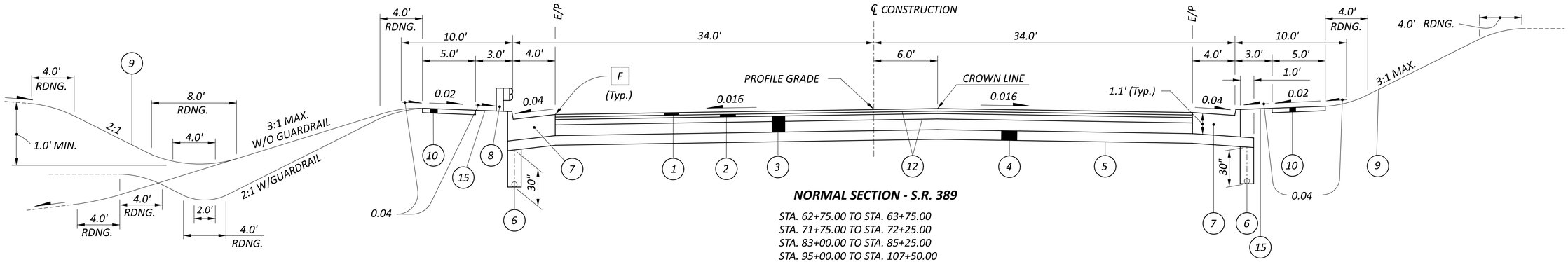

NORMAL SECTION - S.R. 389

STA. 62+75.00 TO STA. 63+75.00
STA. 71+75.00 TO STA. 72+25.00
STA. 83+00.00 TO STA. 85+25.00
STA. 95+00.00 TO STA. 107+50.00

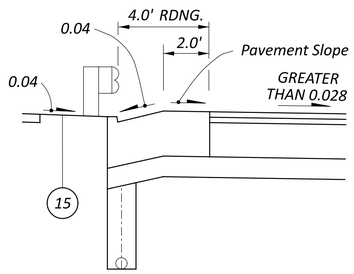

HIGH-SIDE CURB DETAIL "A"

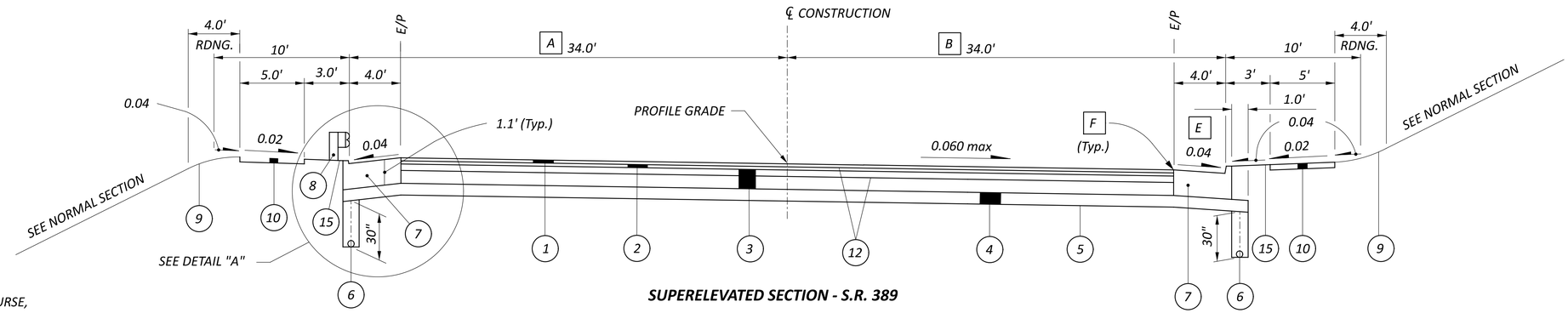

SUPERELEVATED SECTION - S.R. 389

STA. 55+60.00 TO STA. 62+75.00
STA. 63+75.00 TO STA. 71+75.00
STA. 72+25.00 TO STA. 78+13.66
STA. 78+13.66 TO STA. 83+00.00 (SUPERELEVATION DIRECTION REVERSED)
STA. 85+25.00 TO STA. 95+00.00
STA. 107+50.00 TO STA. 130+00.00 (SUPERELEVATION DIRECTION REVERSED)

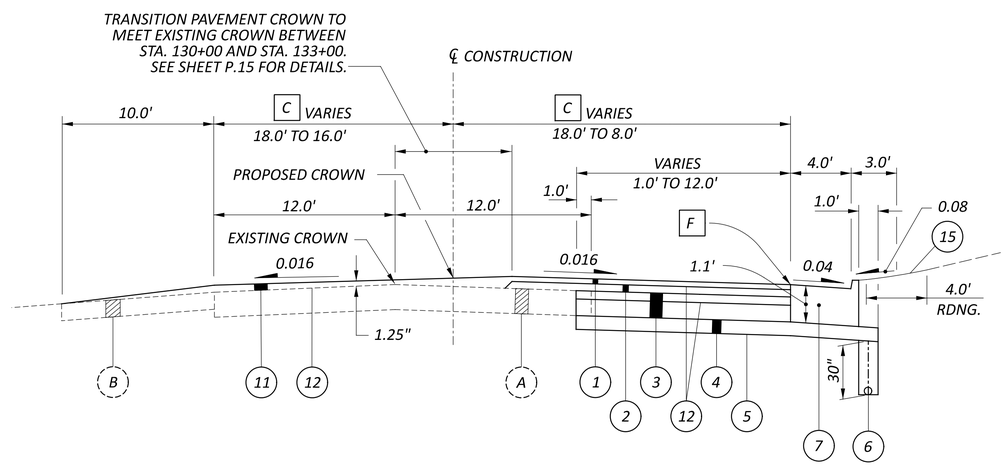

WIDENING AND RESURFACING - S.R. 389

STA. 130+00.00 TO STA. 133+00.00

LEGEND

1. ITEM 441 - 1¼" ASPHALT CONCRETE SURFACE COURSE, TYPE 1, (446), PG64-22
2. ITEM 441 - 1¾" ASPHALT CONCRETE INTERMEDIATE COURSE, TYPE 2, (446)
3. ITEM 301 - 10" ASPHALT CONCRETE BASE, PG64-22
4. ITEM 304 - 6" AGGREGATE BASE
5. ITEM 204 - SUBGRADE COMPACTION
6. ITEM 605 - 6" SHALLOW PIPE UNDERDRAINS [D]
7. ITEM 609 - COMBINATION CURB AND GUTTER, TYPE 2, AS PER PLAN (SEE SHEET P.9)
8. ITEM 606 - GUARDRAIL, TYPE 5
9. ITEM 659 - SEEDING AND MULCHING
10. ITEM 608 - 4" CONCRETE WALK
11. ITEM 441 - ASPHALT CONCRETE SURFACE COURSE, TYPE 1, (446), PG64-22 (VARIABLE THICKNESS)
12. ITEM 407 - TACK COAT
13. ITEM 408 - PRIME COAT (APPLIED AT THE RATE OF 0.4 GAL./SQ. YD.)
14. NOT USED
15. ITEM 660 - SODDING UNSTAKED

(A) 3"± ASPHALT PAVEMENT OVER 10"± AGGREGATE SUBBASE

(B) 8"± DENSE ASPHALT

NOTES:

FOR VARIABLE PAVEMENT WIDTHS AND SIDEWALK LIMITS, SEE PAVEMENT DETAILS, SHEETS P.15 - P.18.

[A] WIDTH VARIES FROM 34'-0" @ STA. 129+50 TO 22'-0" @ STA. 130+00 DUE TO RIGHT TURN LANE TAPER FROM 12' TO 0'

[B] WIDTH VARIES FROM 34'-0" @ STA. 124+60 TO 22'-0" @ STA. 130+00 DUE TO RIGHT THRU LANE TAPER FROM 12' TO 0'

[C] PAVEMENT WIDTH VARIES FROM 18'-0", LT. & RT. @ STA. 130+00 TO 16'-0" LT. AND 8'-0", RT. @ STA. 133+00 DUE TO LEFT TURN LANE TRANSITION

[D] EXCEPT IN AREAS OF GUARDRAIL SECTIONS, PIPE UNDERDRAINS SHALL BE LOCATED IMMEDIATELY BEHIND THE CURB.

[E] OR PAVEMENT SLOPE, IF GREATER

[F] ITEM 441, ASPHALT CONCRETE SURFACE COURSE, TYPE 1, (446), PG64-22, IS TO BE ¼" ABOVE GUTTER PLATE.

TYPICAL SECTIONS - S.R. 389

DESIGN AGENCY

DESIGNER SCA
REVIEWER BJJ 01/17/25
PROJECT ID 130405
SHEET P.3 TOTAL 167

GUE-389-17.63

MODEL: SP1304-5 PAPERSIZE: 34x22 (in.) DATE: 1/17/2025 TIME: 8:00:00 AM
pw:\\ohiodot-pw.bentley.com:ohiodot-pw-02\Documents\03 Standards\Sample Plans\02-Working\SP1304-5.dgn