No PID
C No. 780059

STATE OF OHIO
DEPARTMENT OF TRANSPORTATION

I-480-3(4)153

FED. RD. DIVISION	STATE	PROJECT	
5	OHIO	I-480-3(4)153	

1/375

NOTE: Project Designation LOR-80-18.62 appearing thru-out this plan shall be understood to read LOR-480-0.00

LORAIN COUNTY
LOR.- 480- 0.00

LOR 480 - 0.00
LORAIN COUNTY
CUYAHOGA COUNTY
CITY OF NORTH OLMSTED
CITY OF NORTH RIDGEVILLE

ROLL FILM
MICROFILMED
JUL 18 1983
APERTURE CARDS
MICROFILMED
JUL 18 1983

CONVENTIONAL SIGNS

Center Line	Existing Sewer
Existing R/W	Proposed Sewer
Proposed R/W	Existing Manhole
Limited Access Line —LA—	Proposed Manhole
Temporary R/W —T—	Existing Catch Basin
Work Agreement Line	Proposed Catch Basin
Property Line —PL—	Manhole Abandoned
Original Lot Line O.L. 78 / O.L. 79	Catch Basin Abandoned
Water Line —W—	Existing Guard Rail
Water Valve	Proposed Guard Rail
Water Hydrant	Fence
Gas Line —G—	Existing Retaining Wall
Gas Valve	Railroad
Telephone Underground —T—	Existing Trees Removed
Electric Underground —E—	County Line
Power Pole	
Light Pole	
Telephone Pole	

SHEETS DELETED FROM THIS PLAN
Sht. Nos. 22, 210-217, 243, 266 & 355

SHEETS ADDED TO THIS PLAN
Sht. Nos. 20A, 24A, 24B, 241A, 241B, 241C
366A, 367A, 240A

INDEX OF SHEETS

Title Sheet	1	Pavement Details	64-76
Schematic Plan	2-3	Storm Sewer Profiles	77-79
Typical Sections	4-8	Culvert & Ditch Details	80-91
General Notes	9-13	E.B. I-480 & E.B. U.S. 20 Cross Sections	92-120
General Summary	14-17	W.B. I-480 & W.B. U.S. 20 Cross Sections	121-145
Pavement Calculations	18-20A	E.B. & W.B. I-480 Cross Sections	146-154
Special Details	21-24B	SR 10 Interchange, Ramps Cross Sections	155-179
Horizontal Control Data	25-26	SR 10 (Lorain Road) Cross Sections	180-189
Superelevation Tables	27-28	Water Work Plans	190-192
E.B. I-480 & E.B. U.S. 20 Plan & Profile	29-39	Traffic Control Plans	193-209
W.B. I-480 & W.B. U.S. 20 Plan & Profile	40-49	Lighting Plan	210-241C
E.B. & W.B. I-480 Plan & Profile	50-53	Structures Over 20' Length	242-355
S.R.-10 Interchange, Ramps Plan & Profile	54-58	Right-of-Way Plans	356-375
S.R.-10 (Lorain Rd.) Plan & Profile	59-63		

Sheets 274 & 275 revised 5-11-78 EBL

LINE DATA

Begin Project - Sta. 975+50.00 to Sta. 998+03.01 (Bk) @ I-480 E.B. = 2,253.01 L.F.
Sta. 0+30.17 (Ah) to Sta. 32+31.00 (Toll Plaza) @ I-480 E.B. = 3,200.83 L.F.
Sta. 37+31.00 (Toll Plaza) to Sta. 74+11.39 @ I-480 E.B. = 3,680.39 L.F.
Sta. 74+11.39 to Sta. 100+00.00 @ I-480 End Project = 2,588.61 L.F.
LENGTH OF PROJECT = 11,722.84 L.F. or 2.220 MILES

ADD FOR WORK
Lorain Rd. (S.R.10)
Sta. 1137+30.00 to Sta. 1153+80.00 = 1,650.00 L.F.

I-480
Sta. 973+35.00 to Sta. 975+50.00 = 215.00 L.F.
Sta. 100+25.34 to Sta. 105+37.00 = 511.66 L.F.
LENGTH OF ADDITIONAL WORK = 2,376.66 L.F.
ADD PROJECT LENGTH = 11,722.84 L.F.

LENGTH OF WORK = 14,099.50 L.F. or 2.670 MILES

SUPPLEMENTAL SPECIFICATIONS	
NUMBER	DATE
801	4-25-77
808	1-1-71
814	1-1-69
836	3-12-75
838	1-13-77
839	11-25-70
844	11-8-74
846	4-25-77
948	2-19-74
950	4-25-77
951	4-25-77
S625	1-11-74
S713	1-11-74
1001	1-3-77

FILE NUMBER	LORAIN COUNTY LOR- 480- 0.00
	DATE OF LETTING
	CONTRACT NUMBER

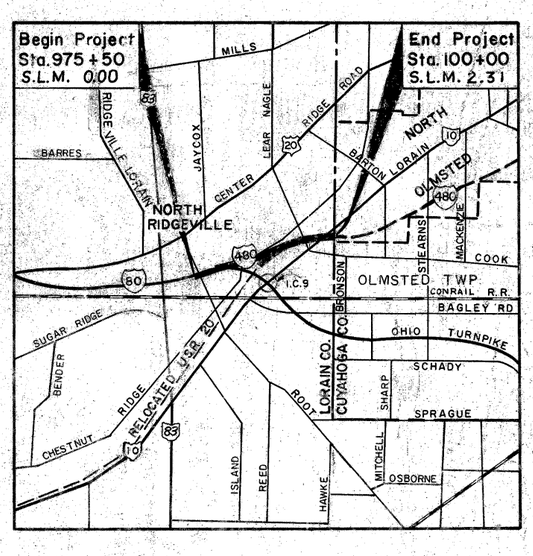

LOCATION MAP

0 1 2 3
SCALE OF MILES

Portion To Be Improved
State Routes
U.S. Routes
Interstate Routes
City Streets
To be Improved Under Separate Contract

SCALES

PLAN	0 50	1" = 50'
PROFILE: HORIZ.	0 50	1" = 50'
VERT.	0 10 20	1" = 20' / 1" = 10'
CROSS SECTIONS	0 10	1" = 10'
PAVEMENT DETAILS	0 20	1" = 20'

"LIMITED ACCESS"

This improvement is especially designed for thru traffic and has been declared a Limited Access Highway or Freeway by action of the Director of Transportation, in accordance with the provisions of Sec. 5511.02 of The Revised Code of Ohio.

1977 SPECIFICATIONS

The Standard Specifications of the State of Ohio, Department of Transportation, including changes and supplemental specifications listed in the proposal, shall govern this improvement.

The Right of Way for this improvement will be provided by the State of Ohio.

I hereby approve these plans and declare that the making of this improvement will not require the closing of the highway to traffic and that provisions for maintenance and safety of traffic will be as set forth on the plans and estimates.

Approved H. H. Reader
Date 1-30-76 District Deputy Director of Transportation
Approved Robert B. Pfeifer
Date 12-21-77 Engineer, Bureau of Bridges and Structural Design
Approved R. E. Bartlin
Date 12-22-77 Chief Engineer, Planning and Design
Approved David L. Weir
Date 12-22-77 Director, Department of Transportation

STANDARD DRAWINGS	
Number	Date
BP-1	6-1-65
BP-2	12-6-76
BP-3	12-6-76
BP-4	12-6-76
BP-5	8-11-75
BP-7	12-6-76
BP-9	12-6-76
BP-10	1-3-75
CB-3	1-1-76
CB-3A	1-1-76
CB-5	9-1-69
CB-6	6-1-65
F-1	5-1-76
BP-6	6-1-65
F-3	5-1-76
F-5	5-1-76
F-6	5-1-76
GR-1	12-6-76
GR-2B	12-6-76
GR-3	12-6-76
GR-4	12-6-76
GR-4A	7-26-76
GR-5	1-1-71
GR-6	1-1-71
HW-4	1-1-70
MC-1	6-13-69
MC-3	6-1-73
MC-4	7-26-76
MC-6	6-1-65
MC-7	10-15-76
MC-8	6-12-75
MC-10	5-1-76
MH-1	6-12-75
MH-3	6-12-75
MH-5	6-12-75
L-1	6-1-73
AS-1-72	6-30-72
BR-1-67	10-15-71
RB-1-55	2-2-59
SD-1-69	6-12-69
SP-53	6-30-61
HL-1	9-6-73
HL-2	7-27-73
HL-3	7-27-73
HL-4	1-21-76
HL-5	9-6-73
HL-6	3-22-77
HL-7	1-21-76
HL-8	1-21-76
HL-9	3-22-77
HL-10	1-21-76
HL-11	4-6-73
HL-12	4-6-73
HL-15	1-21-76
HL-16	4-6-73
HL-19	3-22-77

STANDARD DRAWINGS					
Number	Date	Number	Date	Number	Date
		TC-32.11	8-27-76	TC-61.10	8-19-77
		TC-41.10	8-19-77		
TC-22.20	8-19-77	TC-41.20	4-1-77	TC-71.10	12-1-75
TC-7.65	10-1-74	TC-41.50	4-1-77	TC-72.20	8-29-77
TC-12.30	10-1-74	TC-42.10	8-19-77		
TC-21.10	10-1-74	TC-42.20	4-1-77		
TC-21.40	8-19-77	TC-51.10	6-2-75		
TC-22.10	10-1-74	TC-51.11	6-2-75		
TC-31.21	8-27-76	TC-52.10	4-1-77		
TC-32.10	8-27-76	TC-52.20	4-1-77		

PLANS PREPARED BY
ALDEN E. STILSON & ASSOCIATES
CONSULTING ENGINEERS
75 PUBLIC SQUARE
CLEVELAND OHIO

DESIGN DESIGNATION	
1970 A.D.T. =	18,000
1987 A.D.T. =	40,000
D.H.V. =	2,000
D. (directional distribution)	67%
T. (percent B&C trucks)	5%
V. (design speed)	60 M.P.H.

DEPARTMENT OF TRANSPORTATION
FEDERAL HIGHWAY ADMINISTRATION

APPROVED:

DIVISION ADMINISTRATOR DATE:

MICROFILMED
JUL 18 1983

SCHEMATIC PLAN

FED. RD. DIVISION	STATE	PROJECT	
5	OHIO		

2
375

LORAIN COUNTY
LOR-480-0.00

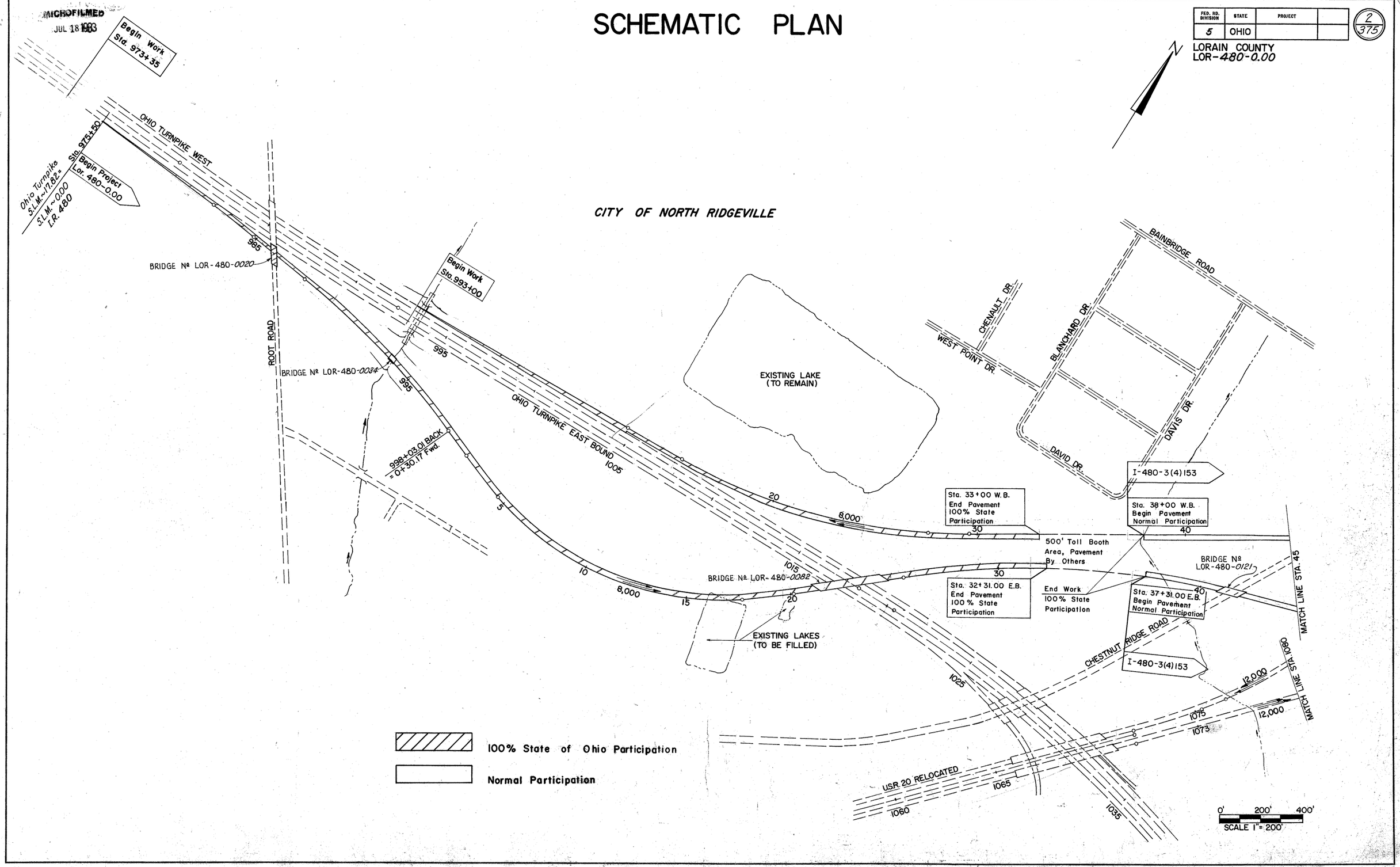

SCHEMATIC PLAN

MICROFILMED
JUL 18 1983

FED. RD. DIVISION	STATE	PROJECT	
5	OHIO		

3/375

LORAIN COUNTY
LOR-480-0.00

SCHEMATIC PLAN

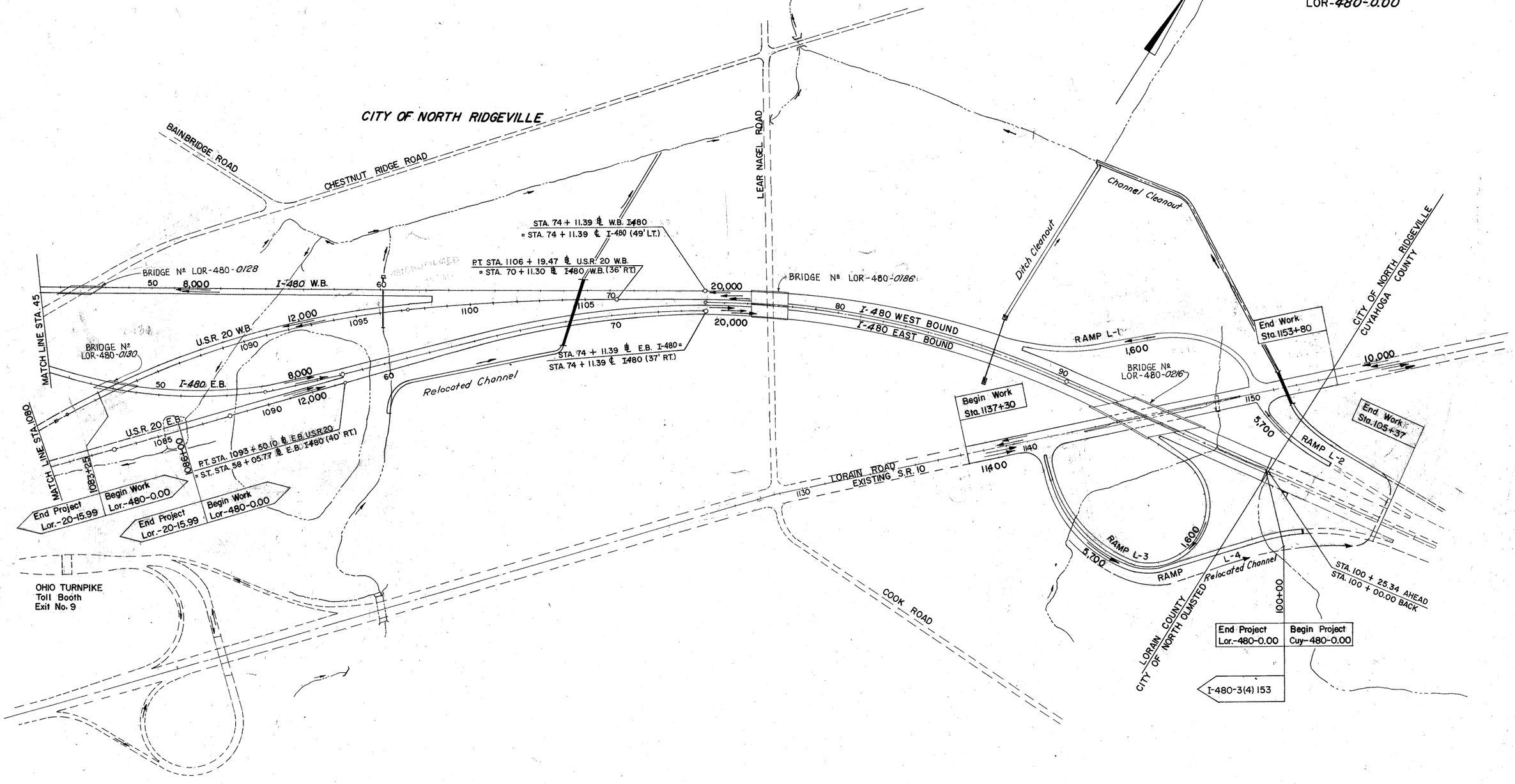

MICROFILMED
JUL 19 1993

FED. RD. DIVISION	STATE	PROJECT	TYPE FUNDS
2	OHIO	.	

330
375

LORAIN COUNTY
LOR.-480-0.00

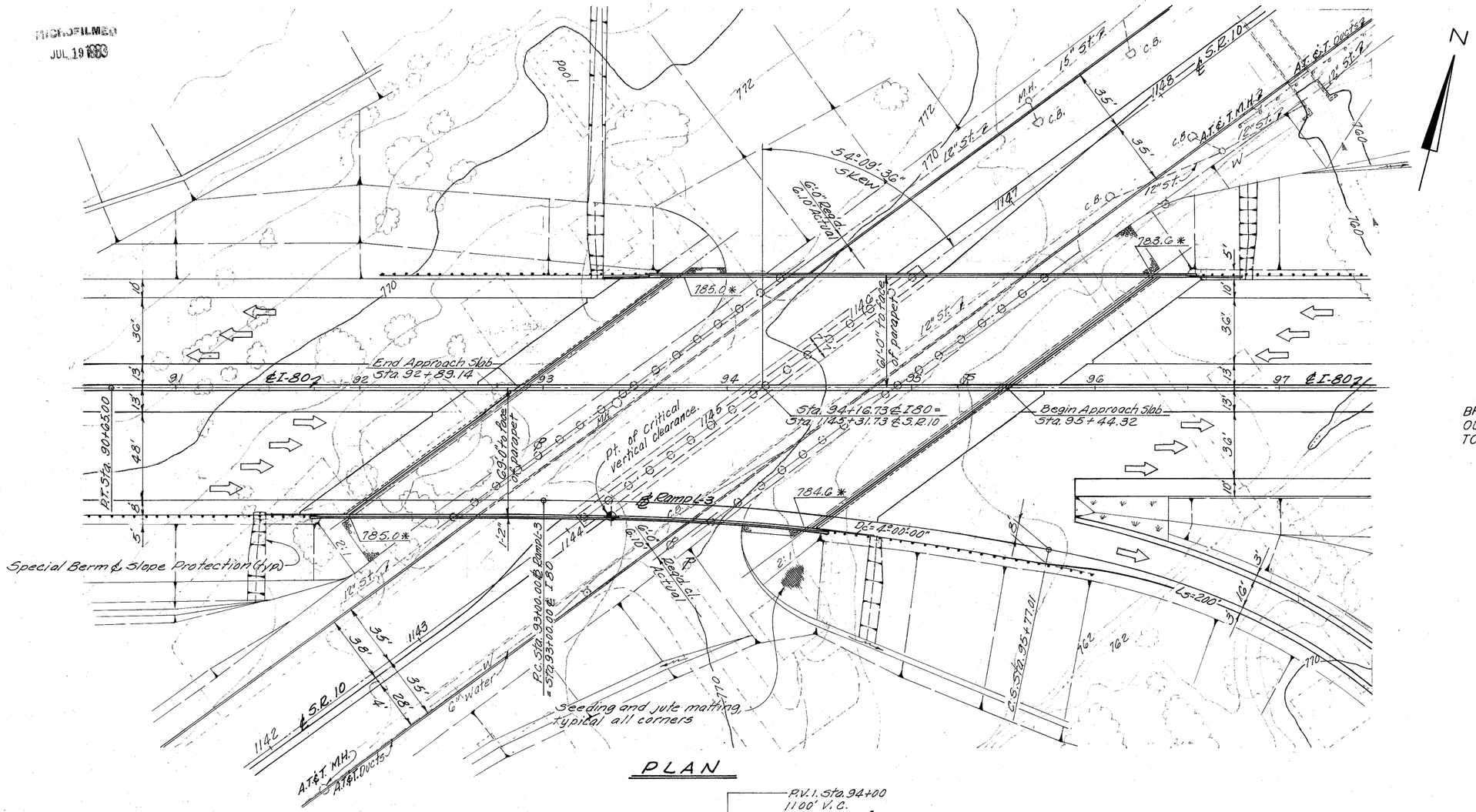

PLAN

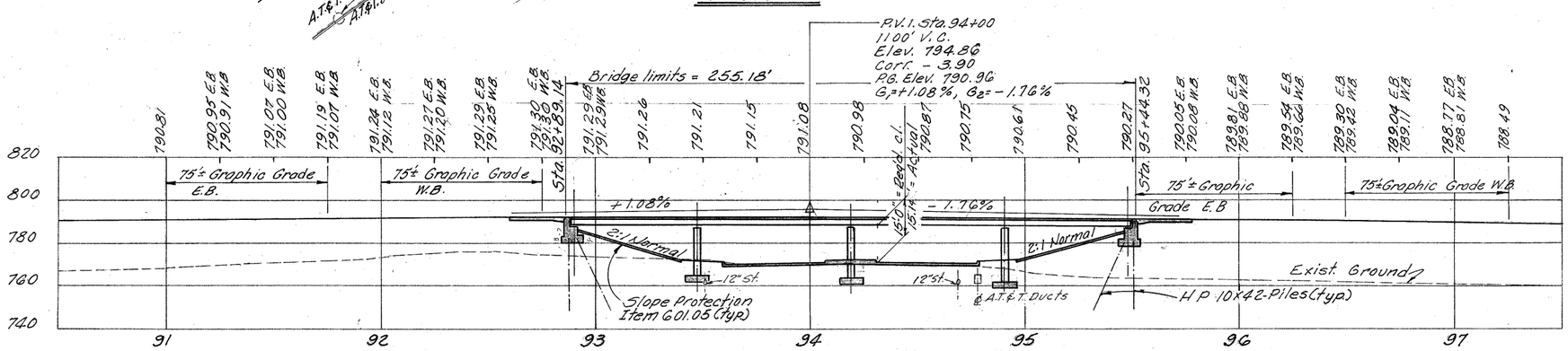

PROFILE ALONG ℄ I-80

Estimated average pay length for abutment piling is 23'.

NOTE:
* Elevation indicated thus are top of slope at face of abutment.

Earthwork limits shown are schematic. Actual slopes shall conform to plan cross sections.

The vertical curve data does not apply to bridge or graphic grade elevations. The bridge elevations were obtained by adding 0.12 feet to the elevations obtained from vertical curve data.

BRIDGE NO. LOR-80-1998 APPEARING THROUGHOUT THIS BRIDGE PLAN SHALL BE CONSIDERED TO READ BRIDGE NO. LOR-480-0216.

PROPOSED STRUCTURE

TYPE: Continuous steel beam with reinforced concrete deck and substructure.

SPANS: 51'-0", 72'-9", 72'-9", 51'-0" c/c bearings.

ROADWAY: Variable width (see plan), with Concrete Barrier Type Median & Railing.

LOADING: HS20-44 plus Interstate alternate.

WEARING SURFACE: Monolithic Conc.

SKEW: 54°09'36" Lt. forward.

ALIGNMENT: Tangent

APPROACH SLABS: AS-1-72 (30' lg.) modified.

SUPERELEVATION: None

TRAFFIC ESTIMATE

Design Year - 1987
Total A.D.T. - 40,000

1/24

ALDEN E. STILSON & ASSOCIATES, LIMITED
CONSULTING ENGINEERS
CLEVELAND, OHIO COLUMBUS, OHIO WHEELING, W. VA.

SITE PLAN

BRIDGE № LOR.-80-1998
I-80 OVER SR. № 10 (LORAIN ROAD)
LORAIN COUNTY STA. 92+89.14 STA. 95+44.32
SCALE 1"=30'-0"

DESIGNED	DRAWN	TRACED	CHECKED	REVIEWED	DATE	REVISED
G.W.M.	G.W.M.	R.T.	B.I.P.	G.W.M.	5/10/70	

MICROFILMED
JUL 19 1993

FED. RD. DIVISION	STATE	PROJECT	TYPE FUNDS
2	OHIO		

331/375

LORAIN COUNTY
LOR-480-0.00

STANDARD DRAWING REFERENCES

DESCRIPTION	DWG. NO.	SHT.	DATE
END DAM AND END CROSSFRAME	SD-1-69	1-2	6-12-69
CURB PLATES	SD-1-69	2	6-12-69
SCUPPERS	SD-1-69	3	6-12-69
MOMENT PLATES	SD-1-69	3	6-12-69
BOLTED SPLICES	SD-1-69	4	6-12-69
BRIDGE ROADWAY RAILING	BR-1-67	1	10-15-71 R
ROCKERS AND BOLSTERS	RB-1-55		2- 2-59 R
APPROACH SLABS	AS-1-72		6-30-72
STRUCTURE GROUNDING	HL-7		1-26-72

(R INDICATES REVISED DATE)

SUPPLEMENTAL SPECIFICATION REFERENCES

DESCRIPTION	NO.	DATE
CHEMICAL ADMIXTURE FOR CONCRETE, TYPE A, B OR D	808	1- 1-71
CONCRETE CURING AND PROTECTIVE MEMBRANE	836	3-12-75

COMMON DETAIL REFERENCES

CONTRACTION JOINTS & END DAMS	SHEET 354
EXPANSION JOINTS	SHEET 354
DECK DRAINAGE DETAILS	SHEET 355

DESIGN SPECIFICATIONS

THIS STRUCTURE CONFORMS TO THE 'STANDARD SPECIFICATIONS FOR HIGHWAY BRIDGES' ADOPTED BY THE AMERICAN ASSOCIATION OF STATE HIGHWAY OFFICIALS, 1969, INCLUDING THE OHIO 'SUPPLEMENT' TO THESE SPECIFICATIONS.

DESIGN DATA

DESIGN LOADING - HS20-44 AND THE INTERSTATE ALTERNATE LOADING
CONCRETE CLASS C - UNIT STRESS 1200 PSI FOR SUPERSTRUCTURE
UNIT STRESS 1333 PSI FOR SUBSTRUCTURE
STRUCTURAL STEEL - ASTM A36 - UNIT STRESS 20000 PSI
REINFORCING STEEL - ASTM A615, A616 OR A617 - UNIT STRESS 20000 PSI.
SPIRAL REINFORCEMENT MAY BE PLAIN BARS ASTM A82, OR A615.

EMBANKMENT CONSTRUCTION

THE EMBANKMENTS SHALL BE CONSTRUCTED TO THE LEVEL OF THE SUBGRADE FOR A MINIMUM DISTANCE OF 200 FEET BACK OF THE ABUTMENTS. EXCAVATION SHALL THEN BE MADE FOR THE ABUTMENTS AND FOR PIER NO.3

PILES

PILES SHALL BE DRIVEN TO A MINIMUM BEARING CAPACITY OF-
35 TONS PER PILE FOR THE ABUTMENTS

FOUNDATION BEARING PRESSURE

PIER FOOTINGS ARE DESIGNED FOR A MAXIMUM BEARING PRESSURE OF 2.5 TONS PER SQ. FT.

LAPS

MINIMUM BAR LAPS SHALL BE 30 DIAMETERS.

UTILITY LINES

ALL EXPENSE INVOLVED IN RELOCATING THE AFFECTED UTILITY LINES SHALL BE BORNE BY THE OWNERS. THE CONTRACTOR AND OWNERS ARE REQUESTED TO COOPERATE BY ARRANGING THEIR WORK IN SUCH A MANNER THAT INCONVENIENCE TO EITHER WOULD BE HELD TO A MINIMUM.

MAINTENANCE OF TRAFFIC

TWO LANES OF TRAFFIC WITH A MINIMUM HORIZONTAL WIDTH OF 26'-0 AND A MINIMUM VERTICAL CLEARANCE OF 13'-6 SHALL BE MAINTAINED ON S.R. 10 AT ALL TIMES.

SUPPLEMENTAL SPECIFICATION REFERENCES- CONT

DESCRIPTION	NO.	DATE
PAINTING FOR NEW STRUCTURAL STEEL	846	4-25-77
INORGANIC ZINC SILICATE PAINT	950	4-25-77
BLUE-GREEN VINYL PAINT	951	4-25-77

ITEM	TOTAL	UNIT	DESCRIPTION	ABUTS	PIERS	SUPER	GENERAL			
503	LUMP	SUM	COFFERDAMS, CRIBS AND SHEETING				LUMP			
503	3180	C.Y.	UNCLASSIFIED EXCAVATION	1055	2125					
505	LUMP	SUM	TEST PILE				LUMP			
507	2185	L.F.	STEEL PILES, HP10X42	2185						
509	305311	LB	REINFORCING STEEL	57,132	113591	134,588				
511	1066	C.Y.	CLASS C CONCRETE, SUPERSTRUCTURE(SEE PROPOSAL NOTE)			1066				
511	300	C.Y.	CLASS C CONCRETE, PIERS ABOVE FOOTINGS		300					
511	466	C.Y.	CLASS C CONCRETE, ABUTMENTS ABOVE FOOTINGS	466						
511	758	C.Y.	CLASS C CONCRETE, FOOTINGS	348	410					
512	100	L.F.	PREMOLDED SEALING STRIP	100						
513	836000	LB	STRUCTURAL STEEL,PRIMER PER 846(SEE PROPOSAL NOTE)			836000				
846	836000	LB	FIELD PAINTING OF STRUCTURAL STEEL			836000				
516	110	S.F.	1 INCH PREFORMED EXPANSION JOINT FILLER	110						
518	262	C.Y.	POROUS BACKFILL	262						
518	12	EA	STANDARD SCUPPERS INCLUDING SUPPORTS			12				
518	12	EA	TYPE 3 SCUPPERS INCLUDING SUPPORTS, AS PER PLAN			12				
518	436	L.F.	6 INCH PERFORATED, HELICAL CSP, 707.01	436						
518	112	L.F.	6 INCH NON-PERFORATED, HELICAL CSP, INCLUDING SPECIALS, 707.01	112						
601	1720	S.Y.	CRUSHED AGGREGATE SLOPE PROTECTION				1720			
S625			SEE SHEET222 FOR LIGHTING SUMMARY							
808	1066	UNIT	CHEMICAL ADMIXTURE FOR CONCRETE, TYPE A, B OR D			1066				
SPEC	138582	LB	EPOXY COATED REINFORCING STEEL(SEE PROPOSAL NOTE)	2074		136508				

MONOLITHIC WEARING SURFACE THICKNESS IS ASSUMED TO BE 1". DECK PROJECTION METHOD: EPOXY COATED REINFORCING STEEL,TOP MAT ONLY.

2/24

ALDEN E. STILSON & ASSOCIATES, LIMITED
CONSULTING ENGINEERS
CLEVELAND, OHIO COLUMBUS, OHIO WHEELING, W. VA.

GENERAL NOTES AND ESTIMATED QUANTITIES

BRIDGE No. LOR-80-1998

I-80 OVER S.R. 10 (LORAIN ROAD)

LORAIN COUNTY STA. 92 + 89.14 STA. 95 + 44.32

DESIGNED	DRAWN	TRACED	CHECKED	REVIEWED	DATE	REVISED
A.S.S.			B.D. 4-17-70	G.W.M.	9/11/70	

*Std. Dwg. AS-1-72 shall be modified to provide 3" clearance to the top re-bars instead of the 2" shown and jacking holes shall be omitted.

ATTACHMENT OF GUARDRAIL TO CONCRETE PARAPETS: CONCRETE INSERT ANCHOR ASSEMBLIES PER STANDARD CONSTRUCTION DRAWINGS GR-3 AND GR-1 SHALL BE PLACED DURING PARAPET CONSTRUCTION.

EBL

FED. RD. DIVISION	STATE	PROJECT	TYPE FUNDS
2	OHIO		

332/375

LORAIN COUNTY
LOR.-480-0.00

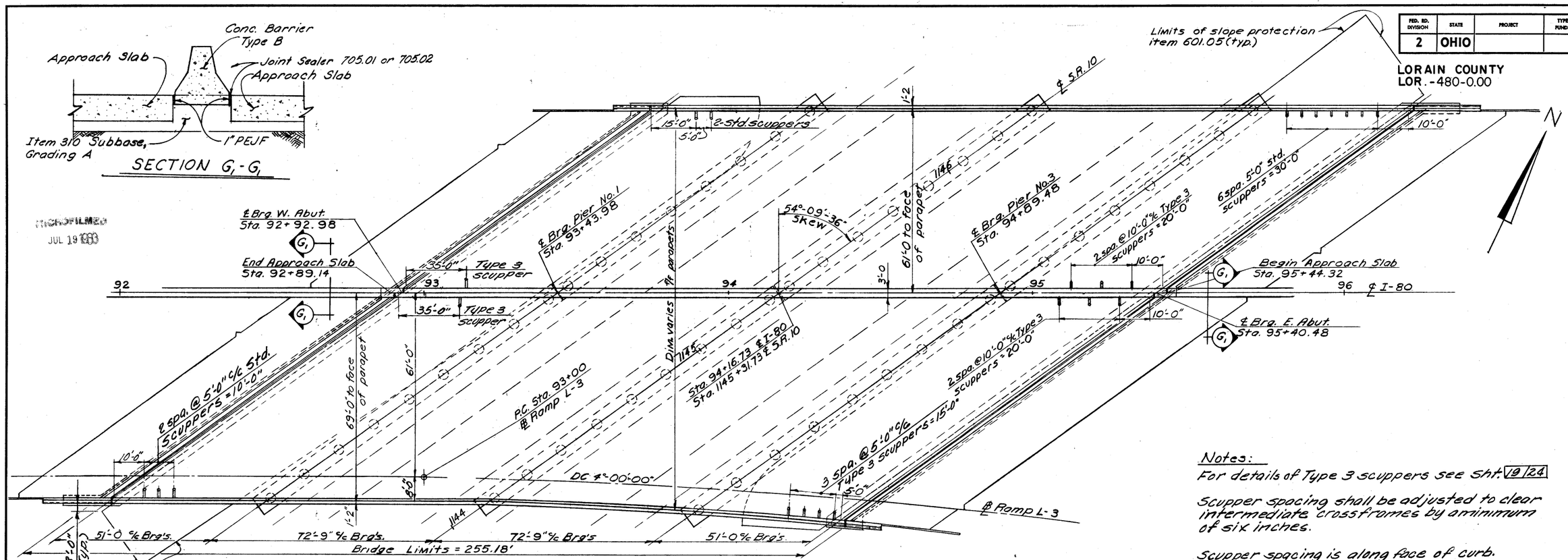

Notes:

For details of Type 3 scuppers see Sht. 19/24

Scupper spacing shall be adjusted to clear intermediate crossfromes by a minimum of six inches.

Scupper spacing is along face of curb.

MICROFILMED JUL 19 1990

3/24

ALDEN E. STILSON & ASSOCIATES, LIMITED
CONSULTING ENGINEERS
CLEVELAND, OHIO COLUMBUS, OHIO WHEELING, W. VA.

GENERAL PLAN

BRIDGE No. LOR-80-1998

I-80 OVER S.R. 10 (LORAIN ROAD)

LORAIN COUNTY STA. 92+89.14 STA. 95+44.32

DESIGNED	DRAWN	TRACED	CHECKED	REVIEWED	DATE	REVISED
R.S.S.	D.L.		B.I.P.	G.W.M.	5/24/70	

MICROFILMED
JUL 19 1990

FED. RD. DIVISION	STATE	PROJECT	TYPE FUNDS
2	OHIO		

333/375

LORAIN COUNTY
LOR. - 480-0.00

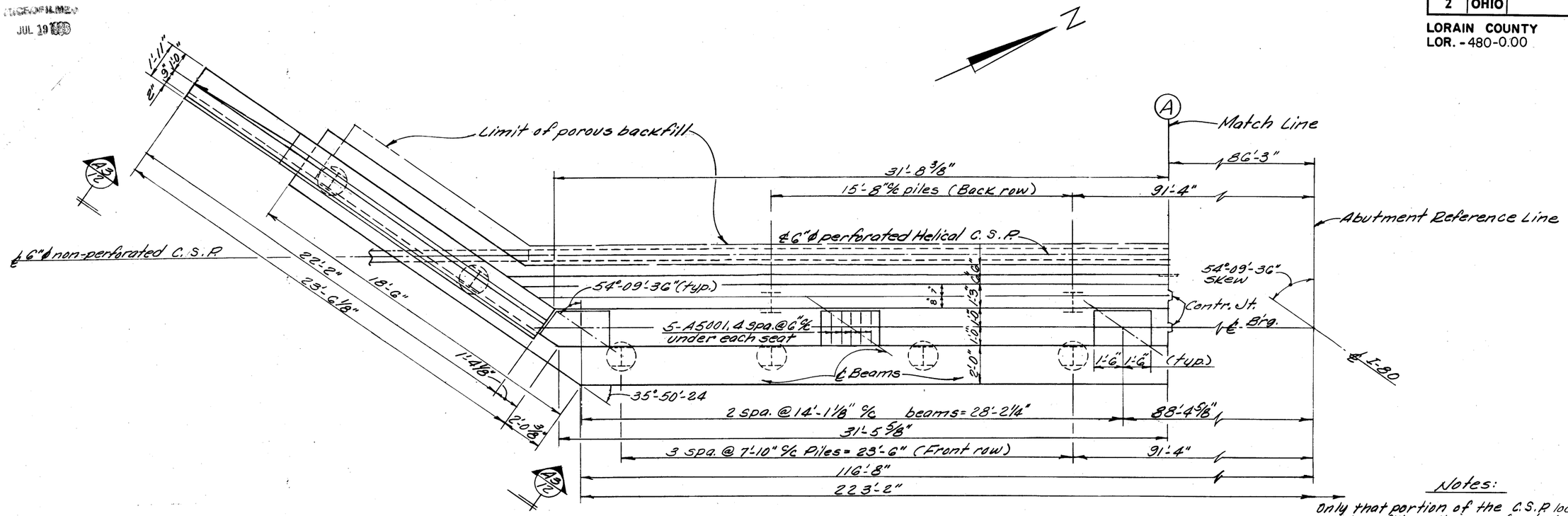

PLAN

Notes:

Only that portion of the C.S.P. located in porous backfill shall be perforated. The 6"ϕ C.S.P. porous backfill drain shall be extended out into the side slopes & terminated near the surface as shown by detail on Sht.

All piles are HP 10x42 Piles
⊥ indicates vertical piles
(1) indicates piles battered 1:4

In reinforcing bar callouts
N.S. indicates near side.
F.S. indicates far side.

* Elevations shown thus are pavement elevations at the face of backwall and the point indicated.

Porous Backfill 1'-6" thick, full length of abutment and 2'-0" thick, full length of wings as shown, shall extend up to the subgrade or underside of approach slab.

For details of contraction joint and expansion joint see Common Details Sht.

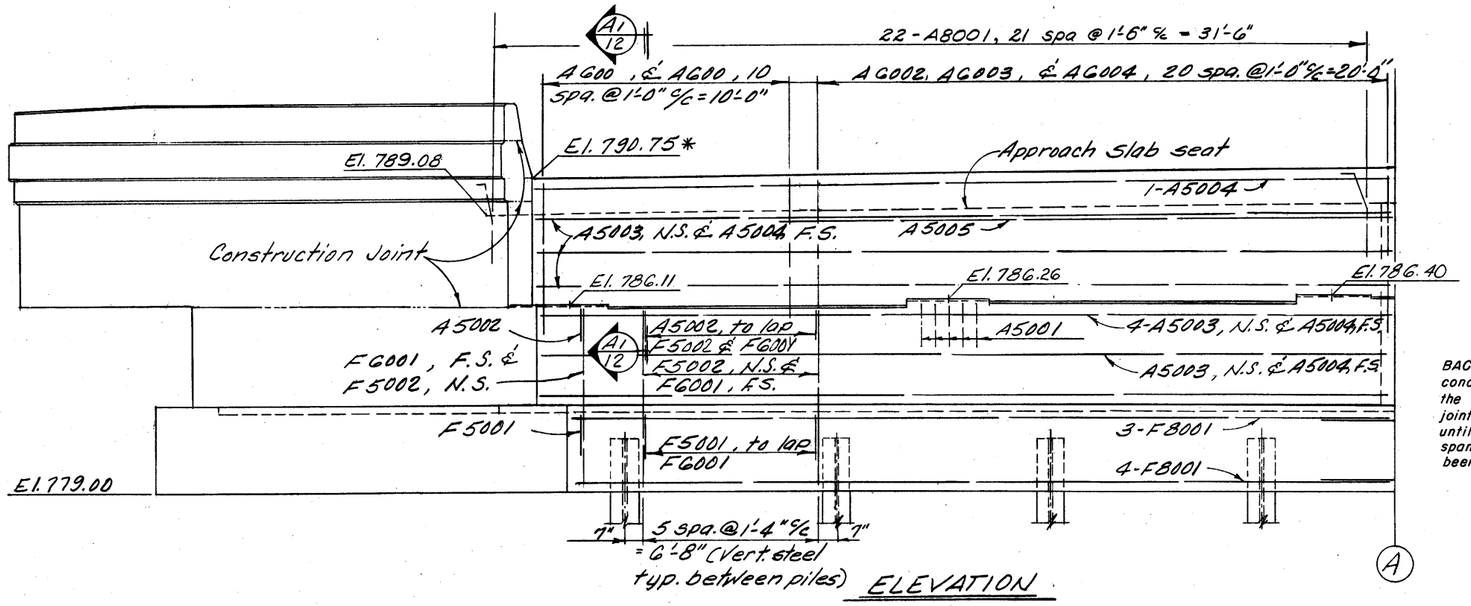

ELEVATION

BACKWALL CONCRETE: No backwall concrete shall be placed above the level of the optional construction joint at the approach slab seat until after the deck concrete in the span adjacent to the abutment has been placed.

4/24

ALDEN E. STILSON & ASSOCIATES, LIMITED
CONSULTING ENGINEERS
CLEVELAND, OHIO COLUMBUS, OHIO WHEELING, W. VA.

WEST ABUTMENT DETAILS
BRIDGE № LOR-80-1998
I-80 OVER S.R. 10 (LORAIN ROAD)

LORAIN COUNTY STA. 92+89.14 STA. 95+44.32

DESIGNED	DRAWN	TRACED	CHECKED	REVIEWED	DATE	REVISED
R.S.S.	R.T.		B.I.P.	G.W.M.	8/24/70	

JUL 19 1990

FED. RD. DIVISION	STATE	PROJECT	TYPE FUNDS
2	OHIO		

334/375

LORAIN COUNTY
LOR. - 480.0.00

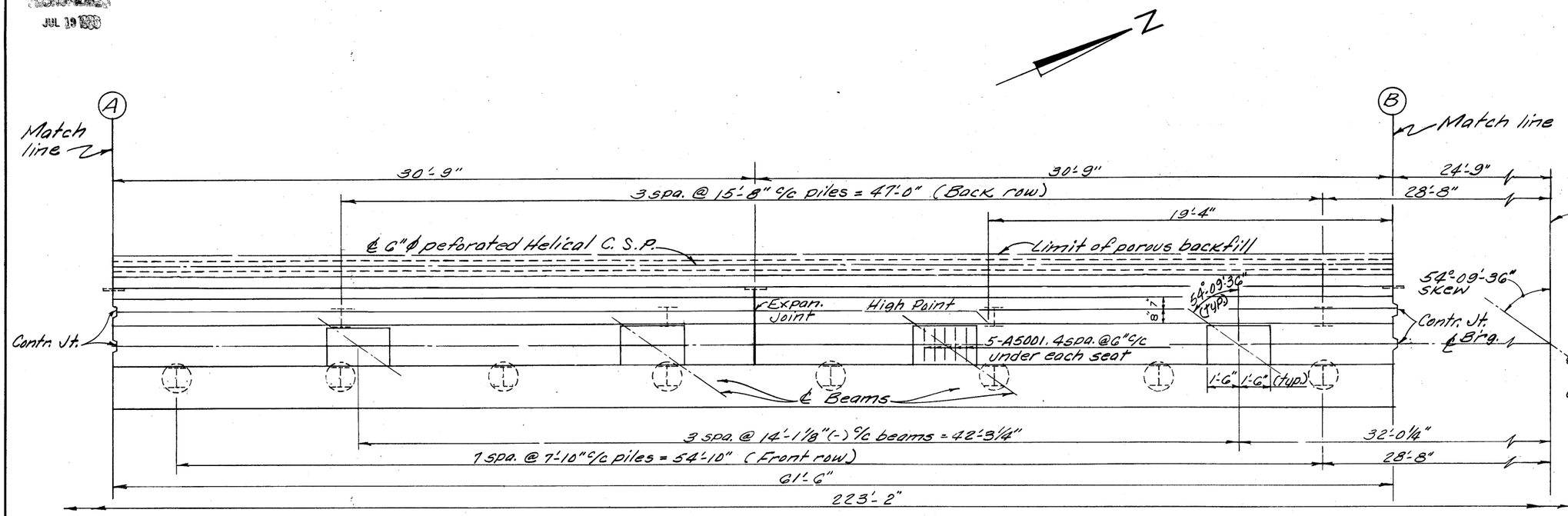

PLAN

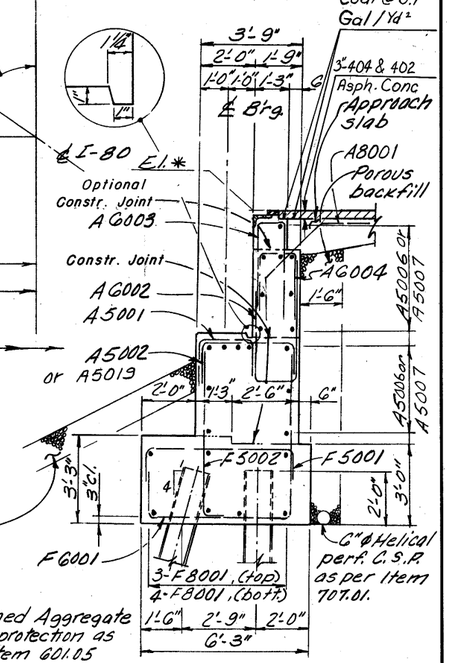

SECTION A2-A2

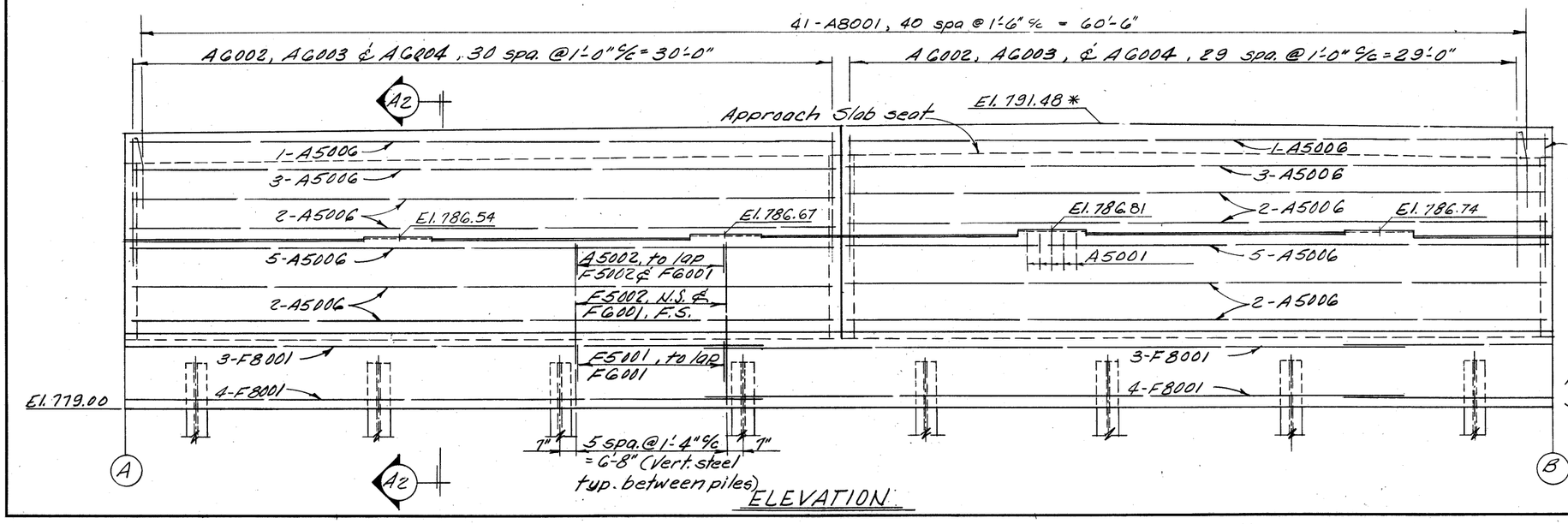

ELEVATION

Note: All piles are HP 10x42 - Piles
I indicates vertical piles
Ⓛ indicates piles battered 1:4

In reinforcing bar callouts, N.S. indicates near side, F.S. indicates far side.

* Elevations shown thus are pavement elevations at the face of back wall and the point indicated.

For additional notes see Sht. 4/24

5/24

ALDEN E. STILSON & ASSOCIATES, LIMITED
CONSULTING ENGINEERS
CLEVELAND, OHIO COLUMBUS, OHIO WHEELING, W. VA.

WEST ABUTMENT DETAILS
BRIDGE No. LOR-80-1998
I-80 OVER S.R. 10 (LORAIN ROAD)

LORAIN COUNTY STA. 92 + 89.14 STA. 95 + 44.32

DESIGNED	DRAWN	TRACED	CHECKED	REVIEWED	DATE	REVISED
R.S.S.	R.T.		B.I.P.	G.W.M.	5/24/90	

MICROFILMED
JUL 19 1990

FED. RD. DIVISION	STATE	PROJECT	TYPE FUNDS
2	OHIO		

335/375

LORAIN COUNTY
LOR. - 480-0.00

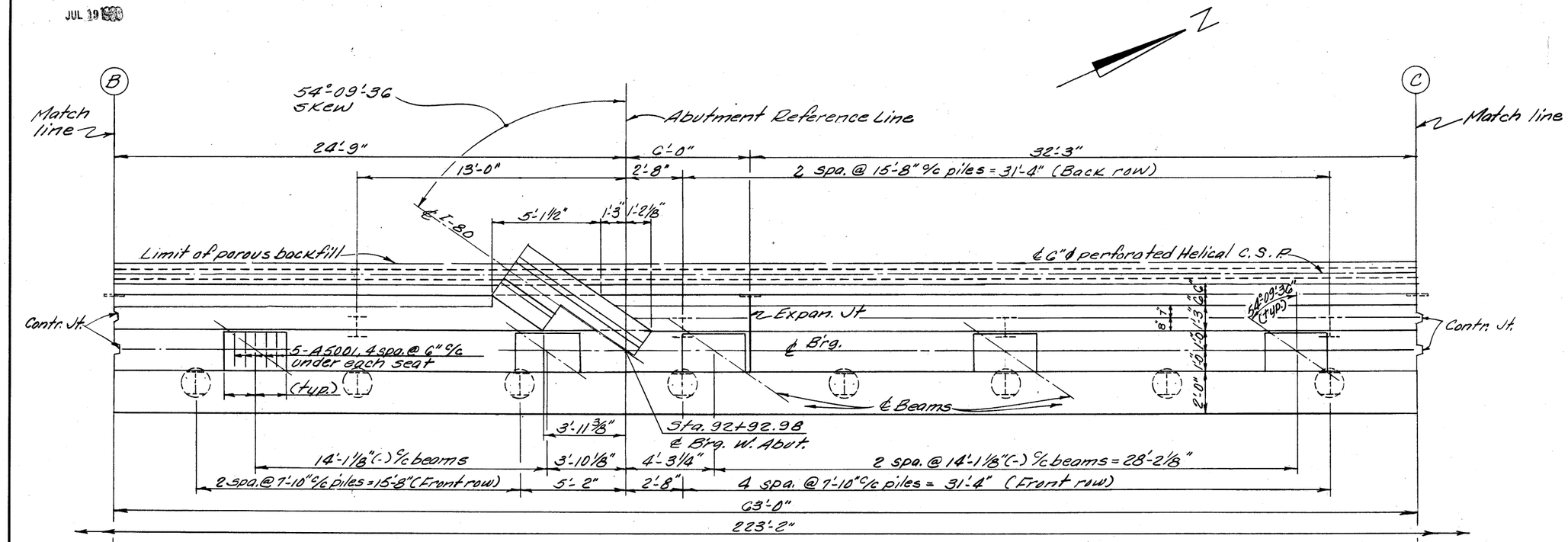

PLAN

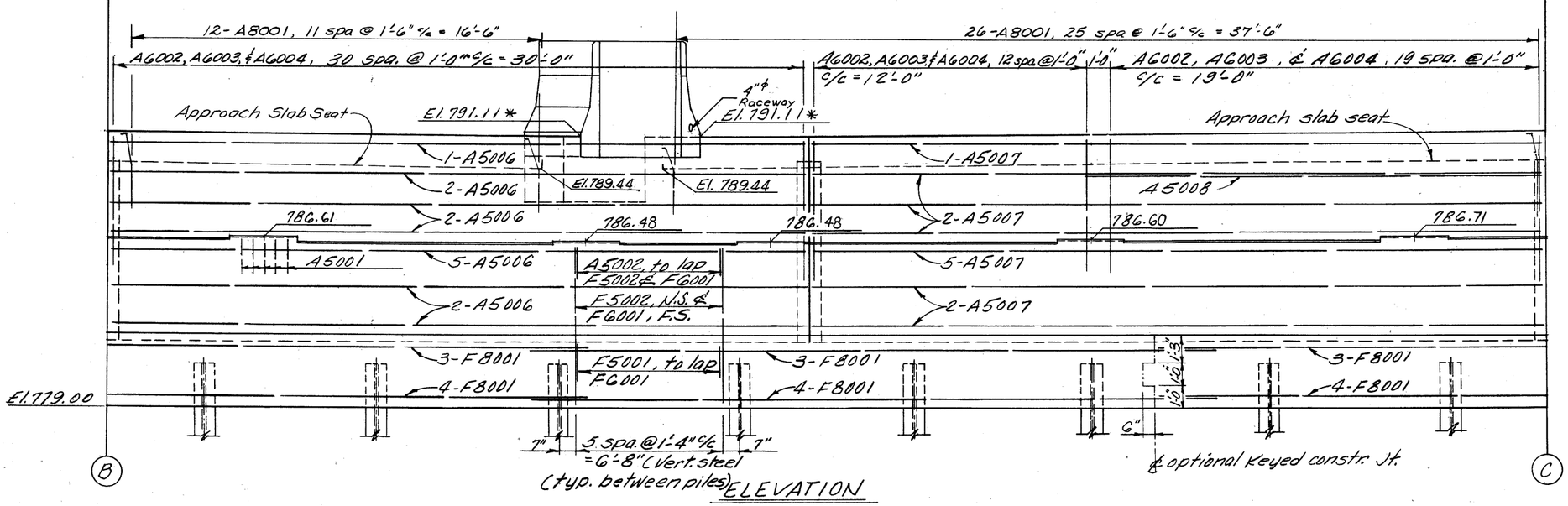

ELEVATION

Notes:

All piles are HP 10 x 42 -Piles
⊥ indicates vertical piles
⊕ indicates piles battered 1:4

In reinforcing bar callouts
N.S. indicates near side.
F.S. indicates far side.

* Elevations shown thus are pavement elevations at the face of backwall and the point indicated.

For additional notes see Sht. 4/24

The shape of the median on the abutment shall match the shape of the median on the superstructure.
For Details of abutment median see Sht. 12/24 6/24

ALDEN E. STILSON & ASSOCIATES, LIMITED
CONSULTING ENGINEERS
CLEVELAND, OHIO COLUMBUS, OHIO WHEELING, W. VA.

WEST ABUTMENT DETAILS
BRIDGE No. LOR-80-1998
I-80 OVER S.R. 10 (LORAIN ROAD)

LORAIN COUNTY
STA. 92 + 89.14
STA. 95 + 44.32

DESIGNED	DRAWN	TRACED	CHECKED	REVIEWED	DATE	REVISED
R.S.S.	R.T.		B.I.P.	G.W.M.	5/26/70	

JUL 19 1990

FED. RD. DIVISION	STATE	PROJECT	TYPE FUNDS
2	OHIO		

336/375

LORAIN COUNTY
LOR. - 480-0.00

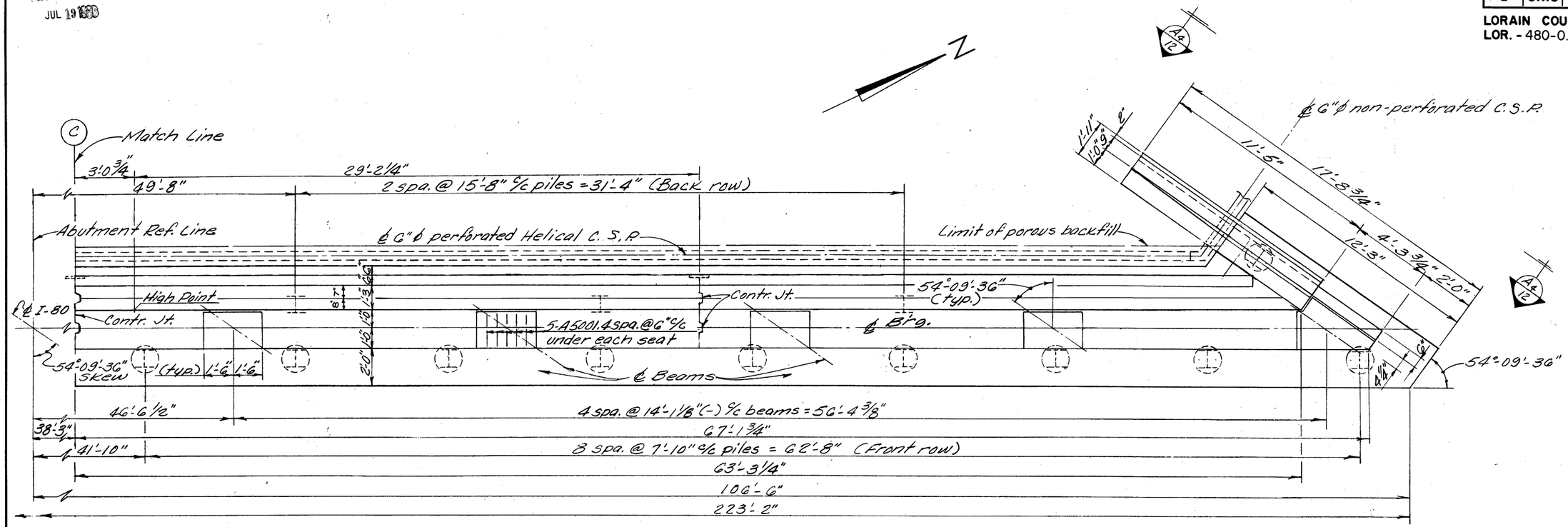

PLAN

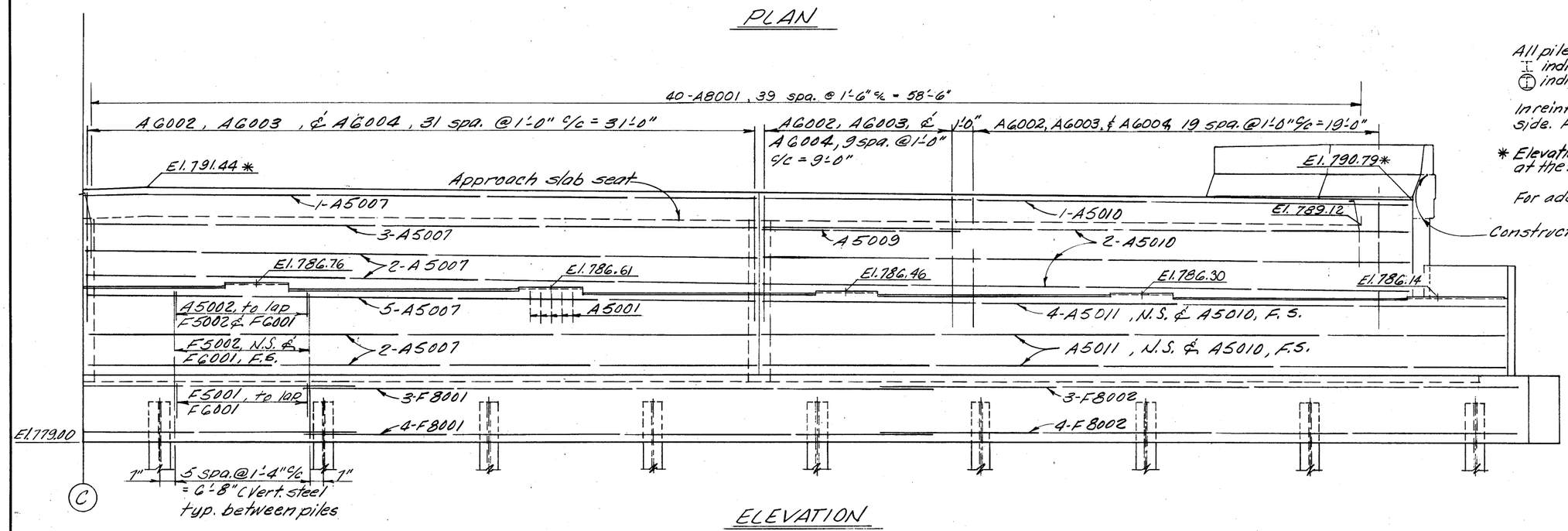

ELEVATION

Note:

All piles are HP10×42 -Piles
I indicates vertical piles
Ⓘ indicates piles battered 1:4

In reinforcing bar callouts, N.S. indicates near side. F.S. indicates far side.

* Elevations shown thus are pavement elevations at the face of backwall and the point indicated.

For additional notes see Sht. 4/24

7/24

ALDEN E. STILSON & ASSOCIATES, LIMITED
CONSULTING ENGINEERS
CLEVELAND, OHIO COLUMBUS, OHIO WHEELING, W. VA.

WEST ABUTMENT DETAILS
BRIDGE № LOR-80-1998
I-80 OVER S.R. 10 (LORAIN ROAD)

LORAIN COUNTY STA. 92+89.14 STA. 95+44.32

DESIGNED	DRAWN	TRACED	CHECKED	REVIEWED	DATE	REVISED
R.S.S.	R.T.		B.I.P.	G.W.M.	5/20/70	

MICROFILMED
JUL 19 1990

FED. RD. DIVISION	STATE	PROJECT	TYPE FUNDS
2	OHIO		

337/375

LORAIN COUNTY
LOR. - 480-0.00

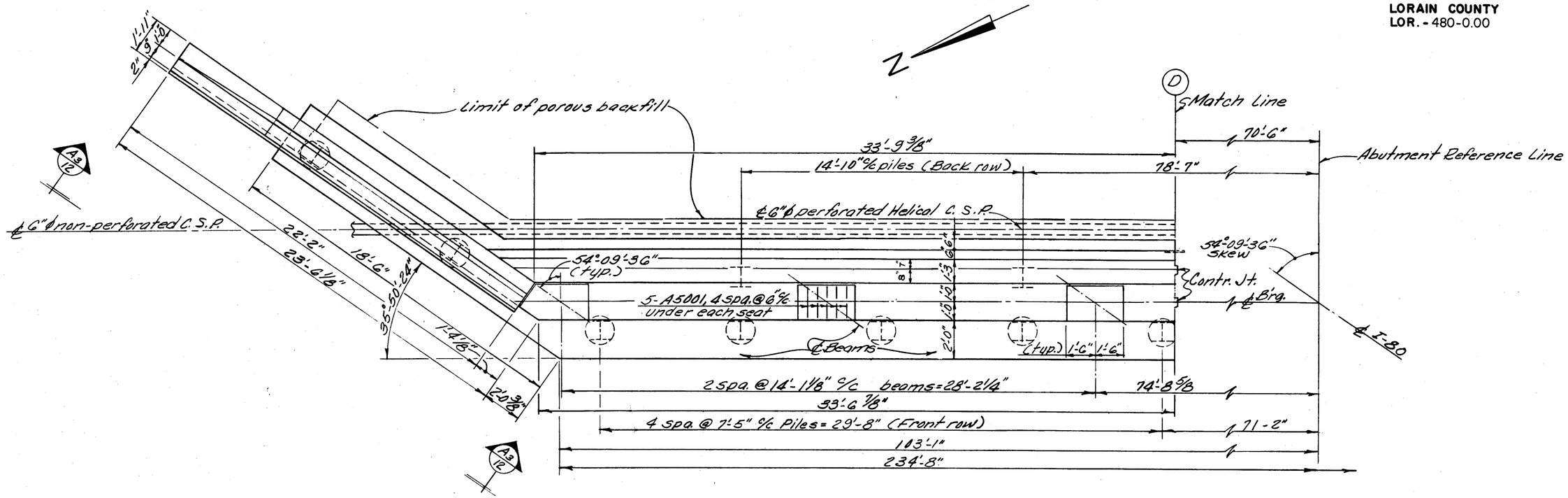

PLAN

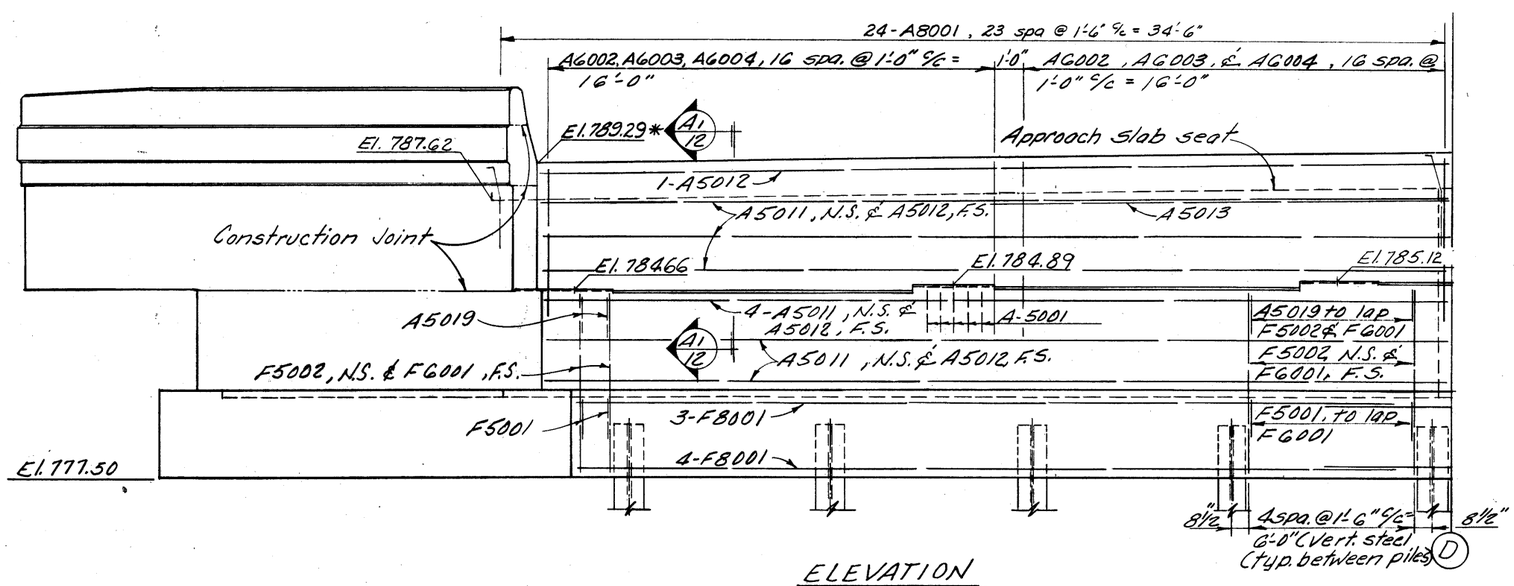

ELEVATION

Notes:

All piles are HP 10x42 - Piles
⊕ indicates vertical piles
⊕ indicates piles battered 1:4

In reinforcing bar callouts,
N.S. indicates near side.
F.S. indicates far side.

* Elevations shown thus are pavement elevations at the face of backwall and the point indicated.

For additional notes see Sht. 4/24

8/24

ALDEN E. STILSON & ASSOCIATES, LIMITED
CONSULTING ENGINEERS
CLEVELAND, OHIO COLUMBUS, OHIO WHEELING, W. VA.

EAST ABUTMENT DETAILS
BRIDGE No. LOR-80-1998
I-80 OVER S.R. 10 (LORAIN ROAD)

LORAIN COUNTY STA. 92+89.14 STA. 95+44.32

DESIGNED	DRAWN	TRACED	CHECKED	REVIEWED	DATE	REVISED
R.S.S.	R.T.		B.I.P.	G.W.M.	5/27/10	

MICROFILMED
JUL 19 1990

FED. RD. DIVISION	STATE	PROJECT	TYPE FUNDS
2	OHIO		

338/375

LORAIN COUNTY
LOR.-480-0.00

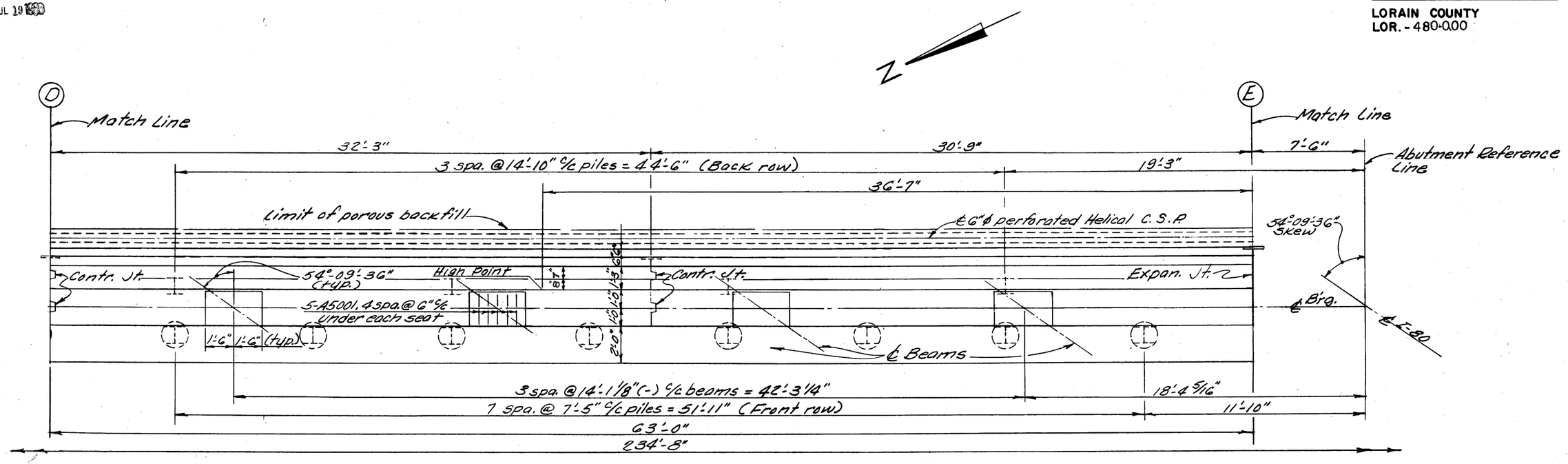

PLAN

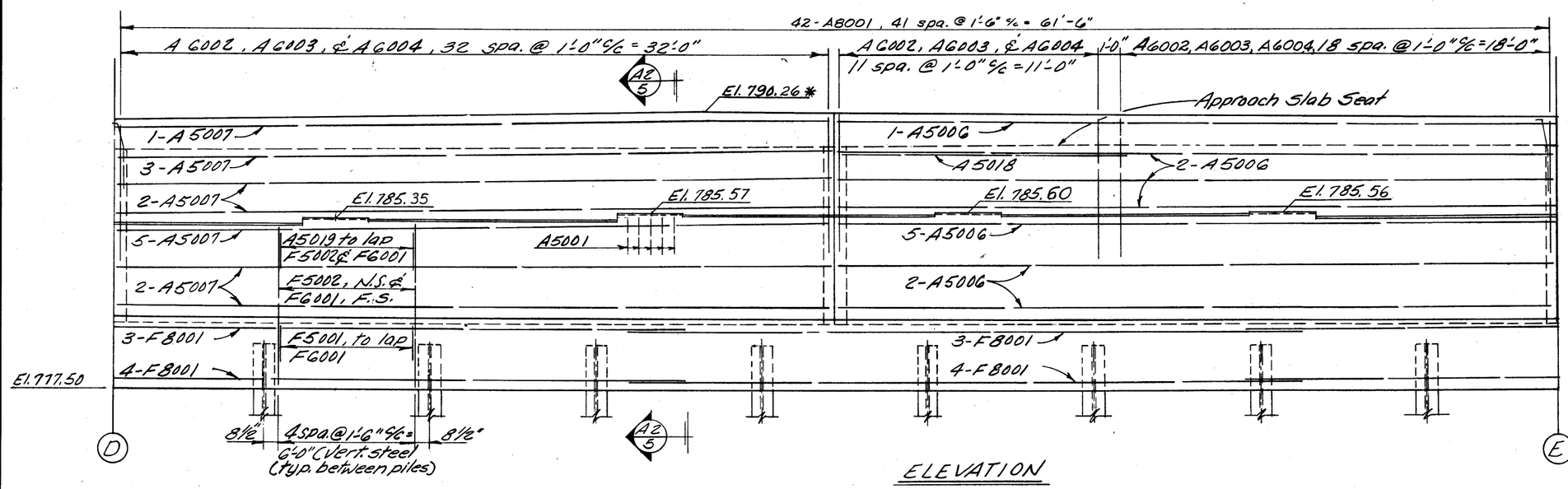

ELEVATION

Notes:

All piles are HP 10 x 42 -Piles
⊥ indicates Vertical piles
⊕ indicates piles battered 1:4

In reinforcing bar callouts,
N.S. indicates near side.
F.S. indicates far side.

* Elevations shown thus are pavement elevations at the face of backwall and the point indicated.

For additional notes see sht. 4/24

9/24

ALDEN E. STILSON & ASSOCIATES, LIMITED
CONSULTING ENGINEERS
CLEVELAND, OHIO COLUMBUS, OHIO WHEELING, W. VA.

EAST ABUTMENT DETAILS
BRIDGE Nº LOR-80-1998
I-80 OVER S.R. 10 (LORAIN ROAD)

LORAIN COUNTY STA. 92+89.14 STA. 95+44.32

DESIGNED	DRAWN	TRACED	CHECKED	REVIEWED	DATE	REVISED
R.S.S.	R.T.		B.I.P.	G.W.M.	5/27/70	

MICROFILMED
JUL 19 1990

FED. RD. DIVISION	STATE	PROJECT	TYPE FUNDS
2	OHIO		

339/375

LORAIN COUNTY
LOR. - 80 - 480-0.00

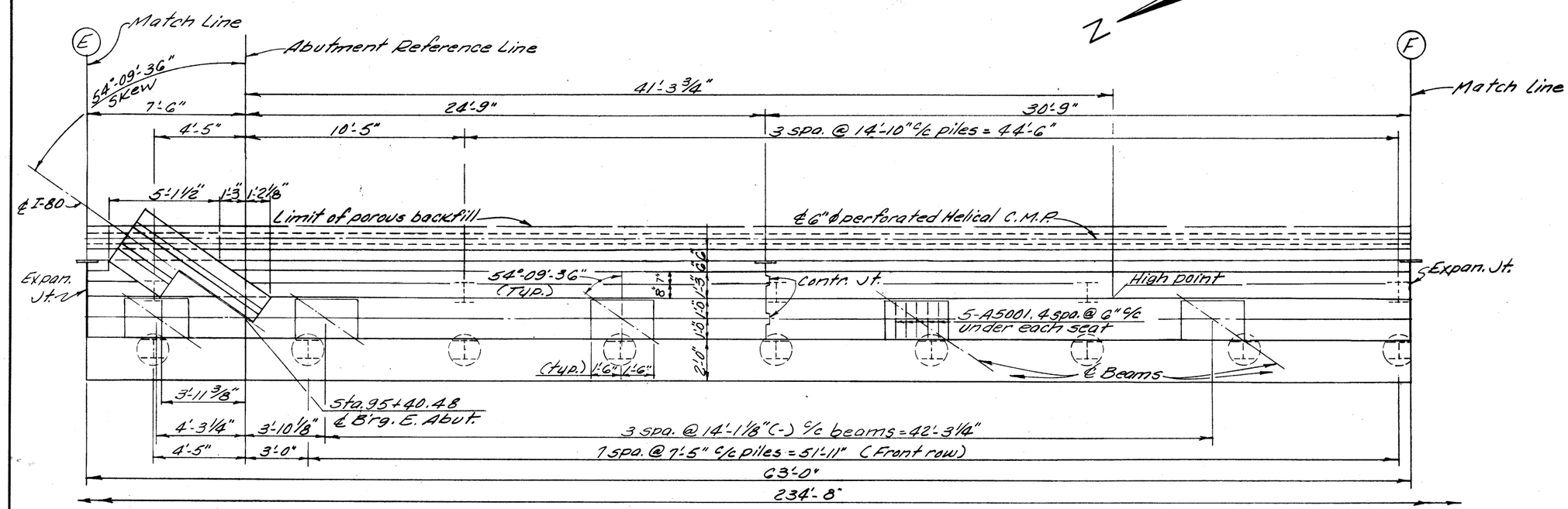

PLAN

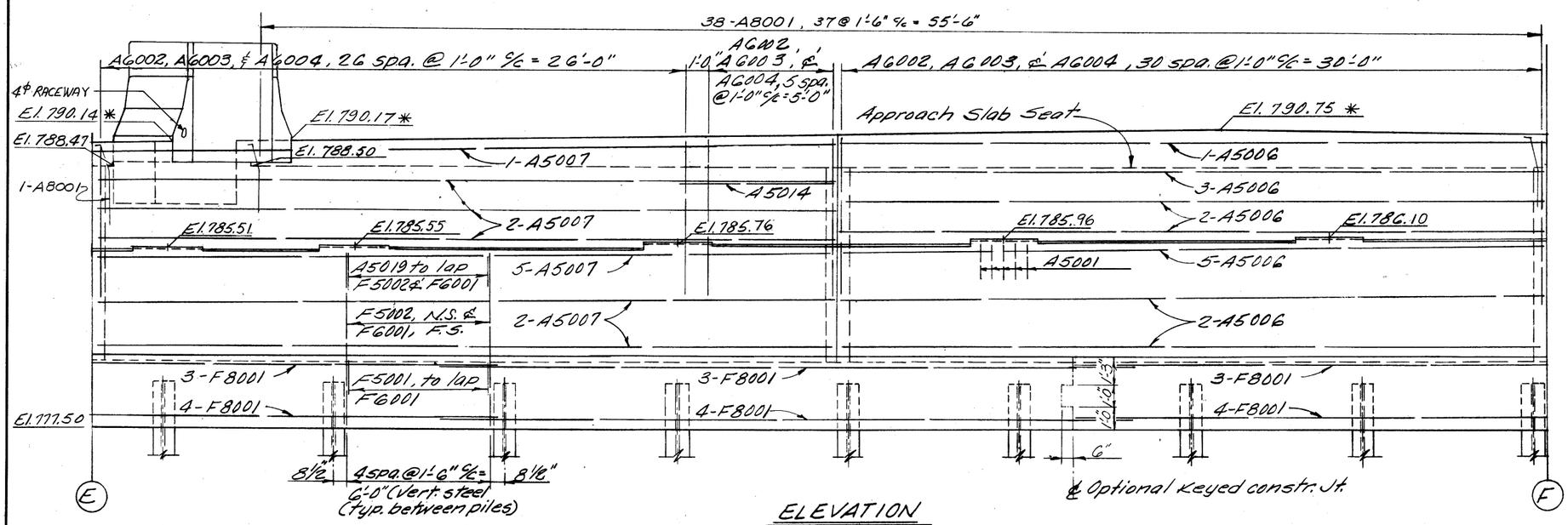

ELEVATION

Notes:

All piles are HP 10 x 42 - Piles
I indicates vertical piles
(1) indicates piles battered 1:4

In reinforcing bar callouts, N.S. indicates near side. F.S. indicates far side.

* Elevations shown thus are pavement elevations at the face of backwall and the point indicated.

For additional notes see Sht. 4/24

The shape of the median on the abutment shall match the shape of the median on the superstructure.
For Details of abutment median see Sht. 12/24

10/24

ALDEN E. STILSON & ASSOCIATES, LIMITED
CONSULTING ENGINEERS
CLEVELAND, OHIO COLUMBUS, OHIO WHEELING, W. VA.

EAST ABUTMENT DETAILS
BRIDGE No. LOR-80-1998
I-80 OVER S.R. 10 (LORAIN ROAD)
LORAIN COUNTY STA. 92+89.14 STA. 95+44.32

DESIGNED	DRAWN	TRACED	CHECKED	REVIEWED	DATE	REVISED
R.S.S.	R.T.		B.I.P.	G.W.M.	5/21/10	

FED. RD. DIVISION	STATE	PROJECT	TYPE FUNDS
2	OHIO		

340
375

LORAIN COUNTY
LOR. - 480-000

MICROFILMED
JUL 19 1990

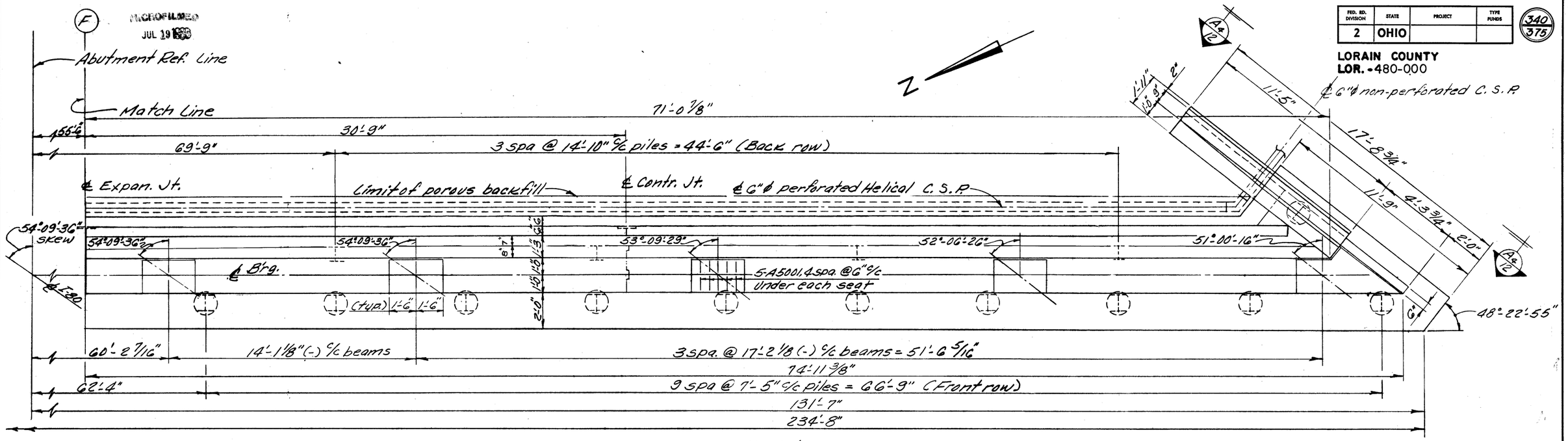

Notes:

All piles are HP 10 x 42 Piles
I indicates vertical piles.
(I) indicates piles battered 1:4

In reinforcing bar callouts, N.S. indicates near side. F.S. indicates far side.

* Elevations shown thus are pavement elevations at the face of backwall and the point indicated.

For additional notes see Sht. 4/24

11/24

ALDEN E. STILSON & ASSOCIATES, LIMITED
CONSULTING ENGINEERS
CLEVELAND, OHIO COLUMBUS, OHIO WHEELING, W. VA.

EAST ABUTMENT DETAILS

BRIDGE № LOR-80-1998

I-80 OVER S.R. 10 (LORAIN ROAD)

LORAIN COUNTY STA. 92+89.14 STA. 95+44.32

DESIGNED	DRAWN	TRACED	CHECKED	REVIEWED	DATE	REVISED
R.S.S.	R.T.		B.I.P.	G.W.M.	5/27/70	

MICROFILMED
JUL 19 1990

FED. RD. DIVISION	STATE	PROJECT	TYPE FUNDS
2	OHIO		

LORAIN COUNTY
LOR.-480-0.00

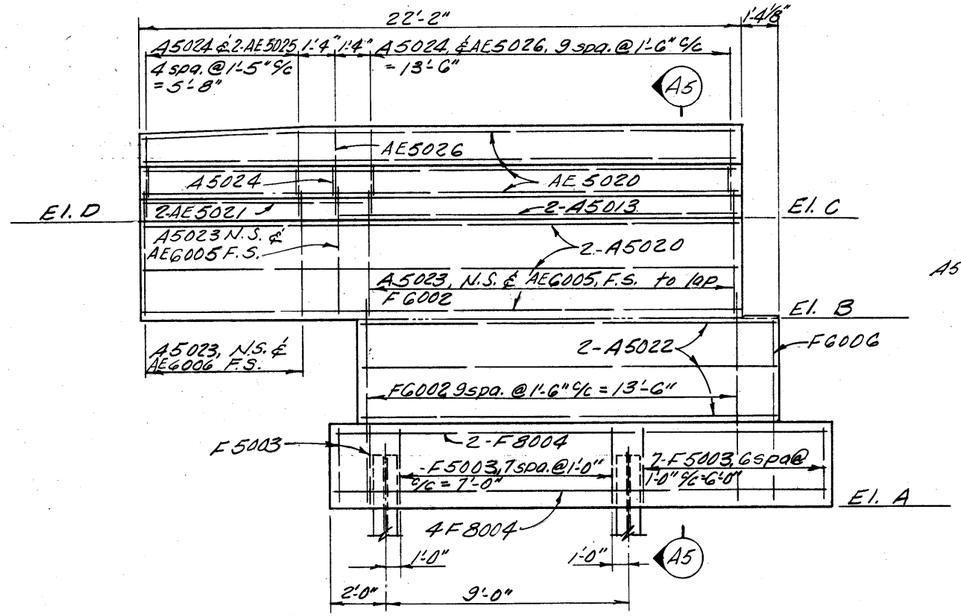

ELEVATION A-3 A-3 Sht. 4/24 & 8/24

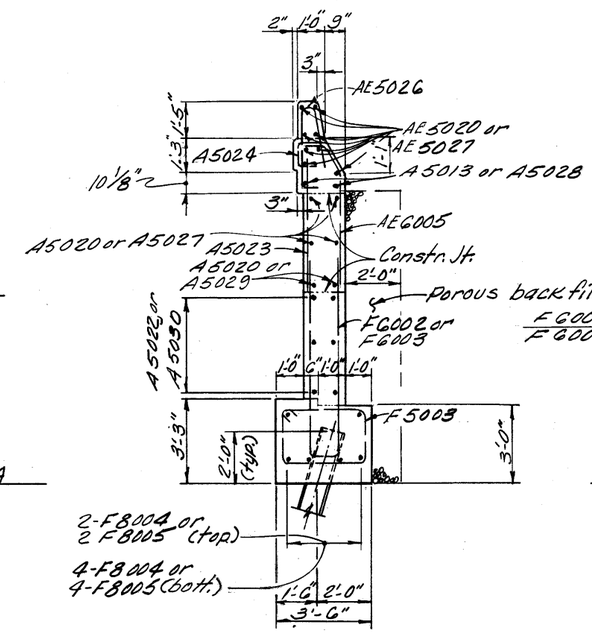

SECTION A-5 A-5

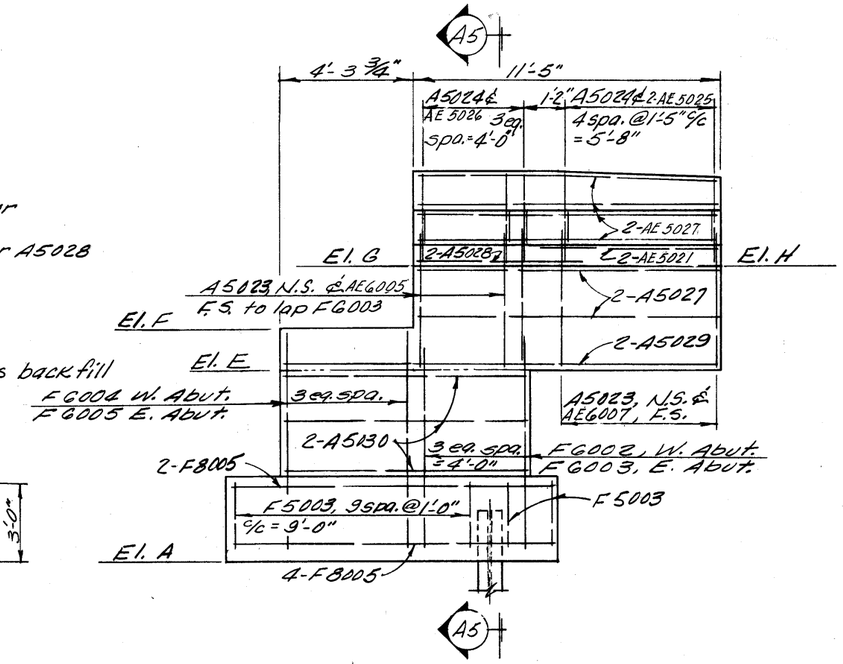

ELEVATION A4-A4 Sht. 7/24 & 11/24

TABLE OF ELEVATIONS								
Location	El. A	El. B	El. C	El. D	El. E	El. F	El. G	El. H
West Abutment	779.00	786.03	789.91	789.85	786.06	787.78	789.95	789.98
East Abutment	777.50	784.58	788.45	788.24	785.62	787.08	789.49	789.42

NOTES:

In reinforcing bar callouts:
N.S. indicates near side
F.S. indicates far side

For additional notes see Sht. 4/24

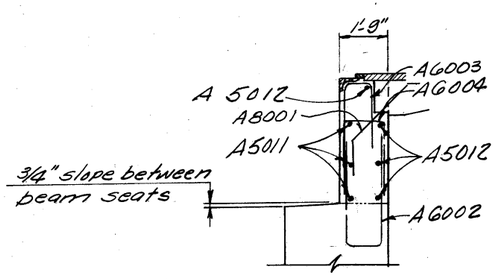

SECTION A1-A1
Details not shown same as Section A2-A2

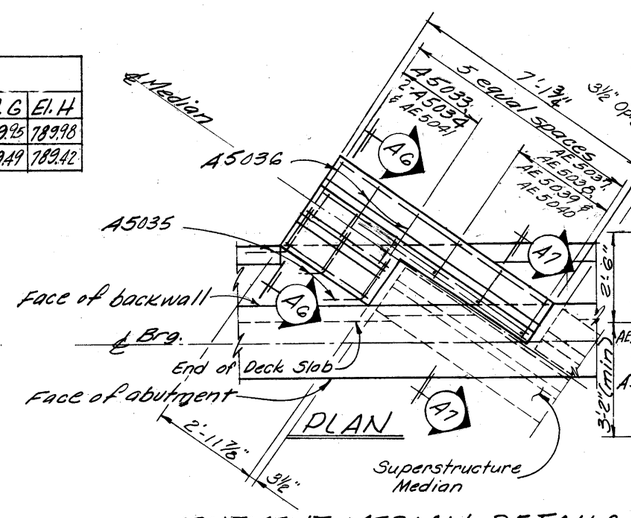

ABUTMENT MEDIAN DETAILS

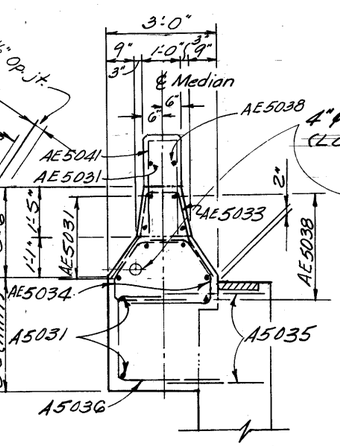

SECTION A6-A6

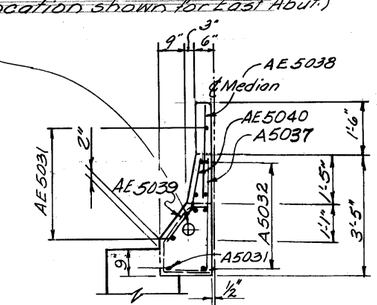

SECTION A7-A7

12/24

ALDEN E. STILSON & ASSOCIATES, LIMITED
CONSULTING ENGINEERS
CLEVELAND, OHIO COLUMBUS, OHIO WHEELING, W. VA.

ABUTMENT DETAILS
BRIDGE № LOR-80-1998
I-80 OVER S.R. 10 (LORAIN ROAD)
LORAIN COUNTY STA. 92+89.14 STA. 95+44.32

DESIGNED	DRAWN	TRACED	CHECKED	REVIEWED	DATE	REVISED
R.S.S.	R.T.		B.I.P.	G.W.M.	3/21/90	

MICROFILMED
JUL 19 1990

FED. RD. DIVISION	STATE	PROJECT	TYPE FUNDS
2	OHIO		

342/375

LORAIN COUNTY
LOR.-480-0.00

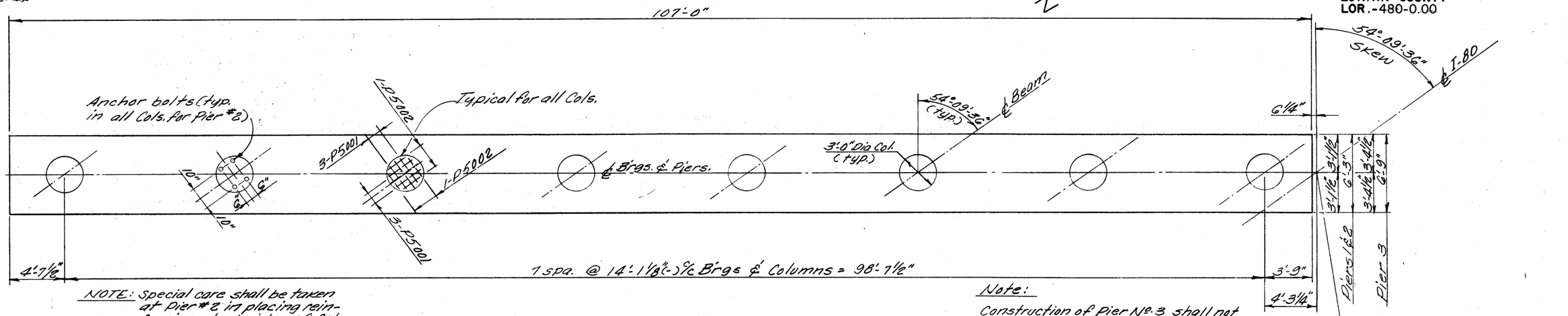

NOTE: Special care shall be taken at Pier #2 in placing reinforcing steel in top of Column so as to avoid interference with the drilling of anchor bar holes or the pre-setting of bearing anchors.

Bearing Anchors: At the option of the Contractor, bearing anchors (or formed holes), located and supported by templates, may be cast in place.

Note:
Construction of Pier No. 3 shall not commence until roadway embankment has been completed to subgrade elevation.

℄ Brgs. Pier #1 Sta. 93+43.98
℄ Brgs. Pier #2 Sta. 94+16.73
℄ Brgs. Pier #3 Sta. 94+89.48

PLAN

TABLE OF ELEVATIONS									
	El. A	El. B	El. C	El. D	El. E	El. F	El. G	El. H	El. J
Pier No. 1	785.55	785.72	785.89	786.06	786.22	786.20	786.10	785.99	762.08
Pier No. 2	785.07	785.27	785.46	785.65	785.83	785.83	785.75	785.67	761.08
Pier No. 3	784.68	784.90	785.11	785.32	785.53	785.54	785.48	785.42	759.08

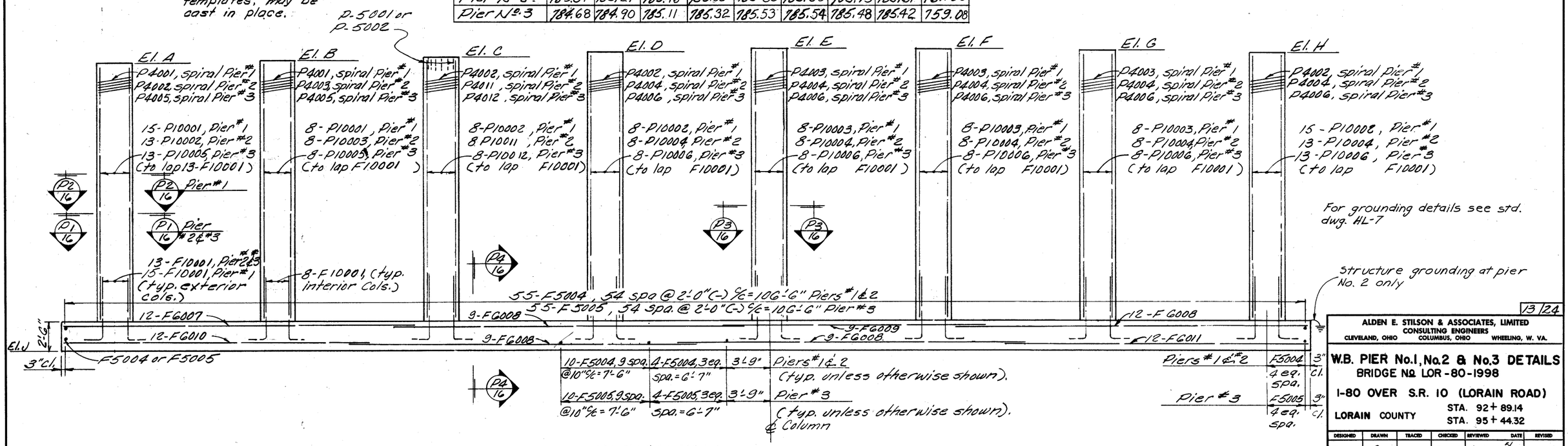

ELEVATION

13/24

ALDEN E. STILSON & ASSOCIATES, LIMITED
CONSULTING ENGINEERS
CLEVELAND, OHIO COLUMBUS, OHIO WHEELING, W. VA.

W.B. PIER No.1, No.2 & No.3 DETAILS
BRIDGE NO. LOR-80-1998
I-80 OVER S.R. 10 (LORAIN ROAD)
LORAIN COUNTY STA. 92+89.14 STA. 95+44.32

DESIGNED	DRAWN	TRACED	CHECKED	REVIEWED	DATE	REVISED
R.S.S.	R.T.		B.I.P.	G.W.M.	5/27/90	

MICROFILMED
JUL 19 1990

FED. RD. DIVISION	STATE	PROJECT	TYPE FUNDS
2	OHIO		

343/375

LORAIN COUNTY
LOR.-480-0.00

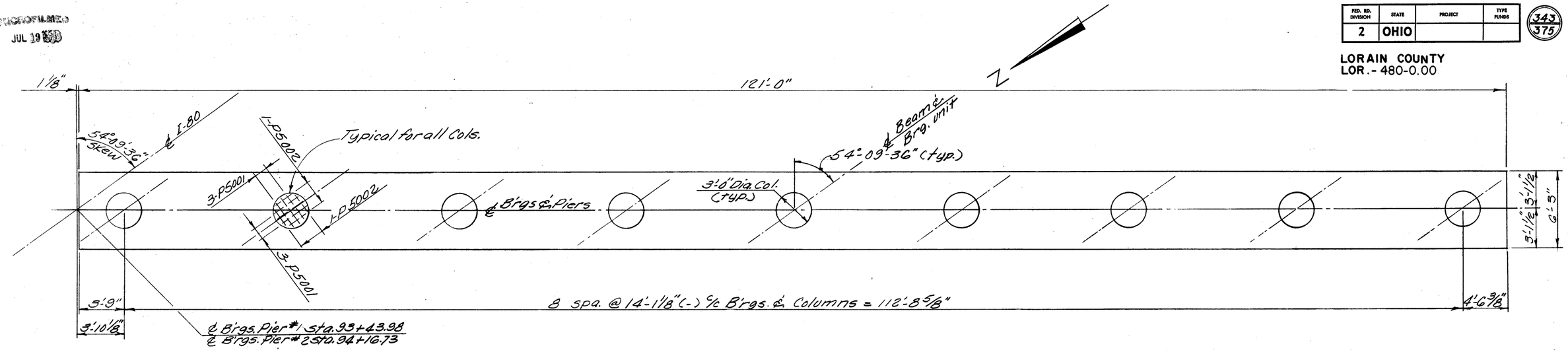

PLAN

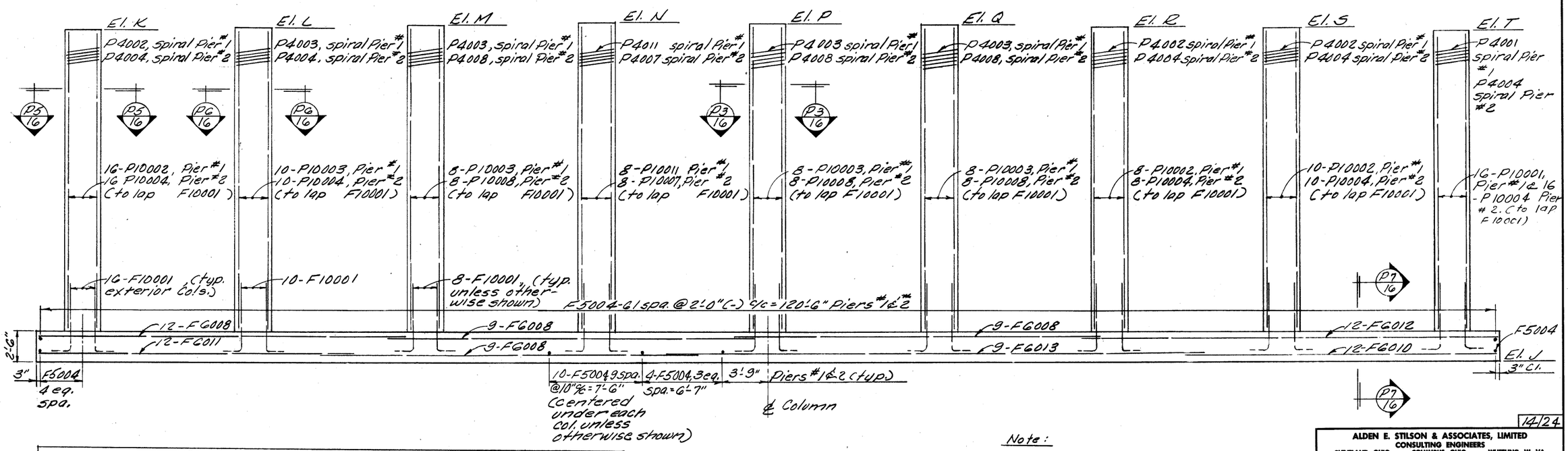

TABLE OF ELEVATIONS										
	El. K	El. L	El. M	El. N	El. P	El. Q	El. R	El. S	El. T	El. J
Pier No. 1	786.00	786.15	786.29	786.38	786.26	786.13	786.01	785.88	785.75	762.08
Pier No. 2	785.69	785.86	786.02	786.13	786.03	785.93	785.82	785.71	785.60	761.08

ELEVATION

Note:
For additional notes see sht. 13/24

14/24

ALDEN E. STILSON & ASSOCIATES, LIMITED
CONSULTING ENGINEERS
CLEVELAND, OHIO COLUMBUS, OHIO WHEELING, W. VA.

E.B. PIER No. 1 & No. 2 DETAILS
BRIDGE No. LOR-80-1998
I-80 OVER S.R. 10 (LORAIN ROAD)
LORAIN COUNTY STA. 92+89.14 STA. 95+44.32

DESIGNED	DRAWN	TRACED	CHECKED	REVIEWED	DATE	REVISED
R.S.S.	R.T.		B.I.P.	G.W.M.	5/27/70	

FED. RD. DIVISION	STATE	PROJECT	TYPE FUNDS
2	OHIO		

344/375

LORAIN COUNTY
LOR.-480-0.00

MICROFILMED JUL 19 1990

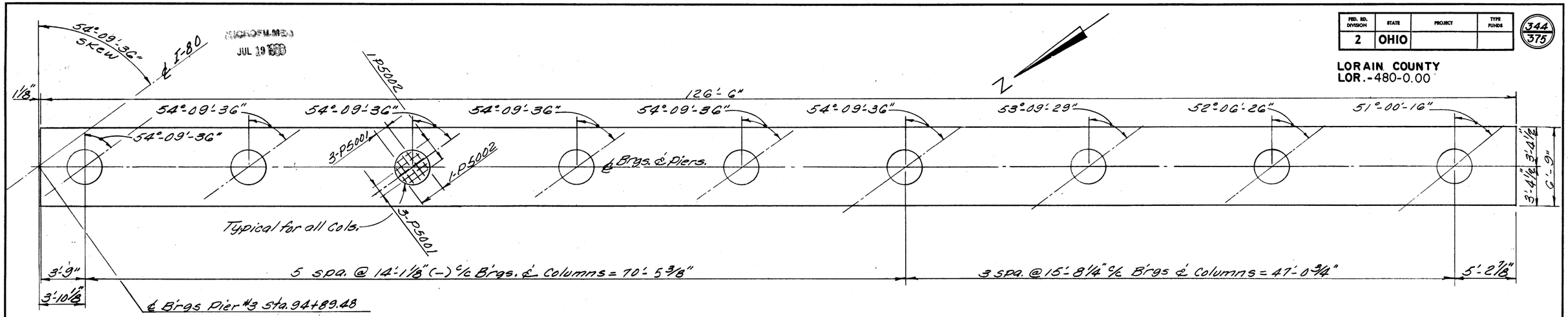

PLAN

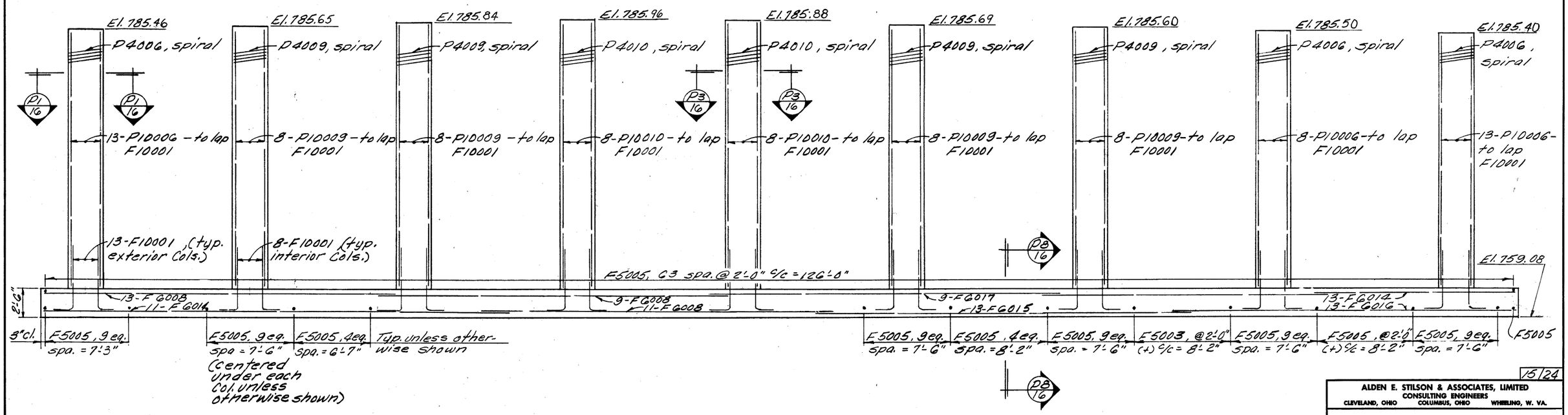

ELEVATION

15/24

ALDEN E. STILSON & ASSOCIATES, LIMITED
CONSULTING ENGINEERS
CLEVELAND, OHIO COLUMBUS, OHIO WHEELING, W. VA.

E.B. PIER No.3 DETAILS
BRIDGE Nº LOR-80-1998
I-80 OVER S.R. 10 (LORAIN ROAD)
LORAIN COUNTY STA. 92+89.14 STA. 95+44.32

DESIGNED	DRAWN	TRACED	CHECKED	REVIEWED	DATE	REVISED
R.S.S.	R.T.		B.I.P.	G.W.M.	5/26/70	

MICROFILMED
JUL 19 1990

FED. RD. DIVISION	STATE	PROJECT	TYPE FUNDS
2	OHIO		

345/375

LORAIN COUNTY
LOR.-480-0.00

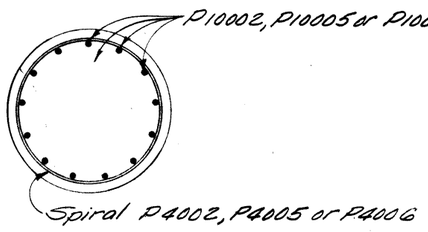

SECTION P1-P1

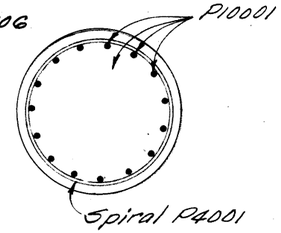

SECTION P2-P2

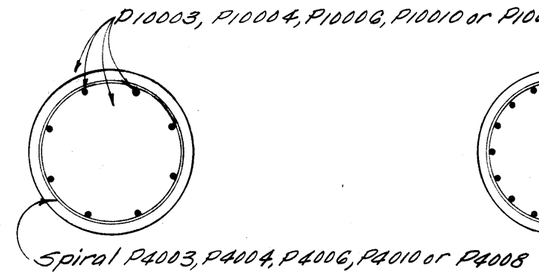

SECTION P3-P3

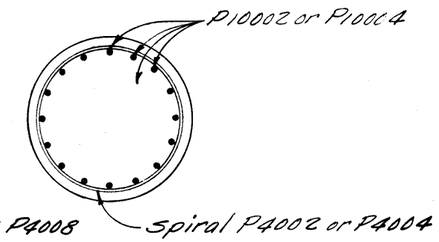

SECTION P5-P5

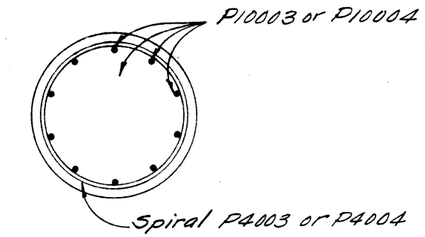

SECTION P6-P6

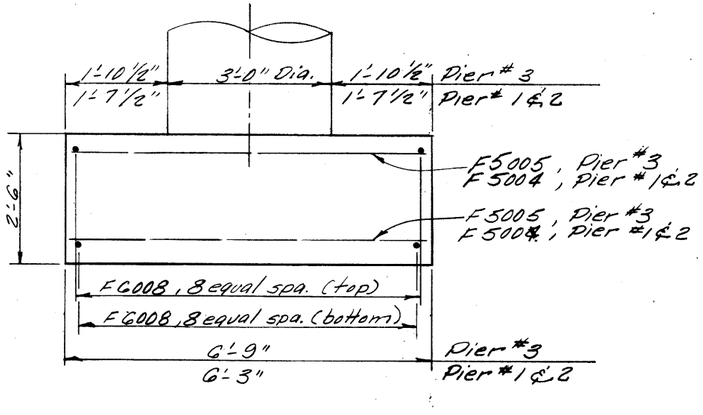

SECTION P4-P4

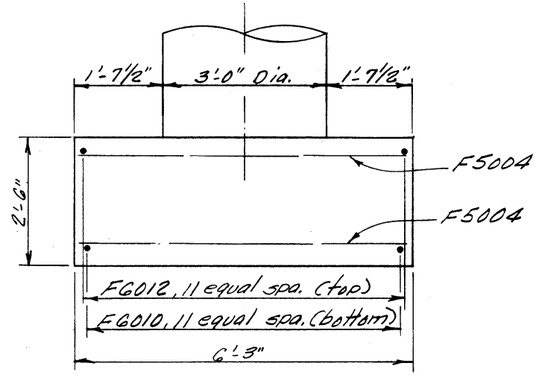

SECTION P7-P7

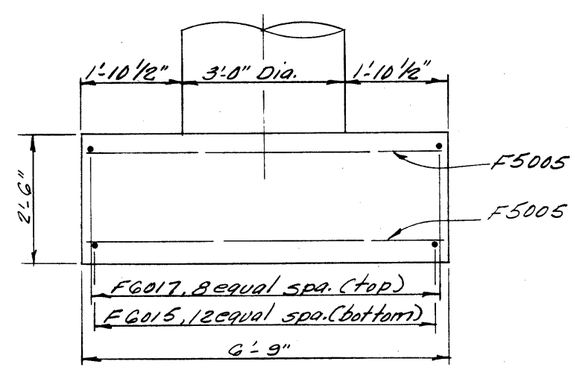

SECTION P8-P8

NOTE: Footing reinforcement shall be 3" clear from all surfaces.

16/24

ALDEN E. STILSON & ASSOCIATES, LIMITED
CONSULTING ENGINEERS
CLEVELAND, OHIO COLUMBUS, OHIO WHEELING, W. VA.

PIER DETAILS
BRIDGE NO. LOR-80-1998
I-80 OVER S.R. 10 (LORAIN ROAD)
LORAIN COUNTY STA. 92+89.14 STA. 95+44.32

DESIGNED	DRAWN	TRACED	CHECKED	REVIEWED	DATE	REVISED
R.S.S.	R.T.		B.I.P.	G.W.M.	9/21/70	

FED. RD. DIVISION	STATE	PROJECT	TYPE FUNDS
2	OHIO		

346 / 375

LORAIN COUNTY
LOR.-480-0.00

MICROFILMED
JUL 19 1999

NOTE: Each run of longitudinal reinforcing, unless otherwise shown, shall be as follows:
Top of slab and lower part of railing and median: 8-SE4001 & 1-SE4002 lapped a min. of 1'-3".
Bottom of slab: 8-S5012 & 1-S5013, lapped a min. of 1'-7".

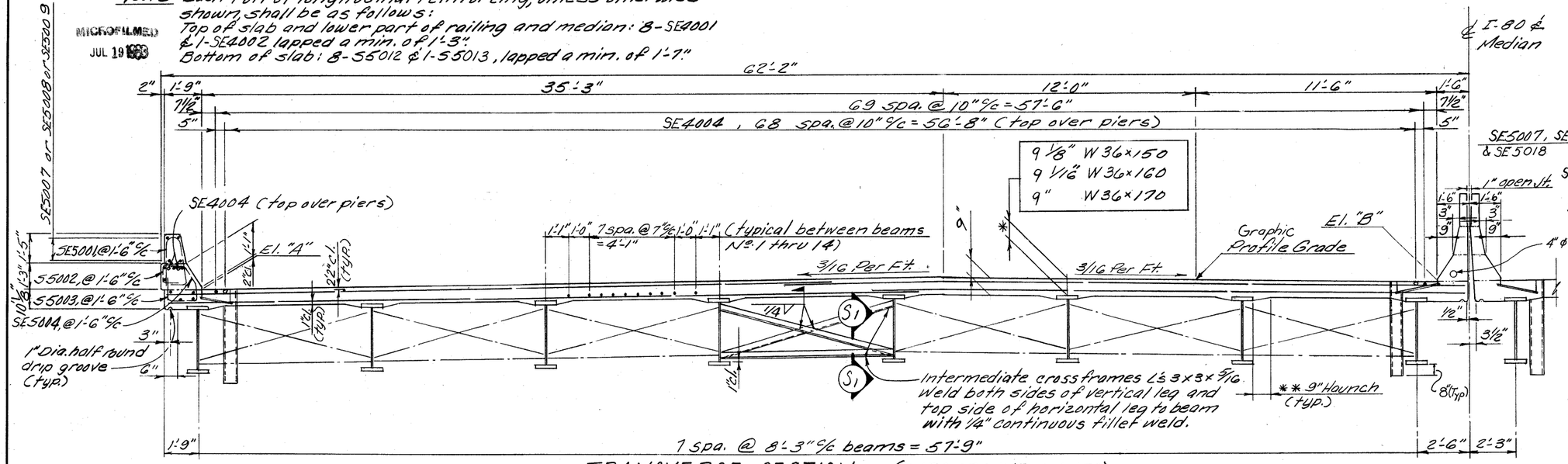

TRANSVERSE SECTION (WESTBOUND LANES)

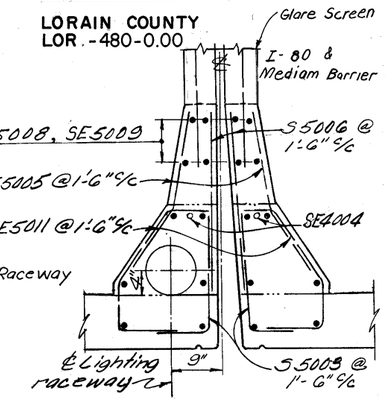

DETAIL S2

Blockout for the lighting raceway shall be increased from 4" ϕ to 8" ϕ for the first and last 3'-0" length of superstructure median to accommodate coupling and/or expansion devices.

For Detail of Glare Screen, See sh. 19/24

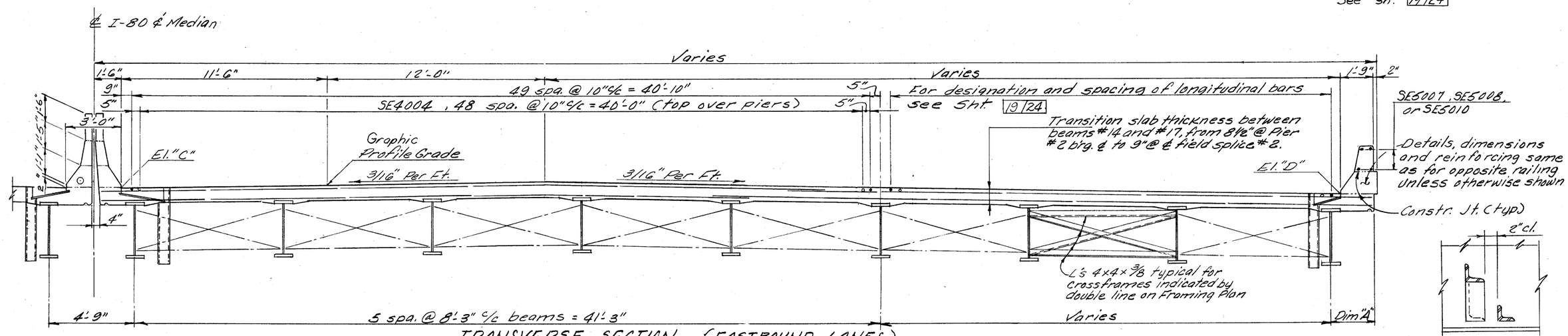

TRANSVERSE SECTION (EASTBOUND LANES)

SECTION S1-S1

Notes:

For scupper details see STD. DWG. SD-1-69

For End Dam details see sht. #354

* Deck slab depth: The distance shown from the top of deck slab to top of steel beam is the design dimension. The quantity of deck concrete to be paid for shall be based on this dimension, even though deviation from it may be necessary because the top flange of the beam may not have the exact camber or conformation required to place it parallel to the finished grade.

** A haunch width of 9" shall be used for computing quantity of concrete. However, the haunch width may vary between 6" and 12" provided that the slope shall be not more than 1:4 for a haunch less than 9" in width.

For transverse slab reinforcing see Sht. 18/24 & 19/24

Concrete and reinforcing steel for parapets and median barrier shall be included for payment with their respective items, Item 511 Superstructure Concrete and Item 509 reinforcing steel.

Longitudinal reinforcing steel shall be field cut as necessary to avoid interference with scuppers.

Steel Erection: During the erection of end dams and crossframes care shall be taken to insure that stringers, bearing parts and bridge seats remain in bearing contact.

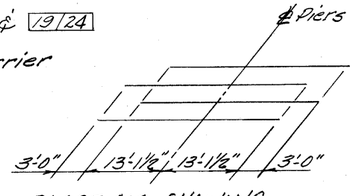

DIAGRAM SHOWING STAGGER OF SE4004, BARS OVER PIERS.

SLAB CANTILEVERS	
Location	Dim. "A"
℄ Brg. W. Abut.	
Span #2 - 0.50 Pt.	1'-9"
" " 0.75 Pt.	1'-9 3/8"
℄ Brg. Pier #2	1'-11 1/8"
Span #3 - F.S. #2	2'-3 7/8"
" " 0.50 Pt.	1'-11 1/8"
" " F.S. #3	1'-9 3/4"
℄ Brg. Pier #3	1'-10 1/8"
Span #4 - 0.25 Pt.	2'-0"
" " 0.50 Pt.	2'-2 5/8"
" " 0.75 Pt.	2'-6 3/4"
℄ Brg. E. Abut.	3'-0"

17/24

ALDEN E. STILSON & ASSOCIATES, LIMITED
CONSULTING ENGINEERS
CLEVELAND, OHIO COLUMBUS, OHIO WHEELING, W. VA.

SUPERSTRUCTURE DETAILS
BRIDGE No. LOR-80-1998
I-80 OVER S.R. 10 (LORAIN ROAD)
LORAIN COUNTY STA. 92 + 89.14 STA. 95 + 44.32

DESIGNED	DRAWN	TRACED	CHECKED	REVIEWED	DATE	REVISED
R.S.S.	R.T.		B.I.P.	G.W.M.	5/23/70	

MICROFILMED
JUL 19 1990

FED. RD. DIVISION	STATE	PROJECT	TYPE FUNDS
2	OHIO		

347/375

LORAIN COUNTY
LOR - 480-0.00

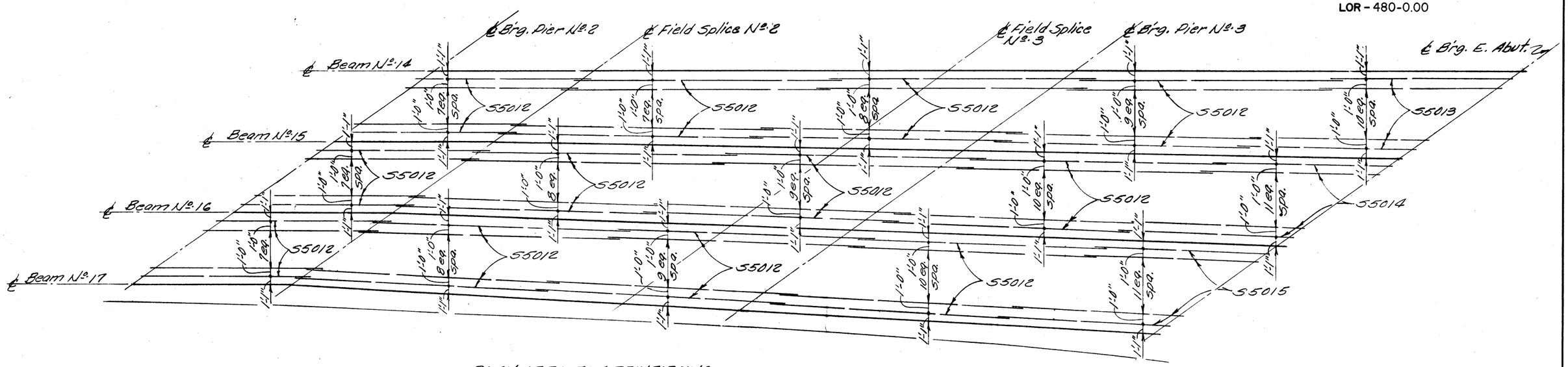

PLAN OF BOTTOM REINFORCING

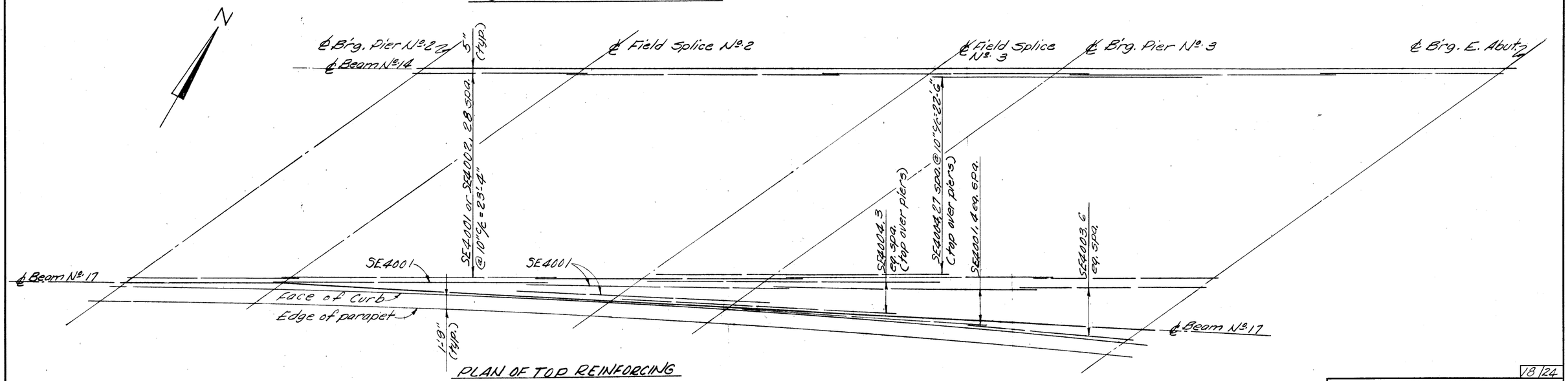

PLAN OF TOP REINFORCING

NOTE: Each run of longitudinal reinforcing shall be as follows:
Top of slab, 8-SE4001 & 1-SE4002 or SE4003 lapped a min. of 1'-3"
Bottom of slab, 8-S5012 & 1-S5013, S5014 or S5015 lapped a min of 1'-7"

LONGITUDINAL SLAB REINFORCING (Between beams #14 thru #17)

18/24

ALDEN E. STILSON & ASSOCIATES, LIMITED
CONSULTING ENGINEERS
CLEVELAND, OHIO COLUMBUS, OHIO WHEELING, W. VA.

SUPERSTRUCTURE DETAILS

BRIDGE No LOR-80-1998

I-80 OVER S.R. 10 (LORAIN ROAD)

LORAIN COUNTY STA. 92+89.14 STA. 95+44.32

DESIGNED	DRAWN	TRACED	CHECKED	REVIEWED	DATE	REVISED
R.S.S.	R.T.		S.I.P.	G.W.M.	9/28/70	

MICROFILMED
JUL 19 1990

FED. RD. DIVISION	STATE	PROJECT	TYPE FUNDS
2	OHIO		

348/375

LORAIN COUNTY
LOR.-480-0.00

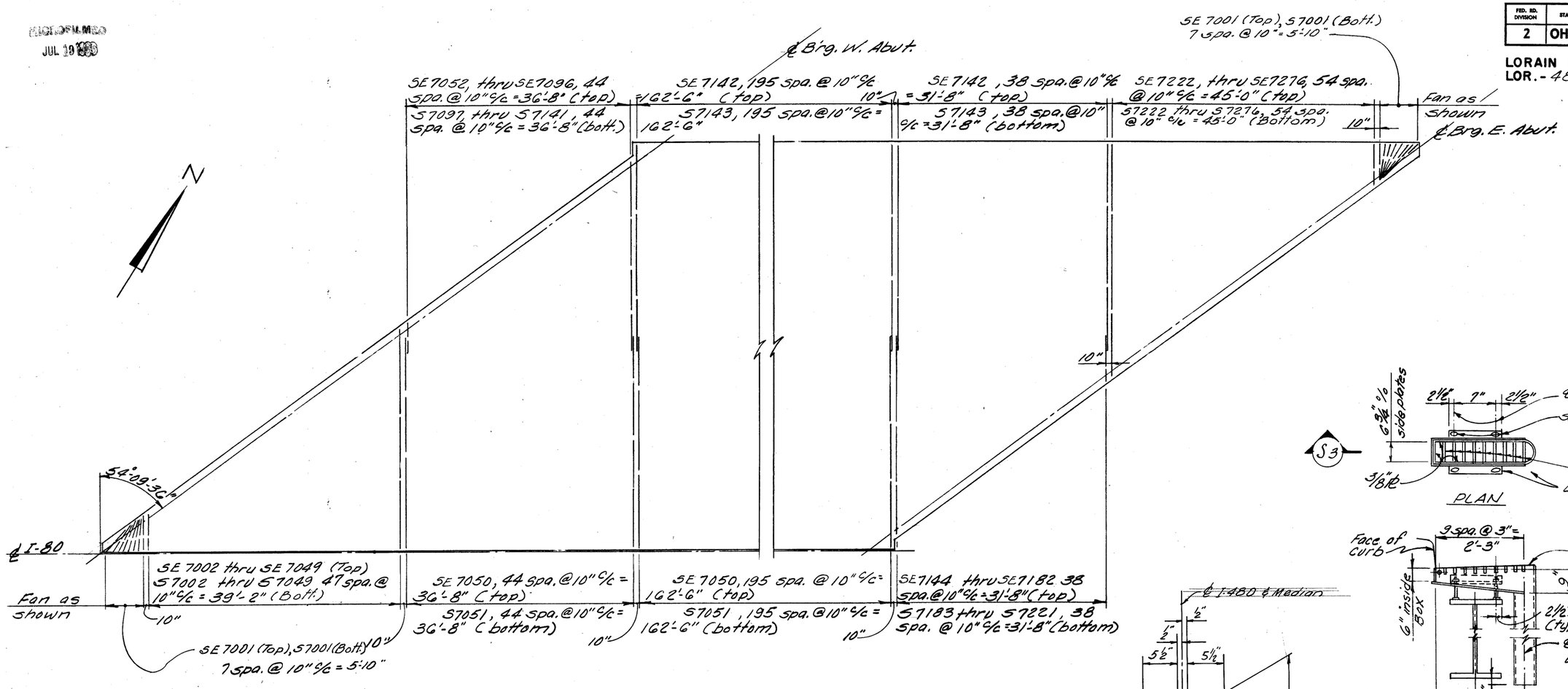

TRANSVERSE SLAB REINFORCING (WEST BOUND LANES)

Note: Transverse slab reinforcing bars shall be placed normal to ℄ of I-80 except at acute corner of slab.

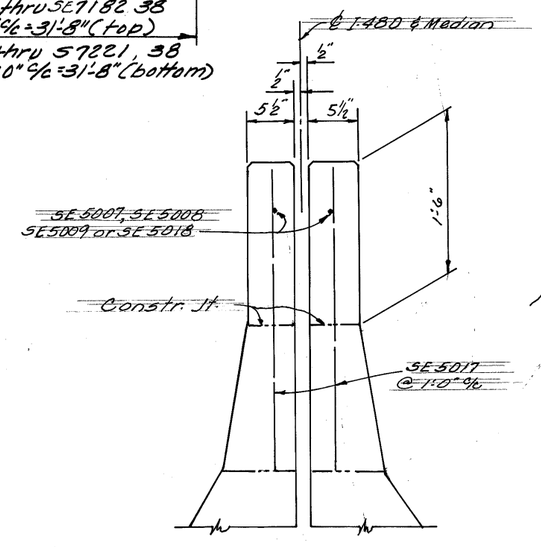

MEDIAN BARRIER WITH GLARE SCREW

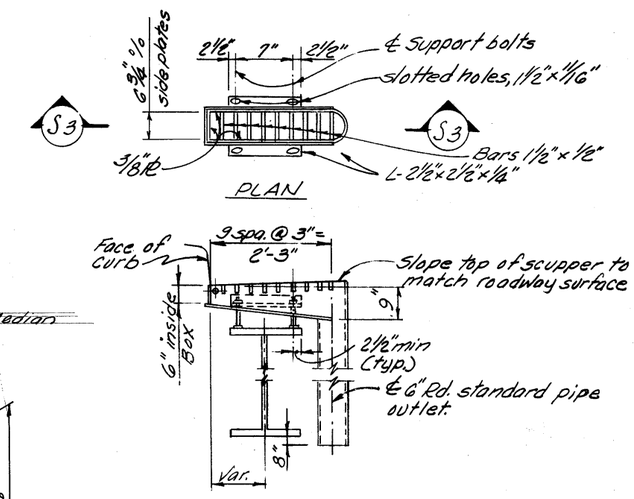

SECTION S3-S3

TYPE 3 SCUPPER DETAIL

Notes. For additional scupper details see Std. Dwg. SD-1-69 Sht. 3

For scupper spacing see General Plan Sht. 3/24

19/24

ALDEN E. STILSON & ASSOCIATES, LIMITED
CONSULTING ENGINEERS
CLEVELAND, OHIO COLUMBUS, OHIO WHEELING, W. VA.

SUPERSTRUCTURE DETAILS

BRIDGE No. LOR-80-1998

I-80 OVER S.R. 10 (LORAIN ROAD)

LORAIN COUNTY STA. 92+89.14 STA. 95+44.32

DESIGNED	DRAWN	TRACED	CHECKED	REVIEWED	DATE	REVISED
R.S.S.	R.T.		B.I.P.	G.W.M.	3/22/70	

MICROFILMED
JUL 19 1990

FED. RD. DIVISION	STATE	PROJECT	TYPE FUNDS
2	OHIO		

LORAIN COUNTY
LOR.-480-0.00

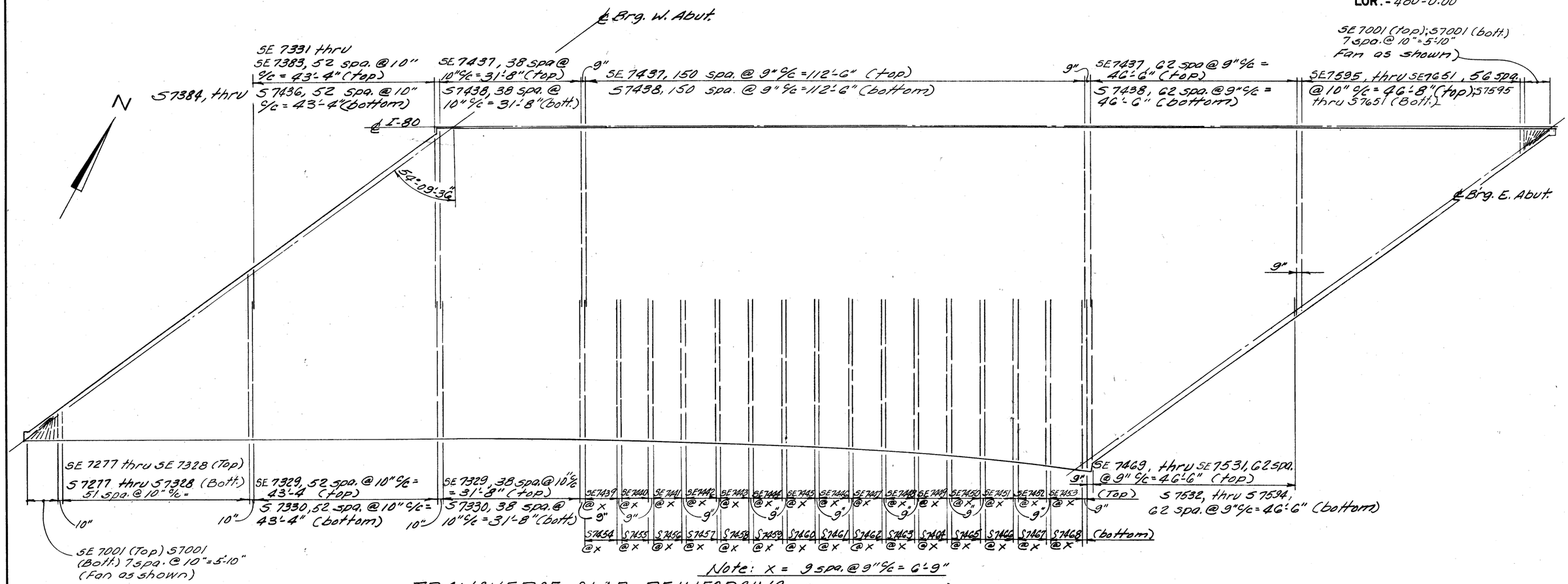

Note: x = 9 spa. @ 9" ℄ = 6'-9"

TRANSVERSE SLAB REINFORCING (EAST BOUND LANES)

Note: Transverse slab reinforcing bars shall be placed normal to ℄ of I-80 except at acute corner of slab.

20/24

ALDEN E. STILSON & ASSOCIATES, LIMITED
CONSULTING ENGINEERS
CLEVELAND, OHIO COLUMBUS, OHIO WHEELING, W. VA.

SUPERSTRUCTURE DETAILS
BRIDGE Nº LOR-80-1998
I-80 OVER S.R. 10 (LORAIN ROAD)
LORAIN COUNTY STA. 92+89.14 STA. 95+44.32

DESIGNED	DRAWN	TRACED	CHECKED	REVIEWED	DATE	REVISED
R.S.S.	R.T.		B.I.P.	G.W.M.	5/24/70	

MICROFILMED
JUL 19 1993

FED. RD. DIVISION	STATE	PROJECT	TYPE FUNDS
2	OHIO		

350/375

LORAIN COUNTY
LOR.-480-0.00

FIELD SPLICE DETAIL

FIELD SPLICE Nº 1, BEAM Nº 1 thru 17
FIELD SPLICE Nº 3, BEAM Nº 1 thru 13

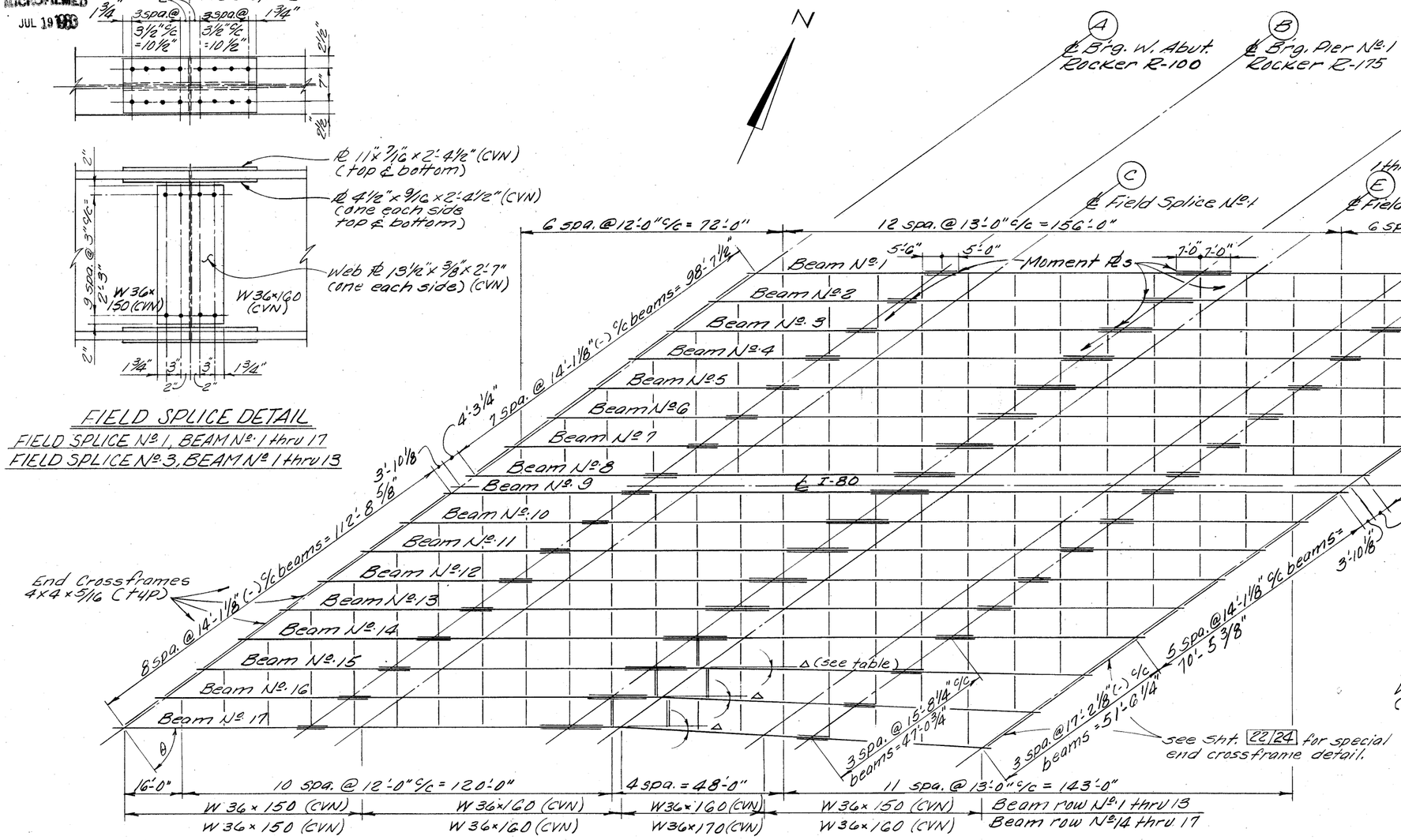

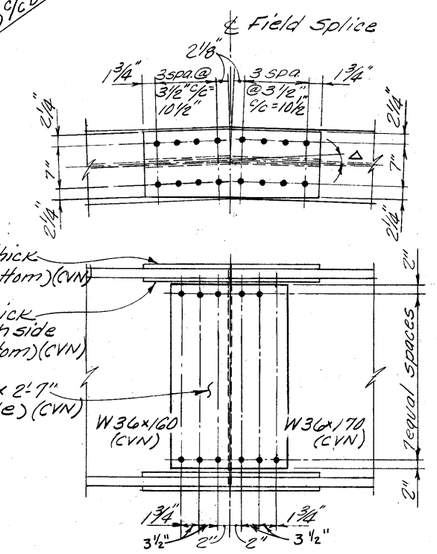

FIELD SPLICE DETAIL

FIELD SPLICE #2 & 3, BEAM Nº 14 thru 17

Note: For Field Splice Nº 2 Beam Nº 1 thru 13 see Std Dwg. SD-1-69 Sht. 4 of 4

FRAMING PLAN

Notes:

1" Ø High strength bolts shall be used at field splices. Boltheads shall be placed on fascia side of exterior beam web and bottom side of bottom flange. Bolts shall conform to A-325 steel.

Crossframes may be shifted if necessary to avoid field splice.

Crossframes shall be placed normal to beam lines 1 thru 16

TABLE OF MOMENT PL SIZES			
Location	Beam Nº	Top PL	Bott PL
Pier Nº 1	1 thru 17	10½ x 7/16	13½ x ½
Pier Nº 2	1 thru 17	10½ x 11/16	13½ x ½
Pier Nº 3	1 thru 13	10½ x 7/16	13½ x ½
Pier Nº 3	14 thru 17	10½ x ½	13½ x ½

Top Moment Plates shall be (CVN)

TABLE OF DEFLECTION ANGLES & BEAM LENGTHS

Bearing Point or Splice Point			Beam Row Nº 1 thru 14	Beam Row Nº 15	Beam Row Nº 16	Beam Row Nº 17
A	θ		54°-09'-36"	54°-09'-36"	54°-09'-36"	54°-09'-36"
	Length	Ⓐ Ⓑ	51'-0"	51'-0"	51'-0"	51'-0"
B	△		00°-00'-00"	00°-00'-00"	00°-00'-00"	00°-00'-00"
	Length	Ⓑ Ⓒ	14'-6"	14'-6"	14'-6"	14'-6"
C	△		00°-00'-00"	00°-00'-00"	00°-00'-00"	00°-00'-00"
	Length	Ⓒ Ⓓ	58'-3"	58'-3"	58'-3"	58'-3"
D	△		00°-00'-00"	00°-00'-00"	00°-00'-00"	00°-00'-00"
	Length	Ⓓ Ⓔ	18'-0"	18'-0"	18'-0"	18'-0"
E	△		00°-00'-00"	01°-00'-07"	02°-03'-10"	03°-09'-20"
	Length	Ⓔ Ⓕ	40'-3"	39'-3 11/16"	38'-4½"	37'-5 7/16"
F	△		00°-00'-00"	00°-00'-00"	00°-00'-00"	00°-00'-00"
	Length	Ⓕ Ⓖ	14'-6"	14'-1 15/16"	13'-9⅞"	13'-5 15/16"
G	△		00°-00'-00"	00°-00'-00"	00°-00'-00"	00°-00'-00"
	Length	Ⓖ Ⓗ	51'-0"	49'-3⅝"	48'-7 7/16"	47'-5½"
H	θ		54°-09'-36"	53°-09'-29"	52°-06'-26"	51°-00'-16"

21/24

ALDEN E. STILSON & ASSOCIATES, LIMITED
CONSULTING ENGINEERS
CLEVELAND, OHIO COLUMBUS, OHIO WHEELING, W. VA.

SUPERSTRUCTURE DETAILS
BRIDGE Nº LOR-80-1998
I-80 OVER S.R. 10 (LORAIN ROAD)

LORAIN COUNTY STA. 92 + 89.14 STA. 95 + 44.32

DESIGNED	DRAWN	TRACED	CHECKED	REVIEWED	DATE	REVISED
R.S.S.	R.T.		B.I.P.	G.W.M.	5/23/70	

MICROFILMED
JUL 19 1990

FED. RD. DIVISION	STATE	PROJECT	TYPE FUNDS
2	OHIO		

351/375

LORAIN COUNTY
LOR-480-0.00

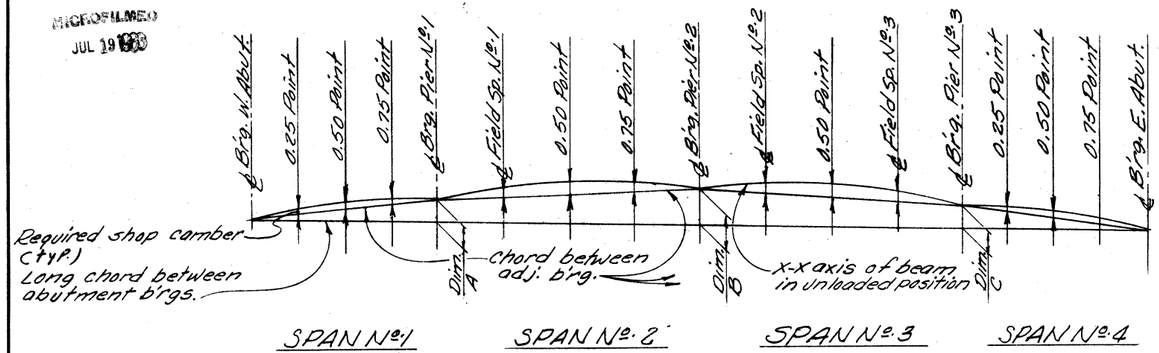

CAMBER & BLOCKING DIAGRAM

DEFLECTION AND CAMBER												
Location	SPAN No. 1			SPAN No. 2			SPAN No. 3			SPAN No. 4		
	0.25	0.50	0.75	F.S.#1	0.50	0.75	F.S.#2	0.50	F.S.#3	0.25	0.50	0.75
Deflection due to weight of steel	1/16	1/16	0	1/16	1/8	1/16	1/16	1/8	1/16	0	1/16	1/16
Deflection due to remaining dead load	3/16	3/16	1/16	3/16	3/8	3/16	3/16	3/8	3/16	1/16	3/16	3/16
Adjust req'd. for vertical curve	1/16	1/8	1/16	1/8	1/4	3/16	3/16	1/4	1/8	1/16	1/8	1/16
Required shop camber	5/16	3/8	1/8	3/8	3/4	7/16	7/16	3/4	3/8	1/8	3/8	5/16

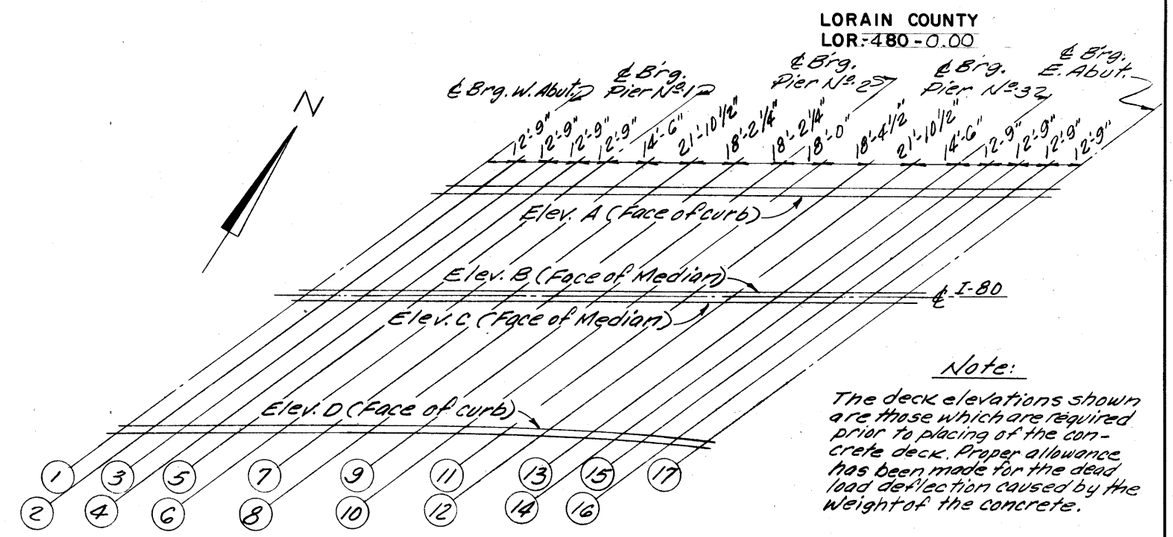

DECK ELEVATIONS

See Transverse Section sht. 17/24 for Elev. locations.

Note:

The deck elevations shown are those which are required prior to placing of the concrete deck. Proper allowance has been made for the dead load deflection caused by the weight of the concrete.

BLOCKING DIMENSIONS			
Beam No.	Dim. A	Dim. B	Dim. C
1 thru 14	1 9/16	2 3/8	1 9/16
15	1 9/16	2 7/16	1 9/16
16	1 5/8	2 9/16	1 5/8
17	1 11/16	2 11/16	1 11/16

TABLE OF DECK ELEVATIONS																	
LINE	1	2	3	4	5	6	7	8	9	10	11	12	13	14	15	16	17
ELEV. A	790.79	790.76	790.72	790.66	790.61	790.56	790.47	790.36	790.24	790.14	790.03	789.86	789.72	789.64	789.54	789.43	789.30
ELEV. B	791.10	791.10	791.09	791.06	791.03	791.01	790.97	790.90	790.82	790.76	790.68	790.56	790.46	790.39	790.32	790.23	790.13
ELEV. C	791.12	791.12	791.10	791.08	791.05	791.03	790.99	790.93	790.85	790.79	790.73	790.60	790.51	790.44	790.37	790.28	790.19
ELEV. D	790.75	790.78	790.80	790.80	790.81	790.82	790.83	790.81	790.77	790.75	790.72	790.64	790.57	790.53	790.48	790.42	790.35

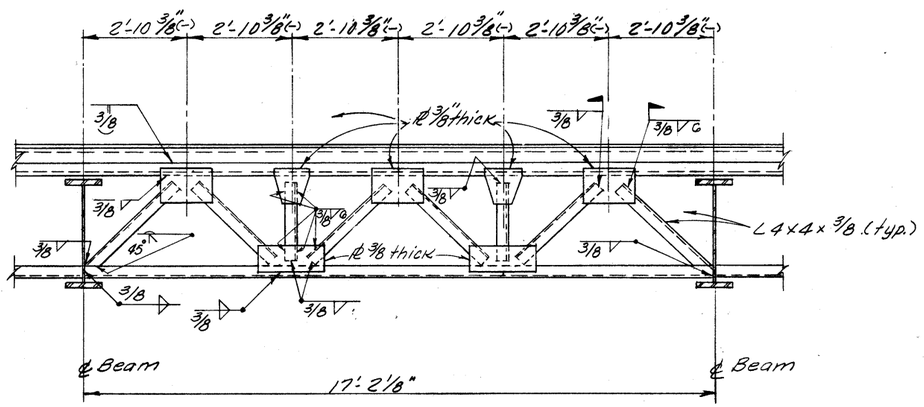

SPECIAL END CROSSFRAME

(For additional details see Std. Dwg. SD-1-69, Sht. #1)

Note:

Where "(CVN)" follows a shape or plate size designation, the material shall meet specified minimum notch toughness requirements.

SHOP DRAWINGS

After all steel fabrication is completed, the Fabricator shall furnish a 35 millimeter microfilm copy of each shop drawing mounted on a 3 1/4" x 7 3/8" aperture card. The card shall be imprinted with the bridge and project number, Fabricator's name, drawing number and details shown on the drawing (girders, beams, crossframes, etc.)

SCUPPERS: Steel bar stock utilized for scuppers may be any weldable grade of low or mild carbon steel available commercially. This material is to be excluded from the requirements of 501.07 for test reports.

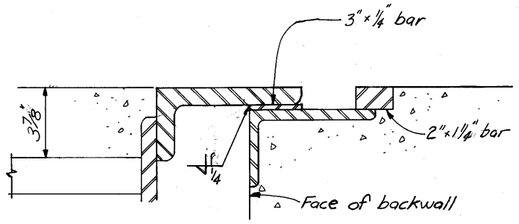

END DAM DETAIL

(See SD-1-69, sheet 1 of 4 for additional details

22/24

ALDEN E. STILSON & ASSOCIATES, LIMITED
CONSULTING ENGINEERS
CLEVELAND, OHIO COLUMBUS, OHIO WHEELING, W. VA.

SUPER STRUCTURE
BRIDGE No. LOR-80-1998
I-80 OVER S.R. 10 (LORAIN ROAD)
LORAIN COUNTY STA. 92 + 89.14 STA. 95 + 44.32

DESIGNED	DRAWN	TRACED	CHECKED	REVIEWED	DATE	REVISED
R.S.S.	R.T.		B.I.P.	G.W.M.	3/23/70	

MARK	NUM	LENGTH	WEIGHT	TYPE	A	B	C	D	E	NOTE
EPOXY COATED REINFORCING STEEL - ABUTMENTS										
AE5020	28	21-10	638	ST						
AE5021	8	7-5	62	ST						
AE5025	40	2-11	122	ST						
AE5026	30	6-4	198	19		2-5	3-2	0-8		
AE5027	24	11-1	277	ST						
AE5031	1-0	6-11	72	ST						
AE5033	6	5-11	37	20	0-3	0-9	0-11	1-5		
AE5034	12	3-11	49	15	1-6	0-8	0-11	0-9	0-9	
AE5038	18	2-8	50	ST						
AE5039	6	2-11	18	15	0-8	0-8	1-1	0-6	0-9	
AE5040	6	2-5	15	12	1-5	0-11		0-6		
AE5041	6	5-11	37	9	2-9	0-8	2-9	0	0	
AE6005	30	6-9	304	15		0-9	0-9	4-10	1-0	
AE6006	10	6-7	99	15		0-9	0-9	4-9	0-11	
AE6007	10	6-5	96	15		0-9	0-9	4-7	0-11	

MICROFILMED
JUL 19 1990

MARK	NUM.	LENGTH	WEIGHT	TYPE	A	B	C	D	E	NOTE
				ABUTMENTS						
A 5001	170	4-11	872	2	1- 6	2- 2	1- 6			
A 5002	169	7- 8	1351	2	2- 3	3- 5	2- 3			
A 5003	9	31- 3	293	ST						
A 5004	7	34- 0	248	ST						
A 5005	1	20-10	22	ST						
A 5006	100	30- 5	3172	ST						
A 5007	66	31-11	2197	ST						
A 5008	1	19- 0	20	ST						
A 5009	1	9- 0	9	ST						
A 5010	10	30- 9	321	ST						
A 5011	15	33- 3	520	ST						
A 5012	7	36- 5	266	ST						
A 5013	5	16- 0	83	ST						
A 5014	1	5- 6	6	ST						
A 5015	1	27- 3	28	ST						
A 5016	10	40- 0	417	ST						
A 5017	6	42- 9	268	ST						
A 5018	1	12- 0	13	ST						
A 5019	157	9- 2	1501	2	3- 0	3- 5	3- 0			
A 5022	12	15- 2	190	ST						
A 5023	50	4-10	252	ST						
A 5024	50	1- 9	91	2	0- 6	1- 0	0- 6			
A 5028	4	5- 3	22	ST						
A 5029	4	15-10	66	ST						
A 5030	12	8-11	112	ST						
A 5031	4	6-11	29	ST						
A 5032	8	5- 6	46	ST						
A 5035	6	3- 1	19	12	1- 4	0- 6	1- 6			
A 5036	6	7- 9	48	2	2- 9	2- 6	2- 9			
A 5037	6	3- 7	22	1	0-8	3-1				
A 6002	452	8- 3	5601	2	3- 7	1- 5	3- 7			
A 6003	452	9- 1	6167	2	4- 3	0-11	4- 3			
A 6004	452	7- 1	4809	2	3- 0	1- 5	3- 0			
A 8001	291	5- 6	4273	21	0- 6	3- 5	1- 1			
F 5001	326	8- 3	2805	2	1- 7	5- 4	1- 7			
F 5002	326	7- 0	2380	2	6- 6	0- 8				
F 5003	58	11- 1	670	3	3- 0	2- 3	3- 0	2- 3		
F 6001	326	14- 0	6855	2	6- 6	5- 4	2- 6			
F 6002	24	17- 8	637	2	8- 5	1- 2	8- 5			
F 6003	4	19- 8	118	2	9- 5	1- 2	9- 5			
F 6004	4	7- 6	45	ST						
F 6005	4	8- 6	51	ST						
F 6006	2	6- 6	20	ST						
F 8001	105	30- 0	8410	ST						
F 8002	7	31- 0	579	ST						
F 8003	7	14- 6	271	ST						

MARK	NUM.	LENGTH	WEIGHT	TYPE	A	B	C	D	E	NOTE
				ABUTMENTS				(CONTINUED)		
F 8004	12	18- 0	577	ST						
F 8005	12	11- 3	360	ST						
				PIERS						
P 4001	3	20-10	1176	17	NO.TURNS= 59		NO.SPACERS= 12			6
P 4002	7	21- 2	2752	17	NO.TURNS= 59		NO.SPACERS= 28			6
P 4003	8	21- 4	3193	17	NO.TURNS= 60		NO.SPACERS= 32			6
P 4004	10	21-10	4063	17	NO.TURNS= 61		NO.SPACERS= 40			6
P 4005	2	23- 0	853	17	NO.TURNS= 64		NO.SPACERS= 8			6
P 4006	8	23- 7	3516	17	NO.TURNS= 66		NO.SPACERS= 32			6
P 4007	1	22- 5	419	17	NO.TURNS= 63		NO.SPACERS= 4			6
P 4008	3	22- 1	1238	17	NO.TURNS= 62		NO.SPACERS= 12			6
P 4009	4	23-10	1783	17	NO.TURNS= 67		NO.SPACERS= 16			6
P 4010	2	24- 2	894	17	NO.TURNS= 67		NO.SPACERS= 8			6
P 4011	2	21- 8	811	17	NO.TURNS= 61		NO.SPACERS= 8			6
P 4012	1	23- 4	433	17	NO.TURNS= 65		NO.SPACERS= 4			6
P 5001	306	5- 1	1622	2	1- 6	2- 4	1- 6			
P 5002	204	1- 6	319	ST						
P10001	39	20-10	3496	ST						
P10002	78	21- 2	7104	ST						
P10003	66	21- 4	6059	ST						
P10004	105	21-10	9865	ST						
P10005	21	23- 0	2078	ST						
P10006	79	23- 7	8017	ST						
P10007	8	22- 5	772	ST						
P10008	24	22- 2	2289	ST						
P10009	32	23-10	3282	ST						
P10010	16	24- 2	1664	ST						
P10011	16	21- 8	1492	ST						
P10012	8	23- 4	803	ST						
F 5004	698	5- 9	4186	ST						
F 5005	359	6- 3	2340	ST						
F 6007	36	30-11	1672	ST						
F 6008	228	30- 3	10359	ST						
F 6009	27	21- 0	852	ST						
F 6010	60	26- 3	2366	ST						
F 6011	60	25- 9	2321	ST						
F 6012	24	35-10	1292	ST						
F 6013	18	44- 3	1196	ST						
F 6014	24	39-10	1436	ST						
F 6015	13	32- 7	636	ST						
F 6016	13	29- 6	576	ST						
F 6017	9	31- 9	429	ST						
F10001	492	6- 7	13937	2	5- 6	1- 5				
				SUPERSTRUCTURE						
S 5002	337	1- 9	615	2	0- 6	1- 0	0- 6			
S 5003	679	2- 0	1416	2	1- 6	0- 8				
S 5006	342	2- 6	892	ST						

FED. RD. DIVISION	STATE	PROJECT	TYPE FUNDS
2	OHIO		

352
375

LORAIN COUNTY
LOR-480-0.00

NOTES

1. INDICATES SERIES BAR. EACH BAR VARIES FROM ADJACENT BAR(S) BY TABULATED AMOUNT(S), CALCULATED TO NEAREST 1/8 INCH. WEIGHT SHOWN IS FOR ENTIRE SERIES UTILIZING AVERAGE LENGTH.
2. BARS INCLUDED WITH ITEM 517, RAILING, FOR PAYMENT.
3. COST OF FIELD BENDING SHALL BE INCLUDED WITH ITEM 509.
4. LIGHT POLE SUPPORT BARS INCLUDED WITH ITEM 509 FOR PAYMENT.
5. END PREPARATION AND FIELD WELDING INCLUDED WITH ITEM 509.
6. 'LENGTH' SHOWN FOR SPIRAL BARS IS DISTANCE FROM TOP OF FOOTING TO BOTTOM OF PIER CAP. 'NO. TURNS' SHOWN IS 'LENGTH' DIVIDED BY PITCH, PLUS 3 TURNS (NUMBER OF CLOSED COILS), EXPRESSED AS NEAREST WHOLE NUMBER.

1 1/2 CLOSED COILS SHALL BE PROVIDED AT ENDS OF EACH SPIRAL UNIT. FOUR STEEL CHANNEL, TEE OR ANGLE SPACERS, WEIGHING APPROXIMATELY 0.80 LB. PER LIN. FT. OF SPACER SHALL BE PROVIDED FOR EACH SPIRAL UNIT. THEY SHALL BE EQUALLY SPACED ALONG PERIPHERY OF COIL. WEIGHT OF SPACERS, AT 0.80 LB. PER LIN. FT. WILL BE PAID FOR AS REINFORCING STEEL AND IS INCLUDED IN TABULATED WEIGHT.

BAR DIMENSIONS ARE OUT TO OUT.

Refer to CMS Sections 106.03, 700, 709.01 through 709.05, and 709.08. Sufficient additional reinforcing steel shall be provided for sampling. Random samples shall be replaced in the structures by the additional steel, spliced in accordance with 509.08.

BAR SIZE DESIGNATION

BAR SIZE IS INDICATED IN THE BAR MARK. THE FIRST DIGIT WHERE FOUR DIGITS ARE USED, AND FIRST TWO DIGITS WHERE FIVE DIGITS ARE USED, INDICATE THE BAR SIZE NUMBER. FOR EXAMPLE, A7001 IS A NO. 7 SIZE BAR AND A10140 IS A NO. 10 SIZE.

BAR BENDING DIAGRAM TYPES

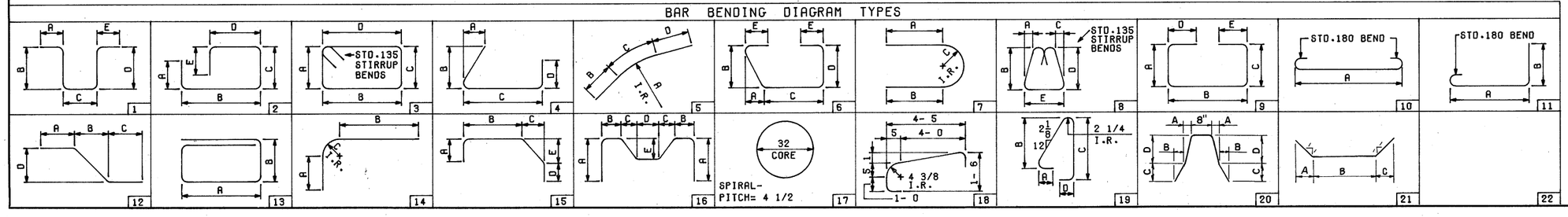

23/24

ALDEN E. STILSON & ASSOCIATES, LIMITED
CONSULTING ENGINEERS
CLEVELAND, OHIO COLUMBUS, OHIO WHEELING, W. VA.

REINFORCING STEEL LIST

BRIDGE No. LOR.-80-1998
I-80 OVER SR. 10 (LORAIN ROAD)

LORAIN COUNTY STA. 92+89.14
STA. 95+44.32

DESIGNED	DRAWN	TRACED	CHECKED	REVIEWED	DATE	REVISED
R.S.S.			B.I.P.	G.W.M.	5/28/70	

MICROFILMED
JUL 19 1990

MARK	NUM.	LENGTH	WEIGHT	TYPE	A	B	C	D	E	NOTE
				SUPERSTRUCTURE				(	CONTINUED)	
SE5010	28	6- 8	195	ST						
SE5011	342	2-11	1040	15	0- 8	0- 8	1- 1	0- 6	0- 9	
S 5012	1279	30- 0	40020	ST						
S 5013	139	21- 9	3153	ST						
S 5014	14	19- 3	281	ST						
S 5015	16	16- 9	280	ST						
S 5016	8	19- 9	165	ST						
S 7001	32	5- 6	360	ST						
S 7002	1	6- 0		ST						1
THRU			1987		VARY	LENGTH	BY	0- 7	1/ 4	
S 7049	1	34- 6		ST						1
S 7051	241	28- 2	13875	ST						
S 7097	1	9- 2		ST						1
THRU			2035		VARY	LENGTH	BY	0- 7	1/ 8	
S 7141	1	35- 1		ST						1
S 7143	235	35- 8	17132	ST						
S 7183	1	27- 7		ST						1
THRU			1299		VARY	LENGTH	BY	0- 7	1/ 8	
S 7221	1	5- 0		ST						1
S 7222	1	37-10		ST						1
THRU					VARY	LENGTH	BY	0- 7	1/ 8	
S 7276	1	6- 0	2464	ST						1
S 7277	1	7- 1		ST						1
THRU					VARY	LENGTH	BY	0- 7	3/ 8	
S 7328	1	38- 5	2418	ST						1
S 7330	92	36- 0	6770	ST						
S 7384	1	5- 0		ST						1
THRU			2248		VARY	LENGTH	BY	0- 7	1/ 4	
S 7436	1	36- 6		ST						1
S 7438	253	36- 6	18875	ST						
S 7454	10	36- 6		ST						1
THRU			12136		VARY	LENGTH	BY	0- 5	1/ 4	
S 7468	10	42- 8		ST						1
S 7532	1	42- 8		ST						1
THRU			3332		VARY	LENGTH	BY	0- 6	1/ 2	
S 7594	1	9- 1		ST						1
S 7595	1	42- 7		ST						1
THRU			2835		VARY	LENGTH	BY	0- 7	7/ 8	
S 7651	1	6- 1		ST						1

MARK	NUM.	LENGTH	WEIGHT	TYPE	A	B	C	D	E	NOTE
EPOXY	COATED	REINFORCING STEEL, SUPERSTRUCTURE								
SE5017	342	2-7	921	ST						
SE5018	8	19-10	165	ST						
SE7001	32	5-6	360	ST						
SE7002	1	6-0		ST						1
THRU			1987		VARY	LENGTH	BY	0-	7	
SE7049	1	34-6		ST						1
SE7050	241	32-4	15928	ST						
SE7052	1	5-0		ST						1
THRU			1652		VARY	LENGTH	BY	0-	7 1/8	
SE7096	1	30-11		ST						1
SE7142	235	31-6	15131	ST						
SE7144	1	31-9		ST						1
THRU			1631		VARY	LENGTH	BY	0-	7 1/8	
SE7182	1	9-2		ST						1
SE7222	1	37-10		ST						1
THRU			2464		VARY	LENGTH	BY	0-	7 1/8	
SE7276	1	6-0		ST						1
SE7277	1	7-1		ST						1
THRU			2418		VARY	LENGTH	BY	0-	7 3/8	
SE7328	1	38-5		ST						1
SE7329	92	31-10	5986	ST						
SE7331	1	5-0		ST						1
THRU			2474		VARY	LENGTH	BY	0-	8 1/4	
SE7383	1	40-8		ST						1
SE7437	253	40-8	21030	ST						
SE7439	10	32-4		ST						1
THRU			10859		VARY	LENGTH	BY	0-	5 1/4	
SE7453	10	38-6		ST						1
SE7469	1	38-6		ST						1
THRU			2801		VARY	LENGTH	BY	0-	6 1/2	
SE7531	1	5-0		ST						1
SE7595	1	42-7		ST						1
THRU			2835		VARY	LENGTH	BY	0-	7 1/8	
SE7651	1	6-1		ST						1
SE4001	1392	30-0	27896	ST						
SE4002	171	19-0	2170	ST						
SE4003	7	22-0	103	ST						
SE4004	464	29-3	9066	ST						
SE5001	337	5-4	1875	19	0-8	2-5	2-2			
SE5004	337	3-2	1113	15	0-8	0-8	1-1	0-9	0-9	
SE5005	342	2-5	862	12	1-5	0-11		0-6		
SE5007	136	15-8	2222	ST						
SE5008	180	7-2	1346	ST						
SE5009	126	6-5	843	ST						

FED. RD. DIVISION	STATE	PROJECT	TYPE FUNDS
2	OHIO		

353/375

LORAIN COUNTY
LOR-480-0.00

NOTES

1. INDICATES SERIES BAR. EACH BAR VARIES FROM ADJACENT BAR(S) BY TABULATED AMOUNT(S), CALCULATED TO NEAREST 1/8 INCH. WEIGHT SHOWN IS FOR ENTIRE SERIES UTILIZING AVERAGE LENGTH.
2. BARS INCLUDED WITH ITEM 517, RAILING, FOR PAYMENT.
3. COST OF FIELD BENDING SHALL BE INCLUDED WITH ITEM 509.
4. LIGHT POLE SUPPORT BARS INCLUDED WITH ITEM 509 FOR PAYMENT.
5. END PREPARATION AND FIELD WELDING INCLUDED WITH ITEM 509.
6. 'LENGTH' SHOWN FOR SPIRAL BARS IS DISTANCE FROM TOP OF FOOTING TO BOTTOM OF PIER CAP.
   'NO. TURNS' SHOWN IS 'LENGTH' DIVIDED BY PITCH, PLUS 3 TURNS (NUMBER OF CLOSED COILS), EXPRESSED AS NEAREST WHOLE NUMBER.

   1 1/2 CLOSED COILS SHALL BE PROVIDED AT ENDS OF EACH SPIRAL UNIT. FOUR STEEL CHANNEL, TEE OR ANGLE SPACERS, WEIGHING APPROXIMATELY 0.80 LB. PER LIN. FT. OF SPACER SHALL BE PROVIDED FOR EACH SPIRAL UNIT. THEY SHALL BE EQUALLY SPACED ALONG PERIPHERY OF COIL. WEIGHT OF SPACERS, AT 0.80 LB. PER LIN. FT. WILL BE PAID FOR AS REINFORCING STEEL AND IS INCLUDED IN TABULATED WEIGHT.

BAR DIMENSIONS ARE OUT TO OUT.

Refer to CMS Sections 106.03, 700, 709.01 through 709.05, and 709.08. Sufficient additional reinforcing steel shall be provided for sampling. Random samples shall be replaced in the structures by the additional steel, spliced in accordance with 509.08.

BAR SIZE DESIGNATION

BAR SIZE IS INDICATED IN THE BAR MARK. THE FIRST DIGIT WHERE FOUR DIGITS ARE USED, AND FIRST TWO DIGITS WHERE FIVE DIGITS ARE USED, INDICATE THE BAR SIZE NUMBER. FOR EXAMPLE, A7001 IS A NO. 7 SIZE BAR AND A10140 IS A NO. 10 SIZE.

BAR BENDING DIAGRAM TYPES

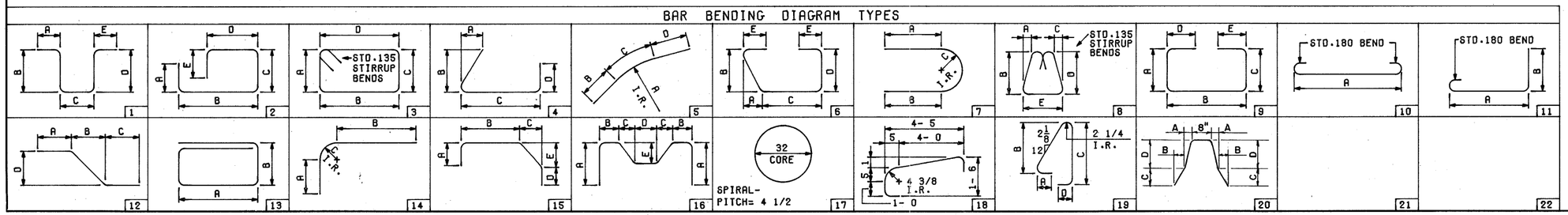

24/24

ALDEN E. STILSON & ASSOCIATES, LIMITED
CONSULTING ENGINEERS
CLEVELAND, OHIO COLUMBUS, OHIO WHEELING, W. VA.

REINFORCING STEEL LIST
BRIDGE Nº LOR.-80-1998
I-80 OVER SR. 10 (LORAIN ROAD)

LORAIN COUNTY STA. 92+89.14
STA. 95+44.32

DESIGNED	DRAWN	TRACED	CHECKED	REVIEWED	DATE	REVISED
R.S.S.			B.I.P.	G.W.M.	5/28/90	