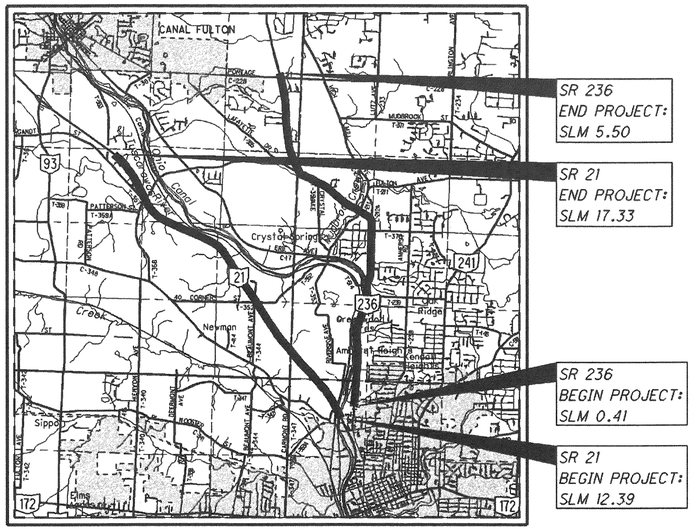

LOCATION MAP

LATITUDE: N40°50'18" LONGITUDE: W81°32'14"

SCALE IN MILES

0 1 2 3 4

N

PORTION TO BE IMPROVED
INTERSTATE HIGHWAY
FEDERAL ROUTES
STATE ROUTES
COUNTY & TOWNSHIP ROADS
OTHER ROADS

STATE OF OHIO
DEPARTMENT OF TRANSPORTATION
STA-21/236-12.39/0.41

JACKSON TOWNSHIP
LAWRENCE TOWNSHIP
PERRY TOWNSHIP
STARK COUNTY

PROJECT DESCRIPTION

FINE GRADED ASPHALT CONCRETE OVERLAY TO SR 21 AND SR 236 IN STARK COUNTY. BOTH ROUTES WILL INCLUDE MINOR BRIDGE REHABILITATION

PROJECT EDA:	N/A MAINTENANCE PROJECT
ESTIMATED CONTRACTOR EDA:	N/A MAINTENANCE PROJECT
NOTICE OF INTENT EDA	N/A MAINTENANCE PROJECT

INDEX OF SHEETS:

TITLE SHEET	1
TYPICAL SECTIONS	2-3
SAFTEY EDGE DETAIL	4
GENERAL NOTES	5-6
MAINTENANCE OF TRAFFIC	7-9
GENERAL SUMMARY	10
PAVEMENT CALCULATIONS	11-12
RAISED PAVEMENT MARKINGS	13
PAVEMENT MARKINGS	14
STRUCTURES	15-19

2013 SPECIFICATIONS

THE STANDARD SPECIFICATIONS OF THE STATE OF OHIO, DEPARTMENT OF TRANSPORTATION, INCLUDING CHANGES AND SUPPLEMENTAL SPECIFICATIONS LISTED IN THE PROPOSAL SHALL GOVERN THIS IMPROVEMENT.

I HEREBY APPROVE THESE PLANS AND DECLARE THAT THE MAKING OF THIS IMPROVEMENT WILL NOT REQUIRE THE CLOSING TO TRAFFIC OF THE HIGHWAY EXCEPT AS NOTED ON SHEET 9, AND THAT PROVISIONS FOR THE MAINTENANCE AND SAFETY OF TRAFFIC WILL BE AS SET FORTH ON THE PLANS AND ESTIMATES.

DESIGN DESIGNATION

DESIGN FUNCTIONAL CLASSIFICATION:
STA-21:
OTHER FREEWAY AND EXPRESSWAY
STA-236:
PRINCIPAL ARTERIAL, MINOR ARTERIAL

NHS PROJECT ..... YES
STA-21 SLM: 12.40-17.33
NHS PROJECT ..... NO
STA-236 SLM: 0.41-5.50

DESIGN EXCEPTIONS

NONE

UNDERGROUND UTILITIES

CONTACT BOTH SERVICES TWO WORKING DAYS
BEFORE YOU DIG.

OHIO Utilities Protection SERVICE
Call Before You Dig
1-800-362-2764
(Non-members must be called directly)

OIL & GAS PRODUCERS
UNDERGROUND PROTECTION SERVICE
1-800-925-0988

PLAN PREPARED BY:
ODOT --- DISTRICT 4 PLANNING AND ENGINEERING
2088 S. ARLINGTON RD
AKRON, OH 44306

ENGINEERS SEAL:

STATE OF OHIO
THOMAS J. POWELL
E-61151
REGISTERED
PROFESSIONAL ENGINEER

SIGNED: [signature]
DATE: 02-29-16

STANDARD CONSTRUCTION DRAWINGS							SUPPLEMENTAL SPECIFICATIONS		SPECIAL PROVISIONS	
BP-3.1	7/18/14	MT-105.10	7/19/13				800 2016	7/15/16	WPC	1/27/16
BP-4.1	7/19/13						821	4/20/12		
BP-9.1	7/19/13	TC-41.20	10/18/13				843	4/18/03		
		TC-42.10	10/18/13				856	4/18/14		
DM-4.3	1/15/16	TC-42.20	10/18/13				921	4/20/12		
DM-4.4	1/15/16	TC-52.10	10/18/13							
		TC-52.20	7/18/14							
RM-1.1	7/18/14	TC-64.10	7/17/15							
		TC-65.10	1/17/14							
MT-95.30	7/18/14	TC-65.11	7/18/14							
MT-95.50	10/16/15	TC-71.10	1/17/14							
MT-97.10	7/18/14									
MT-97.12	7/18/14									
MT-99.30	1/16/15									
MT-101.60	7/19/13									
MT-101.90	7/17/15									

APPROVED [signature]
DATE 3-2-16 DISTRICT DEPUTY DIRECTOR

APPROVED _____
DATE _____ DIRECTOR, DEPARTMENT OF TRANSPORTATION

FEDERAL PROJECT NO. E130(846)
PID NO. 81640
CONSTRUCTION PROJECT NO.
RAILROAD INVOLVEMENT NONE
STA-21/236-12.39/0.41

160553 Conformed Set
Dist 4

I:\Projects\STA\81640\roadway\sheets\81640GT001.dgn 01-MAR-2016 12:41PM nchaney

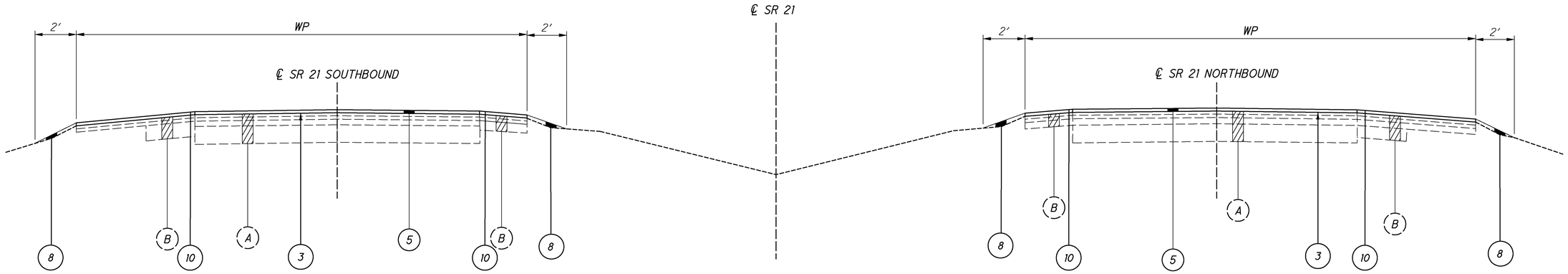

TYPICAL SECTION 1

SOUTHBOUND

NORTHBOUND

ROUTE	SIDE	SLM		LENGTH (MI)	WP (FT)
		FROM	TO		
21	NB	12.40	12.48	0.08	36
21	SB	12.40	12.48	0.08	36
21	NB	12.64	14.32	1.68	36
21	SB	12.64	14.32	1.68	36
21	NB	14.32	14.48	0.16	44
21	SB	14.32	14.48	0.16	44
21	NB	14.48	16.43	1.95	36
21	SB	14.48	16.43	1.95	36
21	NB	16.46	16.62	0.16	44
21	SB	16.46	16.62	0.16	44
21	NB	16.62	17.33	0.71	36
21	SB	16.62	17.33	0.71	36

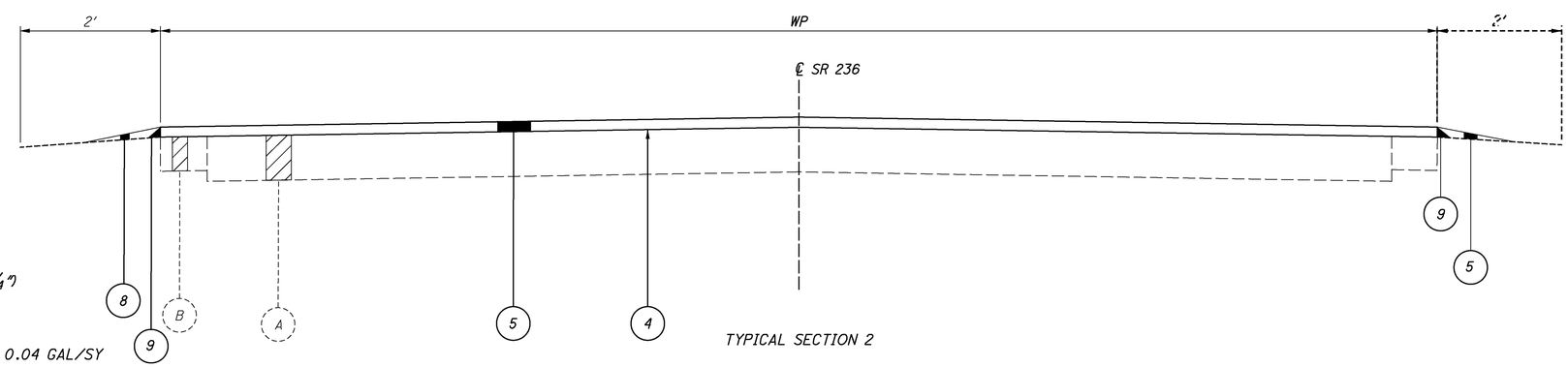

TYPICAL SECTION 2

LEGEND

1. 254, PAVEMENT PLANING, ASPHALT CONCRETE (T=1 1/4")
2. 254, PAVEMENT PLANING, ASPHALT CONCRETE (T=2")
3. 407, TACK COAT, TRACKLESS TACK INTERMEDIATE @ 0.04 GAL/SY
4. 407, TACK COAT, TRACKLESS TACK @ 0.075 GAL/SY
5. 424, FINE GRADED POLYMER ASPHALT CONCRETE, TYPE B, AS PER PLAN (T=1 1/4") (TRUCK ADT LESS THAN 1500)
6. 441 ASPHALT CONCRETE SURFACE COARSE, TYPE 1, (448), PG70-22M, AS PER PLAN (T=1 1/4")
7. 441 ASPHALT CONCRETE INTERMEDIATE COARSE, TYPE 1, (448) (T=1")
8. 617, COMPACTED AGGREGATE, AS PER PLAN (T=2")
9. SAFETY EDGE, SEE SHEET 4 FOR DETAILS
10. RUMBLE STRIPS PER SCD BP 9.1

A. EXISTING ASPHALT PAVEMENT
B. EXISTING ASPHALT SHOULDER
C. EXISTING CURB AND GUTTER

ROUTE	SLM		LENGTH (MI)	WP (FT)
	FROM	TO		
236	0.41	1.60	1.19	25
236	1.6	2.05	0.45	26

TYPICAL SECTIONS

STA-21/236-12.39/0.41

I:\Projects\STA\81640\roadway\sheets\81640GY001.dgn 10/24/2016 11:01:15 AM bross1

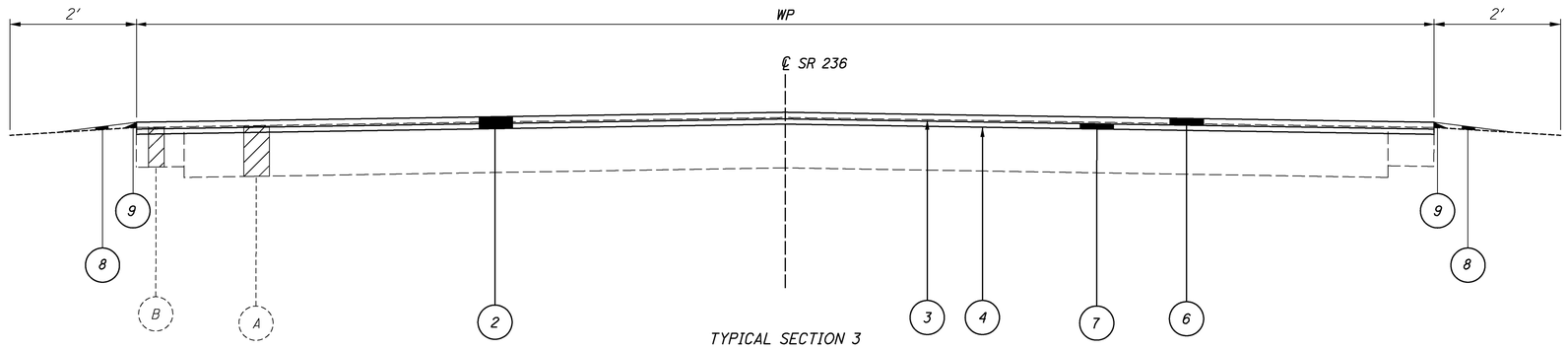

TYPICAL SECTION 3

ROUTE	SLM		LENGTH (MI)	WP (FT)
	FROM	TO		
236	2.05	3.06	1.01	25
236	3.06	3.10	0.04	28
236	3.23	5.33	2.1	24
236	5.33	5.5	0.17	35

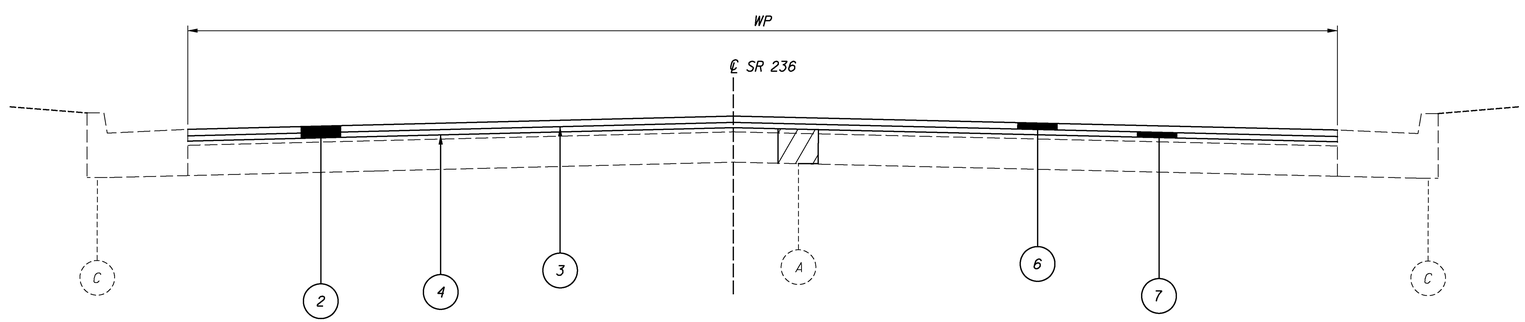

TYPICAL SECTION 4

ROUTE	SLM		LENGTH (MI)	WP (FT)
	FROM	TO		
236	3.10	3.22	0.12	28

* SEE SHEET 2 FOR LEGEND

TYPICAL SECTIONS

STA-21/236-
12.39/0.41

I:\Projects\STA\81640\roadway\sheets\81640GY001.dgn 10/24/2016 11:01:16 AM brosst

SAFETY EDGE (ASPHALT CONCRETE)

IN ADDITION TO THE REQUIREMENTS OF 401.12, ATTACH A DEVICE TO THE SCREED OF THE PAVER THAT CONFINES THE MATERIAL AT THE END GATE AND EXTRUDES THE ASPHALT MATERIAL IN SUCH A WAY THAT RESULTS IN A COMPACTED WEDGE SHAPE PAVEMENT EDGE OF APPROXIMATELY 30 DEGREES (NOT STEEPER THAN 40 DEGREES). ENSURE THE DEVICE MAINTAINS CONTACT WITH THE EXISTING SURFACE, AND ALLOW FOR AUTOMATIC TRANSITION TO CROSS ROADS, DRIVEWAYS AND OBSTRUCTIONS. DO NOT USE CONVENTIONAL SINGLE PLATE STRIKE OFF.

CONSTRUCTION OF SAFETY EDGE CAN BE OMITTED AT LOCATIONS WHERE EXISTING WIDTH OF GRADED SHOULDER OR BERM IS LESS THAN 12". PROJECTS WITH VARYING CONDITIONS SHOULD USE SAFETY EDGE WHERE POSSIBLE. PLAN PREPARATION HAS MADE EVERY REASONABLE ATTEMPT TO IDENTIFY POSSIBLE SAFETY EDGE LOCATIONS.

USE THE TRANSTECH SHOULDER WEDGE MAKER, THE CARLSON SAFETY EDGE END GATE, THE ADVANT-EDGER, THE TROXLER SAFETY SLOPE OR A SIMILAR APPROVED-EQUAL DEVICE THAT PRODUCES THE SAME WEDGE CONSOLIDATION RESULTS. CONTACT INFORMATION FOR THESE WEDGE SHAPE COMPACTION DEVICES IS THE FOLLOWING:

TRANSTECH SYSTEMS, INC.
1594 STATE STREET
SCHENECTADY, NY 12304
1-800-724-6306
WWW.TRANSTECHSYS.COM

ADVANT-EDGE PAVING EQUIPMENT LLC
P.O. BOX 9163
NISKAYUNA, NY 12309-0163
518-280-6090
WWW.ADVANTAEDGEPAVING.COM

CARLSON SAFETY EDGE END GATE
18425 50TH AVENUE EAST
TACOMA, WA 98446
253-875-8000

TROXLER ELECTRONIC LABORATORIES, INC.
3008 E. CORNWALLIS RD.
RESEARCH TRIANGLE PARK, NC 27709
1-877-TROXLER
WWW.TROXLERLABS.COM

IF ELECTING TO USE A SIMILAR DEVICE, PROVIDE PROOF THAT THE DEVICE HAS BEEN USED ON PREVIOUS PROJECTS WITH ACCEPTABLE RESULTS OR CONSTRUCT A TEST SECTION PRIOR TO THE BEGINNING OF WORK AND DEMONSTRATE WEDGE COMPACTION TO THE SATISFACTION OF THE ENGINEER. SHORT SECTIONS OF HANDWORK WILL BE ALLOWED WHEN NECESSARY FOR TRANSITIONS AND TURNOUTS OR OTHERWISE AUTHORIZED BY THE ENGINEER.

IN ADDITION TO THE REQUIREMENTS OF 401.16, MAKE THE FIRST ROLLER PASS 8 TO 12 INCHES AWAY FROM TAPERED EDGE. DO NOT ROLL THE TAPER.

ITEM 209, PREPARING SUBGRADE FOR SHOULDER PAVING, AS PER PLAN.

PREPARE THE SHOULDER FOR PAVING A CONSISTENT SAFETY EDGE IN BOTH THICKNESS AND WIDTH.

PRIOR TO PAVING THE SAFETY EDGE, GRADE AN AREA 10 INCHES WIDE, BEGINNING AT THE EDGE OF THE PAVED ROADWAY, TO PROVIDE A LEVEL SURFACE FREE OF VEGETATION FOR CONSTRUCTION OF THE SAFETY EDGE. IF NECESSARY, EXCAVATE THE GRADED AREA TO THE DEPTH NECESSARY TO CONSTRUCT THE SAFETY EDGE. COMPACT THE GRADED SHOULDER ACCORDING TO 617.05, OR AS DIRECTED BY THE ENGINEER.

NOTES:

1.) SAFETY EDGES ARE REQUIRED AT THE OUTSIDE EDGES OF THE PAVED ROADWAY (EDGE OF TRAVEL LANE OR EDGE OF PAVED SHOULDER).

2.) CONSTRUCT THE SAFETY EDGE THE FULL ASPHALT CONCRETE OVERLAY THICKNESS OR 2.5" WHICHEVER IS GREATER, NOT TO EXCEED THE MAXIMUM SAFETY EDGE THICKNESS OF 6". CONSTRUCT A NEAR-VERTICAL FACE BELOW THE SAFETY EDGE FOR THICKNESS GREATER THAN 6".

3.) BLADE AND SHAPE EXISTING SHOULDER MATERIAL TO FORM A UNIFORM SURFACE UNDER THE SAFETY EDGE PRIOR TO PLACEMENT OF THE ASPHALT CONCRETE OVERLAY.

* 40° MAX

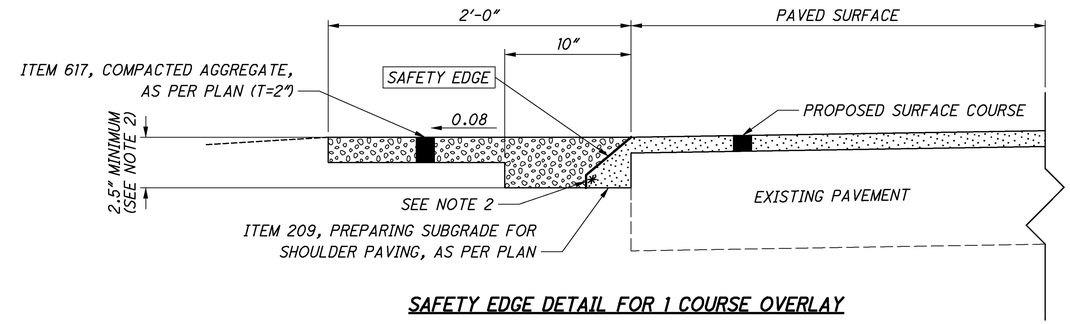

SAFETY EDGE DETAIL FOR 1 COURSE OVERLAY

ESTIMATED QUANTITIES

ROUTE	SAFETY EDGE THICKNESS (IN.)	S.L.M TO S.L.M.			SIDE	209 PREPARING SUBGRADE FOR SHOULDER PAVING, AS PER PLAN	424 FINE GRADED POLYMER ASPHALT CONCRETE, TYPE B, AS PER PLAN	441 ASPHALT CONCRETE SURFACE COURSE, TYPE 1, (448), AS PER PLAN (PG70-22M)
						STA	CY	CY
SR 236	2.5	0.41	TO	2.05	L/R	173.2	16.68	
SR 236	2.5	2.05	TO	3.10	L/R	110.9		10.68
SR 236	2.5	3.23	TO	5.50	L/R	239.7		23.08
TOTALS CARRIED TO GENERAL SUMMARY						524	17	34

REVISED:

DISTRICT 4 - PLANNING & ENGINEERING

DESIGNED MAC REVIEWED TJP

REVISION DATE 06/25/12 CHECKED TJP

SAFETY EDGE DETAIL (RESURFACING)

STA-21/236 - 12.39/0.41

I:\Projects\STA\81640\roadway\sheets\81640SE001.dgn 10/24/2016 11:01:16 AM bross1

UTILITIES

THE CONTRACTOR SHALL USE THE FOLLOWING PROCEDURE AT EACH LOCATION WHERE WORK IS PERFORMED, IN ACCORDANCE WITH SECTIONS 105.07 AND 107.16 IN THE CONSTRUCTION AND MATERIALS SPECIFICATIONS.

THE CONTRACTOR SHALL NOTIFY THE PROJECT ENGINEER, THE OHIO UTILITIES PROTECTION SERVICE (OUPS), THE OHIO & GAS PROCEDURES UNDERGROUND PROTECTION SERVICE (OGPUPS), THE OHIO DEPARTMENT OF TRANSPORTATION DISTRICT 4 HEAD-QUARTERS AND ALL NON REGISTERED UTILITY OWNERS AT LEAST TWO (2) WORKING DAYS PRIOR TO COMMENCING CONSTRUCTION IN ALL AREAS.

OUPS 1-800-362-2764 (CONTACT LIMITED BASIS PARTICIPANTS DIRECTLY)
OGPUPS 1-800-925-0988
ODOT 330-786-3145 KEN GREENE

THE LOCATION OF EXISTING UNDERGROUND UTILITIES ARE NOT SHOWN ON THE PLANS, BUT CAN BE OBTAINED FROM THE OWNERS OF THE UTILITIES. THE CONTRACTOR IS RESPONSIBLE FOR ANY DAMAGE TO UTILITIES.

WORK LIMITS

THE WORK LIMITS SHOWN ON THESE PLANS ARE FOR PHYSICAL CONSTRUCTION ONLY. PROVIDE THE INSTALLATION AND OPERATION OF ALL WORK ZONE TRAFFIC CONTROL AND WORK ZONE TRAFFIC CONTROL DEVICES REQUIRED BY THESE PLANS WHETHER INSIDE OR OUTSIDE THESE WORK LIMITS.

PAVEMENT MARKING LANE WIDTHS

THE NORMAL LANE WIDTH FOR THE PAVEMENT MARKINGS ON THIS PROJECT SHALL BE AS FOLLOWS [AT LEAST 3 DAYS PRIOR TO PERFORMING THE WORK CONTACT THE TRAFFIC OFFICE AT 330-786-3147 TO CONFIRM THE WIDTHS]:

ROUTE	S.L.M. TO	S.L.M.	LANE WIDTH
SR 21	12.40	17.33	12'
SR 236	2.05	5.50	11'

PAVEMENT MARKING DETAILS

THE PAVEMENT MARKING DETAIL SHEETS WILL BE SUPPLIED TO THE CONTRACTOR AT THE PRE-CONSTRUCTION MEETING.

PROFILE AND ALIGNMENT

PLACE THE PROPOSED PAVEMENT TO FOLLOW THE ALIGNMENT AND PROFILE OF THE EXISTING PAVEMENT. PLACE THE PROPOSED ASPHALT CONCRETE OVERLAY AS SHOWN ON THE TYPICAL SECTIONS.

ITEM 251 - PARTIAL DEPTH PAVEMENT REPAIR

A QUANTITY OF THIS ITEM SHALL BE PROVIDED FOR USE AS DIRECTED BY THE ENGINEER. THE ITEM SHALL CONSIST OF REPAIRING EXISTING LOCATIONS EXHIBITING SURFACE DETERIORATION AND PLACING ITEM 448 ASPHALT CONCRETE, TYPE 2. THE ASPHALT CONCRETE SHALL BE COMPACTED WITH A TYPE I PNEUMATIC TIRE ROLLER AND A STEEL WHEEL ROLLER AS PER 401.13. IT IS NOT THE INTENT TO REPAIR EVERY DETERIORATED AREA WITHIN THE PROJECT. THE ENGINEER SHALL DETERMINE WHICH AREAS ARE TO BE REPAIRED. UNLESS OTHERWISE DIRECTED BY THE ENGINEER, THIS ITEM SHALL BE PERFORMED AFTER THE COMPLETION OF MAINLINE PAVEMENT PLANING. ALSO, THIS ITEM SHALL COMMENCE WITHIN 7 DAYS OF THE COMPLETION OF MAINLINE PAVEMENT PLANING. PAYMENT SHALL BE BASED ON THE ACTUAL NUMBER OF SQUARE YARDS OF PAVEMENT REPAIR. THE FOLLOWING ESTIMATED QUANTITY HAS BEEN CARRIED TO THE GENERAL SUMMARY:

SR 21:
251, PARTIAL DEPTH PAVEMENT REPAIR, 300 SQ. YD.

SR 236:
251, PARTIAL DEPTH PAVEMENT REPAIR, 1000 SQ. YD.

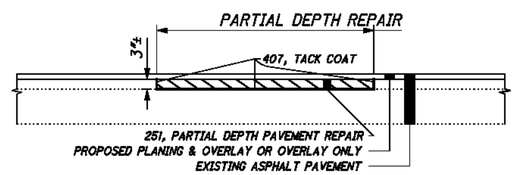

ITEM 253 - PAVEMENT REPAIR (SR 236)

A QUANTITY OF THIS ITEM SHALL BE PROVIDED FOR USE AS DIRECTED BY THE ENGINEER. THIS ITEM SHALL CONSIST OF CUTTING AND REMOVING DETERIORATED PAVEMENT FULL DEPTH AND PLACING 12"± 301 ASPHALT CONCRETE BASE, PG64-22. THE MAXIMUM COMPACTED DEPTH OF ANY ONE LAYER SHALL BE 6 INCHES. UNLESS OTHERWISE DIRECTED BY THE ENGINEER, THIS ITEM SHALL BE PERFORMED AFTER THE COMPLETION OF MAINLINE PAVEMENT PLANING. ALSO, THIS ITEM SHALL COMMENCE WITHIN 7 DAYS OF THE COMPLETION OF MAINLINE PAVEMENT PLANING. IT IS NOT THE INTENT TO REPAIR EVERY DETERIORATED AREA WITHIN THE PROJECT. THE ENGINEER SHALL DETERMINE WHICH AREAS ARE TO BE REPAIRED. PAYMENT SHALL BE BASED ON THE ACTUAL NUMBER OF SQUARE YARDS OF PAVEMENT REMOVED AND REPLACED TO THE LIMITS DESIGNATED BY THE ENGINEER. THE FOLLOWING ESTIMATED QUANTITY HAS BEEN CARRIED TO THE GENERAL SUMMARY:

253, PAVEMENT REPAIR, 100 SQ YD

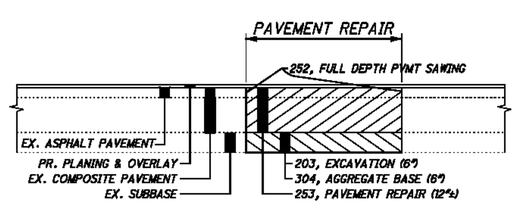

ITEM 203 - EXCAVATION (FOR PAVEMENT REPAIR)

THIS ITEM OF WORK SHALL CONSIST OF REMOVING AND DISPOSING OF ALL UNSUITABLE MATERIAL BY EXCAVATING THE EXISTING SUBGRADE AND SUBBASE TO AN AVERAGE DEPTH OF 6 INCHES OR AS DIRECTED BY THE ENGINEER. EXACT LIMITS OF REMOVAL SHALL BE DETERMINED BY THE ENGINEER. ALL EQUIPMENT, LABOR, TOOLS, AND INCIDENTALS NECESSARY TO COMPLETE THIS ITEM SHALL BE INCLUDED IN THE UNIT PRICE BID FOR ITEM 203 EXCAVATION (FOR PAVEMENT REPAIR). THE FOLLOWING ESTIMATED QUANTITY HAS BEEN CARRIED TO THE GENERAL SUMMARY:

203, EXCAVATION (FOR PAVEMENT REPAIR) 17 CU YD

ITEM 304 - AGGREGATE BASE (FOR PAVEMENT REPAIR)

THE FOLLOWING ESTIMATED QUANTITY HAS BEEN PROVIDED AND SHALL BE USED AS DIRECTED BY THE ENGINEER TO BACKFILL AREAS WHICH WERE EXCAVATED UNDER ITEM 203 EXCAVATION (FOR PAVEMENT REPAIR). THE FOLLOWING ESTIMATEDQUANTITY HAS BEEN CARRIED TO THE GENERAL SUMMARY:

304, AGGREGATE BASE (FOR PAVEMENT REPAIR) 17 CU YD

ITEM 424 - FINE GRADED POLYMER ASPHALT CONCRETE, TYPE B, AS PER PLAN

703.05 DO NOT USE FINE AGGREGATE FROM A SOURCE DESIGNATED "SR" OR "SRH" ACCORDING TO THE OFFICE OF MATERIALS MANAGEMENT (OMM) IN ANY JOB MIX FORMULA (JMF) FOR THIS ITEM.

ITEM 441 - ASPHALT CONCRETE SURFACE COURSE, TYPE 1, (448) PG70-22M, AS PER PLAN

703.05 DO NOT USE COARSE AGGREGATE FROM A SOURCE DESIGNATED "SR" OR "SRH" ACCORDING TO THE OFFICE OF MATERIALS MANAGEMENT (OMM) IN ANY JOB MIX FORMULA (JMF) FOR THIS ITEM.

INTERSECTIONS

INTERSECTIONS WILL BE RESURFACED 25 FT. BEYOND THE EDGE LINE, UNLESS OTHERWISE DIRECTED BY THE ENGINEER OR INDICATED IN THE PLAN. INTERSECTIONS SHALL BE PAVED AFTER COMPLETION OF THE SURFACE COURSE. A BUTT JOINT, AS PER STANDARD CONSTRUCTION DRAWING BP-3.1, SHALL BE USED TO PROVIDE A SMOOTH TRANSITION TO THE EXISTING PAVEMENT. USE THE SAME ASPHALT CONCRETE AS THE MAINLINE PAVEMENT UNLESS SHOWN OTHERWISE ON THE ASPHALT CONCRETE CALCULATIONS SHEET. ANY GRADING OR PRIME NECESSARY TO ACCOMPLISH THIS WORK SHALL BE INCLUDED IN THE COST OF THE PERTINENT BID ITEM.

DRIVEWAYS

THE CONTRACTOR WILL NOT BE PERMITTED TO LEAVE A DIFFERENCE IN ELEVATION BETWEEN THE MAINLINE ASPHALT SURFACE COURSE AND THE EXISTING DRIVEWAYS. IF APPROVED BY THE ENGINEER, AN ASPHALT WEDGE WITH A WIDTH OF APPROX 2' MAY BE PLACED EITHER ON THE ROADWAY SHOULDER OR DRIVEWAY DEPENDENT UPON WHICH SIDE IS HIGH. A QUANTITY OF MAINLINE SURFACE COURSE ASPHALT HAS BEEN PROVIDED IN THE CALCULATIONS AND GENERAL SUMMARY TO PERFORM THIS ITEM OF WORK.

PAVED MAILBOX APPROACHES

ALL EXISTING MAIL BOX APPROACHES WILL BE PAVED WITH ASPHALT CONCRETE AS PER TYPICAL SHOWN OR AS NEAR AS PRACTICAL. AGGREGATE APPROACHES SHALL HAVE A 2 IN. MIN. THICKNESS; IMPROVED APPROACHES SHALL HAVE A 2 IN. MIN. THICKNESS. THE CONTRACTOR SHALL PAVE THE MAILBOX APPROACHES WITH THE MAINLINE AND SHOULDERS, ALL GRADING, TACK, TOOLS, EQUIPMENT, MATERIAL AND INCIDENTALS REQUIRED TO LAYOUT AND CONSTRUCT THE MAILBOX APPROACHES SHALL BE INCLUDED IN THE UNIT BID FOR ITEM 424, FINE GRADED POLYMER ASPHALT CONCRETE, TYPE B.

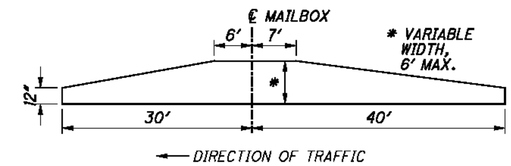

ITEM 617 - COMPACTED AGGREGATE, AS PER PLAN

IN LOW SHOULDER AREAS EXCEEDING 1", AND ADJACENT TO THE SAFETY EDGE, OR AS DIRECTED BY THE ENGINEER, RECYCLED ASPHALT PAVEMENT (RAP) SHALL BE USED IN AREAS ADJACENT TO THE PAVED BERM. THE RAP SHALL HAVE A MINIMUM PG CONTENT OF 4.5% AND MEET THE FOLLOWING GRADATION. ONCE THE STOCKPILE MEETS THE GRADATION, THE PG CONTENT OF THE RAP SHALL BE DETERMINED PER 441.03. THE RAP ANALYSIS MUST BE SUBMITTED TO THE ENGINEER FOR APPROVAL 2 WEEKS PRIOR TO USE. METHOD OF MEASUREMENT SHALL BE AS PER 617.06. PLACEMENT AND COMPACTION SHALL MEET THE REQUIREMENTS OF ITEM 617. ALL MATERIALS, LABOR, EQUIPMENT, TOOLS AND INCIDENTALS NECESSARY TO COMPLETE THE WORK SHALL BE INCLUDED IN THE UNIT PRICE BID FOR ITEM 617 COMPACTED AGGREGATE, AS PER PLAN.

MODIFIED GRADATION SHALL APPLY:

SIEVE	TOTAL PERCENT PASSING
1-½"	100
¾"	50-100
NO. 4	35-70
NO. 30	9-33
NO. 20	0-13

CATCH BASIN ADJUSTED TO GRADE

THE FOLLOWING QUANTITY HAS BEEN CARRIED TO THE GENERAL SUMMARY AND IS TO BE USED AS DIRECTED BY THE ENGINEER TO ADJUST CATCH BASINS TO GRADE ON SR 236.

ITEM 611, CATCH BASIN ADJUSTED TO GRADE, 2 EACH

MONUMENT BOX ADJUSTED TO GRADE

THE CONTRACTOR SHALL ADJUST MONUMENT BOXES TO GRADE ON SR 236. THE FOLLOWING QUANTITY HAS BEEN CARRIED TO THE GENERAL SUMMARY:

ITEM 623, MONUMENT BOX ADJUSTED TO GRADE, 7 EACH

CALCULATED BFR
CHECKED NRC

GENERAL NOTES

STA-21/236-
12.39/0.41

I:\Projects\STA\81640\roadway\sheets\81640GN001.dgn 10/24/2016 11:01:18 AM brosst

ITEM SPECIAL - TACK COAT, TRACKLESS TACK
ITEM SPECIAL - TACK COAT, TRACKLESS TACK FOR INTERMEDIATE COURSE

DESCRIPTION
THIS WORK CONSISTS OF PREPARING AND TREATING A PAVED SURFACE WITH A TRACKLESS TACK ASPHALT EMULSION.

FURNISH MATERIALS ACCORDING TO THE DEPARTMENT'S APPROVED LIST.

MEET ALL REQUIREMENTS OF ITEM 407 TACK COAT IN THE CONSTRUCTION AND MATERIALS SPECIFICATIONS REQUIRED BY THE CONTRACT, EXCEPT AS NOTED BELOW.

MATERIAL
MEET ALL PROPERTIES OF THE APPROVED MANUFACTURER'S TRACKLESS TACK SPECIFICATION REQUIREMENTS ON FILE WITH THE LABORATORY AT TIME OF PLACEMENT.

ACCEPTANCE AND SAMPLING OF MATERIALS:
SUPPLY CERTIFIED TEST DATA TO THE ENGINEER AND TO THE DISTRICT LABORATORY DEMONSTRATING THE TRACKLESS TACK SUPPLIED WAS TESTED FOR AND MEETS ALL MATERIAL PROPERTIES SHOWN ON THE DEPARTMENT'S APPROVED LIST.

DURING CONSTRUCTION, ODOT PERSONNEL WILL SAMPLE FROM THE DISTRIBUTOR AND SUPPLY TO THE DISTRICT TEST LAB A MINIMUM OF ONE QUART OF TRACKLESS TACK FOR EVERY 25,000 GALLONS USED ON THE PROJECT. THE CONTRACTOR IS RESPONSIBLE FOR SUPPLYING THE PROPER PLASTIC QUART SAMPLING CONTAINER. CLEARLY MARK ON THE SAMPLE WITH THE MANUFACTURER'S NAME, PROJECT NUMBER, AND THE WORDS "TRACKLESS TACK".

EQUIPMENT
FOLLOW MANUFACTURER'S RECOMMENDATIONS FOR CORRECT DISTRIBUTOR SETTINGS. THOROUGHLY CLEAN ALL EQUIPMENT IF PREVIOUSLY USED MATERIAL CHARGE IS DIFFERENT THAN THE PROPOSED MATERIAL.

APPLICATION OF ASPHALT MATERIAL
UNIFORMLY APPLY THE TRACKLESS TACK WITH A DISTRIBUTOR ACCORDING TO THE MANUFACTURER'S INSTRUCTIONS. IF TRACKLESS TACK IS STORED FOR AN EXTENDED PERIOD OF TIME, PRIOR TO APPLICATION, AGITATE OR GENTLY CIRCULATE THE MATERIAL.

ENSURE ALL NOZZLES AND SPRAY PATTERNS ARE IDENTICAL TO ONE ANOTHER ALONG THE DISTRIBUTOR SPRAY BAR. PLACE THE ANGLE OF THE NOZZLE AT A 15 TO 30 DEGREE ANGLE TO THE SPRAY BAR AXIS TO MAXIMIZE OVERLAP OR AS RECOMMENDED BY THE NOZZLE MANUFACTURER. CONTACT THE MANUFACTURER'S REPRESENTATIVE FOR REQUIRED SPRAY NOZZLE SIZE AND DISTRIBUTOR AND NOZZLE SETTINGS.

APPLY AT A RATE OF 0.04 TO 0.1 GALLONS PER SQUARE YARD. DO NOT DILUTE TRACKLESS TACK. RECOMMENDED APPLICATION TEMPERATURE IS 160°F. DO NOT EXCEED 180°F. THE ENGINEER WILL APPROVE THE QUANTITY, RATE OF APPLICATION, TEMPERATURE, DISTRIBUTOR SETTINGS, AND AREAS TO BE TREATED BEFORE APPLICATION FO THE TRACKLESS TACK COAT. THE ENGINEER WILL DETERMINE THE ACTUAL APPLICATION IN GALLONS PER SQUARE YARD BY A CHECK ON THE PROJECT.

PERFORMANCE OF TRACKLESS TACK
DETERMINE THE TIME TO SET FOR THE MATERIAL TO BECOME TRACKLESS. THE ENGINEER WILL REPORT ANY ISSUES WITH EXCESSIVE TIME TO SET, OR AFTER SET ISSUES WITH STICKINESS, OR PICKUP OF THE TACK TO THE DISTRICT TESTING ENGINEER AND NEW PRODUCT ENGINEER, BRAD YOUNG 614-351-2882.

IF THE CERTIFIED TEST DATA FAILS TO MEET THE LAB TESTING CRITERIA, OR FIELD SAMPLES FAIL TO MEET THE LAB TEST CRITERIA, OR THE TRACKLESS TACK FAILS TO PERFORM SATISFACTORILY IN THE FIELD, AS NOTED ABOVE, THE CONTRACTOR WILL BE REQUIRED TO REPLACE AND SUPPLY ANOTHER APPROVED TRACKLESS TACK PRODUCT FOR THE REMAINDER OF THE PROJECT AT NO ADDITIONAL COST TO THE DEPARTMENT.

PAVEMENT MARKINGS OVERHEAD STRUCTURES

THE FOLLOWING QUANTITES HAVE BEEN CARRIED TO THE GENERAL SUMMARY TO USE ON STRUCTURES STA-21-1847 AND STA-21-2134.

ITEM 646, EDGE LINE 4", 0.23 MILES
ITEM 646, CENTER LINE, 0.12 MILES

COMMUNITY NOTIFICATION

THE CONTRACTOR WILL ADVISE THE ODOT PROJECT ENGINEER A MINIMUM OF FOURTEEN (14) DAYS PRIOR TO THE START OF CONSTRUCTION ACTIVITIES. THE CONTRACTOR MUST ALSO PROVIDE NOTIFICATION TO THE ODOT PROJECT ENGINEER A MINIMUM OF FOURTEEN (14) DAYS PRIOR TO ANY LANE RESTRICTIONS OR CLOSURES. THE ODOT PROJECT ENGINEER WILL FORWARD THIS INFORMATION TO THE ODOT DISTRICT PUBLIC INFORMATION OFFICER FOR USE TO NOTIFY EMERGENCY SERVICES AND THE PUBLIC A MINIMUM OF FOURTEEN (14) DAYS PRIOR TO THE START OF PROJECT CONSTRUCTION. INCLUDED IN THIS NOTIFICATION WILL BE THE PROPOSED LANE RESTRICTIONS, ROAD CLOSURES AND DETOURS REQUIRED BY THE PROJECT.

WATERWAY PERMIT DETERMINATION (404/401) - ODOT PROJECTS

ALL PROJECTS INVOLVING JURISDICTIONAL WATERS OF THE UNITED STATES (STREAMS, RIVERS, NON-ISOLATED WETLANDS) AND/OR ISOLATED WETLANDS ARE SUBJECT TO REGULATION UNDER SECTIONS 404 AND 401 OF THE CLEAN WATER ACT, AND POSSIBLY OHIO EPA ISOLATED WETLAND LAW. THE WATERWAY PERMITS CONDITIONS VERIFIED FOR THE PROJECT HAVE BEEN INCORPORATED INTO THE PROJECT CONSTRUCTION PLAN AS SPECIAL PROVISIONS. THE PROJECT CONTRACTOR SHALL ADHERE TO ALL WATERWAY PERMIT TERMS AND CONDITIONS THROUGHOUT PROJECT CONSTRUCTION.

WETLAND IMPACTS/AVOIDANCE

UNDER THE DIRECTION OF THE PROJECT ENGINEER, THE CONTRACTOR MAY PLACE PERMANENT FILL IN 0.007-ACRE OF WETLAND C AT BRIDGE STRUCTURE NO. STA-21-1507 AND 0.02-ACRE OF WETLAND D AND 0.01-ACRE OF WETLAND E AT BRIDGE STRUCTURE NO. STA-21-1643. PLACEMENT OF TEMPORARY FILLS IN WETLANDS IS PROHIBITED. TO PROTECT AND DELINEATE THE EXISTING UNIMPACTED WETLAND AREAS, A QUANTITY OF ITEM 832 CONSTRUCTION FENCE AND A QUANTITY OF ITEM 832 PERIMETER FILTER FABRIC FENCE WILL BE PAID FOR UNDER UNDER ITEM 832 EROSION CONTROL. THE CONSTRUCTION FENCE AND PERIMETER FILTER FABRIC FENCE SHALL BE INSTALLED ALONG THE PROPOSED CONSTRUCTION LIMITS WITHIN THE WETLANDS AREAS BY THE CONTRACTOR PRIOR TO THE START OF ANY CONSTRUCTION ACTIVITIES WITHIN THE LIMITS AND ADJACENT AREA, INCLUDING ANY NECESSARY CLEARING AND GRUBBING ACTIVITIES. THE CONSTRUCTION FENCE AND PERIMETER FILTER FABRIC FENCE SHALL BE MAINTAINED BY THE CONTRACTOR THROUGHOUT PROJECT CONSTRUCTION AND SHALL BE REMOVED BY THE CONTRACTOR UPON PROJECT COMPLETION. UNDER NO CIRCUMSTANCES SHALL THE CONTRACTOR IMPACT THE REMAINING WETLANDS AREAS BEYOND THE CONSTRUCTION LIMITS APPROVED BY THE PROJECT ENGINEER. UNDER NO CIRCUMSTANCES SHALL THE CONTRACTOR STORE EQUIPMENT AND/OR MATERIALS WITHIN WETLANDS AREAS.

STREAM CHANNEL EXCAVATION AND DITCH CLEANOUT OPERATIONS

THE CONTRACTOR SHALL TAKE ALL PRECAUTIONS NECESSARY TO PREVENT ANY INCIDENTAL DISCHARGES ASSOCIATED WITH THE EXCAVATION AND HAULING OF MATERIAL FROM STREAMS AND DITCHES. THIS PERTAINS TO ANY EXCAVATION OPERATION SUCH AS, FOUNDATION PIER OR ABUTMENT EXCAVATION, CHANNEL CLEAN OUT, EXCAVATION FOR ROCK CHANNEL PROTECTION.

ALL MATERIALS REMOVED FROM STREAMS AND/OR DITCHES MUST BE IMMEDIATELY REMOVED TO AN UPLAND SITE AND STABILIZED (I.E., SEEDED) TO PREVENT REDISTRIBUTION INTO ANY WATERS OF THE UNITED STATES. IMMEDIATE REMOVAL IS DEFINED BY THE UNITED STATES ARMY CORPS OF ENGINEERS AS DEPOSITING THE REMOVED MATERIALS DIRECTLY INTO A TRUCK AND REMOVING THE MATERIAL FROM THE SITE. PLACEMENT OF REMOVED MATERIALS INTO A WETLANDS OR ON THE BANKS OF A STREAM EVEN TEMPORARILY IS CONSIDERED A FILL AND REQUIRES A PERMIT ACTION.

MECHANICAL EQUIPMENT OPERATION AT STREAM CHANNEL

THE MECHANICAL EQUIPMENT USED TO EXECUTE THE WORK AUTHORIZED HEREIN SHALL BE OPERATED IN SUCH A WAY AS TO MINIMIZE TURBIDITY THAT COULD DEGRADE WATER QUALITY AND ADVERSELY AFFECT AQUATIC PLANT AND ANIMAL LIFE.

BEST MANAGEMENT PRACTICES

WATER COLUMN AND SEDIMENTATION IMPACTS SHALL BE KEPT TO A MINIMUM THROUGH THE USE OF BEST MANAGEMENT PRACTICES FOR SOIL EROSION AND SEDIMENTATION CONTROL. ALL SOIL EROSION AND SEDIMENT CONTROL MEASURES SHALL BE IN PLACE PRIOR TO ANY EXCAVATION, GRADING OR FILLING OPERATIONS AND INSTALLATION OF PROPOSED STRUCTURES OR UTILITIES. THEY SHALL REMAIN IN PLACE UNTIL CONSTRUCTION IS COMPLETED AND THE AREA IS STABILIZED AS ACCEPTED BY THE ENGINEER. SPECIFICATIONS SET FORTH IN THE MOST CURRENT VERSION OF ODOT'S CONSTRUCTION AND MATERIAL SPECIFICATIONS, LOCATION AND DESIGN MANUAL AND STANDARD DRAWINGS SHALL BE USED TO ENSURE ADEQUATE EROSION AND SEDIMENT CONTROL DURING CONSTRUCTION.

NATURAL BUFFERS ADJACENT TO STREAMS AND WETLANDS SHALL BE PRESERVED TO THE MAXIMUM EXTENT PRACTICABLE. EXISTING RIPARIAN HABITATS SHOULD BE MAINTAINED TO THE MAXIMUM EXTENT PRACTICABLE AND EQUIPMENT STAGING AREAS SHALL BE KEPT WELL AWAY FROM STREAMS AND WETLANDS TO THE EXTENT PRACTICABLE. ODOT CONSTRUCTION AND MATERIALS SPECIFICATIONS SECTION 107.10 (PROTECTION AND RESTORATION OF PROPERTY) PROHIBIT THE CONTRACTOR FROM CREATING STAGING AREAS NEAR STREAMS/WETLANDS.

AREAS DISTURBED BY THE PROJECT SHALL BE SEEDED/REVEGETATED WITH NATIVE PLANT SPECIES AND MULCHED DURING CONSTRUCTION TO ENCOURAGE ESTABLISHMENT OF VEGETATION COVER, DECREASE EROSION AND PREVENT EROSION OF SEDIMENTS INTO WATERS OF THE UNITED STATES.

PAINTING AND SEALING OPERATIONS

THE CONTRACTOR SHALL TAKE ALL PRECAUTIONS NECESSARY TO PREVENT EPOXY-URETHANE SEALER, PAINT OR OTHER MATERIALS USED TO REPAIR, CLEAN, PAINT, SEAL OR TREAT ANY STRUCTURE FROM ENTERING ANY STREAMS, WETLANDS OR OTHER WATERS OF THE UNITED STATES AND TAKE THE APPROPRIATE ACTIONS IN THE EVENT OF A RELEASE.

CALCULATED BFR
CHECKED NRC

GENERAL NOTES

STA-21/236-
12.39/0.41

I:\Projects\STA\81640\roadway\sheets\81640GN001.dgn 10/24/2016 11:01:18 AM brosst

MAINTENANCE OF TRAFFIC

THIS ITEM SHALL CONSIST OF MAINTENANCE OF TRAFFIC ON EXISTING ROADWAYS AND RAMPS IN ACCORDANCE WITH THE OHIO MANUAL OF UNIFORM TRAFFIC CONTROL DEVICES FOR STREETS AND HIGHWAYS, CURRENT EDITION, LATEST REVISION, THE SPECIFICATIONS AND THE FOLLOWING:

1. STA 21: A MINIMUM OF ONE ELEVEN FOOT LANE IN EACH DIRECTION SHALL BE MAINTAINED ON THE EXISTING PAVEMENT AND COMPLETED PAVEMENT DURING CONSTRUCTION OF THE WORK.

STA 236: A MINIMUM OF ONE TEN FOOT BIDIRECTIONAL LANE SHALL BE MAINTAINED ON THE EXISTING PAVEMENT AND COMPLETED PAVEMENT DURING CONSTRUCTION OF THE WORK.

2. THE CONTRACTOR SHALL INFORM THE DISTRICT OFFICE (330) 786-2208, EIGHTEEN (18) DAYS PRIOR TO THE BEGINNING OF WORK.

3. LANE RESTRICTIONS OR LANE REDUCTIONS SHALL NOT BE PERMITTED AFTER NORMAL WORKING HOURS. NORMAL WORKING HOURS SHALL BE THOSE HOURS DURING WHICH THE CONTRACTOR HAS A FULL COMPLEMENT OF EMPLOYEES AND EQUIPMENT ACTIVELY REMOVING AND/OR PLACING PAVEMENT MATERIALS.

4. ALL FULL DEPTH PAVEMENT REMOVAL AND REPLACEMENT OPERATIONS SHALL BE COMPLETED THE SAME DAY THE EXCAVATION IS MADE. IF THE CONTRACTOR CANNOT COMPLETE THE WORK, THE EXCAVATION SHALL BE BACKFILLED OR PROTECTED AS PER STANDARD CONSTRUCTION DRAWING MT-101.90.

5. UNDER NO CIRCUMSTANCES SHALL THE CONTRACTOR BE PERMITTED TO HAVE SUCCESSIVE WORK ZONES UNLESS THE DISTANCE BETWEEN THE DRUMS, BARRICADES OR CONES EXCEEDS TWO (2) MILES.

6. ONLY DURING OFF-PEAK PERIODS (ie ANY PERIOD OTHER THAN 6-8AM AND 3-6PM) SHALL THE CONTRACTOR INSTALL AND SUBSEQUENTLY RESET ALL TRAFFIC CONTROL NECESSARY FOR THE WORK ZONE FOR EACH CONSTRUCTION PHASE.

7. IN ADDITION TO THE REQUIREMENTS OF 614.11 WORK ZONE PAVEMENT MARKINGS, AT THE END OF EACH DAY OF WORK, THE CONTRACTOR SHALL REPLACE (WITH WORK ZONE MARKINGS) ALL LANE, CENTER, STOP OR CHANNELIZING LINES THAT WERE REMOVED OR COVERED DURING THE PAVEMENT REMOVAL OR PLACEMENT OPERATIONS. QUANTITIES FOR SUCH PLACEMENT ARE CARRIED AS PART OF THE ITEMS LISTED UNDER 614 WORK ZONE PAVEMENT MARKINGS.

8. A QUANTITY OF 10 CU. YDS. OF ITEM 614 ASPHALT CONCRETE FOR MAINTAINING TRAFFIC SHALL BE PROVIDED FOR USE IN MAINTAINING PAVEMENT, SHOULDERS AND OTHER LOCATIONS AS DIRECTED BY THE ENGINEER.

9. PRIOR TO OPENING TO TRAFFIC EACH LANE SHALL BE IN A SAFE, PASSABLE CONDITION. ALL TRANSVERSE JOINTS SHALL EXTEND ACROSS THE FULL LANE AND SHOULDER WIDTH AND EACH LANE SHALL BE FREE FROM UNEVEN LONGITUDINAL JOINTS. THE CONTRACTOR SHALL PROVIDE ASPHALT WEDGES FOR TRANSVERSE JOINTS WHEREVER THERE ARE PAVEMENT ELEVATION DIFFERENCES.

10. A QUANTITY OF ITEM 614 WORK ZONE MARKING SIGN HAS BEEN INCLUDED IN THE PLAN. THIS QUANTITY SHALL INCLUDE, BUT NOT BE LIMITED TO, THE FOLLOWING SIGNS: W8-1 [BUMP], W8-H13 [NO EDGE LINES], R4-1 [DO NOT PASS], R4-2 [PASS WITH CARE], W8-11 [UNEVEN LANES], W8-15 [GROOVED PAVEMENT]. THESE QUANTITIES SHALL BE AS PER 614.04.

THE FOLLOWING QUANTITIES SHALL BE USED FOR THE MAINTENANCE OF TRAFFIC ON THIS PROJECT:

PHASE I - PLANED SURFACE
614, WORK ZONE CENTER LINE, CLASS I, 5.10 MILE
614, WORK ZONE LANE LINE, CLASS I, 9.86 MILE
614, WORK ZONE STOP LINE, CLASS 1, 117 FT
614, WORK ZONE CHANNELIZING LINE, CLASS 1, 395 FT
614, WORK ZONE MARKING SIGN, 50 EACH (ALL PHASES)

PHASE II - INTERMEDIATE COURSE
614, WORK ZONE CENTERLINE, CLASS III, 642 PAINT 5.10 MILE
614, WORK ZONE LANE LINE, CLASS III, 642 PAINT 9.86 MILE
614, WORK ZONE STOP LINE, CLASS III, 642 PAINT 117 FT
614, WORK ZONE CHANNELIZING LINE, CLASS III, 642 PAINT 395 FT

PHASE III - SURFACE COURSE
614, WORK ZONE CENTERLINE, CLASS III, 642 PAINT 5.10 MILE
614, WORK ZONE LANE LINE, CLASS III, 642 PAINT 9.86 MILE
614, WORK ZONE STOP LINE, CLASS III, 642 PAINT 117 FT
614, WORK ZONE CHANNELIZING LINE, CLASS III, 642 PAINT 395 FT

TO BE USED AS DIRECTED BY THE ENGINEER
614, WORK ZONE EDGE LINE, CLASS III, 642 PAINT, 29.92 MILE

ITEM 614 - LAW ENFORCEMENT OFFICER (WITH PATROL CAR) FOR ASSISTANCE DURING CONSTRUCTION OPERATIONS

USE OF LAW ENFORCEMENT OFFICERS (LEOS) BY CONTRACTORS OTHER THAN THE USES SPECIFIED BELOW WILL NOT BE PERMITTED AT PROJECT COST. LEOS SHOULD NOT BE USED WHERE THE OMUTCD INTENDS THAT FLAGGERS BE USED.

IN ADDITION TO THE REQUIREMENTS OF C&MS 614 AND THE OMUTCD, A UNIFORMED LEO WITH AN OFFICIAL PATROL CAR (CAR WITH TOP-MOUNTED EMERGENCY FLASHING LIGHTS AND COMPLETE MARKINGS OF THE APPROPRIATE LAW ENFORCEMENT AGENCY) SHALL BE PROVIDED FOR THE FOLLOWING TRAFFIC CONTROL TASKS:

DURING THE ENTIRE ADVANCE PREPARATION AND CLOSURE SEQUENCE WHERE COMPLETE BLOCKAGE OF TRAFFIC IS REQUIRED.

IN ADDITION TO THE REQUIREMENT OF C&MS 614 AND THE OMUTCD, A UNIFORMED LEO WITH AN OFFICIAL PATROL CAR (CAR WITH TOP-MOUNTED EMERGENCY FLASHING LIGHTS AND COMPLETE MARKINGS OF THE APPROPRIATE LAW ENFORCEMENT AGENCY) SHOULD BE PROVIDED FOR THE FOLLOWING TRAFFIC CONTROL TASKS:

FOR LANE CLOSURES: DURING INITIAL SET-UP PERIODS, TEAR DOWN PERIODS, SUBSTANTIAL SHIFTS OF A CLOSURE POINT OR WHEN NEW LANE CLOSURE ARRANGEMENTS ARE INITIATED FOR LONG-TERM LANE CLOSURES/SHIFTS (FOR THE FIRST AND LAST DAY OF MAJOR CHANGES IN TRAFFIC CONTROL SETUP). IN GENERAL, LEOS SHOULD BE POSITIONED AT THE POINT OF LANE RESTRICTION OR ROAD CLOSURE AND TO MANUALLY CONTROL TRAFFIC MOVEMENTS THROUGH INTERSECTIONS IN WORK ZONES.

LEOS SHOULD NOT FORGO THEIR TRAFFIC CONTROL RESPONSIBILITIES TO APPREHEND MOTORISTS FOR ROUTINE TRAFFIC VIOLATIONS. HOWEVER, IF A MOTORIST'S ACTIONS ARE CONSIDERED TO BE RECKLESS, THEN PURSUIT OF THE MOTORIST IS APPROPRIATE.

THE LEOS WORK AT THE DIRECTION OF THE CONTRACTOR. THE CONTRACTOR IS RESPONSIBLE FOR SECURING THE SERVICES OF THE LEOS WITH THE APPROPRIATE AGENCIES AND COMMUNICATING THE INTENTIONS OF THE PLANS WITH RESPECT TO DUTIES OF THE LEOS. THE ENGINEER SHALL HAVE FINAL CONTROL OVER THE LEOS' DUTIES AND PLACEMENT, AND WILL RESOLVE ANY ISSUES THAT MAY ARISE BETWEEN THE TWO PARTIES.

THE LEO SHALL REPORT IN TO THE CONTRACTOR PRIOR TO THE START OF THE SHIFT, IN ORDER TO RECEIVE INSTRUCTIONS REGARDING SPECIFIC WORK ASSIGNMENTS DURING HIS/HER SHIFT. THE LEO IS EXPECTED TO STAY AT THE PROJECT SITE FOR THE ENTIRE DURATION OF HIS/HER SHIFT. THE LEO SHALL REPORT TO THE CONTRACTOR AT THE END OF HIS/HER SHIFT. ONCE THE LEO HAS COMPLETED THE DUTIES DESCRIBED ABOVE AND STILL HAS TIME REMAINING ON HIS/HER SHIFT, THE LEO MAY BE ASKED TO PATROL THROUGH THE WORK ZONE (WITH FLASHING LIGHTS OFF) OR BE PLACED AT A LOCATION TO DETER MOTORISTS FROM SPEEDING. SHOULD IT BE NECESSARY TO LEAVE THE PROJECT SITE, THE LEO SHALL NOTIFY THE ENGINEER. THE CONTRACTOR SHALL PROVIDE THE LEO WITH A TWO-WAY COMMUNICATION DEVICE WHICH SHALL BE RETURNED TO THE CONTRACTOR AT THE END OF HIS/HER SHIFT.

LEOS (WITH PATROL CAR) REQUIRED BY THE TRAFFIC MAINTENANCE TASKS ABOVE SHALL BE PAID FOR ON A UNIT PRICE (HOURLY) BASIS UNDER ITEM 614, LAW ENFORCEMENT OFFICER (WITH PATROL CAR) FOR ASSISTANCE. THE FOLLOWING ESTIMATED QUANTITIES HAVE BEEN CARRIED TO THE GENERAL SUMMARY.

ITEM 614, LAW ENFORCEMENT OFFICER WITH PATROL CAR FOR ASSISTANCE 250 HOURS

THE HOURS PAID SHALL INCLUDE ANY MINIMUM SHOW-UP TIME REQUIRED BY THE LAW ENFORCEMENT AGENCY INVOLVED.

ANY ADDITIONAL COSTS (ADMINISTRATIVE OR OTHERWISE) INCURRED BY THE CONTRACTOR TO OBTAIN THE SERVICES OF AN LEO ARE INCLUDED WITH THE BID UNIT PRICE FOR ITEM 614, LAW ENFORCEMENT OFFICER WITH PATROL CAR FOR ASSISTANCE.

ITEM 614, MAINTAINING TRAFFIC (TIME LIMITATION ON DETOUR) (STRUCTURE STA-21-2134)

TRAFFIC ON STRUCTURE STA-21-2134 SHALL BE MAINTAINED AT ALL TIMES EXCEPT FOR A PERIOD NOT TO EXCEED 2 CONSECUTIVE CALENDAR DAYS (6AM TUESDAY - 6 AM THURSDAY), WHEN THROUGH TRAFFIC MAY BE DETOURED AS SHOWN ON SHEET 9. A DISINCENTIVE IN THE AMOUNT OF $1000 FOR EACH CALENDAR DAY THE ROADWAY REMAINS CLOSED TO TRAFFIC BEYOND THE SPECIFIED LIMIT.

TRAFFIC CONTROL INSPECTOR

THE CONTRACTOR SHALL DESIGNATE AN INDIVIDUAL OTHER THAN THE SUPERINTENDENT AND SUBJECT TO THE APPROVAL OF THE ENGINEER, TO CONTINUOUSLY INSPECT ALL TRAFFIC CONTROL DEVICES WHENEVER CONSTRUCTION WORK IS BEING PERFORMED WITHIN THE WORK LIMITS OF THE PROJECT. THE DESIGNATED INDIVIDUAL SHALL ALSO INSPECT ALL TRAFFIC DEVICES AT THE BEGINNING AND AT THE END OF EACH WORK DAY. THE DESIGNATED INDIVIDUAL OR A QUALIFIED REPRESENTATIVE SHALL ALSO BE AVAILABLE ON AN AROUND THE CLOCK BASIS TO REPAIR AND/OR REPLACE DAMAGED OR MISSING TRAFFIC CONTROL DEVICES. THESE INDIVIDUALS SHALL BE EQUIPPED WITH CELLULAR PHONES AND THEIR NAMES AND PHONE NUMBERS SHALL BE GIVEN TO THE PROJECT ENGINEER AT THE PRE-CONSTRUCTION MEETING. THE DESIGNATED INDIVIDUAL MAY HAVE OTHER CONSTRUCTION RELATED DUTIES AS LONG AS IMMEDIATE ATTENTION IS GIVEN TO TRAFFIC CONTROL. PAYMENT FOR THE SERVICES OF THE TRAFFIC CONTROL INSPECTOR SHALL BE INCLUDED IN THE LUMP SUM PRICE BID FOR ITEM 614 MAINTAINING TRAFFIC.

ADVANCED NOTICE TO PAVE

THE CONTRACTOR SHALL SUBMIT FOR APPROVAL TO THE DISTRICT CONSTRUCTION ENGINEER A DETAILED SCHEDULE 15 DAYS PRIOR TO THE PLACEMENT OF THE OVERLAY COURSES, ON HOW THEY PROPOSE TO PROSECUTE THE PAVING OPERATIONS. THE DETAILS SHALL SHOW THE ORDER OF PERFORMANCE OF EACH STAGE (START TO FINISH) OF THE WORK INCLUDING THE MAINTENANCE OF TRAFFIC THAT WILL BE USED.

DETOUR NOTIFICATION [ODOT, COUNTY ENGINEER, VILLAGE OF CLINTON, LAWRENCE TOWNSHIP AND CHIPPEWA TOWNSHIP]

THE CONTRACTOR SHALL ADVISE THE ODOT DISTRICT 4 OFFICE (330-786-3148), ODOT DISTRICT 3 OFFICE (419-281-0513), WAYNE COUNTY ENGINEERS (330-287-5500), STARK COUNTY ENGINEERS (330-477-6781), LAWRENCE TOWNSHIP (330-854-3830), CHIPPEWA TOWNSHIP (330-658-2112), AND THE VILLAGE OF CLINTON (330-882-4782) EIGHTEEN (18) DAYS IN ADVANCE OF WHEN THE DETOUR ROUTE SHOULD BE IN EFFECT. ALL WORK ZONE DEVICES REQUIRED SHALL BE FURNISHED, ERECTED, MAINTAINED, AND SUBSEQUENTLY REMOVED BY THE CONTRACTOR. PAYMENT FOR ALL WORK ASSOCIATED WITH THE DETOUR SHALL BE INCLUDED UNDER THE LUMP SUM BID FOR ITEM 614, DETOUR SIGNING.

CALCULATED HKS CHECKED CNC

MAINTENANCE OF TRAFFIC GENERAL NOTES

STA-21/236 - 12.39/0.41

I:\Projects\STA\81640\roadway\sheets\81640MN001.dgn 10/24/2016 11:01:18 AM brosst

ITEM 614, MAINTAINING TRAFFIC (LANES OPEN DURING HOLIDAYS OR SPECIAL EVENTS)

NO WORK SHALL BE PERFORMED AND ALL EXISTING LANES SHALL BE OPEN TO TRAFFIC DURING THE FOLLOWING DESIGNATED HOLIDAYS OR EVENTS:

CHRISTMAS	FOURTH OF JULY
NEW YEARS	LABOR DAY
MEMORIAL DAY	THANKSGIVING

THE PERIOD OF TIME THAT THE LANES ARE TO BE OPEN DEPENDS ON THE DAY OF THE WEEK ON WHICH THE HOLIDAY OR EVENT FALLS. THE FOLLOWING SCHEDULE SHALL BE USED TO DETERMINE THIS PERIOD:

DAY OF HOLIDAY OR EVENT	TIME ALL LANES MUST BE OPEN TO TRAFFIC
SUNDAY	12:00N FRIDAY THROUGH 6:00 AM MONDAY
MONDAY	12:00N FRIDAY THROUGH 6:00 AM TUESDAY
TUESDAY	12:00N MONDAY THROUGH 6:00 AM WEDNESDAY
WEDNESDAY	12:00N TUESDAY THROUGH 6:00 AM THURSDAY
THURSDAY	12:00N WEDNESDAY THROUGH 6:00 AM FRIDAY
THURSDAY (THANKSGIVING ONLY)	6:00 AM WEDNESDAY THROUGH 6:00 AM MONDAY
FRIDAY	12:00N THURSDAY THROUGH 6:00 AM MONDAY
SATURDAY	12:00N FRIDAY THROUGH 6:00 AM MONDAY

SHOULD THE CONTRACTOR FAIL TO MEET ANY OF THESE REQUIREMENTS, THE CONTRACTOR SHALL BE ASSESSED A DISINCENTIVE IN THE AMOUNT OF $3000 FOR EACH HOUR THE ABOVE DESCRIBED LANE CLOSURE RESTRICTIONS ARE VIOLATED.

WINTER TRAFFIC LIMITATIONS

ALL EXISTING LANES SHALL BE OPEN TO TRAFFIC BETWEEN NOVEMBER 15 AND APRIL 1. NOVEMBER 14 SHALL BE CONSIDERED TO CONSTITUTE AN INTERIM COMPLETION DATE AND DISINCENTIVES OF $1500 SHALL BE ASSESSED FOR EACH CALENDAR DAY THAT THE ROADWAY REMAINS CLOSED TO TRAFFIC BEYOND THE SPECIFIED LIMIT. THE CONTRACTOR MAY CLOSE LANES PRIOR TO APRIL 1 WITH WRITTEN APPROVAL FROM THE DISTRICT CONSTRUCTION ENGINEER.

TIME LIMITATION, TRAFFIC ON A MILLED SURFACE

THE MAXIMUM ALLOWABLE TIME FOR TRAFFIC TO BE PLACED ON A MILLED SURFACE SHALL BE 5 CONSECUTIVE CALENDAR DAYS. SHOULD THE CONTRACTOR FAIL TO MEET THIS REQUIREMENT, THE CONTRACTOR SHALL BE ASSSESSED A DISINCENTIVE IN THE AMOUNT OF $3000 PER DAY THAT THE TRAFFIC IS PLACED ON A MILLED SURFACE BEYOND THE SPECIFIED LIMT.

ITEM 614, MAINTAINING TRAFFIC (NOTICE OF CLOSURE SIGN)

NOTICE OF CLOSURE SIGNS, AS DETAILED IN THESE PLANS, SHALL BE ERECTED BY THE CONTRACTOR AT LEAST ONE WEEK IN ADVANCE OF THE SCHEDULED ROAD OR RAMP CLOSURE. THE SIGNS SHALL BE ERECTED ON THE RIGHT-HAND SIDE OF THE ROAD/RAMP FACING TRAFFIC. THEY SHALL BE PLACED SO AS NOT TO INTERFERE WITH THE VISIBILITY OF ANY OTHER TRAFFIC CONTROL SIGNS. ON ROADWAYS, THEY SHOULD BE ERECTED AT THE POINT OF CLOSURE. THE SIGNS MAY BE ERECTED ANYWHERE ON RAMPS AS LONG AS THEY ARE VISIBLE TO THE MOTORISTS USING THE RAMP. ON ENTRANCE RAMPS, THE SIGN SHALL BE ERECTED WELL IN ADVANCE OF THE MERGE AREA TO AVOID DISTRACTING MOTORISTS.

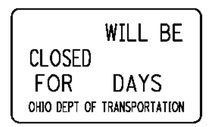

W20-H14-60

CALCULATED HKS
CHECKED CNC

MAINTENANCE OF TRAFFIC GENERAL NOTES

STA-21/236-12.39/0.41

I:\Projects\STA\81640\roadway\sheets\81640MN001.dgn 10/24/2016 11:01:19 AM brosst

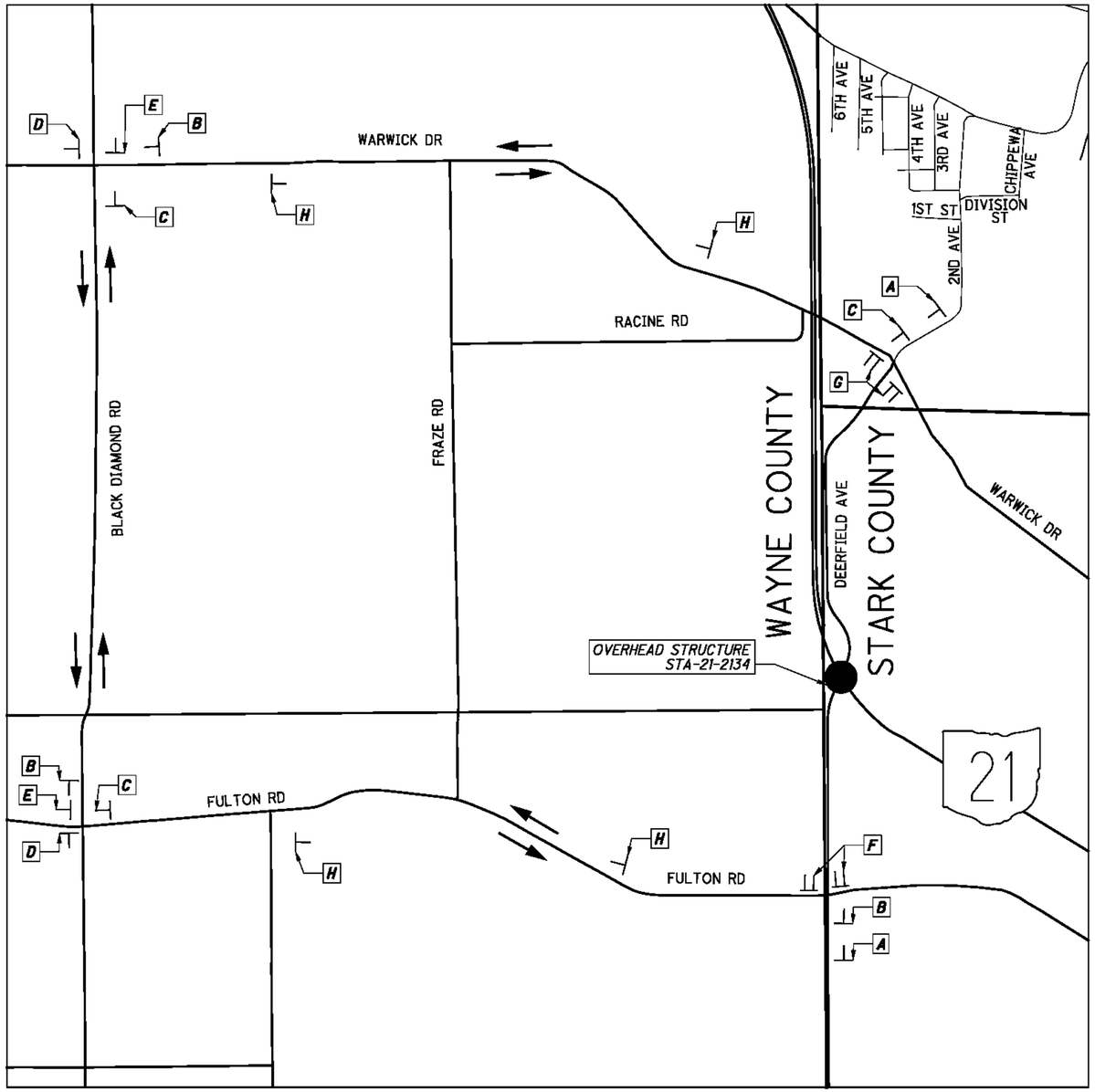

A

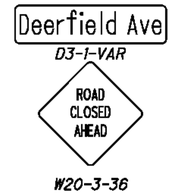

B

C

D

E

F #

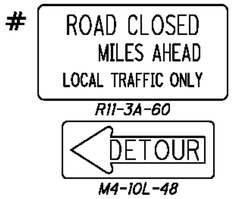

G #

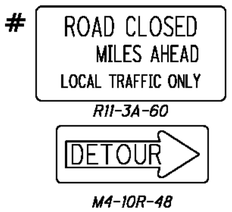

H

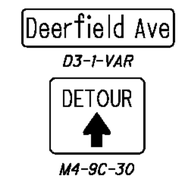

DETOUR ROUTE FOR: DEERFIELD AVE

LOCAL DETOUR ROUTE: FULTON RD/ BLACK DIAMOND RD/ WARWICK RD

CLOSE DEERFIELD AVE AS PER SCD MT 101.60

NOT TO SCALE

REFER TO THE OHIO MANUAL OF UNIFORM TRAFFIC CONTROL DEVICES, FIGURE 6H-8 (TYPICAL APPLICATION 8), FOR SIGN SPACING.

ON TYPE III BARRICADE WITH TYPE B FLASHER MOUNTED PER MT 101.60

CALCULATED HKS
CHECKED CNC

DETOUR PLAN CLOSURE OF STA-21-2134

STA-21-13.67

I:\Projects\STA\81640\roadway\sheets\81640MD001.dgn 10/24/2016 11:01:19 AM brosst

SHEET NUM.												PART.		ITEM	ITEM	GRAND	UNIT	DESCRIPTION	SEE SHEET NO.
				4	5	6	7	11	12	13	14	01/NHS/PV	02/S>2/PV		EXT	TOTAL			
																		ROADWAY	
								943	4,385			943	4,385	202	23500	5,328	SY	WEARING COURSE REMOVED	
					17								17	203	10000	17	CY	EXCAVATION	
				524									524	209	72001	524	STA	PREPARING SUBGRADE FOR SHOULDER PAVING, AS PER PLAN	4
												LS		623	10000	LS		CONSTRUCTION LAYOUT STAKES AND SURVEYING	
					7								7	623	39500	7	EACH	MONUMENT BOX ADJUSTED TO GRADE	
																		EROSION CONTROL	
												1,000		832	30000	1,000	EACH	EROSION CONTROL	
																		DRAINAGE	
					2								2	611	98630	2	EACH	CATCH BASIN ADJUSTED TO GRADE	
																		PAVEMENT	
					1,300							300	1,000	251	01000	1,300	SY	PARTIAL DEPTH PAVEMENT REPAIR	
					100								100	253	01000	100	SY	PAVEMENT REPAIR	
									50,642				50,642	254	01000	50,642	SY	PAVEMENT PLANING, ASPHALT CONCRETE	
					17								17	304	20000	17	CY	AGGREGATE BASE	
									2,026				2,026	SPECIAL	40720000	2,026	GAL	TACK COAT, TRACKLESS TACK, INTERMEDIATE COURSE	6
								15,365	7,322			15,365	7,322	SPECIAL	40720500	22,687	GAL	TACK COAT, TRACKLESS TACK	6
				17				7,114	1,011			7,114	1,028	424	12001	8,142	CY	FINE GRADED POLYMER ASPHALT CONCRETE, TYPE B, AS PER PLAN	5
				34					1,783				1,817	441	50101	1,817	CY	ASPHALT CONCRETE SURFACE COURSE, TYPE 1, (448), AS PER PLAN (PG70-22M)	5
									1,407				1,407	441	50200	1,407	CY	ASPHALT CONCRETE INTERMEDIATE COURSE, TYPE 1, (448)	
								1,236	648			1,236	648	617	10101	1,884	CY	COMPACTED AGGREGATE, AS PER PLAN	5
								19				19		618	40600	19	MILE	RUMBLE STRIPS, (ASPHALT CONCRETE)	
																		TRAFFIC CONTROL	
										1,128		633	495	621	00100	1,128	EACH	RPM	
										851		477	374	621	54000	851	EACH	RAISED PAVEMENT MARKER REMOVED	
											10.2		10.2	644	00100	10.2	MILE	EDGE LINE, 4"	
											5.1		5.1	644	00300	5.1	MILE	CENTER LINE	
											395		395	644	00400	395	FT	CHANNELIZING LINE, 8"	
											117		117	644	00500	117	FT	STOP LINE	
											7		7	644	01300	7	EACH	LANE ARROW	
						0.23						0.23		646	10000	0.23	MILE	EDGE LINE, 4"	
											19.72	19.72		646	10010	19.72	MILE	EDGE LINE, 6"	
											9.86	9.86		646	10110	9.86	MILE	LANE LINE, 6"	
						0.12						0.12		646	10200	0.12	MILE	CENTER LINE	
																		STRUCTURE REPAIRS	
																		FOR STA-21-1507 ESTIMATED QUANTITIES	16
																		FOR STA-21-1643L ESTIMATED QUANTITIES	16
																		FOR STA-21-1643R ESTIMATED QUANTITIES	16
																		FOR STA-21-1847 ESTIMATED QUANTITIES	16
																		FOR STA-21-2134 ESTIMATED QUANTITIES	16
																		FOR STA-236-0322 ESTIMATED QUANTITIES	16
																		MAINTENANCE OF TRAFFIC	
												LS		614	11000	LS		MAINTAINING TRAFFIC	
							250					250		614	11110	250	HOUR	LAW ENFORCEMENT OFFICER WITH PATROL CAR FOR ASSISTANCE	
							LS					LS		614	12420	LS		DETOUR SIGNING	
							50					30	20	614	12460	50	EACH	WORK ZONE MARKING SIGN	
							10					5	5	614	13000	10	CY	ASPHALT CONCRETE FOR MAINTAINING TRAFFIC	
							9.86					9.86		614	20000	9.86	MILE	WORK ZONE LANE LINE, CLASS I	
							19.72					19.72		614	20550	19.72	MILE	WORK ZONE LANE LINE, CLASS III, 642 PAINT	
							5.1						5.1	614	21000	5.1	MILE	WORK ZONE CENTER LINE, CLASS I	
							10.2						10.2	614	21550	10.2	MILE	WORK ZONE CENTER LINE, CLASS III, 642 PAINT	
							29.92					19.72	10.2	614	22350	29.92	MILE	WORK ZONE EDGE LINE, CLASS III, 642 PAINT	
							395						395	614	23000	395	FT	WORK ZONE CHANNELIZING LINE, CLASS I	
							790						790	614	23680	790	FT	WORK ZONE CHANNELIZING LINE, CLASS III, 642 PAINT	
							117						117	614	26000	117	FT	WORK ZONE STOP LINE, CLASS I	
							234						234	614	26610	234	FT	WORK ZONE STOP LINE, CLASS III, 642 PAINT	
																		INCIDENTALS	
												LS		624	10000	LS		MOBILIZATION	

CALCULATED BFR
CHECKED NRC

GENERAL SUMMARY

STA-21/236-
12.39/0.41

I:\Projects\STA\81640\roadway\sheets\81640GG001.dgn 10/24/2016 11:01:20 AM bross1

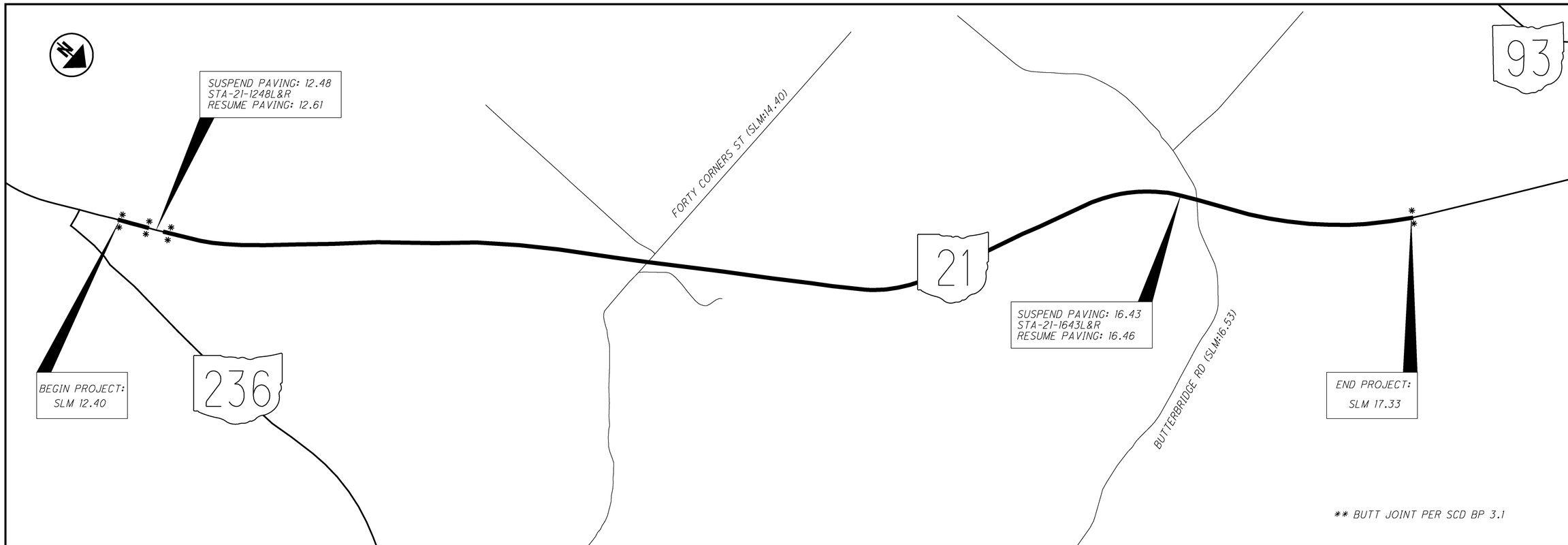

SLM RANGE			TYPICAL SECTION	SIDE	DISTANCE (D)	AVERAGE WIDTH (W)	SURFACE AREA (A) A=DxW/9	CADD GENERATED AREA		202 WEARING COURSE REMOVED		SPECIAL TACK COAT, TRACKLESS TACK @ 0.075 GAL/SY		424 FINE GRADED POLYMER ASPHALT CONCRETE, TYPE B, AS PER PLAN (T=1 1/4")		617 COMPACTED AGGREGATE, AS PER PLAN (T=2")	618 RUMBLE STRIPS, (ASPHALT CONCRETE)									
					FT	FT	SQ YD	SQ YD		SY		GAL		CY		CY	MILE									
SR 21																										
12.40	TO	12.48	1	NB	422.40	36.00	1689.60					126.72		58.67		10.43	0.16									
12.40	TO	12.48	1	SB	422.40	36.00	1689.60					126.72		58.67		10.43	0.16									
12.64	TO	14.32	1	NB	8870.40	36.00	35481.60					2661.12		1232.00		219.02	3.36									
12.64	TO	14.32	1	SB	8870.40	36.00	35481.60					2661.12		1232.00		219.02	3.36									
14.32	TO	14.48	1	NB	844.80	44.00	4130.13					309.76		143.41		20.86	0.32									
14.32	TO	14.48	1	SB	844.80	44.00	4130.13					309.76		143.41		20.86	0.32									
14.48	TO	16.43	1	NB	10296.00	36.00	41184.00					3088.80		1430.00		254.22	3.90									
14.48	TO	16.43	1	SB	10296.00	36.00	41184.00					3088.80		1430.00		254.22	3.90									
16.46	TO	16.62	1	NB	844.80	44.00	4130.13					309.76		143.41		20.86	0.32									
16.46	TO	16.62	1	SB	844.80	44.00	4130.13					309.76		143.41		20.86	0.32									
16.62	TO	17.33	1	NB	3748.80	36.00	14995.20					1124.64		520.67		92.56	1.42									
16.62	TO	17.33	1	SB	3748.80	36.00	14995.20					1124.64		520.67		92.56	1.42									
INTERSECTIONS																										
14.32	TO	14.48		BOTH	844.80	VARIES		993.89		563.89		74.54		34.51												
16.45	TO	16.62		BOTH	897.60	VARIES		648.61		378.61		48.65		22.52												
								SUBTOTALS	0.00	942.50	0.00	15364.79	0.00	7113.33	0.00	1235.91	18.96	0.00	0.00	0.00	0.00	0.00	0.00	0.00	0.00	0.00
								TOTALS CARRIED TO GENERAL SUMMARY	0	943	0	15365	0	7114	0	1236	19	0	0	0	0	0	0	0	0	0

CALCULATED BFR
CHECKED NRC

PAVEMENT CALCULATIONS (SR-21)

STA-21/236-
12.39/0.41

I:\Projects\STA\81640\roadway\sheets\81640GC001.dgn 10/24/2016 11:01:28 AM bross1

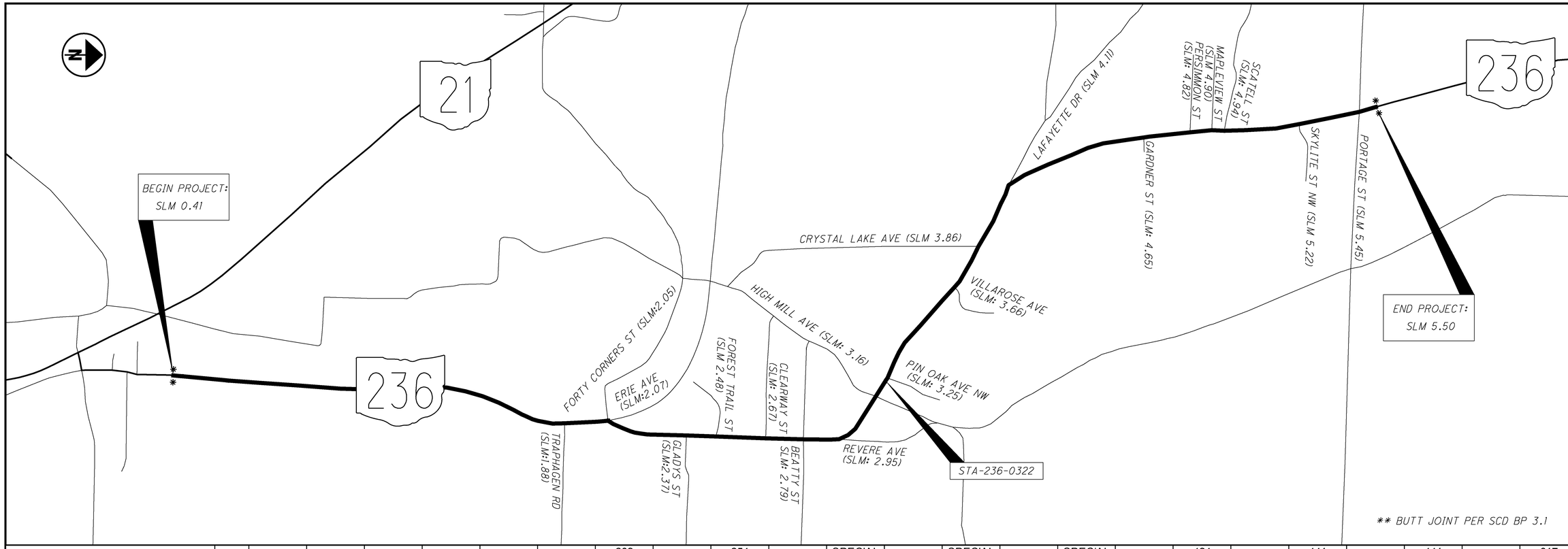

SLM RANGE			TYPICAL SECTION	SIDE	DISTANCE (D)	AVERAGE WIDTH (W)	SURFACE AREA (A) A=DxW/9	CADD GENERATED AREA		202 WEARING COURSE REMOVED		254 PAVEMENT PLANING, ASPHALT CONCRETE (T=2")		SPECIAL TACK COAT, TRACKLESS TACK, INTERMEDIATE COURSE @ 0.04 GAL/SY		SPECIAL TACK COAT, TRACKLESS TACK @ 0.075 GAL/SY		SPECIAL TACK COAT, TRACKLESS TACK @ 0.1 GAL/SY		424 FINE GRADED POLYMER ASPHALT CONCRETE, TYPE B, AS PER PLAN (T=1.25")		441 ASPHALT CONCRETE SURFACE COURSE, TYPE 1, (448), AS PER PLAN PG70-22M (T=1.25")		441 ASPHALT CONCRETE INTERMEDIATE COURSE, TYPE 1, (448) (T=1")		617 COMPACTED AGGREGATE, AS PER PLAN (T=2")
					FT	FT	SQ YD	SQ YD		SY		SY		GAL		GAL		GAL		CY		CY		CY		CY
SR 236																										
0.41	TO	1.60	2		6283.20	25.00	17453.33									1309.00				606.02						155.14
1.60	TO	2.05	2		2376.00	26.00	6864.00									514.80				238.33						58.67
2.05	TO	3.06	3		5332.80	25.00	14813.33					14813.33		592.53				1481.33				514.35		411.48		131.67
3.06	TO	3.10	3		211.20	28.00	657.07					657.07		26.28				65.71				22.81		18.25		5.21
3.10	TO	3.22	4		633.60	28.00	1971.20					1971.20		78.85				197.12				68.44		54.76		
3.22	TO	5.33	3		11140.80	24.00	29708.80					29708.80		1188.35				2970.88				1031.56		825.24		275.08
5.33	TO	5.50	3		897.60	35.00	3490.67					3490.67		139.63				349.07				121.20		96.96		22.16
INTERSECTIONS																										
0.41	TO	2.05			25.00	VARIES		215.28		215.28						16.15				7.47						
2.05	TO	5.50			25.00	VARIES		4169.00		4169.00								416.90		144.76						
DRIVEWAYS																										
0.41	TO	5.50																		7.00		11.00				
MAILBOX APPROACHES																										
0.41	TO	2.05						206.67												7.18						
2.05	TO	5.50						373.33														12.96				
								SUBTOTALS	0.00	4384.28	0.00	50641.07	0.00	2025.64	0.00	1839.95	0.00	5481.01	0.00	1010.76	0.00	1782.33	0.00	1406.70	0.00	647.94
								TOTALS CARRIED TO GENERAL SUMMARY	0	4385	0	50642	0	2026	0	1840	0	5482	0	1011	0	1783	0	1407	0	648

CALCULATED BFR
CHECKED NRC

PAVEMENT CALCULATIONS (SR-236)

STA-21/236-12.39/0.41

I:\Projects\STA\81640\roadway\sheets\81640GC001.dgn 10/24/2016 11:01:32 AM bross1

LOCATION								621	621	621	621		621	
COUNTY	ROUTE	SECTION (S.L.M.)						RPM (YELLOW/YELLOW)	RPM(WHITE/RED)	RPM (WHITE)	RPM (YELLOW/RED)		RAISED PAVEMENT MARKER REMOVED	REMARKS
		FROM	TO					EACH	EACH	EACH	EACH		EACH	
STA	21	12.40	12.48						11				9	
STA	21	12.61	14.40						237				178	
STA	21	14.40	16.44						270				203	
STA	21	16.46	17.33						115				87	
STA	236	0.40	2.05					109		16			94	
STA	236	2.05	2.23					48		16			48	
STA	236	2.23	2.96					49					37	
STA	236	2.96	3.06					14					11	
STA	236	3.06	3.22					17	7	16			30	
STA	236	3.22	4.03					54					41	
STA	236	4.03	4.22					26					20	
STA	236	4.22	5.33					74					56	
STA	236	5.33	5.50					25	8	16			37	
SUBTOTALS				0	0	0	0	416	648	64	0	0	851	
TOTALS CARRIED TO GENERAL SUMMARY				0	0	0	0	1128				0	851	

CALCULATED BFR
CHECKED NRC

RAISED PAVEMENT MARKING SUBSUMMARY

STA-21/236-
12.39/0.41

I:\Projects\STA\81640\roadway\sheets\81640RPM001.dgn 10/24/2016 11:01:36 AM bross1

GENERAL SPEC: 640
MATERIAL TYPE:

CALCULATED MAW
CHECKED

PAVEMENT MARKING SUBSUMMARY

EDGE LINE (646 MATERIAL), 6"

CTY	ROUTE	TRUE LOG	FROM	TRUE LOG	TO	WHITE EDGE LINE TOTAL	WHITE EDGE LINE HIGHWAY	WHITE EDGE LINE RAMP	YELLOW EDGE LINE TOTAL	YELLOW EDGE LINE HIGHWAY	YELLOW EDGE LINE RAMP	COMMENTS
STA	21	12.40	MASSILLON CORP. LIMIT	17.33	S.L.M. 17.33	9.86	9.86		9.86	9.86		
TOTAL						9.86	9.86		9.86	9.86		

EDGE LINE (644 MATERIAL) 4"

CTY	ROUTE	TRUE LOG	FROM	TRUE LOG	TO	TOTAL MILES	4" LANE LINE DASHED	4" LANE LINE SOLID	COMMENTS
STA	236	0.40	MASSILLON CORP. LIMIT	5.50	PORTAGE ST. NW	10.20	10.20		
TOTAL						10.20	10.20		

LANE LINE (646 MATERIAL) 6"

CTY	ROUTE	TRUE LOG	FROM	TRUE LOG	TO	TOTAL MILES	4" LANE LINE DASHED	4" LANE LINE SOLID	COMMENTS
STA	21	12.40	MASSILLON CORP. LIMIT	17.33	S.L.M. 17.33	9.86	9.86		
TOTAL						9.86	9.86		

CENTER LINE

CTY	ROUTE	TRUE LOG	FROM	TRUE LOG	TO	TOTAL MILES	EQUIVALENT SOLID LINE	COMMENTS
STA	236	0.40	MASSILLON CORP. LIMIT	5.50	PORTAGE ST. NW	5.10	8.97	
TOTAL						5.10	8.97	

AUXILIARY

CTY	ROUTE LOCATION	TRUE LOG	CHANNEL LINE, 8"	STOP LINE	CROSS WALK LINES	TRANSVERSE DIAGONAL LINES WHITE	TRANSVERSE DIAGONAL LINES YELLOW	ISLAND MARKING	SYMBOL MARKINGS RxR	SYMBOL MARKINGS SCHOOL 72"	SYMBOL MARKINGS SCHOOL 96"	LANE ARROWS TURN LEFT	LANE ARROWS TURN RIGHT	LANE ARROWS THRU	LANE ARROWS COMB.	LANE ARROWS MERGE	WORD ON PVMT ONLY 72"	WORD ON PVMT ONLY 96"	DOTTED LINES	COMMENTS
			FT	FT	FT	FT	FT	SQ FT	EACH	EACH	EACH	EACH	EACH	EACH	EACH	EACH	EACH	EACH	FT	
STA	S.R. 236 AND ERIE STREET	2.08		45																
STA	S.R. 236 AND HIGH MILL RD.	3.14	135									3								
STA	S.R. 236 AND PORTAGE ST.	5.49	260	72								4								
TOTAL			395	117								7								

STA-21/236-
12.39/0.41

I:\Projects\STA\81640\roadway\sheets\81640PM001.dgn 10/24/2016 11:01:43 AM bross1

STANDARD DRAWINGS AND SUPPLEMENTAL SPECIFICATIONS

REFER TO THE FOLLOWING SUPPLEMENTAL SPECIFICATION(S):

SS 843 DATED 4/18/03

SS 856 DATED 4/18/14

DESIGN SPECIFICATIONS

DESIGN SPECIFICATIONS: THIS STRUCTURE CONFORMS TO "STANDARD SPECIFICATIONS FOR HIGHWAY BRIDGES" ADOPTED BY THE AMERICAN ASSOCIATION OF STATE HIGHWAY AND TRANSPORTATION OFFICIALS, 17TH EDITION , INCLUDING THE 2002 INTERIM SPECIFICATIONS AND THE ODOT BRIDGE DESIGN MANUAL.

EXISTING STRUCTURE VERIFICATION

EXISTING STRUCTURE VERIFICATION: DETAILS AND DIMENSIONS SHOWN ON THESE PLANS PERTAINING TO THE EXISTING STRUCTURE HAVE BEEN OBTAINED FROM PLANS OF THE EXISTING STRUCTURE AND FROM FIELD OBSERVATIONS AND MEASUREMENTS. CONSEQUENTLY, THEY ARE INDICATIVE OF THE EXISTING STRUCTURE AND THE PROPOSED WORK BUT THEY SHALL BE CONSIDERED TENTATIVE AND APPROXIMATE. THE CONTRACTOR IS REFERRED TO CMS SECTIONS 102.05, 105.02 AND 513.04.

BASE CONTRACT BID PRICES UPON A RECOGNITION OF THE UNCERTAINTIES DESCRIBED ABOVE AND UPON A PREBID EXAMINATION OF THE EXISTING STRUCTURE. HOWEVER, THE DEPARTMENT WILL PAY FOR ALL PROJECT WORK BASED UPON ACTUAL DETAILS AND DIMENSIONS WHICH HAVE BEEN VERIFIED IN THE FIELD.

PROPOSED WORK

STA-21-1507 (BRANCH TUSCARAWAS RIVER)
- -RESET DETACHED END SECTIONS OF CULVERT
- -CHANNEL CLEAN OUT
- -CLEARING AND GRUBBING 15' AROUND THE STRUCTURE TO REMOVE VEGETATION
- -NEW STRUCTURE IDENTIFICATION SIGNS

STA 21-1643L (FOX RUN)
- -REMOVE EXISTING ASPHALT CONCRETE OVERLAY AND REPLACE WITH NEW ASPHALT CONCRETE OVERLAY AND WATERPROOFING ASPHALT.
- -PATCH ALL UNSOUND AREAS OF SUBSTRUCTURE
- -SEAL ALL PATCHED AREAS OF CONCRETE WITH EPOXY URETHANE
- -REPAIR REAR AND FORWARD SLOPE PROTECTION
- -CLEARING AND GRUBBING 15' AROUND THE STRUCTURE TO REMOVE VEGETATION
- -NEW STRUCTURE IDENTIFICATION SIGNS

STA 21-1643R (FOX RUN)
- -REMOVE EXISTING ASPHALT CONCRETE OVERLAY AND REPLACE WITH NEW ASPHALT CONCRETE OVERLAY AND WATERPROOFING ASPHALT.
- -PATCH ALL UNSOUND AREAS OF SUBSTRUCTURE
- -SEAL ALL PATCHED AREAS OF CONCRETE WITH EPOXY URETHANE
- -REPAIR REAR AND FORWARD SLOPE PROTECTION
- -CLEARING AND GRUBBING 15' AROUND THE STRUCTURE TO REMOVE VEGETATION
- -NEW STRUCTURE IDENTIFICATION SIGNS

STA-21-1847 (UNDER SR-93)
- -SEAL EXISTING WEARING SURFACE AND APPROACH SLABS WITH SRS CONCRETE TREATMENT
- -PATCH ALL UNSOUND AREAS OF SUBSTRUCTURE
- -SEAL ALL PATCHED AREAS OF CONCRETE WITH EPOXY URETHANE
- -REPAIR EROSION AT RIGHT REAR EMBANKMENT
- -CLEARING AND GRUBBING 15' AROUND THE STRUCTURE TO REMOVE VEGETATION
- -NEW STRUCTURE IDENTIFICATION SIGNS

STA-21-2134 (UNDER DEERFIELD AVENUE)
- -REMOVE AND REPLACE EXISTING ASPHALT CONCRETE OVERLAY
- -PATCH ALL UNSOUND AREAS OF SUBSTRUCTURE
- -SEAL ALL PATCHED AREAS OF CONCRETE WITH EPOXY URETHANE
- -CLEAN OUT SCUPPERS
- -CLEARING AND GRUBBING 15' AROUND THE STRUCTURE TO REMOVE VEGETATION
- -NEW STRUCTURE IDENTIFICATION SIGNS

STA-236-0322 (MUDBROOK CREEK)
- -ADD ASPHALT CONCRETE WEARING SURFACE OVER THE EXISTING WEARING SURFACE. SEE ROADWAY SECTION FOR QUANTITIES.
- -REMOVE ALL SPALLED AREAS OF BOTTOM OF DECK FLOOR AND SEAL WITH EPOXY-URETHANE
- -PATCH ALL UNSOUND AREAS OF SUBSTRUCTURE
- -SEAL ALL PATCHED AREAS OF CONCRETE WITH EPOXY URETHANE
- -CLEARING AND GRUBBING 15' AROUND THE STRUCTURE TO REMOVE VEGETATION
- -NEW STRUCTURE IDENTIFICATION SIGNS

CLEARING AND GRUBBING

ALTHOUGH THERE ARE NO TREES OR STUMPS SPECIFICALLY MARKED FOR REMOVAL WITHIN THE LIMITS OF THE PROJECT, A LUMP SUM QUANTITY IS INCLUDED IN THE GENERAL SUMMARY FOR ITEM 201, CLEARING AND GRUBBING. ALL PROVISIONS AS SET FORTH IN THE SPECIFICATIONS UNDER THIS ITEM ARE INCLUDED IN THE LUMP SUM PRICE BID FOR ITEM 201, CLEARING AND GRUBBING.

ITEM 202, REMOVAL MISC.: CHANNEL CLEANOUT

THIS WORK SHALL CONSIST OF RE-ESTABLISHING THE ORIGINAL CHANNEL PROFILE BY REMOVING SEDIMENT BUILDUP, VEGETATION, AND DEBRIS FROM THE EXISTING CHANNEL OR BANK LIMITS AS SPECIFIED IN THE PLANS. ANY TREES LOCATED WITHIN CHANNEL OR BANK LIMITS SHALL BE INCLUDED UNDER ITEM 201 CLEARING AND GRUBBING. ALL MATERIALS REMOVED SHALL BE DISPOSED IN ACCORDANCE WITH 105.16 AND 105.17 OF THE CMS WITH THE APPROVAL OF THE ENGINEER. NO AREAS OF EXISTING CHANNEL PROTECTION SHALLBE REMOVED IN ORDER TO RESTORE THE ORIGINAL CHANNEL PROFILE. AFFECTED CHANNEL AREAS SHALL BE CLEANED OUT TO THE SATISFACTION OF THE ENGINEER.

CHANNEL CLEANOUT SHALL BE PAID FOR AT THE UNIT PRICE BID FOR ITEM 202 REMOVAL MISC.: CHANNEL CLEANOUT. THIS PRICE SHALL INCLUDE THE COST FOR LABOR, EQUIPMENT, AND ALL INCIDENTALS REQUIRED TO COMPLETE THE CHANNEL CLEANOUT.

ITEM 518 - SCUPPER MISC.: CLEANOUT

THIS WORK WILL CONSIST OF REMOVING ALL DEBRIS FROM ON TOP AND INSIDE OF THE SCUPPERS. SCUPPER CLEANOUT WILL BE PAID FOR AT THE UNIT PRICE BID FOR ITEM 518, SCUPPER MISC.: CLEANOUT. THIS PRICE WILL INCLUDE THE COST FOR LABOR, EQUIPMENT, AND ALL INCIDENTALS REQUIRED TO COMPLETE THIS WORK.

EROSION REPAIR

THIS WORK WILL CONSIST OF REPAIRING THE EROSION AT THE REAR AND FORWARD SLOPE PROTECTION OF STRUCTURES STA-21-1643L AND STA-21-1643R AND ALONG THE REAR RIGHT EMBANKMENT OF STRUCTURE STA-21-1723. REPAIR WORK WILL BE PAID FOR BY THE FOLLOWING ITEMS.

STA-21-1847:
ITEM 203, BORROW 5 CY.

STA-21-1643L:
ITEM 601, CRUSHED AGGREGATE SLOPE PROTECTION 10 CY.

STA-21-1643R:
ITEM 601, CRUSHED AGGREGATE SLOPE PROTECTION 10 CY.

ITEM 519 - PATCHING CONCRETE STRUCTURES, AS PER PLAN

PRIOR TO THE SURFACE CLEANING SPECIFIED IN 519.04 AND WITHIN 24 HOURS OF PLACING PATCHING MATERIAL, BLAST CLEAN ALL SURFACES TO BE PATCHED INCLUDING THE EXPOSED REINFORCING STEEL. ACCEPTABLE METHODS INCLUDE HIGH-PRESSURE WATER BLASTING WITH OR WITHOUT ABRASIVES IN THE WATER, ABRASIVE BLASTING WITH CONTAINMENT, OR VACUUM ABRASIVE BLASTING.

CORRECTING BRIDGE IDENTIFICATION SIGN NUMBERS:

SOME OF THE EXISTING BRIDGE NUMBER SIGNS HAVE INCORRECT BRIDGE NUMBERS ON THEM. THE FOLLOWING BRIDGE NUMBERS ARE THE CORRECT ONES AND WILL BE USED ON THE NEW BRIDGE IDENTIFICATIONS SIGNS.

STRUCTURE STA-21-1643L (SFN:7600577) THE EXISTING SIGN SHOWS 16.44L. THE CORRECT BRIDGE IDENTIFICATION NUMBER IS 1643L.

STRUCTURE STA-21-1643R (SFN:7600607) THE EXISTING SIGN SHOWS 16.44R. THE CORRECT BRIDGE IDENTIFICATION NUMBER IS 1643R.

STRUCTURE STA-21-2134 (SFN:7600666) THE EXISTING SIGN SHOWS 21.33. THE CORRECT BRIDGE IDENTIFICATION NUMBER IS 2134.

STRUCTURE STA-93-1723 (SFN:7605102) THE EXISTING SIGN SHOWS 17.25. THE CORRECT BRIDGE IDENTIFICATION NUMBER IS 1723.

STRUCTURE/CULVERT IDENTIFICATION SIGNS

STRUCTURE IDENTIFICATION SIGNS (I-H25b) WILL BE PLACED ON EACH APPROACH OFF THE RIGHT SHOULDER, FACING TRAFFIC, AND BEHIND THE GUARDRAIL IF APPLICABLE. A QUANTITY OF ONE SIGN PER APPROACH WILL BE INSTALLED. THE SIGNS WILL HAVE A NON-REFLECTIVE WHITE SHEETING BACKGROUND.

THE SIGNS WILL BE MOUNTED ON NEW NO. 2 POSTS AND WILL BE INSTALLED AS PER STANDARD CONSTRUCTION DRAWING TC-41.20, MOST CURRENT REVISION. EACH POST WILL BE 7.5' IN LENGTH.

INSTALL SIGNS FOR THE FOLLOWING STRUCTURES:
STA-21-1507 (2 APPROACHES), STA-21-1643L (2 APPROACHES)
STA-21-1643R (2 APPROACHES), STA-21-1847 (2 APPROACHES),
STA-21-2134 (2 APPROACHES), AND STA-236-0322 (2 APPROACHES)

THE FOLLOWING QUANTITIES HAVE BEEN INCLUDED FOR EACH APPROACH:
- ITEM 630 - GROUND MOUNTED SUPPORT, NO. 2 POST, 7.5 FT
- ITEM 630 - SIGN, FLAT SHEET, 730.20, 1 SQ FT
- ITEM 630 - REMOVAL OF GROUND MOUNTED SIGN AND DISPOSAL, 1 EACH
- ITEM 630 - REMOVAL OF GROUND MOUNTED POST SUPPORT AND DISPOSAL, 1 EACH

CULVERT REPAIR

THIS ITEM OF WORK WILL CONSIST OF RESETTING THE DETACHED END SECTIONS OF STA-21-1507. REPAIR WORK WILL BE PAID FOR BY THE FOLLOWING ITEMS:

ITEM 203, GRANULAR MATERIAL TYPE C (703.16) 10 CY.

ITEM 613, LOW STRENGTH MORTAR 2 CY.

SPECIAL - STRUCTURE MISC.: CONCRETE SPALL REMOVAL

THIS WORK WILL CONSIST OF REMOVING ALL VISIBLY SPALLED AREAS OF THE BOTTOM DECK FLOOR OF STRUCTURE(S) STA-236-0332 WITHOUT SOUNDING. AFTER SPALLED CONCRETE AREAS HAVE BEEN REMOVED, REMOVAL AREAS WILL BE SEALED WITH ITEM 512, SEALING OF CONCRETE SURFACES (EPOXY-URETHANE).

CONCRETE SPALL REMOVAL WILL BE PAID FOR AT THE UNIT BID PRICE FOR SPECIAL - STRUCTURE MISC.: CONCRETE SPALL REMOVAL. THIS PRICE WILL INCLUDE THE COST OF LABOR, EQUIPMENT, AND ALL INCIDENTALS REQUIRED TO COMPLETE THIS WORK.

SPEC, STRUCTURE MISC.: CONCRETE SPALL REMOVAL, 50 SY.
512, SEALING OF CONCRETE SURFACES (EPOXY-URETHANE), 50 SY.

CALC:	BFR	DATE:	1/19/2016
CHECKED:	NRC	DATE:	2/2/2016

ESTIMATED QUANTITIES

BRIDGE NO. / STRUCTURE FILE NO.								ITEM	EXTENSION	UNIT	DESCRIPTION	SEE SHEET
	STA-21-1507 SFN 7600542 03/NHS/BR	STA-21-1643L SFN 7600577 03/NHS/BR	STA-21-1643R SFN 7600607 03/NHS/BR	STA-21-1847 SFN 7605102 03/NHS/BR	STA-21-2134 SFN 7600666 03/NHS/BR	STA-236-0322 SFN 7605994 03/NHS/BR						
	LUMP	LUMP	LUMP	LUMP	LUMP	LUMP		201	11000		CLEARING AND GRUBBING	
		792	792		1018			202	23500	SY	WEARING COURSE REMOVED	
	15							202	98200	FT	REMOVAL MISC.:CHANNEL CLEANOUT	1/5
	10							203	35120	CY	GRANULAR MATERIAL, TYPE C, (703.16)	
		10	10	5				203	40000	CY	BORROW	
		96	96		148			SPEC	40720500	GAL	TACK COAT, TRACKLESS TACK @ 0.15 GAL/SQ YD	
		32	32		41			SPEC	40720510	GAL	TACK COAT, TRACKLESS TACK FOR INTERMEDIATE COURSE @ 0.04 GAL/SQ YD	
		28	28					424	12001	CY	FINE GRADED POLYMER ASPHALT CONCRETE, TYPE B, AS PER PLAN	
					29			441	50101	CY	ASPHALT CONCRETE SURFACE COURSE, TYPE 1, (448), AS PER PLAN, PG64-22	
		50	50	50	50	100		512	10100	SY	SEALING OF CONCRETE SURFACES (EPOXY-URETHANE)	
				1593				512	10400	SY	TREATING OF CONCRETE BRIDGE DECK WITH SRS	
					12			518	12500	EACH	SCUPPER, MISC.:CLEANOUT	1/5
		150	150	150	150	150		519	11101	SF	PATCHING CONCRETE STRUCTURE, AS PER PLAN	1/5
						50		SPEC	53000800	SY	STRUCTURE, MISC.: CONCRETE SPALL REMOVAL	1/5
		10	10					601	20010	CY	CRUSHED AGGREGATE SLOPE PROTECTION	
	2							613	41200	CY	LOW STRENGTH MORTAR BACKFILL	
	15	15	15	15	15	15		630	02100	FT	GROUND MOUNTED SUPPORT, NO. 2 POST	
	2	2	2	2	2	2		630	80100	SF	SIGN, FLAT SHEET, 730.20	
	2	2	2	2	2	2		630	84900	EACH	REMOVAL OF GROUND MOUNTED SIGN AND DISPOSAL	
	2	2	2	2	2	2		630	86002	EACH	REMOVAL OF GROUND MOUNTED POST SUPPORT AND DISPOSAL	
		75	75	75	75	75		843	50000	SF	PATCHING CONCRETE STRUCTURES WITH TROWELABLE MORTAR	
		33	33		43			856	10000	CY	BRIDGE DECK WATERPROOFING ASPHALT CONCRETE	

DESIGN AGENCY
ODOT --- DISTRICT 4
PLANNING AND ENGINEERING

DESIGNED	DRAWN	REVIEWED	DATE
BFR	BFR	NRC	2-2-16
CHECKED	REVISED	STRUCTURE FILE NUMBER	

ESTIMATED QUANTITIES
STA-21-1507, STA-21-1643L, STA-21-1643R, STA-21-1847, STA-21-2134, STA-236-0322

STA-21-/236
12.39/0.41
PID No. 81640

I:\Projects\STA\81640\structures\STA021_1507C\sheets\021_1508CEQ001.dgn 10/24/2016 11:01:51 AM brosst

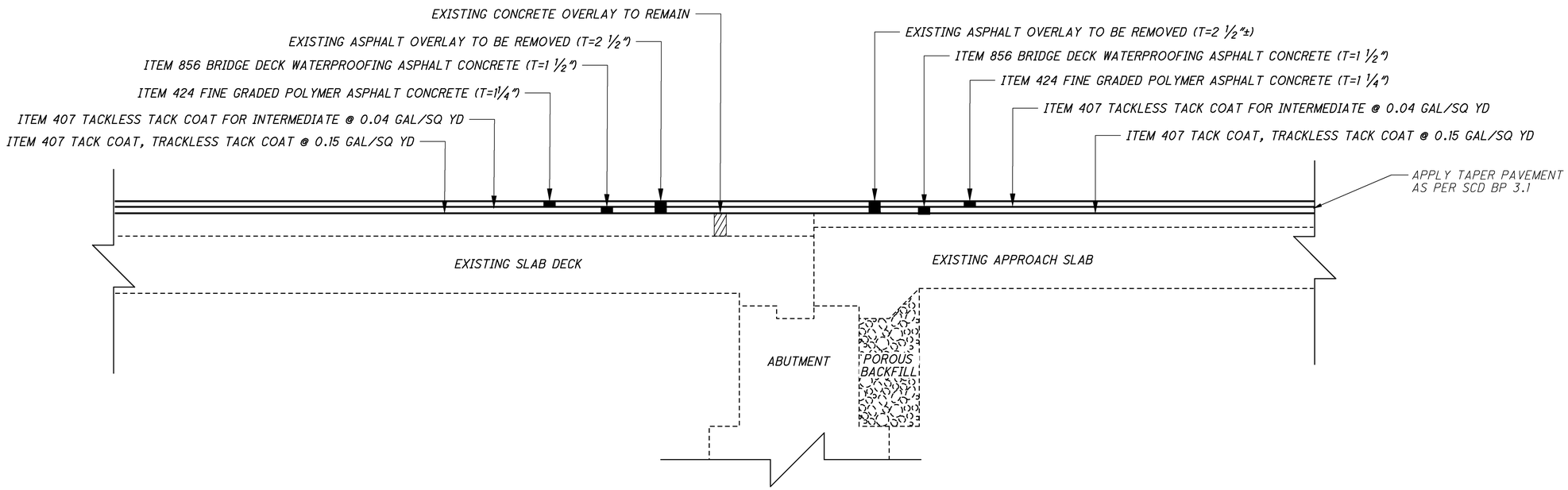

STA-21-1643L AND STA-21-1643R

APPROACH PAVEMENT SHOWN,
TRAILING PAVEMENT SIMILAR

BRIDGE NUMBER	BRIDGE DECK												APPROACH SLABS												
	LENGTH (BRIDGE LIMITS)	BRIDGE WIDTH	DECK AREA	202 WEARING COURSE REMOVED (T= 2 1/2")	SPEC TACK COAT, TRACKLESS TACK @ 0.15 GAL / SQ YD	SPEC TACK COAT, TRACKLESS TACK FOR INTERMEDIATE COURSE @ 0.04 GAL / SQ YD	424 FINE GRADED POLYMER ASPHALT CONCRETE, TYPE B, AS PER PLAN (T=1 1/4")	441 ASPHALT CONCRETE SURFACE COURSE, TYPE 1, (446), AS PER PLAN (T=1")	512 TREATING OF CONCRETE BRIDGE DECK WITH SRS	856 BRIDGE DECK WATERPROOFING ASPHALT CONCRETE (T= 1 1/2")			LENGTH (APPROACH SLABS)	APPROACH SLAB WIDTH	APPROACH SLAB AREA	APPROACH (FORWARD / REAR)	202 WEARING COURSE REMOVED (T= 3 1/2") OR (T= 4 1/2")	SPEC TACK COAT, TRACKLESS TACK @ 0.15 GAL / SQ YD	SPEC TACK COAT, TRACKLESS TACK FOR INTERMEDIATE COURSE @ 0.04 GAL / SQ YD	424 FINE GRADED POLYMER ASPHALT CONCRETE, TYPE B, AS PER PLAN (T=1 1/4")	441 ASPHALT CONCRETE SURFACE COURSE, TYPE 1, (446), AS PER PLAN (T=1")	512 TREATING OF CONCRETE BRIDGE DECK WITH SRS	856 BRIDGE DECK WATERPROOFING ASPHALT CONCRETE (T= 1 1/2")		
	FT	FT	SQ YD	SY	GAL	GAL	CY	CY	SY	CY			FT	FT	SQ YD		SY	GAL	GAL	CY	CY	SY	CY		
STA-21-1643L	112.00	44.00	547.56	547.56	82.13	21.90	19.01			22.81			25.00	44.00	122.22	FWD	122.22	6.60	4.89	4.24			5.09		
													25.00	44.00	122.22	REAR	122.22	6.60	4.89	4.24			5.09		
STA-21-1643R	112.00	44.00	547.56	547.56	82.13	21.90	19.01			22.81			25.00	44.00	122.22	FWD	122.22	6.60	4.89	4.24			5.09		
													25.00	44.00	122.22	REAR	122.22	6.60	4.89	4.24			5.09		
STA-21-2134	273.00	30.92	937.91	937.91	140.69	37.52		26.05		39.08			15.00	24.00	40.00	FWD	40.00	3.60	1.60		1.11		1.67		
													15.00	24.00	40.00	REAR	40.00	3.60	1.60		1.11		1.67		
STA-21-1847	255.00	47.00	1331.67						1331.67				25.00	47.00	130.56	FWD						130.56			
													25.00	47.00	130.56	REAR						130.56			

DESIGN AGENCY
ODOT --- DISTRICT 4
PLANNING AND ENGINEERING

DESIGNED	DRAWN	REVIEWED	DATE
BFR	BFR	NRC	2-2-16
CHECKED	REVISED	STRUCTURE FILE NUMBER	

STRUCTURE DETAILS
STA-21-1507, STA-21-1643L, STA-21-1643R, STA-21-1847, STA-21-2134,
STA-236-0322

STA-21/236-
12.39/0.41
PID No. 81640

I:\Projects\STA\81640\structures\STA021_1507C\sheets\021_1508CSD001.dgn 10/24/2016 11:02:01 AM bross1

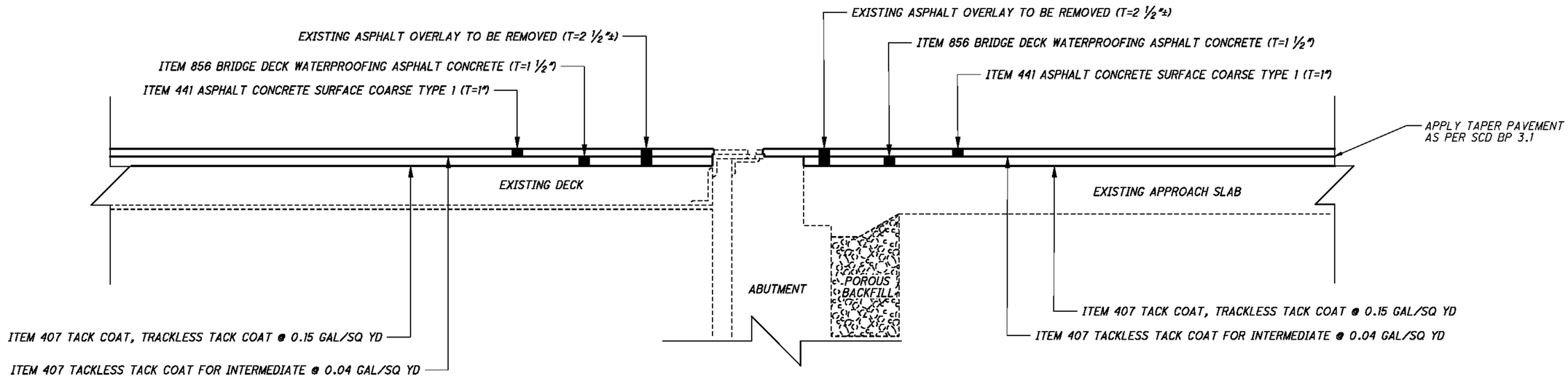

STA-21-2134

APPROACH PAVEMENT SHOWN,
TRAILING PAVEMENT SIMILAR

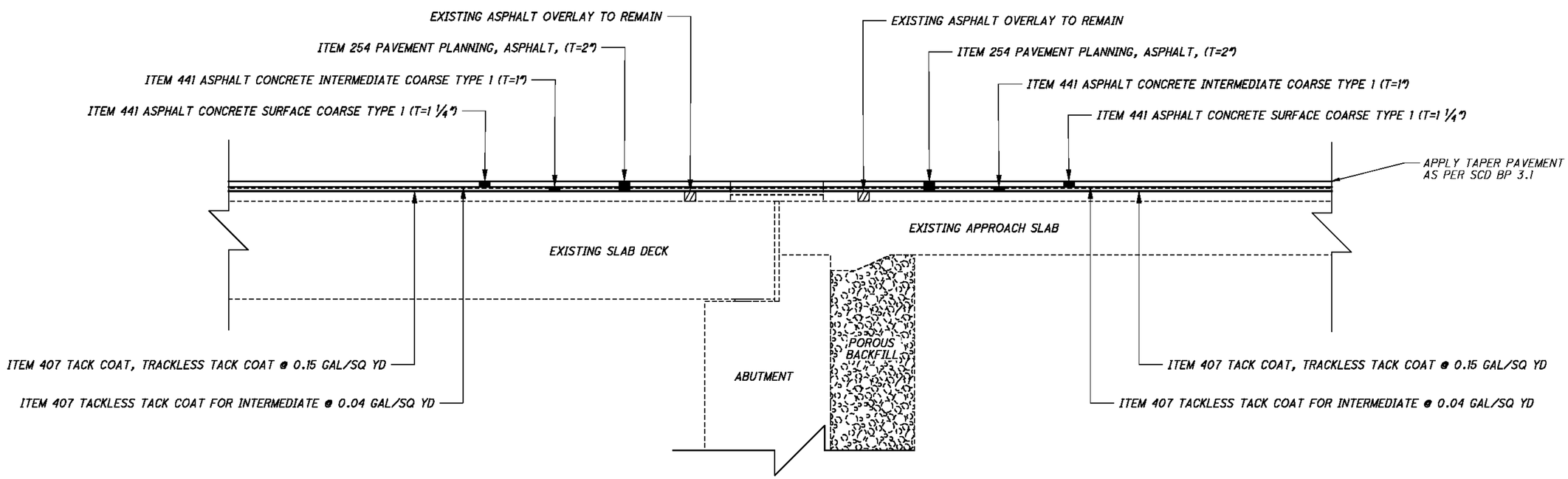

STA-236-0322

APPROACH PAVEMENT SHOWN,
TRAILING PAVEMENT SIMILAR

* STA-236-0322 QUANTITIES INCLUDED IN PAVEMENT CALCULATIONS, SEE SHEET 12

DESIGN AGENCY
ODOT --- DISTRICT 4
PLANNING AND ENGINEERING

DESIGNED	DRAWN	REVIEWED	DATE
BFR	BFR	NRC	2-2-16
CHECKED	REVISED	STRUCTURE FILE NUMBER	

STRUCTURE DETAILS
STA-21-1507, STA-21-1643L, STA-21-1643R, STA-21-1847, STA-236-0322

STA-21/236-12.39/0.41
PID No. 81640

I:\Projects\STA\81640\structures\STA021_1507C\sheets\021_1508CSD001.dgn 10/24/2016 11:02:05 AM brosst

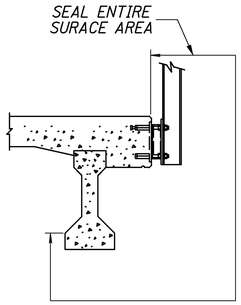

DETAIL A
CONCRETE DECKS WITH
OVER THE SIDE DRAINAGE

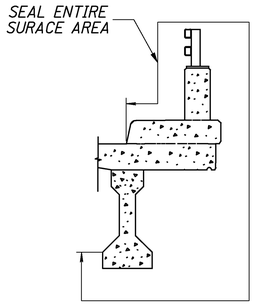

DETAIL B
CONCRETE DECKS WITH CURBS,
SIDEWALKS AND PARAPET

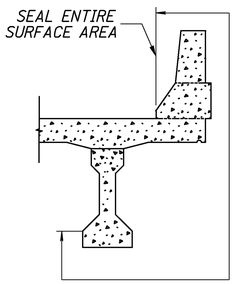

DETAIL C
CONCRETE DECK WITH
DEFLECTOR PARAPET

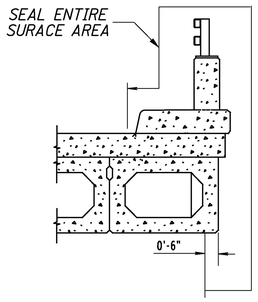

DETAIL D
PRESTRESSED BOX BEAM DECK
WITH DEFLECTOR PARAPET

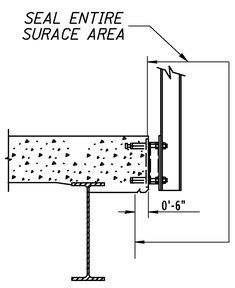

DETAIL E
CONCRETE DECKS WITH
OVER THE SIDE DRAINAGE

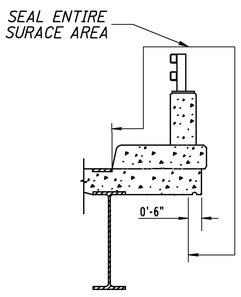

DETAIL F
CONCRETE DECKS WITH CURBS,
SIDEWALKS AND PARAPET

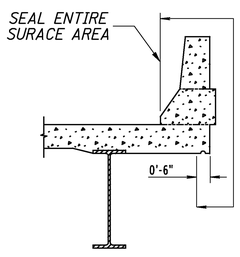

DETAIL G
CONCRETE DECK WITH
DEFLECTOR PARAPET

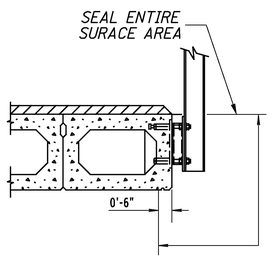

DETAIL H
PRESTRESSED BOX BEAM DECK
WITH OVER THE SIDE DRAINAGE

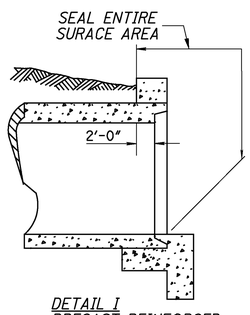

DETAIL I
PRECAST REINFORCED
CONCRETE BOX CULVERT

NOTES:
- EPOXY-URETHANE SEALER SHALL BE USED UNLESS SHOWN OTHERWISE
- DETAILS E, F, G AND H ALSO APPLY TO CONCRETE SLAB BRIDGES

				ESTIMATED QUANTITIES				
BRIDGE NUMBER	STRUCTURE TYPE	PROPOSED SEALING	FEDERAL COLOR NUMBER	ABUT (SQ YD)	PIER (SQ YD)	SUPER (SQ YD)	GENERAL (SQ YD)	TOTAL (SQ YD)
STA-21-1643L	CONCRETE SLAB CONTINUOUS	SEAL ALL PATCHED CONCRETE SURFACES	PER CMS				50	50
STA-21-1643R	CONCRETE SLAB CONTINUOUS	SEAL ALL PATCHED CONCRETE SURFACES	PER CMS				50	50
STA-21-2134	STEEL BEAM CONTINUOUS	SEAL ALL PATCHED CONCRETE SURFACES	PER CMS				50	50
STA-93-1723	STEEL BEAM CONTINUOUS	SEAL ALL PATCHED CONCRETE SURFACES	PER CMS				50	50
STA-236-0322	PRESTRESSED BOX BEAM SIMPLE SPAN	SEAL ALL PATCHED CONCRETE SURFACES SEAL SPALLED REMOVALS FROM DECK FLOOR	PER CMS				100	100

DESIGN AGENCY
ODOT --- DISTRICT 4
PLANNING AND ENGINEERING

REVIEWED NRC DATE 2-2-16
STRUCTURE FILE NUMBER
DRAWN BFR
REVISED
DESIGNED BFR
CHECKED

CONCRETE SEALING DETAILS
STA-21-1507, STA-21-1643L, STA-21-1643R, STA-21-1847, STA-21-2134, STA-236-0322

STA-21-/236
12.39/0.40
PID No. 81640

5/5

19/19

I:\Projects\STA\81640\structures\STA021_1507C\sheets\021_1508CMD001.dgn 10/24/2016 11:02:05 AM bross1