STATE OF OHIO
DEPARTMENT OF TRANSPORTATION

ADA-41-31.53

FRANKLIN TOWNSHIP
ADAMS COUNTY

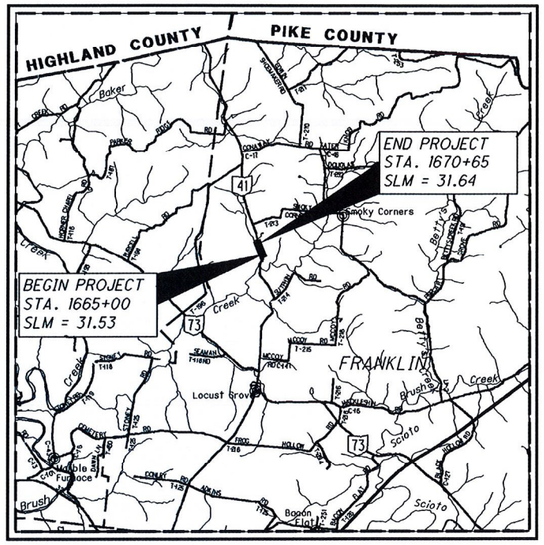

LOCATION MAP

LATITUDE: 39°00'55" LONGITUDE: 83°22'39"

SCALE IN MILES

0 1 2 3 4

N

PORTION TO BE IMPROVED
INTERSTATE HIGHWAY
FEDERAL ROUTES
STATE ROUTES
COUNTY & TOWNSHIP ROADS
OTHER ROADS

DESIGN DESIGNATION

CURRENT ADT (2017)	1300
DESIGN YEAR ADT (2037)	1500
DESIGN HOURLY VOLUME (2037)	180
DIRECTIONAL DISTRIBUTION	59 %
TRUCKS (24 HOUR B&C)	3 %
DESIGN SPEED	55 MPH
LEGAL SPEED	55 MPH
DESIGN FUNCTIONAL CLASSIFICATION: 07 MAJOR COLLECTOR (RURAL)	
NHS PROJECT	NO

DESIGN EXCEPTIONS

DESIGN FEATURE	APPROVAL DATE	SHEET NO
HORIZONTAL CURVE RADIUS	08-03-16	2

INDEX OF SHEETS:

TITLE SHEET	1
SCHEMATIC PLAN	2
TYPICAL SECTIONS	3,4
GENERAL NOTES	5,6
MAINTENANCE OF TRAFFIC	7-11
GENERAL SUMMARY	12-13
ROADWAY SUBSUMMARY	14
PAVEMENT SUBSUMMARY	15
SITE PLAN	16
PLAN AND PROFILE	17 ,18
CROSS-SECTIONS - S.R. 41	19-33
CROSS-SECTIONS - FIELD DRIVE	34-37
DRILLED SHAFT RETAINING WALLS	
LEFT WALL PROFILE AND DETAILS	38
LEFT WALL ELEVATIONS	39-42
RIGHT WALL PROFILE	43
RIGHT WALL DETAILS	44
RIGHT WALL ELEVATIONS	45
RIGHT-OF-WAY	46-51
LANDSLIDE EXPLORATON	

UNDERGROUND UTILITIES

CONTACT BOTH SERVICES
CALL TWO WORKING DAYS
BEFORE YOU DIG

CALL
1-800-362-2764
(TOLL FREE)
OHIO UTILITIES PROTECTION SERVICE
NON-MEMBERS
MUST BE CALLED DIRECTLY

OIL & GAS PRODUCERS UNDERGROUND
PROTECTION SERVICE CALL: **1-800-925-0988**

PROJECT DESCRIPTION

LANDSLIDE REMEDIATION OF A 0.11 MILE SECTION OF STATE ROUTE 41 IN ADAMS COUNTY AND FRANKLIN TOWNSHIP BY CONSTRUCTION OF PARALLEL DRILLED SHAFT RETAINING WALLS INCLUDING MINOR REGRADING FOR DRAINAGE, GUARDRAIL REPLACEMENT AND INCIDENTAL PAVEMENT RESURFACING.

EARTH DISTURBED AREA

PROJECT EARTH DISTURBED AREA:	1.31 ACRES
ESTIMATED CONTRACTOR EARTH DISTURBED AREA:	1.1 ACRES
NOTICE OF INTENT EARTH DISTURBED AREA:	4.9 ACRES

2016 SPECIFICATIONS

THE STANDARD SPECIFICATIONS OF THE STATE OF OHIO, DEPARTMENT OF TRANSPORTATION, INCLUDING CHANGES AND SUPPLEMENTAL SPECIFICATIONS LISTED IN THE PLANS AND CHANGES LISTED IN THE PROPOSAL SHALL GOVERN THIS IMPROVEMENT.

STANDARD CONSTRUCTION DRAWINGS							SUPPLEMENTAL SPECIFICATIONS		SPECIAL PROVISIONS
BP-3.1	7/18/14	MT-97.10	7/18/14				800	1/20/17	
BP-4.1	7/19/13	MT-101.70	1/17/14						
DM-1.1	1/15/16	MT-101.75	7/15/16				832	1/17/14	
DM-4.3	1/15/16	MT-101.90	7/17/15						
DM-4.4	1/15/16						878	7/15/16	
		TC-41.20	10/18/13						
MGS-1.1	7/19/13	TC-42.10	10/18/13				961	7/15/16	
MGS-2.1	7/19/13	TC-42.20	10/18/13						
MGS-4.2	7/19/13	TC-52.10	10/18/13						
		TC-52.20	7/15/16						
RM-1.1	7/18/14	TC-61.10	1/17/14						
RM-4.2	4/18/14	TC-61.30	7/18/14						
		TC-65.10	1/17/14						
MT-96.11	7/15/16	TC-65.11	7/15/16						
MT-96.20	7/15/16								
MT-96.26	7/19/13								

ENGINEERS SEAL:

STATE OF OHIO
CHRISTOPHER W PRIDEMORE
E-70403
REGISTERED
PROFESSIONAL ENGINEER

SIGNED: [signature]
DATE: 12-2-16

STATE OF OHIO DEPARTMENT OF TRANSPORTATION

PLAN PREPARED BY:
OHIO DEPARTMENT OF TRANSPORTATION
DISTRICT 9 - PLANNING & ENGINEERING
650 EASTERN AVE, CHILLICOTHE OH, 45601

* I HEREBY APPROVE THESE PLANS AND DECLARE THAT THE MAKING OF THIS IMPROVEMENT WILL NOT REQUIRE THE CLOSING TO TRAFFIC OF THE HIGHWAY AND THAT PROVISIONS FOR THE MAINTENANCE AND SAFETY OF TRAFFIC WILL BE AS SET FORTH ON THE PLANS AND ESTIMATES.

APPROVED [signature]
DATE 12-2-16 DISTRICT DEPUTY DIRECTOR

APPROVED
DATE DIRECTOR, DEPARTMENT OF TRANSPORTATION

FEDERAL PROJECT NO. E140 (690)
PID NO. 97590
CONSTRUCTION PROJECT NO.
RAILROAD INVOLVEMENT NONE
ADA-41-31.53

170117 Conformed Set
Dist 9
I:\project\Adams\ADA-41-3200-97590\roadway\sheets\97590GT001.dgn 02-DEC-2016 12:32PM cpridemo

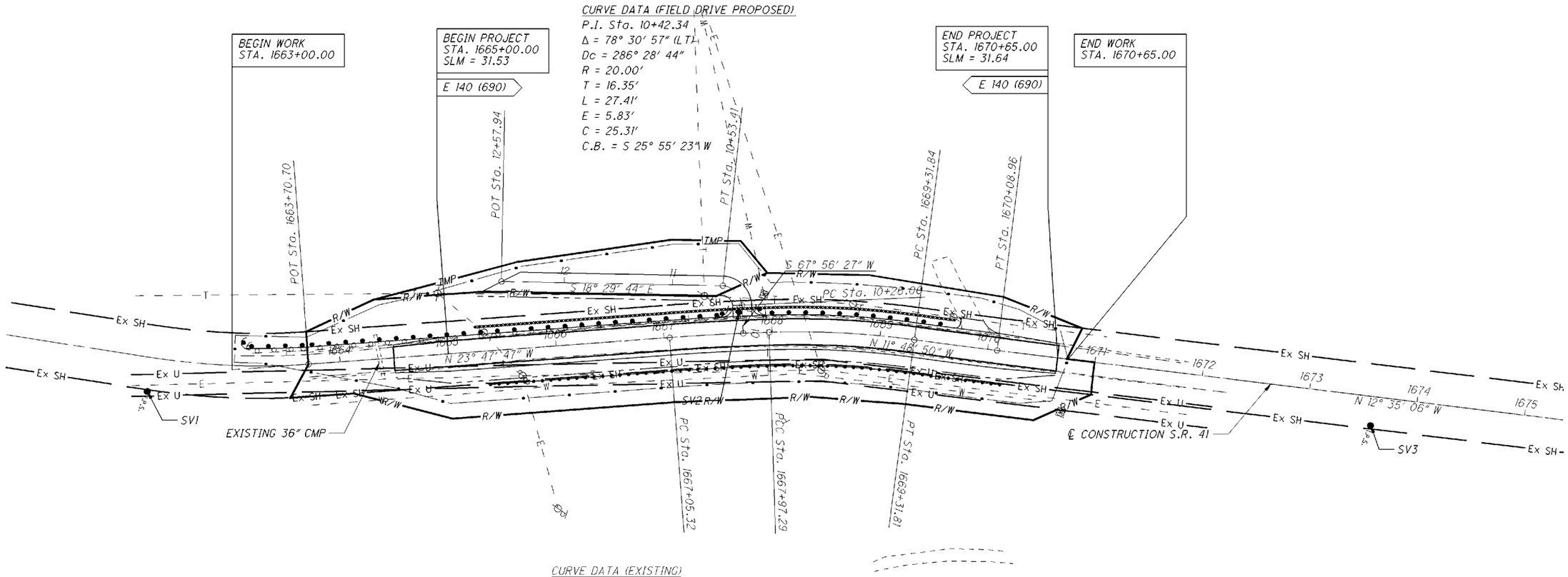

CURVE DATA (EXISTING)
P.I. Sta. 1667+51.31
Δ = 2° 20′ 57″ (RT)
Dc = 2° 33′ 15″
R = 2,243.35′
T = 46.00′
L = 91.98′
E = 0.47′
C = 91.97′
C.B. = N 22° 37′ 19″ W

CURVE DATA (EXISTING)
P.I. Sta. 1668+64.71
Δ = 9° 38′ 00″ (RT)
Dc = 7° 09′ 41″
R = 800.07′
T = 67.42′
L = 134.52′
E = 2.84′
C = 134.36′
C.B. = N 16° 37′ 50″ W

CURVE DATA (EXISTING)
P.I. Sta. 1669+70.40
Δ = 0° 46′ 17″ (LT)
Dc = 1° 00′ 00″
R = 5,729.00′
T = 38.56′
L = 77.12′
E = 0.13′
C = 77.12′
C.B. = N 12° 11′ 58″ W

PRIMARY PROJECT CONTROL INFORMATION

POINT NUMBER	GRID COORDINATES U.S. SURVEY FEET		SCALED COORDINATES U.S. SURVEY FEET		STATION	OFFSET	ORTHOMETRIC HEIGHT	DESCRIPTION
	NORTHING	EASTING	NORTHING	EASTING	(FEET)	(FEET)	(ELEVATION)	
SV1	370519.5920	1719412.1971	370547.1090	1719539.8910	--	--	763.83	1/2″ IRON PIN AND CAP SET
SV2	371009.7741	1719159.8705	371037.3275	1719287.5456	1667+70.08	-19.7982	752.96	RAILROAD SPIKE SET
SV3	371594.9917	1719063.0612	371622.5886	1719190.7291	1673+59.93	26.8229	755.01	1/2″ IRON PIN AND CAP SET

NOTES:

1. REFER TO THE SURVEY PARAMETERS NOTE IN THE GENERAL NOTES ON SHEET 5 FOR ADDITIONAL PROJECT CONTROL INFORMATION.

2. THERE ARE NO EXISTING LANDSCAPED AREAS WITHIN THE WORK LIMITS.

HORIZONTAL SCALE IN FEET
0 25 50 100

SCHEMATIC PLAN

ADA-41-31.53

I:\project\Adams\ADA-41-3200-97590\roadway\sheets\97590GB001.dgn 02-DEC-2016 12:32PM cpridemo

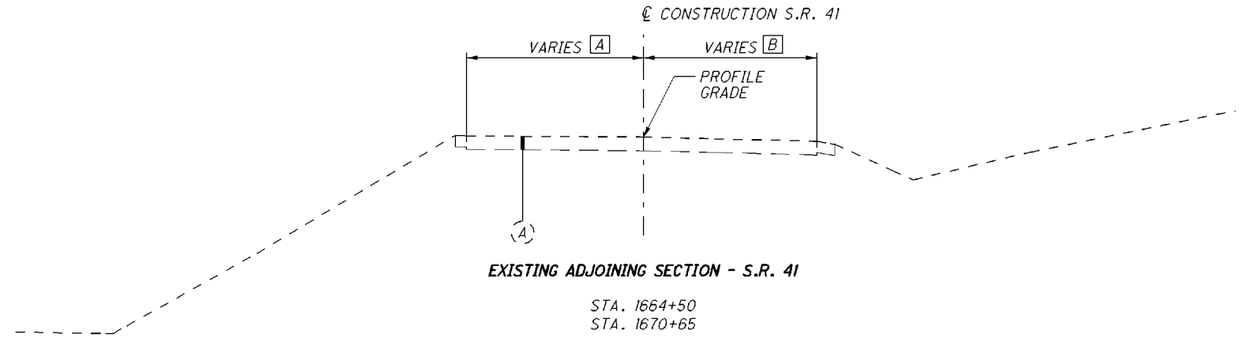

EXISTING ADJOINING SECTION - S.R. 41

STA. 1664+50
STA. 1670+65

A VARIES 10.0'± @ STA. 1664+50
11.4'± @ STA. 1670+65

B VARIES 11.8'± @ STA. 1664+50
12.4'± @ STA. 1670+65

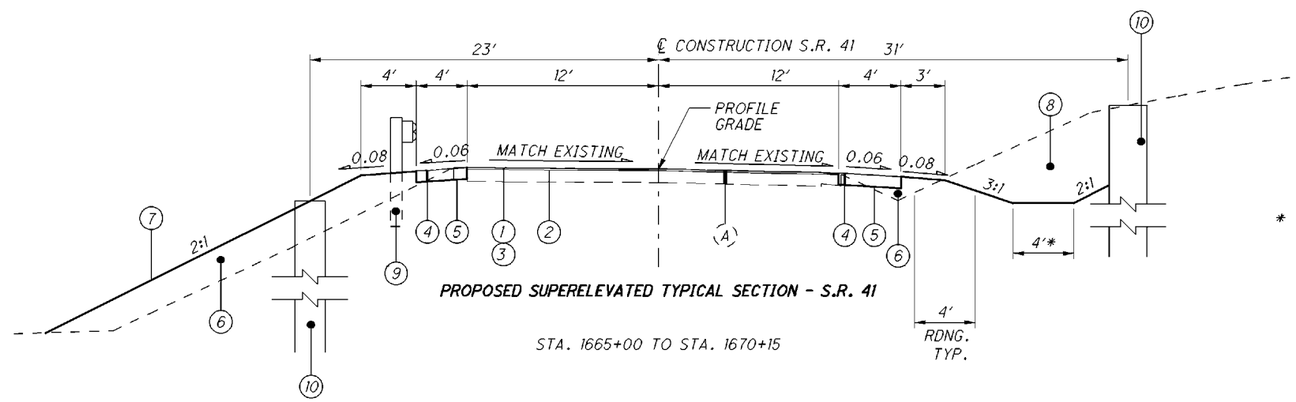

PROPOSED SUPERELEVATED TYPICAL SECTION - S.R. 41

STA. 1665+00 TO STA. 1670+15

* STA. 1665+00 TO 1667+50 - FOUR (4) FOOT DITCH
STA. 1667+75 TO 1670+15 - TWO (2) FOOT DITCH

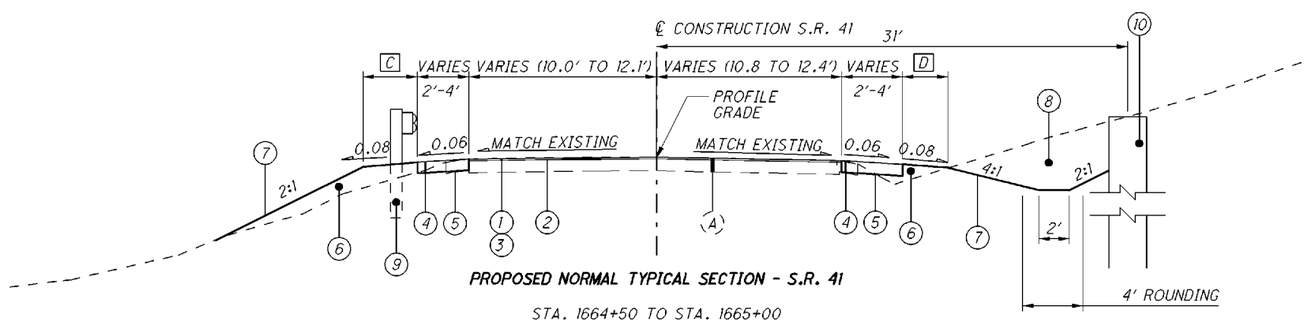

PROPOSED NORMAL TYPICAL SECTION - S.R. 41

STA. 1664+50 TO STA. 1665+00
STA. 1670+15 TO STA. 1670+65

C VARIES 0' TO 4'

D VARIES 0' TO 3'

LEGEND:

1. ITEM 441 - 1½" ASPHALT CONCRETE SURFACE COURSE, TYPE 1, (448)
2. ITEM 407 - TACK COAT @ 0.075 GAL/SQ YD
3. ITEM 254 - PAVEMENT PLANING, ASPHALT CONCRETE (1½")
4. ITEM 411 - STABILIZED CRUSHED AGGREGATE, 8"
5. ITEM 204 - SUBGRADE COMPACTION
6. ITEM 203 - EMBANKMENT
7. ITEM 659 - SEEDING AND MULCHING
8. ITEM 203 - EXCAVATION
9. ITEM 606 - GUARDRAIL, TYPE MGS
10. RETAINING WALL(S) - SEE SHEETS 38 - 45 FOR DETAILS

(A) EXISTING ASPHALT (VARIES 7" TO 12" THICK)

TYPICAL SECTIONS

ADA-41-31.53

I:\project\Adams\ADA-41-3200-97590\roadway\sheets\97590GY001.dgn 02-DEC-2016 12:32PM cpridemo

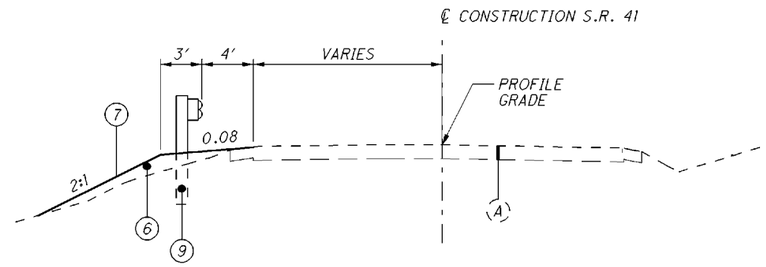

PROPOSED NORMAL TYPICAL SECTION - S.R. 41
STA. 1663+00 TO STA. 1664+50

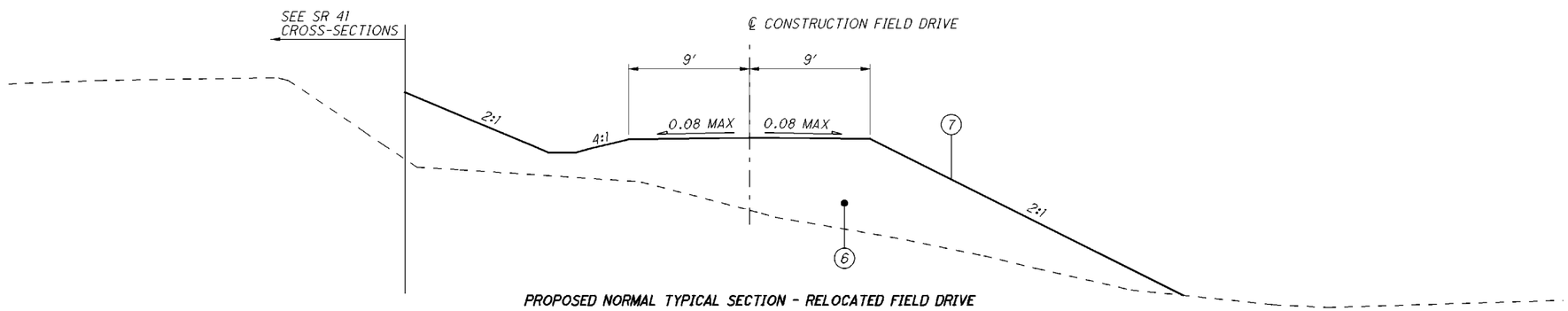

PROPOSED NORMAL TYPICAL SECTION - RELOCATED FIELD DRIVE
STA. 10+25 TO STA. 12+57.94

LEGEND:

1. ITEM 441 - 1½" ASPHALT CONCRETE SURFACE COURSE, TYPE 1, (448)
2. ITEM 407 - TACK COAT @ 0.075 GAL/SQ YD
3. ITEM 254 - PAVEMENT PLANING, ASPHALT CONCRETE (1½")
4. ITEM 411 - STABILIZED CRUSHED AGGREGATE, 8"
5. ITEM 204 - SUBGRADE COMPACTION
6. ITEM 203 - EMBANKMENT
7. ITEM 659 - SEEDING AND MULCHING
8. ITEM 203 - EXCAVATION
9. ITEM 606 - GUARDRAIL, TYPE MGS
10. RETAINING WALL(S) - SEE SHEETS 38 - 45 FOR DETAILS

(A) EXISTING ASPHALT (VARIES 7" TO 12" THICK)

TYPICAL SECTIONS

ADA-41-31.53

I:\project\Adams\ADA-41-3200-97590\roadway\sheets\97590GY002.dgn 02-DEC-2016 12:32PM cpridemo

ROUNDING

THE ROUNDING AT SLOPE BREAKPOINTS SHOWN ON THE TYPICAL SECTIONS APPLIES TO ALL CROSS-SECTIONS EVEN THOUGH OTHERWISE SHOWN.

UTILITIES

LISTED BELOW ARE ALL UTILITIES LOCATED WITHIN THE PROJECT CONSTRUCTION LIMITS TOGETHER WITH THEIR RESPECTIVE OWNERS:

ELECTRIC

Mr. Paul Paxton (Distribution)

Public Projects Coordinator
AEP Ohio Power Company
850 Tech Center Drive
Gahanna, OH 43230
Phone: (614) 883-6831
E-mail: ptpaxton@aep.com

WATER

Mr. Rickey Adamson

Manager
Adams County Regional
Water District
9203 SR 136, PO Box 427
West Union, OH 45693
Phone: (937) 544-2396
E-mail: rickadamson@acrwd.com

TELECOM

Mr. Paul Montavon

Field Engineer
Frontier Communications
1315 Albert Street
Portsmouth, OH 45662
Phone: (740) 354-0512
E-mail: paul.montavon@ftr.com

CABLE

Mr. Neal Hensley

Construction Supervisor
Time Warner Cable
11252 Cornell Park Drive
Cincinnati, Ohio 45242
Phone: (513) 489-5907
E-mail:Neal.hensley@twcable.com

THE LOCATION OF THE UNDERGROUND UTILITIES SHOWN ON THE PLANS ARE AS OBTAINED FROM THE OWNERS AS REQUIRED BY SECTION 153.64 O.R.C.

CLEARING AND GRUBBING

REMOVE ALL TREES AND STUMPS SPECIFICALLY MARKED FOR REMOVAL WITHIN THE CONSTRUCTION LIMITS UNDER THE LUMP SUM BID FOR ITEM 201, CLEARING AND GRUBBING. THE FOLLOWING IS AN APPROXIMATE ESTIMATE OF THE NUMBER OF TREES AND STUMPS TO BE REMOVED.

SIZES	NO. TREES	NO. STUMPS	TOTAL
18"	5	0	5
30"	1	0	1

ENDANGERED BAT HABITAT REMOVAL

THE PROJECT IS LOCATED WITHIN THE KNOWN HABITAT RANGES OF THE FEDERALLY LISTED AND PROTECTED INDIANA BAT AND NORTHERN LONG-EARED BAT. NO TREES SHALL BE REMOVED UNDER THIS PROJECT FROM APRIL 1 THROUGH SEPTEMBER 30. ALL NECESSARY TREE REMOVAL SHALL OCCUR FROM OCTOBER 1 THROUGH MARCH 31. THIS REQUIREMENT IS NECESSARY TO AVOID AND MINIMIZE IMPACTS TO THESE SPECIES AS REQUIRED BY THE ENDANGERED SPECIES ACT. FOR THE PURPOSES OF THIS NOTE, A TREE IS DEFINED AS A LIVE, DYING, OR DEAD WOODY PLANT, WITH A TRUNK THREE INCHES OR GREATER IN DIAMETER AT A HEIGHT OF 4.5 FEET ABOVE THE GROUND SURFACE, AND WITH A MINIMUM HEIGHT OF 13 FEET.

SEEDING AND MULCHING

THE FOLLOWING QUANTITIES ARE PROVIDED TO PROMOTE GROWTH AND CARE OF PERMANENT SEEDED AREAS:

659, SEEDING AND MULCHING 6,113 SQ. YD.

659, REPAIR SEEDING AND MULCHING 306 SQ. YD
5% OF 6,113 SQ YD

659, COMMERCIAL FERTILIZER 0.9 TON
6,113 SY X 9 SF/SY @ 20 LBS PER 1,000 SF = 1100 LBS
2ND APP. @ 10 LBS PER 1,000 SF = 550 LBS
TOTAL = 1650 LBS / 2000 LBS PER TON = 0.825 TON

659, LIME 1.3 ACRES
6,113 SY = 1.26 ACRES

659, WATER 33 M. GAL.
6113 SY X 9 SF/SY @ 300 GAL PER 1,000 SF = 16505 GAL
2ND APP @ 300 GAL PER 1,000 SF = 16505 GAL
TOTAL = 33010 GAL / 1,000 GAL PER M GAL = 33 M GAL

SEEDING AND MULCHING SHALL BE APPLIED TO ALL AREAS OF EXPOSED SOIL BETWEEN THE RIGHT-OF-WAY LINES, AND WITHIN THE CONSTRUCTION LIMITS FOR AREAS OUTSIDE THE RIGHT-OF-WAY LINES COVERED BY WORK AGREEMENT OR SLOPE EASEMENT. QUANTITY CALCULATIONS FOR SEEDING AND MULCHING ARE BASED ON THESE LIMITS.

SURVEYING PARAMETERS

PRIMARY PROJECT CONTROL MONUMENTS GOVERN ALL POSITIONING ON ODOT PROJECTS. SEE SHEET 2 OF THE PLANS FOR A TABLE CONTAINING PROJECT CONTROL INFORMATION.

USE THE FOLLOWING PROJECT CONTROL, VERTICAL POSITIONING, AND HORIZONTAL POSITIONING PARAMETERS FOR ALL SURVEYING:

PROJECT CONTROL

POSITIONING METHOD: VRS
MONUMENT TYPE: RR SPIKE SET & CAPPED IRON PIN SET

VERTICAL POSITIONING

ORTHOMETRIC HEIGHT DATUM: NAVD88
GEOID: GEOID12A

HORIZONTAL POSITIONING

REFERENCE FRAME: NAD83/2011 (EPOCH 2010)
ELLIPSOID: GRS80
MAP PROJECTION: LAMBERT CONFORMAL CONIC
COORDINATE SYSTEM: OHIO STATE PLANE, SOUTH ZONE 3402
COMBINED SCALE FACTOR: 1.000074266

ORIGIN OF COORDINATE SYSTEM: 0,0

USE THE POSITIONING METHODS AND MONUMENT TYPE USED IN THE ORIGINAL SURVEY TO RESTORE ALL MONUMENTS RELATED TO PRIMARY PROJECT CONTROL THAT ARE DAMAGED OR DESTROYED BY CONSTRUCTION ACTIVITIES. RESTORE THE DAMAGED OR DESTROYED MONUMENTS IN ACCORDANCE WITH CMS 623.

UNITS ARE IN U.S. SURVEY FEET. USE THE FOLLOWING CONVERSION FACTOR: 1 METER = 3.280833333 U.S. SURVEY

WORK LIMITS

THE WORK LIMITS SHOWN ON THESE PLANS ARE FOR PHYSICAL CONSTRUCTION ONLY. PROVIDE THE INSTALLATION AND OPERATION OF ALL WORK ZONE TRAFFIC CONTROL AND WORK ZONE TRAFIC CONTROL DEVICES REQUIRED BY THESE PLANS WHETHER INSIDE OR OUTSIDE THESE WORK LIMITS.

ITEM 606 - ANCHOR ASSEMBLY, MGS TYPE E

THIS ITEM SHALL CONSIST OF FURNISHING AND INSTALLING ANY OF THE GUARDRAIL END TERMINALS FOR TYPE MGS GUARDRAIL AS LISTED ON ROADWAY ENGINEERING'S WEB PAGE UNDER ROADSIDE SAFETY DEVICES FOR APPROVED GUARDRAIL END TREATMENTS. INSTALLATION SHALL BE AT THE LOCATIONS SPECIFIED IN THE PLANS, IN ACCORDANCE WITH THE MANUFACTURER'S SPECIFICATIONS.

THE FACE OF THE TYPE E IMPACT HEAD SHALL BE COVERED WITH A SHEET OF TYPE G REFLECTIVE SHEETING, PER CMS 730.19.

REFER TO THE MANUFACTURER'S INSTRUCTIONS REGARDING THE INSTALLATION OF, AND THE GRADING AROUND THE FOUNDATION TUBES AND GROUND STRUT. THE TOP OF ANY FOUNDATION TUBE SHOULD BE LESS THAN 4 INCHES ABOVE THE GROUND. THE PLACEMENT OF THE FOUNDATION TUBES SHOULD BE AN APPROPRIATE DEPTH BELOW THE LEVEL LINE IN ORDER TO MAINTAIN THE FINISHED GUARDRAIL HEIGHT OF 31 INCHES FROM THE EDGE OF THE SHOULDER.

ON-SITE GRADING IS REQUIRED IF THE TOP OF THE FOUNDATION TUBES OR TOP OF THE GROUND STRUT DOES PROJECT MORE THAN 4 INCHES ABOVE THE GROUND LINE.

PAYMENT FOR THE ABOVE WORK SHALL BE MADE AT THE UNIT PRICE BID FOR ITEM 606, ANCHOR ASSEMBLY, MGS TYPE E, EACH, AND SHALL INCLUDE ALL LABOR, TOOLS, EQUIPMENT AND MATERIALS NECESSARY TO CONSTRUCT A COMPLETE AND FUNCTIONAL ANCHOR ASSEMBLY SYSTEM, INCLUDING ALL RELATED TRANSITIONS, REFLECTIVE SHEETING, HARDWARE, GRADING, EMBANKMENT AND EXCAVATION NOT SEPARATELY SPECIFIED, AS REQUIRED BY THE MANUFACTURER.

PART-WIDTH CONSTRUCTION

BECAUSE OF THE NECESSITY TO BUILD THIS PROJECT UNDER TRAFFIC AND TO CONSTRUCT THE FULL PAVEMENT WIDTH IN STAGES, EXERCISE CARE TO PREVENT THE CONSTRUCTION OF A BUTT JOINT IN THE BASE COURSES. LAP LONGITUDINAL JOINTS AS SHOWN ON STANDARD CONSTRUCTION DRAWING BP-3.1.

ITEM 507 - STEEL PILES, MISC.: W12X26 STEEL BEAM, FURNISHED, AS PER PLAN

THIS WORK SHALL CONSIST OF FURNISHING STRUCTURAL STEEL MEMBERS THAT CONFORM TO ASTM A572, GRADE 50 AND CMS 711.01. DO NOT FIELD WELD OR SPLICE THOSE PARTS OF THE STRUCTURAL STEEL MEMBERS THAT WILL BE ABOVE GROUND.

THE INDIVIDUAL LENGTHS SHOWN IN THE DRILLED SHAFT SUMMARY TABLES ON SHEETS 39-42 AND THE TOTAL LENGTHS SHOWN IN THE ESTIMATED QUANTITIES ARE CALCULATED FROM THE ESTIMATED TOP OF ROCK ELEVATIONS AND THE ACTUAL LENGTH OF EACH STEEL BEAM MAY VARY. THE CONTRACTOR SHOULD ANTICIPATE THAT THE STEEL BEAMS WILL NEED TO BE TRIMMED OR SPLICED TO THE ACTUAL TOP OF THE ROCK. THE CONTRACTOR MAY WANT TO ORDER ADDITIONAL LENGTH OF EACH TYPE OF STEEL BEAM FOR SPLICING.

THE DEPARTMENT WILL MEASURE STEEL BEAMS ALONG THE AXIS OF THE STEEL BEAM FROM THE TOP OF SHAFT ELEVATION TO THE BOTTOM OF THE DRILLED SHAFT, AS DETERMINED BY THE ENGINEER. THE DEPARTMENT WILL PAY FOR STEEL BEAMS AT THE CONTRACT UNIT PRICE PER FOOT ITEM 507, STEEL PILES, MISC.: W12X26 STEEL BEAM, FURNISHED, AS PER PLAN.

I:\project\Adams\ADA-41-3200-97590\roadway\sheets\97590GN001.dgn 02-DEC-2016 12:32PM cpridemo

ITEM 507 - STEEL PILES HP14X73, FURNISHED, AS PER PLAN

THIS WORK SHALL CONSIST OF FURNISHING STRUCTURAL STEEL MEMBERS THAT CONFORM TO ASTM A572, GRADE 50 AND CMS 711.01. GALVANIZE SOLDIER PILES AS SHOWN ON THE PLANS AND IN ACCORDANCE WITH CMS 711.02. DO NOT FIELD WELD OR SPLICE THOSE PARTS OF THE STRUCTURAL STEEL MEMBERS THAT WILL BE ABOVE GROUND.

THE INDIVIDUAL LENGTHS SHOWN IN THE DRILLED SHAFT SUMMARY TABLES ON SHEET 45 AND THE TOTAL LENGTHS SHOWN IN THE ESTIMATED QUANTITIES ARE CALCULATED FROM THE ESTIMATED TOP OF ROCK ELEVATIONS AND THE ACTUAL LENGTH OF EACH STEEL BEAM MAY VARY. THE CONTRACTOR SHOULD ANTICIPATE THAT THE STEEL BEAMS WILL NEED TO BE TRIMMED OR SPLICED TO THE ACTUAL TOP OF THE ROCK. THE CONTRACTOR MAY WANT TO ORDER ADDITIONAL LENGTH OF EACH TYPE OF STEEL BEAM FOR SPLICING.

THE DEPARTMENT WILL MEASURE STEEL BEAMS ALONG THE AXIS OF THE STEEL BEAM FROM THE TOP OF SHAFT ELEVATION TO THE BOTTOM OF THE DRILLED SHAFT, AS DETERMINED BY THE ENGINEER. THE DEPARTMENT WILL PAY FOR STEEL BEAMS AT THE CONTRACT UNIT PRICE PER FOOT ITEM 507, STEEL PILES HP14X73, FURNISHED, AS PER PLAN.

ITEM 511 - CLASS QC1 CONCRETE, MISC: LEVELING PAD

ALL REQUIREMENTS OF CMS SECTION 511 SHALL BE FOLLOWED, EXCEPT THE CONTRACTOR WILL BE PERMITTED TO LOAD THE CONCRETE PAD ONE DAY AFTER PLACEMENT.

PAYMENT FOR ALL LABOR, EQUIPMENT AND MATERIALS FOR THE ABOVE SHALL BE INCLUDED IN THE CUBIC YARD CONTRACT PRICE FOR ITEM 511, QC1 CONCRETE, MISC., LEVELING PAD.

ITEM 524 - DRILLED SHAFTS, MISC.: PLUG PILE, 24" DIAMETER, UNREINFORCED, AS PER PLAN

THESE SHAFTS ARE TO BE UNREINFORCED NON-STRUCTURAL "PLUG PILES" SERVING THE PURPOSE OF LAGGING.

THIS WORK SHALL BE AS PER ITEM 524 EXCEPT A REINFORCING CAGE WILL NOT BE USED IN THE SHAFT. EACH PLUG PILE SHALL BE CENTERED BETWEEN EACH REINFORCED 24" DIAMETER DRILLED SHAFT AND DRILLED TO A MINIMUM DEPTH OF 15 FEET BELOW GRADE AS SHOWN ON SHEETS 38-42, AND BACKFILLED WITH UNREINFORCED CLASS QC1 CONCRETE.

PAYMENT FOR LABOR, EQUIPMENT AND MATERIALS FOR THE ABOVE SHALL BE INCLUDED IN THE FOOT CONTRACT PRICE FOR ITEM 524, DRILLED SHAFTS, MISC.: PLUG PILE, 24" DIAMETER, UNREINFORCED, AS PER PLAN.

ITEM 511 - CONCRETE MISC.: PRECAST REINFORCED CONCRETE LAGGING PANEL

THIS WORK CONSISTS OF FURNISHING AND PLACING PRECAST REINFORCED CONCRETE PANELS BETWEEN THE SOLDIER PILES TO FUNCTION AS LAGGING FOR THE RETAINING WALL. PROVIDE PRECAST CONCRETE LAGGING FROM A PRECAST CONCRETE MANUFACTURER CERTIFIED UNDER SUPPLEMENT 1073. PROVIDE CLASS QC 1 CONCRETE ACCORDING TO CMS 499. PROVIDE EPOXY COATED REINFORCING STEEL ACCORDING TO CMS 709.00. IN LIEU OF EPOXY COATING, A CORROSION INHIBITING CONCRETE ADMIXTURE MAY BE USED AT THE SPECIFIED DOSAGE RATE. A QUALIFIED PRODUCT LIST OF CORROSION INHIBITING ADMIXTURES IS ON FILE AT THE LABORATORY. MANUFACTURERS SHOULD RECOGNIZE THAT THE CORROSION INHIBITOR MAY AFFECT THE STRENGTH, ENTRAINED AIR CONTENT, WORKABILITY, ETC. OF THEIR CONCRETE MIXES. THE MANUFACTURER'S CHOICE TO USE ONE OF THESE CORROSION INHIBITORS DOES NOT ALLEVIATE MEETING ALL DESIGN REQUIREMENTS. DO NOT ALLOW THE DIMENSIONS OF THE REINFORCING STEEL TO VARY BY MORE THAN 1/4". THREADED INSERTS SHALL BE CAST INTO THE TOP OF THE SECTIONS FOR LIFTING AND PLACING

ITEM 511 - CONCRETE MISC.: PRECAST REINFORCED CONCRETE LAGGING PANEL (CONT.)

THE FRONT FACE AND SIDES OF THE CONCRETE PANEL SHALL BE SEALED WITH ITEM 512, SEALING OF CONCRETE SURFACES (EPOXY-URETHANE) THE COLOR OF THE URETHANE SHALL BE FEDERAL COLOR NUMBER 17778 (LIGHT NEUTRAL)

REJECT PANELS HAVING ANY OF THE FOLLOWING:

- DEFECTS THAT INDICATE IMPERFECT MOLDING
- DEFECTS THAT INDICATE HONEYCOMBED OR OPEN TEXTURE CONCRETE
- DEFECTS IN THE PHYSICAL CHARACTERISTICS OF THE CONCRETE, OR DAMAGE TO THE SEALING OF CONCRETE SURFACE TREATMENT
- CONCRETE CHIPS OR SPALLS THAT EXCEED 4 INCHES WIDE AND 2 INCHES DEEP. (**REPAIR ALL CHIPS AND SPALLS OF ANY DIMENSION)
- STAINED FORM FACE, DUE TO FORM OIL, CURING OR OTHER CONTAMINANTS
- SIGNS OF AGGREGATE SEGREGATION
- CRACKS WIDER THAN 0.01 INCHES, PENETRATING MORE THAN AN INCH OR LONGER THAN 12 INCHES. (UREPAIR ALL CRACKS OF ANY DIMENSION.
- FACE PANELS THAT DO NOT MEET SPECIFIED TOLERANCES
- EXPOSED REINFORCING STEEL
- INSUFFICIENT CONCRETE COMPRESSIVE STRENGTH.

NOTE: **THE MANUFACTURER SHALL SUBMIT REPAIR METHODS TO THE ENGINEER

PERMANENTLY MARK EACH PANEL TO INDICATE THE FACE TO BE PLACED AGAINST THE SOIL. PLACE THE PANEL BETWEEN THE FLANGES OF THE SOLDIER PILES AND BEARING AGAINST THE FLANGES ON THE EXPOSED SIDE OF THE WALL.

DO NOT SHIP PANELS UNTIL CONCRETE HAS ATTAINED A 3000 PSI COMPRESSIVE STRENGTH.

SUBMIT SHIPPING DOCUMENTATION TO THE ENGINEER AS THE FACING PANELS ARE DELIVERED TO THE PROJECT. REQUIRED DOCUMENTATION SHALL INCLUDE THE PRECASTER'S RECORD OF FINAL INSPECTION OF ALL PRECAST COMPONENTS, THE MEASUREMENTS OF TOLERANCES, STRENGTH, DIMENSIONS, AND THE TE-24 SHIPPING DOCUMENT.

PANELS DAMAGED BY IMPROPER HANDLING, STORING, TRANSPORTATION OR ERECTION SHALL BE REPAIRED OR REPLACED AT THE DISCRETION OF THE ENGINEER

WHEN INSTALLING THE PRECAST CONCRETE LAGGING PANELS, PLACE HARDWOOD WEDGES TO HOLD THE LAGGING PANELS AGAINST THE FRONT INSIDE FLANGE OF THE STEEL PILES.

PAYMENT FOR ALL LABOR, EQUIPMENT AND MATERIAL REQUIRED TO FABRICATE TRANSPORT AND INSTALL THE PRECAST CONCRETE LAGGING SECTIONS INCLUDING POROUS BACKFILL WITH FILTER FABRICJ AS SHOWN IN THE PLANS SHALL BE MADE UNDER ITEM 511 - CONCRETE MISC.: PRECAST REINFORCED CONCRETE LAGGING PANEL.

ITEM 524 - DRILLED SHAFTS, AS PER PLAN

SEQUENCE OF INSTALLATION:
THE INSTALLATION SEQUENCE SHALL BE SUCH THAT NO DRILLED SHAFT IS INSTALLED ADJACENT TO EITHER AN OPEN DRILLED SHAFT EXCAVATION OR A DRILLED SHAFT IN WHICH THE CONCRETE HAS LESS THAN A 48-HOUR CURE. INSTALLING THE SHAFTS IN AN ALTERNATING SEQUENCE OR ANY SEQUENCE THAT MEETS THIS CRITERION IS PERMISSIBLE.

PROTECTION OF UNATTENDED OPEN SHAFTS:
CARE SHALL BE EXERCISED AS TO COVER UNATTENDED OPEN SHAFTS. TEMPORARY COVERS SHALL BE OF ADEQUATE STRENGTH TO PROTECT A PERSON OR ANIMAL FROM FALLING IN.

LOADING OF PILES:
THE PILES SHALL NOT BE LOADED NOR ANY EXCAVATION PERFORMED IN FRONT OF THE WALL FOR 14 DAYS AFTER THE PLACING OF CONCRETE.

ACCESS:
ANY TEMPORARY GRADING OR EMBANKMENT, AGGREGATE, DRAINAGE, SHEETING, ETC., NEEDED FOR ACCESS TO THE WORK AREA SHALL BE INCLUDED IN THE BID PRICE FOR DRILLED SHAFTS.

ITEM 524 - DRILLED SHAFTS, 24" DIAMETER, ABOVE BEDROCK, AS PER PLAN
ITEM 524 - DRILLED SHAFTS, 24" DIAMETER, INTO BEDROCK, AS PER PLAN
ITEM 524 - DRILLED SHAFTS, 36" DIAMETER, ABOVE BEDROCK, AS PER PLAN
ITEM 524 - DRILLED SHAFTS, 36" DIAMETER, INTO BEDROCK, AS PER PLAN

THIS WORK CONSISTS OF INSTALLING DRILLED SHAFTS FOR SLOPE STABILIZATION. THE INSTALLATION SHALL BE PER ITEM 524 EXCEPT THE DRILLED SHAFTS ARE TO BE REINFORCED WITH STRUCTURAL STEEL MEMBERS INSTEAD OF REINFORCING CAGES.

PLACE THE STRUCTURAL MEMBERS IN THE PRE-BORED SHAFTS. ORIENTATE THE STRUCTURAL MEMBER SO THAT THE FLANGES ARE PARALLEL TO THE CENTERLINE OF ROADWAY. DO NOT ALLOW THE ORIENTATION OF THE FLANGES TO VARY BY MORE THAN 10 DEGREES. PLUMB THE STRUCTURAL MEMBERS SO THEY ARE VERTICAL AND NOT INCLINED MORE THAN 1/8 INCH PER FOOT FROM VERTICAL. EACH STRUCTURAL MEMBER SHALL BE CENTERED WITHIN THE SHAFT. SUPPORT THE STRUCTURAL MEMBER SO THAT IT DOES NOT MOVE DURING CONCRETE PLACEMENT.

PLACE ITEM 511 CLASS QC1 CONCRETE IN EACH HOLE AS BACKFILL MATERIAL.

CHECK THE POSITION, THE VERTICAL ALIGNMENT AND ORIENTATION OF THE STRUCTURAL MEMBER IMMEDIATELY AFTER CONCRETE PLACEMENT. MAKE CORRECTIONS AS NECESSARY TO MEET ABOVE TOLERANCES.

PAYMENT FOR LABOR, QC/QA, EQUIPMENT AND MATERIALS FOR THE ABOVE SHALL BE INCLUDED IN THE FOOT CONTRACT PRICE FOR ITEM 524, DRILLED SHAFTS, 24" DIAMETER, ABOVE ROCK, AS PER PLAN OR ITEM 524, DRILLED SHAFTS, 24" DIAMETER, INTO BEDROCK, AS PER PLAN OR ITEM 524, DRILLED SHAFTS, 36" DIAMETER, ABOVE ROCK, AS PER PLAN OR ITEM 524, DRILLED SHAFTS, 36" DIAMETER, INTO BEDROCK, AS PER PLAN.

I:\project\Adams\ADA-41-3200-97590\roadway\sheets\97590GN002.dgn 05-DEC-2016 2:29PM cpridemo

ITEM 614, MAINTAINING TRAFFIC

NO WORK SHALL BE COMPLETED PRIOR TO JUNE 1, 2017 UNLESS APPROVED BY THE DISTRICT CONSTRUCTION ADMINISTRATOR.

A MINIMUM OF ONE LANE OF TWO-WAY TRAFFIC SHALL BE MAINTAINED AT ALL TIMES ALONG S.R. 41 BY THE USE OF EXISTING PAVEMENT AND/OR THE COMPLETED PROPOSED PAVEMENT. THE USE OF A SIGNALIZED LANE CLOSURE PER STANDARD CONSTRUCTION DRAWINGS MT-96.11, MT-96.20 AND MT 96.26 HAS BEEN ESTIMATED TO BE USED DURING TWO PRIMARY CONSTRUCTION PHASES AS SHOWN ON SHEETS 9 AND 10. ACCESS TO ALL RESIDENTIAL DRIVES WITHIN THE CONSTRUCTION LIMITS SHALL BE MAINTAINED AT ALL TIMES EXCEPT THAT THE FIELD DRIVE AT STA. 1667+73 LEFT WILL BE CLOSED DURING PHASE 2 FOR RECONSTRUCTION.

LENGTH AND DURATION OF LANE CLOSURES AND RESTRICTIONS SHALL BE AT THE APPROVAL OF THE ENGINEER. IT IS THE INTENT TO MINIMIZE THE IMPACT TO THE TRAVELING PUBLIC. LANE CLOSURES OR RESTRICTIONS OVER SEGMENTS OF THE PROJECT IN WHICH NO WORK IS ANTICIPATED WITHIN A REASONABLE TIME FRAME, AS DETERMINED BY THE ENGINEER, SHALL NOT BE PERMITTED. THE LEVEL OF UTILIZATION OF MAINTENANCE OF TRAFFIC DEVICES SHALL BE COMMENSURATE WITH THE WORK IN PROGRESS.

BEFORE THE WORK BEGINS, THE CONTRACTOR SHALL SUBMIT TO THE ENGINEER THE NAME(S) AND TELEPHONE NUMBER(S) OF A PERSON OR PERSONS WHO CAN BE CONTACTED TWENTY-FOUR (24) HOURS PER DAY BY THE OHIO DEPARTMENT OF TRANSPORTATION AND ALL INTERESTED POLICE AGENCIES. THIS PERSON OR PERSONS SHALL BE RESPONSIBLE FOR PLACING OR REPLACING NECESSARY TRAFFIC CONTROL DEVICES IN ACCORDANCE WITH THE OHIO MANUAL OF UNIFORM TRAFFIC CONTROL DEVICES.

THE CONTRACTOR WILL ADVISE THE DISTRICT PUBLIC INFORMATION OFFICER AT (740) 774-8834, OR FAX (740) 773-2710, FOURTEEN (14) DAYS PRIOR TO THE START OF CONSTRUCTION ACTIVITIES. THE PROJECT ENGINEER WILL PROVIDE ASSISTANCE/CLARIFICATION FOR ANY QUESTIONS.

ALL WORK AND TRAFFIC CONTROL DEVICES SHALL BE IN ACCORDANCE WITH CMS 614 AND OTHER APPLICABLE PORTIONS OF THE SPECIFICATIONS, AS WELL AS THE OHIO MANUAL OF UNIFORM TRAFFIC CONTROL DEVICES. PAYMENT FOR ALL LABOR, EQUIPMENT AND MATERIALS SHALL BE INCLUDED IN THE LUMP SUM CONTRACT PRICE FOR ITEM 614, MAINTAINING TRAFFIC, UNLESS SEPARATELY ITEMIZED IN THE PLANS.

TRENCH FOR WIDENING

TRENCH EXCAVATION FOR BASE WIDENING SHALL BE ONLY ON ONE SIDE OF THE PAVEMENT AT A TIME. THE OPEN TRENCH SHALL BE ADEQUATELY MAINTAINED AND PROTECTED WITH DRUMS OR BARRICADES AT ALL TIMES. PLACEMENT OF PROPOSED SUBBASE AND BASE MATERIAL SHALL FOLLOW AS CLOSELY AS POSSIBLE BEHIND EXCAVATION OPERATIONS. THE LENGTH OF WIDENING TRENCH WHICH IS OPEN AT ANY ONE TIME SHALL BE HELD TO A MINIMUM AND SHALL AT ALL TIMES BE SUBJECT TO APPROVAL OF THE ENGINEER.

OVERNIGHT TRENCH CLOSING

THE BASE WIDENING SHALL BE COMPLETED TO A DEPTH OF NO MORE THAN 3 INCHES BELOW THE EXISTING PAVEMENT BY THE END OF EACH WORK DAY. NO TRENCH SHALL BE LEFT OPEN OVERNIGHT EXCEPT FOR A SHORT LENGTH (25 FEET OR LESS) OF A WORK SECTION AT THE END OF THE TRENCH. IN CASE WORK MUST BE SUSPENDED BECAUSE OF INCLEMENT WEATHER OR OTHER REASONS, THE TRENCH FOR THE UN-COMPLETED BASE WIDENING SHALL BE BACKFILLED AT THE DIRECTION OF THE ENGINEER.

ITEM 614, WORK ZONE IMPACT ATTENUATOR FOR 24" WIDE HAZARDS (BIDIRECTIONAL)

THIS ITEM SHALL CONSIST OF FURNISHING AND INSTALLING A NON-GATING IMPACT ATTENUATOR. FURNISH AN IMPACT ATTENUATOR FROM THE OFFICE OF ROADWAY ENGINEERING'S APPROVED LIST FOR WORK ZONE IMPACT ATTENUATORS, FROM THE ROADWAY STANDARDS WEB PAGE FOR ROADWAY STANDARDS WEB PAGE.

INSTALLATION SHALL BE AT THE LOCATIONS SPECIFIED IN THE PLANS IN ACCORDANCE WITH THE MANUFACTURER'S SPECIFICATIONS.

THE CONTRACTOR SHALL REPAIR OR REPLACE A DAMAGED UNIT WITHIN 24 HOURS OF A DAMAGING IMPACT.

WHEN BIDIRECTIONAL DESIGNS ARE SPECIFIED, THE CONTRACTOR SHALL SUPPLY APPROPRIATE TRANSITIONS.

WHEN GATING IMPACT ATTENUATORS ARE DESIRED, THE CONTRACTOR SHALL SUBMIT DOCUMENTATION TO THE ENGINEER FOR ACCEPTANCE.

THE COST FOR THE ADDITIONAL BARRIER REQUIRED FOR A GATING IMPACT ATTENUATOR SHALL BE INCLUDED IN THE COST OF THE GATING IMPACT ATTENUATOR.

PAYMENT FOR THE ABOVE WORK SHALL BE MADE AT THE UNIT PRICE BID AND SHALL INCLUDE ALL LABOR, TOOLS, EQUIPMENT AND MATERIALS NECESSARY TO CONSTRUCT AND MAINTAIN A COMPLETE AND FUNCTIONAL IMPACT ATTENUATOR SYSTEM, INCLUDING ALL RELATED BACKUPS, TRANSITIONS, LEVELING PADS, HARDWARE AND GRADING, NOT SEPARATELY SPECIFIED, AS REQUIRED BY THE MANUFACTURER.

ITEM 614 - LAW ENFORCEMENT OFFICER (WITH PATROL CAR) FOR ASSISTANCE DURING CONSTRUCTION OPERATIONS

USE OF LAW ENFORCEMENT OFFICERS (LEOS) BY CONTRACTORS OTHER THAN THE USES SPECIFIED BELOW WILL NOT BE PERMITTED AT PROJECT COST. LEOS SHOULD NOT BE USED WHERE THE OMUTCD INTENDS THAT FLAGGERS BE USED.

IN ADDITION TO THE REQUIREMENTS OF C&MS 614 AND THE OMUTCD, A UNIFORMED LEO WITH AN OFFICIAL PATROL CAR (CAR WITH TOP-MOUNTED EMERGENCY FLASHING LIGHTS AND COMPLETE MARKINGS OF THE APPROPRIATE LAW ENFORCEMENT AGENCY) SHALL BE PROVIDED FOR THE FOLLOWING TRAFFIC CONTROL TASKS:

DURING THE ENTIRE ADVANCE PREPARATION AND CLOSURE SEQUENCE WHERE COMPLETE BLOCKAGE OF TRAFFIC IS REQUIRED.

IN ADDITION TO THE REQUIREMENT OF C&MS 614 AND THE OMUTCD, A UNIFORMED LEO WITH AN OFFICIAL PATROL CAR (CAR WITH TOP-MOUNTED EMERGENCY FLASHING LIGHTS AND COMPLETE MARKINGS OF THE APPROPRIATE LAW ENFORCEMENT AGENCY) SHOULD BE PROVIDED FOR THE FOLLOWING TRAFFIC CONTROL TASKS AS APPROVED BY THE ENGINEER:

FOR LANE CLOSURES: DURING INITIAL SET-UP PERIODS, TEAR DOWN PERIODS, SUBSTANTIAL SHIFTS OF A CLOSURE POINT OR WHEN NEW LANE CLOSURE ARRANGEMENTS ARE INITIATED FOR LONG-TERM LANE CLOSURES/SHIFTS (FOR THE FIRST AND LAST DAY OF MAJOR CHANGES IN TRAFFIC CONTROL SETUP). IN GENERAL, LEOS SHOULD BE POSITIONED AT THE POINT OF LANE RESTRICTION OR ROAD CLOSURE AND TO MANUALLY CONTROL TRAFFIC MOVEMENTS THROUGH INTERSECTIONS IN WORK ZONES.

ITEM 614 - LAW ENFORCEMENT OFFICER (WITH PATROL CAR) FOR ASSISTANCE DURING CONSTRUCTION OPERATIONS (CONT.)

IN GENERAL, LEOS SHOULD BE POSITIONED IN ADVANCE OF AND ON THE SAME SIDE AS THE LANE RESTRICTION OR AT THE POINT OF ROAD CLOSURE, AND TO MANUALLY CONTROL TRAFFIC MOVEMENTS THROUGH SIGNALIZED INTERSECTIONS IN WORK ZONES.

LEOS SHOULD NOT FORGO THEIR TRAFFIC CONTROL RESPONSIBILITIES TO APPREHEND MOTORISTS FOR ROUTINE TRAFFIC VIOLATIONS. HOWEVER, IF A MOTORIST'S ACTIONS ARE CONSIDERED TO BE RECKLESS, THEN PURSUIT OF THE MOTORIST IS APPROPRIATE.

THE LEOS WORK AT THE DIRECTION OF THE CONTRACTOR. THE CONTRACTOR IS RESPONSIBLE FOR SECURING THE SERVICES OF THE LEOS WITH THE APPROPRIATE AGENCIES AND COMMUNICATING THE INTENTIONS OF THE PLANS WITH RESPECT TO DUTIES OF THE LEOS. THE ENGINEER SHALL HAVE FINAL CONTROL OVER THE LEOS' DUTIES AND PLACEMENT, AND WILL RESOLVE ANY ISSUES THAT MAY ARISE BETWEEN THE TWO PARTIES.

THE LEO SHALL REPORT IN TO THE CONTRACTOR PRIOR TO THE START OF THE SHIFT, IN ORDER TO RECEIVE INSTRUCTIONS REGARDING SPECIFIC WORK ASSIGNMENTS DURING HIS/HER SHIFT. THE LEO IS EXPECTED TO STAY AT THE PROJECT SITE FOR THE ENTIRE DURATION OF HIS/HER SHIFT. THE LEO SHALL REPORT TO THE CONTRACTOR AT THE END OF HIS/HER SHIFT. ONCE THE LEO HAS COMPLETED THE DUTIES DESCRIBED ABOVE AND STILL HAS TIME REMAINING ON HIS/HER SHIFT, THE LEO MAY BE ASKED TO PATROL THROUGH THE WORK ZONE (WITH FLASHING LIGHTS OFF) OR BE PLACED AT A LOCATION TO DETER MOTORISTS FROM SPEEDING. SHOULD IT BE NECESSARY TO LEAVE THE PROJECT SITE, THE LEO SHALL NOTIFY THE ENGINEER. THE CONTRACTOR SHALL PROVIDE THE LEO WITH A TWO-WAY COMMUNICATION DEVICE WHICH SHALL BE RETURNED TO THE CONTRACTOR AT THE END OF HIS/HER SHIFT.

LEOS (WITH PATROL CAR) REQUIRED BY THE TRAFFIC MAINTENANCE TASKS ABOVE SHALL BE PAID FOR ON A UNIT PRICE (HOURLY) BASIS UNDER ITEM 614, LAW ENFORCEMENT OFFICER (WITH PATROL CAR) FOR ASSISTANCE. THE FOLLOWING ESTIMATED QUANTITIES HAVE BEEN CARRIED TO THE GENERAL SUMMARY.

ITEM 614, LAW ENFORCEMENT OFFICER WITH PATROL CAR FOR ASSISTANCE 32 HOURS

THE HOURS PAID SHALL INCLUDE ANY MINIMUM SHOW-UP TIME REQUIRED BY THE LAW ENFORCEMENT AGENCY INVOLVED.

ANY ADDITIONAL COSTS (ADMINISTRATIVE OR OTHERWISE) INCURRED BY THE CONTRACTOR TO OBTAIN THE SERVICES OF AN LEO ARE INCLUDED WITH THE BID UNIT PRICE FOR ITEM 614, LAW ENFORCEMENT OFFICER WITH PATROL CAR FOR ASSISTANCE.

DUST CONTROL

THE CONTRACTOR SHALL FURNISH AND APPLY WATER FOR DUST CONTROL AS DIRECTED BY THE ENGINEER. THE FOLLOWING ESTIMATED QUANTITIES HAVE BEEN INCLUDED FOR DUST CONTROL PURPOSES:

ITEM 616, WATER 2 M. GAL

DELINEATION OF PORTABLE AND PERMANENT BARRIER

BARRIER REFLECTORS AND OBJECT MARKERS SHALL BE INSTALLED ON ALL PORTABLE BARRIER (PB) USED FOR TRAFFIC CONTROL AND ON PERMANENT CONCRETE BARRIER (INCLUDING BRIDGE PARAPETS) LOCATED WITHIN 5 FEET OF THE EDGE OF THE ADJACENT TRAVEL LANE.

BARRIER REFLECTORS SHALL CONFORM TO C&MS 626, EXCEPT THAT THE SPACING SHALL BE AS PER TRAFFIC SCD MT-101.70. OBJECT MARKERS AND THEIR INSTALLATION SHALL CONFORM TO C&MS 614.03 AND SCD MT-101.70. WHEN THE PB CONTAINS GLARE SCREEN, ONE SET OF THREE VERTICAL STRIPES OF SHEETING SHALL BE CONSIDERED EQUIVALENT TO AN OBJECT MARKER, ONE-WAY.

INCREASED BARRIER DELINEATION, AS SPECIFIED HEREIN, SHALL BE INSTALLED ON ALL PB AND CONCRETE PERMANENT BARRIER LOCATED WITHIN 5 FEET OF THE EDGE OF THE TRAVELED LANE ALONG TAPERS AND TRANSITION AREAS AND ALONG CURVES (OUTSIDE ONLY) WITH DEGREE OF CURVATURE GREATER THAN OR EQUAL TO 3 DEGREES.

THE INCREASED BARRIER DELINEATION SHALL CONSIST OF EITHER DELINEATION PANELS OR THE TRIPLE STACKING OF WORK ZONE BARRIER REFLECTORS.

DELINEATION PANELS SHALL CONSIST OF PANELS OF DELINEATION, APPROXIMATELY 34 INCHES LONG AND 6 INCHES WIDE AND SHALL BE "CRIMPED." PANELS SHALL BE INSTALLED AND SPACED PER TRAFFIC SCD MT-101.70.

TRIPLE-STACKED BARRIER REFLECTORS SHALL CONSIST OF ALIGNING THREE BARRIER REFLECTORS VERTICALLY, AT LOCATIONS WHERE A SINGLE BARRIER REFLECTOR WOULD BE OTHERWISE ATTACHED. THERE SHALL BE NO OPEN SPACE BETWEEN THE ADJACENT BARRIER REFLECTORS. THE TRIPLE-STACKED BARRIER REFLECTORS SHALLCONFORM TO C&MS 626, EXCEPT THAT THEY SHALL BE SPACED AND ALIGNED PER TRAFFIC SCD MT-101.70.

ESTIMATED QUANTITIES TO PERFORM THIS WORK HAVE BEEN SHOWN ON SHEET 11.

PAYMENT SHALL BE FULL COMPENSATION FOR ALL MATERIAL, LABOR, INCIDENTALS AND EQUIPMENT NECESSARY FOR FURNISHING, INSTALLING, MAINTAINING AND REMOVING EACH OF THE ABOVE ITEMS.

I:\project\Adams\ADA-41-3200-97590\roadway\sheets\97590MN001.dgn 06-DEC-2016 7:51AM cpriderno

FULLY-ACTUATED OPERATION OF WORK ZONE TRAFFIC SIGNAL

THE WORK ZONE SIGNAL CONTROL REQUIRED FOR THIS PROJECT AND SHOWN ON SHEETS 9 & 10 AND TRAFFIC SCDS MT-96.11, 96.20 AND 96.26 SHALL BE FULLY TRAFFIC-ACTUATED AND OPERATE IN A MANNER SIMILAR TO THAT DESCRIBED IN SECTION 733.02 OF THE CONSTRUCTION AND MATERIAL SPECIFICATIONS.

THE INITIAL CONTROLLER TIMING SHALL BE AS FOLLOWS:

	1 (ALL RED) DUM. PHASE	2 U.S. 50 EB	3 (ALL RED) DUM. PHASE	4 U.S. 50 WB
MIN. GREEN		15		15
EXTENSION		4		4
MAX. GREEN		40		40
YELLOW		5		5
ALL RED	33		33	
RECALL	ON	OFF	OFF	OFF

SIGNAL WILL REST ON RED WHEN NO VEHICLES ARE DETECTED.

THE CONTRACTOR SHALL ALSO DESIGN, FURNISH, INSTALL AND MAINTAIN A TRAFFIC DETECTOR ON EACH TRAFFIC APPROACH WHICH WILL RELIABLY DETECT ALL LEGAL TRAFFIC APPROACHING (BUT NOT LEAVING) THE SIGNAL AS IT PASSES OR WAITS IN THE DESIGNATED DETECTOR ZONE SHOWN IN THE PLANS. DETECTOR DESIGNS WHICH DO NOT PROVIDE RELIABLE DETECTION, FREE FROM FALSE CALLS, SHALL BE IMMEDIATELY REPLACED BY THE CONTRACTOR.

SUGGESTED SEQUENCE OF CONSTRUCTION

PHASE 1:

SET UP TRAFFIC CONTROL AS SHOWN ON SHEET 9 TO CLOSE THE NORTHBOUND TRAFFIC LANE ON S.R. 41 TO CONSTRUCT THE TEMPORARY SHAFT ACCESS EMBANKMENT AND CONSTRUCT THE DRILLED SHAFTS LAGGING WALL. UPON COMPLETION OF THE WALL, REMOVE THE TEMPORARY EMBANKMENT, EXCAVATE THE PROPOSED DITCH AND COMPLETE THE SHOULDER AND RIGHT SIDE PAVEMENT CONSTRUCTION.

PHASE 2:

USING FLAGGERS AS NEEDED, OPEN THE COMPLETED WESTBOUND LANES OF S.R. 41 AND SET UP TRAFFIC CONTROL AS SHOWN ON SHEET 10 TO CLOSE THE SOUTHBOUND LANE OF S.R. 41. CONSTRUCT THE LEFT SIDE DRILLED SHAFTS AND PLUG PILE LAGGING. PLACE LEFT SIDE EMBANKMENT AND CONSTRUCT THE PROPOSED FIELD DRIVE. LASTLY, CONSTRUCT THE LEFT GUARDRAIL, SHOULDER AND PROPOSED PAVEMENT.

PHASE 3:

USING FLAGGERS, REMOVE THE TEMPORARY SIGNALS AND PORTABLE BARRIER. PERFORM ANY REMAINING PAVEMENT WORK USING FLAGGERS IN ACCORDANCE WITH THE APPROPRIATE STANDARD CONSTRUCTION DRAWINGS.

DELINEATION OF TEMPORARY AND PERMANENT GUARDRAIL

BARRIER REFLECTORS SHALL BE INSTALLED ON ALL TEMPORARY GUARDRAIL USED FOR TRAFFIC CONTROL AND ON ALL PERMANENT GUARDRAIL LOCATED WITHIN 5 FEET OF THE EDGE OF THE ADJACENT TRAVEL LANE. BARRIER REFLECTORS SHALL CONFORM TO C&MS 626.

OBJECT MARKERS SHALL BE INSTALLED ON ALL TEMPORARY AND PERMANENT GUARDRAIL LOCATED WITHIN 5 FEET OF THE EDGE OF THE ADJACENT TRAVEL LANE. GUARDRAIL-MOUNTING OF OBJECT MARKERS SHALL BE MADE BY INSTALLING THE OBJECT MARKERS ON THE EXTENSION BLOCKS RATHER THAN DIRECTLY ONTO THE GUARDRAIL ITSELF. OBJECT MARKERS SHALL CONFORM TO C&MS 614.03 AND THE SPACING SHALL BE APPROXIMATELY 50 FEET.

THE FOLLOWING ESTIMATED QUANITIES HAVE BEEN INCLUDED IN THE PLANS AND CARRIED TO THE GENERAL SUMMARY:

ITEM 614, BARRIER REFLECTOR, TYPE A2 10 EACH
ITEM 614, OBJECT MARKER, TWO-WAY 10 EACH

PAYMENT SHALL BE FULL COMPENSATION FOR ALL MATERIAL, LABOR, INCIDENTALS AND EQUIPMENT NECESSARY FOR FURNISHING, INSTALLING, MAINTAINING AND REMOVING THE ABOVE ITEM(S).

CALCULATED CWP
CHECKED

MAINTENANCE OF TRAFFIC GENERAL NOTES

ADA-41-31.53

I:\project\Adams\ADA-41-3200-97590\roadway\sheets\97590MN002.dgn 02-DEC-2016 12:32PM cpridemo

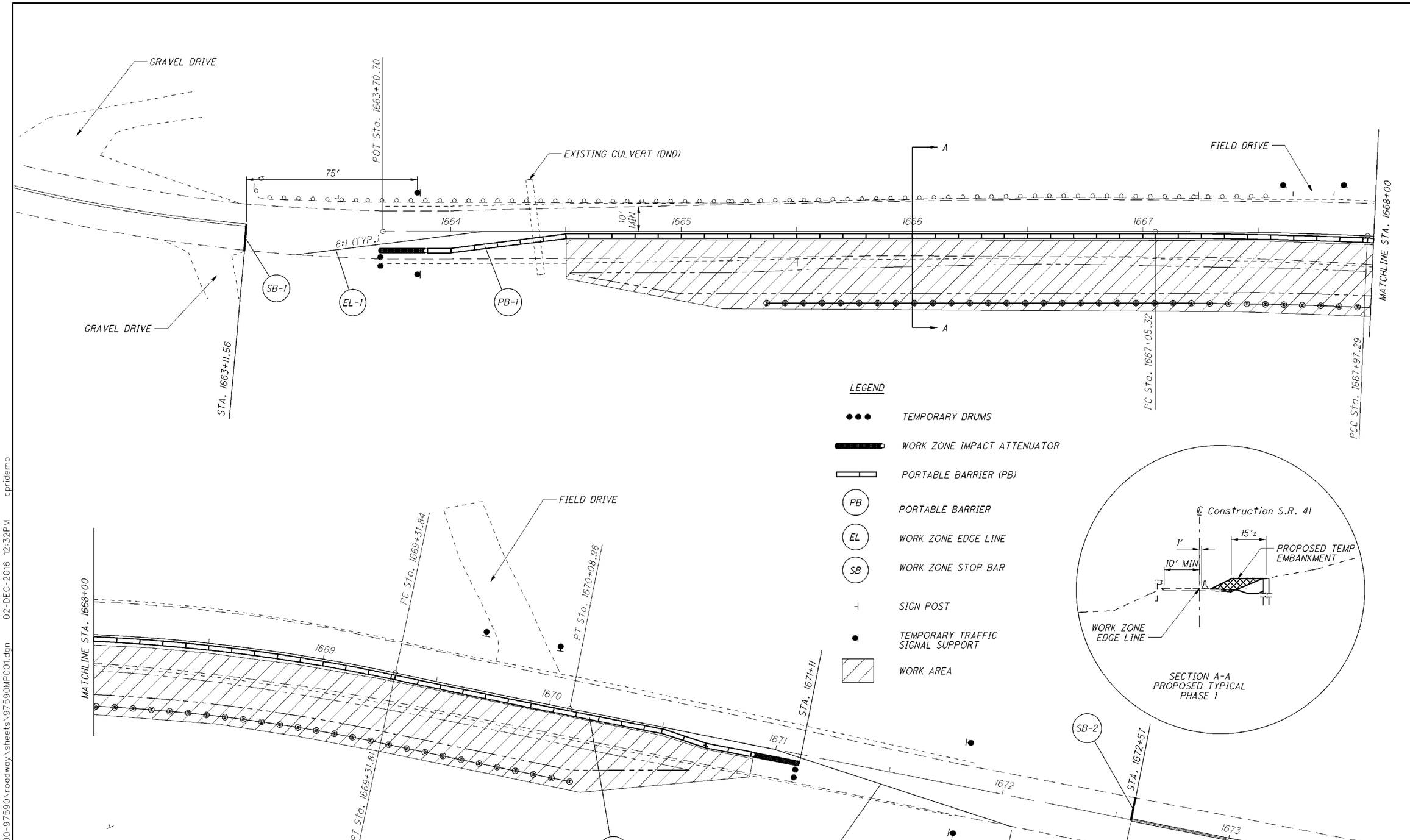

NOTES:

1. FOR ADVANCE SIGNAGE AND OTHER DETAILS NOT SHOWN SEE STANDARD DRAWINGS MT-96.11, MT-96.20 AND MT-97.26.
2. EXISTING PAVEMENT MARKINGS NOT SHOWN ARE TO BE REMOVED.
3. SEE SHEETS 7 - 8 FOR NOTES REGARDING MAINTENANCE OF TRAFFIC.

HORIZONTAL SCALE IN FEET 0 10 20 40

CALCULATED CWP
CHECKED

MAINTENANCE OF TRAFFIC PHASE 1

ADA-41-31.53

I:\project\Adams\ADA-41-3200-97590\roadway\sheets\97590MP001.dgn 02-DEC-2016 12:32PM cpridemo

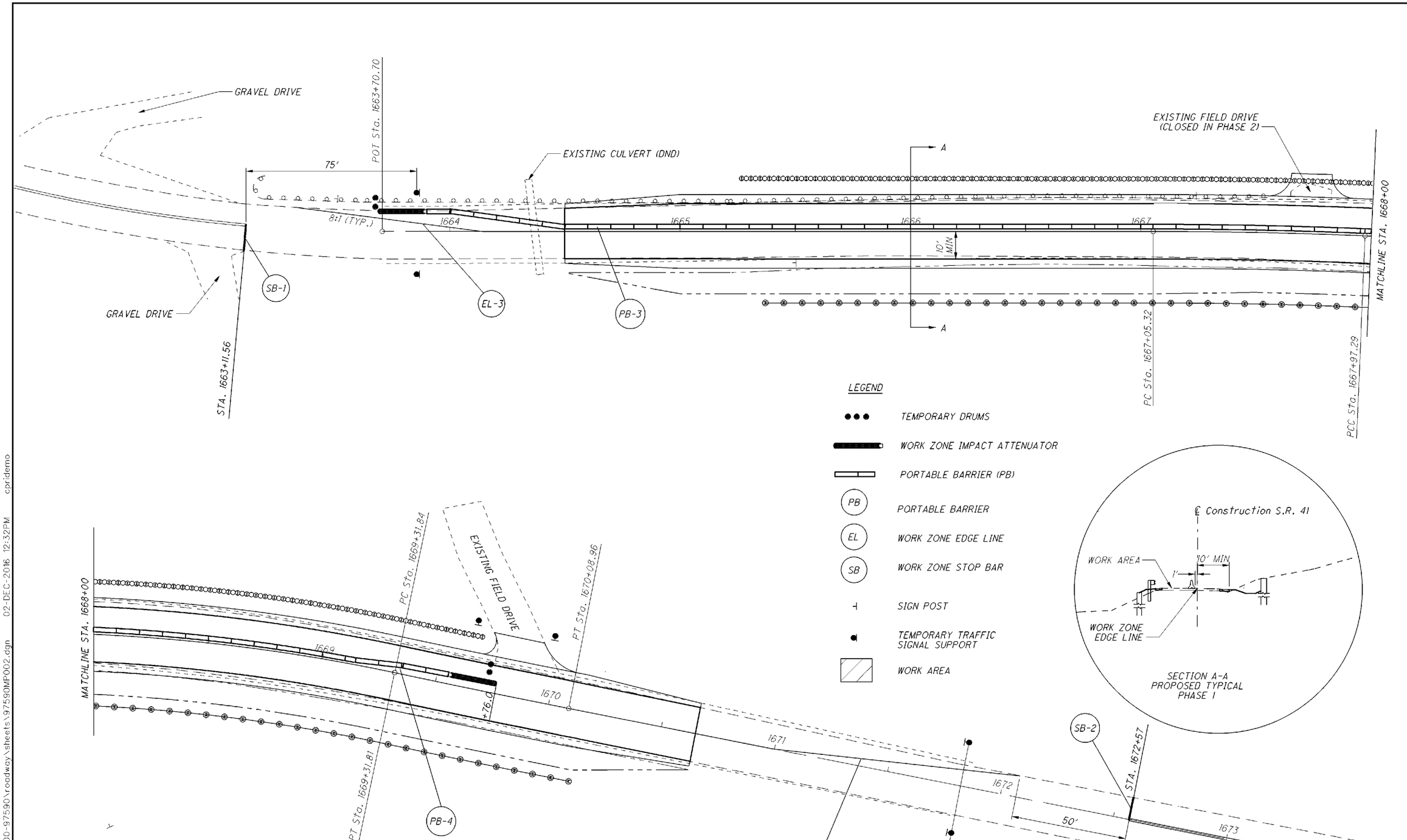

NOTES:

1. FOR ADVANCE SIGNAGE AND OTHER DETAILS NOT SHOWN SEE STANDARD DRAWINGS MT-96.11, MT-96.20 AND MT-97.26.
2. EXISTING PAVEMENT MARKINGS NOT SHOWN ARE TO BE REMOVED.
3. SEE SHEETS 7 - 8 FOR NOTES REGARDING MAINTENANCE OF TRAFFIC.

HORIZONTAL SCALE IN FEET 0 10 20 40

CALCULATED CWP
CHECKED

MAINTENANCE OF TRAFFIC PHASE 2

ADA-41-31.53

I:\project\Adams\ADA-41-3200-97590\roadway\sheets\97590MP002.dgn 02-DEC-2016 12:32PM cpridemo

REF. NO.	SHEET NO.	STATION TO STATION		614										622						
				WORK ZONE IMPACT ATTENUATOR FOR 24" WIDE HAZARDS (BI-DIRECTIONAL)		BARRIER REFLECTOR, TYPE B2	OBJECT MARKER, TWO-WAY	INCREASED BARRIER DELINEATION			WORK ZONE EDGE LINE, CLASS I, 740.06, TYPE I (WHITE)	WORK ZONE STOP LINE, CLASS I, 740.06, TYPE I		PORTABLE BARRIER, 32"						
				EACH		EACH	EACH	FEET			FEET	FEET		FEET						
SB-1	9,10	1663+11										11								
SB-2	9,10	1672+57										11								
EL-1	9	1663+36	1668+00								468									
EL-2	9	1668+00	1672+07								403									
EL-3	10	1663+36	1668+00								468									
EL-4	10	1668+00	1672+07								403									
PB-1	9	1663+70	1668+00	1		10	10	2.7						410						
PB-2	9	1668+00	1671+11	1		7	7	131.8						289						
PB-3	10	1663+70	1668+00	1		10	10	2.7						410						
PB-4	10	1668+00	1670+76	1		7	7	131.8						254						
		Sub Total									FEET 1742									
		Conversion									0.3299 MILE									
TOTALS CARRIED TO GENERAL SUMMARY				4		34	34	269			0.33	22		1363						

CALCULATED CWP
CHECKED

MAINTENANCE OF TRAFFIC SUBSUMMARY

ADA-41-31.53

I:\project\Adams\ADA-41-3200-97590\roadway\sheets\97590MS001.dgn 02-DEC-2016 12:37PM cpridemo

SHEET NUM. 5	6	7	8	11	14	15	26	33	42	44	47	PART. 01/STR/OT		ITEM	ITEM EXT	GRAND TOTAL	UNIT	DESCRIPTION	SEE SHEET NO.
																		ROADWAY	
												LS		201	11000	LS		CLEARING AND GRUBBING	
					451							451		202	38000	451	FT	GUARDRAIL REMOVED	
					1							1		202	42000	1	EACH	ANCHOR ASSEMBLY REMOVED, TYPE A	
					1							1		202	42040	1	EACH	ANCHOR ASSEMBLY REMOVED, TYPE T	
								873				873		203	10000	873	CY	EXCAVATION	
								2,196				2,196		203	20000	2,196	CY	EMBANKMENT	
						67						67		204	10000	67	SY	SUBGRADE COMPACTION	
					609							609		606	15050	609	FT	GUARDRAIL, TYPE MGS	
					1							1		606	26100	1	EACH	ANCHOR ASSEMBLY, TYPE E	5
					3							3		606	26500	3	EACH	ANCHOR ASSEMBLY, TYPE T	
											4	4		623	40500	4	EACH	REFERENCE MONUMENT	
												LS		878	25000	LS		INSPECTION AND COMPACTION TESTING OF UNBOUND MATERIALS	
																		EROSION CONTROL	
					4							4		601	21050	4	SY	TIED CONCRETE BLOCK MAT, TYPE 1	
							33					33		653	10000	33	CY	TOPSOIL FURNISHED AND PLACED	
6,113												6,113		659	10000	6,113	SY	SEEDING AND MULCHING	
306												306		659	14000	306	SY	REPAIR SEEDING AND MULCHING	
0.9												0.9		659	20000	0.9	TON	COMMERCIAL FERTILIZER	
1.26												1.26		659	31000	1.26	ACRE	LIME	
33												33		659	35000	33	MGAL	WATER	
							112					112		670	00710	112	SY	DITCH EROSION PROTECTION MAT, TYPE A	
												LS		832	15000	LS		STORM WATER POLLUTION PREVENTION PLAN	
												5,000		832	30000	5,000	EACH	EROSION CONTROL	
																		DRAINAGE	
					2							2		611	99710	2	EACH	PRECAST REINFORCED CONCRETE OUTLET	
																		PAVEMENT	
						1,630						1,630		254	01000	1,630	SY	PAVEMENT PLANING, ASPHALT CONCRETE, 1 1/2"	
						123						123		407	10000	123	GAL	TACK COAT	
						117						117		411	10000	117	CY	STABILIZED CRUSHED AGGREGATE	
						68						68		441	50000	68	CY	ASPHALT CONCRETE SURFACE COURSE, TYPE 1, (448), PG64-22	
																		TRAFFIC CONTROL	
			10									10		614	13360	10	EACH	OBJECT MARKER, TWO WAY	
					11							11		621	00100	11	EACH	RPM	
					11							11		621	54000	11	EACH	RAISED PAVEMENT MARKER REMOVED	
			10									10		626	00100	10	EACH	BARRIER REFLECTOR, TYPE A2	
					17							17		630	03100	17	FT	GROUND MOUNTED SUPPORT, NO. 3 POST	
					1							1		630	85100	1	EACH	REMOVAL OF GROUND MOUNTED SIGN AND REERECTION	
					1							1		630	86002	1	EACH	REMOVAL OF GROUND MOUNTED POST SUPPORT AND DISPOSAL	
					0.24							0.24		642	00090	0.24	MILE	EDGE LINE, 4"	
					0.12							0.12		642	00290	0.12	MILE	CENTER LINE	
																		RETAINING WALLS (001)	
									2,720			2,720		507	00400	2,720	FT	STEEL PILES, MISC.: W12X26, FURNISHED, AS PER PLAN	5
									1,665			1,665		524	94503	1,665	FT	DRILLED SHAFTS, 24" DIAMETER, ABOVE BEDROCK, AS PER PLAN	6
									1,110			1,110		524	94505	1,110	FT	DRILLED SHAFTS, 24" DIAMETER, INTO BEDROCK, AS PER PLAN	6
									1,650			1,650		524	95000	1,650	FT	DRILLED SHAFTS, MISC.:PLUG PILE, 24" DIAMETER, UNREINFORCED, AS PER PLAN	6

CALCULATED CWP CHECKED

GENERAL SUMMARY

ADA-41-31.53

I:\project\Adams\ADA-41-3200-97590\roadway\sheets\97590GG001.dgn 25-JAN-2017 12:02PM cpridemo

SHEET NUM. 5	6	7	8	11	14	15	26	33	42	44	45	PART. 01/STR/OT		ITEM	ITEM EXT	GRAND TOTAL	UNIT	DESCRIPTION	SEE SHEET NO.
																		RETAINING WALLS (002)	
											1,320	1,320		507	00301	1,320	FT	STEEL PILES HP14X73, FURNISHED, AS PER PLAN	6
										63		63		511	71100	63	CY	CONCRETE, MISC.:LEVELING PAD	6
										2,538		2,538		511	71200	2,538	SF	CONCRETE, MISC.:PRECAST REINFORCED CONCRETE LAGGING PANEL	6
										296		296		512	10100	296	SY	SEALING OF CONCRETE SURFACES (EPOXY-URETHANE)	6
										481		481		518	39800	481	FT	4" PERFORATED CORRUGATED PLASTIC PIPE	
										34		34		518	39900	34	FT	4" NON-PERFORATED CORRUGATED PLASTIC PIPE, INCLUDING SPECIALS	
										312		312		518	21200	312	CY	POROUS BACKFILL WITH GEOTEXTILE FABRIC	
											660	660		524	94703	660	FT	DRILLED SHAFTS, 36" DIAMETER, ABOVE BEDROCK, AS PER PLAN	6
											550	550		524	94705	550	FT	DRILLED SHAFTS, 36" DIAMETER, INTO BEDROCK, AS PER PLAN	6
																		MAINTENANCE OF TRAFFIC	
		32										32		614	11110	32	HOUR	LAW ENFORCEMENT OFFICER WITH PATROL CAR FOR ASSISTANCE	7
				269								269		614	11630	269	FT	INCREASED BARRIER DELINEATION	7
				4								4		614	12338	4	EACH	WORK ZONE IMPACT ATTENUATOR (BIDIRECTIONAL)	7
				34								34		614	13302	34	EACH	BARRIER REFLECTOR, TYPE B2	7
				34								34		614	13361	34	EACH	OBJECT MARKER, TWO WAY, AS PER PLAN	7
				0.33								0.33		614	22200	0.33	MILE	WORK ZONE EDGE LINE, CLASS I, 740.06, TYPE I	
				22								22		614	26400	22	FT	WORK ZONE STOP LINE, CLASS I, 740.06, TYPE I	
		2										2		616	10000	2	MGAL	WATER	
				1,398								1,398		622	41000	1,398	FT	PORTABLE BARRIER, 32"	
																		INCIDENTALS	
												LS		614	11000	LS		MAINTAINING TRAFFIC	
												4		619	16000	4	MNTH	FIELD OFFICE, TYPE A	
												LS		623	10000	LS		CONSTRUCTION LAYOUT STAKES AND SURVEYING	
												LS		624	10000	LS		MOBILIZATION	

CALCULATED CWP CHECKED

GENERAL SUMMARY

ADA-41-31.53

I:\project\Adams\ADA-41-3200-97590\roadway\sheets\97590GG002.dgn 05-DEC-2016 2:44PM cpridemo

SHEET NO.	REFERENCE NO.	LOCATION	STATION FROM	STATION TO	SIDE		202 GUARDRAIL REMOVED FT	202 ANCHOR ASSEMBLY REMOVED, TYPE A EACH	202 ANCHOR ASSEMBLY REMOVED, TYPE T EACH	601 Tied-Concrete Mat, Type I SY	630 GROUND MOUNTED SUPPORT, NO. 3 POST FT	630 REMOVAL OF GROUND MOUNTED SIGN AND REERECTION EACH	630 REMOVAL OF GROUND MOUNTED POST AND DISPOSAL EACH		606 GUARDRAIL, TYPE MGS FT	606 ANCHOR ASSEMBLY, MGS TYPE E EACH	606 ANCHOR ASSEMBLY, TYPE T EACH	621 RAISED PAVEMENT MARKER REMOVED EACH	621 RPM EACH	642 EDGE LINE, 4" FT	642 CENTER LINE FT	611 PRECAST REINFORCED CONCRETE OUTLET EACH
17	R-1	S.R. 41	1663+14.71	1667+54.70	LT		450.92	1	1													
17	GR-1	S.R. 41	1663+14.71	1667+60.97	LT										468.75		2					
17	GR-2	S.R. 41	1667+87.23	1668+50	LT										70.69		1					
17	GR-3	S.R. 41	1668+50	1669+68.35	LT										69.75	1						
17,18		S.R.41	16664+50	1670+75	BOTH													11	11	1250	625	
17	S-1	S.R. 41	1663+51	1663+51	LT						18	1	1									
17	S-2	S.R. 41	1665+50	1665+50	RT						14	1	1									
17	S-3	S.R. 41	1667+24	1667+24	LT						17	1	1									
17	D-1	S.R. 41	1665+20	1665+20	RT					2												1
18	D-2	S.R. 41	1670+30	1670+30	RT					2												1
		SUBTOTALS					450.92	1.00	1.00	4.00	49.00	3.00	3.00		609.19	1.00	3.00	11.00	11.00	1250.00	625.00	2
		CONVERSIONS																		MILE 0.2367	MILE 0.1184	
TOTALS CARRIED TO GENERAL SUMMARY							451	1	1	4	49	3	3		609	1	3	11	11	0.24	0.12	2

CALCULATED CWP
CHECKED

ROADWAY SUBSUMMARY

ADA-41-31.53

I:\project\Adams\ADA-41-3200-97590\roadway\sheets\97590GS001.dgn 05-DEC-2016 2:48PM cpridemo

STATION TO STATION		SIDE	LENGTH L	AVERAGE WIDTH W	SURFACE AREA A A=LxW	CAD AREAS		204 SUBGRADE COMPACTION		254 PAVEMENT PLANING, ASPHALT CONCRETE		407 TACK COAT @ 0.075 GAL. PER SQ. YD.		411 STABILIZED CRUSHED AGGREGATE			441 ASPHALT CONCRETE SURFACE COURSE, TYPE 1, (448), PG64-22		
								SY		SY (1.5"AVG)		SY		CY (8" AVG)			CY (1.5" AVG)		
1664+50	1665+00	BOTH	50.00	22.26	1113.00					123.67		123.67					5.15		
1664+50	1665+00	LEFT	50.00	3.00	150.00			16.67						3.70					
1664+50	1665+00	RIGHT	50.00	3.00	150.00			16.67						3.70					
1665+00	1670+15	BOTH	515.00	24.00	12360.00					1373.33		1373.33					57.22		
1665+00	1670+15	LEFT	515.00	4.00	2060.00									50.86					
1665+00	1670+15	RIGHT	515.00	4.00	2060.00									50.86					
1670+15	1670+65	BOTH	50.00	23.90	1195.00					132.78		132.78					5.53		
1670+15	1670+65	LEFT	50.00	3.00	150.00			16.67						3.70					
1670+15	1670+65	RIGHT	50.00	3.00	150.00			16.67						3.70					
SUBTOTALS								66.67		1629.78		GALLON 122.23		116.54			67.91		
TOTALS								67		1630		123		117			68		

CALCULATED CWP
CHECKED

PAVEMENT SUBSUMMARY

ADA-41-31.53

I:\project\Adams\ADA-41-3200-97590\roadway\sheets\97590GS002.dgn 02-DEC-2016 12:32PM cpridemo

PROJECT DATA			
TOTAL AREA (RIGHT OF WAY)	1.97 ACRES	RUNOFF COEFFICIENT FOR PRE-CONSTRUCTION SITE	0.78
PROJECT EARTH DISTURB AREA	1.31 ACRES	RUNOFF COEFFICIENT FOR POST-CONSTRUCTION SITE	0.69
CONTRACTOR EARTH DISTURBED AREA	1.10 ACRES	IMMEDIATE RECEIVING WATERS	CROOKED CREEK
NOTICE OF INTENT EARTH DISTURBED AREA	4.90 ACRES	SUBSEQUENT RECEIVING WATERS	OHIO BRUSH CREEK
IMPERVIOUS (PAVED) AREA FOR PRE-CONSTRUCTION SITE	0.38 ACRES	POST CONSTRUCTION BMP:	
IMPERVIOUS (PAVED) AREA FOR POST-CONSTRUCTION SITE	0.44 ACRES		

PROJECT DESCRIPTION

LANDSLIDE REMEDIATION OF A 0.11 MILE SECTION OF STATE ROUTE 41 IN ADAMS COUNTY AND FRANKLIN TOWNSHIP BY CONSTRUCTION OF PARALLEL DRILLED SHAFT RETAINING WALLS INCLUDING MINOR REGRADING FOR DRAINAGE, GUARDRAIL REPLACEMENT AND INCIDENTAL PAVEMENT RESURFACING.

USGS QUADRANT NO. 39083-A4-TF-024
SINKING SPRING, OHIO
LATITUDE: 39° 00' 55" N*
LONGITUDE: 83° 22' 39" W*

*LONGITUDE AND LATITUDE TO APPROXIMATE CENTER OF PROJECT

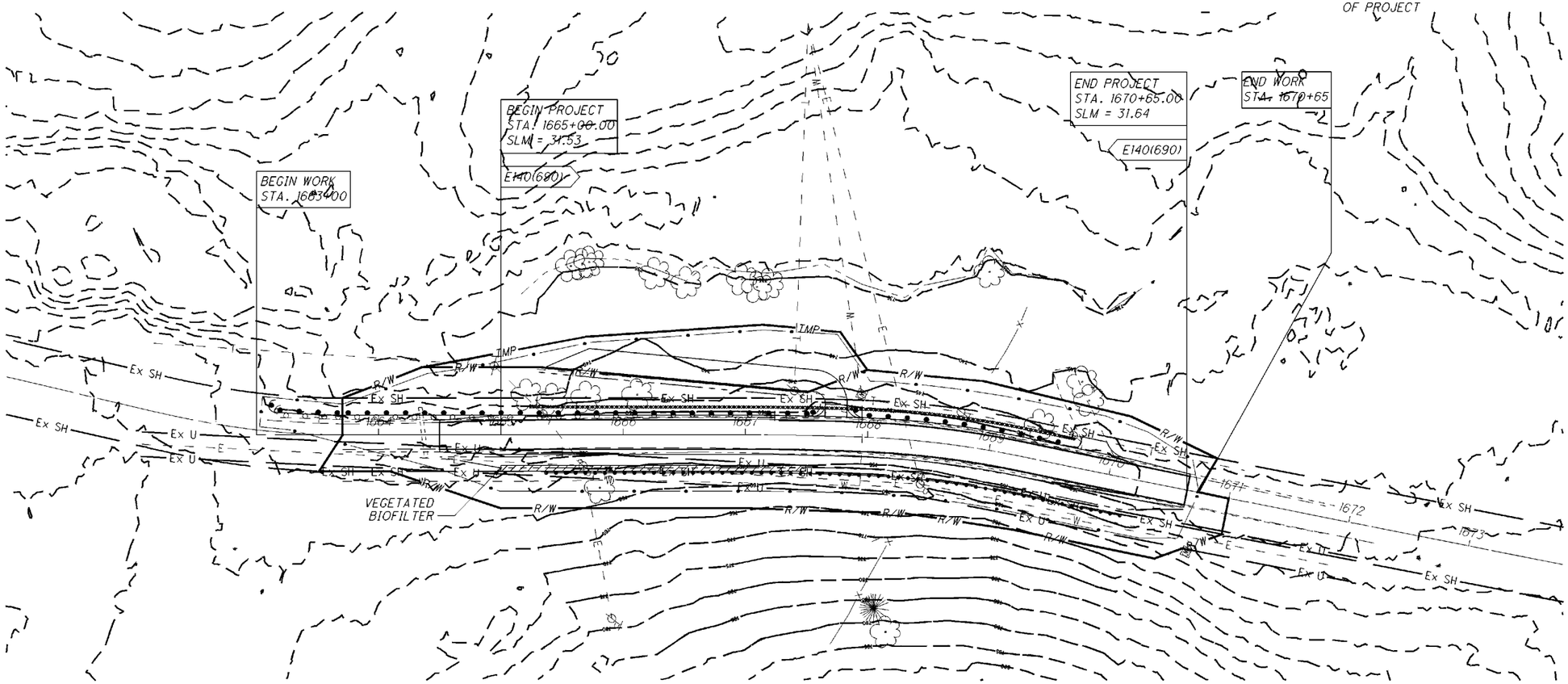

BMP TYPE	STATION		LATITUDE/LONGITUDE				EDA TREATMENT CREDIT (ACRES)
	BEGIN	END	BEGIN		END		
VEGETATED BIOFILTER	1665+50	1667+50	39.014722	-83.377056	39.015250	-83.377361	0.43
					TREATMENT PROVIDED		0.43
					TREATMENT REQUIRED*		0.26

* CALCULATED PER L&D VOL. 2, SEC. 1115.7

LEGEND

VEGETATED BIOFILTER

HORIZONTAL SCALE IN FEET
0 25 50 100

SITE PLAN

ADA-41-31.53

I:\project\Adams\ADA-41-3200-97590\roadway\sheets\97590SP001.dgn 02-DEC-2016 12:32PM cpridemo

PROPOSED CURVE DATA (FIELD DRIVE)
P.I. Sta. 10+42.34
Δ = 78° 30′ 57″ (LT)
Dc = 286° 28′ 44″
R = 20.00′
T = 16.35′
L = 27.41′
E = 5.83′
C = 25.31′
C.B. = S 25° 55′ 23″ W

EXISTING CURVE DATA
P.I. Sta. 1667+51.31
Δ = 2° 20′ 57″ (RT)
Dc = 2° 33′ 15″
R = 2,243.35′
T = 46.00′
L = 91.98′
E = 10.47′
C = 91.97′
C.B. = N 22° 37′ 19″ W

EXISTING CURVE DATA
P.I. Sta. 1668+64.71
Δ = 9° 38′ 00″ (RT)
Dc = 7° 09′ 41″
R = 800.07′
T = 67.42′
L = 134.52′
E = 2.84′
C = 134.36′
C.B. = N 16° 37′ 50″ W

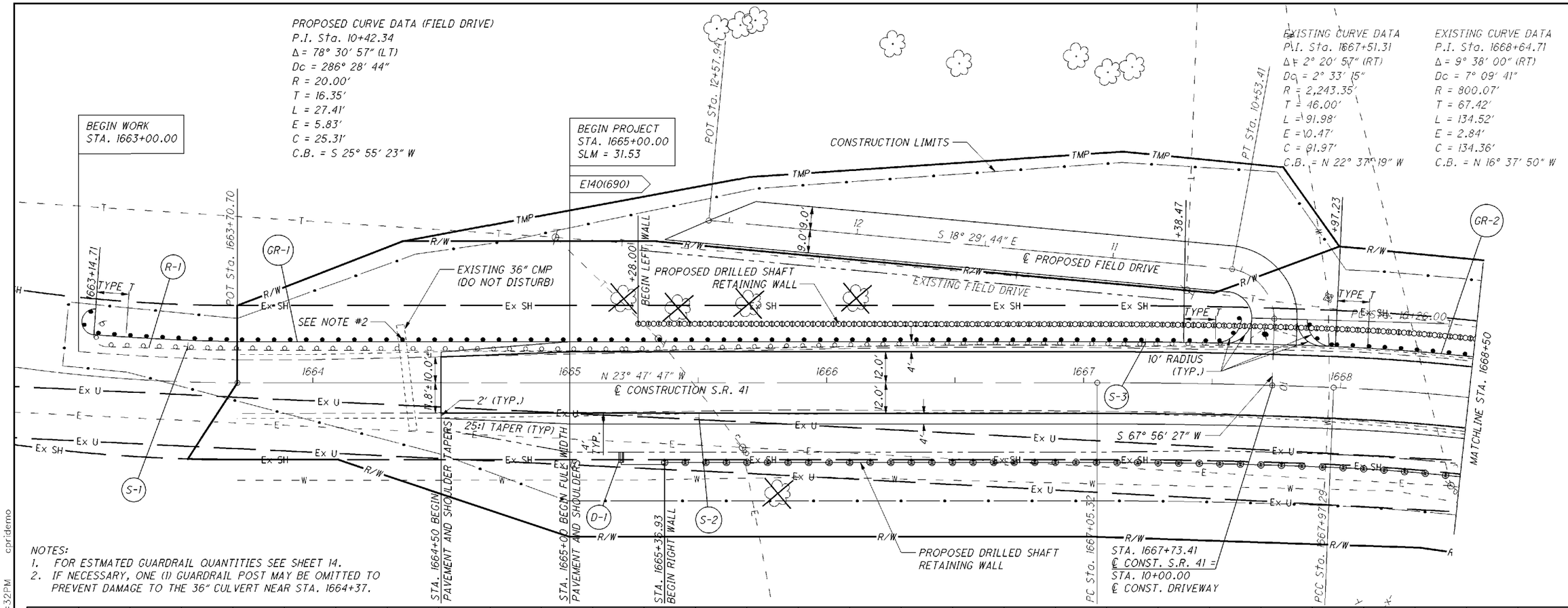

NOTES:
1. FOR ESTMATED GUARDRAIL QUANTITIES SEE SHEET 14.
2. IF NECESSARY, ONE (1) GUARDRAIL POST MAY BE OMITTED TO PREVENT DAMAGE TO THE 36″ CULVERT NEAR STA. 1664+37.

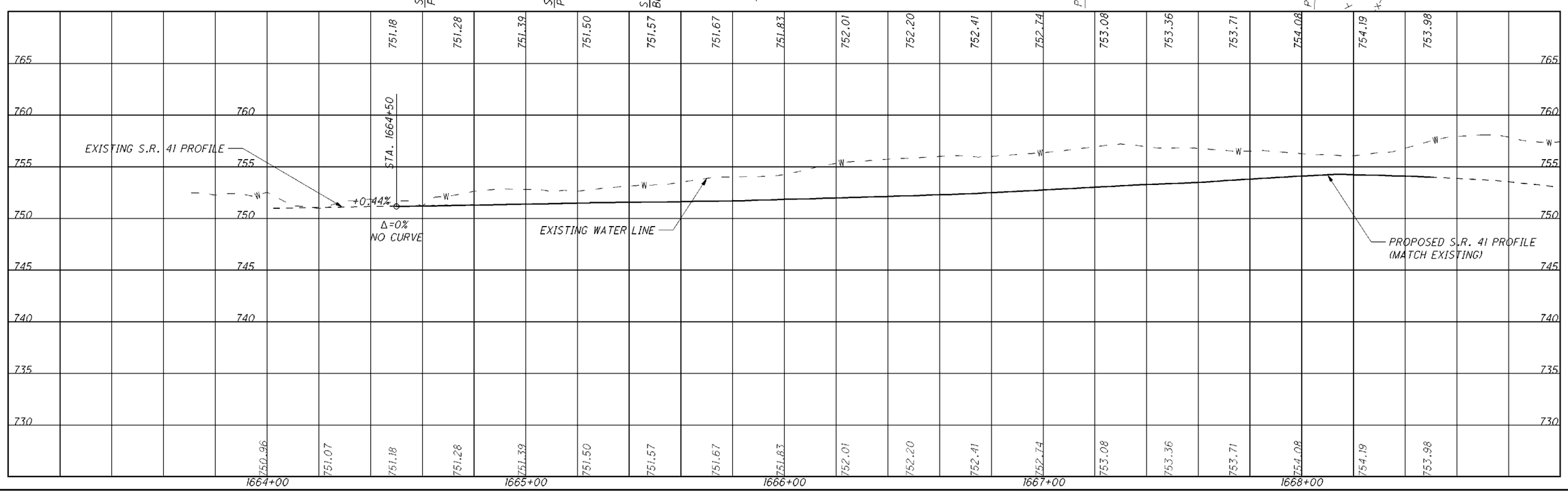

HORIZONTAL SCALE IN FEET
0 10 20 40

CALCULATED CWP
CHECKED

PLAN AND PROFILE
STA. 1663+70.70 to 1668+50.00

ADA-41-31.53

I:\project\Adams\ADA-41-3200-97590\roadway\sheets\97590GP001.dgn 02-DEC-2016 12:32PM cpridemo

EXISTING CURVE DATA
P.I. Sta. 1668+64.71
Δ = 9° 38′ 00″ (RT)
Dc = 7° 09′ 41″
R = 800.07′
T = 67.42′
L = 134.52′
E = 2.84′
C = 134.36′
C.B. = N 16° 37′ 50″ W

EXISTING CURVE DATA
P.I. Sta. 1669+70.40
Δ = 0° 46′ 17″ (LT)
Dc = 1° 00′ 00″
R = 5,729.00′
T = 38.56′
L = 77.12′
E = 0.13′
C = 77.12′
C.B. = N 12° 11′ 58″ W

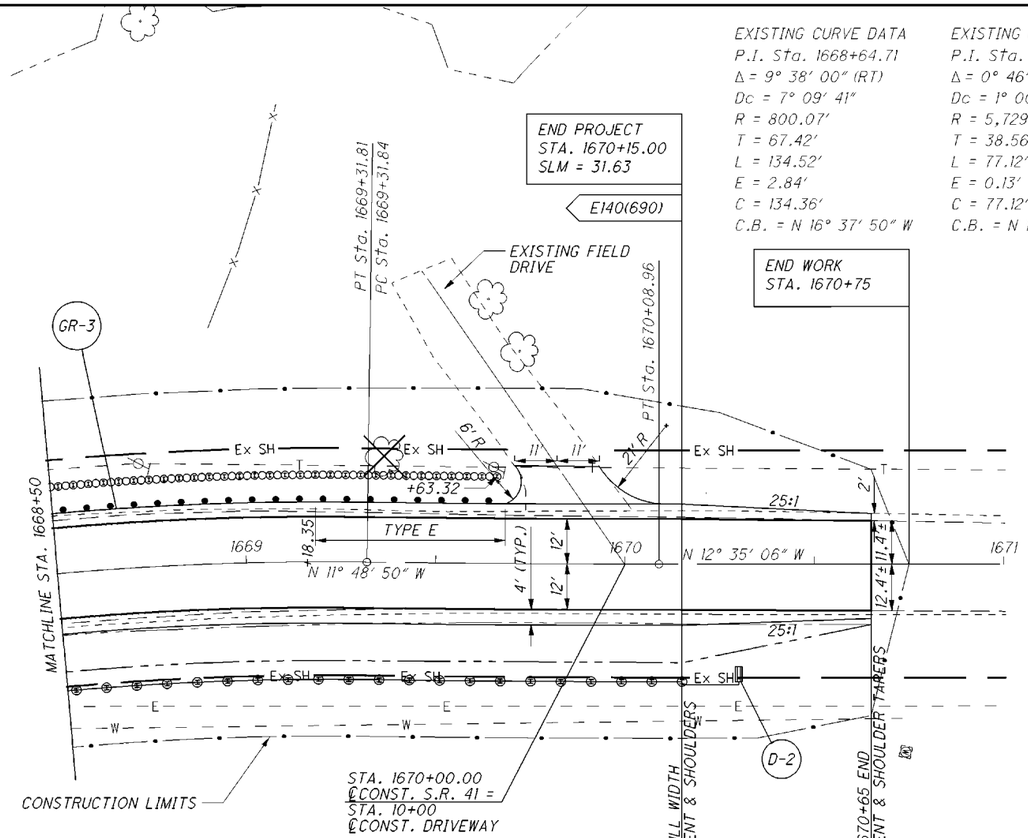

FOR GUARDRAIL QUANTITIES SEE SHEET 14.

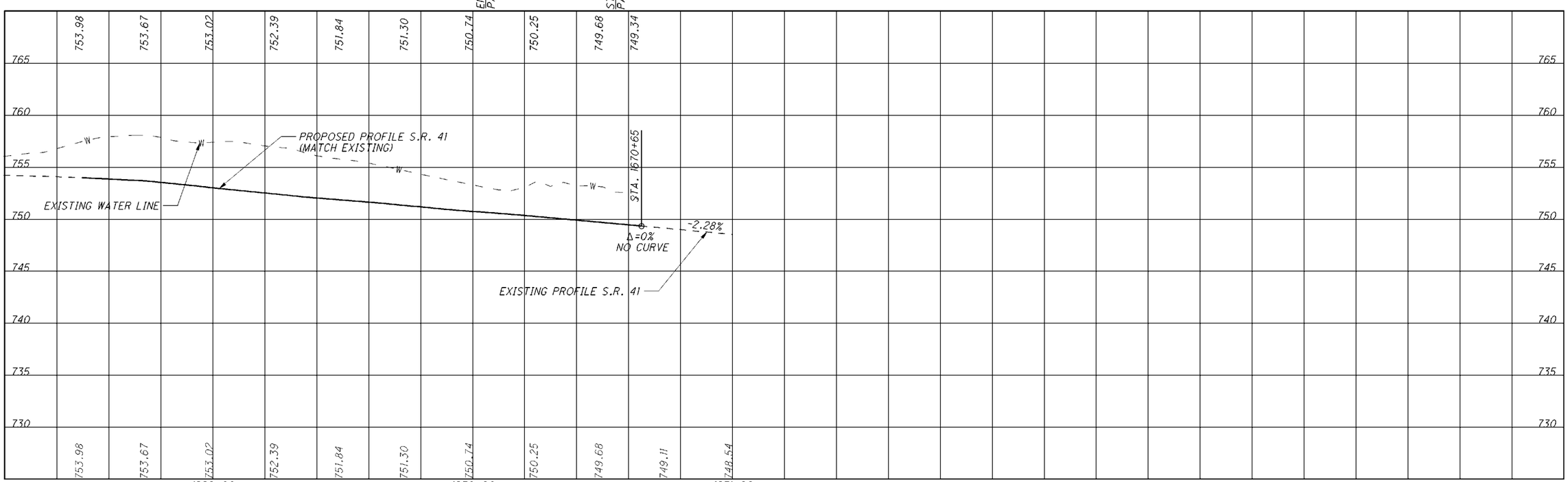

HORIZONTAL SCALE IN FEET
0 10 20 40

CALCULATED CWP
CHECKED

PLAN AND PROFILE
STA. 1668+50.00 TO 1671+00.00

ADA-41-31.53

I:\project\Adams\ADA-41-3200-97590\roadway\sheets\97590GP002.dgn 02-DEC-2016 12:32PM cpridemo

SEEDING		END AREA		VOLUME	
END WIDTH	SQ. YDS.	CUT	FILL	CUT	FILL
17.27	45	0	4	0	4
15.30	21	0	5	0	0
·	66	·	·	0	4

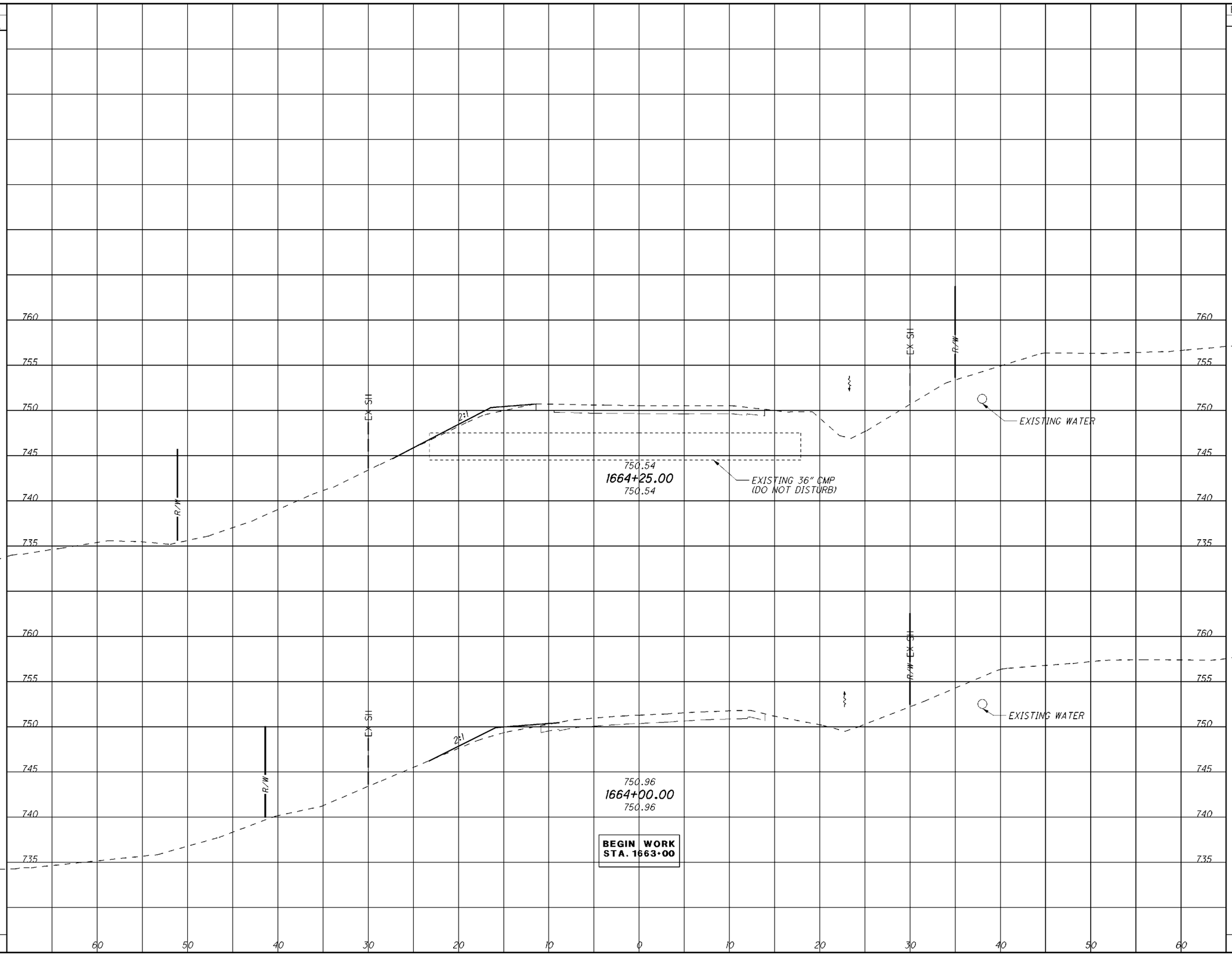

CALCULATED CWP
CHECKED

CROSS SECTIONS S.R. 41
STA. 1664+00.00 TO STA. 1664+25.00

ADA-41-31.53

I:\project\Adams\ADA-41-3200-97590\roadway\sheets\97590XS001.dgn 02-DEC-2016 12:42PM cpridemo

SEEDING		END AREA		VOLUME	
END WIDTH	SQ. YDS.	CUT	FILL	CUT	FILL
63.51	157	18	51	10	39
49.90	93	4	33	2	17
·	250	·	·	12	56

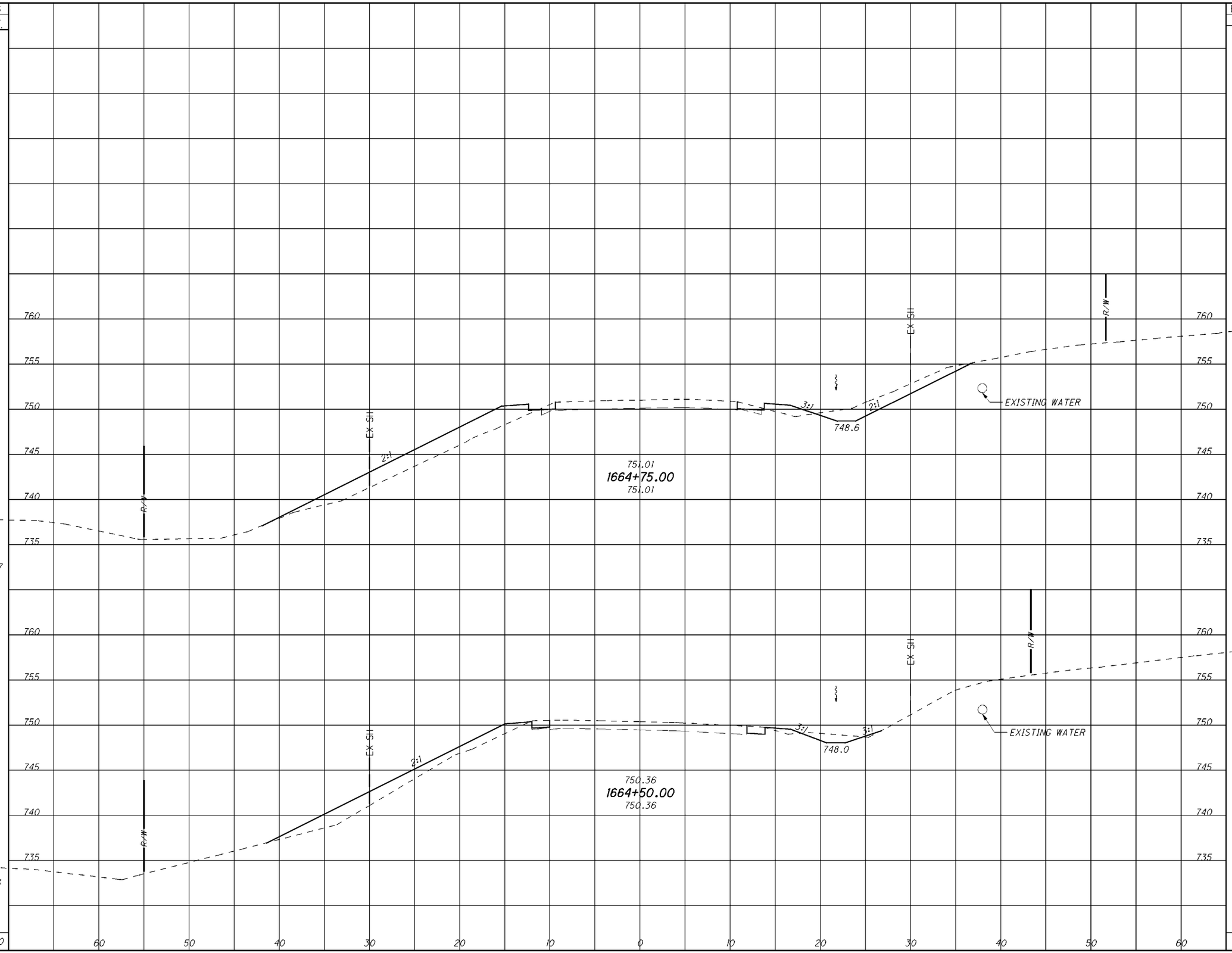

CALCULATED CWP
CHECKED

CROSS SECTIONS S.R. 41
STA. 1664+50.00 TO STA. 1664+75.00

ADA-41-31.53

I:\project\Adams\ADA-41-3200-97590\roadway\sheets\97590XS001.dgn 02-DEC-2016 12:42PM cpridemo

SEEDING		END AREA		VOLUME	
END WIDTH	SQ. YDS.	CUT	FILL	CUT	FILL
86.60		10	108		
65.75	212	58	54	32	75
	180			35	49
	392			67	124

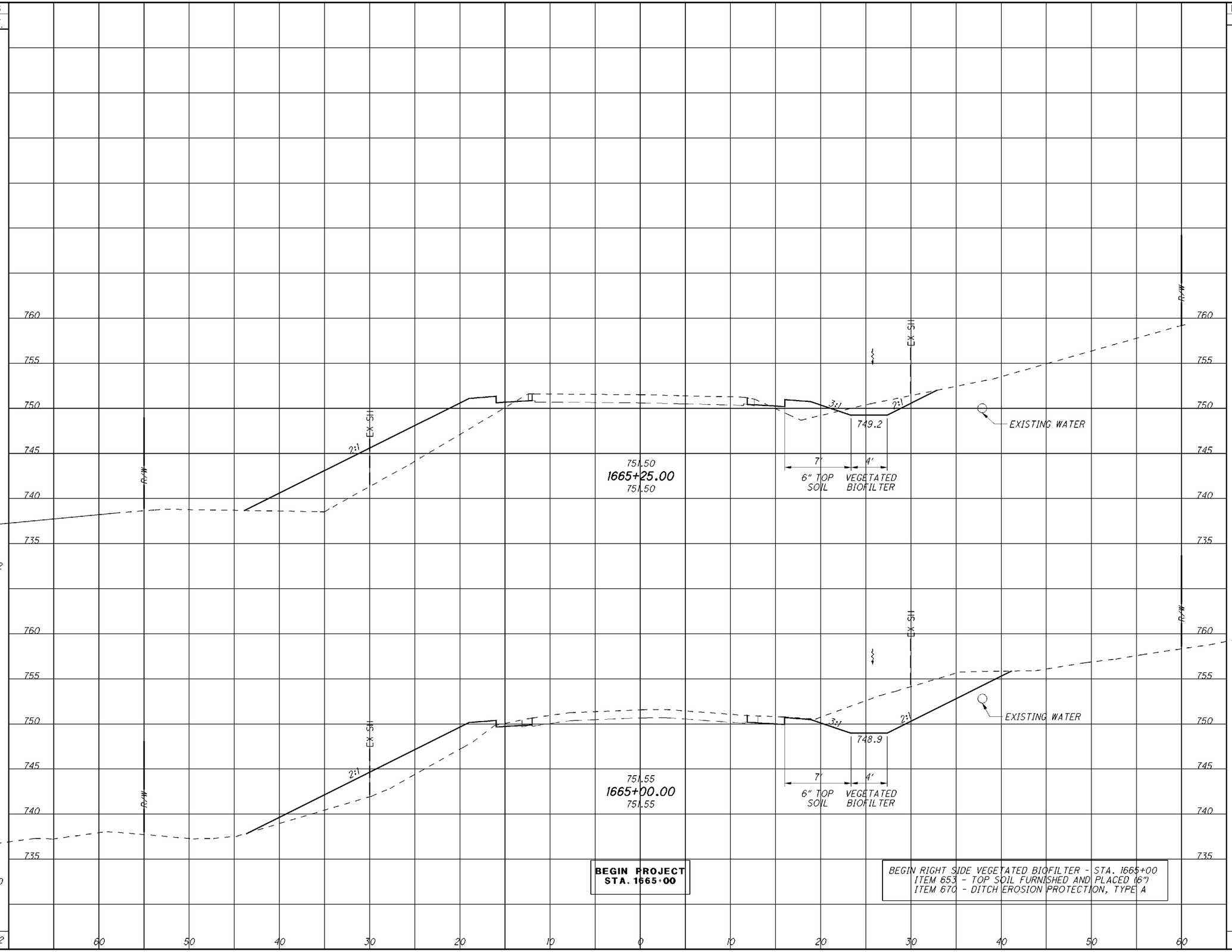

BEGIN PROJECT STA. 1665+00

BEGIN RIGHT SIDE VEGETATED BIOFILTER - STA. 1665+00
ITEM 653 - TOP SOIL FURNISHED AND PLACED (6")
ITEM 670 - DITCH EROSION PROTECTION, TYPE A

CALCULATED CWP
CHECKED

CROSS SECTIONS S.R. 41
STA. 1665+00.00 TO STA. 1665+25.00

ADA-41-31.53

I:\project\Adams\ADA-41-3200-97590\roadway\sheets\97590XS001.dgn 02-DEC-2016 12:42PM cpridemo

SEEDING		END AREA		VOLUME	
END WIDTH	SQ. YDS.	CUT	FILL	CUT	FILL
69.40	190	43	23	34	26
67.57	215	31	32	19	65
·	405	·	·	53	91

CALCULATED CWP
CHECKED

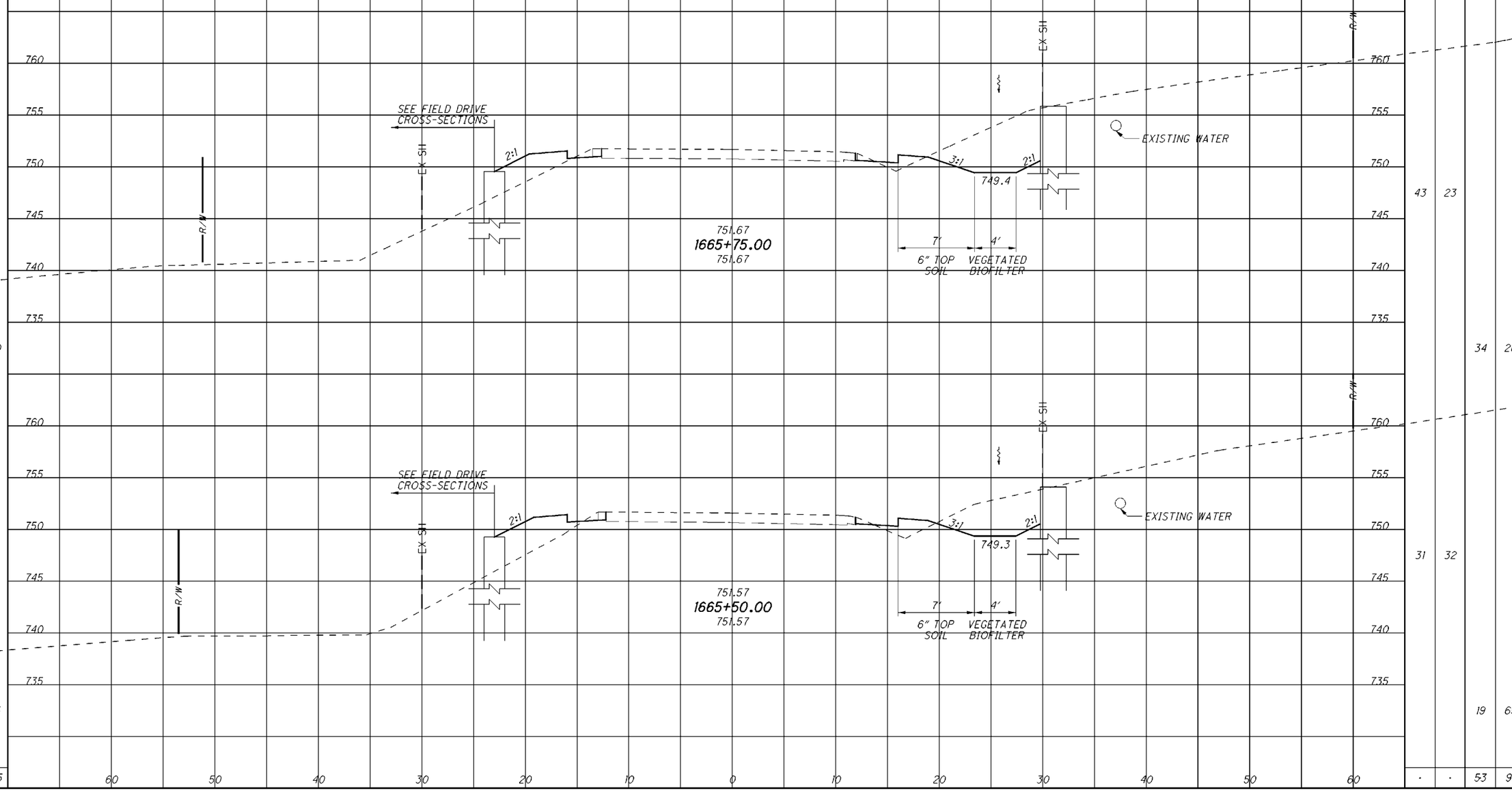

CROSS SECTIONS S.R. 41
STA. 1665+50.00 TO STA. 1665+75.00

ADA-41-31.53

I:\project\Adams\ADA-41-3200-97590\roadway\sheets\97590XS001.dgn 02-DEC-2016 12:42PM cpridemo

SEEDING		END AREA		VOLUME	
END WIDTH	SQ. YDS.	CUT	FILL	CUT	FILL
69.17	191	59	19	49	17
68.14	191	47	19	41	19
·	382	·	·	90	36

CALCULATED CWP
CHECKED

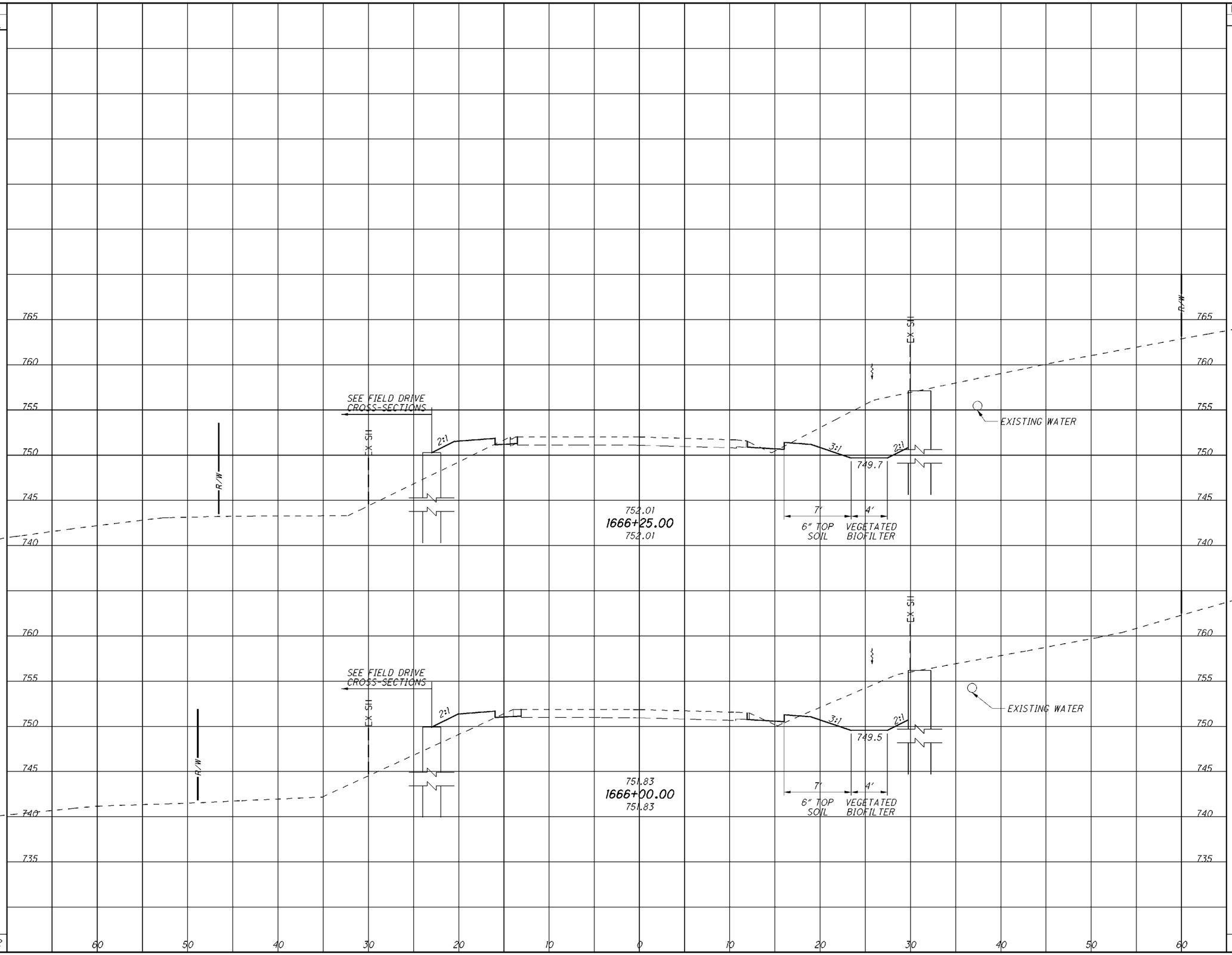

CROSS SECTIONS S.R. 41
STA. 1666+00.00 TO STA. 1666+25.00

ADA-41-31.53

23
51

I:\project\Adams\ADA-41-3200-97590\roadway\sheets\97590XS001.dgn 02-DEC-2016 12:42PM cpridemo

SEEDING			END AREA		VOLUME	
END WIDTH	SQ. YDS.		CUT	FILL	CUT	FILL
69.29	387	194	50	21	51	18
70.39		193	60	19	55	17
					106	35

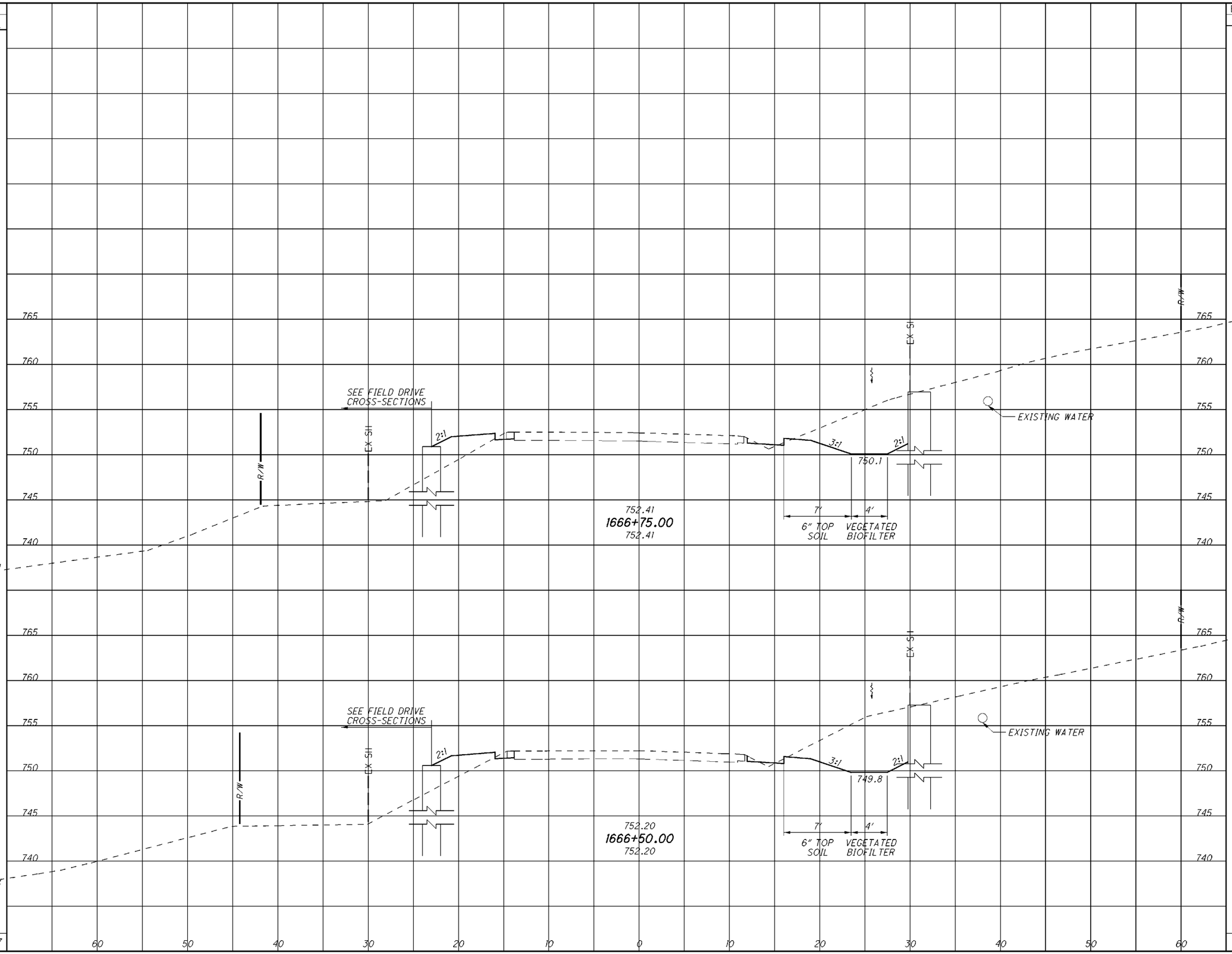

CALCULATED CWP
CHECKED

CROSS SECTIONS S.R. 41
STA. 1666+50.00 TO STA. 1666+75.00

ADA-41-31.53

I:\project\Adams\ADA-41-3200-97590\roadway\sheets\97590XS001.dgn 02-DEC-2016 12:42PM cpridemo

SEEDING			END AREA		VOLUME		
END WIDTH	SQ. YDS.		CUT	FILL	CUT	FILL	
69.82	195	1667+25.00	43	34	41	28	
70.01	193	1667+00.00	44	28	44	22	
·	388		·	·	85	50	

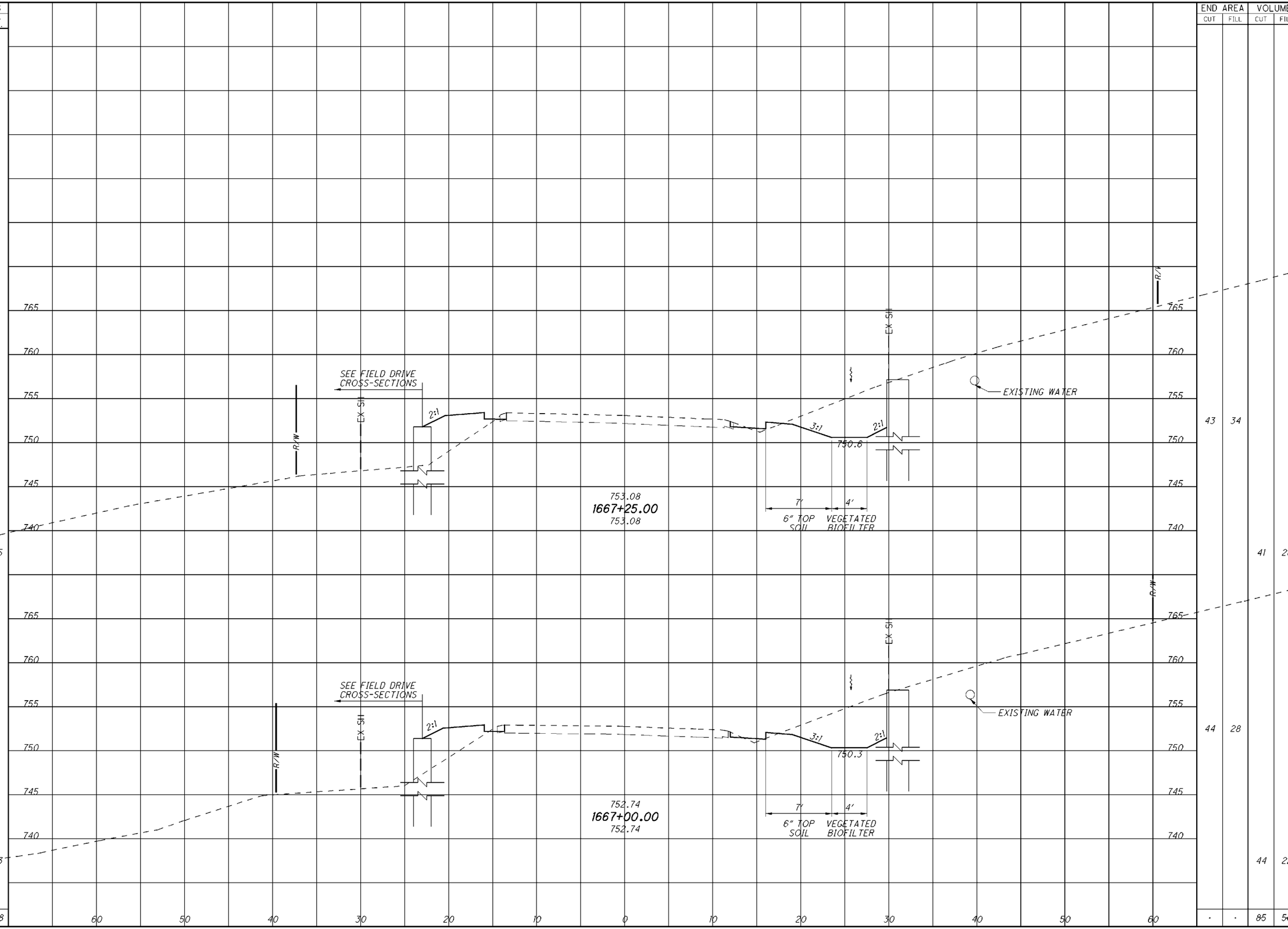

CALCULATED CWP
CHECKED

CROSS SECTIONS S.R. 41
STA. 1667+00.00 TO STA. 1667+25.00

ADA-41-31.53

I:\project\Adams\ADA-41-3200-97590\roadway\sheets\97590XS001.dgn 02-DEC-2016 12:42PM cpridemo

SEEDING END WIDTH	SEEDING SQ. YDS.	END AREA CUT	END AREA FILL	VOLUME CUT	VOLUME FILL
75.74	201	40	25	38	23
68.67	193	42	24	39	27
·	394	·	·	77	50

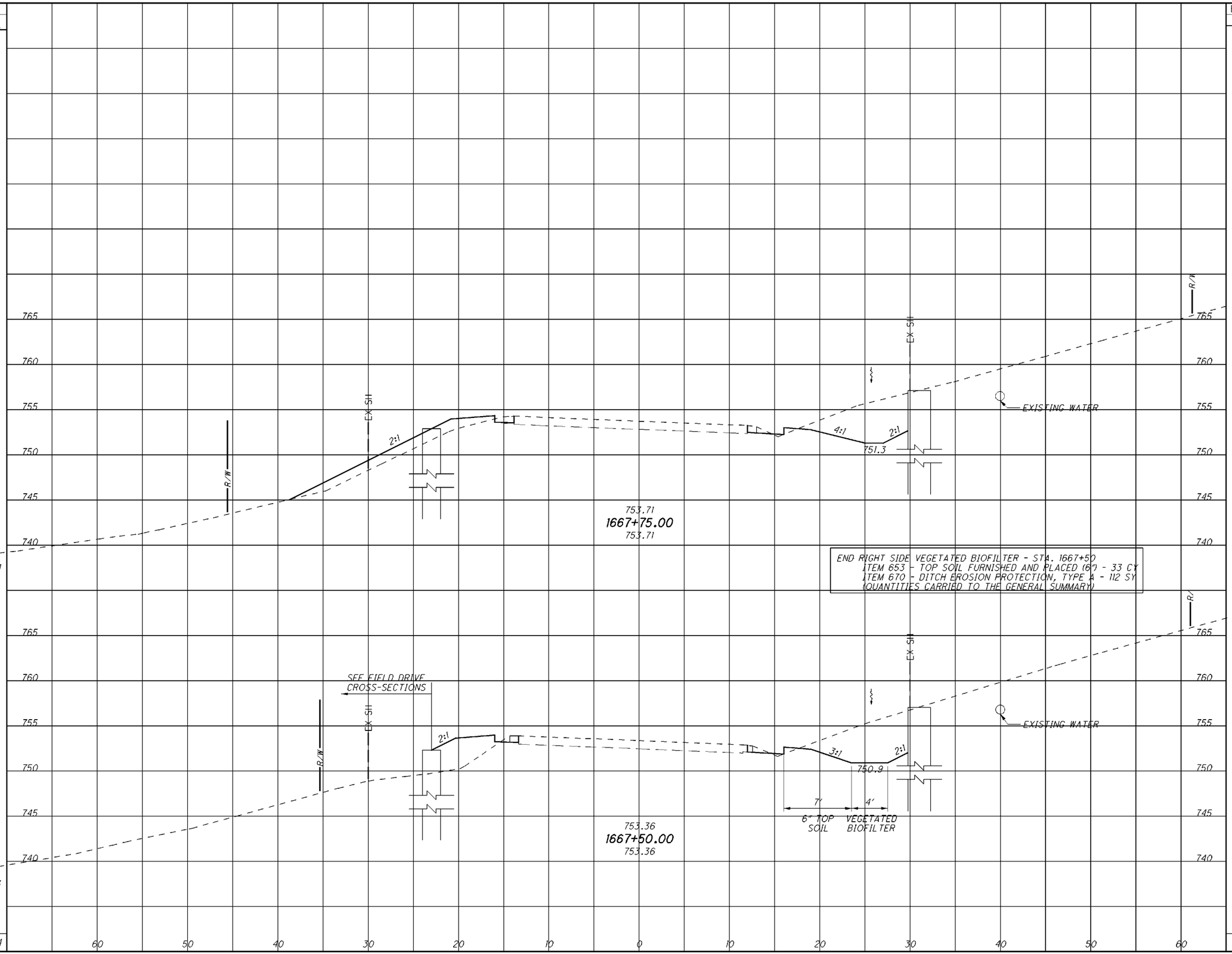

CALCULATED CWP
CHECKED

CROSS SECTIONS S.R. 41
STA. 1667+50.00 TO STA. 1667+75.00

ADA-41-31.53

I:\project\Adams\ADA-41-3200-97590\roadway\sheets\97590XS001.dgn 02-DEC-2016 12:42PM cpridemo

SEEDING		END AREA		VOLUME		
END WIDTH	SQ. YDS.	CUT	FILL	CUT	FILL	
75.13	211	40	50	38	45	1668+25.00
77.02	212	41	47	38	33	1668+00.00
·	423	·	·	76	78	

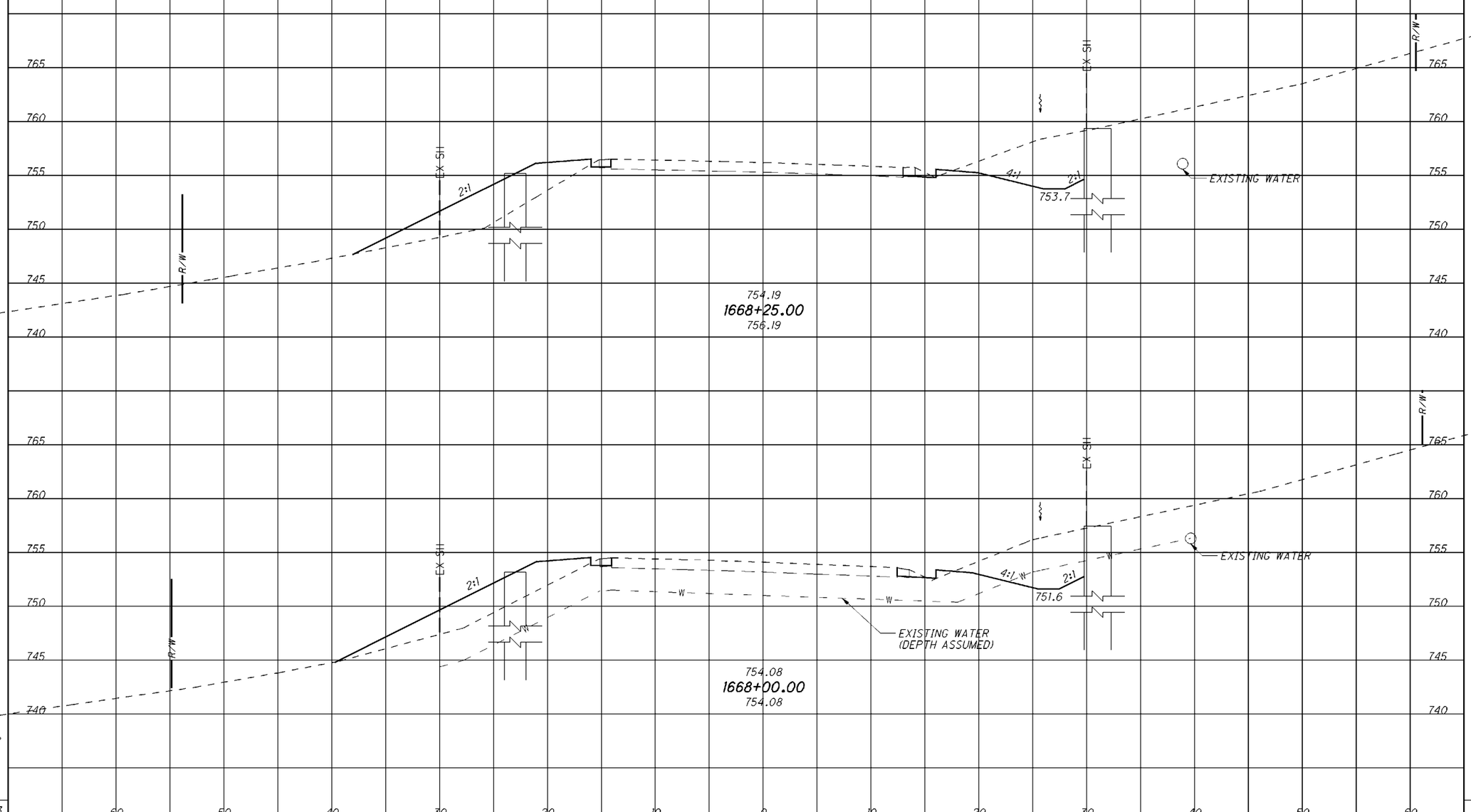

CALCULATED CWP
CHECKED

CROSS SECTIONS S.R. 41
STA. 1668+00.00 TO STA. 1668+25.00

ADA-41-31.53

I:\project\Adams\ADA-41-3200-97590\roadway\sheets\97590XS001.dgn 02-DEC-2016 12:42PM cpridemo

SEEDING		END AREA		VOLUME	
END WIDTH	SQ. YDS.	CUT	FILL	CUT	FILL
81.17	221	36	62	34	57
78.17	213	38	61	36	51
·	434	·	·	70	108

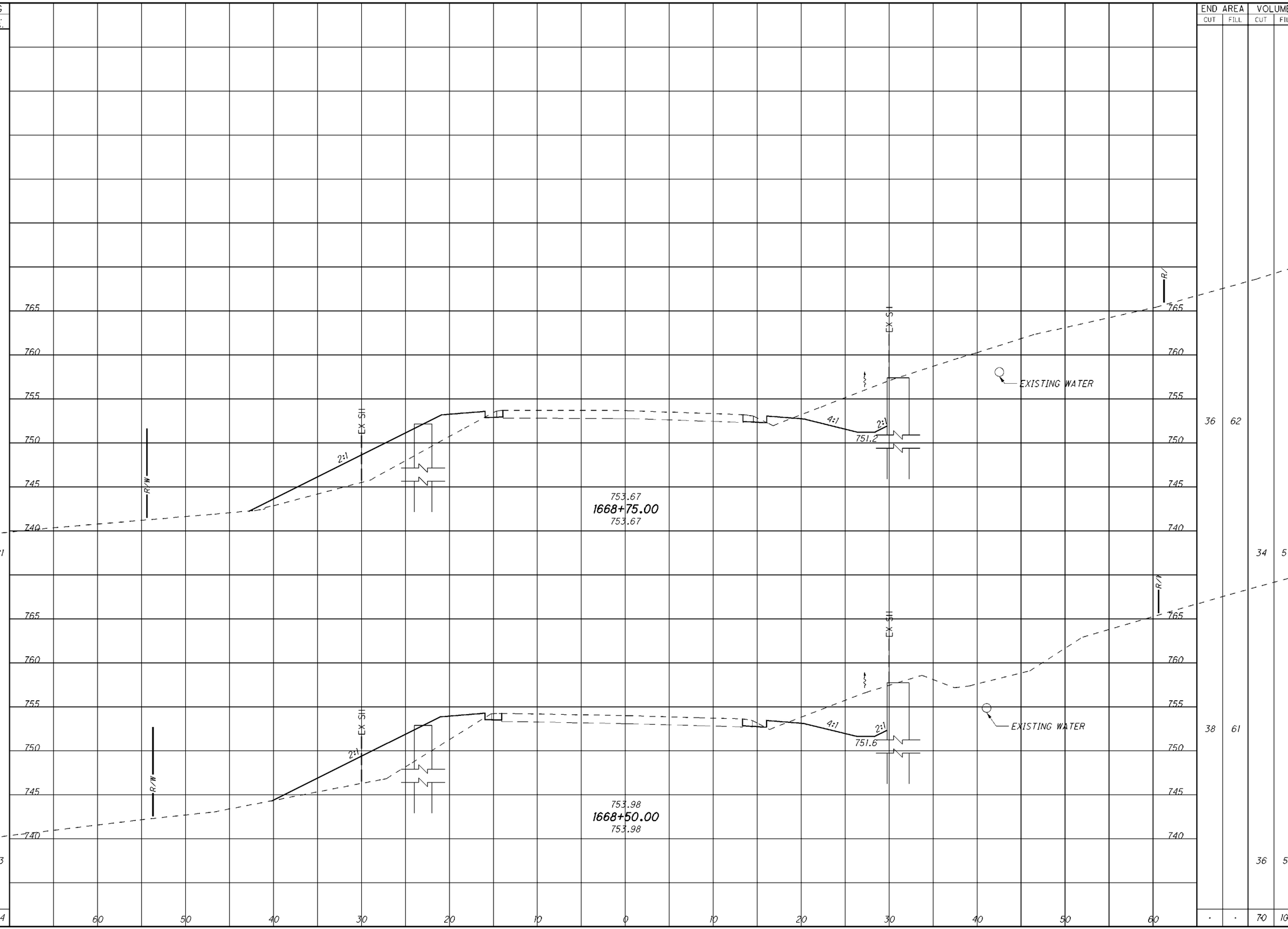

CALCULATED CWP
CHECKED

CROSS SECTIONS S.R. 41
STA. 1668+50.00 TO STA. 1668+75.00

ADA-41-31.53

I:\project\Adams\ADA-41-3200-97590\roadway\sheets\97590XS001.dgn 02-DEC-2016 12:42PM cpridemo

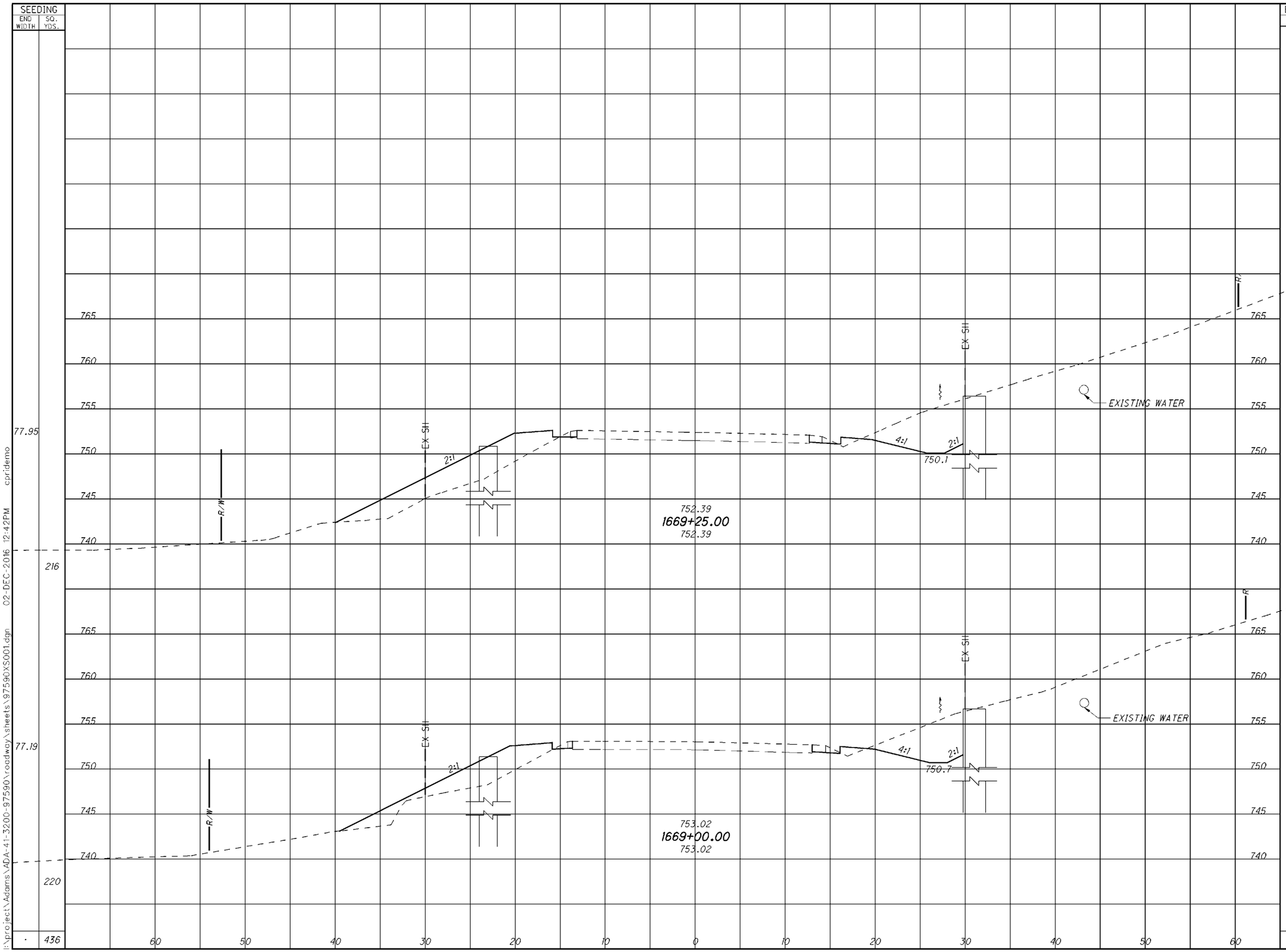

END AREA		VOLUME	
CUT	FILL	CUT	FILL
40	60		
		35	48
36	43		
		33	49
·	·	68	97

CALCULATED CWP
CHECKED

CROSS SECTIONS S.R. 41
STA. 1669+00.00 TO STA. 1669+25.00

ADA-41-31.53

I:\project\Adams\ADA-41-3200-97590\roadway\sheets\97590XS001.dgn 02-DEC-2016 12:42PM cpridemo

SEEDING		END AREA		VOLUME	
END WIDTH	SQ. YDS.	CUT	FILL	CUT	FILL
65.34	200	32	31	32	52
78.35	218	37	82	36	65
·	418	·	·	68	117

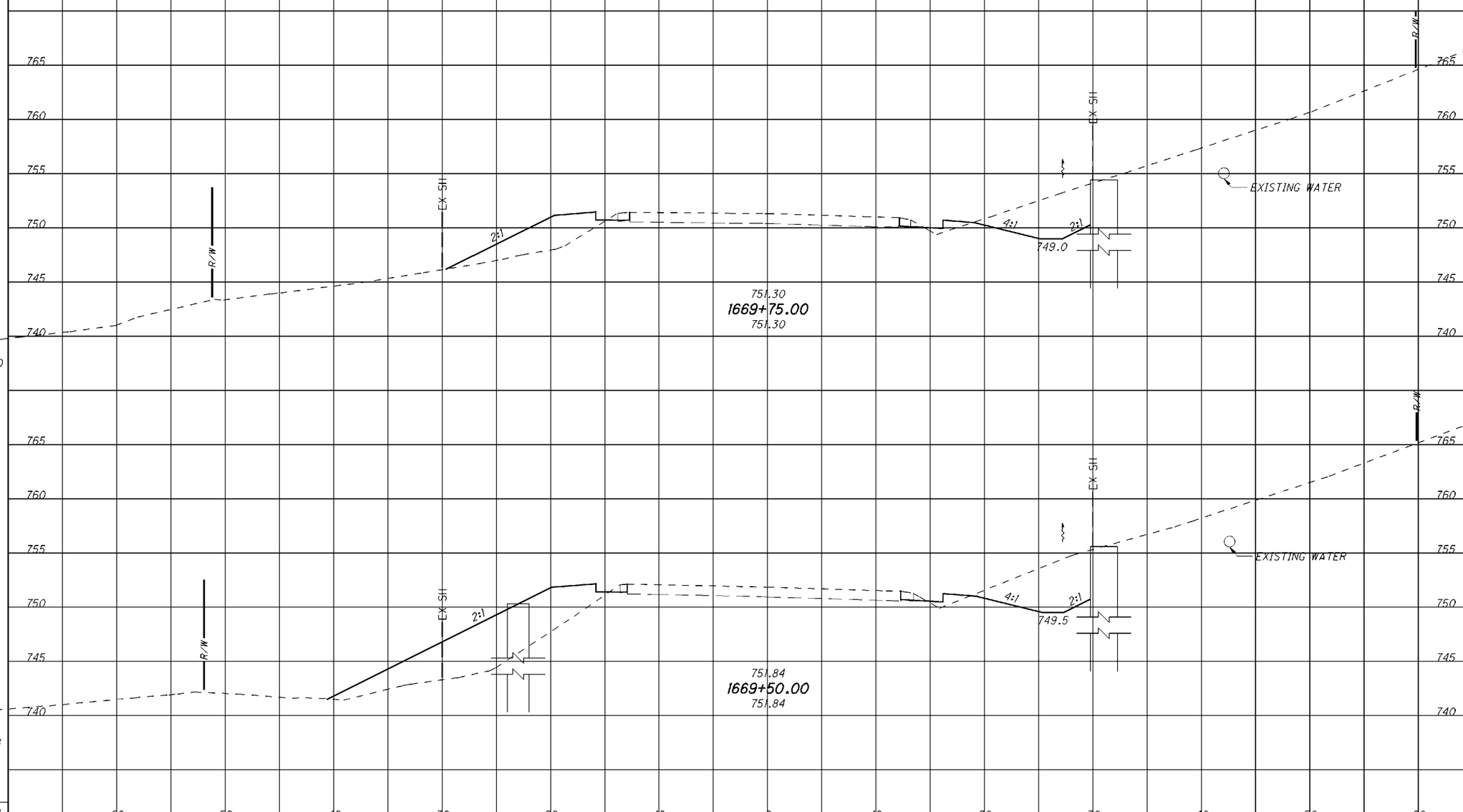

CALCULATED CWP
CHECKED

CROSS SECTIONS S.R. 41
STA. 1669+50.00 TO STA. 1669+75.00

ADA-41-31.53

30
51

I:\project\Adams\ADA-41-3200-97590\roadway\sheets\97590XS001.dgn 02-DEC-2016 12:42PM cpridemo

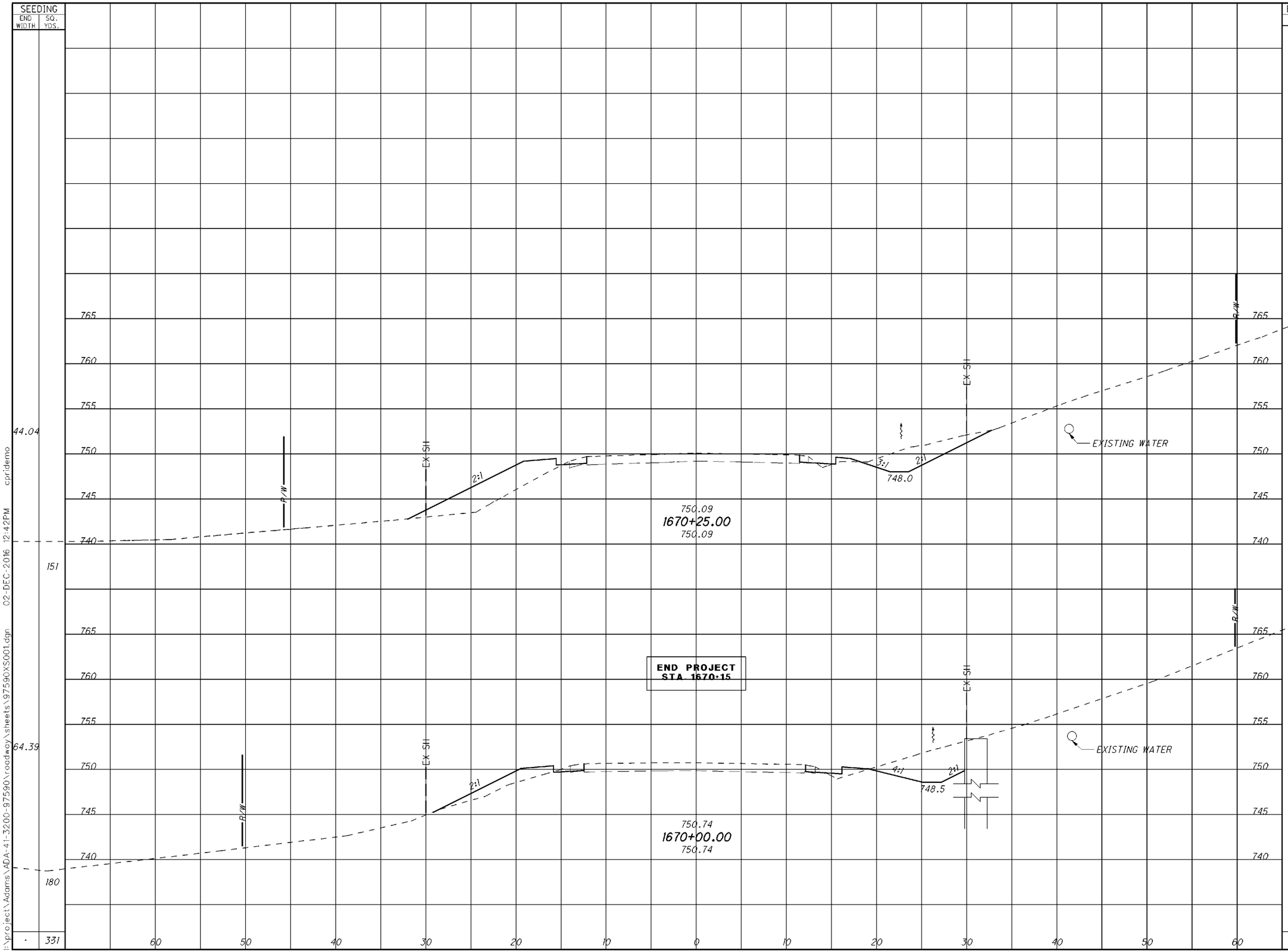

CALCULATED CWP
CHECKED

CROSS SECTIONS S.R. 41
STA. 1670+00.00 TO STA. 1670+25.00

ADA-41-31.53

31
51

I:\project\Adams\ADA-41-3200-97590\roadway\sheets\97590XS001.dgn 02-DEC-2016 12:42PM cpridemo

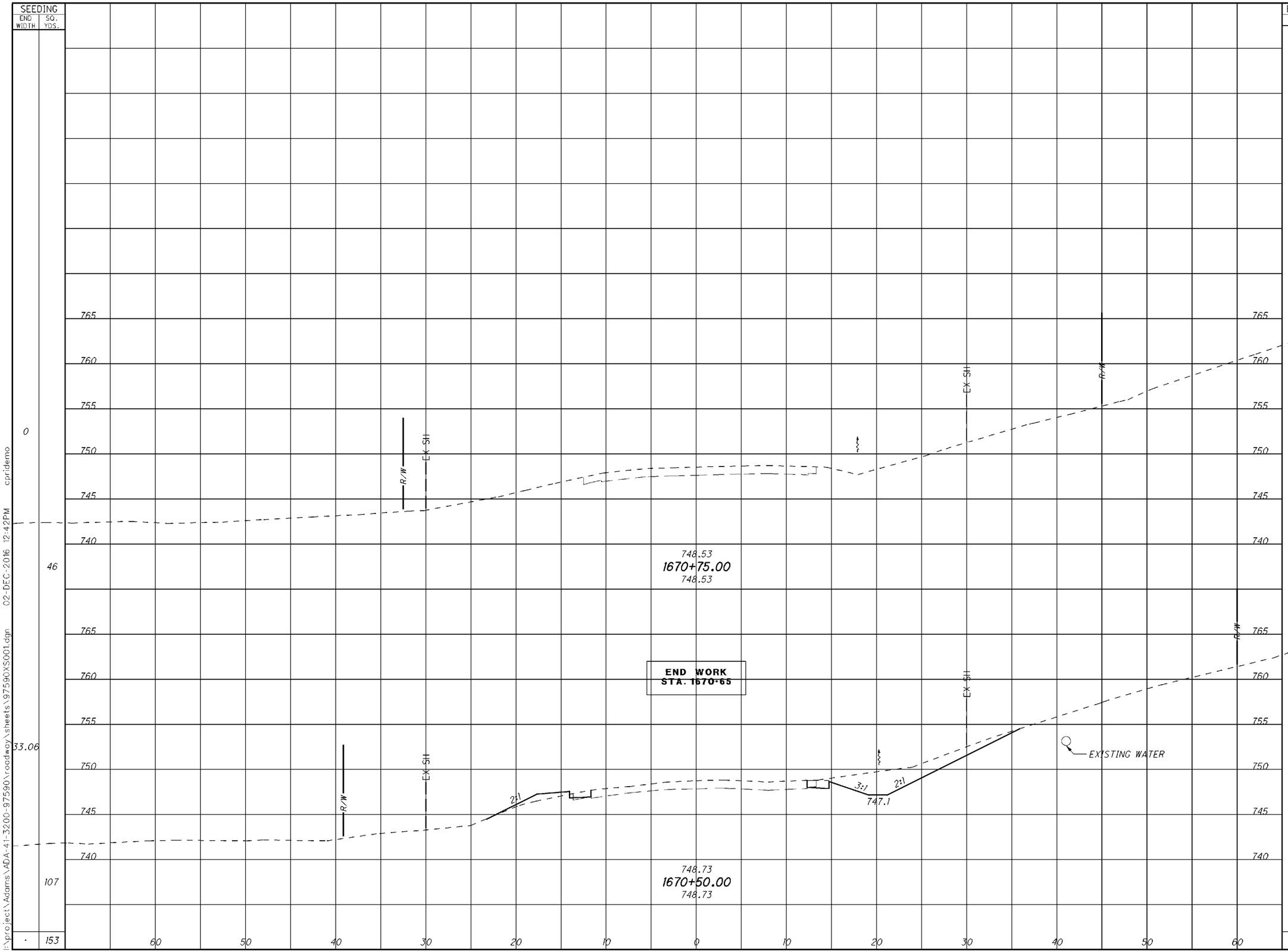

END AREA		VOLUME	
CUT	FILL	CUT	FILL
0	0		
29	4	13	2
		23	20
		36	22

CALCULATED CWP
CHECKED

CROSS SECTIONS S.R. 41
STA. 1670+50.00 TO STA. 1670+75.00

ADA-41-31.53

I:\project\Adams\ADA-41-3200-97590\roadway\sheets\97590XS001.dgn 02-DEC-2016 12:42PM cpridemo

SEEDING	
END WIDTH	SQ. YDS.

SHEET	Item 659 - SEED (SY)	Item 203 - EXC (CY)	Item 203 - EMB (CY)
18	66	0	4
19	250	12	56
20	392	67	124
21	405	53	91
22	382	90	36
23	387	106	36
24	388	85	50
25	394	77	50
26	423	76	78
27	434	70	108
28	436	68	97
29	418	68	117
30	331	50	48
31	153	36	22
32	0	0	0
33	301	0	418
34	341	0	429
35	328	1	322
36	284	14	110
TOTALS	6113	873	2196

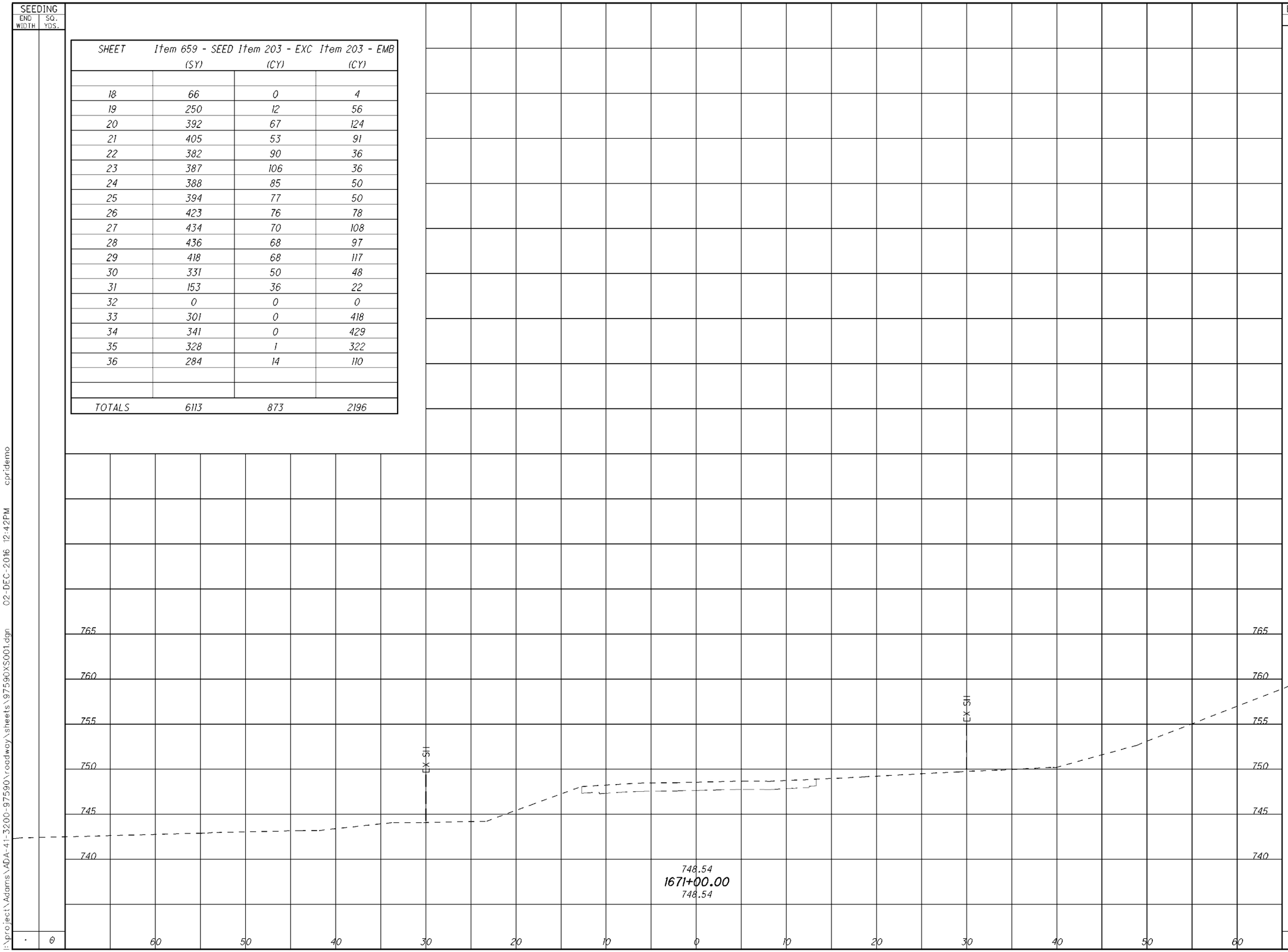

END AREA		VOLUME	
CUT	FILL	CUT	FILL
.	.	0	0

CALCULATED CWP
CHECKED

CROSS SECTIONS S.R. 41
STA. 1671+00.00

ADA-41-31.53

I:\project\Adams\ADA-41-3200-97590\roadway\sheets\97590XS001.dgn 02-DEC-2016 12:42PM cpridemo

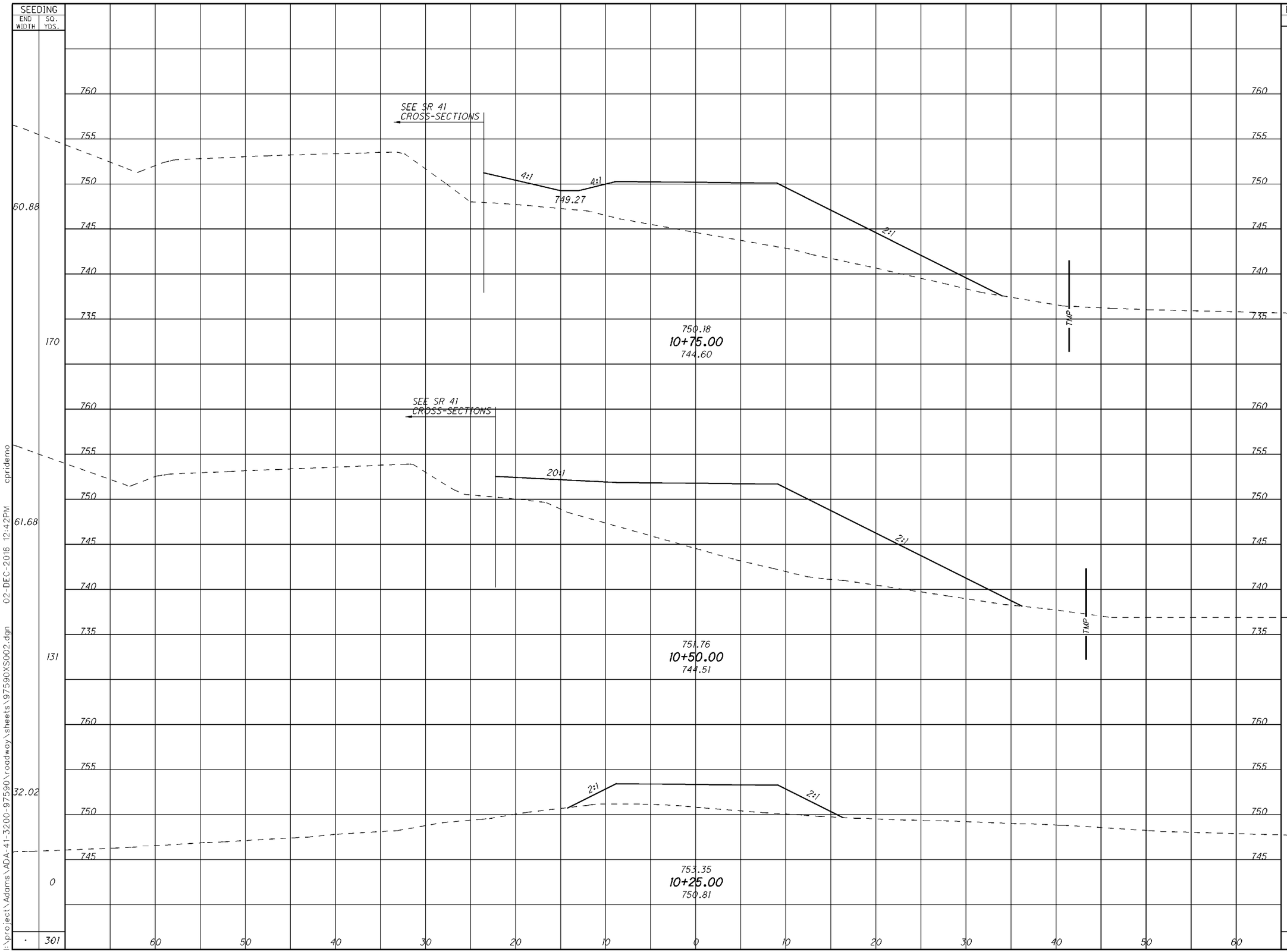

SEEDING END WIDTH	SEEDING SQ. YDS.	END AREA CUT	END AREA FILL	VOLUME CUT	VOLUME FILL
60.88	170	0	228	0	247
61.68	131	0	306	0	171
32.02	0	0	64	0	0
·	301	·	·	0	418

CALCULATED CWP
CHECKED

CROSS SECTIONS RELOCATED FIELD DRIVE
STA. 10+25.00 TO STA. 10+75.00

ADA-41-31.53

I:\project\Adams\ADA-41-3200-97590\roadway\sheets\97590XS002.dgn 02-DEC-2016 12:42PM cpridemo

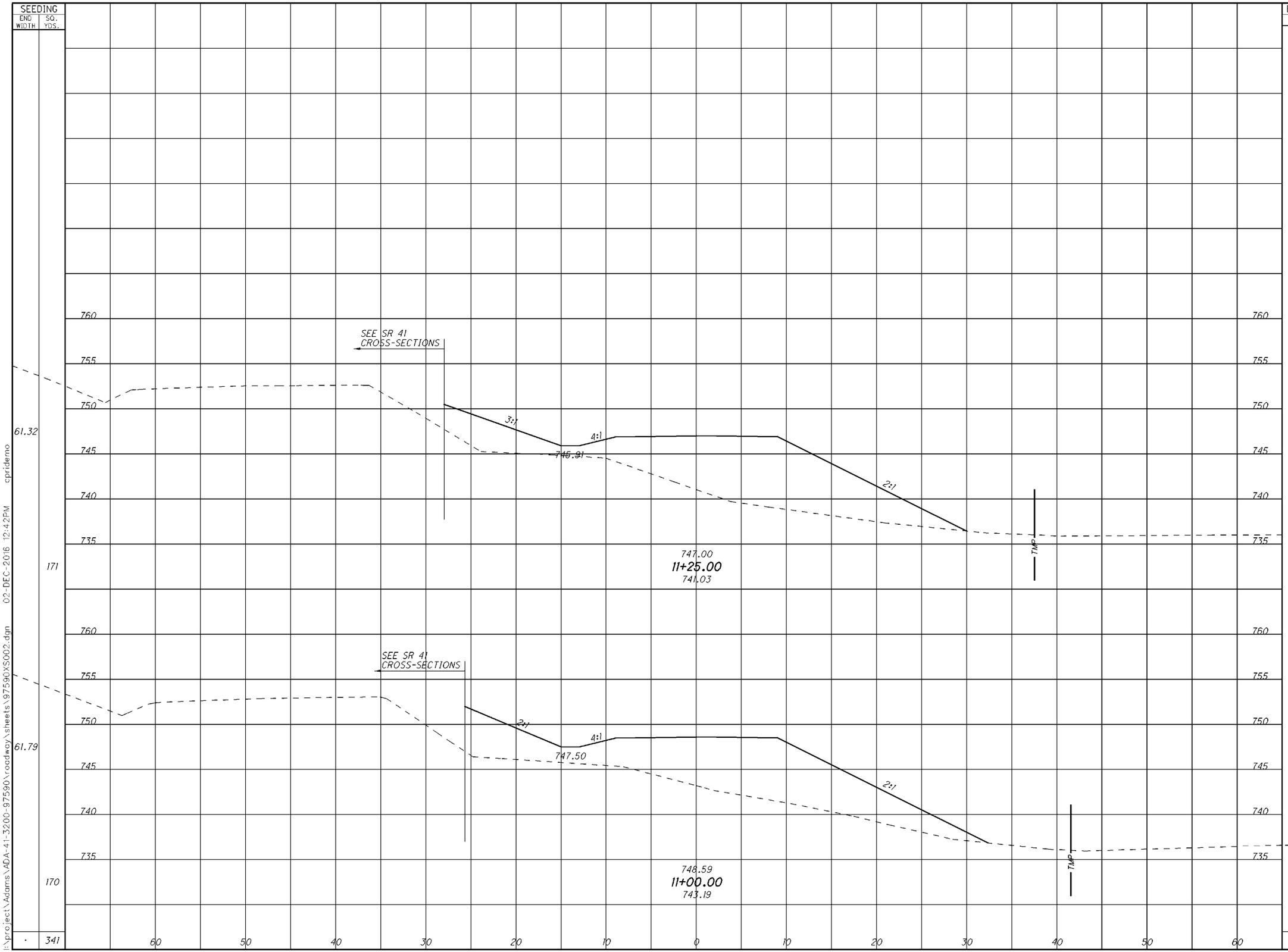

SEEDING END WIDTH	SEEDING SQ. YDS.	END AREA CUT	END AREA FILL	VOLUME CUT	VOLUME FILL
61.32	171	0	234	0	216
61.79	170	0	232	0	213
.	341	.	.	0	429

CALCULATED CWP
CHECKED

CROSS SECTIONS RELOCATED FIELD DRIVE
STA. 11+00.00 TO STA. 11+25.00

ADA-41-31.53

35
51

I:\project\Adams\ADA-41-3200-97590\roadway\sheets\97590XS002.dgn 02-DEC-2016 12:42PM cpridemo

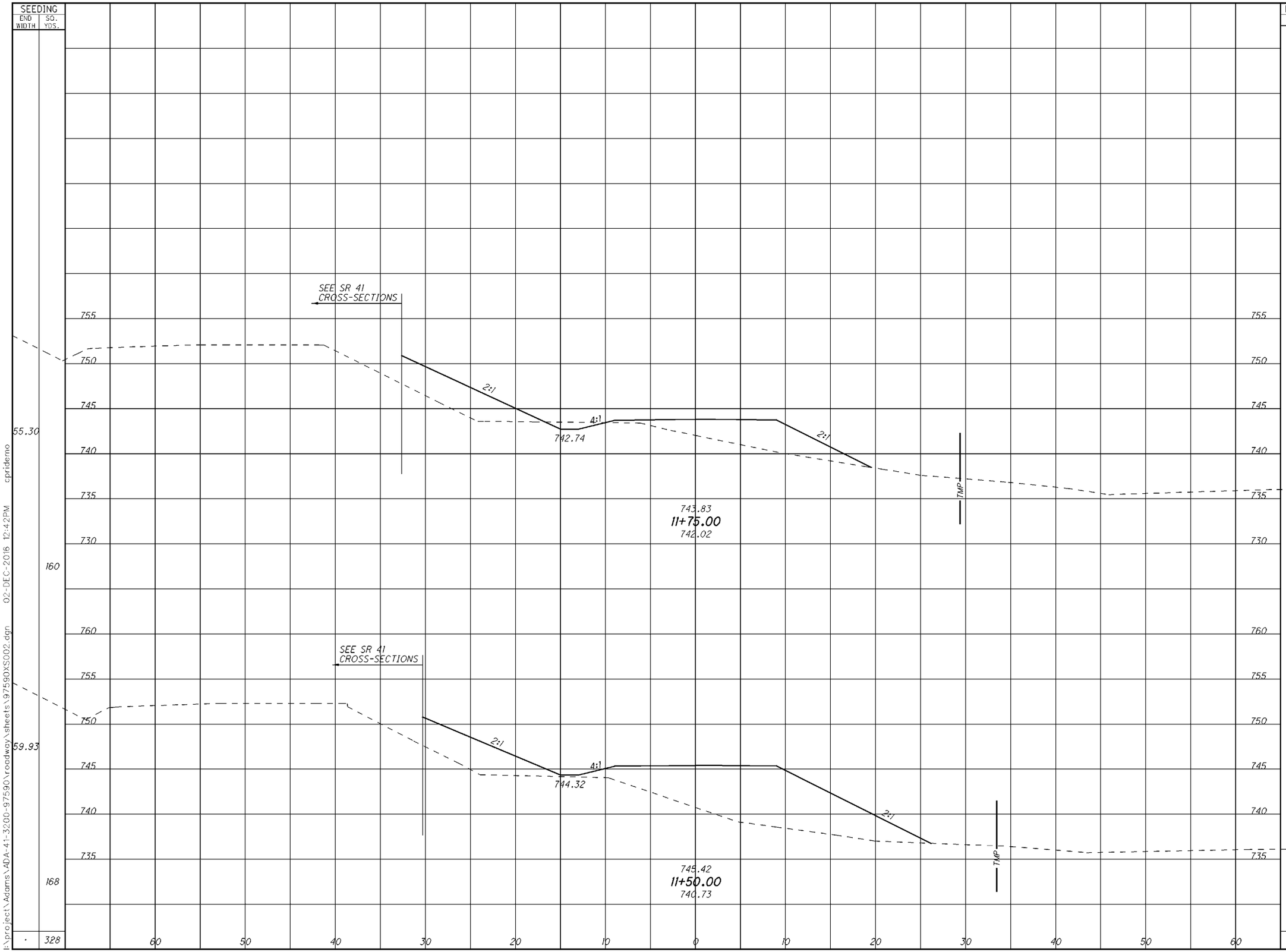

SEEDING END WIDTH	SEEDING SQ. YDS.	END AREA CUT	END AREA FILL	VOLUME CUT	VOLUME FILL
55.30	160	3	91	1	128
59.93	168	0	185	0	194
·	328	·	·	1	322

CALCULATED CWP
CHECKED

CROSS SECTIONS RELOCATED FIELD DRIVE
STA. 11+50.00 TO STA. 11+75.00

ADA-41-31.53

I:\project\Adams\ADA-41-3200-97590\roadway\sheets\97590XS002.dgn 02-DEC-2016 12:42PM cpridemo

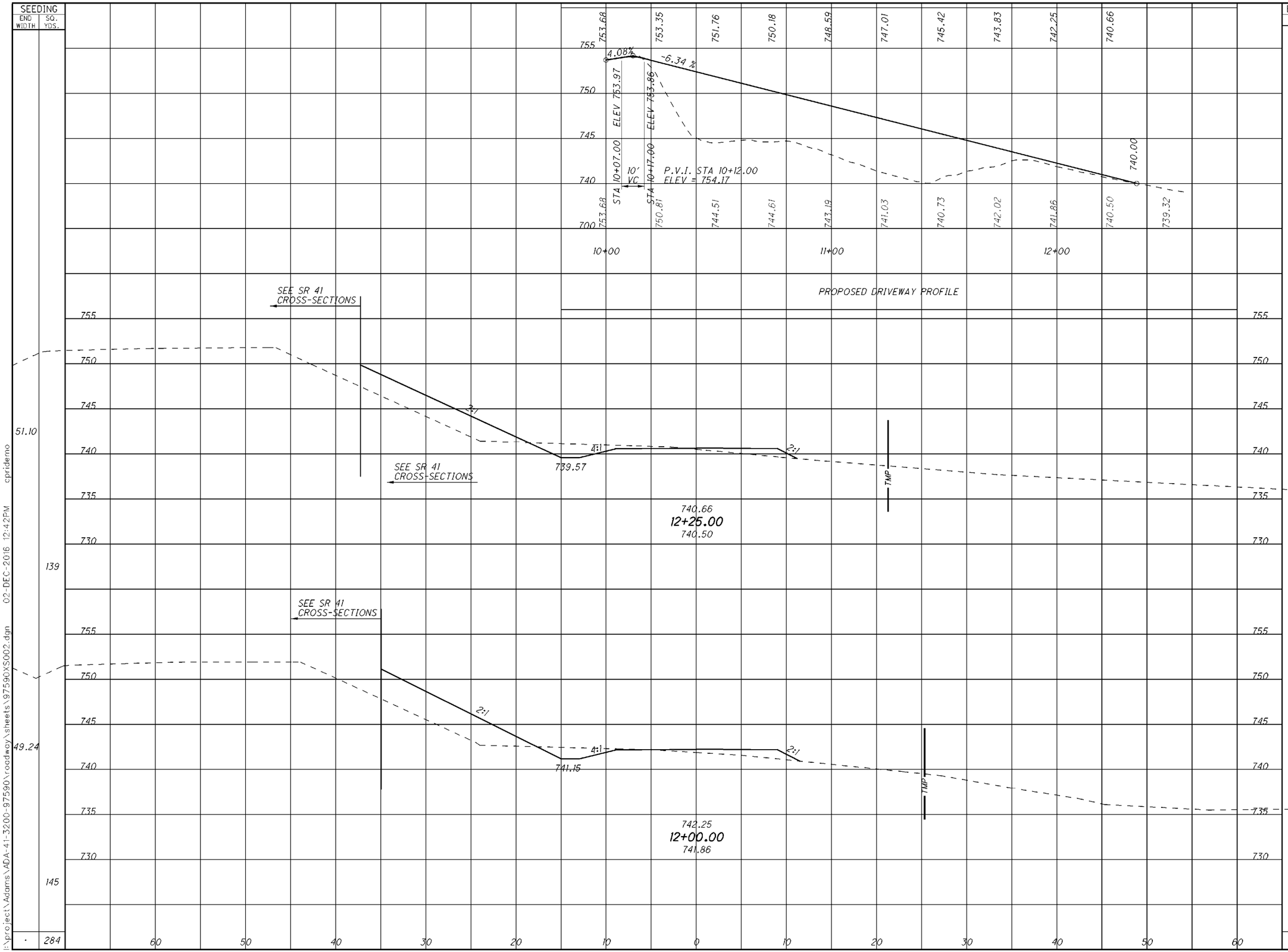
SEEDING
END WIDTH
SQ. YDS.
51.10
139
49.24
145
284
753.68
753.35
751.76
750.18
748.59
747.01
745.42
743.83
742.25
740.66
4.08%
-6.34 %
ELEV 753.97
ELEV 753.86
STA 10+07.00
STA 10+17.00
10'
VC
P.V.I. STA 10+12.00
ELEV = 754.17
740.00
753.68
750.81
744.51
744.61
743.19
741.03
740.73
742.02
741.86
740.50
739.32
10+00
11+00
12+00
PROPOSED DRIVEWAY PROFILE
SEE SR 41
CROSS-SECTIONS
2:1
4:1
739.57
740.66
12+25.00
740.50
TMP
741.15
742.25
12+00.00
741.86
END AREA
CUT
FILL
VOLUME
CUT
FILL
11
43
9
44
7
52
5
66
14
110
CALCULATED
CWP
CHECKED
CROSS SECTIONS RELOCATED FIELD DRIVE
STA. 12+00.00 TO STA. 12+25.00
ADA-41-31.53
37
51
I:\project\Adams\ADA-41-3200-97590\roadway\sheets\97590XS002.dgn 02-DEC-2016 12:42PM cpridemo

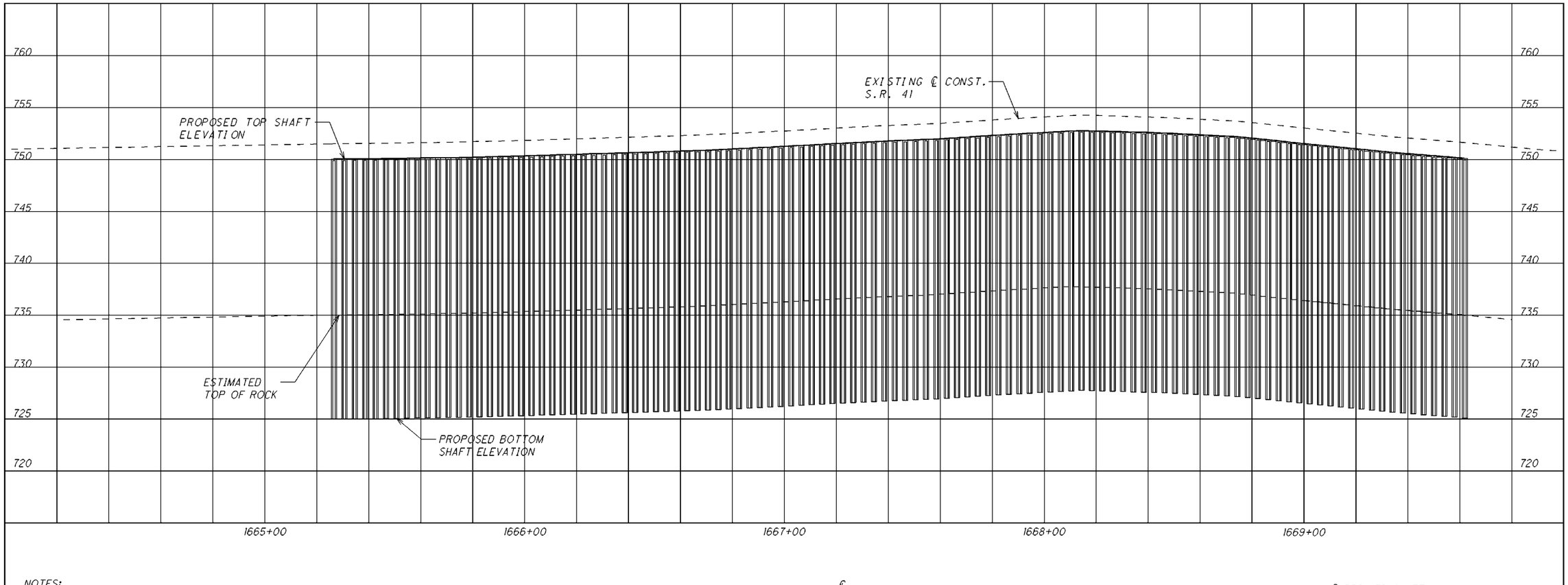

NOTES:

1. DESIGN SPECIFICATIONS:

THIS STRUCTURE CONFORMS TO "LRFD BRIDGE DESIGN SPECIFICATIONS" ADOPTED BY THE AMERICAN ASSOCIATION OF STATE HIGHWAY AND TRANSPORTATION OFFICIALS, 2010, AND THE CURRENT VERSION OF THE ODOT BRIDGE DESIGN MANUAL.

2. DESIGN DATA:

CONCRETE CLASS QC1 - COMPRESSIVE STRENGTH 4,000 PSI (DRILLED SHAFT)

STRUCTURAL STEEL, - A572 GRADE 50 - YIELD STRENGTH 50,000 PSI

3. DURING THE INSTALLATION OF THE W-BEAM REINFORCING, CARE SHOULD BE TAKEN TO ALIGN THE CENTERLINE OF THE W-BEAM PERPENDICULAR TO THE CENTERLINE OF CONSTRUCTION WITH THE ORIENTATION AS SHOWN IN SECTION A-A.

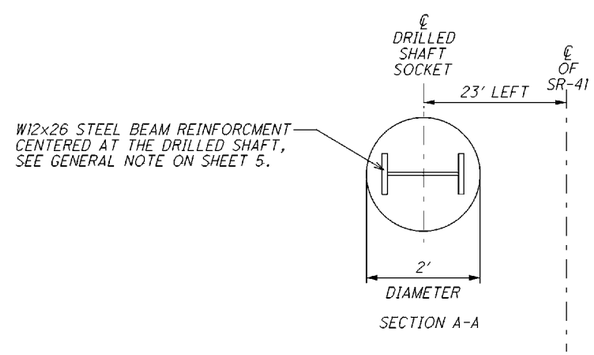

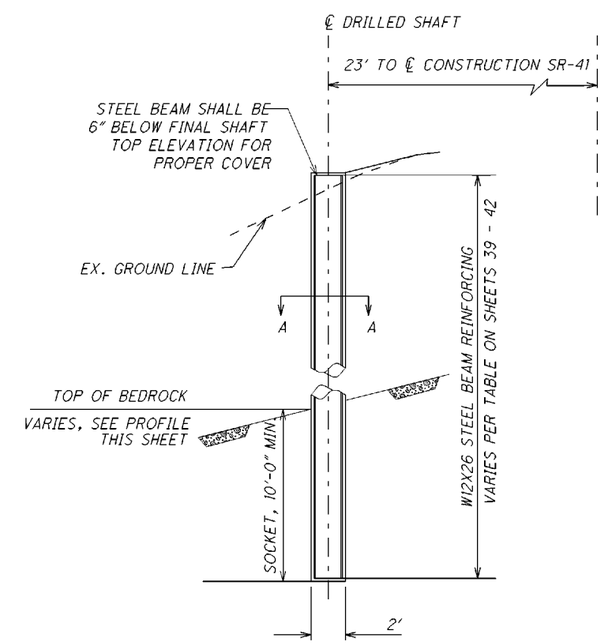

LEFT DRILLED SHAFT WALL - PROFILE & DETAILS
STA. 1665+28.00 + TO STA. 1669+63.32

CALCULATED CWP
CHECKED ---

ADA-41-31.53

I:\project\Adams\ADA-41-3200-97590\roadway\sheets\97590WF001.dgn 02-DEC-2016 12:32PM cpridemo

SHAFT NO.	STATION	OFFSET LEFT	TOP OF DRILL SHAFT ELEVATION	APPROX. BOTTOM OF DRILL SHAFT ELEVATION	TOTAL DRILL SHAFT LENGTH	524 SHAFT LENGTH INTO ROCK	524 SHAFT LENGTH ABOVE ROCK	524 PLUG PILE LENGTH	BEAM SIZE	APPROX. LENGTH OF BEAM
		FT.	FT.	FT.	FT.	FT.	FT.	FT.	TYPE	FT.
1	1665+28.00	-23.00	750.01	725.01	25.0	10	15.0		W12X26	24.5
2	1665+30.00	-23.00	750.02	735.02	15.0			15.0		0
3	1665+32.00	-23.00	750.02	725.02	25.0	10	15.0		W12X26	24.5
4	1665+34.00	-23.00	750.03	735.03	15.0			15.0		0
5	1665+36.00	-23.00	750.03	725.03	25.0	10	15.0		W12X26	24.5
6	1665+38.00	-23.00	750.04	735.04	15.0			15.0		0
7	1665+40.00	-23.00	750.04	725.04	25.0	10	15.0		W12X26	24.5
8	1665+42.00	-23.00	750.05	735.05	15.0			15.0		0
9	1665+44.00	-23.00	750.05	725.05	25.0	10	15.0		W12X26	24.5
10	1665+46.00	-23.00	750.06	735.06	15.0			15.0		0
11	1665+48.00	-23.00	750.06	725.06	25.0	10	15.0		W12X26	24.5
12	1665+50.00	-23.00	750.07	735.07	15.0			15.0		0
13	1665+52.00	-23.00	750.08	725.08	25.0	10	15.0		W12X26	24.5
14	1665+54.00	-23.00	750.08	735.08	15.0			15.0		0
15	1665+56.00	-23.00	750.09	725.09	25.0	10	15.0		W12X26	24.5
16	1665+58.00	-23.00	750.10	735.10	15.0			15.0		0
17	1665+60.00	-23.00	750.11	725.11	25.0	10	15.0		W12X26	24.5
18	1665+62.00	-23.00	750.12	735.12	15.0			15.0		0
19	1665+64.00	-23.00	750.12	725.12	25.0	10	15.0		W12X26	24.5
20	1665+66.00	-23.00	750.13	735.13	15.0			15.0		0
21	1665+68.00	-23.00	750.14	725.14	25.0	10	15.0		W12X26	24.5
22	1665+70.00	-23.00	750.15	735.15	15.0			15.0		0
23	1665+72.00	-23.00	750.16	725.16	25.0	10	15.0		W12X26	24.5
24	1665+74.00	-23.00	750.17	735.17	15.0			15.0		0
25	1665+76.00	-23.00	750.18	725.18	25.0	10	15.0		W12X26	24.5
26	1665+78.00	-23.00	750.18	735.18	15.0			15.0		0
27	1665+80.00	-23.00	750.19	725.19	25.0	10	15.0		W12X26	24.5
28	1665+82.00	-23.00	750.20	735.20	15.0			15.0		0
29	1665+84.00	-23.00	750.21	725.21	25.0	10	15.0		W12X26	24.5
30	1665+86.00	-23.00	750.23	735.23	15.0			15.0		0
31	1665+88.00	-23.00	750.24	725.24	25.0	10	15.0		W12X26	24.5
32	1665+90.00	-23.00	750.26	735.26	15.0			15.0		0
33	1665+92.00	-23.00	750.27	725.27	25.0	10	15.0		W12X26	24.5
34	1665+94.00	-23.00	750.28	735.28	15.0			15.0		0
SUB TOTAL						170.0	255.0	255.0		
TOTAL FOR BEAM TYPE										
									W12X26	416.5

SHAFT NO.	STATION	OFFSET LEFT	TOP OF DRILL SHAFT ELEVATION	APPROX. BOTTOM OF DRILL SHAFT ELEVATION	TOTAL DRILL SHAFT LENGTH	524 SHAFT LENGTH INTO ROCK	524 SHAFT LENGTH ABOVE ROCK	524 PLUG PILE LENGTH	BEAM SIZE	APPROX. LENGTH OF BEAM
		FT.	FT.	FT.	FT.	FT.	FT.	FT.	TYPE	FT.
35	1665+96.00	-23.00	750.30	725.30	25.0	10	15.0		W12X26	24.5
36	1665+98.00	-23.00	750.31	735.31	15.0			15.0		0
37	1666+00.00	-23.00	750.33	725.33	25.0	10	15.0		W12X26	24.5
38	1666+02.00	-23.00	750.34	735.34	15.0			15.0		0
39	1666+04.00	-23.00	750.36	725.36	25.0	10	15.0		W12X26	24.5
40	1666+06.00	-23.00	750.37	735.37	15.0			15.0		0
41	1666+08.00	-23.00	750.39	725.39	25.0	10	15.0		W12X26	24.5
42	1666+10.00	-23.00	750.40	735.40	15.0			15.0		0
43	1666+12.00	-23.00	750.41	725.41	25.0	10	15.0		W12X26	24.5
44	1666+14.00	-23.00	750.43	735.43	15.0			15.0		0
45	1666+16.00	-23.00	750.44	725.44	25.0	10	15.0		W12X26	24.5
46	1666+18.00	-23.00	750.46	735.46	15.0			15.0		0
47	1666+20.00	-23.00	750.47	725.47	25.0	10	15.0		W12X26	24.5
48	1666+22.00	-23.00	750.49	735.49	15.0			15.0		0
49	1666+24.00	-23.00	750.50	725.50	25.0	10	15.0		W12X26	24.5
50	1666+26.00	-23.00	750.52	735.52	15.0			15.0		0
51	1666+28.00	-23.00	750.53	725.53	25.0	10	15.0		W12X26	24.5
52	1666+30.00	-23.00	750.55	735.55	15.0			15.0		0
53	1666+32.00	-23.00	750.56	725.56	25.0	10	15.0		W12X26	24.5
54	1666+34.00	-23.00	750.58	735.58	15.0			15.0		0
55	1666+36.00	-23.00	750.59	725.59	25.0	10	15.0		W12X26	24.5
56	1666+38.00	-23.00	750.61	735.61	15.0			15.0		0
57	1666+40.00	-23.00	750.62	725.62	25.0	10	15.0		W12X26	24.5
58	1666+42.00	-23.00	750.63	735.63	15.0			15.0		0
59	1666+44.00	-23.00	750.65	725.65	25.0	10	15.0		W12X26	24.5
60	1666+46.00	-23.00	750.67	735.67	15.0			15.0		0
61	1666+48.00	-23.00	750.68	725.68	25.0	10	15.0		W12X26	24.5
62	1666+50.00	-23.00	750.70	735.70	15.0			15.0		0
63	1666+52.00	-23.00	750.72	725.72	25.0	10	15.0		W12X26	24.5
64	1666+54.00	-23.00	750.73	735.73	15.0			15.0		0
65	1666+56.00	-23.00	750.75	725.75	25.0	10	15.0		W12X26	24.5
66	1666+58.00	-23.00	750.77	735.77	15.0			15.0		0
67	1666+60.00	-23.00	750.78	725.78	25.0	10	15.0		W12X26	24.5
68	1666+62.00	-23.00	750.80	735.80	15.0			15.0		0
SUB TOTAL						170.0	255.0	255.0		
SHEET TOTAL						340.0	510.0	510.0		
TOTALS FOR EACH BEAM TYPE										
									W12X26	416.5

CALCULATED CWP
CHECKED

DRILLED SHAFT ELEVATIONS

ADA-41-31.53

I:\project\Adams\ADA-41-3200-97590\roadway\sheets\97590WS001.dgn 23-FEB-2017 9:28AM cpridemo

SHAFT NO.	STATION	OFFSET LEFT	TOP OF DRILL SHAFT ELEVATION	APPROX. BOTTOM OF DRILL SHAFT ELEVATION	TOTAL DRILL SHAFT LENGTH	524 SHAFT LENGTH INTO ROCK	524 SHAFT LENGTH ABOVE ROCK	524 PLUG PILE LENGTH	BEAM SIZE	APPROX. LENGTH OF BEAM
		FT.	FT.	FT.	FT.	FT.	FT.	FT.	TYPE	FT.
69	1666+64.00	-23.00	750.82	725.82	25.0	10	15.0		W12X26	24.5
70	1666+66.00	-23.00	750.83	735.83	15.0			15.0		0
71	1666+68.00	-23.00	750.85	725.85	25.0	10	15.0		W12X26	24.5
72	1666+70.00	-23.00	750.87	735.87	15.0			15.0		0
73	1666+72.00	-23.00	750.89	725.89	25.0	10	15.0		W12X26	24.5
74	1666+74.00	-23.00	750.91	735.91	15.0			15.0		0
75	1666+76.00	-23.00	750.93	725.93	25.0	10	15.0		W12X26	24.5
76	1666+78.00	-23.00	750.95	735.95	15.0			15.0		0
77	1666+80.00	-23.00	750.98	725.98	25.0	10	15.0		W12X26	24.5
78	1666+82.00	-23.00	751.01	736.01	15.0			15.0		0
79	1666+84.00	-23.00	751.03	726.03	25.0	10	15.0		W12X26	24.5
80	1666+86.00	-23.00	751.06	736.06	15.0			15.0		0
81	1666+88.00	-23.00	751.08	726.08	25.0	10	15.0		W12X26	24.5
82	1666+90.00	-23.00	751.11	736.11	15.0			15.0		0
83	1666+92.00	-23.00	751.14	726.14	25.0	10	15.0		W12X26	24.5
84	1666+94.00	-23.00	751.16	736.16	15.0			15.0		0
85	1666+96.00	-23.00	751.19	726.19	25.0	10	15.0		W12X26	24.5
86	1666+98.00	-23.00	751.21	736.21	15.0			15.0		0
87	1667+00.00	-23.00	751.24	726.24	25.0	10	15.0		W12X26	24.5
88	1667+02.00	-23.00	751.27	736.27	15.0			15.0		0
89	1667+04.00	-23.00	751.29	726.29	25.0	10	15.0		W12X26	24.5
90	1667+05.99	-23.00	751.32	736.32	15.0			15.0		0
91	1667+07.97	-23.00	751.35	726.35	25.0	10	15.0		W12X26	24.5
92	1667+09.95	-23.00	751.37	736.37	15.0			15.0		0
93	1667+11.93	-23.00	751.40	726.40	25.0	10	15.0		W12X26	24.5
94	1667+13.91	-23.00	751.43	736.43	15.0			15.0		0
95	1667+15.89	-23.00	751.45	726.45	25.0	10	15.0		W12X26	24.5
96	1667+17.87	-23.00	751.48	736.48	15.0			15.0		0
97	1667+19.85	-23.00	751.51	726.51	25.0	10	15.0		W12X26	24.5
98	1667+21.83	-23.00	751.54	736.54	15.0			15.0		0
99	1667+23.81	-23.00	751.56	726.56	25.0	10	15.0		W12X26	24.5
100	1667+25.79	-23.00	751.59	736.59	15.0			15.0		0
101	1667+27.77	-23.00	751.62	726.62	25.0	10	15.0		W12X26	24.5
102	1667+29.75	-23.00	751.64	736.64	15.0			15.0		0
SUB TOTAL						170.0	255.0	255.0		
TOTALS FOR EACH BEAM TYPE									W12X26	416.5

SHAFT NO.	STATION	OFFSET LEFT	TOP OF DRILL SHAFT ELEVATION	APPROX. BOTTOM OF DRILL SHAFT ELEVATION	TOTAL DRILL SHAFT LENGTH	524 SHAFT LENGTH INTO ROCK	524 SHAFT LENGTH ABOVE ROCK	524 PLUG PILE LENGTH	BEAM SIZE	APPROX. LENGTH OF BEAM
		FT.	FT.	FT.	FT.	FT.	FT.	FT.	TYPE	FT.
103	1667+31.73	-23.00	751.67	726.67	25.0	10	15.0		W12X26	24.5
104	1667+33.71	-23.00	751.69	736.69	15.0			15.0		0
105	1667+35.69	-23.00	751.71	726.71	25.0	10	15.0		W12X26	24.5
106	1667+37.67	-23.00	751.74	736.74	15.0			15.0		0
107	1667+39.65	-23.00	751.76	726.76	25.0	10	15.0		W12X26	24.5
108	1667+41.63	-23.00	751.78	736.78	15.0			15.0		0
109	1667+43.61	-23.00	751.80	726.80	25.0	10	15.0		W12X26	24.5
110	1667+45.59	-23.00	751.82	736.82	15.0			15.0		0
111	1667+47.57	-23.00	751.84	726.84	25.0	10	15.0		W12X26	24.5
112	1667+49.55	-23.00	751.86	736.86	15.0			15.0		0
113	1667+51.53	-23.00	751.88	726.88	25.0	10	15.0		W12X26	24.5
114	1667+53.51	-23.00	751.90	736.90	15.0			15.0		0
115	1667+55.49	-23.00	751.92	726.92	25.0	10	15.0		W12X26	24.5
116	1667+57.47	-23.00	751.94	736.94	15.0			15.0		0
117	1667+59.45	-23.00	751.97	726.97	25.0	10	15.0		W12X26	24.5
118	1667+61.42	-23.00	752.00	737.00	15.0			15.0		0
119	1667+63.40	-23.00	752.03	727.03	25.0	10	15.0		W12X26	24.5
120	1667+65.38	-23.00	752.06	737.06	15.0			15.0		0
121	1667+67.36	-23.00	752.10	727.10	25.0	10	15.0		W12X26	24.5
122	1667+69.34	-23.00	752.13	737.13	15.0			15.0		0
123	1667+71.32	-23.00	752.16	727.16	25.0	10	15.0		W12X26	24.5
124	1667+73.30	-23.00	752.19	737.19	15.0			15.0		0
125	1667+75.28	-23.00	752.23	727.23	25.0	10	15.0		W12X26	24.5
126	1667+77.26	-23.00	752.26	737.26	15.0			15.0		0
127	1667+79.24	-23.00	752.29	727.29	25.0	10	15.0		W12X26	24.5
128	1667+81.22	-23.00	752.32	737.32	15.0			15.0		0
129	1667+83.20	-23.00	752.35	727.35	25.0	10	15.0		W12X26	24.5
130	1667+85.18	-23.00	752.38	737.38	15.0			15.0		0
131	1667+87.16	-23.00	752.41	727.41	25.0	10	15.0		W12X26	24.5
132	1667+89.14	-23.00	752.44	737.44	15.0			15.0		0
133	1667+91.12	-23.00	752.47	727.47	25.0	10	15.0		W12X26	24.5
134	1667+93.10	-23.00	752.49	737.49	15.0			15.0		0
135	1667+95.08	-23.00	752.52	727.52	25.0	10	15.0		W12X26	24.5
136	1667+97.06	-23.00	752.55	737.55	15.0			15.0		0
SUB TOTAL						170.0	255.0	255.0		
SHEET TOTAL						340.0	510.0	510.0		
TOTALS FOR EACH BEAM TYPE									W12X26	416.5

CALCULATED CWP
CHECKED

DRILLED SHAFT ELEVATIONS

ADA-41-31.53

I:\project\Adams\ADA-41-3200-97590\roadway\sheets\97590WS002.dgn 02-DEC-2016 12:32PM cpridemo

SHAFT NO.	STATION	OFFSET LEFT	TOP OF DRILL SHAFT ELEVATION	APPROX. BOTTOM OF DRILL SHAFT ELEVATION	TOTAL DRILL SHAFT LENGTH	524 SHAFT LENGTH INTO ROCK	524 SHAFT LENGTH ABOVE ROCK	524 PLUG PILE LENGTH	BEAM SIZE	APPROX. LENGTH OF BEAM
		FT.	FT.	FT.	FT.	FT.	FT.	FT.	TYPE	FT.
137	1667+99.01	-23.00	752.58	727.58	25.0	10	15.0		W12X26	24.5
138	1668+00.95	-23.00	752.61	737.61	15.0			15.0		0
139	1668+02.90	-23.00	752.63	727.63	25.0	10	15.0		W12X26	24.5
140	1668+04.84	-23.00	752.66	737.66	15.0			15.0		0
141	1668+06.78	-23.00	752.69	727.69	25.0	10	15.0		W12X26	24.5
142	1668+08.73	-23.00	752.72	737.72	15.0			15.0		0
143	1668+10.67	-23.00	752.73	727.73	25.0	10	15.0		W12X26	24.5
144	1668+12.62	-23.00	752.75	737.75	15.0			15.0		0
145	1668+14.56	-23.00	752.75	727.75	25.0	10	15.0		W12X26	24.5
146	1668+16.50	-23.00	752.74	737.74	15.0			15.0		0
147	1668+18.45	-23.00	752.72	727.72	25.0	10	15.0		W12X26	24.5
148	1668+20.39	-23.00	752.71	737.71	15.0			15.0		0
149	1668+22.34	-23.00	752.70	727.70	25.0	10	15.0		W12X26	24.5
150	1668+24.28	-23.00	752.68	737.68	15.0			15.0		0
151	1668+26.23	-23.00	752.67	727.67	25.0	10	15.0		W12X26	24.5
152	1668+28.17	-23.00	752.65	737.65	15.0			15.0		0
153	1668+30.11	-23.00	752.64	727.64	25.0	10	15.0		W12X26	24.5
154	1668+32.06	-23.00	752.63	737.63	15.0			15.0		0
155	1668+34.00	-23.00	752.61	727.61	25.0	10	15.0		W12X26	24.5
156	1668+35.95	-23.00	752.60	737.60	15.0			15.0		0
157	1668+37.89	-23.00	752.58	727.58	25.0	10	15.0		W12X26	24.5
158	1668+39.83	-23.00	752.57	737.57	15.0			15.0		0
159	1668+41.78	-23.00	752.55	727.55	25.0	10	15.0		W12X26	24.5
160	1668+43.72	-23.00	752.53	737.53	15.0			15.0		0
161	1668+45.67	-23.00	752.51	727.51	25.0	10	15.0		W12X26	24.5
162	1668+47.61	-23.00	752.48	737.48	15.0			15.0		0
163	1668+49.55	-23.00	752.46	727.46	25.0	10	15.0		W12X26	24.5
164	1668+51.50	-23.00	752.43	737.43	15.0			15.0		0
165	1668+53.44	-23.00	752.41	727.41	25.0	10	15.0		W12X26	24.5
166	1668+55.39	-23.00	752.38	737.38	15.0			15.0		0
167	1668+57.33	-23.00	752.36	727.36	25.0	10	15.0		W12X26	24.5
168	1668+59.28	-23.00	752.33	737.33	15.0			15.0		0
169	1668+61.22	-23.00	752.31	727.31	25.0	10	15.0		W12X26	24.5
170	1668+63.16	-23.00	752.28	737.28	15.0			15.0		0
SUB TOTAL						170.0	255.0	255.0		
TOTALS FOR EACH BEAM TYPE										
									W12X26	416.5

SHAFT NO.	STATION	OFFSET LEFT	TOP OF DRILL SHAFT ELEVATION	APPROX. BOTTOM OF DRILL SHAFT ELEVATION	TOTAL DRILL SHAFT LENGTH	524 SHAFT LENGTH INTO ROCK	524 SHAFT LENGTH ABOVE ROCK	524 PLUG PILE LENGTH	BEAM SIZE	APPROX. LENGTH OF BEAM
		FT.	FT.	FT.	FT.	FT.	FT.	FT.	TYPE	FT.
171	1668+65.11	-23.00	752.26	727.26	25.0	10	15.0		W12X26	24.5
172	1668+67.05	-23.00	752.23	737.23	15.0			15.0		0
173	1668+69.00	-23.00	752.21	727.21	25.0	10	15.0		W12X26	24.5
174	1668+70.94	-23.00	752.18	737.18	15.0			15.0		0
175	1668+72.88	-23.00	752.14	727.14	25.0	10	15.0		W12X26	24.5
176	1668+74.83	-23.00	752.09	737.09	15.0			15.0		0
177	1668+76.77	-23.00	752.04	727.04	25.0	10	15.0		W12X26	24.5
178	1668+78.72	-23.00	751.99	736.99	15.0			15.0		0
179	1668+80.66	-23.00	751.94	726.94	25.0	10	15.0		W12X26	24.5
180	1668+82.60	-23.00	751.89	736.89	15.0			15.0		0
181	1668+84.55	-23.00	751.83	726.83	25.0	10	15.0		W12X26	24.5
182	1668+86.49	-23.00	751.78	736.78	15.0			15.0		0
183	1668+88.44	-23.00	751.73	726.73	25.0	10	15.0		W12X26	24.5
184	1668+90.38	-23.00	751.68	736.68	15.0			15.0		0
185	1668+92.33	-23.00	751.63	726.63	25.0	10	15.0		W12X26	24.5
186	1668+94.27	-23.00	751.57	736.57	15.0			15.0		0
187	1668+96.21	-23.00	751.52	726.52	25.0	10	15.0		W12X26	24.5
188	1668+98.16	-23.00	751.47	736.47	15.0			15.0		0
189	1669+00.10	-23.00	751.42	726.42	25.0	10	15.0		W12X26	24.5
190	1669+02.05	-23.00	751.37	736.37	15.0			15.0		0
191	1669+03.99	-23.00	751.32	726.32	25.0	10	15.0		W12X26	24.5
192	1669+05.93	-23.00	751.27	736.27	15.0			15.0		0
193	1669+07.88	-23.00	751.22	726.22	25.0	10	15.0		W12X26	24.5
194	1669+09.82	-23.00	751.17	736.17	15.0			15.0		0
195	1669+11.77	-23.00	751.12	726.12	25.0	10	15.0		W12X26	24.5
196	1669+13.71	-23.00	751.07	736.07	15.0			15.0		0
197	1669+15.65	-23.00	751.02	726.02	25.0	10	15.0		W12X26	24.5
198	1669+17.60	-23.00	750.96	735.96	15.0			15.0		0
199	1669+19.54	-23.00	750.91	725.91	25.0	10	15.0		W12X26	24.5
200	1669+21.49	-23.00	750.86	735.86	15.0			15.0		0
201	1669+23.43	-23.00	750.81	725.81	25.0	10	15.0		W12X26	24.5
202	1669+25.37	-23.00	750.76	735.76	15.0			15.0		0
203	1669+27.32	-23.00	750.71	725.71	25.0	10	15.0		W12X26	24.5
204	1669+29.26	-23.00	750.66	735.66	15.0			15.0		0
SUB TOTAL						170.0	255.0	255.0		
SHEET TOTAL						340.0	510.0	510.0		
TOTALS FOR EACH BEAM TYPE										
									W12X26	416.5

CALCULATED CWP
CHECKED

DRILLED SHAFT ELEVATIONS

ADA-41-31.53

I:\project\Adams\ADA-41-3200-97590\roadway\sheets\97590WS003.dgn 25-JAN-2017 10:59AM cpridemo

SHAFT NO.	STATION	OFFSET LEFT	TOP OF DRILL SHAFT ELEVATION	APPROX. BOTTOM OF DRILL SHAFT ELEVATION	TOTAL DRILL SHAFT LENGTH	524 SHAFT LENGTH INTO ROCK	524 SHAFT LENGTH ABOVE ROCK	524 PLUG PILE LENGTH	BEAM SIZE	APPROX. LENGTH OF BEAM
		FT.	FT.	FT.	FT.	FT.	FT.	FT.	TYPE	FT.
205	1669+31.21	-23.00	750.62	725.62	25.0	10	15.0		W12X26	24.5
206	1669+33.20	-23.00	750.58	735.58	15.0			15.0		0
207	1669+35.20	-23.00	750.54	725.54	25.0	10	15.0		W12X26	24.5
208	1669+37.21	-23.00	750.50	735.50	15.0			15.0		0
209	1669+39.22	-23.00	750.46	725.46	25.0	10	15.0		W12X26	24.5
210	1669+41.23	-23.00	750.42	735.42	15.0			15.0		0
211	1669+43.24	-23.00	750.38	725.38	25.0	10	15.0		W12X26	24.5
212	1669+45.24	-23.00	750.34	735.34	15.0			15.0		0
213	1669+47.25	-23.00	750.30	725.30	25.0	10	15.0		W12X26	24.5
214	1669+49.26	-23.00	750.26	735.26	15.0			15.0		0
215	1669+51.27	-23.00	750.22	725.22	25.0	10	15.0		W12X26	24.5
216	1669+53.28	-23.00	750.18	735.18	15.0			15.0		0
217	1669+55.28	-23.00	750.14	725.14	25.0	10	15.0		W12X26	24.5
218	1669+57.29	-23.00	750.10	735.10	15.0			15.0		0
219	1669+59.30	-23.00	750.05	725.05	25.0	10	15.0		W12X26	24.5
220	1669+61.31	-23.00	750.01	735.01	15.0			15.0		0
221	1669+63.32	-23.00	749.96	724.96	25.0	10	15.0		W12X26	24.5
SUB TOTAL						90.0	135.0	120.0		
SHEET TOTAL						90.0	135.0	120.0	W12X26	220.5
TOTALS OF ALL SHEETS						1110.0	1665.0	1650.0		2719.5
TOTALS CARRIED TO GENERAL SUMMARY						1110	1665	1650		2720
TOTALS FOR EACH BEAM TYPE									W12X26	2720

CALCULATED CWP
CHECKED

DRILLED SHAFT ELEVATIONS

ADA-41-31.53

I:\project\Adams\ADA-41-3200-97590\roadway\sheets\97590WS004.dgn 25-JAN-2017 11:01AM cpridemo

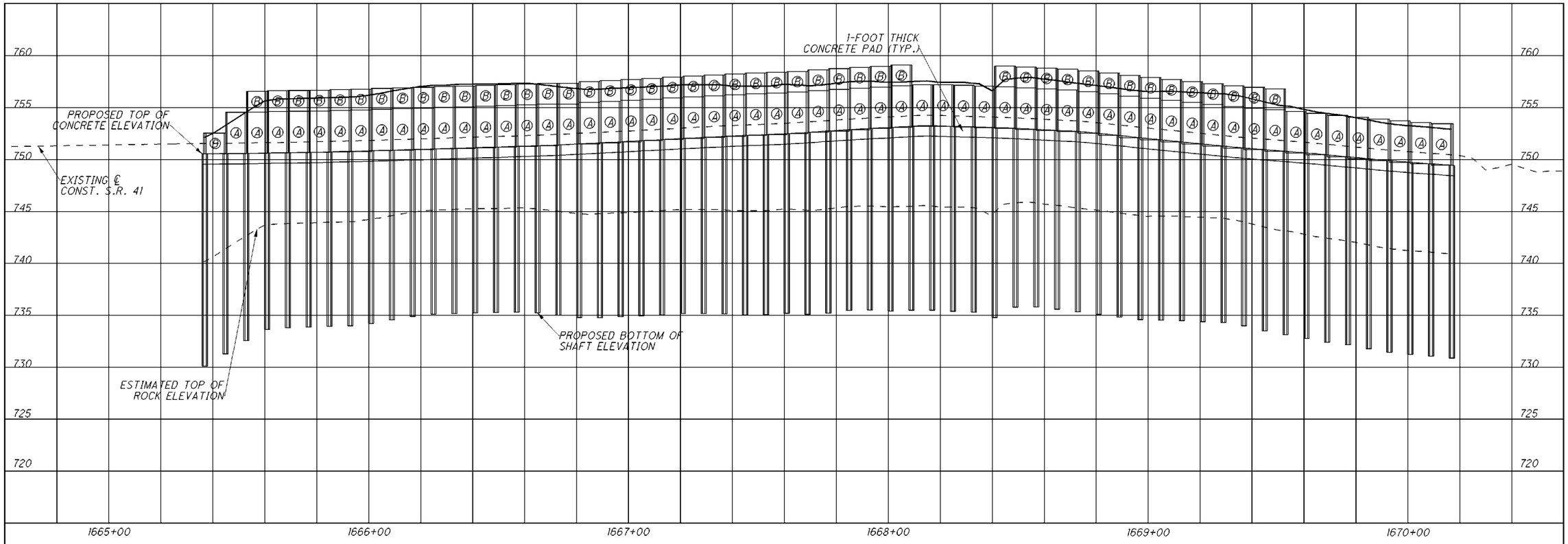

NOTES:

1. DESIGN SPECIFICATIONS:

THIS STRUCTURE CONFORMS TO "LRFD BRIDGE DESIGN SPECIFICATIONS" ADOPTED BY THE AMERICAN ASSOCIATION OF STATE HIGHWAY AND TRANSPORTATION OFFICIALS, 2010, AND THE CURRENT VERSION OF THE ODOT BRIDGE DESIGN MANUAL.

2. DESIGN DATA:

CONCRETE CLASS QC1 - COMPRESSIVE STRENGTH 4,000 PSI (DRILLED SHAFT)

STRUCTURAL STEEL, - A572 GRADE 50 - YIELD STRENGTH 50,000 PSI

3. DURING THE INSTALLATION OF THE W-BEAM REINFORCING, CARE SHOULD BE TAKEN TO ALIGN THE CENTERLINE OF THE W-BEAM PERPENDICULAR TO THE CENTERLINE OF CONSTRUCTION WITH THE ORIENTATION AS SHOWN IN SECTION A-A.

LEGEND

Ⓐ Ⓑ
CONCRETE LAGGING PANELS (SEE SHEET 44 FOR DETAILS)

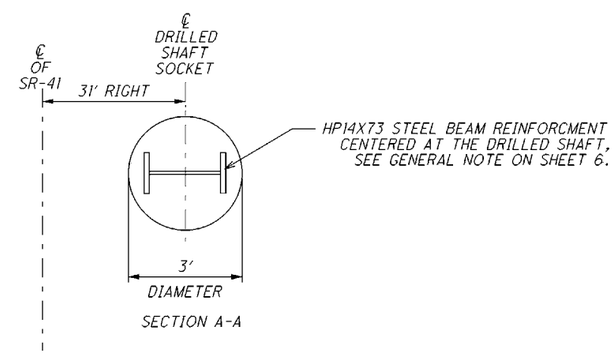

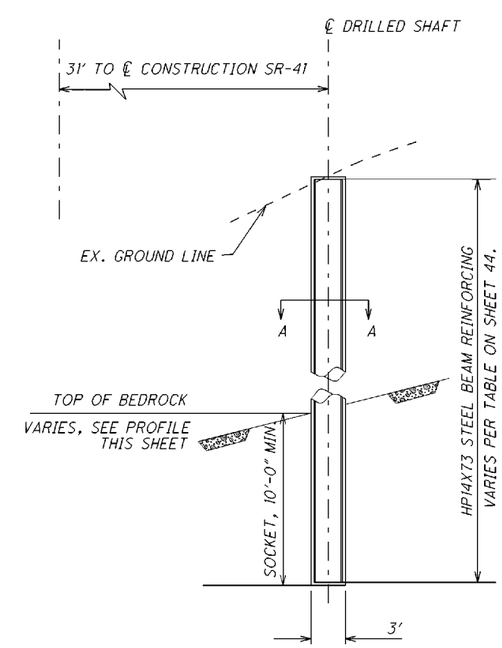

CALCULATED CWP
CHECKED ---

RIGHT DRILLED SHAFT WALL - PROFILE STA. 1665+36.93 + TO STA. 1670+15.00

ADA-41-31.53

I:\project\Adams\ADA-41-3200-97590\roadway\sheets\97590WF002.dgn 02-DEC-2016 12:32PM cpridemo

THE FOLLOWING ESTIMATED QUANTITIES HAVE BEEN CARRIED TO THE GENERAL SUMMARY.

ITEM 511 - CONCRETE, MISC.: PRECAST LAGGING PANEL - - 2,538 SQ FT
(46 @ 15.67 SF) + (58 @ 31.33 SF) = 2537.96 SQ. FT.

ITEM 511 - CONCRETE, MISC.: LEVELING PAD - - 63 CU YD
((481' X 1' X 3.5') / 27)

ITEM 512 - SEALING OF CONCRETE SURFACES - - 296 SQ YD
(2,538 SF / 9 = 282 SQ YD + 5 % SIDES)

ITEM 518 - POROUS BACKFIL WITH GEOTEXTILE FABRIC - - 312 CU YD
(481' X 5' X 3.5') / 9 = 312 CU YD)

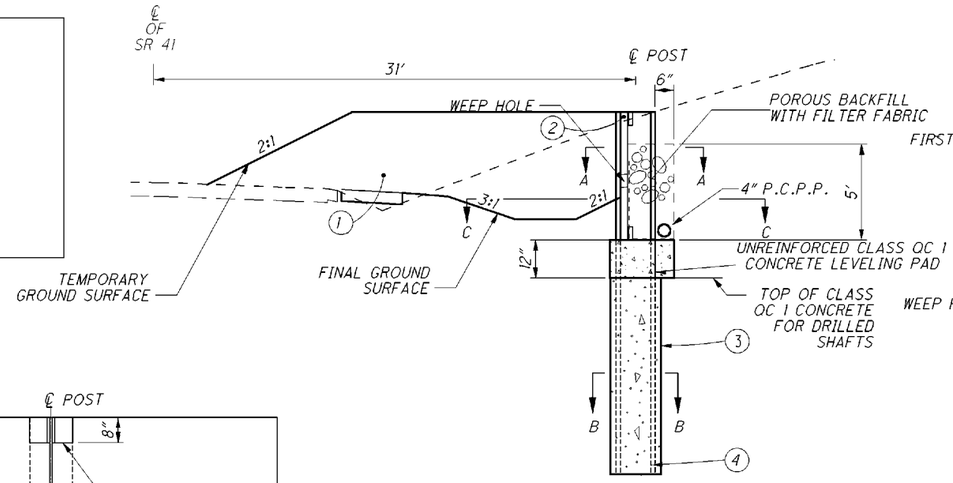

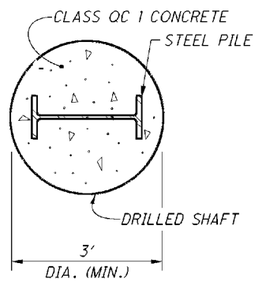

SEC. B-B

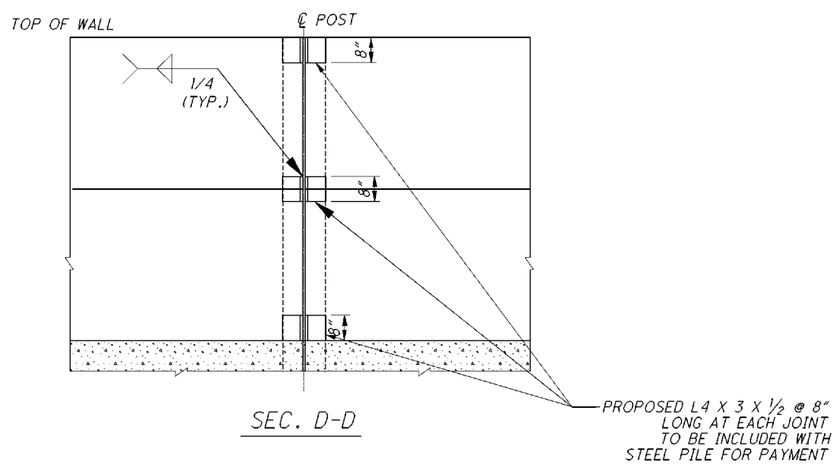

SEC. D-D

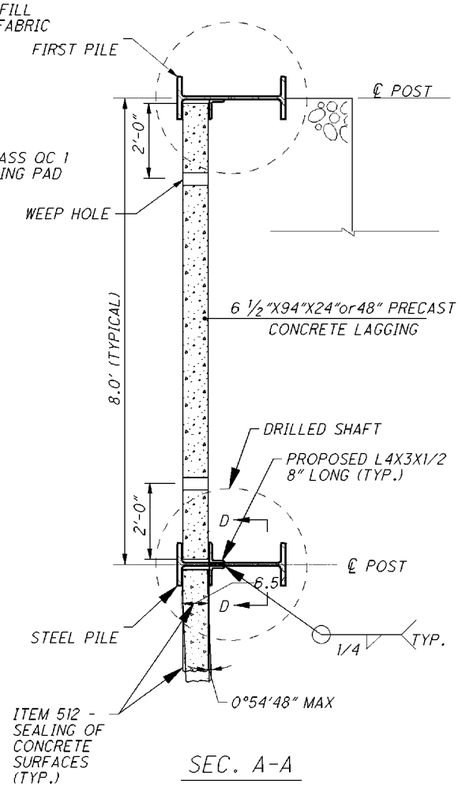

SEC. A-A

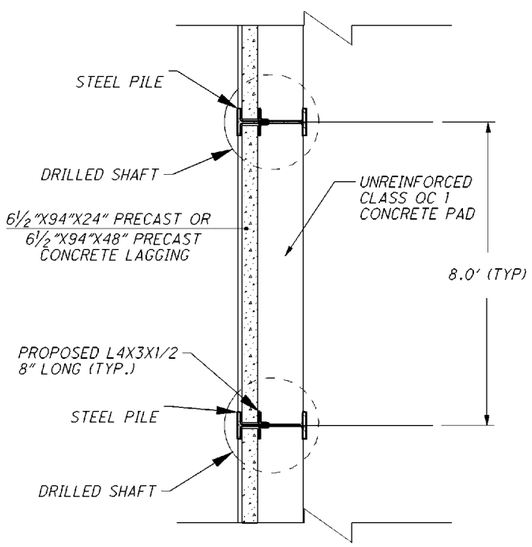

SEC. C-C

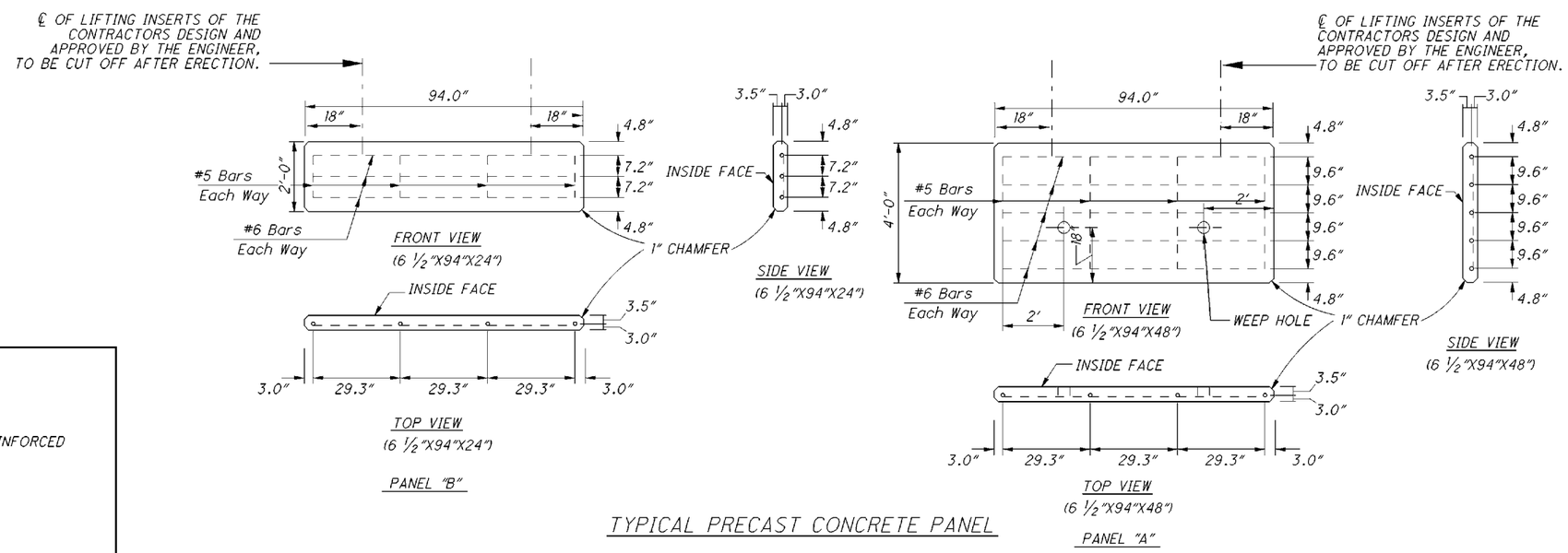

TYPICAL PRECAST CONCRETE PANEL

LEGEND

1 — ITEM 203 - EMBANKMENT (TEMPORARY)

2 — ITEM 610 - RETAINING WALL, MISC: PRECAST REINFORCED CONCRETE LAGGING PANEL

3 — ITEM 524 - DRILLED SHAFT, AS PER PLAN

4 — ITEM 507 - STEEL PILES

NO SCALE

CALCULATED CWP
CHECKED

LAGGING WALL DETAILS

ADA-41-31.53

I:\project\Adams\ADA-41-3200-97590\roadway\sheets\97590WD001.dgn 02-DEC-2016 12:32PM cpridemo

SHAFT NO.	STATION	OFFSET RIGHT	TOP OF PILE ELEVATION	TOP OF CONCRETE PAD ELEVATION	APPROX. BOTTOM OF DRILL SHAFT ELEVATION	524 SHAFT LENGTH INTO ROCK	524 SHAFT LENGTH ABOVE ROCK	BEAM SIZE	APPROX. LENGTH OF BEAM
		FT.	FT.	FT.	FT.	FT.	FT.	TYPE	FT.
1	1665+36.93	31.00	752.53	750.53	730.53	10	12	HP14x73	22.0
2	1665+44.93	31.00	754.56	750.56	732.56	10	12	HP14x73	22.0
3	1665+52.93	31.00	756.58	750.58	734.58	10	12	HP14x73	22.0
4	1665+60.93	31.00	756.61	750.61	734.61	10	12	HP14x73	22.0
5	1665+68.93	31.00	756.65	750.65	734.65	10	12	HP14x73	22.0
6	1665+76.93	31.00	756.68	750.68	734.68	10	12	HP14x73	22.0
7	1665+84.93	31.00	756.72	750.72	734.72	10	12	HP14x73	22.0
8	1665+92.93	31.00	756.78	750.78	734.78	10	12	HP14x73	22.0
9	1666+00.93	31.00	756.83	750.83	734.83	10	12	HP14x73	22.0
10	1666+08.93	31.00	756.89	750.89	734.89	10	12	HP14x73	22.0
11	1666+16.93	31.00	756.95	750.95	734.95	10	12	HP14x73	22.0
12	1666+24.93	31.00	757.01	751.01	735.01	10	12	HP14x73	22.0
13	1666+32.93	31.00	757.07	751.07	735.07	10	12	HP14x73	22.0
14	1666+40.93	31.00	757.13	751.13	735.13	10	12	HP14x73	22.0
15	1666+48.93	31.00	757.19	751.19	735.19	10	12	HP14x73	22.0
16	1666+56.93	31.00	757.26	751.26	735.26	10	12	HP14x73	22.0
17	1666+64.93	31.00	757.33	751.33	735.33	10	12	HP14x73	22.0
18	1666+72.93	31.00	757.40	751.40	735.40	10	12	HP14x73	22.0
19	1666+80.93	31.00	757.49	751.49	735.49	10	12	HP14x73	22.0
20	1666+88.93	31.00	757.60	751.60	735.60	10	12	HP14x73	22.0
21	1666+96.93	31.00	757.70	751.70	735.70	10	12	HP14x73	22.0
22	1667+04.93	31.00	757.80	751.80	735.80	10	12	HP14x73	22.0
23	1667+13.04	31.00	757.91	751.91	735.91	10	12	HP14x73	22.0
24	1667+21.15	31.00	758.02	752.02	736.02	10	12	HP14x73	22.0
25	1667+29.26	31.00	758.13	752.13	736.13	10	12	HP14x73	22.0
26	1667+37.37	31.00	758.22	752.22	736.22	10	12	HP14x73	22.0
27	1667+45.49	31.00	758.31	752.31	736.31	10	12	HP14x73	22.0
28	1667+53.60	31.00	758.39	752.39	736.39	10	12	HP14x73	22.0
29	1667+61.71	31.00	758.48	752.48	736.48	10	12	HP14x73	22.0
30	1667+69.82	31.00	758.61	752.61	736.61	10	12	HP14x73	22.0
31	1667+77.93	31.00	758.74	752.74	736.74	10	12	HP14x73	22.0
32	1667+86.05	31.00	758.87	752.87	736.87	10	12	HP14x73	22.0
33	1667+94.16	31.00	758.98	752.98	736.98	10	12	HP14x73	22.0
34	1668+02.40	31.00	759.09	753.09	737.09	10	12	HP14x73	22.0
SUB TOTAL						340	408		
TOTAL FOR BEAM TYPE									
								HP14x73	748.0

SHAFT NO.	STATION	OFFSET RIGHT	TOP OF PILE ELEVATION	TOP OF CONCRETE PAD ELEVATION	APPROX. BOTTOM OF DRILL SHAFT ELEVATION	524 SHAFT LENGTH INTO ROCK	524 SHAFT LENGTH ABOVE ROCK	BEAM SIZE	APPROX. LENGTH OF BEAM
		FT.	FT.	FT.	FT.	FT.	FT.	TYPE	FT.
35	1668+10.72	31	759.20	753.20	737.20	10	12	HP14X73	22.0
36	1668+19.04	31	757.24	753.24	735.24	10	12	HP14X73	22.0
37	1668+27.37	31	757.19	753.19	735.19	10	12	HP14X73	22.0
38	1668+35.69	31	757.13	753.13	735.13	10	12	HP14X73	22.0
39	1668+44.01	31	759.08	753.08	737.08	10	12	HP14X73	22.0
40	1668+52.33	31	759.00	753.00	737.00	10	12	HP14X73	22.0
41	1668+60.66	31	758.90	752.90	736.90	10	12	HP14X73	22.0
42	1668+68.98	31	758.80	752.80	736.80	10	12	HP14X73	22.0
43	1668+77.30	31	758.69	752.69	736.69	10	12	HP14X73	22.0
44	1668+85.62	31	758.52	752.52	736.52	10	12	HP14X73	22.0
45	1668+93.95	31	758.31	752.31	736.31	10	12	HP14X73	22.0
46	1669+02.27	31	758.10	752.10	736.10	10	12	HP14X73	22.0
47	1669+10.59	31	757.89	751.89	735.89	10	12	HP14X73	22.0
48	1669+18.91	31	757.69	751.69	735.69	10	12	HP14X73	22.0
49	1669+27.24	31	757.49	751.49	735.49	10	12	HP14X73	22.0
50	1669+35.39	31	757.29	751.29	735.29	10	12	HP14X73	22.0
51	1669+43.35	31	757.10	751.10	735.10	10	12	HP14X73	22.0
52	1669+51.31	31	756.94	750.94	734.94	10	12	HP14X73	22.0
53	1669+59.26	31	756.78	750.78	734.78	10	12	HP14X73	22.0
54	1669+67.22	31	756.62	750.62	734.62	10	12	HP14X73	22.0
55	1669+75.18	31	756.44	750.44	734.44	10	12	HP14X73	22.0
56	1669+83.14	31	756.25	750.25	734.25	10	12	HP14X73	22.0
57	1669+91.09	31	756.06	750.06	734.06	10	12	HP14X73	22.0
58	1669+99.05	31	755.88	749.88	733.88	10	12	HP14X73	22.0
59	1670+07.01	31	755.73	749.73	733.73	10	12	HP14X73	22.0
60	1670+15.00	31	755.58	749.58	749.58	10	12	HP14X73	22.0
SUB TOTAL						210	252	HP14X73	572.0
SHEET TOTAL						550	660	HP14X73	1320.0
TOTALS OF ALL SHEETS						550	660	HP14X73	1320.0
TOTALS CARRIED TO GENERAL SUMMARY						550	660	HP14X73	1320
TOTALS FOR EACH BEAM TYPE									
								HP14X73	1320

CALCULATED CWP
CHECKED

DRILLED SHAFT ELEVATIONS

ADA-41-31.53

I:\project\Adams\ADA-41-3200-97590\roadway\sheets\97590WS005.dgn 02-DEC-2016 12:32PM cpridemo

RIGHT OF WAY LEGEND SHEET

ADA-41-31.53

ADAMS COUNTY
FRANKLIN TOWNSHIP
V.M.S. 8769

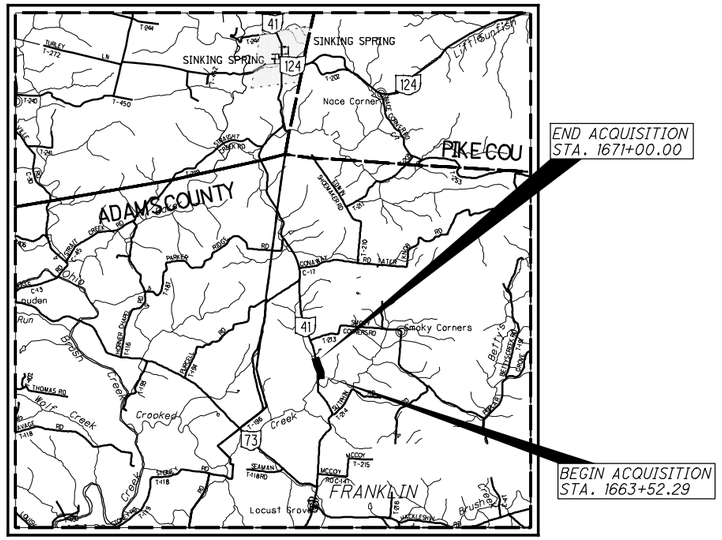

LOCATION MAP

LATITUDE: 39°00'57" LONGITUDE: 83°22'39"

PROJECT DESCRIPTION:

LANDSLIDE REMEDIATION OF A 0.12 MILE SECTION OF STATE ROUTE 41 IN ADAMS COUNTY AND FRANKLIN TOWNSHIP BY CONSTRUCTION OF PARALLEL DRILLED SHAFT RETAINING WALLS INCLUDING MINOR REGRADING FOR DRAINAGE, GUARDRAIL REPLACEMENT AND INCIDENTAL PAVEMENT RESURFACING.

PLANS PREPARED BY:

GPD GROUP
Glaus, Pyle, Schomer, Burns & Deweese, Inc.
1801 Watermark Drive, Suite 150
Columbus, Ohio 43215
614-210-0751 Fax 614-210-0752

R/W DESIGNER: NATHAN L. CONNER
R/W REVIEWER: TRAVIS D. McCARTY, P.S.
FIELD REVIEWER: NATHAN L. CONNER
PRELIMINARY FIELD REVIEW DATE: 7/9/2015
TRACINGS FIELD REVIEW DATE: 11/6/2015
OWNERSHIP UPDATED BY: NATHAN L. CONNER
DATE COMPLETED: 11/9/2015
PLAN COMPLETION DATE: 11/9/2015

UTILITIES:

LISTED BELOW ARE ALL UTILITIES LOCATED WITHIN THE PROJECT CONSTRUCTION LIMITS TOGETHER WITH THEIR RESPECTIVE OWNERS:

AMERICAN ELECTRIC POWER
850 TECH CENTER DRIVE
GAHANNA, OH 43230
(614) 883-6831
CONTACT: MR. PAUL PAXTON

FRONTIER COMMUNICATIONS
1315 ALBERT STREET
PORTSMOUTH, OH 45662
(740) 354-0512
CONTACT: MR. PAUL MONTAVON

ADAMS COUNTY REGIONAL WATER
9203 STATE ROUTE 136
P.O. BOX 427
WEST UNION, OHIO 45693
(937) 544-2396
CONTACT: RICKEY ADAMSON

TIME WARNER CABLE
11252 CORNELL PARK DRIVE
CINCINNATI, OHIO 45242
(513) 489-5907
CONTACT: MR. NEAL HENSLEY

THE LOCATION OF THE UNDERGROUND UTILITIES SHOWN ON THE PLANS ARE AS OBTAINED FROM THE OWNERS AS REQUIRED BY SECTION 153.64 O.R.C.

INDEX OF SHEETS:

LEGEND SHEET	1
CENTERLINE PLAT	2
PROPERTY MAP	3
SUMMARY OF ADDITIONAL R/W	4
R/W DETAIL SHEETS	5-6

STRUCTURE KEY

- RESIDENTIAL
- COMMERCIAL
- OUT-BUILDING

CONVENTIONAL SYMBOLS

Township Line
Fence Line (Ex)
Fence Line (Pr)
Center Line
Right of Way (Ex) Ex R/W
Right of Way (Pr) R/W
Standard Highway Ease.(Ex) Ex SH
Temporary Right of Way TMP
Utility Ease. (Ex) Ex U
Guardrail (Ex)
Guardrail (Pr)
Construction Limits
Edge of Pavement (Ex)
Edge of Pavement (Pr)
Edge of Shoulder (Ex)
Edge of Shoulder (Pr)
Ditch / Creek (Ex)
Ditch / Creek (Pr)
Tree Line (Ex)
Ownership Hook Symbol, Example
Property Line Symbol, Example
Break Line Symbol, Example
Tree (Pr), Tree (Ex), Shrub (Ex), Post (Ex)
Tree (Remove), Shrub (Remove), Light Pole (Ex)
Evergreen (Ex), Evergreen (Removed)
Stump (Ex), Stump (Remove), Telephone Pole (Ex)
Mailbox (Ex) MB, Mailbox (Pr) MB, Light (Ex)
Fire Hydrant (Ex), Water Meter (Ex) W, Water Valve (Ex)
Telephone Marker (Ex) TEL, Gas Valve (Ex.), Power Pole (Ex)

TYPES OF TITLE LEGEND:
WD = WARRANTY DEED
T = TEMPORARY EASEMENT

I, Steven L. Mullaney, P. S. have established the proposed property lines, calculated the Gross Take, present roadway occupied (PRO), Net Take and Net Residue; as well as prepared the legal descriptions necessary to acquire the parcels as shown herein. The horizontal coordinates expressed herein are based on the Ohio State Plane Coordinate System, South Zone on NAD 83 (2011) datum. The Project Coordinates (US Survey feet) are relative to State Plane Grid Coordinates (US Survey feet) by a Project Adjustment Factor multiplier of 0.99992574. As a part of this work I have set right of way monuments at the property corners, property line intersection, points along the right of way and/or angle points on the right of way, and other points as shown herein. All of my work contained herein was conducted in accordance with Ohio Administrative Code 4733-37 commonly known as "Minimum Standards for Boundary Surveys in the State of Ohio" unless noted. The words I and my as used herein are to mean either myself or someone working under my direct supervision.

03/29/16

Steven L. Mullaney, Professional Land Surveyor 7900 — Date

SURVEYORS SEAL
STATE OF OHIO
STEVEN L MULLANEY 7900
REGISTERED SURVEYOR

FEDERAL PROJECT NO. E140(690)
PID NO. 97590
CALCULATED NLC
CHECKED TDM

RIGHT OF WAY LEGEND SHEET

ADA-41-31.53

MONUMENT TABLE

℄ of R/W S.R. 41		PROJECT COORDINATES SEE SURVEY CERTIFCATION		MONUMENTS TO BE SET DURING CONSTRUCTION		R/W MON. EXPECTED TO BE DISTURBED	
STATION	OFFSET	NORTH (Y)	EAST (X)	MON. ASSY.	REF. MON.	R/W MON.	DESCRIPTION
1667+05.32	-	370985.1625	1719331.1563	1			PC
1667+97.29	-	371070.0588	1719295.7795	1			PCC
1669+31.81	-	371198.7999	1719257.3254	1			MARKING PT AND PC (0.03' APART)
1670+08.96	-	371274.2041	1719241.0235	1			PT
TOTAL CARRIED TO GENERAL SUMMARY SHEET				4			

SETTING OF ALL MONUMENTS SHALL BE PERFORMED BY A SURVEYOR REGISTERED IN THE STATE OF OHIO. THE MONUMENT ASSEMBLIES AND REFERENCE MONUMENTS WILL BE INSTALLED BY THE CONTRACTOR AT THE TIME OF CONSTRUCTION. THE IRON PIN AND CAP (WHEN REQUIRED) ARE TO BE INSTALLED BY THE CONTRACTOR'S SURVEYOR.

CHANGES OR ALTERATIONS TO THE LOCATION OF ANY MONUMENTS SHOWN IN THIS TABLE, REQUIRE PRIOR APPROVAL FROM THE DISTRICT REAL ESTATE ADMINISTRATOR OF THE OHIO DEPARTMENT OF TRANSPORTATION. IN THE EVENT THAT CHANGES OR ALTERATIONS ARE APPROVED, A REVISED CENTERLINE PLAT WITH THE NEW LOCATIONS SHALL BE RECORDED IN THE APPLICABLE COUNTY RECORDS AND THE OHIO DEPARTMENT OF TRANSPORTATION. SPECIFICATIONS FOR MONUMENT ASSEMBLIES, REFERENCE MONUMENTS AND RIGHT OF WAY MONUMENTS ARE SHOWN ON STANDARD CONSTRUCTION DRAWING RM-1.1.

ADAMS COUNTY
BRATTON TOWNSHIP
V.M.S. 8769

RECEIVED _____, 20___
RECORDED _____, 20___
BOOK _____ PAGE _____
_____
ADAMS COUNTY RECORDER

BASIS FOR BEARINGS:

ALL BEARINGS SHOWN ARE FOR PROJECT USE ONLY.
BEARINGS ARE BASED ON GRID NORTH OF THE OHIO STATE PLANE COORDINATE SYSTEM, SOUTH ZONE, NAD83(2011).

MONUMENT LEGEND

- PROPOSED R/W MONUMENT BOX
- I.R.F. 5/8" REBAR FOUND
- I.R.S. 5/8" x 30" REBAR SET, WITH CAP STAMPED "GPD"
- R.F. 1" IRON PIPE FOUND
- P.K.F. P.K. NAIL FOUND

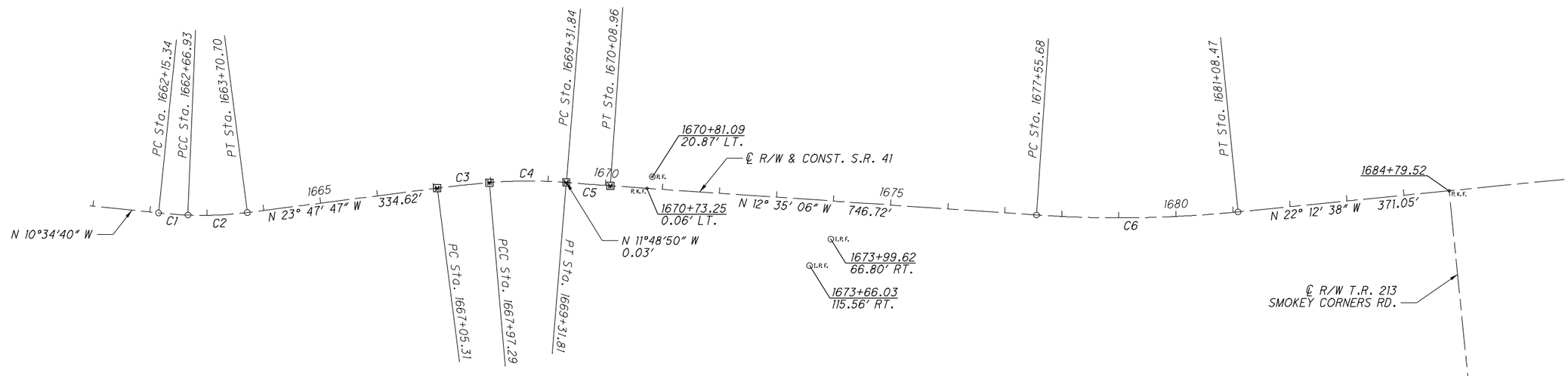

CENTERLINE CURVE DATA

℄ STATE ROUTE 41							
CURVE	P.I. STATION	CENTRAL ANGLE	DEGREE OF CURVE	RADIUS	CURVE LENGTH	CHORD LENGTH	CHORD BEARING
C1	1662+41.15	03°34'59" (LT)	06°56'42"	825.00'	51.59'	51.59'	N 12°22'09" W
C2	1663+18.94	09°38'08" (LT)	09°17'10"	617.00'	103.76'	103.64'	N 18°58'43" W
C3	1667+51.31	02°20'57" (RT)	02°33'15"	2243.35'	91.98'	91.97'	N 22°37'19" W
C4	1668+64.71	09°38'00" (RT)	07°09'41"	800.07'	134.52'	134.36'	N 16°37'50" W
C5	1669+70.40	00°46'17" (LT)	01°00'00"	5729.00'	77.12'	77.12'	N 12°11'58" W
C6	1679+32.49	09°37'32" (LT)	02°43'42"	2100.00'	352.79'	352.38'	N 17°23'52" W

I, Steven L. Mullaney, P. S. have established the proposed property lines, calculated the Gross Take, present roadway occupied (PRO), Net Take and Net Residue; as well as prepared the legal descriptions necessary to acquire the parcels as shown herein. The horizontal coordinates expressed herein are based on the Ohio State Plane Coordinate System, South Zone on NAD 83 (2011) datum. The Project Coordinates (US Survey feet) are relative to State Plane Grid Coordinates (US Survey feet) by a Project Adjustment Factor multiplier of 0.99992574. As a part of this work I have set right of way monuments at the property corners, property line intersection, points along the right of way and/or angle points on the right of way, and other points as shown herein. All of my work contained herein was conducted in accordance with Ohio Administrative Code 4733-37 commonly known as "Minimum Standards for Boundary Surveys in the State of Ohio" unless noted. The words I and my as used herein are to mean either myself or someone working under my direct supervision.

03/29/16
Steven L. Mullaney, Professional Land Surveyor 7900 — Date

SURVEYOR SEAL
STATE OF OHIO
STEVEN L. MULLANEY 7900 REGISTERED SURVEYOR

HORIZONTAL SCALE IN FEET 0 100 200

PID NO. 97590

R/W DESIGNER NLC
R/W REVIEWER TDM

CENTERLINE PLAT

ADA-41-31.53

ADAMS COUNTY
FRANKLIN TOWNSHIP
V.M.S. 8769

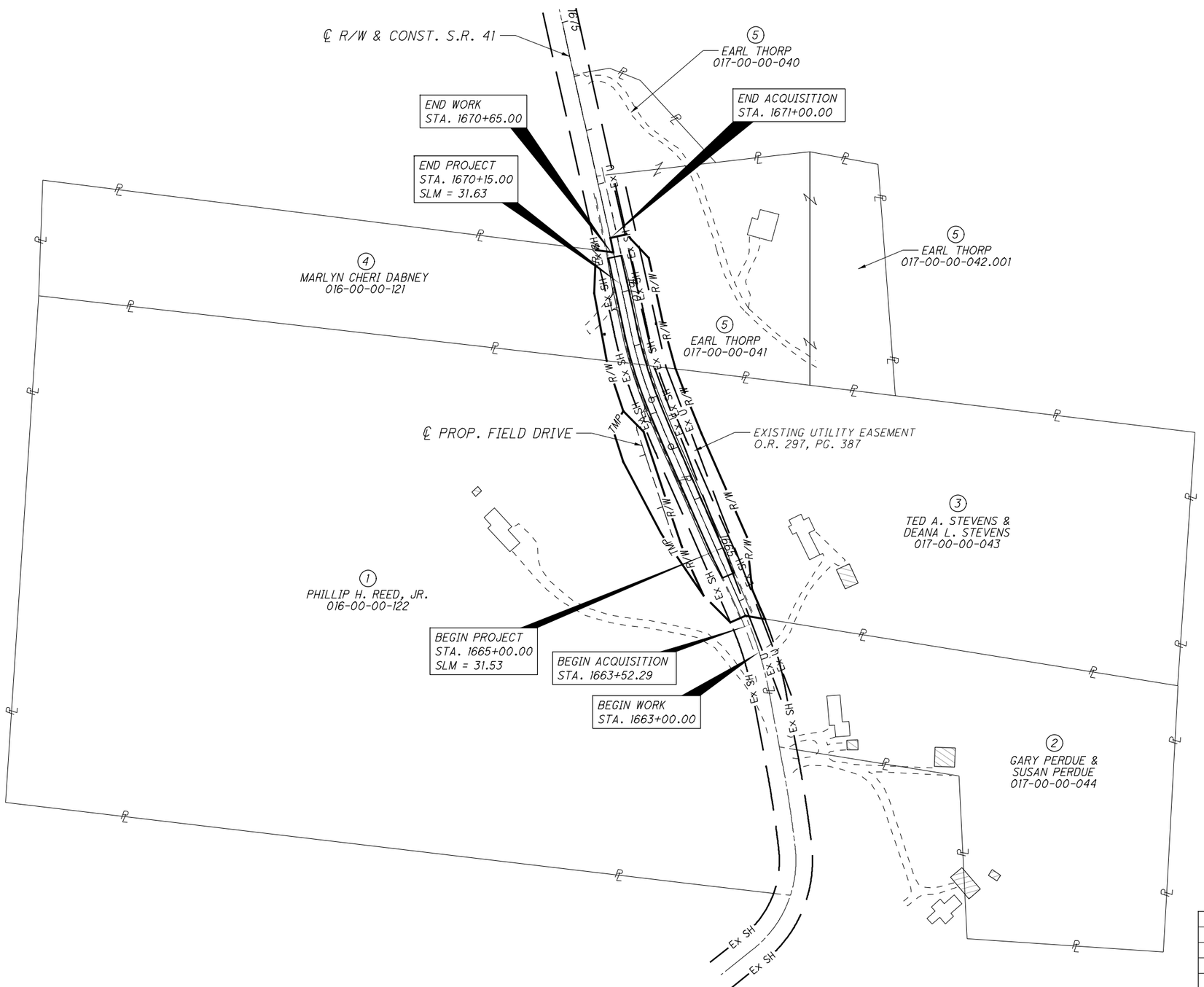

REV. BY	DATE	DESCRIPTION

DATE COMPLETED: 11/9/2015

HORIZONTAL SCALE IN FEET
0 100 200

PID NO. 97590

R/W DESIGNER NLC
R/W REVIEWER TDM

PROPERTY MAP

ADA-41-31.53

3 / 6

48
51

TOTAL NUMBER OF :

4 OWNERSHIPS — 0 TOTAL TAKES

5 PARCELS — 0 OWNERSHIPS W/ STRUCTURES INVOLVED

NET TAKE = GROSS TAKE - PRO IN TAKE
NET RESIDUE = RECORD AREA - TOTAL PRO - NET TAKE

ALL AREAS IN ACRES

* DENOTES ENCROACHMENT

GRANTEE:

ALL RIGHT OF WAY ACQUIRED IN THE NAME OF STATE OF OHIO, DEPARTMENT OF TRANSPORTATION UNLESS OTHERWISE NOTED.

PARCEL NO.	OWNER	SHEET NO.	OWNERS RECORD	AUDITOR'S PARCEL	RECORD AREA	TOTAL P.R.O.	GROSS TAKE	P.R.O. IN TAKE	NET TAKE	STRUCTURE	NET RESIDUE LEFT	NET RESIDUE RIGHT	TYPE FUND	REMARKS	AS ACQUIRED INSTRUMENT NO.
1-WD	PHILLIP H. REED, JR.	3,5,6	D.V. 289, Pg. 439	016-00-00-122	27.719	0.6977	0.5618	0.3461	0.2157	NO	26.8056		STATE	TAKE 4 TREES	
1-T		3,5,6					0.2537	0.0000	0.2537					GRADING & DRIVE CONSTRUCTION	
2	GARY PERDUE & SUSAN PERDUE	3 & 5	D.V. 239, Pg. 784	017-00-00-044	1.920	0.1686								NO TAKE FROM THIS PARCEL	
3-WD	TED A. STEVENS & DEANA L. STEVENS	3,5,6	O.R. 351, Pg. 151	017-00-00-043	8.705	0.3415	0.6086	0.3412	0.2674			8.0961		TAKE 1 TREE	
4-WD	EARL THORP	3,6	O.R. 358, Pg. 755	017-00-00-041	3.525	0.2437	0.3230	0.2131	0.1099		3.1714				
				017-00-00-040	0.680	0.1302	0.0000	0.0000	0.0000		0.5498			NO TAKE FROM THIS PARCEL	
				017-00-00-042.001	1.000	0.0000	0.0000	0.0000	0.0000		1.0000			NO TAKE FROM THIS PARCEL	
	TOTAL				5.205	0.3739	0.3230	0.2131	0.1099		4.7212				
5-WD	MARYLN CHERI DABNEY	3,6	D.V. 342, Pg. 521	016-00-00-121	81.450	0.1437	0.2269	0.0962	0.1307	NO		81.1756	STATE	TAKE 1 TREE	

TYPES OF TITLE LEGEND:
WD = WARRANTY DEED
T = TEMPORARY EASEMENT

NOTE: UNDER NO CIRCUMSTANCES ARE TEMPORARY EASEMENTS TO BE USED FOR STORAGE OF MATERIAL OR EQUIPMENT BY THE CONTRACTOR UNLESS NOTED OTHERWISE.

NOTE: ALL TEMPORARY PARCELS TO BE OF 12 MONTHS DURATION.

REV. BY	DATE	DESCRIPTION
NLC	3/29/16	UPDATED RECORD ON PARCEL 4-WD

FIELD REVIEW BY: NLC — DATE: 11/6/2015
OWNERSHIP VERIFIED BY: NLC — DATE: 11/9/2015
DATE COMPLETED: 11/9/2015

FEDERAL PROJECT NO. E140(690)

PID NO. 97590

STATE JOB NO. 499077

R/W DESIGNER NLC
R/W REVIEWER TDM

SUMMARY OF ADDITIONAL RIGHT OF WAY

ADA-41-31.53

CENTERLINE CURVE DATA

℄ STATE ROUTE 41							
CURVE	P.I. STATION	CENTRAL ANGLE	DEGREE OF CURVE	RADIUS	CURVE LENGTH	CHORD LENGTH	CHORD BEARING
C2	1663+18.94	09°38′08″ (LT)	09°17′10″	617.00′	103.76′	103.64′	N 18°58′43″ W

RIGHT OF WAY CURVE DATA

CURVE	CENTRAL ANGLE	RADIUS	CURVE LENGTH	CHORD LENGTH	CHORD BEARING
C10	01°42′34″	647.00′	19.30′	19.30′	S 22°56′30″ E

LINE TABLE

LINE	BEARING	DISTANCE
L1	S 66°12′13″ W	30.00′

ADAMS COUNTY
FRANKLIN TOWNSHIP
V.M.S. 8769

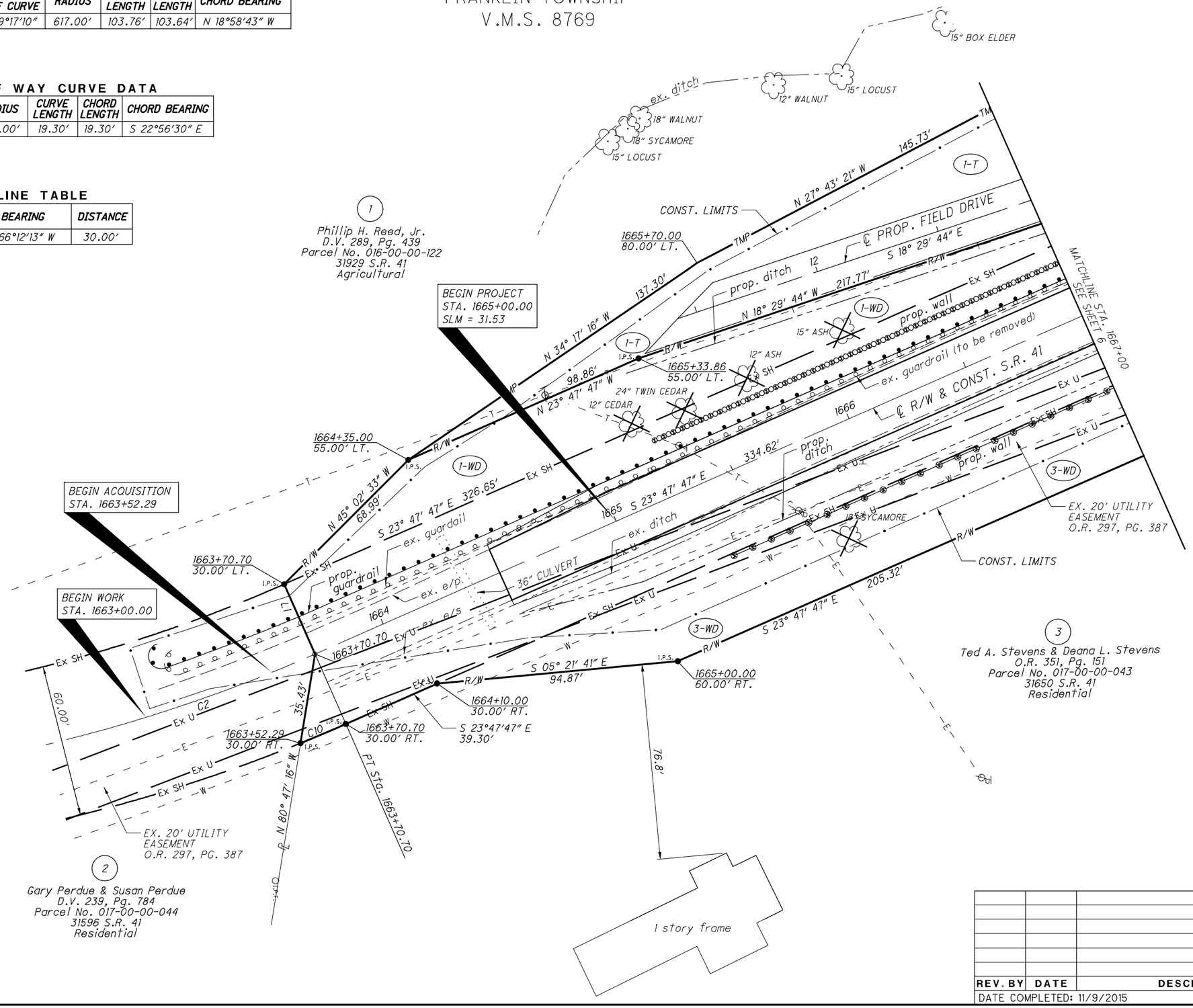

REV. BY	DATE	DESCRIPTION

DATE COMPLETED: 11/9/2015

HORIZONTAL SCALE IN FEET 0 20 40

PID NO. 97590

R/W DESIGNER NLC
R/W REVIEWER TDM

RIGHT OF WAY DETAIL SHEET
BEGIN TO STA. 1667+00

ADA-41-31.53

CENTERLINE CURVE DATA

℄ STATE ROUTE 41							
CURVE	P.I. STATION	CENTRAL ANGLE	DEGREE OF CURVE	RADIUS	CURVE LENGTH	CHORD LENGTH	CHORD BEARING
C3	1667+51.31	02°20′57″ (RT)	02°33′15″	2243.35′	91.98′	91.97′	N 22°37′19″ W
C4	1668+64.71	09°38′00″ (RT)	07°09′41″	800.07′	134.52′	134.36′	N 16°37′50″ W
C5	1669+70.40	00°46′17″ (LT)	01°00′00″	5729.00′	77.12′	77.12′	N 12°11′58″ W
C6	1679+32.49	09°37′32″ (LT)	02°43′42″	2100.00′	352.79′	352.38′	N 17°23′52″ W

ADAMS COUNTY
FRANKLIN TOWNSHIP
V.M.S. 8769

LINE TABLE

LINE	BEARING	DISTANCE
L1	N 83°28′26″ W	59.46′
L2	S 83°03′25″ E	65.96′
L3	N 11°48′50″ W	0.03′
L4	N 77°24′54″ E	30.00′
L5	S 82°47′26″ E	31.88′

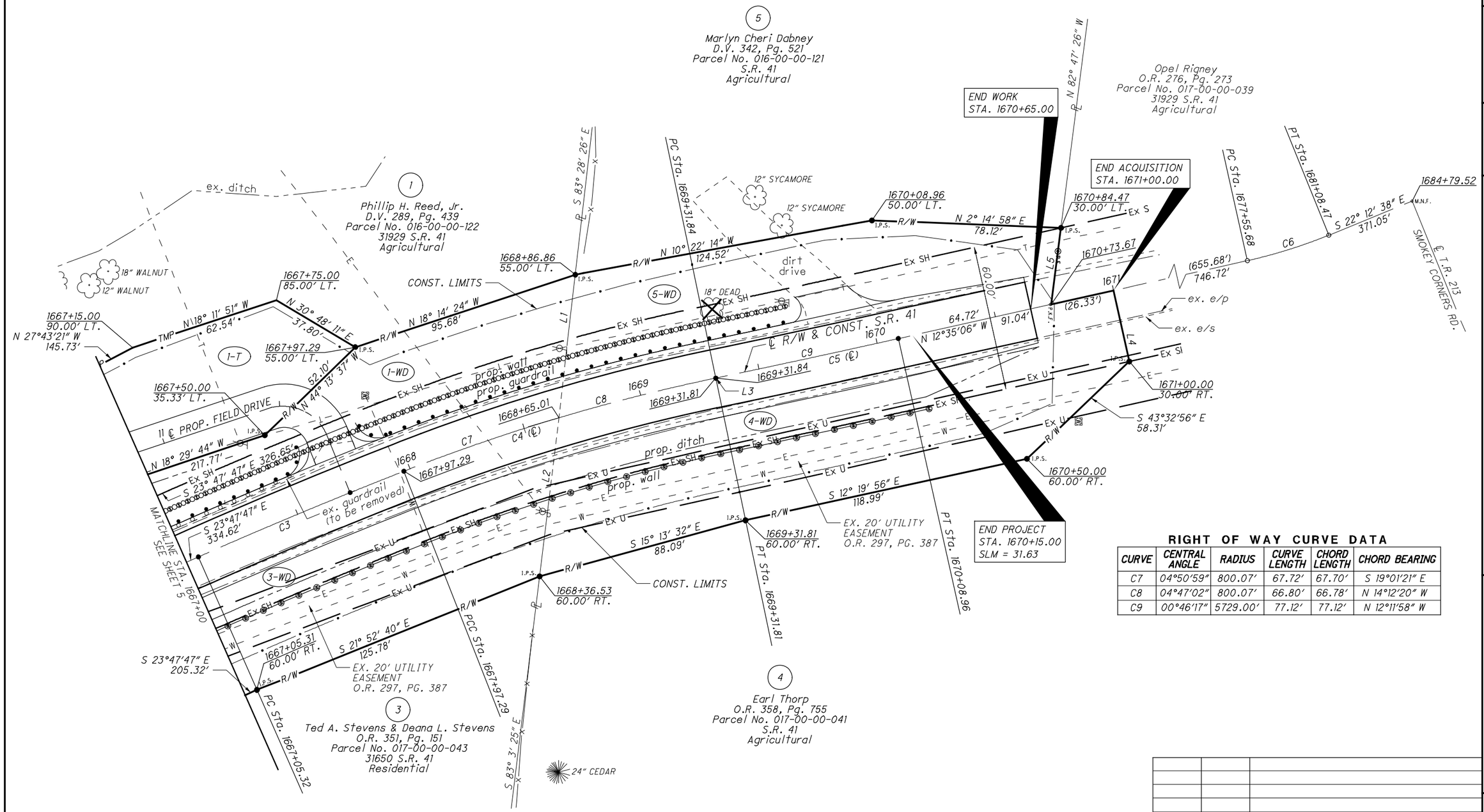

RIGHT OF WAY CURVE DATA

CURVE	CENTRAL ANGLE	RADIUS	CURVE LENGTH	CHORD LENGTH	CHORD BEARING
C7	04°50′59″	800.07′	67.72′	67.70′	S 19°01′21″ E
C8	04°47′02″	800.07′	66.80′	66.78′	N 14°12′20″ W
C9	00°46′17″	5729.00′	77.12′	77.12′	N 12°11′58″ W

REV. BY	DATE	DESCRIPTION
NLC	3/29/16	UPDATED RECORD ON PARCEL 4-WD

DATE COMPLETED: 11/9/2015

HORIZONTAL SCALE IN FEET 0 20 40

PID NO. 97590

R/W DESIGNER NLC
R/W REVIEWER TDM

RIGHT OF WAY DETAIL SHEET
STA. 1667+00 TO END

ADA-41-31.53

PROJECT DESCRIPTION

LANDSLIDE REMEDIATION OF A 0.12 MILE SECTION OF STATE ROUTE 41 IN ADAMS COUNTY AND FRANKLIN TOWNSHIP BY CONSTRUCTION OF PARALLEL DRILLED SHAFT RETAINING WALLS INCLUDING MINOR REGRADING FOR DRAINAGE, GUARDRAIL REPLACEMENT AND INCIDENTAL PAVEMENT RESURFACING.

HISTORIC RECORDS

NO HISTORIC RECORDS WERE FOUND FOR THIS PROJECT.

GEOLOGY

THE PROJECT IS LOCATED WITHIN THE OUTER BLUEGRASS REGION PHYSIOGRAPHIC PROVINCE. THE AREA IS NON-GLACIATED AND CHARACTERIZED BY MODERATELY HIGH RELIEF OF A DISSECTED PLATEAU WITH KARSTIC TERRAIN COMMON. OVERBURDEN CONTAINS THIN GLACIAL DRIFT CAPPING THE NARROW RIDGES AND RESIDUAL AND COLLUVIAL SOILS ALONG THE HILLSIDES AND AT THE BASE OF THE HILLSIDES. THE OVERBURDEN SOILS ARE REPORTABLE UNDERLAIN BY BEDROCK ASSOCIATED OF WITH THE SERPENT MOUND DISTURBANCE STRUCTURE WHICH HAS BEDROCK IS HIGHLY VARIABLE RANGING IN AGE FROM MISSISSIPPIAN TO ORDOVICIAN AND CONTAINS NUMEROUS GEOLOGICAL STRUCTURAL FEATURES.

RECONNAISSANCE

FIELD RECONNAISSANCE WAS COMPLETED ON JULY 30, 2014 BY DISTRICT PERSONNEL. THE EXISTING ASPHALT PAVEMENT WAS NOTED AS BEING IN GOOD CONDITION. AT THE TIME OF THE RECONNAISSANCE TO MARK THE BORING LOCATIONS A RECENT PAVEMENT OVERLAY HAD BEEN PLACED. PRIOR TO THE OVERLAY SEVERAL TENSION CRACKS AND A DEPRESSION WAS NOTED IN THE ROADWAY. THE ADJACENT LAND USAGE WAS NOTED AS BEING RURAL RESIDENTIAL.

SUBSURFACE EXPLORATION

FOUR (4) BORINGS, B-001-0-14 THROUGH B-003-0-14 AND B-002-1-14, WERE COMPLETED AS PART OF THE SUBSURFACE EXPLORATION. THE BORINGS WERE DRILLED ON SEPTEMBER 9 AND 10, 2014 WITH A TRACK MOUNTED ROTARY DRILL RIG, USING 3-1/4 INCH I.D. HOLLOW STEM AUGERS TO ADVANCE THE BORINGS THROUGH THE SOIL. DISTURBED SAMPLES WERE COLLECTED IN ACCORDANCE WITH THE STANDARD PENETRATION TEST (AASHTO T206) AT CONTINUOUS INTERVALS WITH THE OVERBURDEN SOILS. THE HAMMER SYSTEM WAS CALIBRATED ON OCTOBER 23, 2014, AND THE AVERAGE DRILL ROD ENERGY RATIO (ER) WAS 82.5%. THE BORINGS WERE ADVANCED INTO BEDROCK AND SAMPLED (AASHTO T225) USING AN N SERIES WIRELINE CORE BARREL, WATER METHOD.

EXPLORATION FINDINGS

ALL BORINGS WERE DRILLED WITHIN PAVEMENT AND ENCOUNTERED ASPHALT RANGING BETWEEN 7 TO 14 INCHES IN THICKNESS UNDERLAIN BY 6 TO 31 INCHES OF AGGREGATE BASE, EXCEPT FOR B-003 WHICH DID NOT ENCOUNTER ANY AGGREGATE BASE. BENEATH THE PAVEMENT THE BORING ENCOUNTERED PREDOMINATELY COHESIVE SOILS CONSISTING OF SILT AND CLAY (A-6a), SILTY CLAY (A-6b), ELASTIC CLAY (A-7-5), AND CLAY (A-7-6). THESE SOILS WERE TYPICALLY FOUND IN VERY STIFF TO HARD CONSISTENCY AND MOIST CONDITION. UNCONFINED COMPRESSIVE STRENGTH TESTING COMPLETED ON THE SPLIT SPOON SAMPLES REVEALED STRENGTH VALUES RANGING FROM 26 TO 310 PSI. BEDROCK ENCOUNTERED WITHIN THE BORINGS CONSISTED OF INTERBEDDED SHALE AND CLAYSTONE. BOTH UNITS WERE TYPICALLY VERY WEAK WITH THE SHALE LAYERS TYPICALLY BEING UNWEATHERED TO SLIGHTLY WEATHERED AND THE CLAYSTONE LAYERS TYPICALLY BEING SLIGHTLY WEATHERED. UNCONFINED COMPRESSIVE STRENGTH TESTING OF THE ROCK CORE REVEALED STRENGTH VALUES BETWEEN 44 AND 101 PSI.

WATER LEVELS RECORDED IN THE BORINGS RANGED BETWEEN ELEVATION 747.8 AND 740.1 FEET, BUT INCLUDED CORE WATER USED TO COLLECT ROCK CORE SAMPLES.

HORIZONTAL POSITIONING

THE LATITUDE AND LONGITUDE COORDINATE VALUES SHOWN ON THE BORING LOGS ARE TRUE GRID VALUES. SEE THE PROJECT CONSTRUCTION PLANS FOR PROJECT SPECIFIC HORIZONTAL POSITIONING PARAMETERS.

SPECIFICATIONS

THIS GEOTECHNICAL EXPLORATION WAS PERFORMED IN ACCORDANCE WITH THE STATE OF OHIO, DEPARTMENT OF TRANSPORTATION, OFFICE OF GEOTECHNICAL ENGINEERING, SPECIFICATIONS FOR GEOTECHNICAL EXPLORATIONS, DATED JULY 21, 2014.

AVAILABLE INFORMATION

ALL AVAILABLE SOIL AND BEDROCK INFORMATION THAT CAN BE CONVENIENTLY SHOWN ON THE GEOTECHNICAL EXPLORATION SHEETS HAS BEEN SO REPORTED. ADDITIONAL EXPLORATIONS MAY HAVE BEEN MADE TO STUDY SOME SPECIAL ASPECT OF THE PROJECT. COPIES OF THIS DATA, IF ANY, MAY BE INSPECTED IN THE DISTRICT DEPUTY DIRECTOR'S OFFICE OR THE OFFICE OF GEOTECHNICAL ENGINEERING AT 1980 WEST BROAD STREET.

LEGEND

DESCRIPTION	ODOT CLASS	CLASSIFIED MECH.	CLASSIFIED VISUAL
SILT AND CLAY	A-6a	1	-
SILTY CLAY	A-6b	3	3
ELASTIC CLAY	A-7-5	1	-
CLAY	A-7-6	18	1
	TOTAL	23	4
SHALE	VISUAL		
PAVEMENT OR BASE = X = APPROXIMATE THICKNESS	VISUAL		

BORING LOCATION - PLAN VIEW.

DRIVE SAMPLE AND/OR ROCK CORE BORING PLOTTED TO VERTICAL SCALE ONLY. HORIZONTAL BAR INDICATES A CHANGE IN STRATIGRAPHY.

WC INDICATES WATER CONTENT IN PERCENT.

N_{60} INDICATES STANDARD PENETRATION RESISTANCE NORMALIZED TO 60% DRILL ROD ENERGY RATIO.

INDICATES STATIC WATER ELEVATION.

SS INDICATES A SPLIT SPOON SAMPLE.

TR INDICATES TOP OF ROCK.

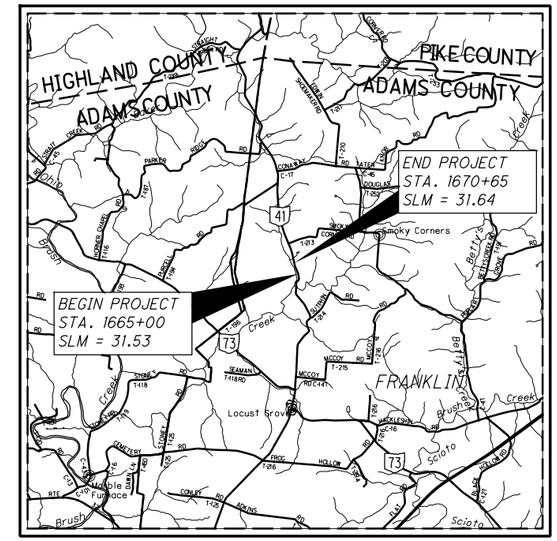

LOCATION MAP

SCALE IN MILES

0 1 2 3 4

N

PARTICLE SIZE DEFINITIONS

BOULDERS	12"	COBBLES	3"	GRAVEL	2.0 mm (No. 10 SIEVE)	COARSE SAND	0.42 mm (No. 40 SIEVE)	FINE SAND	0.074 mm (No. 200 SIEVE)	SILT	0.005 mm	CLAY

RECON. -	CP	07/30/14
DRILLING -	TERRACON	09/09/14 - 09/10/14
DRAWN -	GLM	06/2016
REVIEWED -	SAT	06/2016

DESIGN AGENCY
OHIO DEPARTMENT OF TRANSPORTATION
OFFICE OF GEOTECHNICAL ENGINEERING
1980 W. BROAD ST. COLUMBUS, OH 43223

PID NO. **97590**

LANDSLIDE EXPLORATION

ADA-41-32.00

I:\gt\Projects\D09\Adams\ADA-41-32.00\geotechnical\sheets\97590YC001.dgn 23-JUN-2016 11:21AM gmcginni

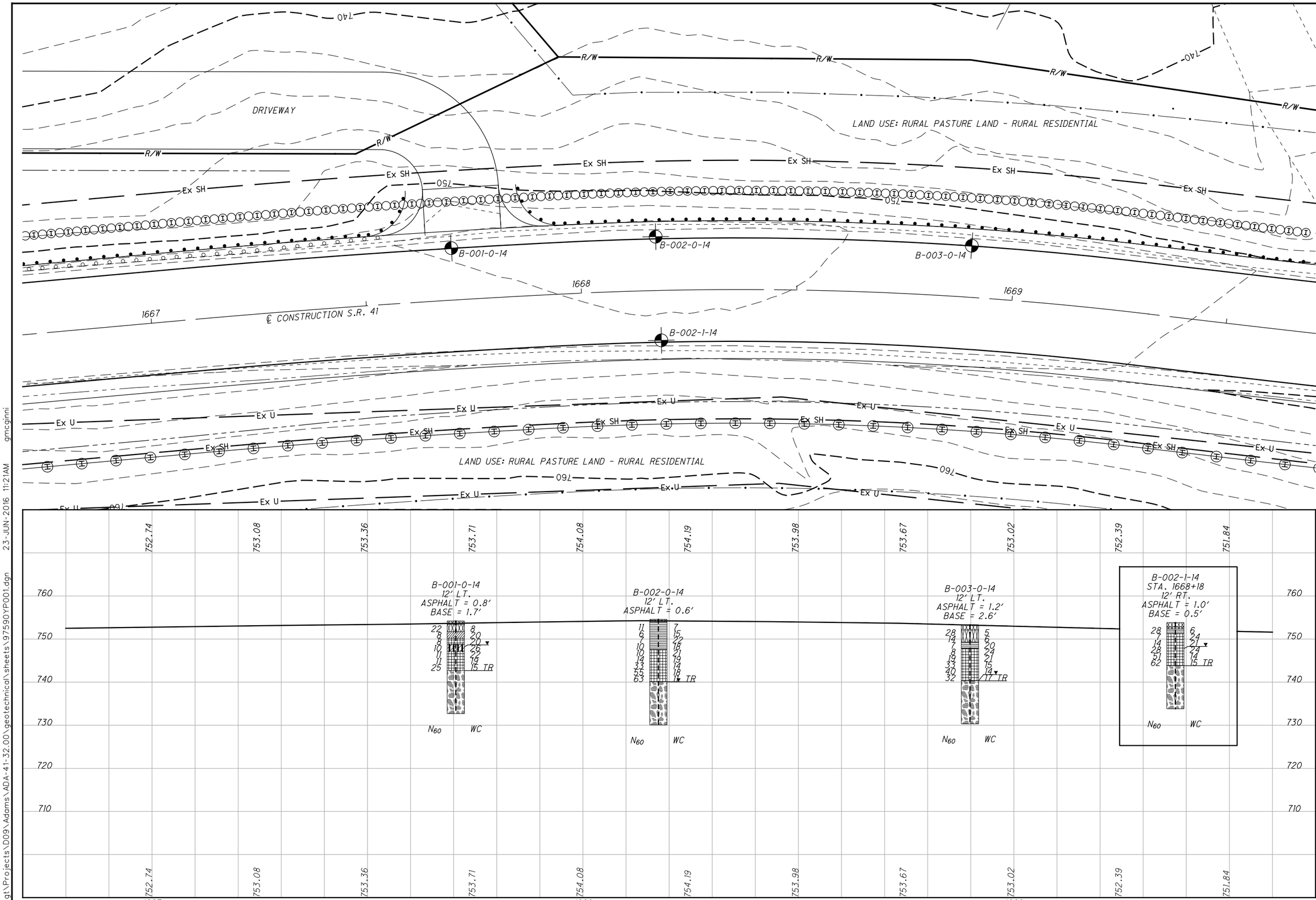

HORIZONTAL SCALE IN FEET
0 5 10 20

DRAWN GLM
CHECKED SAT

LANDSLIDE EXPLORATION
STA. 1666+80 TO STA. 1669+60

ADA-41-32.00

2/5

23-JUN-2016 11:21AM gmcginni

I:\gt\Projects\D09\Adams\ADA-41-32.00\geotechnical\sheets\97590YP001.dgn

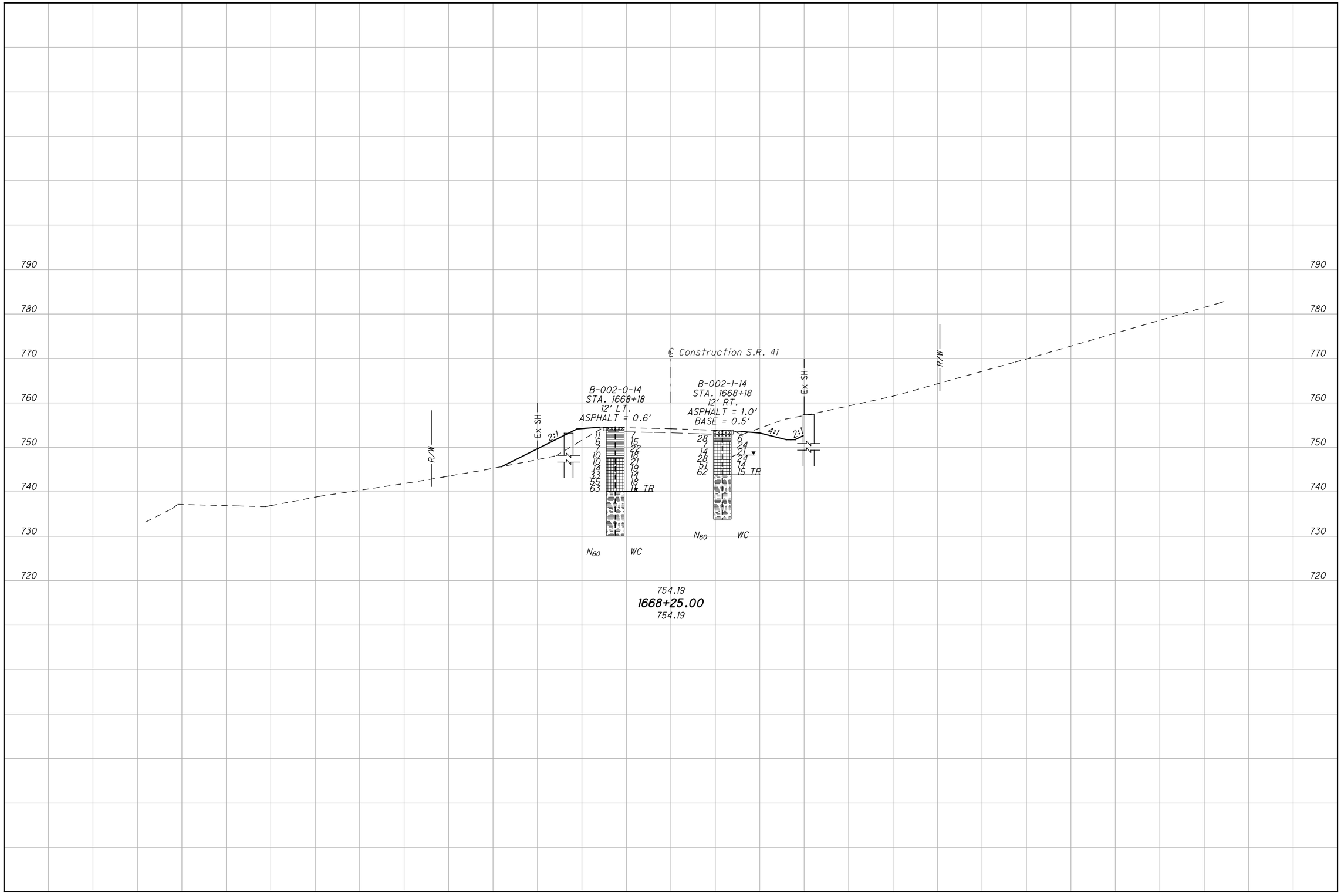

HORIZONTAL SCALE IN FEET
0 5 10 20

DRAWN GLM
CHECKED SAT

LANDSLIDE CROSS SECTION STA. 1668+25.00

ADA-41-32.00

3/5

I:\gt\Projects\D09\Adams\ADA-41-32.00\geotechnical\sheets\97590YX001.dgn 23-JUN-2016 11:21AM gmcginni

PROJECT: ADA-41-32.00	DRILLING FIRM / OPERATOR: TERRACON / TS	DRILL RIG: TRACK 0299	STATION / OFFSET: 1667+71, 12' LT.	EXPLORATION ID B-001-0-14
TYPE: LANDSLIDE	SAMPLING FIRM / LOGGER: TERRACON / RG	HAMMER: DIEDRICH AUTOMATIC	ALIGNMENT: SR-41	
PID: 97590 SFN:	DRILLING METHOD: 3.25" HSA / NQ2	CALIBRATION DATE: 10/23/14	ELEVATION: 754.2 (MSL) EOB: 21.5 ft.	PAGE 1 OF 1
START: 9/10/14 END: 9/10/14	SAMPLING METHOD: SPT / NQ2	ENERGY RATIO (%): 82.5	LAT / LONG: 39.015335, -83.377536	

MATERIAL DESCRIPTION AND NOTES	ELEV. 754.2	DEPTHS	SPT/ RQD	N_{60}	REC (%)	SAMPLE ID	HP (tsf)	GR	CS	FS	SI	CL	LL	PL	PI	WC	ODOT CLASS (GI)	BACK FILL
ASPHALT PAVEMENT (10 INCHES)	753.4																	
GRANULAR BASE (20 INCHES)	751.7	1–2	10 9 7	22	67	SS-1	-	-	-	-	-	-	-	-	-	8		
VERY STIFF, BROWN, **SILT AND CLAY**, TRACE GRAVEL, LITTLE SAND, MOIST	750.2	3–4	3 3 3	8	100	SS-2	3.00	10	8	13	36	33	32	17	15	20	A-6a (9)	
VERY STIFF, BROWN, **CLAY**, "AND" SILT, TRACE GRAVEL, TRACE SAND, MOIST @ 4.0' - 4.2'; γ = 108 pcf; Qu = 26 psi.	748.7	5	3 3 3	8	100	SS-3	3.50	2	2	4	38	54	49	22	27	20	A-7-6 (17)	
VERY STIFF, BROWN, **ELASTIC CLAY**, "AND" SILT, TRACE GRAVEL, TRACE SAND, MOIST	747.2	6	3 3 4	10	72	SS-4	2.50	2	2	3	42	51	49	33	16	26	A-7-5 (12)	
STIFF TO VERY STIFF, BROWN, **CLAY**, "AND" TO SOME SILT, TRACE GRAVEL, TRACE SAND, MOIST	742.7	7–8	3 3 5	11	33	SS-5	2.00	0	2	2	30	66	55	23	32	22	A-7-6 (19)	
		9	3 4 4	11	33	SS-6	3.00	1	0	1	36	62	51	25	26	19	A-7-6 (17)	
		10–11	3 8 10	25	100	SS-7	3.00	4	2	1	36	57	52	24	28	15	A-7-6 (18)	
INTERBEDDED SHALE (90%) AND CLAYSTONE (10%); **SHALE**, GRAY, UNWEATHERED TO SLIGHTLY WEATHERED, VERY WEAK, LAMINATED; **CLAYSTONE**, REDDISH BROWN, SLIGHTLY WEATHERED, VERY WEAK, VERY THIN BEDDED. @ 14.0' - 14.4'; γ = 132 pcf; Qu = 96 psi.		TR 12	0		89	NQ2-1										CORE	
		13–18	48		80	NQ2-2											CORE	
		19–21	43		100	NQ2-3											CORE	
	732.7	EOB																

NOTES: WATER WAS USED IN DRILLING AT 11.5' FOR ROCK CORING. LAT/LONG/ELEV FROM DISTRICT SURVEY.

ABANDONMENT METHODS, MATERIALS, QUANTITIES: PLACED ASPHALT PATCH; BACKFILLED WITH AUGER CUTTINGS

STANDARD ODOT SOIL BORING LOG (8.5 X 11) - OH DOT GDT - 6/15/16 14:55 - I:\GT\PROJECTS\D09\ADAMS\ADA-41-32.00\GEOTECHNICAL\GINT\ADA-41-32.GPJ

PROJECT: ADA-41-32.00	DRILLING FIRM / OPERATOR: TERRACON / TS	DRILL RIG: TRACK 0299	STATION / OFFSET: 1668+18, 12' LT.	EXPLORATION ID B-002-0-14
TYPE: LANDSLIDE	SAMPLING FIRM / LOGGER: TERRACON / RG	HAMMER: DIEDRICH AUTOMATIC	ALIGNMENT: SR-41	
PID: 97590 SFN:	DRILLING METHOD: 3.25" HSA / NQ2	CALIBRATION DATE: 10/23/14	ELEVATION: 754.6 (MSL) EOB: 24.5 ft.	PAGE 1 OF 1
START: 9/9/14 END: 9/9/14	SAMPLING METHOD: SPT / NQ2	ENERGY RATIO (%): 82.5	LAT / LONG: 39.015456, -83.377600	

MATERIAL DESCRIPTION AND NOTES	ELEV. 754.6	DEPTHS	SPT/ RQD	N_{60}	REC (%)	SAMPLE ID	HP (tsf)	GR	CS	FS	SI	CL	LL	PL	PI	WC	ODOT CLASS (GI)	BACK FILL
ASPHALT PAVEMENT (7 INCHES)	754.0																	
VERY STIFF, BROWN TO REDDISH-BROWN, **SILTY CLAY**, LITTLE GRAVEL, SOME SAND, MOIST	747.6	1–2	4 2 6	11	33	SS-1	-	-	-	-	-	-	-	-	-	7	A-6b (V)	
		3	3 2 2	6	33	SS-2	-	-	-	-	-	-	-	-	-	15	A-6b (V)	
		4–5	2 2 3	7	22	SS-3	2.50	22	15	9	29	25	33	17	16	22	A-6b (6)	
		6	2 3 4	10	22	SS-4	2.00	0	9	10	41	40	35	18	17	18	A-6b (11)	
VERY STIFF TO HARD, BROWN AND GRAY, **CLAY**, "AND" SILT, TRACE GRAVEL, TRACE SAND, MOIST		7–8	2 3 4	10	100	SS-5	2.50	4	2	1	32	61	49	23	26	21	A-7-6 (16)	
		9	3 4 6	14	67	SS-6	3.00	3	2	1	33	61	51	23	28	19	A-7-6 (17)	
@ 10.0' - 10.2'; γ = 118 pcf; Qu = 29 psi.		10	6 9 15	33	100	SS-7	4.00	1	0	1	40	58	51	25	26	14	A-7-6 (17)	
		11–12	6 10 30	55	100	SS-8	3.00	5	1	1	36	57	49	24	25	18	A-7-6 (16)	
	740.1	13–14	12 17 29	63	100	SS-9	4.50	13	4	3	40	40	43	22	21	11	A-7-6 (13)	
INTERBEDDED SHALE (90%) AND CLAYSTONE (10%); **SHALE**, GRAY, UNWEATHERED TO SLIGHTLY WEATHERED, VERY WEAK, LAMINATED; **CLAYSTONE**, REDDISH-BROWN, SLIGHTLY WEATHERED, VERY WEAK, VERY THIN BEDDED. @ 16.0' - 16.3'; γ = 136 pcf; Qu = 101 psi		TR 15	50		100	NQ2-1											CORE	
		16–20	80		90	NQ2-2											CORE	
		21–24	25		63	NQ2-3											CORE	
	730.1	EOB																

NOTES: WATER WAS USED IN DRILLING AT 14.5' FOR ROCK CORING. LAT/LONG/ELEV FROM DISTRICT SURVEY.

ABANDONMENT METHODS, MATERIALS, QUANTITIES: PLACED ASPHALT PATCH; BACKFILLED WITH AUGER CUTTINGS

STANDARD ODOT SOIL BORING LOG (8.5 X 11) - OH DOT GDT - 6/15/16 14:55 - I:\GT\PROJECTS\D09\ADAMS\ADA-41-32.00\GEOTECHNICAL\GINT\ADA-41-32.GPJ

ADA-41-32.00

LANDSLIDE EXPLORATION
BORING LOG B-001-0-14 & B-002-0-14

DRAWN GLM
CHECKED SAT

PROJECT: ADA-41-32.00	DRILLING FIRM / OPERATOR: TERRACON / TS	DRILL RIG: TRACK 0299	STATION / OFFSET: 1668+18, 12' RT.	EXPLORATION ID B-002-1-14
TYPE: LANDSLIDE	SAMPLING FIRM / LOGGER: TERRACON / RG	HAMMER: DIEDRICH AUTOMATIC	ALIGNMENT: SR-41	
PID: 97590 SFN:	DRILLING METHOD: 3.25" HSA / NQ2	CALIBRATION DATE: 10/23/14	ELEVATION: 753.8 (MSL) EOB: 20.0 ft.	PAGE 1 OF 1
START: 9/9/14 END: 9/9/14	SAMPLING METHOD: SPT / NQ2	ENERGY RATIO (%): 82.5	LAT / LONG: 39.015481, -83.377521	

MATERIAL DESCRIPTION AND NOTES	ELEV. 753.8	DEPTHS	SPT/ RQD	N_{60}	REC (%)	SAMPLE ID	HP (tsf)	GR	CS	FS	SI	CL	LL	PL	PI	WC	ODOT CLASS (GI)	BACK FILL
ASPHALT PAVEMENT (12 INCHES)	752.8																	
GRANULAR BASE (6 INCHES)	752.3																	
STIFF, REDDISH-BROWN AND GRAY, **SILTY CLAY**, TRACE SAND, TRACE GRAVEL, MOIST	751.3	1	19 16 4	28	33	SS-1	-	-	-	-	-	-	-	-	-	6	A-6b (V)	
VERY STIFF TO HARD, GRAY WITH REDDISH-BROWN MOTTLES, **CLAY**, "AND" SILT, TRACE GRAVEL, TRACE SAND, MOIST		2	3 2 3	7	33	SS-2	2.00	5	3	4	24	64	55	24	31	24	A-7-6 (19)	
		3	3 4 6	14	33	SS-3	3.50	1	1	2	30	66	59	26	33	21	A-7-6 (20)	
		4	3 6 14	28	67	SS-4	4.00	5	1	2	33	59	53	24	29	24	A-7-6 (18)	
		5	5 14 23	51	78	SS-5	4.50	4	1	1	29	65	55	25	30	14	A-7-6 (19)	
	743.8	6	10 17 28	62	100	SS-6	4.50	1	0	1	34	64	49	24	25	15	A-7-6 (16)	
INTERBEDDED SHALE (80%) AND CLAYSTONE (20%); **SHALE**, GRAY, UNWEATHERED TO SLIGHTLY WEATHERED, VERY WEAK, LAMINATED; **CLAYSTONE**, REDDISH-BROWN, SLIGHTLY WEATHERED, VERY WEAK, VERY THIN BEDDED.		TR	54		65	NQ2-1											CORE	
@ 14.0' - 14.4'; γ = 129 pcf; Qu = 44 psi.			20		37	NQ2-2											CORE	
	733.8	EOB	100		100	NQ2-3											CORE	

NOTES: WATER WAS USED IN DRILLING AT 10' FOR ROCK CORING. LAT/LONG/ELEV FROM DISTRICT SURVEY.

ABANDONMENT METHODS, MATERIALS, QUANTITIES: PLACED ASPHALT PATCH; BACKFILLED WITH AUGER CUTTINGS

STANDARD ODOT SOIL BORING LOG (8.5 X 11) - OH DOT.GDT - 6/15/16 14:55 - I:\GT\PROJECTS\D09\ADAMS\ADA-41-32.00\GEOTECHNICAL\GINT\ADA-41-32.GPJ

PROJECT: ADA-41-32.00	DRILLING FIRM / OPERATOR: TERRACON / TS	DRILL RIG: TRACK 0299	STATION / OFFSET: 1668+90, 12' LT.	EXPLORATION ID B-003-0-14
TYPE: LANDSLIDE	SAMPLING FIRM / LOGGER: TERRACON / RG	HAMMER: DIEDRICH AUTOMATIC	ALIGNMENT: SR-41	
PID: 97590 SFN:	DRILLING METHOD: 3.25" HSA / NQ2	CALIBRATION DATE: 10/23/14	ELEVATION: 753.3 (MSL) EOB: 23.0 ft.	PAGE 1 OF 1
START: 9/10/14 END: 9/10/14	SAMPLING METHOD: SPT / NQ2	ENERGY RATIO (%): 82.5	LAT / LONG: 39.015648, -83.377678	

MATERIAL DESCRIPTION AND NOTES	ELEV. 753.3	DEPTHS	SPT/ RQD	N_{60}	REC (%)	SAMPLE ID	HP (tsf)	GR	CS	FS	SI	CL	LL	PL	PI	WC	ODOT CLASS (GI)	BACK FILL
ASPHALT PAVEMENT (14 INCHES)	752.1																	
GRANULAR BASE (31 INCHES)	749.3	1	9 12 8	28	56	SS-1	-	-	-	-	-	-	-	-	-	5		
		2	6 7 3	14	56	SS-2	-	-	-	-	-	-	-	-	-	6		
STIFF, BROWN, **SILTY CLAY**, LITTLE GRAVEL, LITTLE SAND, MOIST Qu @ 5.5' = 1.86 tsf	747.8	3	3 2 3	7	33	SS-3	2.00	18	10	10	28	34	37	18	19	20	A-6b (9)	
VERY STIFF TO HARD, BROWN, **CLAY**, "AND" TO SOME SILT, TRACE GRAVEL, TRACE SAND, MOIST @ 5.5' - 5.7'; γ = 101 pcf; Qu = 310 psi.		4	3 3 3	8	33	SS-4	2.00	1	2	0	28	69	64	24	40	24	A-7-6 (20)	
		5	3 6 8	19	61	SS-5	4.00	2	0	1	33	64	50	24	26	21	A-7-6 (16)	
		6	6 9 15	33	100	SS-6	4.00	8	1	1	37	53	52	23	29	15	A-7-6 (18)	
		7	6 10 19	40	33	SS-7	4.50	9	3	2	35	51	-	-	-	14	A-7-6 (V)	
	740.3	TR	7 9 14	32	100	SS-8	4.50	4	0	1	95	0	45	21	24	17	A-7-6 (15)	
INTERBEDDED SHALE (85%) AND CLAYSTONE (15%); **SHALE**, GRAY, UNWEATHERED TO SLIGHTLY WEATHERED, VERY WEAK, LAMINATED; **CLAYSTONE**, REDDISH-BROWN, SLIGHTLY WEATHERED, VERY WEAK, VERY THIN BEDDED.			50		92	NQ2-1											CORE	
			12		72	NQ2-2											CORE	
@ 20.5' - 20.9'; γ = 135 pcf; Qu = 72 psi.			54		75	NQ2-3											CORE	
	730.3	EOB																

NOTES: WATER WAS USED IN DRILLING AT 13' FOR ROCK CORING. LAT/LONG/ELEV FROM DISTRICT SURVEY.

ABANDONMENT METHODS, MATERIALS, QUANTITIES: PLACED ASPHALT PATCH; BACKFILLED WITH AUGER CUTTINGS

STANDARD ODOT SOIL BORING LOG (8.5 X 11) - OH DOT.GDT - 6/15/16 14:55 - I:\GT\PROJECTS\D09\ADAMS\ADA-41-32.00\GEOTECHNICAL\GINT\ADA-41-32.GPJ

LANDSLIDE EXPLORATION
BORING LOGS B-002-1-14 & B-003-0-14

DRAWN GLM
CHECKED SAT