I-470-9(3)229

FED. RD. DIVISION	STATE	PROJECT	
5	OHIO	I-470-9(3) 229	

1 / 288

BELMONT COUNTY
BEL - 470 - 5.90

MICROFILMED
DEC 17 1985

STATE OF OHIO
DEPARTMENT OF TRANSPORTATION

MICROFILMED
1984

BEL-470-5.90
PULTNEY TWP.
BELMONT COUNTY
GRADE SEPARATION WITH
CONSOLIDATED RAIL CORPORATION - BALTIMORE & OHIO RAILROAD CO.

Sheets 209, 210, 220, & 226 revised 9-12-78 EBL
Sheets 215, 230 & 231 revised 9-12-77 EBL

CONVENTIONAL SIGNS

MICROFILMED
AUG 11 1986

State Line
Section Line
Center Line of Road
Existing Right of Way Line
Property Line
Limited Access & Right of Way — LA & RW
Limited Access Only — LA
Right of Way Only — RW
Corporation Line
Limits of Construction
202 Removal
Guard Rail (Existing)
Guard Rail (Proposed)
Power Pole
Telephone Pole
Fire Hydrant
Fence Line
Railroad — or
Trees or Stumps
Jute Matting
Township Line
Proposed Pipe
Proposed Pipe (Quant. Shown on Other Dwgs.)
Existing Pipe
Water Line — W
Gas Line — G

INDEX OF SHEET

Title Sheet	1
Schematic Plan and Design Designation	2
Typical Sections	3 – 7
General Notes	8 – 9A
General Summary	10 – 13
Calculation	14 – 16
Plan & Profiles	17 – 42
Cross Sections (Mainline)	43 – 74
Cross Sections (Ramps, Side Roads & Channels)	75 – 136
Concrete Barrier Detail	137
Miscellaneous Details	138 & 138A
Intersection Details	139 – 143
S.R. 7 Median Detail	144
Geometric Layout	145 – 146
References	147 – 148
Cross Section Layout & Interch. Grading Plan	149
Culvert Details Under 20' Span	150 – 155
Debris Trap	156
Storm Sewer Details	157 – 160
Superelevation Tables	161 – 163
Traffic Control	164 – 166, 169 – 174
Structures Over 20' Span	189 – 254, 189A
Lighting	255 – 267
Right-of-Way	268 – 288

SHEETS NOT USED
167, 168, 175–188

LINE DATA

Begin Project Sta. 1429+00	
End Project Sta. 1468+69.60	
Net Length of Project	3969.60 Lin. Ft. or 0.751 Miles
Begin Work Sta. 1426+13	
End Work Sta. 1468+69.60	4256.00 Lin. Ft. or 0.806 Miles
S.R. 7 (N.B. Stations)	
Begin Work Sta. 941+36	
Eq. Sta. 942+96 Bk. = Sta. 51+35.76 Ah.	
End Work Sta. 99+50	4974.24 Lin. Ft. or 0.942 Miles
Add For Sign Erection	
S.R. 7 Sta. 931+40 To Sta. 931+60	20 Lin. Ft.
S.R. 7 Sta. 113+80 To Sta. 114+00	20 Lin. Ft.
Net Length of Work	9270.34 Lin. Ft. or 1.755 Miles

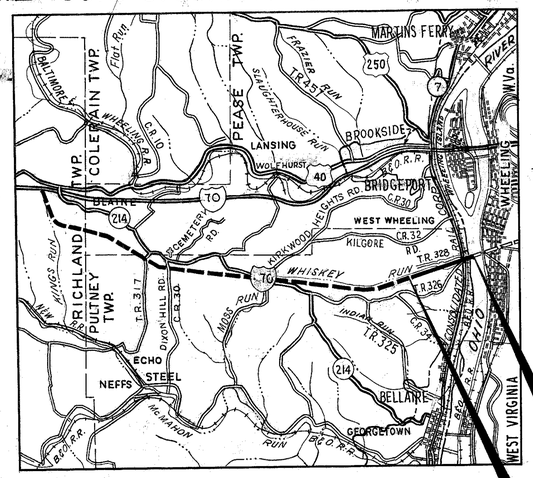

LOCATION MAP

Scale 1/2 0 1 2 3 4 in Miles

Portion To Be Improved
Future Construction
Interstate Routes — 70
Federal Routes — 40
State Routes — 214
Other Roads

SCALES IN FEET

Plan 50 25 0 50
Profile Hor. 50 25 0 50
Profile Vert. 10 5 0 10
Cross Sections 10 5 0 10
Profile Vert. 5 0 5

End Project
I-470-9(3) 229
Sta. 1468+69.60

Begin Project
I-470-9(3) 229
Sta. 1429+00

TC-21.41	8-19-77
HL-4	1-21-76
TC-41.10	8-19-77
TC-42.10	8-19-77
TC-72.20	8-29-77
TC-7.65	10-1-74
TC-12.30	10-1-74
TC-18.24	10-1-74
TC-21.10	10-1-74
TC-21.40	8-19-77
TC-22.10	10-1-74
TC-31.20	8-27-76
TC-32.10	8-27-76
TC-32.11	8-27-76
TC-41.20	4-1-77
TC-41.50	4-1-77
TC-42.20	4-1-77
TC-51.10	6-2-75
TC-51.11	6-2-75
TC-52.10	4-1-77
TC-52.20	4-1-77
HL-10	1-21-76
HL-11	4-6-73
HL-12	4-6-73
HL-15	1-21-76
HL-16	4-6-73
HL-19	3-22-77
MC-10	5-1-76
MH-5	6-12-75
HL-2	7-27-73
BP-10	1-3-75
CB-3	1-1-76
F-4	5-1-76
F-5	5-1-76
HL-3	7-27-73
TC-61.10	8-19-77
HL-5	9-6-73
TC-71.10	12-1-75

SUPPLEMENTAL PRINTS OF STANDARD CONSTRUCTION DRAWINGS

BP-1	6-1-65	CB-8	9-1-69	HL-1	9-6-73	MC-7	10-15-76	808	1-1-71
BP-2	12-6-76	F-2	5-1-76	HL-7	1-21-76	MH-1	6-12-75	801	4-25-77
BP-3	12-6-76	F-3	5-1-76	HL-9	3-22-77	HL-8	1-21-76	844	11-8-74
BP-4	12-6-76	F-6	5-1-76	HW-1	6-1-65	DBR-1-71	1-1-71	9713	1-11-74
BP-7	12-6-76	GR-1	12-6-76	HW-4	1-1-70	RB-1-55	2-2-59	9625	1-11-74
BP-9	12-6-76	I-3	1-1-77	I-2	6-6-69	AS-1-72	6-30-72	836	3-12-75
BP-5	8-11-76	GR-3 & GR-3A	12-6-76	L-1	6-1-73	BR-1-67	10-15-71	839	11-25-70
CB-458A	6-6-68	GR-4	12-6-76	MC-1	6-13-69	SD-1-69	6-12-69	847	4-3-76
CB-4	9-1-69	GR-2B	12-6-76	MC-3	6-1-73	I-2A	6-6-69	927	1-1-71
CB-5	9-1-69	GR-5	1-1-71	MC-4	7-26-76	MC-9	11-1-77	1001	1-3-77
CB-6	6-1-65	GR-6	1-1-71	MC-6	6-1-65	GR-4A	12-6-76	846	4-25-77
								950	4-25-77
								951	4-25-77

SUPPLEMENTAL SPECIFICATIONS

LIMITED ACCESS

This improvement is especially designed for through traffic and has been declared a limited access highway or freeway, by action of the Director of Highways in accordance with provisions of Section 5511.02 of the Revised Code of Ohio.

The standard specifications of the State of Ohio, Department of Transportation, including changes and Supplemental Specifications listed in the proposal shall govern this improvment.

The right of way for this improvement will be provided by the State of Ohio.

I hereby approve these plans and declare that the making of this improvement will not require the closing of the highway to traffic, and that provisions for the maintenance and safety of traffic will be as set forth on the plans and estimates.

1977 SPECIFICATIONS

Approved C. Clark Street
Date 5-12-77 District Deputy Director of Transportation

Approved Robert B. Pfeifer
Date 10-18-77 Engineer, Bureau of Bridges and Structural Design

Approved R. E. Sutter
Date 12-14-77 Chief Engineer, Planning and Design

Approved Dave L. Weir
Date 12-30-77 Director, Department of Transportation

MICHAEL BAKER, JR.
Consulting Engineers
4301 Dutch Ridge Rd.
Beaver, Pennsylvania 15009
Michael Baker Jr. P.E.
REG. PROF. ENGR.
Ohio 9065
April 12, 1974
Date

DEPARTMENT OF TRANSPORTATION
FEDERAL HIGHWAY ADMINISTRATION

APPROVED

DIVISION ADMINISTRATOR — DATE

FILE NO.	BELMONT COUNTY	BEL-470-5.90
	Date of Letting	197
	Contract No	

FED. RD. DIVISION	STATE	PROJECT	
5	OHIO		

2/288

BELMONT COUNTY
BEL-470-5.90

MICROFILMED
AUG 11 1993

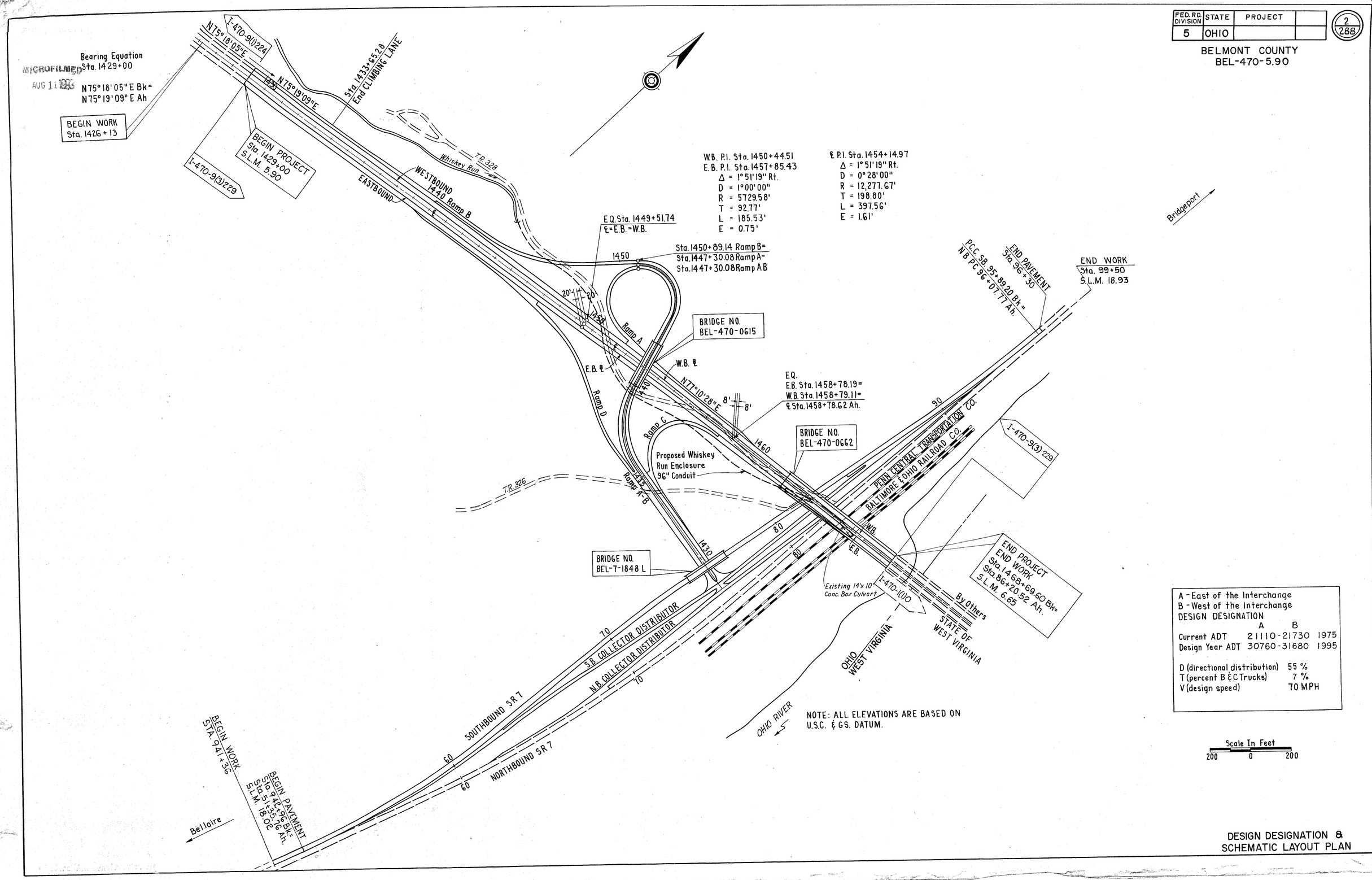

A - East of the Interchange
B - West of the Interchange
DESIGN DESIGNATION

	A	B	
Current ADT	21110	21730	1975
Design Year ADT	30760	31680	1995

D (directional distribution)	55 %
T (percent B & C Trucks)	7 %
V (design speed)	70 MPH

DESIGN DESIGNATION &
SCHEMATIC LAYOUT PLAN

FED. RD. DIVISION	STATE	PROJECT	
5	OHIO		

3
288

BELMONT COUNTY
BEL-470- 5.90

TYPICAL SECTIONS
TYPE 404 on 801
CODE TYPE 6707

LEGEND

1. 404 1¼" Asphalt Concrete (AC-20)
2. 402 1¾" Asphalt Concrete (AC-20)
3. 801 9" Portland Cement Concrete Base
4. 310 Subbase, Grading A, As Per Plan
5. 407 Tack Coat 702.04, SS-1, SS-1h, MS-2 or RS-1; or 702.02 RC-250 applied at the rate of 0.1 gal. per sq. yd.
6. 409 Seal Coat 702.09 RT-9 or RT-10; 702.02 MC-800 or MC-3000, 702.04 RS-1, RS-2, or CRS-2; or 702.03 CRS-1 CBAE 800 applied at the rate of 0.3 gal. per sq. yd. and No. 8 aggregate applied at the rate of 0.008 cu. yds. per sq. yd.
8. 301 6" Bituminous Aggregate Base 702.01 AC-20 or 702.09 RT-11 or RT-12
9. 606 Guard Rail, Type 5
10. Standard Longitudinal Joints
15. See Sheet No. 6 For Ditch & Slope
11. 605 6" Pipe Underdrain

Scale in Feet
10 8 6 4 2 0 2 4 6 8 10

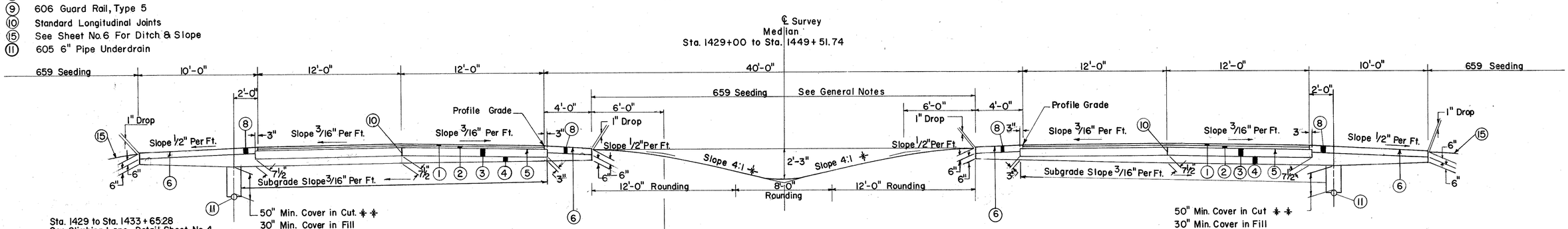

NORMAL SECTION

Sta. 1429+00 to Sta. 1451+60.00 Eastbound
Sta. 1429+00 to Sta. 1447+99.74 Westbound

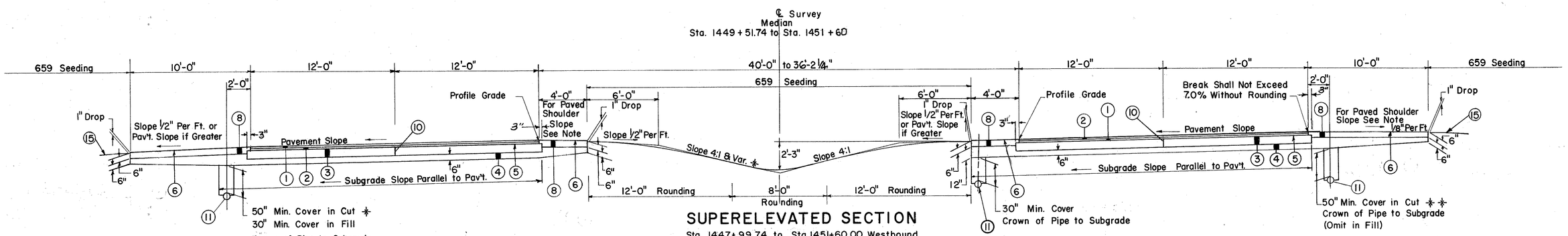

SUPERELEVATED SECTION

Sta. 1447+99.74 to Sta. 1451+60.00 Westbound
(For Pavement Edge Elevations See Superelevation Tables on Sheet No. 161)

NOTE: Superelevated Paved Shoulders

The upper outside paved shoulder shall slope away from the pavement at the rate of ½" per ft. until the angle between the shoulder and pavement reaches 7.0% (Shoulder Slope ⅛" per ft.) after which the same angle shall be maintained until the slope of the shoulder would be less than ⅛" per ft., after which the pavement slope and shoulder shall be joined by a gentle 5' Rounding.

The upper median paved shoulders shall slope away from the pavement at the rate of ½" per ft. until the maximum break between pavement and paved shoulder 7.% is reached, then the shoulder shall be rounded with both edges at the same elevation as the pavement edge.

SEQUENCE OF OPERATION

1 - Install pipe underdrain on outside shoulder, where required. Installation of shallow underdrain in median may be deferred until 801 is placed.

2 - Place Subbase out to outside edge of underdrain or to one foot beyond edge of 801 where no underdrain is present.

3 - Construct 801

4 - Completion of the shoulder construction shall proceed as paving operations are completed.

✱ or as shown on Cross Sections
✱✱ Underdrain in Rock Cut, See Rock Cut Typicals

FED. RD. DIVISION	STATE	PROJECT	
5	OHIO		

4
288

BELMONT COUNTY
BEL-470-5.90

TYPICAL SECTIONS
TYPE 404 on 801
CODE TYPE 6707

LEGEND

1. 404 1¼" Asphalt Concrete (AC-20)
2. 402 1¾" Asphalt Concrete (AC-20)
3. 801 9" Portland Cement Concrete Base
4. 310 Subbase, Grading A, As Per Plan
5. 407 Tack Coat 702.04, SS-1, SS-1h, MS-2 or RS-1; or 702.02 RC-250 applied at the rate of 0.1 gal. per. sq. yd.
6. 409 Seal Coat 702.09 RT-9 or RT-10; 702.02 MC-800 or MC-3000, 702.04 RS-1, RS-2, or CRS-2; or 702.03 CBAE 800 applied at the rate of 0.3 gal. per sq. yd. and No. 8 aggregate applied at the rate of 0.008 cu. yds. per sq. yd.

8. 301 6" Bituminous Aggregate Base 702.01 AC-20 or 702.09 RT-11 or RT-12
10. Standard Longitudinal Joints
11. 605 6" Pipe Underdrain

15. See Sheet No. 6 For Ditch & Slope
17. 622 Concrete Barrier

Scale in Feet
10 8 6 4 2 0 2 4 6 8 10

NOTE:
For paved median and median shoulder see detail sheet No. 137

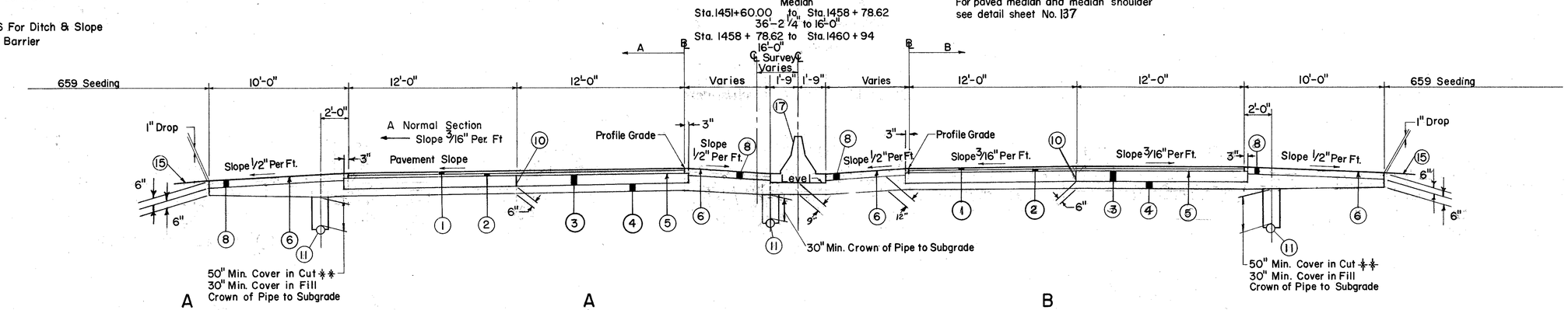

A NORMAL SECTION

Sta. 1458 + 78.19 to Sta. 1462 + 49.30 Eastbound
Bridge & Appoach Slab-Sta. 1462 + 49.30 to Sta. 1468 + 65.08 Eastbound
Sta. 1460 + 94 to Sta. 1462 + 49.30 Westbound
Bridge & Appoach Slab-Sta. 1462 + 49.30 to Sta. 1468 + 65.08 Westbound

A SUPERELEVATED SECTION

Sta. 1455+40.66 to Sta. 1458 + 78.19 Eastbound
Sta. 1451 + 60.00 to Sta. 1452 + 89.27 Westbound
(For Pavement Edge Elevations See Superelevation Tables on Sheet No. 161)

B NORMAL SECTION

Sta. 1451 + 60.00 to Sta. 1455 + 40.66 Eastbound
Sta. 1452 + 89.27 to Sta. 1460 + 94 Westbound

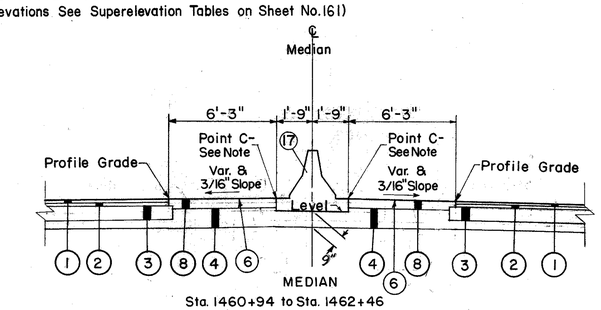

Sta. 1460+94 to Sta. 1462+46
NOTE: Point C Trans. Profile Grade-0.21 to +0.08
Sta. 1462+46 to Sta. 1462+74.30
NOTE: Point C Profile Grade +0.09

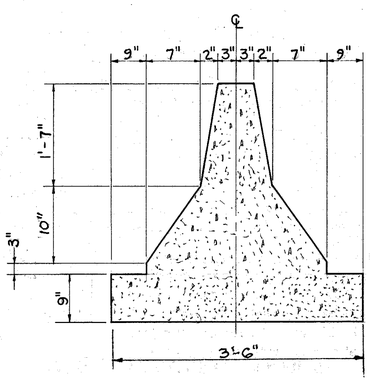

DETAIL OF CONCRETE MEDIAN

For Details not shown, see Std. Drawing MC-9

NOTE:
The concrete barrier shall be constructed as shown on this detail and as shown on the Standard Drawings.

A transition will be required on the approach slab as shown on sheet 138A to fit the bridge details.

✱ or as shown on cross sections

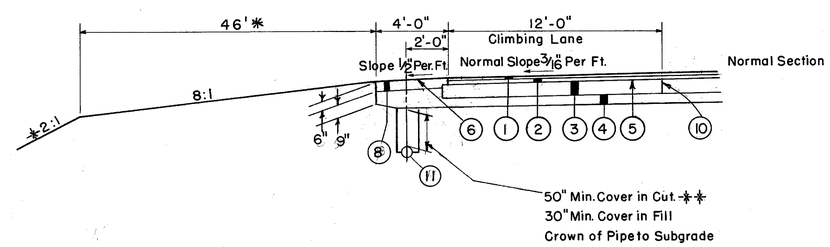

DETAIL FILL SECTION CLIMBING LANE

Sta. 1429+00 to Sta. 1433+65.28

FED. RD. DIVISION	STATE	PROJECT	
5	OHIO		

5 / 288

BELMONT COUNTY
BEL - 470 - 5.90

TYPICAL SECTIONS
TYPE 404 on 801
CODE TYPE 6707

Scale in Feet
10 8 6 4 2 0 2 4 6 8 10

LEGEND

1. 404 1¼" Asphalt Concrete, AC-20
2. 402 1¾" Asphalt Concrete, AC-20
3. 801 9" Portland Cement Concrete Base
4. 310 Subbase, Grading A, as per plan
5. 407 Tack Coat 702.04, SS-1, SS-1h, MS-2 or RS-1; or 702.02 RC-250 applied at the rate of 0.1 gal. per sq. yd.
6. 409 Seal Coat 702.09 RT-9 or RT-10, 702.02 MC-800 or MC-3000; 702.04 RS-1, RS-2, or CRS-2; or 702.03 CBAE 800 applied at the rate of 0.3 gal. per sq.yd. and № 8 Aggr. applied at the rate of 0.008 cu.yds. per sq. yd.
8. 301 6" Bituminous Aggregate Base 702.01 AC-20 or 702.09 RT-11 or RT-12
9. 606 Guard Rail, Type 5
10. Standard Longitudinal Joints
11. 605 6" Pipe Underdrain
17. 622 Concrete Barrier
18. 612 Concrete Median

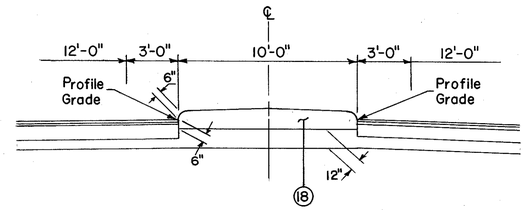

⊗ Sta. 1428+71.14 to Sta. 1429+33.5

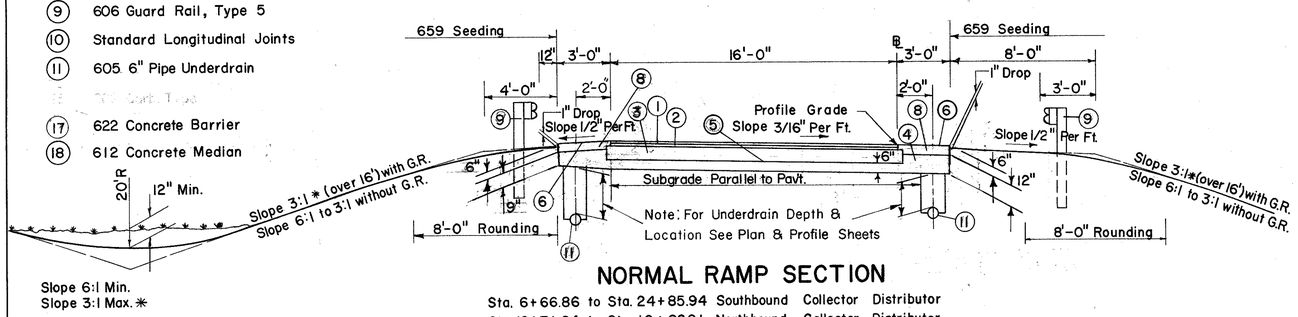

NORMAL RAMP SECTION

Sta. 6+66.86 to Sta. 24+85.94 Southbound Collector Distributor
Sta. 10+71.94 to Sta. 19+82.21 Northbound Collector Distributor

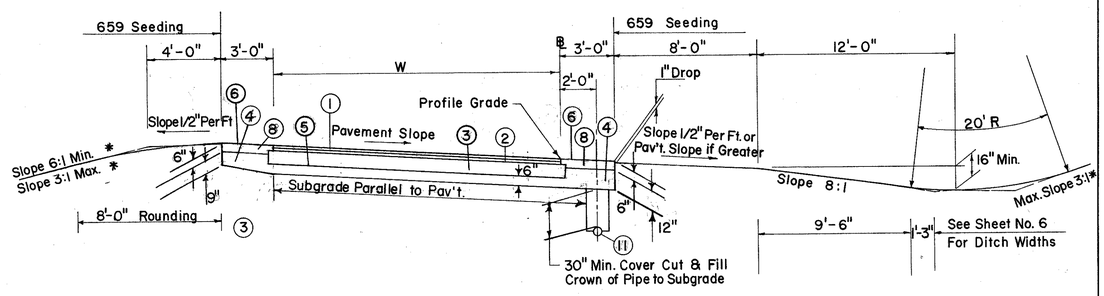

SUPERELEVATED RAMP SECTION

RAMP A
Sta. 1447+80.50 to Sta. 1451+63.19 W=18'-0"
RAMP B
Sta. 1443+89.28 to Sta. 1450+34 W=16'-0"
RAMP C
Sta. 1453+07.51 to Sta. 1457+14.55 W=18'-0"
RAMP D
Sta. 1446+90.87 to Sta. 1455+65.89 W=16'-0"

Southbound Collector Distributor
Sta. 4+00 to Sta. 6+66.86 W=16'-0"

Northbound Collector Distributor
Sta. 9+41.04 to Sta. 10+71.94
Sta. 19+82.21 to Sta. 21+95.57 W=16'-0"

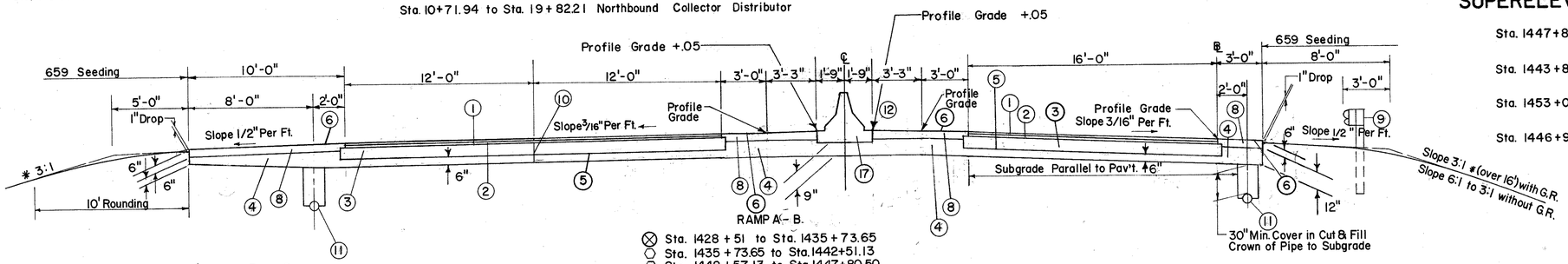

⊗ Sta. 1428 + 51 to Sta. 1435 + 73.65
○ Sta. 1435 + 73.65 to Sta. 1442+51.13
○ Sta. 1442 + 57.13 to Sta. 1447+80.50

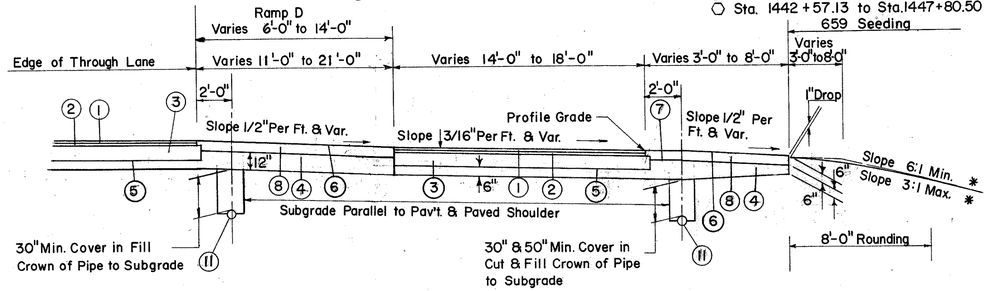

ENTRANCE RAMP TERMINAL

RAMP B
Sta. 1439 + 89.28 to Sta. 1443 + 89.28
RAMP C
Sta. 1457 + 14.55 to Sta. 1458 + 14.55
RAMP D
Sta. 1455 + 65.89 to Sta. 1456 + 65.89

Southbound Collector Distributor
Sta. 3 + 00 to Sta. 4 + 00

Northbound Collector Distributor
Sta. 21 + 95.57 to Sta. 22 + 95.57

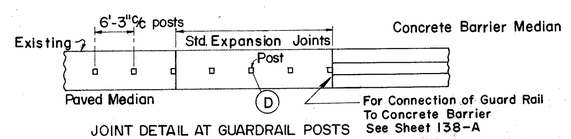

JOINT DETAIL AT GUARDRAIL POSTS

NOTES

In lieu of the spacing requirements of Standard Drawing MC-6, expansion and contraction joints shall be provided in the concrete median as required hereon whenever guardrail is specified.

¼" expansion joints 705.03, shall be provided at each construction joint, at each end of each inlet and approximately 20 feet and 60 feet beyond each approach slab, cost included with 612 for payment.

Construction joints shall conform with details shown on Standard Drawing BP-4 801 Base. Joint opening shall not extend below surface of shoulder paving.

Circular or square openings maybe cast in the median paving so that guard-rail post may be installed later. Maximum dimensions for openings shall be 18" diameter or 18" square. Remaining space shall be filled with 1:3 grout or Class C Concrete.

(D) For square-sawed wood posts ¼" 705.03 expansion joint material shall be used on all four sides for the depth of median. When steel posts are used, a coating of an oil such as S.A.E. 140 or other "bond-breaking" material shall be applied to the depth of median prior to placing the concrete. Payment shall be included in 612.

PAVED BARRIER MEDIAN

For Location See Detail Sheet № 144

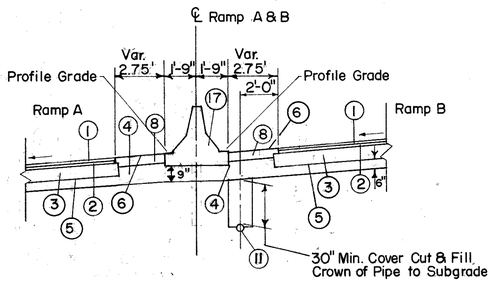

TYPICAL RAMP A-B PAVED MEDIAN
○ Sta. 1435+73.65 to Sta. 1439 + 65.09
Sta. 1439+ 65.09 to Sta. 1442 + 57.13 – Bridge & Approach Slab
○ Sta. 1442+ 57.13 to Sta. 1447 + 80.50 - Ramp A

Typical Sections Are Shown With Traffic
* Or As Shown on Cross Sections

TYPICAL SECTIONS

FED. RD. DIVISION	STATE	PROJECT	
5	OHIO		

6
288

BELMONT COUNTY
BEL-470-5.90

TYPICAL SECTIONS
TYPE 404 on 801
CODE TYPE 6707

Scale in Feet
10 8 6 4 2 0 2 4 6 8 10

LEGEND

1. 404 1¼" Asphalt Concrete (AC-20)
2. 402 1¾" Asphalt Concrete (AC-20)
3. 801 9" Portland Cement Concrete Base
4. 310 Subbase, Grading A, As Per Plan
5. 407 Tack Coat 702.04, SS-1, SS-1h, MS-2 or RS-1; or 702.02 RC-250 applied at the rate of 0.1 gal. per sq. yd.
6. 409 Seal Coat 702.09 RT-9 or RT-10; 702.02 MC-800 or MC-3000, 702.04 RS-1, RS-2, or CRS-2; or 702.03 CBAE 800 applied at the rate of 0.3 gal. per sq. yd. and No. 8 aggregate applied at the rate of 0.008 cu. yds. per sq. yd.
8. 301 6" Bituminous Aggregate Base 702.01 AC-20 or 702.09 RT-11 or RT-12
9. 606 Guard Rail, Type 5
10. Standard Longitudinal Joints
11. 605 6" Pipe Underdrain

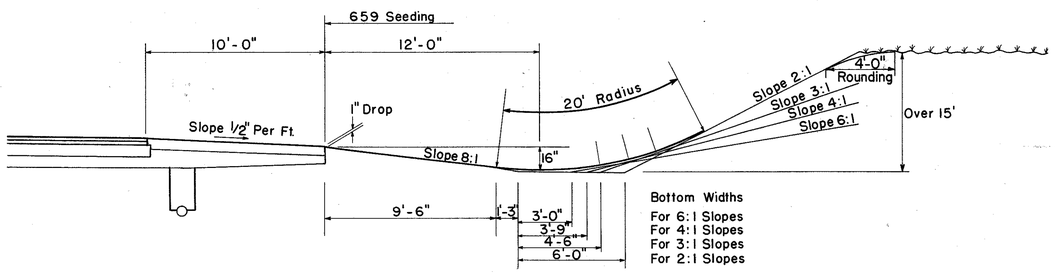

DETAIL CUT SECTION

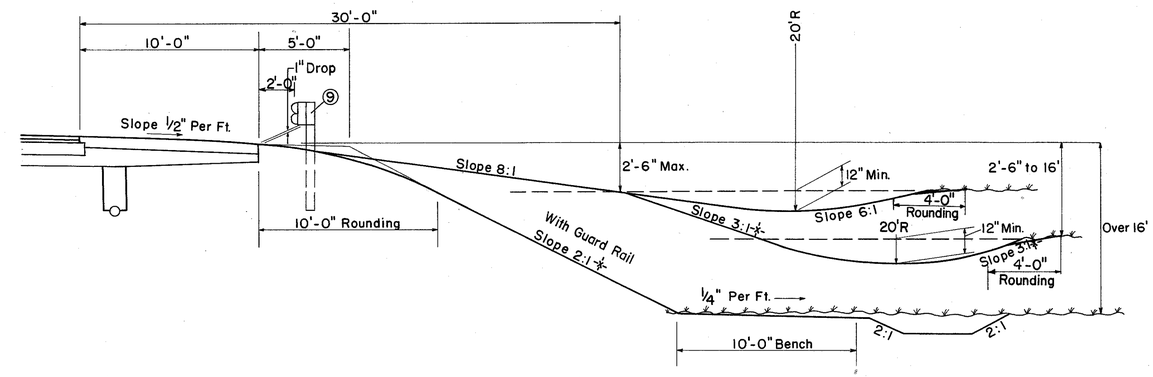

DETAIL FILL SECTION

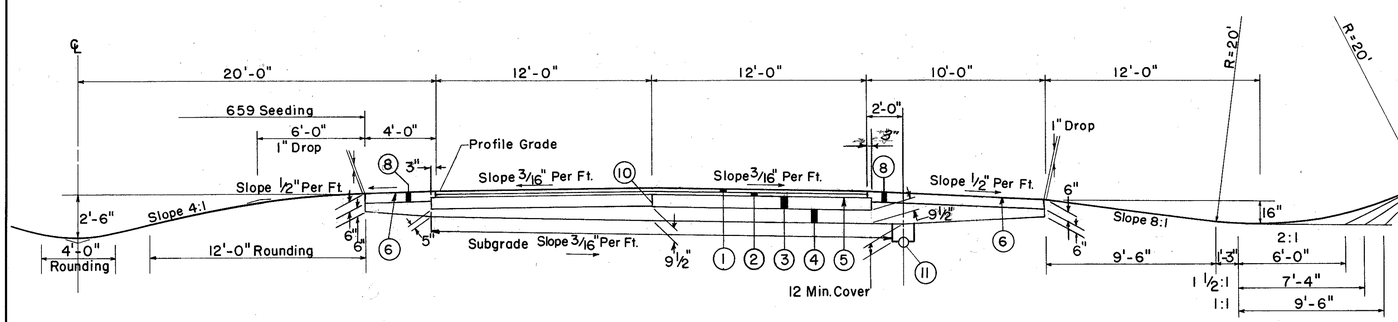

NORMAL SECTION - ROCK CUT
(For Treatment of Subbase of Superelevated Sections See Sheet No. 3)

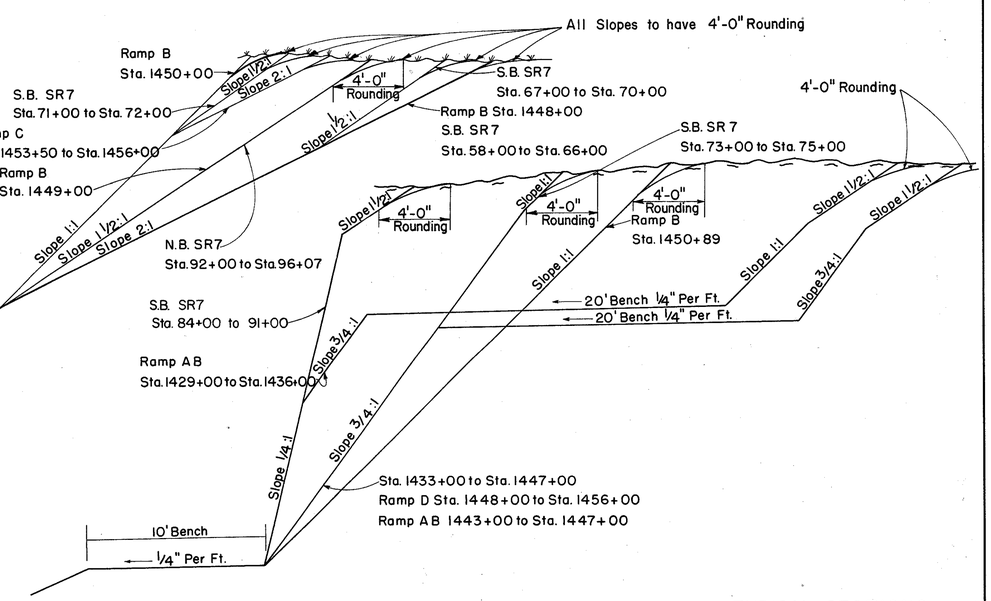

-✳- or as shown on Cross Sections

TYPICAL SECTIONS

FED. RD. DIVISION	STATE	PROJECT	
5	OHIO		

7 / 288

BELMONT COUNTY
BEL-470-5.90

TYPICAL SECTIONS
TYPE 404 on 801
CODE TYPE 6707

Scale in Feet
10 8 6 4 2 0 2 4 6 8 10

LEGEND

1. 404 1¼" Asphalt Concrete (AC-20)
2. 402 1¾" Asphalt Concrete (AC-20)
3. 801 9" Portland Cement Concrete Base
4. 310 Subbase, Grading A, As Per Plan
5. 407 Tack Coat 702.04, SS-1, SS-1h, MS-2 or RS-1; or 702.02 RC-250 applied at the rate of 0.1 gal. per sq. yd.
6. 409 Seal Coat 702.09 RT-9 or RT-10; 702.02 MC-800 or MC-3000, 702.04 RS-1, RS-2 or CRS-2 (CRS-1); or 702.03 CBAE 800 applied at the rate of 0.3 gal. per sq. yd. and No. 8 aggregate applied at the rate of 0.008 cu. yds. per sq. yd.
8. 301 6" Bituminous Aggregate Base 702.01 AC-20 or 702.09 RT-11 or RT-12
9. 606 Guard Rail, Type 5
10. Standard Longitudinal Joints
11. 605 6" Pipe Underdrain
12. 451 Reinforced Portland Cement Concrete Pavement
15. See Sheet No. 6 For Ditch & Slope
16. 605 Aggregate Drains
17. 622 Concrete Barrier

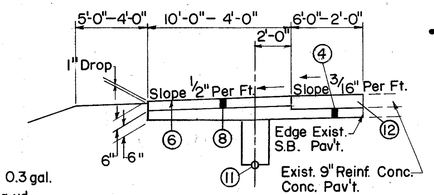

TYPICAL SECTION
S.R. 7 SOUTHBOUND PAVEMENT TAPER
Sta. 941+36 to Sta. 942+96 Bk.= Sta. 51+35.76 Ah.

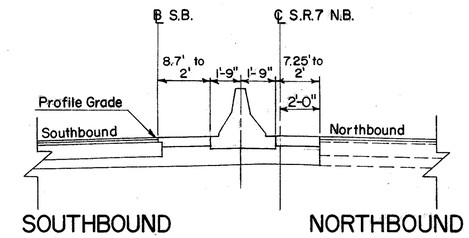

⊗ PAVED MEDIAN DETAIL
See Median Details Sheet № 144

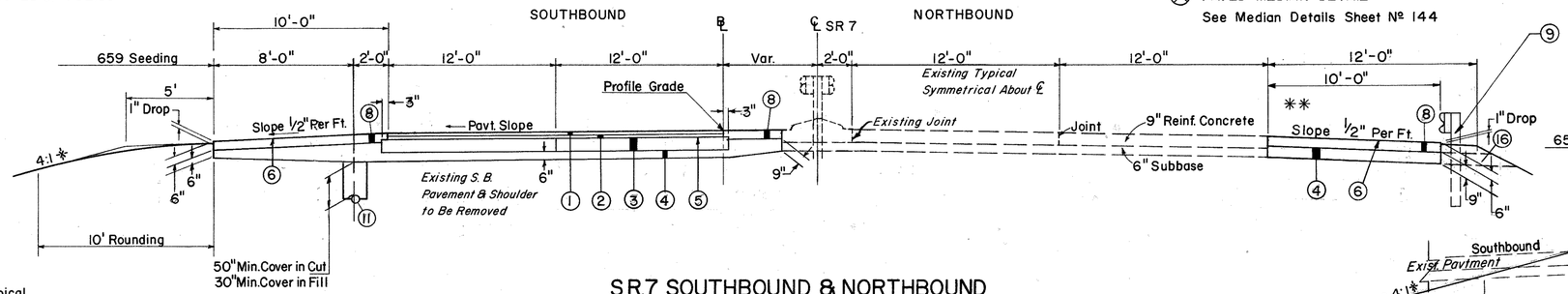

See Typical Detail Cut Section Sheet No. 6

S.R.7 SOUTHBOUND & NORTHBOUND
N.B. & S.B. Sta. 51+35.76 to Sta. 54+35.76 (Existing Median to Remain)

** N.B. Sta. 54+35.76 to Sta. 90+02.40 (10' Paved Shoulder)

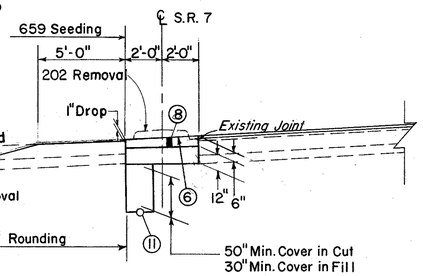

S.R.7 NORTHBOUND
Sta. 54+35.76 to Sta. 80+40

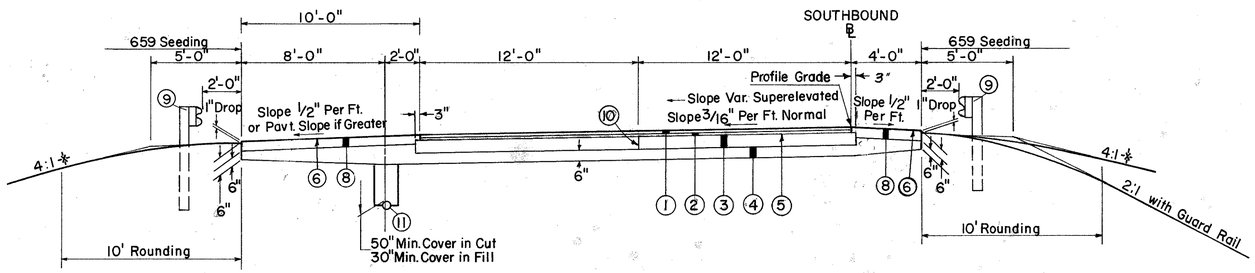

S.R.7 SOUTHBOUND

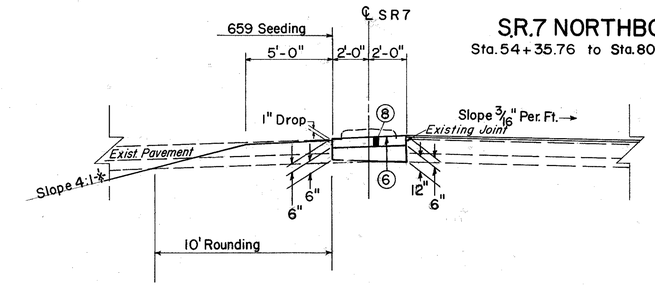

S.R.7 NORTHBOUND
Sta. 80+40 to Sta. 90+02.40

SUPERELEVATED SECTION
Sta. 54+35.76 to Sta. 61+30.03
* Sta. 68+88.96 to Sta. 74+78.89
Sta. 74+78.89 to Sta. 76+85.39 Approach Slab & Bridge

NORMAL SECTION
Sta. 61+30.03 to Sta. 68+88.96
Sta. 76+85.39 to Sta. 89+89.42

NOTE
** For Paved Shoulder Detail see I-470 Superelevated Section on Sheet № 3.

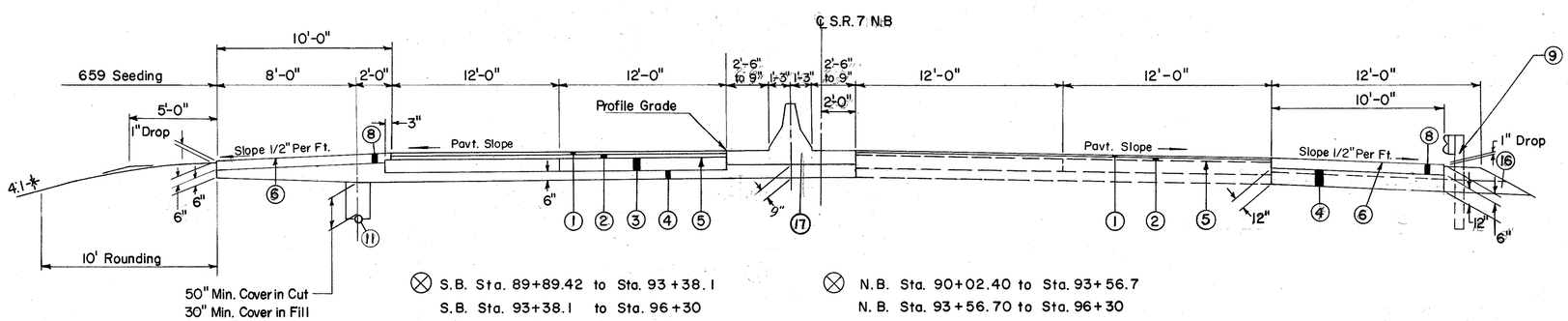

⊗ S.B. Sta. 89+89.42 to Sta. 93+38.1
S.B. Sta. 93+38.1 to Sta. 96+30

⊗ N.B. Sta. 90+02.40 to Sta. 93+56.7
N.B. Sta. 93+56.70 to Sta. 96+30

* Or As Shown On Cross Section Plan

GENERAL NOTES

FIELD OFFICE

THE CONTRACTOR SHALL PROVIDE A MINIMUM OF EIGHT-HUNDRED (800) SQUARE FEET OF FLOOR SPACE FOR THE FIELD OFFICE AND IN ADDITION TO THE REQUIREMENTS OF ITEM 619 PROVIDE AND MAINTAIN SANITARY PROVISIONS AS PER 107.06. ALL THE ABOVE IS INCLUDED IN THE LUMP SUM PRICE BID FOR ITEM 619. "FIELD OFFICE".

UNDERGROUND UTILILITIES

THE LOCATIONS OF THE UNDERGROUND UTILITIES SHOWN ON THE PLANS HAVE BEEN OBTAINED BY DILIGENT FIELD CHECKS AND SEARCHES OF AVAILABLE RECORDS. IT IS BELIEVED THAT THEY ARE ESSENTIALLY CORRECT, BUT THE STATE OF OHIO DOES NOT GUARANTEE THEIR ACCURACY OR COMPLETENESS.

ESTIMATED QUANTITIES

SPECIFIC LOCATIONS AND USAGE OF ESTIMATED QUANTITIES SET UP ON THIS PLAN TO BE USED "AS DIRECTED BY THE ENGINEER" SHALL BE MADE A MATTER OF RECORD BY INCORPORATION INTO THE FINAL CHANGE ORDER GOVERNING COMPLETION OF THIS PROJECT. THIS NOTE SHALL APPLY TO ALL CONTINGENCY ITEMS. THE ESTIMATED QUANTITIES SHALL NOT BE ORDERED UNTIL SO DIRECTED BY THE ENGINEER.

CONSTRUCTION SIGNING

ALL CONSTRUCTION SIGNING SHALL CONFORM TO "OHIO MANUAL OF UNIFORM TRAFFIC CONTROL DEVICES FOR STREETS AND HIGHWAYS, CURRENT EDITION, LATEST REVISION" EVEN THOUGH THE SIGN MAY BE LOCATED BEYOND THE WORK LIMITS.

UTILITIES: The Contractor shall notify, at least seven (7) days before breaking ground, all public service corporations having wire, poles, pipes, conduit, manholes or other structures which may be affected by the operation, including all structures which are affected and not shown on these plans. He shall conduct his operations in such a manner as to avoid damage to any and all utilities.

Any and all work required for public or private utilities will be done by and at the expense of their respective owners unless otherwise noted on these plans. Following is a list of utilities within the limits of this project.

PUBLIC UTILITIES AFFECTED

THE CONTRACTOR SHALL NOTIFY, AT LEAST SEVEN(7) DAYS IN ADVANCE OF GROUNDBREAKING ALL OWNERS OF UTILITIES BEING AFFECTED BY THE PROJECT.

OHIO BELL TELEPHONE COMPANY	-	*150 E. Gay St 11-F. Columbus, Ohio 43215*
OHIO POWER COMPANY	-	301-321 CLEVELAND AVENUE, S.W. CANTON, OHIO *44701*
BELMONT COUNTY SANITARY SEWER DISTRICT NO. 3.	-	COURT HOUSE ST. CLAIRSVILLE, OHIO
Columbia Gas Transmission Corp.	-	*P.O. Box 1273 Charleston, W.V.A. 25325*
Columbia Gas of Ohio Inc.	-	99 NORTH FRONT STREET COLUMBUS, OHIO *43215*
BELLAIRE WATER AUTHORITY	-	MUNICIPAL BUILDING BELLAIRE, OHIO

REFERENCE TO PENN CENTRAL TRANSPORTATION COMPANY

REFERENCES TO PENN. CENTRAL TRANSPORTATION COMPANY APPEARING IN THESE PLANS SHALL BE CONSIDERED TO READ CONSOLIDATED RAIL CORPORATION.

PAVEMENT REMOVAL OUTSIDE NORMAL CONSTRUCTION LIMITS

THE EXISTING PAVEMENT AS INDICATED ON THE PLANS SHALL BE REMOVED AND DISPOSED OF, THE OLD ROADWAY GRADED TO THE LEVEL OF THE SURROUNDING GROUND, THE OLD DITCHES FILLED, AND THE DISTURBED AREAS SLOPED TO DRAIN AND LEFT IN A NEAT CONDITION READY FOR SEEDING. SEEDING SHALL BE MEASURED AND PAID FOR IN ACCORDANCE WITH ITEM 659, SEEDING AND MULCHING. PAYMENT FOR THE ABOVE WORK, EXCEPT SEEDING SHALL BE INCLUDED IN THE UNIT PRICE BID FOR ITEM 202.

BENCHING OF FOUNDATION SLOPES

ALTHOUGH CROSS SECTIONS ON THIS PLAN INDICATE SPECIFIC WIDTHS AND DEPTHS OF PROPOSED BENCHING OF THE EMBANKMENT FOUNDATION IN CERTAIN AREAS, NO WAIVER OF THE SPECIFICATIONS IS INTENDED AND ALL OTHER SLOPED FOUNDATION AREAS SHALL BE BENCHED AS SET FORTH IN 203.09. NO ADDITIONAL PAYMENT WILL BE MADE FOR BENCHING REQUIRED BY THE PROVISIONS OF 203.09.

ITEM 659, "SEEDING AND MULCHING"

MAINLINE:

QUANTITIES FOR SEEDING ARE CALCULATED FOR THE SOIL AREAS BETWEEN THE RIGHT-OF-WAY FENCE LINES, BETWEEN THE RIGHT-OF-WAY LINES IN UNFENCED AREAS AND WITHIN THE WORK LIMITS FOR AREAS OUTSIDE THE RIGHT-OF-WAY LINES COVERED BY WORK AGREEMENT OR SLOPE EASEMENT.

INTERSECTING ROADS:

QUANTITIES FOR SEEDING ARE CALCULATED FOR THE SOIL AREAS BETWEEN LINES TEN (10) FEET OUTSIDE THE WORK LIMITS, AS SHOWN ON THE CROSS SECTIONS OR TO THE RIGHT-OF-WAY LINE IF SUCH LINE IS LESS THAN TEN (10) FEET FROM THE WORK LIMITS.

CONTRACTION AND EXPANSION JOINTS

ALTHOUGH SPECIFIC LOCATIONS OF CERTAIN EXPANSION AND CONTRACTION JOINTS HAVE BEEN DETAILED ON THIS PLAN, NO WAIVER OF THE SPECIFICATIONS IS INTENDED. PROVISIONS OF EXPANSION JOINTS AT ALL MAJOR STRUCTURES AND THE MAXIMUM SPACING BETWEEN CONTRACTION JOINTS SHALL IN ALL CASES, BE IN ACCORDANCE WITH STANDARD CONSTRUCTION DRAWING AND THE SPECIFICATIONS.

ITEM 310 - SUBBASE, GRADING A, AS PER PLAN

MATERIAL FOR THIS ITEM SHALL MEET THE REQUIREMENTS OF GRADING A OF 310.02 EXCEPT THAT NO MORE THAN 10% OF THE MATERIAL SHALL PASS A NO. 200 SIEVE AFTER ALL OPERATIONS OF PLACING AND COMPACTING HAVE BEEN COMPLETED.

SUPERELEVATION

SUPERELEVATED CURVES SHALL BE BUILT WITHOUT CROWN. THE CROWN SHALL BE WORKED OUT OF THE PAVEMENT IN THE PORTION BETWEEN THE BEGINNING OF THE TRANSITION AND THE POINT WHERE THE SUPERELEVATION EQUALS TWICE THE CROWN.

ROUNDING OF CORNERS SHOWN ON CROSS SECTIONS

THE ROUNDED CORNERS SHOWN ON THE TYPICAL SECTIONS, APPLY TO ALL CROSS SECTIONS, EVEN THOUGH OTHERWISE SHOWN ON THESE PLANS.

REMOVAL OF TREES AND STUMPS

ALL TREES AND STUMPS SPECIFICALLY MARKED FOR REMOVAL WITHIN THE CONSTRUCTION LIMITS OF THIS PROJECT SHALL BE REMOVED UNDER THE LUMP SUM PRICE BID FOR ITEM 201, CLEARING AND GRUBBING, EXCEPT THAT THOSE TREES FOR WHICH PROTECTION AND PRESERVATION WORK IS INDICATED ELSEWHERE IN THESE PLANS SHALL NOT BE REMOVED.

THE FOLLOWING IS AN APPROXIMATE ESTIMATE OF THE NUMBER OF TREES AND STUMPS TO BE REMOVED:

SIZES	NO. TREES	NO. STUMPS
18"	624	42
30"	84	6
48"	58	0
60"	0	0

THE ABOVE ESTIMATE IS APPROXIMATE AND THE STATE OF OHIO RESERVES THE RIGHT TO ORDER THE REMOVAL OF ADDITIONAL TREES OR STUMPS OUTSIDE THE LIMITS OF CONSTRUCTION BUT WITHIN THE RIGHT-OF-WAY AND/OR EASEMENT LINES. PAYMENT FOR THE REMOVAL OF THESE ADDITIONAL TREES OR STUMPS SHALL BE INCLUDED IN THE LUMP SUM PRICE BID FOR ITEM 201, CLEARING AND GRUBBING.

REMOVAL OF EXISTING PIPE

THE REMOVAL OF ALL EXISTING PIPE DRAINS WHICH WOULD NORMALLY BE REMOVED IN VARIOUS EXCAVATION ITEMS SHALL BE INCLUDED FOR PAYMENT IN THE UNIT PRICE BIDS FOR THE RESPECTIVE EXCAVATION ITEMS, UNLESS OTHERWISE ITEMIZED IN THE PLANS.

TILE FOR SUBGRADE DRAINAGE

A ONE (1) FOOT LENGTH OF SIX (6) INCH DRAIN TILE, 706.07 OR 706.09 SHALL BE FURNISHED AND PLACED BY THE CONTRACTOR IN MANHOLES., CATCH BASINS AND INLETS FOR SUBGRADE DRAINAGE, WHERE, AND AS DIRECTED BY THE ENGINEER. PAYMENT FOR SAME SHALL BE INCLUDED IN PRICE BID PER EACH FOR STORM MANHOLES, CATCH BASINS AND INLETS.

SPRING DRAINS

REFERENCE IS MADE TO THE STANDARD DRAWING MC-1 SHOWING THE METHOD OF DRAINING ANY SPRING THAT MAY BE SHOWN ON THE PLAN OR ENCOUNTERED DURING CONSTRUCTION AS DETERMINED BY THE ENGINEER. THE FOLLOWING ESTIMATED QUANTITIES HAVE BEEN INCLUDED IN THE GENERAL SUMMARY FOR THIS PURPOSE:

ITEM 605	- 6" UNCLASSIFIED PIPE UNDERDRAIN, 707.01, TYPE III OR 707.12, AS PER PLAN	200 L.F.
ITEM 605	- AGGREGATE DRAINS FOR SPRINGS, AS PER PLAN	50 L.F.

THE CONTRACTOR SHALL NOT ORDER MATERIALS FOR "SPRING DRAINS" UNTIL AUTHORIZED BY THE ENGINEER AND IN THE EVENT NO SPRINGS ARE ENCOUNTERED, THE ITEM SHALL BE NON-PERFORMED.

ITEM 605 - AGGREGATE DRAINS

AGGREGATE DRAINS SHALL BE PLACED AT FIFTY (50)FOOT INTERVALS ON EACH SIDE OF NORMAL CROWNED SECTIONS AND AT TWENTY-FIVE (25) FOOT INTERVALS ON THE LOW SIDE ONLY OF SUPERELEVATED SECTIONS, EXCEPT WHERE ITEM 605 PIPE UNDERDRAINS HAVE BEEN PROVIDED.

AGGREGATE DRAINS ADJACENT TO REINFORCED PORTLAND CEMENT CONCRETE PAVEMENT SHALL BE PLACED AT EACH TRANSVERSE JOINT ON THE OUTSIDE EDGE OF NORMAL SECTIONS AND ON THE LOW SIDE OF SUPERELEVATED SECTIONS.

AN AGGREGATE DRAIN SHALL BE PLACED AT THE LOW POINT OF EACH SAG VERTICAL CURVE.

AN ESTIMATED QUANTITY OF 370 LIN. FT. OF ITEM 605 AGGREGATE DRAINS HAS BEEN INCLUDED IN THE GENERAL SUMMARY.

CONDUIT, TYPE F

THE SECTIONS OF ALL CORRUGATED METAL PIPE USED FOR TYPE F CONDUITS SHALL BE JOINTED WITH COUPLING BANDS. BAND COUPLERS SHALL HAVE CORRUGATIONS THAT MESH WITH THE CORRUGATIONS OF THE PIPES. BANDS WITH PROJECTIONS (DIMPLE BANDS) WILL NOT BE PERMITTED.

CONNECTIONS TO EXISTING PIPE

WHERE THE PLANS PROVIDE FOR PROPOSED CONDUIT TO BE CONNECTED TO, OR TO CROSS EITHER OVER OR UNDER AN EXISTING SEWER, IT SHALL BE THE RESPONSIBILITY OF THE CONTRACTOR TO LOCATE THE EXISTING PIPE BOTH AS TO LINE AND GRADE BEFORE HE STARTS TO LAY THE PROPOSED CONDUIT.

PAYMENT FOR ALL OPERATIONS DESCRIBED ABOVE SHALL BE INCLUDED IN THE UNIT PRICE BID FOR THE PERTINENT 603 CONDUIT ITEMS.

FARM DRAINS

ALL FARM DRAINS WHICH ARE ENCOUNTERED DURING CONSTRUCTION SHALL BE PROVIDED WITH UNOBSTRUCTED OUTLETS UNDER THE DIRECTION OF THE ENGINEER. EXISTING COLLECTORS WHICH ARE LOCATED BELOW THE ROADWAY DITCH ELEVATIONS AND WHICH CROSS THE ROADWAY SHALL BE REPLACED WITHIN THE RIGHT-OF-WAY LIMITS BY ITEM 603, "TYPE B CONDUIT", ONE COMMERCIAL SIZE LARGER THAN THE EXISTING CONDUIT, EXISTING COLLECTORS AND ISOLATED FARM DRAINS WHICH ARE ENCOUNTERED ABOVE THE ELEVATION OF THE ROADWAY DITCHES SHALL BE OUTLETTED INTO THE ROADWAY DITCH BY ITEM 603, TYPE F CONDUIT. THE OPTIMUM OUTLET ELEVATION SHALL BE, IF POSSIBLE, ONE (1) FOOT ABOVE THE FLOWLINE ELEVATION OF THE DITCH. LATERAL TILE FIELDS WHICH CROSS THE ROADWAY SHALL BE INTERCEPTED BY ITEM 603, TYPE E CONDUIT AND CARRIED IN A LONGITUDINAL DIRECTION TO AN ADEQUATE OUTLET OR ROADWAY CROSSING.

THE LOCATION, TYPE, SIZE AND GRADE OF REQUIRED REPLACEMENTS SHALL BE DETERMINED BY THE ENGINEER DURING CONSTRUCTION AND PAYMENT SHALL BE MADE ON FINAL MEASUREMENTS. THE ESTIMATED QUANTITIES SHALL NOT BE ORDERED BY THE CONTRACTOR WITHOUT PRIOR APPROVAL OF THE ENGINEER.

THE FOLLOWING ESTIMATED QUANTITIES HAVE BEEN INCLUDED IN THE GENERAL SUMMARY FOR THE WORK NOTED ABOVE:

ITEM 603	-	6" CONDUIT TYPE B	500 L.F.
ITEM 603	-	6" CONDUIT TYPE E	200 L.F.
ITEM 603	-	6" CONDUIT TYPE F	20 L.F.
ITEM 603	-	8" CONDUIT TYPE B	500 L.F.
ITEM 603	-	8" CONDUIT TYPE E	200 L.F.
ITEM 603	-	8" CONDUIT TYPE F	20 L.F.
ITEM 601	-	ROCK CHANNEL PROTECTION, TYPE B (18" THICK) *with bedding*	30 CU. YDS.

ALL NECESSARY BENDS OR BRANCHES SHALL BE INCLUDED FOR PAYMENT IN THE PERTINENT CONDUIT ITEM.

SPECIAL DITCHES

FOR SPECIAL DITCH GRADES, SEE CROSS SECTIONS.

ITEM 202, PRIVY VAULT REMOVED

AN ESTIMATED NUMBER OF PRIVY VAULTS, 4-EACH HAS BEEN CARRIED TO THE GENERAL SUMMARY

LOCATIONS OF GUARDRAIL

THE LOCATIONS OF GUARDRAIL RUNS AS SHOWN IN THESE PLANS ARE SUBJECT TO ADJUSTMENT TO ASSURE THAT THE PLANNED INSTALLATIONS WILL AFFORD MAXIMUM PROTECTION FOR TRAFFIC.

ELEVATION DATUM ADJOINING PROJECT:
This project, I.R.-470-5.90, begins at Station 1429+00, which is the ending Station for project I.R.-470-0.00. The Contractor's attention is directed to the elevation datum equation that exists between the two projects. The I.R.-470-0.00 Project Datums 0.38' lower than the I.R.-470-5.90 Project Datum.

Calculated by J.D.F. 12-5-68
Checked by P.J.B. 4-8-69

GENERAL NOTES

EARTHWORK CORRECTION:
This plan was originally completed with a 9" reinforced concrete pavement. The pavement has been revised to the type shown on the typical section. The current pavement will have a pavement trench 3" deeper than that shown on the cross sections; however the cross sections have not been revised and the correction in the earthwork has been done by calculation. The correction will be minus 1,605 cubic yards of Embankment and plus 5,549 cubic yards of Excavation.
These quantities have been carried to Sheet 15.

EROSION CONTROL

ITEMS 601, 660 AND 667 ARE PROVIDED IN THESE PLANS FOR EROSION CONTROL. ROCK OF A STABLE NATURE WILL NOT BE REMOVED IN ORDER TO PLACE ANY OF THESE ITEMS. THE ENGINEER WILL CHECK AND NON-PERFORM QUANTITIES OR ADJUST LOCATIONS AND QUANTITIES FOR THESE ITEMS WHERE INDICATED BY FIELD CONDITIONS DURING CONSTRUCTION.

STANDARD NO. 1-2A PAVED SHOULDER INLET AND 1-2 MEDIAN INLET

THE FLOW LINE AND STATION FOR STANDARD (AND MODIFIED) NO. 2-A-6 TO NO. 2-A-20 PAVED SHOULDER INLETS AND NO. 2-6 AND 2-20 MEDIAN INLETS ARE LOCATED AT THE FACE OF CURB AND CENTER LINE OF BASIN (WELL) SECTION OF INLET. THE 2" DEPRESSION REQUIRED ALONG INLETS CURB-GUTTER PROFILE IS INCLUDED IN THE FLOW LINE SHOWN.

STEPS IN DEEP CATCH BASINS

STEPS SHALL BE PLACED IN ALL CATCH BASINS THAT ARE OVER FOUR (4) FEET IN DEPTH AND WITH MINIMUM DIMENSIONS OF 2'- 8". THEY SHALL BE CONSTRUCTED IN ACCORDANCE WITH STANDARD DRAWING MH-1. THE COST OF THESE STEPS SHALL BE INCLUDED IN THE UNIT PRICE BID FOR EACH TYPE OF CATCH BASIN.

STANDARD NO. 6 CATCH BASIN , AS PER PLAN

IN LIEU OF THE PROVISIONS FOR DEPRESSING THE PAVEMENT ONE (1) INCH, AS SHOWN IN THE STANDARD DRAWING CATCH BASIN CB-6. THE PAVEMENT SHALL BE DEPRESSED TWO (2) INCHES ON THIS PROJECT.

REINFORCED CONCRETE CATCH BASINS

CATCH BASINS OVER TWELVE (12) FEET IN DEPTH SHALL BE BUILT OF CLASS "C" CONCRETE REINFORCED BY PLACING 1/2" DIAMETER BARS 12" CENTER TO CENTER, BOTH VERTICALLY AND HORIZONTALLY WITH A 2" CLEARANCE FROM THE INSIDE FACE OF THE WALL. PAYMENT FOR FURNISHING AND PLACING THE REINFORCING STEEL SHALL BE INCLUDED IN THE UNIT PRICE BID FOR ITEM 604, "REINFORCED CONCRETE CATCH BASIN".

ABANDONED WATER LINES

THE EXISTING WATER LINES MARKED TO BE ABANDONED MAY BE REMOVED BY OTHERS WITHIN 10 DAYS TIME AFTER THE EXISTING LINE IS ABANDONED. ANY EXTENSION BEYOND THIS TIME FOR REMOVAL IS SUBJECT TO APPROVAL BY THE CONTRACTOR.

ANY LINES NOT REMOVED BY OTHERS SHALL BECOME THE PROPERTY OF THE CONTRACTOR AND BE ABANDONED IN PLACE OR DISPOSED OF BY HIM.

ITEM 203, "PROOF ROLLING"

AN ESTIMATED QUANTITY FOR THIS ITEM HAS BEEN PROVIDED IN THE GENERAL SUMMARY FOR USE IN PROOF ROLLING OF SUBGRADE FOR THE MAINLINE, RAMP PAVEMENTS, S.R. 7 AND FOR PAVED SHOULDERS.

ROADWAY EXCAVATION

IN THE EVENT SLIDES SHOULD OCCUR ON THIS PROJECT DUE TO NO FAULT OF THE CONTRACTOR, THE DISPLACED MATERIAL SHALL BE REMOVED AT THE DIRECTION OF, AND IN AMOUNTS DETERMINED BY THE ENGINEER IN ACCORDANCE WITH ITEM 203, "ROADWAY EXCAVATION," AT THE UNIT PRICE BID FOR THIS ITEM. AN ESTIMATED QUANTITY OF 200,000 CUBIC YARDS OF EXCAVATION HAS BEEN INCLUDED IN THE GENERAL SUMMARY TO ALLOW FOR SUCH A CONTINGENCY. PAYMENT, HOWEVER, WILL BE BASED ON FINAL MEASUREMENT AND, IF NO SLIDES OCCUR, THE QUANTITY WILL BE NON-PERFORMED.

EARTHWORK CORRECTION FOR CURVED ALIGNMENT

WHERE THE ALIGNMENT OF A ROADWAY IS CURVED, THE EARTHWORK COMPUTATION HAS BEEN ADJUSTED BY USING A CORRECTED ARC LENGTH BETWEEN THE CENTROIDS OF THE CROSS-SECTIONS. THE FOLLOWING DIAGRAM SHOWS THE METHOD OF DETERMING THE CORRECTED ARC LENGTH:

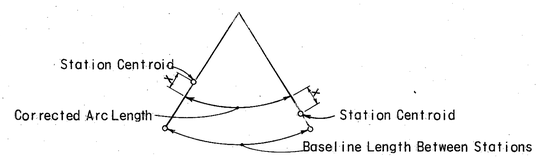

FILLING OLD MINE OPENINGS

OPENINGS TO UNDERGROUND MINES ENCOUNTERED IN THE CUTSLOPES SHALL BE SEALED BY PUSHING SHALE OR ROCK INTO THE OPENING TO THE EXTENT NEEDED TO COMPLETELY SEAL THE OPENING AT THE FACE OF THE CUTSLOPE. COST OF THIS OPERATION SHALL BE INCLUDED IN THE UNIT PRICE BID FOR ITEM 203 EXCAVATION AND ITEM 203 EMBANKMENT. IF WATER IS ENCOUNTERED, A SUITABLE SECTION OF OUTLET PIPE SHALL BE INSTALLED AS DIRECTED BY THE ENGINEER FOR DRAINAGE.

PAVEMENT JOINTS IN CONCRETE BASE
In lieu of the requirements for transverse joints at 17' spacing of Standard Drawing BP-4 on this project, the maximum spacing between transverse joints may be increased to 20'. Contraction joints shall be skewed with the right edge of the joint 4' ahead of the left edge in the direction of travel for a 24' wide pavement. The first 25 joints away from the pressure relief joints shall not be skewed and shall be doweled as per BP-4. Contraction joints shall be protected by the use of roving jute or joint sealer if construction traffic is to be permitted on the base prior to the placement of the bituminous surface courses.

GENERAL NOTES - TRAFFIC

1. MINIMUM PROVISIONS FOR THE MAINTENANCE OF TRAFFIC ON STATE ROUTE 7, AFFECTED BY THE CONSTRUCTION OF I-470.

   A. TWO-WAY TRAFFIC SHALL BE MAINTAINED AT ALL TIMES, BY USE OF THE EXISTING OR THE PROPOSED PAVEMENT.

   B. MAINTENANCE AND PROTECTION OF TRAFFIC DURING THE CONSTRUCTION OF BEL-470-0662 BRIDGE.

      1. CONSTRUCTION CLEARANCES VERTICALLY ABOVE THE TOP OF THE RAILROAD RAILS AND HORIZONTALLY FROM THE CENTER OF TRACKS SHALL BE MAINTAINED AT ALL TIMES FOR THE BALTIMORE AND OHIO AND THE PENN CENTRAL COMPANY RAILROADS. FOR CONSTRUCTION CLEARANCE NOTE SEE SHEET 202.
      2. A MINIMUM HORIZONTAL WIDTH OF 56'-0" SHALL BE MAINTAINED ON STATE ROUTE 7 UNTIL THE NEW SOUTHBOUND LANES ARE CONSTRUCTED AND OPEN TO TRAFFIC THEN, MINIMUM HORIZONTAL WIDTHS OF 26' ON NORTHBOUND AND SOUTHBOUND LANES SHALL BE MAINTAINED AT ALL TIMES. A MINIMUM VERTICAL CLEARANCE OF 13'- 6" SHALL BE PROVIDED AT ALL TIMES.
      3. PAYMENT FOR THIS MAINTENANCE AND PROTECTION SHALL BE INCLUDED IN THE LUMP SUM PRICE BID FOR ITEM 614, "MAINTAINING TRAFFIC".

2. CONSTRUCTION SIGNING

MINIMUM CONSTRUCTION SIGNS TO BE USED ON ALL ROADS SHALL BE AS DESCRIBED IN THE OHIO MANUAL OF UNIFORM TRAFFIC CONTROL DEVICES FOR STREETS AND HIGHWAYS, CURRENT EDITION, LATEST REVISION.

PAYMENT FOR PROVIDING, ERECTING, MAINTAINING AND REMOVING LIGHTS, SIGNS, SUPPORTS, BARRELS, DELINEATORS AND ANY OTHER TRAFFIC CONTROL DEVICE DEEMED NECESSARY BY THE ENGINEER TO MAINTAIN TRAFFIC DURING CONSTRUCTION OF THIS PROJECT, UNLESS SPECIFICALLY ITEMIZED SEPARATELY, SHALL BE INCLUDED IN THE LUMP SUM BID FOR ITEM 614, "MAINTAINING TRAFFIC".

ESTIMATED QUANTITIES
(TO THE GENERAL SUMMARY)

ITEM 410	500 C.Y. TRAFFIC COMPACTED SURFACE, TYPE A OR B
ITEM 410	1500 C.Y. TRAFFIC COMPACTED SURFACE, TYPE C
ITEM 616	50 M. GALLONS WATER
ITEM 616	40 TONS CALCIUM CHLORIDE

DUST CONTROL

AN ESTIMATED QUANTITY OF 300 M.GALS. OF ITEM 616, WATER IS CARRIED IN THE GENERAL SUMMARY FOR USE AS DIRECTED BY THE ENGINEER FOR DUST CONTROL.

REVIEW OF DRAINAGE FACILITIES

BEFORE ANY WORK IS STARTED ON THE PROJECT, AND AGAIN BEFORE FINAL ACCEPTANCE BY THE STATE, REPRESENTATIVES OF THE STATE AND THE CONTRACTOR SHALL MAKE AN INSPECTION OF THE EXISTING STORM SEWERS WITHIN THE WORK LIMITS WHICH ARE TO REMAIN IN SERVICE AND WHICH MAY BE AFFECTED BY THE WORK. THE CONDITION OF THE EXISTING CONDUITS AND THEIR APPURTENANCES SHALL BE DETERMINED FROM FIELD OBSERVATIONS WHICH CAN BE MADE WITHOUT THE AID OF TELEVISION EQUIPMENT. RECORDS OF THE INSPECTIONS SHALL BE KEPT IN WRITING BY THE STATE.

ALL NEW CONDUITS, INLETS, CATCH BASINS AND MANHOLES CONSTRUCTED AS A PART OF THE PROJECT SHALL BE FREE OF ALL FOREIGN MATTER AND IN A CLEAN CONDITION BEFORE THE PROJECT WILL BE ACCEPTED BY THE STATE.

ALL EXISTING SEWERS INSPECTED INITIALLY BY THE ABOVE-MENTIONED PARTIES SHALL BE MAINTAINED AND LEFT IN A CONDITION REASONABLY COMPARABLE TO THAT DETERMINED BY THE ORIGINAL INSPECTION. ANY CHANGE IN THE CONDITION RESULTING FROM THE CONTRACTOR'S OPERATIONS SHALL BE CORRECTED BY THE CONTRACTOR TO THE SATISFACTION OF THE ENGINEER.

PAYMENT FOR ALL OPERATIONS DESCRIBED ABOVE SHALL BE INCLUDED IN THE UNIT PRICES BID FOR THE PERTINENT 603 CONDUIT ITEMS OF THE CONTRACT.

ITEM SPECIAL - CLEANING OF EXISTING SEWERS AND DRAINAGE STRUCTURES

SEE NOTE IN PROPOSAL FOR LOCATIONS AND WORK REQUIRED IN CLEANING EXISTING SEWERS AND DRAINAGE STRUCTURES.

WATER POLLUTION, SOIL EROSION AND SILTATION CONTROL

THE FOLLOWING ESTIMATED QUANTITIES ARE TO BE USED AS DIRECTED BY THE ENGINEER FOR EROSION AND SILTATION CONTROL MEASURES.

ITEM 207	- TEMPORARY SEEDING AND MULCHING	73,423 Sq. Yds.
ITEM 659	- WATER	30 M/Gal.
ITEM 207	- TEMPORARY BENCHES, DIKES, DAMS AND SEDIMENT BASINS	4,141 Cu. Yds.
ITEM 659	- MOWING	50 M/Sq.Ft.
ITEM 207	- TEMPORARY SLOPE DRAINS	2,680 Lin. Ft.
ITEM 659	- REPAIR SEEDING & MULCHING	36,711 Sq. Yds.
ITEM 659	- COMMERCIAL FERTILIZER (12-12-12)	3.30 Tons
ITEM 207	- STRAW OR HAY BALES	200 EACH

WATERING AND MOWING PERMANENT SEEDED AREAS

THE FOLLOWING ESTIMATED QUANTITIES ARE TO BE USED AS DIRECTED BY THE ENGINEER TO PROMOTE GROWTH AND TO CARE FOR THE PERMANENT SEEDED AREAS, AS PER 659.09.

659 WATER	60 M GAL.
659 MOWING	100 M SQ.FT.

Calculated by L.M 8-14-73
Checked by M.H 9-3-73

GENERAL NOTES
CONDUITS FOR THE WHISKEY RUN ENCLOSURE

Either of the following types of construction are permitted

96" TYPE A 706.02 CONDUIT

When this option is taken the pipe shall be as follows:

1. Required pipe strength for each stationing interval are as follows:

1+04.48 To 9+80	2250	D-load pipe
9+80 To 13+00	3000	D-load pipe
13+00 To 17+50	2500	D-load pipe
17+50 To 20+48.33	3000	D-load pipe

2. Required bedding specifications for each station interval are as follows:

1+04.48 To 10+20	Class B Bedding
10+20 To 12+40	Class A Bedding
12+40 To 18+65	Class B Bedding
18+65 To 20+48.33	Class A Bedding

(See sheet 151 for the details for Class A Bedding)

3. All curved alignments (except the 802' R curve) must be negotiated with radius pipe. The 802' radius curve may be negotiated by deflected straight pipe. The Engineer will be provided shop drawings for all radius pipe.

114" TYPE A 707.02 CONDUIT

When the corrugated steel pipe option is selected the following special requirements apply:

1. Pipe Specification (707.02)

The pipe shall be 114" in diameter, 0.168" thick, galvanized 3"x1" corrugated steel pipe and 5% vertical elongated. Each end of the pipe section will be wire strutted at the factory. The struts are to be removed after the joints have been banded.

2. Negotiating Curves

Bend requirements for curves are as follows:

200' R-4 radius elbows	Approximately	14° each
400' R-7 radius elbows	Approximately	6°-30' each
*400' R-10 radius elbows	Approximately	5°-36' each
802' R-7 radius elbows	Approximately	3°-26' each
**400' R-5 radius elbows	Approximately	5°-12' each

* P.I. Sta. 10+47.80
** P.I. Sta. 18+12.18

The Contractor shall provide shop drawings for each radius elbow (with its respective curve layout) to be approved by the Engineer prior to fabrication by the pipe manufacturer. Radius elbows shall be supplied in 20' lengths as shown below.

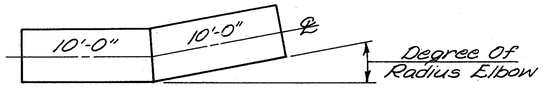

3. Invert Paving

The steel pipe culvert structure shall be paved with portland cement concrete as shown in Section D-D, page 155 of the plan. Before placement of paving material, 10 gauge galvanized wire mesh having openings of 10"x 6" (or comparable openings) shall be placed on the corrugations and securely fastened to the pipe by tack welding (or other able fastening method) approved by the Engineer. The wire mesh shall have a width 1" less than the finished paving and shall be fastened to the structure near each edge and at the center of the mesh at points not more than 2' apart along the flow line of the structure.

The concrete paving shall consist of Class C concrete. The paving shall be 4 inches thick with a true approximate 4'-5" radius up to a 3' minimum depth in the conduit. The finish and the true radius shall be comparable to that in a prefabricated concrete pipe section. Hand trowel methods of placing concrete are not acceptable. The Contractor shall obtain approval of the paving procedures to be used. A sample of the finished paving to insure proper radius and finish shall be approved by the Engineer before work proceeds. Curing of the concrete shall be in accordance with Paragraph 451.10 of the Ohio Specifications.

FED. RD. DIVISION	STATE	PROJECT	
5	OHIO		

10
288

BELMONT COUNTY
BEL-470-5.90

GENERAL SUMMARY

ITEM	SHEET NUMBER 14	15	16	21	22	23	25	26	27	29	141	ITEM	QUANT.	UNIT	Unless Otherwise Noted CODE TYPE 6707 DESCRIPTION
															PAVEMENT
301			5313									301	5313	Cu.Yd.	Bituminous Aggregate Base, 702.01 AC-20 or 702.09 RT-11 or RT-12
801	61,403											801	61,403	Sq.Yd.	9" Portland Cement Concrete Base
310	20,096											310	20,096	Cu.Yd.	Subbase, Grading A, as per plan
402		3,467										402	3,467	Cu.Yd.	Asphalt Concrete, AC-20
404		2,545										404	2,545	Cu.Yd.	Asphalt Concrete, AC-20
407		7,372										407	7,372	Gal.	Tack Coat - 702.04, SS-1, SS-1h, MS-2 or RS-1, or 702.02 RC-250
407		258										407	258	Tons	Cover Aggregate
409			9,749									409	9,749	Gal	Seal Coat - 702.09 RT-9 or RT-10, 702.02 MC-800 or MC-3000, 702.04 RS-1, RS-2 or CRS-1, or 702.03 C.B.A.E 800
409			260									409	260	Cu.Yd.	Seal Coat Cover Aggregate Nº 8
451									72			451	72	Sq.Yd.	9" Reinforced Portland Cement Concrete Pavement
609						52	78					609	130	Lin.Ft.	Concrete Curb, Standard Type G
611			304									611	304	Sq.Yd.	Reinforced Concrete Approach Slabs (T=14")
611			426									611	426	Sq.Yd.	Reinforced Concrete Approach Slabs (T=15")
612	6											612	6	Sq.Yd.	Concrete Median, as per plan
612	61											612	61	Sq.Yd.	Concrete Median, Type A
622		1,689		251		1,098		224				622	3,262	Lin.Ft.	Concrete Barrier, Type A, As Per Plan
Special										20		Special	20	Sq.Yd.	Full Depth Pavement Joint Repair
Special										50		Special	50	Sq.Yd.	Partial Depth Pavement Joint Repair
Special											176	Special	176	Lin. Ft.	Pressure Relief Joint, Type A

Calculated by: M.H. 10-8-73
Checked by: R.S. 10-9-73

LD0303
12-29-67

FED. RD. DIVISION	STATE	PROJECT	
5	OHIO		

11 / 288

BELMONT COUNTY
BEL-470-5.90

GENERAL SUMMARY

* unless otherwise shown

ITEM	*CODE TYPE 6707 SHEET NUMBERS 8	9	14	15	16	17	19	21	23	25	26	27	28	29				149	150	151					R/W		GRAND TOTAL ITEM	QUANTITY	UNIT	DESCRIPTION ROADWAY
201	Lump																										201	Lump	Lump	Clearing and Grubbing
202					14,263									20													202	14,283	Sq.Yds.	Pavement Removed
202					404																						202	404	Lin.Ft.	Curb Removed
202					150																						202	150	Sq.Ft.	Sidewalk Removed
202					156																						202	156	Lin.Ft.	Railing Removed
202					1,834																						202	1,834	Sq.Yds.	Concrete Median Removed
203				44,567																							203	44,567	Sq.Yds.	Subgrade Compaction
203		200,000		2,643,830																28							203	2,843,858	Cu.Yds.	Excavation Not Including Embankment Construction
203				412,504																							203	412,504	Cu.Yds.	Embankment
203				15																							203	16	Hours	Proof Rolling
202											850	900		1192.5													202	2942.5	Lin. Ft.	Guard Rail Removed, Barrier
410		500																									410	500	Cu.Yds.	Traffic Compacted Surface Type A or B
410		1,500																									410	1,500	Cu.Yds.	Traffic Compacted Surface Type C
604			49																								604	49	Each	Reference Monuments
202																		Lump									202	Lump	Lump	Structures Removed , As Per Plan
202											875	1162.5	2325	1175													202	5537.5	Lin.Ft.	Guard Rail Removed
202								2	5	1				3													202	11	Each	Septic Tank Removed
606								612.5	875		2937.5	1162.5	3200	2475													606	11,262.5	Lin.Ft.	Guard Rail, Type 5
606														12.5													606	12.5	Lin.Ft.	Guard Rail Type 5, Barrier Design
606								6	5		7		2	4													606	24	Each	Anchor Assembly, TYPE A
606												1															606	1	Each	Anchor Assembly, Barrier Design
606									2		3		1														606	6	Each	Bridge Terminal Assembly, TYPE A
606								1	3		2		3														606	9	Each	Anchor Assembly, TYPE T
202																									Lump		202	Lump	Lump	Parcel Nº 153 WL, Removal of One 1-Story Frame Residence with Basement
607			10,635																								607	10,635	Lin.Ft.	Fence, Type 47
607			1																								607	1	Each	Gates, Type 47
616		40																									616	40	Tons	Calcium Chloride
616		350																									616	350	M.Gals.	Water
202																									Lump		202	Lump	Lump	Parcel Nº 136 WL, Removal of one two-story Frame Residence With Basement
202																									Lump		202	Lump	Lump	Parcel Nº 152 WL, Removal of One Frame Shed
																														EROSION CONTROL (CODE TYPE Y 005)
601						278	231													144							601	653	Cu.Yds.	Rock Channel Protection, Type A, with bedding
601	30		26			49	83	105	53																		601	346	Cu.Yds.	Rock Channel Protection, Type B, with bedding
601								186	7			7	42	41					31								601	314	Sq.Yds.	Riprap, Using 6" Reinforced Concrete Slab
656																		114									656	114	M Sq.Ft.	Roadside Cleanup
659				367,113																							659	367,113	Sq.Yds.	Seeding and Mulching
659		3.30		33.46																							659	36.76	Tons	Commercial Fertilizer (12-12-12)
659				167.30																							659	167.30	Tons	Agricultural Liming
660										113																	660	113	Sq. Yds.	Reinforced Sodding
667						167	42	870	368	744		761	1,037	666					18								667	4,673	Sq. Yds.	Seeding and Jute Matting
207		73,423																									207	73,423	Sq. Yds.	Temporary Seeding and Mulching
659		90																									659	90	M/Gals.	Water
207		4,141																									207	4141	Cu. Yds.	Temporary benches, dikes, dams & sediment Basins
659		150																									659	150	M/Sq.Ft.	Mowing
207		2,680																									207	2680	Lin. Ft.	Temp. Slope Drains
659		36,711																									659	36,711	Sq. Yds.	Repair Seeding & Mulching
207		200																									207	200	Each	Straw or Hay Bales

Calculated by M.H. 10-8-73
Checked by R.S. 10-9-73

Rev. 3-10-78 Item 203 Exc. Revised by M.H. 10-30-74 Checked by W.R.
Rev. 1-10-78 Rev. 12-30-77

FED. RD. DIVISION	STATE	PROJECT	
5	OHIO		

12
288

BELMONT COUNTY
BEL-470-5.90

GENERAL SUMMARY

⊛ as per plan
✱✱ unless otherwise shown

ITEM	✱✱CODE TYPE 6707 SHEET NUMBERS											GRAND TOTAL			DESCRIPTION
	8	19	21	22	23	25	27	28	29	150	151	ITEM	QUANTITY	UNIT	DRAINAGE
202						1	9	6	3			202	19	Each	Catch Basin Removed or Abandoned
202							5	5				202	10	Each	Inlet Removed or Abandoned
202							57	247	124			202	428	Lin.Ft.	Pipe Removed 24" and Under
202							34					202	34	Lin.Ft.	Pipe Removed Over 24"
202	4											202	4	Each	Privy Vault Removed
603											596	603	596	Lin. Ft.	Conduit, Type A: 96" 706.02, 2250 D-load, Radius pipe, or 114" 707.02 ⊛
603											280	603	280	Lin. Ft.	Conduit, Type A: 96" 706.02, 2250 D-load, or 114" 707.02 ⊛
603											60	603	60	Lin. Ft.	Conduit, Type A: 96" 706.02, 3000 D-load, or 114" 707.02 ⊛
603											241	603	241	Lin. Ft.	Conduit. Type A: 96" 706.02, 3000 D-load, Radius pipe with Class A Bedding, or 114" 707.02⊛
603											162	603	162	Lin. Ft.	Conduit, Type A: 96" 706.02, 3000 D-load with Class A Bedding, or 114" 707.02⊛
603											421	603	421	Lin. Ft.	Conduit, Type A: 96" 706.02, 2500 D-load, or 114" 707.02⊛
603											29	603	29	Lin. Ft.	Conduit, Type A: 96" 706.02, 2500 D-load, Radius pipe, or 114" 707.02⊛
603											155	603	155	Lin. Ft.	Conduit, Type A: 96" 706.02, 3000 D-load, Radius pipe, or 114" 707.02⊛
602		0.3	0.7		1.0		3.5	0.5		2.7		602	8.7	Cu. Yds.	Concrete Masonry
603										260		603	260	Lin.Ft.	Conduit, Type A, 48" 706.02, 1500 D-Load or 54" 707.05 Type C.
603										62		603	62	Lin.Ft.	Conduit, Type A 48" 706.02, or 54" 707.05 Type C
603	500							20				603	520	Lin.Ft.	6" Conduit, Type B
603	500											603	500	Lin.Ft.	8" Conduit, Type B
603		80	168		322	66	128	94	80			603	938	Lin.Ft.	15" Conduit, Type B
603						76						603	76	Lin.Ft.	18" Conduit, Type B
603								194				603	194	Lin.Ft.	21" Conduit, Type B
603							34	198				603	232	Lin.Ft.	24" Conduit, Type B
603			262				78					603	340	Lin.Ft.	27" Conduit, Type B
603			198			104						603	302	Lin.Ft.	30" Conduit, Type B
603					100							603	100	Lin.Ft.	33" Conduit, Type B
603					74							603	74	Lin.Ft.	33" Conduit, Type B, 706.02, 3000 D-Load or 707.13
603			160									603	160	Lin.Ft.	36" Conduit, Type B, 706.02, 1250 D-load, 706.08 or 707.13
603					200	100						603	300	Lin.Ft.	12" Conduit, Type B
603							14	42	50			603	106	Lin.Ft.	12" Conduit, Type C.
603							124					603	124	Lin.Ft.	15" Conduit, Type C
603					256	50	198					603	504	Lin.Ft.	18" Conduit, Type C
603					180	90		568	468			603	1306	Lin.Ft.	21" Conduit, Type C
603									16			603	16	Lin.Ft.	21" Conduit, Type C, 706.08
603			50									603	50	Lin.Ft.	27" Conduit, Type C
603			28									603	28	Lin.Ft.	27" Conduit, Type C, 706.02, 2000 D-Load, 706.08 E.S. or 707.13
603						410						603	410	Lin.Ft.	30" Conduit, Type C, 706.02, 706.08 or 707.13
603						116						603	116	Lin.Ft.	30" Conduit, Type C, 706.02, 2250 D-Load or 707.13
603			50									603	50	Lin.Ft.	36" Conduit, Type C, 706.02, 1500 D-load or 707.13
603			20									603	20	Lin.Ft.	36" Conduit, Type C, 706.02, 2250 D-load or 707.13
603						146						603	146	Lin.Ft.	30" Conduit, Type C
603	200											603	200	Lin.Ft.	6" Conduit, Type E
603	200											603	200	Lin.Ft.	8" Conduit, Type E
603	20	20		90	60	40	60	100	30			603	420	Lin.Ft.	6" Conduit, Type F
603	20											603	20	Lin.Ft.	8" Conduit, Type F
603						68						603	68	Lin.Ft.	12" Conduit, Type F, 707.05 (Type C)
603								118				603	118	Lin.Ft.	24" Conduit, Type F, 707.05 (Type C)
603							106					603	106	Lin.Ft.	27" Conduit, Type F, 707.05 (Type C)

Calculated by M.H. 10-10-73
Checked by R.S. 10-11-73

FED. RD. DIVISION	STATE	PROJECT	
5	OHIO		

13
288

BELMONT COUNTY
BEL-470-5.90

GENERAL SUMMARY

** 100% Payment By State * unless otherwise shown

ITEM	*CODE TYPE 6707 SHEET NUMBERS 8	9	14	15	16	17	19	21	23	25	27	28	29	150			22			141		153	156				GRAND TOTAL ITEM	QUANTITY	UNIT	DESCRIPTION DRAINAGE (Continued)
603								114																			603	114	Lin.Ft.	30" Conduit, Type F, 707.05 (Type C)
604								3																			604	3	Each	Std. No. 4 Catch Basin
604								1	3	6	8	7	4														604	29	Each	Std. No. 5 Catch Basin
604								2																			604	2	Each	Std. No. 5A Reinforced Catch Basin
604									1			1															604	2	Each	Std. No. 6 Catch Basin
604							1	2	3	1		1	1														604	9	Each	Std. No. 8 Catch Basin
604											1																604	1	Each	Std. No. 2-6 Median Inlet
604										1																	604	1	Each	Std. No. 3 Catch Basin
604								1																			604	1	Each	Std. No. 4A Catch Basin
604										1																	604	1	Each	Std. No. 5 Reinforced Catch Basin
604									1																		604	1	Each	Std. No. 2-A-8 PAVED SHOULDER INLET
604									3																		604	3	Each	Std. No. 1-3 A Median Inlet
604								1																			604	1	Each	No. 1 Manhole Modified Using No. 6 C. B. Grate
604												1															604	1	Each	Std. No. 1 Manhole
604														1													604	1	Each	No. 5 Manhole, Modified as per plan
604									1																		604	1	Each	Std. No. 2-A-10 PAVED SHOULDER INLET
605	370																										605	370	Lin.Ft.	Aggregate Drain
605	50																										605	50	Lin.Ft.	Aggregate Drains for Springs, As Per Plan
605	200																										605	200	Lin.Ft.	6" - 707.01, Type III or 707.12 Unclassified Pipe Underdrain as per plan for Springs
605						225	346		1,945	2,474	818	1,002	54				2,070										605	8,934	Lin.Ft.	6" Shallow Pipe Underdrain
605											1,354	1,844	1,154														605	4,352	Lin.Ft.	6" Deep Pipe Underdrain
605						175	2,106		3,327	1,791		1,440	214				2,711			190							605	11,954	Lin.Ft.	6" 707.01, Type III or 707.12 Pipe Underdrain
Special											218																**Special	218	Lin.Ft.	Cleaning of Existing 12" Conduit
Special											213		162														**Special	375	Lin.Ft.	Cleaning of Existing 18" Conduit
Special												124	150														**Special	274	Lin.Ft.	Cleaning of Existing 21" Conduit
Special											345	114	94														**Special	553	Lin.Ft.	Cleaning of Existing 24" Conduit
Special											230	230															**Special	460	Lin.Ft.	Cleaning of Existing 30" Conduit
Special											116																**Special	116	Lin.Ft.	Cleaning of Existing 36" Conduit
Special											10	4	4														**Special	18	Each	Cleaning of Existing Drainage Structure (Catch Basin)
503																						Lump					503	Lump	Lump	Cofferdams, Cribs and Sheeting
503																						129	5				503	134	Cu.Yds	Unclassified Excavation
509																						8773					509	8773	Lbs.	Reinforcing Steel
510																						39					510	39	Lin.Ft.	Dowel Holes
511																						84.1	5				511	89.1	Cu.Yds.	Class C Concrete
513																							6800				513	6800	Lbs.	Structural Steel
514																							6800				514	6800	Lbs.	Field Painting of Structural Steel
614		Lump																									614	Lump	Lump	Maintaining Traffic
619	Lump																										619	Lump	Lump	Field Office
623																											623	Lump	Lump	Construction Lay Out Stakes
																								See Sheet No.	164					Traffic Control
																								See Sheet No.	258					Lighting
																														STRUCTURES OVER 20' SPAN
																								See Sheet No.	189-A					Bridge No. BEL-470-0615
																								See Sheet No.	203					Bridge No. BEL-470-0662
																								See Sheet No.	247					Bridge No. BEL-7-1848L

Calculated by M.H. 10-10-73
Checked by R.S. 10-11-73

FED. RD. DIVISION	STATE	PROJECT	
5	OHIO		

14
288

BELMONT COUNTY
BEL - 470-5.90

CALCULATIONS

ITEM 301-9" PORTLAND CEMENT CONCRETE BASE

STATION	TO STATION	LENGTH	WIDTH	SQ. YDS.	REMARKS
EASTBOUND					
1429+00	1462+55.25	3355.25	24	8947.3	
WESTBOUND					
1429+00	1462+55.25	3355.25	24	8947.3	
WESTBOUND CLIMBING LANE					
1429+00	1433+65.28	465.28	12	620.4	
			SUB-TOTAL:	18,515.0	
ACCELERATION & DECELERATION LANES					
1433+65.28	1439+89.28	624.00	12+25 ÷ 2	1282.7	Ramp B
1438+91.70	1439+08.37	16.67	2	3.7	Ramp D
1439+08.37	1439+91.70	83.33	2+12 ÷ 2	64.8	Ramp D
1439+91.70	1442+37.39	245.69	12	327.6	Ramp D
1442+37.39	1446+91.70	Planimeter 23.99 Sq. In. x 400		1066.2	Ramp D
1451+62.16 WB	1456+33.06 WB	Planimeter 25.73 Sq. In. x 400		1143.6	Ramp A
1456+33.06 WB	1458+62.16 WB	229.10	12	305.5	Ramp A
1458+62.16 WB	1459+45.00 WL	83.33	2+12 ÷ 2	64.8	Ramp A
1459+45.00 WB	1458+62.67	16.67	2	3.7	Ramp A
1458+14.55 WB	1462+43.00 WL	428.02	25+14.30 ÷ 2	934.5	Ramp C
			SUB-TOTAL:	5197.1	
RAMP B					
1439+89.28	1442+89.28	300.00	14+16 ÷ 2	500.0	
1442+89.28	1443+89.28	100.00	16+18 ÷ 2	188.9	
1443+89.28	1449+89.14	599.86	16	1066.4	
1449+89.14	1450+89.14	100.00	16+18 ÷ 2	188.9	
			SUB-TOTAL:	1944.2	
RAMP A					
1447+30.08	1451+63.19	433.11	18	866.2	
			SUB-TOTAL:	866.2	
RAMP A-B Lt.					
1428+50.99	1429+08.58	Planimeter 6.60 x 400		293.3	
1429+08.58	1431+98.91	290.33	24	774.2	
1431+98.91	1435+58.91	360.00	24+36 ÷ 2	1200.0	
1435+58.91	1439+65.09	406.18	16	722.1	
1442+45.13	1442+72.73	27.60	16	49.1	
1442+72.73	1443+72.73	100.00	16+18 ÷ 2	188.9	
1443+72.73	1447+30.08	357.35	18	714.7	
			SUB-TOTAL:	3942.3	
RAMP A-B Rt.					
1428+50.99	1429+57.01	Planimeter 8.65 Sq. In. x 400		384.4	
1429+57.01	1439+65.09	1008.08	16	1792.1	
1431+12.03	1433+62.03	250.00	0+12 ÷ 2	166.7	
1433+62.03	1435+20.76	Planimeter 7.71 Sq. In. x 400		342.7	
1442+45.13	1442+72.73	27.60	16	49.1	
1443+72.73	1447+30.08	357.35	18	714.7	
1428+17.99	1428+34.99	Planimeter 2.95 x 400		131.1	
			SUB-TOTAL:	3769.7	
RAMP D					
1446+90.87	1454+65.89	775.02	16	1377.8	
1454+65.89	1455+65.89	100.00	16+14 ÷ 2	166.7	
1455+65.89	1456+65.89	100.00	16+14 ÷ 2	166.7	
			SUB-TOTAL:	1711.2	
RAMP C					
1453+07.51	1456+14.55	307.04	18	614.1	
1456+14.55	1457+14.55	100.00	18+14 ÷ 2	177.8	
1457+14.55	1458+14.55	100.00	16+14 ÷ 2	166.7	
			SUB-TOTAL:	958.6	

SOUTHBOUND COLLECTOR DISTRIBUTOR

53+00	63+00	1000.00	0+20 ÷ 2	1111.1
3+00	4+00	100.00	14+16 ÷ 2	166.7
4+00	5+00	100.00	14+16 ÷ 2	166.7
5+00	24+85.94	1985.94	16	3530.6
24+85.94	29+60.89	Planimeter 4.68 Sq. In. x 2500		1300.0
89+61.85	91+36.60	174.75	12	233.0
91+36.60	92+36.60	100.00	12+0 ÷ 2	66.7
			SUB-TOTAL:	6574.8

S. R. 7 SOUTHBOUND

51+35.76	74+78.89	2343.13	24	6248.3
76+85.39	95+89.20 EQ	1903.81	24	5076.8
EQ 96+07.77	96+30	22.23	24	59.3
941+36	942+96	160	2 + 6 ÷ 2	71.1
			SUB-TOTAL	11455.5

NORTHBOUND COLLECTOR DISTRIBUTOR

STATION	TO STATION	LENGTH	WIDTH	SQ. YDS.	REMARKS
61+43.37	62+43.37	100	0+12 ÷ 2	66.7	
62+43.37	62+76.11	32.74	12	43.7	
2+76.11	9+41.04	Planimeter 6.00 Sq. In. x 2500		1666.7	
9+41.04	20+95.57	1154.53	16	2052.5	
20+95.57	21+95.57	100	16+14 ÷ 2	166.7	
21+95.57	22+95.57	100	16+14 ÷ 2	166.7	
83+00.01	93+00.01	1000.00	20+0 ÷ 2	1111.1	
			SUB-TOTAL:	5274.1	

ITEM 801 – 3" BASE EXTENSION

			SQ. YDS.
M.L.	1429+00.00 - 1462+55.25 - 3355.25 x 4 -3"	=	372.81
Ramp B	1439+89.28 - 1450+89.14 - 1099.86 x 2 -3"	=	61.10
Ramp A-B	1428+50.99 - 1439+65.09 Appr. Slab 1114.10 x 4 -3"	=	123.79
Appr. Slab	1442+45.13 - 1447+30.08 - 484.95 x 4 -3"	=	53.88
Ramp D	1446+90.87 - 1456+65.89 - 975.02 x 2 -3"	=	54.17
Ramp A	1447+30.08 - 1451+63.19 - 433.11 x 2 -3"	=	24.06
Ramp C	1453+07.51 - 1458+14.55 - 507.04 x 2 -3"	=	28.17
S.B. S.R.7	51+35.76 - 74+78.89 Appr. Slab -2343.13 x 2 -3"	=	130.17
Appr. Slab	76+85.39 - 93+38.1 - 1652.71 x 2 -3"	=	91.82
	93+38.1 - 95+89.20 (+22.23 L.F) 273.33 x 1 -3"	=	7.59
S.B. Coll. Dis.	3+00 - 24+85.94 - 2185.94 x 2 -3"	=	121.44
N.B. Coll. Dis.	1+43.37 - 9+41.04 - 797.67 x 1 -3"	=	22.16
	9+41.04 - 22+95.57 1354.53 x 2 -3"	=	75.25
	Decel. Lane -1000 x 1 -3"	=	27.78
	SUB-TOTAL		1194.19
	TOTAL		61,402.89
	TOTAL ITEM 801 USE:		61,403 ✓

ITEM 310 SUBBASE, GRADING A, AS PER PLAN

(See Separate Computations)

SUBBASE, GRADING A, AS PER PLAN

EASTBOUND	4087.48
WESTBOUND	3749.63
RAMP A	231.15
RAMP B	560.17
RAMP C	264.46
RAMP D	474.33
RAMP A-B	2319.41
S.R.7 NORTHBOUND	1799.26
S.R.7 SOUTHBOUND	4027.83
S.B. COLLECTOR DISTRIBUTOR	1116.54
N.B. COLLECTOR DISTRIBUTOR	1283.12
S.R.7 MEDIAN	182.63
TOTAL:	20,096.01 ✓

TOTAL ITEM 310 SUBBASE, GRADING A, AS PER PLAN 20,096 CU.YDS.

ITEM 607 - FENCE TYPE 47

R/W Sheet No.	Lin. Ft.
9	2,788
10	2,240
11	1,658
12	730
13	1,680
14	1,539
TOTAL	10,635

ITEM 607 - GATES, TYPE 47

R/W Sheet No. 9 — 1 Each ✓

ITEM 601 - ROCK CHANNEL PROTECTION, TYPE B

R/W Sheet No.	Cu. Yds.
9	14
11	12
TOTAL	26 ✓

ITEM 604 - Reference Monuments Tabulated on Centerline Survey Plat. Sheet No. 2 Right-of-Way Plans.
TOTAL 49 Ea. ✓

ITEM 612 CONCRETE MEDIAN AS PER PLAN

STATION	TO STATION	LENGTH	WIDTH	SQ. YDS.
S.R. 7				
96+30	96+42.5	12.5	4	5.6
			TOTAL ITEM 612, AS PER PLAN USE:	6 SQ. YDS. ✓

ITEM 612 CONCRETE MEDIAN
RAMP A-B
STA. 1428+71.14 TO STA. 1429+33.50 $(62.36 \times 10) - (\frac{3+1}{2} \times 15) \div 9$ 60.95 SQ. YDS.

TOTAL ITEM 612 USE 61 SQ. YDS ✓

Revised by M.H. 7-30-73
Checked by L.M. 8-1-73

Calculated by M.H. 12-8-69
Checked by T.A.O. 12-15-69

CALCULATIONS

ITEM 203 EXCAVATION NOT INCLUDING EMBANKMENT
ITEM 203 EMBANKMENT

STATION	TO STATION	EXCAVATION CU.YDS.	EMBANKMENT CU.YDS.	SEEDING SQ.YDS.
MAINLINE				
1426+40	1431+00	71,205	56,862	18,789
1431+00	1442+00	470,774	55,546	53,426
1442+00	1452+00	82,952	50,356	24,447
1452+00	1460+00	50,568	101,828	17,406
1460+00	1462+50	1,181	68,682	7,614
MAINLINE SUB-TOTALS:		676,680	333,274	121,682
S.B - S.R. 7				
59+03	63+00	76,334	309	16,048
63+00	74+75	232,665	0	41,000
77+00	84+77	51,420	9,857	10,648
RAMP A-B	Sub-Totals	360,419	10,166	67,696
1428+36	1435+58.91	711,654	0	35,481
1435+58.91	1440+00	59,276	25,845	5,166
1442+00	1447+00	390,352	0	21,833
SUB-TOTALS:		1,161,282	25,845	62,480
RAMP A SUB-TOTALS		48,152	283	4,383
RAMP B SUB TOTALS:		43,779	28,261	15,310
RAMP C SUB-TOTALS:		41,965	5,034	4,665
RAMP D SUB-TOTALS.		177,853	8,150	29,639
N.B. S.R. 7				
941+36	942+96	80	0	0 Taper
51+35.76	63+00 Lt.	11,955	553	17,613
63+00	75+00 Lt.	20,402	958	9,844
75+00	85+00 Lt.	2,294	907	3,539
85+00	96+78 Lt.	47,290	75	24,997
51+35.76	96+30 Rt.	1,995	603	7,228
SUB-TOTALS:		84,016	3,096	63,184
CENTER OF RAMP A		44,235	0	2,735
Correction for Pavement Type		*5549*	*-1605*	
TOTAL:		2,643,830	412,504	371,774

TOTAL ITEM 203 EXCAVATION NOT INCLUDING EMBANKMENT CONSTRUCTION 2,643,830 CU. YDS.
2,643,830

TOTAL ITEM 203 EMBANKMENT 412,504 CU. YDS.

ITEM 659 SEEDING AND MULCHING

	SQ. YDS.
From Tabulation This	371,774
Less 660 Sodding For Special Berm and Slope Protection	113
Less 667 Seeding and Jute Matting	4,548
ITEM TOTAL:	367,113

ITEM 659 COMMERCIAL FERTILIZER

371,774 SQ. YDS. x 9 x 20/1000 ÷ 2000 = 33.46 TONS

ITEM 659 AGRICULTURAL LIMING

371,774 SQ. YDS. x 9 x 100/1000 ÷ 2000 = 167.30 TONS
USE: 167.30 TONS

ITEM 203 SUBGRADE COMPACTION

STATION	TO STATION	LENGTH	WIDTH	SQ.YDS.
EASTBOUND				
1430+00	1432+00	200.00	38.00	844
1448+00	1451+62.50	362.50	38.00	1531
1451+62.50	1452+87.50	125.00	46.50	646
1452+87.50	1456+88	400.50	42.50	1891
1456+88	1458+14.55	126.55	45.50	640
1458+14.55	1458+78.62	64.07	61.20	436
1458+78.62	1462+74.30	395.68	55.45	2438
			SUB-TOTAL:	8426
WESTBOUND				
1429+00	1431+73.28	273.28	44.00	1336
1431+73.28	1433+65.28	192.00	46.00	981
1433+65.28	1434+00	34.72	48.00	185
1443+00	1443+73	73.00	46.00	373
1443+73	1444+50	77.00	38.00	325
1447+00	1451+50	450.00	38.00	1900
1456+00	1458+62.16	262.16	49.50	1442
1458+62.16	1459+61.67	100.00	44.00	489
1459+61.67	1462+74.30	312.63	39.00	1355
			SUB-TOTAL:	8386
RAMP B				
1442+50	1449+60	710.00	22.00	1736
			SUB-TOTAL:	1736
RAMP A				
1449+50	1451+63.19	213.19	24.00	569
			SUB-TOTAL:	569
RAMP A-B				
1438+50	1439+90.09	140.09	44.00	685
			SUB-TOTAL:	685
RAMP C				
1456+00	1457+14.55	114.55	21.50	274
1457+14.55	1458+14.55	100.00	20.50	228
			SUB-TOTAL:	502
RAMP D				
1448+00	1452+60	460.00	22.00	1124
			SUB-TOTAL:	1124
S.R. 7 SOUTHBOUND				
51+35.76	54+35.76	300.00	42.00	14.00
54+35.76	63+00	864.24	48.00	4609
63+00	65+62	262.00	43.50	1266
65+62	68+00	238.00	38.00	1005
79+00	84+00	500.00	38.00	2111
90+00	91+36.60	136.60	49.00	744
91+36.60	92+36.60	100.00	43.00	478
92+36.60	95+11.43	274.83	36.00	1099
95+11.43	96+30	100.00	33.00	367
			SUB-TOTAL	13079
S.B.C.D.				
3+00	4+00	100.00	18.50	206
4+00	5+00	100.00	20.50	228
5+00	11+00	600.00	22.00	1467
19+00	24+00	500.00	22.00	1222
			SUB-TOTAL:	3123
N.B.C.D.				
61+43.37	62+43.37	100.00	10.00	111
62+43.37	62+76.11	32.74	16.00	58
2+76.11	9+41.04	664.93	29.50	2179
9+41.04	10+41.04	100.00	27.50	250
10+41.04	20+95.57	1054.53	27.00	2578
20+95.57	21+95.57	100.00	20.50	228
21+95.57	22+95.57	100.00	18.50	206
83+00.01	90+02.40	702.39	17.00	1327
			SUB-TOTAL:	6937

TOTAL ITEM 203 SUBGRADE COMPACTION 44,567 SQ.YDS.

ITEM 203 PROOF ROLLING 3,000 SQ.YDS. PER HR.

From Subgrade Compaction 44,567 S.Y. ÷ 3,000 = 14.9 Hrs.

TOTAL ITEM 203 - PROOF ROLLING = 15 Hrs.

ITEM 407 TACK COAT

			SQ. YDS.
Area from Item 801			61403
N.B. S.R. 7 - Existing - 4344.24 x 24 ÷ 9		=	11585
Approach Slabs 426 + 180 + 124		=	730
TOTAL			73718
Bituminous Material	73718 x 0.1 Gal.	=	7372 Gal.
Cover Aggregate	73718 x 7 ÷ 2000	=	258 Tons

ITEM 404 ASPHALT CONCRETE, AC-20

		CU.YDS.
Areas from 801 Calculations		
M.L. 18,515 x (1¼ ÷ 36)	=	642.9
Accel. & Decel. Lane - 5197.1 x (1¼ ÷ 36)	=	180.5
Ramp B 1944.2 x (1¼ ÷ 36)	=	67.5
Ramp A 866.2 x (1¼ ÷ 36)	=	30.1
Ramp A-B Lt. 3942.3 x (1¼ ÷ 36)	=	136.9
Ramp A-B Rt. 3769.7 x (1¼ ÷ 36)	=	130.9
Ramp D 1711.2 x (1¼ ÷ 36)	=	59.4
Ramp C 958.6 x (1¼ ÷ 36)	=	33.3
S.B. Coll. Dis. 6574.8 x (1¼ ÷ 36)	=	228.3
S.B. S.R. 7 (Minus Taper) 11384.4 x (1¼ ÷ 36)	=	395.3
N.B. Coll. Dis. 5274.1 x (1¼ ÷ 36)	=	183.1
N.B. S.R. 7 Existing		
54+35.76 - 96+30 - 4194.24 x 24 x (1¼ ÷ 12) ÷ 27	=	388.4
Feather Area 2 x (75 x 24 x 1½ Av. ÷ 12 ÷ 27)	=	16.7
Approach Slabs		
M.L. 1462+55.25 - 1462+80.25	271.5 x (2½ ÷ 36) =	18.9
Ramp A-B 1439+65.09 - 1439+90.09	154.2 x (2½ ÷ 36) =	10.7
Ramp A-B 1442+25.13 - 1442+45.13	123.3 x (2½ ÷ 36) =	8.6
S.R. 7 74+78.89 - 74+98.89	90.0 x (2½ ÷ 36) =	6.3
S.R. 7 76+65.39 76+85.39	90.0 x (2½ ÷ 36)	6.3
TOTAL		2544.1
TOTAL ITEM 404 USE		2545 C.Y.

ITEM 402 ASPHALT CONCRETE, AC-20

Areas from 801 Calculations		
M.L. 18,515 x (1¾ ÷ 36)	=	900.0
Accel & Decel Lane 5197.1 x (1¾ ÷ 36)	=	252.6
Ramp B 1944.2 x (1¾ ÷ 36)	=	94.5
Ramp A 866.2 x (1¾ ÷ 36)	=	42.1
Ramp A-B Lt. 3942.3 x (1¾ ÷ 36)	=	191.6
Ramp A-B Rt. 3769.7 x (1¾ ÷ 36)	=	183.2
Ramp D 1711.2 x (1¾ ÷ 36)	=	83.2
Ramp C 958.6 x (1¾ ÷ 36)	=	46.6
S.B. Coll. Dis. 6574.8 x (1¾ ÷ 36)	=	319.6
S.B. S.R. 7 (minus taper) 11384.4 x (1¾ ÷ 36)	=	553.4
N.B. Coll. Dis. 5274.1 x (1¾ ÷ 36)	=	256.4
N.B. S.R. 7 Existing 4194.24 x (1¾ ÷ 12) ÷ 27	=	543.7
TOTAL		3466.90
TOTAL ITEM 402 USE		3467

ITEM 622 CONCRETE BARRIER, TYPE A

STATION	TO	STATION	LIN. FT.
1451+60		1457+15	555.00
1457+35		1458+15	80.00
1458+35		1459+15	80.00
1459+35		1462+80.25	345.25
S.R. 7 NORTHBOUND			
90+02.4		96+30	628.00
		TOTAL =	1688.25

Total use 1689

Item 203 Exc.
Revised by M.H. 10-30-74
Checked by W.R. 10-30-74

Revised by M H 7-31-73	Calculated by M H 12-10-69
Checked by L M 8-2-73	Checked by TA O 12-17-69

CALCULATIONS

FHWA REGION	STATE	PROJECT	
5	OHIO		

16 / 288

BELMONT COUNTY
BEL-470-5.90

ITEM 301 BITUMINOUS AGGREGATE BASE

STATION	TO STATION	LENGTH	WIDTH 301 6" DEPTH	S.F. 301 END AREA	301 CU.YDS	409 SQ.YDS	409 GAL.	409 Aggr. CU.YDS.	REMARKS
1429+00	1451+62.50	2262.50	8	3.88	325.1	2011.1			Lt. & Rt. Median
1451+62.50	1452+20	57.50	32.2+30.2 ÷ 2	15.48	33.0	199.3			Lt. & Rt. Median
1452+20	1452+90	70.00	30.2+24.8 ÷ 2	13.63	35.3	213.9			Lt. & Rt. Median
1452+90	1453+48	58.00	24.8+23.1 ÷ 2	11.86	25.5	154.3			Lt. & Rt. Median
1453+48	1454+18	70.00	23.1+23.8 ÷ 2	11.61	30.1	182.4			Lt. & Rt. Median
1454+18	1458+78.62	460.62	23.8+12.0 ÷ 2	8.83	150.6	916.1			Lt. & Rt. Median
1458+78.62	1462+55.25	376.63	12	5.88	82.0	502.2			Lt. & Rt. Median
				SUB-TOTALS	681.6	4179.3	1253.8	33.4	
WESTBOUND									
1429+00	1431+73.28	273.28	4	1.94	19.6	121.5			
1431+73.28	1433+65.28	192.00	4+8 ÷ 2	2.94	20.9	128.0			
1433+65.28	1439+89.28	624.00	8	3.94	91.1	554.7			
1439+89.28	1443+73	383.72	10+20 ÷ 2	7.44	105.7	639.5			
1443+73	1451+62.16	789.16	10	4.94	144.4	876.8			
1451+62.16	1458+62.16	700.00	8	3.94	102.2	622.2			
1458+62.16	1459+61.67	100.00	8	3.94	14.6	88.9			
1459+61.67	1462+55.25	293.58	10	4.94	53.7	326.2			
				SUB-TOTALS	552.2	3357.8	1007.3	26.9	
EASTBOUND									
1429+00	1438+91.70	991.70	10	4.94	181.4	1101.9			
1438+91.70	1446+91.70	800.00	8	3.94	116.7	711.1			
1446+91.70	1456+88	996.30	10	4.94	182.3	1107.0			
1456+88	1458+14.55	126.55	20+10 ÷ 2	7.44	34.9	210.9			
1458+14.55	1458+78.19	63.64	8	3.94	9.3	56.6			
1458+78.62	1462+55.25	376.63	8	3.94	55.0	334.8			
				SUB-TOTALS	579.6	3522.3	1056.7	28.2	
RAMP A-B									
1428+51	1428+55	12.5	1+3 ÷ 2	0.94	0.4	2.8			Lt.
1428+55	1428+60	37.00	3	1.44	2.0	12.3			Lt.
1428+60	1429+08	67.00	3+10 ÷ 2	3.19	7.9	48.4			Lt.
1429+08.58	1435+58.91	650.33	10	4.94	119.0	722.6			Lt.
1435+58.91	1436+43	84.09	5+13 ÷ 2	4.44	13.8	84.1			Lt.
1436+43	1439+68	325.00	3	1.44	17.6	108.3			Lt.
1442+47	1447+30.08	483.08	3	1.44	25.5	161.0			Lt.
1428+51	1428+52.5	20.00	1+3 ÷ 2	0.94	0.7	4.4			Rt.
1428+52.5	1429+57.01	170.00	3	1.44	9.1	56.7			Rt.
1429+57.01	1433+62.03	405.02	3	1.44	21.6	135.0			Rt.
1435+20.76	1439+61	440.24	3	1.44	23.5	146.7			Rt.
1442+41	1447+30.08	489.08	3	1.44	26.1	163.0			Rt.
				SUB-TOTALS	267.2	1645.3	493.6	13.2	
RAMP A									
1447+30.08	1450+63.19	333.11	6	2.88	35.5	222.1			Lt. & Rt.
1450+63.19	1451+63.19	100.00	3+8 ÷ 2	2.69	10.0	61.1			Lt.
1450+63.19	1451+63.19	100.00	3	1.44	5.3	33.3			Rt.
				SUB-TOTALS	50.8	316.5	95.0	2.5	
RAMP B									
1439+89.28	1442+89.28	300.00	8	3.94	43.8	266.7			Lt.
1442+89.28	1444+39.28	150.00	3+8 ÷ 2	2.69	14.9	91.7			Lt.
1443+89.28	1444+39.28	50.00	2+3 ÷ 2	1.19	2.2	13.9			Rt.
1444+39.28	1450+89.14	649.86	6	2.88	69.3	433.2			Lt. & Rt.
				SUB-TOTALS	130.2	805.5	241.7	6.4	
RAMP C									
1451+52.42	1456+14.55	462.13	3	1.44	24.6	154.0			Rt.
1456+14.55	1458+14.55	200.00	3+8 ÷ 2	2.69	19.9	122.2			Rt.
1453+07.51	1456+14.55	307.04	3	1.44	16.4	102.3			Lt.
1456+14.55	1457+14.55	100.00	3+2 ÷ 2	1.19	4.4	27.8			Lt.
				SUB-TOTALS	65.3	406.3	121.9	3.3	
RAMP D									
1446+90.87	1447+90.46	100.00	8+3 ÷ 2	2.69	10.0	61.1			Rt.
1447+90.46	1454+65.89	675.43	6	2.88	72.0	450.3			Lt. & Rt.
1454+65.89	1456+65.89	200.00	3+10 ÷ 2	3.19	23.6	144.4			Rt.
1446+90.87	1447+90.46	100.00	3	1.44	5.3	33.3			Lt.
1454+65.89	1455+65.89	100.00	2+3 ÷ 2	1.19	4.4	27.8			Lt.
				SUB-TOTALS	115.3	716.9	215.1	5.7	
S.R.7 SOUTHBOUND									
941+36.00	942+96.00	160.00	4+10 ÷ 2	3.44	20.4	124.4			Lt.
51+35.76	70+40	1904.24	10	4.94	348.4	2115.8			Lt.
70+40	74+78	438.00	10	4.94	80.1	486.7			Lt.
76+90	95+11.43	1821.43	10	4.94	333.3	2023.8			Lt.
95+11.43	96+30	100.00	10+4 ÷ 2	3.44	12.7	77.8			Lt.
51+35.76	54+35.76	300.00	6+10 ÷ 2	3.94	43.8	266.7			Rt.
54+35.76	63+00	864.24	4	1.94	62.1	384.1			Rt.
63+00	65+62	262.00	5+15 ÷ 2	4.94	47.9	291.1			Rt.
65+62	74+76	914.00	4	1.94	65.7	406.2			Rt.
76+90	84+85.80	795.80	4	1.94	57.2	353.7			
89+61.85	89+89.42	27.57	4	1.94	2.0	12.3			Rt.
89+89.42	91+36.60	147.18	7.25+2 ÷ 2	2.25	12.3	75.7			
91+36.60	92+36.60	100.00	2+8.45 ÷ 2	2.55	9.4	58.1			
92+36.60	93+38.1	101.50	8.45+2 ÷ 2	2.55	9.6	59.0			
				SUB-TOTALS	1104.9	6735.4	2020.6	53.9	
S.R.7 NORTHBOUND									
51+35.76	95+30.00	4394.24	10	4.94	804.0	4882.5			Rt.
95+30	96+30	100.00	10+4 ÷ 2	3.44	12.7	77.8			Rt.
54+35.76	69+14.37	1478.61	4	2.00	109.5	657.2			Lt.
69+14.37	80+40	1125.63	4	2.00	83.4	500.3			Lt.
80+40	83+00.01	260.01	10+5 ÷ 2	3.75	36.1	216.7			Lt.
83+00.01	90+02.40	702.39	4	1.94	50.5	312.2			
90+02.40	91+54.54	152.14	7.25+2 ÷ 2	2.26	12.7	78.3			
91+54.54	93+56.7	202.16	2	0.94	7.0	44.9			
				SUB-TOTALS	1115.9	6769.9	2031.0	54.2	

ITEM 301 BITUMINOUS AGGR. BASE CONT.

STATION	TO STATION	LENGTH	WIDTH 301 6" DEPTH	S.F. 301 END AREA	301 CU.YDS	409 SQ.YDS.	409 GAL.	409 Aggr. CU.YDS.	REMARKS
S.B.C.D.									
3+00	3+50	50.00	3+4 ÷ 2	1.69	3.1	19.4			Rt.
3+50	6+16	266.00	3	1.44	14.2	88.7			Rt.
6+16	15+60	944.00	3	1.44	50.3	314.7			Rt.
16+16	24+35.94	820.94	3	1.44	43.8	273.6			Rt.
24+35.94	24+85.94	50.00	3+4 ÷ 2	1.69	3.1	19.4			Rt.
24+85.94	29+60.89	474.95	4	1.94	34.1	211.1			RT.
				SUB-TOTALS	148.6	926.9	278.1	7.4	
N.B.C.D.									
9+41.04	9+91.04	50.00	4+3 ÷ 2	1.69	3.1	19.4			Lt.
9+91.04	10+23	31.96	3	1.44	1.7	10.7			Lt.
10+23	15+34.11	511.11	3	1.44	27.3	170.4			Lt.
15+34.11	15+74	43.00	3	1.44	2.3	14.3			Lt.
16+25	16+63.88	43.00	3	1.44	2.3	14.3			Lt.
16+63.88	22+45.57	581.69	3	1.44	31.0	193.9			Lt.
22+45.57	22+95.57	50.00	3+4 ÷ 2	1.69	3.1	19.4			Lt.
9+41.04	20+35	1093.96	3	1.44	58.3	364.7			Rt.
20+35	20+95.57	60.57	3	1.44	3.2	20.2			Rt.
20+95.57	21+95.57	100.00	3+2 ÷ 2	1.19	4.4	27.8			Rt.
				SUB-TOTALS	136.7	855.1	256.5	6.8	
S.B.C.D.									
4+00	5+00	100.00	2+3 ÷ 2	1.19	4.4	27.8			Lt.
5+00	5+78.86	78.86	3	1.44	4.2	26.3			Lt.
5+78.86	14+57.07	878.21	3	1.44	46.8	292.7			Lt.
17+10.69	24+85.94	775.25	3	1.44	41.3	258.4			Lt.
				SUB-TOTALS	96.7	605.2	181.6	4.8	
RAMP A-B MEDIAN									
1429+18.5	1435+73.65	655.15	12.5	6.13	148.7	909.9			Lt. & Rt.
1435+73.65	1439+65.09	391.44	12.5+5.5 ÷ 2	4.38	63.5	391.4			
1442+45.13	1447+30.08	484.95	5.5	2.62	47.1	296.4			
1447+30.08	1447+80.5	50.42	5.5+13.5 ÷ 2	4.63	8.6	53.2			
				SUB-TOTALS	267.9	1650.9	495.3	13.2	
				TOTALS	5312.9	32,493.3	9,748.2	259.9	
				USE	5313	32,494	9749	260	

ITEM 202 CURB REMOVED

STATION	TO STATION	L.F.
SHEET 27 S.R.7 N.B. Rt.		
64+10	66+10	202
SHEET 24 S.R.7		
82+50	84+50	202
TOTAL ITEM 202		404

ITEM 202 SIDEWALK REMOVED

STATION	TO STATION	LENGTH	WIDTH	S.F.
SHEET 27 S.R.7 N.B. Rt.				
65+45	65+60	15'	15'	75
SHEET 24 S.R.7				
83+93	84+08	15'	5'	75
TOTAL ITEM 202				150

ITEM 202 STEEL RAILING REMOVED

STATION	TO STATION	L.F.
SHEET 27 S.R.7 N.B. Rt.		
65+10	65+72	78
SHEET 24 S.R.7 N.B. Rt.		
83+58	84+20	78
TOTAL ITEM 202		156

ITEM 202 CONCRETE MEDIAN REMOVED

STATION	TO STATION	LENGTH	WIDTH	SQ.YDS.
SHEET 25 S.R.7				
75+00	83+10	810	4	360
83+90	84+50	60	4	27
SHEET 27 S.R.7				
54+35.76	63+00	864.24	4	384
SHEET 28 S.R.7				
63+00	75+00	1200	4	533
SHEET 29 S.R.7				
84+50	96+42.50	1192.50	4	530
TOTAL ITEM 202				1834

ITEM 611 REINFORCED CONC. APPROACH SLABS (T=15") As per Plan

STATION	TO STATION		SQ. YDS.
BEL-470-0662			
1462+55.25	1462+80.25	97.74 x 25	271.5
BEL-470-0615			
1439+65.09	1439+90.09	55.5 x 25	154.2
		SUB-TOTAL	425.7
		TOTAL ITEM 611 USE	426

ITEM 611 REINFORCED CONC. APPROACH SLABS (T=14") As per Plan

STATION	TO STATION		SQ. YDS.
S.R.7 OVER RAMP A-B BEL-7-1848L			
74+78.89	74+98.89	40.5 x 20	90.0
76+65.39	76+85.39	40.5 x 20	90.0
BEL-470-0615			
1442+25.13	1442+45.13	55.5 x 20	123.3
		SUB-TOTAL	303.3
		TOTAL ITEM 611 USE	304

NOTE: FOR MEDIAN DETAILS ON APPROACH SLAB, SEE SHEET 138A.

ITEM 202 EXISTING PAVEMENT REMOVED

STATION	TO STATION	LENGTH	WIDTH	SQ. YDS.	REMARKS
SHEET 25 S.R.7					
75+00	84+50	950.00	24	2533	
S.R.7 SOUTHBOUND					
79+25 Lt.	84+25 Rt.	Planimeter 7.20	2500	2000	
SHEET 27 S.R.7					
51+35.76	63+00	1164.24	24	3105	
SHEET 28 S.R.7					
63+00	75+00	1200	24	3200	
64+10	66+10	Planimeter 0.59 x 2500		164	N.B. Rt.
SHEET 29 S.R.7					
82+50	84+50	Planimeter 0.59 x 2500		164	N.B. Rt.
84+50	95+89.20 Bk.	1139.20	24	3038	
96+07.77 Ah.	96+30	22.23	24	59	
		TOTAL ITEM 202		14,263	

Revised by: M.H. 7-31-73	Calculated by: M.H. 12-16-69
Checked by: L.M. 8-2-73	Checked by: T.A.O. 12-19-69

FED. RD. DIVISION	STATE	PROJECT	
5	OHIO		

17
288

BELMONT COUNTY
BEL-470-5.90

B.M. 18 EQ {Elev. 1182.263 Bk. / Elev. 1182.643 Ah.
Mine Spike in base of 12" Locust on South Side of T.R. 326 (Hospital Rd.) At the Intersection of T.R. 326 Rd. & Water Tank Rd. 1740' Rt. of Sta. 1431+00

B.M. EQ. U.S.G.S. Benches Bk.
U.S.C.G.S. Benches Ah.

B.M. 19 Elev. 1166.986
Mine Spike In Base of 8" Locust On The South Side of T.R. 326 (Hospitol Rd) Where Farm Drive Turns North Off T.R. 326 1550' Rt. of Sta. 1425+10

For Typical of Adjoining Section to the West. See Normal Typical Section Sheet No. 3

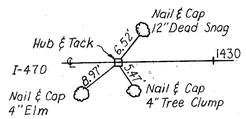

REFERENCE POINT
Sta. 1424+11.96

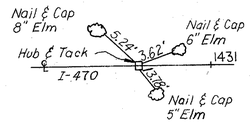

REFERENCE POINT
Sta. 1429+99.02

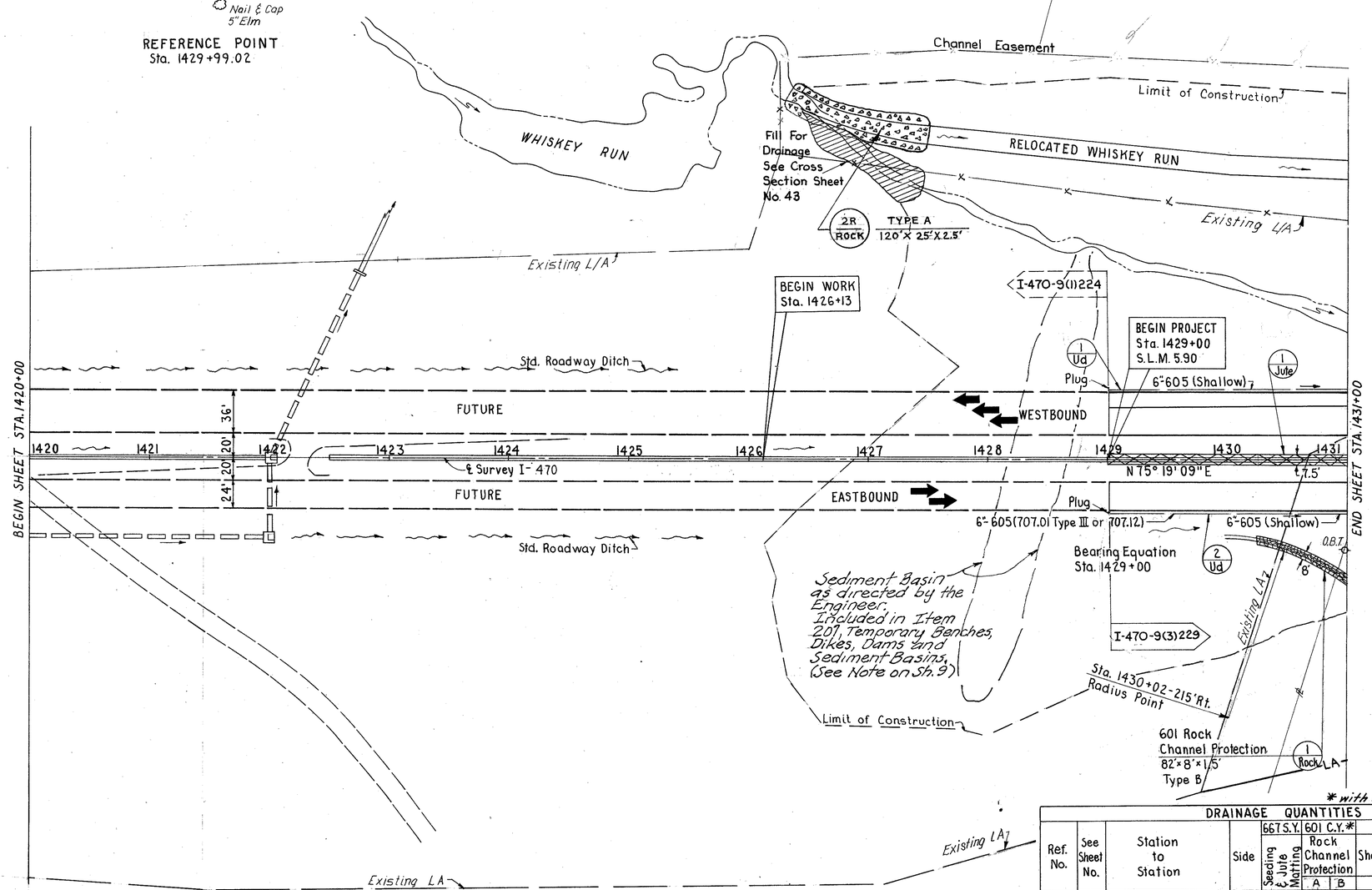

NOTE:
If BEL-470-0.00 Is Constructed First, Relocated Whiskey Run Work Will Be Non-Performed On BEL-470-5.90 Project.

* with bedding

DRAINAGE QUANTITIES

Ref. No.	See Sheet No.	Station to Station	Side	667 S.Y. Seeding & Jute Matting	601 C.Y.* Rock Channel Protection A	Rock Channel Protection B	605 Conduit L.F. Shallow 6" Pipe Underdrain	707.01 Type III or 707.12 6" Pipe Underdrain	
1-Rock		1430+25-1431+00	Rt.			49			
1-Ud		1429+00-1431+00	Lt.				200		
2-Ud		1429+00-1431+00	Rt.				25	175	
1-Jute		1429+00-1431+00	℄	167					
2-Rock		1426+30-1427+40	LT.		278				
		TOTALS		167	278	49	225	175	

Calculated By J.D.F. Date 12-4-68
Checked By P.J.B. Date 4-2-69

PLAN SHEET-STA. 1420+00 TO STA. 1431+00

BELMONT COUNTY
BEL-470-5.90

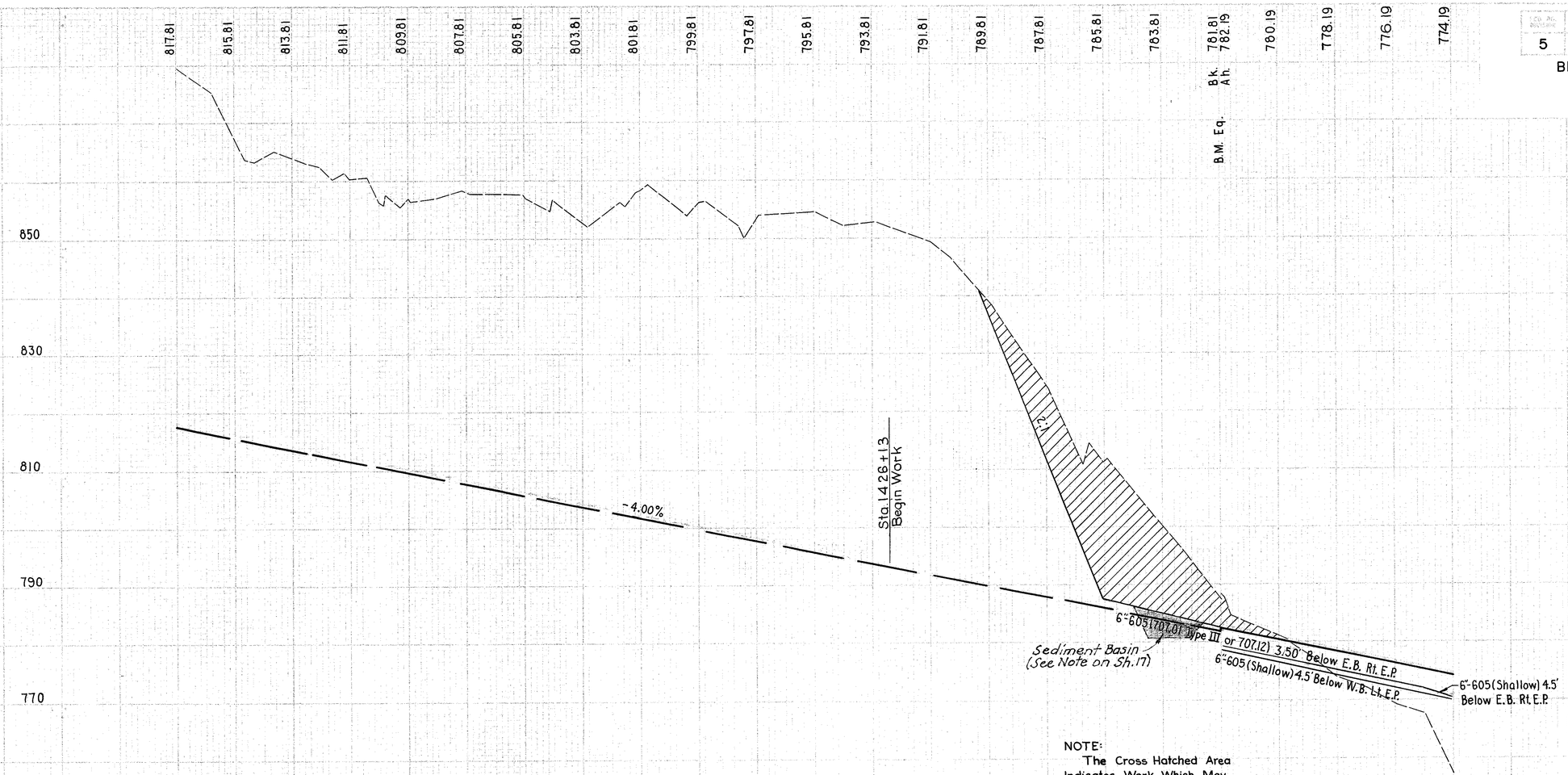

PROFILE SHEET- STA.1420+00 TO STA.1431+00

FED. RD DIVISION	STATE	PROJECT	
5	OHIO		

19 / 288

BELMONT COUNTY
BEL-470-5.90

B.M.17 Elev. 1171.015
Mine Spike in the Base on the East Side of a 12" Locust on the North Side of T.R.326 (Hospital Rd.). Tree lies at the top of a hill. 1410' Rt. of Sta. 1437+00

B.M.18 Elev. EQ {1182.263 Bk.= / 1182.643 Ah.
Mine Spike in Base of a 12" Locust on the South Side of T.R.326 (Hospital Rd) at the intersection of T.R.326 and Road to Water Tank. 1740' Rt. of Sta. 1431+00

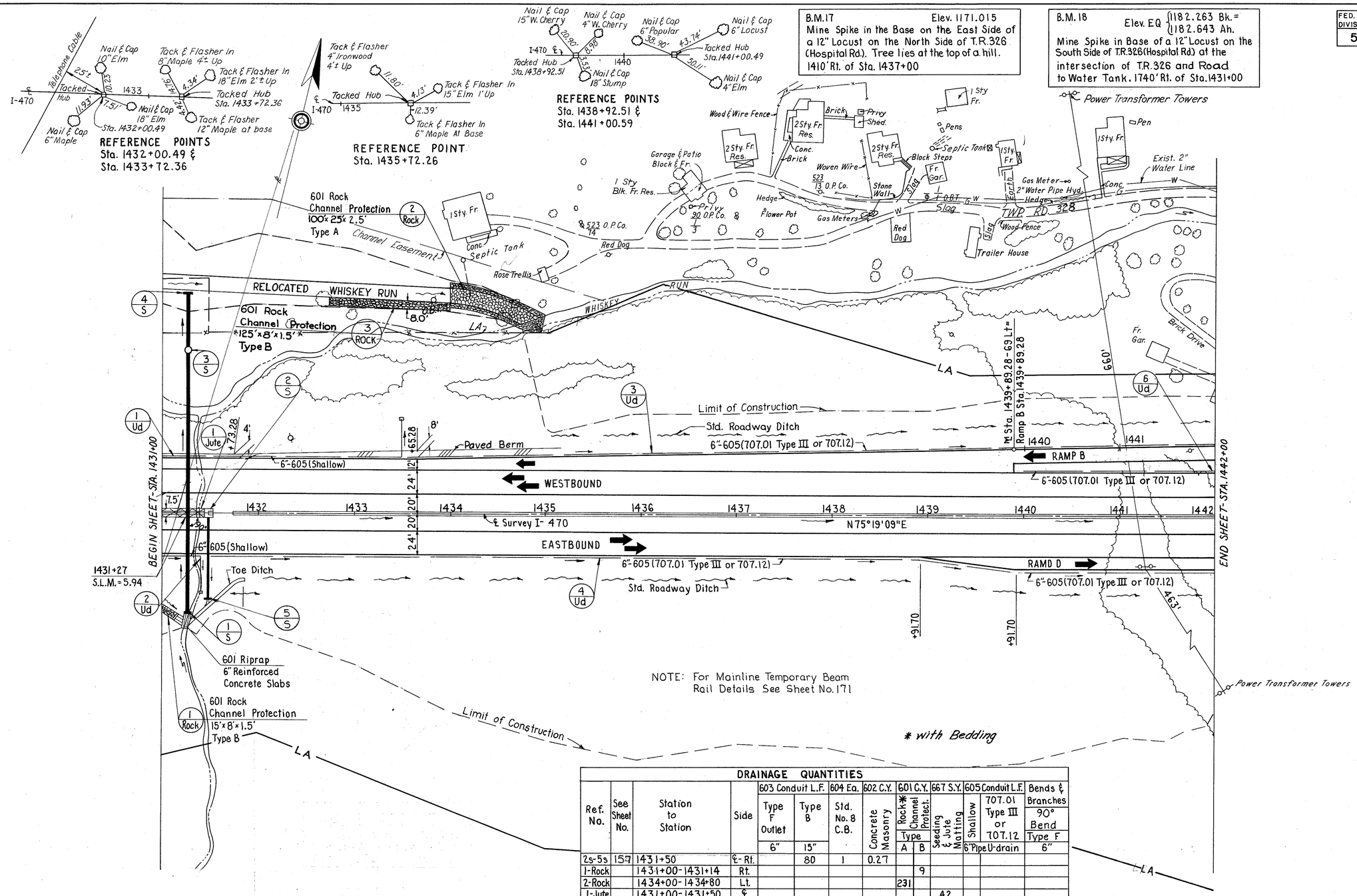

DRAINAGE QUANTITIES

Ref. No.	See Sheet No.	Station to Station	Side	603 Conduit L.F. Type F Outlet 6"	603 Conduit L.F. Type B 15"	604 Ea. Std. No. 8 C.B.	602 C.Y. Concrete Masonry	601 C.Y. Rock* Channel Protect. Type A	601 C.Y. Rock* Channel Protect. Type B	667 S.Y. Seeding & Jute Matting	605 Conduit L.F. Shallow 6" Pipe	605 Conduit L.F. 707.01 Type III or 707.12 U-drain	Bends & Branches 90° Bend Type F 6"
2s-5s	157	1431+50	℄-Rt.		80	1	0.27						
1-Rock		1431+00-1431+14	Rt.						9				
2-Rock		1434+00-1434+80	Lt.					231					
1-Jute		1431+00-1431+50	℄							42			
1-Ud		1431+00-1433+50	Lt.	10							280		1
2-Ud		1431+00-1431+40	Rt.	10							66		1
3-Ud		1433+52-1442+00	Lt.									848	
4-Ud		1431+52-1442+00	Rt.									1048	
6-Ud		1439+90-1442+00	Lt.									210	
3-Rock		1432+75-1434+00	Lt.						74				
		TOTALS		20	80	1	0.27	231	83	42	346	2106	

STRUCTURES UNDER 20' SPAN

Ref. No.	Detail Sheet	Sta.	Type A	Size	Remarks
1s-3s	150	1431+27	48" 706.02, 1500 D-Load or 54" 707.05 Type C	48"or54"x260'	Nl
3s-4s	150	1431+27	48" 706.02 or 54" 707.05 Type C	48"or54"x62'	Nl

Calculated By J.D.F. Date 12-5-68
Checked By P.J.B. Date 4-8-69

PLAN SHEET - STA. 1431+00 TO STA. 1442+00

BELMONT COUNTY
BEL-470-5.90

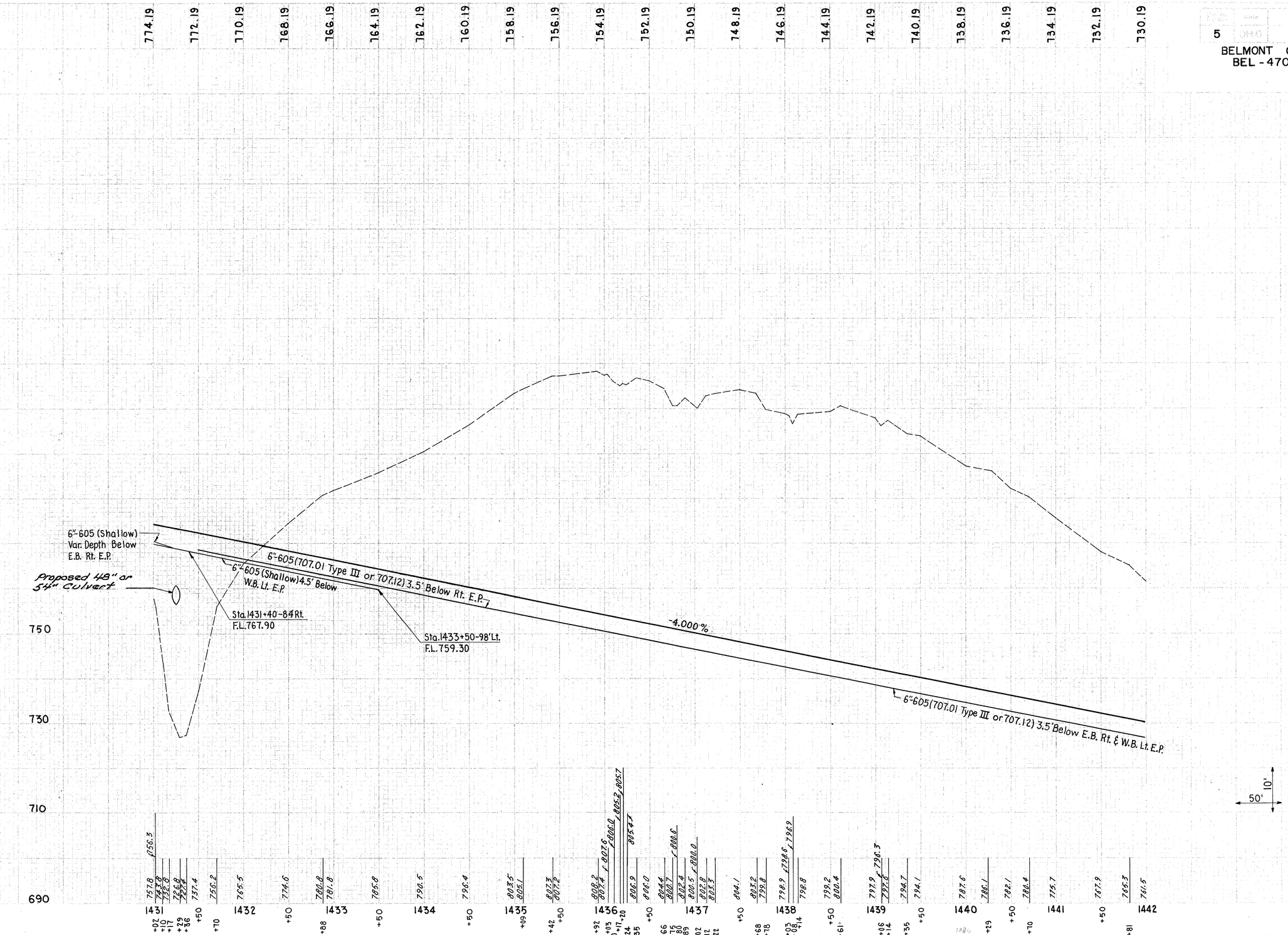

PROFILE SHEET-STA.1431+00 TO STA.1442+00

FED. RD. DIVISION	STATE	PROJECT		21/288
5	OHIO			

BELMONT COUNTY
BEL-470-5.90

B.M. 13 Elev. 868.397
Mine spike in base of 36" Elm
8'± north of Hospital Road.
687' Rt. of Sta. 1452+23

NOTE: For Details of Guard Rail to Concrete Barrier Connection See Sheet No 138-A

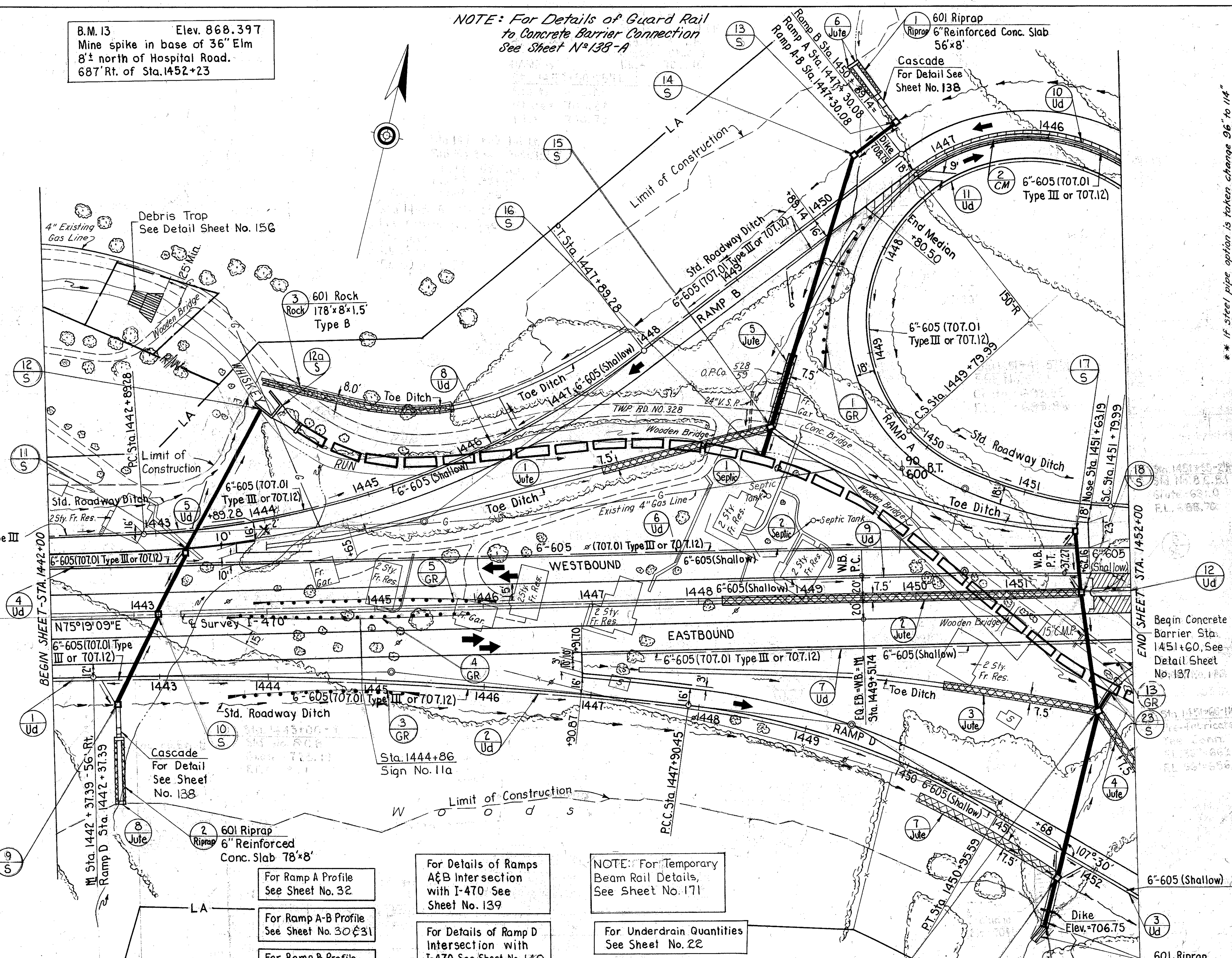

W.B. P.I. Sta. 1450+44.51
E.B. P.I. Sta. 1457+85.43
Δ=1°51'19" Rt.
D=1°00'00"
R=5729.58'
T=92.77'
L=185.53'
E=0.75'

℄ Survey
P.I. Sta. 1454+14.97
Δ=1°51'19" Rt.
D=0°28'00"
R=12277.67'
T=198.80'
L=397.56'
E=1.61'

For Ramp A Profile See Sheet No. 32

For Ramp A-B Profile See Sheet No. 30 & 31

For Ramp B Profile See Sheet No. 33

For Ramp D Profile See Sheet No. 35

For Details of Ramps A&B Intersection with I-470 See Sheet No. 139

For Details of Ramp D Intersection with I-470 See Sheet No. 140

For Cross Sections Layout & Interchange Grading Plans See Sheet No. 149

NOTE: For Temporary Beam Rail Details, See Sheet No. 171

For Underdrain Quantities See Sheet No. 22

STRUCTURES UNDER 20' SPAN

Ref. No.	Detail Sheet	Sta.	Type	Size	Remarks
12as	151-156	1450+61.24	706.02 707.02	96" or 114"	Whiskey Run Enclosure

DRAINAGE QUANTITIES

Ref. No.	See Sheet No.	Station to Station	Side	603 Conduit L.F. Type B 15"	Type B 30"	Type B 27"	Type B 36" ⊗	Type C 27"	Type C 706.02 2000 D-Load ▲ 27"	Type C 706.02 1500 D-load or 707.13 36"	Type C 706.02 2250 D-load or 707.13 36"	Type F 707.05 Type C 30"	604 Each Std. No. 4 C.B.	Std. No. 8 C.B.	No. 1 M.H. Mod. Using No. 6 C.B. Grate	Std. No. 5A Reinf. C.B.	Std. No. 5 C.B.	601 C.Y. *Rock Channel Protection Type B	667 S.Y. Seeding & Jute Matting	601 S.Y. Riprap Using 6" Reinf. Conc. Slab	602 C.Y. Concrete Masonry	Bends & Branches Prefabricated ** Tee Connections 27"x96"	** Tee Connections 36"x96"	Type F 22½° Bend 27"	202 Ea. Septic Tank Removed	604 Ea. Std. No. 4A C.B.
9s-10s	157	1442+60-1443+00	Rt.-℄		92								1	1												
10s-11s		1443+00-1443+28	℄-Lt.		66										1											
11s-12s		1443+28-1443+55	Lt.		40							114												2		
13s-14s		1447+20-1450+50	Rt.-Lt.					50					2													
14s-15s		1450+50-1448+62	Lt.			262										1										
15s-16s		1448+62-1448+70	Lt.						28													1				
17s-18s		1451+48-1451+55	Lt.-Rt.	58										1			1									
18s-22s	157	1451+55-1451+63	Rt.	110												1										
20s-21s	158	1451+88-1451+75	Rt.							50										66	0.69					1
21s-22s	157	1451+75-1451+63	Rt.				160																			
22s-23s	157	1451+63-1451+66	Rt.								20												1			
1-Riprap		1447+20	Rt.																	50						
1 Jute		1446+98-1448+68 Ramp B	Rt.																130							
2 Jute		1448+20-1451+55	℄																280							
3 Jute		1450+24-1451+64	Rt.																118							
4 Jute		1451+30-1451+75 Ramp D	Lt.																42							
5 Jute		1448+45-1448+98 Ramp B	Rt.																55							
6 Jute		1447+20	Rt.																50							
7 Jute		1450+20-1451+75	Rt.																125							
3 Rock		1444+25-1446+00 Ramp B	Lt.															105								
1 Septic		1448+68	Lt.																						1	
2 Septic		1449+07	Lt.																						1	
8 Jute		1442+60	Rt.																70							
2-Riprap		1442+60	Rt.																	70						
		TOTALS		168	198	262	160	50	28	50	20	114	3	2	1	2	1	105	870	186	0.69				2	1

▲ 706.08 E.S. or 707.13
⊗ 706.02, 1250 D-load, 706.08 or 707.13
** If steel pipe option is taken change 96" to 114"
* with bedding

Ref. No.	ITEM 606 GUARDRAIL TYPE 5 Station to Station	Side	Standard Type Lin. Ft.	Anchor Assembly Each Type A	Anchor Assembly Each Type T	Item 622 Concrete Barrier Type A L.F.	Remarks
1-GR	1447+80.5-1449+04	Rt.	125.0	1			Ramp A
2-CM	1445+30-1447+80.5	℄				250.5	Ramp A&B
3-GR	1443+61-1445+36	Rt.	137.5	1	1		M
4-GR	1443+61-1445+86	Rt.	175	2			M
5-GR	1443+86-1446+11	Lt.	175	2			M
	TOTALS		612.5	6	1	250.5	

Calculated by J.D.F. 12-6-68
Checked by P.J.B. 4-8-69

PLAN SHEET- STA. 1442+00 TO STA. 1452+00

BELMONT COUNTY
BEL-470-5.90

Calculated By R.T. 11-4-68
Checked By D.B.T. 5-20-70

730.19 728.19 726.19 724.19 722.19 720.19 718.19 716.19 714.19 712.19 710.19 708.19 706.19 704.19 702.20 701.24 700.30 699.40 698.52 697.66 696.84 696.04 695.27 694.52 693.81 693.12 692.46

UNDERDRAIN QUANTITIES

Ref. No.	See Sheet No.	Station to Station	Side	603 Conduit Lin. Ft. Type F Outlet 6"	605 Conduit Lin. Ft. 6" Pipe Underdrain Shallow	707.01 Type III or 707.12		Bends & Branches Wye 60°	Tee 6"	Bend 60°
1-Ud	21	1442+00-1442+68	Rt.	10		80		1		
2-Ud		Ramp D 1442+74-1451+75	Rt.	10	378	526				1
3-Ud		Ramp D 1451+75-1452+44	Rt.	10	58			1		
4-Ud		1442+00-1443+25	Lt.	10		122				1
5-Ud		1442+00-1443+58	Lt.	10		172				1
6-Ud		1443+26-1451+48	Lt.	10	420	412				1
7-Ud		1446+92-1452+00	Rt.		325	183				
8-Ud		Ramp B 1443+44-1450+89	Lt.	10	586	186			1	
9-Ud		1449+00-1451+55	Lt.	10	258			1		
10-Ud		Ramp A-B - Ramp B 1445+30-1449+25	Rt.	10		376				1
11-Ud	21	Ramp A-B - Ramp A 1445+12-1451+98	Lt.			654				
12-Ud	21	1451+55-1452+00	Lt.		45					
		TOTALS		90	2070	2711				

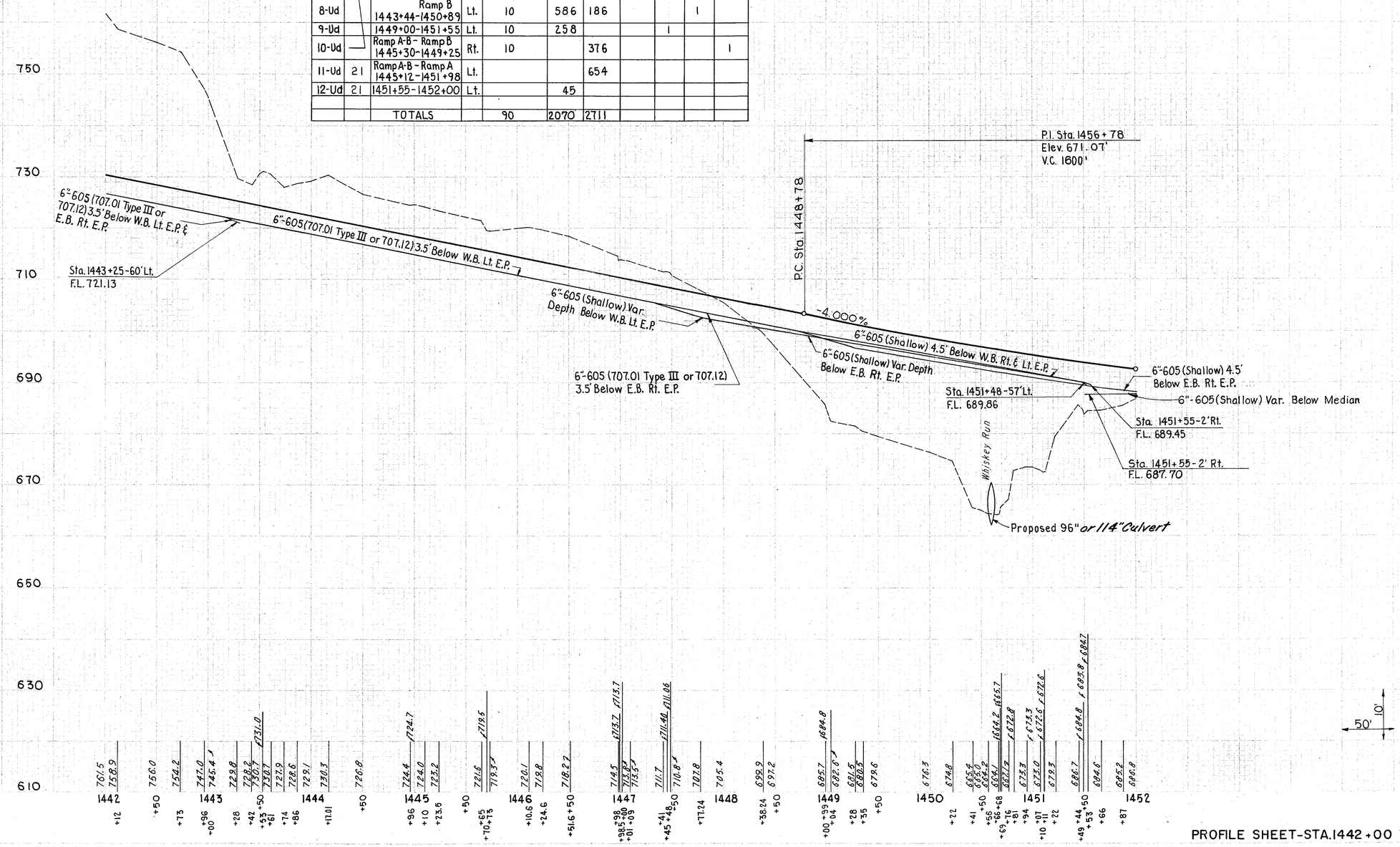

PROFILE SHEET-STA.1442+00 TO STA.1452+00

BELMONT COUNTY
BEL-470-5.90

BM 12 Elev. 811.013
Mine Spike in Base on South Side of 14" Elm 6'± North of Centerline of Hospital Road 150'± west of a Telephone Cable Crossing Hospital Road 515' Rt. of Sta. 1456+00.

DRAINAGE QUANTITIES					
Ref. No.	See Sheet No.	Station to Station	Side	604 Ea. Std. No. 2-A-8 Paved Shoulder Inlet	604 Ea. Std. No. 2-A-10 Paved Shoulder Inlet
31S-32S	158	1456+64-1435+64	Lt.	1	
34S-35S	158	1433+08	Lt		1
		TOTALS		1	1

NOTE:
Slotted Holes are to be used in Guard Rail Panels that are placed over the Expansion Dams at the Abutment.

For Concrete Barrier Detail on Approach Slab See Sheet Nº 138-A

BM 11 Elev. 738.883
Mine Spike in Base on North Side of Pole (No Number) with Transformer Pole lies on South Side Hospital Road 293' Rt. of Sta. 1459+85.

MICROFILMED AUG 11 1983

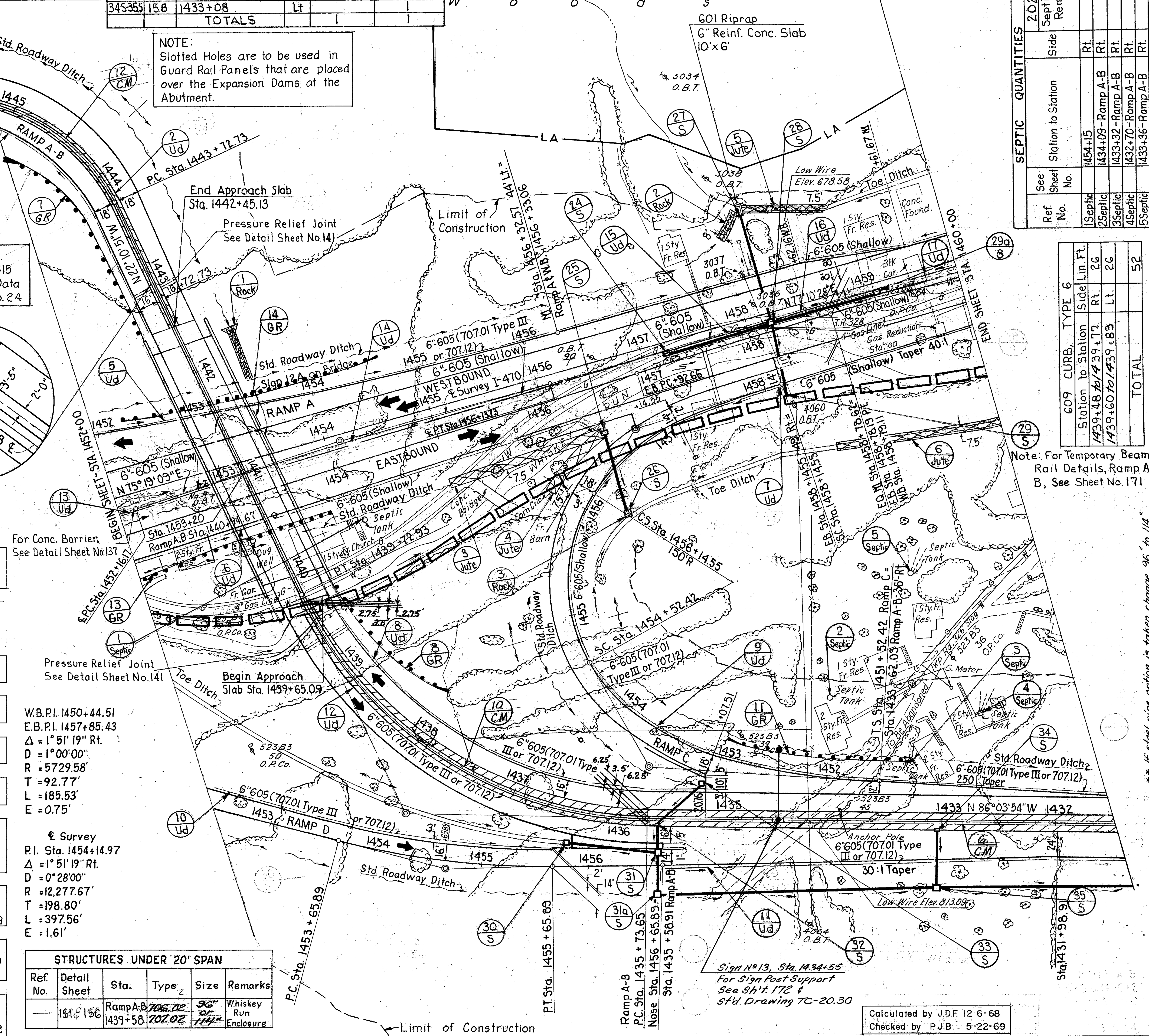

Bridge No. BEL-470-0615
For Bridge Data See Sheet No. 24

For Ramp Curve Data & Bearings See Sheet No. 145

For Ramp A Profile See Sheet No. 32

For Ramp A-B Profile See Sheet No. 30 & 31

For Ramp C Profile See Sheet No. 34

For Ramp D Profile See Sheet No. 35

For Details of Ramps A & B Intersection with I-470 See Sheet No. 139

For Cross Sections & Interchange Grading Plans See Sheet No. 149

For Details of Ramp C Intersection with I-470 See Sheet No. 140

For Details of Ramps C & D Intersection with Ramp A-B See Sheet No. 142

W.B. P.I. 1450+44.51
E.B. P.I. 1457+85.43
Δ = 1°51'19" Rt.
D = 1°00'00"
R = 5729.58'
T = 92.77'
L = 185.53'
E = 0.75'

℄ Survey
P.I. Sta. 1454+14.97
Δ = 1°51'19" Rt.
D = 0°28'00"
R = 12,277.67'
T = 198.80'
L = 397.56'
E = 1.61'

STRUCTURES UNDER 20' SPAN					
Ref. No.	Detail Sheet	Sta.	Type	Size	Remarks
—	151 & 156	Ramp A-B 1439+58	706.02 707.02	96" or 114"	Whiskey Run Enclosure

Note: For Temporary Beam Rail Details, Ramp A & B, See Sheet No. 171

SEPTIC QUANTITIES				202 Each
Ref. No.	See Sheet No.	Station to Station	Side	Septic Tank Removed
1 Septic		1454+15	Rt.	1
2 Septic		1434+09-Ramp A-B	Rt.	1
3 Septic		1433+32-Ramp A-B	Rt.	1
4 Septic		1432+70-Ramp A-B	Rt.	1
5 Septic		1433+36-Ramp A-B	Rt.	1
		TOTAL		5

609 CURB, TYPE 6		
Station to Station	Side	Lin. Ft.
1439+48 to 1439+77	Rt.	26
1439+60 to 1439+83	Lt.	26
TOTAL		52

Continued on this Sheet

DRAINAGE QUANTITIES

Ref. No.	See Sheet No.	Station to Station	Side	603 Conduit L.F. Type B 15"	Type B 12"	Type B 33"	706.02 3000 D-Load 33"	Type F Outlet 6"	Type C 18"	Type C 21"	604 Each Std. No. I-3 A Median Inlet	604 Std. No. 8 C.B.	604 Std. No. 6 C.B. As Per Plan	604 Std. No. 5 C.B.	601 C.Y.* Type B Rock Channel Protection	602 C.Y. Concrete Masonry	667 S.Y. Seeding & Jute Matting	605 Cond. L.F. Shallow 6" Pipe Ud.	605 Cond. L.F. 707.01 Type III or 707.12 ●	601 S.Y. Riprap Using 6" Reinf. Conc.	Bends & Branches Type B Pre-Fab Tee** Connect. 33"x96"	Type F Wye 60° 6"	Type F Tee 6"
25S-26S	158	1456+50	Rt.	64								1				0.27							
27S-28S	/	1458+25	Lt-℄			100										0.68				7			
28s-29S	/	1458+25-1458+20	℄-Rt.				74														1		
30S-31S		1455+80-1456+64	Lt.	84								1	1										
31S-31as	158	1456+64-Ramp D	Lt-Rt.	40																			
24S-28s	160	1457+25-1458+25	Rt-℄		100						2												
28s-29as	160	1458+25-1459+25	℄-Rt.		100						1												
31S-32S	158	1456+64-1435+64	Lt.	24																			
33S-32S	/	1435+24-1435+64	Rt-Lt.	56								1											
3las-35S	/	1456+64-1433+08	Lt.						256					2									
34S-35S		1433+08	Lt.	54										1									
35S	158	1433+08-1431+35	Lt.							180													
1 Rock		1453+48-Ramp A	Lt.												23								
2 Rock		1458+00-1458+24	Lt.												27								
3 Rock		1456+50	Rt.												3								
1 Jute		1455+00 E.B.-1456+50	Rt.														125						
4 Jute		1456+00-1456+60 Ramp C	Lt.														58						
5 Jute		1458+26-1459+00	Lt.														60						
6 Jute		1458+50-1460+00	Rt.														125						
1 Ud		1442+48-1445+12 Ramp A-B	Lt.																240				
2 Ud		1442+48-1445+30 Ramp A-B	Rt.																274				
5 Ud		Ramp A 1451+98-1460+00 M	Lt.					10										206	625				1
6 Ud		1452+00-1456+50 M	Rt.					10										445				1	
7 Ud		Ramp C 1454+90-1460+00 M	Lt.					10										474	60				1
8 Ud		Ramp A-B 1435+24-1439+85	Rt.					10											420			1	
9 Ud		1431+54 Ramp D 1454+90 Ramp C	Lt.																542				
10 Ud		1452+44-1455+80 Ramp D	Lt.					10											320			1	
11 Ud		1431+44-1435+58 Ramp A-B	Lt.																428				
12 Ud		1435+64-1439+85 Ramp A-B	Lt.					10											418				
		TOTALS		322	200	100	74	60	256	180	3	3	1	3	53	0.95	368	1125	3327	7			
		From Sheet No. 24																820					
		TOTAL																1945					

● or 707.13
* with bedding
** If steel pipe option is taken change 96" to 114"

ITEM 606 GUARD RAIL TYPE 5								
Ref. No.	Station to Station	Side	Item 622 Concrete Barrier Type A L.F.	Standard Type Lin. Ft.	Anchor Assembly Each Type A	Anchor Assembly Each Type T	Bridge Terminal Assembly Type A	Remarks
6-CM	1431+42.5-1434+50	℄	307.50					Ramp A-B
7-GR	1442+40-1445+00	Lt.		187.5	1		1	Ramp A-B
8-GR	1438+04-1439+74	Rt.		125.0	1		1	Ramp A-B
10-CM	1434+60-1439+65.09	℄	505.09					Ramp A-B
12-CM	1442+45.13-1445+30	℄	284.87					Ramp A-B
11-GR	1451+20-1453+00	Rt.		137.5	1	1		Ramp C
13-GR	1451+65-1454+14	Rt.		212.5	1	1		M
14-GR	1452+25-1454+75	Lt.		212.5	1	1		Ramp A
	TOTAL		1097.46	875.0	5	3	2	

Calculated by J.D.F. 12-6-68
Checked by P.J.B. 5-22-69

PLAN SHEET- STA. 1452+00 TO STA. 1460+00

BELMONT COUNTY
BEL - 470 - 5.90

Calculated By J.D.E. 12-6-68
Checked By P.J.B 5-22-69

MICROFILMED
AUG 10 1983

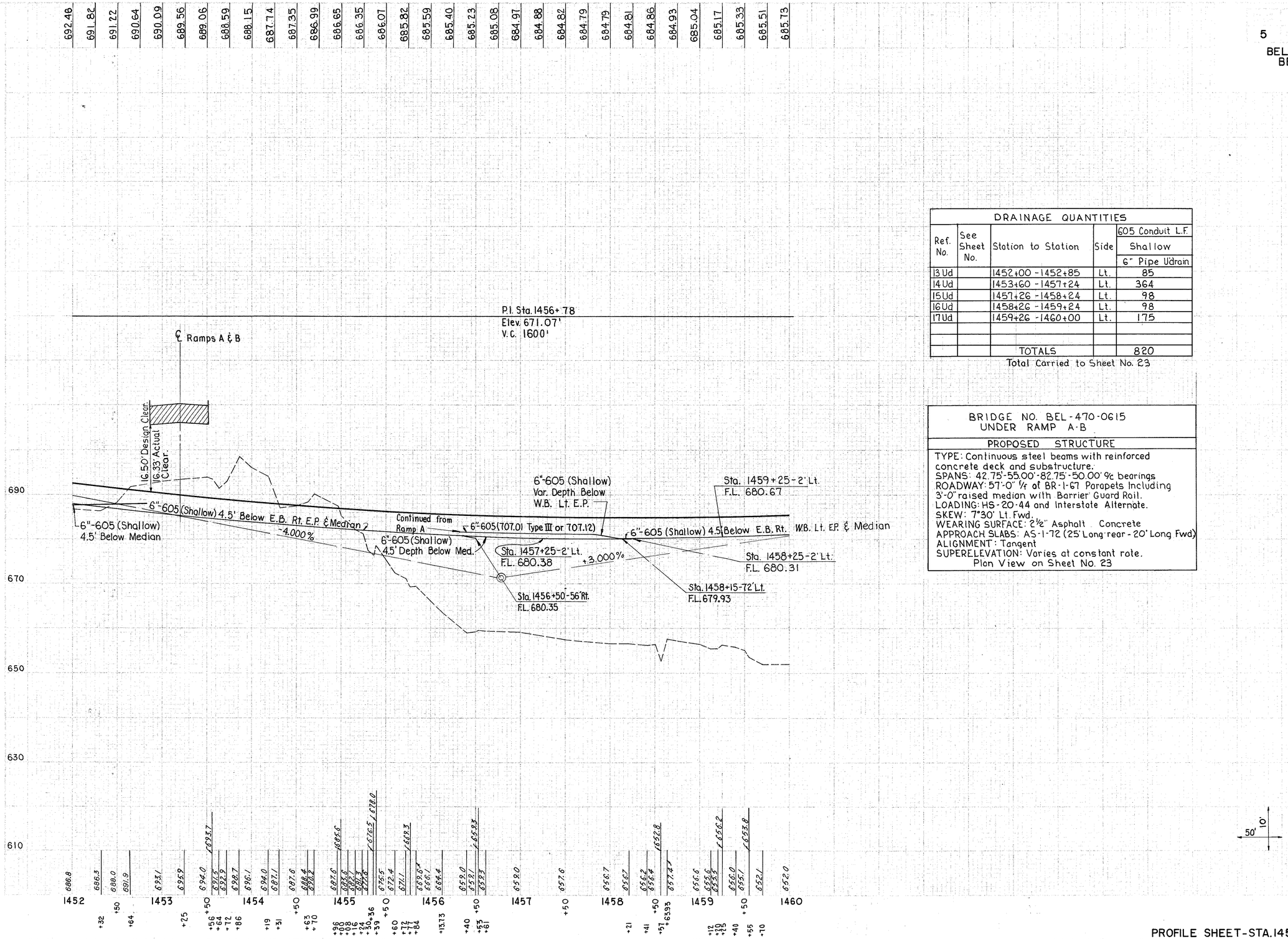

DRAINAGE QUANTITIES				
Ref. No.	See Sheet No.	Station to Station	Side	605 Conduit L.F. Shallow 6" Pipe Udrain
13 Ud		1452+00 - 1452+85	Lt.	85
14 Ud		1453+60 - 1457+24	Lt.	364
15 Ud		1457+26 - 1458+24	Lt.	98
16 Ud		1458+26 - 1459+24	Lt.	98
17 Ud		1459+26 - 1460+00	Lt.	175
		TOTALS		820

Total Carried to Sheet No. 23

BRIDGE NO. BEL-470-0615
UNDER RAMP A-B

PROPOSED STRUCTURE

TYPE: Continuous steel beams with reinforced concrete deck and substructure.
SPANS: 42.75'-55.00'-82.75'-50.00' ℄ bearings
ROADWAY: 57'-0" ℄ at BR-1-67 Parapets Including 3'-0" raised median with Barrier Guard Rail.
LOADING: HS-20-44 and Interstate Alternate.
SKEW: 7°30' Lt. Fwd.
WEARING SURFACE: 2½" Asphalt Concrete
APPROACH SLABS: AS-1-72 (25' Long rear - 20' Long Fwd)
ALIGNMENT: Tangent
SUPERELEVATION: Varies at constant rate.
Plan View on Sheet No. 23

PROFILE SHEET-STA. 1452+00 TO STA. 1460+00

FED. RD DIVISION	STATE	PROJECT	
5	OHIO		

25
288

BELMONT COUNTY
BEL-470-5.90

B.M. Elev. 646.403
S-115 U.S.G.S. 0.8 miles South along the B & O Railroad from the Station at Bridgeport at bridge 110 in the top of the East End of the North Concrete Abutment 3.5 feet East of the centerline of the East Track and about 1½ Feet Lower than the track. A standard Disc Stamped S-115 1943.

BM 10 Elev. 679.504
Mine Spike in base of North Side of O.P.Co. pole No Number 196' Rt. of Sta. 1463+27.

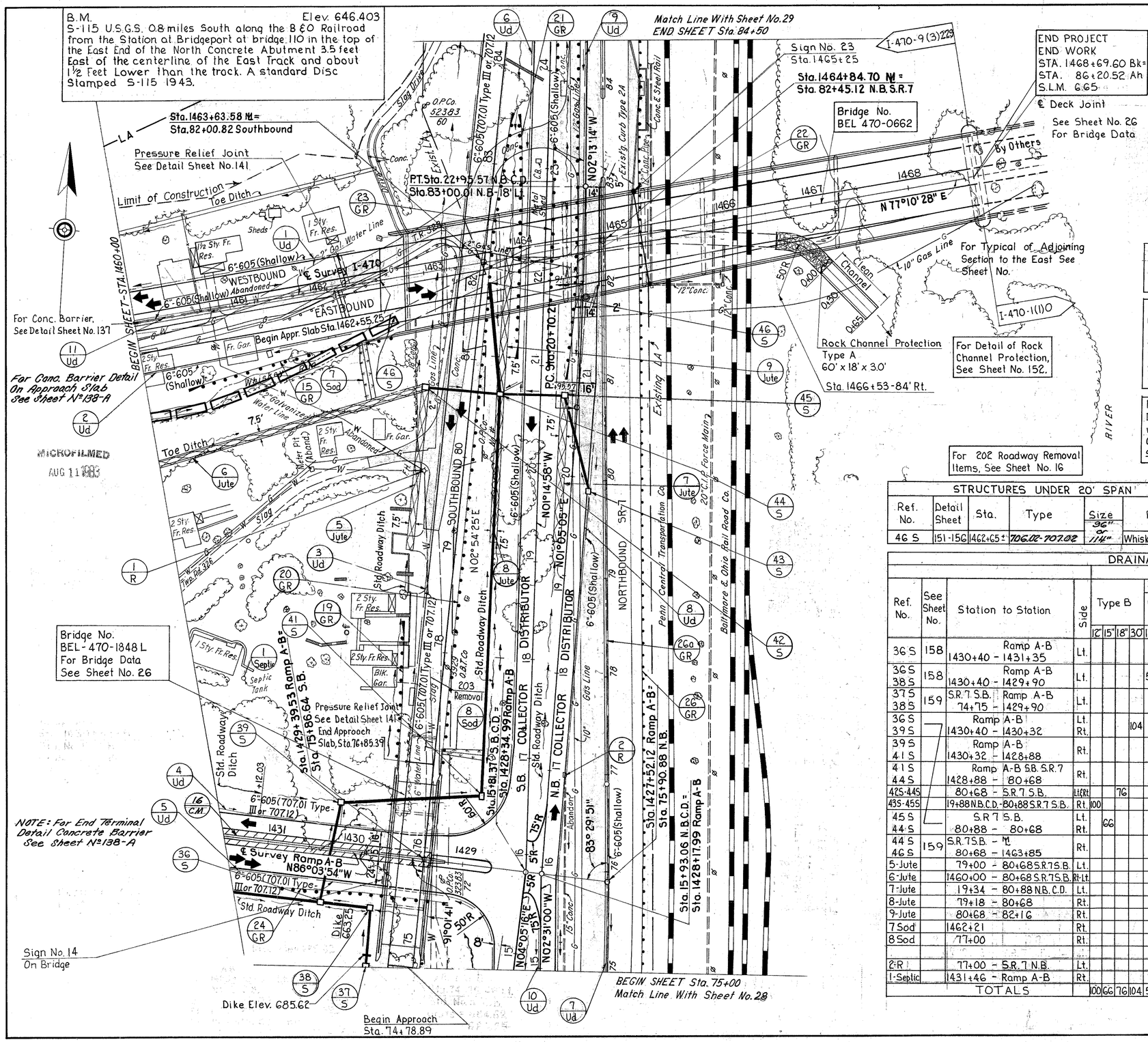

For Guard Rail and Concrete Barrier Quantities, See Sheet No. 26

Profile Sheets
Mainline 26
Ramp A-B 30 & 31
SR.7 N.B. No. 38 & 39
N.B. Collector No. 37
S.B. Collector No. 36
SR.7 S.B. No. 40 & 41

For Intersection Detail of Ramp A-B with SR.7 N.B & S.B. Collector Dist. See Sheet No. 141

For 202 Roadway Removal Items, See Sheet No. 16

609 CURB, TYPE 6			
Station	to Station	Side	Lin. Ft.
76+74	to 77+00	Rt.	26
76+79	to 77+05	Lt.	26
1462+27	to 1462+52	Rt.	26
TOTAL			78

UNDERDRAIN QUANTITIES								
				603 L.F.	605 L.F.		Bends & Branches	
Ref. No.	See Sheet No.	Station to Station	Side	Type F Outlet	Shallow	707.01 Type III 707.12	Type F Tee	60° Wye
				6"	6" Pipe Udrain		6"	
1-Ud		1460+00 - 1462+35	Lt.		235			
2-Ud		1460+00 - 1462+25	Rt.		235			
3-Ud		76+94 - 84+25 S.B. S.R.7	Lt.			731		
4-Ud		Ramp A-B - S.B.C.D. 1431+44 - 20+66	Rt-Lt.	10		730	1	
5-Ud		Ramp A-B - S.B.C.D. 1431+44 - 14+83	Lt.	10		330	1	
6-Ud		S.R.7 S.B. - S.B.C.D. 80+68 - 24+30	Rt-Lt.	10	372			1
7-Ud		S.R.7 N.B 75+00 - 80+40	Lt.		540			
8-Ud		N.B.C.D. N.B.C.D. 14+98 - 20+34	Rt.		540			
9-Ud		20+32 N.B.C.D. - 84+50 N.B.C.D.	Lt.	10	412		1	
10-Ud		14+94 - 15+50 N.B.C.D.	Lt.		56			
11-Ud		1460+00 - 1460+94	Lt.		94			
TOTALS				40	2474	1791		

STRUCTURES UNDER 20' SPAN					
Ref. No.	Detail Sheet	Sta.	Type	Size	Remarks
46 S	151-156	1462+65±	706.02-707.02	96" or 114"	Whiskey Run Enclosure

DRAINAGE QUANTITIES

Ref. No.	See Sheet No.	Station to Station	Side	603 Conduit L.F. Type B 12"	Type B 15"	Type B 18"	Type B 30"	Type C 18"	Type C 21"	Type C 30"	706.02 2250 D-Load 30"	706.02 706.08 or 707.13 30"	Type F 707.05 Type C 12"	604 Ea. Std. No. 5 C.B.	5 Reinf. C.B. As Per Plan	Std. No. 8 C.B.	Std. No. 3 C.B.	607 Ea. Seeding & Jute Matting	202 Ea. C.B. Removed or Abandoned	Bend & Branches Type F 45° Bend 12"	660 S.Y. Rein Forced Sodding	202 Ea. Septic Tank Removed
36 S	158	Ramp A-B 1430+40 - 1431+35	Lt.						90					1								
36 S 38 S	158	Ramp A-B 1430+40 - 1429+90	Lt.					50						1								
37 S 38 S	159	S.R.7 S.B. Ramp A-B 74+75 - 1429+90	Lt.										68	1						2		
36 S 39 S		Ramp A-B 1430+40 - 1430+32	Lt. Rt.			104								1								
39 S 41 S		Ramp A-B 1430+32 - 1428+88	Rt.							146				1								
41 S 44 S		Ramp A-B S.B. S.R.7 1428+88 - 80+68	Rt.									410			1							
42S-44S		80+68 - S.R.7 S.B.	Lt & Rt.		76									1								
43S-45S		19+88 N.B.C.D. - 80+88 S.R.7 S.B.	Rt.	100													1					
45 S 44 S		S.R.7 S.B. 80+88 - 80+68	Lt. Rt.	66											1							
44 S 46 S	159	S.R.7 S.B. - N 80+68 - 1463+85	Rt.								116											
5-Jute		79+00 - 80+68 S.R.7 S.B.	Lt.															137				
6-Jute		1460+00 - 80+68 S.R.7 S.B.	Rt-Lt.															232				
7-Jute		19+34 - 80+88 N.B.C.D.	Lt.															125				
8-Jute		79+18 - 80+68	Rt.															125				
9-Jute		80+68 - 82+16	Rt.															125				
7 Sod		1462+21	Rt.																		66	
8 Sod		77+00	Rt.																		47	
2-R		77+00 - S.R.7 N.B.	Lt.																1			
1-Septic		1431+46 - Ramp A-B	Rt.																			1
TOTALS				100	66	76	104	50	90	146	116	410	68	6	1	1	1	744	1		113	1

Calculated By J.D.F Date 12-18-68
Checked By P.J.B. Date 5-23-69

PLAN SHEET STA. 1460 TO STA. 1468+65.08

MICROFILMED
AUG 11 1983

BELMONT COUNTY
BEL - 470 - 5.90

Calculated By M.H. 12-3-68
Checked By R.T. 12-5-68

MICROFILMED
AUG 1 1 1986

Ref. No.	Station to Station	Side	ITEM 622 Concrete Barrier Type A Lin. Ft.	ITEM 606 GUARD RAIL TYPE 5 Rail Standard Type 5 L.F.	Anchor Assembly Type A Each	Anchor Assembly Type T Each	Bridge Terminal Assembly Type A Each	ITEM 202 Guard Rail Removed Single Barr. L.F.		Remarks
15GR	1460+52 - 1462+52	Rt.		175.0	1		1			M
16CM	1429+18.5 - 1431+42.5	℄	224							Ramp A-B
19GR	76+79 - 78+29	Lt.		125.0	1		1			S.B. SR.7
20GR	74+74 - 83+49	Rt.		650.0	1		1			S.B. SR.7
21GR	21+00 - 23+50	Lt.		212.5	1	1				S.B. C.D.
22GR	81+00 - 84+50	Lt.		350.0	1					N.B. SR.7
23GR	21+00 - 24+25	Rt.		325.0	1					S.B. C.D.
24GR	1429+12.5 - 1431+00	Lt.		137.5	1	1				Ramp A-B
26GR	75+00 - 84+50	Rt.		950.0			475	875		N.B. SR.7
26aGR	75+00 - 84+50	℄							850	N.B. SR.7
	TOTALS		224	2925	7	2	3	875	850	

475 875 850 850

BRIDGE NO. BEL-7-1848 L
OVER RAMPS A-B

PROPOSED STRUCTURE

TYPE: Continuous steel beams with reinforced Concrete deck and Substructure.
SPAN: 37.5'-48'-42.5'-34' c/c Brgs.
ROADWAY: 42'-0" f/f of Parapets
LOADING: HS-20-44
SKEW: 1°01'41" Lt. Fwd.
WEARING SURFACE: 2½" Asphalt Concrete
APPROACH SLABS: AS-1-72 (20' Long)
ALIGNMENT: Tangent
SUPERELEVATION: Runout on Bridge.

BRIDGE NO. BEL-470-0662
OVER SR 7, PENN CENTRAL & B&O RAILROADS

PROPOSED STRUCTURE

TYPE: Continuous steel beams and welded girders with Reinforced concrete deck and substructure
SPANS: 46'-56'-69'-83'-58.5'-140.885'-140.885' c/c Brgs.
ROADWAY: Varies from 98' to 88' f/f parapets Including 16' median with concrete barrier railing.
LOADING: HS-20-44 & the Interstate Alternate Loading.
SKEW: Rear Abut. & Piers 1 & 2 15° 43'57 Lt. Fwd.
Piers 3 thru 5 9° 26' Lt. Fwd. Pier 6 - 4° 45' Lt. Fwd.
Pier 7 None
WEARING SURFACE: 2½" Asphalt Concrete
APPROACH SLAB: AS-1-72 (25 ft. Long) rear only.
ALIGNMENT: Tangent

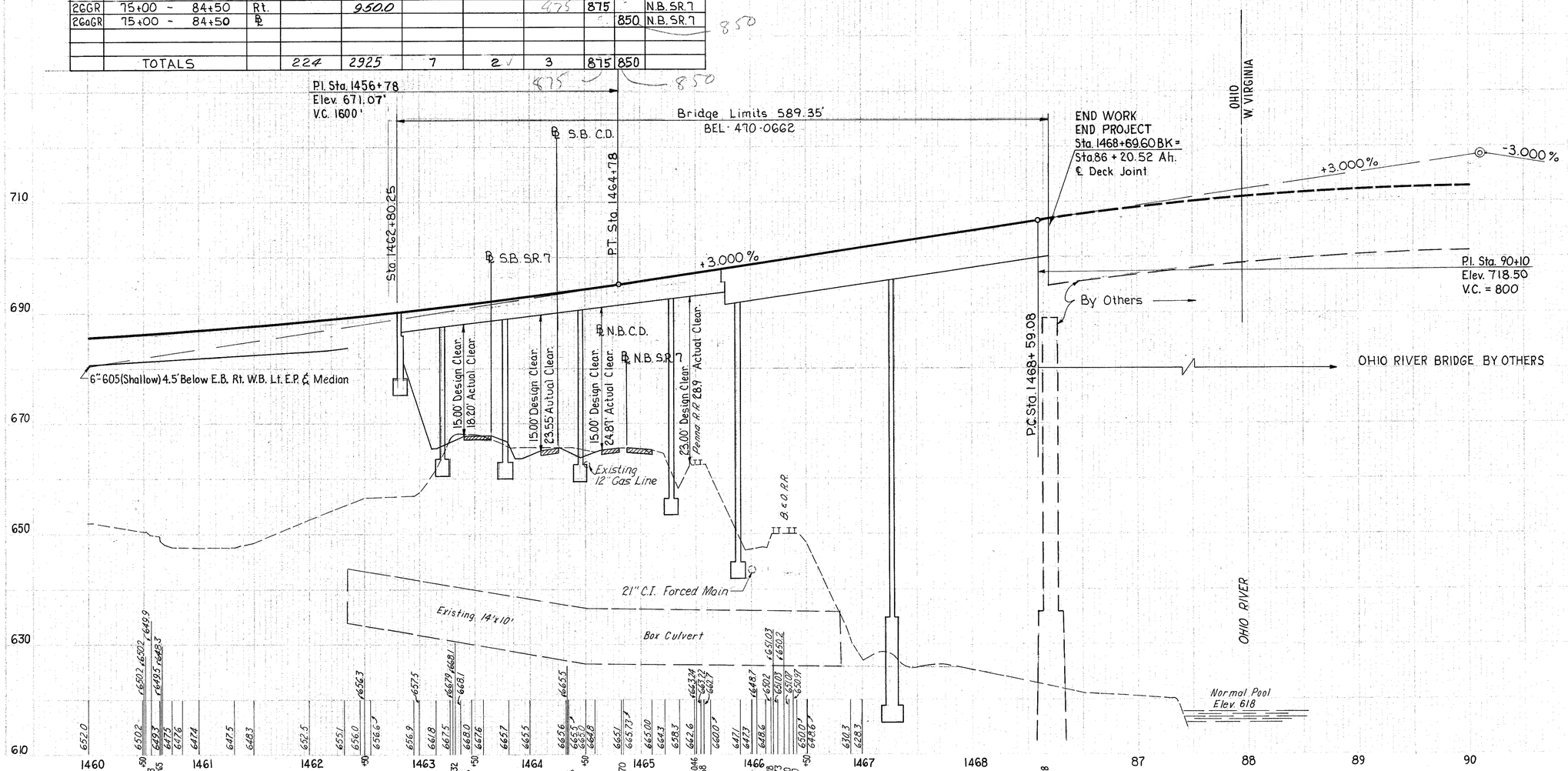

PROFILE SHEET-STA. 1460+00 TO STA. 1468+65.08

FED. RD. DIVISION	STATE	PROJECT	
5	OHIO		

BELMONT COUNTY
BEL-470-5.90

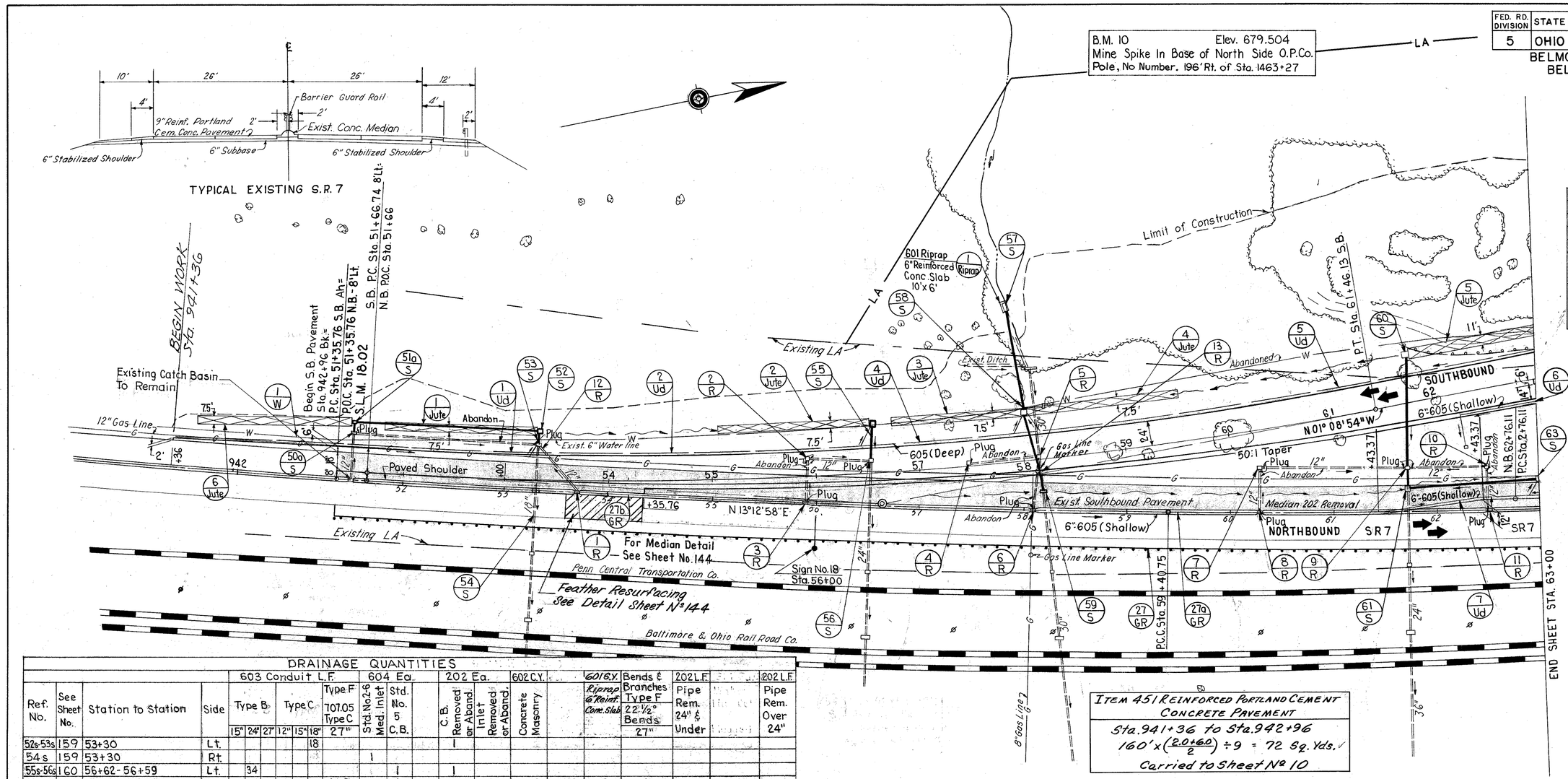

PROFILE SHEETS	
SR-7 S.B.	40
SR-7 S.B Collect Dist.	36
SR-7 N.B.	38
SR-7 N.B. Collect Dist.	37
For 202 Removal Items See Sheet No. 16	
See Geometric Layout Sheet No. 146 For Curve Data	

DRAINAGE QUANTITIES				
Ref. No.	See Sheet No.	Station to Station	Side	867 S.Y. Seeding & Jute Matting
1-Jute		51+80-53+30 S.R-7 S.B.	Lt.	125
2-Jute		55+08-56+62 S.R-7 S.B.	Lt.	125
3-Jute		56+78-58+08 S.R-7 S.B.	Lt.	107
4-Jute		58+08-59+56 S.R-7 S.B.	Lt.	125
5-Jute		61+85-63+00 S.R-7 S.B.	Lt.	154
6-Jute		50+00-51+50	Lt.	125
		TOTAL		761

DRAINAGE QUANTITIES																							
				603 Conduit L.F.							604 Ea.		202 Ea.		602 C.Y.		601 S.Y.		Bends & Branches	202 L.F.		202 L.F.
Ref. No.	See Sheet No.	Station to Station	Side	Type B			Type C			Type F 707.05 Type C	Std. No. 2-6 Med. Inlet	Std. No. 5 C.B.	C.B. Removed or Aband.	Inlet Removed or Aband.	Concrete Masonry		Riprap & Reinf. Conc. Slab		Type F 22½° Bends	Pipe Rem. 24" & Under		Pipe Rem. Over 24"
				15"	24"	27"	12"	15"	18"	27"									27"			
52s-53s	159	53+30	Lt.						18				1									
54s	159	53+30	Rt.								1											
55s-56s	160	56+62-56+59	Lt.		34							1	1									
57s-58s	159	58+03-58+08	Lt.							106		1			3.5		7		1			
58s-59s	159	58+08-58+22	Lt.			78						1										
60s-61s	160	61+85-61+74	Lt.	128								2										
61s-63s	160	61+74-63+00	Lt.						124			1										
1-R		53+70-N.B. S.R.-7	℄											1								
2-R		55+90-N.B.S.R.-7	Lt.										1									
3-R		55+90-N.B.S.R.-7	℄											1								
4-R		57+50-S.B.S.R.-7	Lt.										1									
5-R		58+16-S.B.S.R.-7	Lt.										1									
6-R		58+10-N.B. S.R.-7	℄											1								
7-R		60+28-N.B.S.R.-7	Lt.										1									
8-R		60+28-N.B.S.R.-7	℄											1								
9-R		61+72-N.B.S.R.-7	Lt.										1									
10-R		62+50-N.B.S.R.-7	Lt.										1									
11-R		62+50-N.B.S.R.-7	℄											1								
12-R		53+30-53+70	Lt.																	57		
13-R		58+14-58+22 N.B.S.R.-7	Lt.																			34
			Lt.																			
50as-51as	157	51+50	Lt.				14					1	1									
51a-52s	157	51+50-53+30	Lt.						180			1										
		TOTALS		128	34	78	14	124	198	106	1	8	9	5	3.5		7		1	57		34

ITEM 451 REINFORCED PORTLAND CEMENT CONCRETE PAVEMENT

Sta. 941+36 to Sta. 942+96

$160' \times \left(\frac{20+60}{2}\right) \div 9 = 72$ Sq. Yds. ✓

Carried to Sheet No 10

**100% by STATE

DRAINAGE QUANTITIES							
Station to Station	Side	**Special/Lin. Ft. Cleaning of Exist. Sewers					**Special/Ea. Cleaning of Existing Structure (Catch Basin)
		12"	18"	24"	30"	36"	
51+50-S.R.-7 N.B.	Lt.-Rt.	41					2
51+50-53+30 S.R-7 N.B.	Lt.	177					
53+30-S.R.-7 N.B.	Lt.-Rt.		213				2
56+55-S.R.-7 N.B.	Lt.-Rt.			213			2
58+21-S.R.-7 N.B.	Lt.-Rt.				230		2
61+74-S.R.-7 N.B.	Lt.-Rt.			132		116	2
TOTALS		218	213	345	230	116	10

ITEM 606 GUARD RAIL TYPE 5								ITEM 202		
Ref. No.	Station to Station	Side	Rail Std.	Rail Barrier	Anchor Assem. Std.	Anchor Assem. Barrier	Bridge Term. Assem.	Guard Rail Removed Single Bar		Remarks
			L.F.	L.F.	Each	Each	Each	L.F.		
27GR	51+37.5-63+00	Rt.	1162.5					1162.5		N.B.S.R.-7
27aGR	54+00-63+00	℞							900	N.B.S.R.-7
27bGR	54+00-54+25	℞				1				
TOTALS			1162.5			1		1162.5	900	

UNDERDRAIN QUANTITIES								
Ref. No.		Station to Station	Side	603 Cond. L.F. Type F Outlet	605 Cond. L.F. Deep	605 Cond. L.F. Shallow	Bends & Branches Type F 60° Wye	Bends & Branches Type F 90° Wye
				6"	6" Pipe U'drain		6"	
1-Ud		49+80-53+30 S.R-7 S.B.	Lt.	10	352		1	
2-Ud		53+34-56+62 S.R-7 S.B.	Lt.	10.	332		1	
4-Ud		56+63-58+08 S.R-7 S.B.	Lt.	10	162		1	
5-Ud		58+08-63+00 S.R-7 S.B.	Lt.	10	508		1	
6-Ud		62+22-63+00 S.R-7 S.B.	Rt.	10		96		1
7-Ud		55+80-63+00 S.R-7 S.B.	Lt.	10		722	1	
		TOTALS		60	1354	818		

Calculated By J.D.F. Date 12-19-68
Checked By P.J.B. Date 5-28-69

SR-7 PLAN SHEET-STA. 49+00 TO STA. 63+00

D.F. D.F.

FED. RD. DIVISION	STATE	PROJECT	
5	OHIO		

BELMONT COUNTY
BEL-470-5.90

28
288

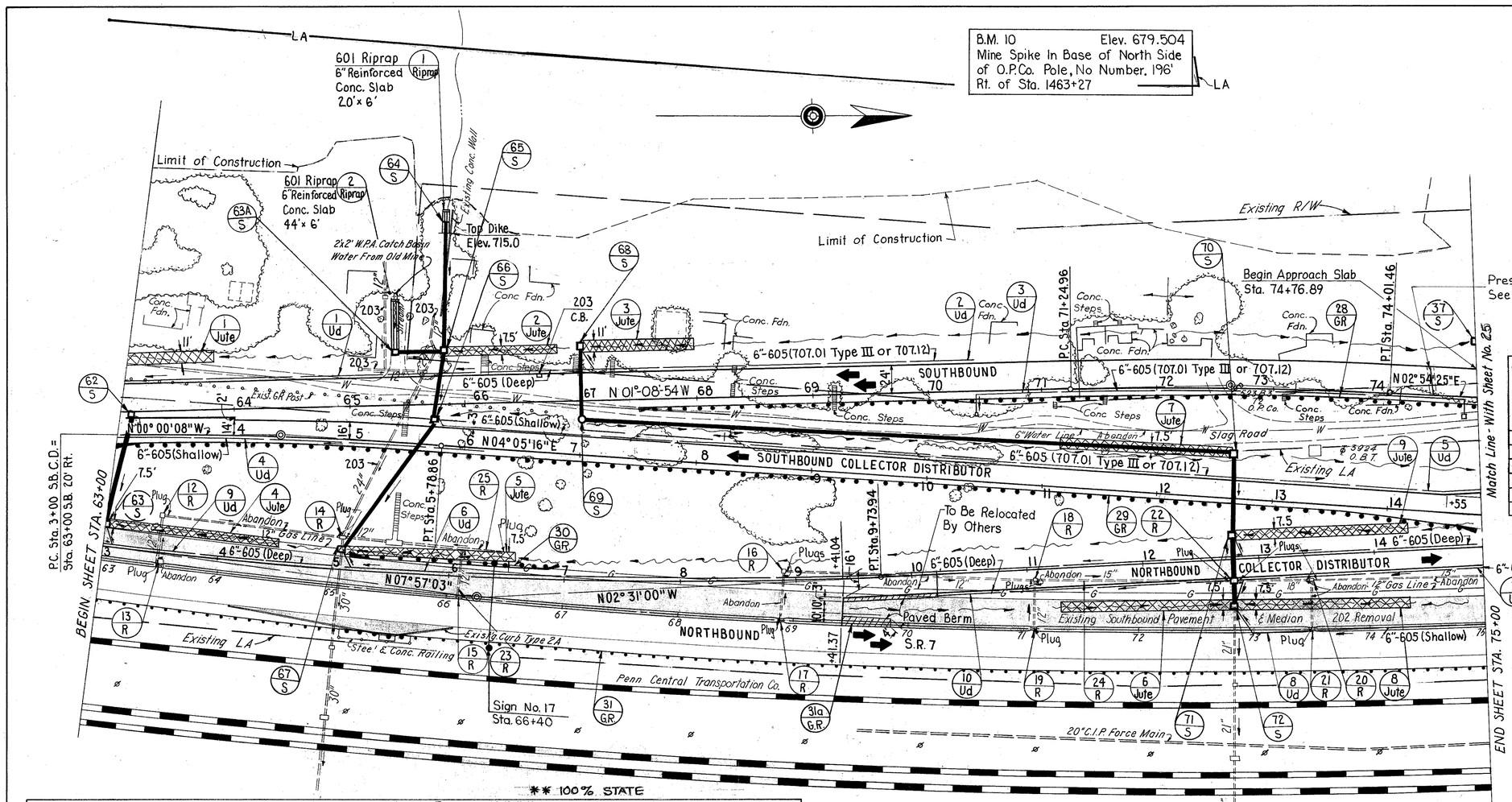

Ref. No.	Station to Station	Side	ITEM 606 GUARD RAIL TYPE 5 Rail Std. L.F.	Rail Barrier L.F.	Anchor Assem Type A Each	Anchor Assem Type T Each	Bridge Terminal Assembly Type A Each	ITEM 202 Guard Rail Removal L.F.	Remarks
28	67+50.5-74+88	Rt.	725.0			1	1		S.B.S.R.7
29	3+00-14+75	Rt.	1137.5		1	1			S.B.C.D.
30	65+15-66+90	Lt.	137.5		1	1			N.B.S.R.7
31	63+00-75+00	Rt.	1200.0					1125.0	N.B.S.R.7
31a	63+00-75+00	℄						1200.0	N.B.S.R.7
	TOTAL		3200		2	3	1	2325.0	

PROFILE SHEETS	
SR.-7 S.B.	41
SR.-7 S.B. Collect Dist.	36
SR.-7 N.B.	38
SR.-7 N.B. Collect Dist.	37
Intersection Details	143
For 202 Removal Items See Sheet No. 16	
For Curve Data, See Sheet No. 146	

ITEM 202 DRAINAGE QUANTITIES Ref. No.	See Sheet No.	Station to Station	Side	202 Each C.B. Removed or Aband.	202 Each Inlet Removed or Aband.	202 L.F. Pipe Removed 24" & Under
12-R		63+50-SR-7 N.B.	Lt.	1		
13-R		63+50-SR-7 N.B.	℄		1	
14-R		65+05-SR-7 N.B.	Lt.	1		
15-R		66+10-SR-7 N.B.	℄		1	
16-R		68+90-SR-7 N.B.	Lt.	1		
17-R		68+90-SR-7 N.B.	℄		1	
18-R		71+10-SR-7 N.B.	Lt.	1		
19-R		71+10-SR-7 N.B.	℄		1	
20-R		73+50-SR-7 N.B.	Lt.	1		
21-R		73+50-SR-7 N.B.	℄		1	
22-R		12+78-N.B. C-D	Rt.	1		
23-R		66+10-S.R.-7 N.B.	℄-Lt.			41
24-R		71+10-72+83 SR.7 N.B.	Lt.			170
25-R		66+10-66+46 S.R.7 N.B.	℄-Lt.			36
		TOTALS		6	5	247

DRAINAGE QUANTITIES

Ref. No.	See Sheet No.	Station to Station	Side	603 Conduit L.F. Type B 15"	Type B 21"	Type B 24"	Type C 21"	Type F 707.05 Type C 24"	602 S.Y. Concrete Masonry	601 S.Y. Riprap 6" Reinf. Conc. Slab	604 Eq. Std. No.1 M.H.	Std. No.5 C.B.	Std. No.6 C.B.	Std. No.8 C.B.	667 S.Y. Seeding & Jute Matting	Bends & Branches Type F 22½% Bend 24"	** SPEC. LIN. FT. Cleaning of Existing Sewer 21"	24"	30"	** SPEC. EA. Cleaning of Existing Structure (Catch Basin)	603 Con. L.F. Type C 12"
62s-63s	160	63+10 SR-7 N.B. ℄ S.B.	Rt.-Lt.	94									*1								
64s-65s	159	65+88-65+84	Lt.					118	0.46	13		1				1					
65s-66s	159	65+84-65+75	Lt.-Rt.			60								1							
66s-67s	160	65+75 SR-7 S.B. 65+07 S.R.-7 N.B.	Rt.-Lt.			138						1									
68s-69s	160	67+00-SR-7 S.B.	Lt.-Rt.		62						1	1									
69s-70s	160	67+00 SR-7 S.B. 12+65 SR-7 S.B. C-D	Rt.-Lt.				568					1									
70s-71s	159	12+65 SR-7 S.B. C-D 12+85 S.R.-7 N.B. C-D	Lt.		70							1									
71s-72s	159	12+85 S.R.-7 N.B. C-D 72+83 SR-7 N.B.	Lt.		62							1									
63as-65s	159	65+42-65+84 S.R.7 S.B.	Lt.									1									42
		65+07 SR-7 N.B.	Lt.-Rt.															230	2		
		72+83 SR-7 N.B.	Lt.-Rt.														124	114		2	
2 Riprap		65+42 SR-7 S.B.	Lt.							29											
1 Jute		63+00-63+85 SR-7 S.B.	Lt.												90						
2 Jute		65+84-66+80 S.R.-7 S.B.	Lt.												80						
3 Jute		67+00-68+00 S.R.-7 S.B.	Lt.												117						
4 Jute		63+00-64+50 S.R.-7 N.B.	Lt.												125						
5 Jute		65+07-66+57 S.R.-7 N.B.	Lt.												125						
6 Jute		71+33-72+83 S.R.-7 N.B.	Lt.												125						
7 Jute		11+10-12+65 S.B.-7 C-D	Lt.												125						
8 Jute		72+83-74+33 S.R.-7 N.B.	Lt.												125						
9 Jute		12+85-14+35 N.B. C-D	Lt.												125						
		TOTALS		94	194	198	568	118	0.46	42	1	7	1	1	1037		124	114	230	4	42

* As Per Plan

UNDERDRAIN QUANTITIES

Ref. No.	See Sheet No.	Station to Station	Side	603 Con. L.F. Type B	603 Con. L.F. Type F 6"	605 Con. L.F. Deep 6" Pipe U-drain	605 Con. L.F. Shallow 6" Pipe U-drain	605 Con. L.F. 707.01 Type III or 707.12 6" Pipe U-drain	Bends & Branches 60° Bend 6" Type F	60° Wye 6" Type F	90° Bend 6" Type F	Tee 6" Type F
1-Ud		63+00-66+98-SR-7 S.B.	Lt.		10	384						
2-Ud		67+02-70+40-S.R-7 S.B.	Lt.		10			352		1		
3-Ud		70+41-74+65-S.R-7 S.B.	Rt.		20			432			2	
4-Ud		3+00-6+16 S.B.-C-D	Rt.				316					
5-Ud		65+75 S.R.-7 S.B.-14+82 S.B. C-D	Rt.-Lt.		10		244	656	1			
6-Ud		5+10-12+76 N.B.-C-D.	Lt.		10	772						1
7-Ud		72+83 SR-7 N.B. 14+94 N.B. C-D	Lt.-Rt.		10		224			1		
8-Ud		72+83-75+00 S.R.-7 N.B.	Lt.		10		218		1			
9-Ud		3+00-5+04 N.B. C-D	Lt.		10	210				1		
10-Ud		10+22-12+76 N.B. C-D	Lt.-Rt.	20		254					1	
11-Ud		12+85-14+94 N.B. C-D	Lt.		10	224				1		
		TOTALS		20	100	1844	1002	1440				

Calculated by JDF Date 12-20-68
Checked by PJB Date 5-28-69

SR-7 PLAN SHEET STA. 63+00 TO STA. 75+00

FED. RD DIVISION	STATE	PROJECT	
5	OHIO		

29 / 288

BELMONT COUNTY
BEL-470-5.90

PARTIAL DEPTH PAVEMENT JOINT REPAIR:
This item shall conform to the note in the Proposal, except that the depth of removal shall be as directed by the Engineer. An estimated quantity of 50 sq. yd. Item Special-Partial Depth Pavement Joint Repair has been carried to the General Summary.

BM	Elev. 646.403
S-115 U.S.G.S. 0.8 mile South along the B&O Railroad from the Station at Bridgeport at Bridge 110 in the top of the East end of the North Concrete Abutment 3.5 feet East of the Centerline of the East track and about 1-1/2 feet lower than the track. A Standard Disc stamped S-115, 1943.	
B.M. 10	Elev. 679.504
Mine Spike in Base of North Side of O. P. Co. Pole No Number, 196' Rt. of Sta. 1463+27.	

Note: All Joint Repair work is for N.B. S.R.-7 Sta. 54+35.76 to Sta. 96+30 where existing SR-7 is being resurfaced.

NOTE: For Details of Guard Rail to Concrete Barrier Connection See Sheet No. 138-A

PROFILE SHEET	
S.R.7 S.B.	42
S.R.7 S.Br Collector Dist.	36
S.R.7 N.B.	39
For 202 Removal Items, See Sheet No. 16	
For Curve Data, See Sheet No. 146	

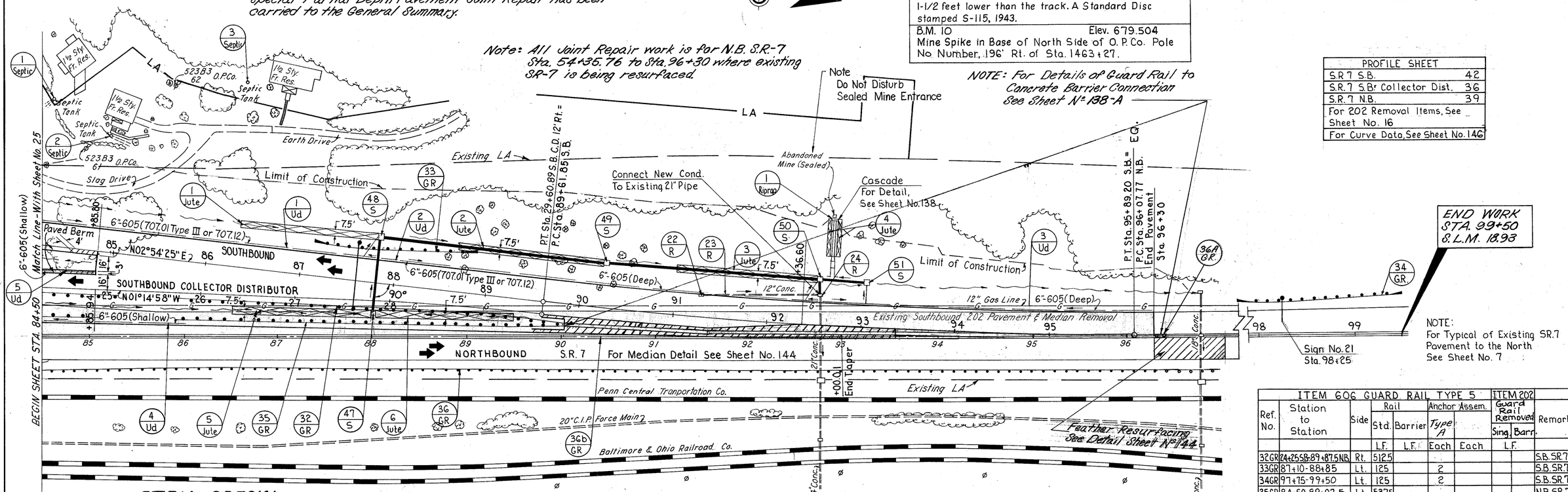

END WORK
STA. 99+50
S.L.M. 18.93

NOTE:
For Typical of Existing SR.7 Pavement to the North See Sheet No. 7

ITEM 606 GUARD RAIL TYPE 5							ITEM 202 Guard Rail Removed		
Ref. No.	Station to Station	Side	Rail Std.	Rail Barrier	Anchor Assem. Type A	Anchor Assem.	Sing.	Barr.	Remarks
			LF.	LF.	Each	Each	LF.		
32GR	24+25 SB-89+87.5 NB	Rt.	512.5						S.B. SR.7
33GR	87+10-88+85	Lt.	125		2				S.B. SR.7
34GR	97+75-97+50	Lt.	125		2				S.B. SR.7
35GR	84+50-89+87.5	Lt.	537.5						N.B. SR.7
36GR	84+50-96+25	Rt	1175				1175		N.B. SR.7
36A GR	96+30-96+42.5	℄		12.5					
36B GR	84+50-96+42.5	℄						1192.5	N.B. SR.7
TOTALS			2475	12.5	4		1175	1192.5	

Note: An estimated quantity of 20 sq. yd. Item Special-Full Depth Pavement Joint Repair and 20 sq. yd. Item 202 Pavement Removed has been carried to the General Summary.

ITEM SPECIAL FULL DEPTH PAVEMENT JOINT REPAIR

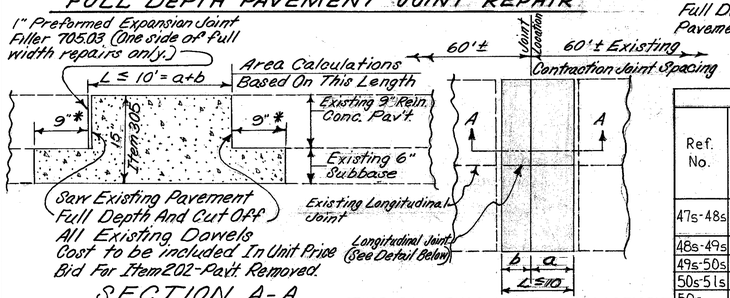

SECTION A-A

TYPICAL FULL WIDTH REPLACEMENT

Note: This work is for the repair of deteriorated transverse pavement joints. The location and size of the repairs shall be as directed by the Engineer. For part width replacement the longitudinal joints shall be sawed full depth and any bars or hook bolts encountered shall be cut off flush with existing pavement.

*Note: The Area to be paid for at the unit price bid per square yard shall be based upon the width shown on Section AA and the width of pavement. Entire cost of providing the 9" slab key shall be included in the unit price bid for Item Special-Full Depth Pavement Joint Repair Sq. Yd.

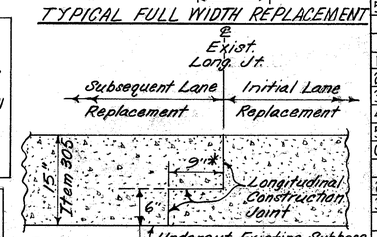

LONGITUDINAL CONSTRUCTION JOINT FOR FULL WIDTH REPLACEMENT

** 100% STATE

DRAINAGE QUANTITIES																		
				603 Conduit L.F.				604 Each		202 Each	202 L.F.	202 Each	**Special L.F.			**Special Each	601 S.Y.	667 S.Y.
				Type B	Type C	Type C		Std. No. 5	Std. No. 8				Cleaning of Existing Conduit			Cleaning of Existing Structure	Riprap 6" Reinf. Conc. Slab	Seeding & Jute Matting
Ref. No.	See Sheet No.	Station to Station	Side	15"	21"	12"	21"	C.B.	C.B.	C.B. Removed or Aband.	Pipe Removed 24" & Under	Septic Tank Removed	18"	21"	24"	(C.B.)		
47s-48s	157	S.R.7 N.B S.R.7 S.B. 88+00 - 87+81	Lt.	80				1	1									
48s-49s		87+81 -90+25 SR.7 S.B.	Lt.		242			1										
49s-50s		90+25 -92+54 SR.7 S.B.	Lt.		226			1										
50s-51s		92+54 -93+04 SR.7 S.B.	Lt.			50		1										
50s	157	92+54 - SR.7 S.B.	Lt.				16			1								
		92+77	Lt.-Rt.											150	52	1		
		96+80	Lt.-Rt.										162		42	3		
1 Jute		86+31 -87+81 SR.7 S.B.	Lt.															125
2 Jute		88+75 -90+25 SR.7 S.B.	Lt.															125
3 Jute		91+04 -92+54 SR.7 S.B.	Lt.															125
4 Jute		92+70 - SR.7 S.B.	Lt.															41
5 Jute		86+50 -88+00 SR.7 N.B.	Lt.															125
6 Jute		88+00 -89+50 SR.7 N.B.	Lt.															125
1 Septic		84+20 - S.B.	Lt.									1						
2 Septic		84+85 - S.B.	Lt.									1						
3 Septic		86+23 - S.B.	Lt.									1						
22R		91+50 - S.R.7 N.B	Lt.							1								
23R		91+50 -92+75 SR.7 N.B.	Lt.								124							
24R		92+75 - S.R.7 N.B.	Lt.							1								
1 Riprap		92+70 - SR.7 S.B.	Lt.														41	
		TOTALS		80	468	50	16	4	1	3	124	3	162	150	94	4	41	666

UNDERDRAIN QUANTITIES									
			603 Cond. L.F.	605 Conduit L.F.			Bends & Branches	
Ref. No.	See Sheet No.	Station to Station	Side	Type F Outlet	Deep	Shallow	707.01 Type III or 707.12	Type F 60° Wye	Type F Tee
				6"	6" Pipe U Drain			6"	
1 Ud		84+28 - 87+81 SR.7 S.B.	Lt.	10	374			1	
2 Ud		87+86 - 92+54 SR.7 S.B.	Lt.	10	268		214	1	
3 Ud		92+80 - 96+80 SR.7 S.B.	Lt.	10	362				1
4 Ud		84+50 - 86+00 SR.7 N.B.	Lt.		150				
5 Ud		SR.7 S.B. C.D. 24+30 - 24+85	Lt.			54			
TOTALS				30	1154	54	214		

Calculated by	JDF	Date	12-23-68
Checked by	PJB	Date	5-29-69

SR-7 PLAN SHEET-STA. 84+50 TO STA. 97+00

Rev. 1-10-78

BELMONT COUNTY
BEL - 470 - 5.90

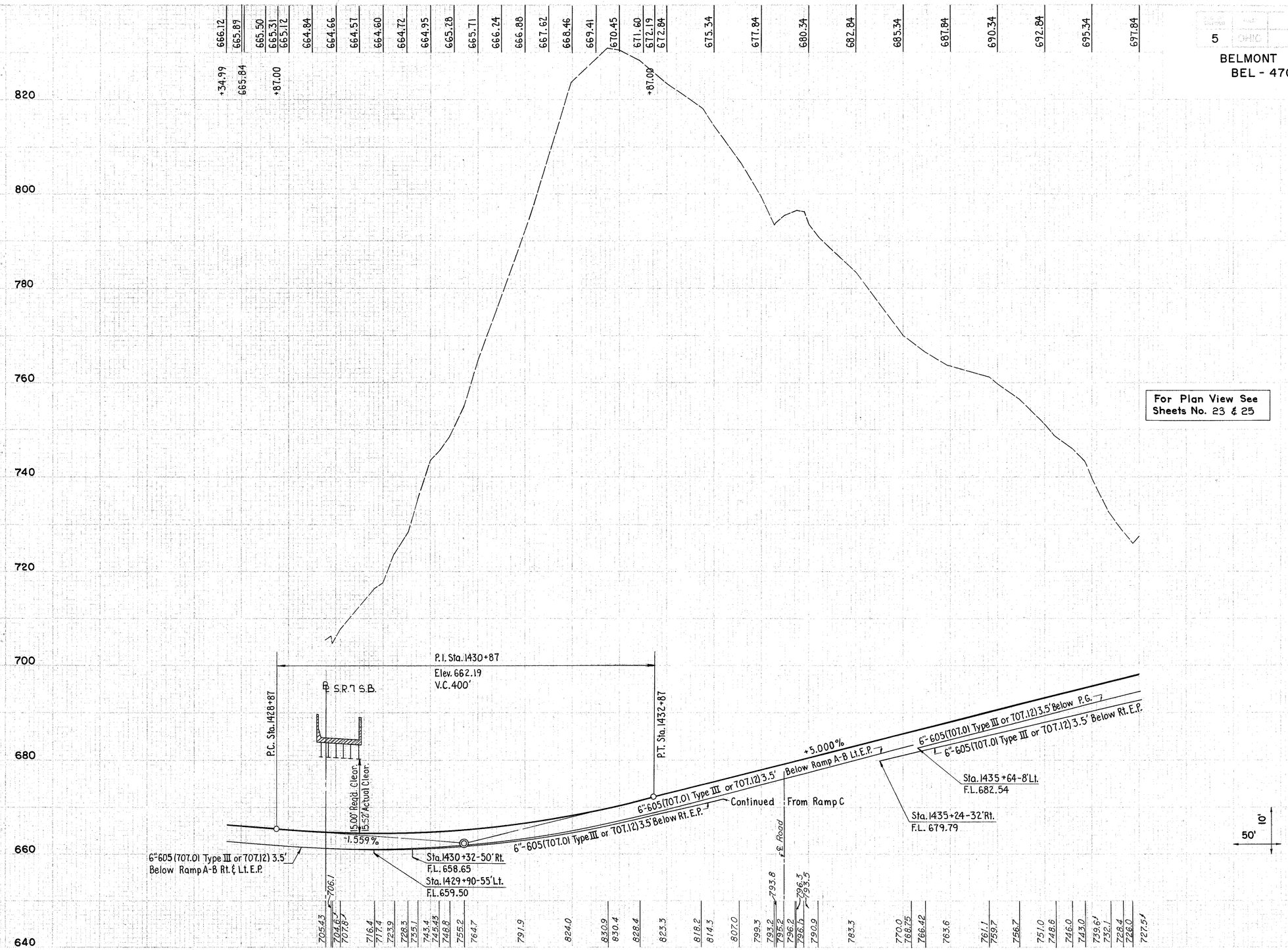

RAMP A-B
PROFILE SHEET - STA. 1429+39.53 TO STA. 1438+00

BELMONT COUNTY
BEL - 470 - 5.90

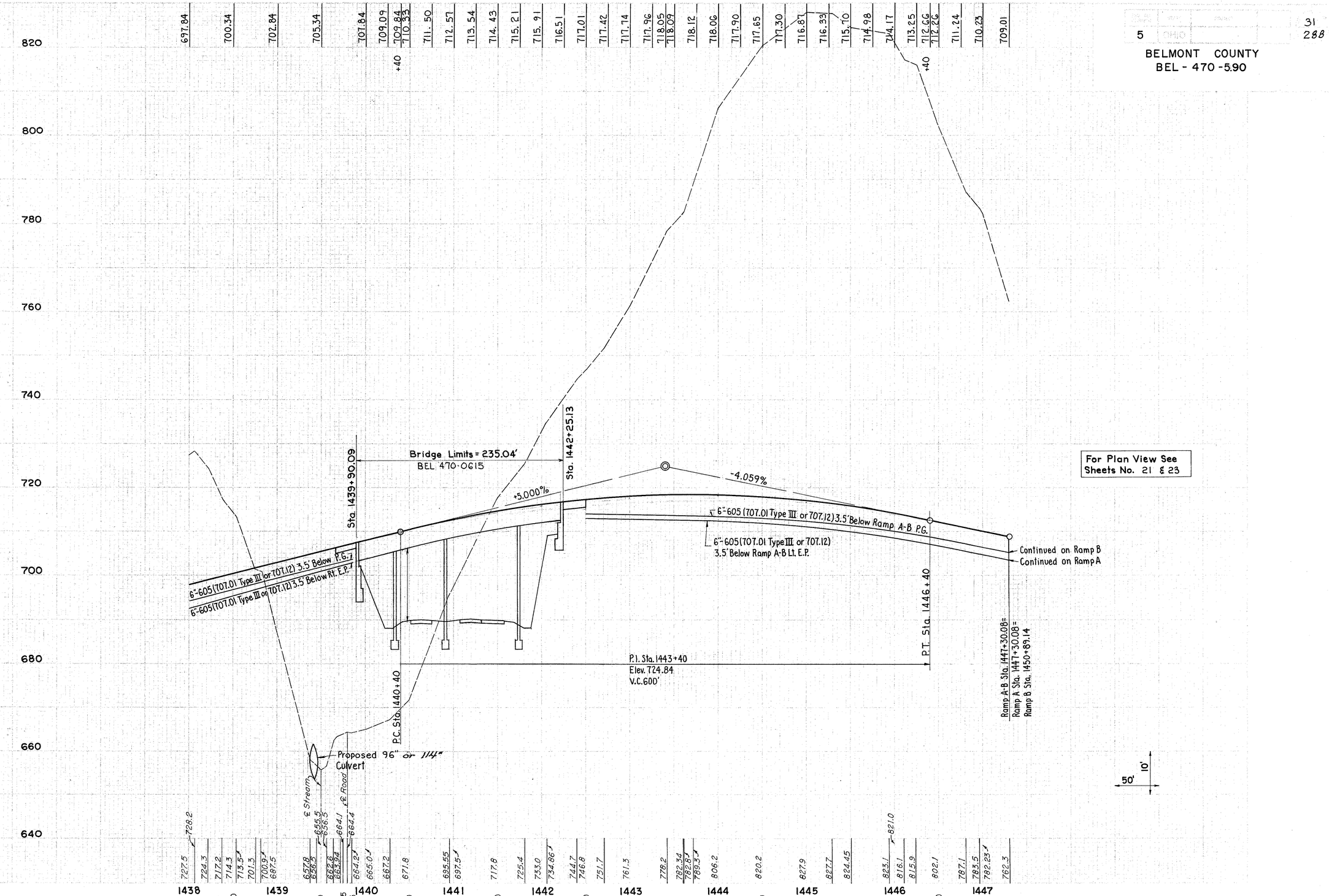

RAMP A-B
PROFILE SHEET - STA. 1438+00 TO STA. 1447+30.08

BELMONT COUNTY
BEL-470-5.90

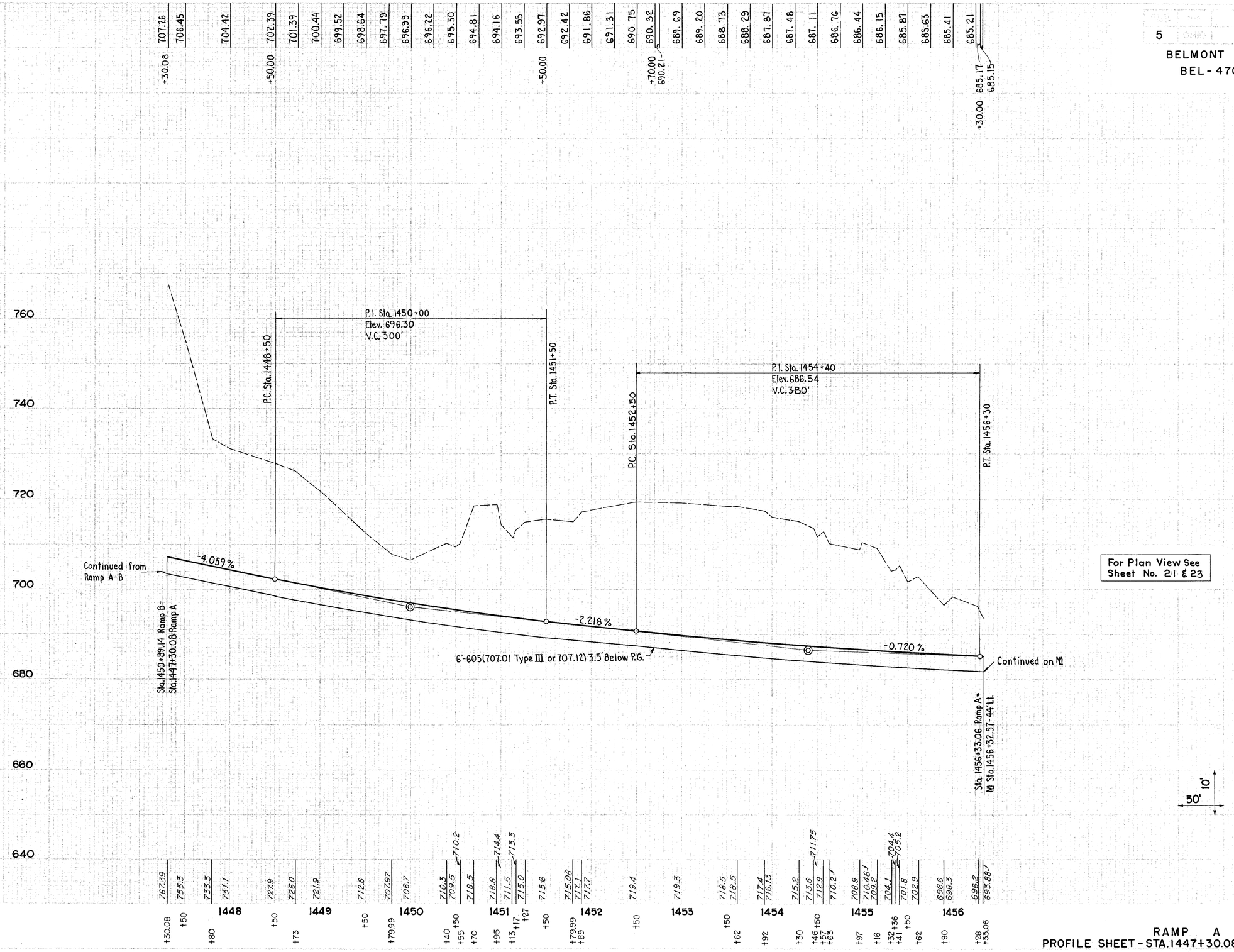

RAMP A
PROFILE SHEET - STA.1447+30.08 TO STA.1456+33.06

BELMONT COUNTY
BEL - 470 - 5.90

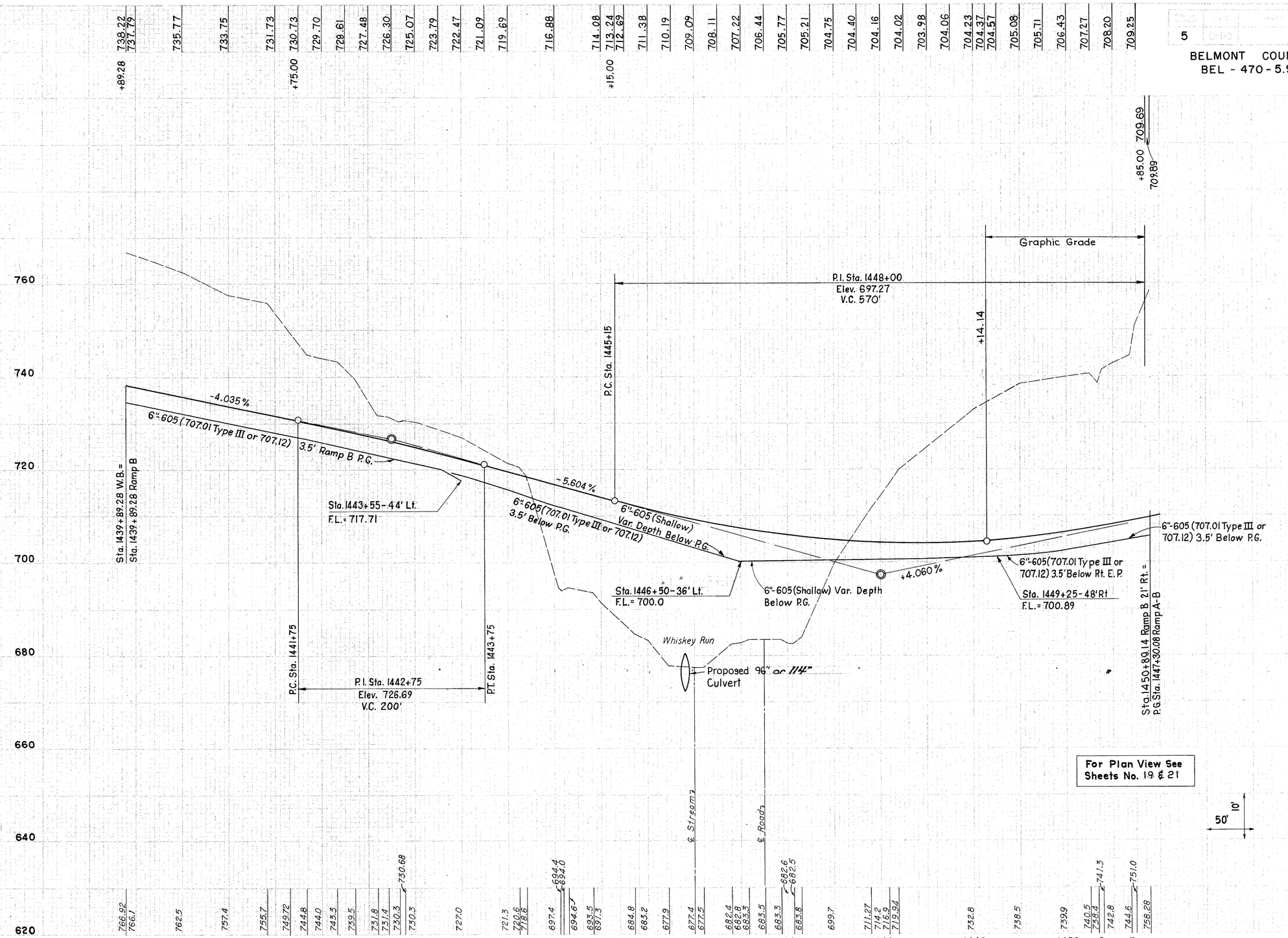

RAMP B
PROFILE SHEET - STA. 1439+89.28 TO STA. 1450+89.14

BELMONT COUNTY
BEL - 470 - 5.90

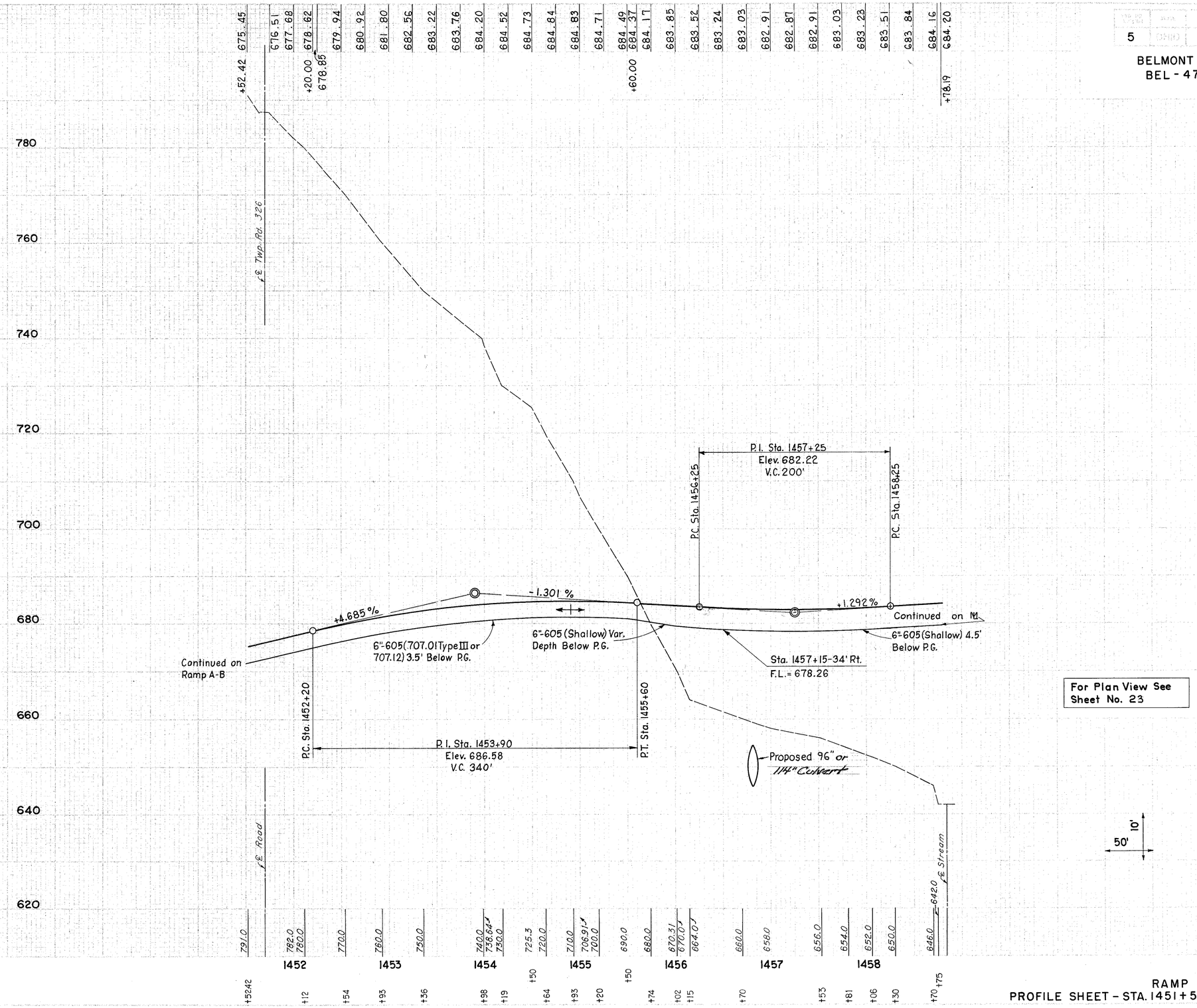

For Plan View See Sheet No. 23

RAMP C
PROFILE SHEET - STA. 1451+52.42 TO STA. 1458+78.19

BELMONT COUNTY
BEL -470 - 5.90

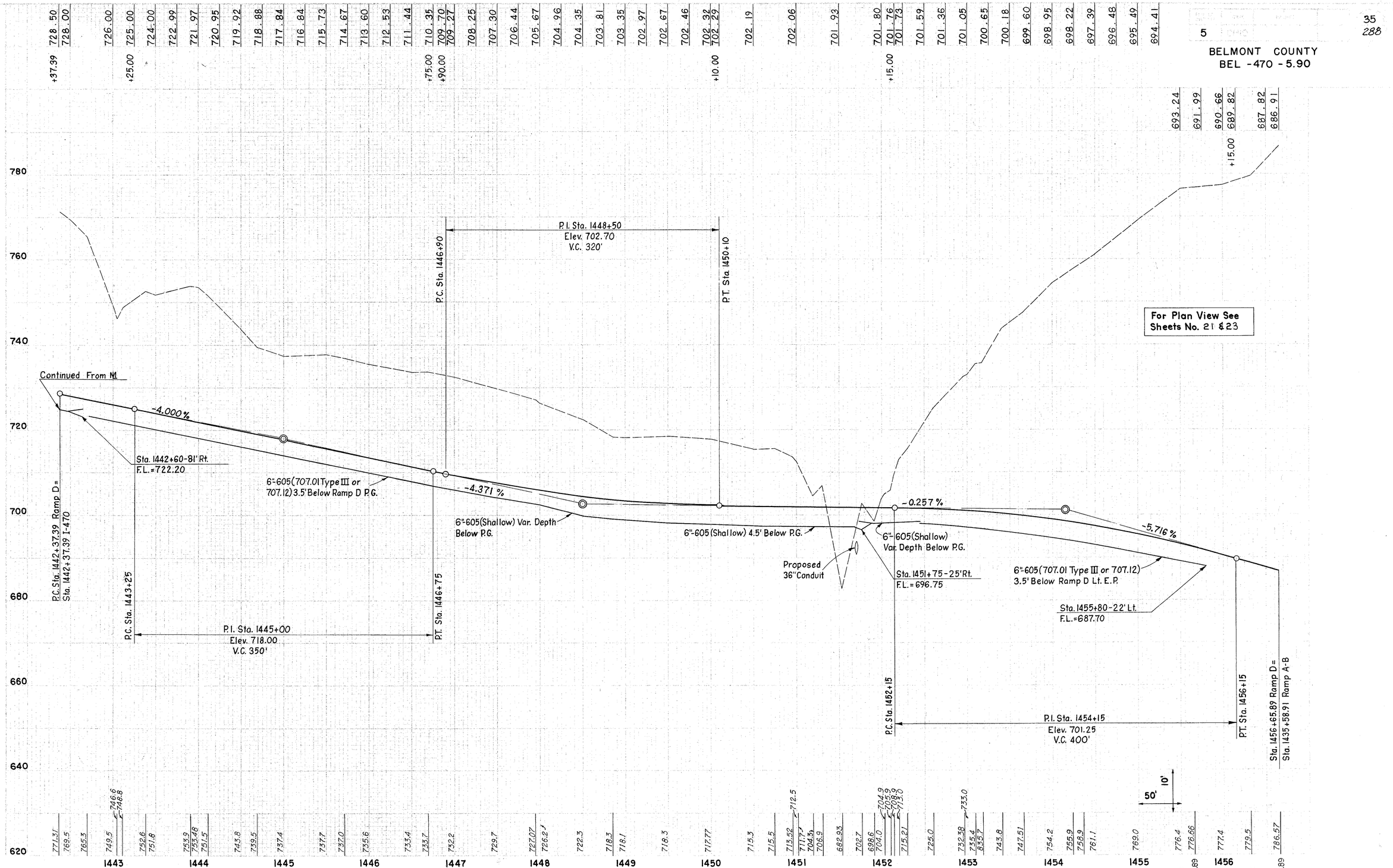

RAMP D
PROFILE SHEET - STA.1442+37.39 TO STA.1456+65.89

BELMONT COUNTY
BEL - 4.70 - 5.90

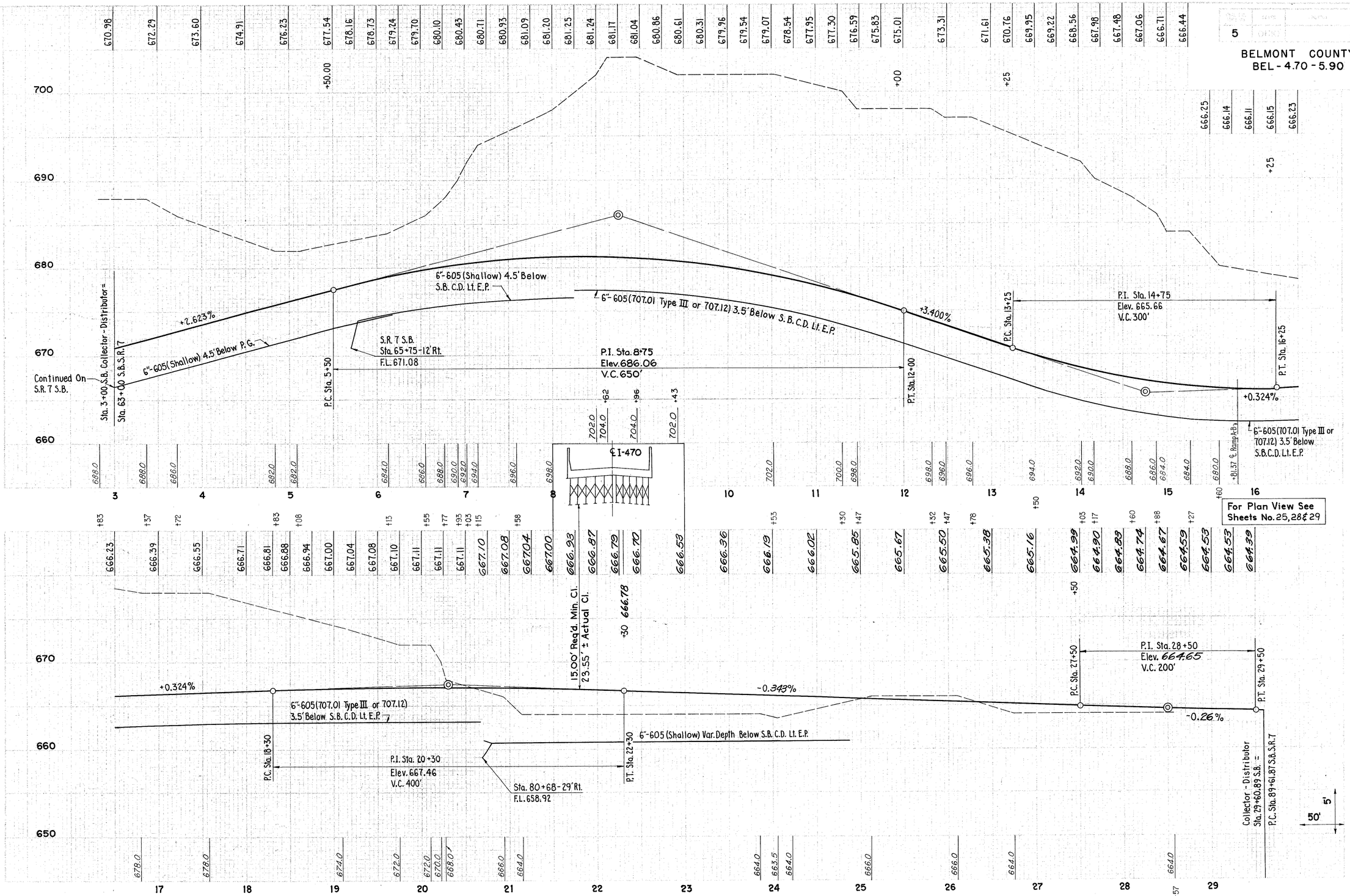

SOUTHBOUND COLLECTOR-DISTRIBUTOR
PROFILE SHEET-STA. 2+83 TO STA. 29+60.89

BELMONT COUNTY
BEL-470-5.90

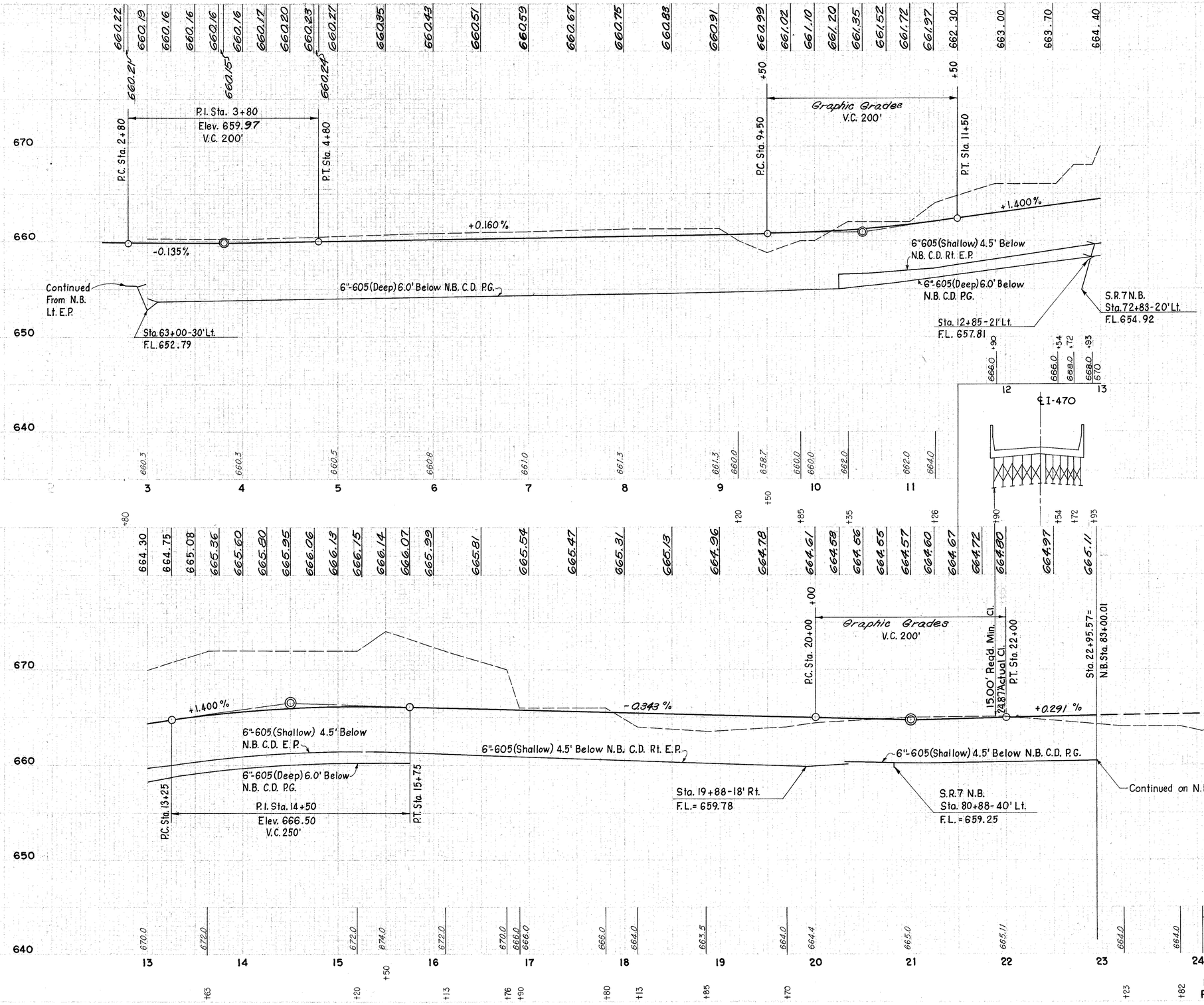

NORTHBOUND COLLECTOR-DISTRIBUTOR
PROFILE SHEET - STA. 2+80 TO STA. 24+26

BELMONT COUNTY
BEL - 4.70-5.90

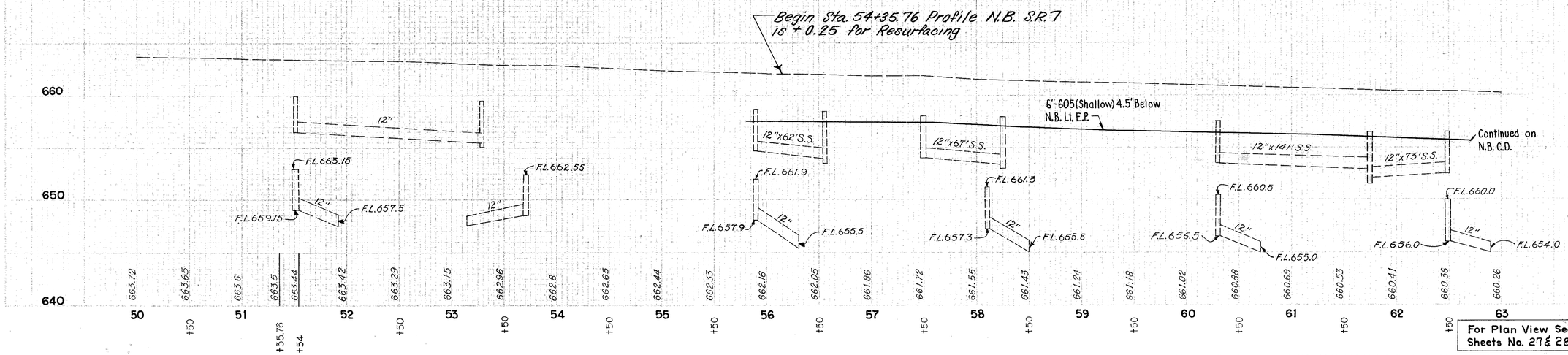

For Plan View See Sheets No. 27 & 28

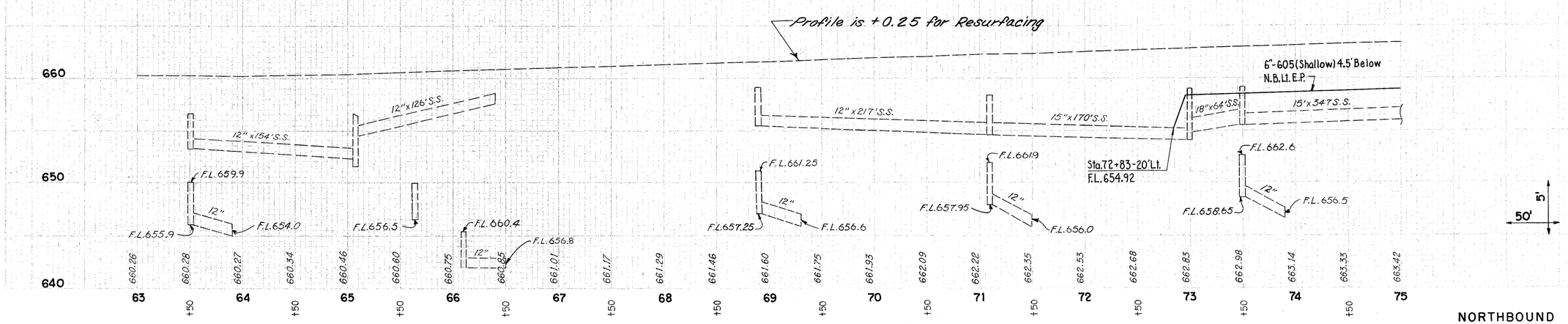

NORTHBOUND S.R.7
PROFILE SHEET - STA. 50+00 TO STA. 75+00

BELMONT COUNTY
BEL-4.70 - 5.90

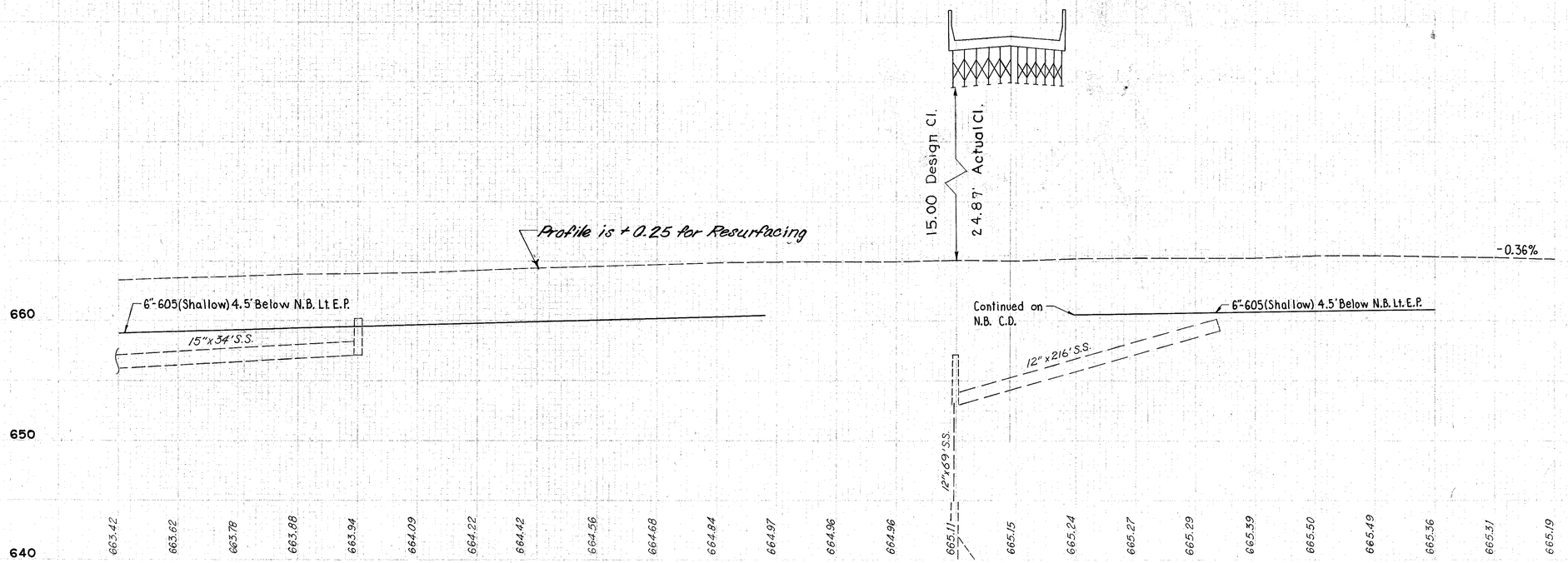

For Plan View See Sheets No. 25 & 29

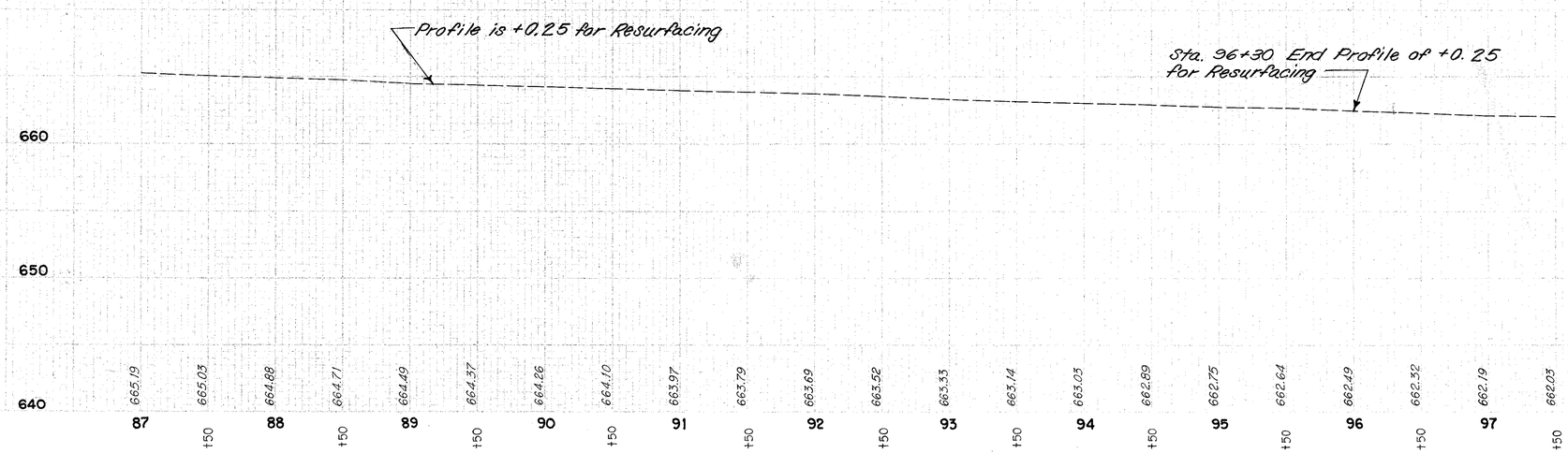

5'
50'

NORTHBOUND S.R. 7
PROFILE SHEET - STA. 75+00 TO STA. 97+50

BELMONT COUNTY
BEL-470-5.90

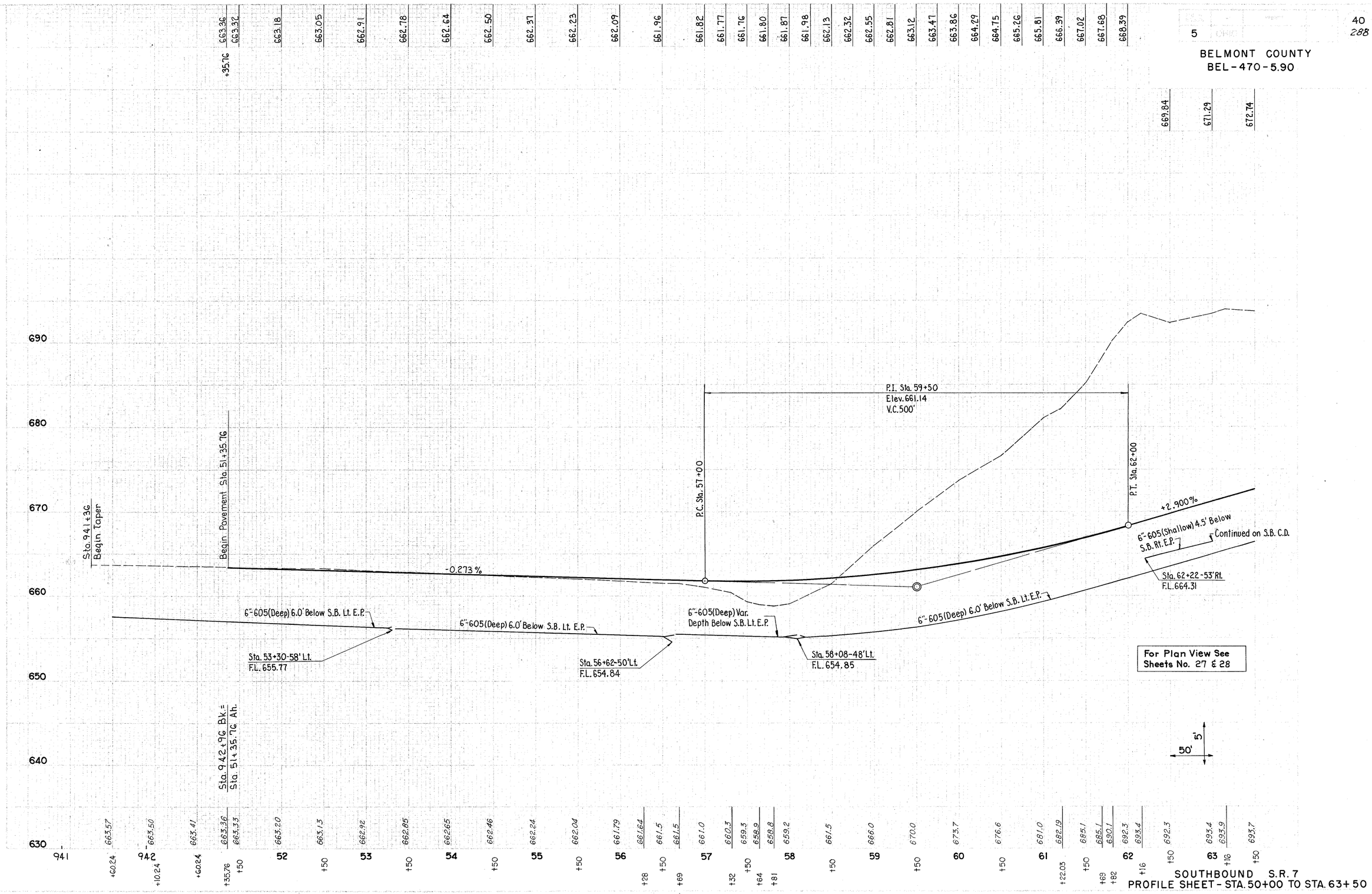

SOUTHBOUND S.R. 7
PROFILE SHEET - STA. 50+00 TO STA. 63+50

5

BELMONT COUNTY
BEL-470-5.90

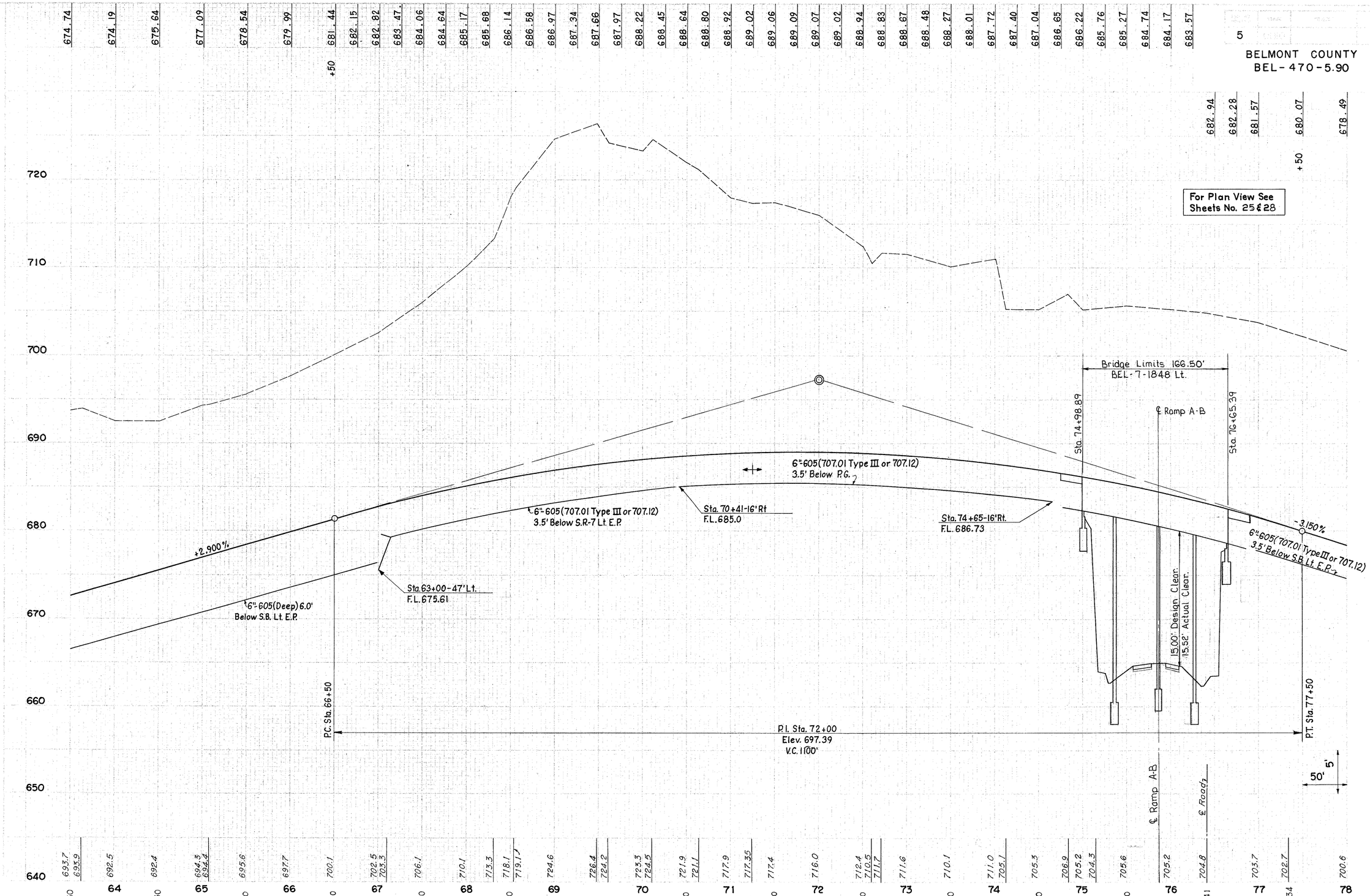

SOUTHBOUND S.R. 7
PROFILE SHEET - STA. 63+50 TO STA. 78+00

BELMONT COUNTY
BEL-470-5.90

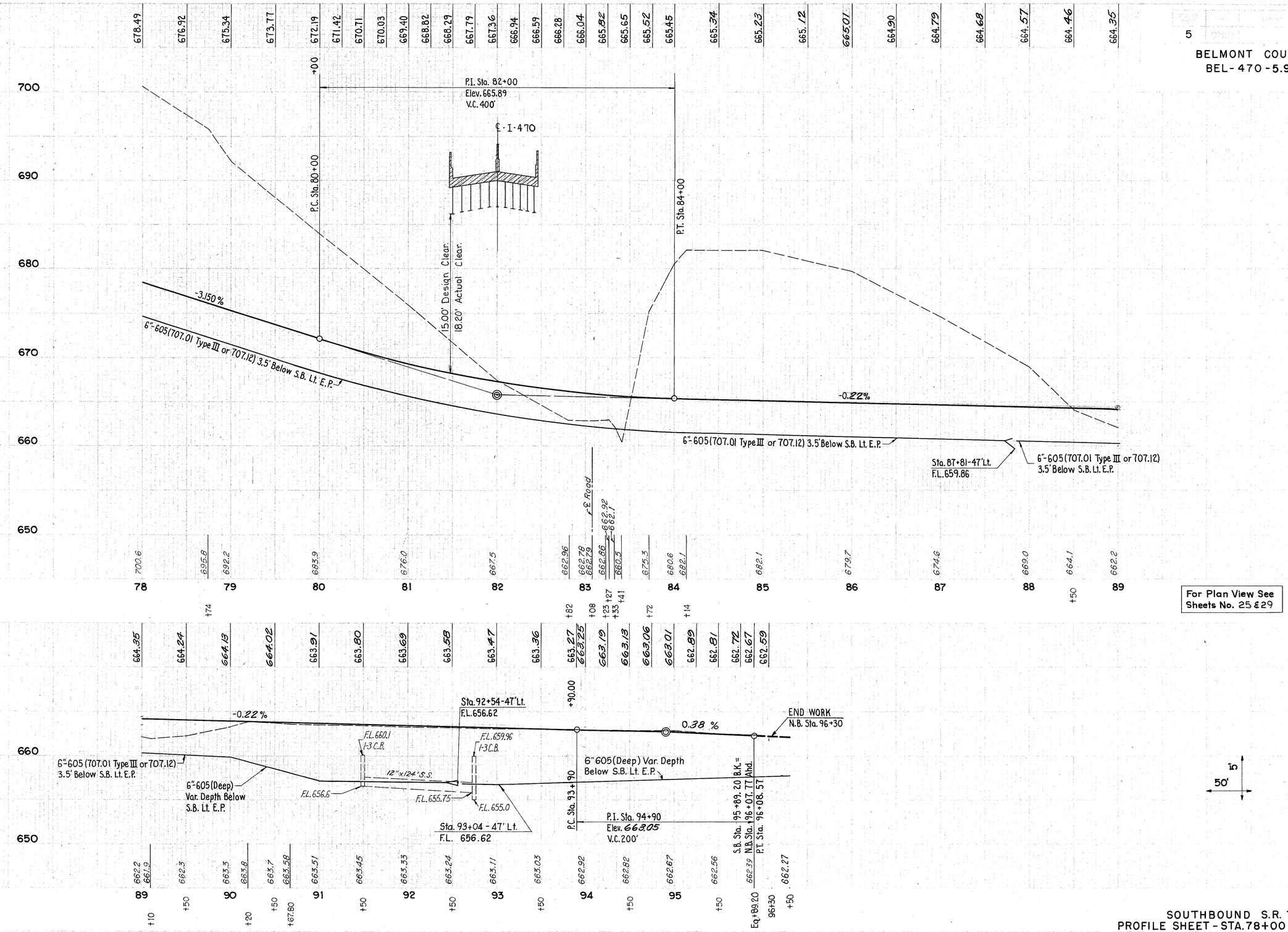

SOUTHBOUND S.R. 7
PROFILE SHEET - STA. 78+00 TO STA. 96+30

BELMONT COUNTY
BEL-470.-5.90

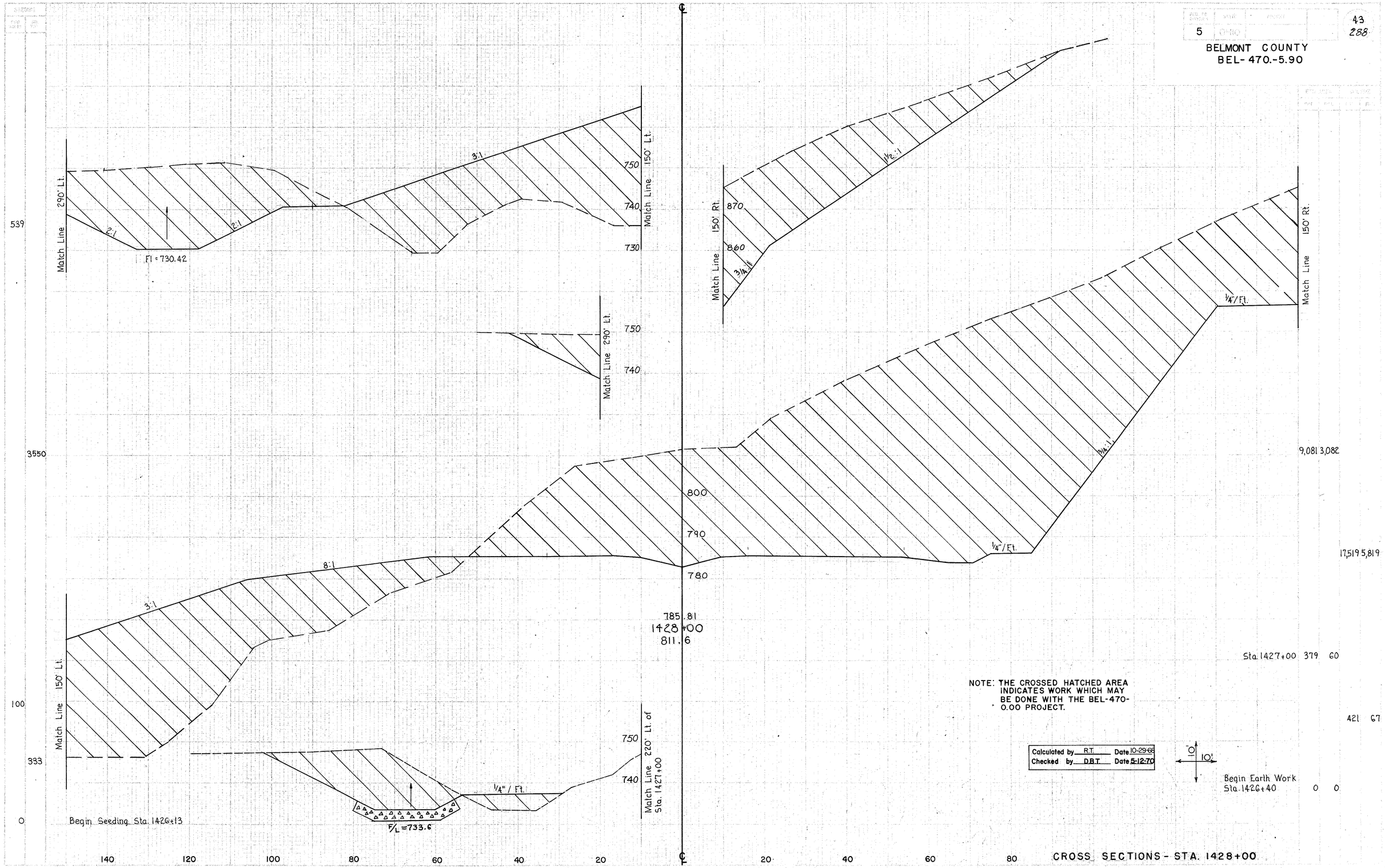

NOTE: THE CROSSED HATCHED AREA INDICATES WORK WHICH MAY BE DONE WITH THE BEL-470-0.00 PROJECT.

Calculated by R.T. Date 10-29-68
Checked by D.B.T. Date 5-12-70

CROSS SECTIONS - STA. 1428+00

BELMONT COUNTY
BEL-470-5.90

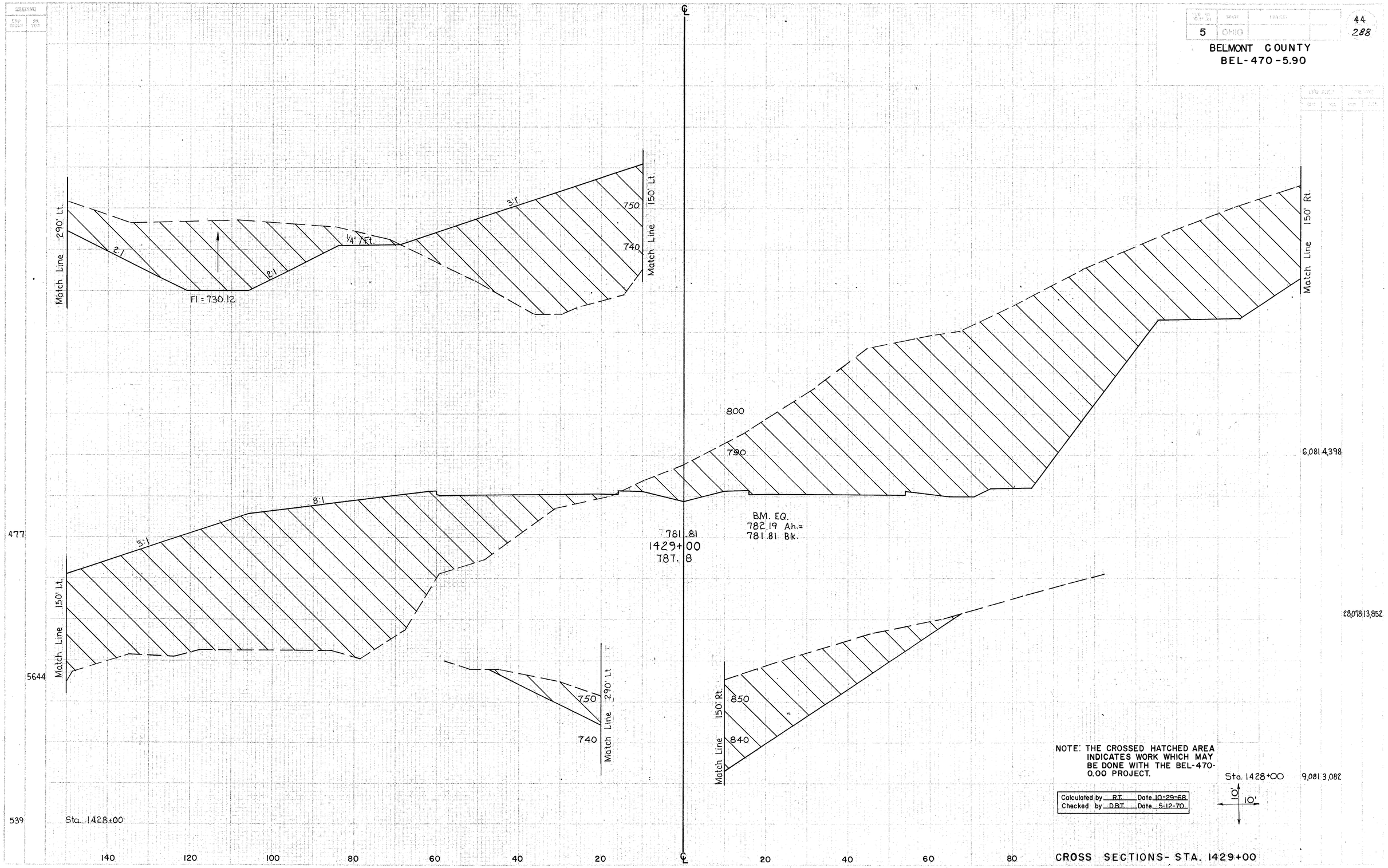

CROSS SECTIONS- STA. 1429+00

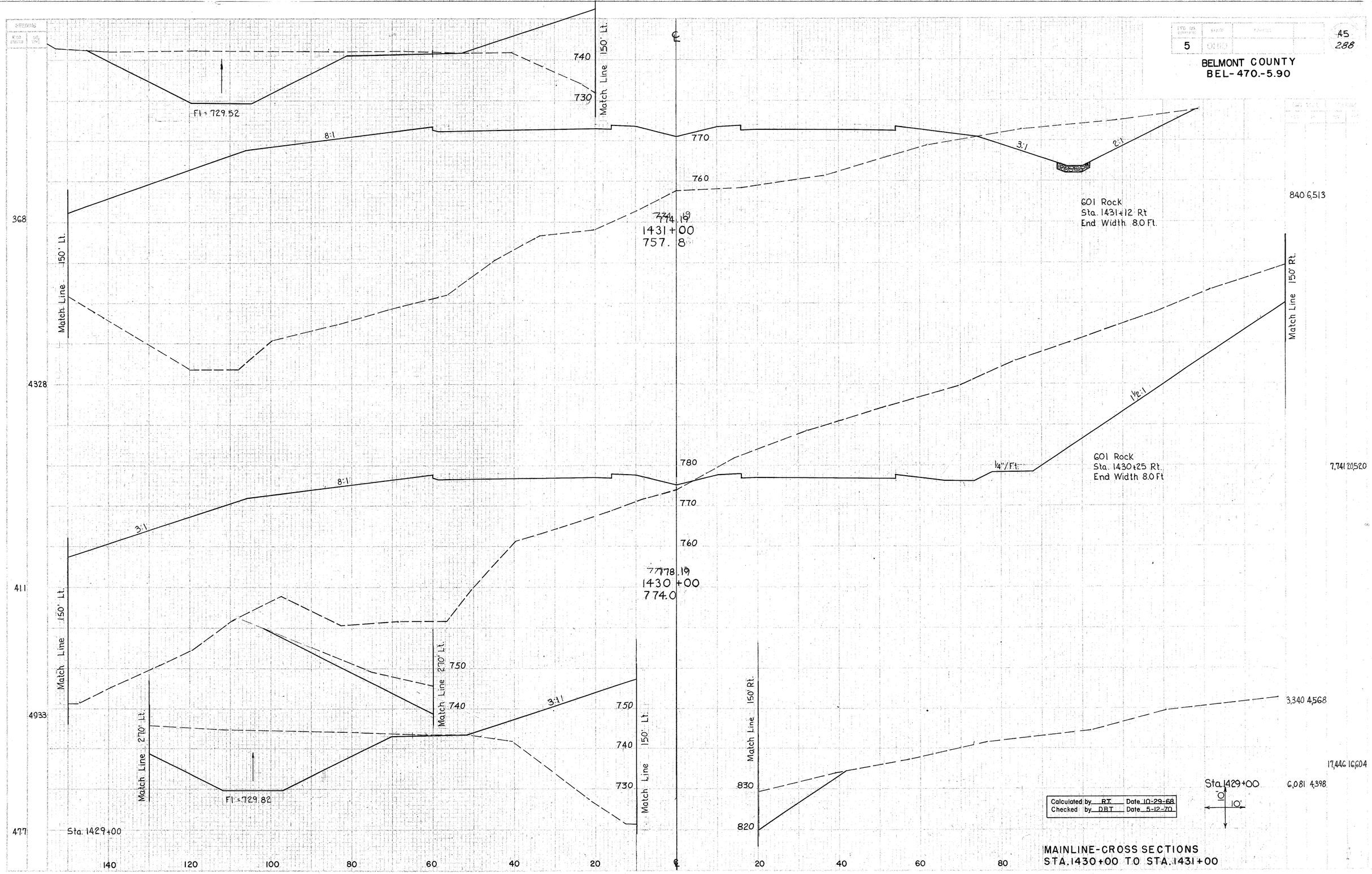

MAINLINE-CROSS SECTIONS
STA. 1430+00 TO STA. 1431+00

BELMONT COUNTY
BEL-470-5.90

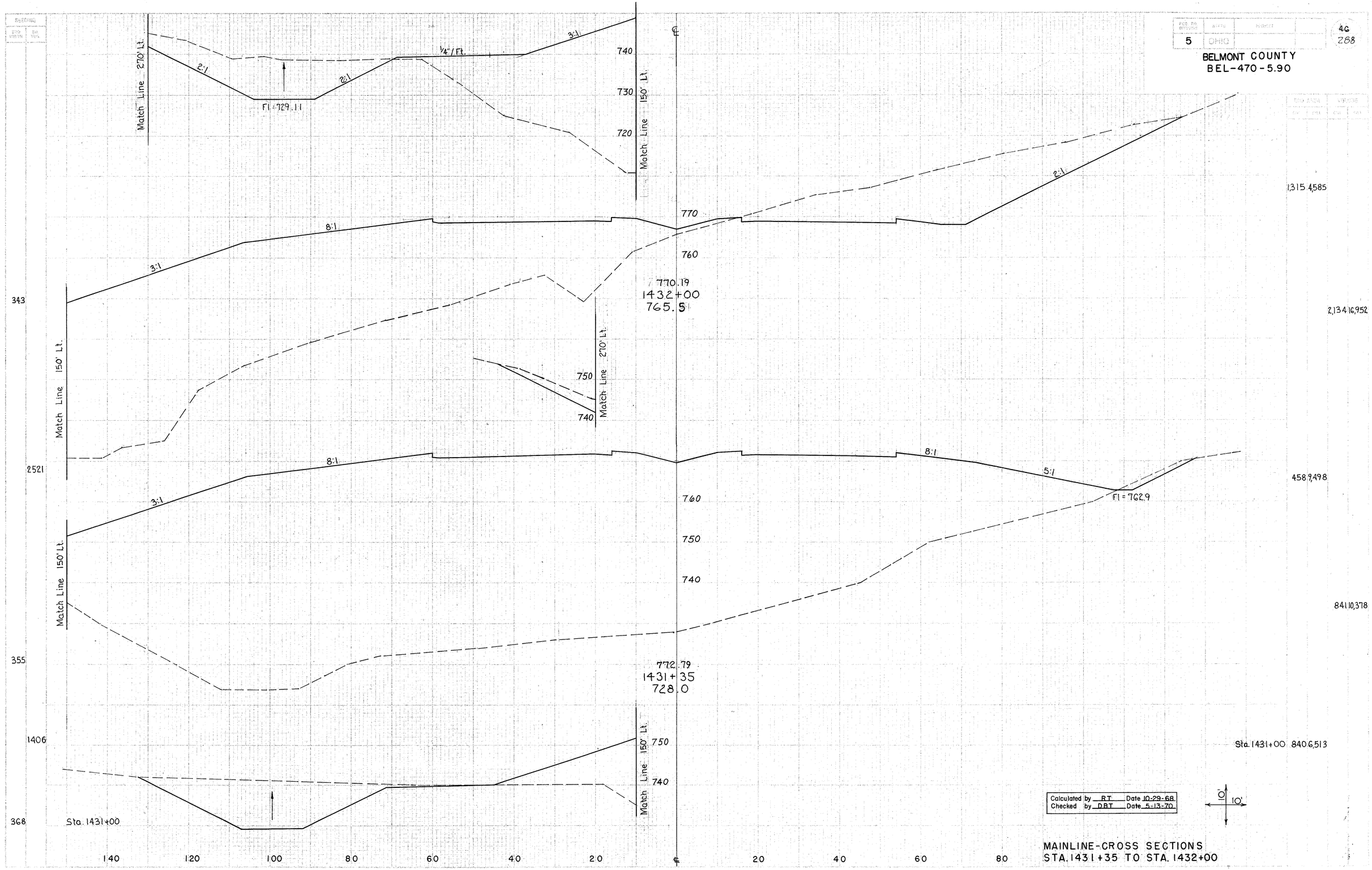

Calculated by RT Date 10-29-68
Checked by DBT Date 5-13-70

10' 10'

MAINLINE-CROSS SECTIONS
STA. 1431+35 TO STA. 1432+00

FED. RD. DIVISION	STATE	PROJECT	
5	OHIO		

47
288

BELMONT COUNTY
BEL-470.-5.90

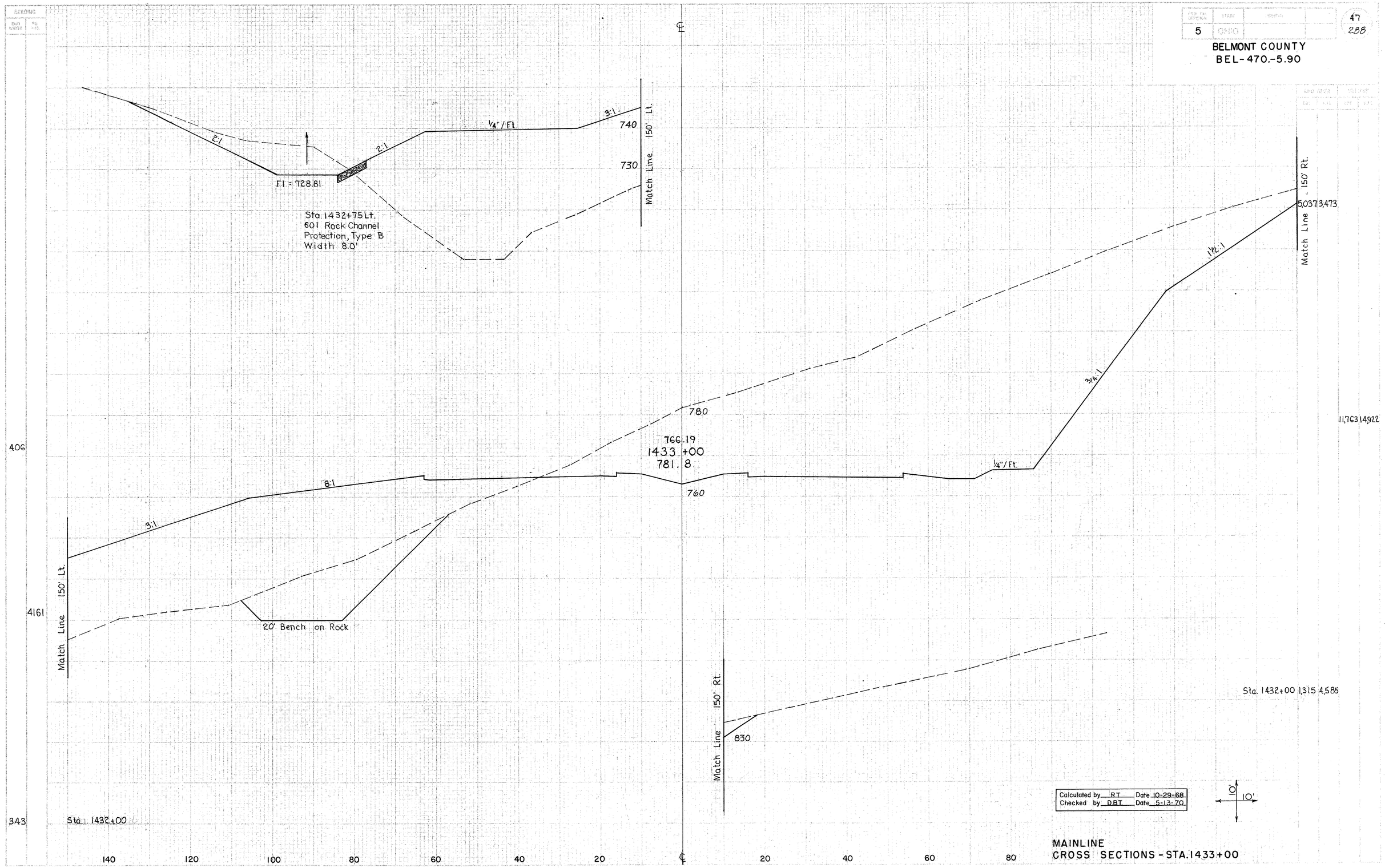

Calculated by RT Date 10-29-68
Checked by D.B.T. Date 5-13-70

10'
10'

MAINLINE
CROSS SECTIONS - STA. 1433+00

FED. RD. DIVISION	STATE	PROJECT	
5	OHIO		

BELMONT COUNTY
BEL-470-5.90

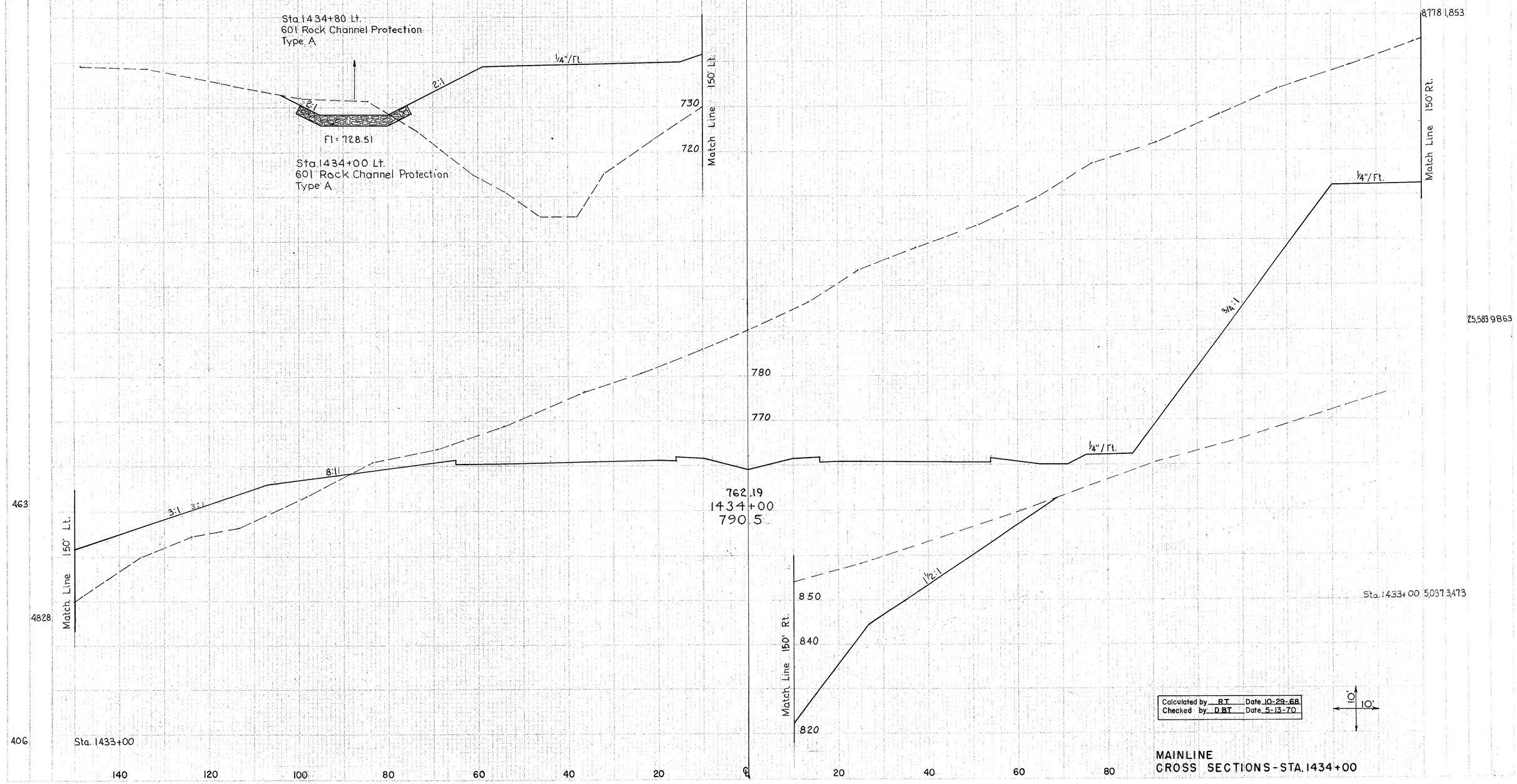

Calculated by RT Date 10-29-68
Checked by DBT Date 5-13-70

10' 10'

MAINLINE
CROSS SECTIONS - STA. 1434+00

BELMONT COUNTY
BEL-470-5.90

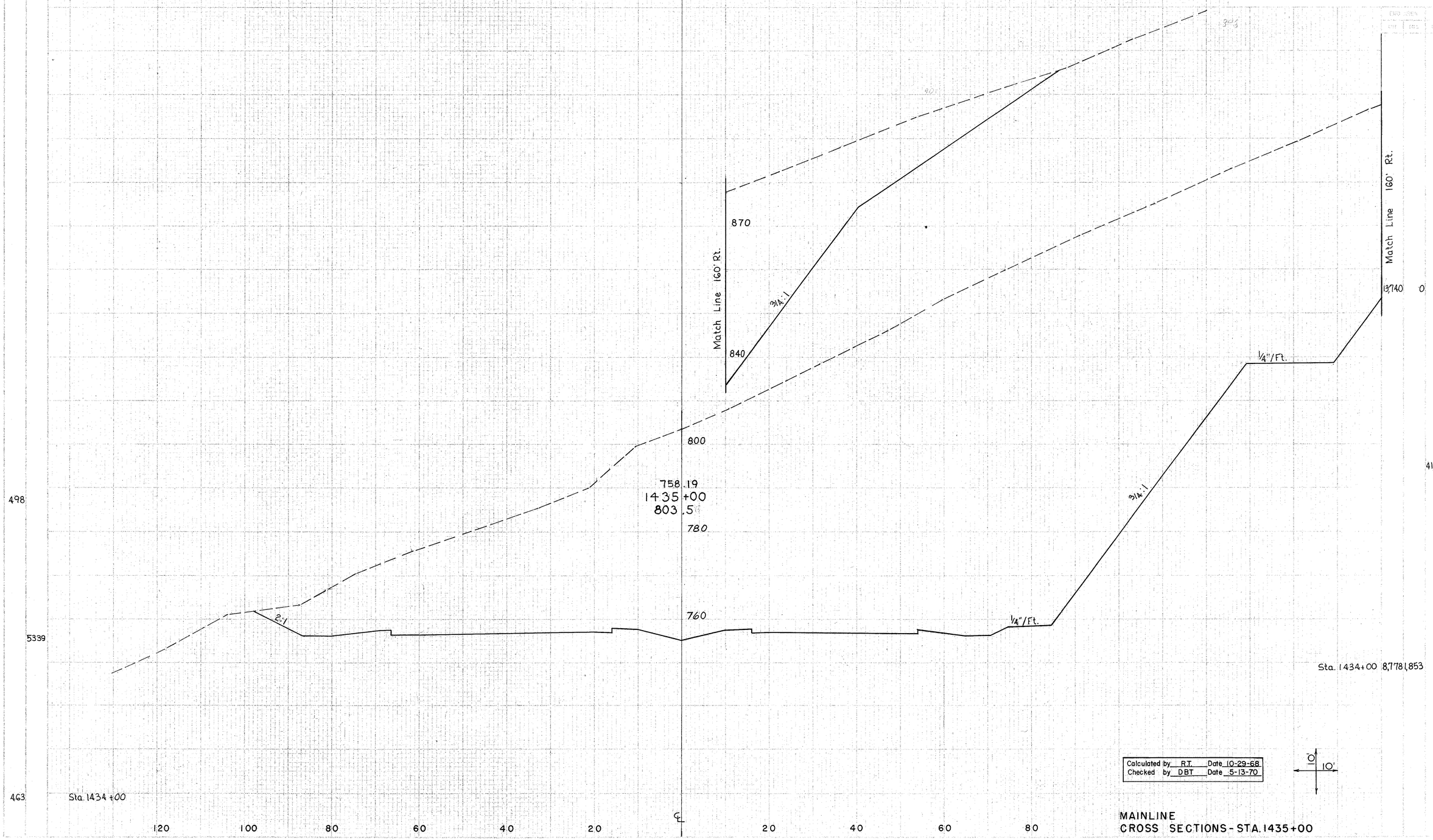

Calculated by R.T. Date 10-29-68
Checked by DBT Date 5-13-70

MAINLINE
CROSS SECTIONS - STA. 1435+00

FED. RD. DIST. NO.	STATE	FACILITY	
5	OHIO		

50
286

BELMONT COUNTY
BEL-470-5.90

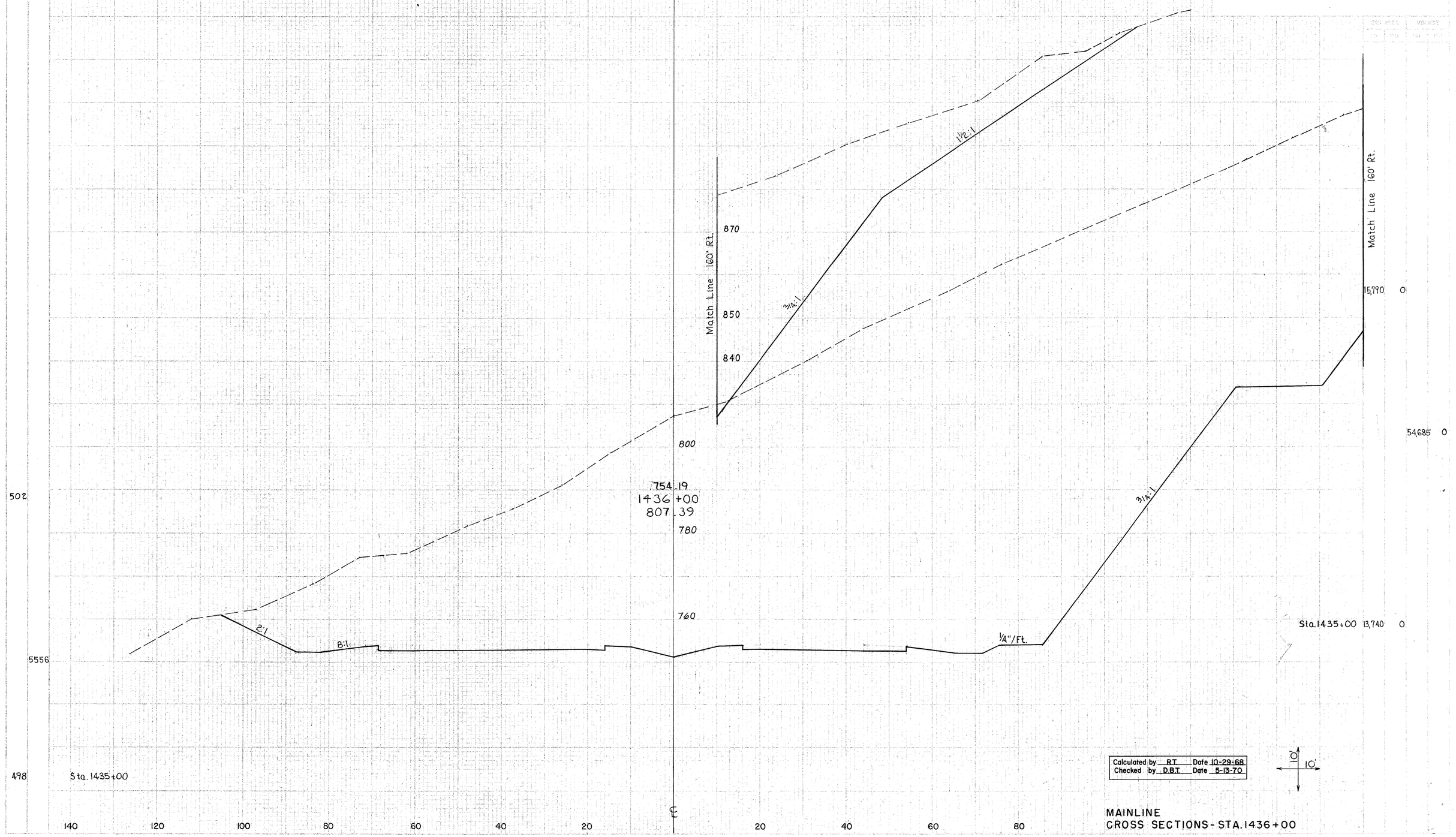

Calculated by R.T. Date 10-29-68
Checked by D.B.T. Date 5-13-70

MAINLINE
CROSS SECTIONS - STA. 1436+00

FED. RD. DIVISION	STATE	PROJECT	
5	OHIO		

51
288

BELMONT COUNTY
BEL-470.-5.90

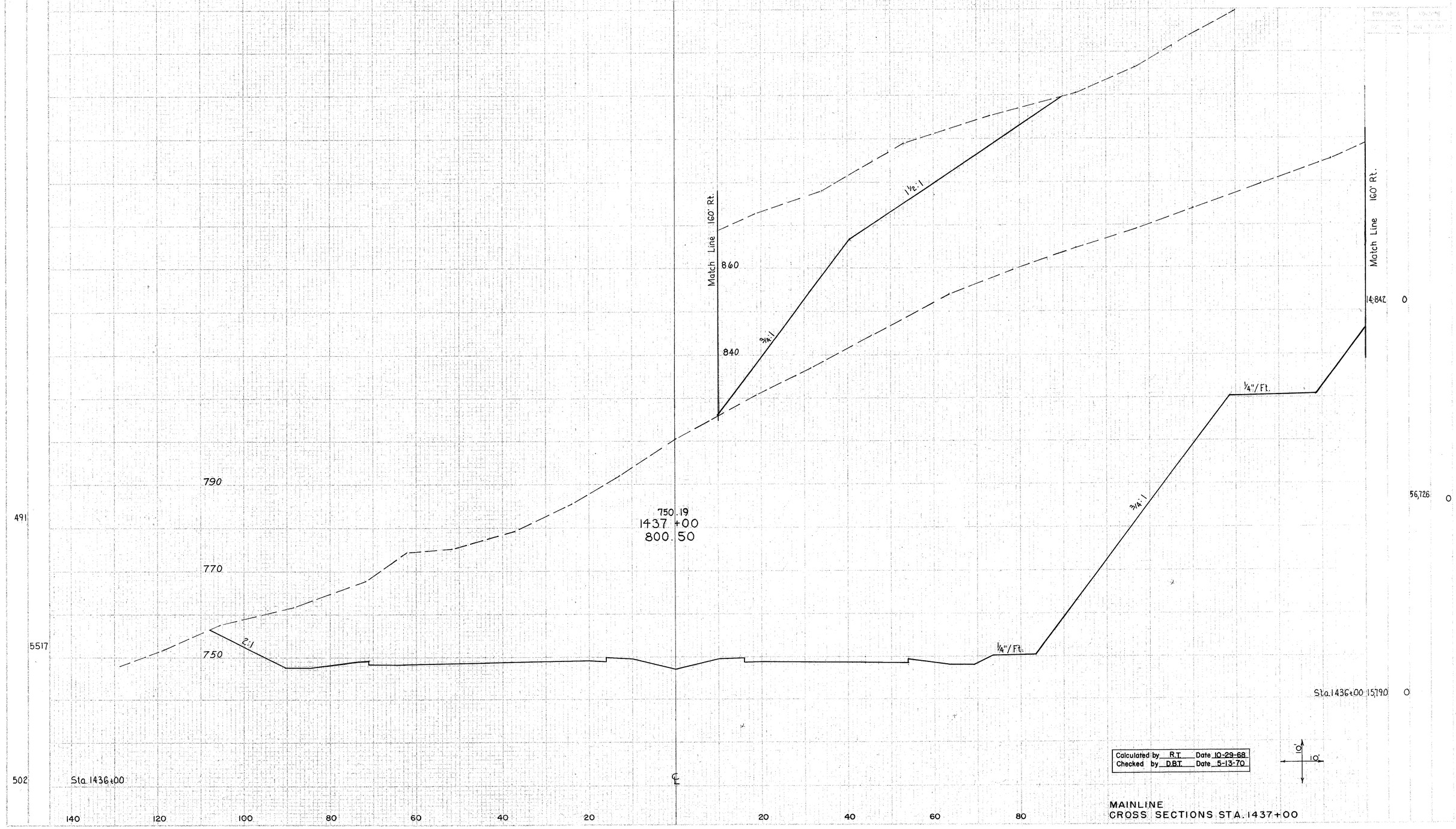

Calculated by R.T. Date 10-29-68
Checked by D.B.T. Date 5-13-70

MAINLINE
CROSS SECTIONS STA. 1437+00

FED. RD. DIVISION	STATE	COUNTY		
5	OHIO			

52
28B

BELMONT COUNTY
BEL-470-5.90

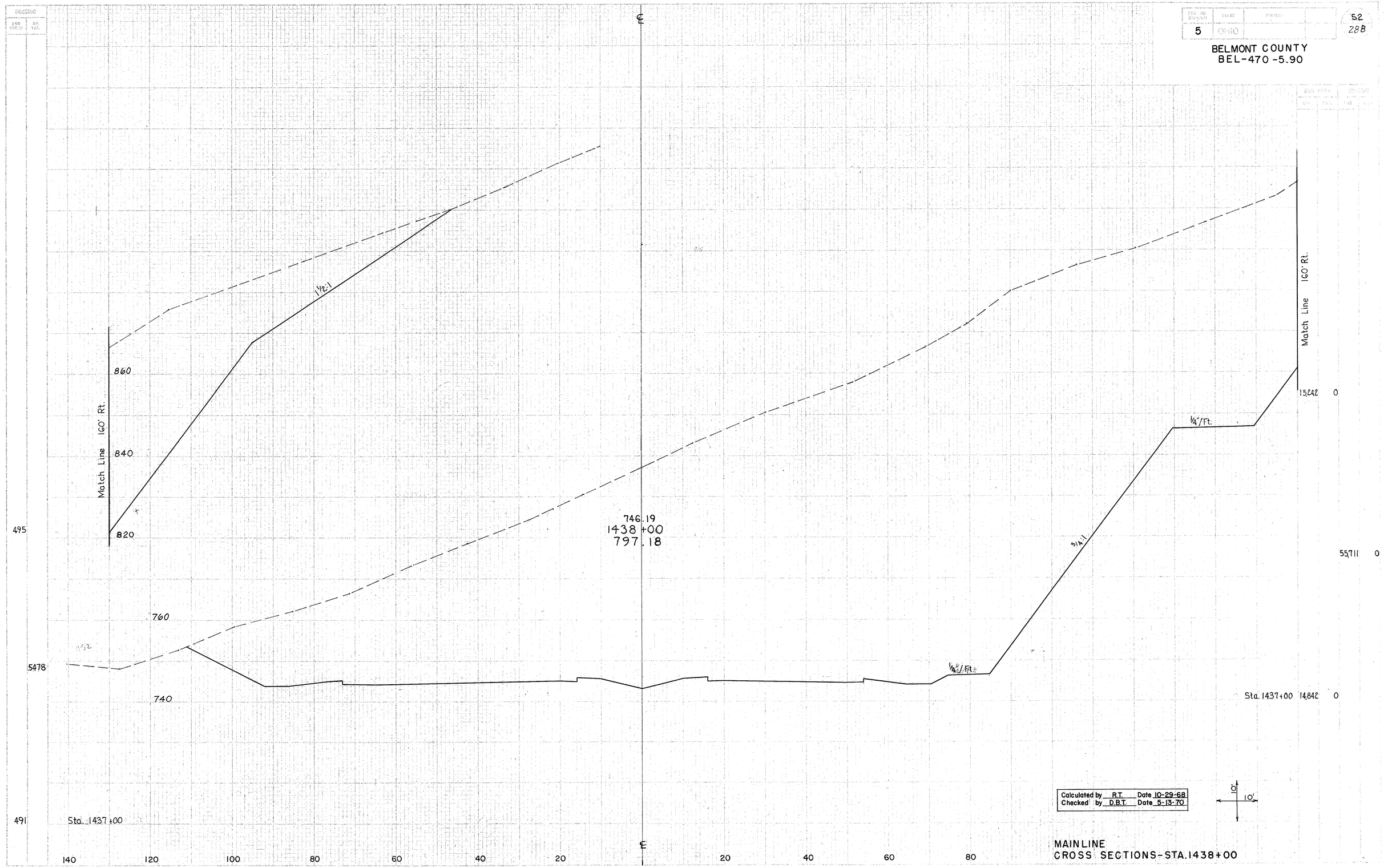

Calculated by R.T. Date 10-29-68
Checked by D.B.T. Date 5-13-70

MAINLINE
CROSS SECTIONS-STA.1438+00

BELMONT COUNTY
BEL-470-5.90

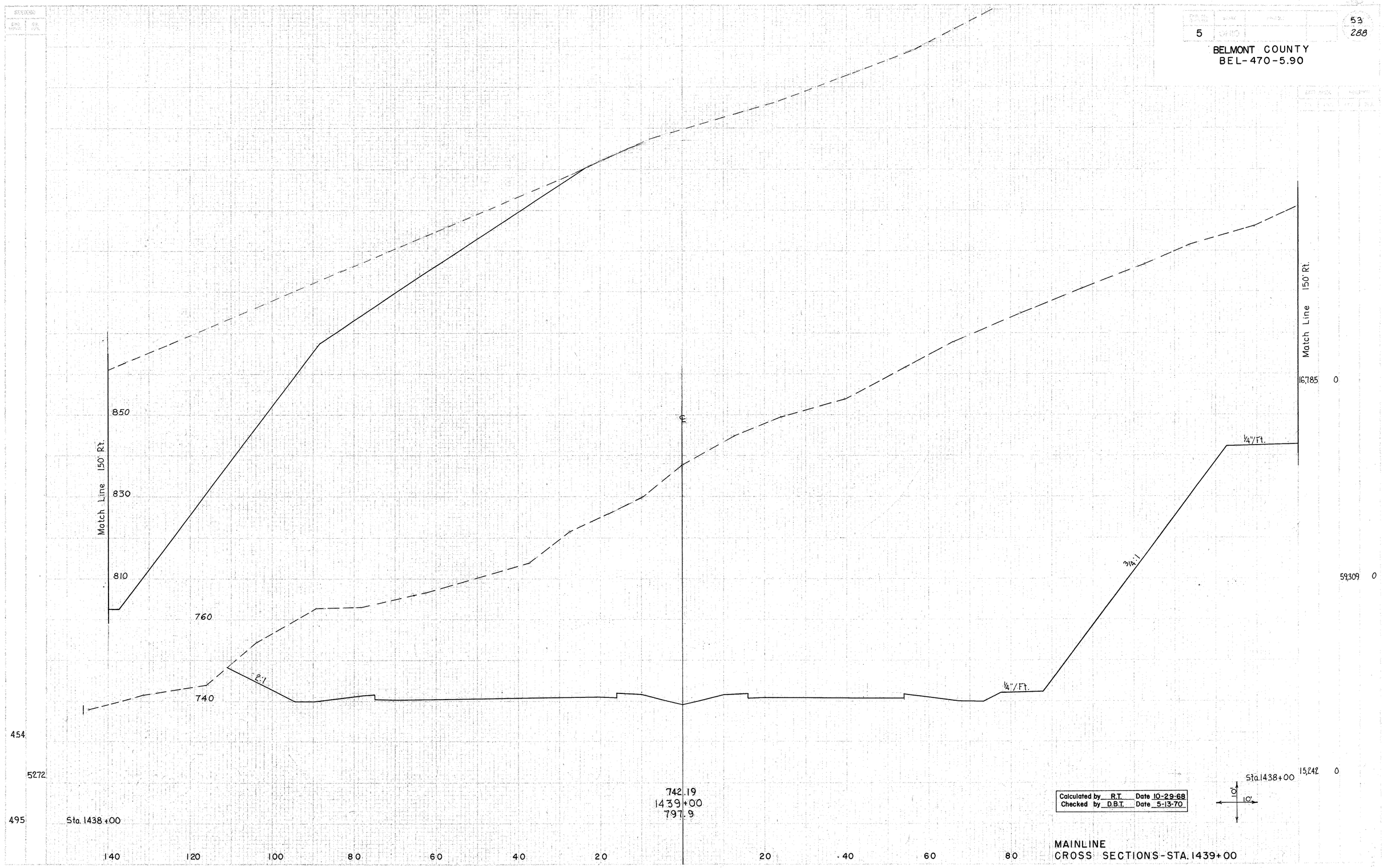

Calculated by R.T. Date 10-29-68
Checked by D.B.T. Date 5-13-70

MAINLINE
CROSS SECTIONS-STA. 1439+00

BELMONT COUNTY
BEL-470-5.90

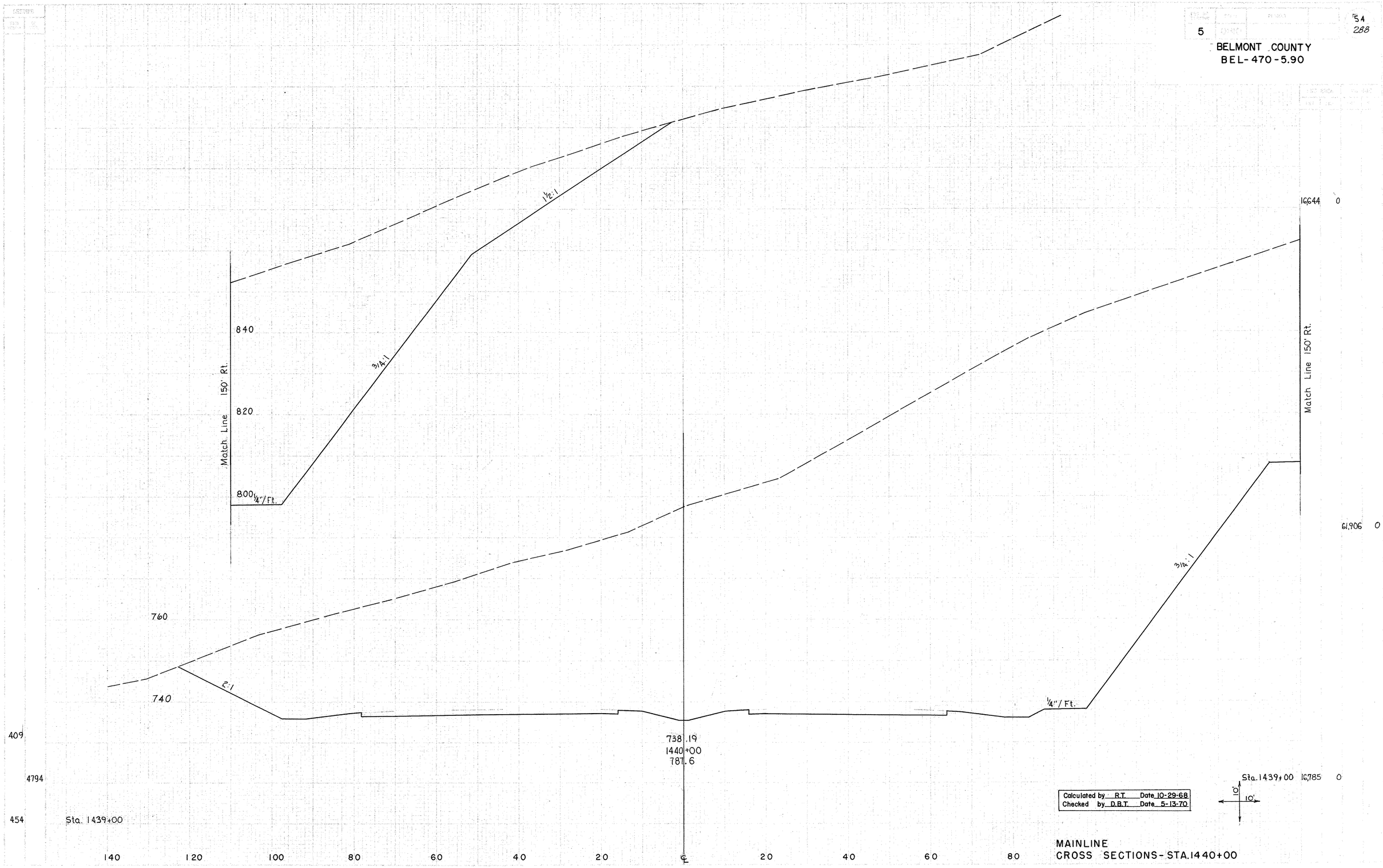

Calculated by R.T. Date 10-29-68
Checked by D.B.T. Date 5-13-70

MAINLINE
CROSS SECTIONS - STA. 1440+00

BELMONT COUNTY
BEL-470-5.90

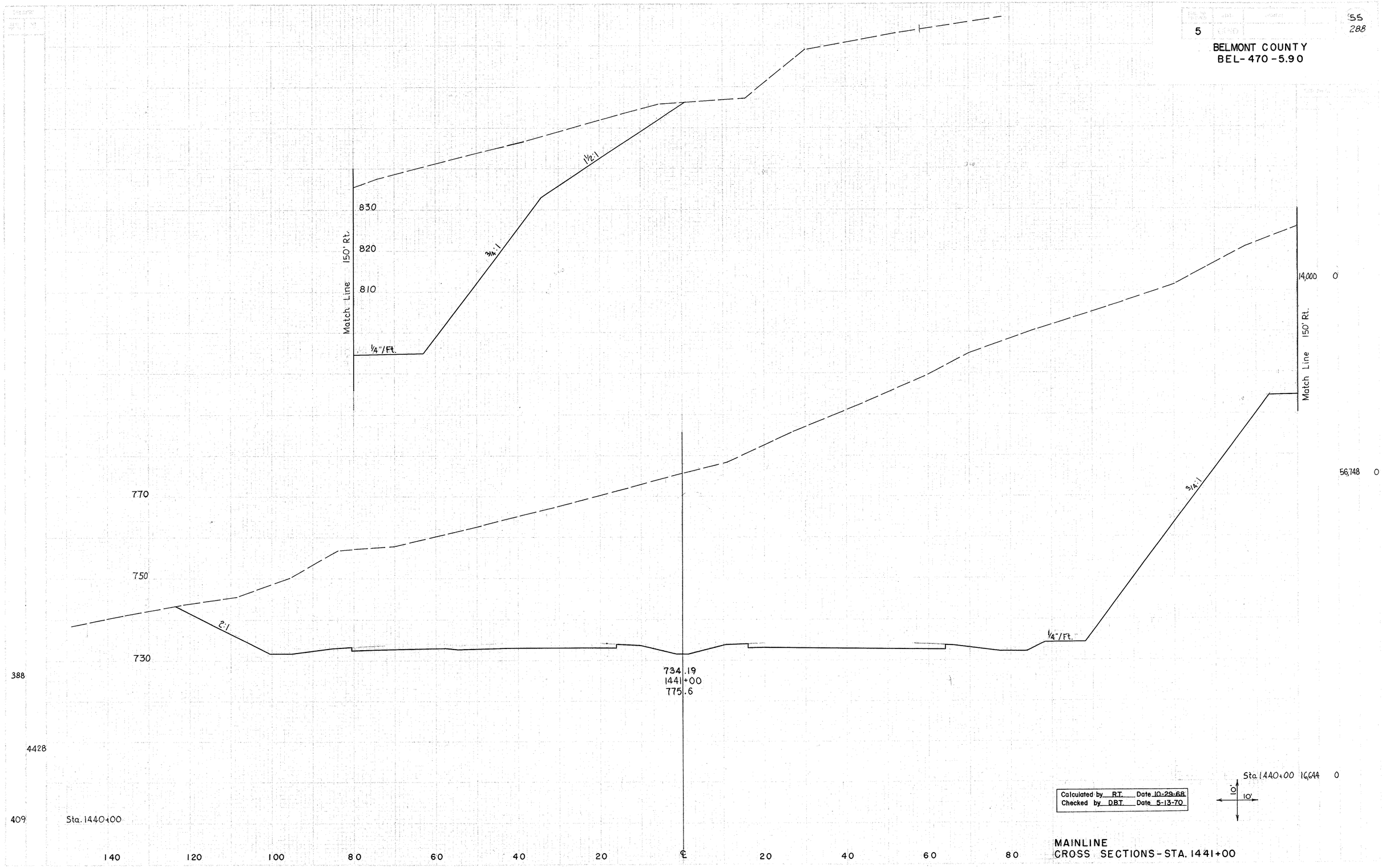

Calculated by R.T. Date 10-29-68
Checked by D.B.T. Date 5-13-70

MAINLINE
CROSS SECTIONS - STA. 1441+00

BELMONT COUNTY
BEL-470-5.90

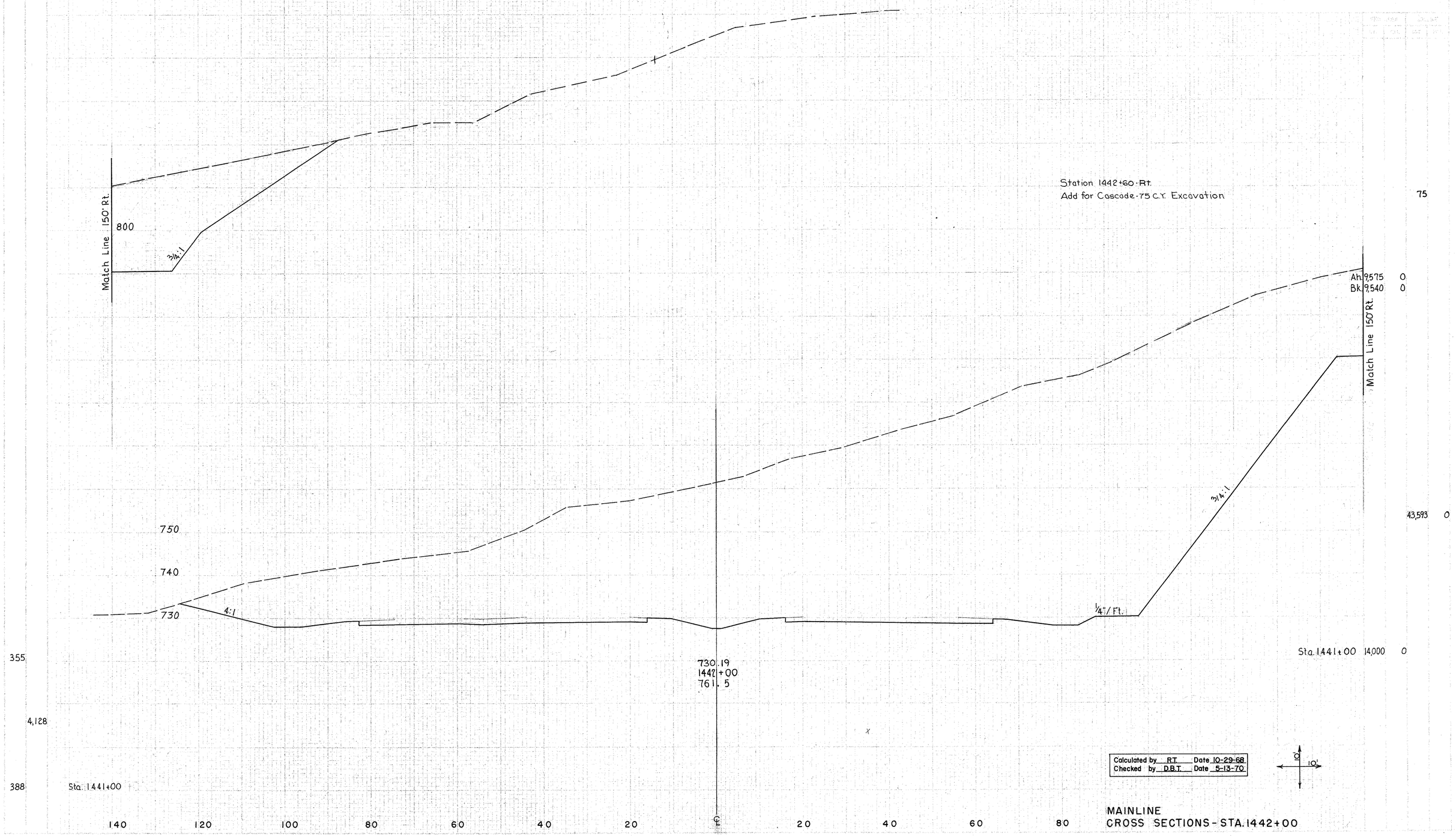

Calculated by R.T. Date 10-29-68
Checked by D.B.T. Date 5-13-70

MAINLINE
CROSS SECTIONS - STA. 1442+00

BELMONT COUNTY
BEL-470-5.90

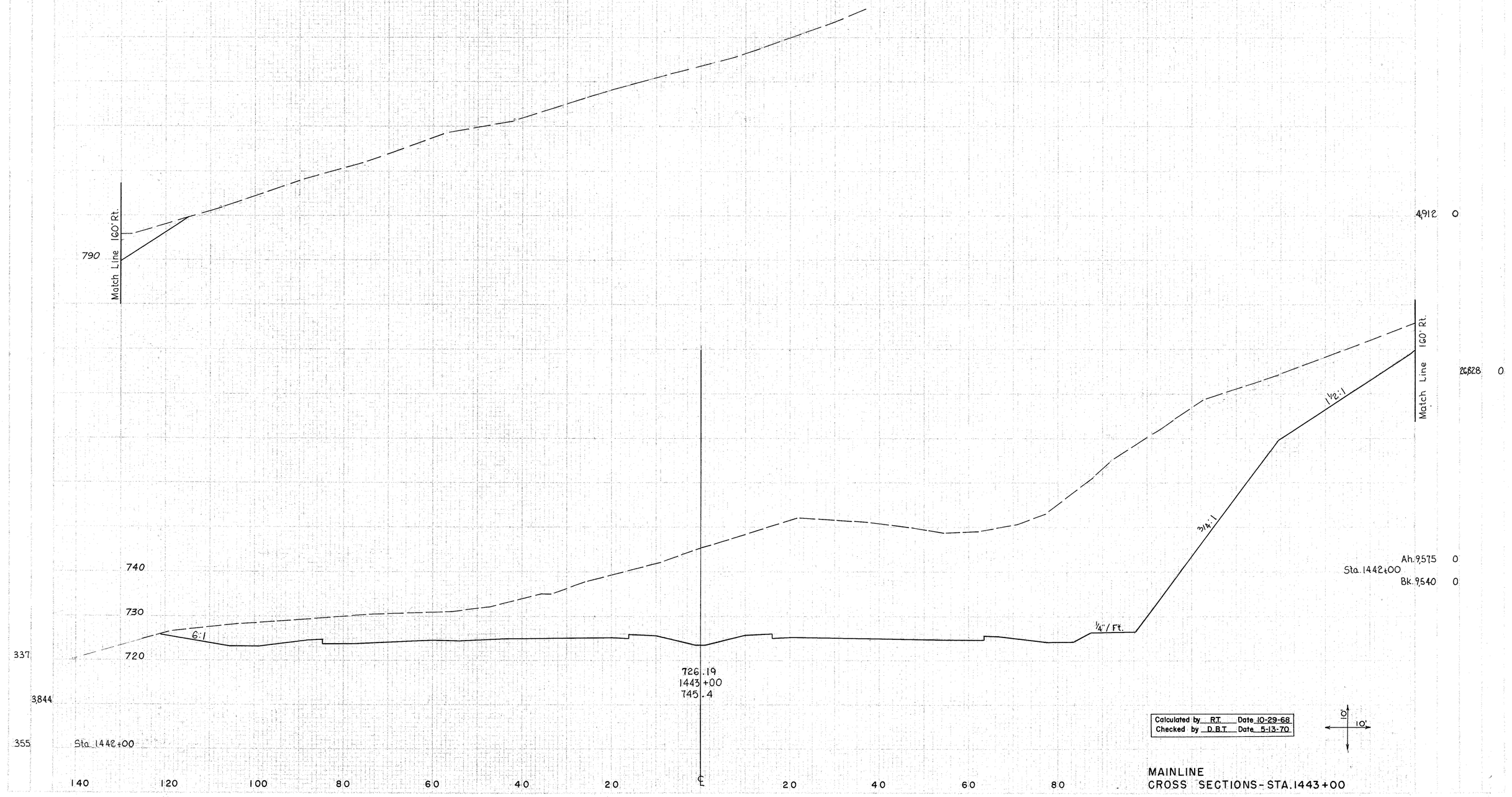

Calculated by R.T. Date 10-29-68
Checked by D.B.T. Date 5-13-70

MAINLINE
CROSS SECTIONS-STA. 1443+00

5

BELMONT COUNTY
BEL-470-5.90

58
288

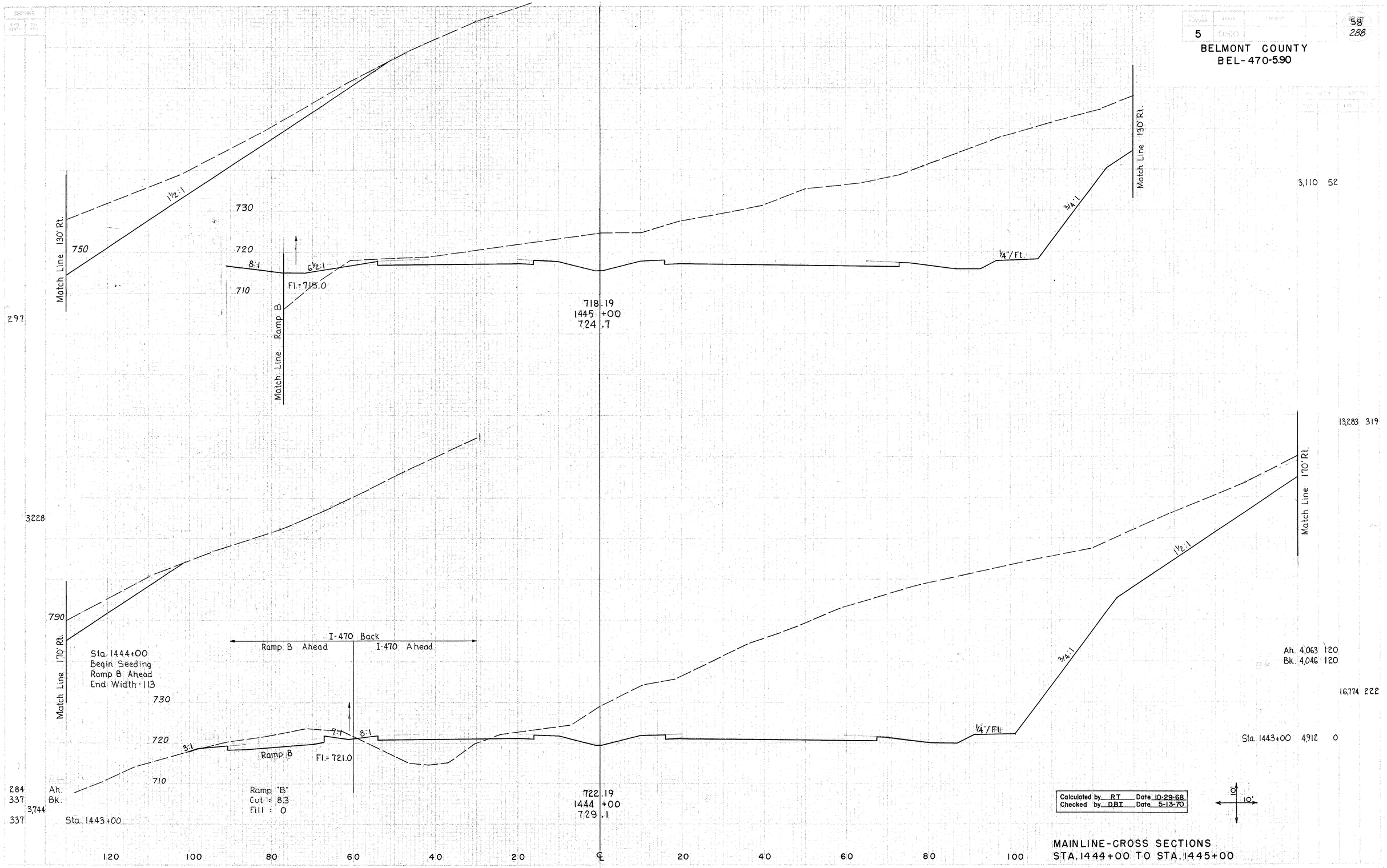

297

Calculated by R.T. Date 10-29-68
Checked by D.B.T. Date 5-13-70

MAINLINE-CROSS SECTIONS
STA. 1444+00 TO STA. 1445+00

BELMONT COUNTY
BEL-470-5.90

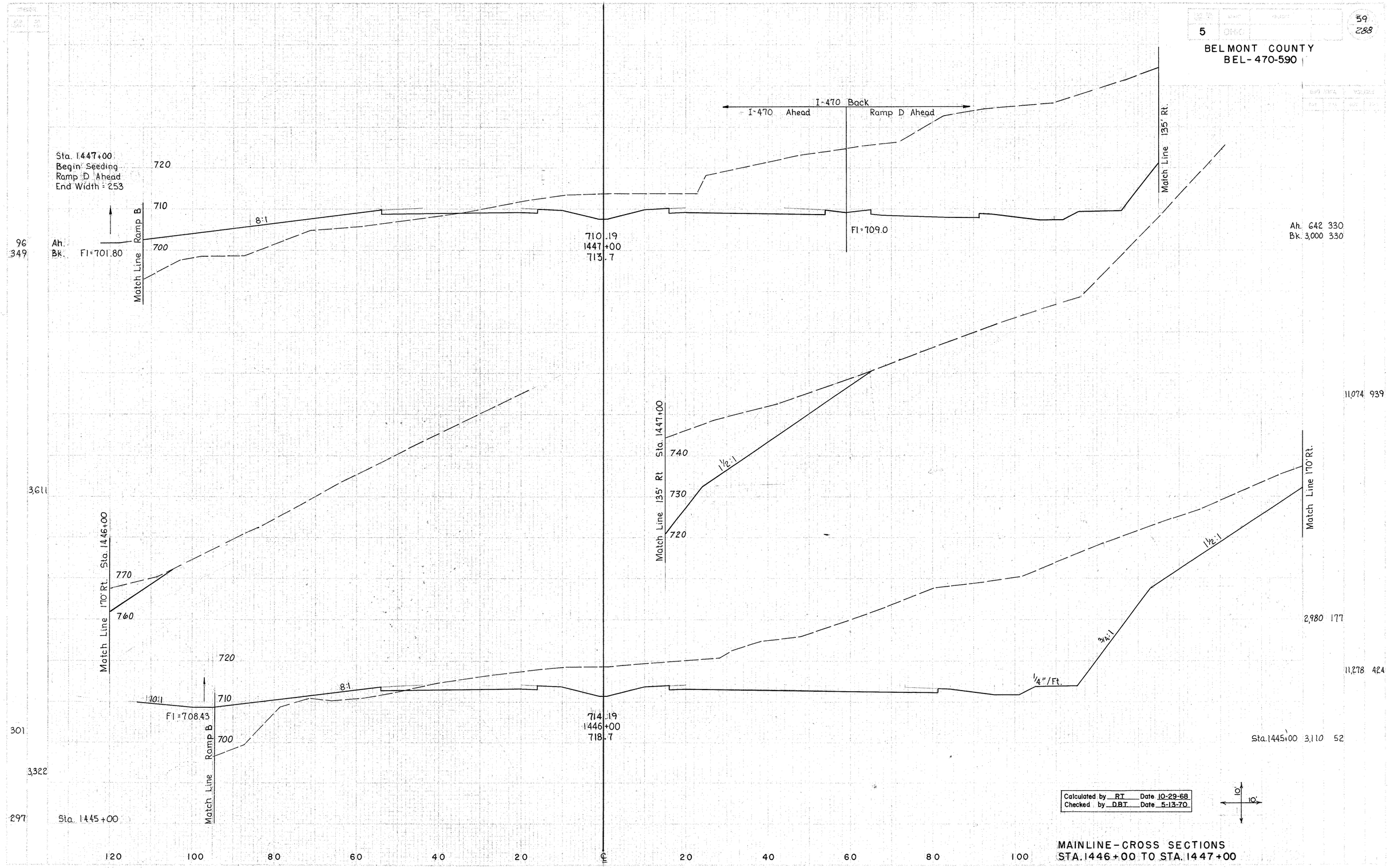

Calculated by	RT	Date	10-29-68
Checked by	D.B.T.	Date	5-13-70

MAINLINE-CROSS SECTIONS
STA. 1446+00 TO STA. 1447+00

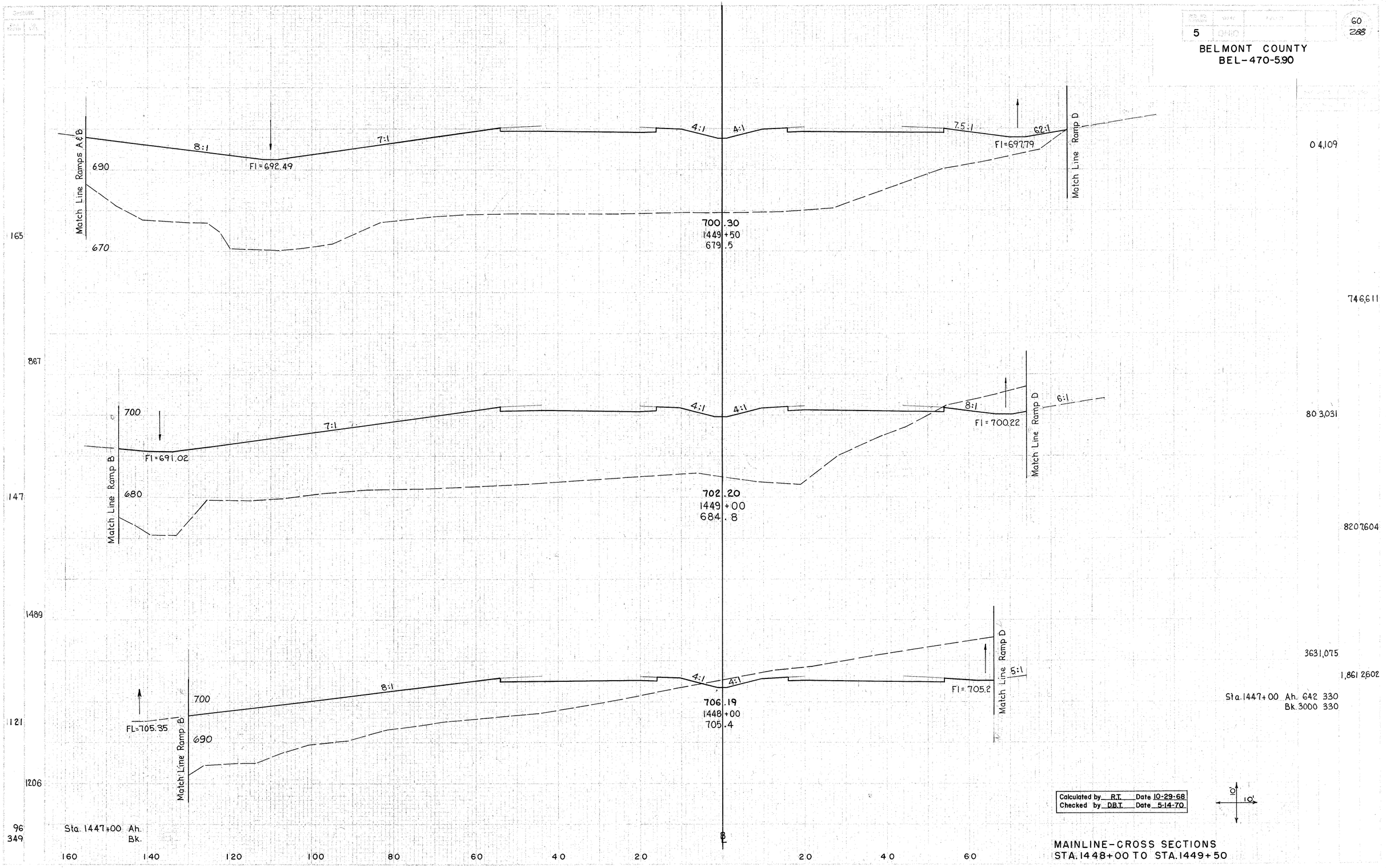

Calculated by R.T. Date 10-29-68
Checked by D.B.T. Date 5-14-70

MAINLINE-CROSS SECTIONS
STA. 1448+00 TO STA. 1449+50

EB

5

61
288

BELMONT COUNTY
BEL-470-5.90

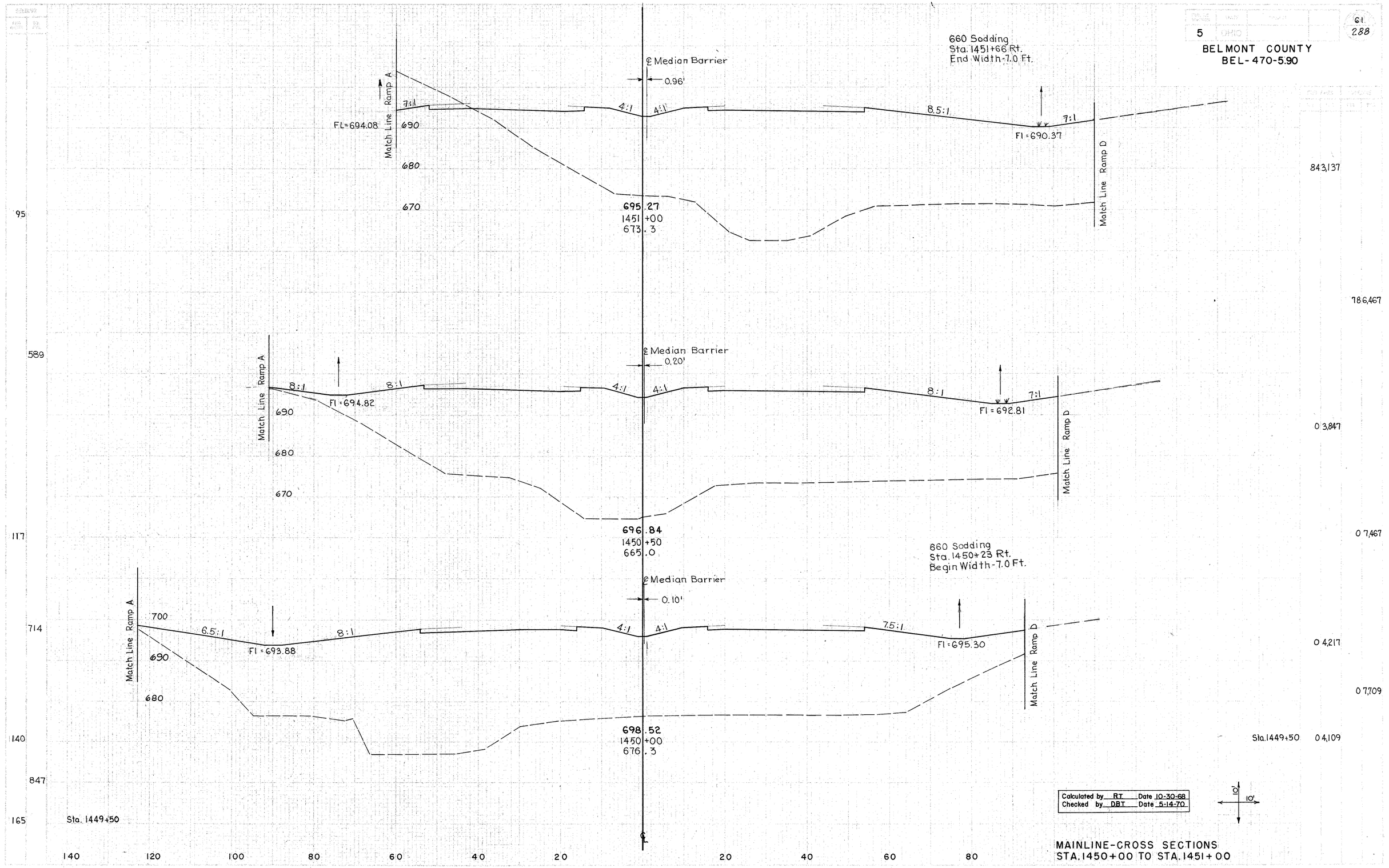

Calculated by RT Date 10-30-68
Checked by DBT Date 5-14-70

MAINLINE-CROSS SECTIONS
STA. 1450+00 TO STA. 1451+00

BELMONT COUNTY
BEL-470-5.90

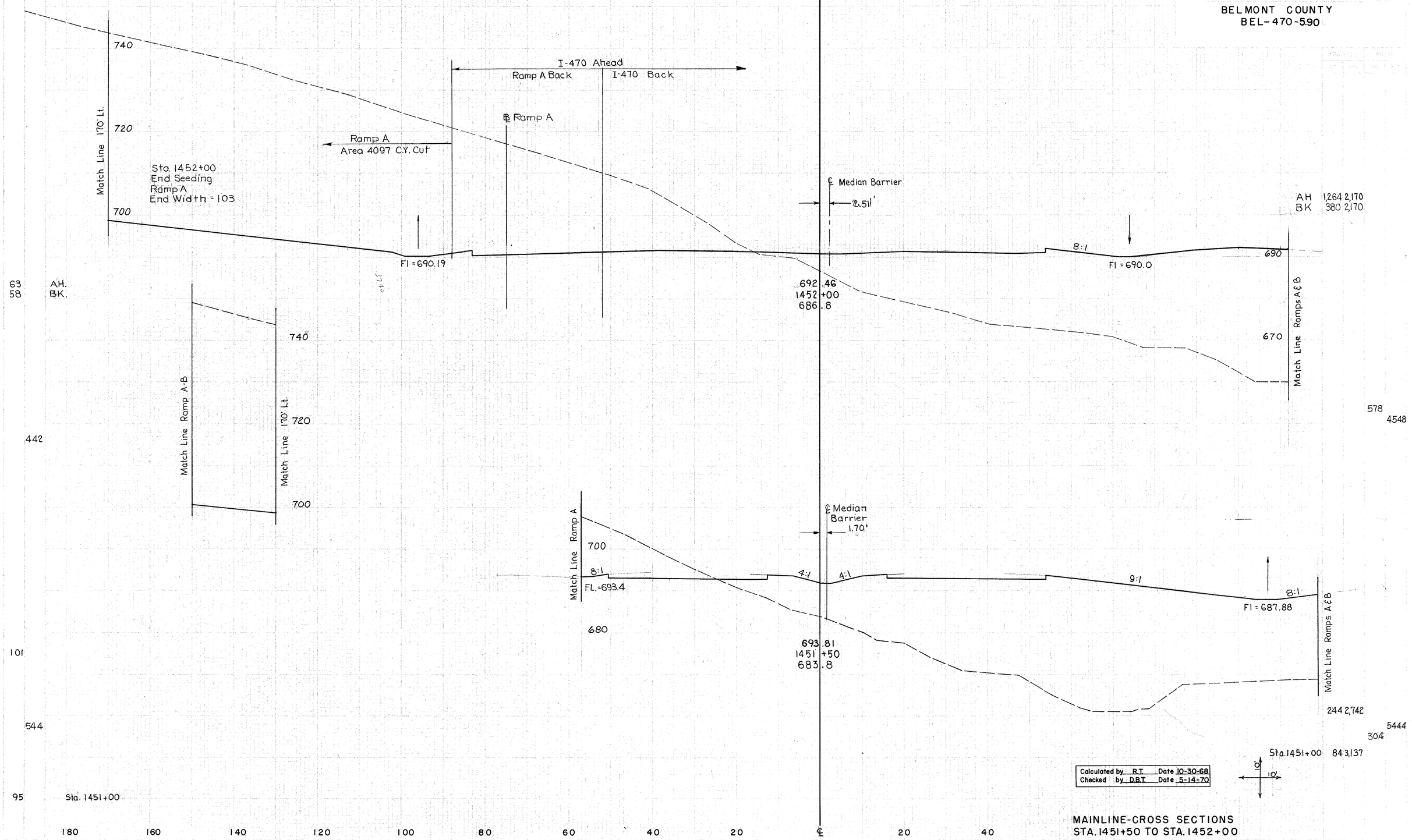

Calculated by R.T. Date 10-30-68
Checked by D.B.T. Date 5-14-70

MAINLINE-CROSS SECTIONS
STA. 1451+50 TO STA. 1452+00

BELMONT COUNTY
BEL-470-5.90

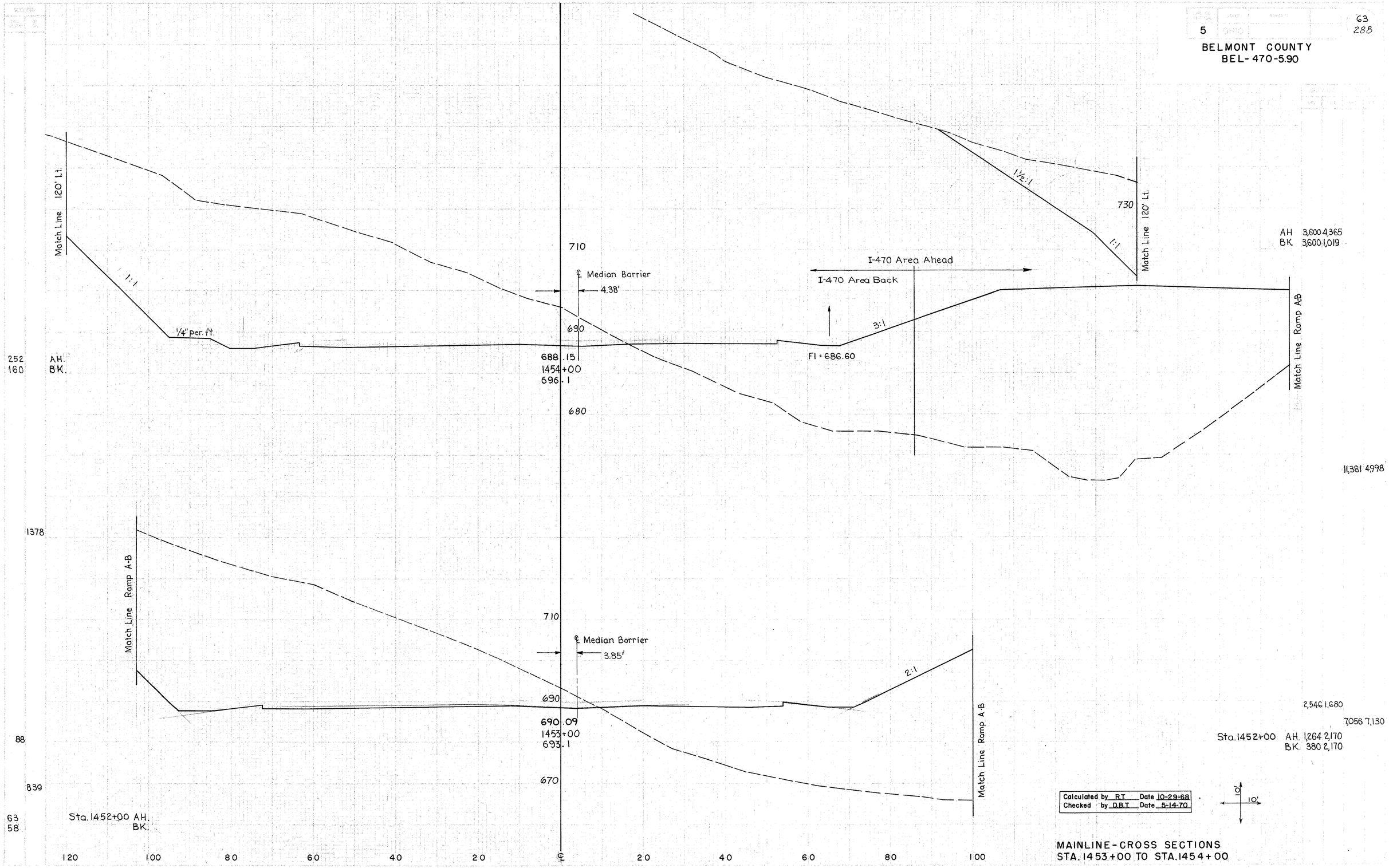

Calculated by R.T. Date 10-29-68
Checked by D.B.T. Date 5-14-70

MAINLINE-CROSS SECTIONS
STA. 1453+00 TO STA. 1454+00

BELMONT COUNTY
BEL-470-5.90

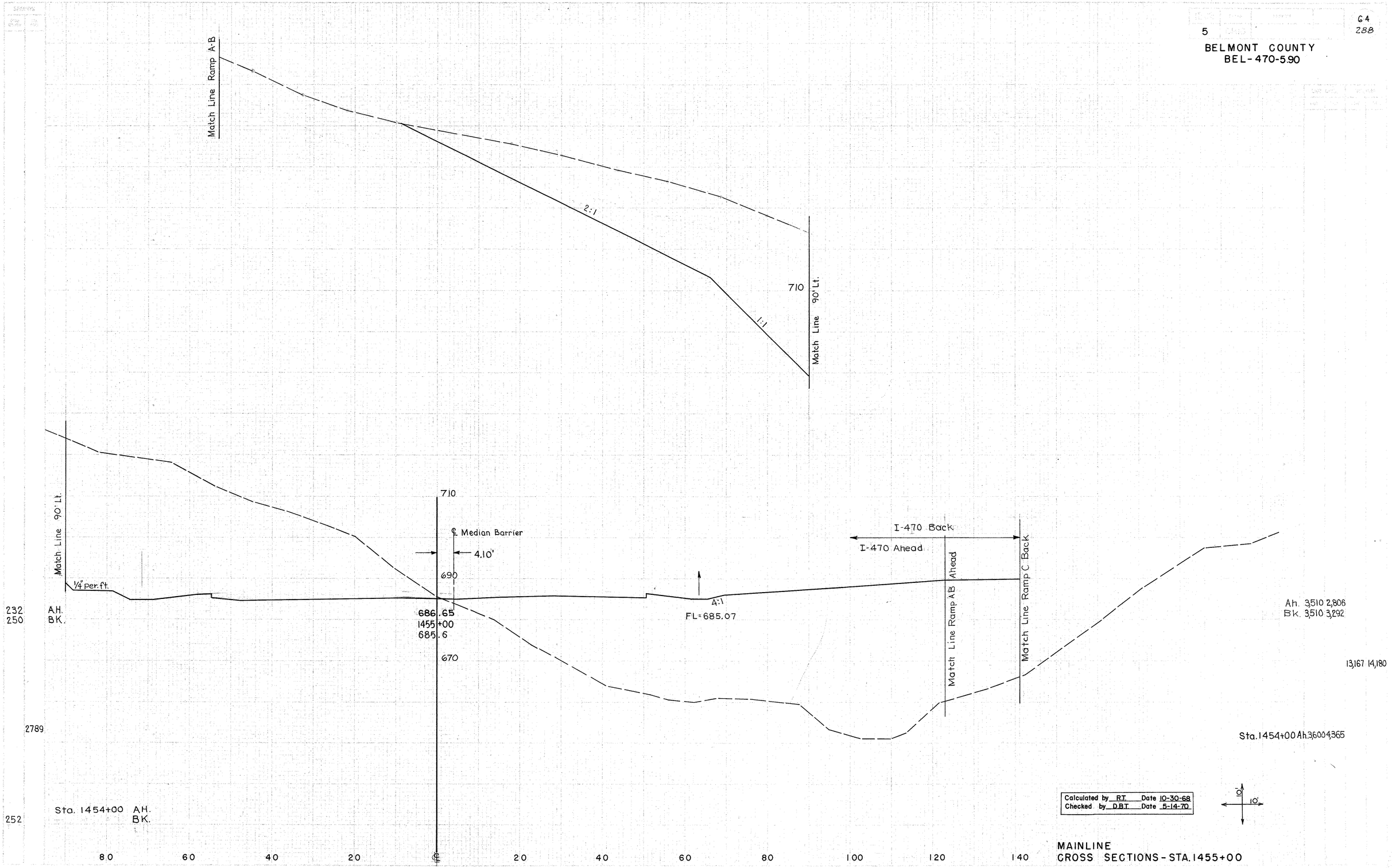

MAINLINE
CROSS SECTIONS - STA. 1455+00

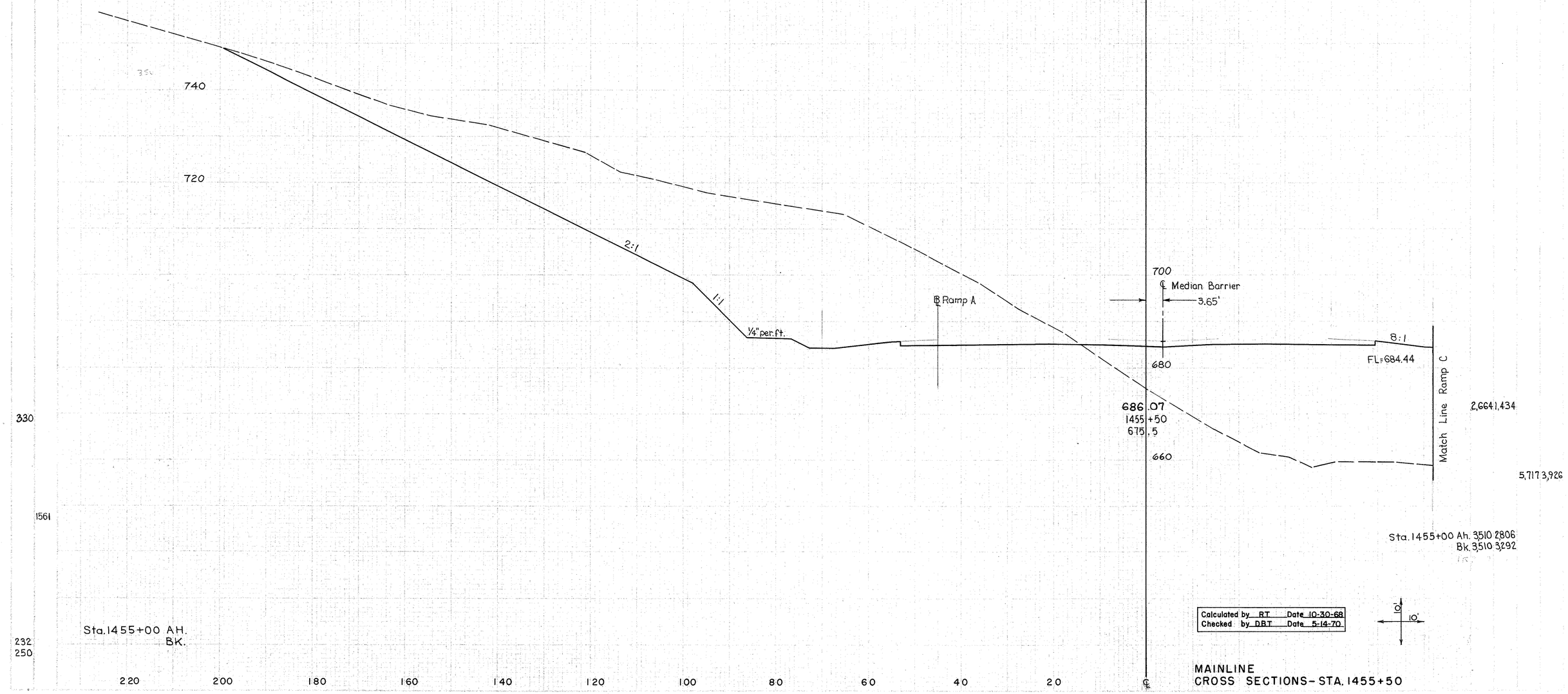

MAINLINE
CROSS SECTIONS - STA. 1455+50

BELMONT COUNTY
BEL-470-5.90

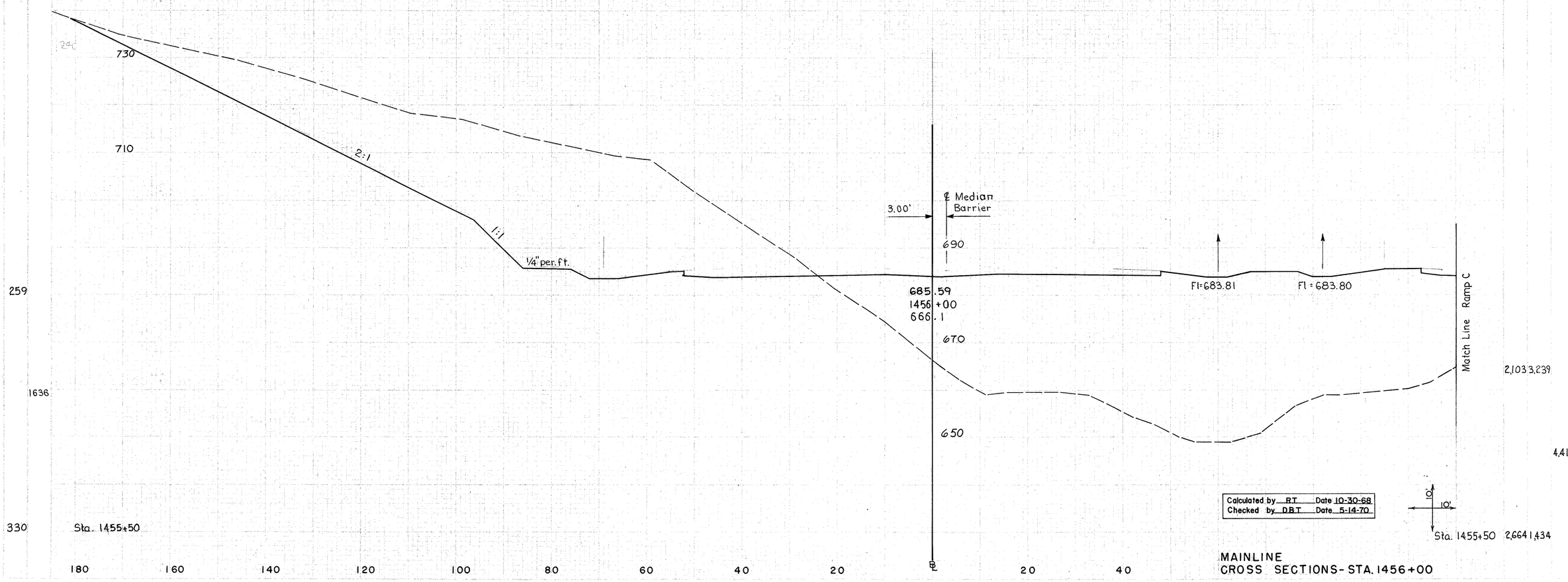

MAINLINE
CROSS SECTIONS - STA. 1456+00

BELMONT COUNTY
BEL-470-5.90

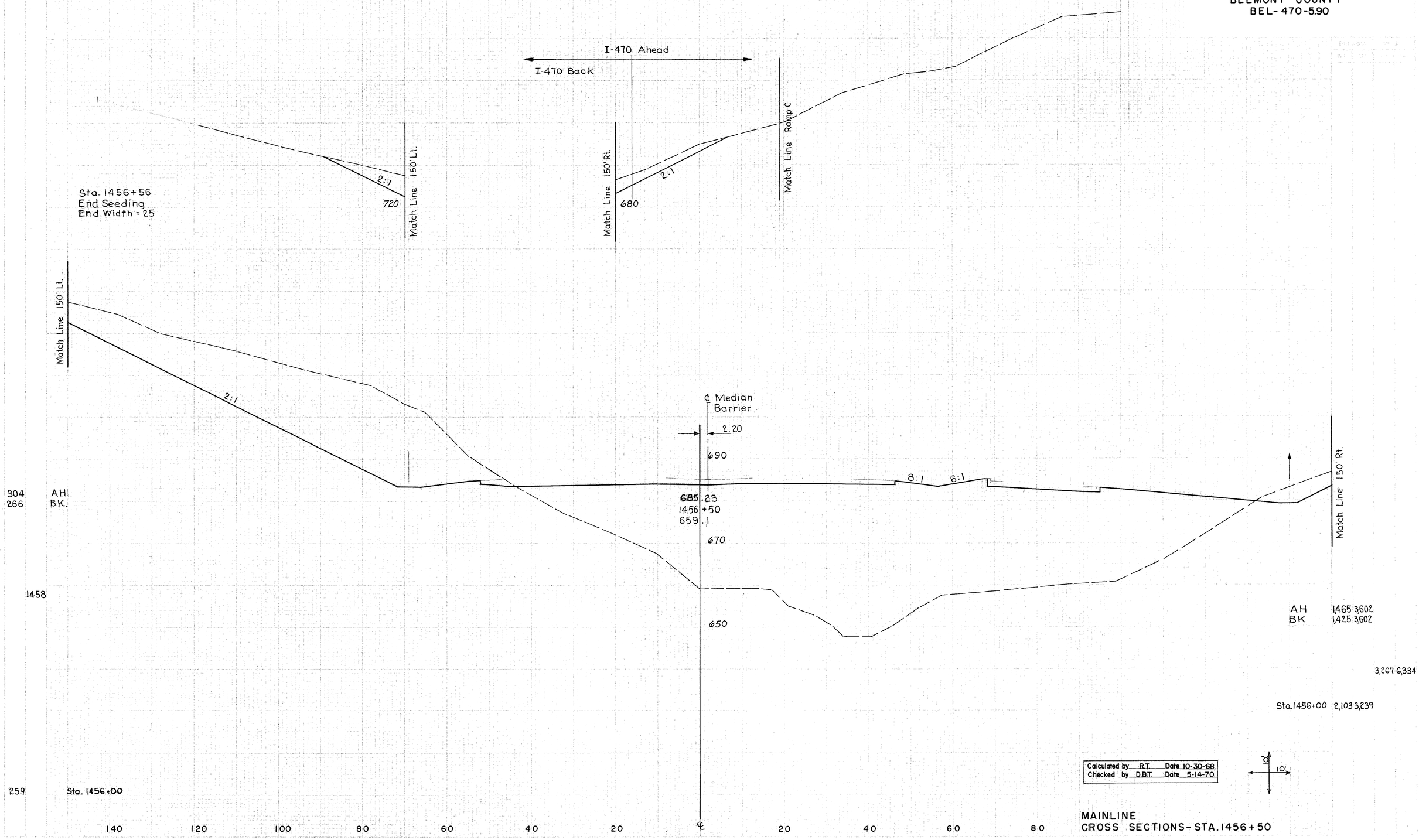

Calculated by R.T. Date 10-30-68
Checked by D.B.T. Date 5-14-70

MAINLINE
CROSS SECTIONS - STA. 1456+50

BELMONT COUNTY
BEL-470-5.90

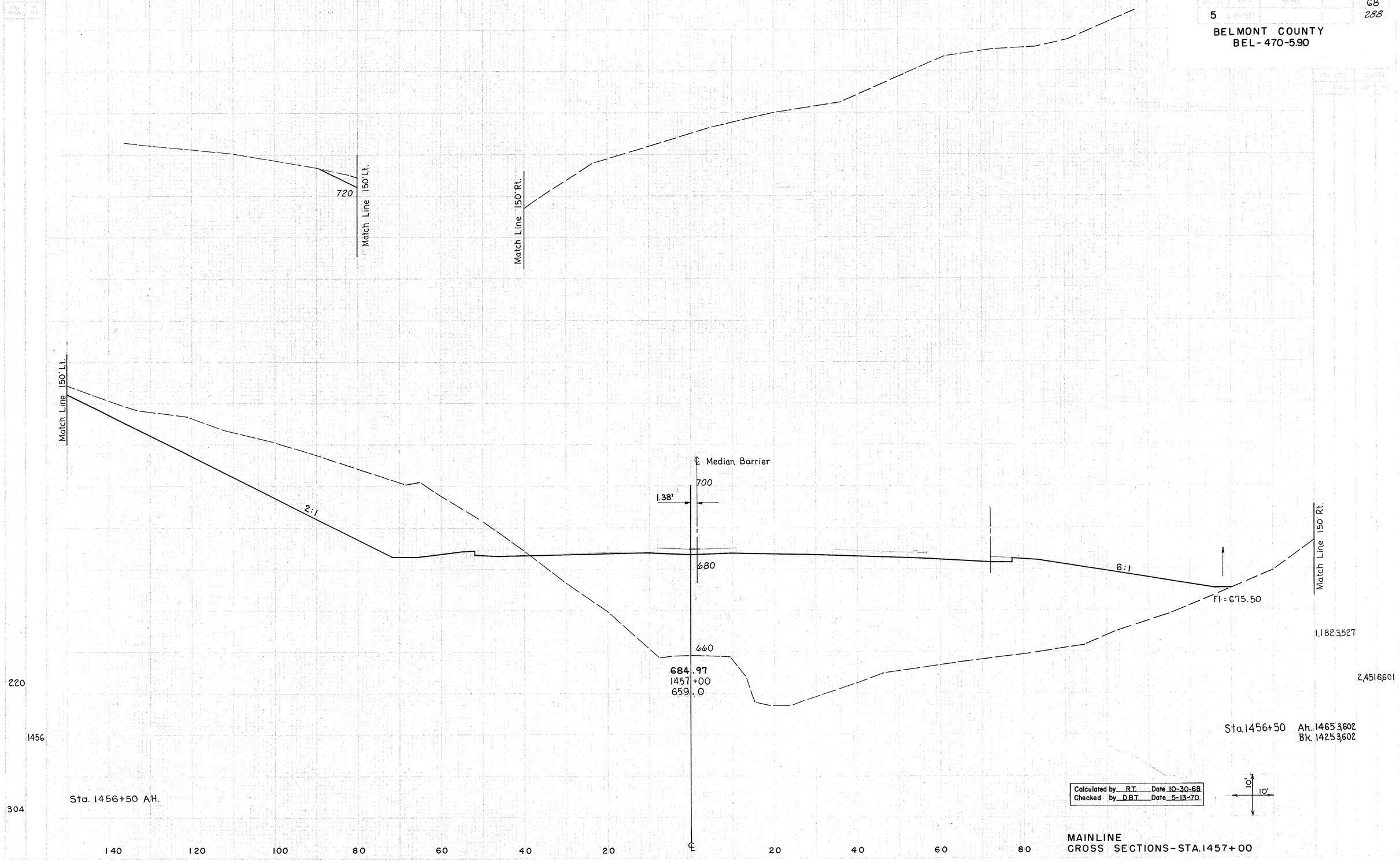

MAINLINE
CROSS SECTIONS-STA. 1457+00

BELMONT COUNTY
BEL-470-5.90

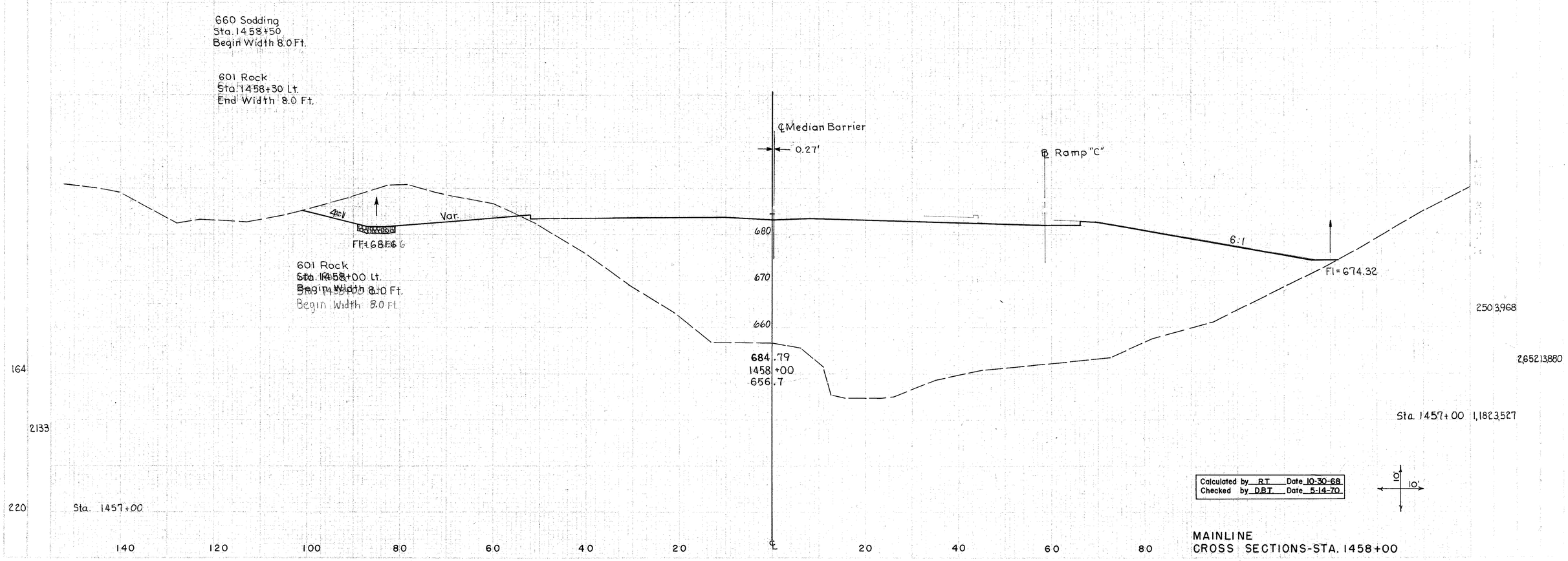

MAINLINE
CROSS SECTIONS-STA. 1458+00

BELMONT COUNTY
BEL-470-5.90

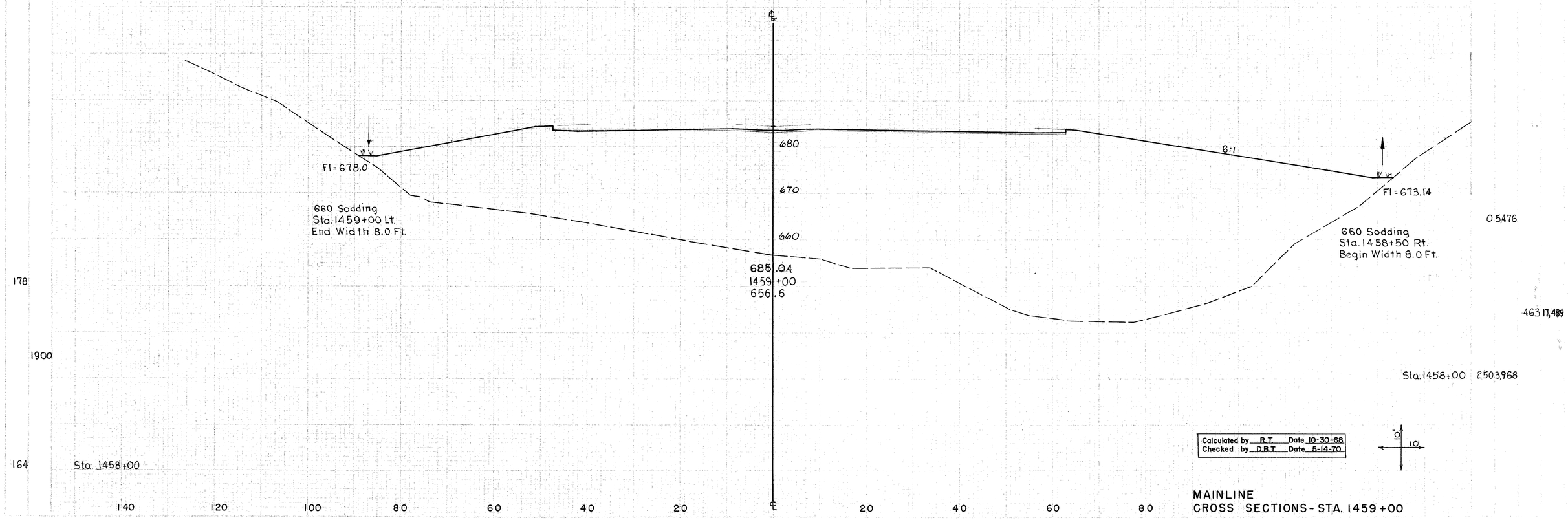

MAINLINE
CROSS SECTIONS - STA. 1459+00

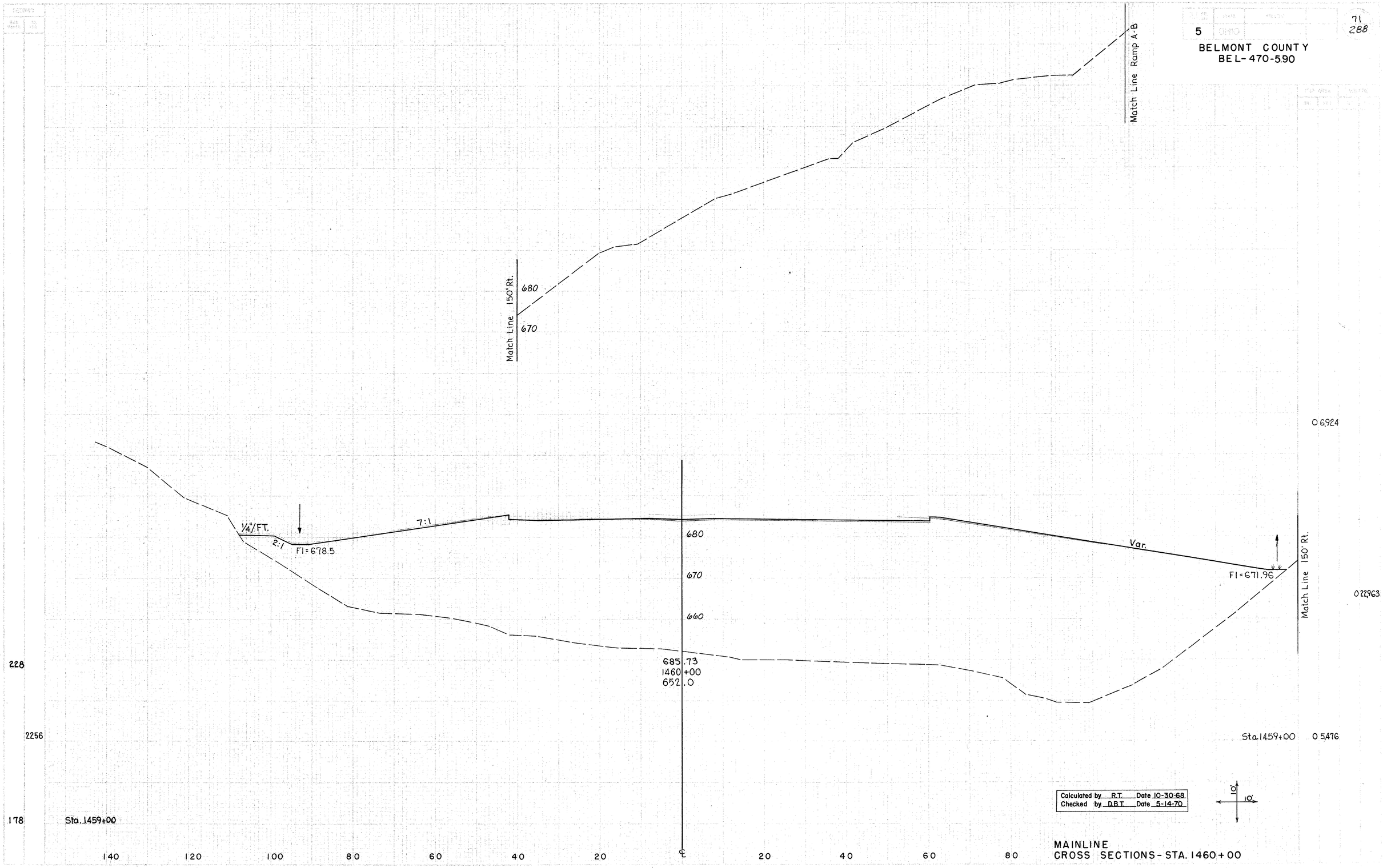

MAINLINE
CROSS SECTIONS - STA. 1460+00

BELMONT COUNTY
BEL-470-5.90

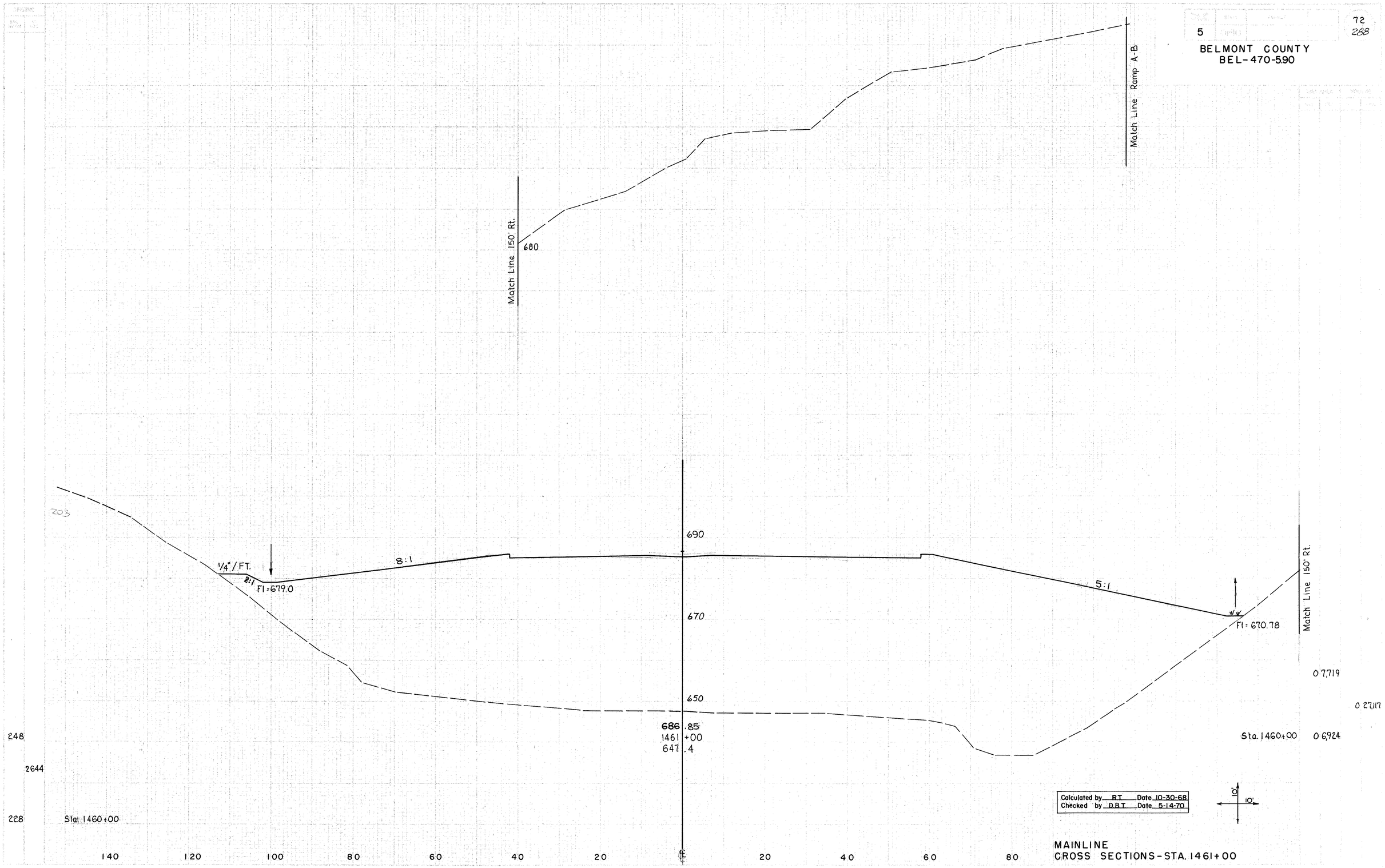

MAINLINE
CROSS SECTIONS-STA. 1461+00

BELMONT COUNTY
BEL-470-5.90

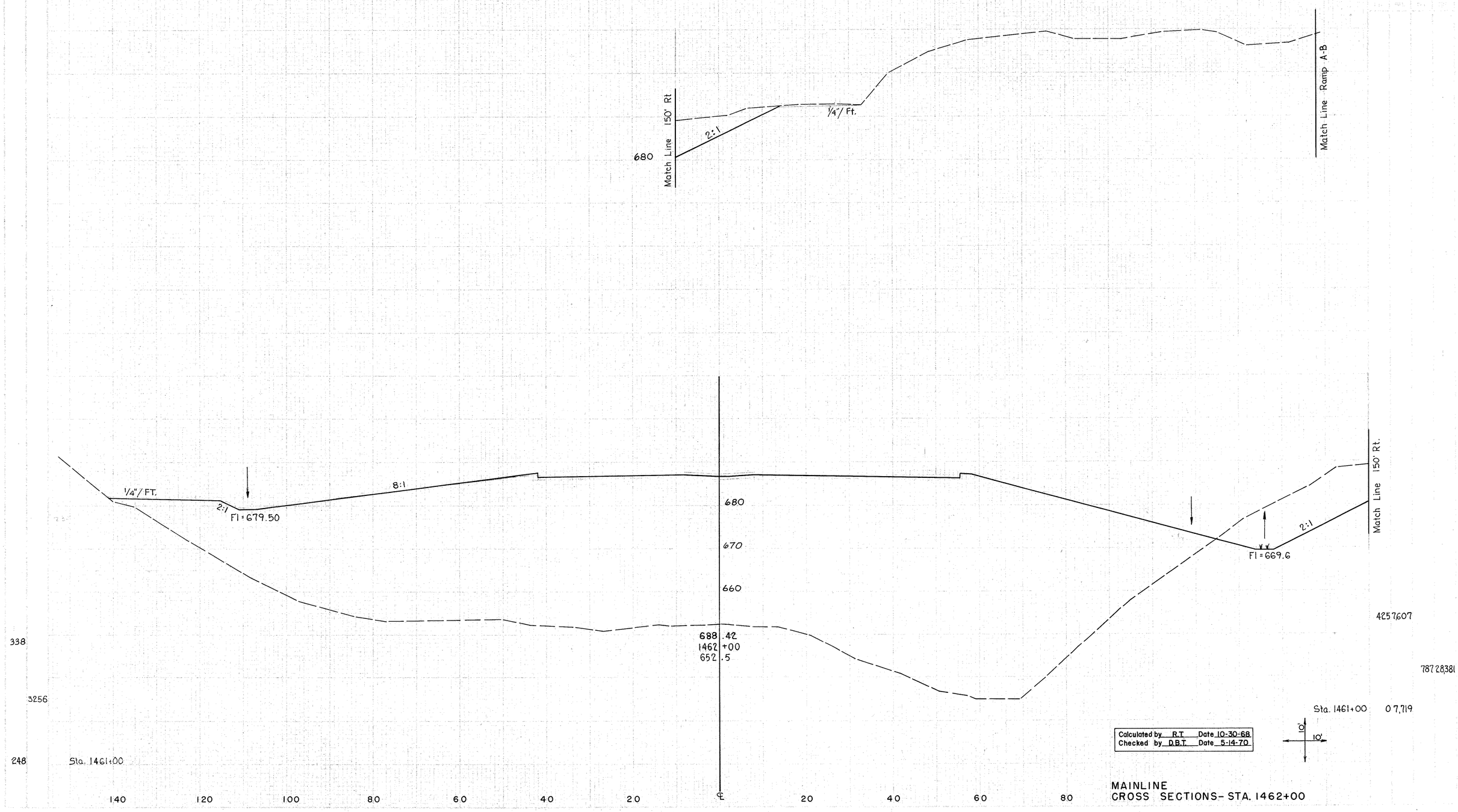

Calculated by R.T. Date 10-30-68
Checked by D.B.T. Date 5-14-70

MAINLINE
CROSS SECTIONS- STA. 1462+00

BELMONT COUNTY
BEL-470-5.90

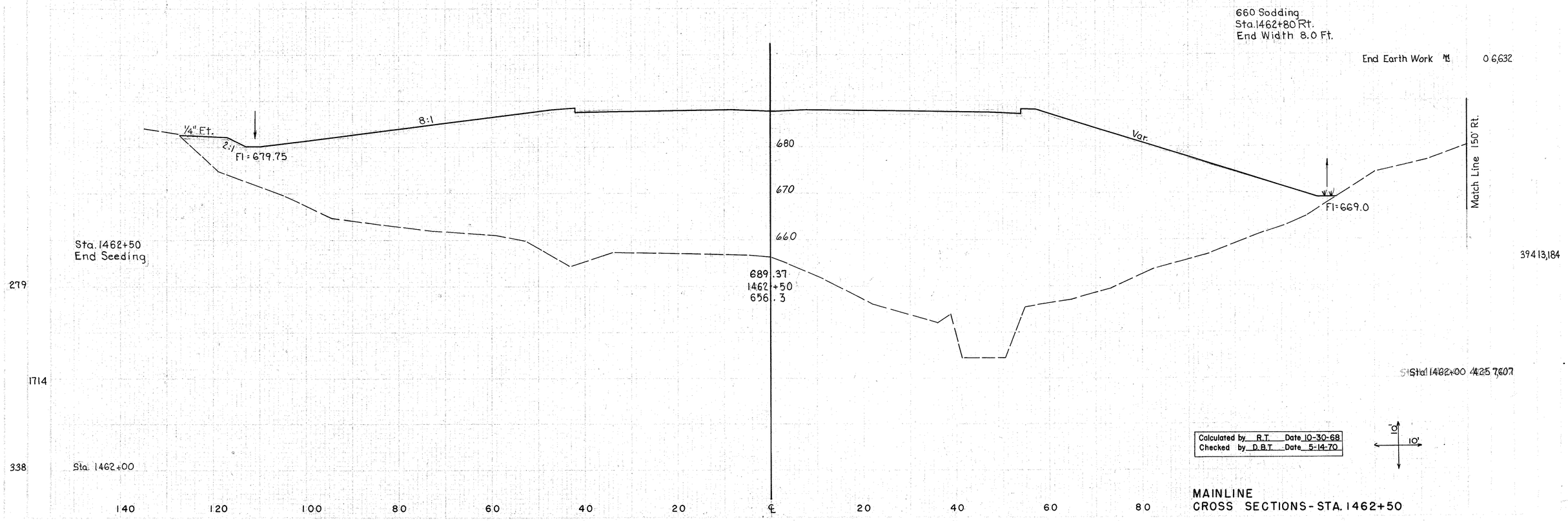

MAINLINE
CROSS SECTIONS - STA. 1462+50

BELMONT COUNTY
BEL-470-5.90

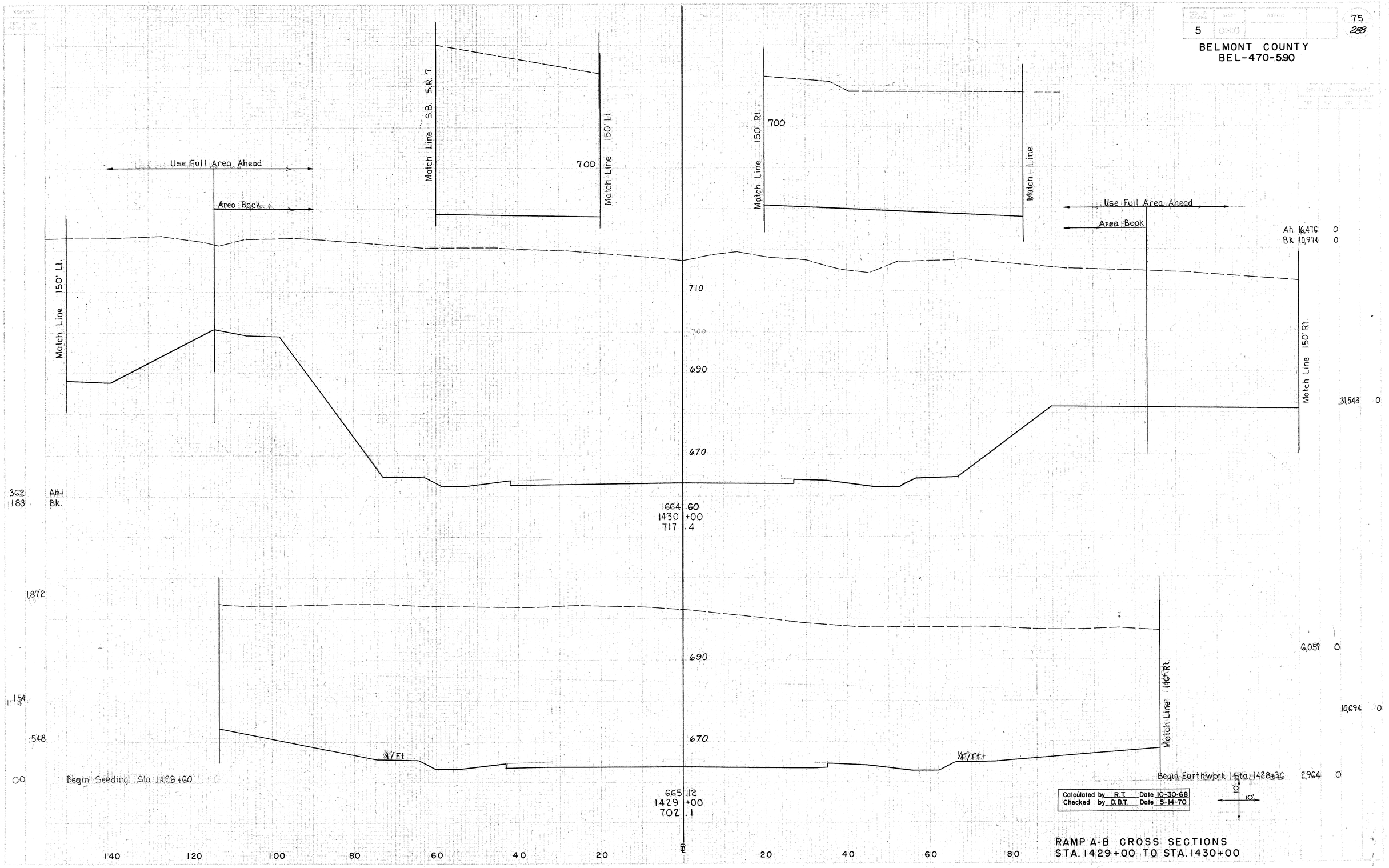

Calculated by R.T. Date 10-30-68
Checked by D.B.T. Date 5-14-70

RAMP A-B CROSS SECTIONS
STA. 1429+00 TO STA. 1430+00

BELMONT COUNTY
BEL-470-5.90

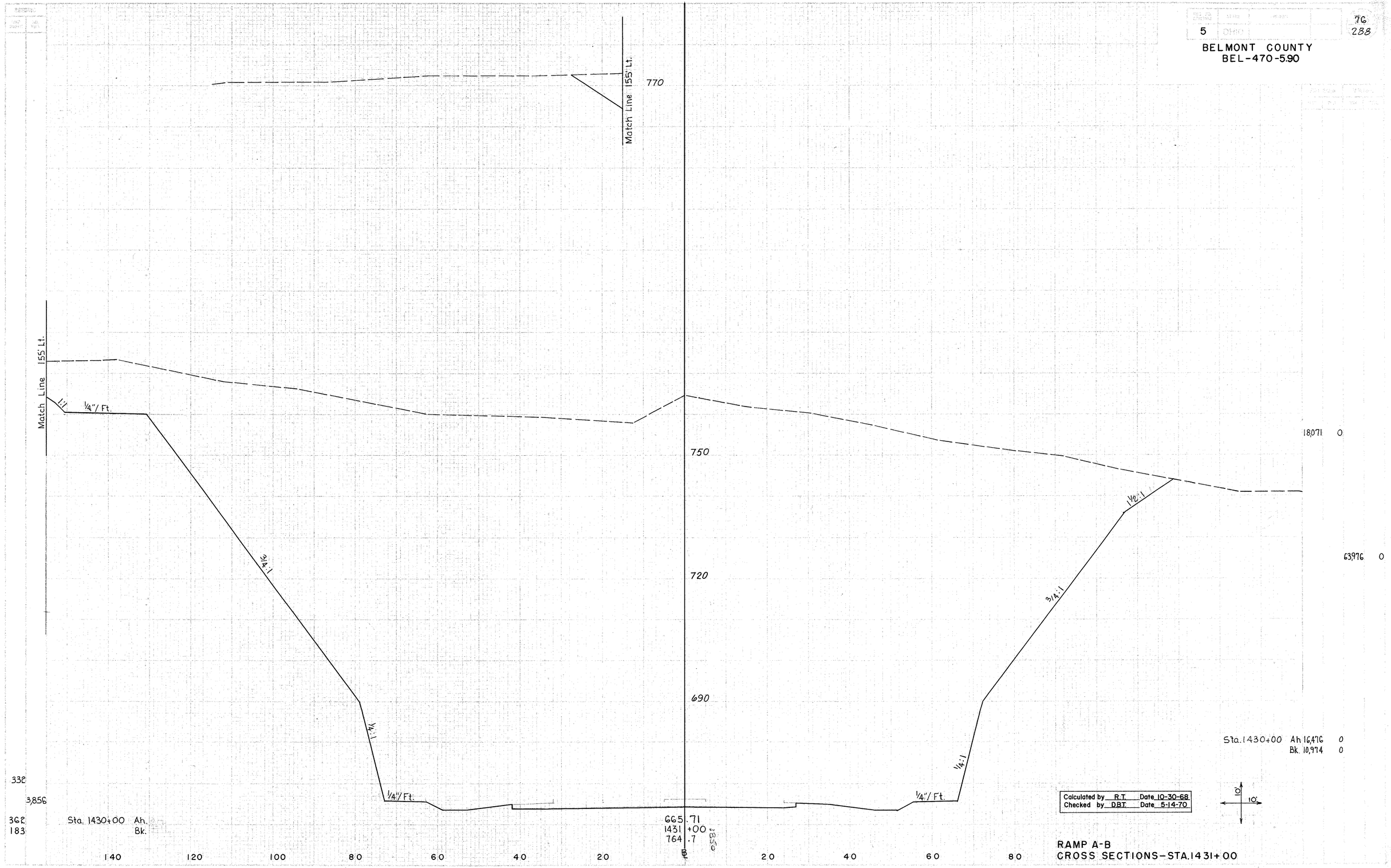

RAMP A-B
CROSS SECTIONS–STA.1431+00

BELMONT COUNTY
BEL-470-5.90

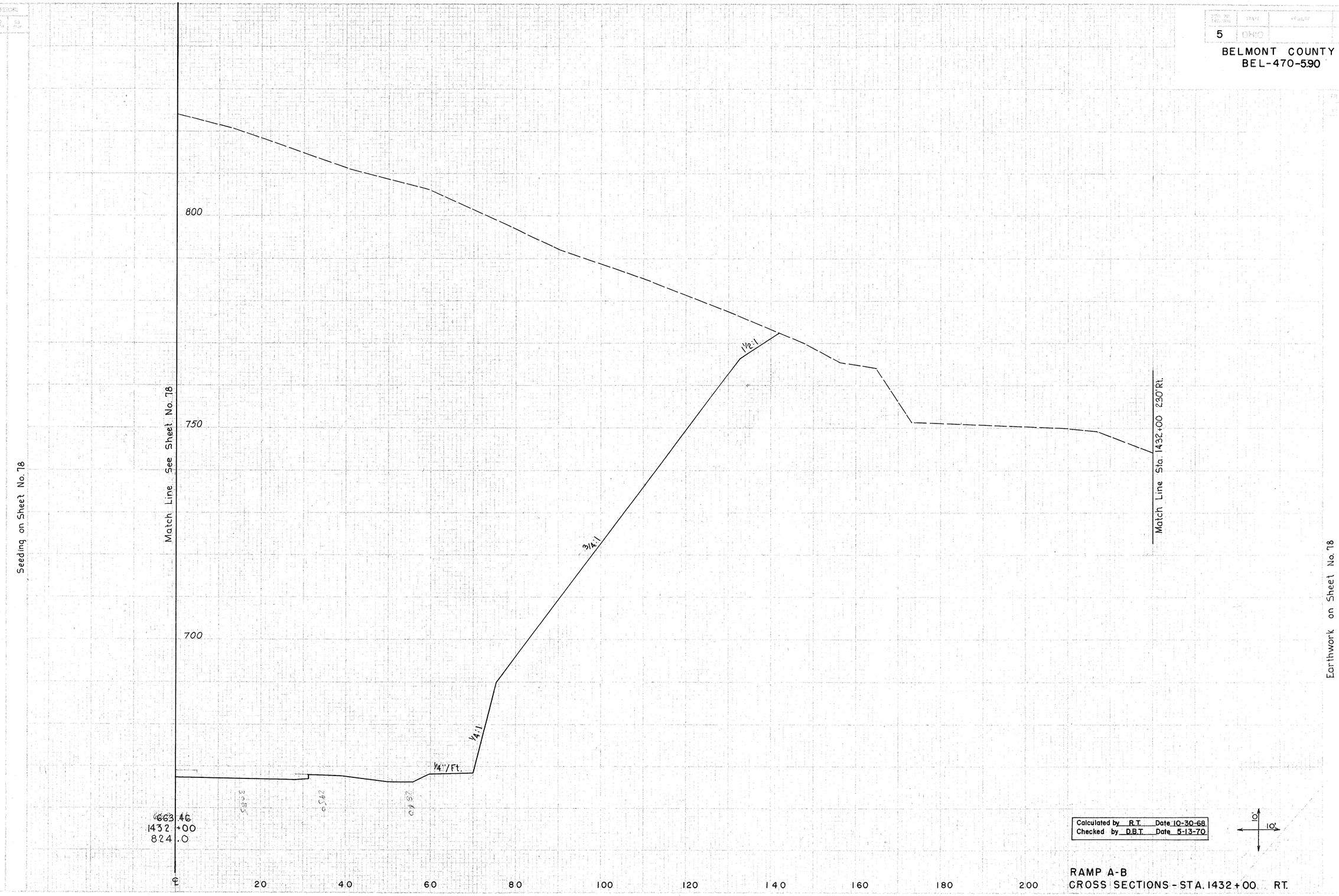

Calculated by R.T. Date 10-30-68
Checked by D.B.T. Date 5-13-70

RAMP A-B
CROSS SECTIONS - STA. 1432+00 RT.

BELMONT COUNTY
BEL-470-5.90

Calculated by R.T. Date 10-30-68
Checked by D.B.T. Date 5-13-70

RAMP A-B
CROSS SECTIONS - STA. 1432+00 LT.

BELMONT COUNTY
BEL-470-5.90

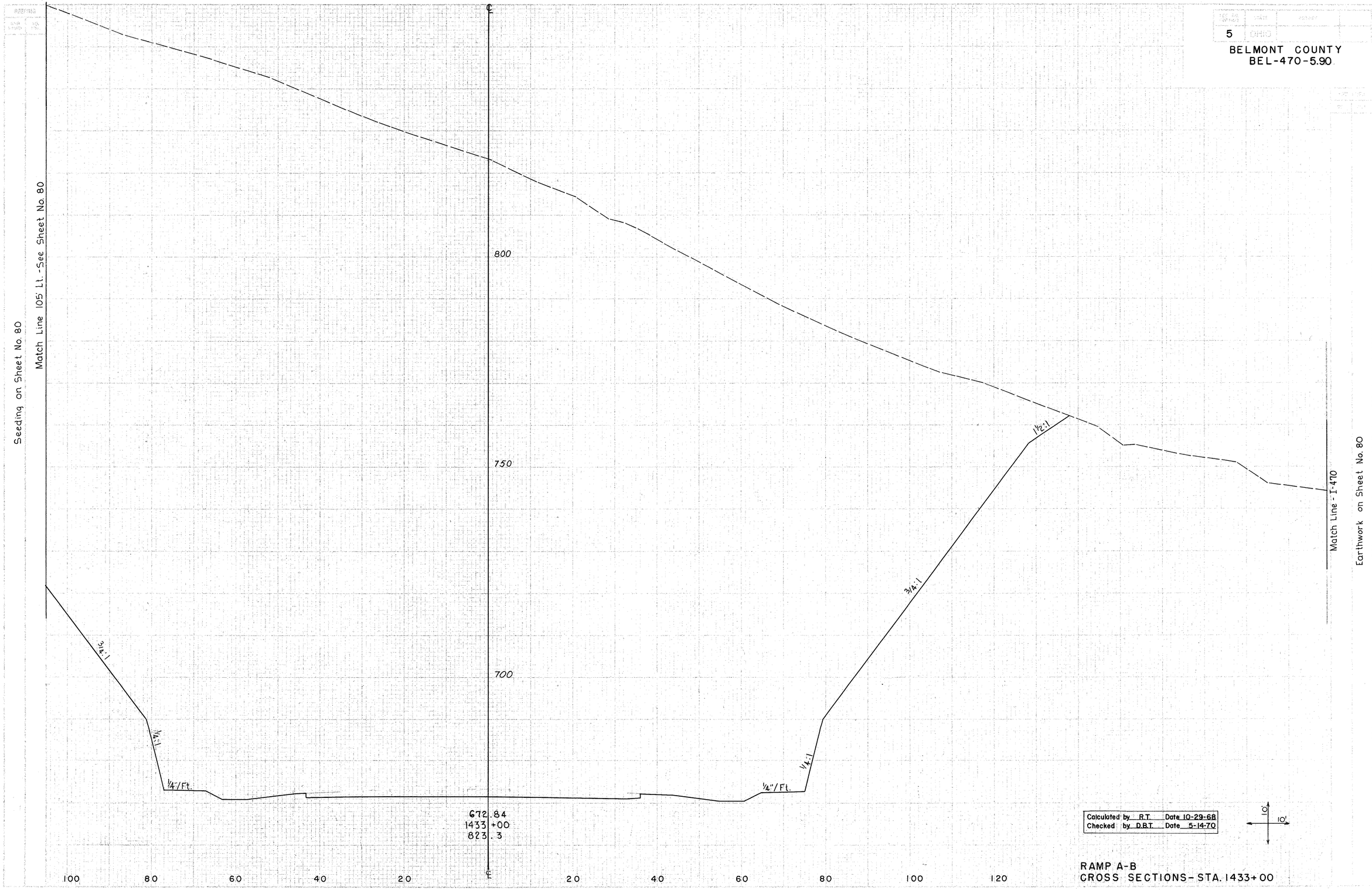

RAMP A-B
CROSS SECTIONS - STA. 1433+00

BELMONT COUNTY
BEL-470-5.90

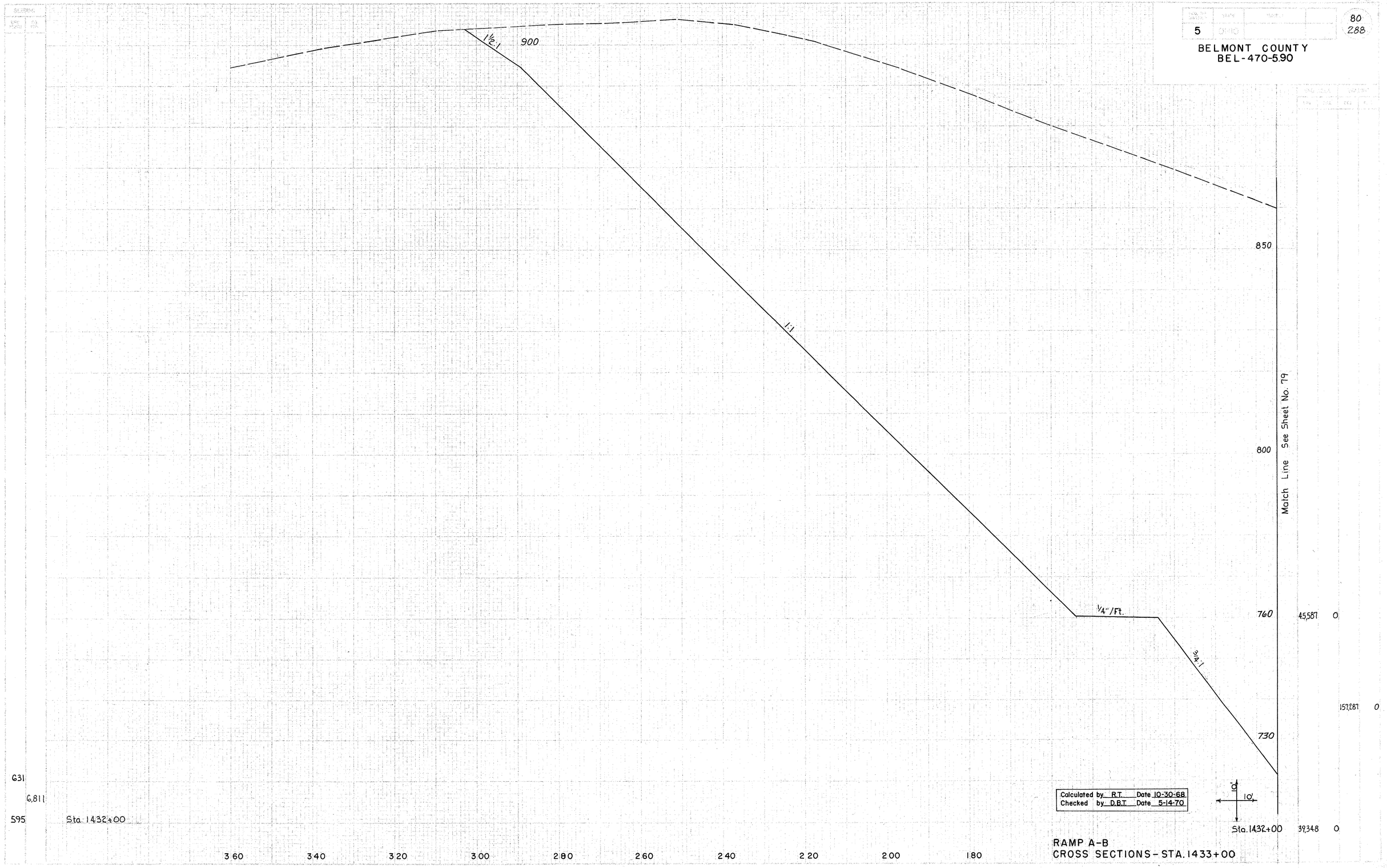

RAMP A-B
CROSS SECTIONS - STA. 1433+00

BELMONT COUNTY
BEL-470-5.90

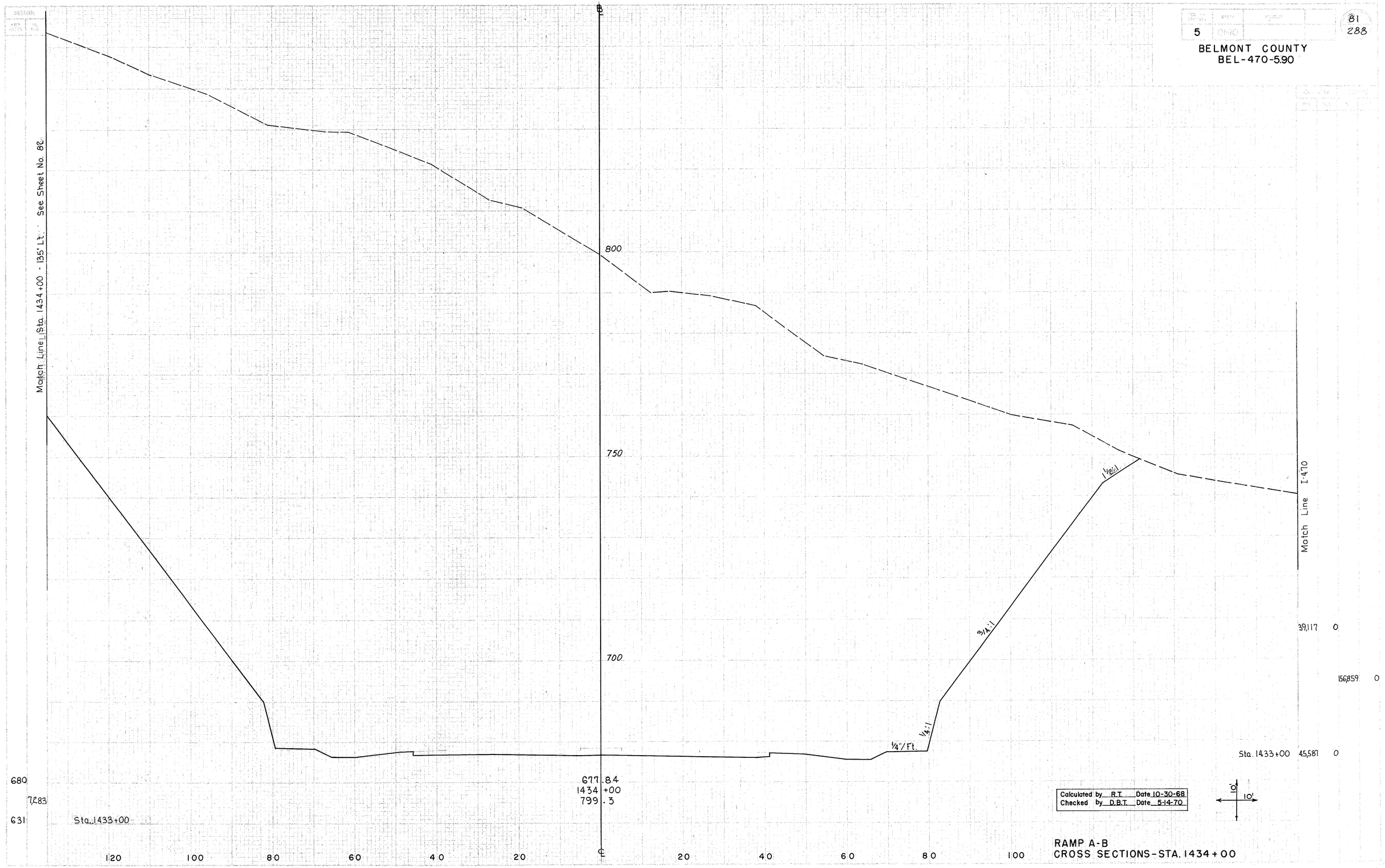

Calculated by R.T. Date 10-30-68
Checked by D.B.T. Date 5-14-70

RAMP A-B
CROSS SECTIONS-STA. 1434+00

BELMONT COUNTY
BEL-470-5.90

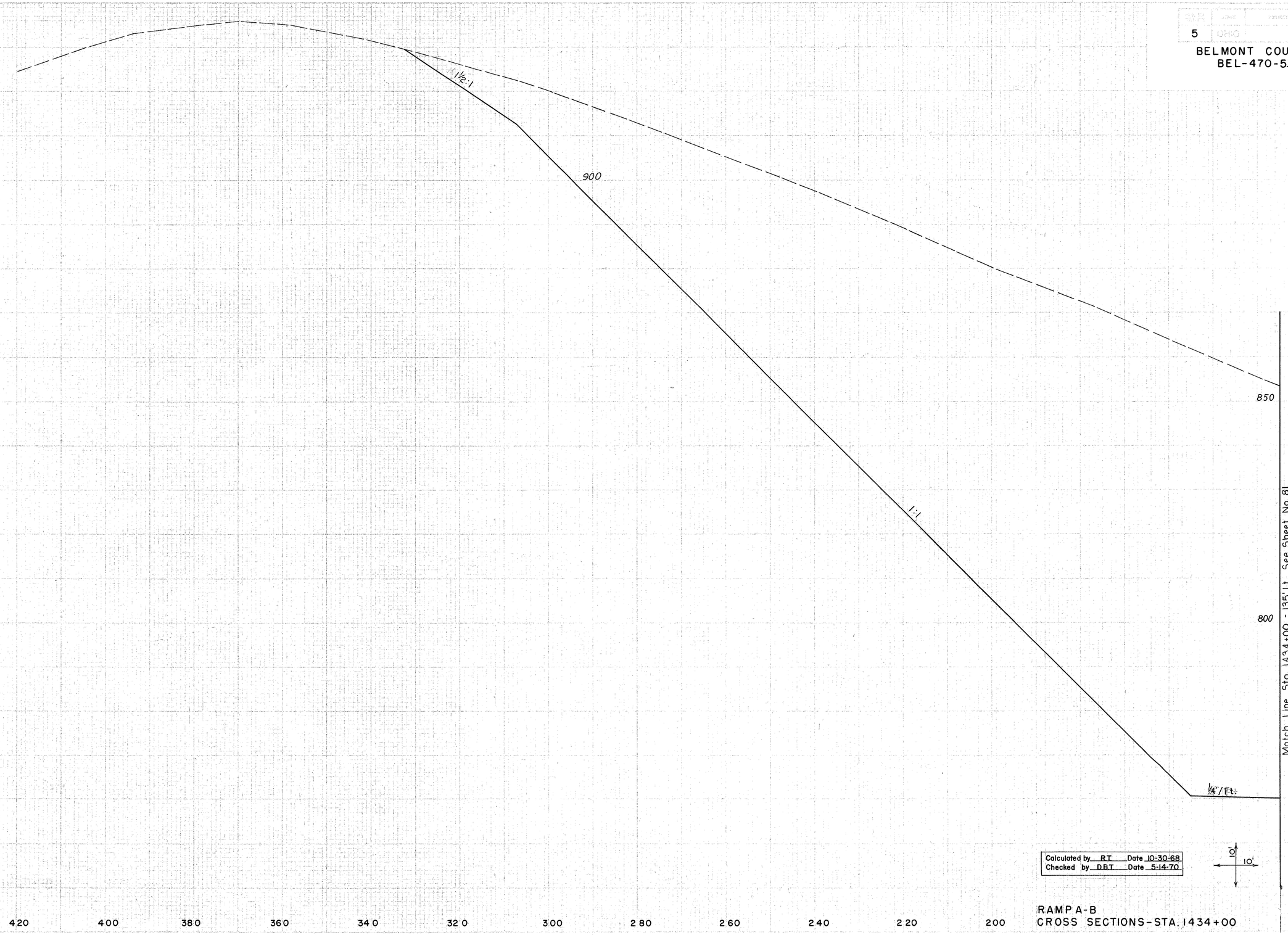

Calculated by R.T. Date 10-30-68
Checked by D.B.T. Date 5-14-70

RAMP A-B
CROSS SECTIONS-STA. 1434+00

Seeding on Sheet No. 81

Match Line Sta. 1434+00 - 135' Lt. See Sheet No. 81

Earthwork on Sheet No. 81

BELMONT COUNTY
BEL-470-5.90

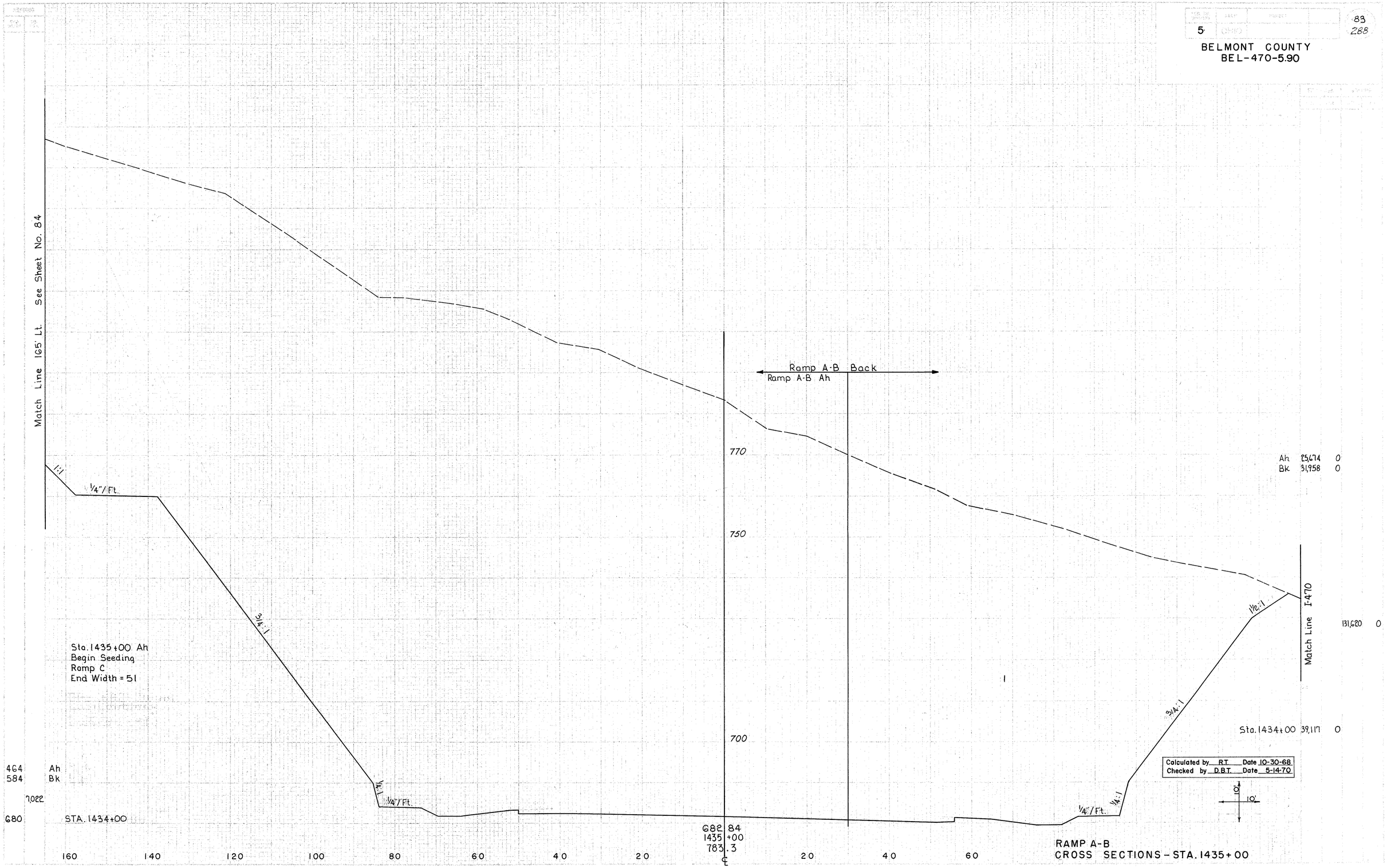

RAMP A-B
CROSS SECTIONS - STA. 1435+00

BELMONT COUNTY
BEL-470-5.90

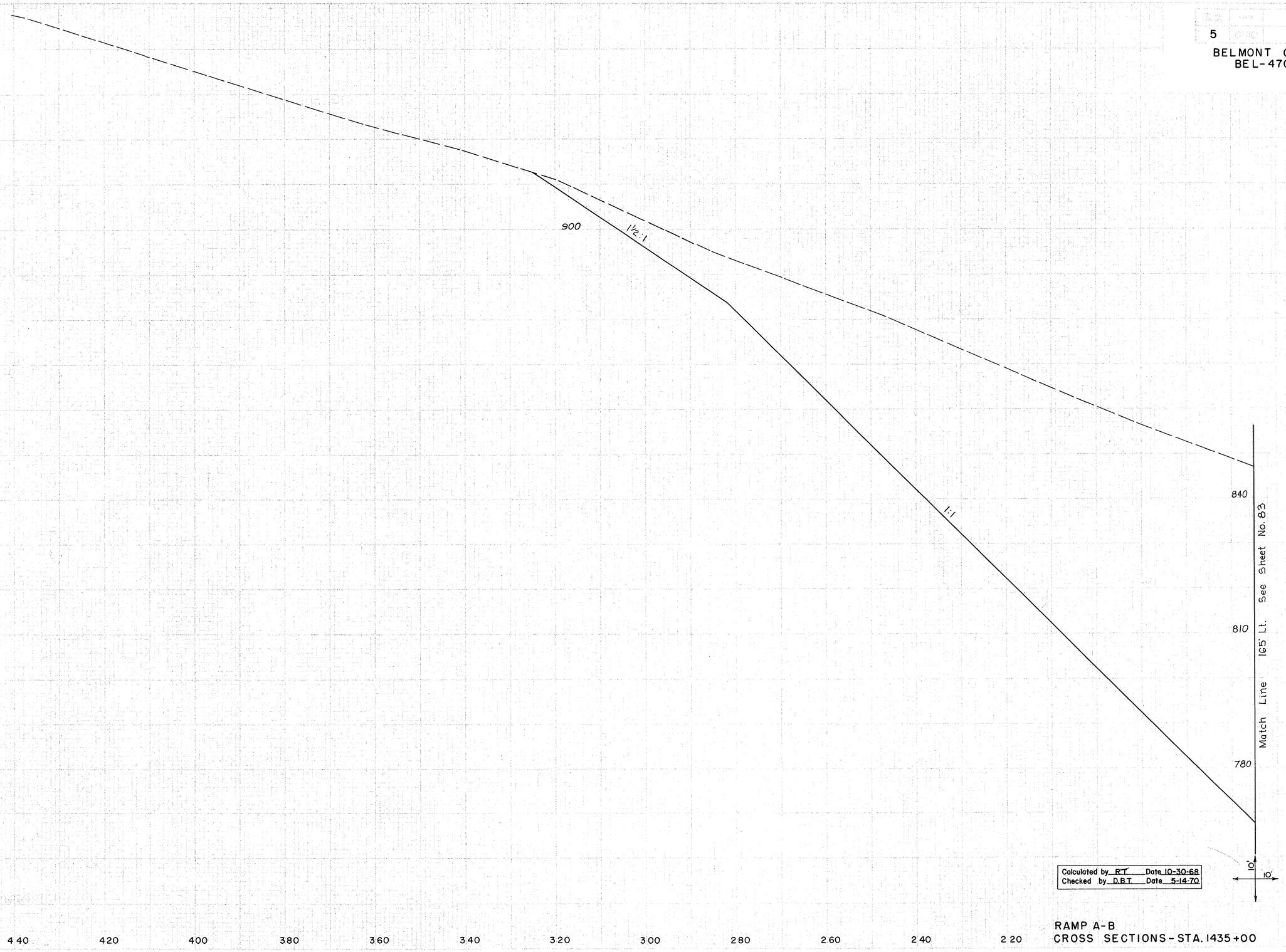

Seeding on Sheet No. 83

Earthwork on Sheet No. 83

Calculated by R.T. Date 10-30-68
Checked by D.B.T. Date 5-14-70

RAMP A-B
CROSS SECTIONS - STA. 1435+00

BELMONT COUNTY
BEL-470-5.90

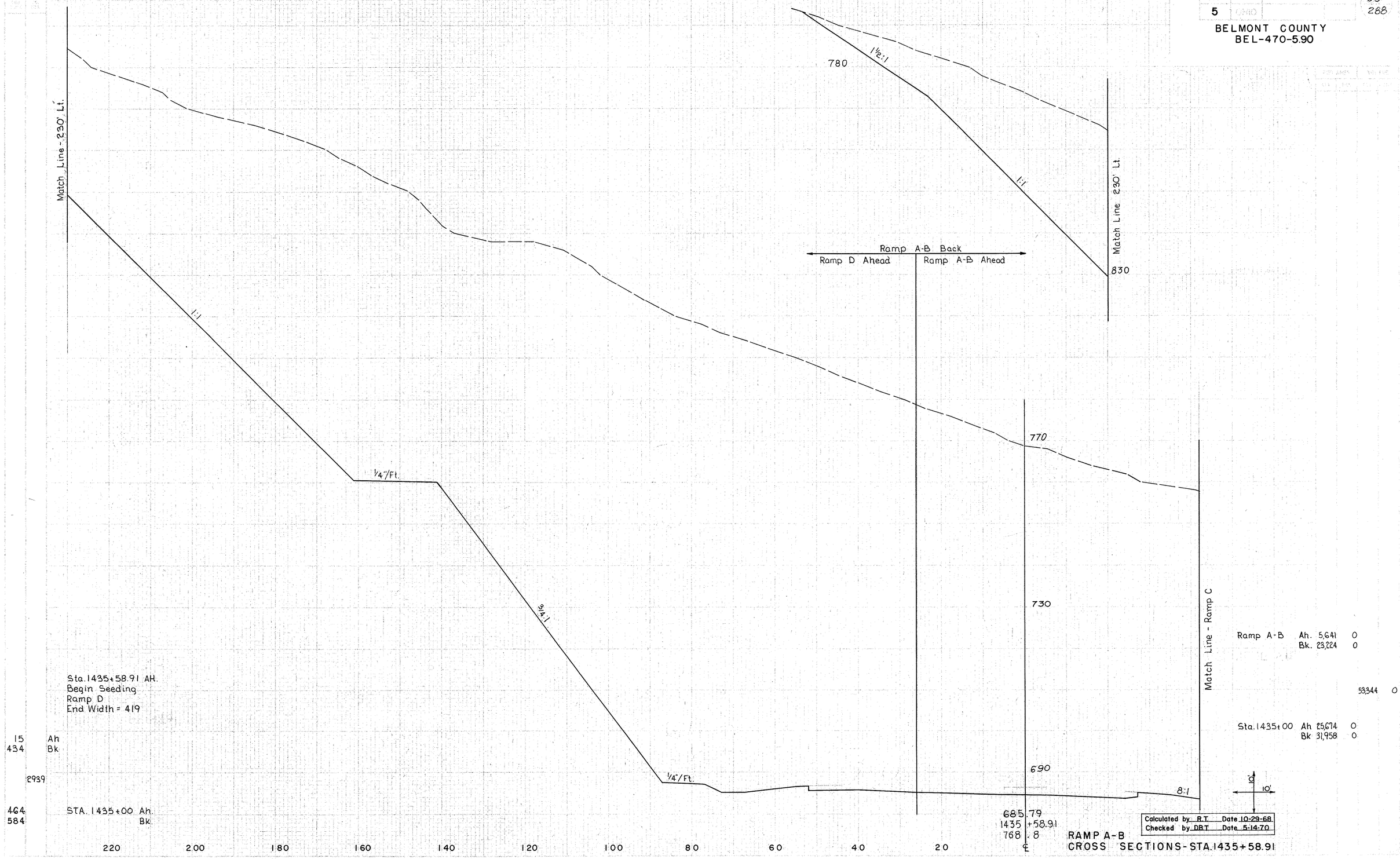

Calculated by R.T. Date 10-29-68
Checked by DBT Date 5-14-70

RAMP A-B
CROSS SECTIONS-STA.1435+58.91

BELMONT COUNTY
BEL-470-5.90

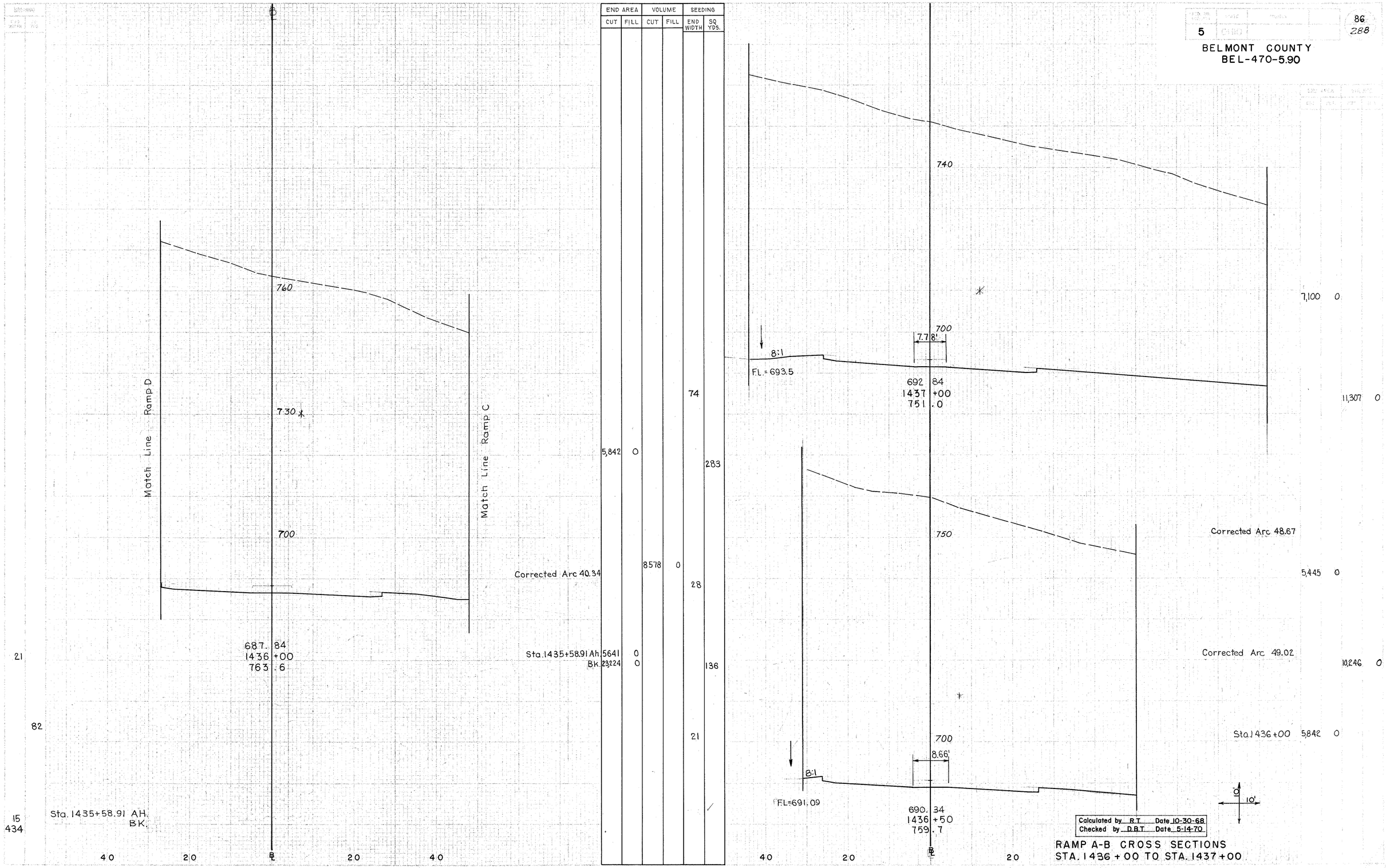

END AREA		VOLUME		SEEDING	
CUT	FILL	CUT	FILL	END WIDTH	SQ. YDS.
				74	
5,842	0				283
		8578	0		
				28	
5641	0				
23224	0				136
				21	

7,100	0	
		11,307 0
5,445	0	
		10,246 0
5,842	0	

Calculated by R.T. Date 10-30-68
Checked by D.B.T. Date 5-14-70

RAMP A-B CROSS SECTIONS
STA. 1436+00 TO STA. 1437+00

BELMONT COUNTY
BEL-470-5.90

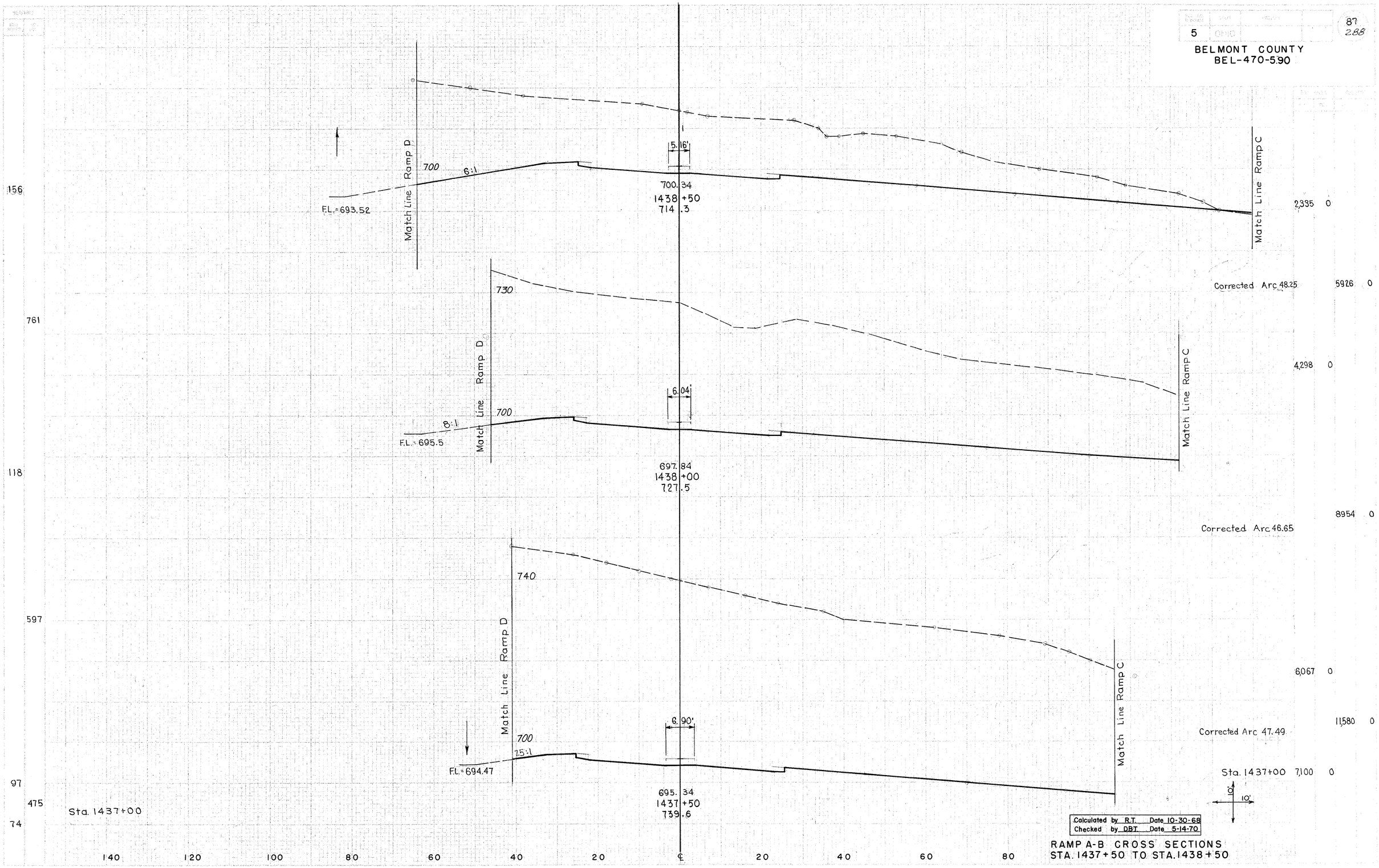

Calculated by R.T. Date 10-30-68
Checked by D.B.T. Date 5-14-70

RAMP A-B CROSS SECTIONS
STA. 1437+50 TO STA. 1438+50

88
288

BELMONT COUNTY
BEL-470-5.90

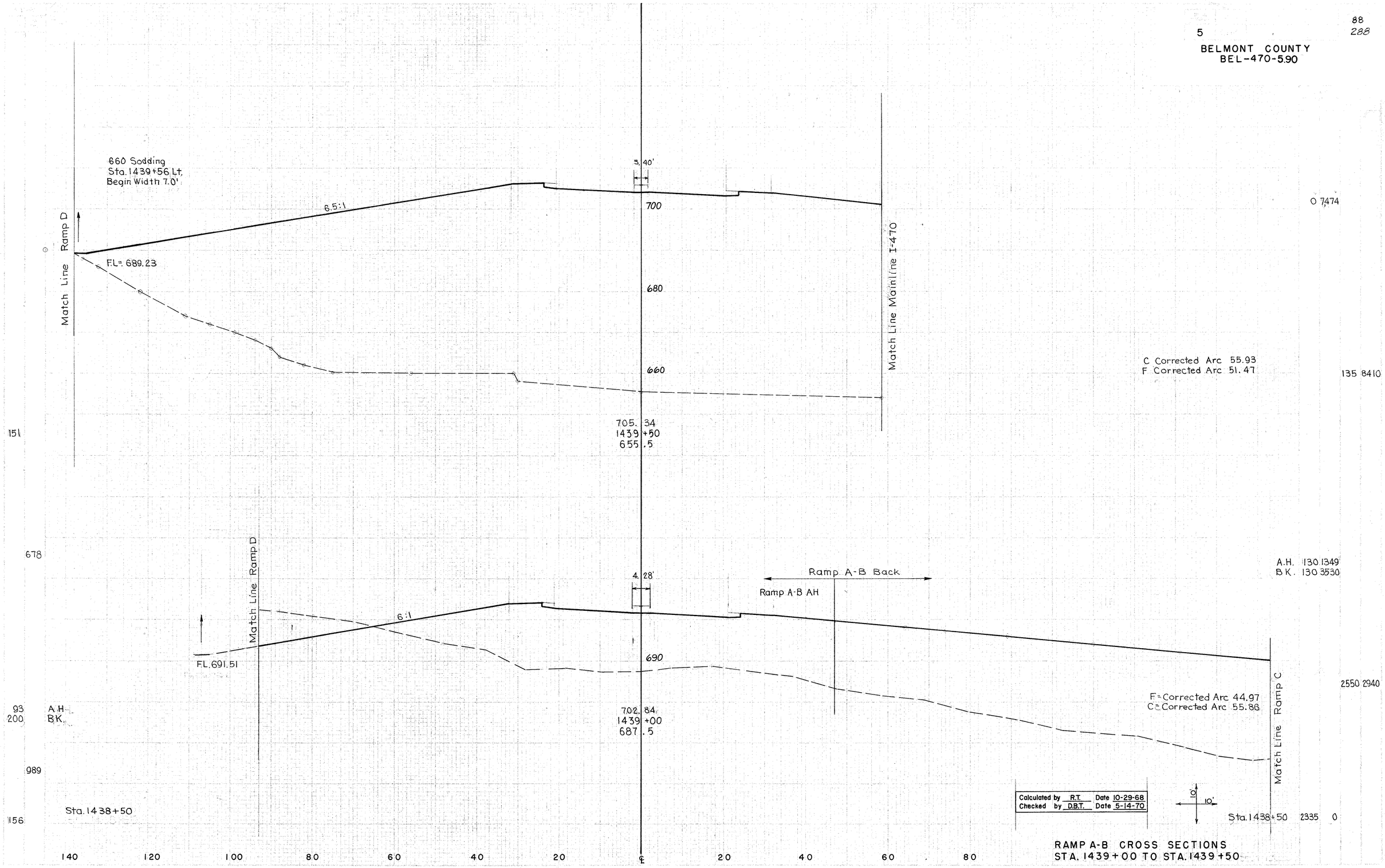

RAMP A-B CROSS SECTIONS
STA. 1439+00 TO STA. 1439+50

BELMONT COUNTY
BEL-470-5.90

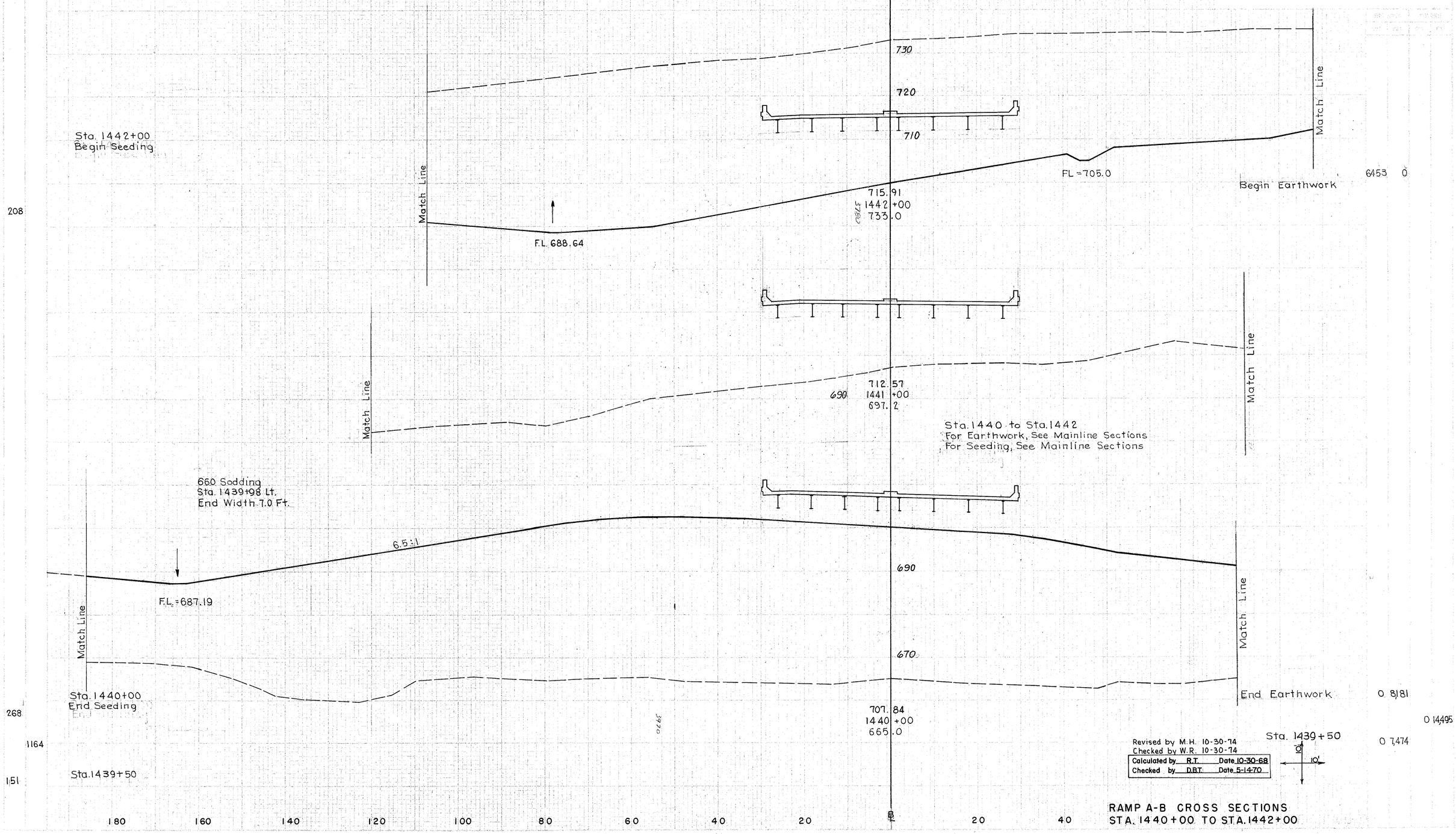

Revised by M.H. 10-30-74
Checked by W.R. 10-30-74

Calculated by	R.T.	Date 10-30-68
Checked by	D.B.T.	Date 5-14-70

RAMP A-B CROSS SECTIONS
STA. 1440+00 TO STA. 1442+00

FEDERAL REGION	STATE	PROJECT	
5	OHIO		

90
288

BELMONT COUNTY
BEL-470-5.90

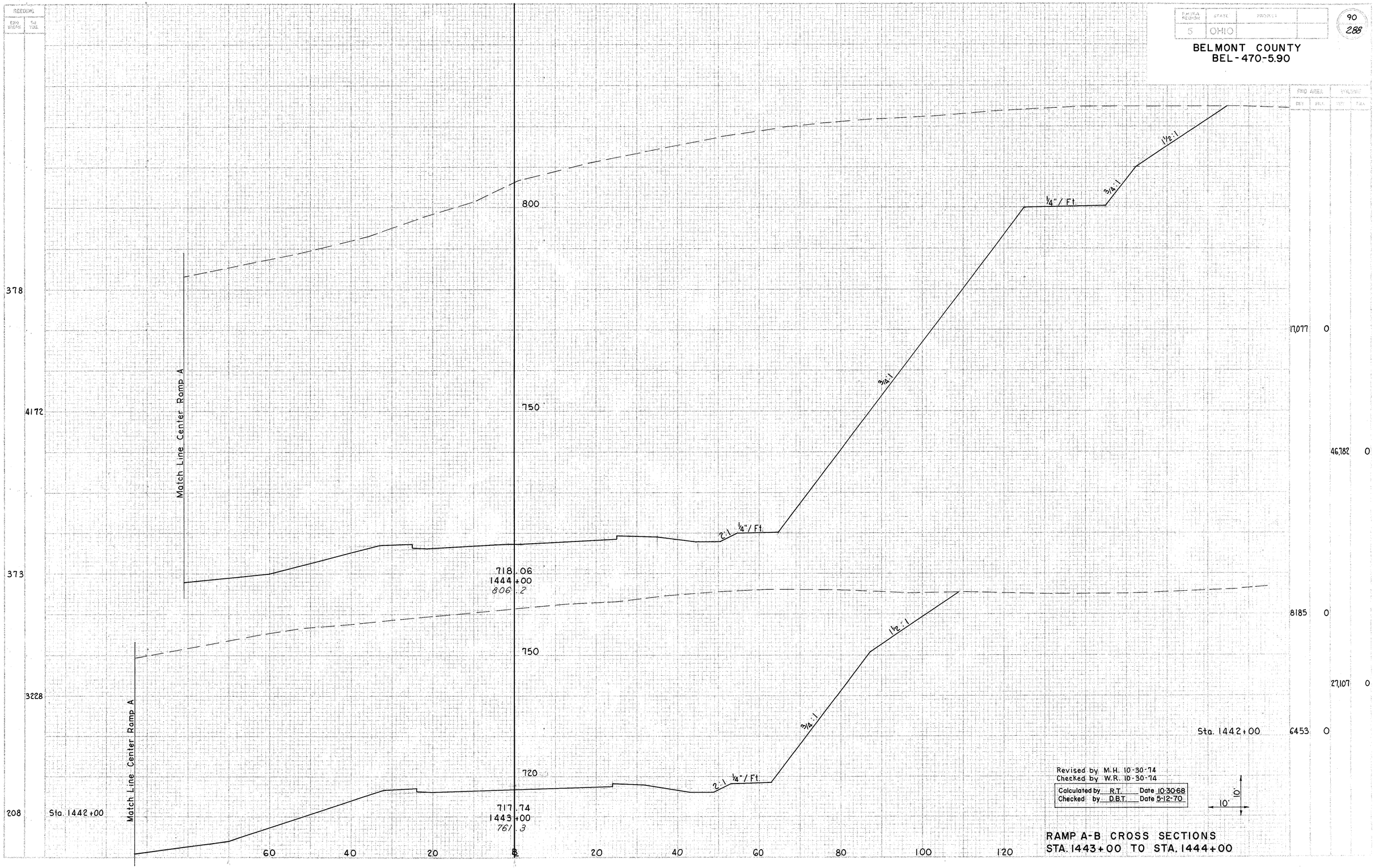

RAMP A-B CROSS SECTIONS
STA. 1443+00 TO STA. 1444+00

91
2.88

BELMONT COUNTY
BEL-470-5.90

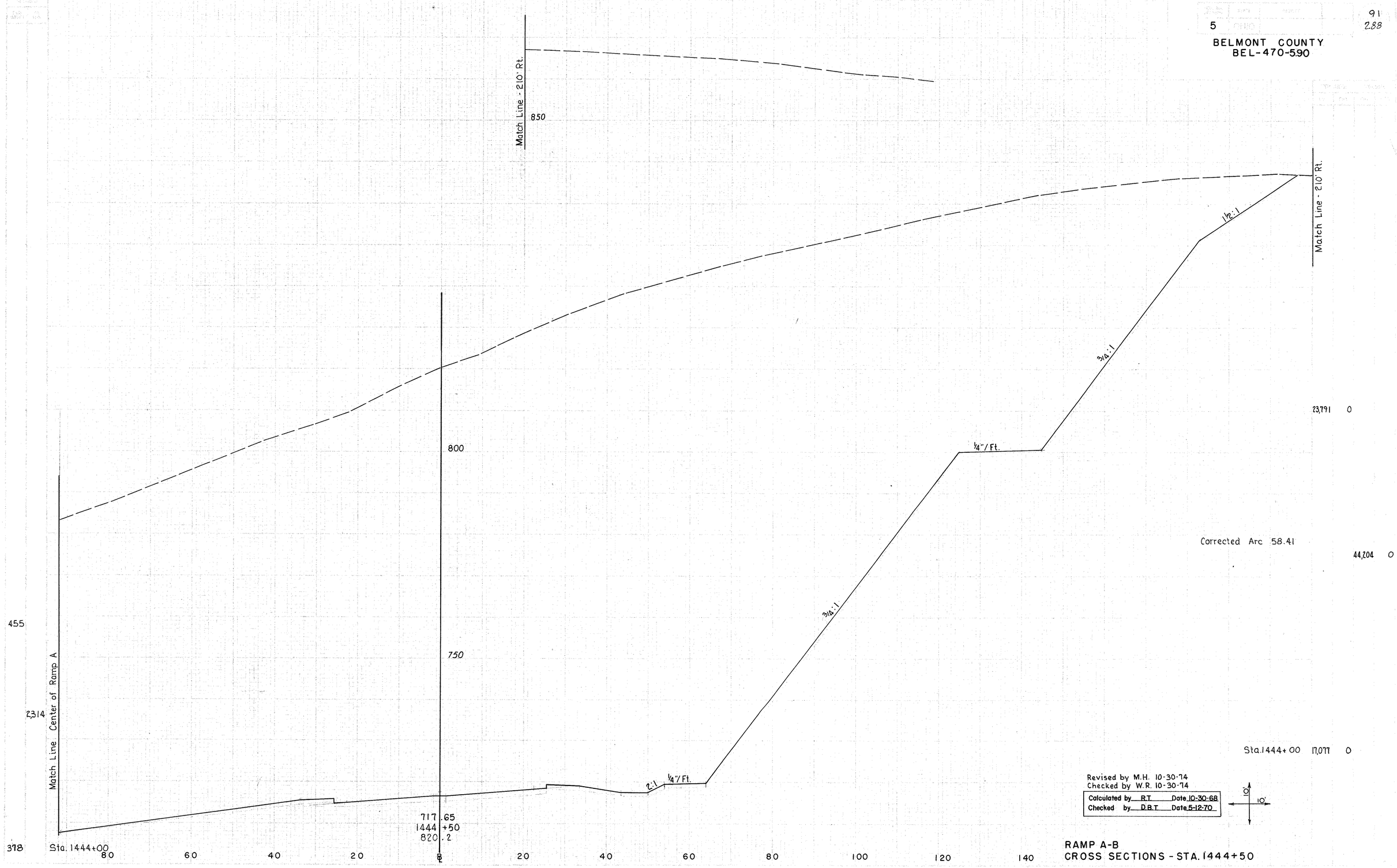

Revised by M.H. 10-30-74
Checked by W.R. 10-30-74

Calculated by	R.T.	Date	10-30-68
Checked by	D.B.T.	Date	5-12-70

0' 10'

RAMP A-B
CROSS SECTIONS - STA. 1444+50

BELMONT COUNTY
BEL-470-5.90

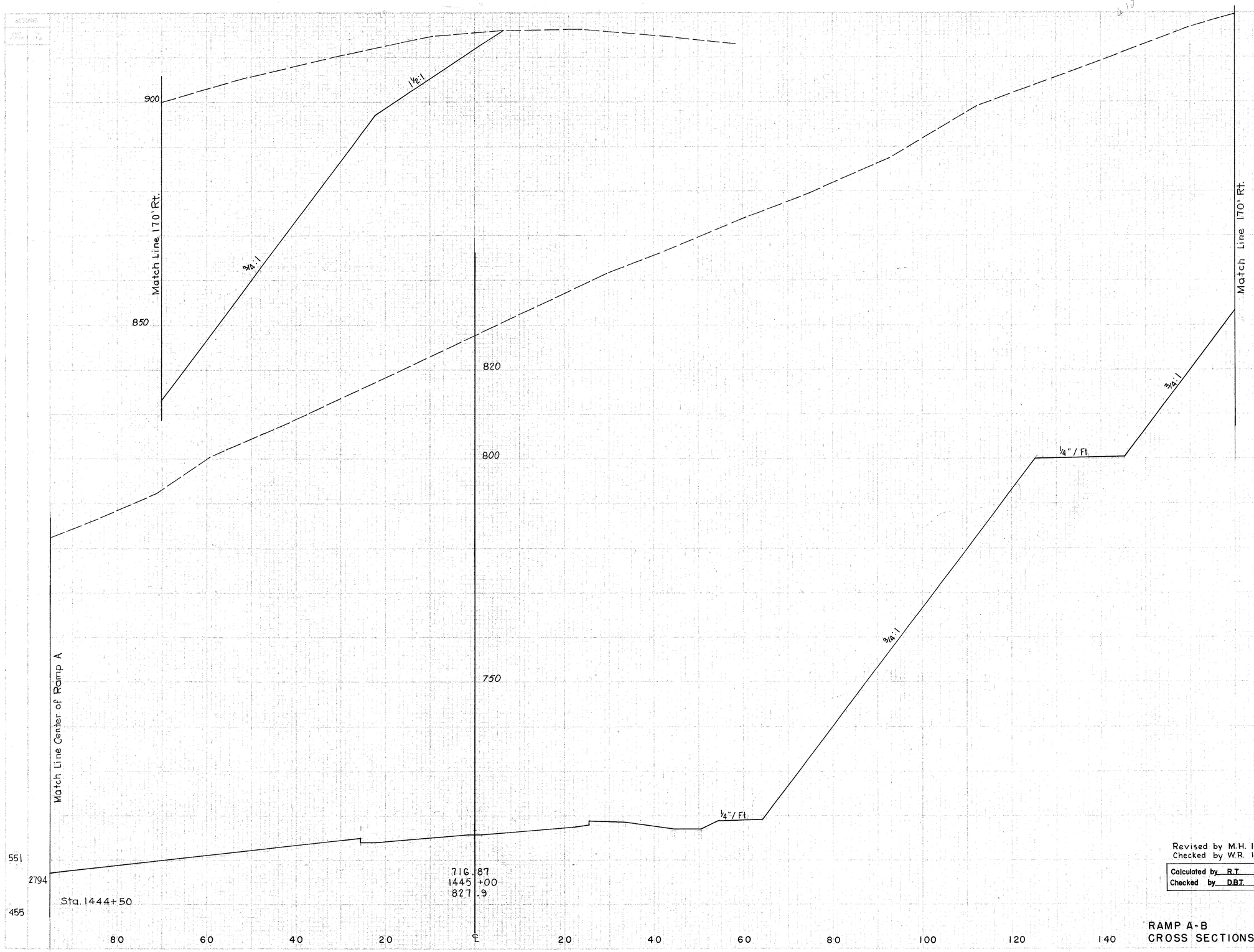

29,344 0

Corrected Arc 62.03 61,036 0

Sta. 1444+50 23,719 0

Revised by M.H. 10-30-74
Checked by W.R. 10-30-74

Calculated by R.T.	Date 10-30-68
Checked by D.B.T.	Date 5-12-70

10'
10'

RAMP A-B
CROSS SECTIONS - STA. 1445+00

BELMONT COUNTY
BEL-470-5.90

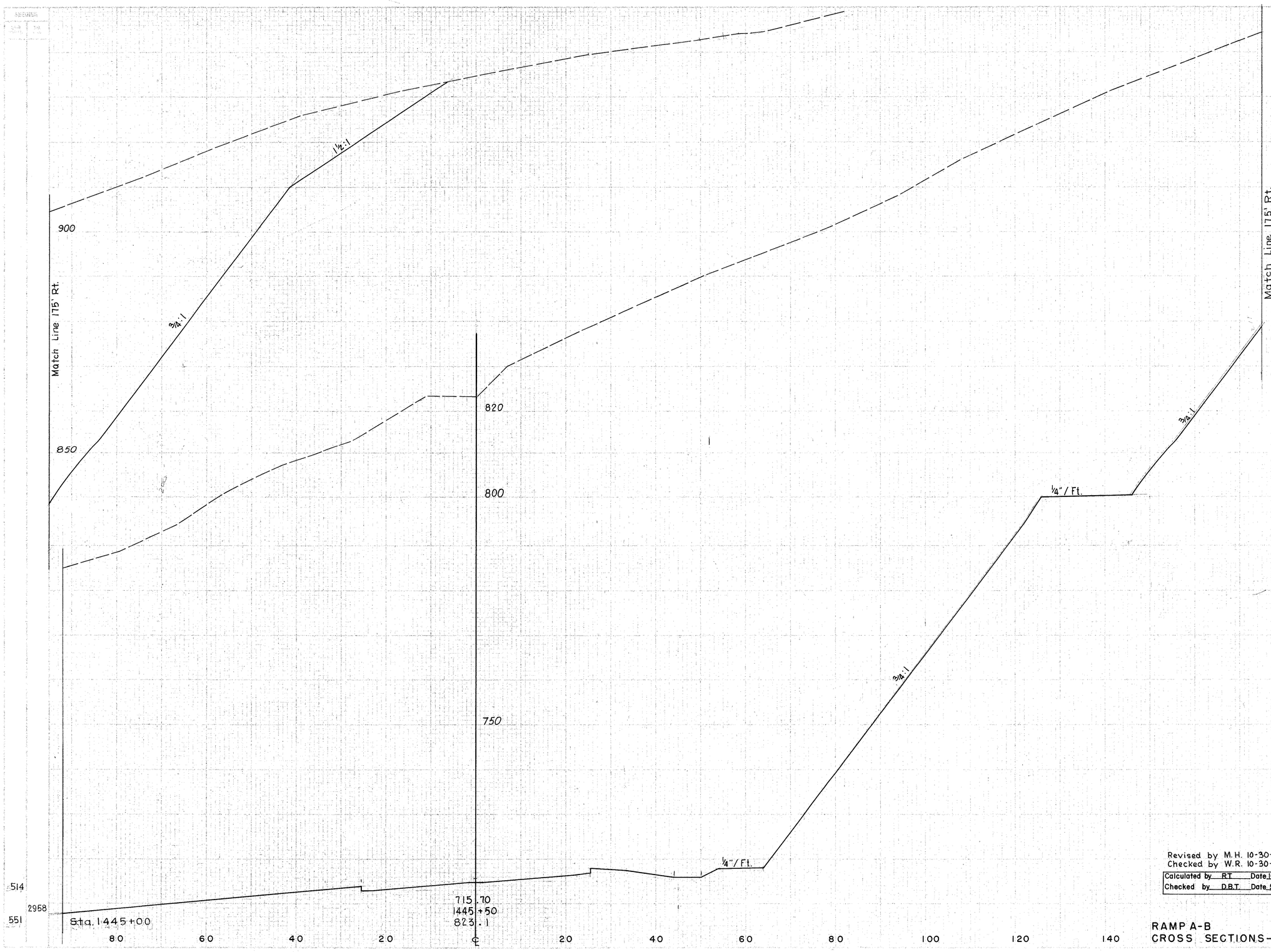

29,966 0

Corrected Arc 64.49 70,832 0

Sta. 1445+00 29,344 0

Revised by M.H. 10-30-74
Checked by W.R. 10-30-74

Calculated by	R.T.	Date	10-30-68
Checked by	D.B.T.	Date	5-14-70

10'
10'

RAMP A-B
CROSS SECTIONS - STA. 1445+50

BELMONT COUNTY
BEL-470-5.90

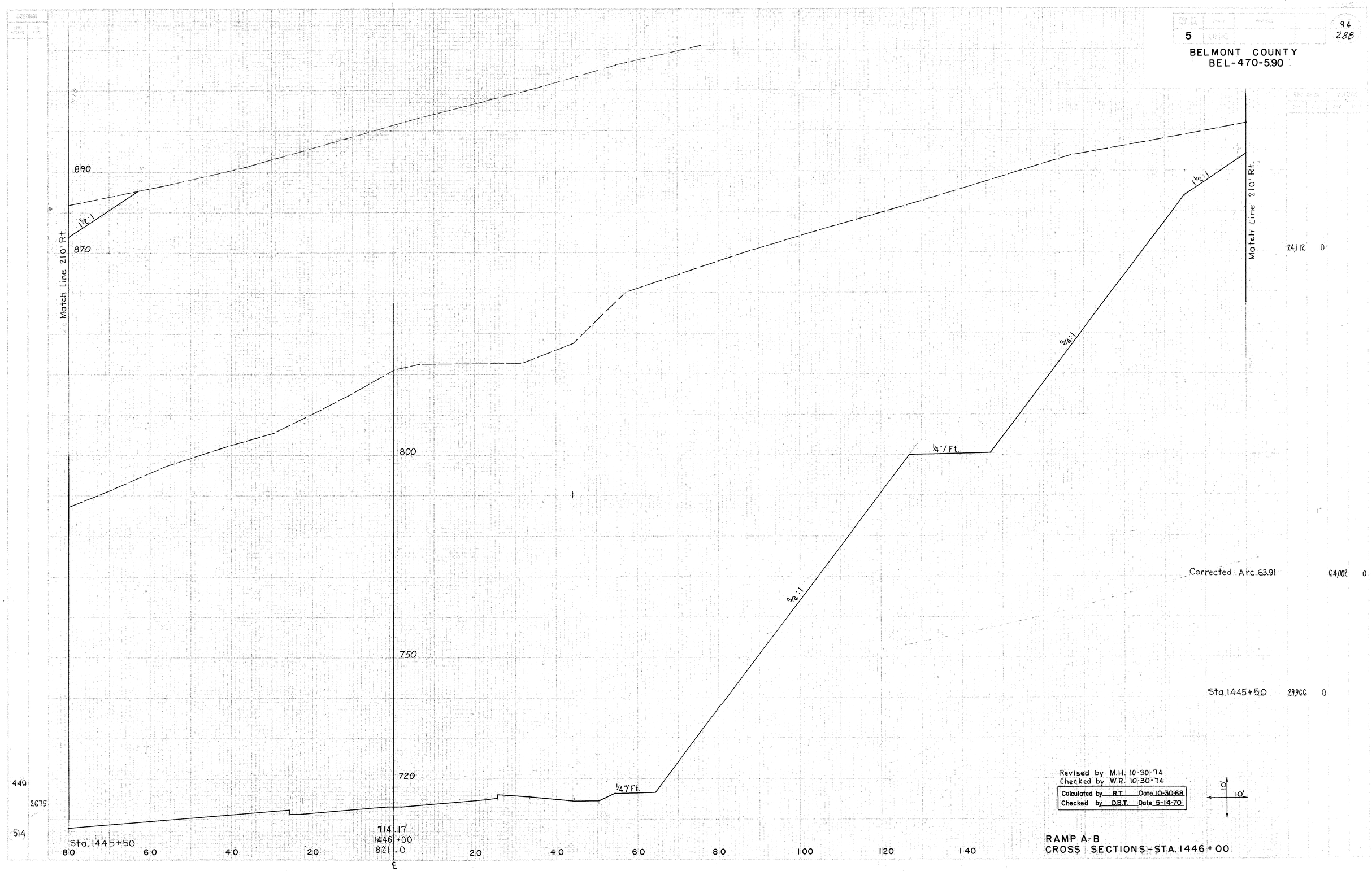

Revised by M.H. 10-30-74
Checked by W.R. 10-30-74

Calculated by R.T.	Date 10-30-68	
Checked by D.B.T.	Date 5-14-70	

RAMP A-B
CROSS SECTIONS - STA. 1446+00

5

95
288

BELMONT COUNTY
BEL-470-5.90

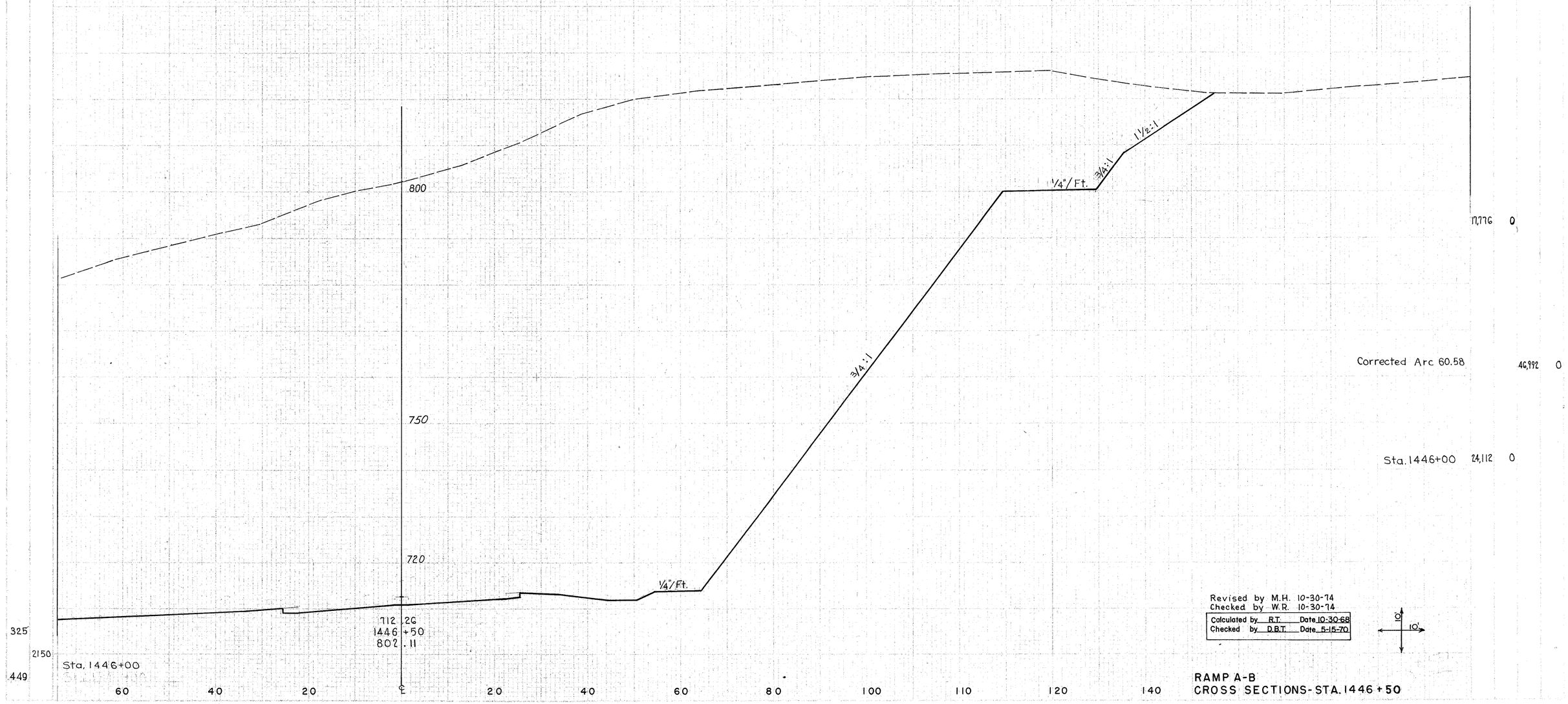

Revised by M.H. 10-30-74
Checked by W.R. 10-30-74

Calculated by	R.T.	Date 10-30-68
Checked by	D.B.T.	Date 5-15-70

RAMP A-B
CROSS SECTIONS-STA. 1446+50

BELMONT COUNTY
BEL-470-5.90

Station 1447+20-Rt.
Add for Cascade-84 C.Y. Excavation

84

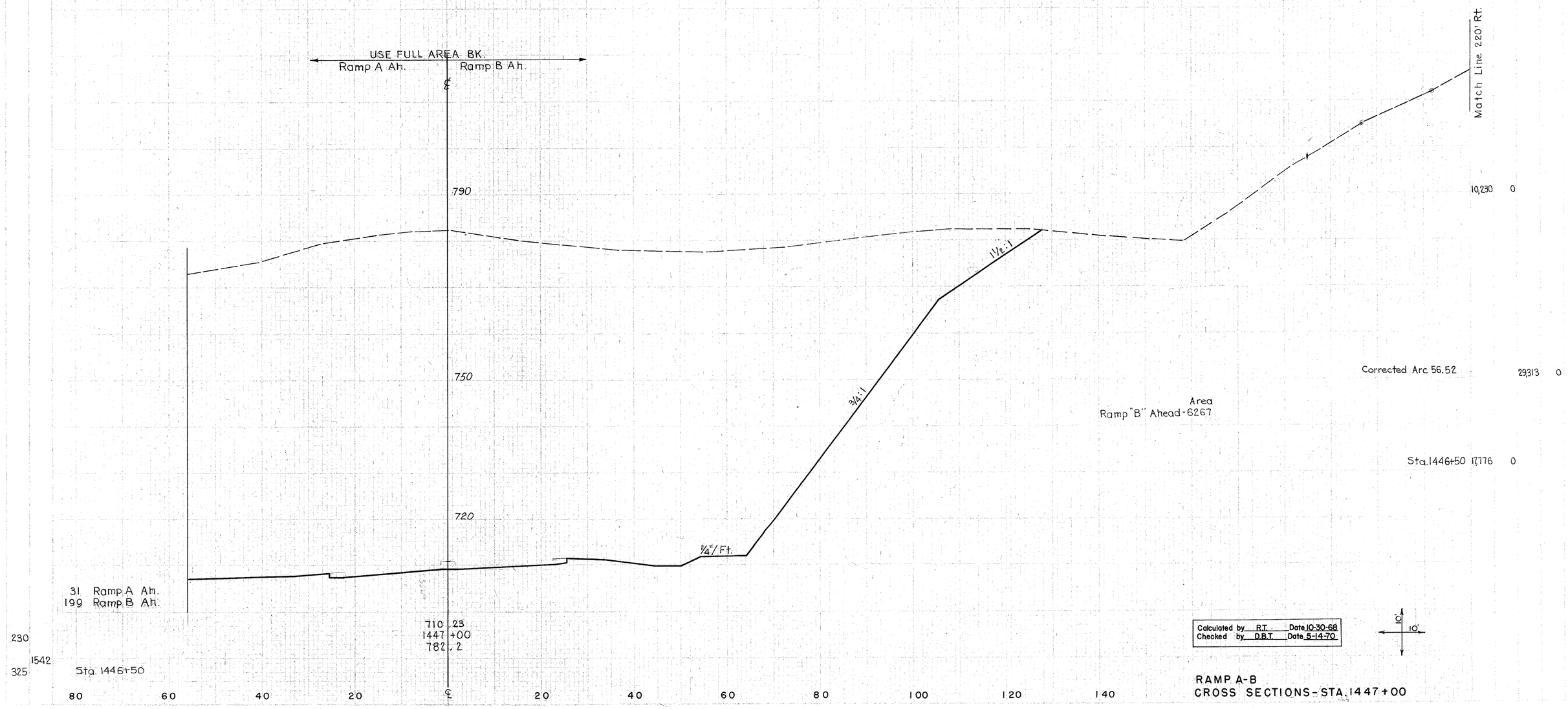

Calculated by R.T. Date 10-30-68
Checked by D.B.T. Date 5-14-70

RAMP A-B
CROSS SECTIONS-STA. 1447+00

BELMONT COUNTY
BEL-470-5.90

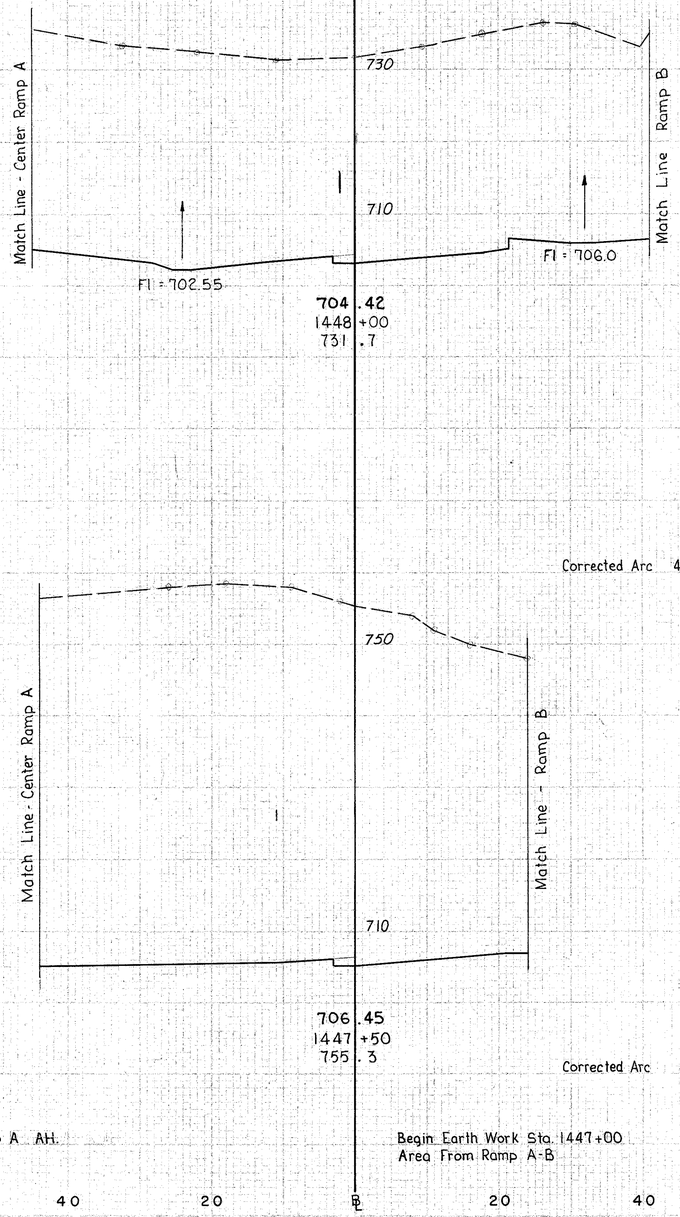

	END AREA		VOLUME		SEEDING	
	CUT	FILL	CUT	FILL	END WIDTH	SQ. YDS.
	2,532	0				
Corrected Arc 47.83			5,245	0		
	3,390	0				
Corrected Arc 43.67			5,946	0		
	3,963	0				

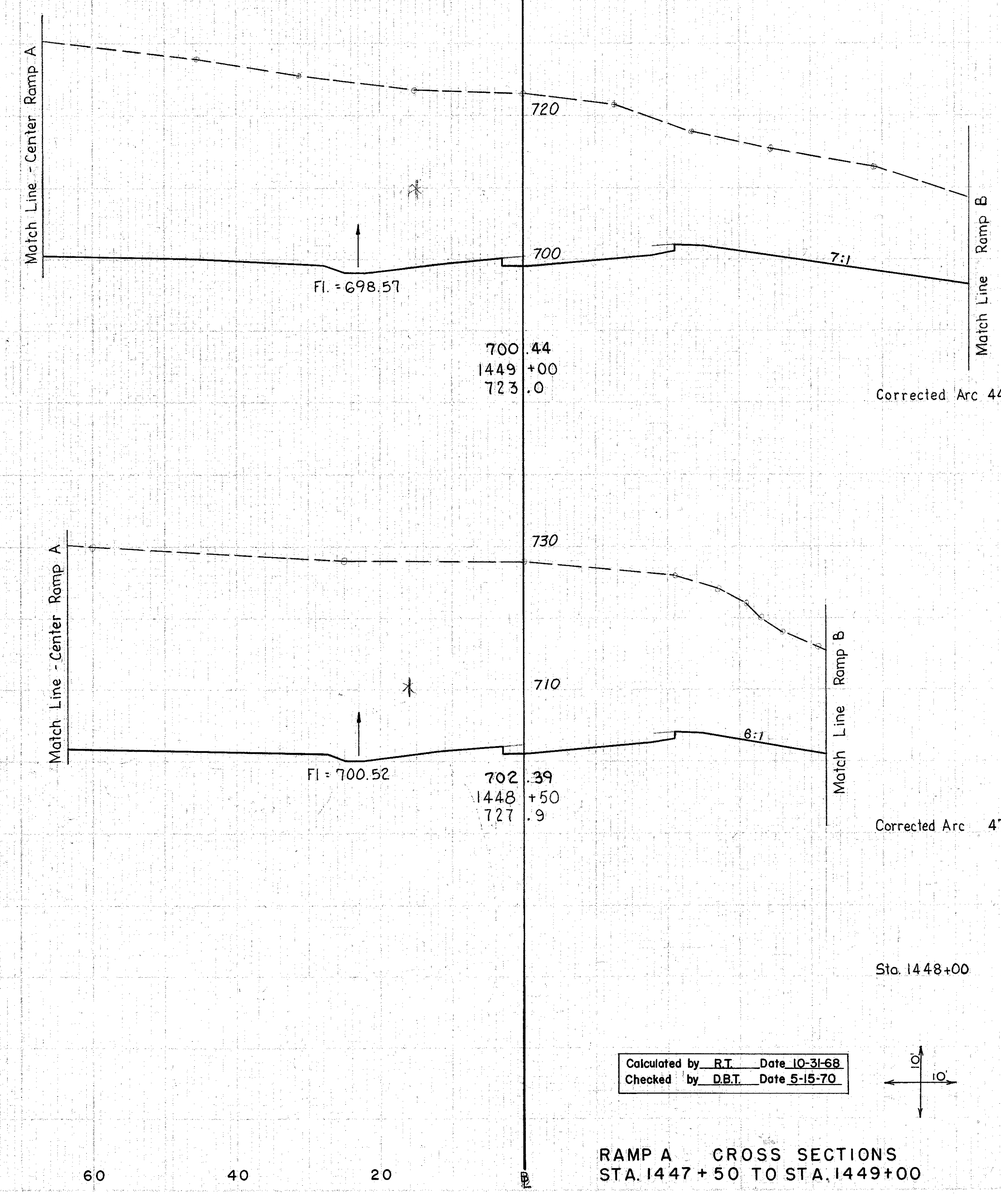

	2,821	0	
Corrected Arc 44.83	4,530	0	105
	2,636	0	519
Corrected Arc 47.00	4498	0	82
Sta. 1448+00	2532	0	400
			62

Calculated by R.T. Date 10-31-68
Checked by D.B.T. Date 5-15-70

RAMP A CROSS SECTIONS
STA. 1447+50 TO STA. 1449+00

BELMONT COUNTY
BEL-470-5.90

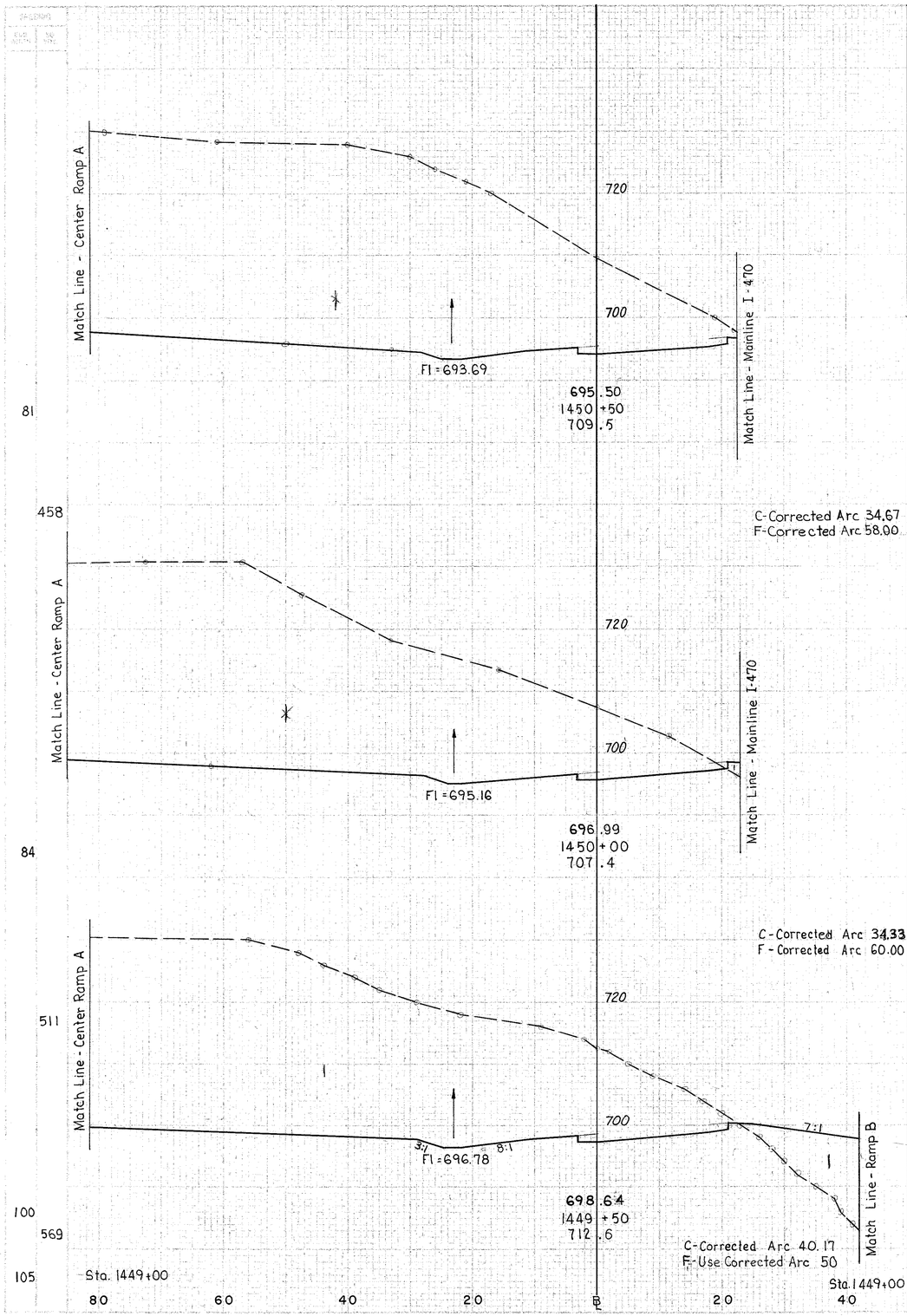

END AREA		VOLUME		SEEDING	
CUT	FILL	CUT	FILL	END WIDTH	SQ. YDS.
				103	
2,544	0				
					522
		3087	4	97	
2,264	4				
					481
		2888	154		
				76	
					436
2,278	135			81	
		3,793	125		
2,821	0				

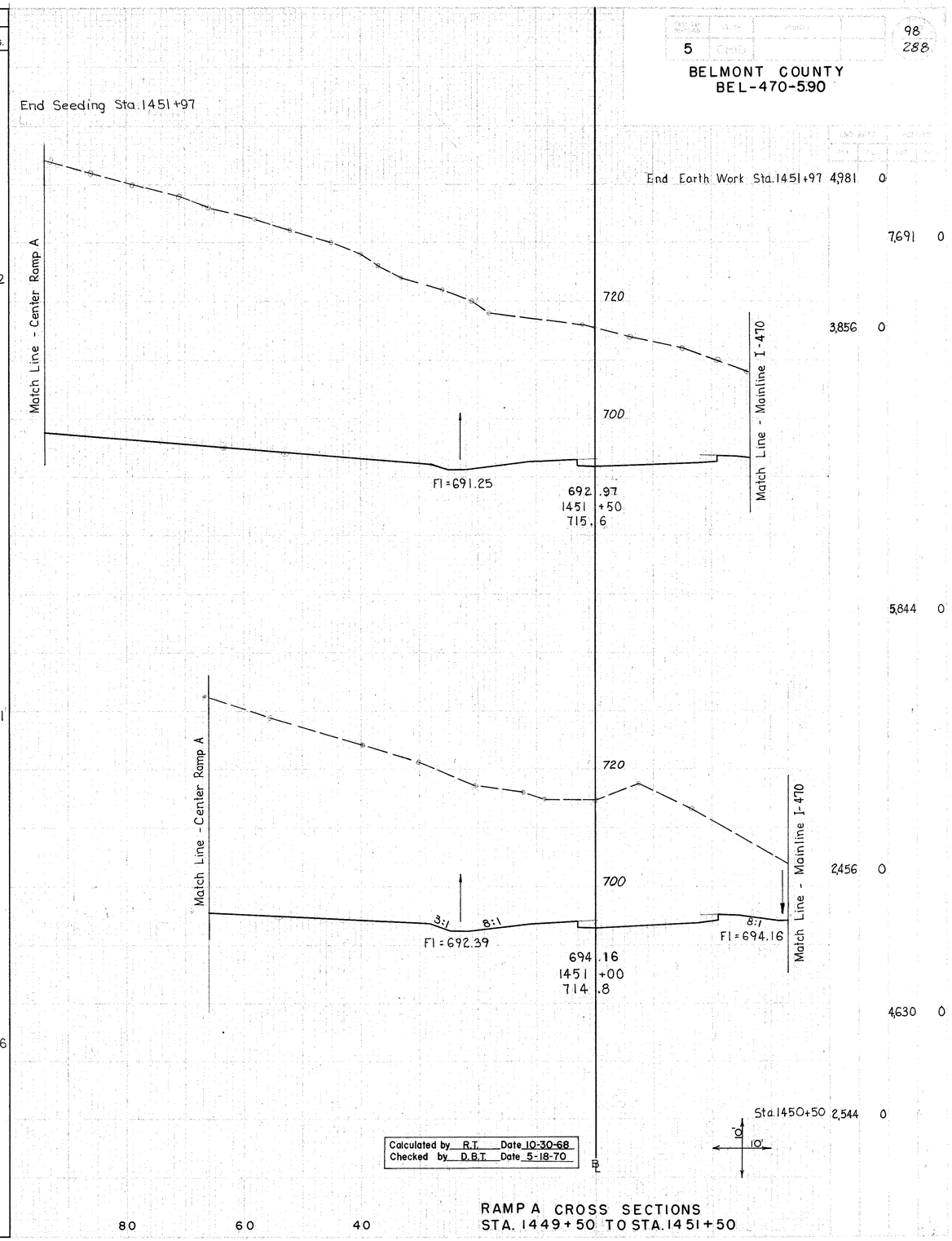

Calculated by R.T. Date 10-30-68
Checked by D.B.T. Date 5-18-70

RAMP A CROSS SECTIONS
STA. 1449+50 TO STA. 1451+50

DIST.	STATE	COUNTY		99
5	OHIO			288

BELMONT COUNTY
BEL-470-5.90

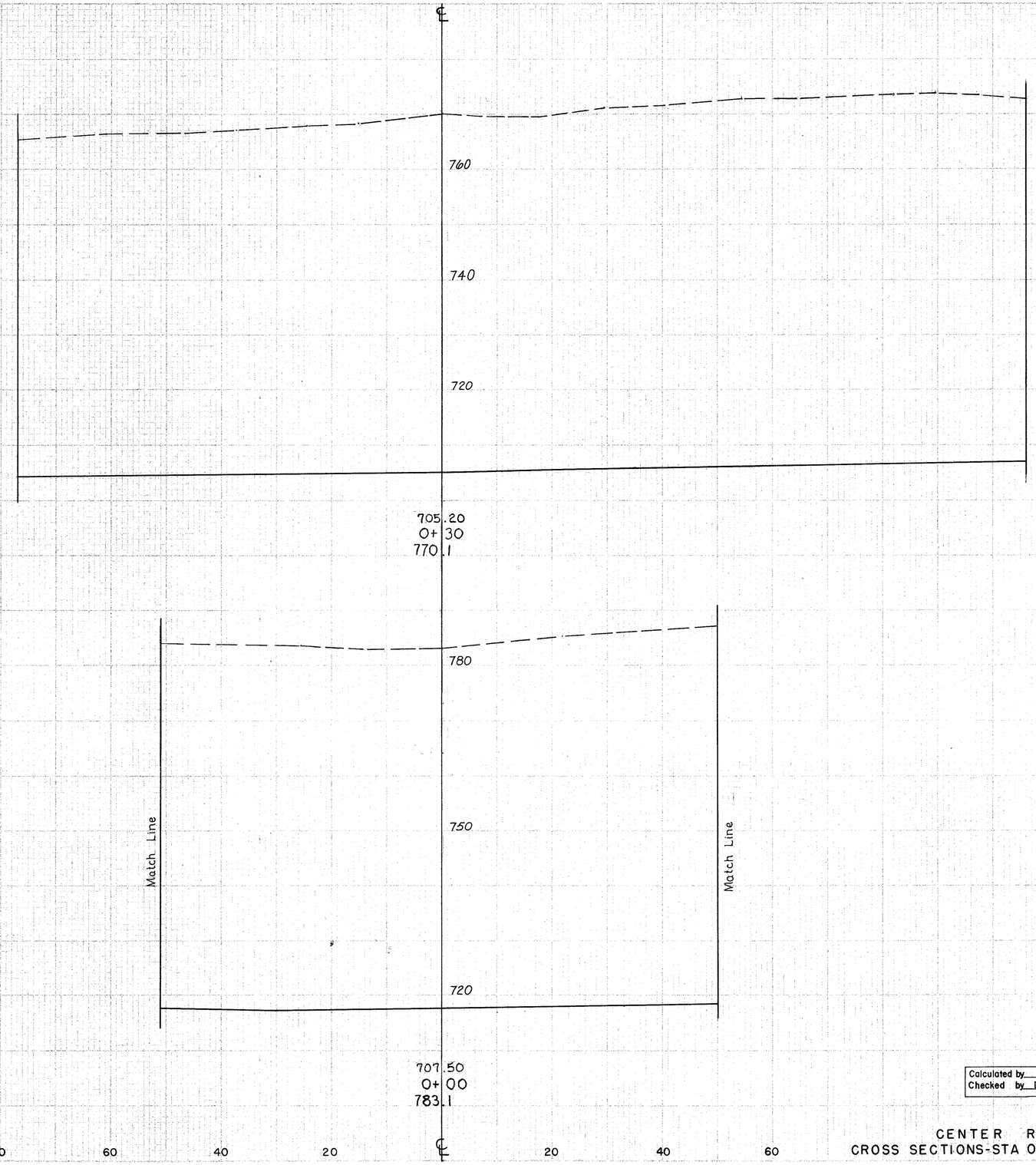

183				11,797	0
				10,234	0
473			Begin Earth Work	6625	0
101	Sta. 0+00 Begin Seeding				

140 120 100 80 60 40 20 ℄ 20 40 60

Calculated by R.T. Date 10-31-68
Checked by D.B.T. Date 5-18-70

0 10'

CENTER RAMP A
CROSS SECTIONS-STA 0+00 TO STA. 0+30

BELMONT COUNTY
BEL-470-5.90

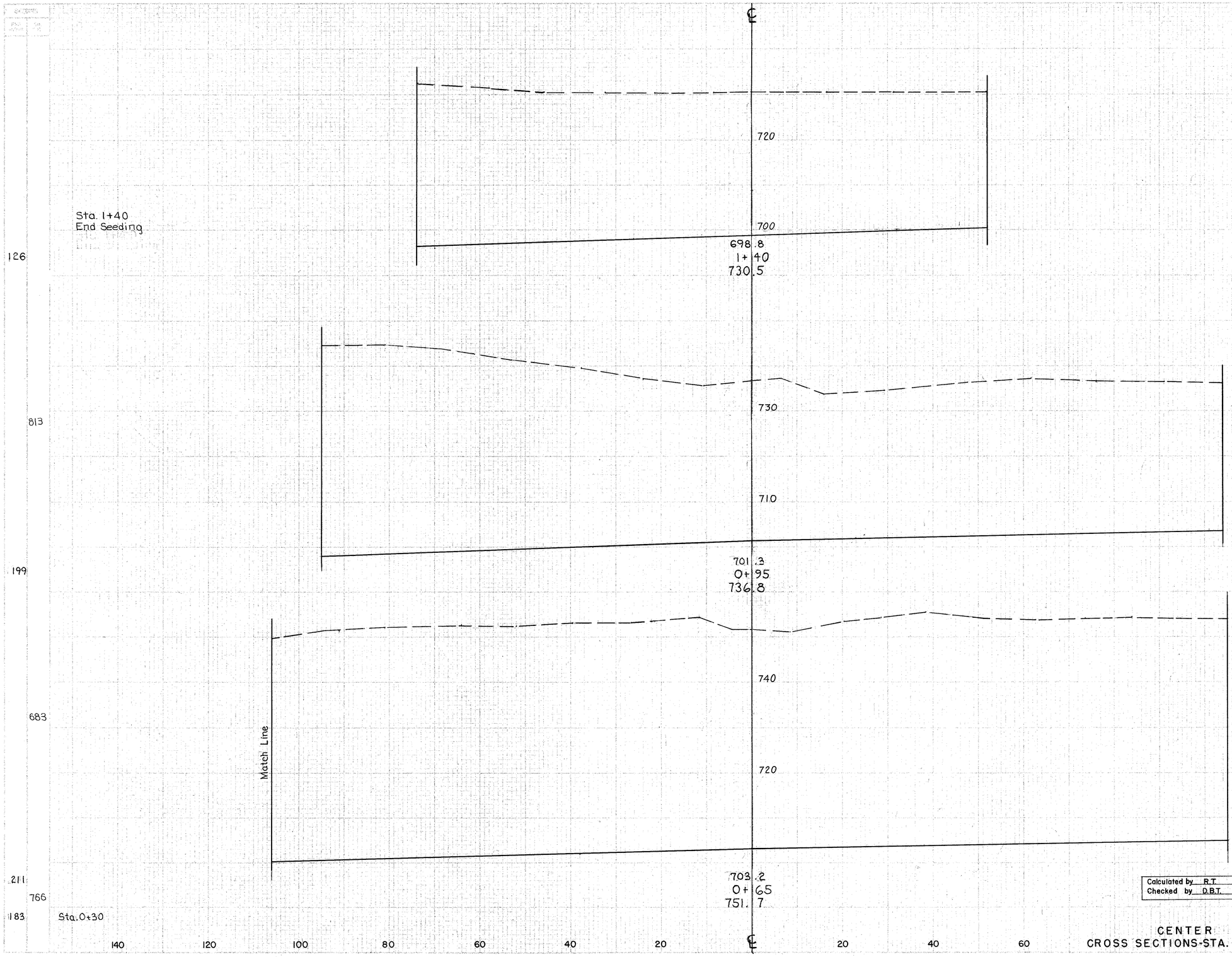

End Earth Work	4,056	0
	9,520	0
	7,368	0
	9,974	0
	10,585	0
	14,507	0
Sta. 0+30	11,797	0

CENTER RAMP A
CROSS SECTIONS-STA. 0+65 TO STA. 1+00

BELMONT COUNTY
BEL-470-5.90

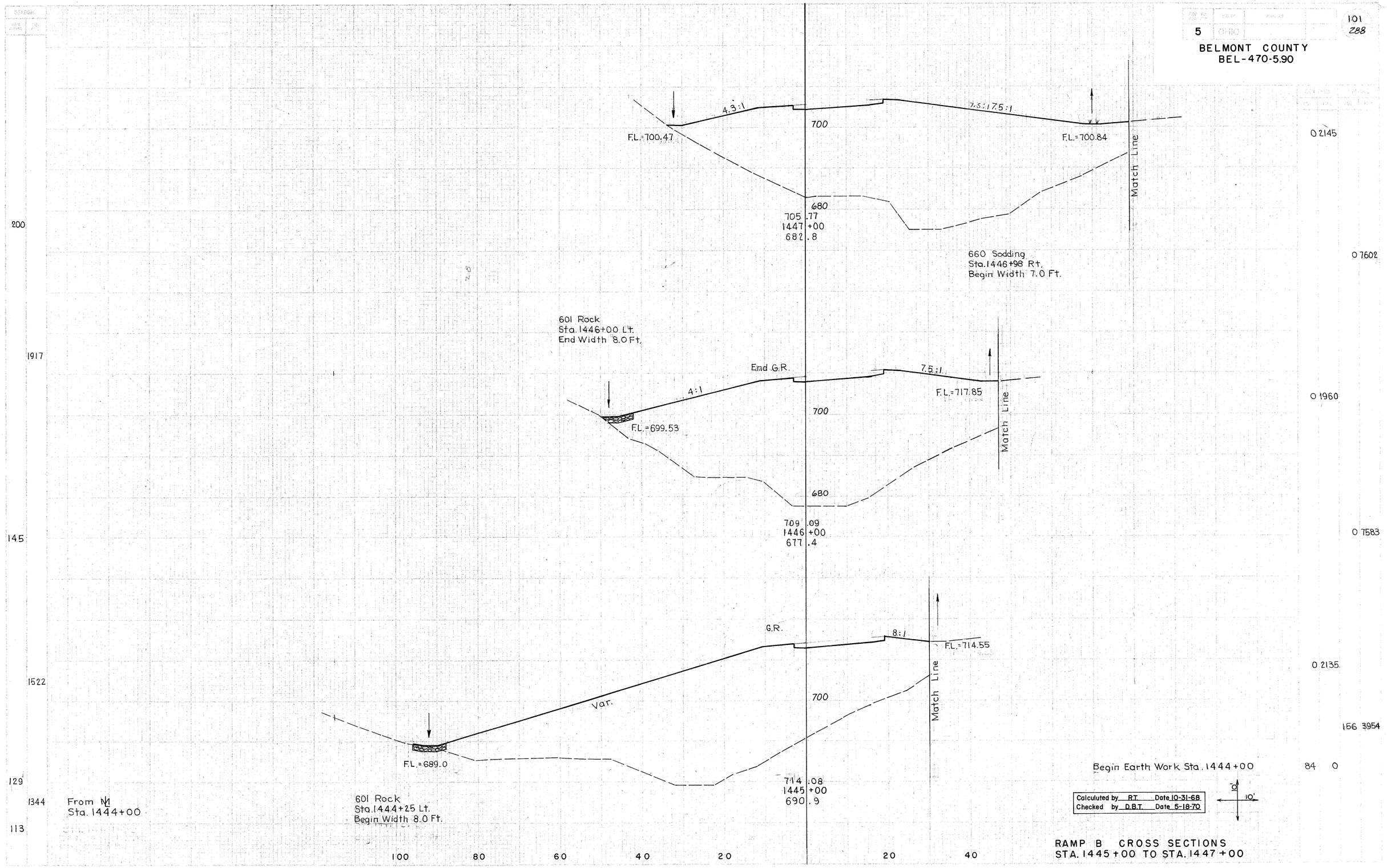

RAMP B CROSS SECTIONS
STA. 1445+00 TO STA. 1447+00

BELMONT COUNTY
BEL-470-5.90

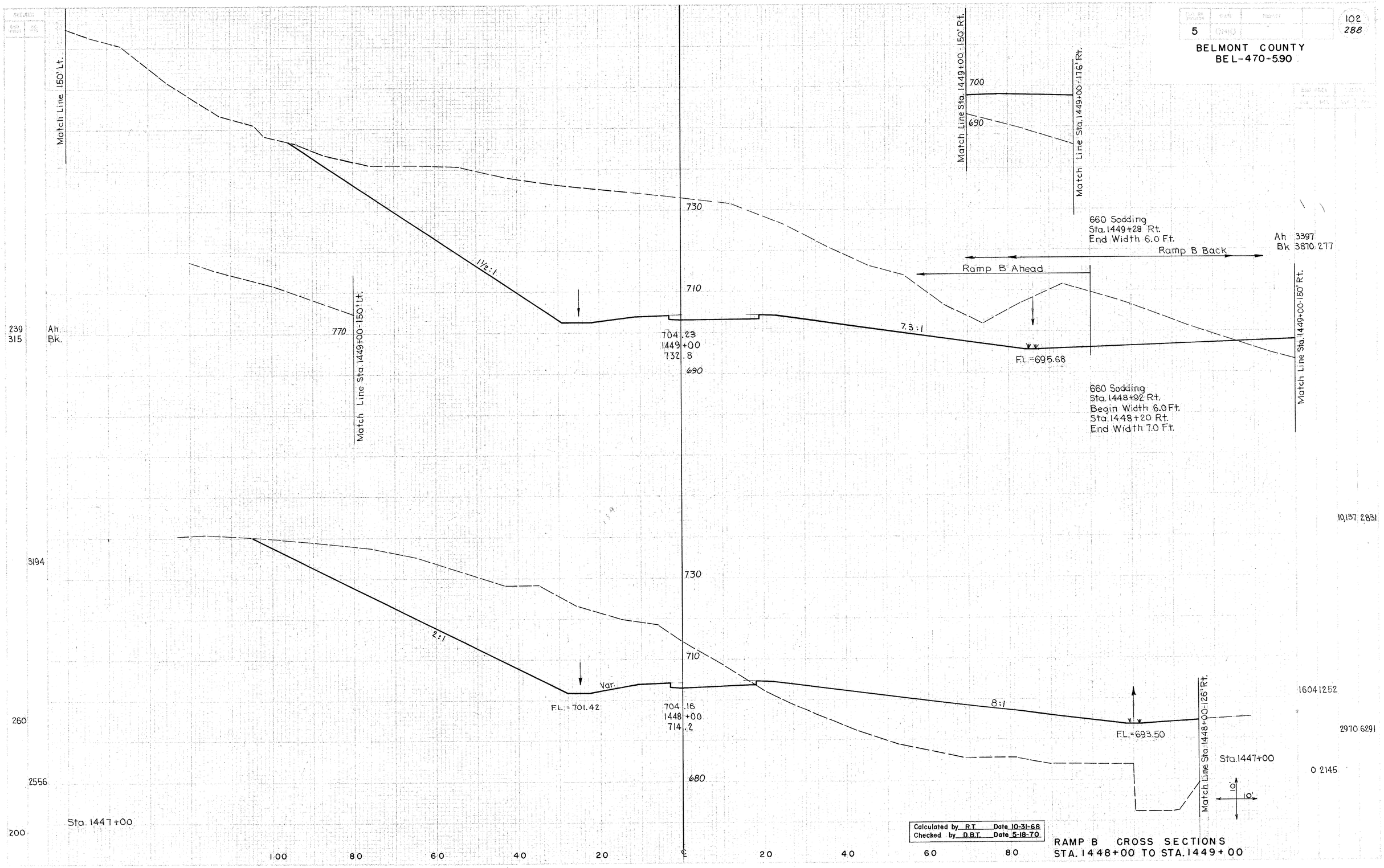

Calculated by R.T. Date 10-31-68
Checked by D.B.T. Date 5-18-70

RAMP B CROSS SECTIONS
STA. 1448+00 TO STA. 1449+00

BELMONT COUNTY
BEL-470-5.90

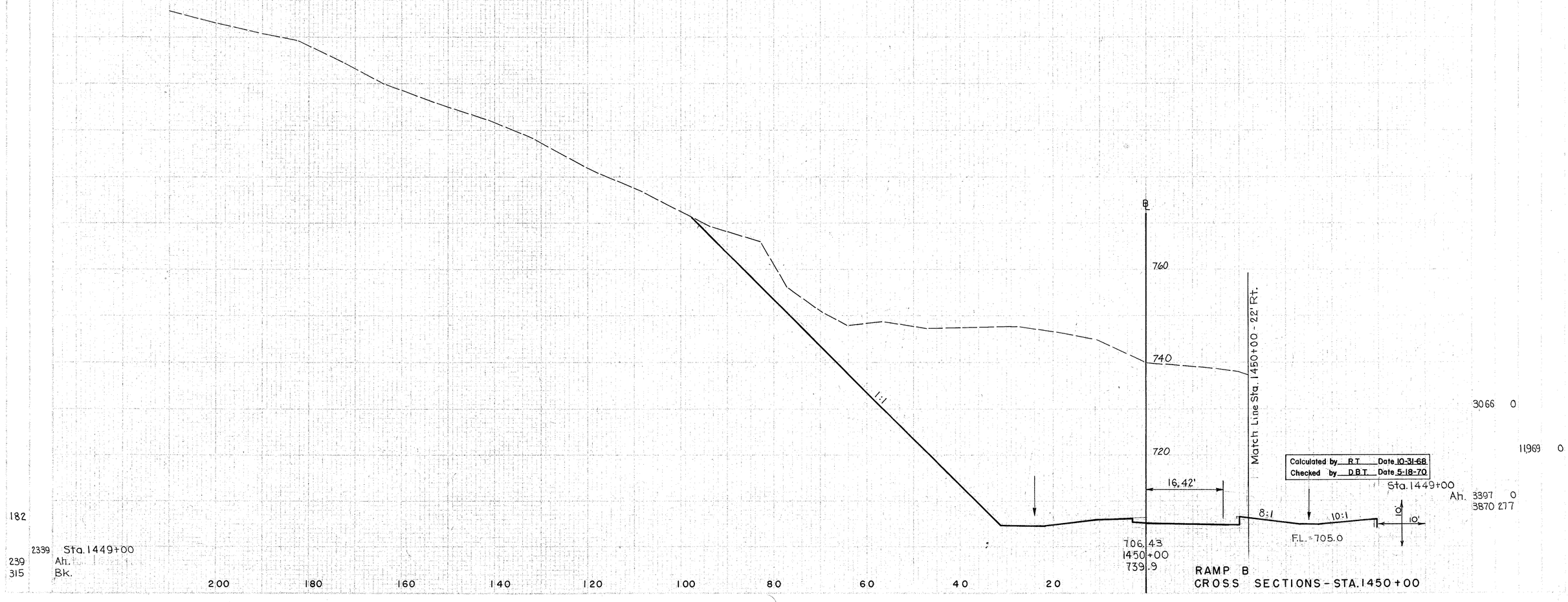

RAMP B
CROSS SECTIONS - STA. 1450+00

BELMONT COUNTY
BEL-470-5.90

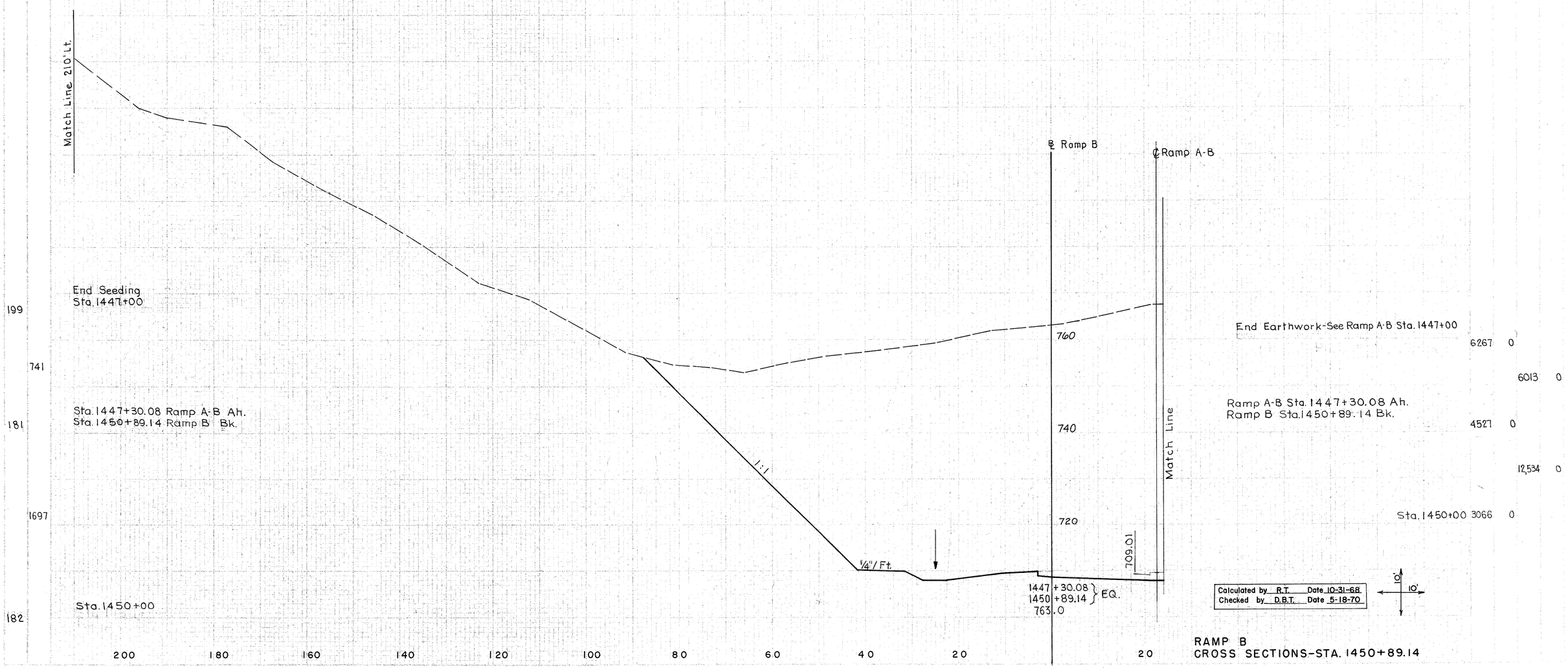

RAMP B
CROSS SECTIONS-STA. 1450+89.14

BELMONT COUNTY
BEL-470-5.90

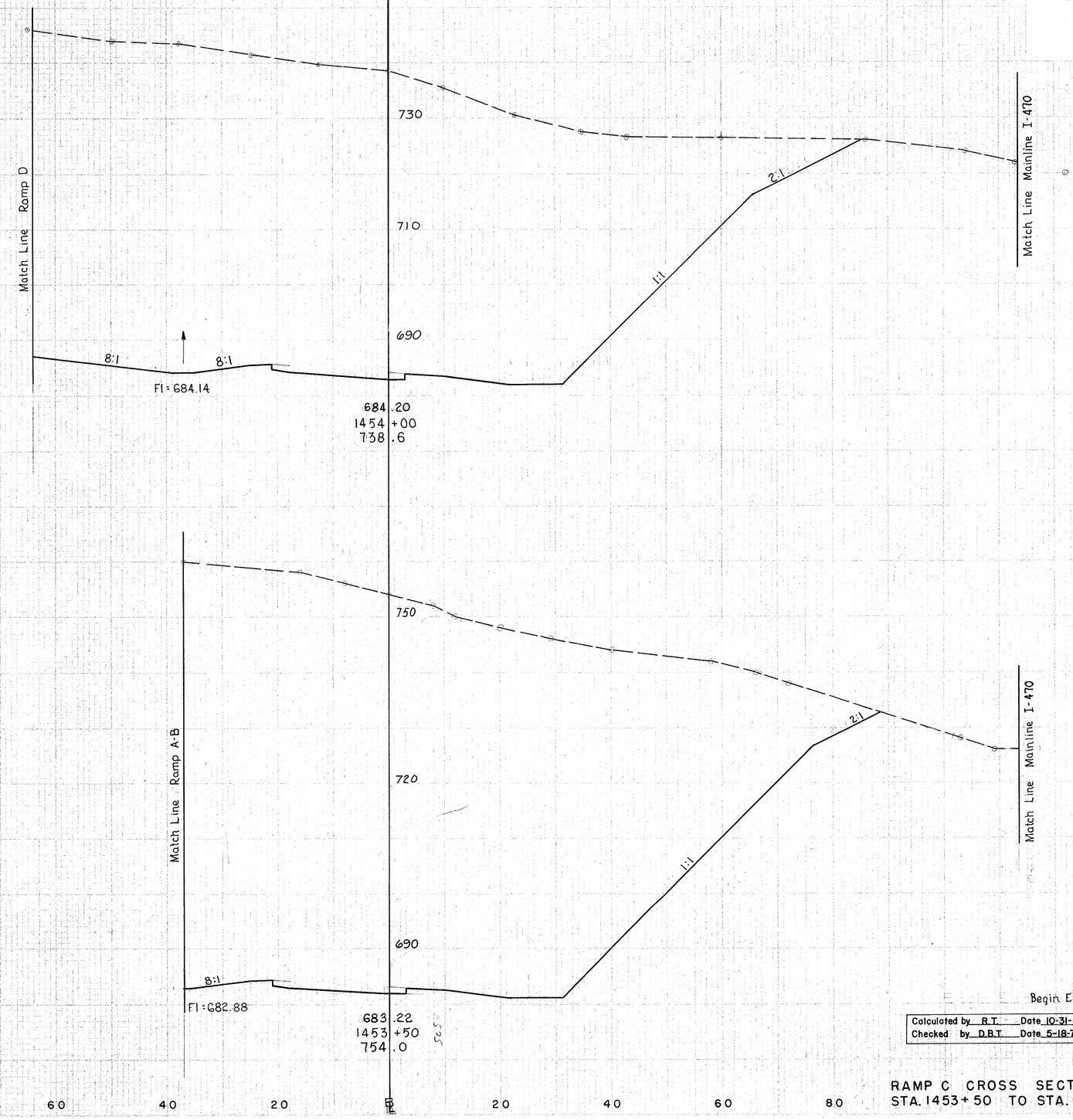

	6,302	0
Corrected Arc 50.17	12,028	0
	6,644	0
Corrected Arc 42.33	10,134	0
Begin Earth Work Sta. 1452+92	6,284	0

168

836

133

815

120

Sta. 1452+92

140 120 100 80 60 40 20 20 40 60 80

Calculated by R.T. Date 10-31-68
Checked by D.B.T. Date 5-18-70

10'
10'

RAMP C CROSS SECTIONS
STA. 1453+50 TO STA. 1454+00

BELMONT COUNTY
BEL-470-5.90

106
288

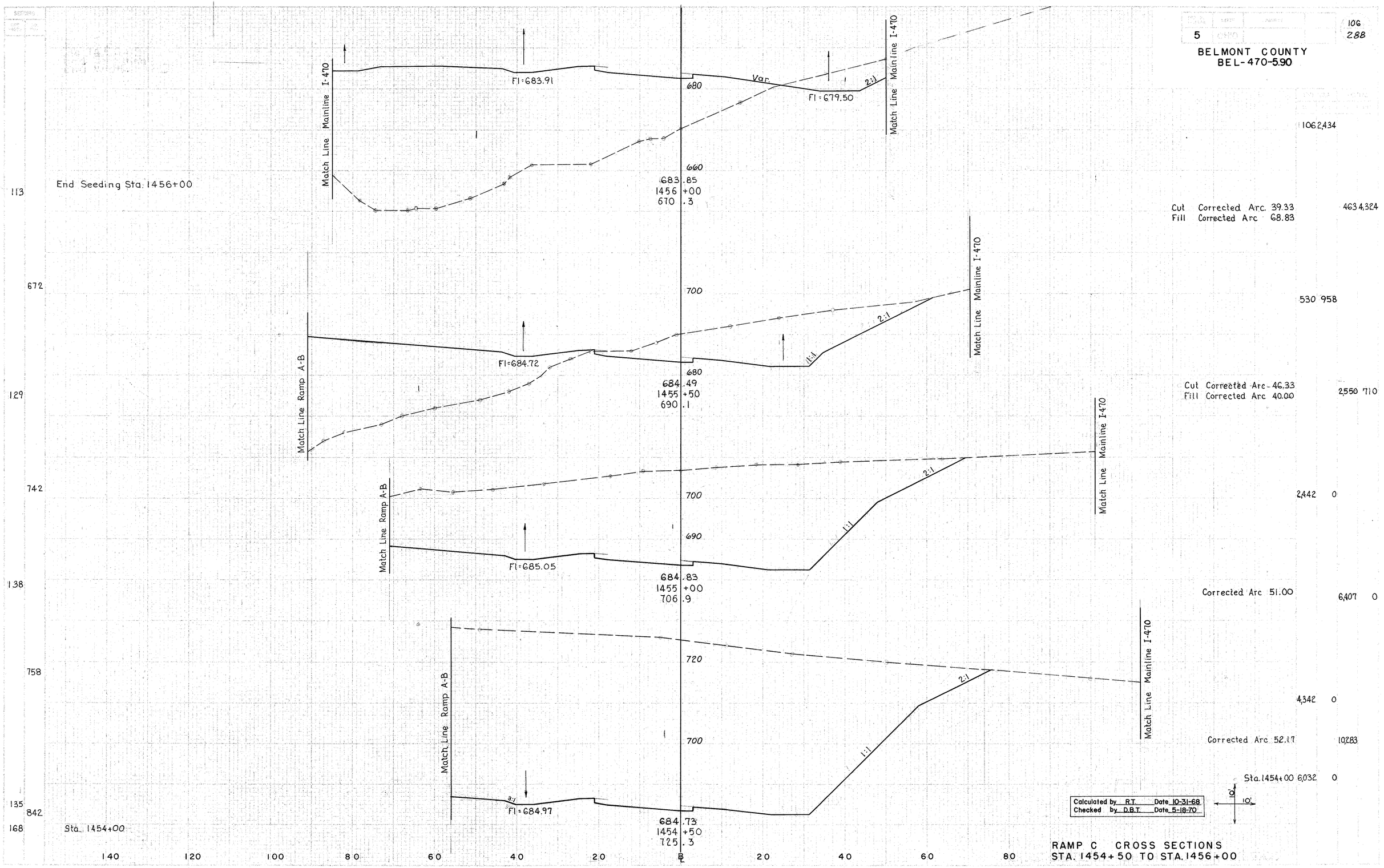

RAMP C CROSS SECTIONS
STA. 1454+50 TO STA. 1456+00

BELMONT COUNTY
BEL-470-5.90

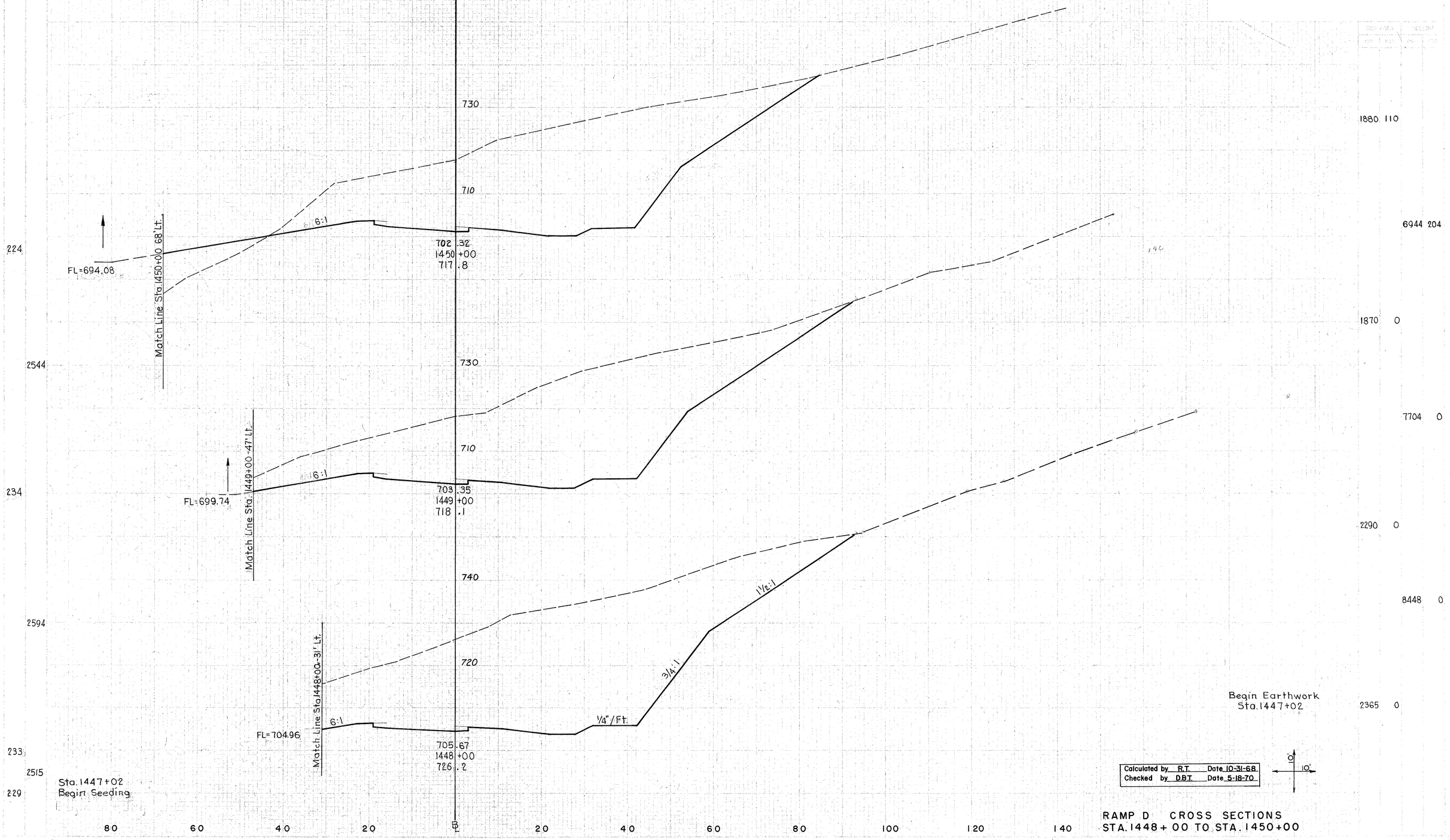

Calculated by R.T.	Date 10-31-68
Checked by D.B.T.	Date 5-18-70

10'
10'

RAMP D CROSS SECTIONS
STA. 1448+00 TO STA. 1450+00

BELMONT COUNTY
BEL-470-5.90

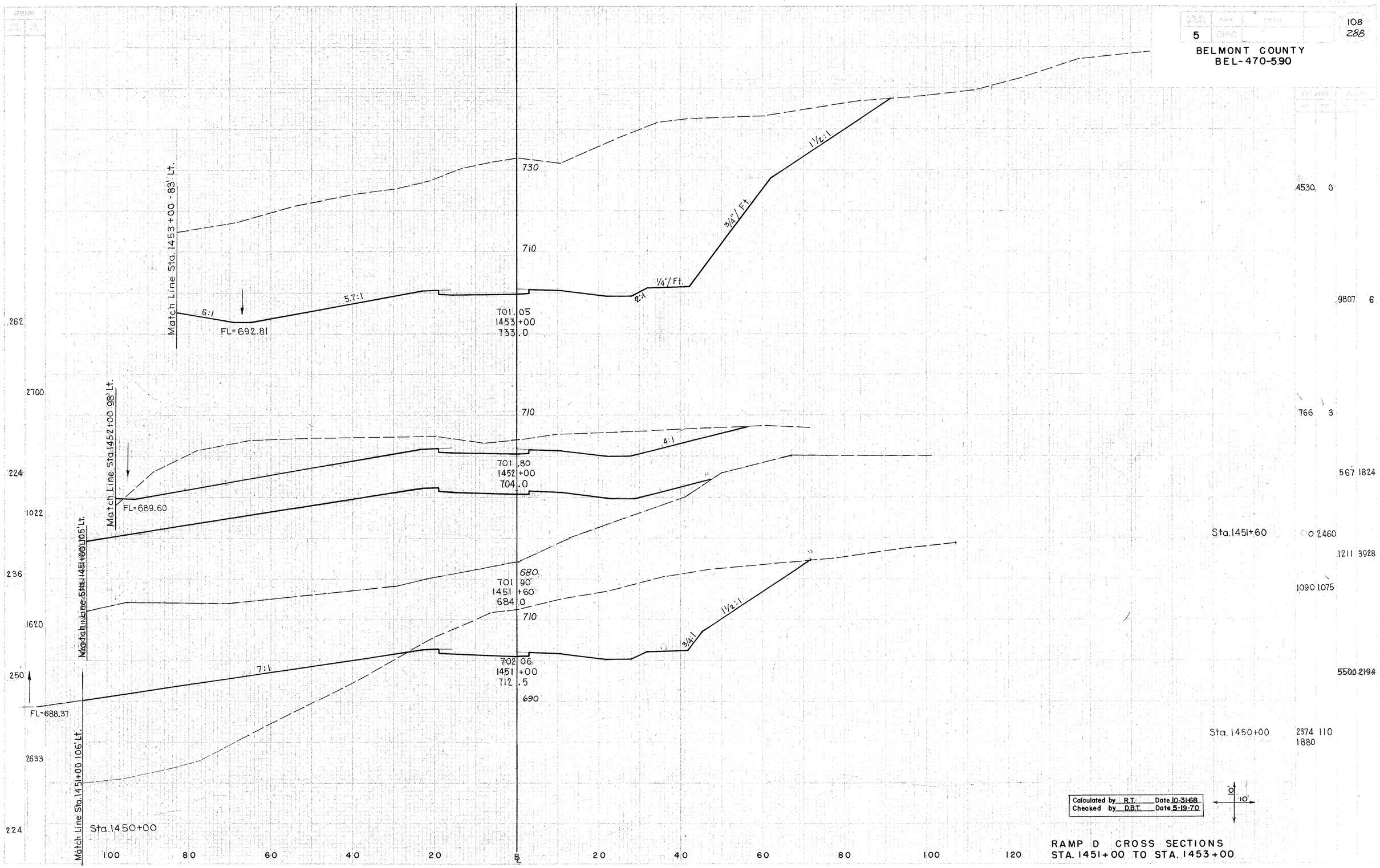

RAMP D CROSS SECTIONS
STA. 1451+00 TO STA. 1453+00

BELMONT COUNTY
BEL-470-5.90

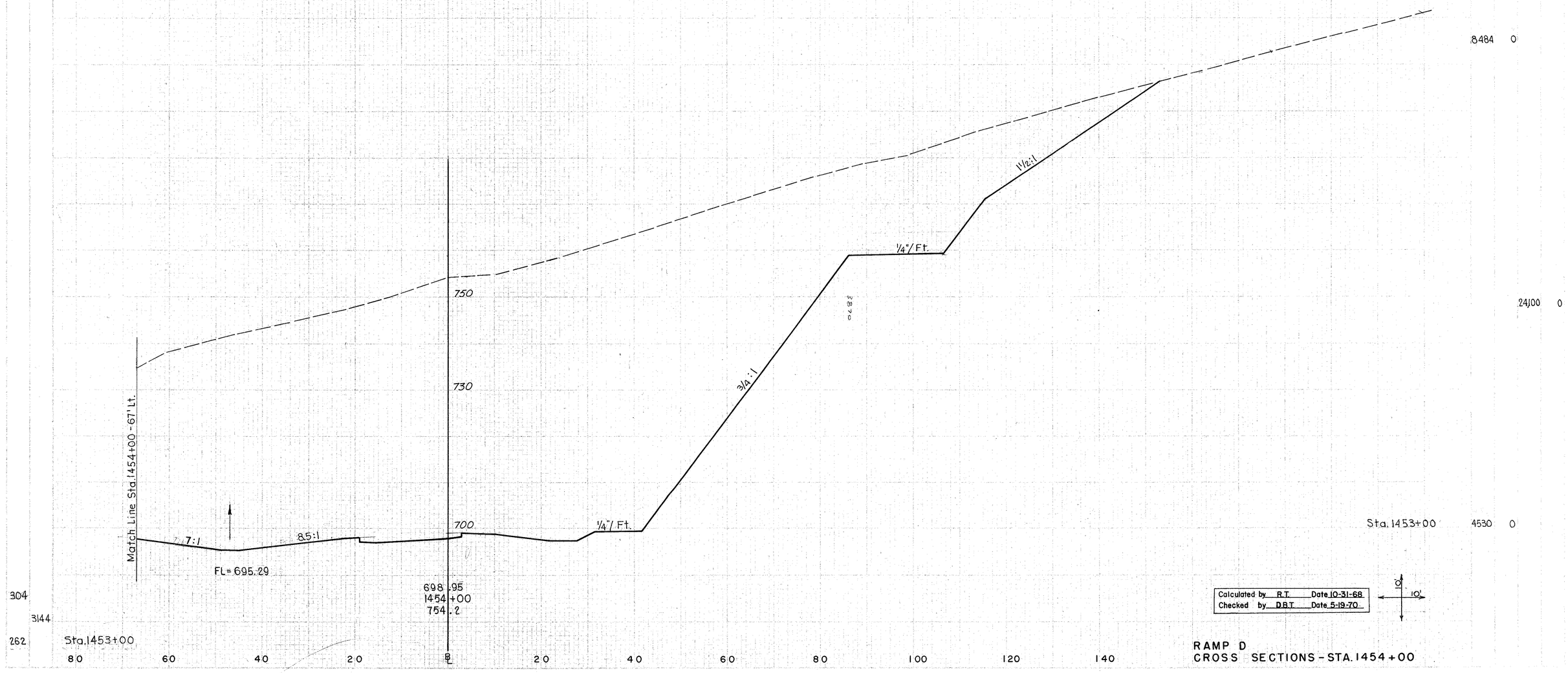

RAMP D
CROSS SECTIONS - STA. 1454+00

BELMONT COUNTY
BEL-470-5.90

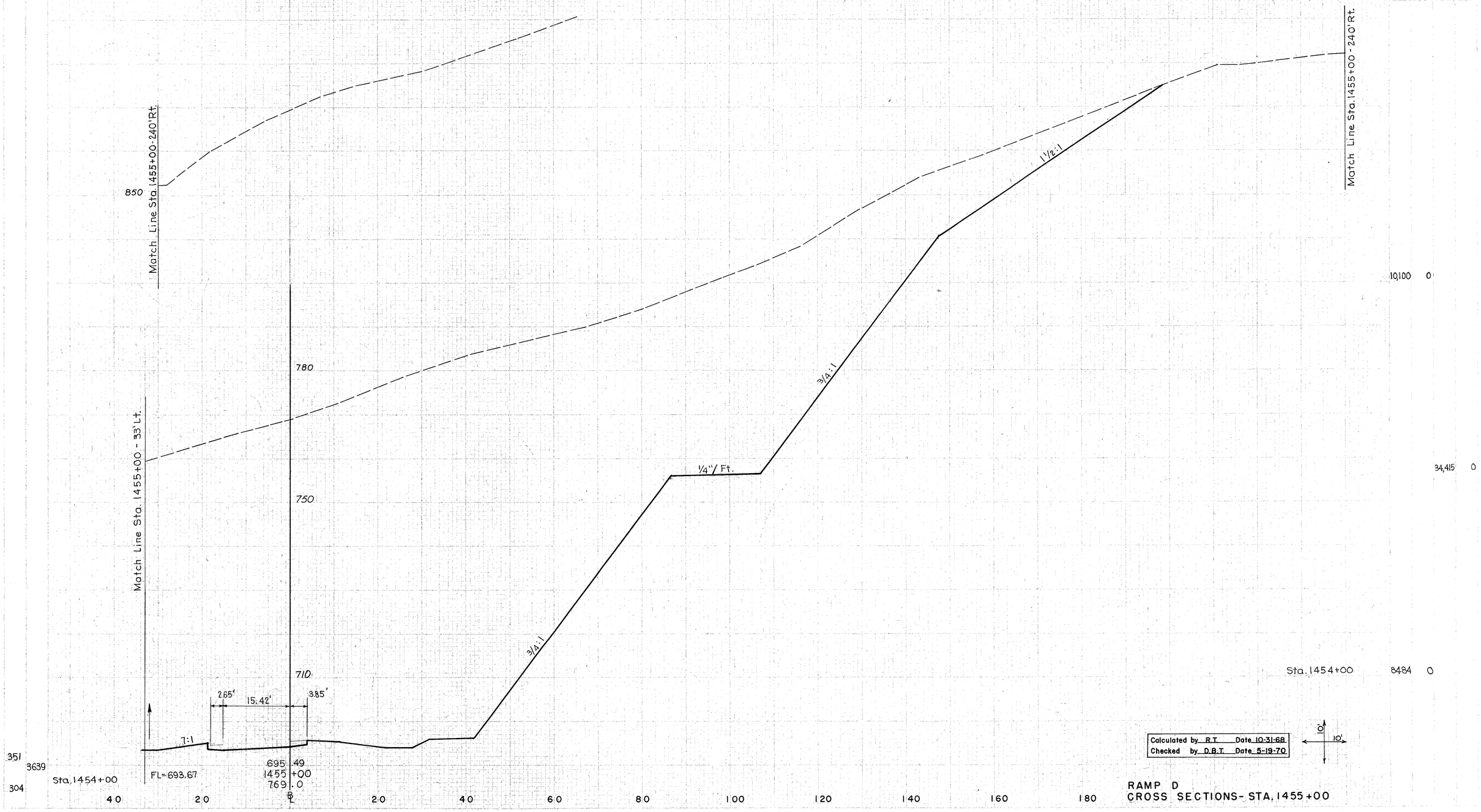

RAMP D
CROSS SECTIONS- STA. 1455+00

BELMONT COUNTY
BEL-470-5.90

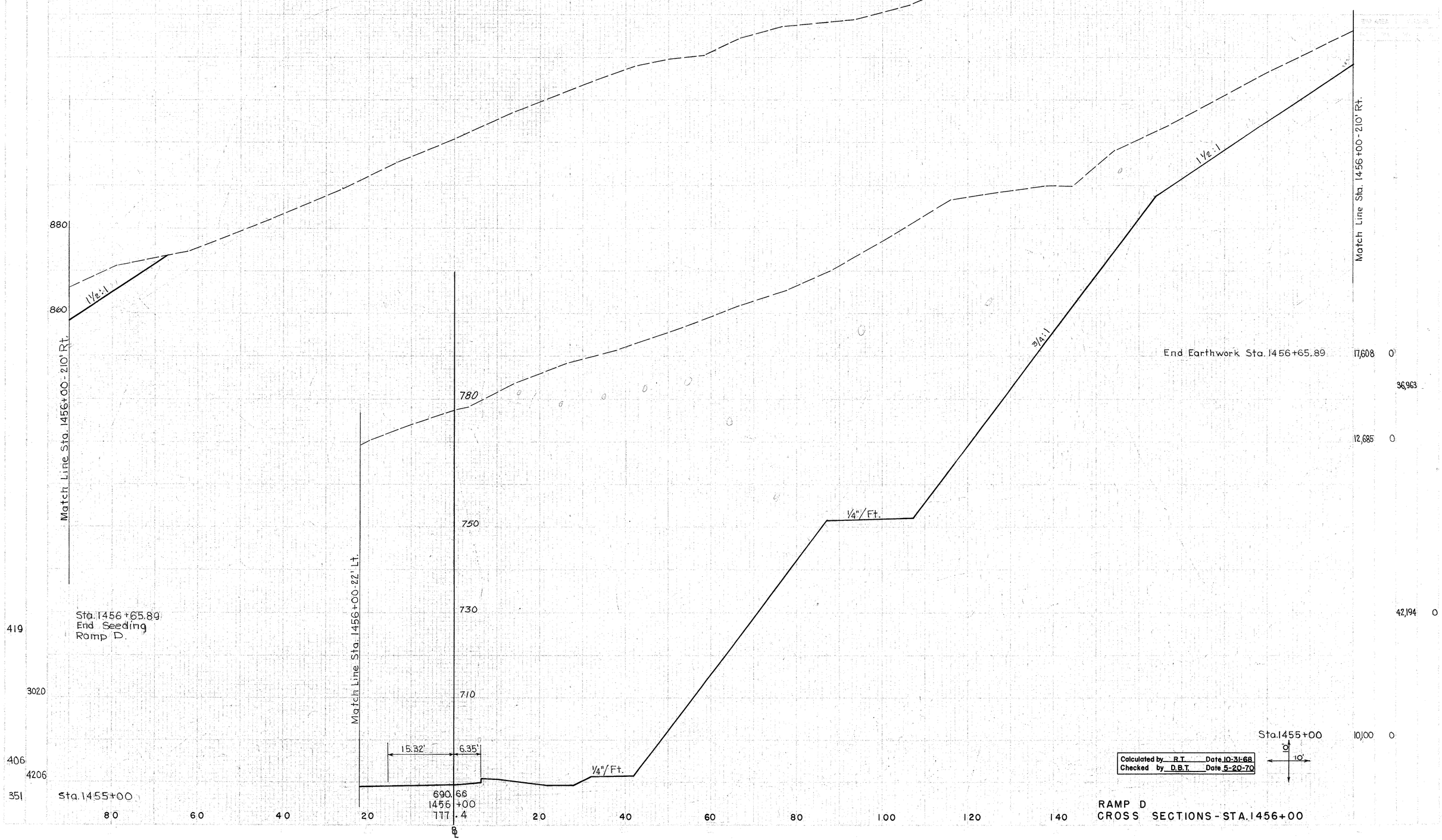

RAMP D
CROSS SECTIONS - STA. 1456+00

BELMONT COUNTY
BEL-470-5.90

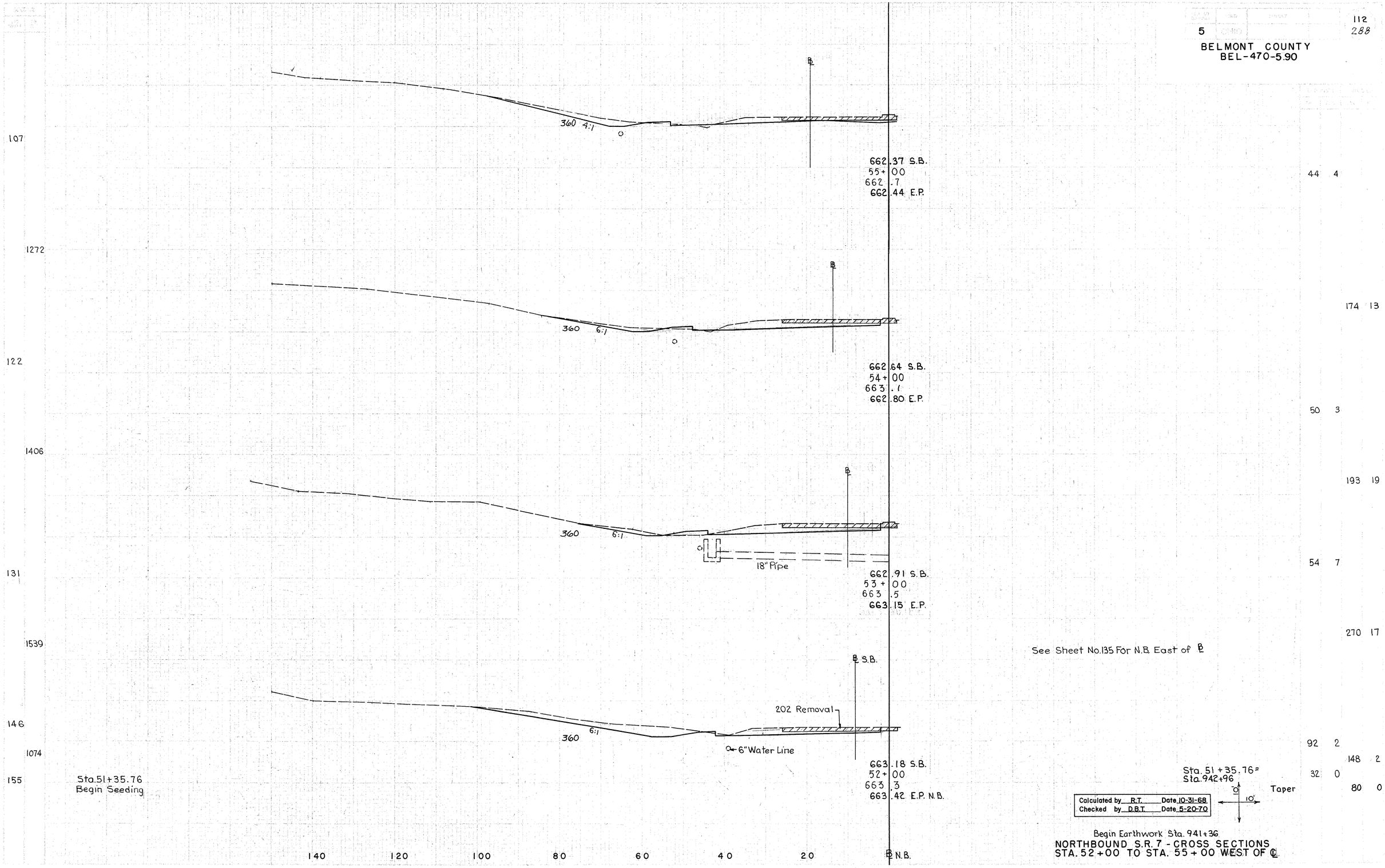

Calculated by R.T.	Date 10-31-68
Checked by D.B.T.	Date 5-20-70

Begin Earthwork Sta. 941+36

NORTHBOUND S.R. 7 - CROSS SECTIONS
STA. 52+00 TO STA. 55+00 WEST OF ℄

BELMONT COUNTY
BEL-470-5.90

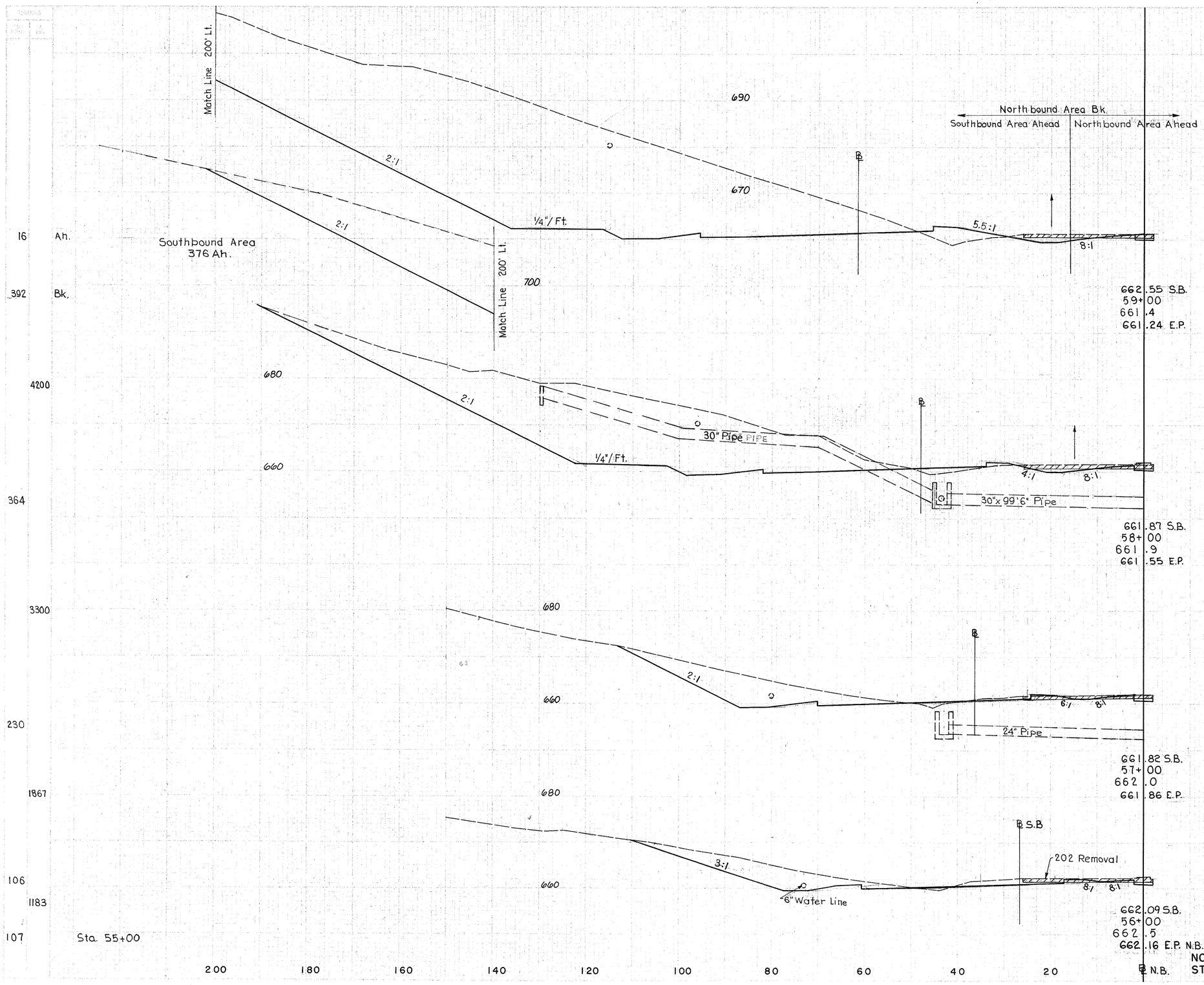

Ah. 2 0
Bk. 2653 32

16 Ah.
392 Bk.
4200
364
3300
230
1867
106
1183
107

7124 83
1194 13
2596 30
208 3
719 11
180 3
415 13
44 4

Calculated by R.T. Date 11-4-68
Checked by D.R.T. Date 5-20-70

NORTHBOUND S.R. 7- CROSS SECTIONS
STA. 56+00 TO STA. 59+00

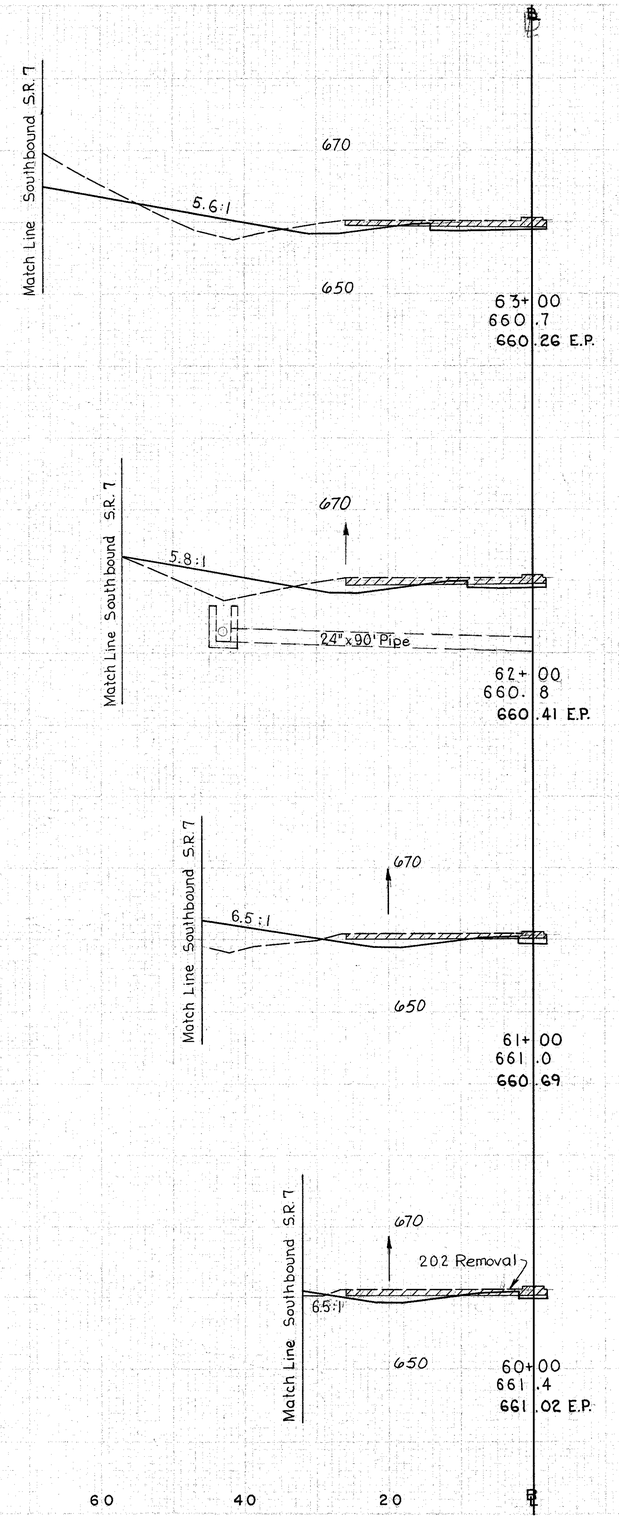

END AREA CUT	END AREA FILL	VOLUME CUT	VOLUME FILL	SEEDING END WIDTH	SEEDING SQ. YDS.
47	31				
				75	
		137	139		
					828
27	44				
				74	
		85	150		
					794
119	37				
				69	
		63	72		
					739
15	2				
		31	4	64	
					661
Sta. 59+00 Ah. 2	0				
Bk. 2653	32			55	Sta. 63+00

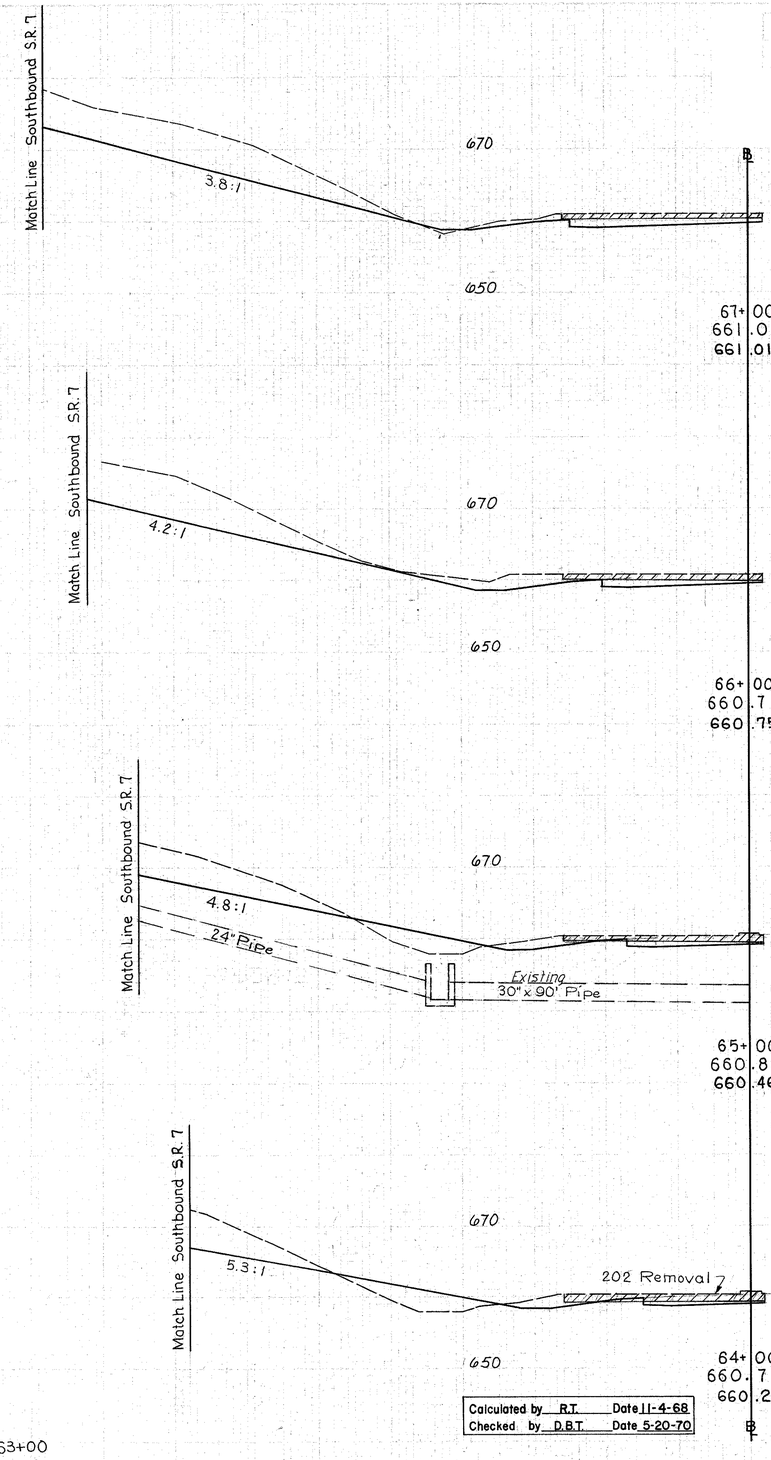

241	2						
		822	4				
203	0						
		600	59				
121	32						
		374	133				
81	40						
		237	131				
Sta. 63+00							
47	31						

Calculated by R.T. Date 11-4-68
Checked by D.B.T. Date 5-20-70

NORTHBOUND S.R.7 - CROSS SECTIONS
STA. 60+00 TO STA. 67+00

116 Ah. Sta. 59+00 N.B. AH.
392 Bk.

BELMONT COUNTY
BEL-470-5.90

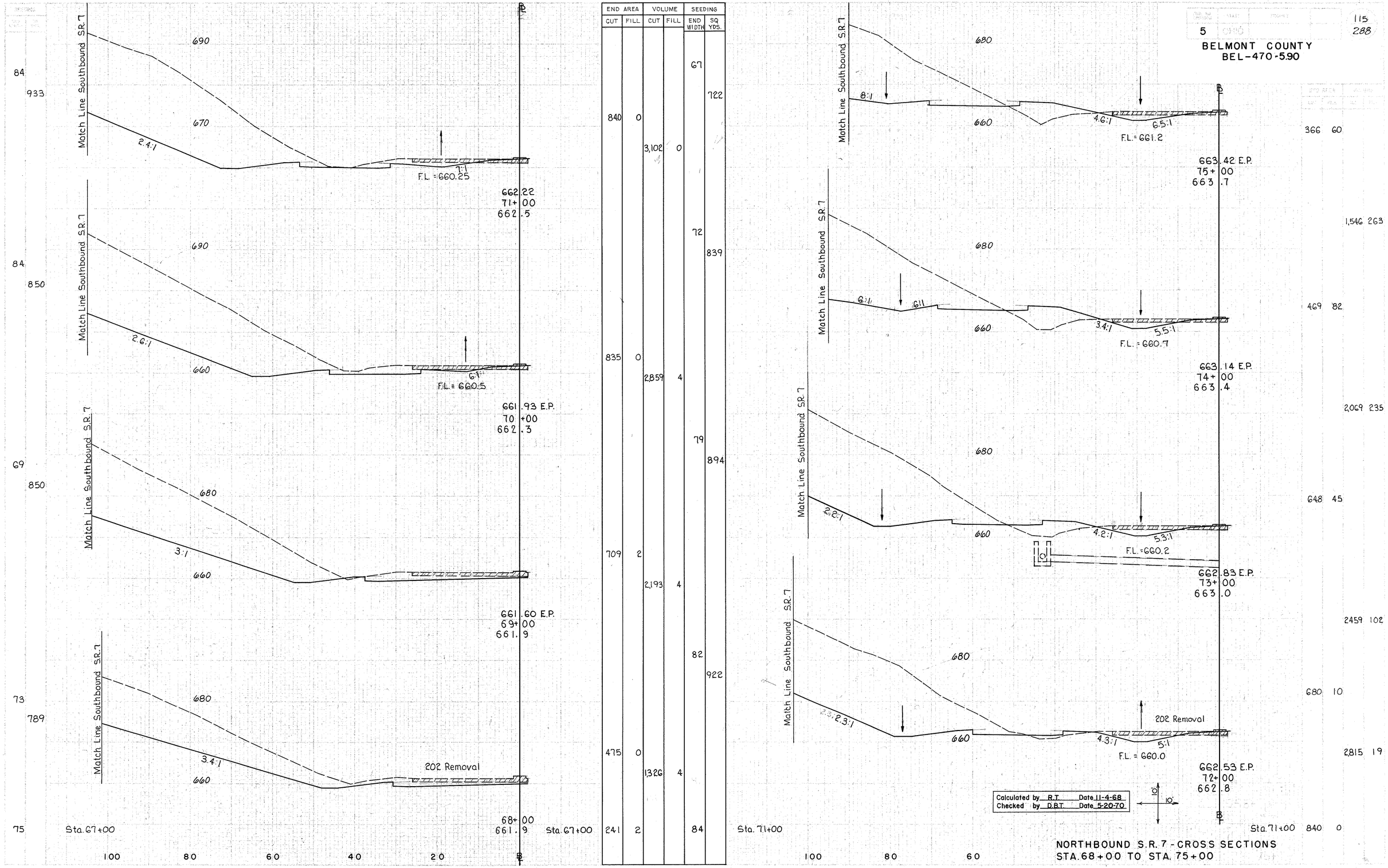

END AREA		VOLUME		SEEDING	
CUT	FILL	CUT	FILL	END WIDTH	SQ YDS.
				67	
					722
840	0				
		3,102	0		
				72	
					839
835	0				
		2859	4		
				79	
					894
709	2				
		2,193	4		
				82	
					922
475	0				
		1326	4		
241	2			84	

366	60
1,546	263
469	82
2,069	235
648	45
2459	102
680	10
2815	19
840	0

Calculated by R.T. Date 11-4-68
Checked by D.B.T. Date 5-20-70

NORTHBOUND S.R. 7 - CROSS SECTIONS
STA. 68+00 TO STA. 75+00

BELMONT COUNTY
BEL-470-5.90

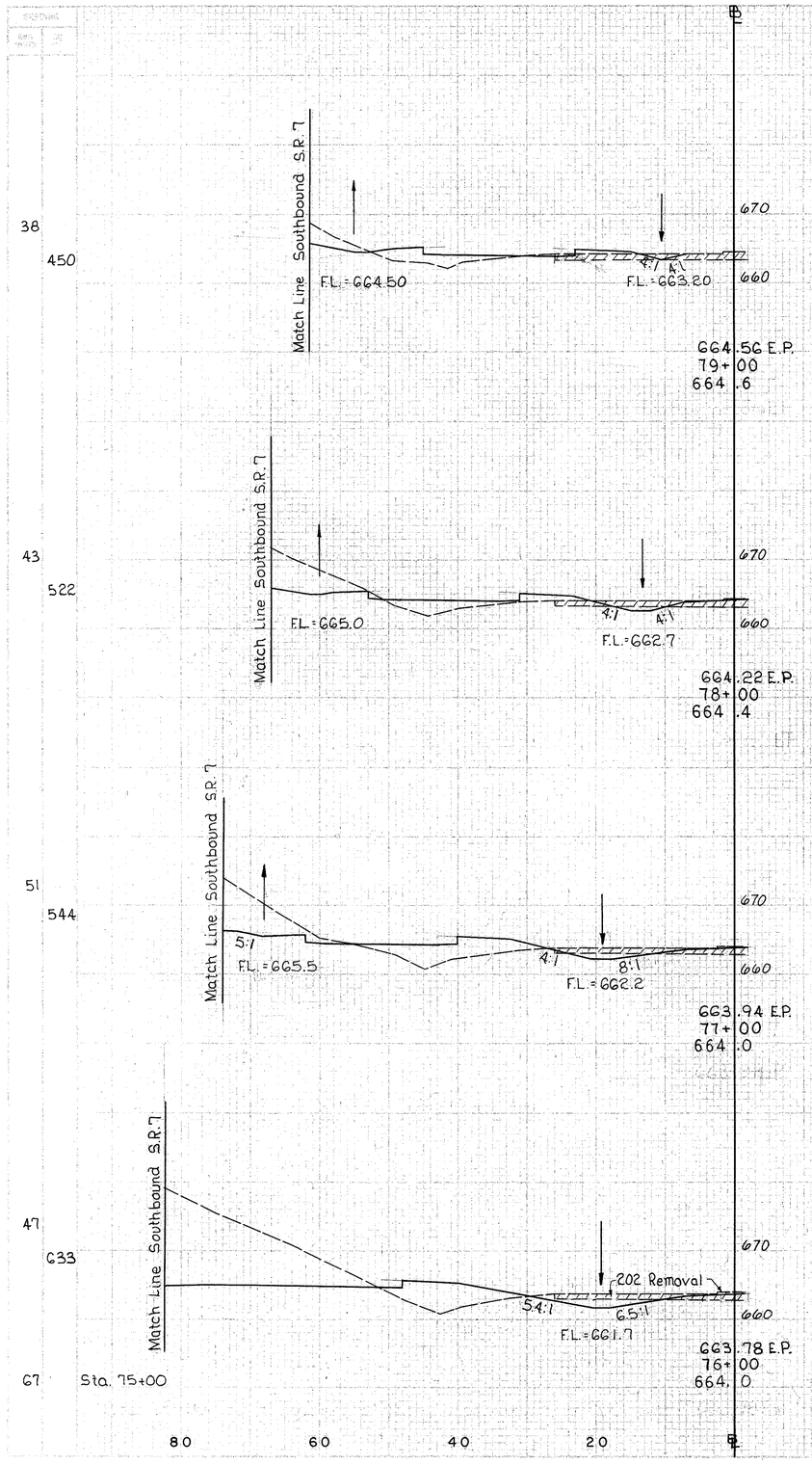

END AREA		VOLUME		SEEDING	
CUT	FILL	CUT	FILL	END WIDTH	SQ YDS.
20	27			19	222
		144	115		
58	35			21	244
		228	185		
65	65			23	239
		550	222		
232	55			20	322
		1107	213		
Sta 75+00 366	60			38	

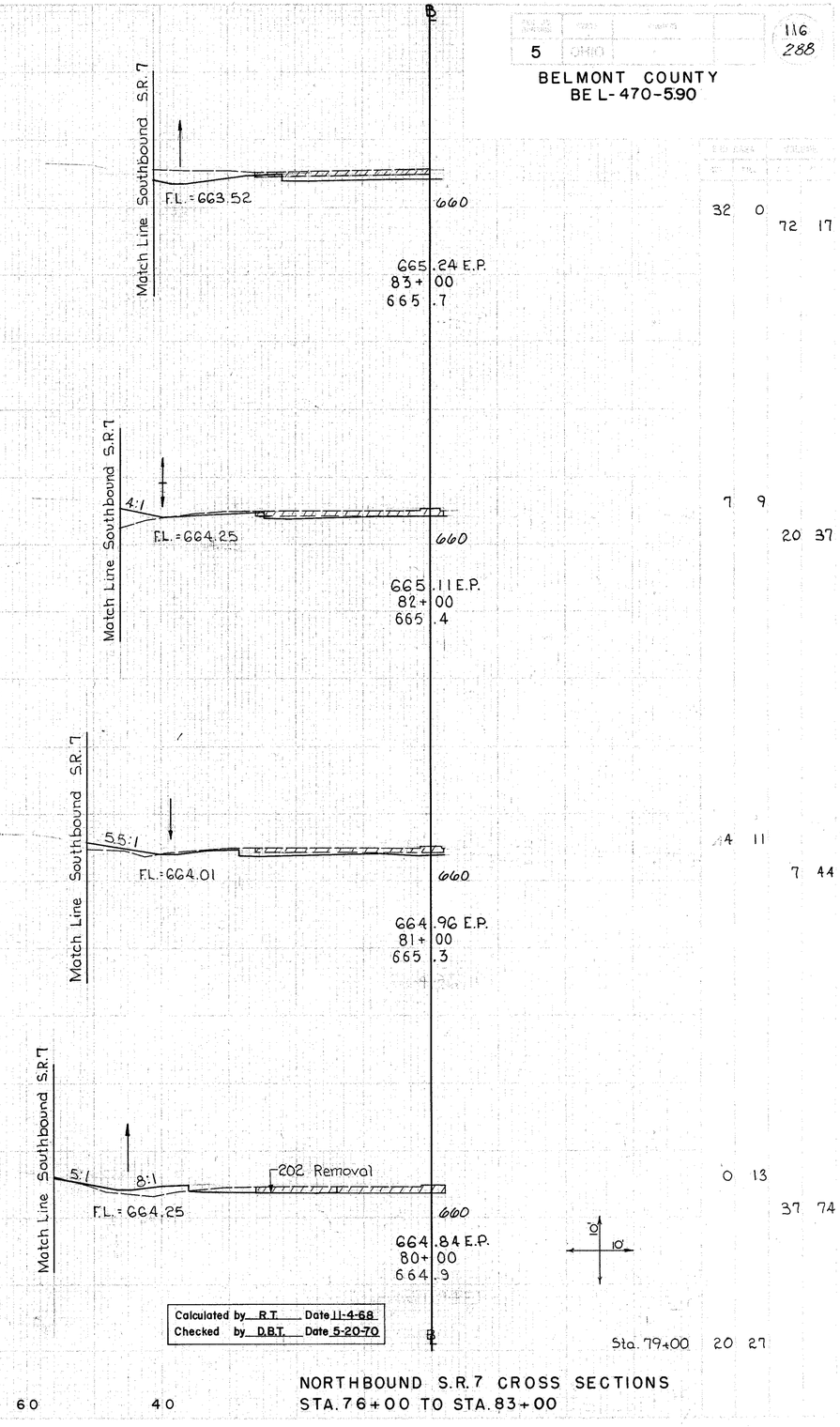

32	0	72	17
7	9	20	37
4	11	7	44
0	13	37	74
20	27		

Calculated by R.T. Date 11-4-68
Checked by D.B.T. Date 5-20-70

NORTHBOUND S.R. 7 CROSS SECTIONS
STA. 76+00 TO STA. 83+00

FED. RD. DIVISION	STATE	PROJECT		
5	OHIO			

117
288

BELMONT COUNTY
BEL-470-5.90

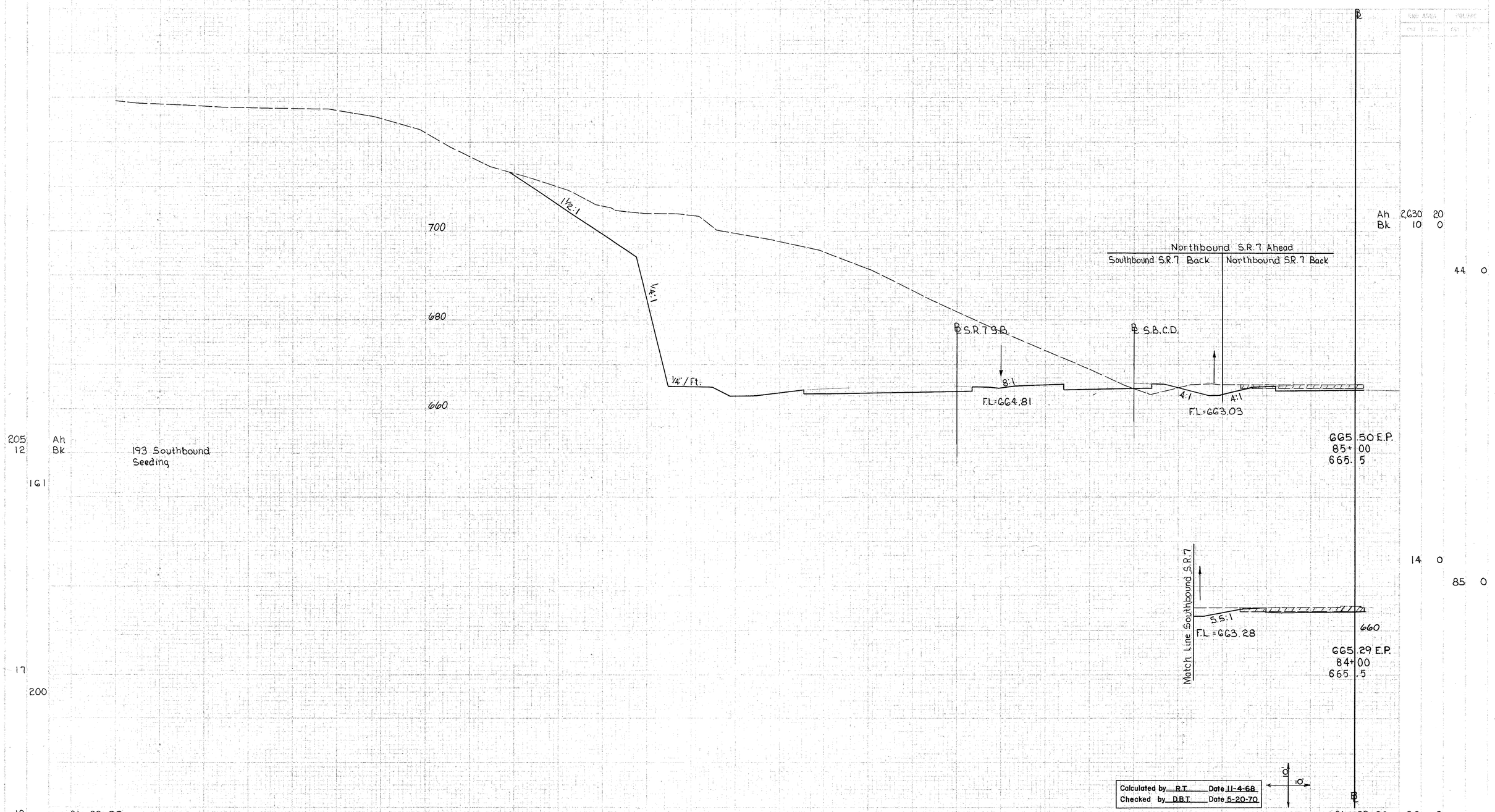

NORTHBOUND S.R. 7-CROSS SECTIONS
STA. 84+00 TO STA. 85+00

FED. RD. DIVISION	STATE	PROJECT	
5	OHIO		

118
288

BELMONT COUNTY
BEL-470-5.90

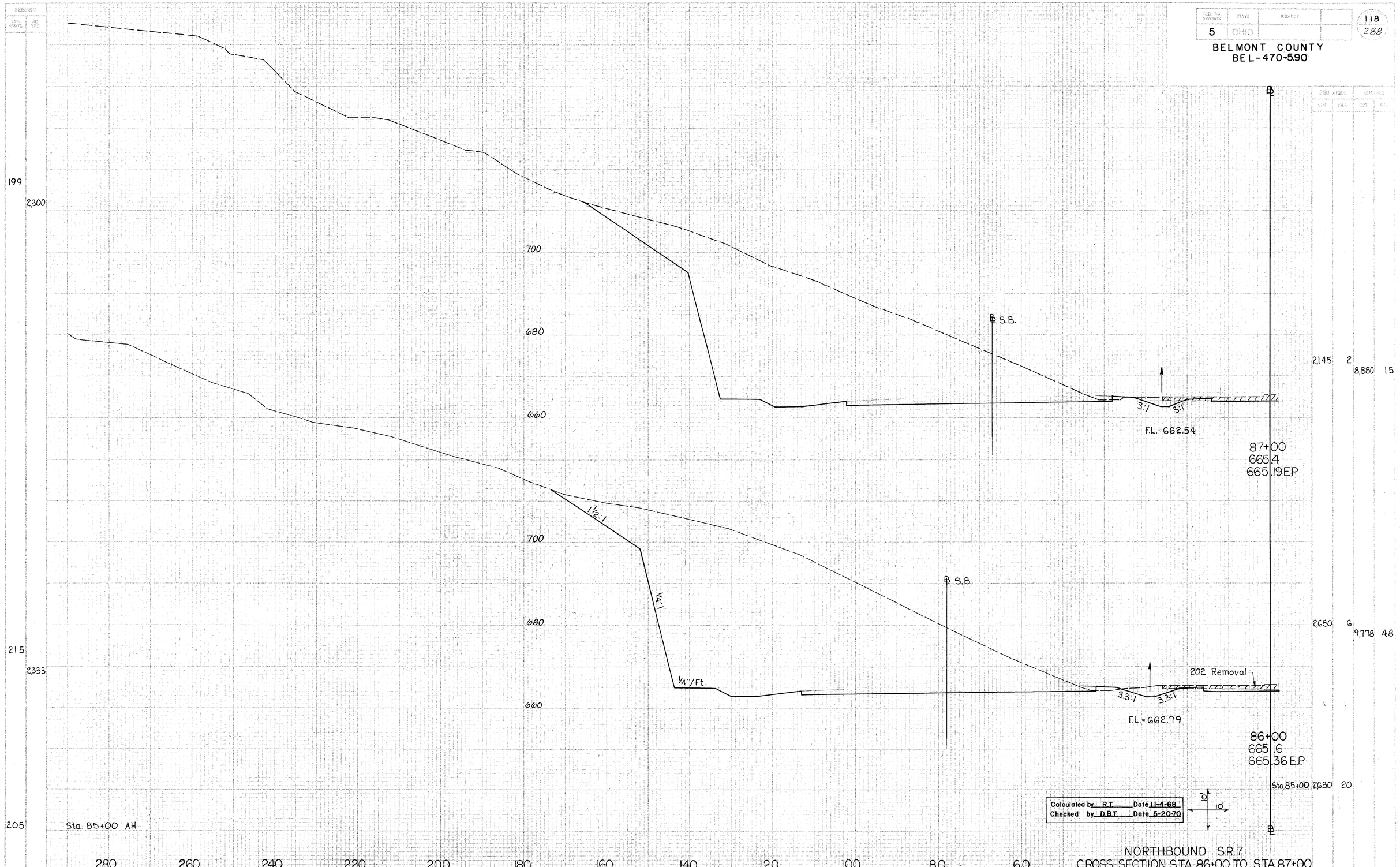

Calculated by R.T. Date 11-4-68
Checked by D.B.T. Date 5-20-70

NORTHBOUND S.R.7
CROSS SECTION STA.86+00 TO STA.87+00

BELMONT COUNTY
BEL-470-5.90

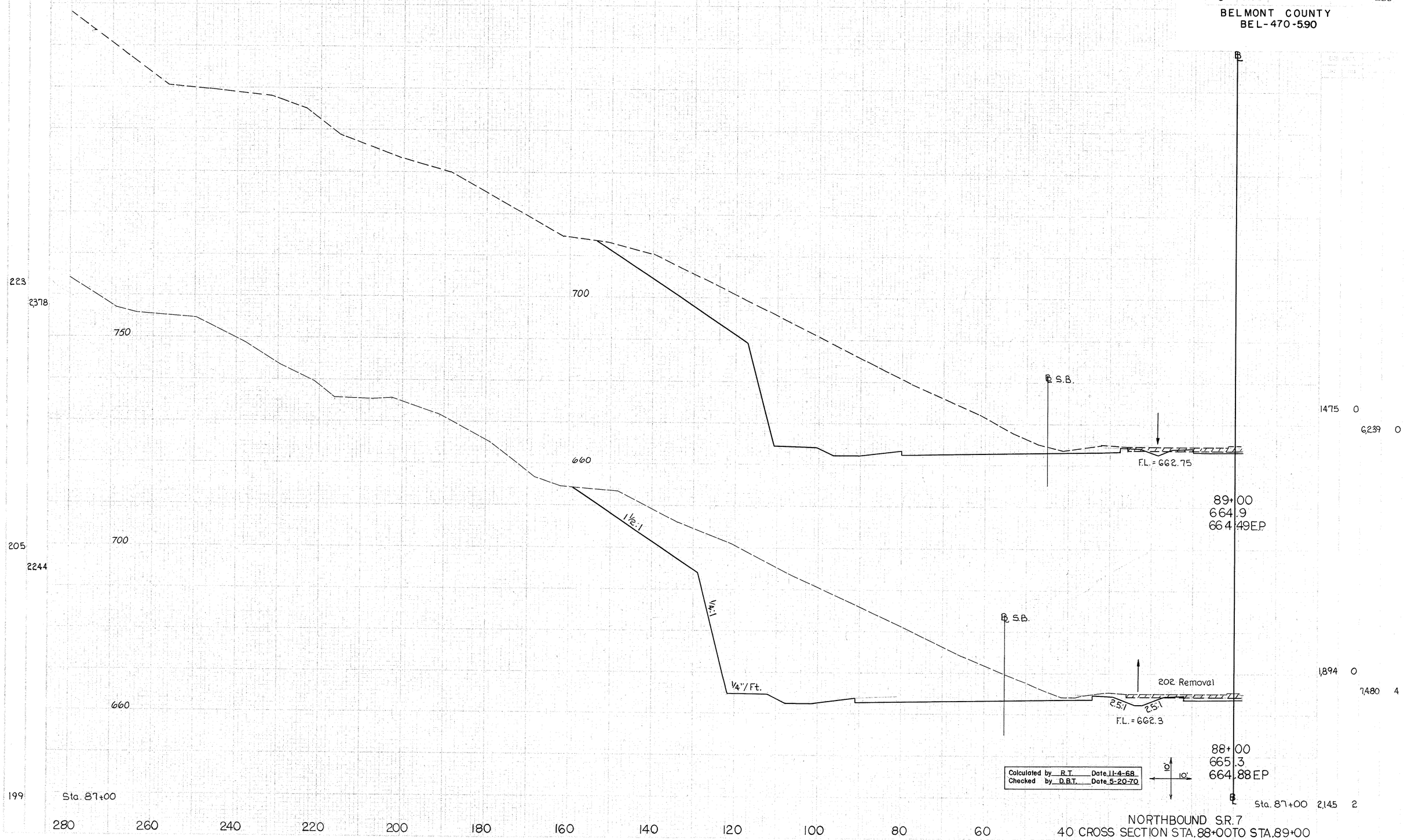

Calculated by	R.T.	Date	11-4-68
Checked by	D.B.T.	Date	5-20-70

NORTHBOUND S.R.7
40 CROSS SECTION STA.88+00 TO STA.89+00

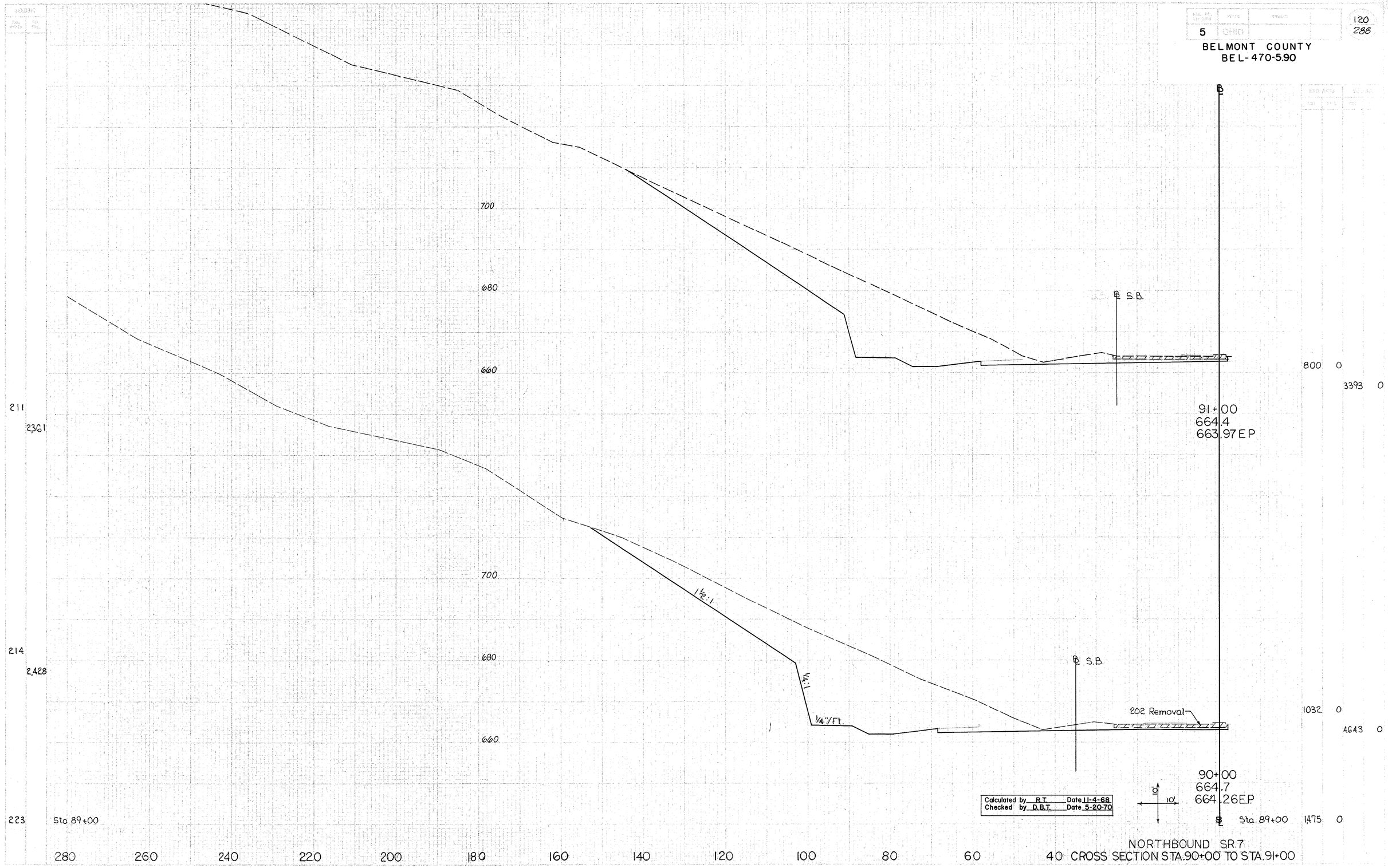

Calculated by R.T. Date 11-4-68
Checked by D.B.T. Date 5-20-70

NORTHBOUND SR.7
CROSS SECTION STA.90+00 TO STA.91+00

BELMONT COUNTY
BEL-470-5.90

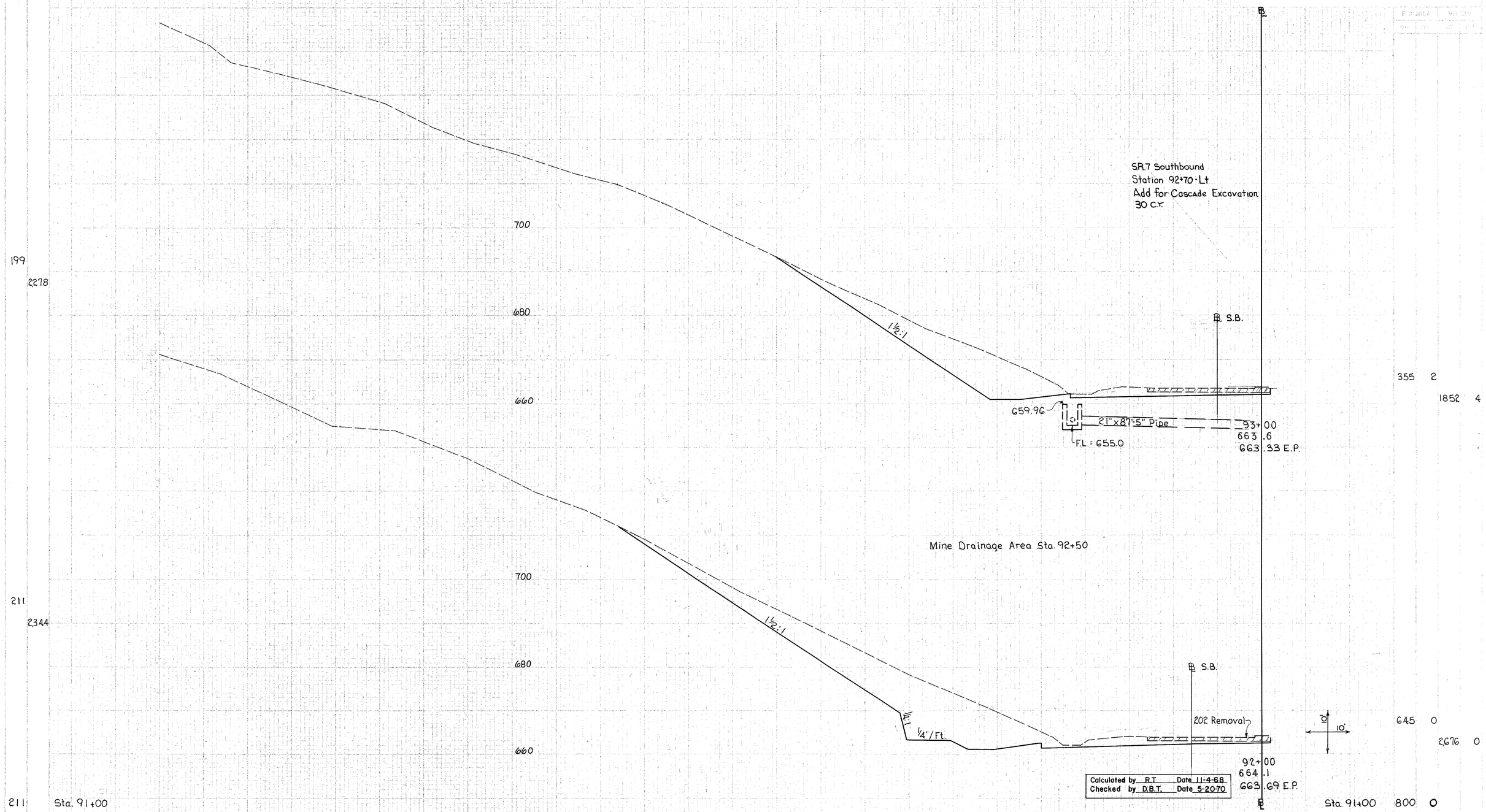

NORTHBOUND S.R. 7 - CROSS SECTIONS
STA. 92+00 TO STA. 93+00

BELMONT COUNTY
BEL-470-5.90

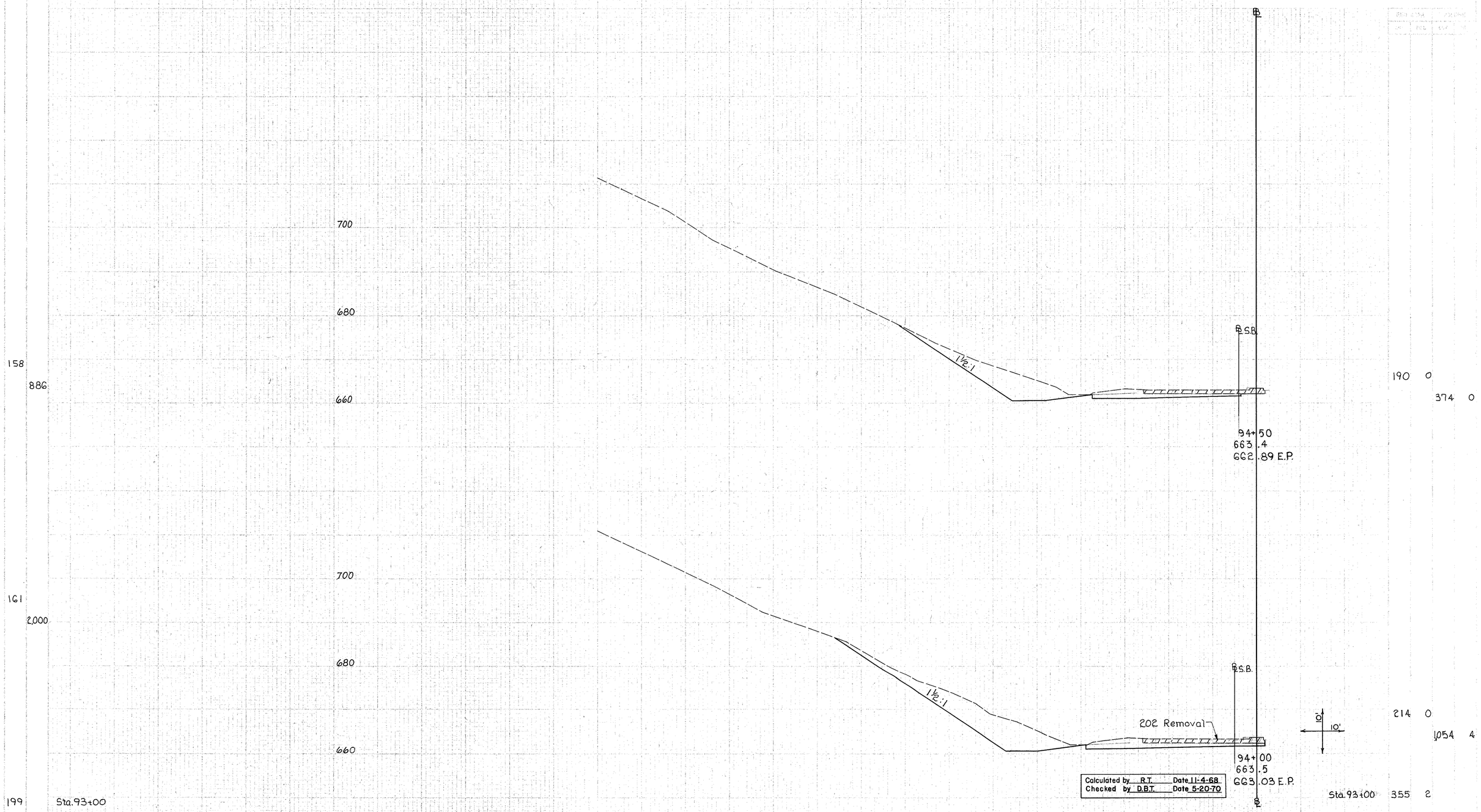

Calculated by R.T. Date 11-4-68
Checked by D.B.T. Date 5-20-70

NORTHBOUND S.R. 7 - CROSS SECTIONS
STA. 94+00 TO STA. 94+50

BELMONT COUNTY
BEL-470-590

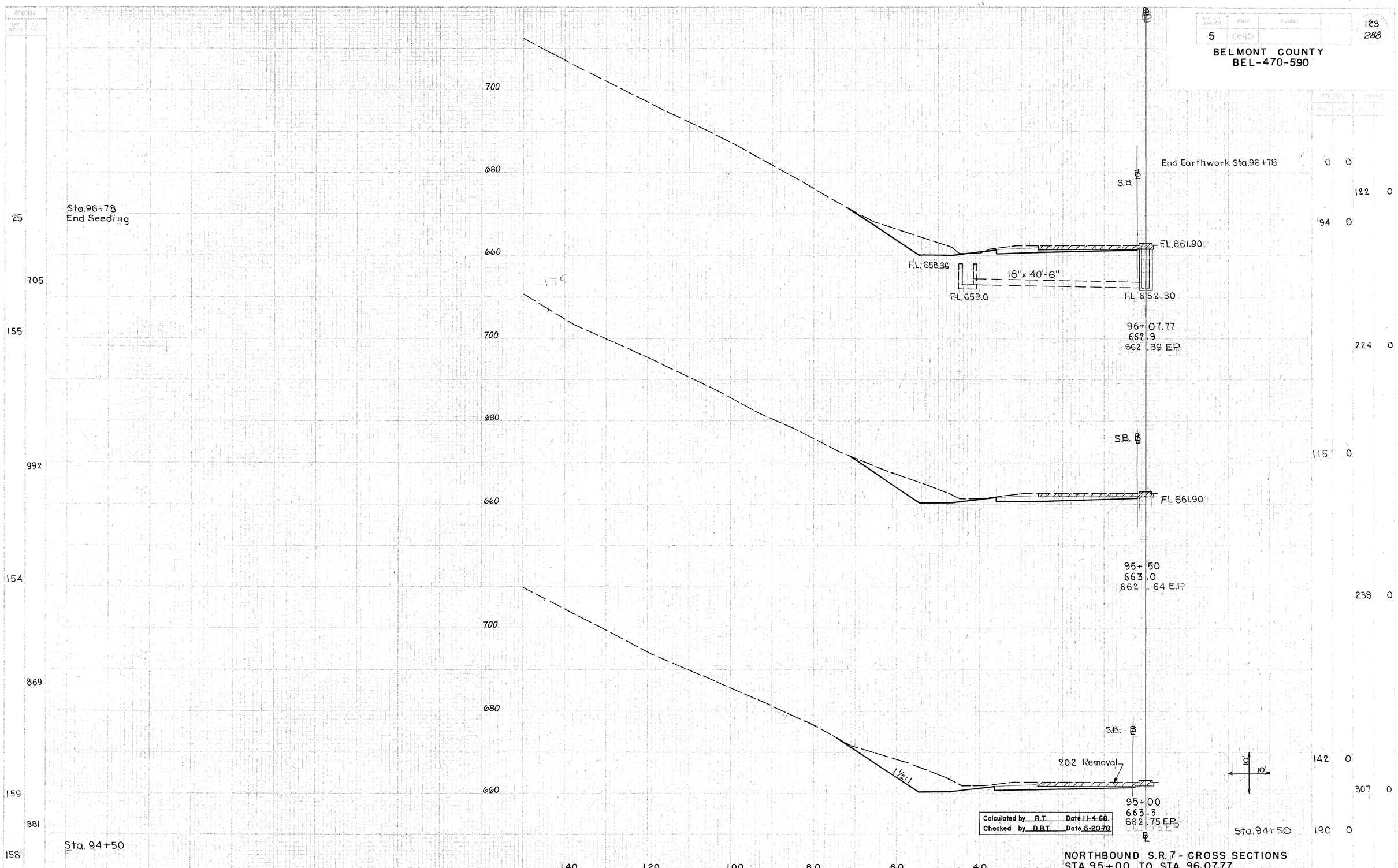

Calculated by R.T. Date 11-4-68
Checked by D.B.T. Date 5-20-70

NORTHBOUND S.R. 7 - CROSS SECTIONS
STA. 95+00 TO STA. 96.07.77

FED. RD. DIVISION	STATE	PROJECT	
5	OHIO		

124
288

BELMONT COUNTY
BEL-470-5.90

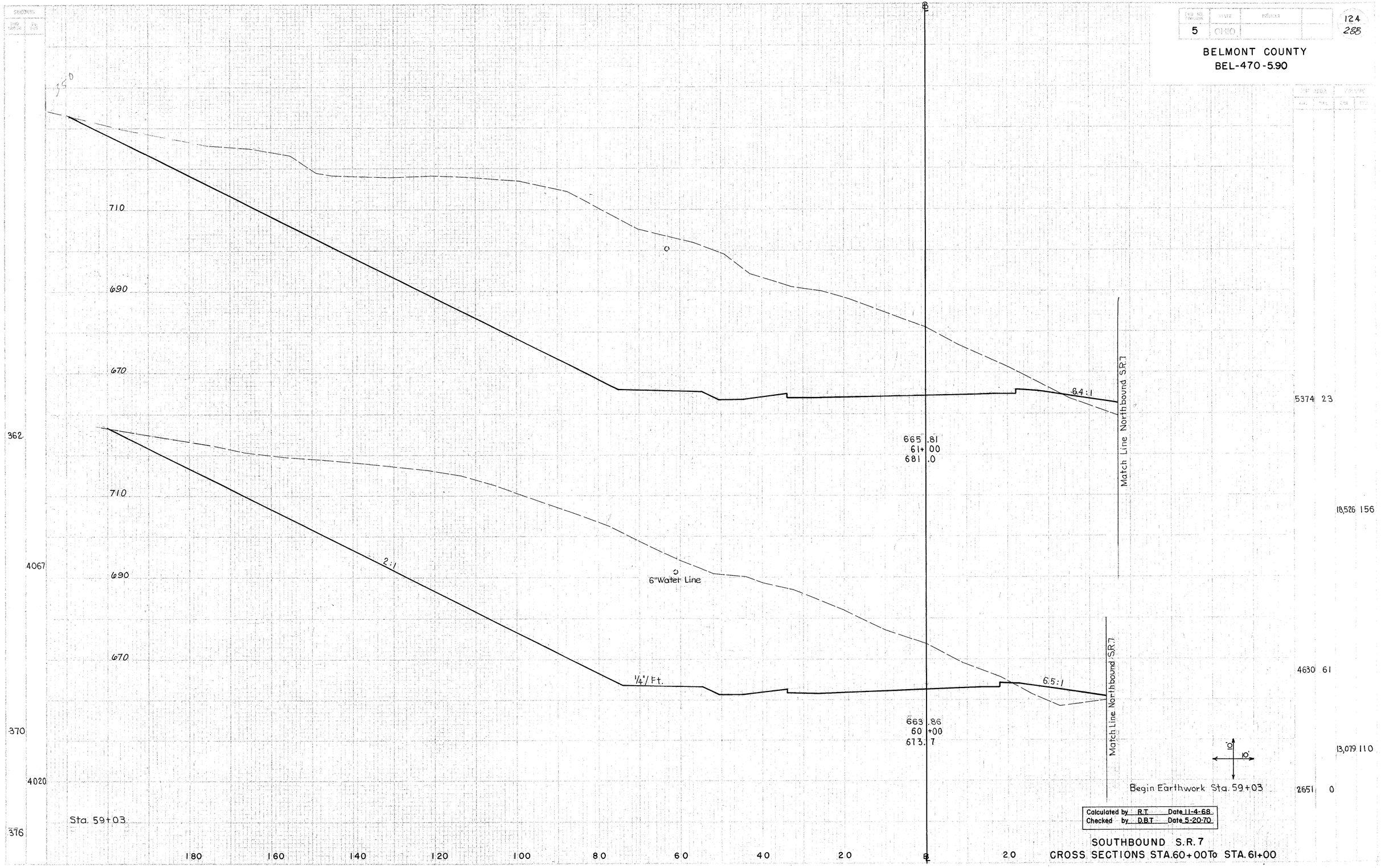

Calculated by R.T. Date 11-4-68
Checked by D.B.T. Date 5-20-70

SOUTHBOUND S.R. 7
CROSS SECTIONS STA. 60+00 To STA. 61+00

FED. RD. DIVISION	STATE	PROJECT	
5	OHIO		

125
288

BELMONT COUNTY
BEL-470-5.90

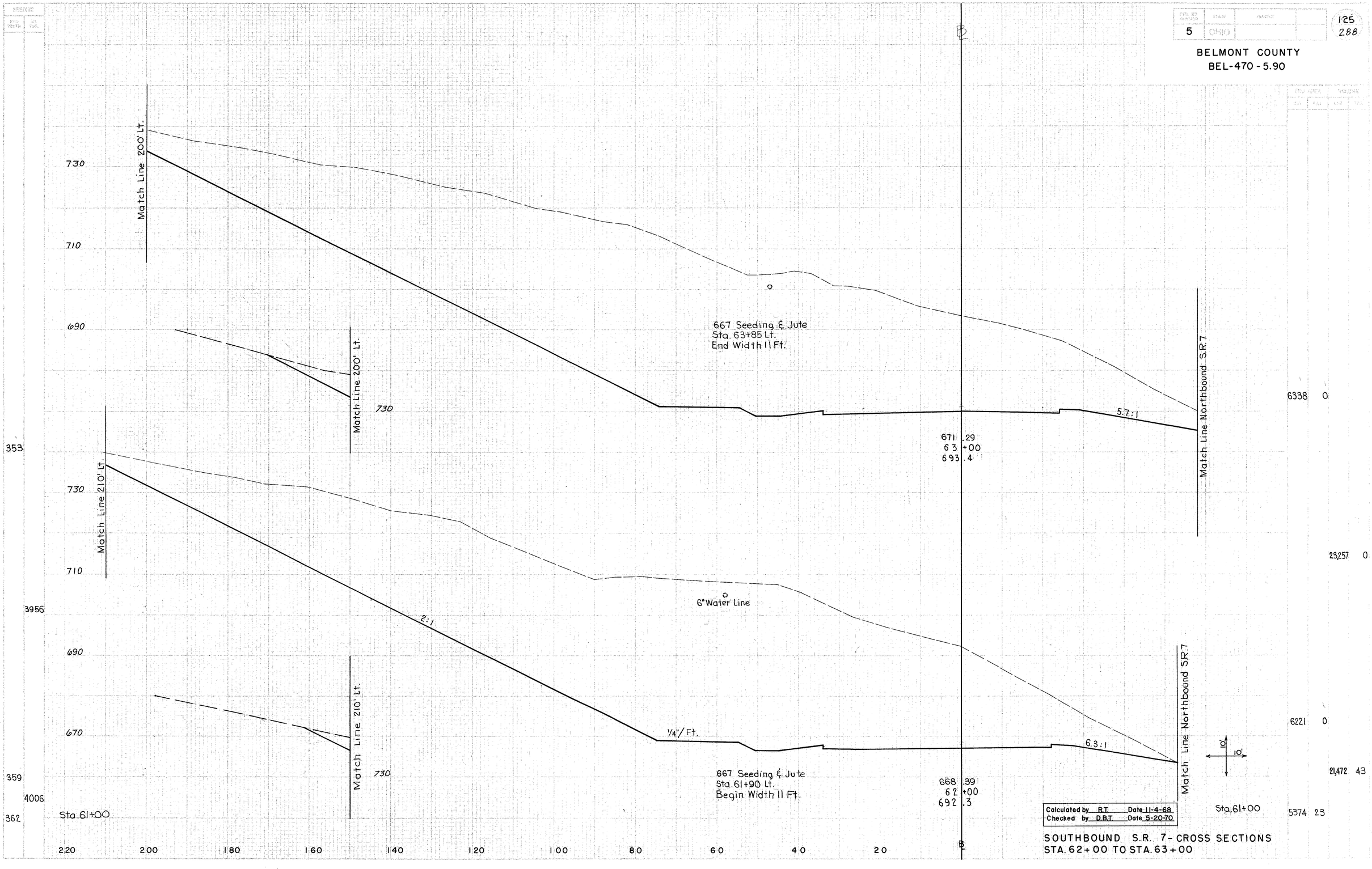

Calculated by R.T. Date 11-4-68
Checked by D.B.T. Date 5-20-70

SOUTHBOUND S.R. 7- CROSS SECTIONS
STA. 62+00 TO STA. 63+00

SHEET NO.	OF TOTAL SHEETS	STATE	PROJECT	
5		OHIO		126 / 288

BELMONT COUNTY
BEL-470-5.90

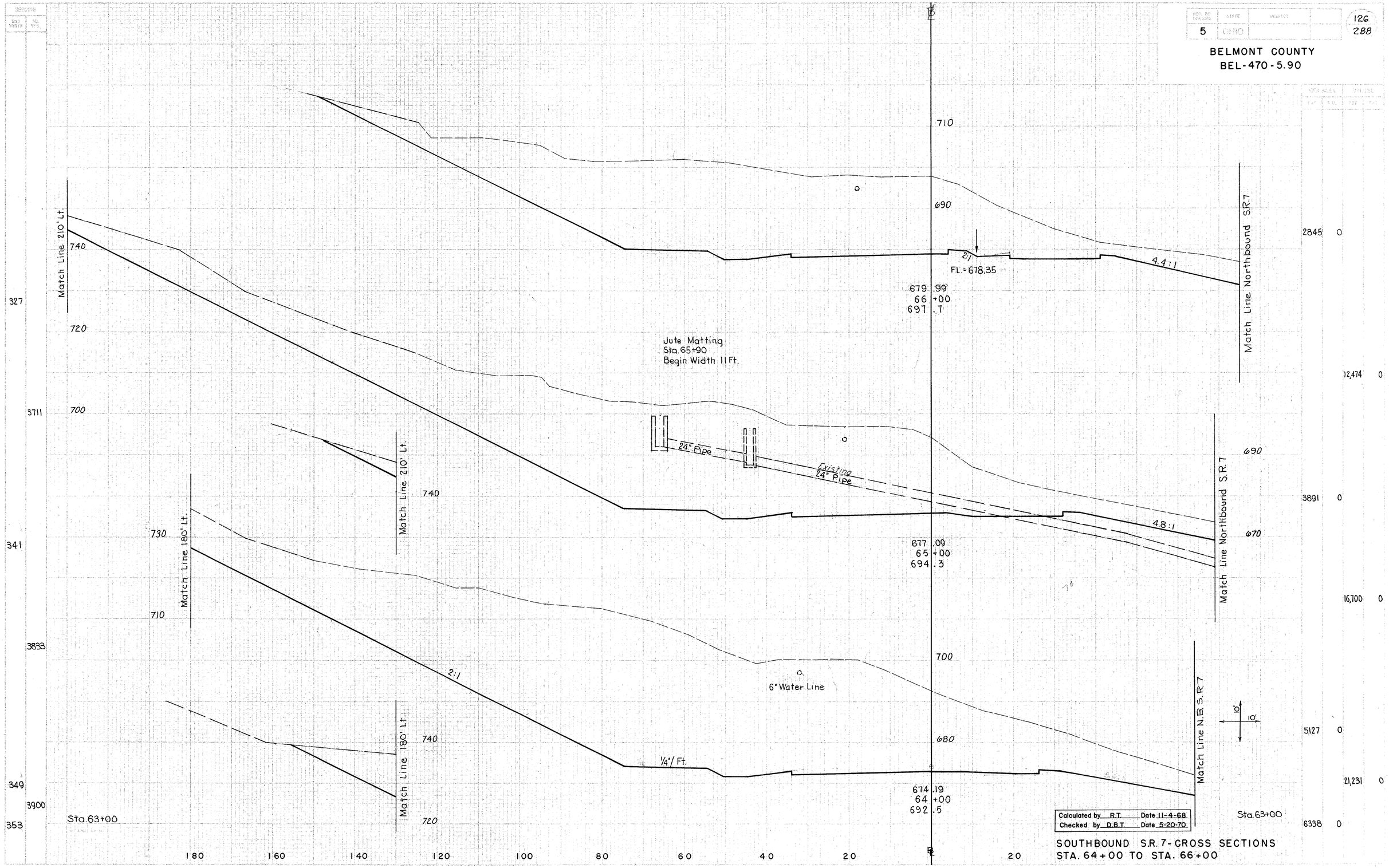

Calculated by R.T. Date 11-4-68
Checked by D.B.T. Date 5-20-70

SOUTHBOUND S.R. 7- CROSS SECTIONS
STA. 64+00 TO STA. 66+00

VISUAL SECTION	STATE	PROJECT		
5	OHIO			

127
288

BELMONT COUNTY
BEL-470-5.90

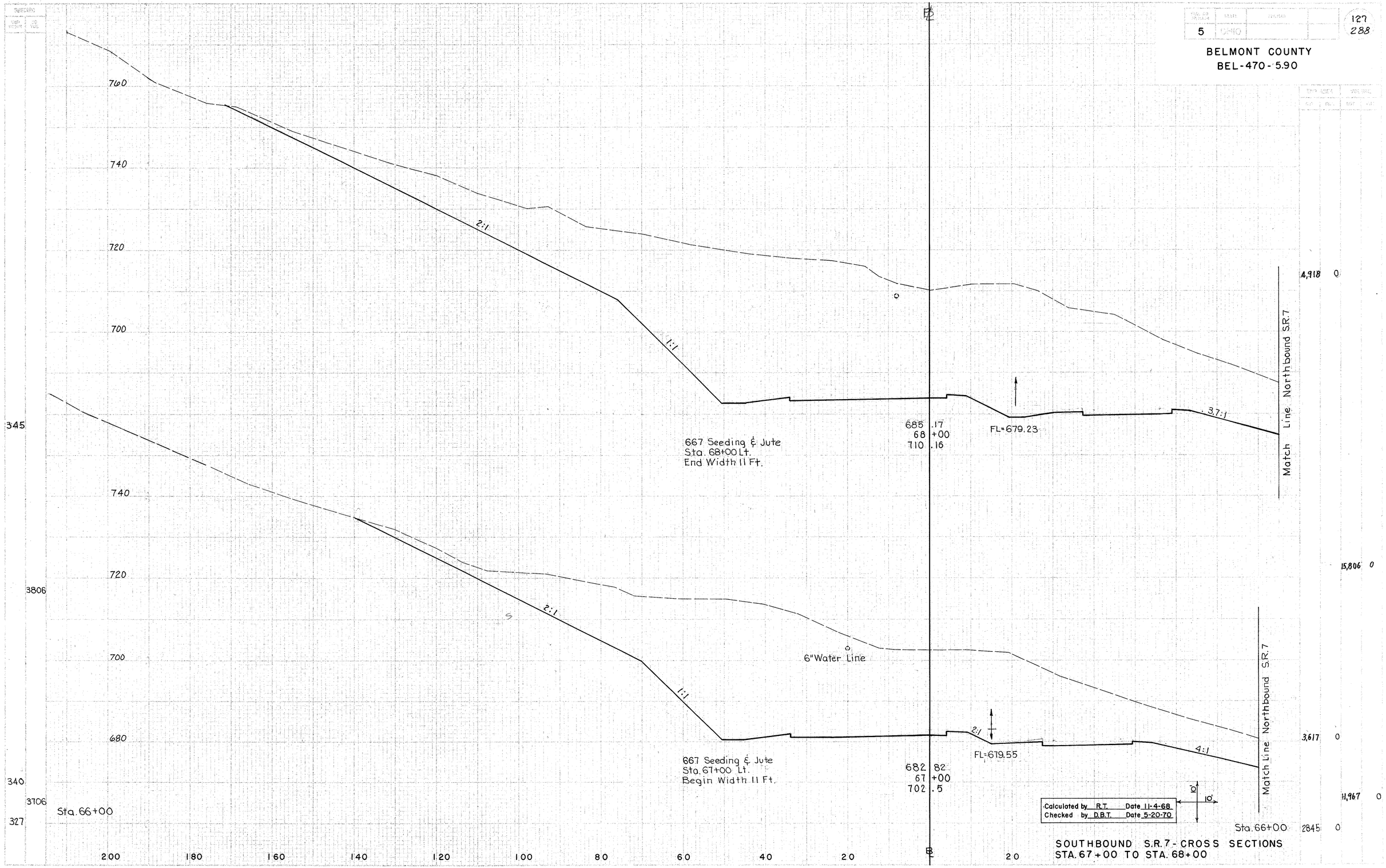

Calculated by R.T. Date 11-4-68
Checked by D.B.T. Date 5-20-70

SOUTHBOUND S.R.7 - CROSS SECTIONS
STA. 67+00 TO STA. 68+00

DIST. NO.	STATE	FEDERAL AID PROJECT		
5	OHIO			128 / 288

BELMONT COUNTY
BEL-470-5.90

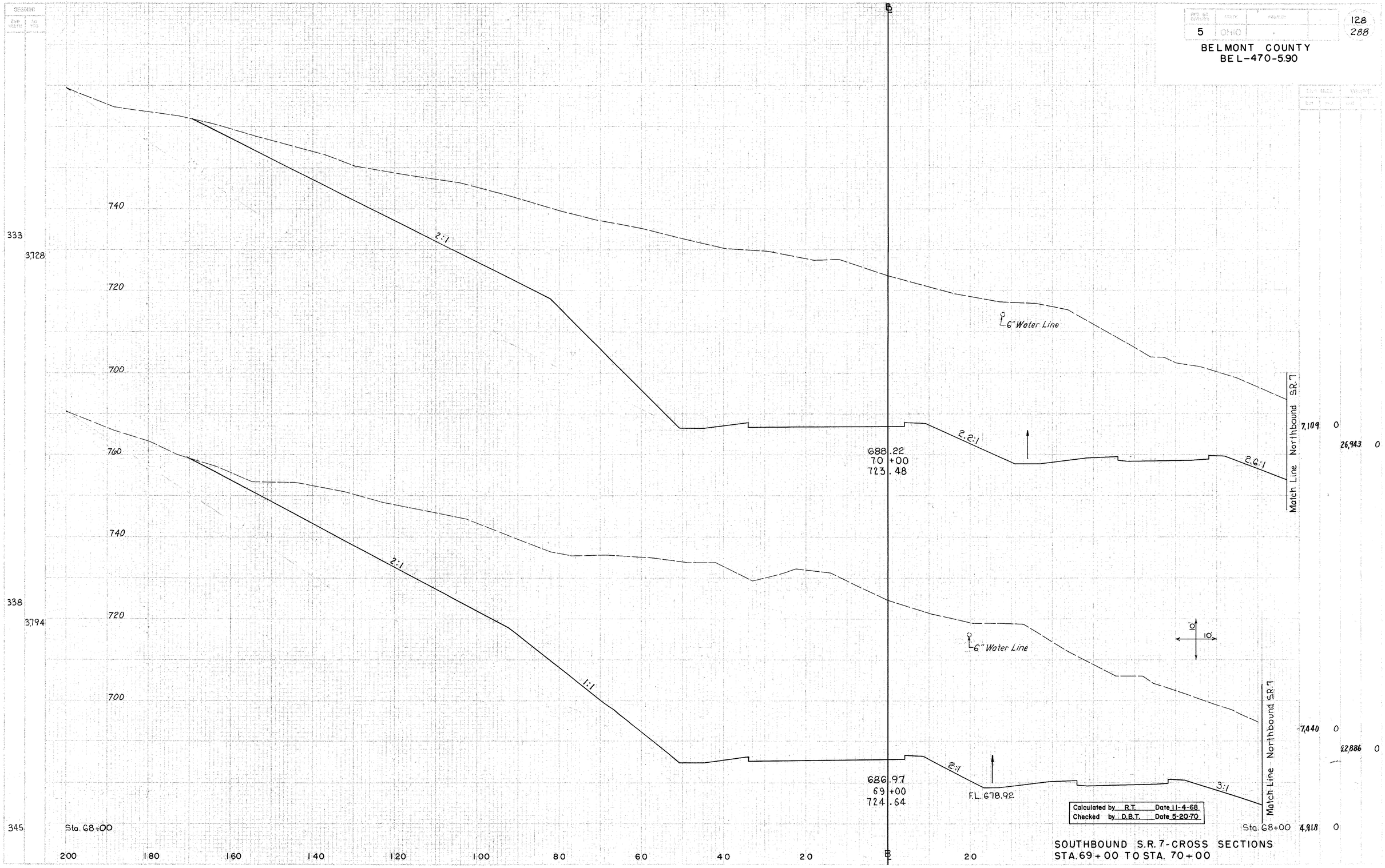

Calculated by R.T. Date 11-4-68
Checked by D.B.T. Date 5-20-70

SOUTHBOUND S.R. 7-CROSS SECTIONS
STA. 69+00 TO STA. 70+00

BELMONT COUNTY
BEL-470-5.90

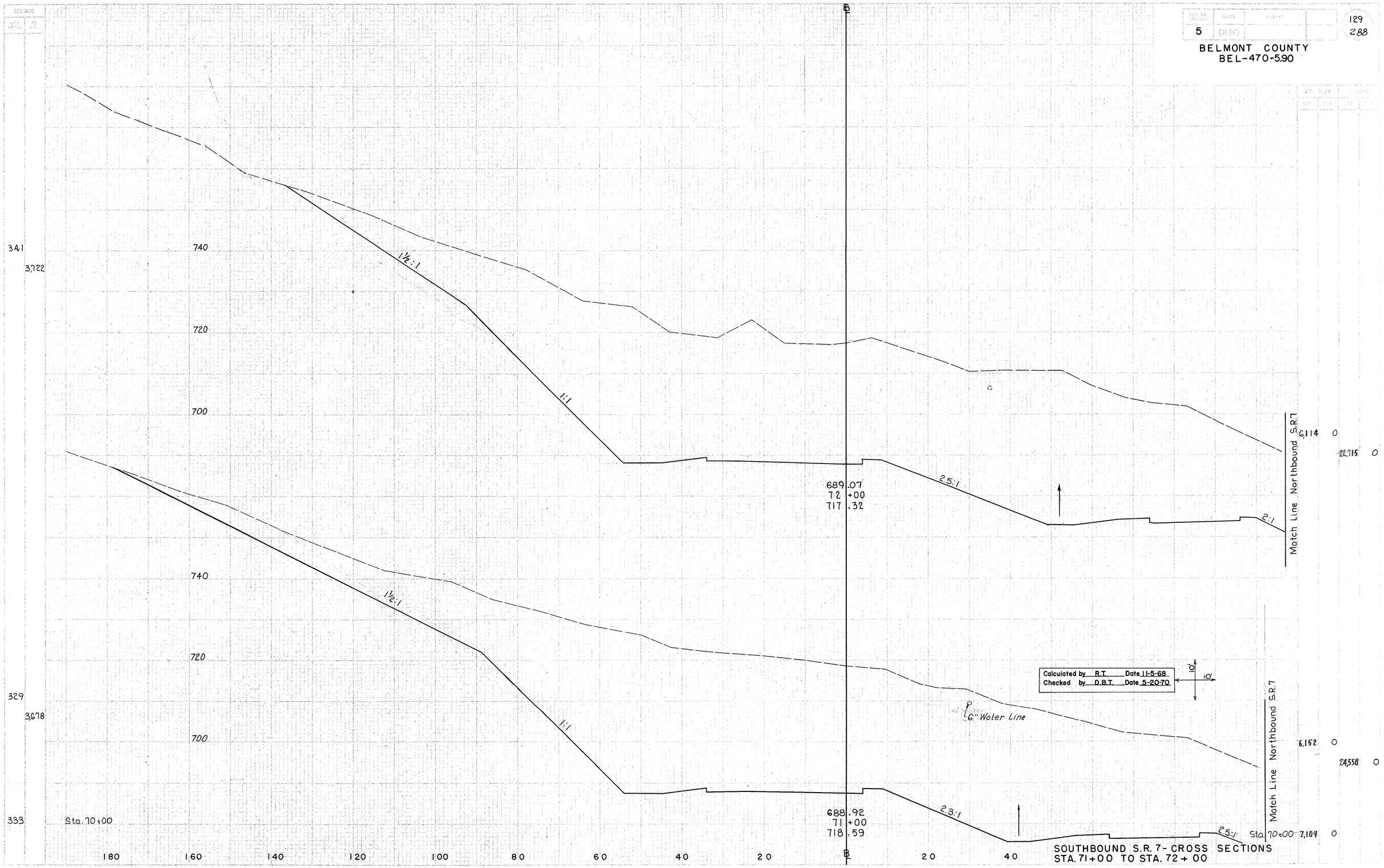

SOUTHBOUND S.R. 7- CROSS SECTIONS
STA. 71+00 TO STA. 72+00

BELMONT COUNTY
BEL-470-5.90

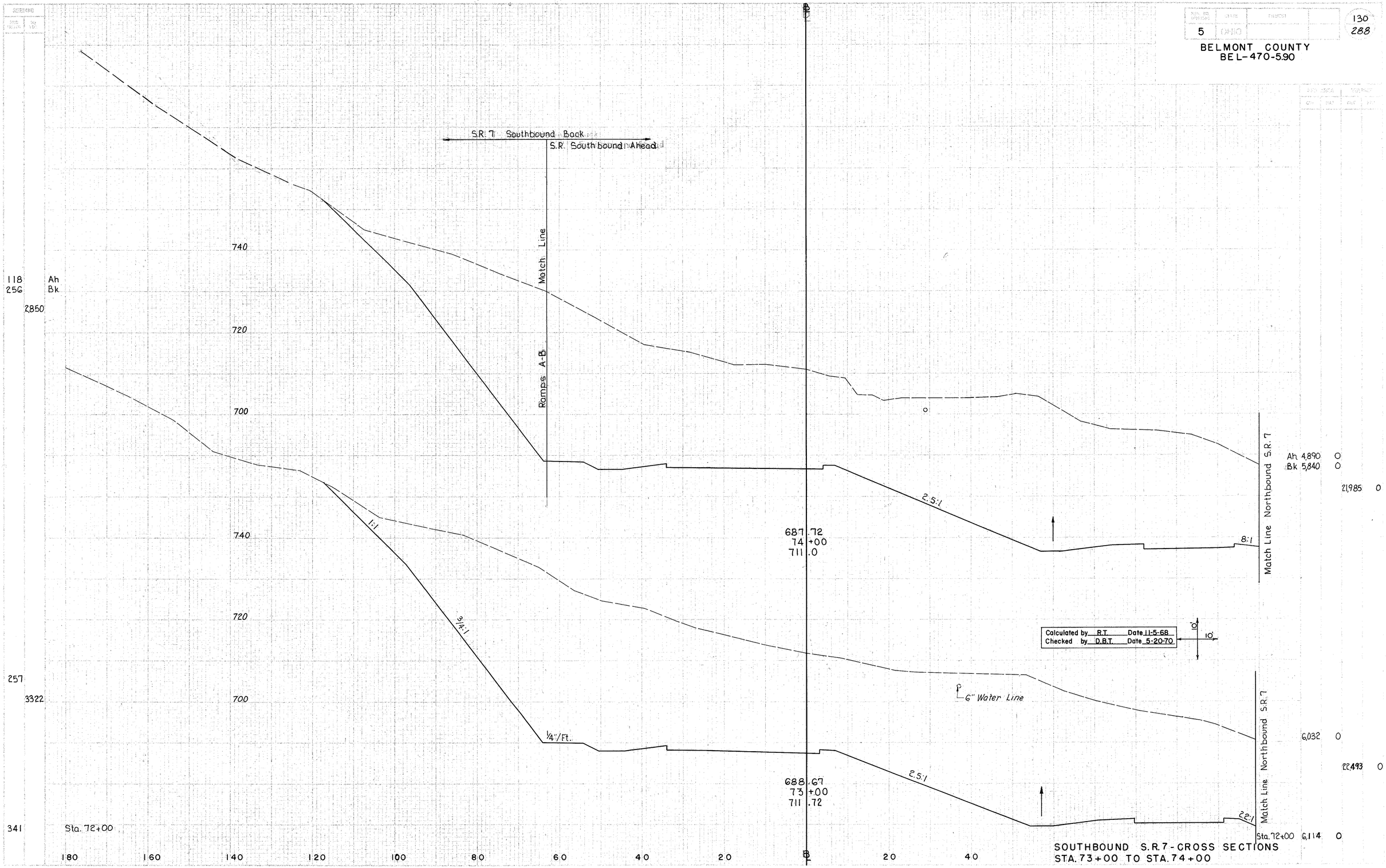

SOUTHBOUND S.R.7-CROSS SECTIONS
STA. 73+00 TO STA. 74+00

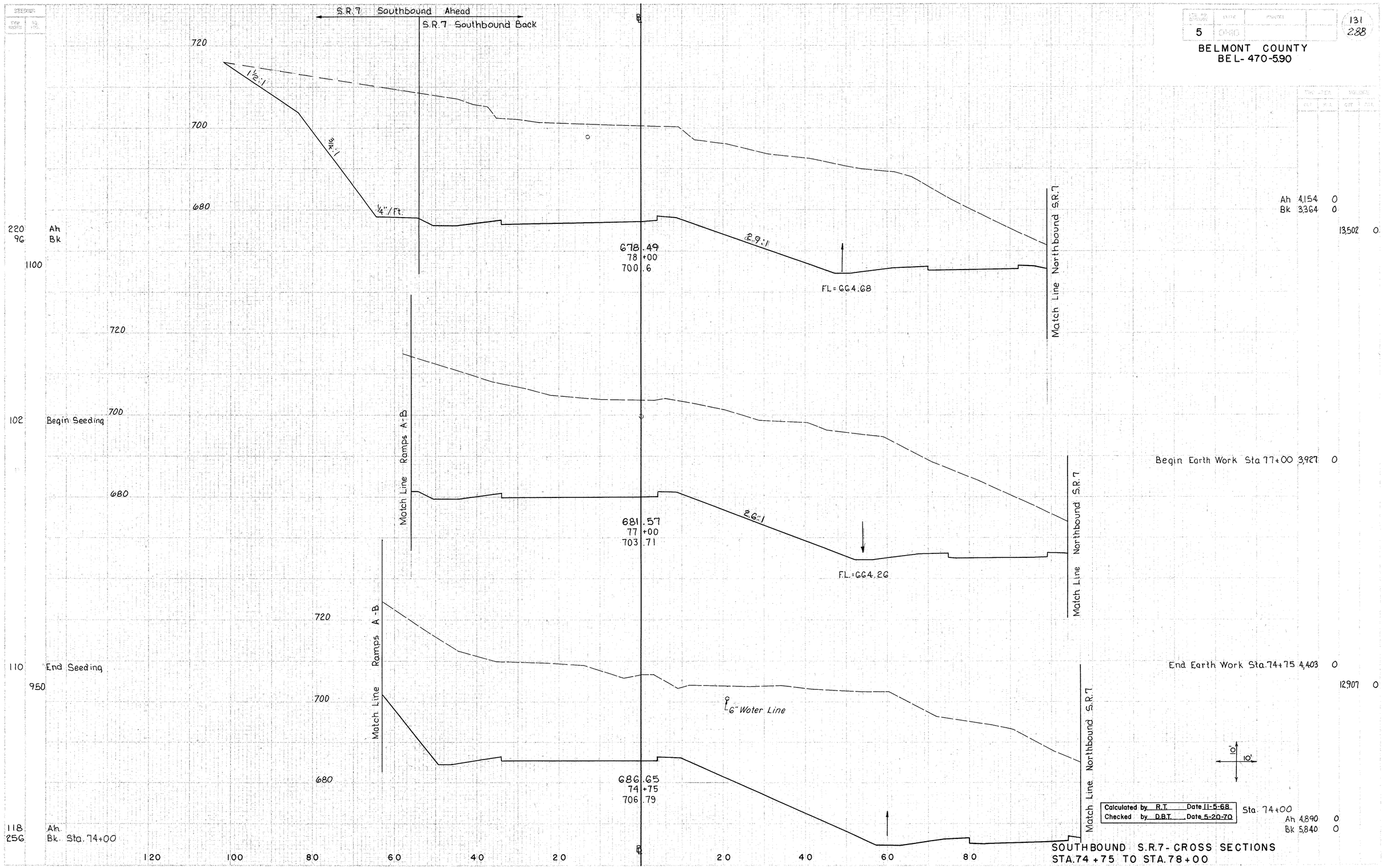

Sheet No.	State	County	Total Sheets
5	OHIO	BELMONT	131 / 288

BELMONT COUNTY
BEL-470-5.90

SOUTHBOUND S.R.7 - CROSS SECTIONS
STA.74+75 TO STA.78+00

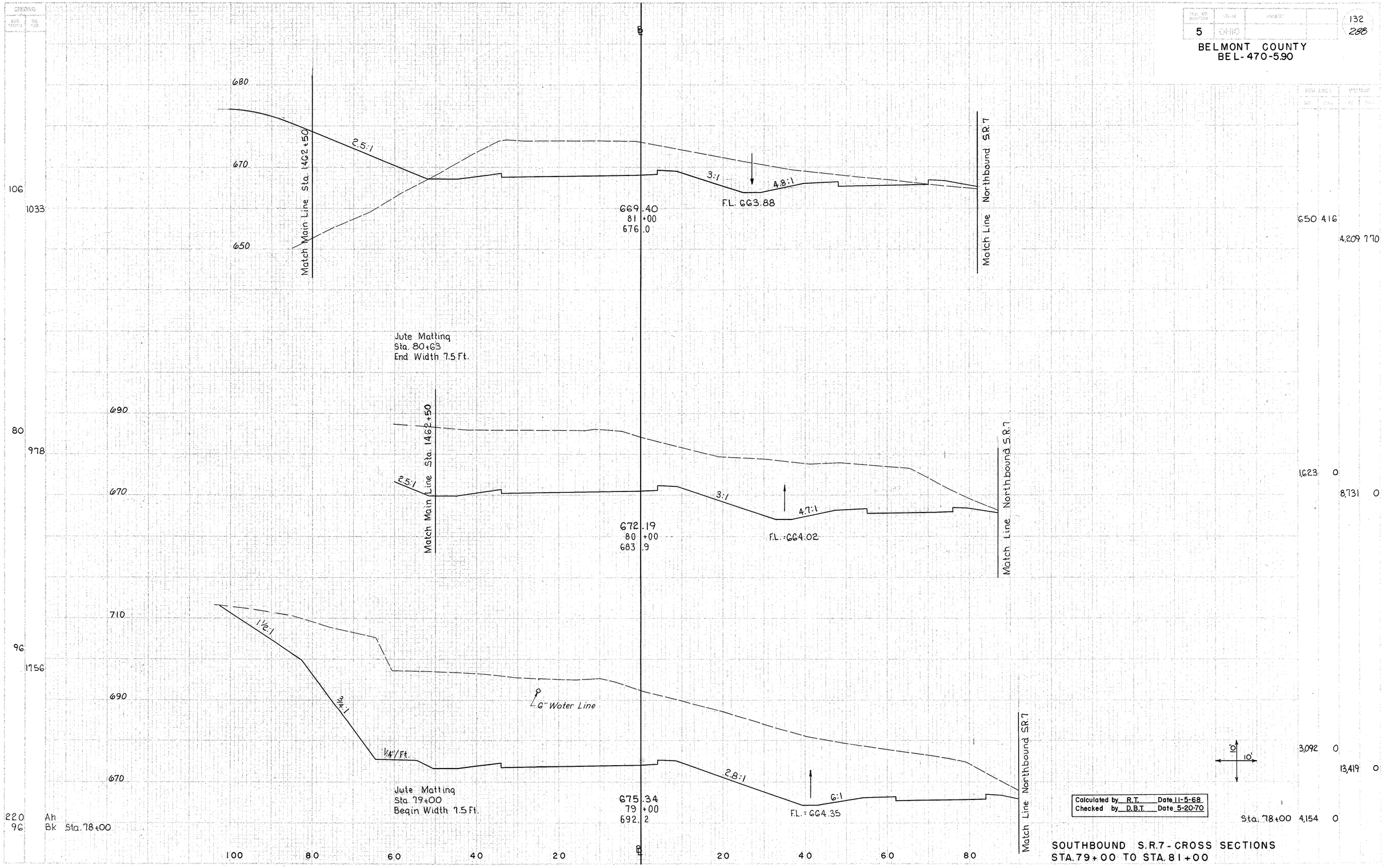

Calculated by R.T. Date 11-5-68
Checked by D.B.T. Date 5-20-70

SOUTHBOUND S.R.7 - CROSS SECTIONS
STA. 79+00 TO STA. 81+00

BELMONT COUNTY
BEL-470-5.90

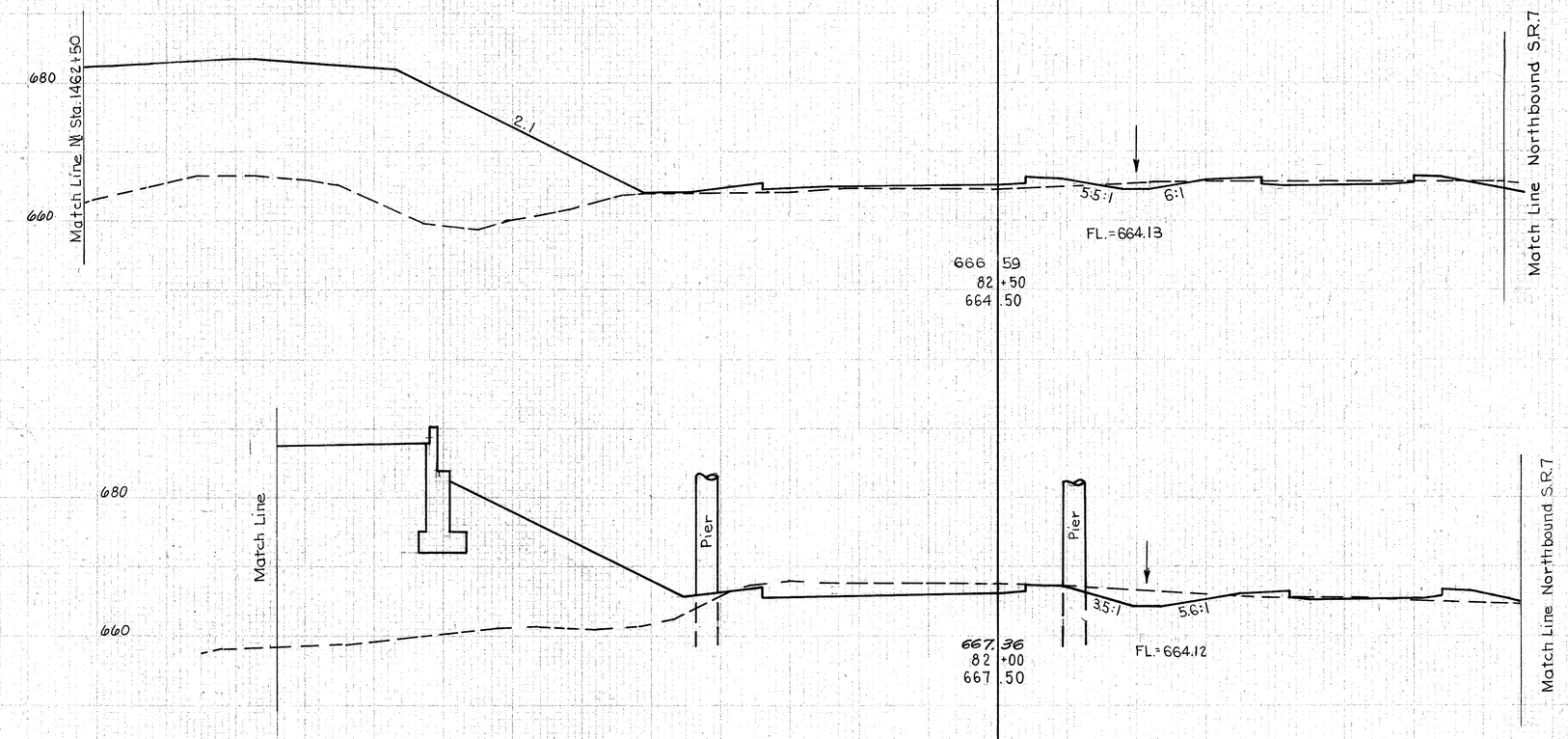

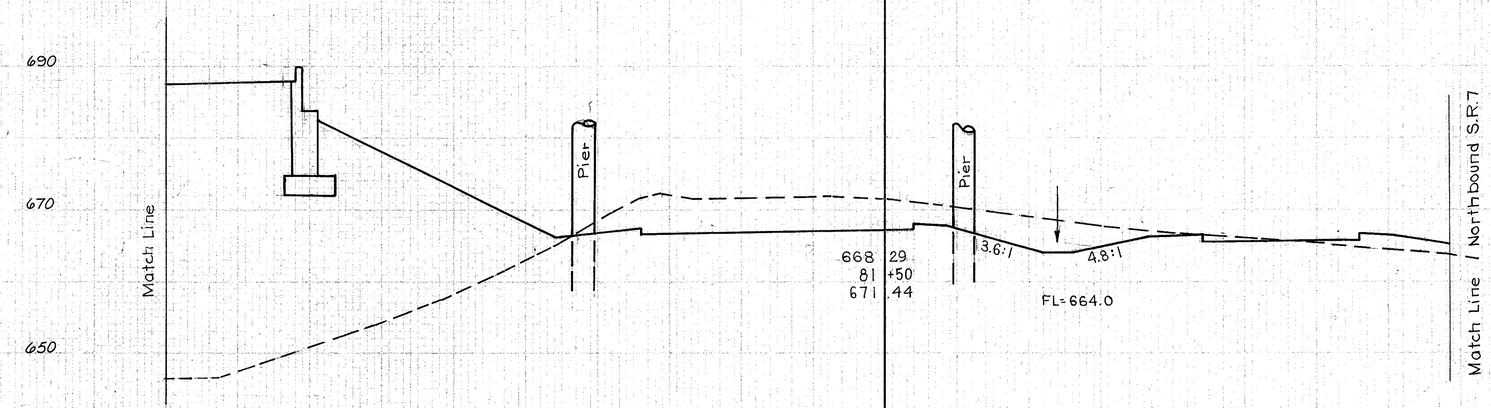

140
561
62
356
66
478
106

10 1,278
97 2225
95 1125
384 2269
320 1325
898 1612
650 416

Sta. 81+00

130 120 110 100 90 80 70 60 50 40 30 20 10 10 20 30 40 50 60 70

10' 10'

Calculated by R.T. Date 11-5-68
Checked by D.B.T. Date 5-20-70

Sta. 81+00

SOUTHBOUND S.R.7 - CROSS SECTIONS
STA. 81+50 TO STA. 82+50

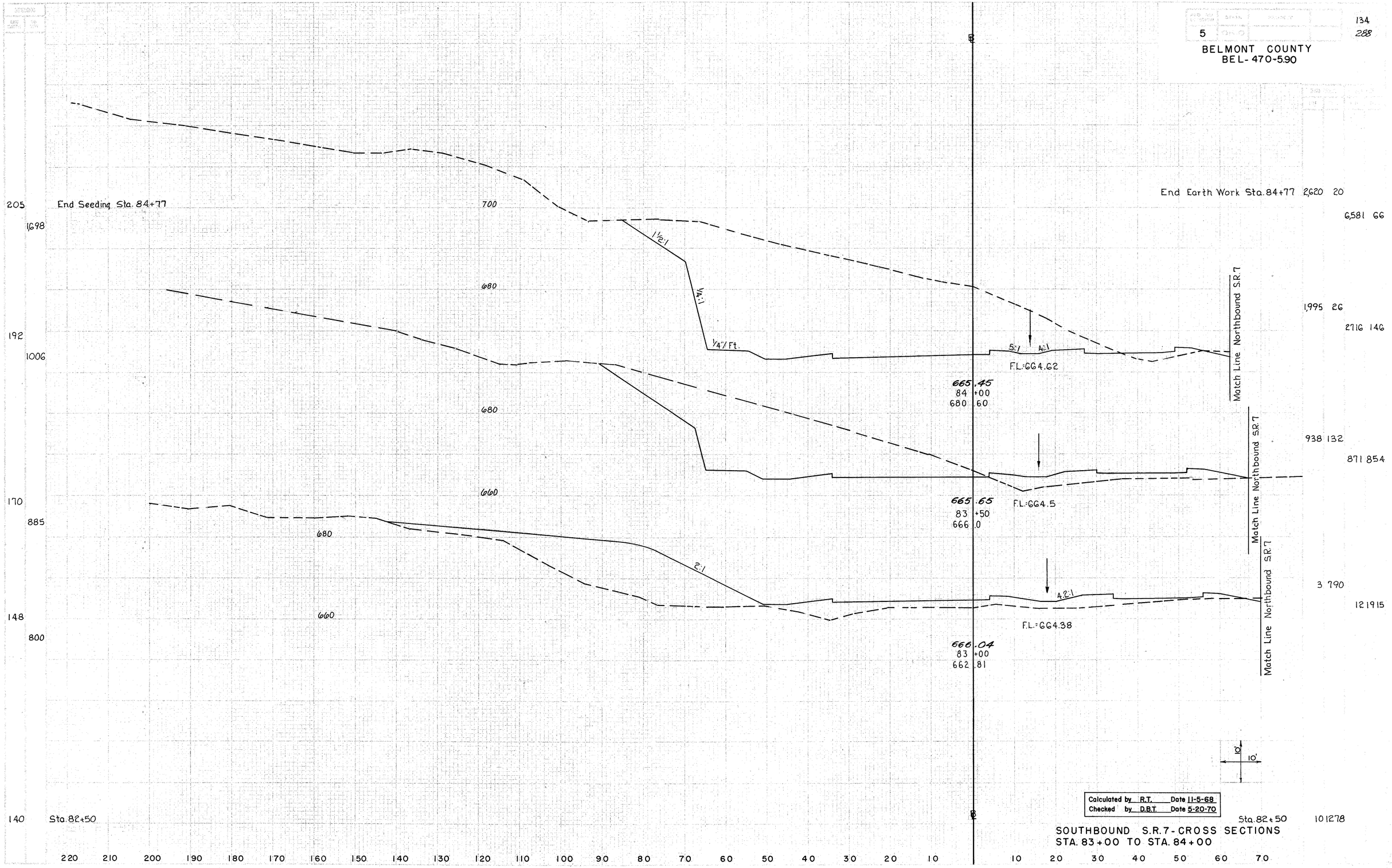

SOUTHBOUND S.R.7 - CROSS SECTIONS
STA. 83+00 TO STA. 84+00

5

135
288

BELMONT COUNTY
BEL-470-5.90

Station	Elevation	Description	End Area Cut	End Area Fill	Volume Cut	Volume Fill
57+00	662.0	End Width 14 Sq. Yds. 144	14	0		
					50	0
56+00	662.5	End Width 12 Sq. Yds. 133	13	0		
					50	0
55+00	662.7	End Width 12 Sq. Yds. 133	14	0		
					52	
54+00	663.1	End Width 12 Sq. Yds. 133	14	0		
					48	0
53+00	663.5	End Width 12 Sq. Yds. 156	12	0		
					52	0
52+00	663.3	SEEDING End Width 16 Sq. Yds. 93	16	0		
					36	0
Begin Seeding Sta. 51+35.76 End Width 10		Begin Earthwork Sta. 51+35.76 Area	14	0		

Station	Elevation	Description	End Area Cut	End Area Fill	Volume Cut	Volume Fill
63+00	660.7	End Width 14 Sq. Yds. 183	11	2		
					39	20
62+00	660.8	End Width 19 Sq. Yds. 211	10	9		
					35	37
61+00	661.0	End Width 19 Sq. Yds. 183	9	11		
					33	26
60+00	661.4	End Width 14 Sq. Yds. 167	9	3		
					28	13
59+00	661.4	End Width 16 Sq. Yds. 172	6	4		
					28	15
58+00	661.9	SEEDING End Width 15 Sq. Yds. 161	9	4		
					43	7
Sta. 57+00			14	0		

Station	Elevation	Description	End Area Cut	End Area Fill	Volume Cut	Volume Fill
69+00	661.9	End Width 12 Sq. Yds. 144	15	0		
					48	6
68+00	661.9	End Width 14 Sq. Yds. 150	11	3		
					39	9
67+00	661.0	End Width 13 Sq. Yds. 144	10	2		
					37	7
66+00	660.7	End Width 13 Sq. Yds. 144	10	2		
					46	4
65+00	660.8	End Width 13 Sq. Yds. 144	15	0		
					56	0
64+00	660.7	SEEDING End Width 13 Sq. Yds. 150	15	0		
					48	4
Sta. 63+00			11	2		

Station	Elevation	Description	End Area Cut	End Area Fill	Volume Cut	Volume Fill
75+00	663.7	End Width 14 Sq. Yds. 156	10	2		
					37	9
74+00	663.4	End Width 14 Sq. Yds. 156	10	3		
					41	9
73+00	663.0	End Width 14 Sq. Yds. 150	12	2		
					46	5
72+00	662.8	End Width 13 Sq. Yds. 139	13	1		
					52	2
71+00	662.5	End Width 12 Sq. Yds. 133	15	0		
					56	0
70+00	662.3	SEEDING End Width 12 Sq. Yds. 133	15	0		
					56	0
			15	0		

Calculated by R.S. 7-10-73
Checked by M.H. 7-11-73

10'
10'

NORTHBOUND S.R. 7 Rt.
STA. 52+00 TO STA. 75+00

BELMONT COUNTY
BEL-470-5.90

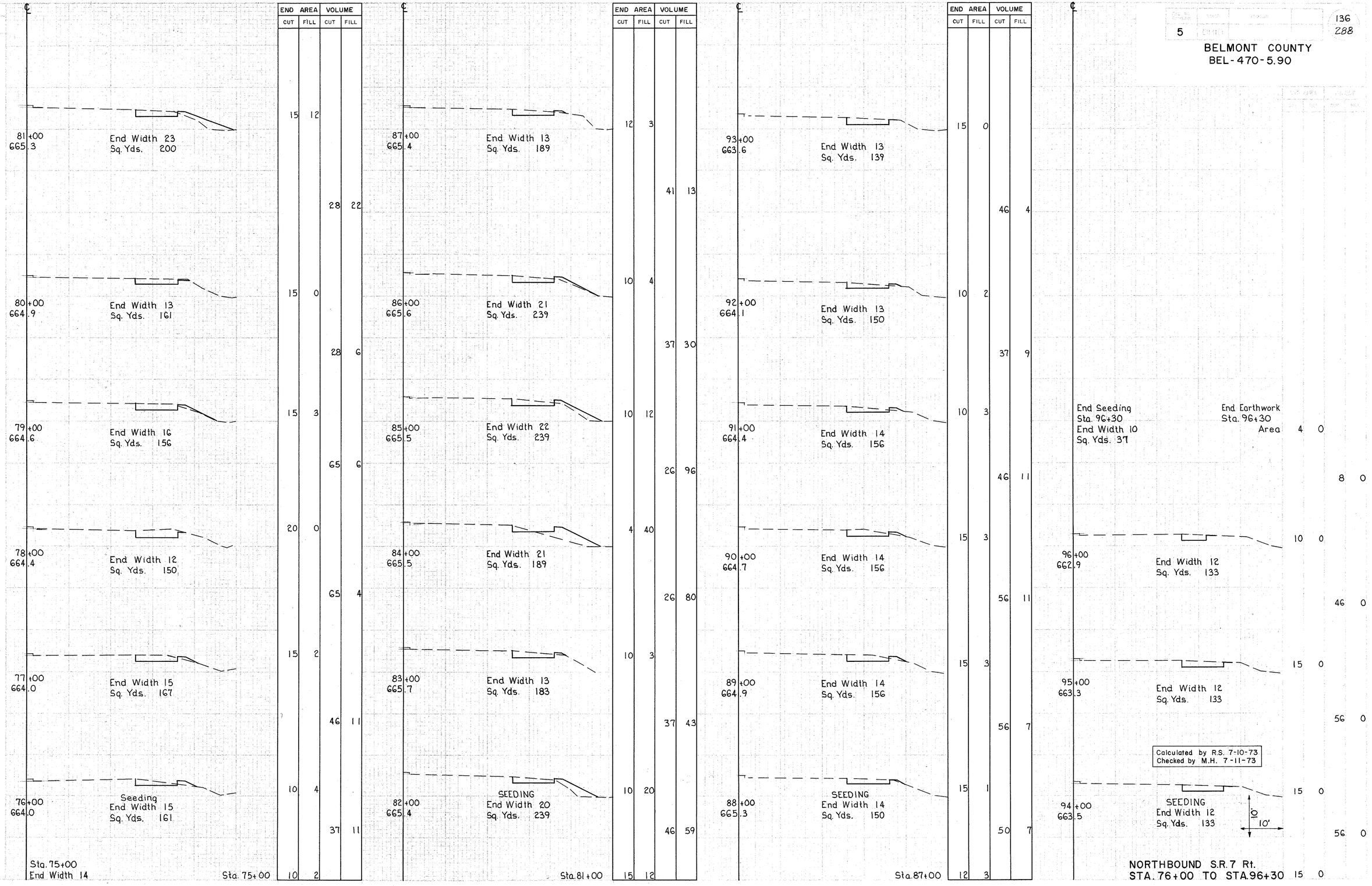

END AREA CUT	END AREA FILL	VOLUME CUT	VOLUME FILL
15	12		
		28	22
15	0		
		28	6
15	3		
		65	6
20	0		
		65	4
15	2		
		46	11
10	4		
		37	11
10	2		

END AREA CUT	END AREA FILL	VOLUME CUT	VOLUME FILL
12	3		
		41	13
10	4		
		37	30
10	12		
		26	96
4	40		
		26	80
10	3		
		37	43
10	20		
		46	59
15	12		

END AREA CUT	END AREA FILL	VOLUME CUT	VOLUME FILL
15	0		
		46	4
10	2		
		37	9
10	3		
		46	11
15	3		
		56	11
15	3		
		56	7
15	1		
		50	7
12	3		

8	0
46	0
56	0
15	0
56	0
15	0

FED. RD. DIVISION	STATE	PROJECT	
5	OHIO		

137
288

BELMONT COUNTY
BEL-470-5.90

NOTES: (a) EXPANSION JOINT, 3/4" MIN. PREFORMED FILLER 705.03.
(b) NO. 8 DEFORMED STEEL BARS, 12" LONG, SPACED ON STAGGERED (EXCEPT TYPE D) 4' CENTERS. THE END TERMINAL WILL REQUIRE SHORTER DOWELS BETWEEN POINTS A & C. OMIT DOWELS WHEN TOP IS CONSTRUCTED INTEGRAL WITH THE BASE.
(c) 1" RADIUS OR 3/4" CHAMFER.
(d) PERMISSIBLE 10" RADIUS.
(e) PERMISSIBLE 1" RADIUS.

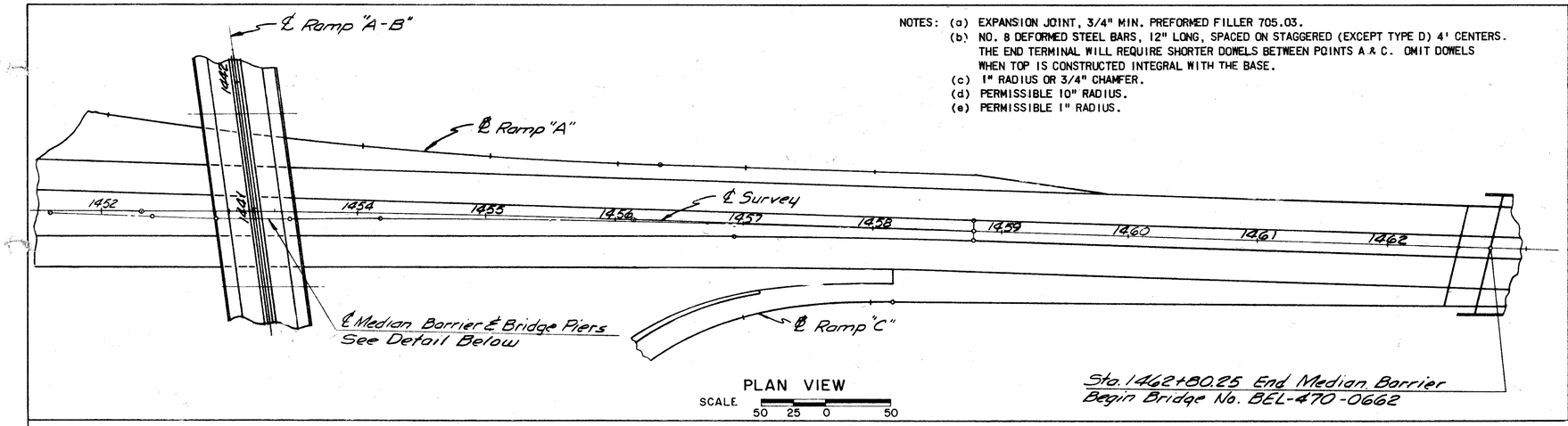

PLAN VIEW
SCALE 50 25 0 50

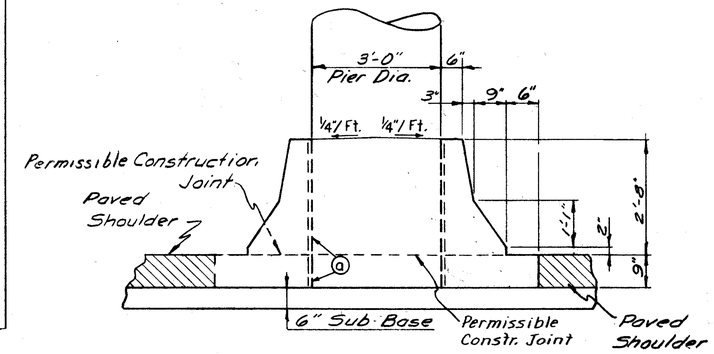

SECTION "A-A"

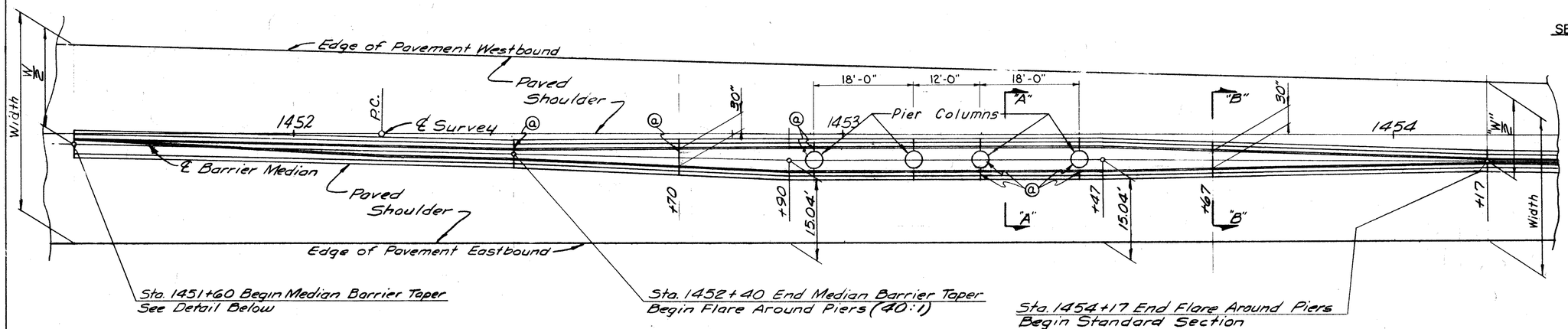

DETAIL AROUND BRIDGE PIERS
SCALE 10 5 0 10

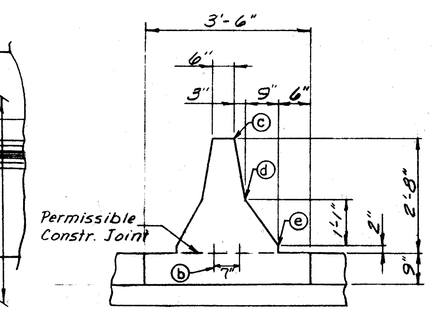

STANDARD SECTION

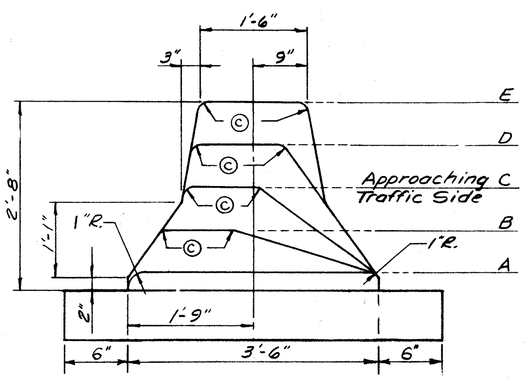

DETAIL MEDIAN BARRIER TAPER

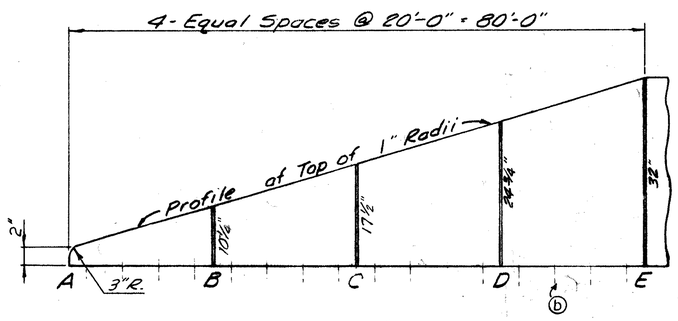

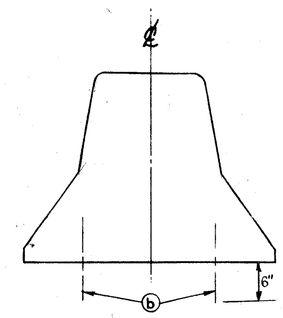

POSITION KEY
For # 4 Longitudinal Reinforcing Bars

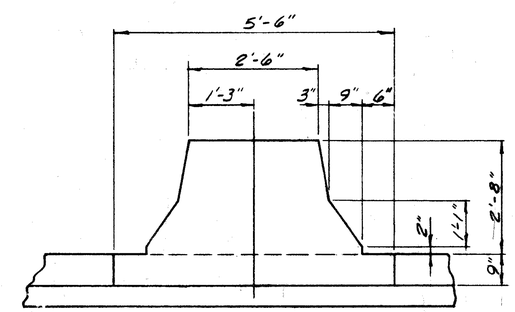

SECTION "B-B"

Detail on Sh. 4 of Std. Construction Drawing MC-9 govern

Drawing MC-9 shall govern where there are differences in dimensions. ~~(Also see detail on Sh. 4)~~

CONCRETE BARRIER, TYPE A

FED. RD. DIVISION	STATE	PROJECT	
5	OHIO		

138
288

BELMONT COUNTY
BEL - 470 - 5.90

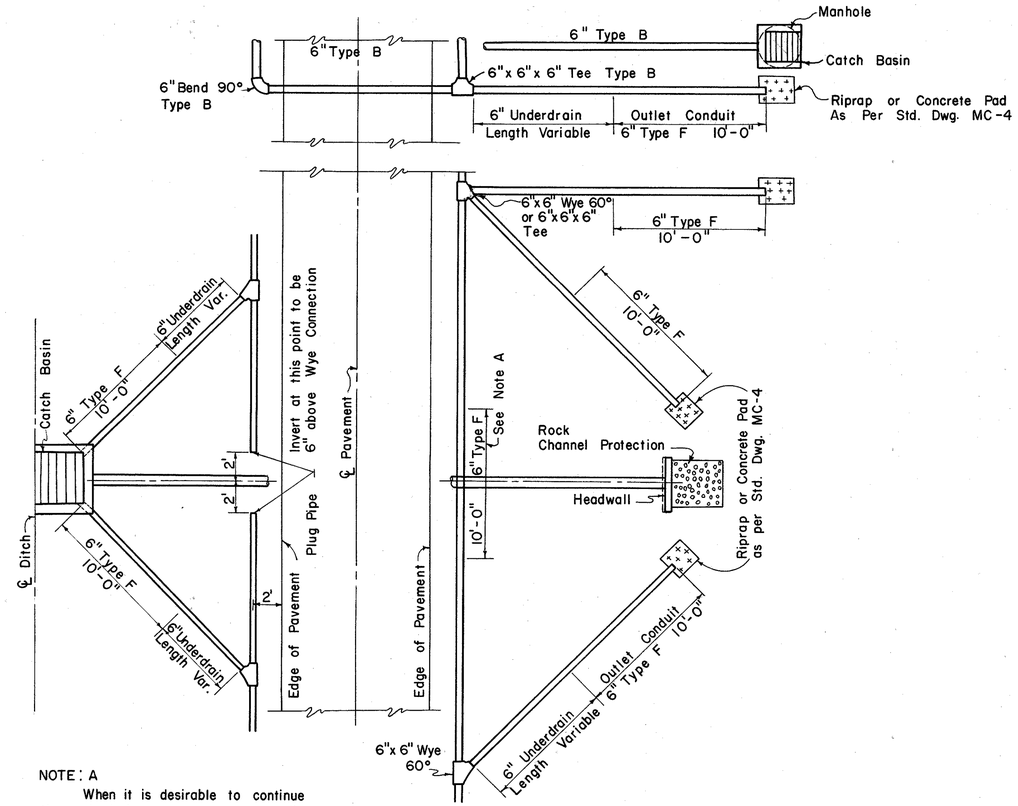

NOTE: A

When it is desirable to continue the underdrain across a traverse line, a 10' length of 6" Type F should be used to span the trench unless such crossing is 2' above the area of granular backfill.

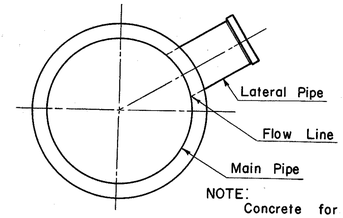

NOTE:

Concrete for grouting shall be the same as that specified for pertinent pipe.
Tee connection to be included with price of pipe.

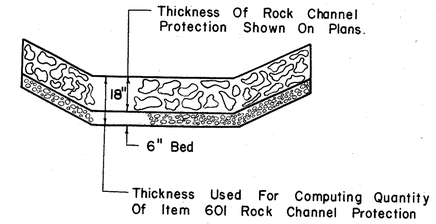

DETAIL OF ROCK CHANNEL PROTECTION

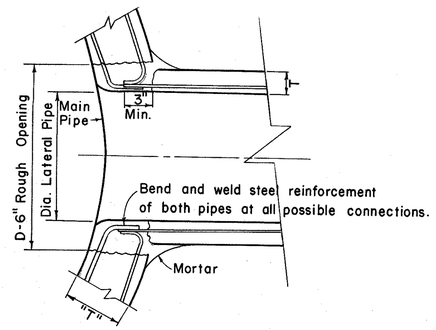

PRE - FABRICATED "T" CONNECTION
(No Scale)

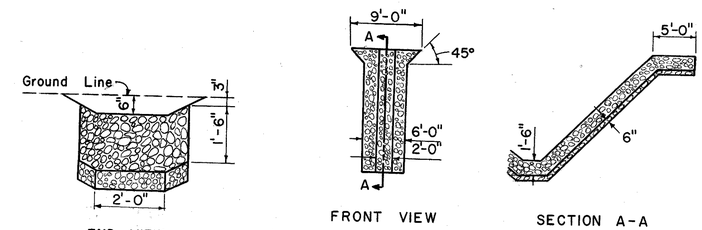

END VIEW

FRONT VIEW

SECTION A-A

ROCK FOR BACK SLOPE PROTECTION

Sta. 1448 + 62 - 134' Lt.
Sta. 1451 + 66 - 110' Rt.
Sta. 1458 + 20 - 70' Rt.

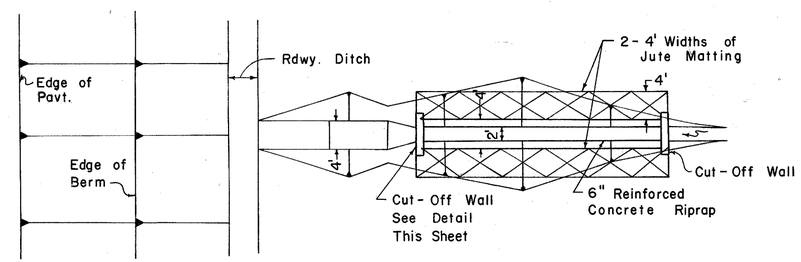

PLAN
Scale in Feet
10 5 0 10

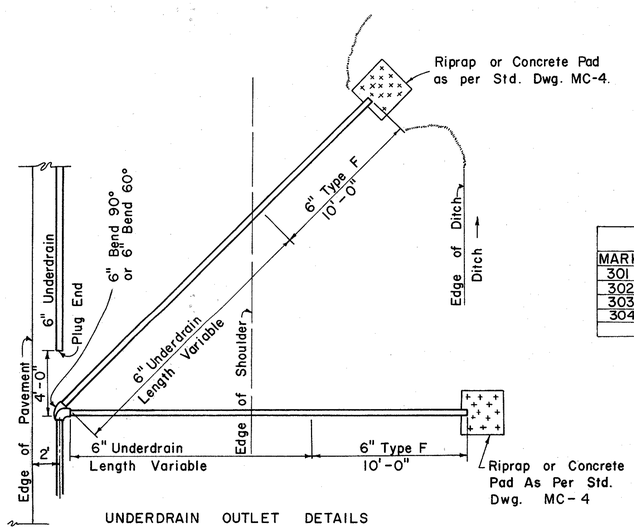

UNDERDRAIN OUTLET DETAILS

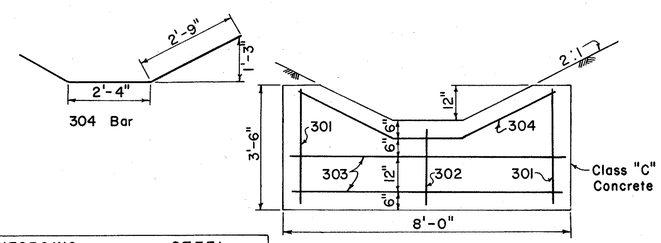

REINFORCING			STEEL		
MARK	SIZE	SHAPE	NO. REQ'D	LENGTH	WEIGHT
301	3/8" ø	Str't.	2	3'-2"	1.3
302	3/8" ø	Str't.	1	2'-0"	0.8
303	3/8" ø	Str't.	2	1'-6"	2.8
304	3/8" ø	Bn't.	1	7'-10"	2.9
			TOTAL	(lbs.)	7.8

CUT - OFF WALL DETAIL FOR CASCADE

Scale In Feet
2 1 0 2

NOTE:

All steel to be placed 2" clear. Cost of cut-off wall to be included in cost of item 601 riprap, using 6" reinforced concrete slab, as per plan.

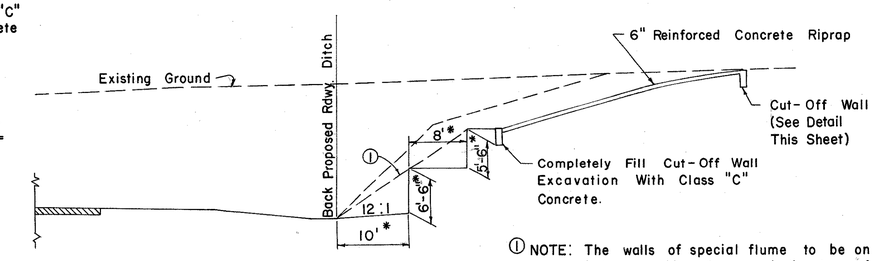

PROFILE
Scale in Feet
10 5 0 10

CASCADE DETAIL
Sta. 1447 + 20 - Rt. Ramp A - B
Sta. 92 + 70 - Lt. S.B. SR 7
Sta. 1442 + 60 - Rt. M1

1 NOTE: The walls of special flume to be on 1:1 slope between this plane and the top of rock. Below the plane the walls will be vertical.

* NOTE: These dimensions are to be considered as approximate and may be varied during construction to conform with the natural planes of stratification encountered in the rock.

Cost of excavation for cascade to be included in item 203 excavation not including embankment construction.

MISCELLANEOUS DETAILS

FHWA REGION	STATE	PROJECT	
5	OHIO		

138A
288

BELMONT COUNTY
BEL-470-5.90

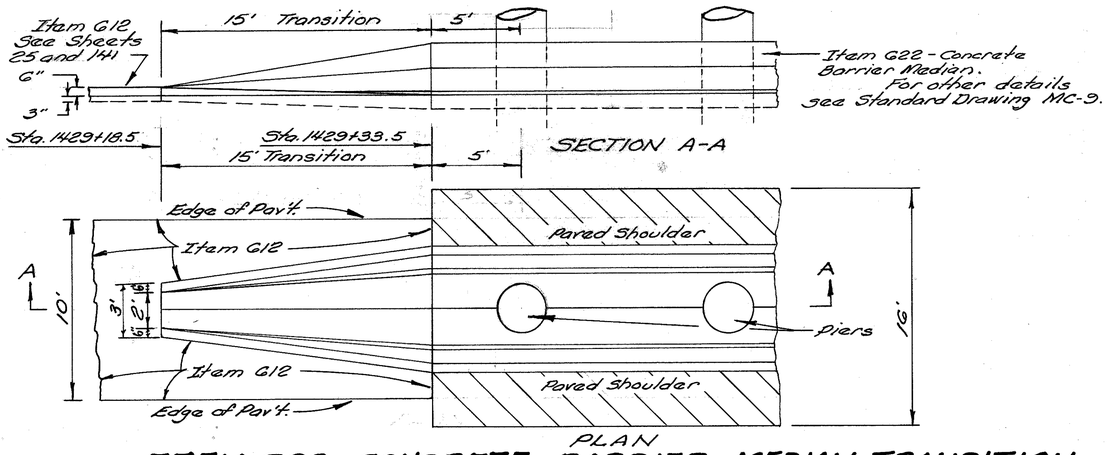

ITEM G22 - CONCRETE BARRIER MEDIAN TRANSITION

REINFORCING STEEL LIST FOR CONCRETE MEDIAN					
	STATION		MARK	NO.	LENGTH
	FROM	TO			
Mainline	1462+55.25	1462+80.25	AS 505	20	2' 7"
Ramps A&B	1439+65.09	1439+90.09	AS 505	20	2' 7"
Ramps A&B	1442+25.13	1442+45.13	AS 505	16	2' 7"
TOTALS = 56 × 2.5833 × 1.043 = 151 LBS.					

NOTES

For notes and details not shown see Standard Drawing AS-1-72.

Reinforcing steel shall not extend through construction joint.

Payment for Concrete Barrier shall be included in the unit price bid per sq. yd. of Approach Slab.

A Tack Coat shall be applied to the approach slab at the rate of 0.10 gal. per sq. yd.

The Jacking holes are not required when an asphalt surface course is used.

Refer to Standard Drawing MC-9 for barrier radii.

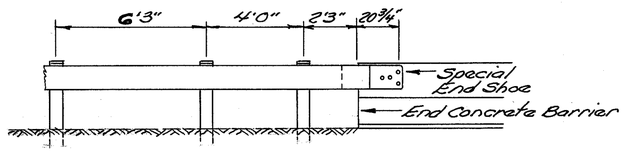

NOTE: At Sta. 1447+80.50 Ramp A Transition Standard Type 5 Guard Rail to Concrete Barrier Median. Transition shall be the same as shown in Detail A, except that guard rail is single rail and Type D, Connection shall be used.

Cost of all connections included in the unit price bid per lin. ft. for Item 622, Concrete Barrier, As Per Plan.

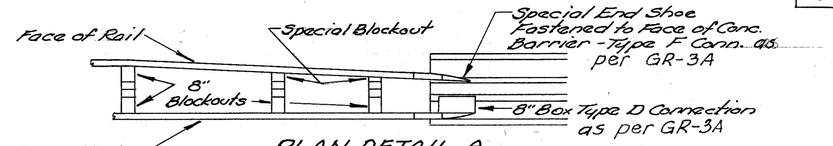

PLAN DETAIL A
STA. 90+02.40 NORTHBOUND S.R. 7

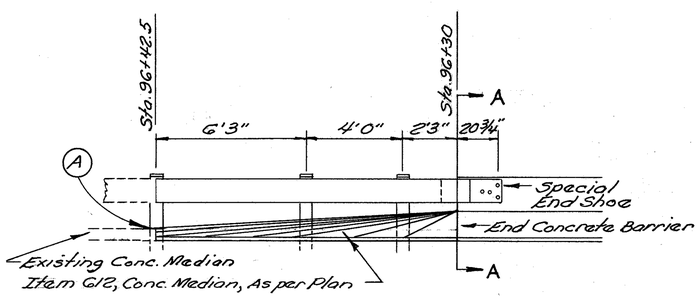

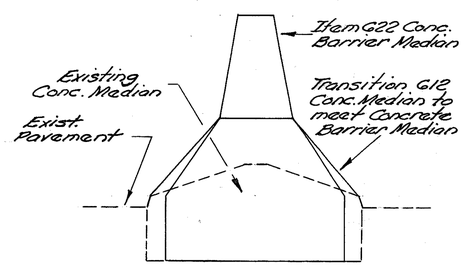

Note: Dash line is the shape of Conc. Median at point A.

SECTION A-A

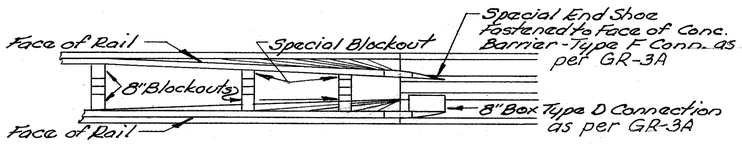

PLAN DETAIL B
NORTHBOUND STA. 96+30 TO STA. 96+42.5

GUARDRAIL TO CONCRETE BARRIER CONNECTION DETAILS

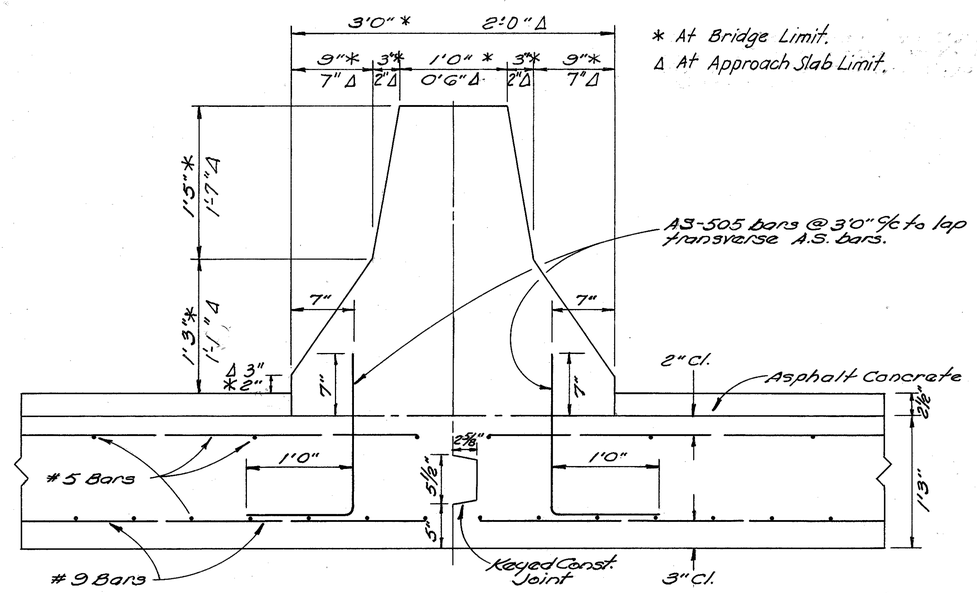

* At Bridge Limit.
Δ At Approach Slab Limit.

DETAIL OF CONCRETE BARRIER AT APPROACH SLAB

Rev. 1-10-78

FED. RD. DIVISION	STATE	PROJECT	
5	OHIO		

139
288

BELMONT COUNTY
BEL-470-5.90

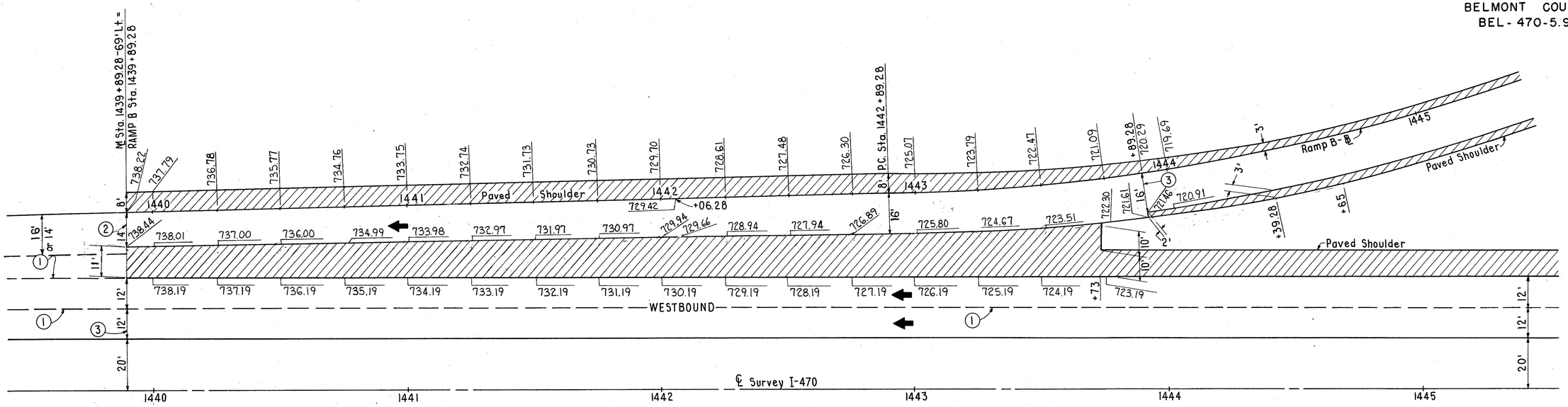

RAMP B WITH I-470

Scale in Feet
20 10 0 20

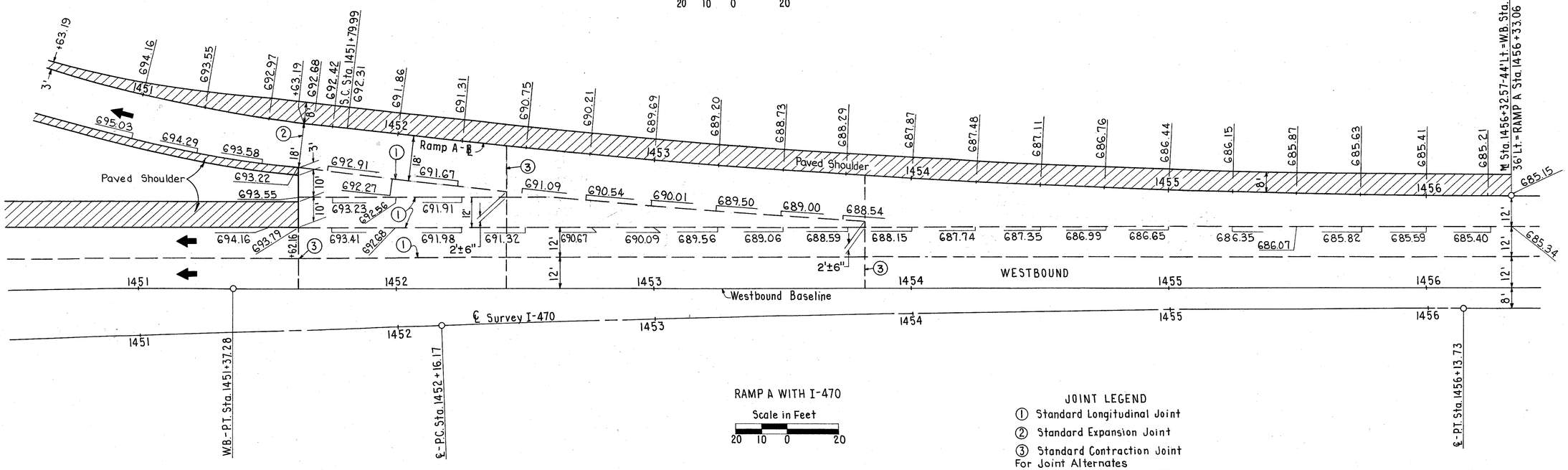

RAMP A WITH I-470

Scale in Feet
20 10 0 20

JOINT LEGEND

1. Standard Longitudinal Joint
2. Standard Expansion Joint
3. Standard Contraction Joint

For Joint Alternates
See Standard Drawing BP-9

NOTE: Elevations are at 25' intervals unless otherwise shown.

INTERSECTION DETAILS

FED. RD. DIVISION	STATE	PROJECT	
5	OHIO		

140
288

BELMONT COUNTY
BEL-470-5.90

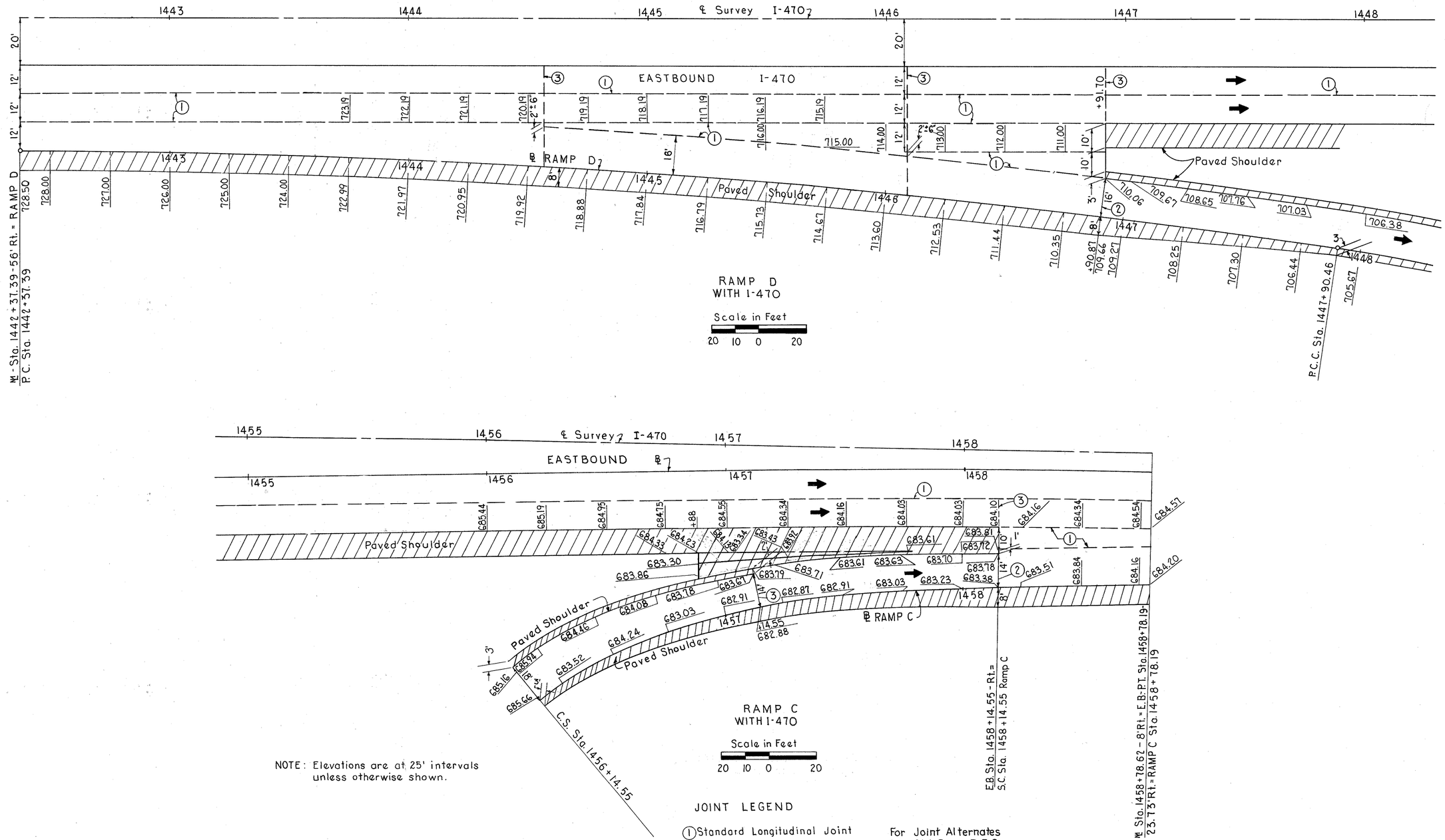

NOTE: Elevations are at 25' intervals unless otherwise shown.

JOINT LEGEND

1. Standard Longitudinal Joint
2. Standard Expansion Joint
3. Standard Contraction Joint

For Joint Alternates See Std. Dwg. B.P.-9

INTERSECTION DETAILS

FED. RD. DIVISION	STATE	PROJECT	
5	OHIO		

141
288

BELMONT COUNTY
BEL-470-5.90

PRESSURE RELIEF JOINT TYPE A

LOCATION & QUANTITIES

W.B. ℳ Sta. 1462+26.52 = 24.08 L.F.
E.B. ℳ Sta. 1462+13.00 = 39.18 L.F.
SR. 7 Sta. 77+25.39 = 24.08 L.F.
SR. 7 Sta. 77+36.89 = 24.08 L.F.
Ramp A-B Lt. Sta. 1442+85.76 = 16.06 L.F.
Ramp A-B Rt. Sta. 1442+82.25 = 16.06 L.F.
Ramp A-B Lt. Sta. 1439+28.00 = 16.06 L.F.
Ramp A-B Rt. Sta. 1439+25.00 = 16.06 L.F.
TOTAL 175.66 L.F.
TOTAL TO SUMMARY 176 L.F.

605 6" Shallow Pipe Underdrains, 707.01, Type III or 707.12 _ _ _ _ _ _ _ 190 L.F.

NOTE: FOR CONSTRUCTION DETAILS, SEE STANDARD CONSTRUCTION DRAWING BP-10.

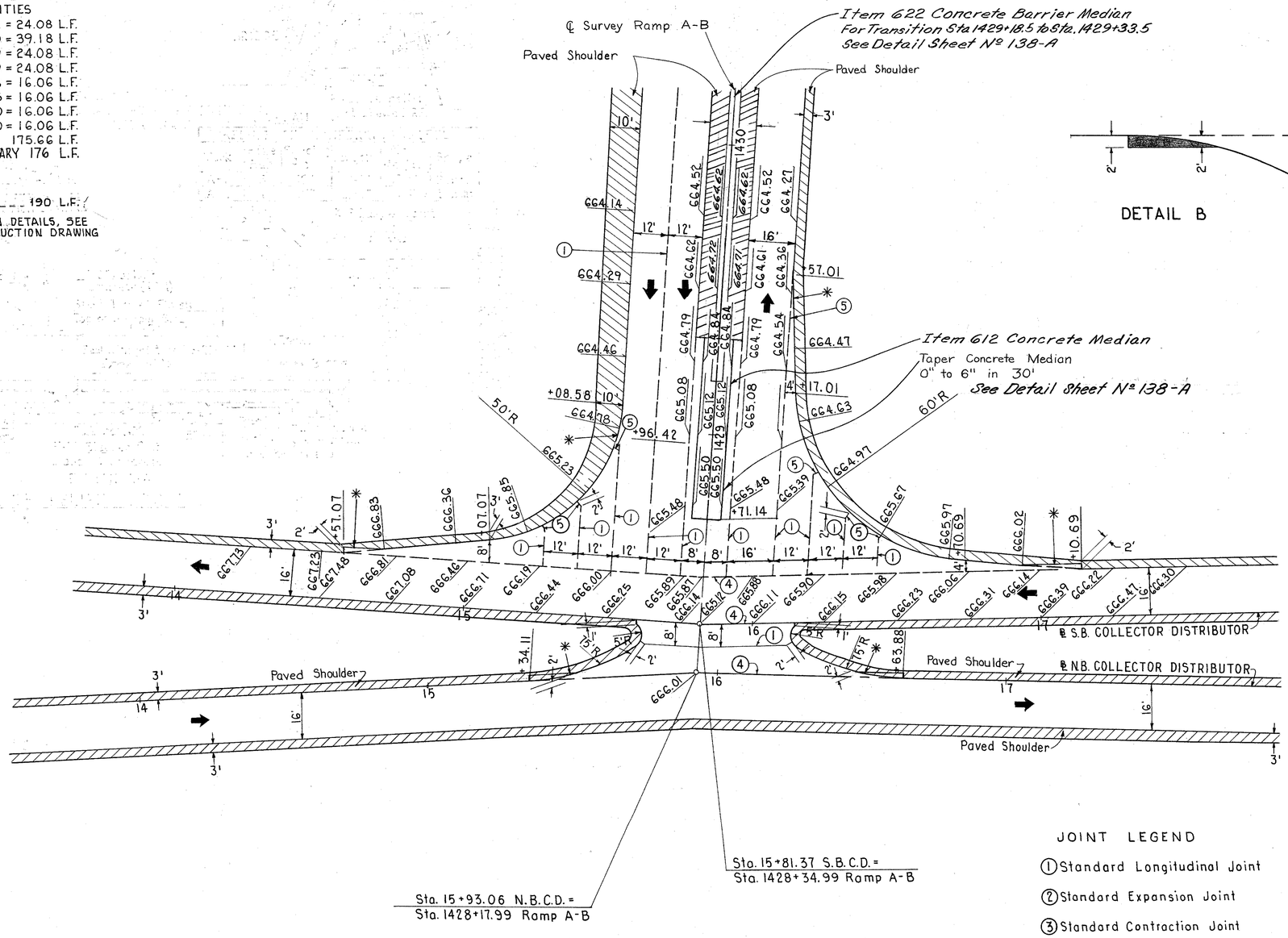

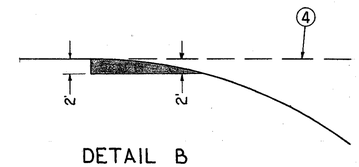

DETAIL B

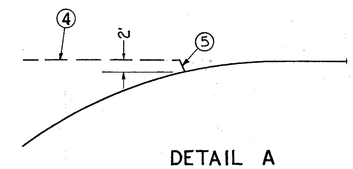

DETAIL A

✱ Either Detail A or Detail B may be used for returns.

NOTE: The Shaded Area shown on Detail B shall be constructed of *Item 305 Concrete Base. And surfaced with Item 301 with the Construction of the paved shoulder.*

NOTE: Elevations are at 2.5' intervals unless otherwise shown.

INTERSECTION RAMP AB WITH SR 7 COLLECTOR DISTRIBUTOR

Scale In Feet
20 10 0 20

JOINT LEGEND

1. Standard Longitudinal Joint
2. Standard Expansion Joint
3. Standard Contraction Joint
4. Key Joint without Tie bars
5. Expansion Joint without Dowels

INTERSECTION DETAILS

FED. RD. DIVISION	STATE	PROJECT	
5	OHIO		

142/288

BELMONT COUNTY
BEL-470-5.90

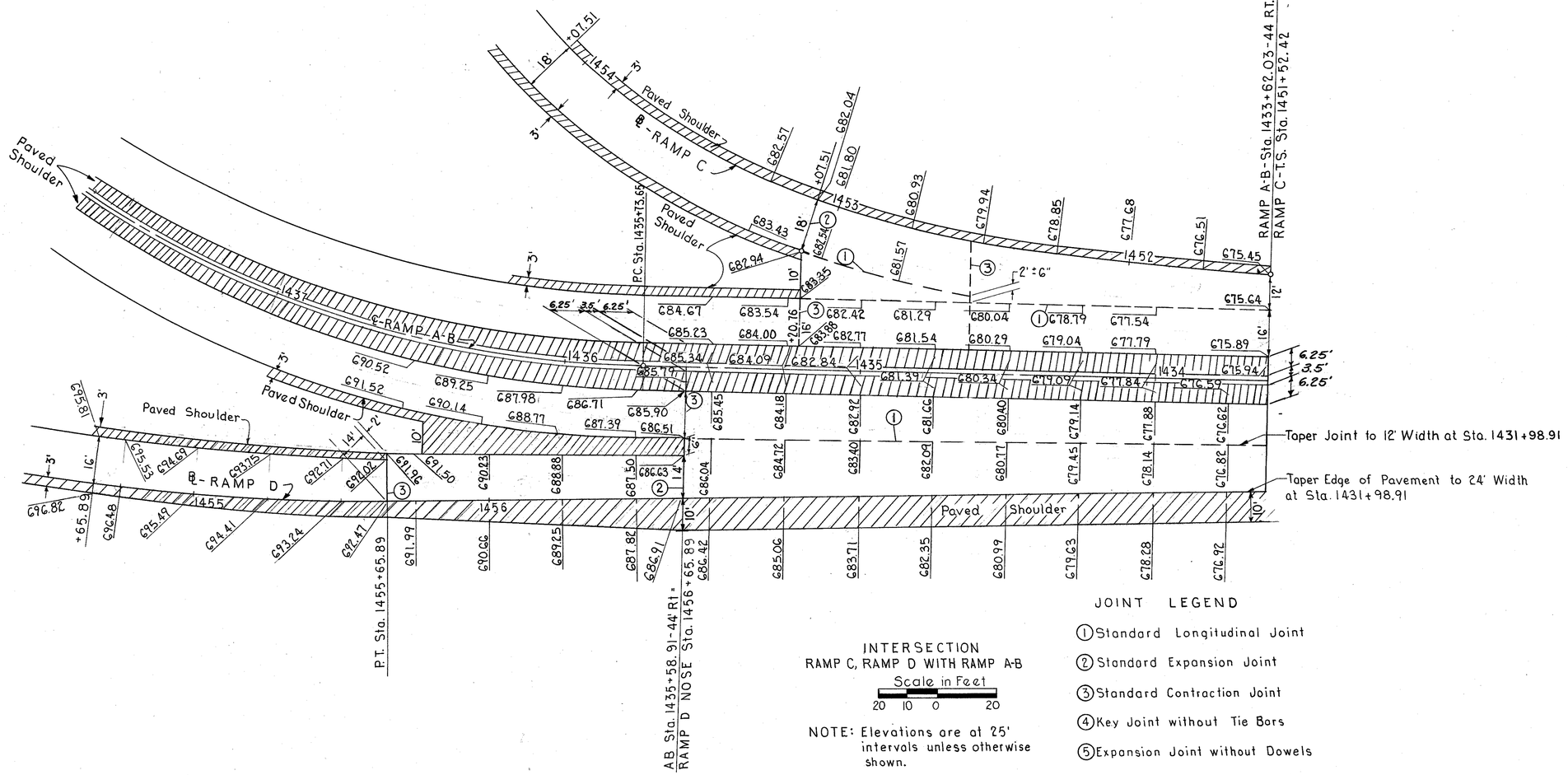

INTERSECTION
RAMP C, RAMP D WITH RAMP A-B

Scale in Feet
20 10 0 20

NOTE: Elevations are at 25' intervals unless otherwise shown.

JOINT LEGEND

1. Standard Longitudinal Joint
2. Standard Expansion Joint
3. Standard Contraction Joint
4. Key Joint without Tie Bars
5. Expansion Joint without Dowels

NOTE: Elevations are at 25' intervals unless otherwise shown.

INTERSECTION DETAILS

FED. RD. DIVISION	STATE	PROJECT	
5	OHIO		

143
288

BELMONT COUNTY
BEL-470-5.90

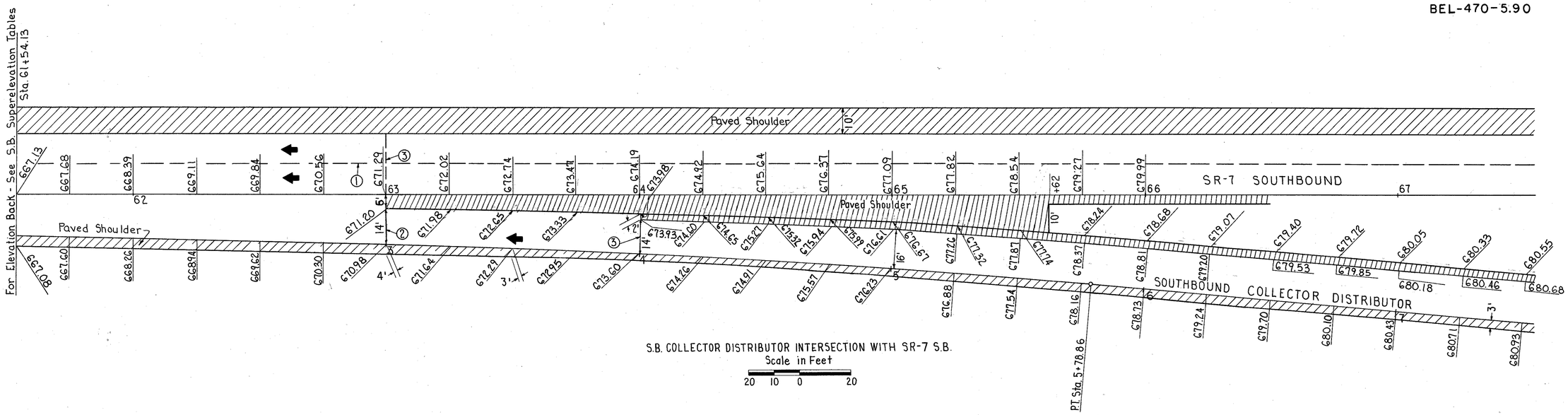

S.B. COLLECTOR DISTRIBUTOR INTERSECTION WITH SR-7 S.B.
Scale in Feet
20 10 0 20

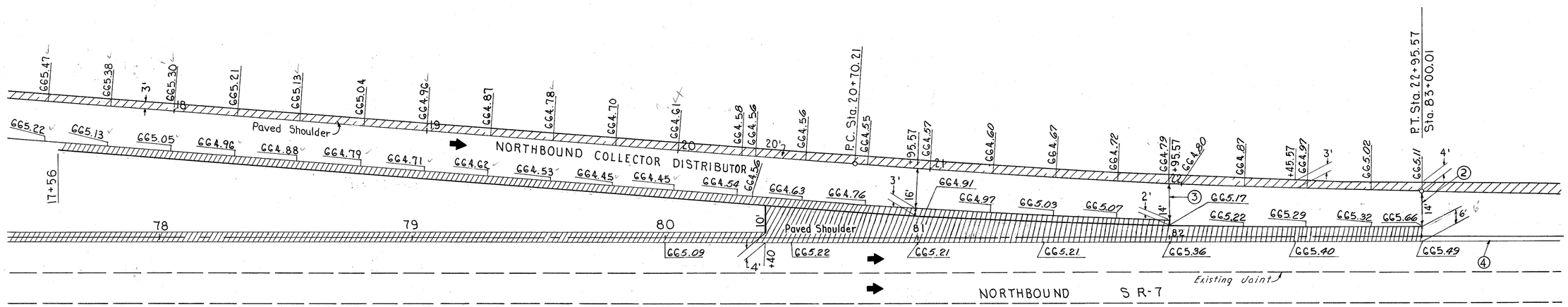

N.B. COLLECTOR DISTRIBUTOR INTERSECTION WITH SR-7 N.B.
Scale in Feet
20 10 0 20

JOINT LEGEND

1. Standard Longitudinal Joint
2. Standard Expansion Joint
3. Standard Contraction Joint
4. Key Joint without Tie bars
5. Expansion Joint without Dowels
   For Joint Alternates
   See Std. Dwg. BP-9

NOTE: Elevations are at 25' intervals unless otherwise shown.

INTERSECTION DETAILS

FED. RD. DIVISION	STATE	PROJECT	
5	OHIO		

144
288

BELMONT COUNTY
BEL-470-5.90

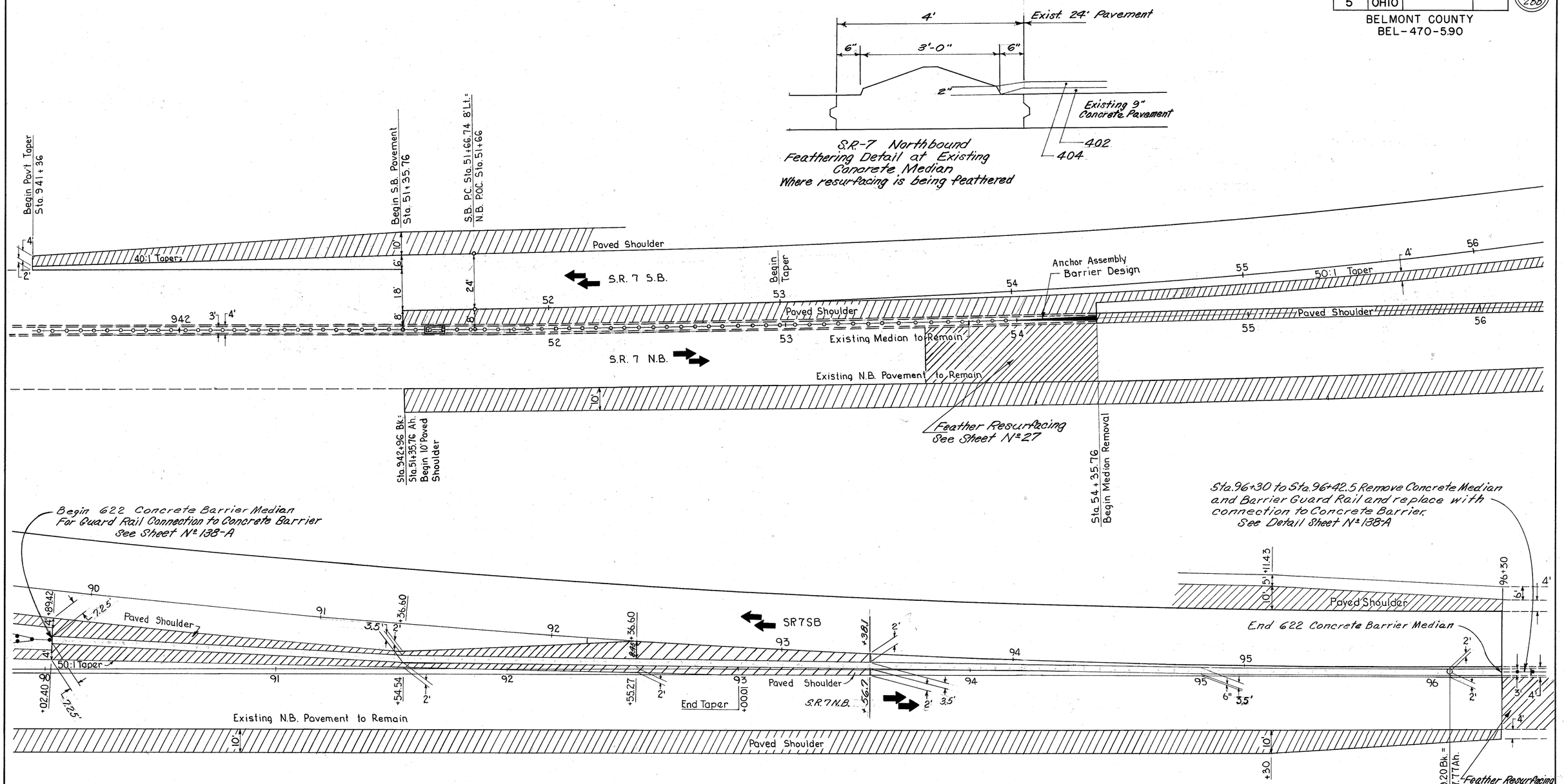

CENTER LINE LOCATION of CONCRETE BARRIER MEDIAN

S.R.7-N.B. Sta. 90+02.40 to Sta. 91+54.54 - Center of Median

S.R.7-N.B. Sta. 91+54.54 to Sta. 95+56.7 - 3.75' Lt. of Lt. Edge of N.B. Collector Distributor Decel Lane & N.B. S.R.7 (Existing)

S.R.7-N.B. Sta. 93+56.7 to Sta. 96+30 - Varies ~ 3.75' to 2' Lt. edge Pavement N.B. S.R.7

SR 7 MEDIAN DETAIL

FED. RD. DIVISION	STATE	PROJECT	
5	OHIO		

BELMONT COUNTY
BEL - 470 - 5.90

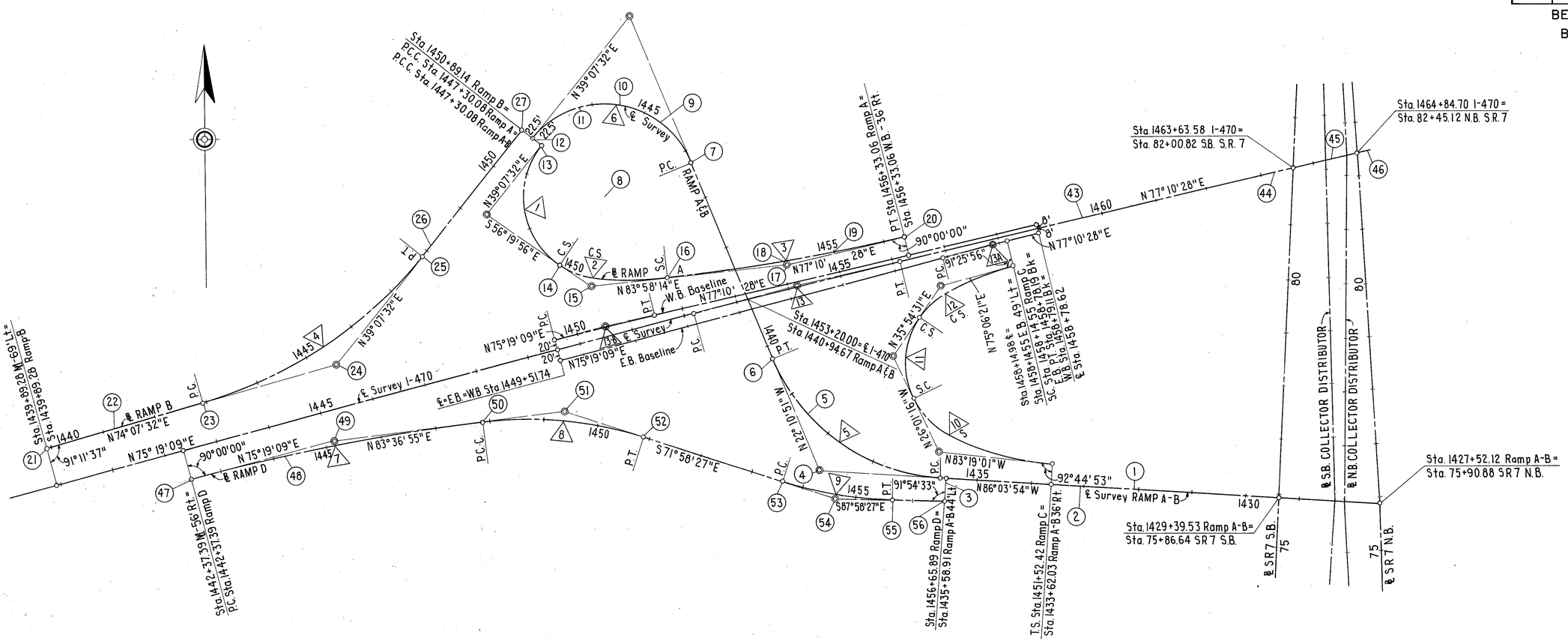

CIRCULAR CURVE DATA

CURVE NO.	BEGINNING - P.C., P.C.C. or S.C. STATION		NORTH	EAST	INTERSECTION POINT STATION	NORTH	EAST	ENDING - P.T., P.C.C. or C.S. STATION		NORTH	EAST	Δ	D	R	T	L	E	REMARKS
1	1447+30.08	P.C.C.	751274.347	393006.432	1448+95.09	751146.338	492902.307	1449+79.99	C.S.	751054.860	493039.639	95° 27' 28"	38° 11' 50"	150.00	165.01	249.91	73.00	RAMP A
3	1451+79.99	S.C.	751028.882	493235.044	1454+06.79	751052.705	493460.589	1456+33.06	P.T.	751103.051	493681.730	6° 47' 46"	1° 30' 00"	3,819.72	226.80	453.07	6.73	RAMP A
4	1442+89.28	P.C.	750799.323	492371.211	1445+47.36	750869.916	492619.449	1447+89.28	P.T.	751070.125	492782.303	35° 00' 00"	7° 00' 00"	818.51	258.08	500.00	39.72	RAMP B
5	1435+73.65	P.C.	750652.547	493740.491	1437+96.91	750667.869	493517.755	1439+72.93	P.T.	750874.607	493433.467	63° 53' 03"	16° 00' 00"	358.10	223.26	399.28	63.90	RAMP A - B
6	1443+72.73	P.C.	751244.824	493282.529	1446+63.79	751514.345	493172.624	1447+30.08	P.C.C.	751288.551	492988.980	118° 41' 37"	37° 30' 00"	172.50	291.06	357.35	165.84	RAMP A - B
7	1442+37.39	P.C.	750659.225	492354.340	1445+14.41	750729.431	492622.316	1447+90.46	P.C.C.	750760.237	492897.618	8° 17' 46"	1° 30' 00"	3,819.72	277.02	553.07	10.03	RAMP D
8	1447+90.46	P.C.C.	750760.237	492897.618	1449+45.38	750777.465	493051.571	1450+95.59	P.T.	750729.526	493198.887	24° 24' 38"	8° 00' 00"	716.20	154.92	305.13	16.56	RAMP D
9	1453+65.89	P.C.	750645.882	493455.921	1454+66.55	750614.733	493551.640	1455+65.89	P.T.	750611.175	493652.237	16° 00' 00"	8° 00' 00"	716.20	100.66	200.00	7.04	RAMP D
11	1454+52.42	S.C.	750797.971	493695.401	1455+42.42	750878.848	493655.918	1456+14.55	C.S.	750951.749	493708.701	64° 55' 47"	38° 11' 50"	150.00	90.00	162.13	24.93	RAMP C
13	1452+16.17	P.C.	750961.454	493286.977	1454+14.97	751011.837	493479.287	1456+13.73	P.T.	751055.967	493673.127	1° 51' 19"	0° 28' 00"	12,277.67	198.80	397.56	1.61	I-470 ℄
13A	1456+92.66	P.C.	751062.861	493752.944	1457+85.43	751086.372	493842.735	1458+78.19	P.T.	751106.965	493933.190	1° 51' 19"	1° 00' 00"	5,729.58	92.77	185.53	0.75	I-470 EB Baseline
13B	1449+51.74	P.C.	750913.785	493026.111	1450+44.51	750937.296	493115.852	1451+37.27	P.T.	750957.889	493206.307	1° 51' 19"	1° 00' 00"	5,729.58	92.77	185.53	0.75	I-470 WB Baseline

SPIRAL CURVE DATA

CURVE NO.	BEGINNING - T.S. or C.S. STATION		NORTH	EAST	INTERSECTION POINT OF SPIRAL STATION	NORTH	EAST	ENDING - S.C. or S.T. STATION		NORTH	EAST	θs	Ls	L.T.	S.T.	L.C.	Xc	Yc	P	K	Dc	Rc	REMARKS
10	1451+52.42	T.S.	750673.940	493954.082	1453+64.01	750698.564	493743.930	1454+52.42	S.C.	750797.971	493695.401	57° 17' 45"	300.00	211.59	110.62	286.88	271.36	93.08	24.13	145.14	38° 11' 50"	150	RAMP C

COMPOUND SPIRAL CURVE DATA

CURVE NO.	BEGINNING - C.S. or S.C. STATION		NORTH	EAST	INTERSECTION POINT OF SPIRAL STATION	NORTH	EAST	ENDING - S.C. or C.S. STATION		NORTH	EAST	Δ1+Δ2	θa	La	T1	T2	Pa	D1	D2	R1	R2	REMARKS
2	1449+79.99	C.S.	751054.860	493039.639	1450+52.57	751014.623	493100.045	1451+79.99	S.C.	751028.882	493235.044	39° 41' 50"	36° 41' 50"	200.00	72.58	135.75	10.52	38° 11' 50"	1° 30' 00"	150.00	3,819.72	RAMP A
12	1456+14.55	C.S.	750951.749	493708.701	1456+86.17	751009.758	493750.706	1458+14.55	S.C.	751044.841	493882.610	39° 11' 50"	37° 11' 50"	200.00	71.62	136.49	10.66	38° 11' 50"	1° 00' 00"	150.00	5,729.58	RAMP C

NOTE:
For Geometric Layout of Work
Along S.R.-7 - See Sheet No. 143.

LEGEND

- 13 — CURVE NUMBER
- 10 S — SPIRAL CURVE NUMBER
- 2 C.S. — COMPOUND SPIRAL CURVE NUMBER
- (2) — REFERENCES

Calculated by M. H. Date 1/15/68
Checked by G. F. Date 2/14/68

GEOMETRIC LAYOUT

D.F.

FED RD DIVISION	STATE	PROJECT	
5	OHIO		

146
2.38

BELMONT COUNTY
BEL-470-5.90

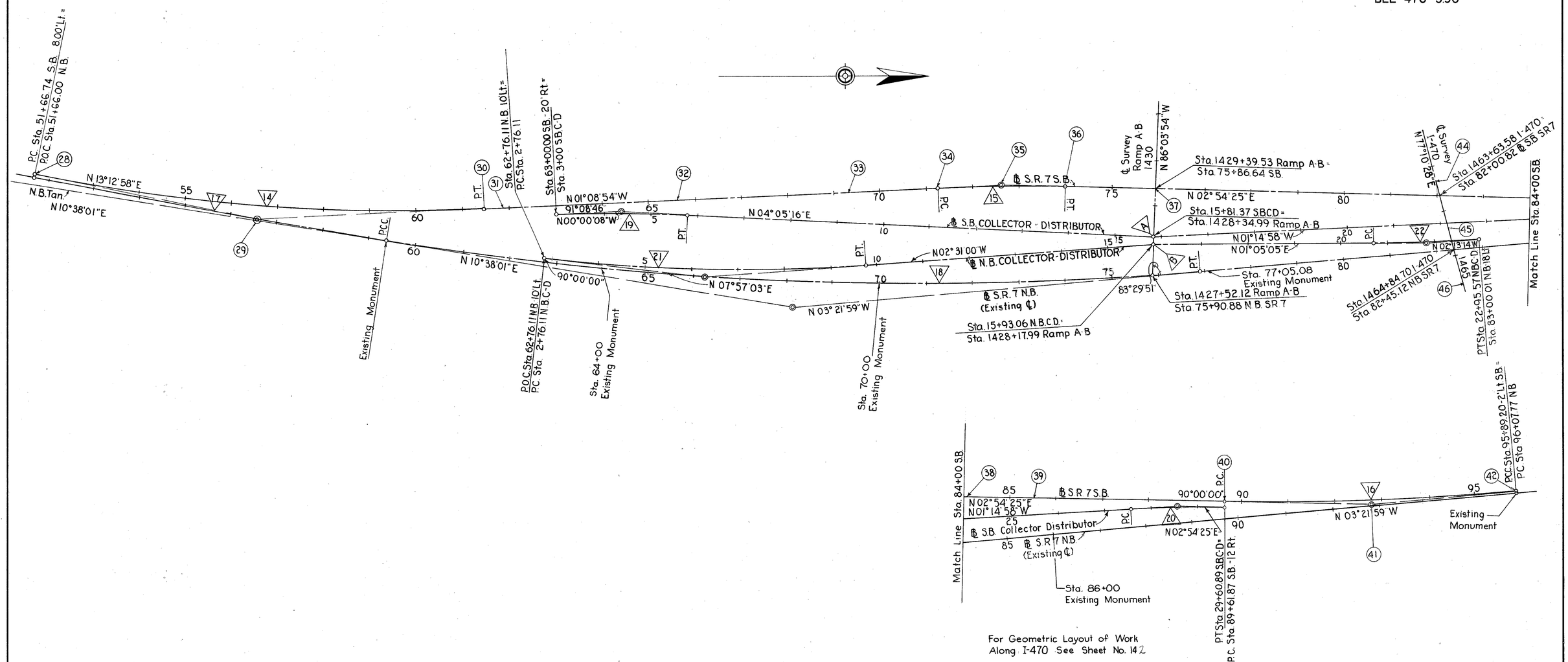

For Geometric Layout of Work Along I-470 See Sheet No. 142

CIRCULAR CURVE DATA

CURVE NO.	BEGINNING - P.C. or P.C.C. STATION		NORTH	EAST	INTERSECTION POINT STATION	NORTH	EAST	ENDING - P.T. or P.C.C. STATION		NORTH	EAST	Δ	D	R	T	L	E	REMARKS
14	51+66.74	P.C.	748197.631	494276.421	56+59.02	748676.872	494388.968	61+46.13	P.T.	749169.053	494379.102	14° 21' 52"	1° 28' 00"	3,906.53	492.28	979.39	30.89	SOUTHBOUND S.R. 7
15	71+24.96	P.C.	750147.674	494359.484	72+63.27	750285.956	494356.712	74+01.46	P.T.	750424.088	494363.726	4° 03' 19"	1° 28' 00"	3,906.53	138.31	276.50	2.45	SOUTHBOUND S.R. 7
16	89+61.87	P.C.	751982.491	494442.861	92+75.85	752296.067	494458.784	95+89.20	P.T.	752609.505	494440.347	6° 16' 24"	1° 00' 00"	5,729.58	313.98	627.33	8.60	SOUTHBOUND S.R. 7
17	41+70.75	P.C.	747234.043	494028.757	50+56.53	748083.199	494280.830	59+40.75	P.C.C.	748953.768	494444.281	5° 54' 00"	0° 20' 00"	17,188.74	885.78	1,770.00	22.81	NORTHBOUND S.R. 7 EXISTING
18	59+40.75	P.C.C.	748953.768	494444.281	68+20.13	749818.047	494606.551	76+90.75	P.T.	750695.910	494554.913	14° 00' 00"	0° 48' 00"	7,161.98	879.38	1,750.00	53.76	NORTHBOUND S.R. 7 EXISTING
19	3+00	P.C.	749323.277	494396.012	4+39.49	749462.767	494396.007	5+78.86	P.T.	749601.902	494405.951	4° 05' 24"	1° 28' 00"	3,906.53	139.49	278.86	2.49	S.B. COLLECTOR DISTRIBUTOR
20	27+53.89	P.C.	751774.103	494451.848	28+57.85	751878.038	494449.581	29+60.89	P.T.	751981.864	494454.853	4° 09' 23"	2° 00' 00"	2,864.79	103.96	207.00	1.89	S.B. COLLECTOR DISTRIBUTOR
21	2+76.11	P.C.	749286.085	494488.524	6+26.00	749632.612	494536.922	9+73.94	P.T.	749982.165	494521.558	10° 28' 03"	1° 30' 00"	3,819.72	349.89	697.83	15.99	N.B. COLLECTOR DISTRIBUTOR
22	20+70.21	P.C.	751077.752	494503.405	21+82.92	751190.442	494505.539	22+95.57	P.T.	751303.067	494501.172	3° 18' 19"	1° 28' 00"	3,906.53	112.71	225.36	1.63	N.B. COLLECTOR DISTRIBUTOR
A					15+81.37	750601.862	494477.415					5° 20' 14"						S.B. COLLECTOR DISTRIBUTOR
B					15+93.06	750600.688	494494.372					3° 36' 05"						N.B. COLLECTOR DISTRIBUTOR

LEGEND

16 CURVE NUMBER

2 REFERENCES

Calculated by M.H. Date 1/15/68
Checked by G.F. Date 2/14/68

GEOMETRIC LAYOUT

D.F.

FED. RD. DIVISION	STATE	PROJECT	
5	OHIO		

147
288

BELMONT COUNTY
BEL-470-5.90

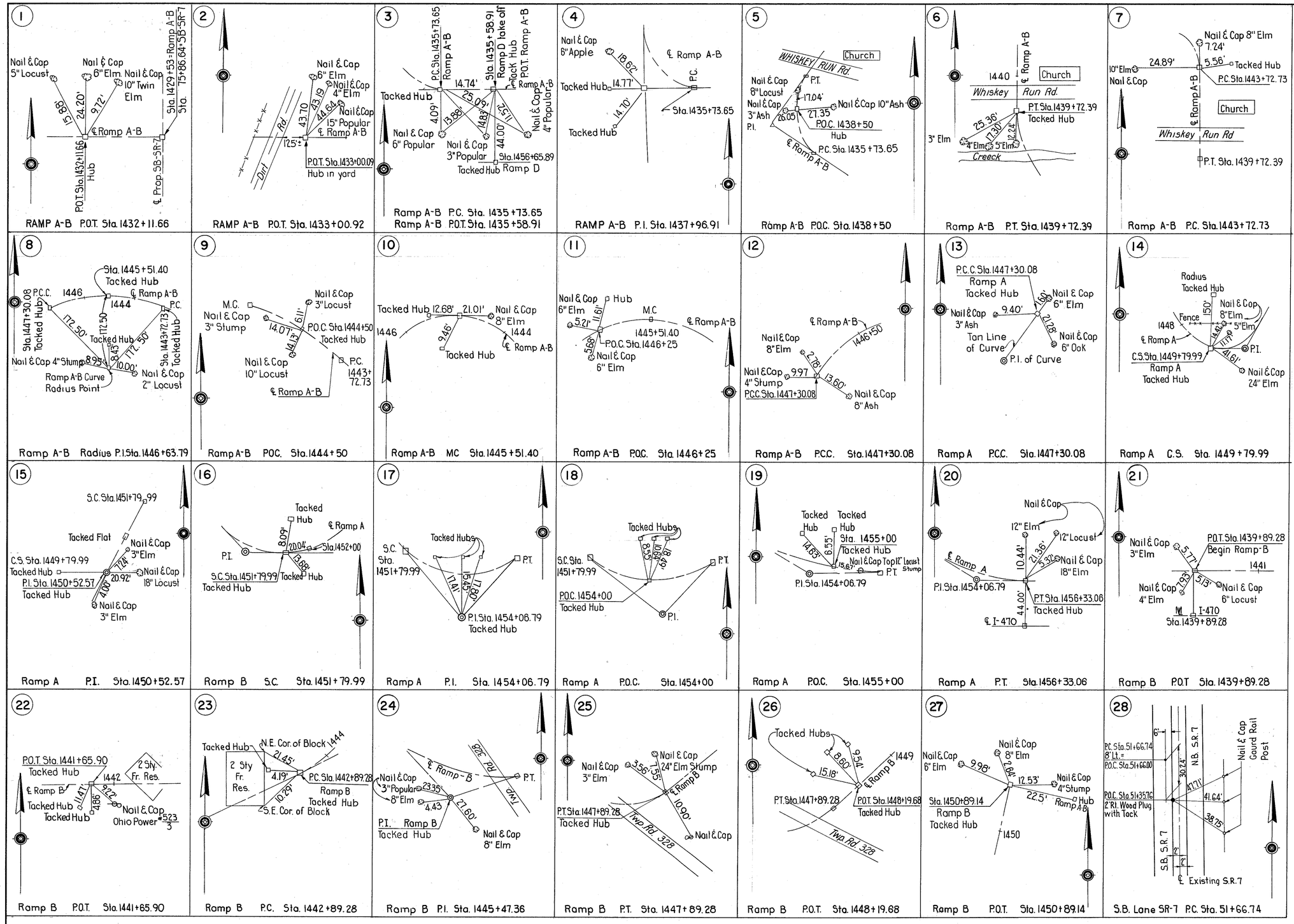

For Location of References
See Sheet Nos. 143 & 144

INTERCHANGE REFERENCES

FED. RD. DIVISION	STATE	PROJECT	
5	OHIO		

148
288

BELMONT COUNTY
BEL-470-5.90

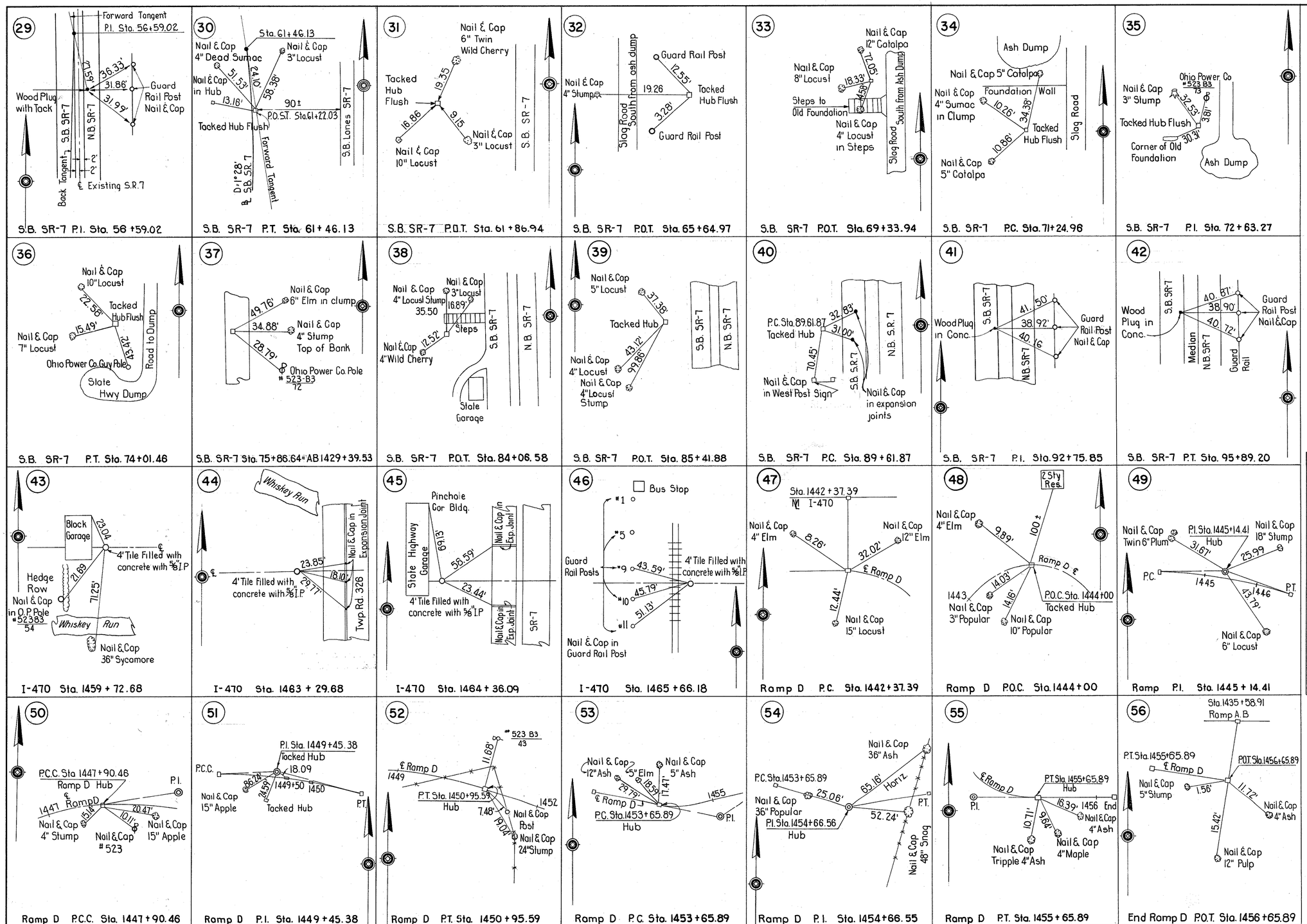

For Location of References
See Sheet Nos. 142 & 143

INTERCHANGE REFERENCES

FED. RD. DIVISION	STATE	PROJECT	
5	OHIO		

149
288

BELMONT COUNTY
BEL - 470 - 5.90

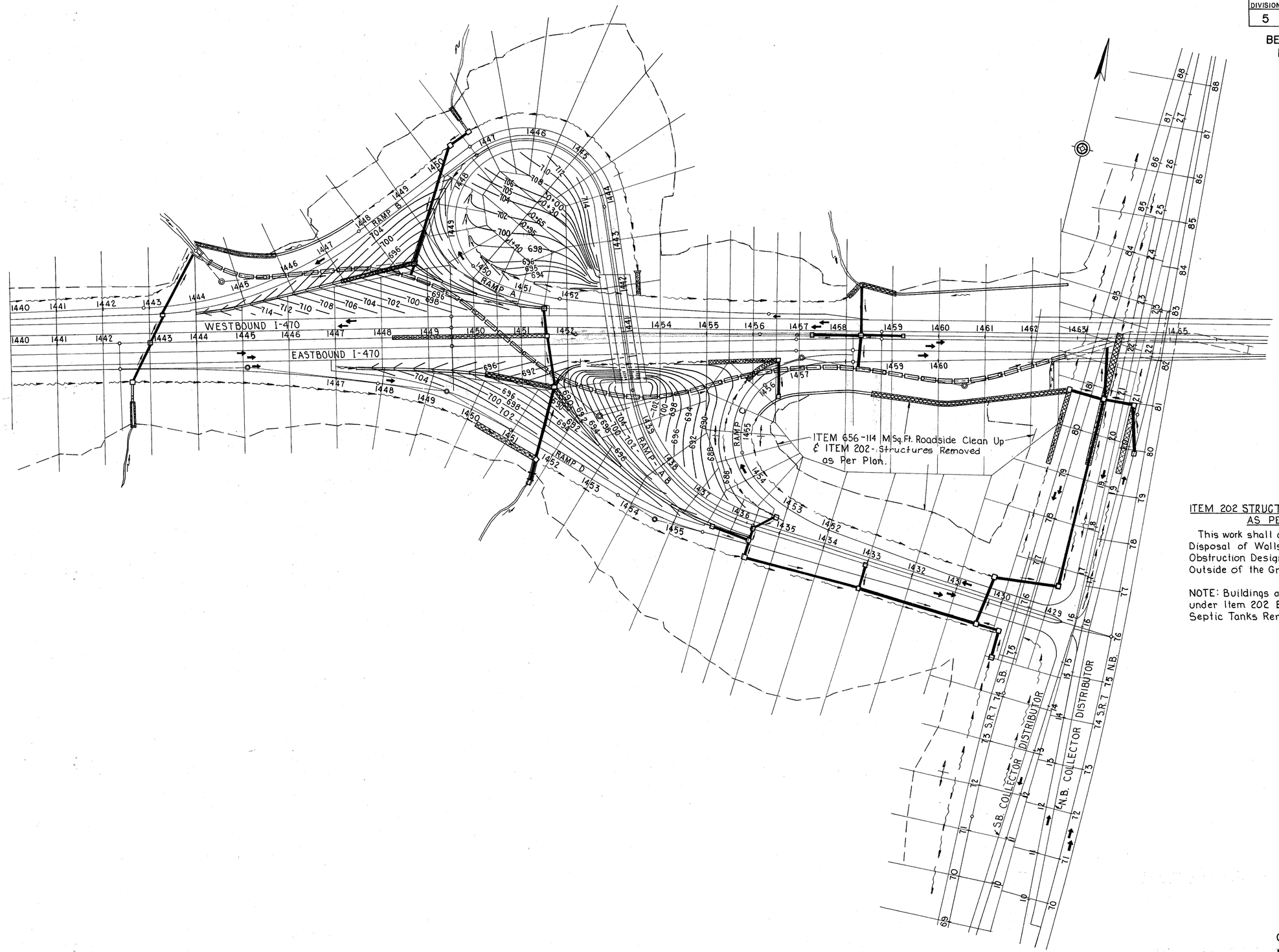

ITEM 202 STRUCTURES REMOVED
AS PER PLAN

This work shall consist of Removal and Satisfactory Disposal of Walls, Steps, Walks and any other Obstruction Designated for Removal by the Engineer, Outside of the Grading Limits shown on this sheet.

NOTE: Buildings and Septic Tanks shall be Removed under Item 202 Buildings Removed, or Item 202 Septic Tanks Removed.

Scale In Feet
100 50 0 100

CROSS-SECTION LAYOUT &
INTERCHANGE GRADING PLAN

FED. RD. DIVISION	STATE	PROJECT	
5	OHIO		

150
288

BELMONT COUNTY
BEL-470-5.90

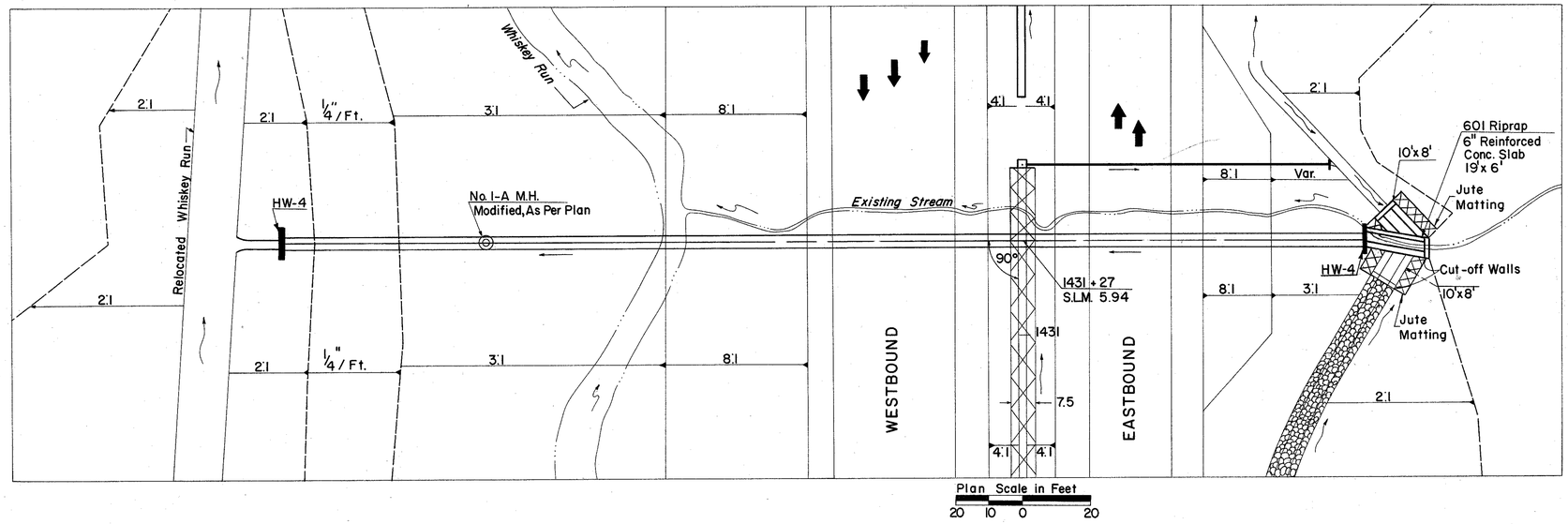

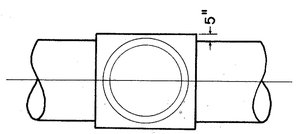

PLAN

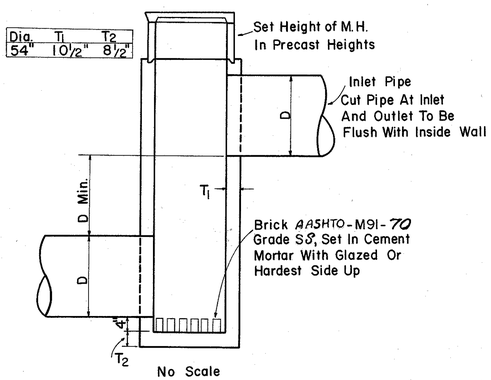

No Scale

NOTE:
For Details And
Notes Not Shown, Refer
To Std. Constr. Dwg. MH-5

NO. 5 MANHOLE MODIFIED

DRAINAGE QUANTITIES

603	Conduit Type A: 48" 706.02, 1500D-Load, or 54" 707.05 (Type C)	260 L.F.
603	Conduit Type A: 48" 706.02, or 54" 707.05 (Type C)	62 L.F.
602	Concrete Masonry	2.66 C.Y.
601	Riprap 6" Reinforced Concrete Slab	31 S.Y.
604	No. 5 Manhole, Modified as per plan	1 Ea.
667	Seeding & Jute Matting	18 S.Y.

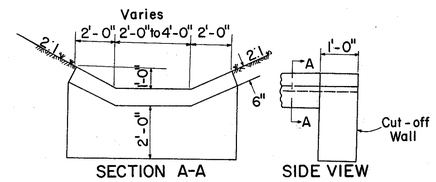

No Scale
DETAIL OF 601 RIPRAP
6" REINFORCED CONCRETE SLAB
WITH CUT-OFF WALLS

D.A. =	55 Acres
Q_{50} =	137 Cfs.

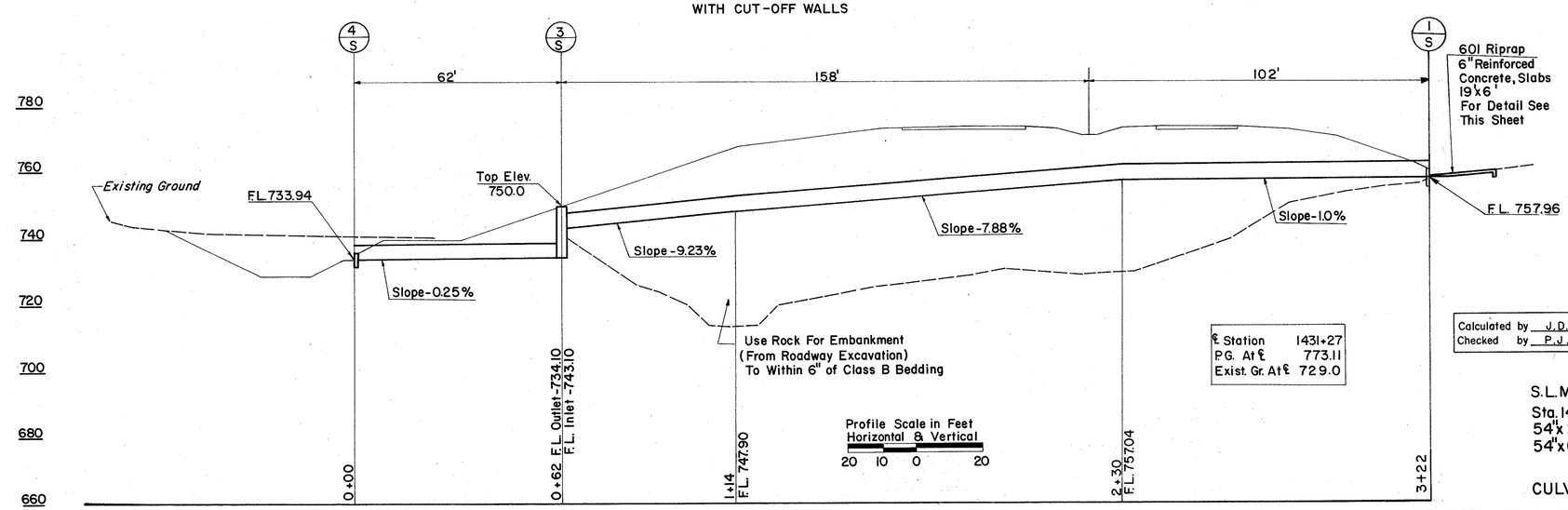

℄ Station	1431+27
P.G. At ℄	773.11
Exist. Gr. At ℄	729.0

Calculated by J.D.F. Date 12/4/68
Checked by P.J.B. Date 4/2/69

S.L.M. 5.94
Sta. 1431+27
54"x 260' Conduit
54"x 62' Conduit

CULVERT DETAIL

FED. RD. DIVISION	STATE	PROJECT	
5	OHIO		

150
288

BELMONT COUNTY
BEL-470-5.90

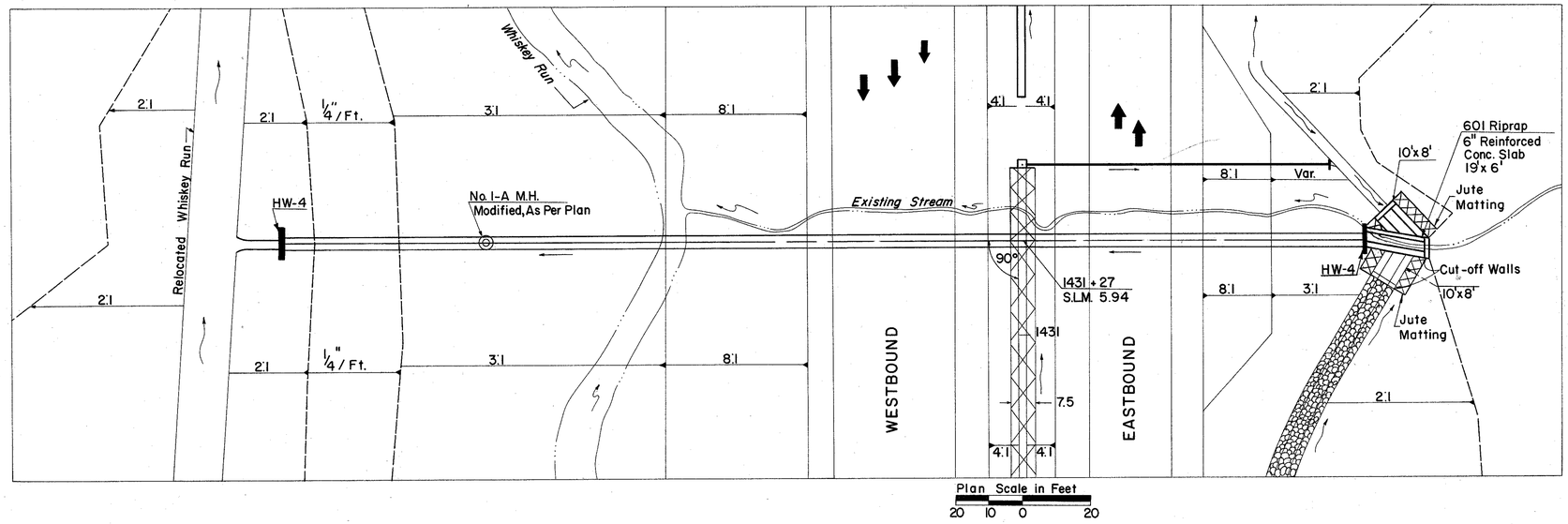

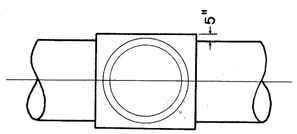

PLAN

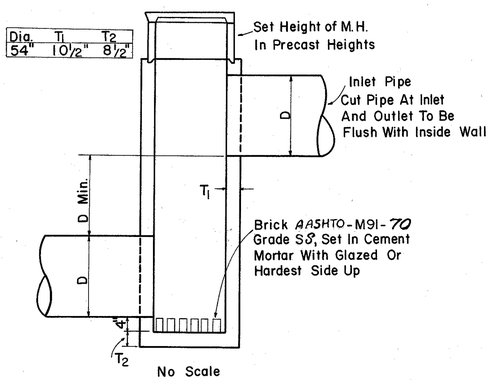

No Scale

NOTE:
For Details And
Notes Not Shown, Refer
To Std. Constr. Dwg. MH-5

NO. 5 MANHOLE MODIFIED

DRAINAGE QUANTITIES

603	Conduit Type A: 48" 706.02, 1500D-Load, or 54" 707.05 (Type C)	260 L.F.
603	Conduit Type A: 48" 706.02, or 54" 707.05 (Type C)	62 L.F.
602	Concrete Masonry	2.66 C.Y.
601	Riprap 6" Reinforced Concrete Slab	31 S.Y.
604	No. 5 Manhole, Modified as per plan	1 Ea.
667	Seeding & Jute Matting	18 S.Y.

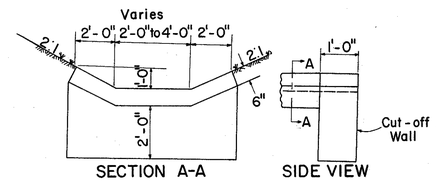

No Scale
DETAIL OF 601 RIPRAP
6" REINFORCED CONCRETE SLAB
WITH CUT-OFF WALLS

D.A. =	55 Acres
Q_{50} =	137 Cfs.

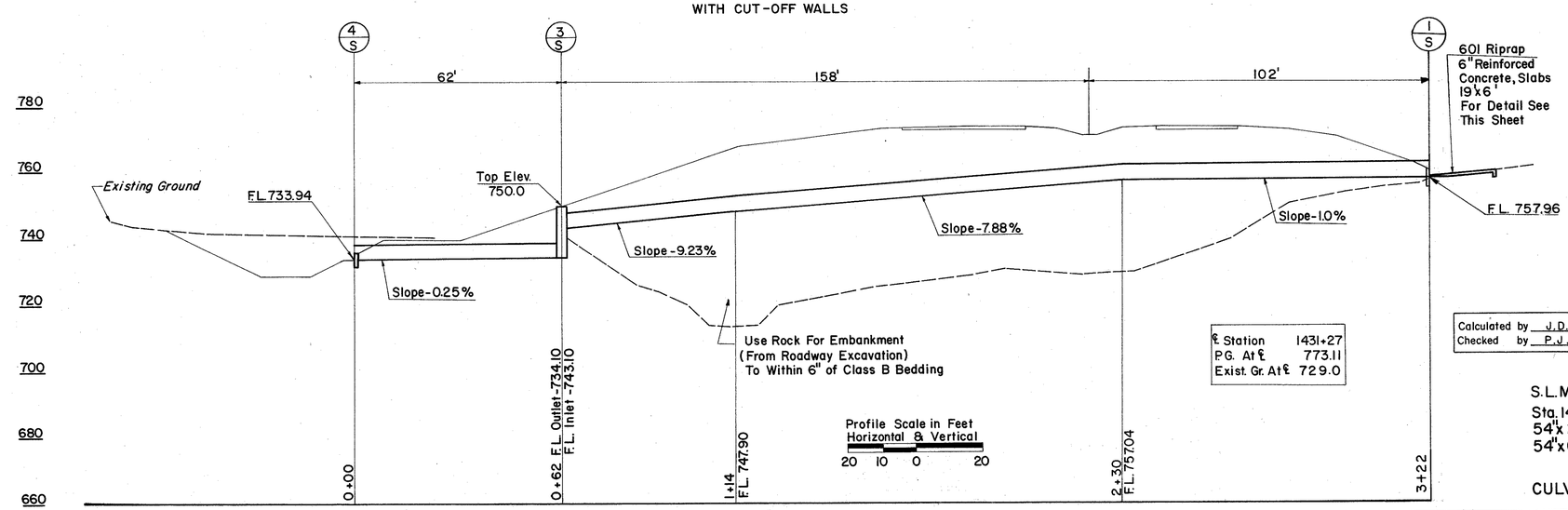

℄ Station	1431+27
P.G. At ℄	773.11
Exist. Gr. At ℄	729.0

Calculated by J.D.F. Date 12/4/68
Checked by P.J.B. Date 4/2/69

S.L.M. 5.94
Sta. 1431+27
54"x 260' Conduit
54"x 62' Conduit

CULVERT DETAIL

FED. RD. DIVISION	STATE	PROJECT	
5	OHIO		

151 / 288

BELMONT COUNTY
BEL-470-5.90

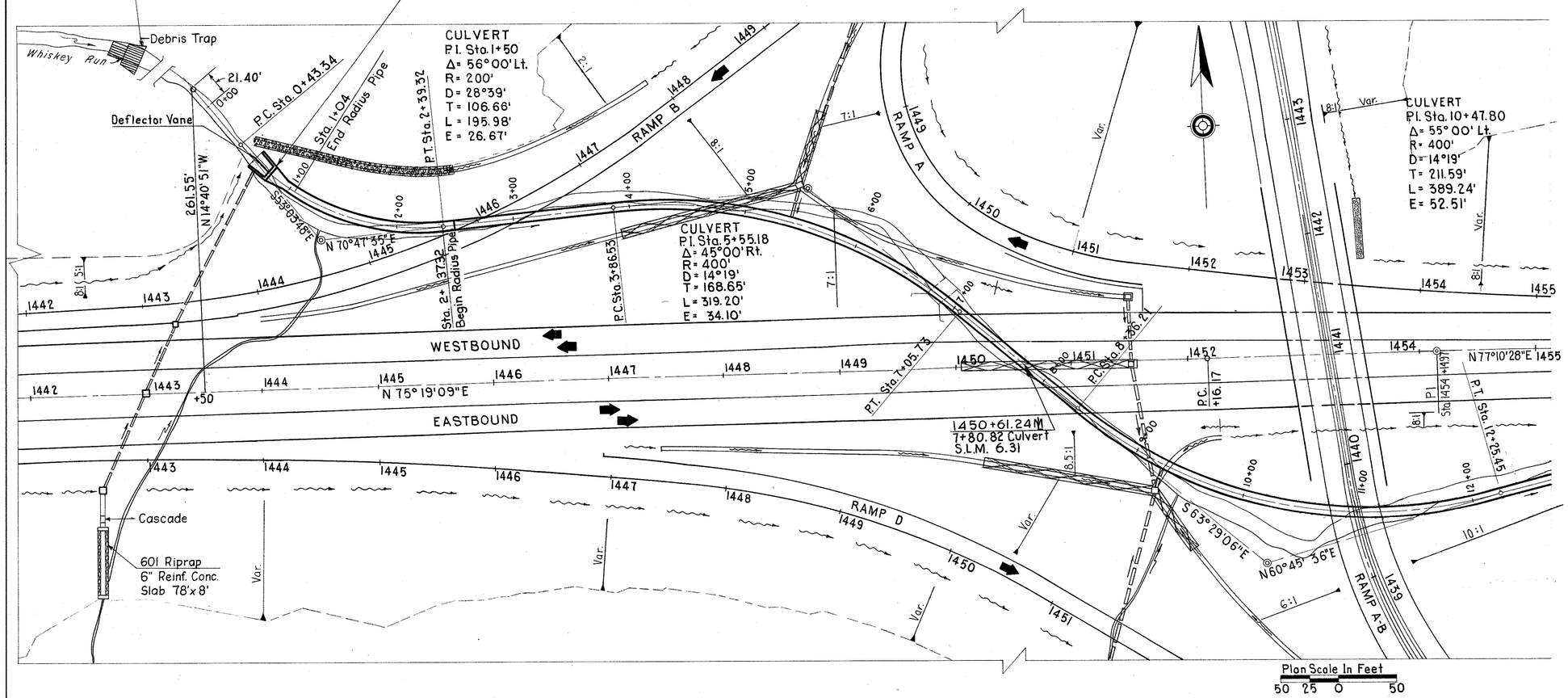

FOR DRAINAGE QUANTITIES SEE SHEET NO. 152

DRAINAGE QUANTITIES

603

596 L.F. Conduit, Type A: 96" 706.02, 2250 D-load, Radius pipe or 114" 707.02, as per plan

280 L.F. Conduit, Type A: 96" 706.02, 2250 D-load, or 114" 707.02, as per plan

60 L.F. Conduit, Type A: 96" 706.02, 3000 D-load, or 114" 707.02, as per plan

241 L.F. Conduit, Type A: 96" 706.02, 3000 D-load, Radius pipe with Class A Bedding or 114" 707.02, as per plan

162 L.F. Conduit, Type A: 96" 706.02, 3000 D-load, with Class A Bedding or 114" 707.02, as per plan

421 L.F. Conduit, Type A: 96" 706.02, 2500 D-load, or 114" 707.02, as per plan

29 L.F. Conduit, Type A: 96" 706.02, 2500 D-load, Radius pipe or 114" 707.02, as per plan

155 L.F. Conduit, Type A: 96" 706.02, 3000 D-load, Radius pipe or 114" 707.02, as per plan (See Sheet 9-A)

601

144 C.Y. Rock Channel Protection, Type A with bedding

203

28 C.Y. Excavation Not Including Embankment Construction (From Sheet 152)
For Special Drop Down Entrance & Bulkhead Quantities, See Sheet № 153

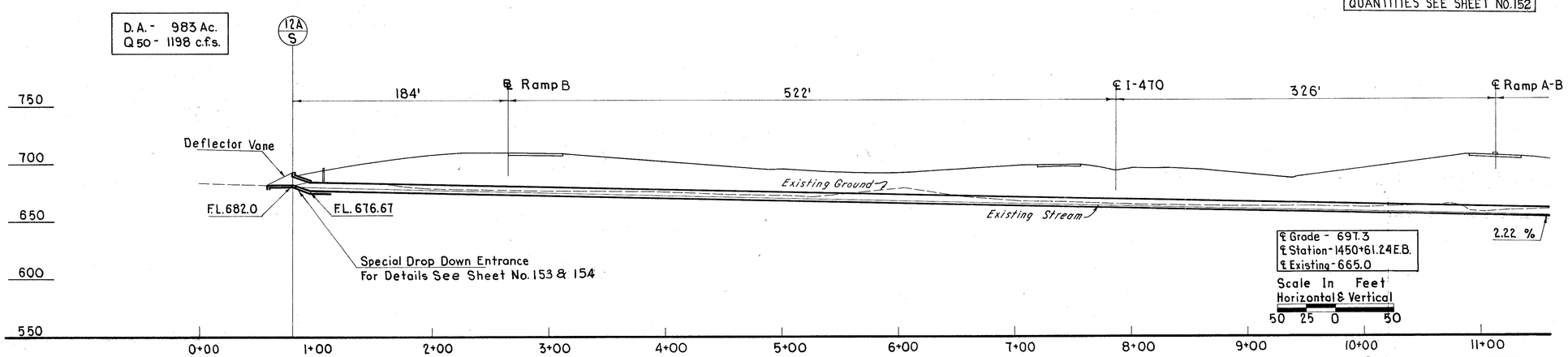

Calculated by J.D.F. 12-6-68
Checked by P.J.B. 5-22-69

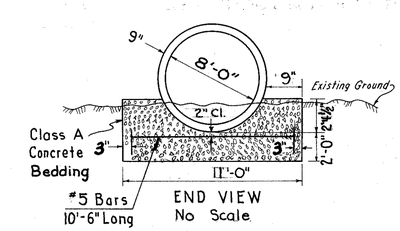

END VIEW
No Scale

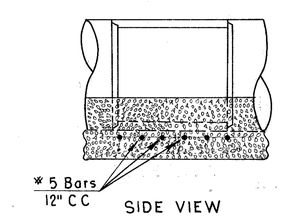

SIDE VIEW
No Scale

DETAIL CLASS A BEDDING
For Detail of Bedding on 14'x 10' Concrete Box Apron See Sheet No. 155.

WHISKEY RUN ENCLOSURE

FED. RD. DIVISION	STATE	PROJECT	
5	OHIO		

152/288

BELMONT COUNTY
BEL-470-5.90

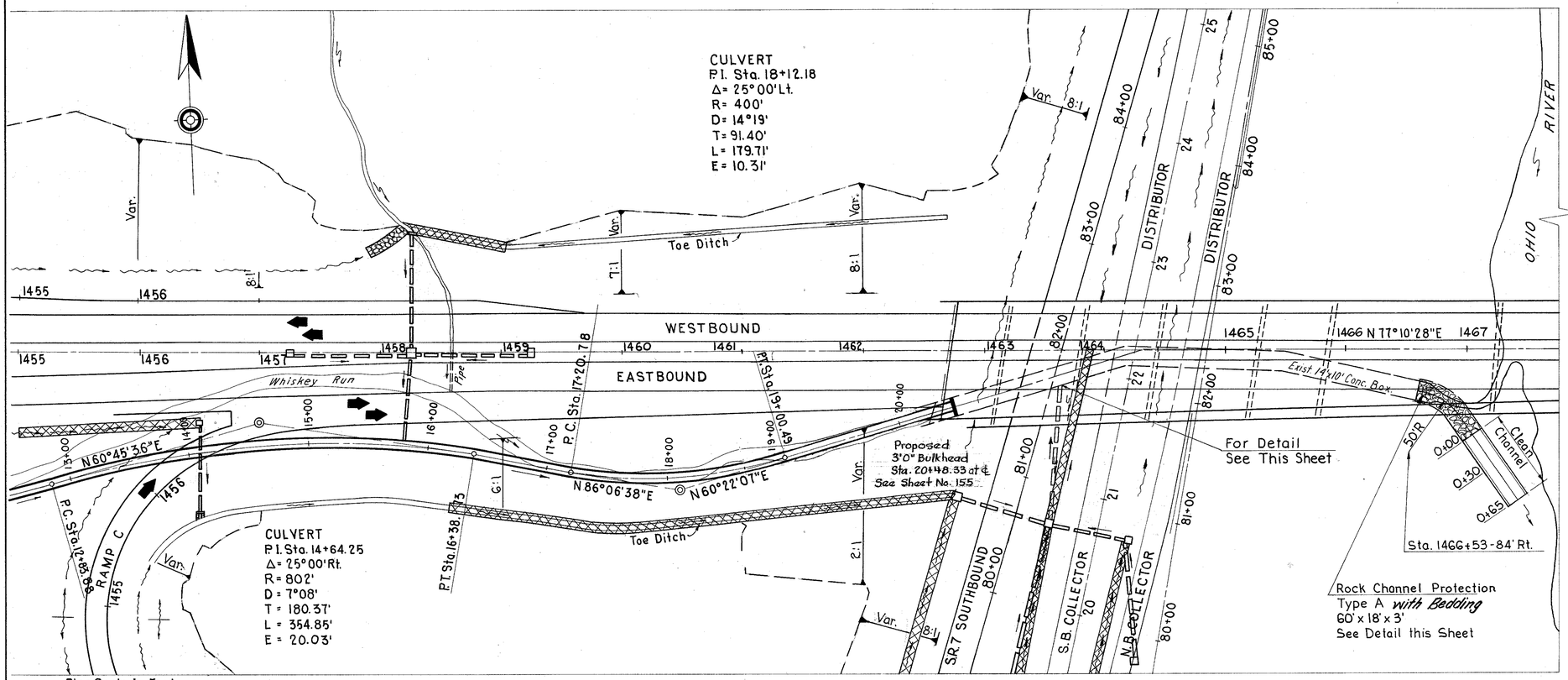

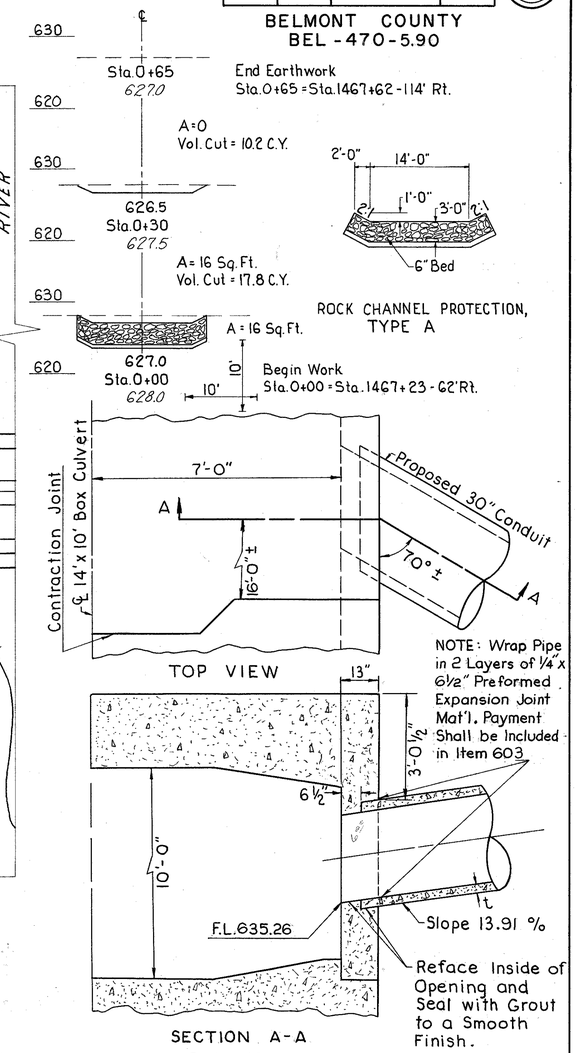

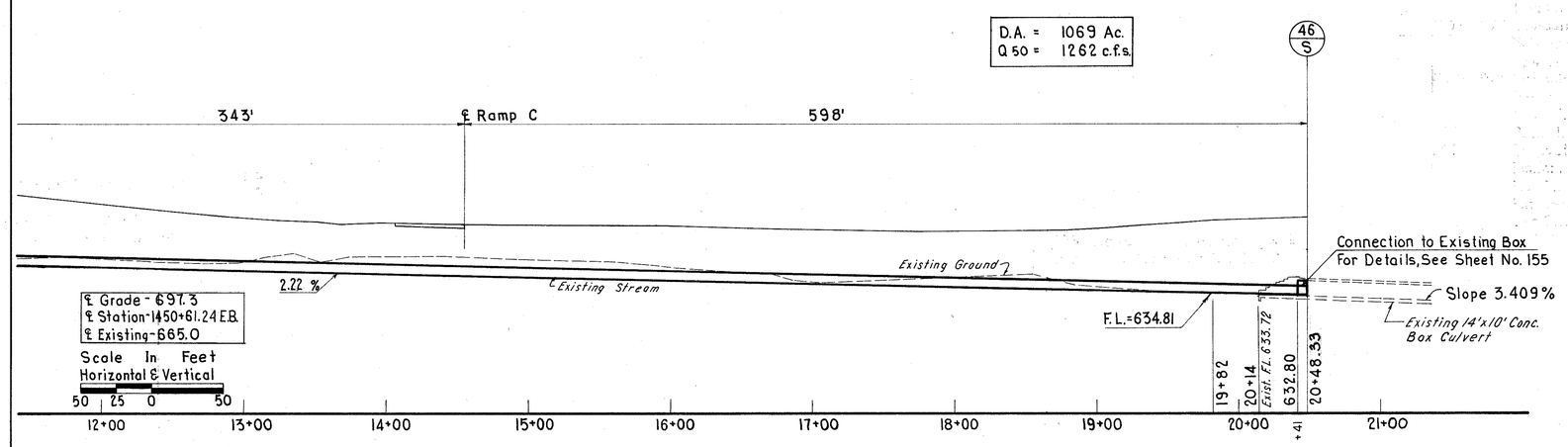

Calculated By: J.D.F. Date: 12-6-68
Checked By: P.J.B. Date: 5-22-69

S.L.M. 6.31
Sta. 1450 + 61.24
114" or 96" x 1944' Conduit
WHISKEY RUN ENCLOSURE

FED. RD. DIVISION	STATE	PROJECT	TYPE FUNDS
5	OHIO		

153/288

BELMONT COUNTY
BEL. 470 - 5.90

NOTE:
For Location, see Dwg. No. 149 & 150

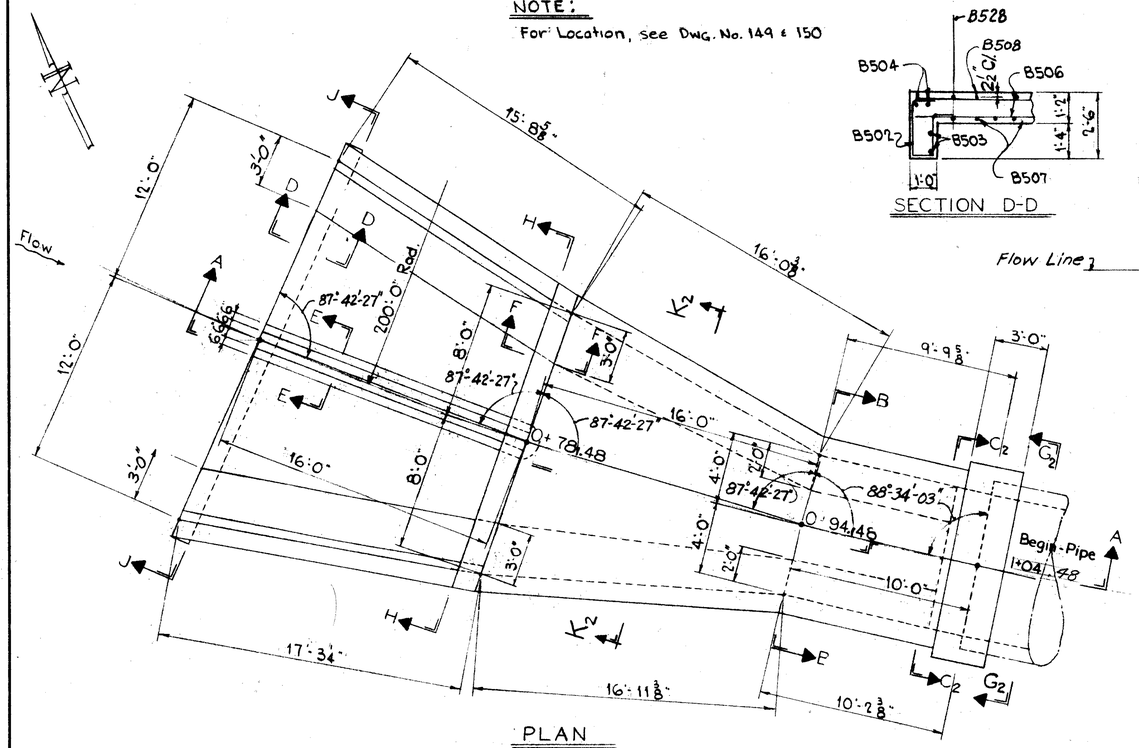

PLAN
Scale 1/4" = 1'-0"

SECTION D-D

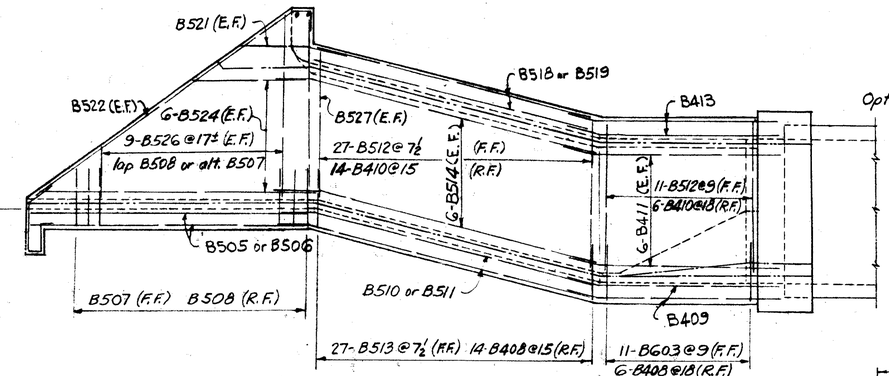

ELEVATION
Scale 1/4" = 1'-0"

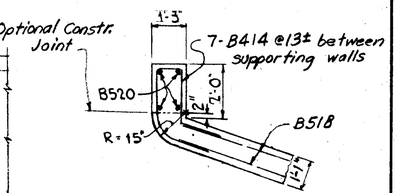

SECTION "F-F"

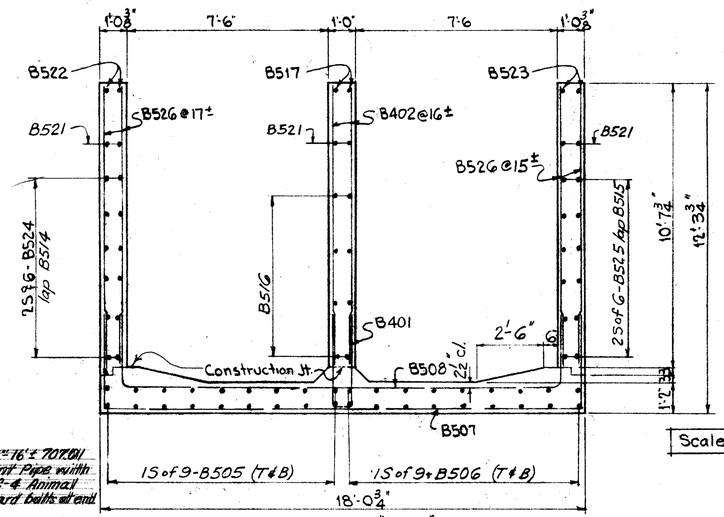

SECTION "H-H"

Scale 3/8" = 1'-0" Unless Noted

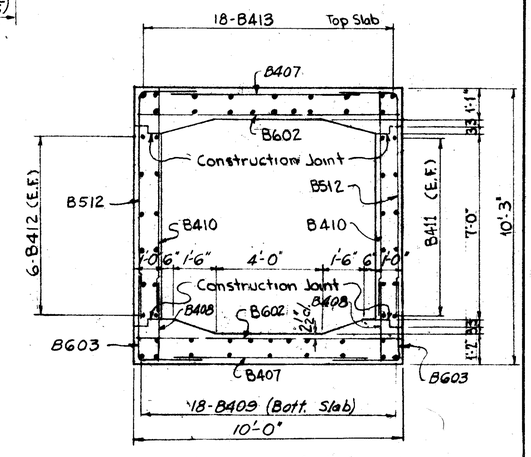

SECTION "B-B"

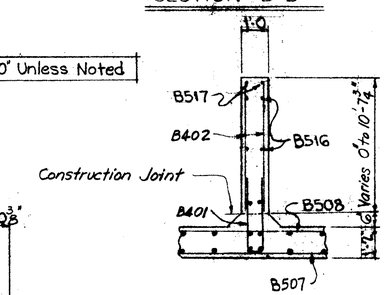

SECTION "E-E"

STRUCTURE QUANTITIES

Item	Total	Unit	Description	Entrance	Exit		
503	L.S.	L.S.	Cofferdams, cribs & sheeting	L.S.	-		
503	129	Cu. Yds.	Unclassified excavation	129	-		
509	8773	Lbs.	Reinforcing Steel	8528	245		
510	39	Lin. Ft.	Dowel Holes		39		
511	84.1	Cu. Yds.	Class "C" Concrete	82.7	1.4		

Computed By	DWP	2-12-70
Checked By	PLL	2-13-70

LEGEND
F.F. = Front Face
R.F. = Rear Face
E.F. = Each Face
T.&B. = Top & Bott.

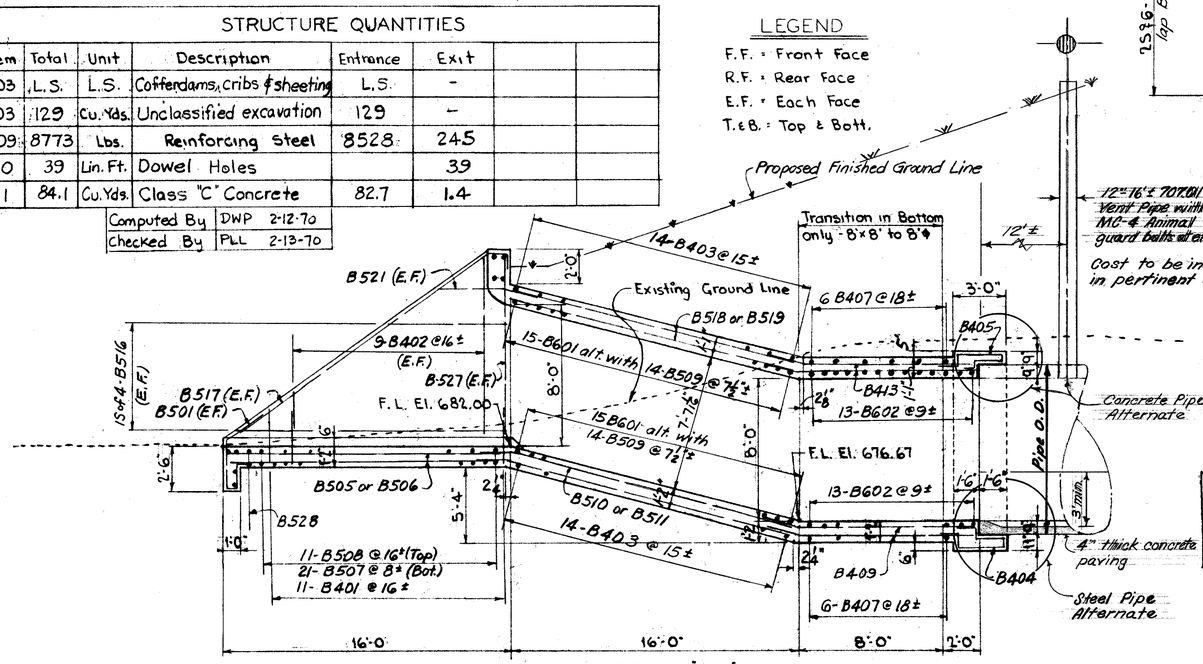

SECTION "A-A"
Scale 1/4" = 1'-0"

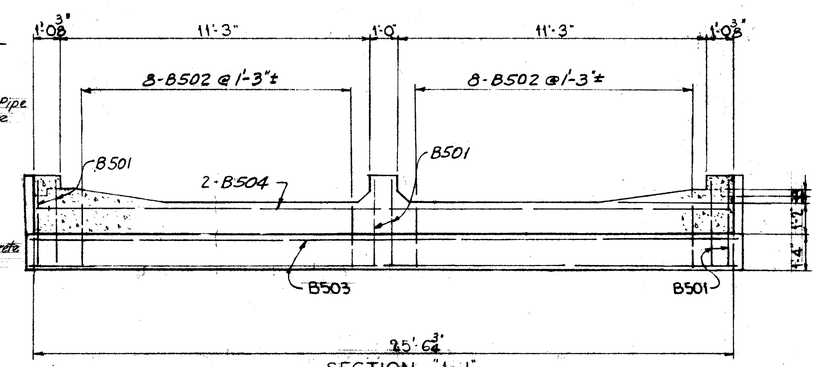

SECTION "J-J"

All bars 2" clear unless noted.

1/3

MICHAEL BAKER JR., CONSULTING ENGINEERS
ROCHESTER, PENNSYLVANIA

PLAN, QUANTITIES & DETAILS
SPECIAL DROPDOWN ENTRANCE
STA. 1444+33.80 - 97' LT. RAMP "B"

STA. 0+78.75 - CULVERT

DESIGNED	DRAWN	TRACED	CHECKED	REVIEWED	DATE	REVISED
TYT JRW	DG		DWP	LGH	4-15-74	

BEAVER VALLEY ENGINEERING SUPPLIES CO. 8666666 A-30754

FED. RD. DIVISION	STATE	PROJECT	TYPE FUNDS
5	OHIO		

154/288

BELMONT COUNTY
BEL. 470 - 5.90

GENERAL NOTES:

- DESIGN SPECIFICATIONS: This Structure conforms to "Standard Specifications for Highway Bridges" adopted by the American Association of State Highway Officials, 1973, including the Ohio "Supplement" to these specifications.
- DESIGN DATA:
  Concrete Class "C" —— unit stress 1333 p.s.i.
  Reinforcing Steel —— ASTM A615, A616 or A617 – unit stress 20,000 p.s.i.
- FOUNDATION BEARING PRESSURE: Inlet structure is designed for a maximum bearing pressure of 1.3 ton per square ft.
- BACKFILL: shall be placed not higher then 4'-0" above flow line prior to completion of the top slab.

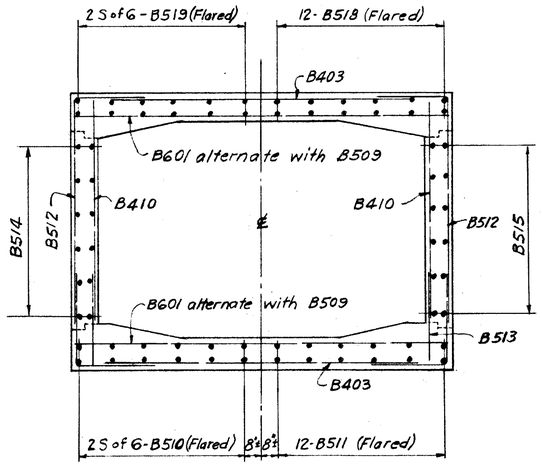

SECTION K-K

Scale 3/8" = 1'-0" Unless Noted

LEGEND

F.F. = Front Face
R.F. = Rear Face
E.F. = Each Face
T.&B. = Top & Bott.

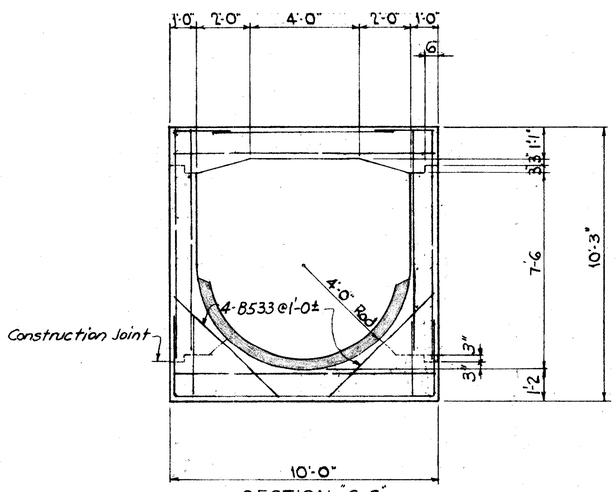

SECTION "C-C"

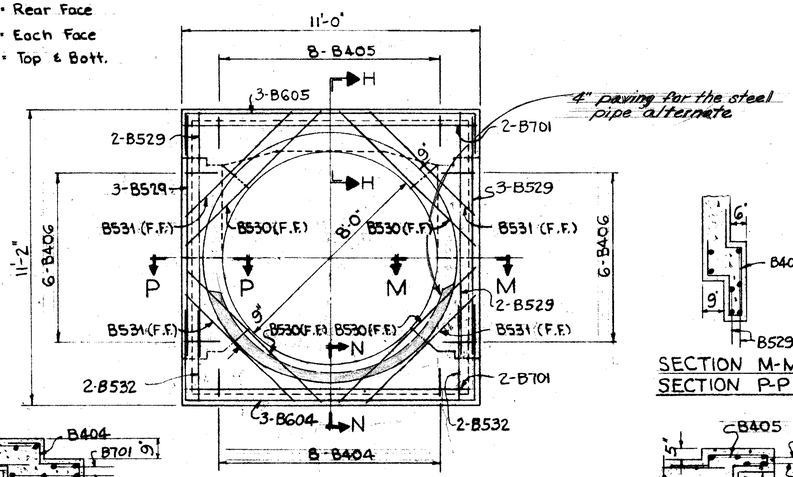

END ELEVATION "G-G"

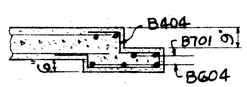

SECTION N-N
N.T.S.

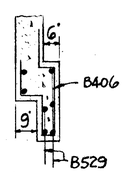

SECTION M-M (SHOWN)
SECTION P-P (OPP. HAND)

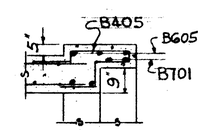

SECTION "H-H"
N.T.S.

REINFORCEMENT BAR SCHEDULE

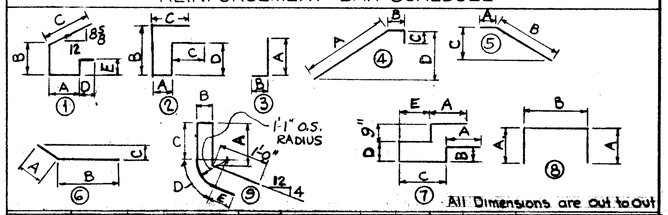

Mark	No.	Type	Length	A	B	C	D	E	Weight	Remarks
B701	4	Str.	10'-8						87	
B601	2S of 15	Str.	17'-4 to 9'-8						608	Vary ea. bar by 6½" ±
B602	26	Str.	9'-8						378	
B603	26	3	5'-5	3'-1	2'-6				212	
B604	3	8	17'-5	3'-6	10'-8				79	
B605	3	8	13'-7	1'-7	10'-8				61	
B501	6	1	8'-4	8"	2'-8	1'-9	2'-7	2'-1	52	
B502	16	2	6'-0	8"	2'-0	1'-3	1'-4		100	
B503	2	Str.	25'-6						53	
B504	2	Str.	25'-4						53	
B505	2S of 9	Str.	16'-11 to 5'-8						306	Vary ea. bar by 1½" ±
B506	2S of 9	Str.	15'-8 to 5'-4						292	Vary ea. bar by 1½" ±
B507	1S of 21	8	30'-4 to 23'-8	3'-1	24'-5 to 17'-9				592	Vary B by 4" ± ea. bar
B508	1S of 11	8	27'-7 to 20'-11	2'-4	23'-2 to 16'-6				278	Vary B by 3" ± ea. bar
B509	2S of 14	Str.	17'-1 to 9'-11						395	Vary ea. bar by 6½" ±
B510	2S of 6	5	19'-1 to 18'-2	1'-6	17'-7 to 16'-8	5'-3			234	Vary B by 2½" ± ea. bar
B511	12	5	18'-2	1'-6	16'-8	5'-3			228	
B512	76	3	10'-9	8'-5	2'-6				852	
B513	54	3	5'-5	3'-1	2'-6				306	
B514	12	6	19'-2	1'-7	17'-7	7"			240	
B515	12	6	18'-4	1'-7	16'-9	7"			230	
B516	2S of 4	Str.	15'-4 to 1'-0						93	Vary ea. bar by 2'-8½" ±
B517	2	4	19'-4	17'-10	1'-0	7½"	10'-5		40	
B518	12	Str.	16'-9						235	
B519	2S of 6	Str.	16'-9 to 17'-7						215	Vary ea. bar by 2" ±
B520	4	Str.	17'-11						75	
B521	6	5	5'-4	4'-0	1'-4	6"			33	
B522	2	4	20'-3	18'-9	1'-0	7½"	10'-5		42	
B523	2	4	19'-1	17'-7	1'-0	7½"	10'-5		40	
B524	2S of 6	Str.	16'-6 to 6'-9						145	Vary ea. bar by 1½" ±
B525	2S of 6	Str.	15'-0 to 6'-2						132	Vary ea. bar by 1½" ±
B526	4S of 9	Str.	2'-6 to 10'-4						241	Vary ea. bar by 1½" ±
B527	6	Str.	10'-4						65	
B528	2	Str.	25'-0						52	
B529	10	Str.	9'-0						94	
B530	4	Str.	7'-0						29	
B531	4	Str.	5'-0						21	
B532	4	Str.	3'-3						14	
B533	8	Str.	4'-0						33	
B401	11	8	6'-0	2'-9	8"				44	
B402	2S of 9	Str.	2'-6 to 10'-4						77	Vary ea. bar by 1½" ±
B403	2S of 14	Str	17'-6 to 10'-3						260	Vary ea. bar by 6½" ±
B404	8	7	7'-5	1'-0	6"	2'-8	7"	1'-6	40	
B405	8	7	7'-2	1'-0	5"	2'-8	5"	1'-6	38	
B406	12	7	7'-3	1'-0	6"	2'-8	5"	1'-6	58	
B407	12	Str.	7'-2						57	
B408	40	Str.	2'-9						73	
B409	18	6	11'-7	1'-3	9'-11	5"			139	
B410	40	Str.	8'-4						223	
B411	12	6	11'-4	1'-4	10'-0	4"			91	
B412	12	6	10'-11	1'-4	9'-7	4"			87	
B413	18	6	10'-11	1'-3	9'-8	5"			131	
B414	14	9	8'-0	2'-0	11"	1'-8	1'-4	1'-3	75	

BAR SIZE is Indicated in the bar mark. The first digit indicates the bar size number. For example, B701 is a No. 7 size bar. 2/3

REPLACEMENT BARS

Mark	No.	Shape	Length	Weight
RE701	1	Str.	7'-3	–
RE601	1	Str.	6'-10	–
RE501	1	Str.	6'-7	–
RE401	1	Str.	6'-3	–

MICHAEL BAKER JR., CONSULTING ENGINEERS
ROCHESTER, PENNSYLVANIA

BAR SCHEDULE & DETAILS
SPECIAL DROPDOWN ENTRANCE
STA. 1444+33.80-97' LT. RAMP "B"

STA. = 0+78.75 - CULVERT

DESIGNED	DRAWN	TRACED	CHECKED	REVIEWED	DATE	REVISED
TYT JRW	DG		DWP	LGH	4-15-74	

BEAVER VALLEY ENGINEERING SUPPLIES CO. ROCHESTER, PA.

FED. RD. DIVISION	STATE	PROJECT	TYPE FUNDS
5	OHIO		

155 / 288

BELMONT COUNTY
BEL 470-5.90

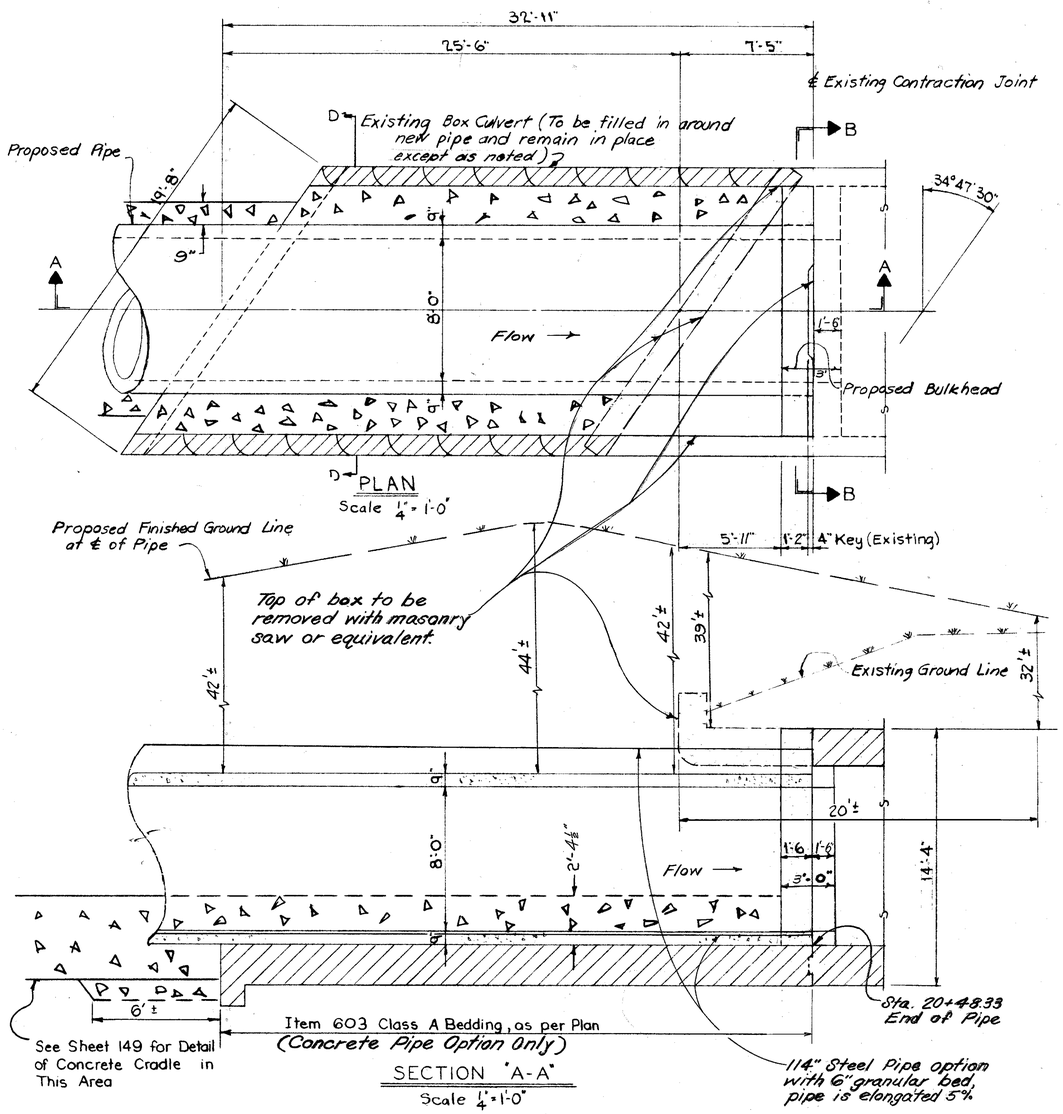

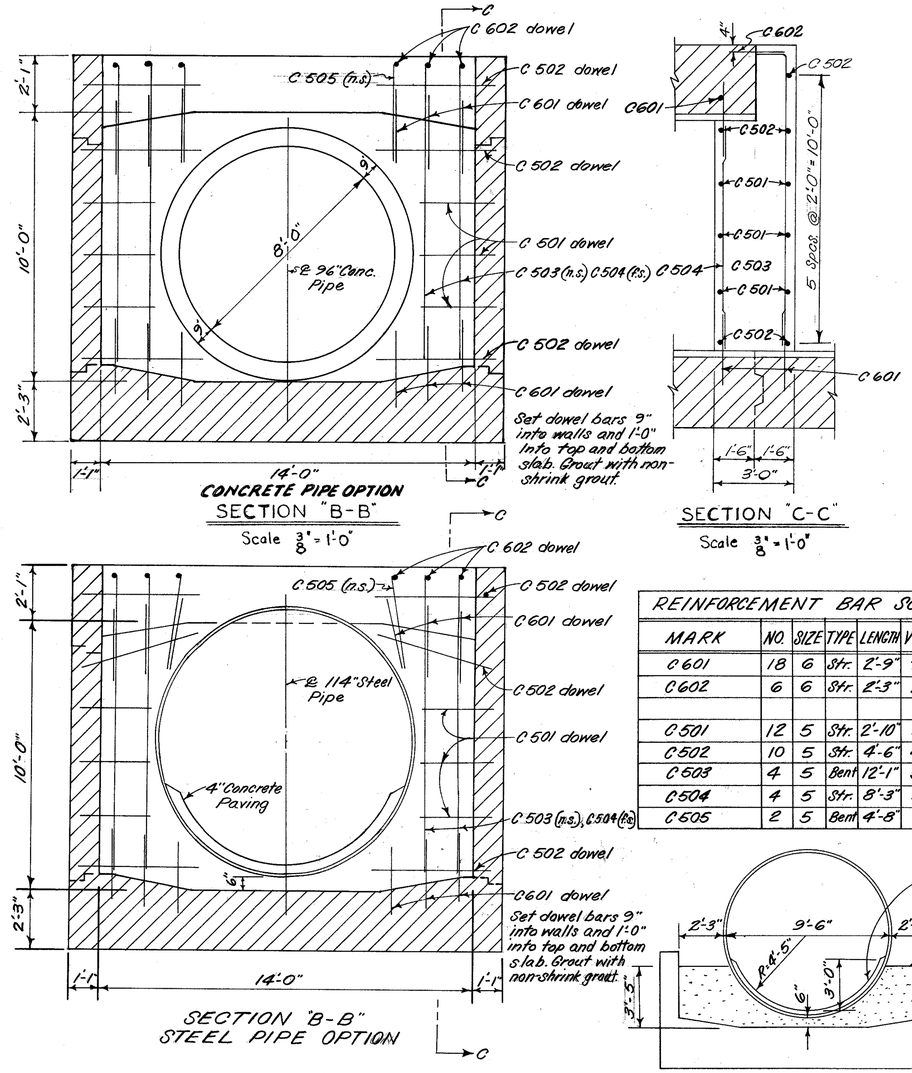

REINFORCEMENT BAR SCHEDULE						
MARK	NO.	SIZE	TYPE	LENGTH	WEIGHT	SHAPE
C601	18	6	Str.	2'-9"	74	1'-3"
C602	6	6	Str.	2'-3"	20	
C501	12	5	Str.	2'-10"	35	10'-1" / 3'-6"
C502	10	5	Str.	4'-6"	47	
C503	4	5	Bent	12'-1"	50	C503 / C505
C504	4	5	Str.	8'-3"	34	
C505	2	5	Bent	4'-8"	10	

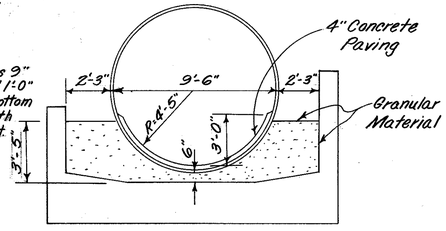

SECTION D"-D"-STEEL PIPE OPTION
CLASS "B" BEDDING
(USE ON 14' x 10' CONCRETE BOX APRON)

NOTE:
Depth of Cradle Shall be Adjusted at the Direction of the Project Engineer, For a Length of 6Ft.± Adjacent to Existing Culvert Apron as Required to Obtain Firm Foundation Material.

Note:
- Crossed Hatched area indicates existing Structure.
- Concrete to be Class "C"

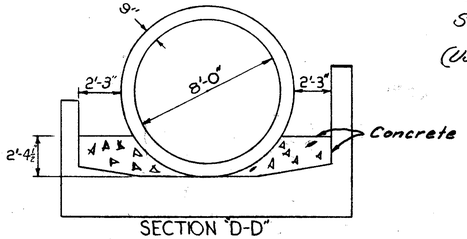

SECTION "D-D"
DETAIL CLASS A BEDDING, AS PER PLAN
(Use on 14'x10' Concrete Box Apron)
Scale - 1/4" = 1'-0"
CONCRETE PIPE OPTION

3 / 3

MICHAEL BAKER JR., CONSULTING ENGINEERS
ROCHESTER, PENNSYLVANIA

PLAN & DETAILS
CONNECTION TO EXISTING 14'x10' BOX CULVERT

STA 20+48 - CULVERT

DESIGNED	DRAWN	TRACED	CHECKED	REVIEWED DATE	REVISED
TYT	DG		DWP	LGH 4-15-74	

FED. RD. DIVISION	STATE	PROJECT	TYPE FUNDS
5	OHIO		

156
288

BELMONT COUNTY
BEL-470-5.90

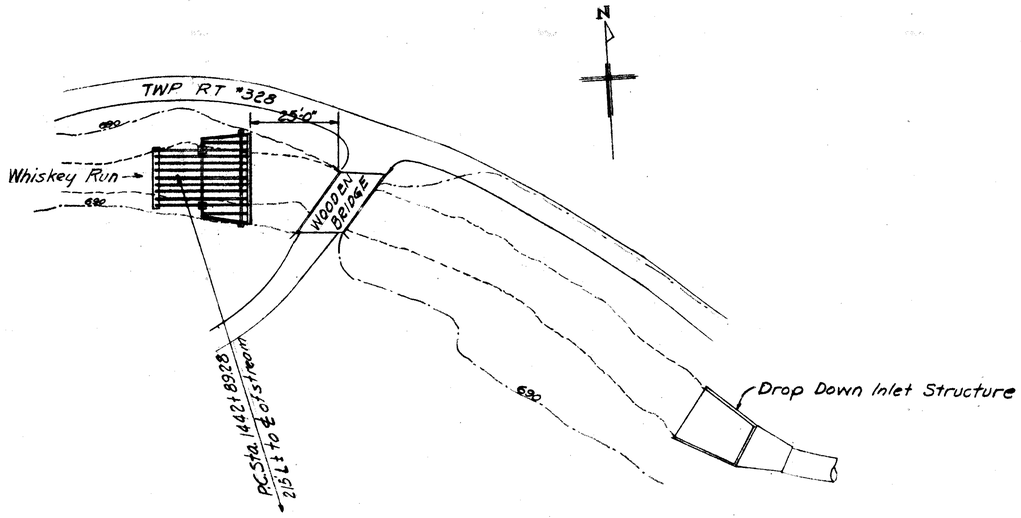

LOCATION PLAN
Scale 1" = 20'

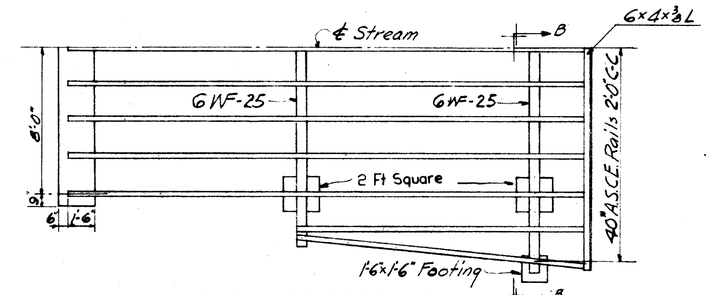

DETAIL OF DEBRIS TRAP
Symmetrical around ℄ of stream
Scale 1/4" = 1'-0"

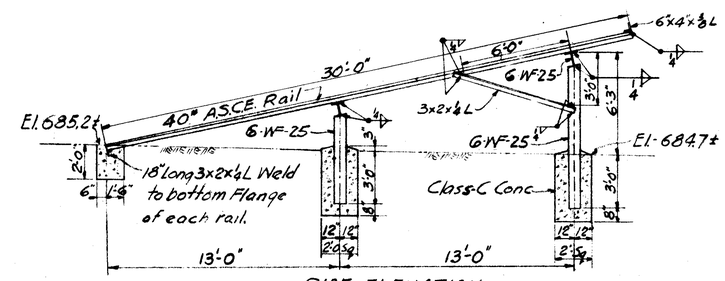

SIDE ELEVATION
Scale 1/4" = 1'-0"

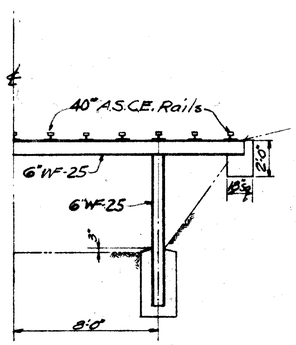

HALF SECTION 'B-B'
Scale 1/4" = 1'-0"

GENERAL NOTES:

DESIGN DATA:

Design Loading: Dead load plus 18"x6' obstruction under 3' of water (No water below obstruction)

Concrete Class C: Unit stress 1333 p.s.i.

Structural Steel: Columns, Cross beams & struts ASTM-A36 unit stress 20000 p.s.i. Rails ASTM A1 or A2 unit stress 20000 p.s.i.

EXCAVATION QUANTITY: for footings is computed without allowance for formwork.

FOUNDATION BEARING PRESSURE: Column footings are designed for a maximum bearing pressure of 1.6 Tons per sq. ft. Footings at ends of debris trap are designed for a maximum bearing pressure of 0.6 Tons per sq. ft.

FOOTING ELEVATIONS: may be adjusted as required to fit field conditions as directed by the Engineer.

ESTIMATED QUANTITIES

Item	Total	Unit	Description		
503	5.0	Cu. Yds	Unclassified excavation		
511	5.0	Cu. Yds	Class C Concrete		
513	6800	Lbs	Structural Steel *		
514	6800	Lbs	Field painting of Struct. Steel		
*	New ASCE Rails Must be Used				

Computed By	REH	10-20-69
Checked By	DWP	10-23-69

MICHAEL BAKER JR., CONSULTING ENGINEERS
ROCHESTER, PENNSYLVANIA

PLAN, QUANTITIES & DETAILS
DEBRIS TRAP
P.C. STA. 1442+89.28 - 215' L OF RAMP 'B'

DESIGNED	DRAWN	TRACED	CHECKED	REVIEWED DATE	REVISED
DWP	REH		DWP	KGH 4-15-74	

FED. RD. DIVISION	STATE	PROJECT	
5	OHIO		

BELMONT COUNTY
BEL-470-5.90

157
2.88

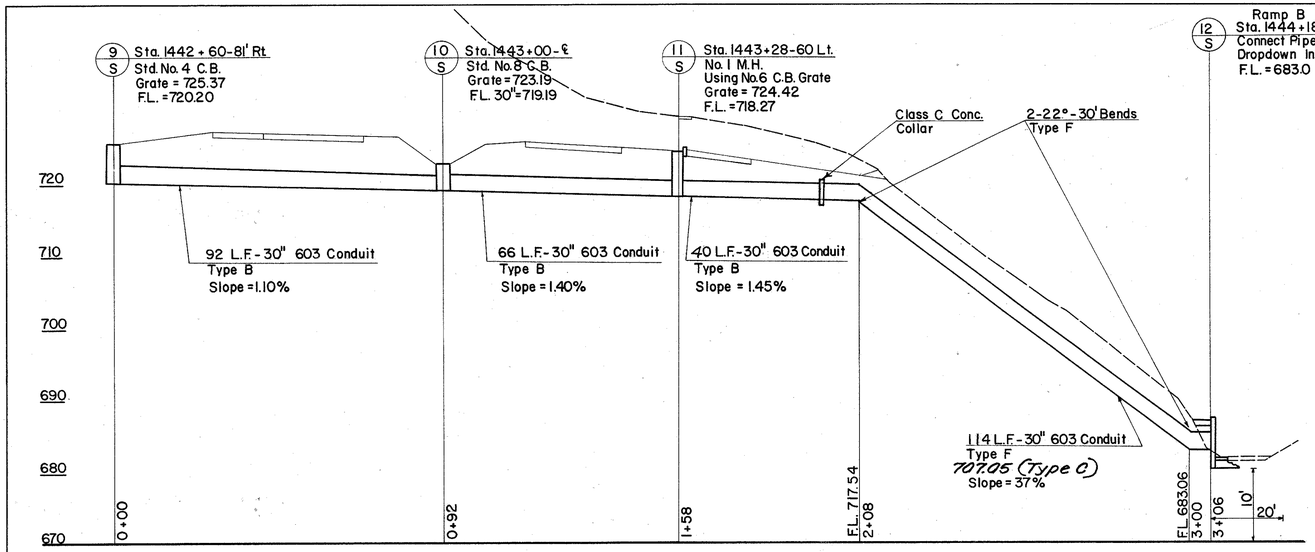

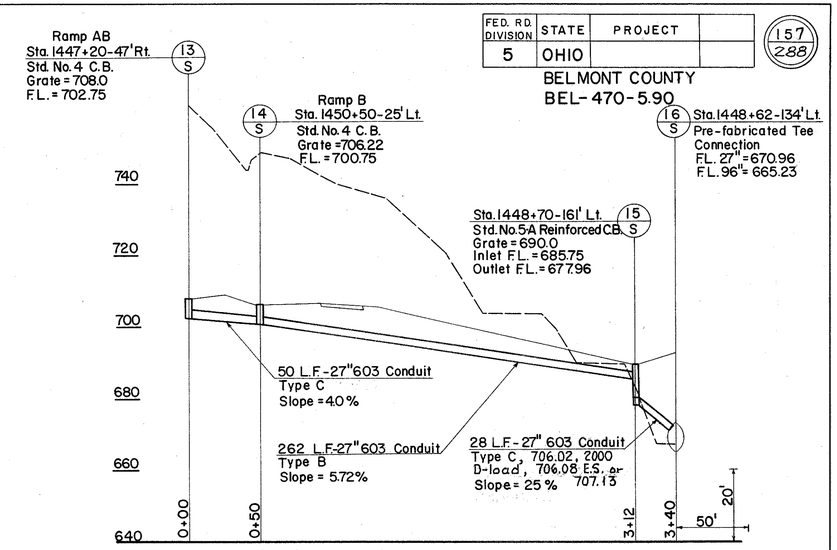

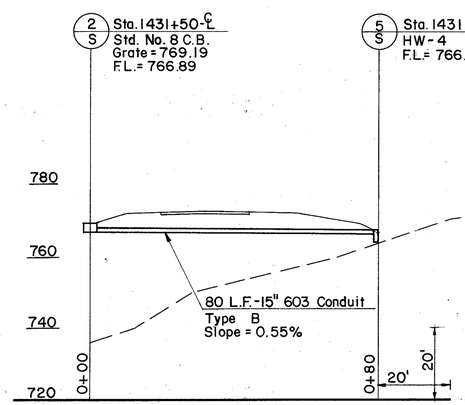

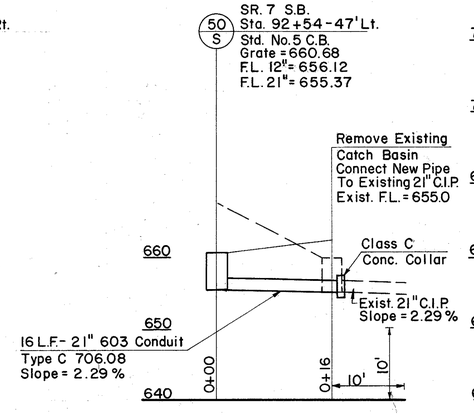

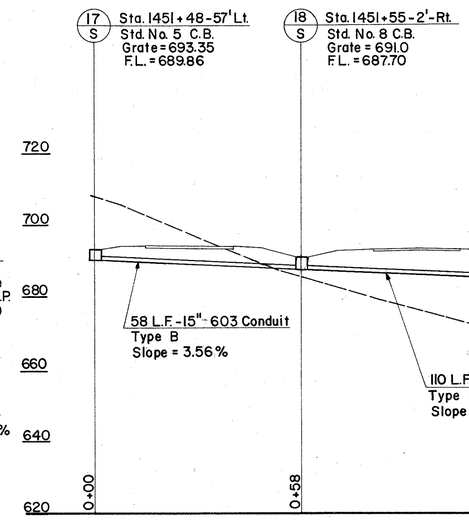

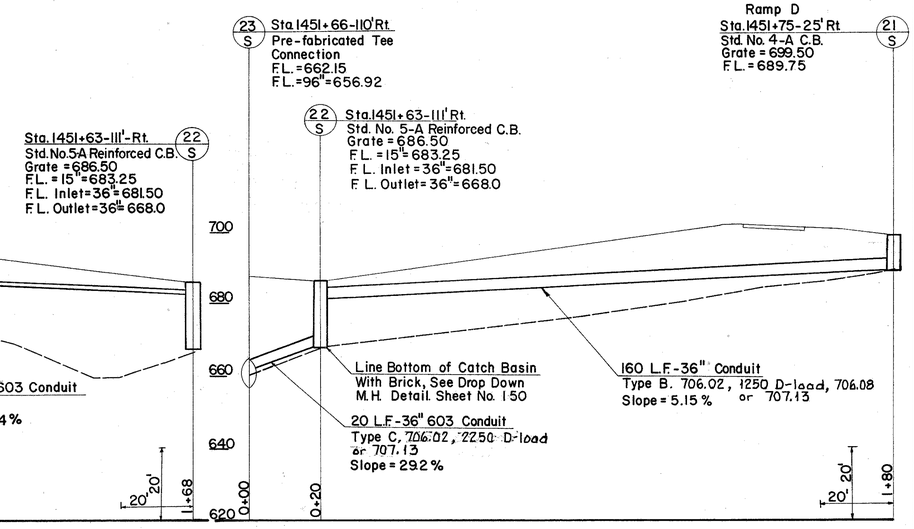

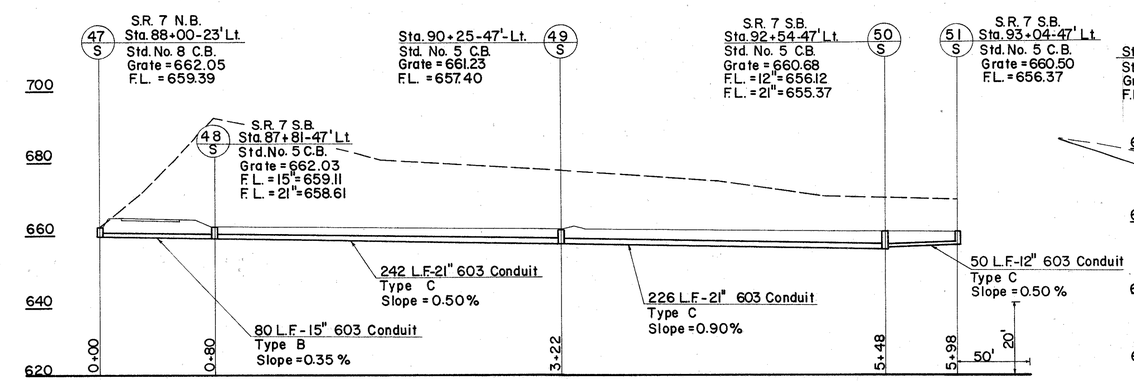

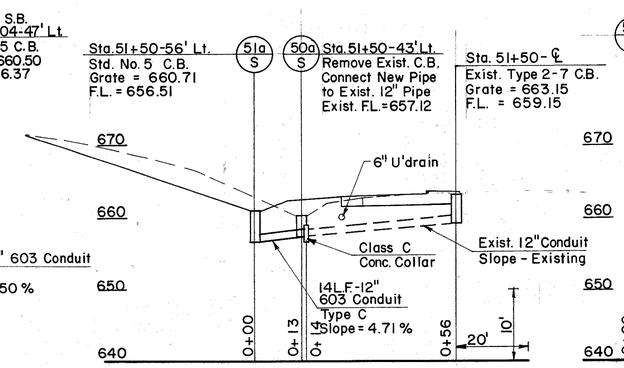

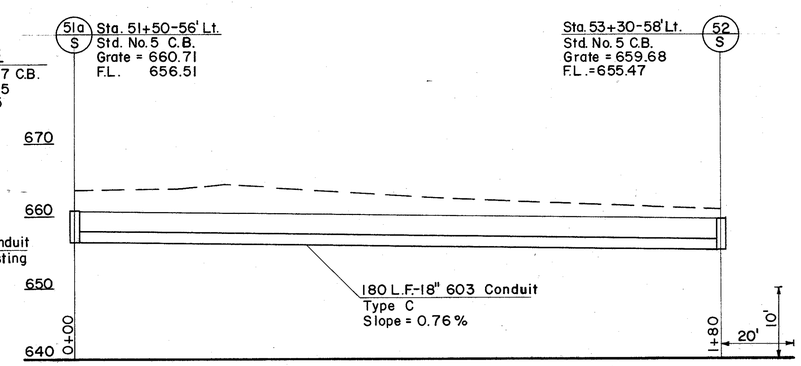

STORM SEWER PROFILES

FED. RD. DIVISION	STATE	PROJECT.	
5	OHIO		

158
288

BELMONT COUNTY
BEL - 470 - 590

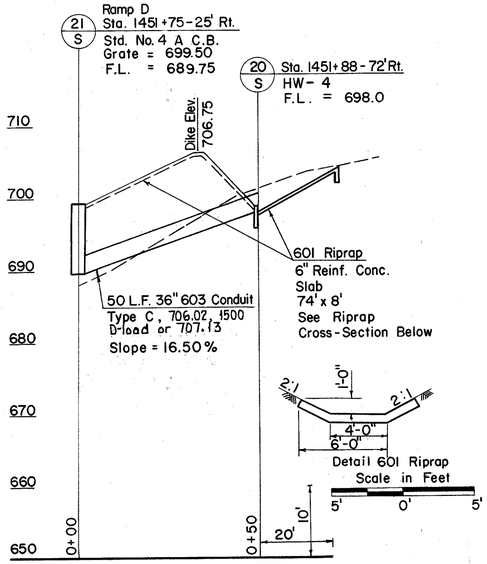

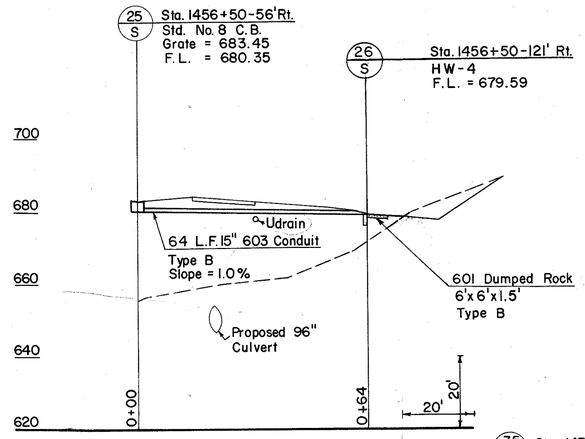

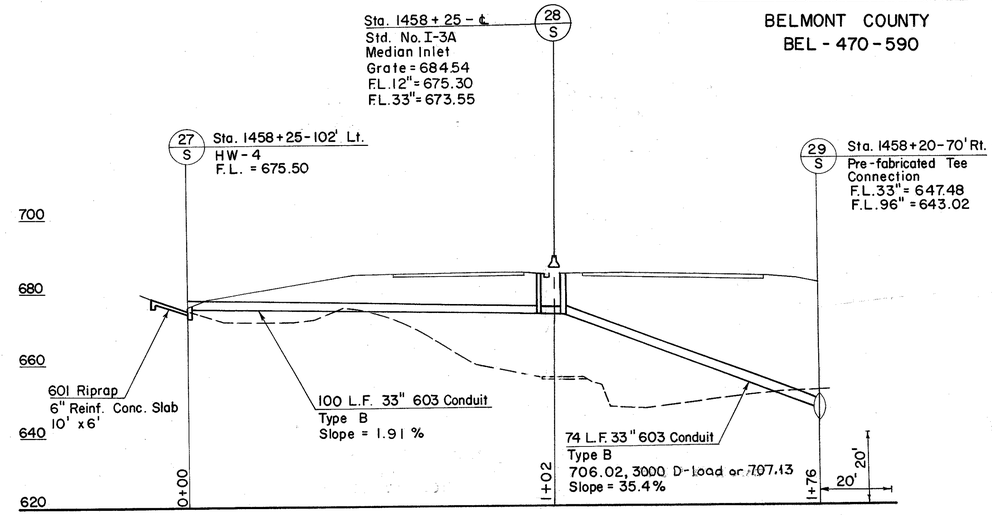

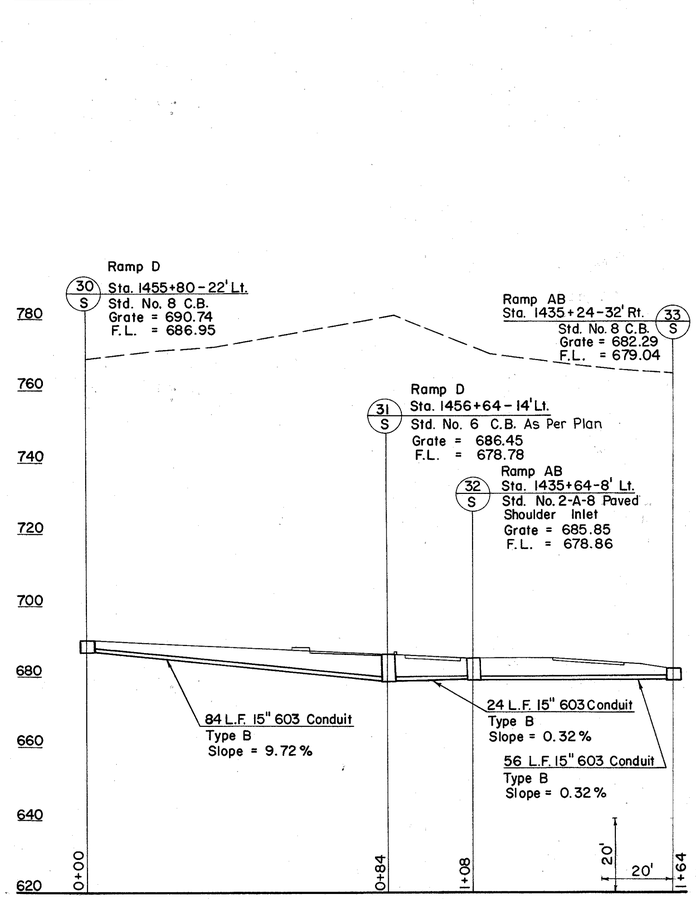

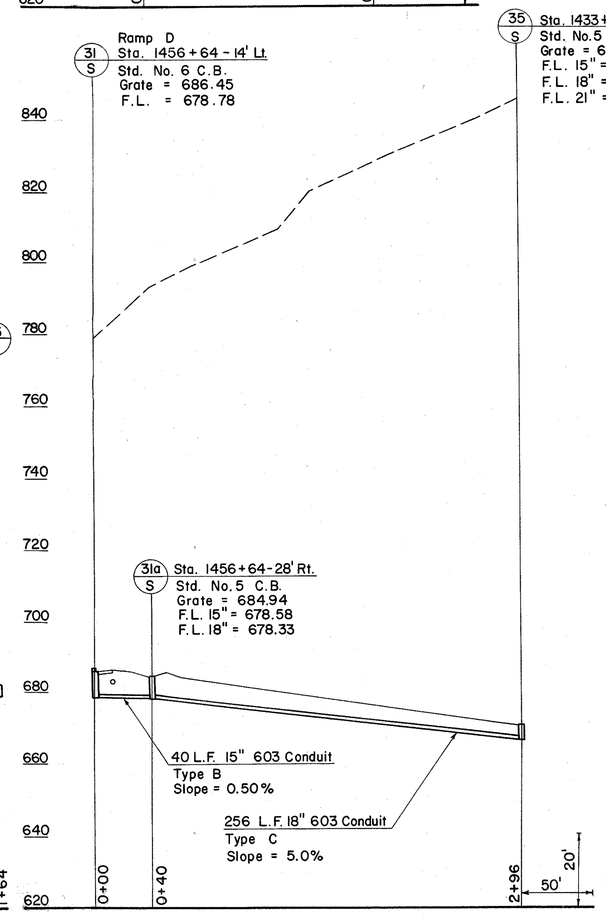

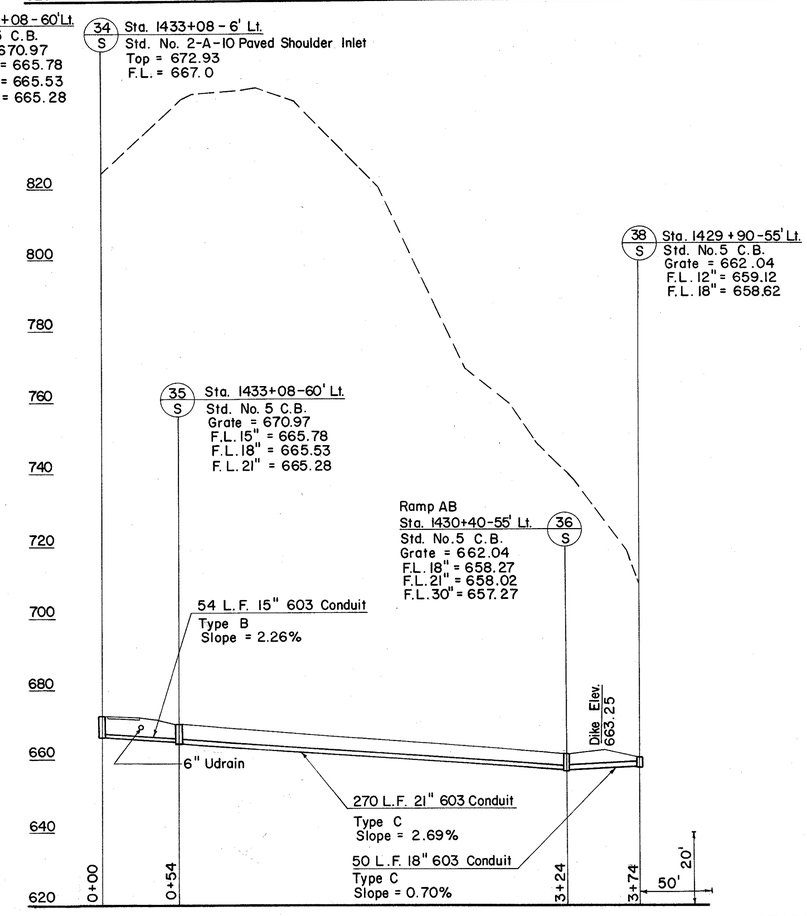

STORM SEWER PROFILES

FED. RD. DIVISION	STATE	PROJECT	
5	OHIO		

159
288

BELMONT COUNTY
BEL - 470 - 5.90

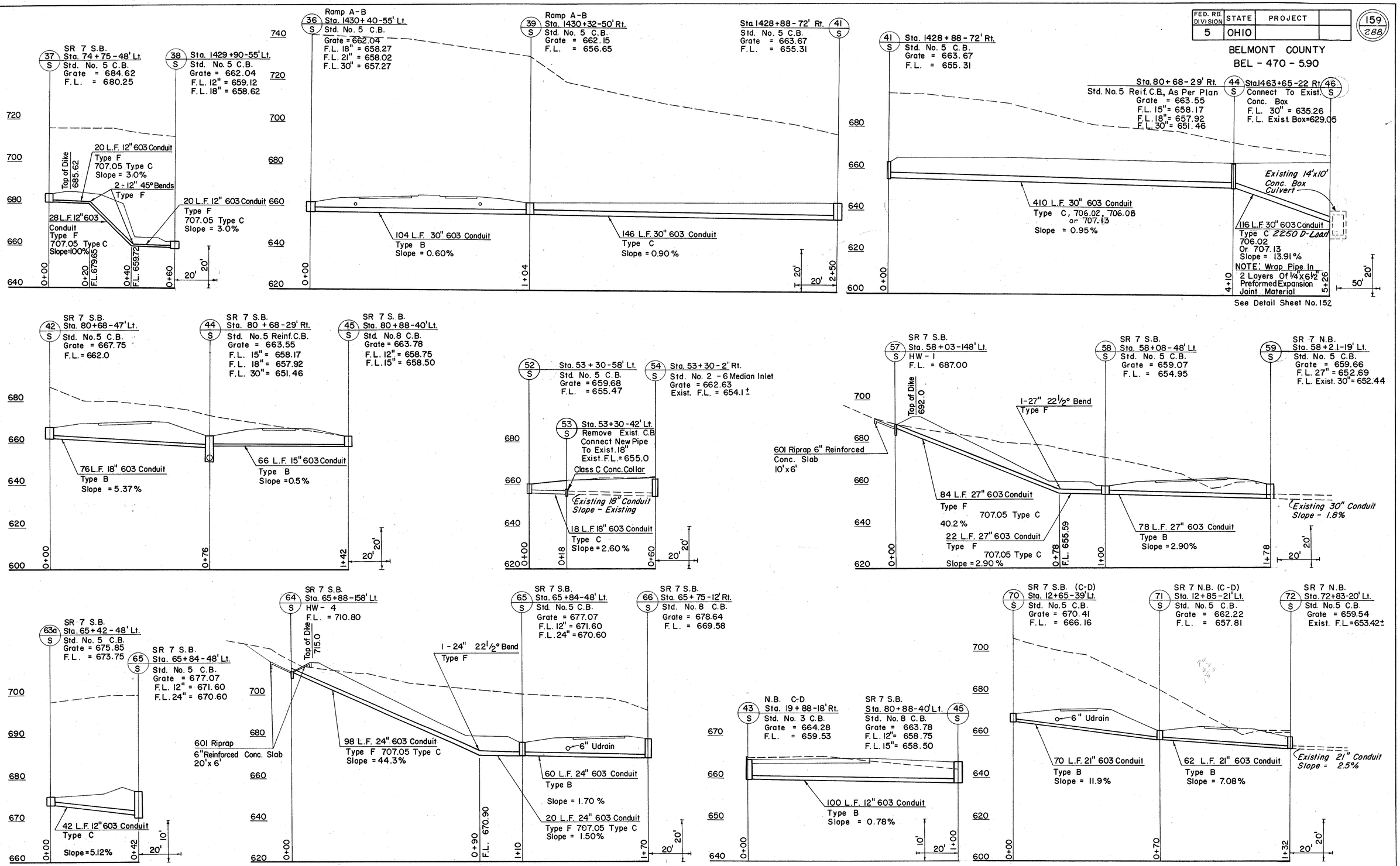

STORM SEWER PROFILES

FED. RD. DIVISION	STATE	PROJECT	
5	OHIO		

160
288

BELMONT COUNTY
BEL - 470-5.90

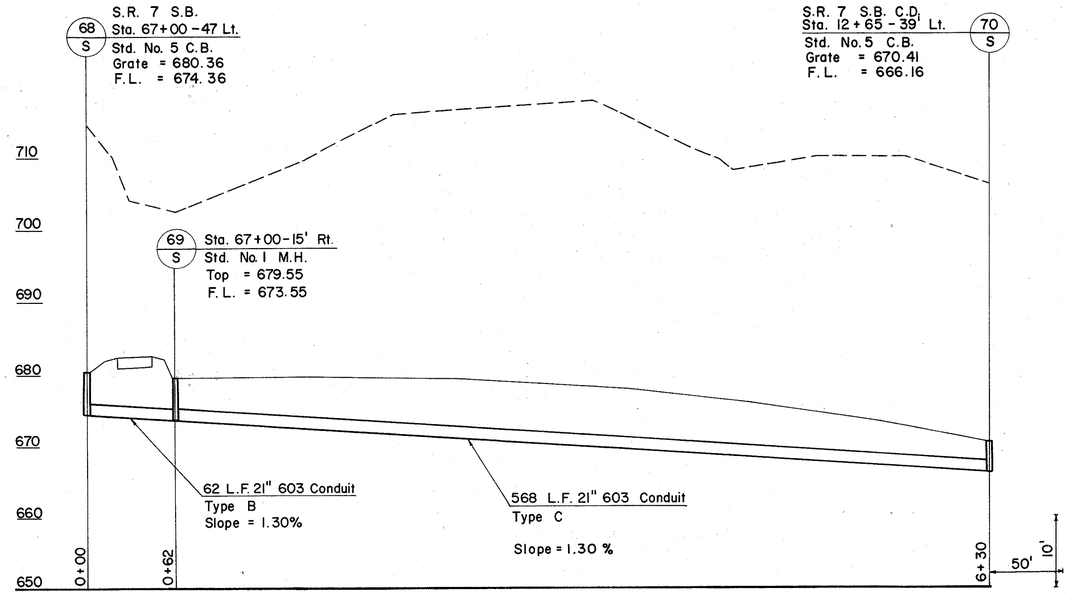

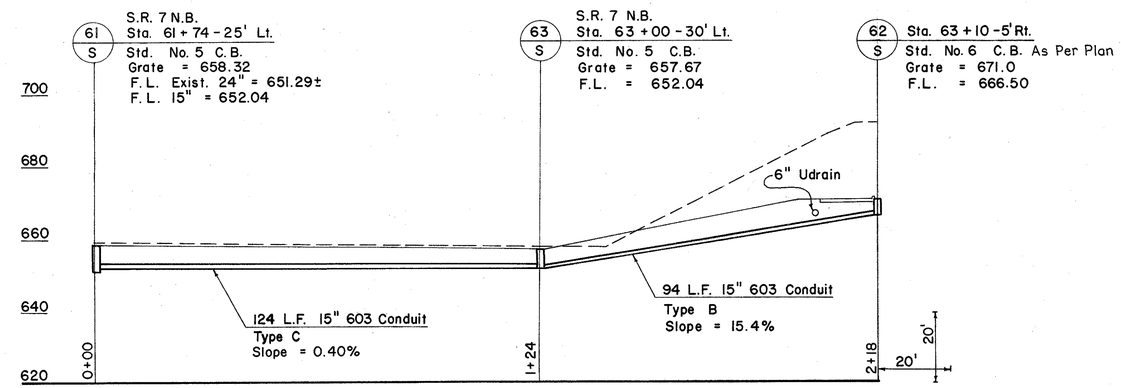

NOTE:
The grates of the I-3 A Median Inlets shall be on the left side (W.B. Side) of the Concrete Barrier.

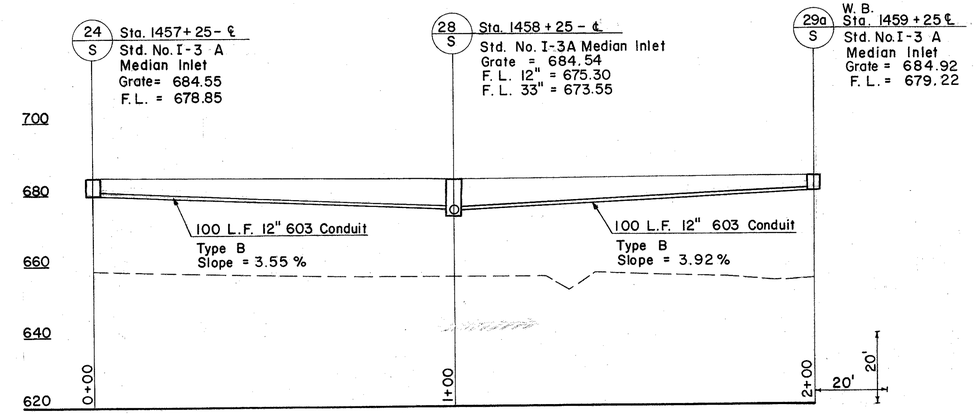

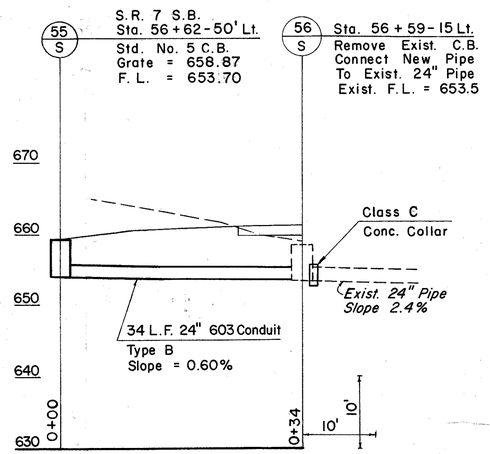

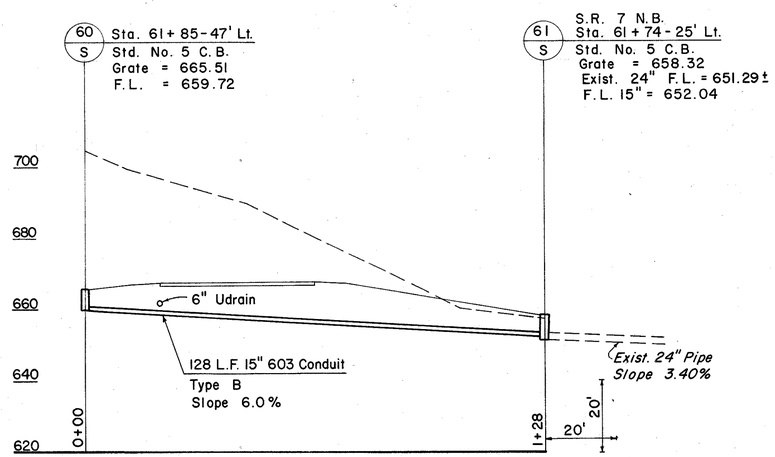

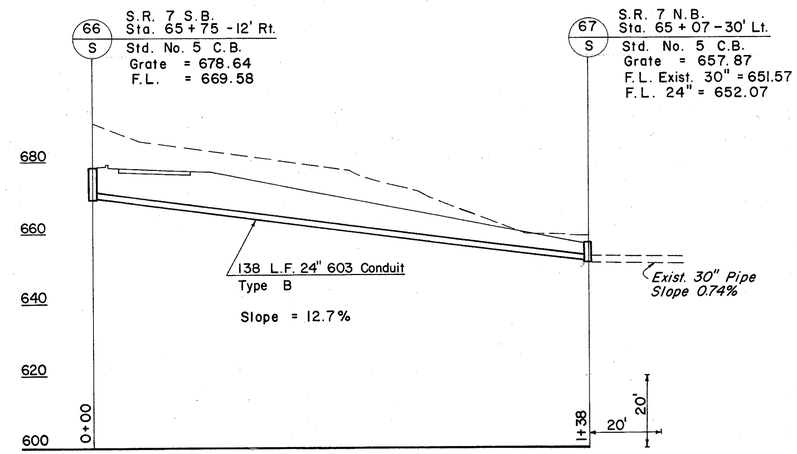

STORM SEWER PROFILES

FED. RD. DIVISION	STATE	PROJECT	
5	OHIO		

161
288

BELMONT COUNTY
BEL-470-5.90

SUPERELEVATION TABLES

WESTBOUND

Remarks			24' Lt. Elev.	12' Lt. Elev.	P. G. Elev.	Station
Begin Trans.			706.20	706.39	706.20	1447+99.74
			706.19	706.38	706.19	1448+00
			705.25	705.38	705.19	1448+25.00
			704.32	704.38	704.19	1448+50.00
			703.38	703.38	703.19	1448+75.00
			702.45	702.39	702.20	1449+00
			701.55	701.43	701.24	1449+25.00
			700.68	700.49	700.30	1449+50.00
P. C.			700.62	700.43	700.24	1449+51.74
			699.89	699.64	699.40	1449+75.00
			699.14	698.83	698.52	1450+00
			698.41	698.04	697.66	1450+25.00
Begin F. S.			698.33	697.95	697.57	1450+27.74
			697.60	697.22	696.84	1450+50.00
End F. S.			697.23	696.85	696.47	1450+61.27
			696.73	696.38	696.04	1450+75.00
			695.83	695.55	695.27	1451+00
			694.97	694.75	694.52	1451+25.00
P. T.			694.55	694.36	694.17	1451+37.27
			694.16	694.00	693.81	1451+50.00
			693.79	693.66	693.47	1451+62.16
			693.76	693.63	693.44	1451+63.19
			693.41	693.12	693.12	1451+75.00
			692.68	692.65	692.46	1452+00
			691.98	692.01	691.82	1452+25.00
			691.32	691.41	691.22	1452+50.00
			690.67	690.83	690.64	1452+75.00
Begin N. C.			690.32	690.51	690.32	1452+89.27
Begin Pav't. Tran.			686.77	686.96	686.77	1460+94.00
			686.84	687.03	686.85	1461+00
			687.13	687.32	687.21	1461+25.00
			687.44	687.63	687.58	1461+50.00
			687.71	687.90	687.90	1461+70.00
			687.79	687.98	687.99	1461+75.00
			688.15	688.34	688.42	1462+00
			688.55	688.74	688.88	1462+25.00
			688.91	689.10	689.29	1462+46.00
			688.99	689.18	689.37	1462+50.00
Begin Appr. Slab			689.08	689.27	689.46	1462+55.25

EASTBOUND

Station	P. G. Elev.	12' Rt. Elev.	24' Rt. Elev.	Ramp G Width	Accel. Elev.	Remarks
1455+40.66	686.17	686.36	686.17			End Normal Begin Transition
1455+50.00	686.07	686.23	686.04			
1455+75.00	685.82	685.92	685.73			
1456+00	685.59	685.63	685.44			
1456+25.00	685.40	685.38	685.19			
1456+50.00	685.23	685.14	684.95			
1456+75.00	685.08	684.94	684.75			
1456+92.66	685.00	684.81	684.62			P. C.
1457+00	684.97	684.76	684.55			
1457+25.00	684.88	684.61	684.34			
1457+50.00	684.82	684.49	684.16			
1457+68.66	684.80	684.42	684.04			Begin F. S.
1457+75.00	684.79	684.41	684.03			
1458+00	684.79	684.41	684.03			
1458+02.19	684.79	684.41	684.03			End F. S.
1458+14.98	684.79	684.45	684.10	25.00	683.38	Begin Accel. Taper
1458+25.00	684.81	684.48	684.16	24.75	683.49	
1458+50.00	684.86	684.60	684.34	24.12	683.83	
1458+75.00	684.93	684.74	684.54	23.50	684.16	
1458+78.19	684.95	684.76	684.57	23.42	684.20	End Transition
1458+78.62	684.95	684.76	684.57	23.41	684.20	
1459+00	685.04	684.85	684.66	22.87	684.29	
1459+25.00	685.17	684.98	684.79	22.25	684.43	
1459+50.00	685.33	685.14	684.95	21.62	684.60	
1459+75.00	685.51	685.32	685.13	21.00	684.79	
1460+00	685.73	685.54	685.35	20.37	685.02	
1460+25.00	685.97	685.78	685.59	19.75	685.27	
1460+50.00	686.24	686.05	685.86	19.12	685.55	
1460+75.00	686.53	686.34	686.15	18.50	685.85	
1460+94.00	686.77	686.58	686.39	18.02	686.10	
1461+00	686.85	686.66	686.47	17.87	686.18	
1461+25.00	687.21	687.02	686.83	17.25	686.55	
1461+50.00	687.58	687.39	687.20	16.62	686.93	
1461+70.00	687.90	687.71	687.52	16.12	687.26	
1461+75.00	687.99	687.80	687.61	16.00	687.35	
1462+00	688.42	688.23	688.04	15.37	687.79	
1462+25.00	688.88	688.69	688.50	14.75	688.26	
1462+46.00	689.29	689.10	688.91	14.22	688.68	
1462+50.00	689.37	689.18	688.99	14.12	688.76	
1462+55.25	689.48	689.29	689.10	13.99	688.88	Begin Approach Slab

RAMP B

Station	P.G. Elev.	Edge of Pavement Elev.	Edge of Pavement Dist.	Face of Curb Elev.	Face of Curb Dist.	Remarks
1444+00	719.69	720.91	16.00			
1444+22.28	718.44	719.77				Begin F. S.
1444+25.00	718.28	719.61				
1444+50.00	716.88	718.21				
1444+75.00	715.48	716.81				
1445+00	714.08	715.41				
1445+15.00	713.24	714.57				
1445+25.00	712.69	714.02				
1445+50.00	711.38	712.71				
1445+75.00	710.19	711.52				
1446+00	709.09	710.42				
1446+25.00	708.11	709.44				
1446+48.14	707.28	708.61				End F. S.
1446+50.00	707.22	708.54				
1446+75.00	706.44	707.64				
1447+00	705.77	706.84				
1447+25.00	705.21	706.16				
1447+50.00	704.75	705.57				
1447+75.00	704.40	705.10				
1447+89.28	704.25	704.87				
1448+00	704.16	704.73				
1448+25.00	704.02	704.47				
1448+50.00	703.98	704.30				
1448+64.14	704.01	704.26				
1448+75.00	704.06	704.26				
1449+00	704.23	704.30				
1449+14.14	704.37	704.37				
1449+25.00	704.57	704.53				
1449+50.00	705.08	704.94				
1449+75.00	705.71	705.48				
1449+89.14	706.11	705.82	16.00	705.77	19.00	
1450+00	706.43	706.09	16.22	706.03	19.22	
1450+25.00	707.27	706.83	16.72	706.75	19.72	
1450+50.00	708.20	707.64	17.22	707.54	20.22	
1450+75.00	709.25	708.57	17.72	708.45	20.72	21' Rt.= P.G. Ramp
1450+85.00	709.69	708.96	17.92	708.84	20.92	AB Sta. 1447+30.08
1450+89.14	709.89	709.14	18.00	709.01	21.00	(1.5' Rt.)

S.B. COLLECTOR DISTRIBUTOR

Station	P.G.	Elev.	Width Lt.			
3+00	670.98	671.20	14.00			
3+25	671.64	671.98	14.50			
3+26	671.66	672.01	14.52			Begin F. S.
3+50	672.29	672.65	15.00			
3+75	672.95	673.33	15.50			
4+00	673.60	673.98	16.00			Bk.
4+00	673.60	673.93	14.00			Ah.
4+25	674.26	674.60	14.50			
4+50	674.91	675.27	15.00			
4+75	675.57	675.94	15.50			
5+00	676.23	676.61	16.00			
5+25	676.88	677.26				
5+40.86	677.30	677.68				End F. S.
5+50	677.54	677.87				
5+75	678.16	678.37				
6+00	678.73	678.81				
6+16.86	679.08	679.08				
6+25	679.24	679.20				
6+50	679.70	679.53				
6+66.86	679.97	679.72	16.00			Begin N.C.

N.B. COLLECTOR-DISTRIBUTOR

Station	P.G. Elev.	16' Rt. Elev.	Remarks
9+41.04	660.73	661.13	Nose Point
9+50.00	660.74	661.10	
9+73.94	660.80	661.04	P. T.
9+75.00	660.80	661.03	
10+00	660.90	661.01	
10+21.94	661.02	661.02	
10+25.00	661.03	661.01	
10+50.00	661.21	661.07	
10+71.94	661.40	661.15	Begin N. C.

N.B. COLLECTOR-DISTRIBUTOR

Station-S.R. 7	P.G.-Elev.	20'-0" Lt.	Remarks
83+00	665.49	665.11	
+50	665.52	665.19	
84+00	665.54	665.26	
+50	665.64	665.37	
85+00	665.75	665.50	
+50	665.74	665.51	
86+00	665.61	665.39	
+50	665.56	665.36	
87+00	665.44	665.25	
+50	665.28	665.11	
88+00	665.13	664.98	
+50	664.96	664.82	
89+00	664.74	664.62	
+50	664.62	664.61	
90+00	664.51	664.60	
+50	664.35	664.43	
91+00	664.22	664.28	
+50	664.04	664.09	
92+00	663.94	663.97	
+50	663.77	663.79	
93+00	663.58	663.58	

Profile Grade is N.B. S.R. 7 (Existing +825)
Elevation Left is Edge of Pavement
N.B. Collector Distribution Decel. Lane

RAMP C

Station	18' Lt. Elev.	P.G. Elev.	Remarks
1453+07.51	682.94	682.04	Ramp "C" Nose
1453+25.00	683.43	682.56	
1453+50.00	684.21	683.22	
1453+75.00	684.88	683.76	
1453+90.00	685.22	684.04	
1454+00	685.43	684.20	
1454+25.00	685.88	684.52	
1454+50.00	686.22	684.73	
1454+52.42	686.25	684.75	Begin F. S.
1454+75.00	686.34	684.84	
1455+00	686.33	684.83	
1455+25.00	686.22	684.72	
1455+50.00	685.99	684.49	
1455+60.00	685.87	684.37	
1455+75.00	685.67	684.17	
1456+00	685.35	683.85	
1456+14.55	685.16	683.66	End F. S.

FED. RD. DIVISION	STATE	PROJECT	
5	OHIO		

162
288

BELMONT COUNTY
BEL-470-5.90

SUPERELEVATION TABLES

S. R. 7 SOUTHBOUND

24' Lt. Elev.	12' Lt. Elev.	P. G. Elev.	Accel. Elev.	Lane Width	Station	Remarks
662.98	663.17	663.36			51+35.76	Begin P.C.Pavement
662.94	663.13	663.32			51+50.00	
662.92	663.11	663.30			51+58.74	
662.79	663.02	663.25			51+75.00	
662.60	662.89	663.18			52+00	
662.41	662.76	663.12			52+25.00	
662.21	662.63	663.05			52+50.00	
662.21	662.63	663.05			52+50.74	Begin F.S.
662.14	662.56	662.98			52+75.00	
662.07	662.49	662.91	662.91	0.00	53+00	Begin Accel. Lane
662.00	662.42	662.84	662.86	0.50	53+25.00	
661.94	662.36	662.78	662.81	1.00	53+50.00	
661.87	662.29	662.71	662.76	1.50	53+75.00	
661.80	662.22	662.64	662.71	2.00	54+00	
661.73	662.15	662.57	662.66	2.50	54+25.00	
661.66	662.08	662.50	662.61	3.00	54+50.00	
661.60	662.02	662.44	662.56	3.50	54+75.00	
661.53	661.95	662.37	662.51	4.00	55+00	
661.46	661.88	662.30	662.46	4.50	55+25.00	
661.39	661.81	662.23	662.41	5.00	55+50.00	
661.32	661.74	662.16	662.35	5.50	55+75.00	
661.25	661.67	662.09	662.30	6.00	56+00	
661.19	661.61	662.03	662.25	6.50	56+25.00	
661.12	661.54	661.96	662.20	7.00	56+50.00	
661.05	661.47	661.89	662.15	7.50	56+75.00	
660.98	661.40	661.82	662.10	8.00	57+00	
660.93	661.35	661.77	662.07	8.50	57+25.00	
660.92	661.34	661.76	662.08	9.00	57+50.00	
660.96	661.38	661.80	662.13	9.50	57+75.00	
661.03	661.45	661.87	662.22	10.00	58+00	
661.14	661.56	661.98	662.34	10.50	58+25.00	
661.29	661.71	662.13	662.51	11.00	58+50.00	
661.48	661.90	662.32	662.72	11.50	58+75.00	
661.71	662.13	662.55	662.97	12.00	59+00	
661.97	662.39	662.81	663.19	12.50	59+25.00	
662.28	662.70	663.12	663.45	13.00	59+50.00	
662.63	663.05	663.47	663.75	13.50	59+75.00	
663.02	663.44	663.86	664.10	14.00	60+00	
663.45	663.87	664.29	664.48	14.50	60+25.00	
663.91	664.33	664.75	664.90	15.00	60+50.00	
664.15	664.57	664.99	665.12	15.24	60+62.13	End F. S.
664.49	664.87	665.26	665.36	15.50	60+75.00	
665.16	665.48	665.81	665.86	16.00	61+00	
665.87	666.13	666.39	666.40	16.50	61+25.00	
666.62	666.82	667.02	666.98	17.00	61+50.00	
666.75	666.94	667.13	667.08	17.08	61+54.13	Begin N. C.
666.30	667.49	667.68	667.60	17.50	61+75.00	
668.01	668.20	668.39	668.26	18.00	62+00	
668.73	668.92	669.11	668.94	18.50	62+25.00	
669.46	669.65	669.84	669.62	19.00	62+50.00	
670.18	670.37	670.56	670.30	19.50	62+75.00	
670.91	671.10	671.29	670.98	20.00	63+00	End Accel. Lane
686.42	686.61	686.80			68+88.96	End N. C.
686.62	686.79	686.97			69+00	
687.05	687.20	687.34			69+25.00	
687.43	687.55	687.66			69+50.00	
687.81	687.89	687.97			69+75.00	
688.12	688.17	688.22			70+00	

S. R. 7 SOUTHBOUND (CONTINUED)

24' Lt. Elev.	12' Lt. Elev.	P. G. Elev.	Decel. Elev.	Lane Width	Station	Remarks
688.41	688.43	688.45			70+25.00	
688.58	688.58	688.58			70+40.96	
688.69	688.66	688.64			70+50.00	
688.97	688.89	688.80			70+75.00	
689.22	689.07	688.92			71+00	
689.43	689.22	689.01			71+24.96	
689.44	689.23	689.02			71+25.00	
689.61	689.33	689.06			71+50.00	
689.76	689.43	689.09			71+75.00	
689.87	689.47	689.07			72+00	
689.90	689.48	689.06			72+8.96	Begin F. S.
689.86	689.44	689.02			72+25.00	
689.78	689.36	688.94			72+50.00	
689.67	689.25	688.83			72+75.00	
689.51	689.09	688.67			73+00	
689.39	688.97	688.55			73+17.46	End F. S.
689.28	688.88	688.48			73+25.00	
688.95	688.61	688.27			73+50.00	
688.56	688.29	688.01			73+75.00	
688.15	687.93	687.72			74+00	
688.12	687.91	687.70			74+ 1.46	
687.70	687.55	687.40			74+25.00	
687.22	687.13	687.04			74+50.00	
686.70	686.68	686.65			74+75.00	
686.48	686.48	686.48			74+85.46	
686.18	686.20	686.22			75+00	
685.66	685.71	685.76			75+25.00	
685.11	685.19	685.27			75+50.00	
684.52	684.63	684.74			75+75.00	
684.23	684.23	684.48			75+86.64	
683.88	684.03	684.17			76+00	
683.57	683.73	683.89			76+12.00	
683.22	683.40	683.57			76+25.00	
682.88	683.07	683.26			76+37.46	Begin N. C.
663.67	663.86	664.05	664.24	12.00	89+61.87	End N.C. Begin Decel. Lane
663.56	663.79	664.01	664.23	12.00	89+75.00	
663.38	663.66	663.95	664.24	12.00	90+00	
663.37	663.66	663.95	664.24	12.00	90+ 1.87	Begin F. S.
663.31	663.60	663.89	664.18	12.00	90+25.00	
663.25	663.54	663.83	664.12	12.00	90+50.00	
663.19	663.48	663.77	664.06	12.00	90+75.00	
663.13	663.42	663.71	664.00	12.00	91+00	
663.07	663.36	663.65	663.94	12.00	91+25.00	
663.04	663.33	663.62	663.91	12.00	91+36.60	
663.01	663.30	663.59	663.84	10.39	91+50.00	
662.95	663.24	663.53	663.71	7.39	91+75.00	
662.92	663.21	663.50	663.65	6.10	91+85.80	
662.89	663.18	663.47	663.58	4.39	92+00	
662.83	663.12	663.41	663.44	1.39	92+25.00	
662.80	663.09	663.38	663.38	0.00	92+36.60	
662.77	663.06	663.35			92+50.00	End Decel. Lane
662.71	663.00	663.29			92+75.00	
662.68	662.97	663.26			92+85.80	
662.65	662.94	663.23			93+00	
662.59	662.88	663.17			93+25.00	
662.53	662.82	663.11			93+50.00	
662.47	662.76	663.05			93+75.00	
662.43	662.72	663.01			93+90.00	

S. R. 7 SOUTHBOUND (CONTINUED)

24' Lt. Elev.	12' Lt. Elev.	P. G. Elev.			Station	Remarks
662.41	662.70	662.99			94+00	
662.35	662.64	662.93			94+25.00	
662.28	662.57	662.86			94+50.00	
662.20	662.49	662.78			94+75.00	
662.16	662.45	662.74			94+90.00	
662.13	662.42	662.71			95+00	
662.06	662.35	662.64			95+25.00	
661.98	662.27	662.56			95+50.00	
661.91	662.20	662.47			95+75.00	
661.84	662.13	662.42			95+89.20 =	96+07.77 N.B. ℄
661.84	662.13	662.42			96+08.57 N.B.	End F. S.
661.83	662.11	662.38			96+18.57 N.B.	
661.83	662.10	662.36			96+25.00 N.B.	
661.83	662.09	662.34			96+30.00 N.B.	End Work

RAMP A

Station	P. G. Elev.	18' Rt. Elev.	Remarks
1447+30.08	707.26	708.76	Begin Ramp "A"
1447+50.00	706.45	707.95	
1447+75.00	705.43	706.93	
1448+00	704.42	705.92	
1448+25.00	703.40	704.90	
1448+50.000	702.39	703.89	
1448+75.00	701.39	702.89	
1449+00	700.44	701.94	
1449+25.00	699.52	701.02	
1449+50.00	698.64	700.14	
1449+75.00	697.79	699.29	
1449+79.99	697.63	699.13	End F. S.
1450+00	696.99	698.39	
1450+25.00	696.22	697.49	
1450+50.00	695.50	696.63	
1450+75.00	694.81	695.81	
1451+00	694.16	695.03	
1451+25.00	693.55	694.29	
1451+50.00	692.97	693.58	
1451+63.19	692.68	693.22	Ramp "A" Nose

RAMP D

Station	16' Lt. Elev.	P. G. Elev.	Remarks
1446+90.87	710.06	709.66	Ramp "D" Nose
1447+00	709.67	709.27	
1447+25.00	708.65	708.25	
1447+37.46	708.16	707.76	
1447+50.00	707.76	707.30	
1447+75.00	707.03	706.44	
1447+90.46	706.62	705.95	
1448+00	706.38	705.67	
1448+25.00	705.80	704.96	
1448+50.00	705.31	704.35	
1448+75.00	704.90	703.81	
1449+00	704.56	703.35	
1449+23.46	704.32	702.99	Begin F. S.
1449+25.00	704.30	702.97	
1449+50.00	704.00	702.67	
1449+75.00	703.79	702.46	
1449+77.89	703.77	702.44	
1450+00	703.54	702.32	
1450+10.00	703.46	702.29	
1450+25.00	703.34	702.25	
1450+50.00	703.16	702.19	
1450+75.00	702.96	702.12	
1450+95.59	702.81	702.07	
1451+00	702.78	702.06	
1451+25.00	702.58	701.99	
1451+50.00	702.40	701.93	
1451+75.00	702.20	701.86	
1452+00	702.02	701.80	
1452+15.00	701.90	701.76	
1452+25.00	701.82	701.73	
1452+43.89	701.63	701.63	
1452+50.00	701.56	701.59	
1452+75.00	701.20	701.36	
1453+00	700.77	701.05	
1453+25.00	700.24	700.65	
1453+50.00	699.65	700.18	
1453+75.00	698.94	699.60	
1454+00	698.17	698.95	
1454+15.00	697.66	698.52	
1454+25.00	697.31	698.22	
1454+47.89	696.44	697.46	
1454+50.00	696.37	697.39	
1454+63.89	695.88	696.90	End F. S.
1454+65.89	695.81	696.82	

FED. RD. DIVISION	STATE	PROJECT	
5	OHIO		

BELMONT COUNTY
BEL-470-5.90

SUPERELEVATION TABLES

RAMP A-B

LEFT								RIGHT				
Remarks	DECEL. LANE		EDGE OF PAVEMENT		3' Lt.	P. G.	Station	P. G.	3' Rt.	EDGE OF PAVEMENT		Remarks
	Dist.	Elev.	Dist.	Elev.	Elev.	Elev.		Elev.	Elev.	Elev.	Dist.	
End N. C.	27.00	677.99	15.00	668.37	668.18	668.42	1431+98.91	668.42	668.37	668.12	19.00	
	27.04	668.04	15.01	668.22	668.41	668.46	1432+00	668.46	668.41	668.16		
	27.87	669.09	15.29	669.23	669.37	669.41	1432+25.00	669.41	669.36	669.11		
	28.70	670.24	15.57	670.35	670.42	670.45	1432+50.00	670.45	670.40	670.15		
	29.54	671.50	15.85	671.56	671.59	671.60	1432+75.00	671.60	671.55	671.30		
	30.37	672.85	16.12	672.87	672.83	672.84	1433+00	672.84	672.79	672.54		
	31.20	674.20	16.40	674.19	674.10	674.09	1433+25.00	674.09	674.04	673.79		
	32.04	675.56	16.68	675.50	675.36	675.34	1433+50.00	675.34	675.29	675.04		
	32.87	676.92	16.96	676.82	676.62	676.59	1433+75.00	676.59	676.54	676.29		
	33.70	687.28	17.23	678.14	677.88	677.84	1434+00	677.84	677.79	677.54		
	34.54	679.63	17.51	679.45	679.14	679.09	1434+25.00	679.09	679.04	678.79		
	35.37	680.99	17.79	680.77	680.40	680.34	1434+50.00	680.34	680.29	680.04		
	36.20	682.35	18.07	682.09	681.66	681.59	1434+75.00	681.59	681.54	681.29		
	36.22	683.80	18.07	682.12	681.69	681.62	1434+75.65	681.62	681.57	681.32		End N. C.
	37.04	683.71	18.35	683.40	682.92	682.84	1435+00	682.84	682.77	682.42		
	37.87	685.06	18.62	684.72	684.18	684.09	1435+25.00	684.09	684.00	683.54		
	38.70	686.42	18.90	686.04	685.45	685.34	1435+50.00	685.34	685.23	684.67		
Ramp "D" Nose	39.00	686.91	19.00	686.51	685.90	685.79	1435+58.91	685.79	685.67	685.07		
				687.31	686.64	686.52	1435+73.65	686.52	686.39	685.72		
				687.39	686.71	686.59	1435+75.00	686.59	686.46	685.79		
				688.77	687.98	687.84	1436+00	687.84	687.69	686.92		
				690.14	689.25	689.09	1436+25.00	689.09	688.92	688.04		
				691.52	690.52	690.34	1436+50.00	690.34	690.15	689.17		
				692.89	691.79	691.59	1436+75.00	691.59	691.38	690.29		
				694.27	693.06	692.84	1437+00	692.84	692.61	691.42		
				695.64	694.34	694.09	1437+25.00	694.09	693.85	692.54		
				695.97	694.64	694.39	1437+31.65	694.42	694.17	692.84		Beg. F. S.
				696.92	695.59	695.34	1437+50.00	695.34	695.09	693.76		
				698.17	696.84	696.59	1437+75.00	696.59	696.34	695.01		
				699.42	698.09	697.84	1438+00	697.84	697.59	696.26		
				700.17	698.84	698.59	1438+14.93	698.59	698.34	697.01		End F. S.
				700.62	699.33	699.09	1438+25.00	699.09	698.85	697.56		
				701.74	700.56	700.34	1438+50.00	700.34	700.12	698.94		
				702.87	701.79	701.59	1438+75.00	701.59	701.39	700.31		
				703.99	703.02	702.84	1439+00	702.84	702.66	701.69		
				705.12	704.25	704.09	1439+25.00	704.09	703.93	703.06		
				706.24	705.48	705.34	1439+50.00	705.34	705.20	704.44		
				707.28	706.62	706.49	1439+72.93	706.49	706.36	705.70		
				707.37	706.71	706.59	1439+75.00	706.59	706.47	705.81		
				708.06	707.45	707.34	1439+90.00	707.34	707.23	706.62		
				708.51	707.95	707.84	1440+00	707.84	707.73	707.17		
				709.65	709.18	709.09	1440+25.00	709.09	709.00	708.53		
				710.34	709.92	709.84	*1440+40	709.84	709.76	709.34		V.P.C.
				710.79	710.40	710.33	*1440+50.00	710.33	710.26	709.88		
				711.84	711.55	711.50	1440+75.00	711.50	711.44	711.15		
				712.60	712.38	712.34	1440+94.67	712.34	712.30	712.08		
				712.81	712.61	712.57	1441+00	712.57	712.53	712.33		
				713.67	713.56	713.54	1441+25	713.54	713.52	713.42		
				714.45	714.43	714.43	1441+50.00	714.43	714.42	714.41		
				714.57	714.57	714.57	1441+54.45	714.57	714.57	714.57		Flat
			19.00	715.13	715.20	715.21	1441+75.00	715.21	715.23	715.30	19.00	

RAMP A-B

LEFT					RIGHT				
EDGE OF PAVEMENT		3' Lt.	P.G.	Station	P.G.	3' Rt.	EDGE OF PAVEMENT		Remarks
Dist.	Elev.	Elev.	Elev.		Elev.	Elev.	Elev.	Dist.	
19.00	715.71	715.88	715.91	1442+00	715.91	715.94	716.10	19.00	
19.00	716.20	716.46	716.51	1442+25.00	716.51	716.55	716.81	19.00	
19.00	716.60	716.95	717.01	1442+50.00	717.01	717.08	717.42	19.00	
19.00	716.88	717.31	717.39	1442+72.73	717.39	717.47	717.90	19.00	
19.05	716.90	717.34	717.42	1442+75.00	717.42	717.50	717.94	19.05	
19.55	717.08	717.64	717.74	1443+00	717.74	717.84	718.39	19.55	
20.05	717.17	717.84	717.96	1443+25.00	717.96	718.07	718.75	20.05	
20.35	717.18	717.92	718.05	*1443+40	718.05	718.18	718.92	20.35	V.P.I.
20.55	717.16	717.95	718.09	*1443+50.00	718.09	718.22	719.01	20.55	
21.00	717.07	717.97	718.12	1443+72.73	718.12	718.27	719.17	21.00	
	717.06	717.97	718.12	1443+75.00	718.12	718.27	719.18		
	716.87	717.89	718.06	1444+00	718.06	718.23	719.24		
	716.59	717.71	717.90	1444+25.00	717.90	718.09	719.21		
	716.21	717.44	717.65	1444+50.00	717.65	717.85	719.09		
	715.74	717.08	717.30	1444+75.00	717.30	717.53	717.87		
	715.18	716.62	716.87	1445+00	716.87	717.11	718.55		
	714.86	716.36	716.61	1445+12.73	716.61	716.86	718.36		Begin F. S.
	714.56	716.08	716.33	1445+25.00	716.33	716.58	718.08		
	713.95	715.45	715.70	1445+50.00	715.70	715.95	717.45		
	713.82	715.32	715.57	1445+55.08	715.57	715.82	717.32		End F. S.
	713.23	714.73	714.98	1445+75.00	714.98	715.22	716.63		
	712.42	713.92	714.17	1446+00	714.17	714.38	715.69		
	711.50	713.00	713.25	1446+25.00	713.25	713.45	714.66		
	710.91	712.41	712.66	*1446+40	712.66	712.85	713.99		V.P.I.
	710.51	712.01	712.26	*1446+50.00	712.26	712.44	713.53		
	709.49	710.99	711.24	1446+75.00	711.24	711.41	712.39		
	708.88	710.38	710.63	1446+90.00	710.63	710.79	711.71		
	708.48	709.98	710.23	1447+00	710.23	710.38	711.26		
	707.46	708.96	709.21	1447+25.00	709.21	709.34	710.11		
21.00	707.26	708.76	709.01	1447+30.08	709.01	709.14	709.89	21.00	End Ramp A-B

GENERAL SUMMARY

BELMONT COUNTY
BEL-470-5.90

ITEM	Sheet Numbers 165	171	Installation Number 11a	12a	13	14	15	16	17	18	19	20	21	22	23 Normal	100% State	47% Fed. 33% State	24	25	26	27	28	ITEM	QUANT.	UNIT	DESCRIPTION
606		2012.5																					606	2012.5	L.F.	Temporary Beam Rail, Type 6
620	14																						620	14	Each	Delineators, Type A, Post Mounted
620	3																						620	3	Each	Delineators, Type A, Bracket Mounted
620	128																						620	128	Each	Delineators, Type D, Post Mounted
620	34																						620	34	Each	Delineators, Type D, Bracket Mounted
620		13																					620	13	Each	Interim Delineators
621	10.49																						621	10.49	Mile	Edge Lines
621	2.22																						621	2.22	Mile	4" Lane Lines
621	1.50																						621	1.50	Mile	6" Lane Lines
621	3573																						621	3573	L.F.	Channelizing Lines
621	1370																						621	1370	L.F.	24" Broad Transverse Lines
621	2126																						621	2126	L.F.	Curb Marking
621	83																						621	83	L.F.	24" Stop Lines
621	2																						621	2	Each	Word, ONLY, on Pavement
621	10																						621	10	Each	Lane Arrows
621	253																						621	253	S.F.	Island Marking
S625			1	1	1	1			1	1		1	1										S625	8	Each	Ground Rods
844			10.3		11.9				9.3	4.0		9.3	4.0										844	48.8	C.Y.	Concrete for Anchor Base Foundations
844							2.2	2.2			3.0			3.0				0.6	0.6	0.6	0.6	0.6	844	13.4	C.Y.	Concrete for Embedded Foundations
844	62																						844	62	L.F.	Ground Mounted Supports, No. 3 Post, Driven
844	506																						844	506	L.F.	Ground Mounted Supports, No. 4 Post, Driven
844	48																						844	48	L.F.	Ground Mounted Supports, No. 4 Post, As Per Plan, Driven
844	68																						844	68	L.F.	Ground Mounted Supports, No. 6 Post, Driven
844																		26	26	28	32	32	844	144	L.F.	Ground Mounted Supports, S4x7.7
844							37	42															844	79	L.F.	Ground Mounted Supports, W10x11.5
844											61			61									844	122	L.F.	Ground Mounted Supports, W12x31
844		176																					844	176	L.F.	Interim Posts, No. 3, As Per Plan
844							2	2			2			2				2	2	2	2	2	844	18	Each	Breakaway Beam Connection
844					1																		844	1	Each	Overhead Sign Support, Type 7.65, Design 6, Modified, 57' Span
844												1											844	1	Each	Overhead Sign Support, Type 7.65, Design 6, Modified, 72' Span
844									1														844	1	Each	Overhead Sign Support, Type 7.65, Design 6, Modified, 74' Span
844			1																				844	1	Each	Overhead Sign Support, Type 7.65, Design 8, Modified, 76' Span
844																	1						844	1	Each	Overhead Sign Support, Type 7.65, Design 8, Modified, 93'5" Span
844										1			1										844	2	Each	Overhead Sign Support, Type 12.30, Design 8, Modified, 26' Arm
844				2		2																	844	4	Each	Overpass Structure Mounted Sign Support, Type 18.24
844	423	100																18.5	18.5				844	560	S.F.	Signs Erected, Flat Sheet
844			563	338	424	252	65	65	306	176	160	306	176	160	414	173		20	18	32	30	30	35 35 844	3708	S.F.	Signs Erected, Extrusheet
844			1	1	1	1			1	1		1	1		1								844	9	Each	Sign Service
844			3		2				2	1		2	1		2	1							844	14	Each	Signs Wired
844				2		2																	844	4	Each	Signs Wired, Overpass Structure Mounted
844			1	1	1	1			1	1		1	1		1								844	9	Each	Disconnect Switch with Enclosure, Size X
844				2		2																	844	4	Each	Disconnect Switch Enclosure Mounting Brackets
844			4	4	3	4			4	2		4	2			3							844	30	Each	Ballast, Type CMRI-175-480
844			2		2										4								844	8	Each	Ballast, Type CMRI-250-480
844			4	4	3	4			4	2		4	2			3							844	30	Each	Mercury Vapor Luminaire with Type 175 Watt Lamp
844			2		2										4								844	8	Each	Mercury Vapor Luminaire with Type 250 Watt Lamp
847		1950																					847	1950	L.F.	Temporary 4" Edge Line, 847.10 Type B

FED. RD. DIVISION	STATE	PROJECT	
5	OHIO		

165
288

BELMONT COUNTY
BEL-470-5.90

ITEM 621 PAVEMENT MARKINGS

Station to Station		Side	4" Edge Lines White	4" Edge Lines Yellow	4" Lane Lines	6" Lane Lines	8" Channel Lines	Broad Trans. Lines	Curb Marking	Stop Lines	Lane Arrows	Only	Island Marking Yellow
			Lin.Ft.	Lin.Ft.	Lin.Ft.	Lin.Ft.	Lin.Ft.	Lin.Ft.	Lin.Ft.	Lin.Ft.	Each	Each	Sq.Ft.
W.B. ACCEL. LANE													
1429+00	1439+89.28	Lt.	1089		561								
WESTBOUND													
1429+00	1468+69.60	Med.& ℄		3970		3970							
1434+61.28	1451+62.16	Lt.	1701										
1456+32.57	1468+69.60	Lt.	1237										
E. B. & DECEL LANE													
1429+00	1446+91.70	Rt.	1792										
EASTBOUND													
1429+00	1468+69.60	Med.& ℄		3970		3970							
1446+91.70	1462+54.55	Rt.	1563										
E. B. ACCEL. LANE													
1458+14.55	1468+69.60	Rt.	1055										
RAMP A DECEL. LANE													
1451+62.16	1454+17						511	260					
1454+17	1456+40				223								
RAMP B ACCEL. LANE													
1437+49.28	1439+89.28						240						
1434+61.28	1437+49.28				288								
RAMP C DECEL & ACCEL. LANES													
1452+29	1453+07.51						160	64					
1458+14.55	1460+14.55						200						
1460+14.55	1462+54.55				240								
RAMP D DECEL. LANE													
1444+13	1446+91.70						560	280					
1442+11	1444+13				202								
RAMP A													
1447+30.08	1456+33.06	Lt.	903										
1447+30.08	1448+34	Rt.		104					104				
1448+34	1451+63.19	Rt.	329										
RAMP B													
1439+89.28	1450+89.14	Lt.	1100						476				
1443+89.28	1449+82	Rt.	593										
1449+82	1450+89.14	Rt.		107					107				
RAMP C													
1451+52.42	1458+14.55	Rt.	662										
1453+07.51	1457+14.55	Lt.	407										
1456+14.55	1458+14.55	Lt.							200				
1452+40	1453+07.51	Lt.					140	100					
RAMP D													
1446+90.87	1456+65.89	Rt.	975										
1446+90.87	1455+65.89	Lt.	875						200				
RAMP A-B													
1428+56	1429+08.58	Lt.	120										
1428+56	1429+57.01	Rt.	170										
1429+08.58	1435+58.91	Lt.	650										
1432+85	1435+58.91	Lt.	274										
1435+58.91	1447+30.08	Lt.	1171										
1429+57.01	1433+62.03	Rt.	405										
1435+20.76	1447+30.08	Rt.	1209										
1428+96.42	1447+30.08	Med.Rt.		1834									
1428+96.42	1447+30.08	Med.Lt.		1834									
1428+71.14	1428+96.42	Med.											253
1430+60	1435+58.91	Lt.			499								
1428+81	1420+60						179			35	4	2	
S. R. 7 SOUTHBOUND													
51+35.76	96+30	Lt.	4495		4495								
51+35.76	63+00	Rt.		1164									
60+00	84+85.80	B/L	300	2186									
84+85.80	88+29	B/L					693	333					
88+29	89+85	B/L			156								
89+61.85	EQ.95+89.20	Rt.		628									
EQ96+07.77	96+30	Rt.		22									
SOUTHBOUND COLLECTOR DISTRIBUTOR													
3+00	14+57.07	Lt.	1157										
17+10.69	24+85.94	Lt.	775										
3+00	15+60	Rt.		1260					500				
16+15	29+60.89	B/L		1336						27	3		
60+00 S.B.	63+00 S.B.	Rt.			100		200						

ITEM 621 PAVEMENT MARKINGS

Station to Station		Side	4" Edge Lines White	4" Edge Lines Yellow	4" Lane Lines	6" Lane Lines	8" Channel Lines	Broad Trans. Lines	Curb Marking	Stop Lines	Lane Arrows	Only	Island Marking Yellow
			Lin.Ft.	Lin.Ft.	Lin.Ft.	Lin.Ft.	Lin.Ft.	Lin.Ft.	Lin.Ft.	Lin.Ft.	Each	Each	Sq.Ft.
S.R. 7 NORTHBOUND													
51+35.76	62+76.11	Lt.		1140									
69+41.37	86+00	Lt.	300	1359									
83+00	86+00	B/L			300								
83+00	96+07.77 EQ	Lt.		1308									
EQ96+07.77	96+30	Lt.		22									
51+35.76	96+30	Rt.	4495		4495								
NORTHBOUND COLLECTOR DISTRIBUTOR													
9+41.04	22+95.57	Rt.	1354										
2+76.11	15+34.11	Lt.		1258									
15+34.11	15+74	Lt.		50						21	3		
16+25	16+63.88	Lt.		45									
16+63.88	22+95.57	Lt.		632					539				
6+00	9+41.04						690	333					
4+20	6+00				180								
	TOTAL		31,156	24,229	11,739	7,940	3,573	1,370	2,126	83	10	2	253
	TOTAL MILES		5.90	4.59	2.22	1.50							

ITEM 620 DELINEATORS

Station to Station		Side	Interval	TYPE POST A Ea.	TYPE POST D Ea.	TYPE BRACKET A Ea.	TYPE BRACKET D Ea.
WESTBOUND							
1431+60		Lt.		1			
1434+60	1442+60	Lt.	100		9		
1444+00	1450+00	Lt.	200	4			
1461+00		Lt.		1			
1463+00	1467+00	Lt.	200			3	
EASTBOUND							
1431+60		Rt.		1			
1435+60	1437+60	Rt.	200	2			
1439+00	1442+00	Rt.	100		4		
1447+00	1455+00	Rt.	200	5			
1458+20	1462+20	Rt.	100		4		1
1463+20	1468+20	Rt.	100				6
RAMP A							
1448+20	1450+60	Rt.	30		9		
1451+20		Lt.&Rt.			2		
1451+80	1459+80	Lt.	100		9		
RAMP B							
1443+20	1445+60	Rt.	60		5		
1445+60	1448+00	Lt.	60		5		
1449+00	1450+00	Rt.	100		2		
1450+00	1450+60	Lt.	60		2		
1450+60		Rt.			1		
RAMP A-B							
1429+10	1433+10	Rt.	100		5		
1429+10	1435+10	Lt.	100		7		
1436+50	1439+70	Lt.	40		9		
1440+10	1442+10	Lt.	100				3
1440+10	1442+10	℄	100		3		

Station to Station		Side	Interval	TYPE POST A Ea.	TYPE POST D Ea.	TYPE BRACKET A Ea.	TYPE BRACKET D Ea.
RAMP A-B (Continued)							
1443+10		Rt.			1		
1443+70	1447+30	Rt.	30		13		
RAMP C							
1452+00	1453+00	Rt.	100		2		
1453+60		Lt.&Rt.			2		
1454+20	1456+60	Lt.	30		9		
1456+60	1457+80	Rt.	60		3		
RAMP D							
1443+00	1447+00	Rt.	100		5		
1447+80		Rt.			1		
1448+30		Rt.			1		
1448+30	1451+30	Lt.	50		7		
1451+30		Rt.			1		
1452+10	1453+10	Rt.	100		2		
1453+90		Rt.			1		
1454+40	1455+40	Rt.	50		3		
1456+20		Rt.			1		
	SUB-TOTAL			14	128	3	10
	AS PER PLAN						
RAMP A-B							
1436+10	1439+70	℄	40				10
1443+10		℄					1
1443+70	1447+30	℄	30				13
	SUB-TOTAL						24
	TOTAL			14	128	3	34

Sheet No.	CODE NO.	LOCATION STATION		ITEM 844 SIGNS ERECTED FLAT SHEET Sq.Ft.	ITEM 844 GROUND MOUNTED SUPPORTS #4 Post #3 Post Lin.Ft.	#4 Post Lin.Ft.	As Per Plan Lin.Ft.	#6 Post Lin.Ft.
169	N-41-12	1433+60	Lt.	2.0	7.5			
	N-41-12	1433+60	Rt.	2.0	7.5			
	W-49R-48	1444+00	Lt.	16.0		18.0/18.0		
	W-97-48	1454+50	Lt.	20.0		18.0/18.0		
	W-49R-48	1455+00	Rt.	16.0		18.0/18.0		
	RAMP A-B							
	R-15A-36	1430+20	Rt.	9.0		15.5		
	W-49SP-48	1436+40	Lt.	16.0		18.0/18.0		
	R-41A-36			6.0				
	W-45-48	1432+70	℄	16.0		18.0/18.0		
	W-45-48	1432+70	Lt.	16.0		18.0/18.0		
	R-31F-36	1430+88	Lt.	7.5	16.0/16.0			
	R-41A-36			6.0				
	W-98-48	1433+25	Rt.	20.0		17.0/17.0		
	R-1-48	1428+80	℄	16.0		15.0/15.0		
	R-1A-12			0.5				
	R-37-24			5.0				
	R-1-48	1428+80	Lt.	16.0		16.6	16.6	
	R-41B-30			6.25				
	R-1A-12			0.5				
	R-43L-36			3.0				
	S. B. COLLECTOR DISTRIBUTOR							
	W-45-36	19+00	Rt.	9.0		16.1		
	R-41A-36			6.0				
	W-45-36	19+00	Lt.	9.0		16.1		
	R-41A-36			6.0				
	R-1-48	16+60	Lt.	16.0		15.0	15.0	
	R-1A-12			0.5				
	R-41B-30			6.25				
	R-43L-36			3.0				
	M-2-36	14+30	Lt.	9.0				17.0
	M-38-36			4.5				
	N. B. COLLECTOR DISTRIBUTOR							
	W-45-36	13+00	Lt.	9.0		15.6		
	R-41A-36			6.0				
	W-45-36	13+00	Rt.	9.0		15.8		
	R-41A-36			6.0				
	R-37-24	15+62	Lt.	5.0	14.5			
	R-1-48	15+62	Rt.	16.0		16.0	16.0	
	R-1A-12			0.5				
	R-41B-30			6.25				
	R-43L-36			3.0				
	R-37-36	16+25	Lt.	12.0		15.6/15.7		
	M-2-36	17+10	Rt.	9.0				17.0
	M-37-36			4.5				
	SOUTHBOUND							
	W-49L-36	66+00	Rt.	9.0		16.1		
	M-2-36	48+00	Lt.	9.0				17.0
	M-38-36			4.5				
	NORTHBOUND							
	W-49L-36	80+50	Lt.	9.0		15.0		
	M-2-36	99+00	Rt.	9.0				17.0
	M-37-36			4.5				
	RAMP D							
	W-45-48	1455+80	Rt.	16.0		18.0/18.0		
169	R-41A-36			6.0				
		TOTALS		422.25	61.5	505.1	47.6	68.0

Calculated by L.M. 7-21-73
Checked by M.H. 7-26-73

620 INTERIM DELINEATORS

This work shall consist of furnishing and installing interim delineators as specified.

The work shall include No. 2 posts, 4'-0" long bolted to the inside of interim barrels furnished under 606 using a minimum of three 5/16" steel bolts spaced on 12" centers. Post flanges shall be 90 degrees to interim edge lines facing approaching traffic. Type D delineators shall be mounted on the drive post flanges with the top of the delineator 4'-0" above the pavement.

The quantity furnished and installed will be paid for at the price bid per each, 620 INTERIM DELINEATORS, which price will be full compensation for furnishing and installing drive posts and delineators including necessary hardware, labor and equipment.

625 PLAN SPECIFICATION REFERENCES

References to Item 625 and 713 in these plans shall be considered to read as respective references to Items S625 and S713.

844 SIGNS FURNISHED BY THE STATE

The contractor shall submit, in triplicate, a schedule for sign erection to the Engineer at least 120 calendar days prior to the start of any scheduled erection work. The schedule shall include proposed dates, sign numbers and delivery point. The Engineer will furnish copies of the schedule to the District Traffic Engineer and to the Engineer of Design Services, 25 South Front Street, Columbus, Ohio 43215.

844 MILE MARKER LOCATION

The locations shown in the plans for mile markers are approximate. The Bureau of Transportation Technical Services will locate the longitudinal position of the mile markers by a paint mark on the completed pavement edge. On divided highways only one pavement edge will be marked. Markers for the opposite direction shall be set across from those on the marked edge. The contractor shall notify the project engineer 30 days in advance of the planned marker installation. The project engineer will then notify the Bureau of Transportation Technical Services. Any delineator within 50 feet of a mile marker shall be omitted.

844 ALTERNATE DESIGNS FOR SIGN SUPPORTS

If the contractor desires to furnish alternate designs or materials for sign supports, the alternate designs shall be submitted to the State at least 21 days prior to opening of bids. The bidder will be notified as to acceptance or rejection of alternate design at least 7 days before bids are to be opened. Submissions shall be made to the Ohio Department of Transportation, Bureau of Design Services, 25 South Front Street, Columbus, Ohio 43215.

844 INTERIM POSTS, NO. 3, AS PER PLAN

This work shall consist of furnishing and installing interim posts as specified for interim pavement width transitions. Details are shown on Sheet 171.

Work shall consist of No. 3 posts 11'-0" long bolted to the inside of temporary barrels furnished under 606 using a minimum of three 5/16" steel bolts spaced on 12" centers.

Post flanges shall be 90 degrees to the interim edge lines facing approaching traffic. Bearing plates 3"x2" shall be used at each bolt outside the barrel to prevent pull through. Signs mounted on the posts shall have a seven foot clearance from the bottom of the sign to the surface of the pavement. Payment for furnishing and erection of these signs is covered under separate items within the plans.

The quantity furnished and installed will be paid for at the contract price bid per linear foot, 844 INTERIM POSTS, NO. 3, AS PER PLAN, which price will be full compensation for furnishing and installing the posts, including necessary hardware, labor and equipment.

844 GROUND MOUNTED SUPPORTS, NO. 4 POST, AS PER PLAN, DRIVEN

This work shall consist of the furnishing, assembly and installation of two (2) No. 2 drive posts (No. 4 post) in combination with a square welded or seamless galvanized tubular post extension spliced to the top of the No. 4 post. Details are shown on Standard Construction Drawing TC 41.50.

Square tubular post material shall conform to ASTM A 570 Grade B. Work shall include all labor, materials, equipment, tools and hardware necessary to perform the required work.

Basis of payment will be for 844 GROUND MOUNTED SUPPORTS, NO. 4 POST, AS PER PLAN, DRIVEN, per linear foot measured by the total overall length of combination post.

BALLASTS

In addition to the requirements of 844.10, ballasts for mercury vapor luminaires shall be located within the luminaire housing or contained in a weatherproof housing contiguous to the luminaire.

844 PADLOCKS AND KEYS

Padlocks furnished shall be either brass or bronze padlocks equal to Master No. 4 BKA or Wilson Bohannan 660 and shall be keyed in accordance with 844.10.

Payment will be included in the bid for the items being locked.

844 DISCONNECT SWITCH ENCLOSURE MOUNTING BRACKETS

This work shall include the fabricating, furnishing and installation of disconnect switch enclosure mounting brackets when enclosures are attached to concrete bridge columns or abutments

Work shall consist of field drilling, attachment and hardware as detailed on Standard Construction Drawing TC-32.11.

Basis of payment will be at the contract bid price per each, 844 DISCONNECT SWITCH ENCLOSURE MOUNTING BRACKETS, which price will be full compensation for furnishing, fabrication and installation including all labor, material and incidentals necessary to complete this work.

FED. RD. DIVISION	STATE	PROJECT	
5	OHIO		

169
288

BELMONT COUNTY
BEL-470-5.90

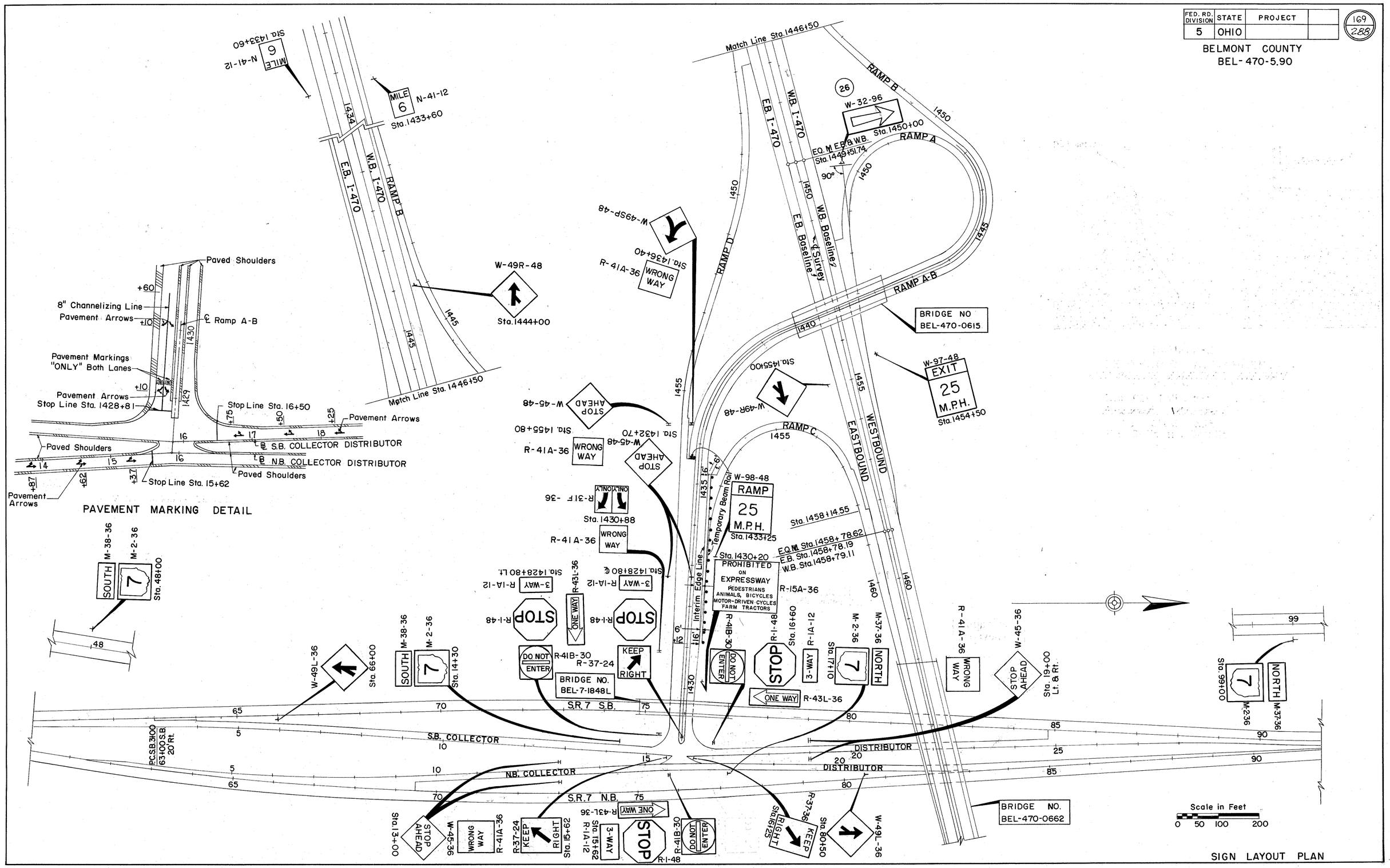

SIGN LAYOUT PLAN

FED. RD. DIVISION	STATE	PROJECT	
5	OHIO		

170/288

BELMONT COUNTY
BEL-470-5.90

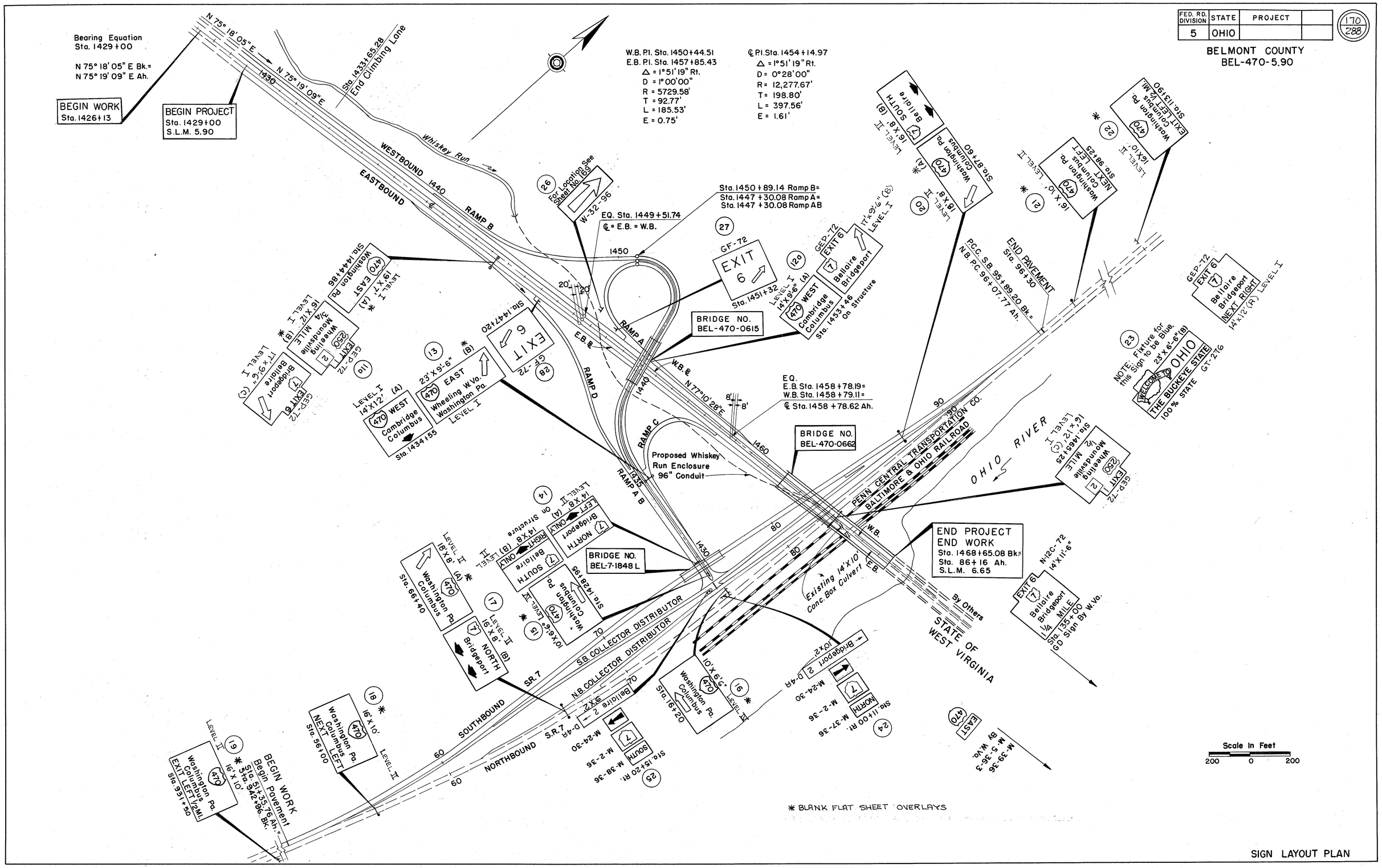

SIGN LAYOUT PLAN

FED. RD. DIVISION	STATE	PROJECT	
5	OHIO		

171
288

BELMONT COUNTY
BEL - 470 - 5.90

ITEM 606 TEMPORARY BEAM RAIL

Ramp A-B	Sta. 1431 + 12 to Sta. 1435 + 24.5 Rt.	412.5 L.F.	(From Sheet No. 169)
Ramp A-B	Sta. 1435 + 60 Lt.	25 L.F.	(From Sheet No. 169)
Mainline	Sta. 1431 + 50 to Sta. 1447 + 00 Rt.	1550 L.F.	
Mainline	Sta. 1440 + 00 Lt.	25 L.F.	
	TOTAL	2012.5 L.F.	

ITEM 620 INTERIM DELINEATORS

	Sta. 1432 + 00 to Sta. 1445 + 50	9 Ea.
Ramp A	Sta. 1430 + 62 to Sta. 1434 + 12	4 Ea.
	TOTAL	13 Ea.

ITEM 847 TEMPORARY EDGE LINE, 847.10 TYPE B

Ramp A-B	Sta. 1431 + 12 to Sta. 1435 + 20 Rt.	408 L.F.	(From Sheet No. 169)
Mainline	Sta. 1431 + 50 to Sta. 1446 + 91.70 Rt.	1542 L.F.	
	TOTAL	1950 L.F.	

BLANK FLAT SHEET OVERLAYS

Sta.	Sign No.	S.F.	SIZE
1444 + 86	11 aA	144	18'x8'
1444 + 86	11 aB	165	15'x11'
1434 + 55	13 B	187	22'x8.5'
40 + 00	19	135	15'x9'
56 + 00	18	135	15'x9'
66 + 40	17 A	119	17'x7'
1428 + 95	15	49.5	9'x5.5'
16 + 20	16	49.5	9'x5.5'
87 + 60	20	119	17'x7'
89 + 25	21	135	15'x9'
114 + 00	22	135	15'x9'
	TOTAL	1373 S.F.	

ITEM 844 INTERIM POSTS, NO. 3 , AS PER PLAN

Sta. 1431 + 50 to Sta. 1446 + 50	11 Ea. x 11'	121 L.F.	
Sta. 1430 + 12 to Sta. 1435 + 12	5 Ea. x 11'	55 L.F.	
	TOTAL	176 L.F.	

ITEM 844 SIGNS ERECTED, FLAT SHEET (W-138-30)

Sta. 1431 + 50 to Sta. 1446 + 50	11 Ea. x 6.25 S.F. = 68.75 S.F.	
Sta. 1431 + 12 to Sta. 1435 + 12	5 Ea. x 6.25 S.F. = 31.25 S.F.	
	TOTAL	100.00 S.F.

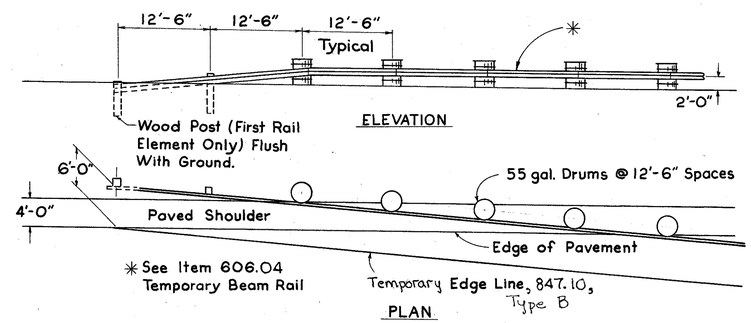

ANCHOR DETAIL
FOR
TEMPORARY BEAM RAIL

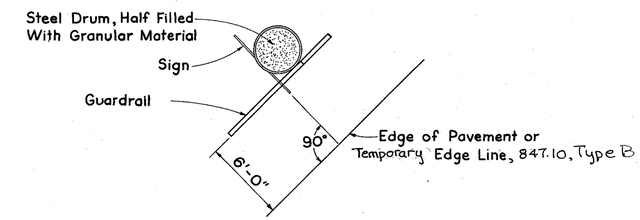

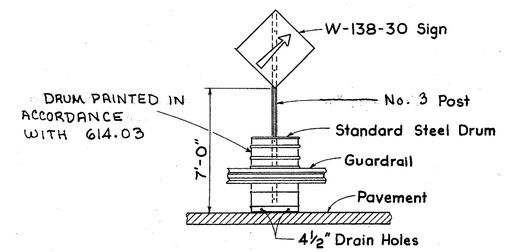

NOTE:
Erect W-138-30 Signs on First Barrel Then Every 100' For 300' Then Every 200' Thereafter. For Further Information See Page 78, Article WS-4 of the "OHIO MANUAL OF UNIFORM TRAFFIC CONTROL DEVICES" Double Amber Delineators Shall Be Erected Approximately Midway Between Signs on Barrels. (D) See General Note Sheet No. 166

SIGN ATTACHMENT TO
TEMPORARY BEAM RAIL

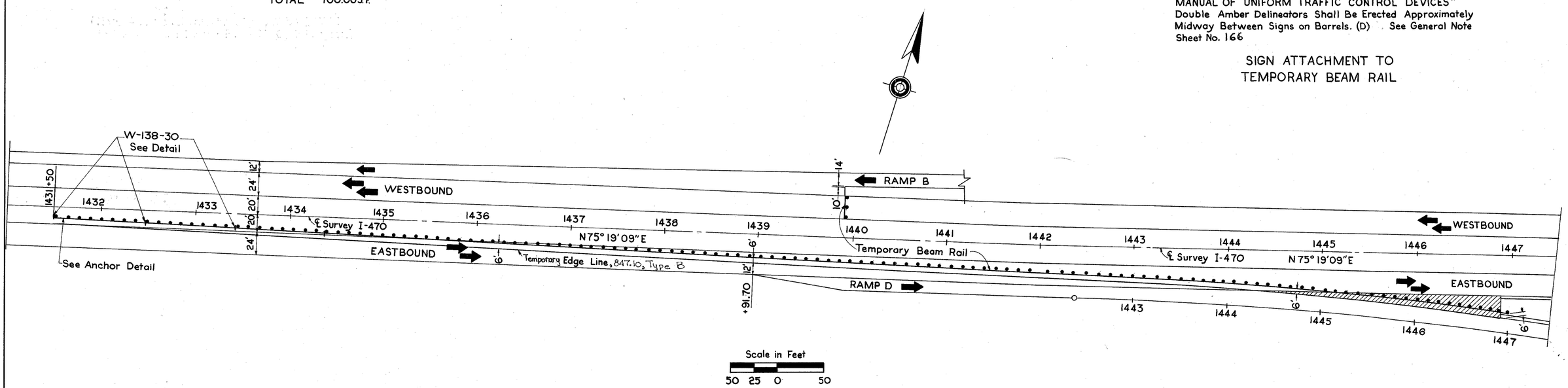

TEMPORARY BEAM RAIL & DETAILS

FED. RD. DIVISION	STATE	PROJECT	
5	OHIO		

172
288

BELMONT COUNTY
BEL-470-5.90

SIGN A
19'x8' = 152 S.F.
3 BRACKETS

SIGN B
16'x13' = 208 S.F.
6'x 2' = 12 S.F.
TOTAL 220 S.F.
3 BRACKETS

SIGN C
17'x10'-6" = 178.5 S.F.
6'x 2' = 12.0 S.F.
TOTAL 190.5 S.F.
3 BRACKETS

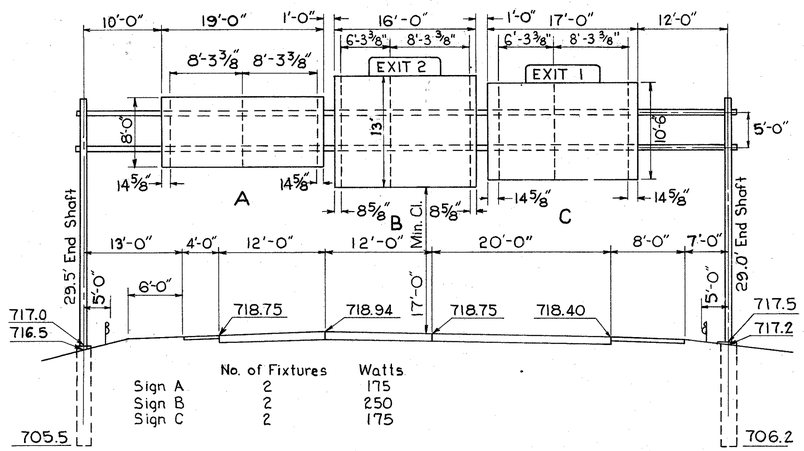

	No. of Fixtures	Watts
Sign A	2	175
Sign B	2	250
Sign C	2	175

OVERHEAD SIGN SUPPORT NO. 11a
STA. 1444+86 E.B.
NO. 7.65 DESIGN NO. 8 MODIFIED
76' SPAN

SIGN A
14'x13' = 182 S.F.
3 BRACKETS

SIGN B
23'x10'-6" = 241.5 S.F.
4 BRACKETS

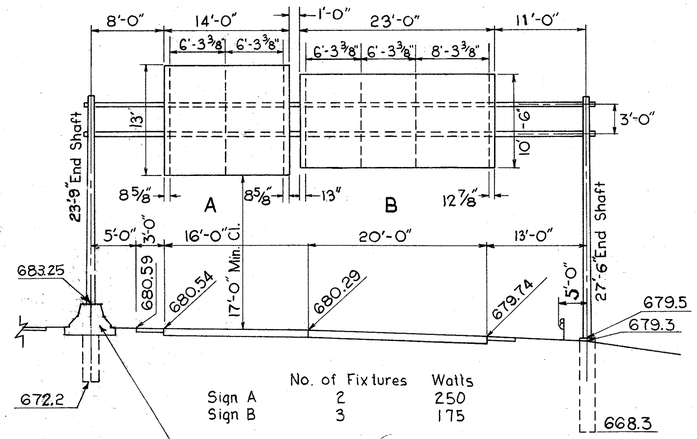

	No. of Fixtures	Watts
Sign A	2	250
Sign B	3	175

Note: For Concrete Sign Foundation Details not shown see Standard Drawing Nº TC-21.10, TC-21.40 & TC-21.41

OVERHEAD SIGN SUPPORT NO. 13
STA. 1434+55 RAMP AB
NO. 7.65 DESIGN NO. 6 MODIFIED
57' SPAN

SIGN
16'x11' = 176 S.F.
3 BRACKETS

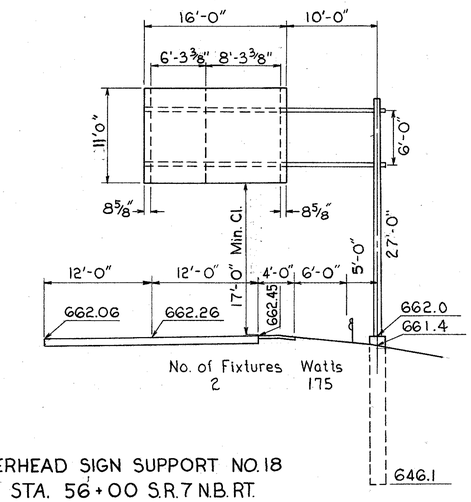

	No. of Fixtures	Watts
	2	175

OVERHEAD SIGN SUPPORT NO. 18
STA. 56+00 S.R. 7 N.B. RT.
NO. 12.30 DESIGN NO. 8 MODIFIED
26' ARM

SIGN A
18'x9' = 162 S.F.
3 BRACKETS

SIGN B
16'x9' = 144 S.F.
3 BRACKETS

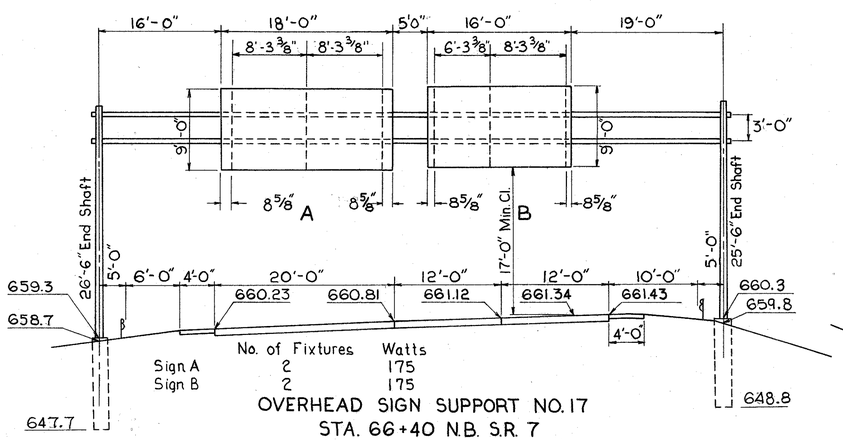

	No. of Fixtures	Watts
Sign A	2	175
Sign B	2	175

OVERHEAD SIGN SUPPORT NO. 17
STA. 66+40 N.B. S.R. 7
NO. 7.65 DESIGN NO. 6 MODIFIED
74' SPAN

SIGN A
18'x9' = 162 S.F.
3 BRACKETS

SIGN B
16'x9' = 144 S.F.
3 BRACKETS

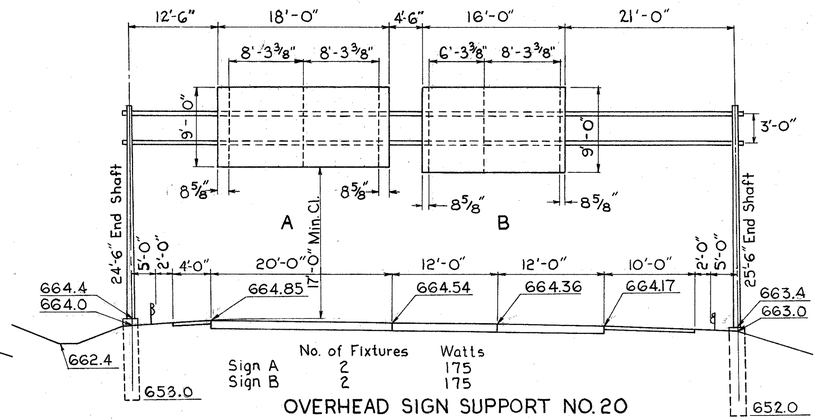

	No. of Fixtures	Watts
Sign A	2	175
Sign B	2	175

OVERHEAD SIGN SUPPORT NO. 20
STA. 87+60 S.B. S.R. 7
NO. 7.65 DESIGN NO. 6 MODIFIED
72' SPAN

SIGN
16'x11' = 176 S.F.
3 BRACKETS

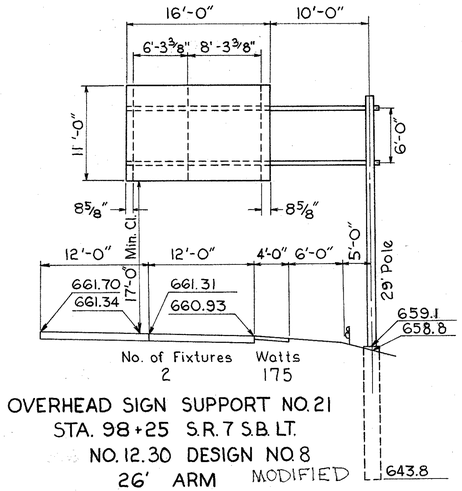

	No. of Fixtures	Watts
	2	175

OVERHEAD SIGN SUPPORT NO. 21
STA. 98+25 S.R. 7 S.B. LT.
NO. 12.30 DESIGN NO. 8 MODIFIED
26' ARM

OVERHEAD SIGN SUPPORT DETAILS

FED. RD. DIVISION	STATE	PROJECT	
5	OHIO		

173
288

BELMONT COUNTY
BEL-470-5.90

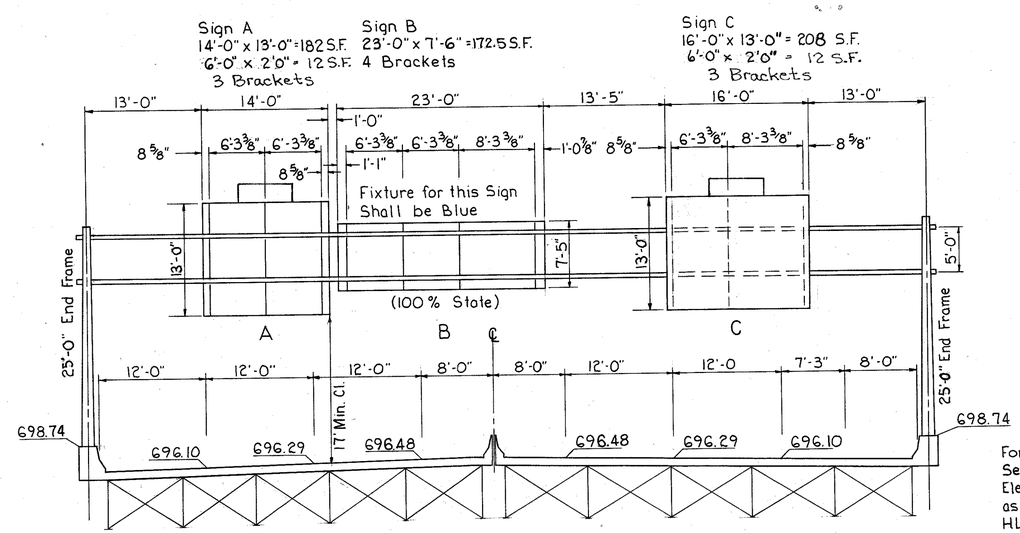

For Foundation Details
See Bridge Sheet No. 223
Electrical Details
as per Std. Drawings

HL 4	1-21-76
HL 7	1-21-76
HL 9	3-22-77

BRIDGE-BEL-470-0662

	No. of Fixtures	Watts
Sign A	2	250
Sign B	3	175
Sign C	2	250

SIGN NO. 23
OVERHEAD SIGN SUPPORT NO. 7.65 DESIGN NO. 8 MODIFIED
STA. 1465+25 93'-5" SPAN

OVERHEAD SIGN SUPPORT NO. 23

FED. RD. DIVISION	STATE	PROJECT	
5	OHIO		

174
285

BELMONT COUNTY
BEL-470-5.90

LEGEND
(1) Sign Number
(1) Bracket Number

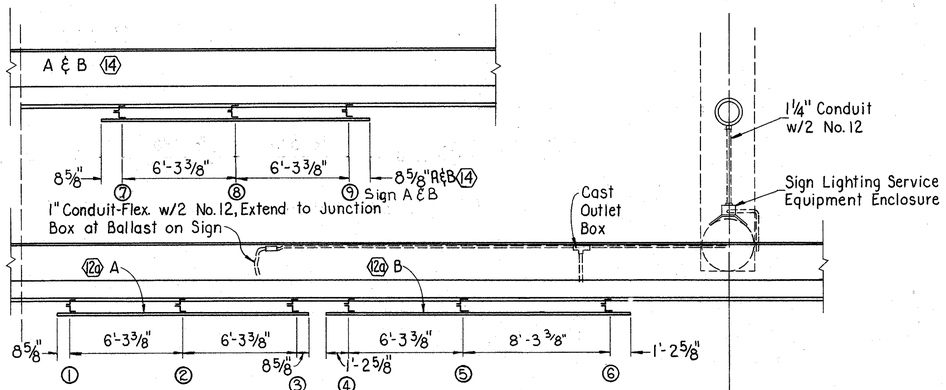

VERTICAL BRACKET SPACING
PLAN

NOTE:

- Cast outlet boxes shall be single gang with threaded hubs, 1" size, cast cover with neoprene gasket and type as noted. Fasten with 1/4" bolts with expansion anchor on concrete surface and threaded hole on steel surfaces.
- All flexible conduit shall be liquid tight P.V.C. jacket and internal grounding conduit U.L. approved.

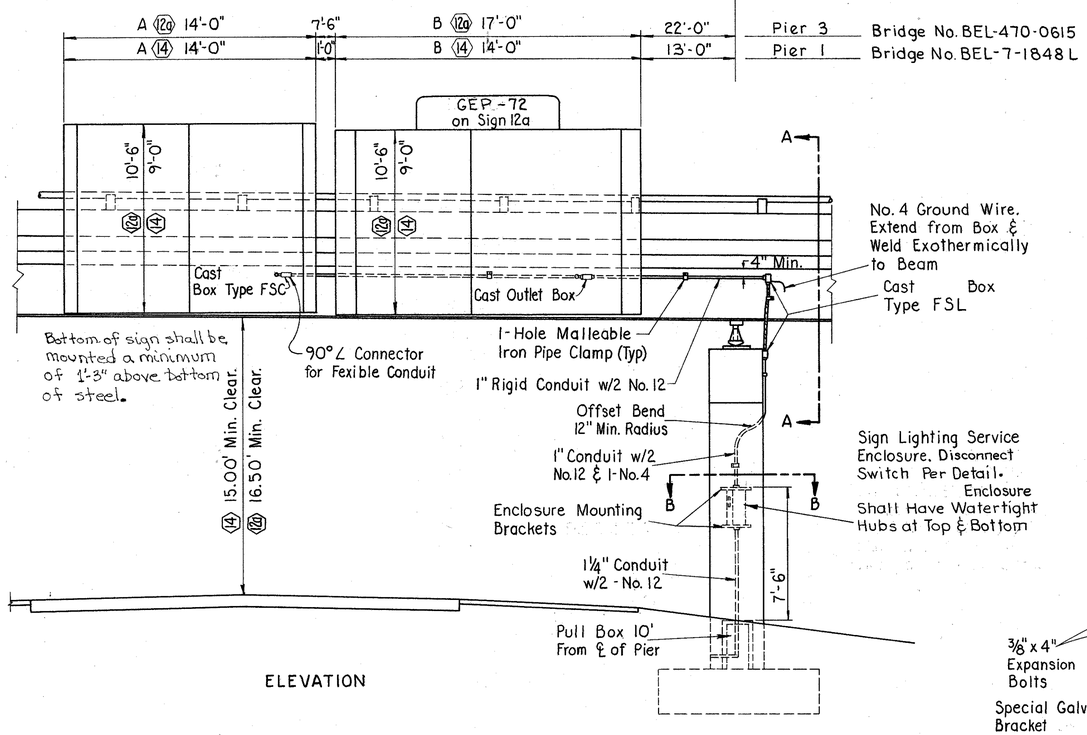

ELEVATION

(12a) Sign Number on Bridge No. BEL-470-0615
A = 14'-0" x 10'-6" = 147 S.F. 3 Brackets 2 Fixtures 175 W
B = 17'-0" x 10'-6" = 178.5 S.F. 3 Brackets 2 Fixtures 175 W
B = 6'-0" x 2'-0" = 12 S.F. (GEP-72)

(14) Sign Number on Bridge No. BEL-7-1848L
A = 14'-0" x 9'-0" = 126 S.F. 3 Brackets 2 Fixtures 175 W
B = 14'-0" x 9'-0" = 126 S.F. 3 Brackets 2 Fixtures 175 W

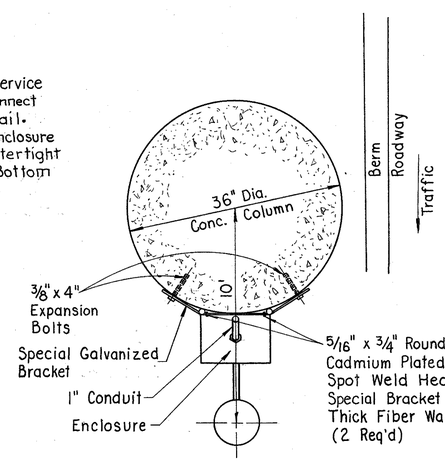

SECTION B-B

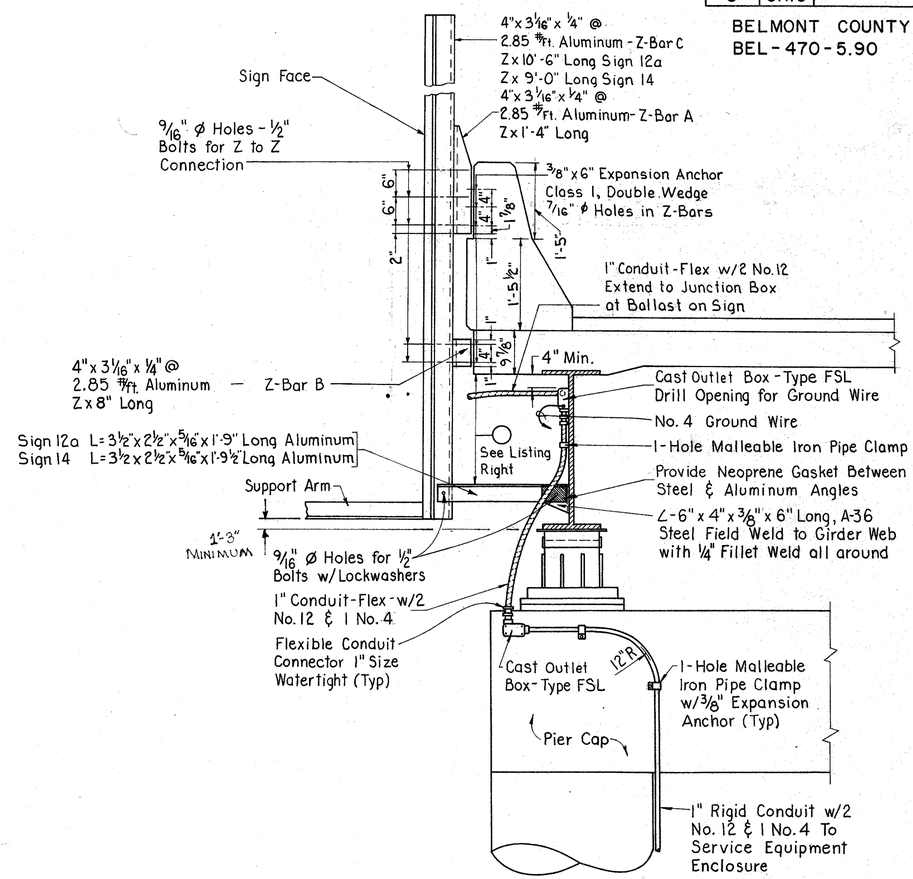

SECTION A-A

SIGN 12a
(1) 1'-11 1/8"
(2) 2'-2 1/8"
(3) 2'-5"
(4) 1'-10 7/8"
(5) 2'-1 1/2"
(6) 2'-5"

SIGN 14
(7) 1'-8 1/2"
(8) 1'-10 1/4"
(9) 2'-0"

OVERPASS STRUCTURE SIGN SUPPORT NO. (12a) & (14)

FED. RD. DIVISION	STATE	PROJECT	
5	OHIO		

189/288

BELMONT COUNTY
BEL-470-5.90

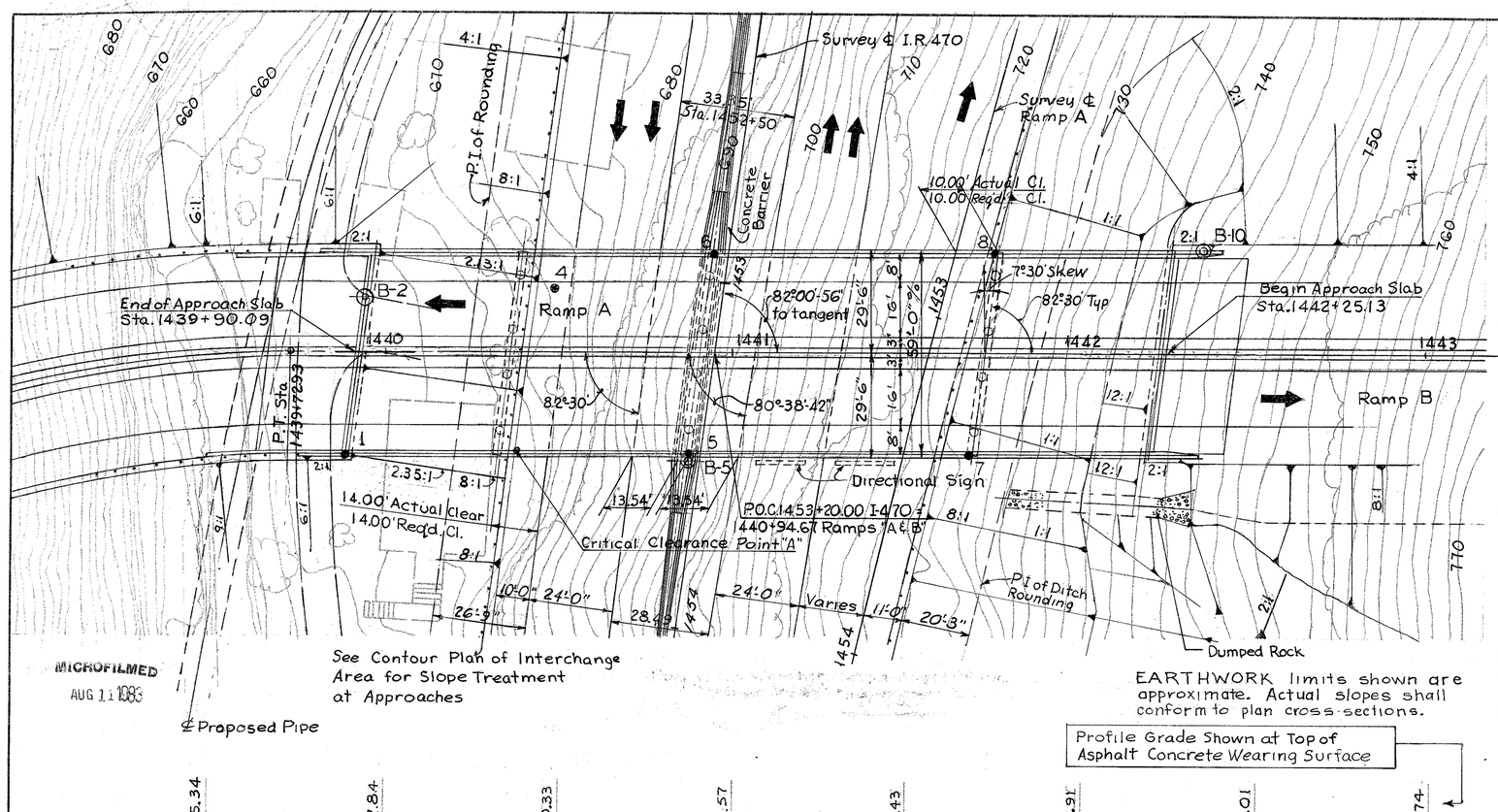

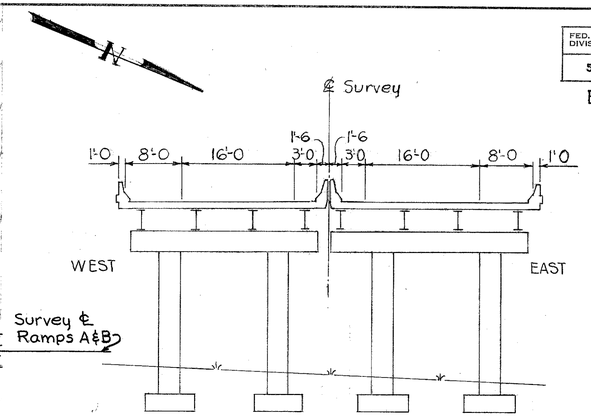

CURVE DATA

MAINLINE
P.I. Sta. 1454+14.97
Δ = 1°-51'-19" Lt.
D = 0° 28' 00"
R = 12,277.67
T = 198.80
L = 397.56
E = 1.61'

RAMP A
P.I. Sta. 1454+06.79
Δ = 6° 47'-46" Lt.
D = 1° 30'-00"
R = 3819.72'
T = 226.80'
L = 453.07
E = 6.73'
S.C. = 1451+79.99
P.T. = 1456+33.06

RAMP A&B
P.I. Sta. 1437+96.91
Δ = 63° 53'-03" Rt.
D = 16° 00'-00"
R = 358.10'
T = 223.26'
L = 399.28'
E = 63.90'
P.C. = 1435+73.65
P.T. = 1439+72.93

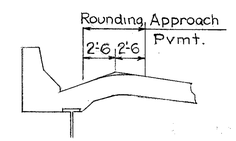

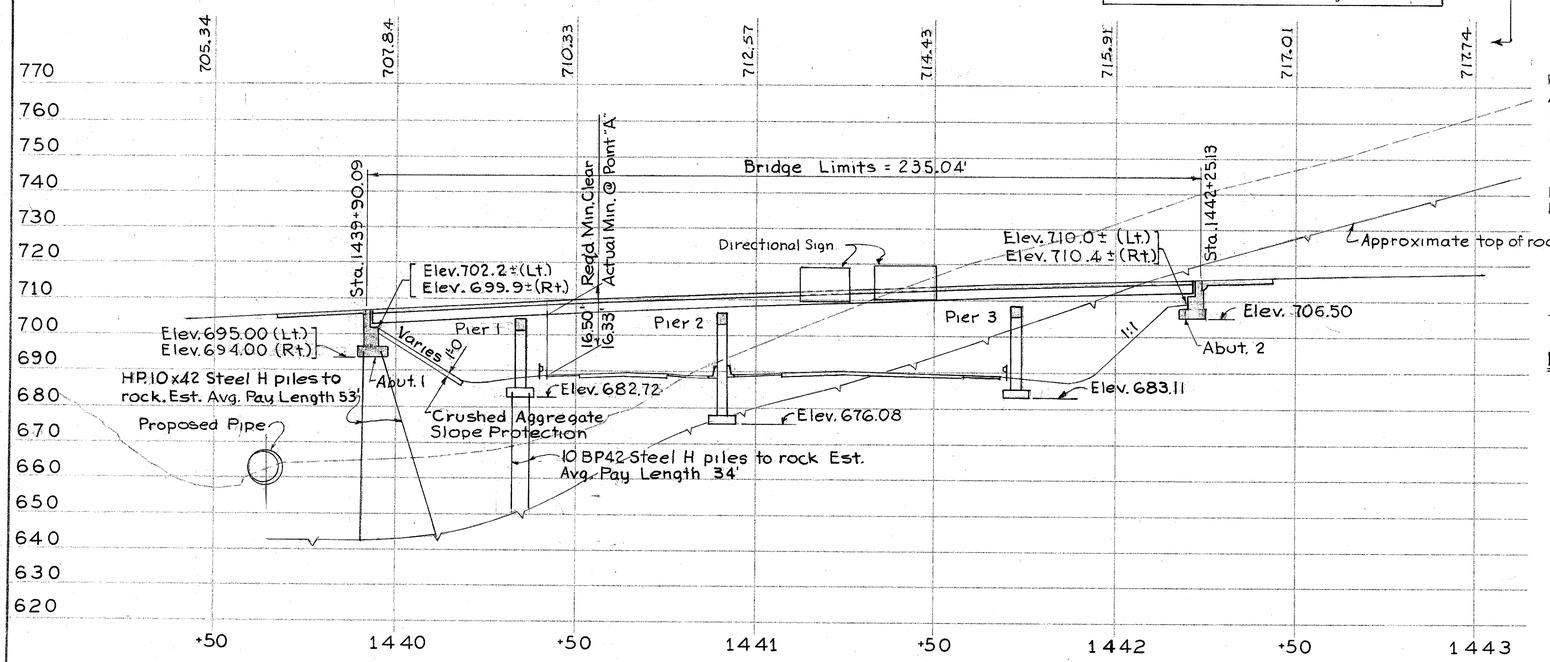

+5.00% −4.06%
P.I. Sta. 1443+40
Elev. 724.84'
V.C. 600'

RAMPS A&B GRADE

−4.00% +3.00%
P.I. Sta. 1456+78.00
Elev. 671.07'
V.C. 1600'

I-470 GRADE

LEGEND

⊕ = Core Boring
● = Rod Sounding

PROPOSED STRUCTURE

TYPE: Continuous steel beams with reinforced concrete deck and substructure
SPANS: 42.75-55.00-82.75'-50.00' % bearings
ROADWAY: 57'-0" f/f of BR-1-67 parapets including 3'-0" concrete median barrier
LOADING: HS-20-44 and Alternate Military Loading
SKEW: 7°-30' Lt. Fwd.
WEARING SURFACE: 2½" Asphalt concrete
APPROACH SLABS: AS-1-72 (25' long rear - 20' long fwd.)
ALIGNMENT: Tangent
SUPERELEVATION: Varies at constant rate.

1989 A.D.T. Ramp A 3935 Ramp B-1120

1/12

MICHAEL BAKER JR., CONSULTING ENGINEERS
ROCHESTER, PENNSYLVANIA

SITE PLAN
BRIDGE NO. BEL-470-0615
UNDER
RAMPS A & B

STA. 1453+20.00

PRESENT TOPOGRAPHY		PROPOSED WORK			
SURVEYED	DRAWN	DESIGNED	DRAWN	CHECKED	REVIEWED
Aerial Survey	R J P	Dwp	RJP	T.Y.T.	WRP 8/18/78

MICROFILMED
AUG 11 1983

BEAVER VALLEY ENGINEERING SUPPLIES COMPANY REORDER A-19928

FED. RD. DIVISION	STATE	PROJECT	TYPE FUNDS
5	OHIO		

189-A
288

BEL 470-5.90

Note: Lengths are horizontal distances and do not reflect changes in elevation from point to point.

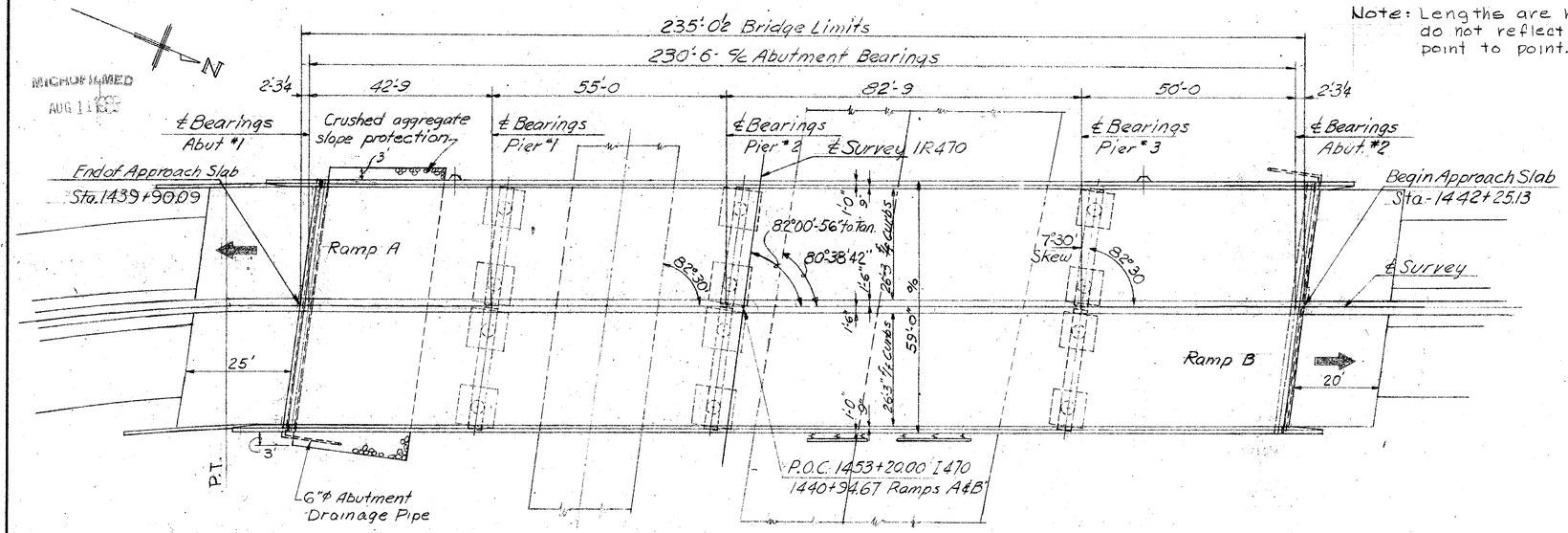

PLAN

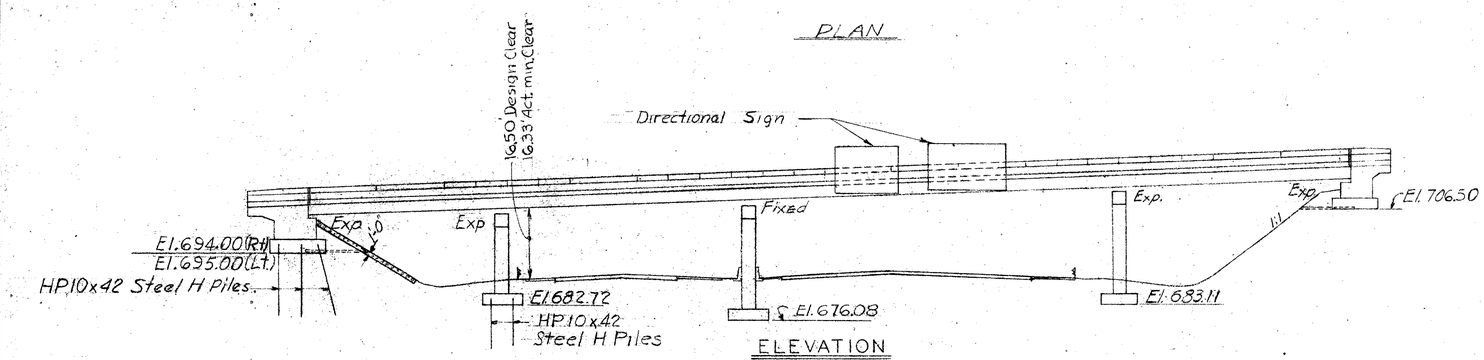

ELEVATION

* See Proposal Note

ESTIMATED QUANTITIES

Item	Total	Unit	Description	Superstr.	Abuts.	Piers	General
404	94	Cu. yds.	Asphalt concrete AC-20	94			
503	Lump sum	Lump sum	Coffardams, cribs and sheeting				Lump sum
503	441	Cu. yds.	Unclassified excavation		185	256	
503	256	Cu. yds.	Rock excavation		198	58	
505	Lump sum	Lump sum	Test pile				Lump sum
507	1480	Lin. ft.	Steel piles HP10x42		800	680	
509	167,823	Lbs.	Reinforcing steel	115,749	15,711	36363	
511	493	Cu. yds.	Class "C" Concrete, superstructure *	493			
511	132	Cu. yds.	Class "C" Concrete, pier caps & columns			132	
511	198	Cu. yds.	Class "C" Concrete, abutments		198		
511	75	Cu. yds.	Class "C" Concrete, pier footings			75	
513	395300	Lbs.	Structural steel (PRIMER PER 846)	395300			
846	395300	Lbs.	Painting for new structural steel	395300			
518	464	Lin. ft.	Subdrainage for wearing course (as per plan)	464			
518	54	Cu. yds.	Porous backfill		54		
518	9	Each	Scuppers, including supports	9			
518	104	Lin. ft.	6" Perforated Helical CSP, 707.01		104		
518	45	Lin. ft.	6" Non-perforated Helical CSP, including specials, 707.01		45		
601	238	Sq. yds.	Crushed aggregate slope protection				238
S625			See Sheet for Electrical Quantities				
808	493	Units	Chemical admixture for concrete, Type A, B or D	493			
Special	1373	Sq. yds.	Membrane waterproofing *	1373			

Computed by DRB 10-10-73 Rev. 5-31-76
Checked by DWP 10-15-73 Rev. 6-3-76
J. A. J. D.W.P.

BEAVER VALLEY ENGINEERING SUPPLIES CO. REORDER 6-33679

ATTACHMENT OF GUARDRAIL TO CONCRETE PARAPETS: Concrete insert anchor assemblies per Standard Construction Drawings GR-3 and GR-1 shall be placed during parapet construction.

GENERAL NOTES

REFERENCE: shall be made to Standard Drawings RB-1-55 revised 2-2-59, BR-1-67 revised 10-15-71 DBR-1-71 dated 1-1-71 and SD-1-69 dated 6-12-69; and to Supplemental Spec. 846, 950, & 951 dated 4-25-75, 808 dated 1-1-71 and 836 dated 3-12-75

DESIGN SPECIFICATIONS: This structure conforms to "Standard Specifications for Highway Bridges" adopted by the American Association of State Highway Officials 1973 including the "Ohio Supplement" to these specifications.

DESIGN DATA: DESIGN LOADING - HS20-44 and the Alternate Military Loading.

Concrete Class C - unit stress 1200 p.s.i. for superstructure.
unit stress 1333 p.s.i. for substructure.

Structural Steel - ASTM A 36 - Unit stress 20,000 psi

Reinforcing Steel - ASTM A615, A616 or A617 - Unit stress 20,000 p.s.i.
Spiral reinforcement may be plain bars ASTM A82 or A 615.

EMBANKMENT CONSTRUCTION: The embankment shall be constructed to the level of the subgrade for a minimum distance of 200 feet back of the rear abutment. Excavation shall then be made for the abutment and piles are then to be driven.

PILES shall be driven to bedrock. The bearing capacity shall be considered obtained by refusal on hard bedrock or by penetrating soft bedrock for several inches with a minimum resistance of 20 blows per inch. The design load is 39 tons per pile for the abutment piles and 36 tons per pile for the pier piles.

FOUNDATION BEARING PRESSURE: Footings are designed for a maximum bearing pressure as follows:
Center pier footings are 5.0 tons per sq. ft.
Forward pier footings are 5.1 tons per sq. ft.
Forward abutment footings are 1.6 tons per sq. ft.

FORWARD PIER & FORWARD ABUTMENT FOOTINGS: Shall be placed in bedrock at the elevations shown.

CENTER PIER FOOTING: Shall extend a minimum of 3" into bedrock or to the elevation shown whichever is lower.

Texturing of the deck surface, as per 451.09 of the Construction and Materials Specifications is not required.

UTILITY LINES: All expense involved in relocating the affected utility lines shall be borne by the Owners. The Contractor and Owners are requested to cooperate by arranging their work in such a manner that inconvenience to either will be held to a minimum.

APPROACH SLAB DETAILS:
The jacking holes are not required.
The top reinforcing bars shall be 3" clear.

REINFORCING BAR LAPPED SPLICES:
All splices shall be lapped 30 bar diameters.

2/12

MICHAEL BAKER JR., CONSULTING ENGINEERS
ROCHESTER, PENNSYLVANIA

GENERAL PLAN & ELEVATION
NOTES - ESTIMATED QUANTITIES
BRIDGE NO. BEL-470-0615
UNDER RAMPS A & B
STA. 1453+20.00

DESIGNED	DRAWN	TRACED	CHECKED	REVIEWED DATE	REVISED
TYT DRB	RLH		DWP	WRK 8/18/76	2/23/78

FED. RD. DIVISION	STATE	PROJECT	TYPE FUNDS
5	OHIO	.	

190 / 288

BEL-470-5.90

BACKWALL CONCRETE: In addition to the provisions of 511.08, backwall concrete shall not be placed until after the deck concrete in span adjacent to the backwall has been placed.

MICROFILMED AUG 11 1992

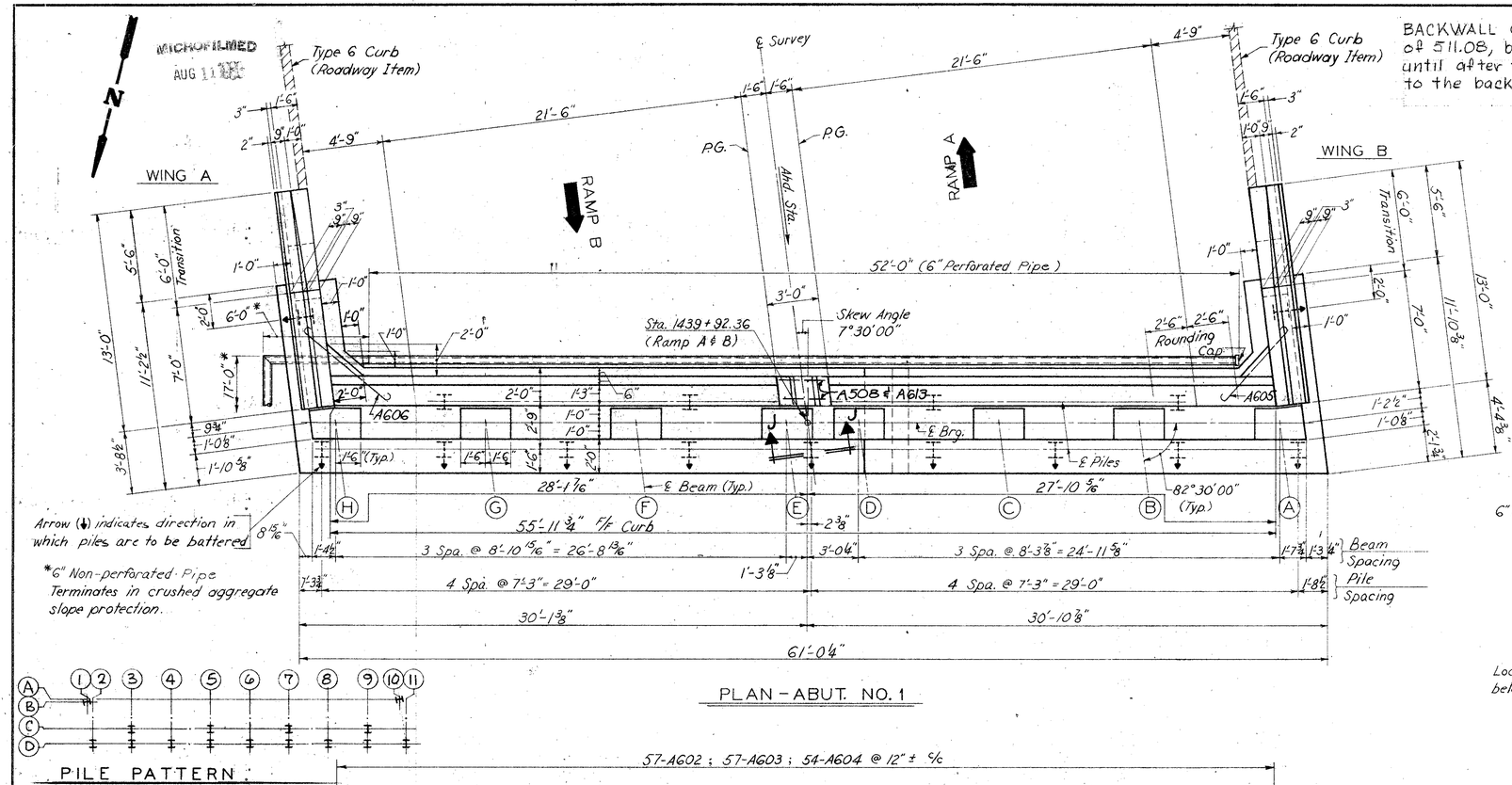

PLAN - ABUT. NO. 1

PILE PATTERN

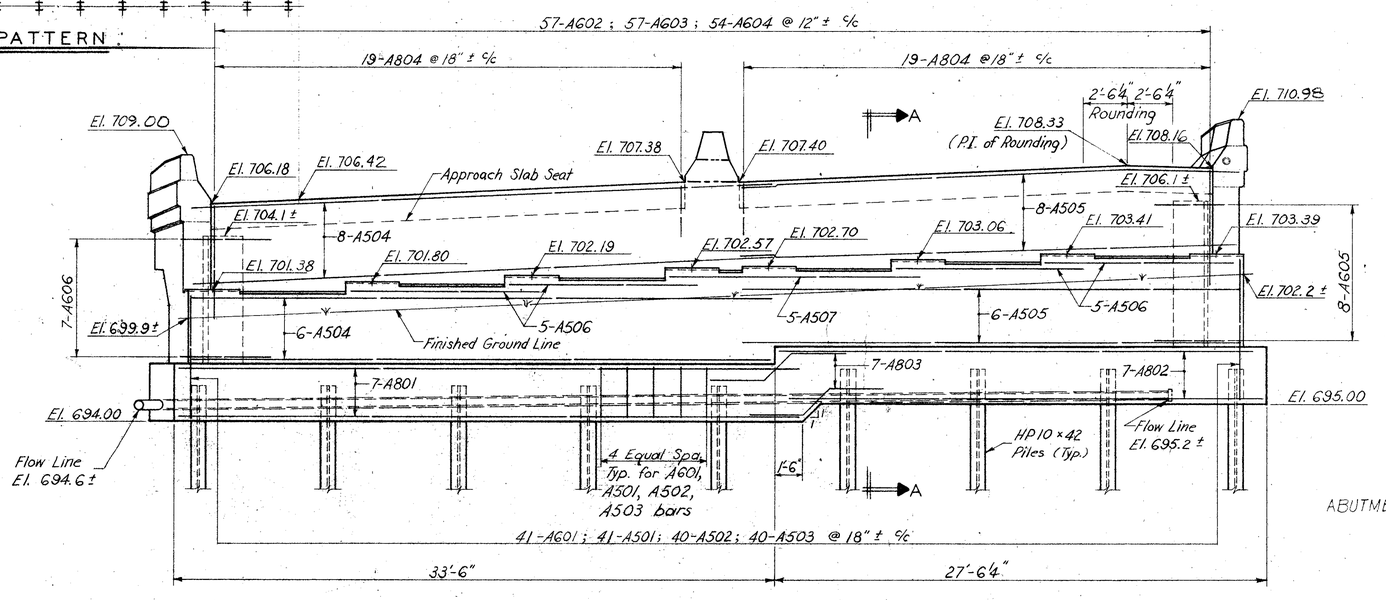

ELEVATION

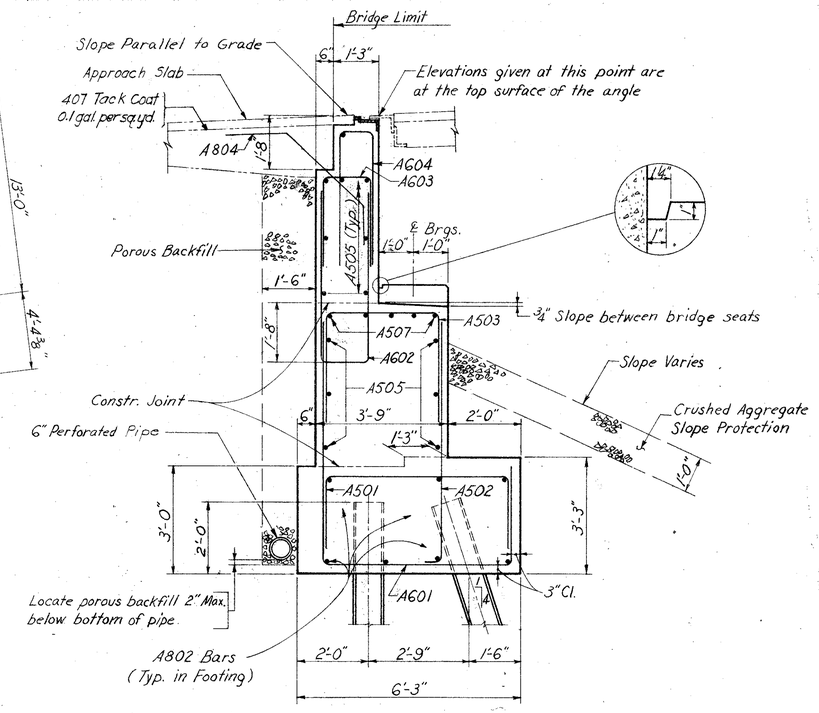

SECTION A-A

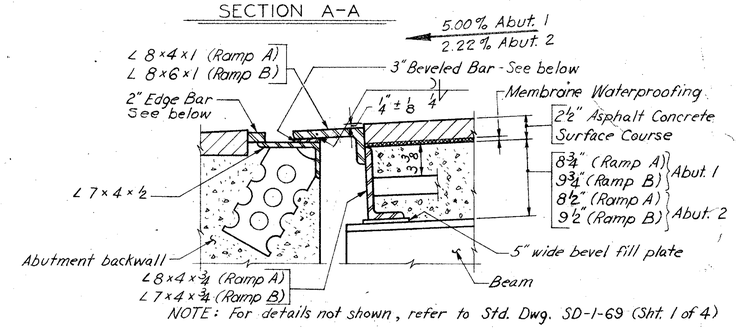

NOTE: For details not shown, refer to Std. Dwg. SD-1-69 (Sht. 1 of 4)

END DAM DETAILS

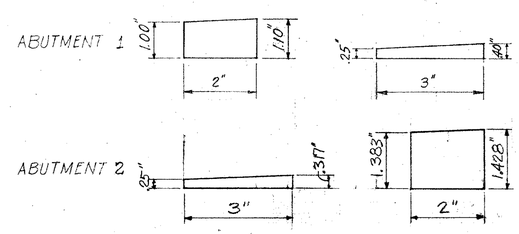

3 / 12

MICHAEL BAKER JR., CONSULTING ENGINEERS
ROCHESTER, PENNSYLVANIA

ABUTMENT NO. 1
BRIDGE NO. BEL-470-0615
UNDER RAMPS A & B
STA 1453 + 20.00 I-470

DESIGNED	DRAWN	TRACED	CHECKED	REVIEWED	DATE	REVISED
TYT	DRB		DWP	WRK	8/18/76	

BEAVER VALLEY ENGINEERING SUPPLIES CO. REORDER A-23679

FED. RD. DIVISION	STATE	PROJECT	TYPE FUNDS
5	OHIO		

191
288

BEL-470-5.90

BACKWALL CONCRETE: In addition to the provisions of 511.08, backwall concrete shall not be placed until after the deck concrete in the span adjacent to the backwall has been placed.

MICROFILMED
AUG 11 1980

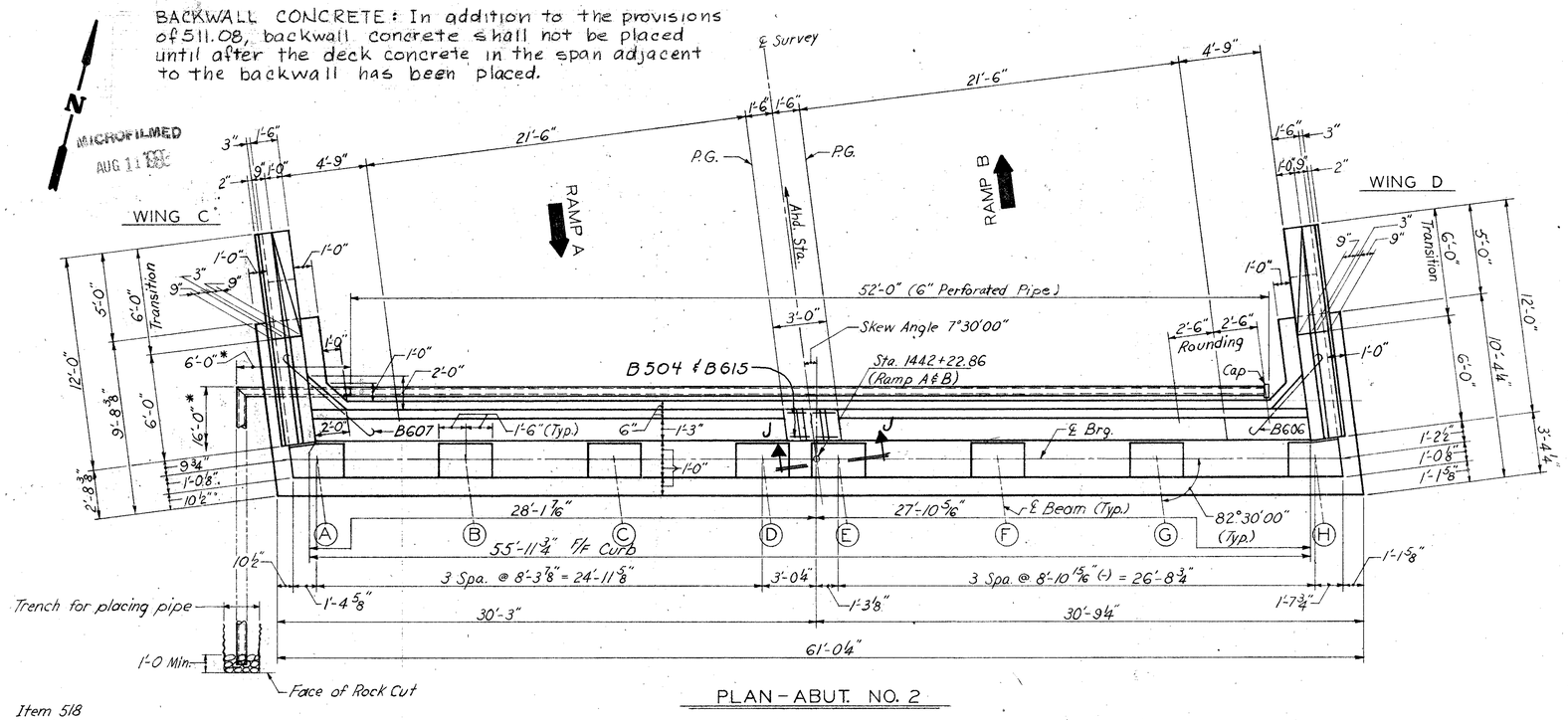

PLAN - ABUT. NO. 2

Item 518
* 6" Non-perforated Pipe.
Pipe ends 6" from face of 1:1 rock cut.
Stone facing 1'-0" thick, hand placed in trench is included with Item 518 for payment.

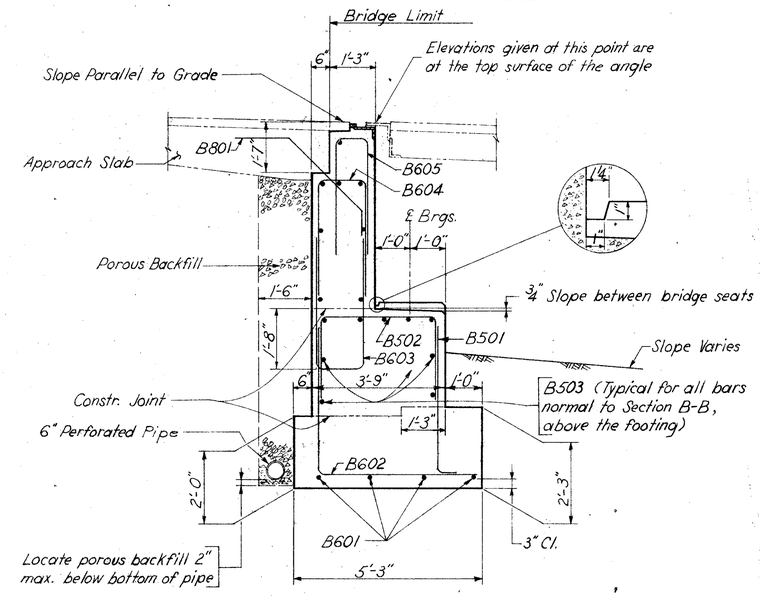

SECTION B-B

NOTES
For end dam details see sheet no. 3/12

See SD-1-69 sheet 2 of 4 for curb plate details for parapet railing and median barrier at abutments.

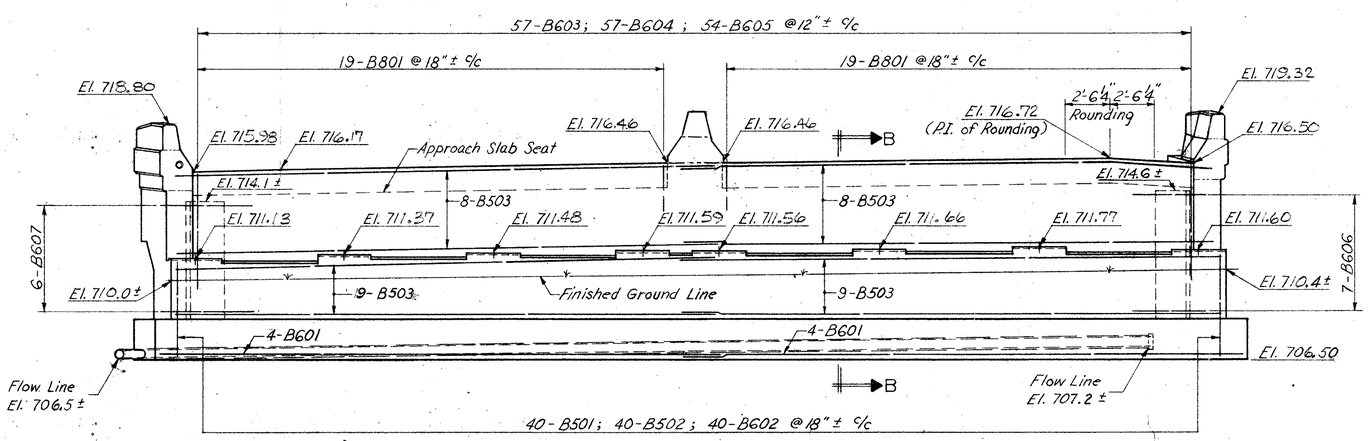

ELEVATION

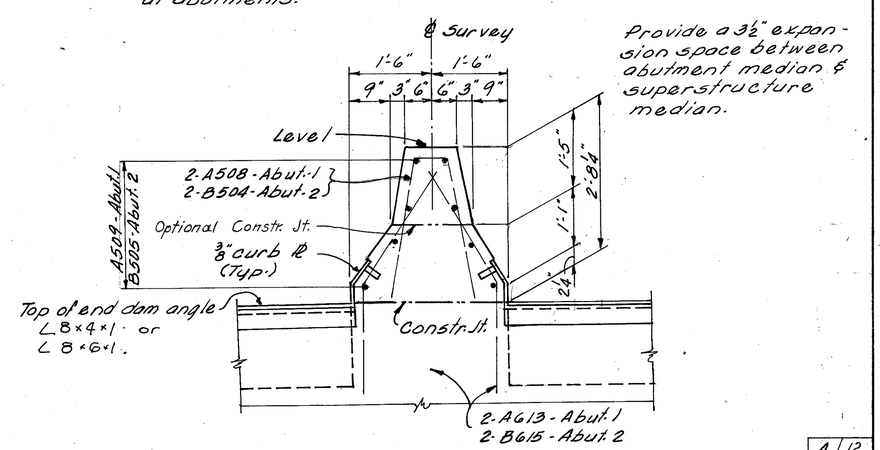

SECTION J-J

4/12

MICHAEL BAKER JR., CONSULTING ENGINEERS
ROCHESTER, PENNSYLVANIA

ABUTMENT NO. 2
BRIDGE NO. BEL-470-0615
UNDER RAMPS A & B
STA. 1453 + 20.00 I-470

DESIGNED	DRAWN	TRACED	CHECKED	REVIEWED DATE	REVISED
TYT	DRB		DWP	WRK 8/18/76	

BEAVER VALLEY ENGINEERING SUPPLIES CO. REORDER A-23679

MICROFILMED
AUG 11 1980

FED. RD. DIVISION	STATE	PROJECT	TYPE FUNDS
5	OHIO		

192
288

BEL-470-5.90

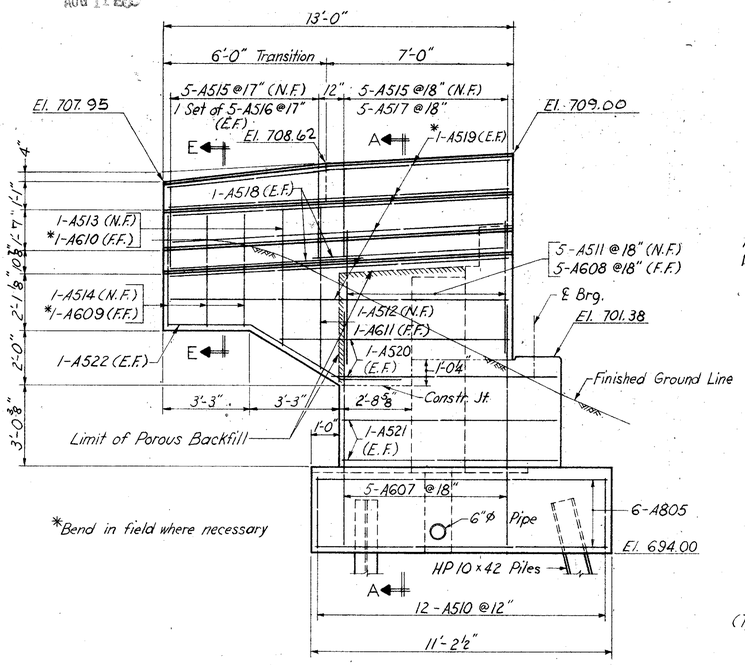

WING A

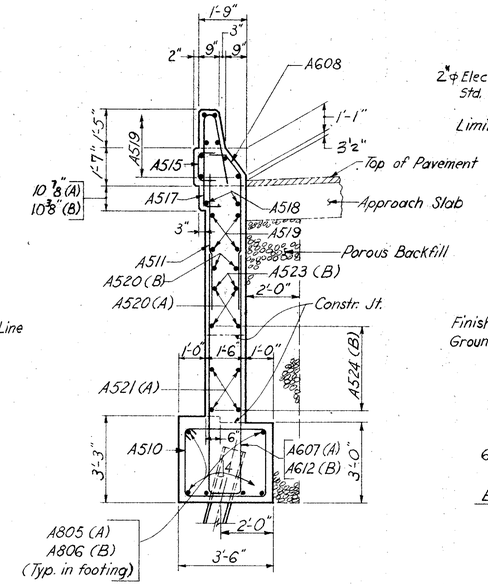

SECTION A-A (SHOWN)
SECTION B-B (SIMILAR)

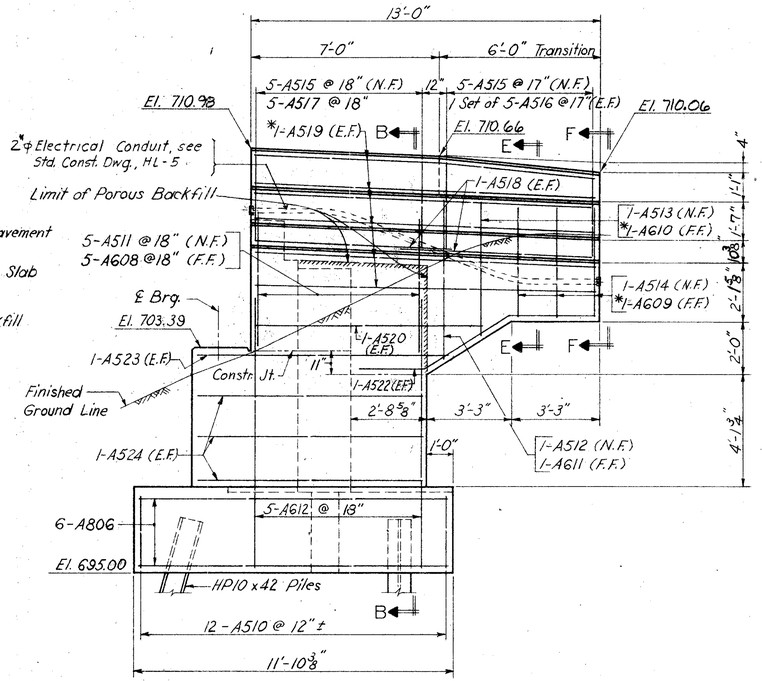

WING B

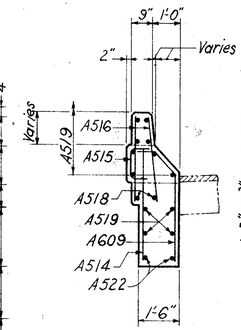

SECTION E-E

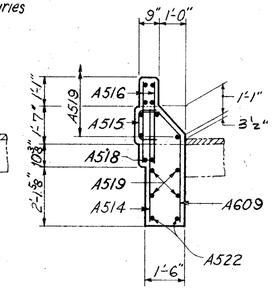

VIEW F-F
(WING A SIMILAR)

LEGEND

N.F. = Near Face
F.F. = Far Face
E.F. = Each Face
A = Wing A
B = Wing B
C = Wing C
D = Wing D
* Bend in field as required

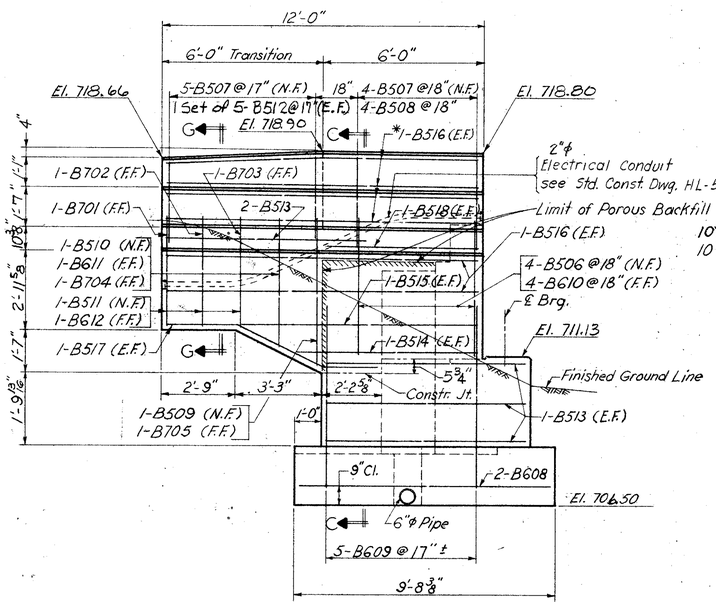

WING C

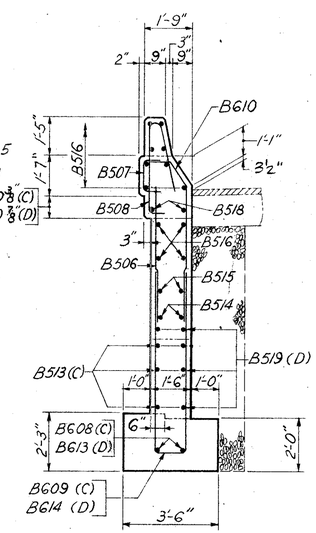

SECTION C-C (SHOWN)
SECTION D-D (SIMILAR)

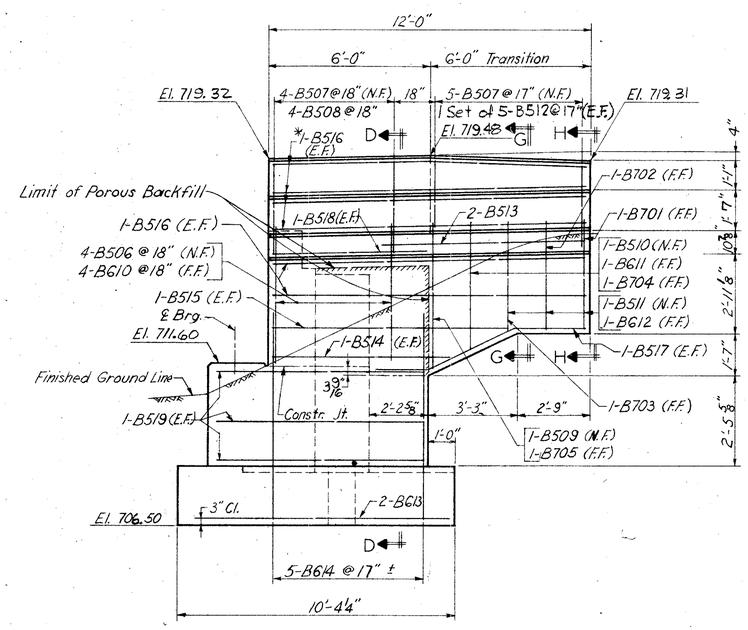

WING D

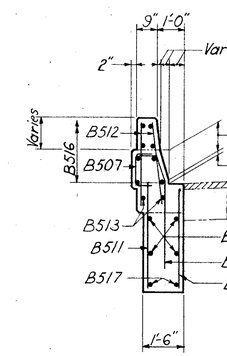

SECTION G-G

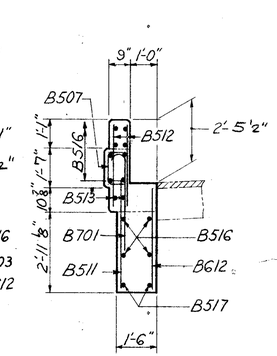

VIEW H-H
(WING C SIMILAR)

5-12

MICHAEL BAKER JR., CONSULTING ENGINEERS
ROCHESTER, PENNSYLVANIA

WING DETAILS
BRIDGE NO. BEL-470-0615
UNDER RAMPS A & B
STA. 1453 + 20.00 I-470

DESIGNED	DRAWN	TRACED	CHECKED	REVIEWED	DATE	REVISED
DRB	DRB		DWP	WRK	8/18/76	

BEAVER VALLEY ENGINEERING SUPPLIES CO. REORDER A-23879

MICROFILMED
AUG 11 1980

FED. RD. DIVISION	STATE	PROJECT	TYPE FUNDS
5	OHIO		

193/288

BEL - 470 - 5.90

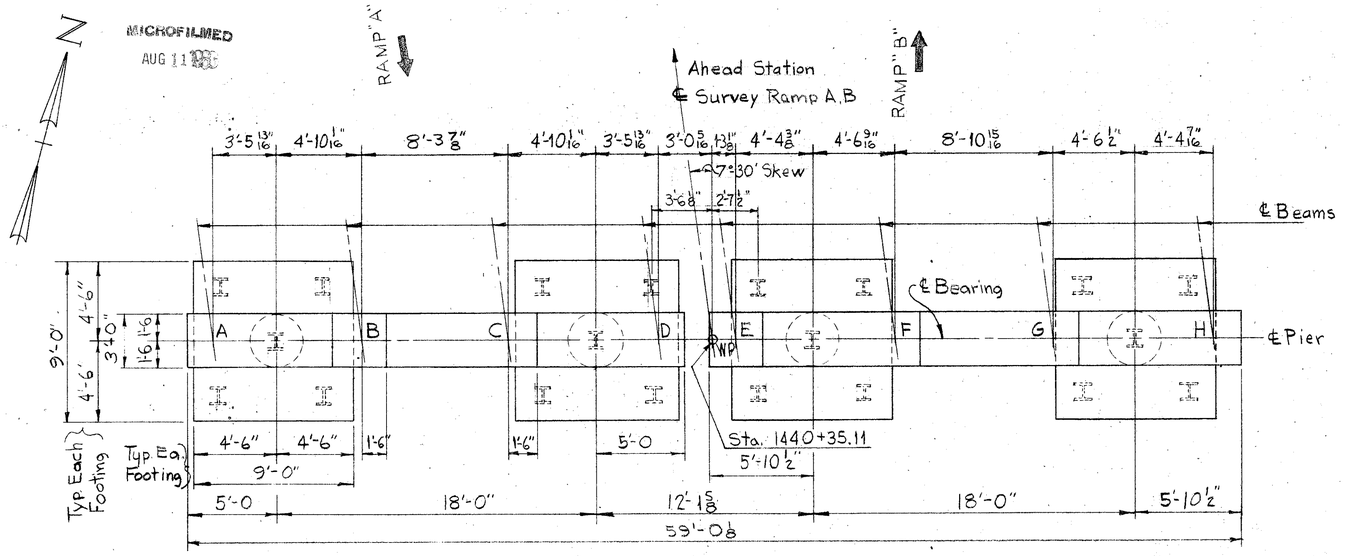

PLAN - PIER NO 1.

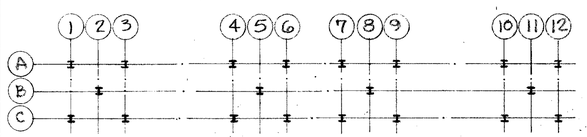

PILE PATTERN

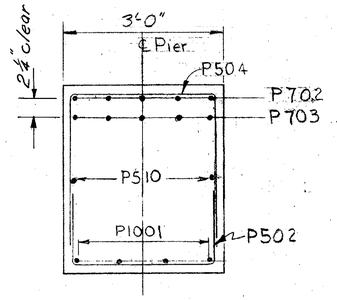

SECTION B-B

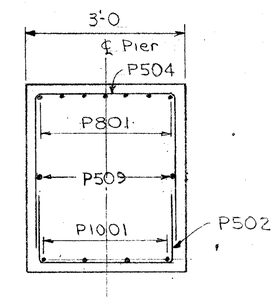

SECTION A-A

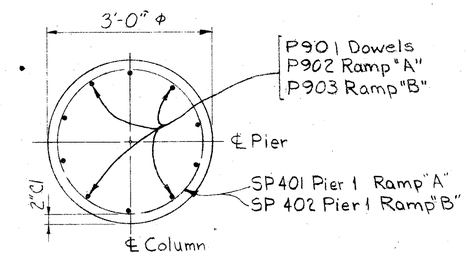

SECTION C-C

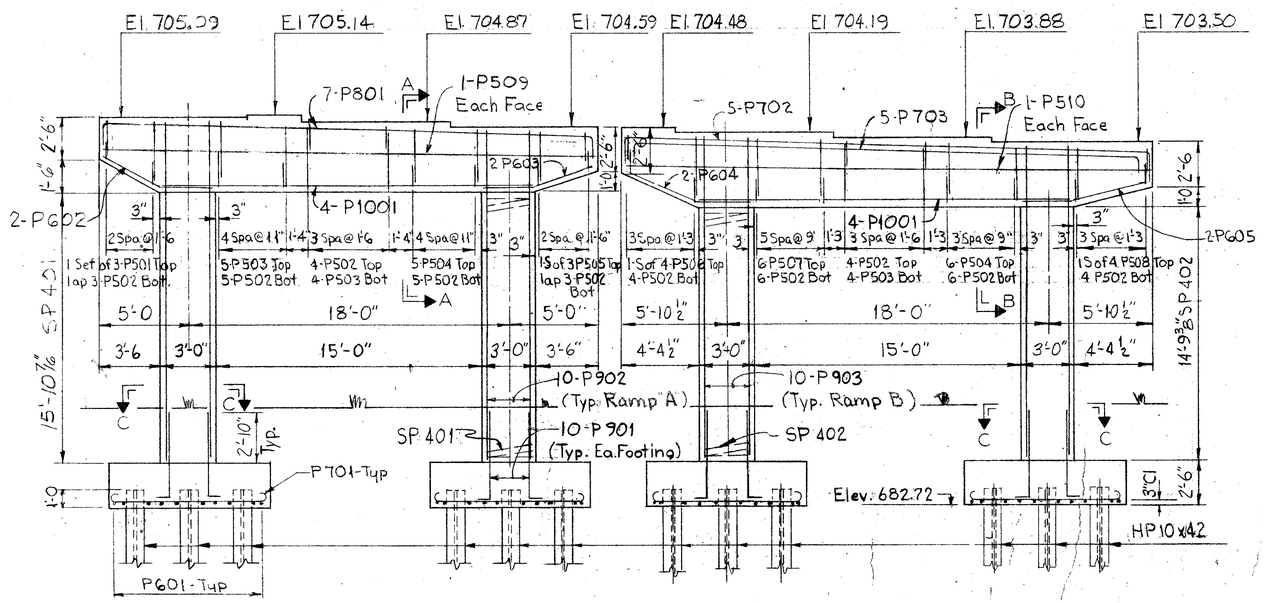

ELEVATION

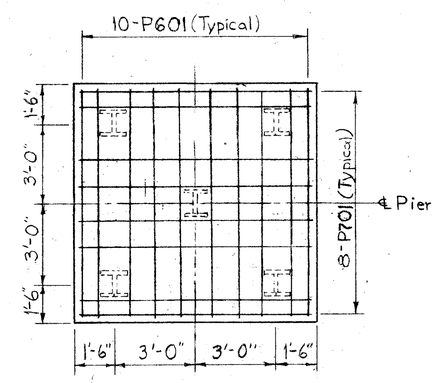

PLAN OF FOOTING

6/12

MICHAEL BAKER JR., CONSULTING ENGINEERS
ROCHESTER, PENNSYLVANIA

PIER 1 DETAILS
BRIDGE NO. BEL 470-0615
UNDER RAMP A&B

STA. 1453+20.00

DESIGNED	DRAWN	TRACED	CHECKED	REVIEWED, DATE	REVISED
JEK	R.W.S.		Dwp	WRK 8/18/76	

BEAVER VALLEY ENGINEERING SUPPLIES CO. REORDER A-20734

MICROFILMED
AUG 11 1986

FED. RD. DIVISION	STATE	PROJECT	TYPE FUNDS
5	OHIO		

194
288

BEL 470-590

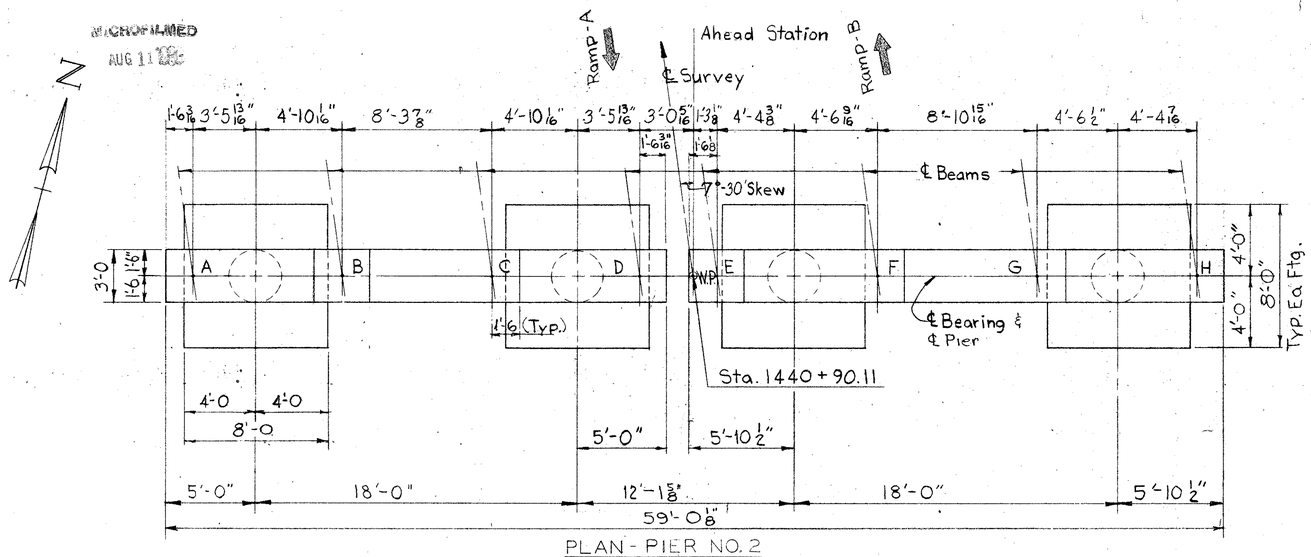

PLAN - PIER NO. 2

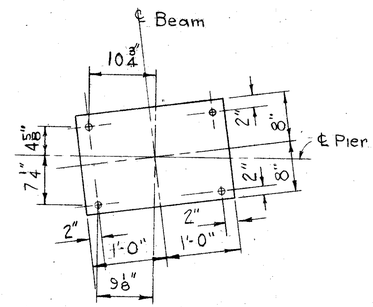

ANCHOR BOLTS LAYOUT

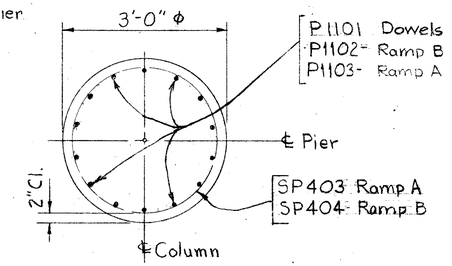

SECTION C-C

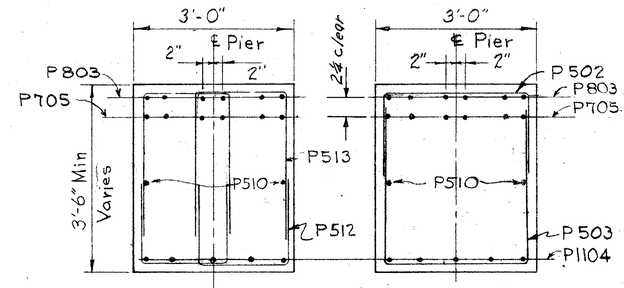

SECTION A-A

SECTION B-B (Shown)
SECTION D-D (Similar)

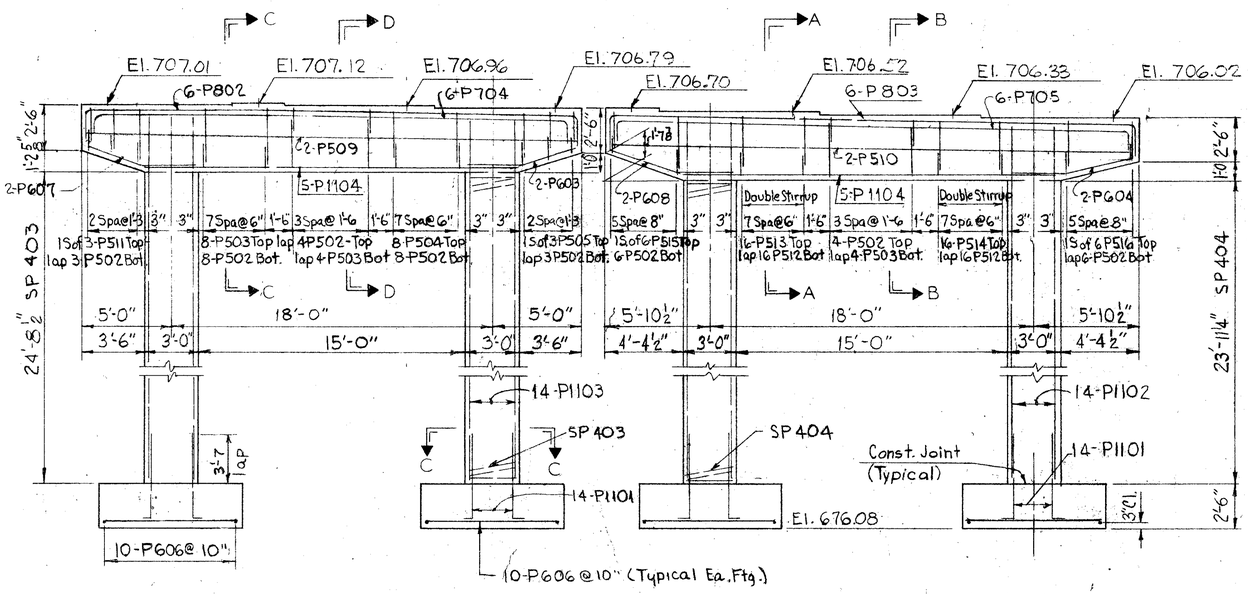

ELEVATION

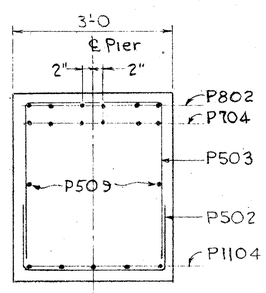

SECTION C-C

Special care shall be taken in placing bars in pier cap to avoid interference with the drilling of bearing anchor holes or the pre-setting of bearing anchors.

BEARING ANCHORS: At the option of the Contractor, bearing anchors (or formed holes) located and supported by templates, may be cast in place.

7/12

MICHAEL BAKER JR., CONSULTING ENGINEERS
ROCHESTER, PENNSYLVANIA

PIER 2 DETAILS
BRIDGE NO BEL 470-0615
UNDER RAMP A&B

STA 1453 + 20.00

DESIGNED	DRAWN	TRACED	CHECKED	REVIEWED	DATE	REVISED
J.E.K.	CWS		DWP	WRK	8/18/76	

BEAVER VALLEY ENGINEERING SUPPLIES CO. REORDER A-20734

MICROFILMED
AUG 11 1980

FED. RD. DIVISION	STATE	PROJECT	TYPE FUNDS
5	OHIO		

195
288

BEL-470-5.90

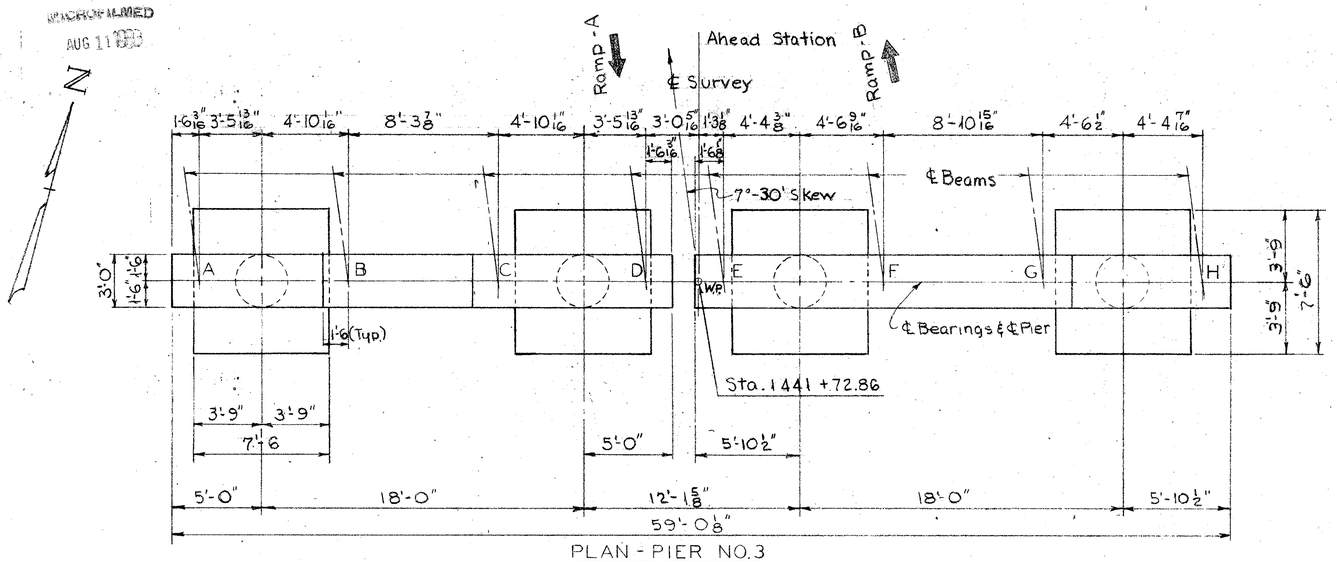

PLAN - PIER NO. 3

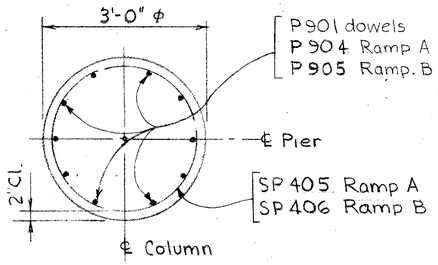

SECTION C-C

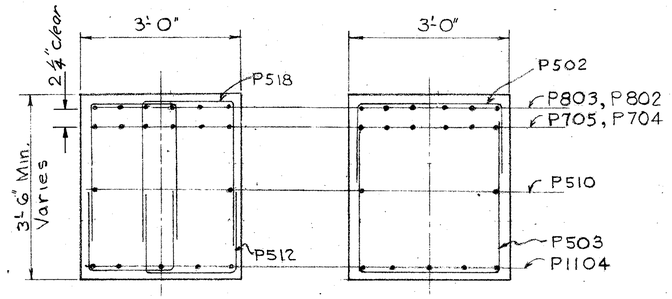

SECTION A-A

SECTION B-B (Shown)

SECTION D-D (Similar)

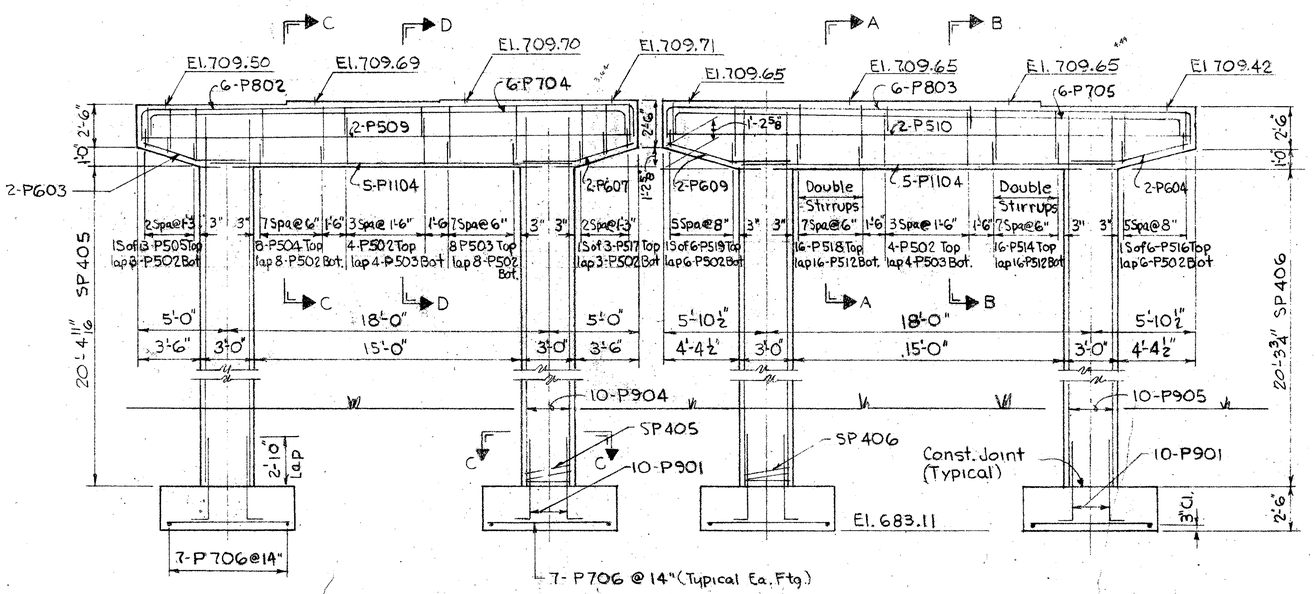

ELEVATION

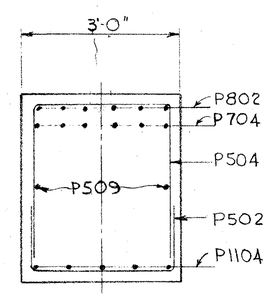

SECTION C-C

8/12

MICHAEL BAKER JR., CONSULTING ENGINEERS
ROCHESTER, PENNSYLVANIA

PIER 3 DETAILS
BRIDGE NO. BEL.470-0615
UNDER RAMP A & B

STA 1453 + 20.00

DESIGNED	DRAWN	TRACED	CHECKED	REVIEWED	DATE	REVISED
J.E.K.	JOW		DWP.	WRK.	8/18/76	

BEAVER VALLEY ENGINEERING SUPPLIES CO. REORDER A-33879

MICROFILMED
AUG 11 1995

FED. RD. DIVISION	STATE	PROJECT	TYPE FUNDS
5	OHIO		

196
288

BEL.-470-5.90

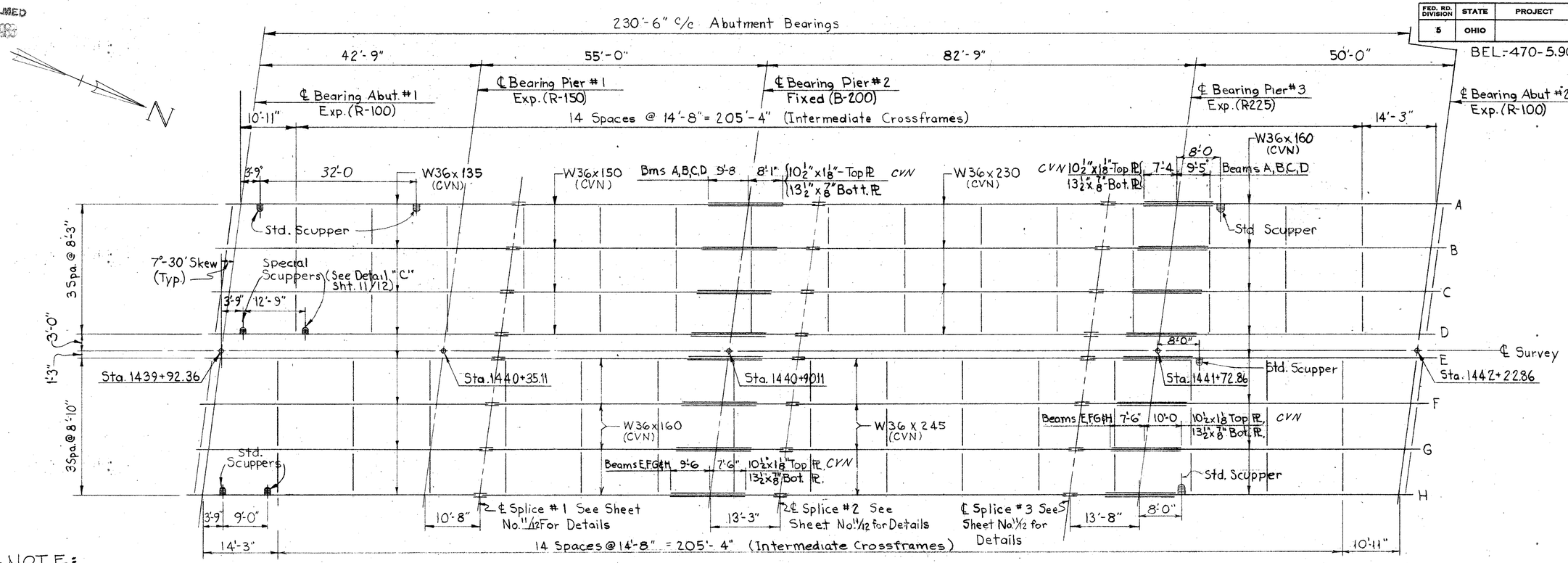

C.V.N. NOTE:
All beams and splice materials (except filler plates) marked C.V.N. shall meet the minimum notch toughness requirements (C.V.N.) as specified by Item 711.01, 1975 C.M.S.

FRAMING PLAN

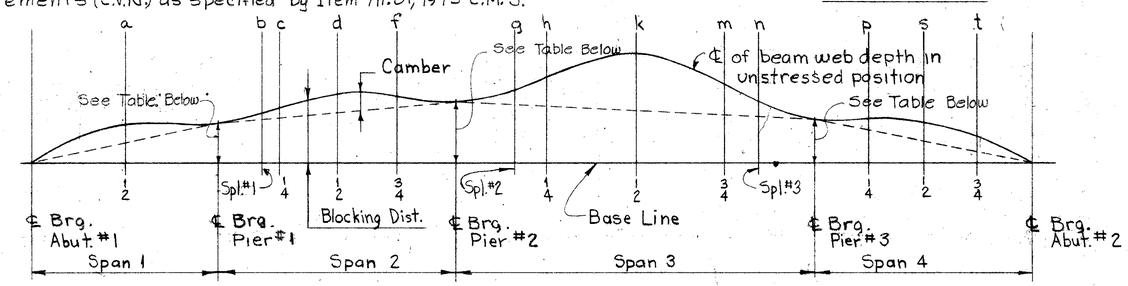

BLOCKING & CAMBER DIAGRAM

BEAM BLOCKING CONTROL DISTANCE							
POINT / BEAM NO.	A	B	C	D&E	F	G	H
Pier 1	5⅞	5¾	5 11/16	5⅝	5 9/16	5 7/16	5⅜
Pier 2	10¾	10 11/16	10⅝	10 9/16	10½	10 7/16	10⅜
Pier 3	7 13/16	7¾	7¾	7¾	7 11/16	7 11/16	7 11/16

END DAMS AND SCUPPERS: Steel bar stock utilized for end dams and scuppers may be any weldable grade of low or mild carbon steel available commercially. This material is to be excluded from the requirements of 501.07 for test reports.

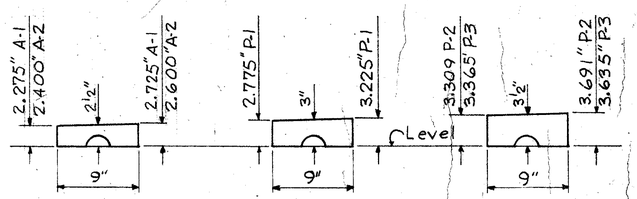

SOLE PLATE DETAILS

BEAM DEFLECTION AND CAMBER – BEAM BLOCKING DISTANCE													
Beam No.	Point	a	b	c	d	f	g	h	k	m	n	p	s	t
A	Deflection Due to Wt. of Steel	0	0	0	0	0	1/16	1/8	3/16	1/8	1/16	0	0	0
	Deflection Due to Remaining D.L.	3/16	0	0	0	-1/16	1/4	3/8	5/8	3/8	1/4	-1/16	0	1/16
	Adjust Req'd For Vert. Curve	0	7/16	1/2	11/16	1/2	13/16	13/16	1 9/16	13/16	7/8	7/16	9/16	7/16
	Total Req'd Camber	3/16	7/16	1/2	11/16	7/16	1⅛	1 11/16	2⅜	1 11/16	1⅛	⅜	9/16	1/2
	Blocking Distance	3⅛	7¼	7 1/16	9	10¼	11⅜	11 11/16	11 11/16	10¼	9½	6⅜	4½	2 5/16
B&C	Deflection Due to Wt. of Steel	0	0	0	0	0	1/16	1/8	3/16	1/8	1/16	0	0	0
	Deflection Due to Remaining D.L.	3/16	0	0	0	-1/16	5/16	1/2	3/4	1/2	1/16	-1/16	1/16	1/16
	Adjust Req'd For Vert. Curve	0	7/16	1/2	11/16	1/2	13/16	13/16	1 9/16	13/16	7/8	7/16	9/16	7/16
	Total Req'd Camber	3/16	7/16	1/2	11/16	7/16	1 3/16	1 13/16	2½	1 1/16	1¼	⅜	⅝	1/2
	Blocking Distance	←					VARIES							→
D,E,& H	Deflection Due to Wt of Steel	0	0	0	0	0	1/16	1/8	3/16	1/8	1/16	0	0	0
	Deflection Due to Remaining D.L.	3/16	0	0	0	-1/16	1/4	7/16	11/16	7/16	1/4	-1/16	1/16	1/16
	Adjust Req'd for Vert. Curve	0	7/16	1/2	11/16	1/2	13/16	13/16	1 9/16	13/16	7/8	7/16	9/16	7/16
	Total Req'd Camber	3/16	7/16	1/2	11/16	7/16	1⅛	1⅞	2 7/16	1⅞	1 5/16	⅜	⅝	1/2
	Blocking Distance	←					VARIES							→
F&G	Deflection Due to Wt. of Steel	0	0	0	0	0	1/16	1/8	3/16	1/8	1/16	0	0	0
	Deflection Due to Remaining D.L.	1/4	0	0	0	-1/8	3/8	9/16	7/8	9/16	3/8	-1/16	1/16	1/16
	Adjust Req'd For Vert. Curve	0	3/8	1/2	11/16	1/2	13/16	1 3/16	1 9/16	1 3/16	7/8	7/16	9/16	7/16
	Total Req'd Camber	1/4	3/8	1/2	11/16	⅜	1/4	1⅛	2⅝	1⅛	1 5/16	⅜	⅝	1/2
	Blocking Distance	←					VARIES							→

See Standard Drawing SD-1-69 for end dam details, end crossframes, moment plate welding and curb plate details not shown on these plans.

For additional scupper details refer to Detail C, sheet 11/12 and to the Deck Drainage Details sheet. (234)

9/12

MICHAEL BAKER JR., CONSULTING ENGINEERS
ROCHESTER, PENNSYLVANIA

FRAMING PLAN
BRIDGE NO. BEL. 470-0615
UNDER RAMP A&B

STA. 1453+20.00

DESIGNED	DRAWN	TRACED	CHECKED	REVIEWED	DATE	REVISED
DRB	CWS		DWP	WRK	8/18/76	

BEAVER VALLEY ENGINEERING SUPPLIES CO. REORDER A-20734

FED. RD. DIVISION	STATE	PROJECT	TYPE FUNDS
5	OHIO	.	

197 / 288

BEL-470-5.90

MICROFILMED
AUG 11 1986

Preformed Expansion Joint Filler (PEJF) may be either 4" gray sponge rubber or gray cellular polyvinyl chloride (PVC) sponge. If rubber is used it shall meet the requirements of AASHO M153. Include with Item 511 for payment.

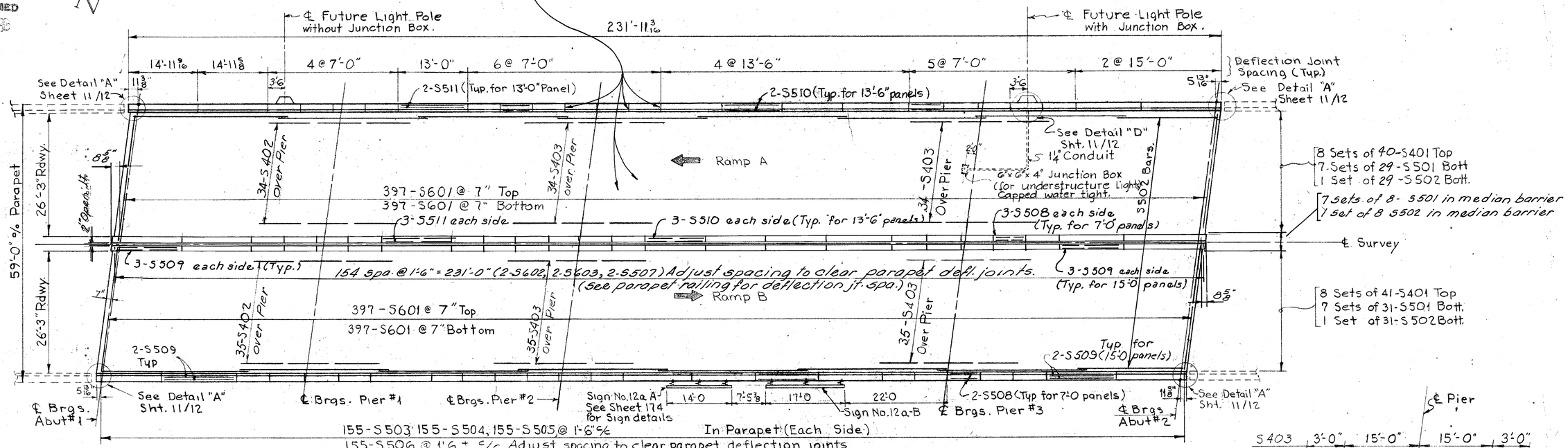

DECK REINFORCING PLAN

DECK SLAB DEPTH The distance shown from the top of deck slab to the top of steel beam is the design dimension. The quantity of deck concrete to be paid for shall be based on this dimension, even though deviation from it may be necessary because the top flange of the beam may not have the exact profile required to place it parallel to finished grade

Haunch Note:

A typical haunch width of 9" shall be used for computing quantity of concrete. However, the haunch width may vary between 6" and 12" provided that the slope shall be not more than 1:4 for a haunch less than 9" wide.

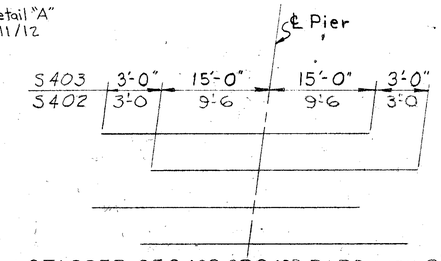

STAGGER OF S402 OR S403 BARS over Piers

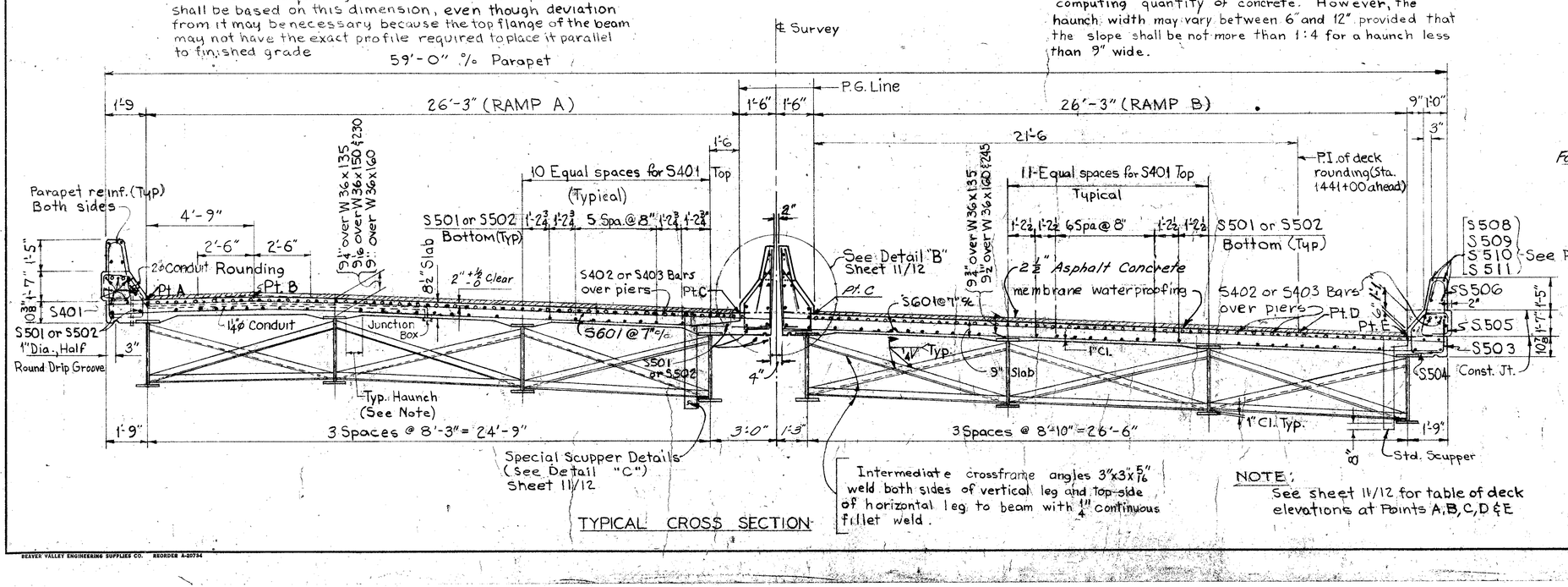

TYPICAL CROSS SECTION

Intermediate crossframe angles 3"x3"x5/16" weld both sides of vertical leg and top-side of horizontal leg to beam with 1/4" continuous fillet weld.

NOTE:
See sheet 11/12 for table of deck elevations at Points A, B, C, D & E

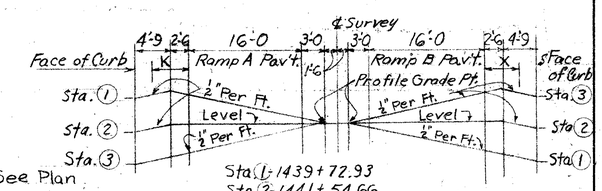

K - Provide 5'-0 Rounding up to Sta. 1442+00
X - Provide 5'-0 Rounding from Sta. 1441+00 ahead

DECK CROSS SLOPE CONTROLS

10/12

MICHAEL BAKER JR., CONSULTING ENGINEERS
ROCHESTER, PENNSYLVANIA

DECK PLAN
BRIDGE NO. BEL. 470-0615
UNDER RAMPS A&B

STA. 1453 + 20.00

DESIGNED	DRAWN	TRACED	CHECKED	REVIEWED	DATE	REVISED
DRB	CWS		Dwp	WRK	8/18/76	

BEAVER VALLEY ENGINEERING SUPPLIES CO. REORDER A-20734

MICROFILMED
AUG 11 1980

FED. RD. DIVISION	STATE	PROJECT	TYPE FUNDS
5	OHIO		

198
288

BEL-470-5.90

NOTE: For Splice Details Not Shown, See Standard Drawing SD-1-69 (Sht. 4 of 4)

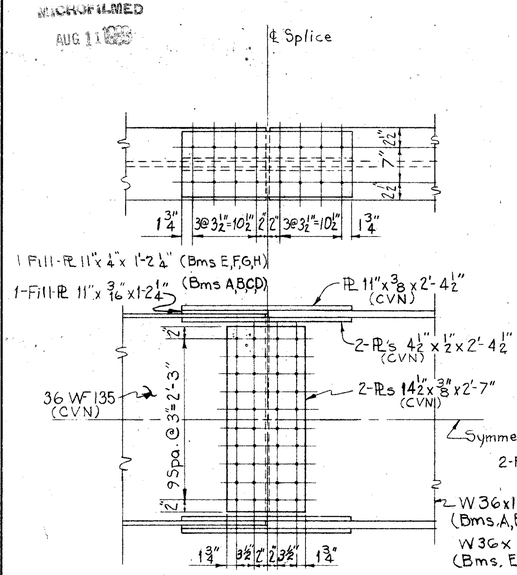

DETAIL SPLICE #1

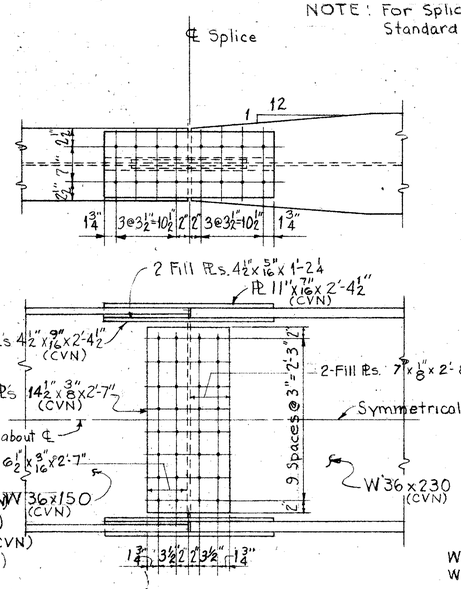

DETAIL SPLICE #2 (Bms. A,B,C,D)

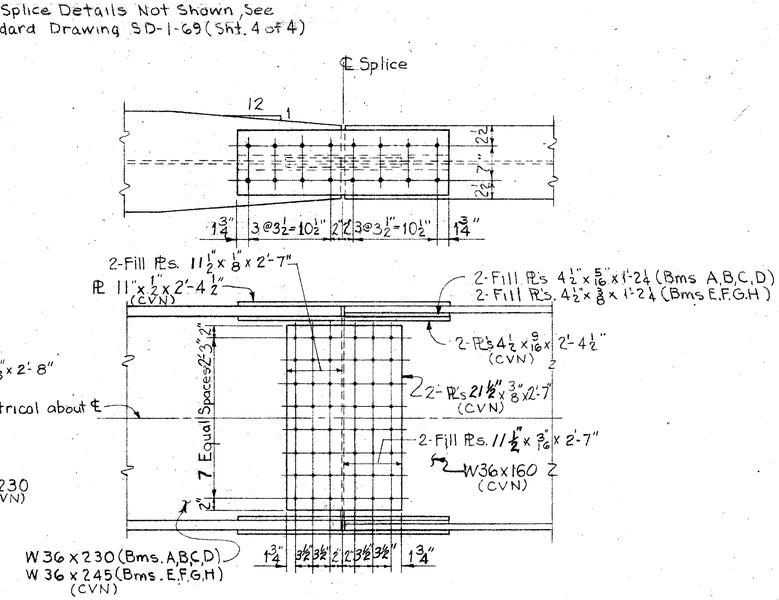

DETAIL SPLICE #3 - Shown
DETAIL SPLICE #2 - (Bms. E F G H) Opp. Hand

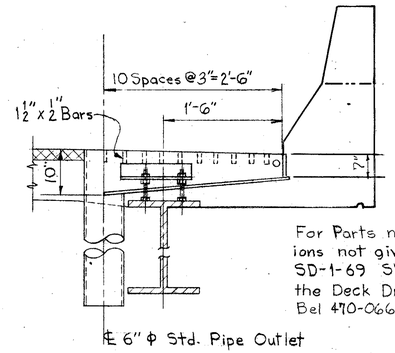

For Parts not shown & dimensions not given See Std. Dwg. SD-1-69 Sheet 3 of 4 and the Deck Drainage sheet, Bel 470-0662 35/37

DETAIL "C"
(Special Scupper)

TABLE OF DECK ELEVATIONS ⊙

Station	Point A		Point B		Point C		Point D		Point E	
	Constr.*	Final	Constr.*	Final	Constr.*	Final	Constr.*	Final	Constr.*	Final
1439+80	707.30	707.30	707.49	707.49	706.63	706.63	705.77	705.77	705.57	705.57
1440+00	708.20	708.20	708.39	708.39	707.63	707.63	706.88	706.87	706.68	706.67
1440+20	709.11	709.10	709.31	709.30	708.66	708.64	707.98	707.97	707.78	707.77
1440+40	710.00	710.00	710.20	710.20	709.63	709.63	709.07	709.07	708.87	708.87
1440+60	710.87	710.87	710.07	710.07	710.60	710.60	710.14	710.14	709.94	709.94
1440+80	711.67	711.68	711.87	711.88	711.50	711.51	711.14	711.14	710.95	710.95
1441+00	712.44	712.43	712.64	712.63	712.38	712.36	712.12	712.08	711.91	711.89
1441+20	713.16	713.12	713.37	713.32	713.20	713.15	713.04	712.98	712.83	712.78
1441+40	713.80	713.75	714.01	713.95	713.93	713.88	713.87	713.80	713.66	713.61
1441+60	714.34	714.32	714.55	714.52	714.57	714.55	714.59	714.57	714.39	714.37
1441+80	714.83	714.83	715.03	715.03	715.14	715.15	715.28	715.25	715.08	715.08
1442+00	715.28	715.28	715.48	715.48	715.71	715.70	715.92	715.92	715.73	715.72
1442+20	715.67	715.67	715.86	715.86	716.18	716.18	716.51	716.51	716.31	716.31
1442+40	715.99	715.99	716.19	716.19	716.61	716.61	717.03	717.03	716.83	716.83

⊙ At Top of Concrete Slab - Points B & D not adjusted for rounding.

* Construction elevations listed have been adjusted for deflection due to weight of concrete and asphalt concrete surface course.

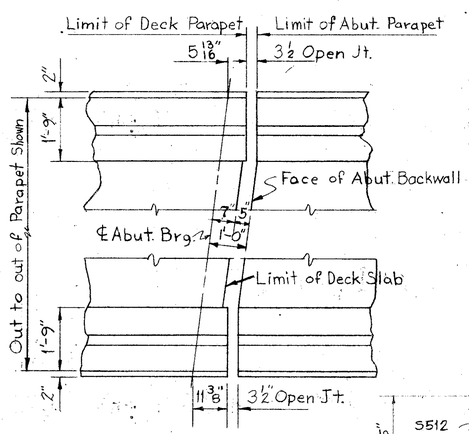

DETAIL "A"

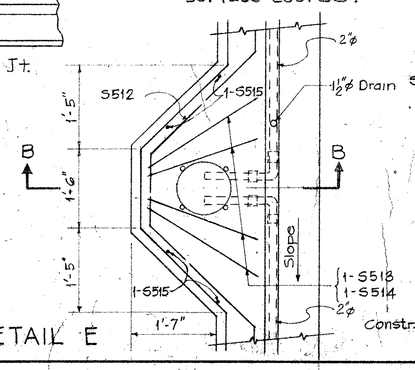

PLAN-DETAIL E

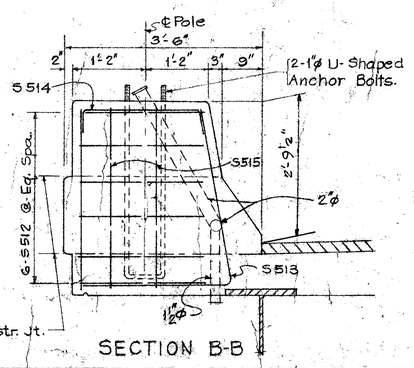

SECTION B-B

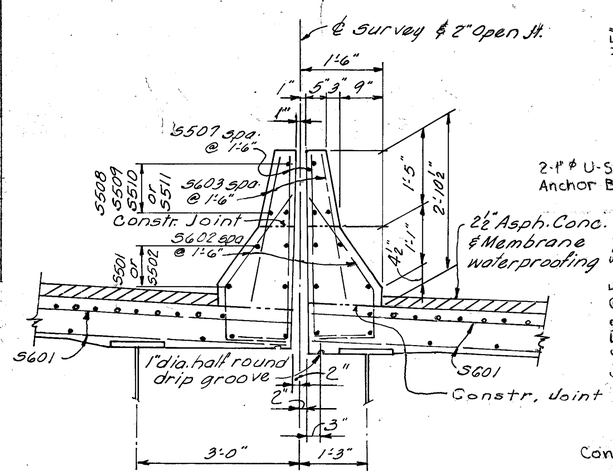

DETAIL "B"

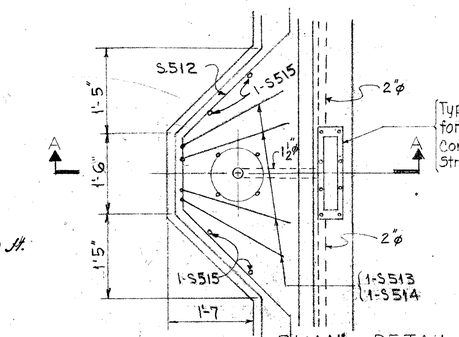

PLAN - DETAIL D

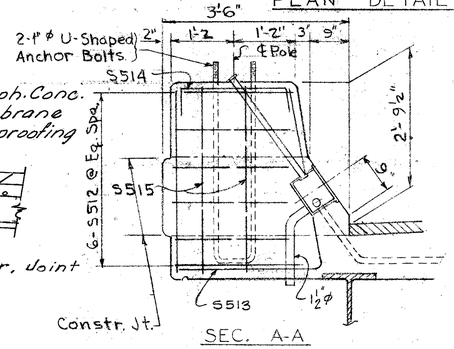

SEC. A-A

11/12

MICHAEL BAKER JR., CONSULTING ENGINEERS
ROCHESTER, PENNSYLVANIA

SUPERSTRUCTURE DETAILS
BRIDGE NO BEL-470-0615
UNDER RAMP A&B

STA. 1453+20

DESIGNED	DRAWN	TRACED	CHECKED	REVIEWED DATE	REVISED
DRB	CWS		Dwp	WRK 8/18/76	

BEAVER VALLEY ENGINEERING SUPPLIES CO. REORDER A-20734

REINFORCING STEEL LIST

FED. RD. DIVISION	STATE	PROJECT	TYPE FUNDS
5	OHIO		

199 / 288

BEL.-470-5.90

SUPERSTRUCTURE

Mark	No.	Length	Weight	Sh'p
S601	1588	29'-0"	69,170	Str
S602	310	3'-5"	1591	Bt.
S603	310	2'-9"	1280	Str.
S501	476	30'-0	14,894	Str.
S502	68	31'-7	2240	Str
S503	310	2'-8	862	Bt.
S504	310	3'-8	1186	Bt.
S505	310	2'-3	727	Bt.
S506	310	5'-10	1886	Bt.
S507	310	4'-3"	1374	Bt.
S508	210	6'-8	1460	Str.
S509	56	14'-8	857	Str.
S510	56	13'-2	769	Str.
S511	14	12'-8	185	Str.
S512	12	7'-8"	96	Bt.
S513	8	9'-2	76	Bt.
S514	8	3'-1	26	Bt.
S515	8	3'-4	28	Str.
S401	648	30'-0	12,986	Str.
S402	69	22'-0	1014	Str.
S403	138	33'-0	3042	Str.

PIER NO.1

Mark	No.	Length	Weight	Sh'p
P1001	8	21'-0	723	Str.
P901	40	6'-5"	873	Bt
P902	20	19'-1	1298	Str.
P903	20	18'-0	1224	Str.
P801	7	30'-7	572	Bt.
P701	40	10'-2	831	Bt.
P702	5	32'-6	332	Bt.
P703	5	31'-6	322	Bt.
P601	40	9'-10	591	Bt
P602	2	5'-7	17	Bt
P603	2	5'-5	16	Bt.
P604	2	6'-8	20	Bt
P605	2	6'-4	19	Bt
P501 ⓐ	1 of 3	6'-11 to 9'-5	26	Bt.
P502	44	5'-7	256	Bt.
P503	13	8'-9	119	Bt.
P504	11	8'-5	97	Bt
P505 ⓑ	1 of 3	8'-3 to 6'-7	23	Bt.
P506 ⓒ	1 of 4	6'-3 to 9'-7	33	Bt.
P507	6	9'-5	59	Bt.
P508 ⓓ	1 of 4	8'-3 to 5'-11	30	Bt.
P509	2	27'-8	58	Str.
P510	2	29'-5	61	Str.

Spirals - Core Diam. 32" o/o
Pitch 4½ c/c
other details in accordance with C.R.S.I. standard practice

SP401	2	15'-11	603	Bt
SP402	2	14'-9	561	Bt

BENDING DIAGRAMS

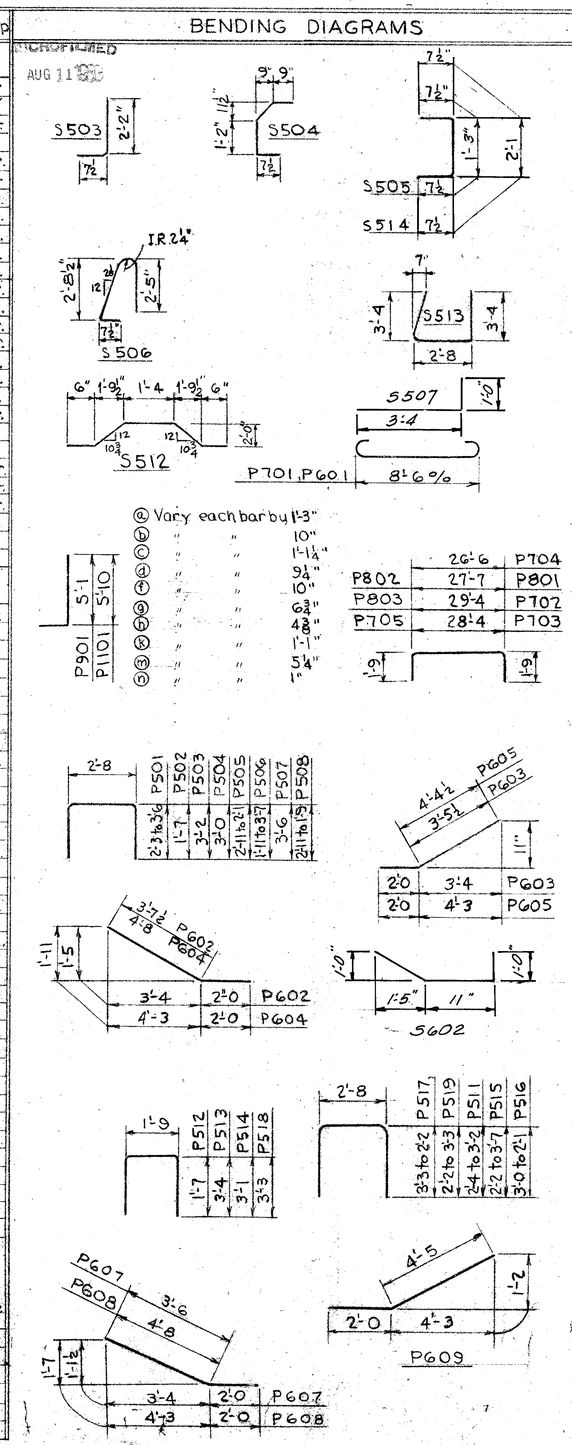

PIER NO.2

Mark	No.	Length	Weight	Sh'p
P1101	56	7'-6"	2231	Bt.
P1102	28	27'-0	4017	Str.
P1103	28	27'-11	4153	Str.
P1104	10	20'-10	1107	Str.
P802	6	30'-7	490	Bt.
P803	6	32'-4	518	Bt.
P704	6	29'-8	364	Bt.
P705	6	31'-6	386	Bt.
P603	2	5'-5	16	Bt.
P604	2	6'-8	20	Bt.
P606	80	7'-6	901	Str.
P607	2	5'-6	17	Bt.
P608	2	6'-8	20	Bt.
P502	42	5'-7	245	Bt
P503	16	8'-9	146	Bt.
P504	8	8'-5	70	Bt.
P505 ⓑ	1 of 3	8'-3 to 6'-7	23	Bt.
P509	2	27'-8	58	Str.
P510	2	29'-5	61	Str.
P511 ⓕ	1 of 3	7'-11 to 8'-9	25	Bt.
P512	32	4'-8	156	Bt.
P513	16	8'-2	136	Bt.
P514	16	7'-8	128	Bt.
P515 ⓖ	1 of 6	6'-9 to 9'-7	51	Bt.
P516 ⓗ	1 of 6	8'-5 to 6'-7	47	Bt.

Spirals Core Diam. 32 o/o
Pitch 4½ c/c
other details in accordance with C.R.S.I. standard practice

SP403	2	24'-9	919	Bt.
SP404	2	23'-11	889	Bt.

PIER NO.3

Mark	No.	Length	Weight	Sh'p
P1104	10	20'-10	1107	Str.
P901	40	6'-1	827	Bt.
P904	20	23'-7	1604	Str.
P905	20	23'-6	1598	Str.
P802	6	30'-7	490	Bt.
P803	6	32'-4	518	Bt.
P704	6	29'-8	365	Bt.
P705	6	31'-6	386	Bt.
P706	56	7'-0	801	Str.
P603	2	5'-5	16	Bt.
P604	2	6'-8	20	Bt.
P607	2	5'-6	17	Bt.
P609	2	6'-5	19	Bt.
P502	42	5'-7	245	Bt.
P503	16	8'-9	146	Bt.
P504	8	8'-5	70	Bt.
P505 ⓑ	1 of 3	8'-3 to 6'-7	23	Bt.
P509	2	27'-8	58	Str.
P510	2	29'-5	61	Str.
P512	32	4'-8	156	Bt.
P514	16	7'-8	128	Bt.

BENDING DIAGRAMS

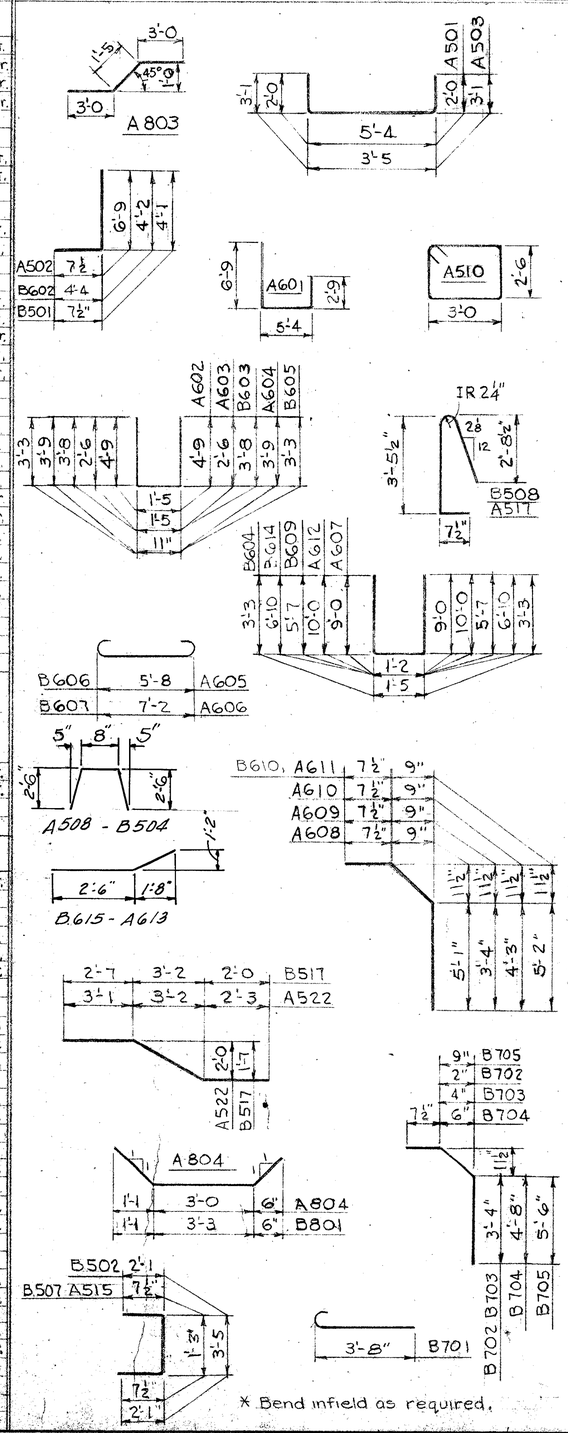

PIER NO.3

Mark	No	Length	Weight	Sh'p
P516 ⓗ	1 of 6	8'-5 to 6'-7	47	Bt.
P517 ⓚ	1 of 3	8'-11 to 6'-9	25	Bt.
P518	16	8'-0	134	Bt.
P519 ⓜ	1 of 6	6'-9 to 8'-11	49	Bt.

Spirals Core Diam. 32" o/o
Pitch 4½ c/c
other details in accordance with C.R.S.I. standard practice

SP405	2	20'-5	764	Bt.
SP406	2	20'-4	761	Bt.

ABUTMENT NO.1

Mark	No	Length	Weight	Sh'p
A801	7	34'-8"	648	Str.
A802	7	26'-5	494	Str.
A803	7	7'-5	139	Bt.
A804	38	5'-3	533	Bt.
A805	6	10'-10	174	Str.
A806	6	11'-2	179	Str.
A601	41	14'-6	893	Bt.
A602	57	10'-7	906	Bt.
A603	57	6'-1	521	Bt.
A604	54	8'-1	656	Bt.
A605	8	7'-0	84	Bt
A606	7	8'-6	89	Bt.
A607	5	18'-10	141	Bt.
A608	10	6'-9	101	Bt.
*A609	6	5'-1	46	Bt.
*A610	2	6'-0	18	Bt.
A611	2	6'-11	21	Bt.
A612	5	20'-10	156	Bt.
A613	4	4'-6"	27	Bt.
A501	41	9'-1	388	Bt.
A502	40	7'-3	302	Bt.
A503	40	9'-4	389	Bt.
A504	14	32'-5	473	Str
A505	14	27'-10	406	Str.
A506	20	10'-6	219	Str.
A507	5	14'-0	73	Str.
A508	2	5'-5"	11	Bt.
A509	8	1'-5"	12	Str.
A510	24	11'-10	296	Bt.
A511	10	4'-11	51	Str.
A512	2	5'-5	11	Str.
A513	2	4'-7	10	Str.
A514	6	4'-1	26	Str.
A515	20	2'-3	47	Bt.
A516 ⓝ	1 of 5	3'-2 to 3'-6	70	Str
A517	10	7'-0	73	Bt
A518	8	7'-3	60	Str.
*A519	24	12'-8	317	Str.
A520	6	8'-6	53	Str.
A521	4	8'-0	33	Str
A522	4	9'-0	38	Bt.
A523	2	9'-4	19	Str
A524	6	8'-2	51	Str

ABUTMENT NO. 2

Mark	No	Length	Weight	Sh'p
B801	38	5'-6	558	Bt.
B701	2	4'-6	18	Bt.
B702	2	4'-10	20	Bt.
B703	2	4'-11	20	Bt.
B704	2	6'-4	26	Bt.
B705	2	7'-3	30	Bt.

ABUTMENT NO.2 (CONT.)

Mark	No	Length	Weight	Sh'p
B601	8	31'-4	377	Str.
B602	40	8'-4	501	Bt.
B603	57	8'-5	721	Bt.
B604	57	7'-7	654	Bt.
B605	54	7'-1	575	Bt.
B606	7	7'-0	74	Bt.
B607	6	8'-6	77	Bt.
B608	2	9'-4	28	Str.
B609	5	12'-0	90	Bt.
B610	8	6'-11	83	Bt.
B611	2	4'-5	13	Str.
B612	6	3'-8	33	Str.
B613	2	9'-6	29	Str.
B614	5	14'-6"	109	Bt.
B615	4	4'-6"	27	Bt.
B501	40	4'-7	191	Bt.
B502	40	7'-4	306	Bt.
B503	34	30'-2	1070	Str.
B504	2	5'-5"	11	Bt.
B505	8	1'-5	12	Str.
B506	8	5'-0	42	Str.
B507	18	2'-3	42	Bt.
B508	8	7'-0	58	Bt.
B509	2	5'-4	11	Str.
B510	2	4'-7	10	Str.
B511	6	3'-11	25	Str.
B512 ⓝ	4 S of 5	3'-2 to 3'-6	70	Str.
B513	10	7'-6	78	Str.
B514	4	6'-9	28	Str.
B515	4	10'-0	42	Str.
*B516	24	11'-8	292	Str.
B517	4	8'-1	34	Bt.
B518	4	5'-8	24	Str
B519	6	7'-8	48	Str.

REINFORCING STEEL SAMPLES
Refer to CMS Sections 106.03, 700, 709.01 through 709.05 and 709.08 Sufficient additional reinforcing steel shall be provided for sampling. Random samples shall be replaced in the structures by the additional steel, spliced in accordance with 509.08.

1 S of 5 means 1 series of 5 bars

12/12

MICHAEL BAKER JR., CONSULTING ENGINEERS
ROCHESTER, PENNSYLVANIA

REINFORCING STEEL LIST
BRIDGE NO. BEL.470-0615
UNDER RAMP A & B

STA. 1453 + 20.00

DESIGNED	DRAWN	TRACED	CHECKED	REVIEWED	DATE	REVISED
TYT DRB	O.W.		Dwp	WRK	8/18/76	

BEAVER VALLEY ENGINEERING SUPPLIES CO. REORDER A-23879

FED. RD. DIVISION	STATE	PROJECT	
5	OHIO		

200
288

BELMONT COUNTY
BEL-470-5.90

MICROFILMED
AUG 11 1988

Rail Elevations taken 1-5-68.

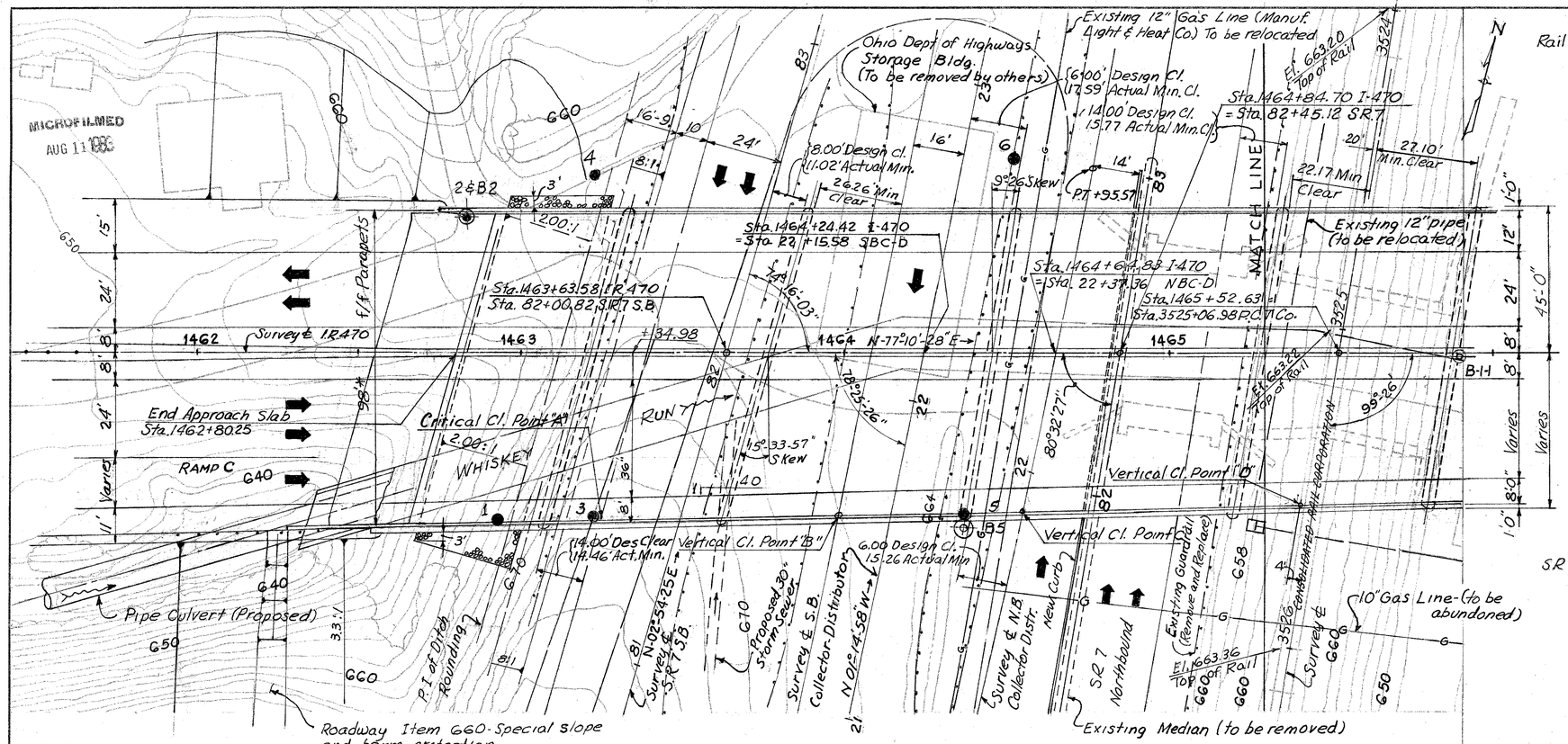

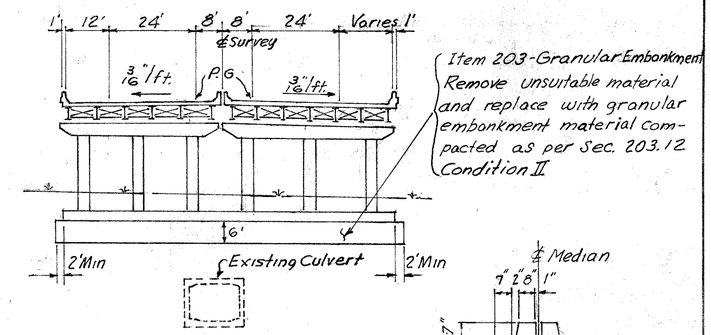

TYPICAL SECTION
Piers 1 thru. 4

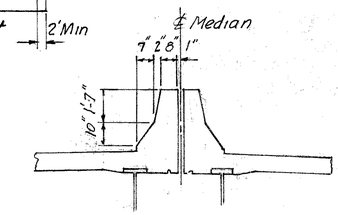

MEDIAN

SR 7 Northbound Collector Distributor

P.I. Sta. 21+82.92
Δ = 3°-18'-19" Lt.
D = 1°28'-00"
R = 3906.53'
T = 112.71
L = 225.36
E = 1.63'

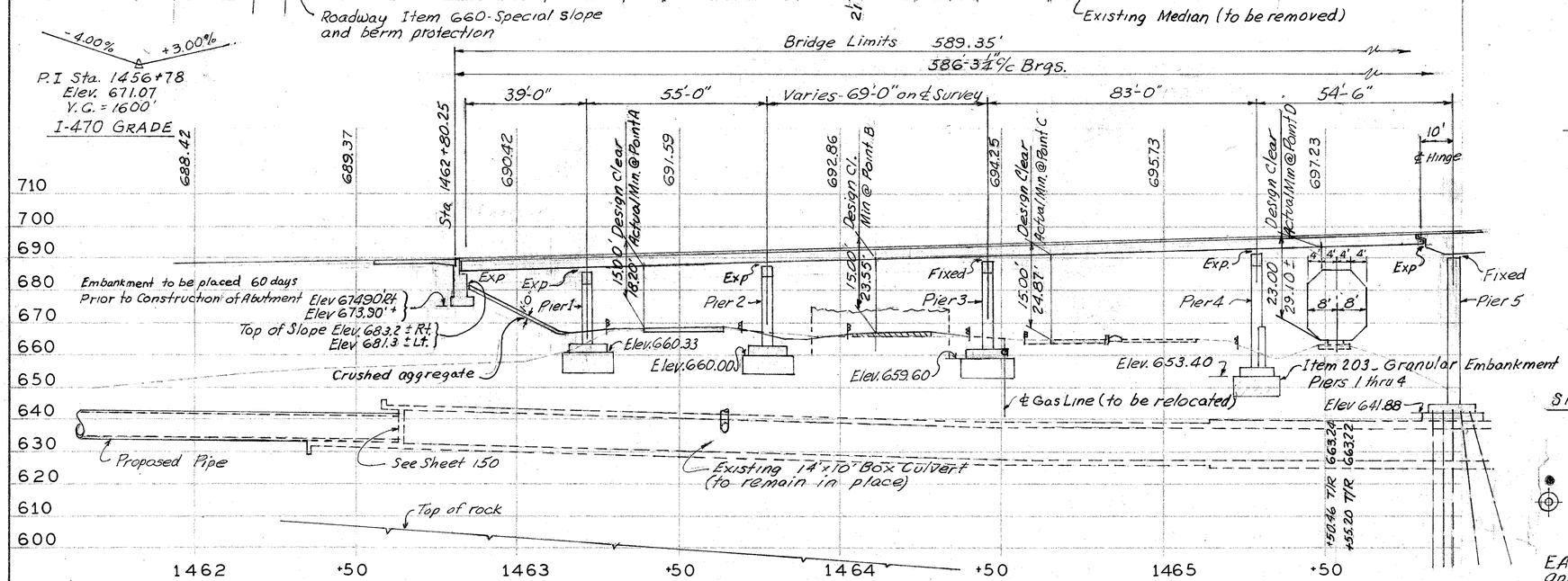

-3.15%
-0.242%
P.I. Sta. 82+00
Elev 665.89
V.C. 400'
SR 7 Southbound GRADE

-0.269%
+0.225%
P.I. Sta. 21+00
Elev. 664.75
V.C. 200'
SR 7 (N.B) COLL. DISTR. GRADE

+0.324%
-0.360%
P.I. Sta. 20+30
Elev. 667.46
V.C. 400'
SR 7 (S.B) COLL. DISTR GRADE

* @ Sta. 1462+55.08
** @ Sta 1466+55.08 Ahead

1989 ADT = 10760

PROPOSED STRUCTURE

TYPE: Continuous steel beams and welded girders with reinforced concrete deck and substructure.
SPANS: 46'-56'-69'-83'-54.5'-144.885'-140.885' c/c Brgs.
ROADWAY: Varies from *98' to **88' f/f parapets including 16' median with concrete barrier railing
LOADING: HS-20-44 & the Alternate Military Loading.
SKEW: Rear Abut & Piers 1 & 2 15°43'-57" Lt. Fwd.
Piers 3 thru 5 - 9° 26' Lt. Fwd.
Pier 6 - 4° 45' Lt. Fwd. Pier 7 - None
WEARING SURFACE: 2 1/2" Asphalt Concrete
APPROACH SLAB: AS-1-72 (25 ft long) rear only
ALIGNMENT: Tangent

LEGEND
● = Rod Sounding
⊕ = Core Boring

EARTHWORK limits shown are approximate. Actual slopes shall conform to plan cross-sections.

SHEET 1 OF 2 — 1/37

MICHAEL BAKER JR., CONSULTING ENGINEERS
ROCHESTER, PENNSYLVANIA

SITE PLAN
BRIDGE NO. BEL-470-0662
OVER
S.R.7, CONRAIL, CHESSIE SYSTEM

Sta. 1462+8025 to Sta. 1468+69.60

PRESENT TOPOGRAPHY		PROPOSED WORK			
SURVEYED	DRAWN	DESIGNED	DRAWN	CHECKED	REVIEWED
Aerial Survey	R.J.P.	DWP	DWP	BLA	WKR 2/18/76

REV. 2/23/78

BEAVER VALLEY ENGINEERING SUPPLIES COMPANY REORDER A-11920

FED. RD. DIVISION	STATE	PROJECT	
5	OHIO		

201
288

BELMONT COUNTY
BEL-470-5.90

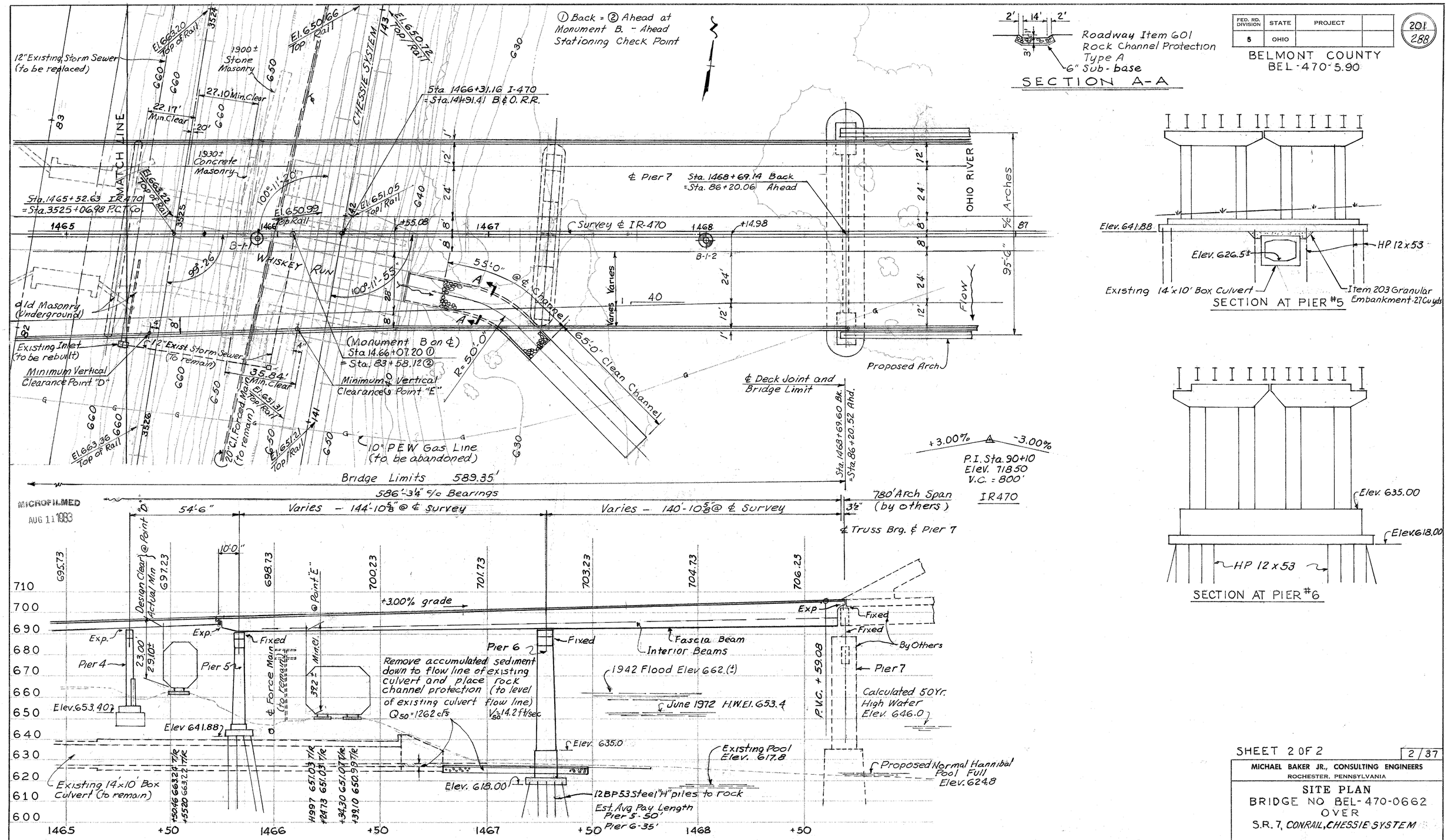

MICROFILMED
AUG 11 1983

SHEET 2 OF 2 | 2/37

MICHAEL BAKER JR., CONSULTING ENGINEERS
ROCHESTER, PENNSYLVANIA

SITE PLAN
BRIDGE NO BEL-470-0662
OVER
S.R. 7, CONRAIL, CHESSIE SYSTEM

Sta. 1462+80.25 to Sta. 1468+69.60

PRESENT TOPOGRAPHY		PROPOSED WORK			
SURVEYED	DRAWN	DESIGNED	DRAWN	CHECKED	REVIEWED
Aerial Survey	R J P	DWP	DWP	BLA	WRK 8/18/76

BEAVER VALLEY ENGINEERING SUPPLIES COMPANY REORDER A-10920

FED. RD. DIVISION	STATE	PROJECT	TYPE FUNDS
5	OHIO		

202
288

BEL 470 - 5.90

NOTE: All Lengths are Horizontal Distances and Do Not Reflect Changes in Elevations From Support to Support.

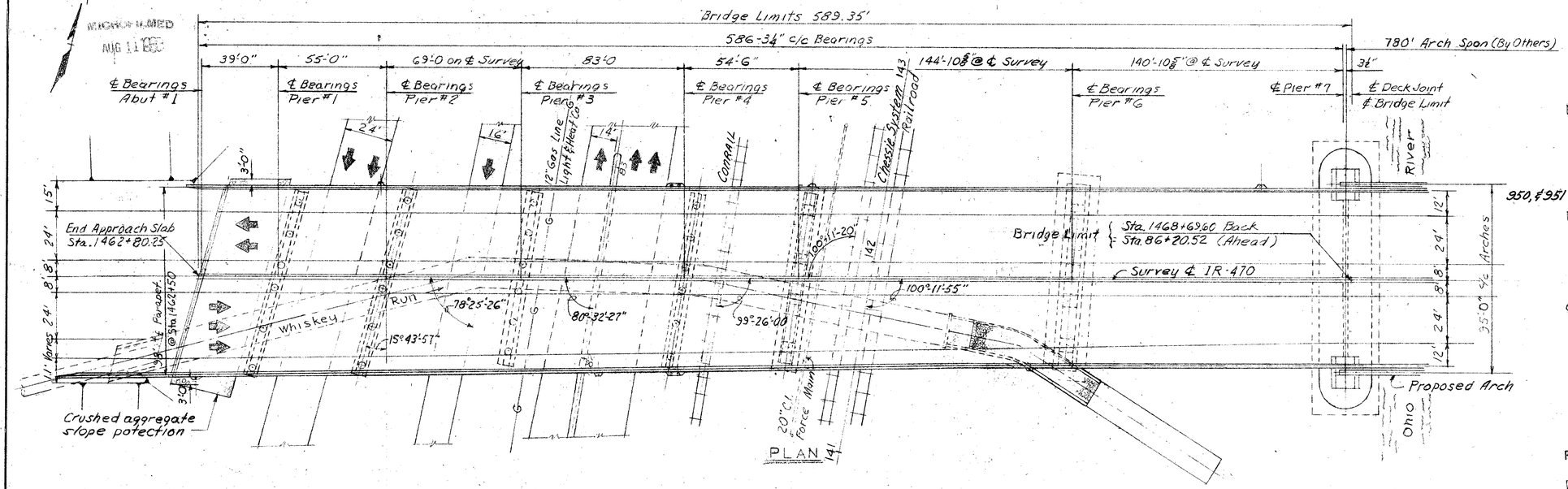

NOTE: Sequence of Concrete Placement is indicated ① First, ② Second

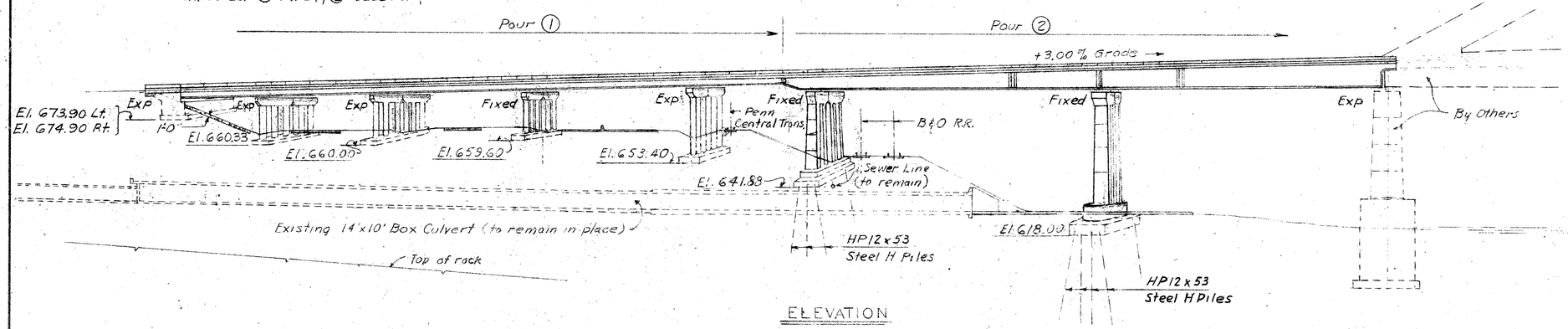

ELEVATION

PILES shall be driven to bedrock. The bearing capacity shall be considered obtained by refusal on hard bedrock or by penetrating soft bedrock for several inches with a minimum resistance of 20 blows per inch. The design load is 70 tons per pile at Pier 5 and 64 tons per pile at Pier 6.

ATTACHMENT OF GUARDRAIL TO CONCRETE PARAPETS: Concrete inserts anchor assemblies per Standard Construction Drawings GR-3 and GR-1 shall be placed during parapet construction.

MAINTENANCE OF TRAFFIC: Four lanes (2 = 26' + 4' Divider + 2 = 26') with min. horizontal width of 56'-0" and a minimum vertical clearance of 12'-9" shall be maintained on SR 7 at all times.

CONSTRUCTION CLEARANCE: of 8'-0" horizontally from the center of the *Consolidated Rail Corporation* track and 20'-0" vertical from a point level with the top of the higher rail and 4 feet from the center of track shall be maintained at all times.

CONSTRUCTION CLEARANCE of 10'-0" horizontally from the center of each of the *Chessie System* tracks and 22'-0 vertically from a point level with the top of the highest rail and 4' feet from the center between rails should be maintained at all times

RAILROAD AERIAL LINES will be temporarily relocated by the B&O. RR. The Contractor shall use all precautions necessary to see that lines are not disturbed during the construction stage and shall cooperate with the Railroad in the relocation of these lines. The cost of the relocation shall be included in the railroad Force Account Work.

See Sheet No. 4/37 for General Notes (Cont.)

GENERAL NOTES

REFERENCE: Shall be made to Standard Drawings
RB-1-55 revised 2-2-59
BR-1-67 revised 10-15-71
SD-1-69 dated 6-12-69
AS-1-72 dated 6-30-72
and to Supplemental Specifications 846, 950, & 951 dated 4-25-77, 808 dated 1-1-71 and 836, dated 3-12-75

DESIGN SPECIFICATIONS: This structure conforms to "Standard Specifications for Highway Bridges" adopted by the American Association of State Highway and Transportation Officals, 1973, the 1974 & 1975 AASHTO Interim Specifications and the Ohio "Supplement" to these specifications.

CONSTRUCTION PROCEDURE: After the W.Va. main river span has been erected the Ohio Contractor will erect the Ohio approach spans structural steel. Deck joint end dam at Pier 7 (W.Va. plans - Pier 1) shall then be furnished and erected by the W.Va. project Contractor. Deck slab, parapets and wearing surface shall then be completed by the Ohio Contractor on the West side of the expansion dam and by the W.Va. Contractor on the east side of the expansion dam

REFERENCE shall be made to W.Va. Bridge Plans See Sht. 4/37

DESIGN DATA:
Design Loading - H.S. 20-44 and the *Alternate Military Loading*
Concrete Class C - unit stress 1200 psi for superstructure
unit stress 1333 psi for substructure
Structural Steel - ASTM A36 unit stress 20,000 psi.
Reinforcing Steel - ASTM A615, A616 or A617 unit stress 20,000 psi. Spiral reinforcement may be plain bars ASTM A82 or A615.

EMBANKMENT CONSTRUCTION: Excavation shall be made at Pier 1 and unsuitable material shall be replaced with granular embankment, as per plan. Excavation shall then be backfilled and embankment shall be constructed to the level of the subgrade for a minimum distance of 200 feet back of the abutment. After a 60 day minimum waiting period, excavation shall then be made for the abutment and for Pier No. 1.

FOUNDATION BEARING PRESSURE: Footings are designed for maximum bearing pressure in tons per square foot as follows:
Abutment 1.6 T/□' Pier 1 1.9 T/□' Pier 2 2.0 T/□'
Pier 3, 1.9 T/□' Pier 4, 2.0 T/□'

UTILITY LINES: All expense involved in relocating the affected utility lines shall be borne by the Owners. The Contractor and Owners are requested to cooperate by arranging their work in such a manner that inconvenience to either will be held to a minimum.

3 / 37

MICHAEL BAKER JR., CONSULTING ENGINEERS
ROCHESTER, PENNSYLVANIA

GENERAL PLAN & ELEVATION
BRIDGE NO. BEL-470-0662
OVER
S.R. 7, CONRAIL, CHESSIE SYSTEM
STA. 1462+80.25 TO STA. 1468+69.60

DESIGNED	DRAWN	TRACED	CHECKED	REVIEWED	DATE	REVISED
BLA			DWP	WRK	8/18/76	2/23/78

BEAVER VALLEY ENGINEERING SUPPLIES CO. REORDER A-23870

FED. RD. DIVISION	STATE	PROJECT	TYPE FUNDS
5	OHIO		

203
288

BEL-470-5.90

MICROFILMED
AUG 1 1995

ESTIMATED QUANTITIES

ITEM	TOTAL	UNIT	DESCRIPTION	ABUT.	PIER 1	PIER 2	PIER 3	PIER 4	PIER 5	PIER 6	SUPERSTR	GENERAL		
202	—	Lump Sum	Portions of structures removed						Lump Sum					
203	1147	Cu. yds.	Granular embankment		237	255	307	321	27					
404	390	Cu. yds.	Asphalt Concrete AC-20								390			
503	Lump Sum	Lump Sum	Cofferdams, cribs and sheeting									Lump Sum		
503	2670	Cu. yds.	Unclassified excavation	323	202	222	254	345	507	817				
505	Lump Sum	Lump Sum	Test pile						L.S.					
506	Lump Sum	Lump Sum	Pile test load							L.S.				
506	1	Each	Subsequent pile test load							L.S.				
507	5440	Lin. ft.	Steel piles HP12x53						2620	2820				
509	775578	Lbs.	Reinforcing Steel	12876	23035	24968	27034	50218	74077	125848	437522			
511	1796	Cu. yds.	Class "C" concrete, superstructure #								1796			
511	1326	Cu. yds.	Class "C" concrete, pier footing		63	72	105	113	258	715				
511	1317	Cu. yds.	Class "C" concrete, pier caps and columns.		75	77	82	193 ♦	240	650		—		
511	225	Cu. yds.	Class "C" concrete, abutments	225										
513	2020,400	Lbs.	Structural Steel (PRIMER PER 846)								2020,400			
846	2020,400	Lbs.	Painting of new structural steel.								2020,400			
516	62	Sq. ft.	1" Preformed expansion joint filler								62			
518	96	Lin. ft.	6" ø Perforated, helical CSP, 707.01	96										
518	55	Lin. ft.	6" ø Non-perforated helical CSP, including specials, 707.01	55										
518	1161	Lin. ft.	Subdrainage for wearing surface coarse, as per plan								1161			
518	30	Each	Scuppers, including supports								30			
518	282	Lin. ft.	6" ø Std. pipe horizontal conductors including specials. *								282			
518	260	Lin. ft.	6" ø Standard pipe downspout *			47.5			212.5					
518	78	Cu. yds.	Porous Backfill	78										
601	437	Sq. yds.	Crushed aggregate slope protection	437										
S 625			See sheet for Electrical Quantities											
808	1766	Units	CHEMICAL ADMIXTURE FOR CONCRETE type A, B & D								1766			
Special	5679	Sq. yds.	Membrane waterproofing (See Proposal Note)								5679			
512	14	Lin. ft.	Premolded Sealing strip	14										

Computed by:	DWP	4-75
Checked by:	BLA	4-75

Comp. by DWP 4/76
Checked by JAJ 4/76
Parapet Height

* Downspouts and horizontal conductors may be alloy steel, galvanized steel

♦ Includes collision wall

REINFORCING BAR LAPPED SPLICES
Bars shall be lapped as shown by the lap dimension; bars without lap dimensions shall be lapped a minimum of 30 bar diameters.

 # See Proposal Note

GENERAL NOTES (continued from sheet 3/36)

CONSTRUCTION PROCEDURE AT PIER 5: The Contractor shall investigate and verify in the areas of the proposed footing the location of existing above and underground structures and utilities. Careful excavations and/or earth boring equipment will be permitted for this purpose. The Contractor shall submit to the Director three (3) copies of drawings showing the information obtained and his proposed plan for removing the obstructions where required. He shall ascertain that the piles will not interfere with the existing structures and utilities. Plans for sheeting to protect the *Consolidated Rail Corporation* embankment, the existing telegraph line, the 20" Sanitary Sewer and the *Chessie System* roadbed will be reviewed by the State, the two Railroads and the Sewer Authority. The Contractor will submit to the Department a minimum of twelve (12) sets of prints of his proposed cofferdam details for review and approval. Four copies of supporting design calculations shall also be submitted.

Item 202, Portions of Structures Removed: This item shall include the locating of existing structures and utilities, the preparation, submission and necessary revisions to obtain approval of drawings describing proposed methods. ~~Item 202 shall also include~~ ing for the protection of the *Consolidated Rail Corp.*, the *Chessie System* and the Belmont County Sewer Authority No. 1 sewer line, ~~the furnishing, driving, maintenance and subsequent removal of sheeting~~ and the removal of existing masonry as required to permit driving of piling for Pier No. 5. This item shall also include repair of any damages which may be inflicted on the existing structures and utilities including the railroad roadbed, occuring at the site during construction.

plans

The cost of Item 202 shall be lump sum for removed masonry. The removed soil which over lies the masonry shall not be included.

Payment will be made at contract prices for Item 202, Lump Sum, Portions of Structures Removed.

Item 203, Granular Embankment - This item shall include the removal of unsatisfactory foundation material at Piers 1, 2, 3, 4 and 5 to the limits shown on the plans; the replacement of removed material with granular materials as defined in Section 203.02 up to proposed footing elevations; the necessary water, clean up and testing as required by Section 203. Compaction shall be in accordance with Section 203.12 Condition II.

Method of measurement - The quantity of granular embankment for which payment will be made, shall be the number of cubic yards excavated below the proposed footing elevations assuming vertical sides 6 feet high extending 2 feet beyond the plan area of the proposed footing.

Payment will be made at contract prices for Item 203, Cubic Yard, Granular Embankment.

Contractor Responsibility @ Pier 7: Contractor shall verify the location, dimensions and elevations at Pier 7 prior to ordering structural steel. If any deviation occurs adjustment shall be made with payment considered as incidental to Item 513. W12x40 Supports for end dam in Ohio Span 7 are a part of this contract. End dam will be furnished and installed by the W.Va. Project Contractor. After this installation has been made the Ohio Project Contractor will be responsible for completing deck slab, waterproofing and parapets west of the end dam. Detail plans for the W.Va. Project will be furnished to the successful Ohio Project bidder upon receipt of written request by the W.Va. Dept. of Highways, Charleston W.Va. Cooperation between the two Contractors is essential to the effecient completion of the structure.

Plan Dimensions are horizontal distance and do not take into account changes in elevations from support to support unless otherwise noted

REFERENCE shall also be made to design plans for W.Va. Bridge No. 2494 Sheets 6, 10 and 11 of the structural steel contract and Sheets B 218, B 219, B 220, B 221, B 228 and B 229 of the decking contract. Reference details are included as project plan sheets 237 thru. 245

APPROACH SLAB DETAILS:
The jacking holes are not required
The top reinforcing bars shall be 3" clear.

The name CONRAIL has been used in the title blocks rather than CONSOLIDATED RAIL CORPORATION

4/37

MICHAEL BAKER JR., CONSULTING ENGINEERS
ROCHESTER, PENNSYLVANIA

ESTIMATED QUANTITIES & NOTES
BRIDGE NO. BEL. 470-0662
OVER
S.R. 7, CONRAIL & CHESSIE SYSTEM
STA. 1462+80.25 TO STA. 1468+69.60

DESIGNED	DRAWN	TRACED	CHECKED	REVIEWED	DATE	REVISED
DWP	OW		DWP	WRK	8/18/76	2/23/78

BEAVER VALLEY ENGINEERING SUPPLIES CO. REORDER A-58878

MICROFILMED
AUG 11 1988

FED. RD. DIVISION	STATE	PROJECT	TYPE FUNDS
5	OHIO		

204
288

BELMONT COUNTY
BEL-470-5.90

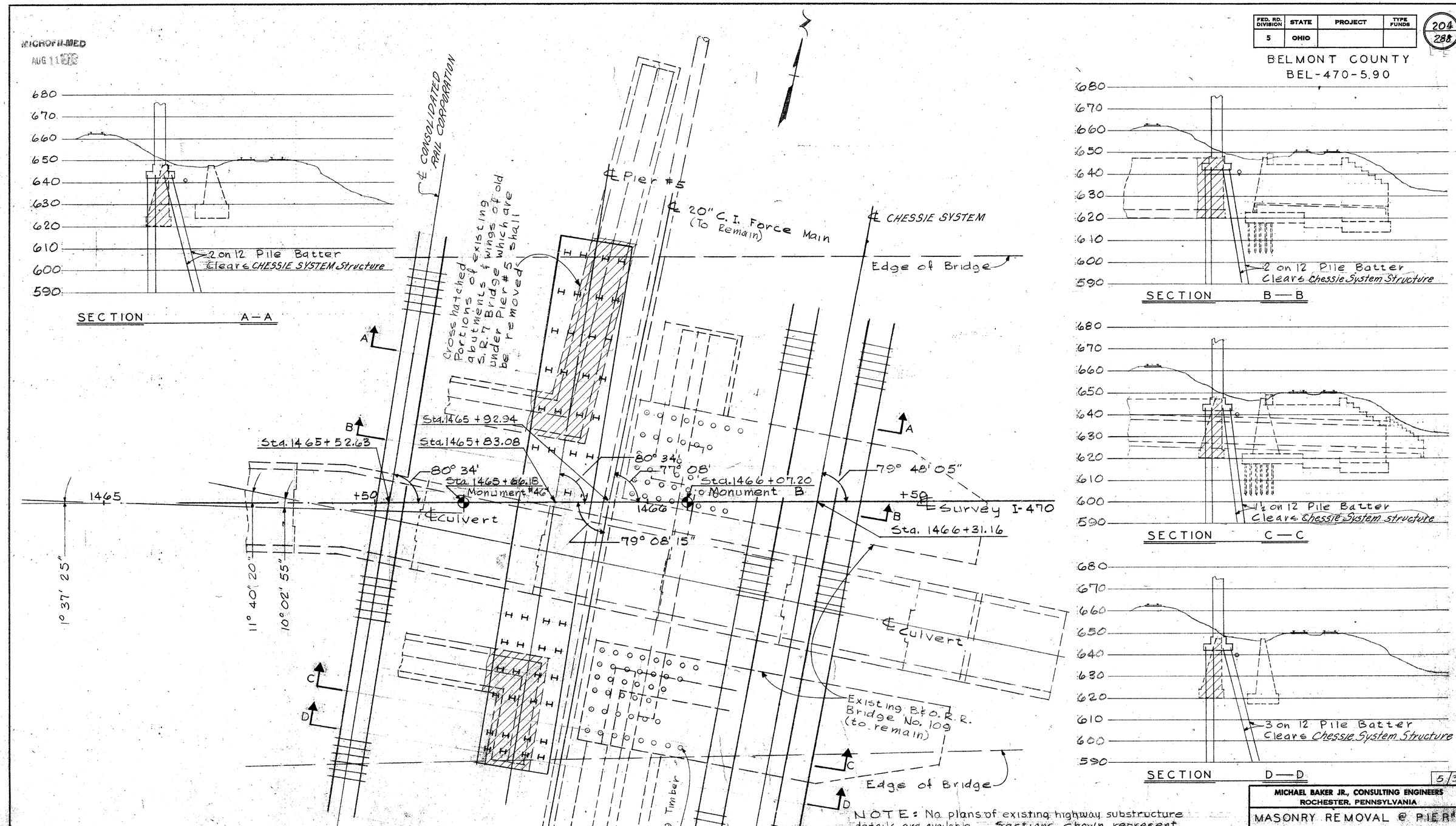

Note: See Sheets 13/37 & 14/37 for Pier 5 Details

NOTE: No plans of existing highway substructure details are available. Sections shown represent only estimated elevations and dimensions. Plans for the CHESSIE SYSTEM Bridge (Which will not be disturbed) are available and may be viewed at the District Office.

5/37

MICHAEL BAKER JR., CONSULTING ENGINEERS
ROCHESTER, PENNSYLVANIA

MASONRY REMOVAL @ PIER #5
BRIDGE NO. BEL-470-0662
OVER
S.R. 7, CONRAIL & CHESSIE SYSTEM
STA. 1462+80.25 TO STA. 1468+69.60

DESIGNED	DRAWN	TRACED	CHECKED	REVIEWED DATE	REVISED
D.W.P.	J.A.J.		T.M.W.	W.R.K. 8/18/76	

BEAVER VALLEY ENGINEERING SUPPLIES CO. REORDER A-23979

MICROFILMED
AUG 11 1980

FED. RD. DIVISION	STATE	PROJECT	TYPE FUNDS
5	OHIO		

205
288

BEL-470-5.90

Backwall Concrete Note: In addition to the provisions of 511.08, back wall concrete shall not be placed untill after the deck concrete in span adjacent to the backwall has been placed.

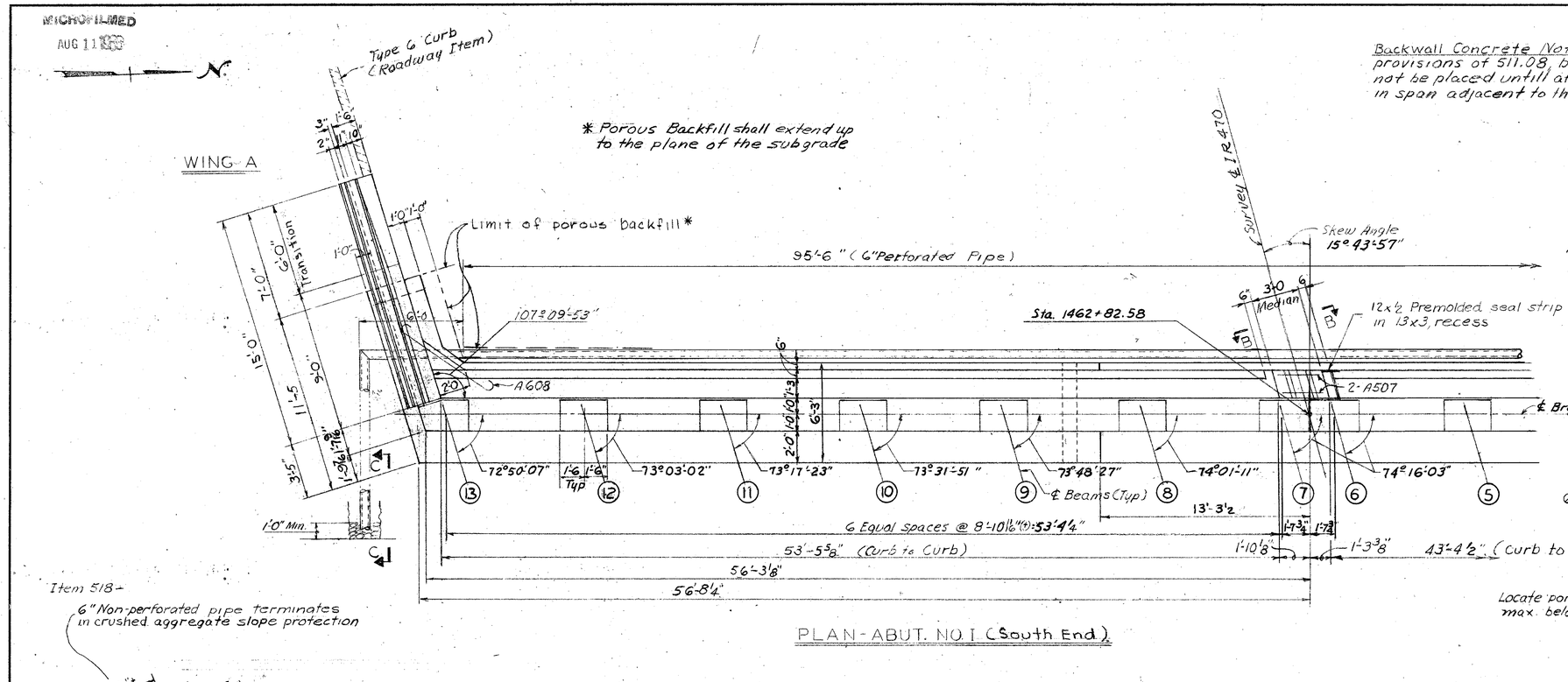

PLAN-ABUT. NO. I (South End)

SECTION C-C

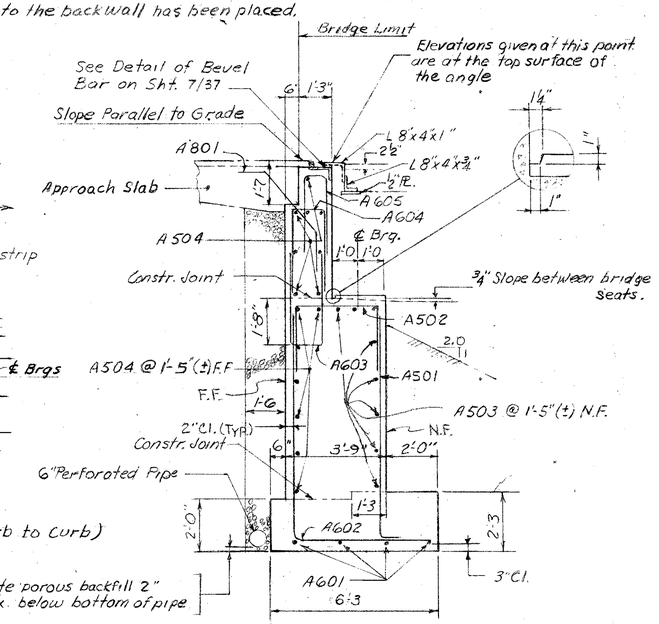

SECTION A-A

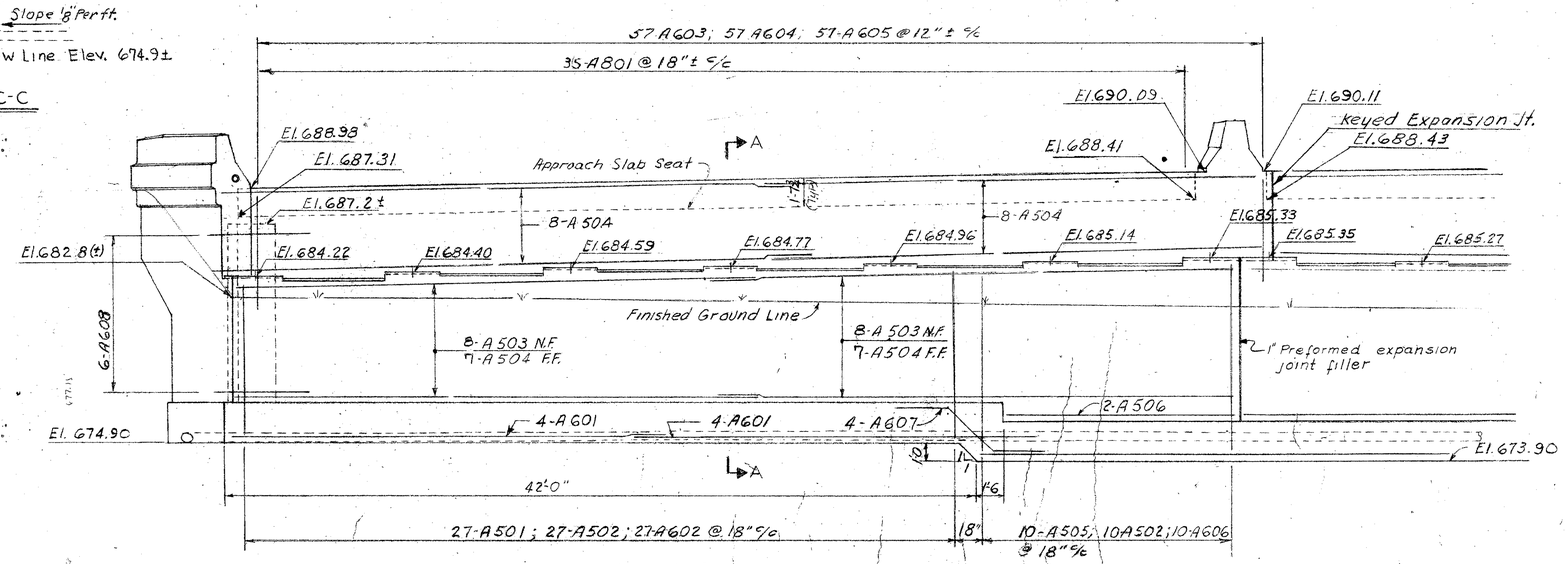

ELEVATION

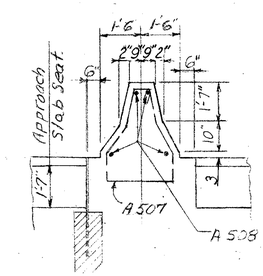

SECTION B-B

NOTE;

For North End of Abutment See Sht. 7/37

6/37

MICHAEL BAKER JR., CONSULTING ENGINEERS
ROCHESTER, PENNSYLVANIA

ABUTMENT NO. I
BRIDGE NO. BEL-470-0662
OVER
S.R. 7, CONRAIL & CHESSIE SYSTEM
STA. 1462+80.25 TO STA. 1468+69.60

DESIGNED	DRAWN	TRACED	CHECKED	REVIEWED DATE	REVISED
J.E.M.	O.W.		J.A.S.	WRK 3/18/70	2/23/78

BEAVER VALLEY ENGINEERING SUPPLIES CO. REORDER A-23879

FED. RD. DIVISION	STATE	PROJECT	TYPE FUNDS
5	OHIO		

206
288

BEL-470-5.90

MICROFILMED
AUG 11 1988

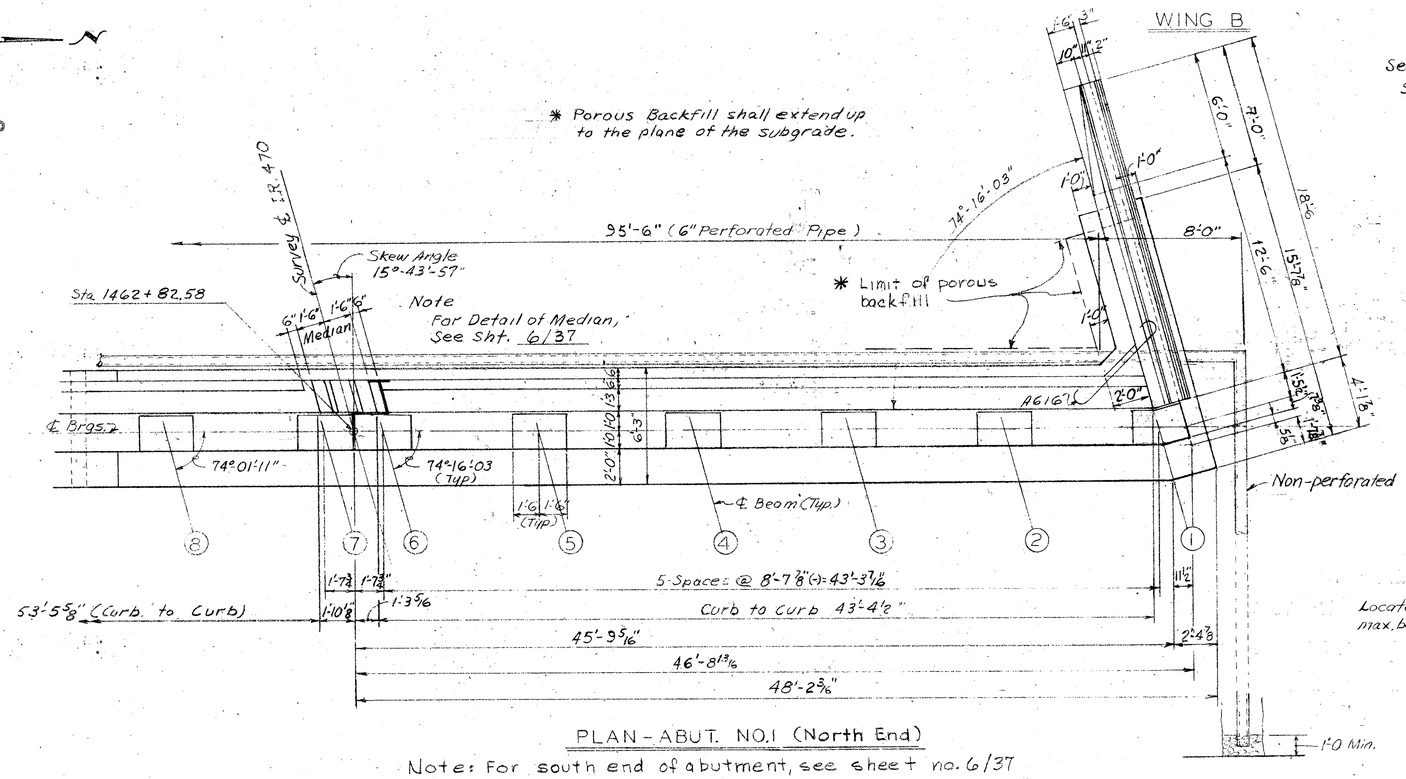

PLAN - ABUT. NO.1 (North End)

Note: For south end of abutment, see sheet no. 6/37

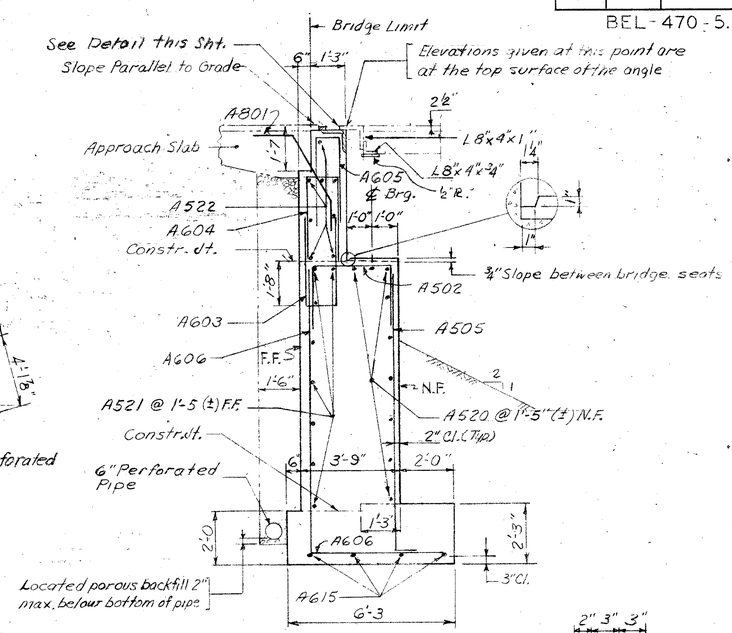

SECTION C-C

Backwall Concrete Note: In addition to the provisions of 511.08 back wall concrete shall not be placed until after the deck concrete in span adjacent to the backwall has been placed.

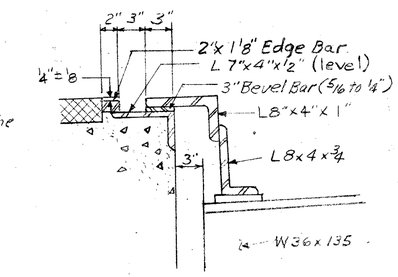

BEVEL BAR DETAIL

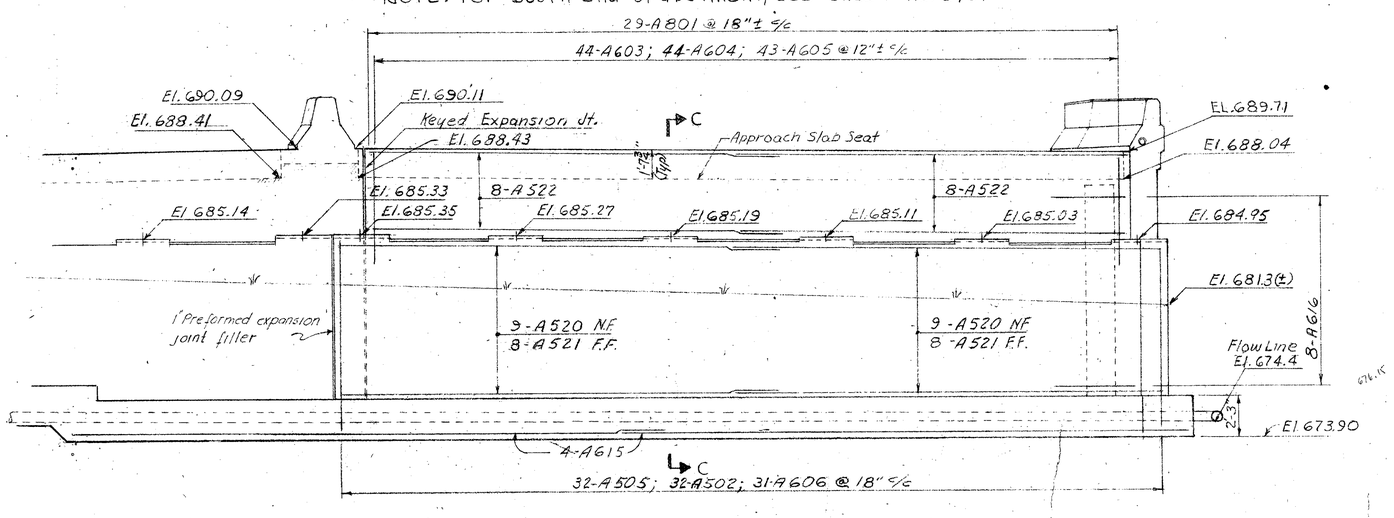

ELEVATION

7/37

MICHAEL BAKER JR., CONSULTING ENGINEERS
ROCHESTER, PENNSYLVANIA

ABUTMENT NO.1
BRIDGE NO. BEL-470-0662
OVER
S.R 7, CONRAIL & CHESSIE SYSTEM
STA. 1462+80.25 TO STA. 1468+69.60

DESIGNED	DRAWN	TRACED	CHECKED	REVIEWED DATE	REVISED
J.E.M.	D.W.		J.A.S.	WRK 8/18/70	2/23/78

BEAVER VALLEY ENGINEERING SUPPLIES CO. REORDER A-23979

MICROFILMED
AUG 11 1978

FED. RD. DIVISION	STATE	PROJECT	TYPE FUNDS
5	OHIO		

207/288

BEL 470-5.90

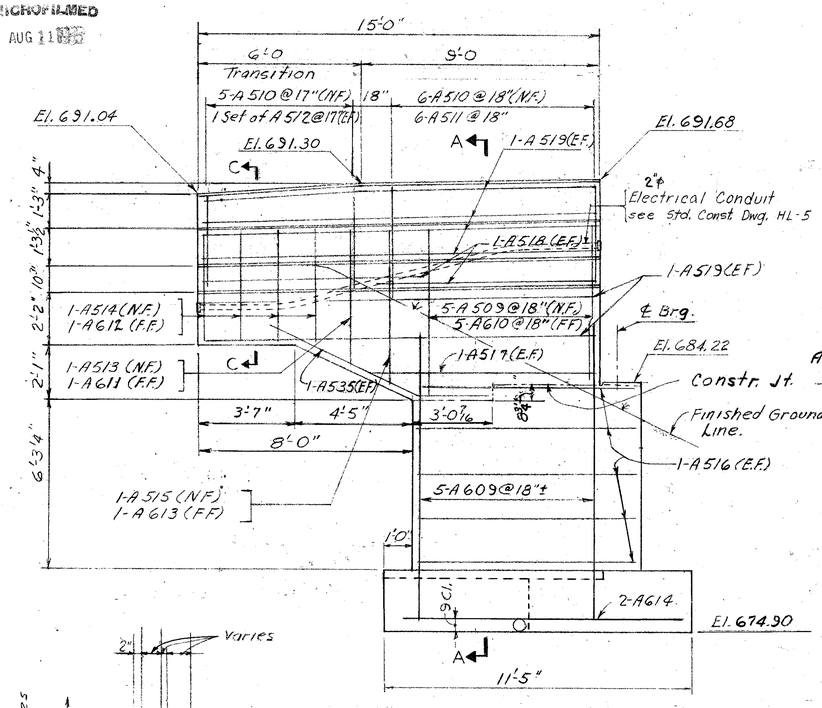

WING A

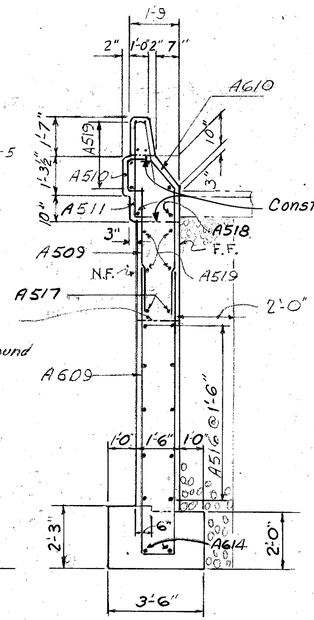

SECTION A-A

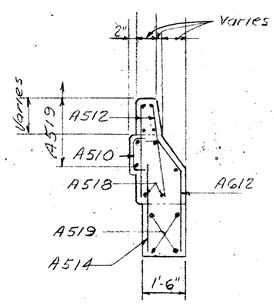

SECTION C-C

Note: 2" Electrical conduit with provision for expansion fittings is required in both wings. See Standard Construction Drwg. HL-5 and Electrical Sheets for details.

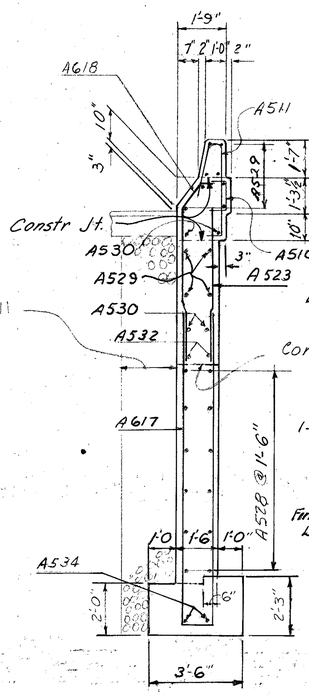

SECTION B-B

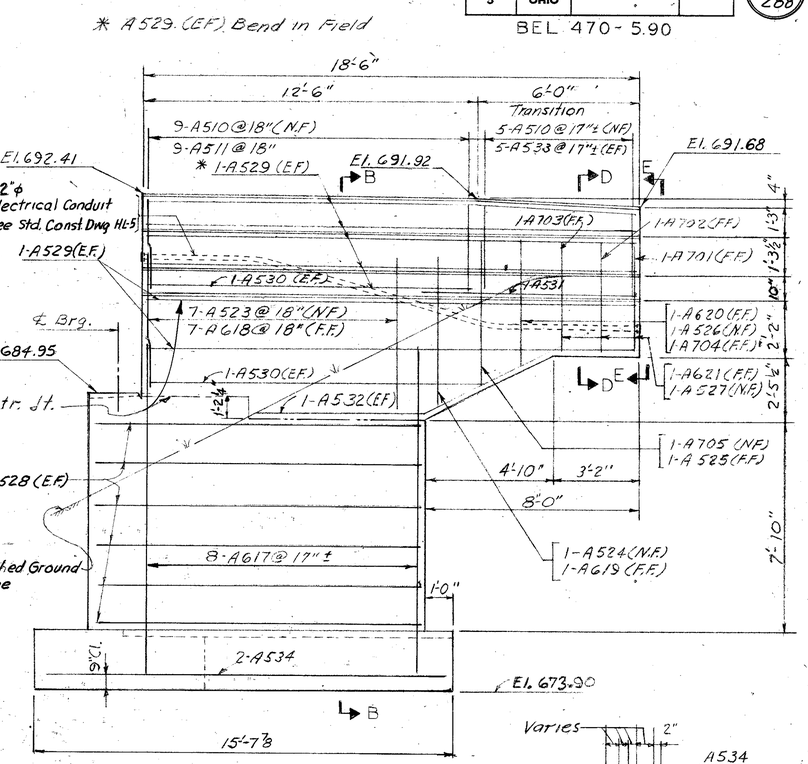

WING B

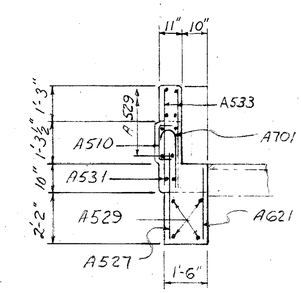

VIEW E-E

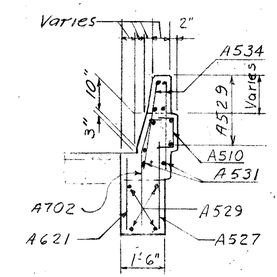

SECTION D-D

8/37

MICHAEL BAKER JR., CONSULTING ENGINEERS
ROCHESTER, PENNSYLVANIA

WINGS
BRIDGE NO. BEL-470-0662
OVER
S.R. 7, CONRAIL & CHESSIE SYSTEM
STA. 1462+80.25 TO STA 1468+69.60

DESIGNED	DRAWN	TRACED	CHECKED	REVIEWED DATE	REVISED
J.E.M.	O.W.		J.A.S.	WRK 8/18/76	2/23/78

BEAVER VALLEY ENGINEERING SUPPLIES CO. REORDER A-23679

MICROFILMED
AUG 11 1980

FED. RD. DIVISION	STATE	PROJECT	TYPE FUNDS
5	OHIO		

208
288

BEL-470-5.90

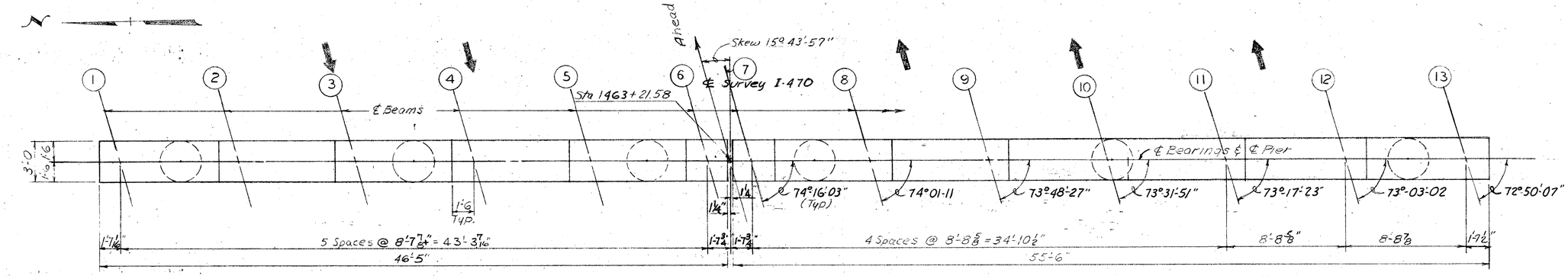

PLAN - PIER NO. 1

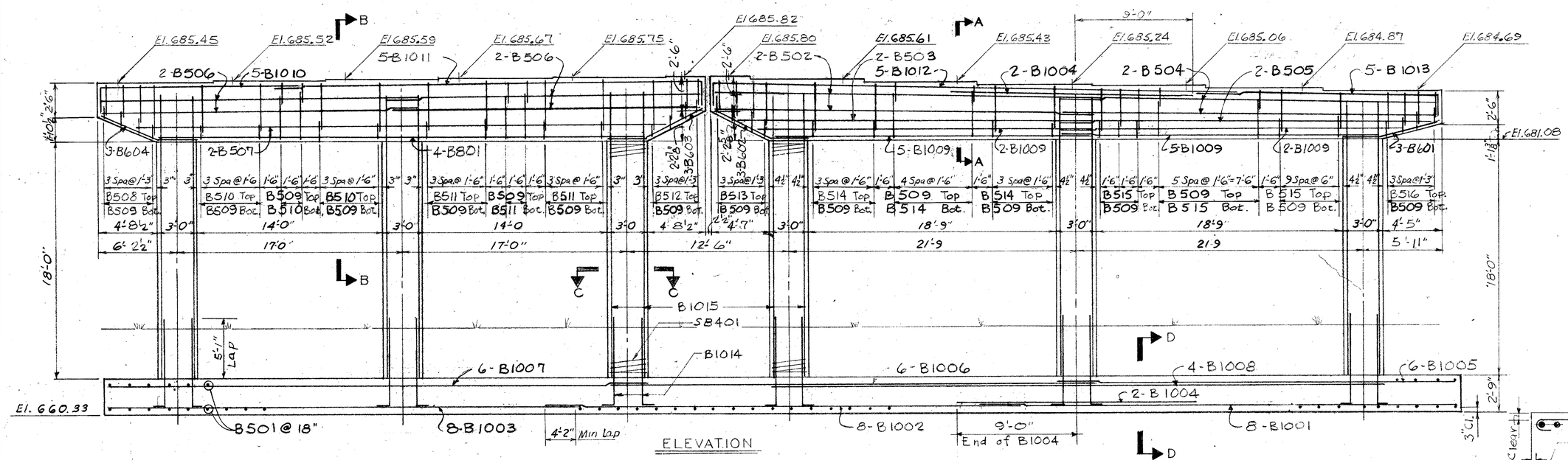

ELEVATION

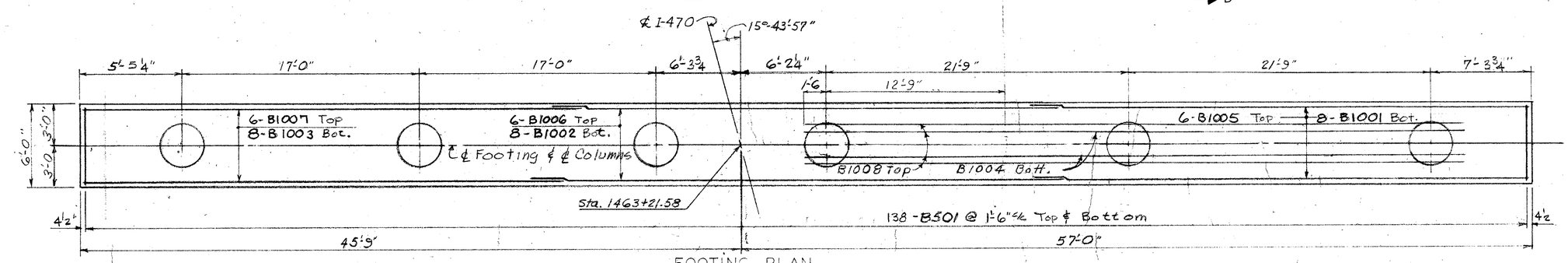

FOOTING PLAN

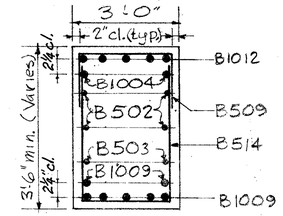

SECTION A-A

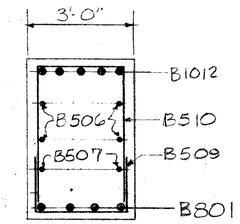

SECTION B-B

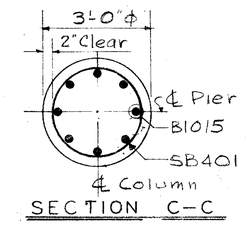

SECTION C-C

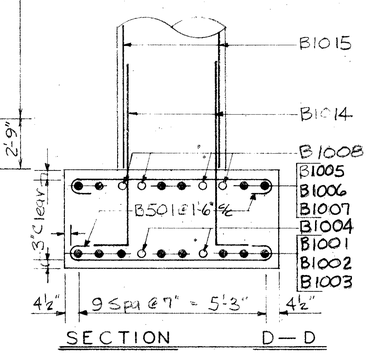

SECTION D-D

9/37

MICHAEL BAKER JR., CONSULTING ENGINEERS
ROCHESTER, PENNSYLVANIA

PIER NO. 1

BRIDGE NO. BEL-470-0662
OVER,
S.R. 7, CONRAIL & CHESSIE SYSTEM
STA. 1462+80.25 TO STA. 1468+69.60

DESIGNED	DRAWN	TRACED	CHECKED	REVIEWED	DATE	REVISED
D.W.P.	C.W.		T.M.W.	WRK	8/18/76	

BEAVER VALLEY ENGINEERING SUPPLIES CO. REORDER A-23878

MICROFILMED
AUG 11 1993

FED. RD. DIVISION	STATE	PROJECT	TYPE FUNDS
5	OHIO		

209/288

BEL-470-5.90

See Sheets 33/37 and 34/37 for downspout details.

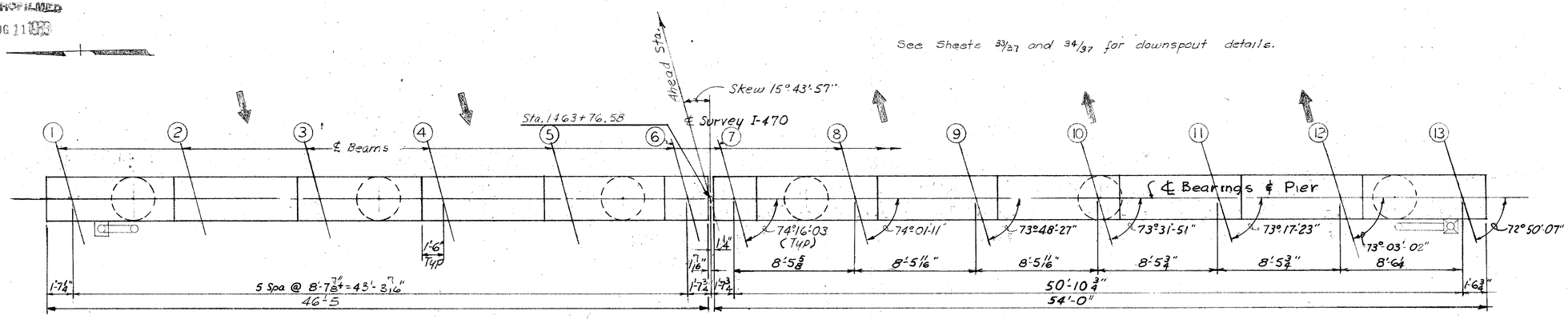

PLAN-PIER NO. 2

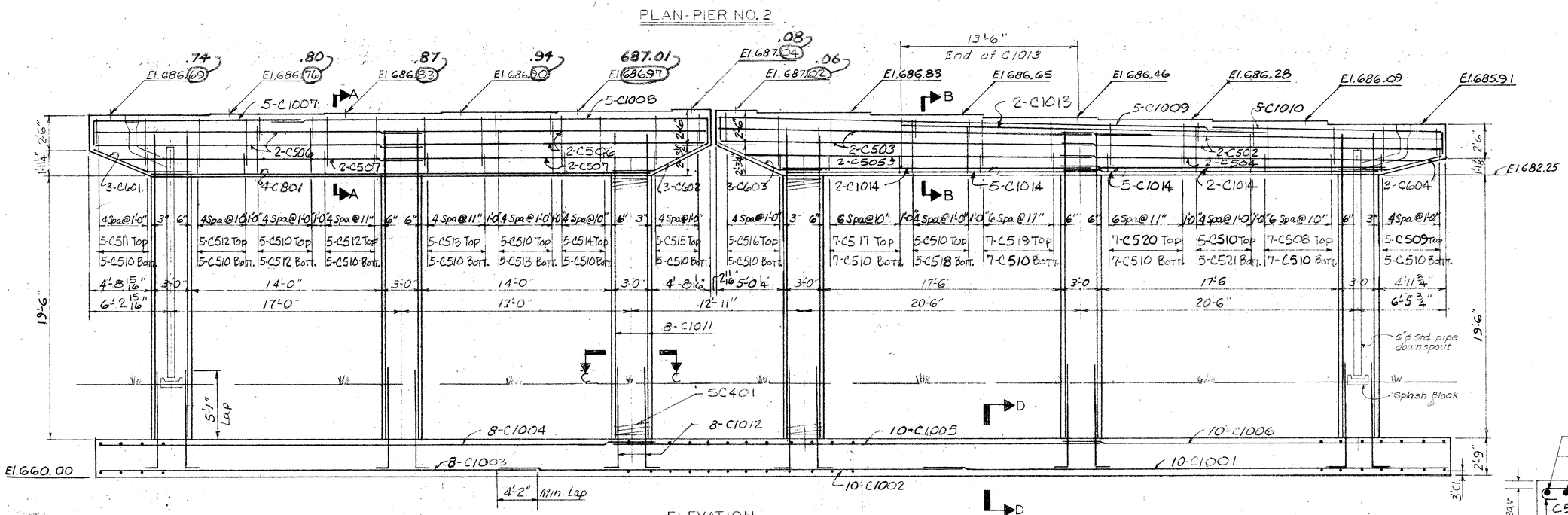

ELEVATION

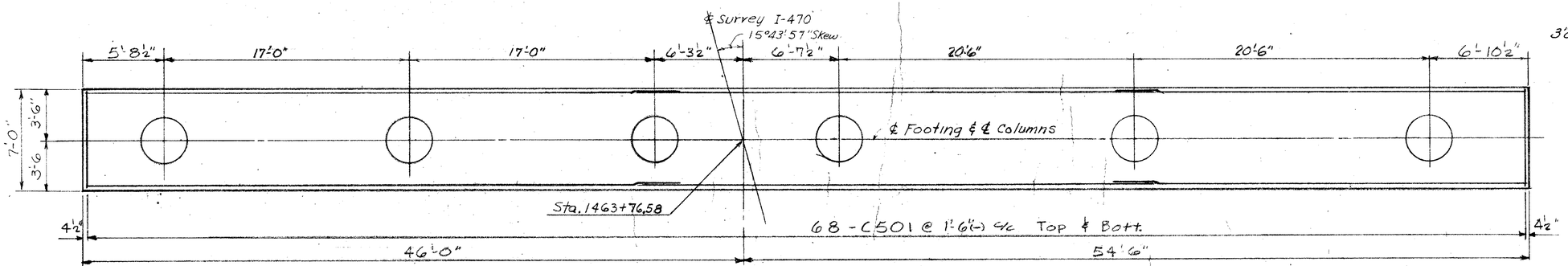

FOOTING PLAN

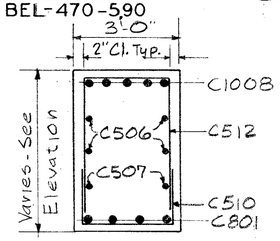

SECTION A—A

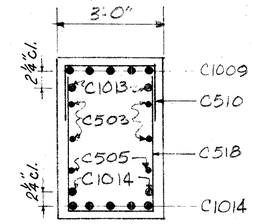

SECTION B—B

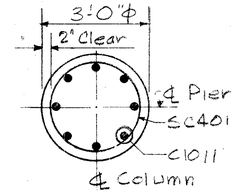

SECTION C—C

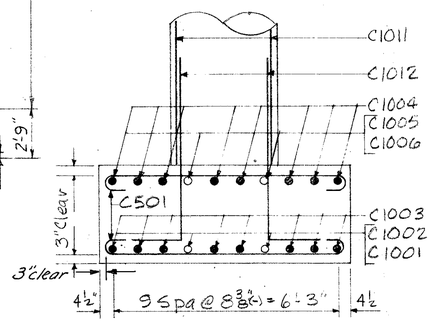

SECTION D—D

10/37

MICHAEL BAKER JR., CONSULTING ENGINEERS
ROCHESTER, PENNSYLVANIA

PIER NO. 2

BRIDGE NO. BEL-470-0662
O/FR
S.R. 7, CONRAIL & CHESSIE SYSTEM
STA. 1462+80.25 TO STA. 1468+69.60

DESIGNED	DRAWN	TRACED	CHECKED	REVIEWED DATE	REVISED
T.M.W.	O.W.		E.L.A.	W.R.K. 8/18/76	9-12-78

BEAVER VALLEY ENGINEERING SUPPLIES CO. REORDER A-23079

FED. RD. DIVISION	STATE	PROJECT	TYPE FUNDS
5	OHIO		

210
288

Note: Bridge Seat Reinforcing: Reinforcing steel in the vicinity of the bridge seat shall be accurately placed to avoid interference with the drilling of bearing anchor holes or the pre-setting of bearing anchors. See Sht. 15/37

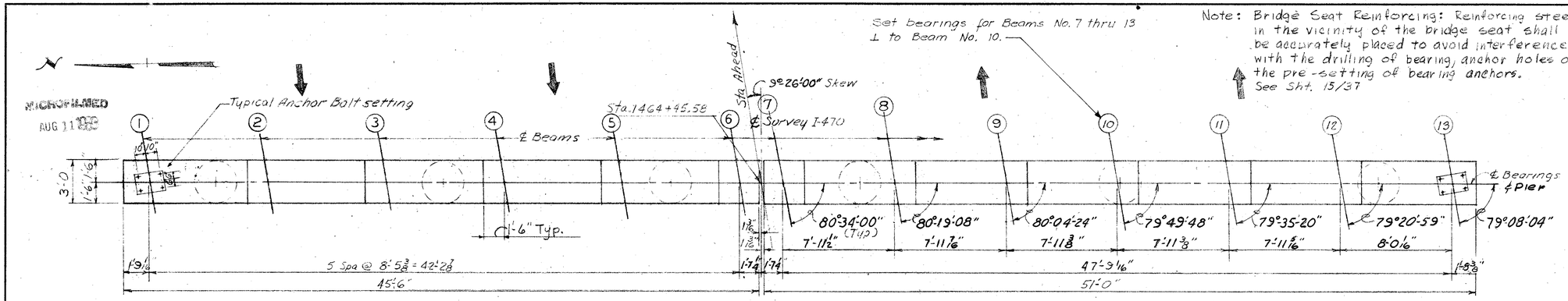

PLAN-PIER NO. 3

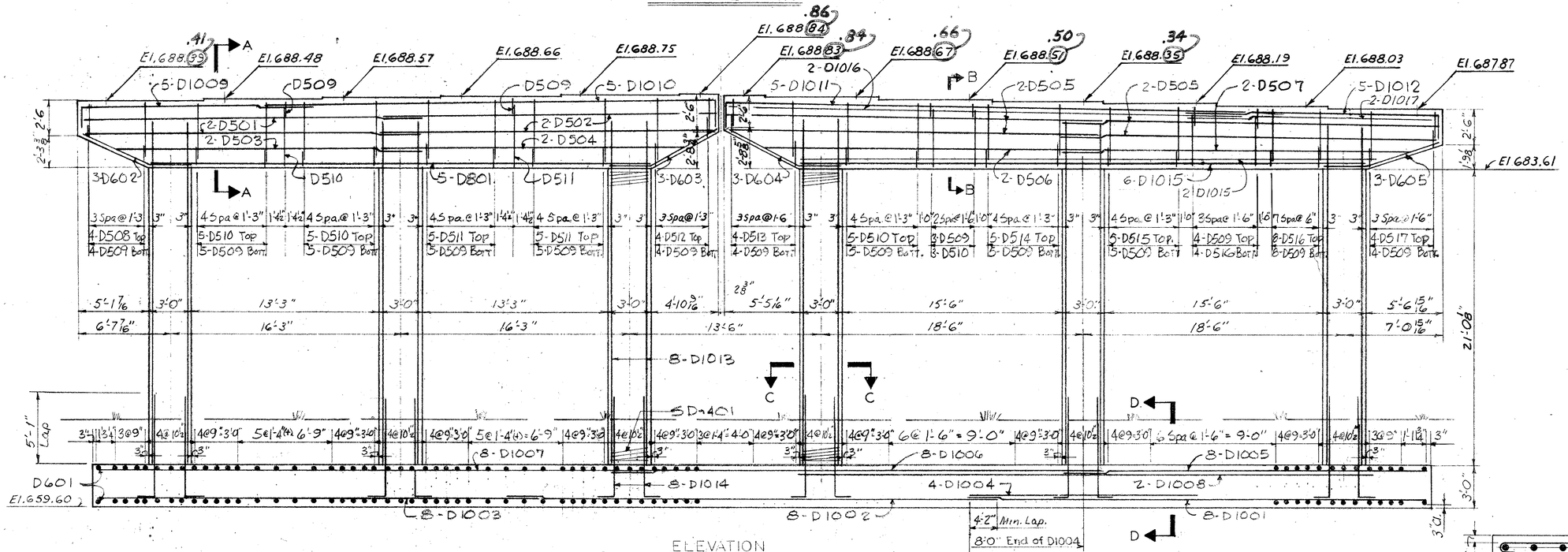

ELEVATION

FOOTING PLAN

BEL-470 - 5.90

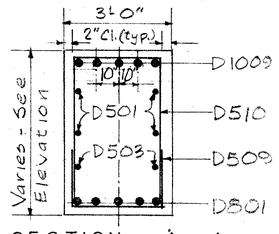

SECTION A—A

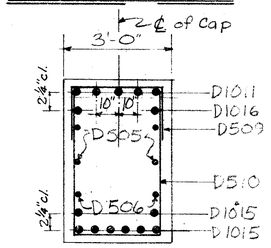

SECTION B—B

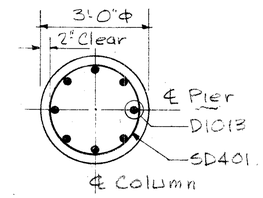

SECTION C—C

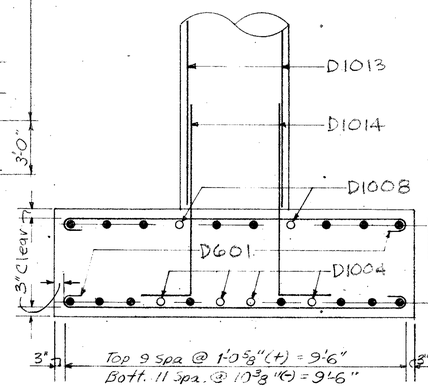

SECTION D—D

11/37

MICHAEL BAKER JR., CONSULTING ENGINEERS
ROCHESTER, PENNSYLVANIA

PIER NO. 3

BRIDGE NO. BEL-470-0662
OVER
S.R. 7, CONRAIL & CHESSIE SYSTEM
STA. 1462+80.25 TO STA. 1468+69.60

DESIGNED	DRAWN	TRACED	CHECKED	REVIEWED DATE	REVISED
BLA	DW		T.M.W.	WRK 8/18/76	9-12-78

MICROFILMED AUG 11 1978

BEAVER VALLEY ENGINEERING SUPPLIES CO. REORDER A-23879

FED. RD. DIVISION	STATE	PROJECT	TYPE FUNDS
5	OHIO		

211/288

BEL-470-5.90

MICROFILMED AUG 11 1983

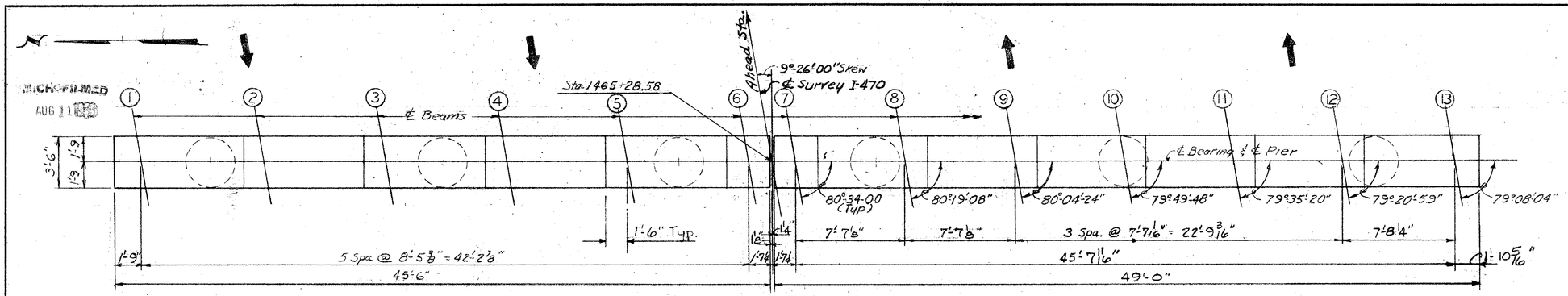

PLAN-PIER NO.4

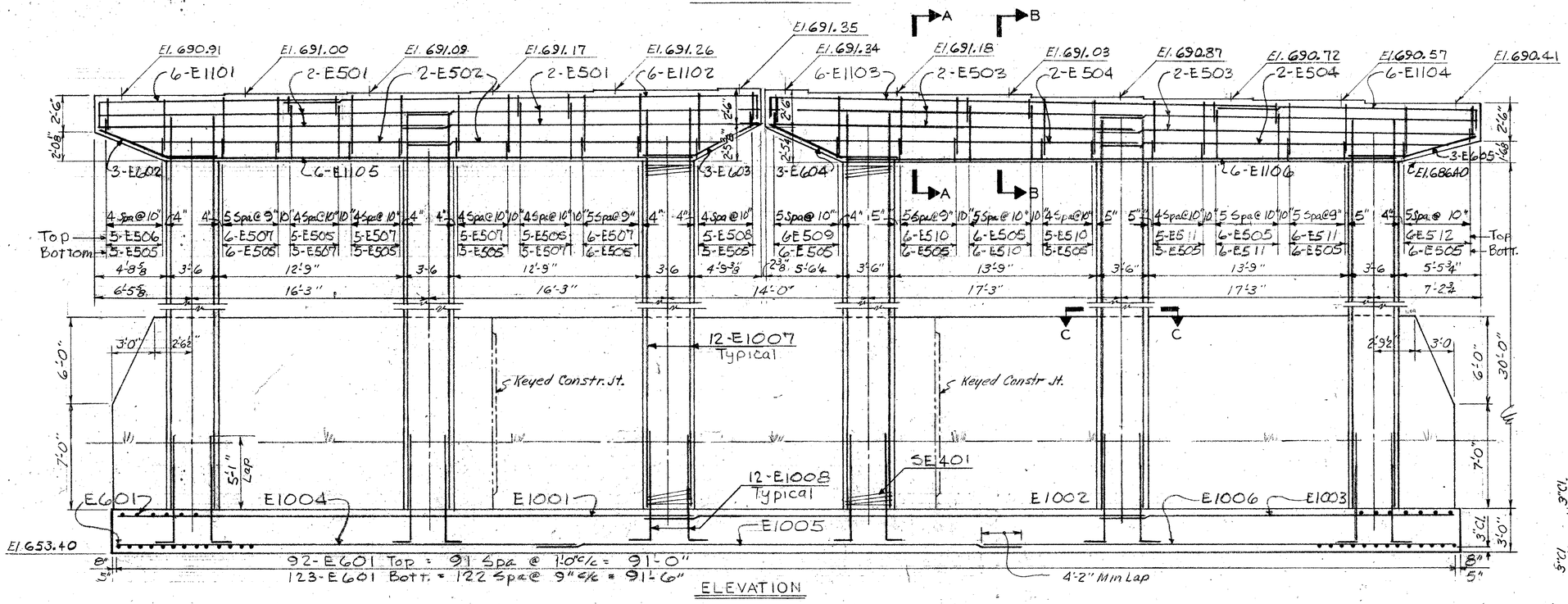

ELEVATION

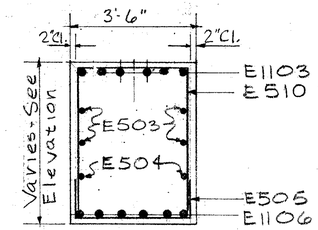

SECTION A-A

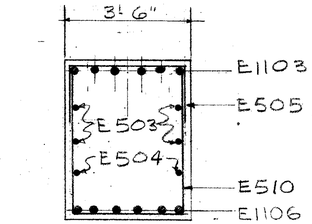

SECTION B-B

NOTE:
For Collision Wall Details, See Sht. 13/37

END VIEW

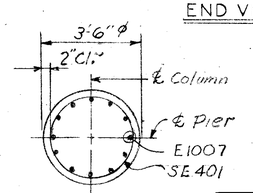

SECTION C-C

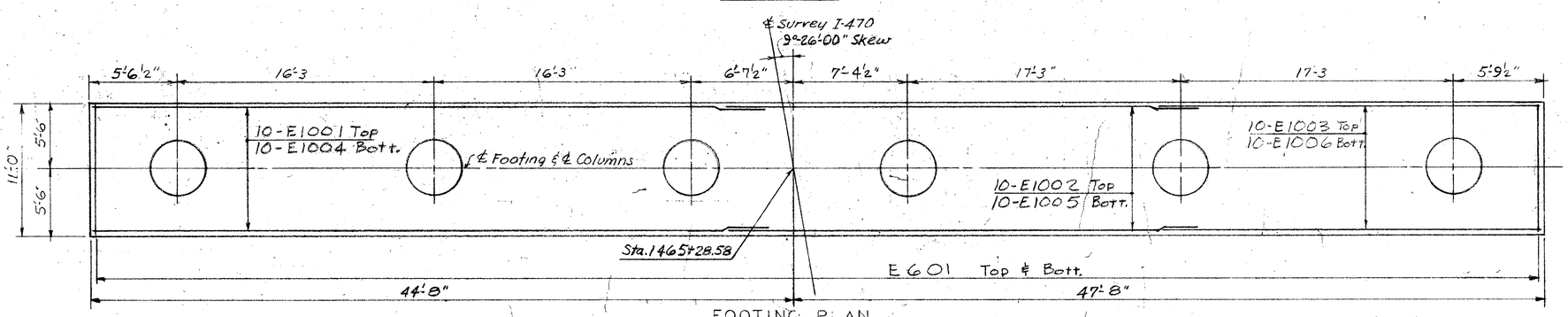

FOOTING PLAN
Collision Wall Not Shown

12/37

MICHAEL BAKER JR., CONSULTING ENGINEERS
ROCHESTER, PENNSYLVANIA

PIER NO. 4

BRIDGE NO. BEL-470-0662
OVER
S.R. 7, CONRAIL, CHESSIE SYSTEM
STA. 1462+80.25 TO STA. 1468+69.60

DESIGNED	DRAWN	TRACED	CHECKED	REVIEWED	DATE	REVISED
T.M.W.	COW JAJ		E.L.A.	WRK	8/18/76	

BEAVER VALLEY ENGINEERING SUPPLIES CO. REORDER A-23439

FED. RD. DIVISION	STATE	PROJECT	TYPE FUNDS
5	OHIO		

212
288

BEL-470-5.90

MICROFILMED
AUG 11 1983

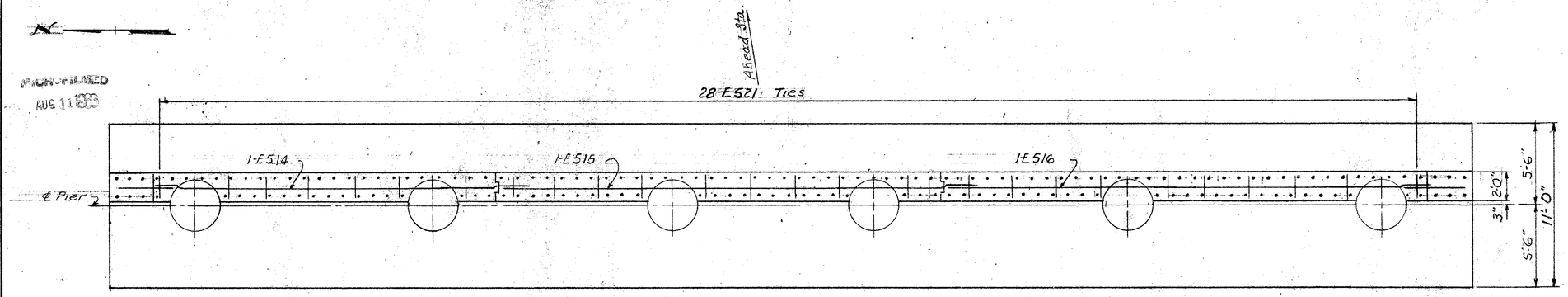

PLAN

NOTES

Near face Longitudinal steel for center section may be installed through column cores at either end of pier.
Contractor is cautioned to align column spirals so that they are all in phase-otherwise #8 bars in near face of collision wall will not clear if horizontal.

LEGEND

N.F. = Near Face
F.F. = Far Face
E.F. = Each Face

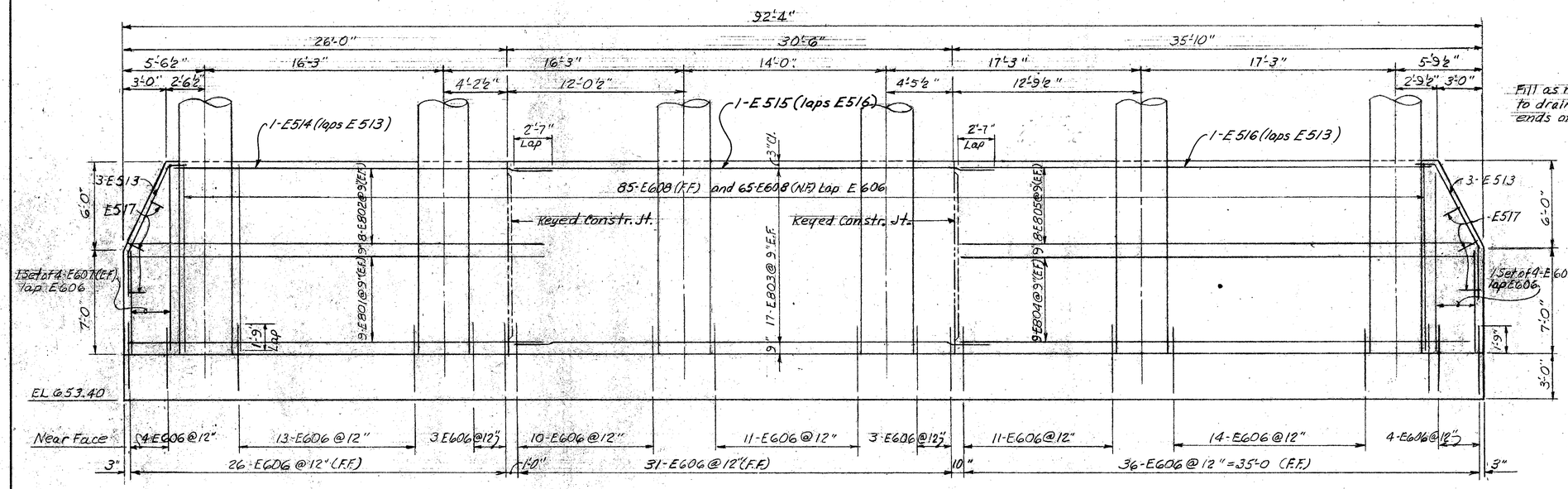

ELEVATION

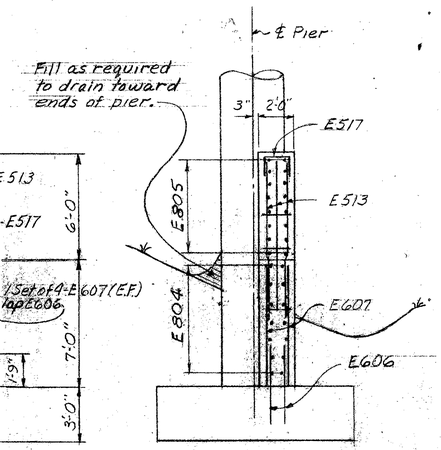

END VIEW

NOTE:
For Pier № 4 see Sht. 12/37

13/37

MICHAEL BAKER JR., CONSULTING ENGINEERS
BEAVER, PENNSYLVANIA

COLLISION WALL- PIER #4
BRIDGE NO. BEL-470-0662
OVER
S.R. 7, CONRAIL, CHESSIE SYSTEM
STA. 1462 + 80.25 TO STA. 1468 + 69.60

DESIGNED	DRAWN	TRACED	CHECKED	REVIEWED DATE	REVISED
DWP	O.W.		JAJ	WRK 8/17/79	

BEAVER VALLEY ENGINEERING SUPPLIES CO. RECORDS 00238

MICROFILMED
AUG 11 1983

FED. RD. DIVISION	STATE	PROJECT	TYPE FUNDS
5	OHIO		

213/288

BEL 470-590

Note: See Pile Pattern, Anchor Bolt Layout Sections & Details on Sheet No 15/37

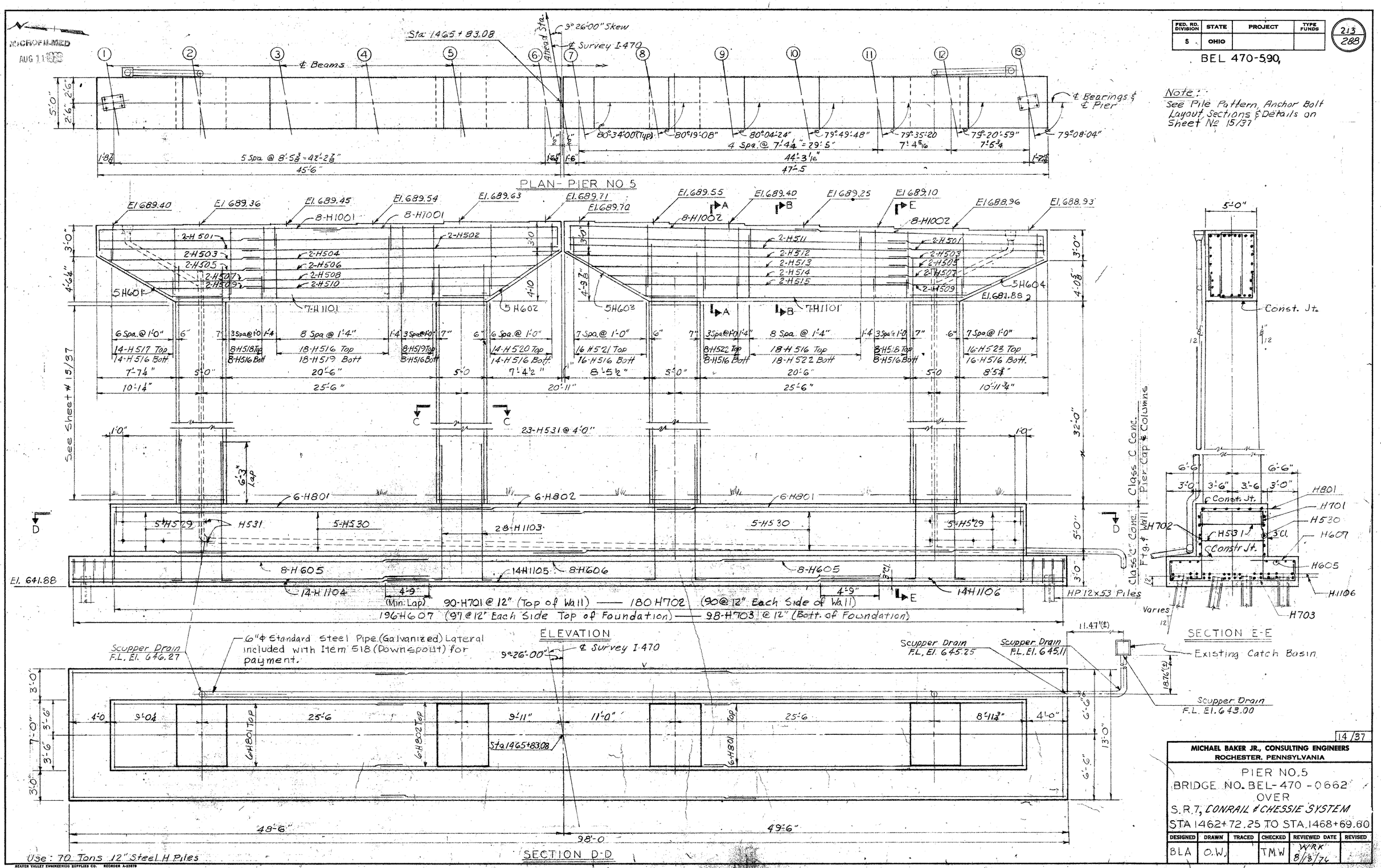

14/37

MICHAEL BAKER JR., CONSULTING ENGINEERS
ROCHESTER, PENNSYLVANIA

PIER NO. 5
BRIDGE NO. BEL-470-0662
OVER
S.R. 7, CONRAIL & CHESSIE SYSTEM
STA 1462+72.25 TO STA 1468+69.60

DESIGNED	DRAWN	TRACED	CHECKED	REVIEWED DATE	REVISED
BLA	O.W.		TMW	WRK 8/18/76	

BEAVER VALLEY ENGINEERING SUPPLIES CO. RECORDER A-23879

MICROFILMED
AUG 11 1976

FED. RD. DIVISION	STATE	PROJECT	TYPE FUNDS
5.	OHIO		

214
288

BEL.470-5.90

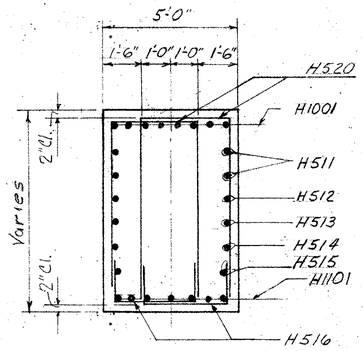

SECTION A-A

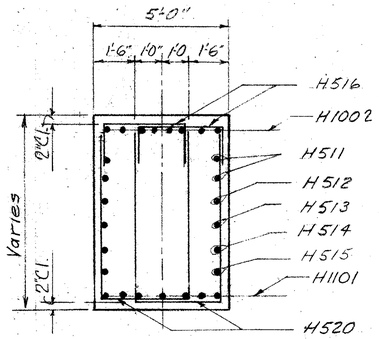

SECTION B-B

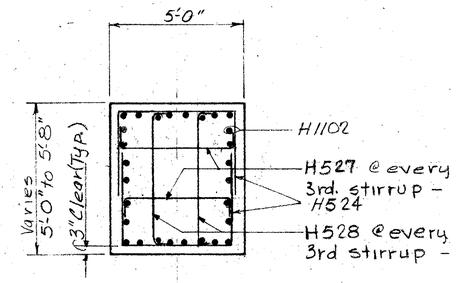

SECTION C-C

Note: Bridge Seat Reinforcing: Reinforcing steel in the vicinity of the bridge seat shall be accurately placed to avoid interference with the drilling of bearing anchor holes or the presetting of bearing anchors.

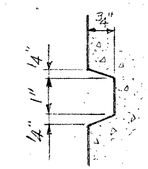

Run Groove All Around Column

RUSTICATION GROOVE

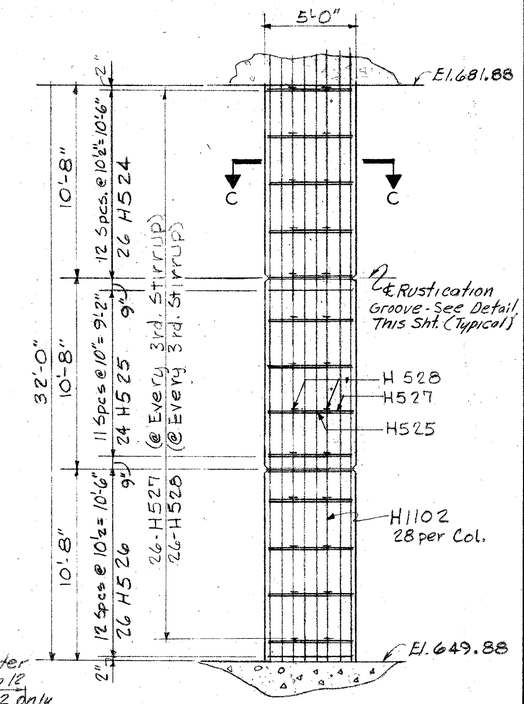

COLUMN ELEVATION

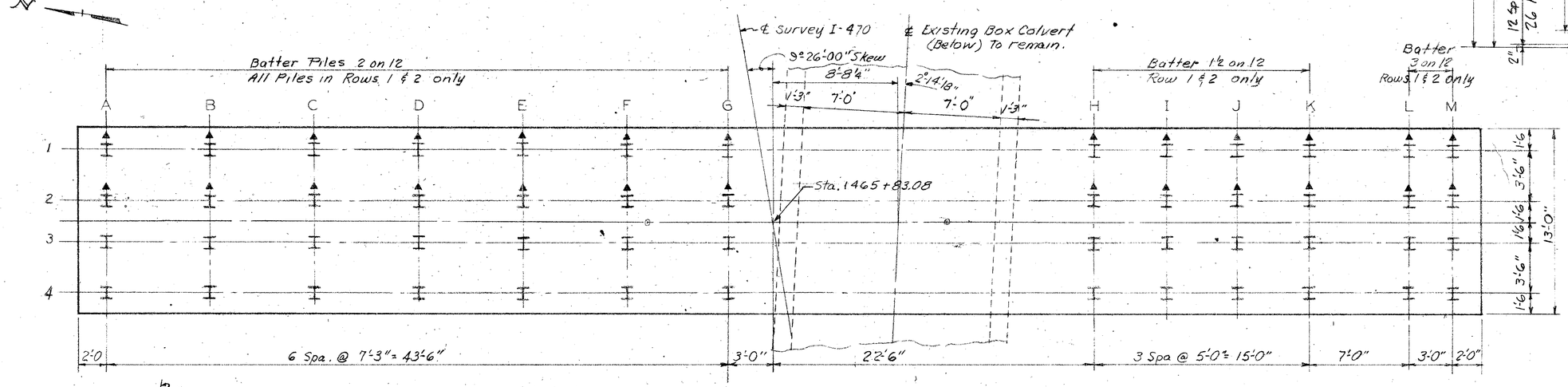

PILE PATTERN

Pile batter varies because of underground obstructions.

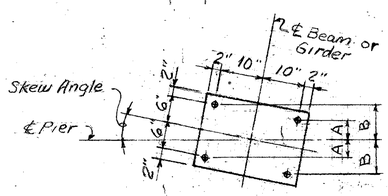

PLAN & PIER NO. 3 & 5

PIER No 3 & 5			
Beam or Girder No	Skew Angle	Dim "A"	Dim "B"
1 thru 6	9°26'00"	4¼"	7 9/16"
7 thru 10	10°-10'-12"	4⅛"	7 11/16"

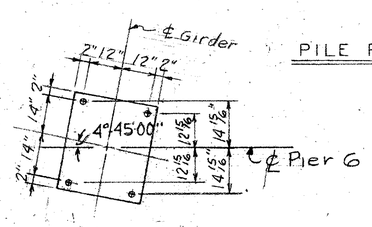

PLAN @ PIER NO. 6

BEARING ANCHORS: At the option of the Contractor, bearing anchors (or formed holes), located and supported templates, may be cast in place.

15/37

MICHAEL BAKER JR., CONSULTING ENGINEERS
ROCHESTER, PENNSYLVANIA

PIER NO. 5 - DETAILS
BRIDGE NO. BEL.-470.-0662
OVER
S.R. 7, CONRAIL & CHESSIE SYSTEM
STA. 1462+80.25 TO STA. 1468+69.60

DESIGNED	DRAWN	TRACED	CHECKED	REVIEWED DATE	REVISED
BLA	JAJ		TMW	WRK 8/18/76	

BEAVER VALLEY ENGINEERING SUPPLIES CO. REORDER A-23679

FED. RD. DIVISION	STATE	PROJECT	TYPE FUNDS
5	OHIO		

215/288

BEL. 470-5.90

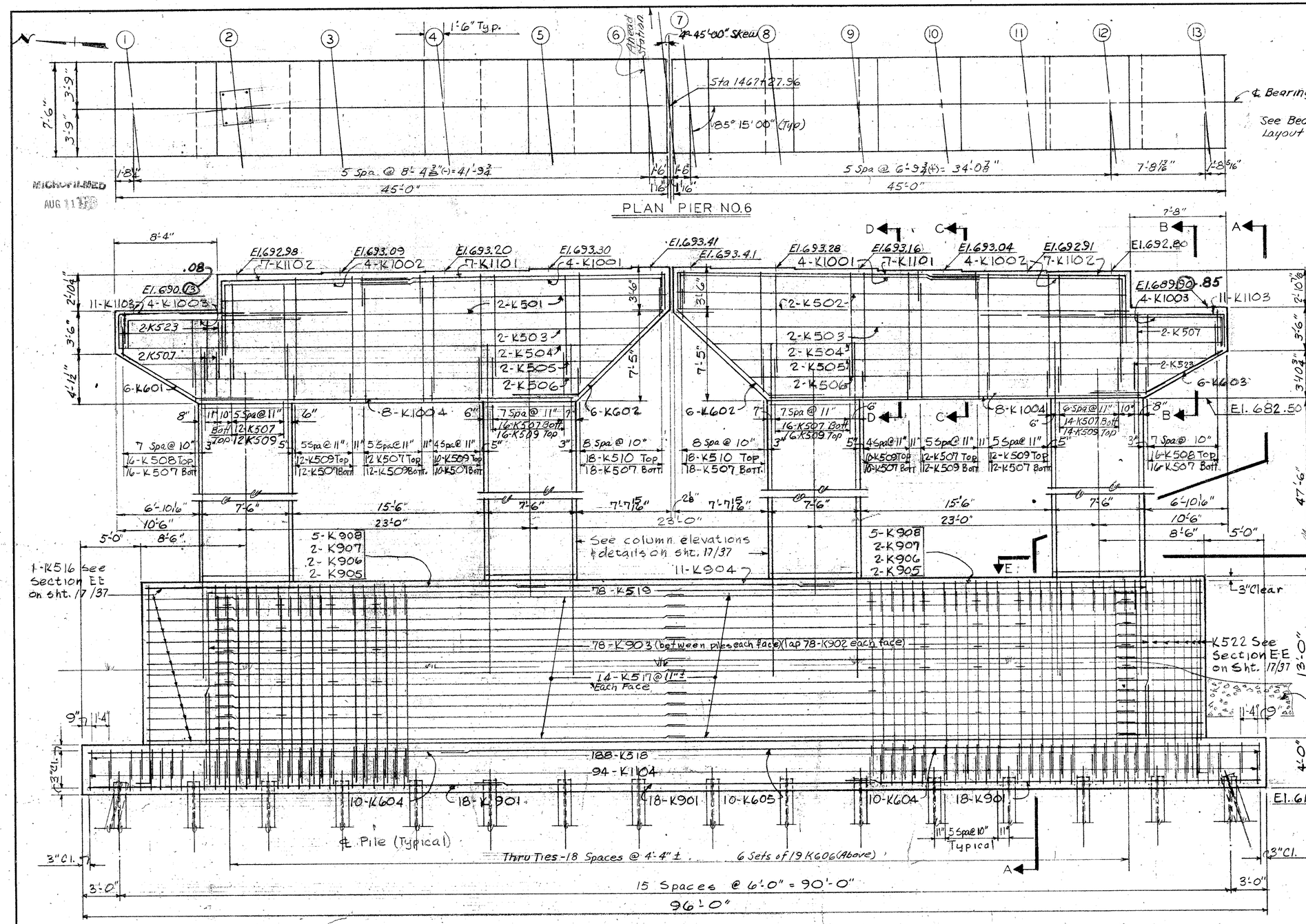

Note: For footing plan, pile pattern and sections not shown see sheet no. 17/37

MICHAEL BAKER JR., CONSULTING ENGINEERS
ROCHESTER, PENNSYLVANIA

PIER NO. 6
BRIDGE NO. BEL-470-0662
OVER
S.R. 7, CONRAIL & CHESSIE SYSTEM
STA. 1462+80.25 TO STA. 1468+69.60

DESIGNED	DRAWN	TRACED	CHECKED	REVIEWED DATE	REVISED
T.M.W.	J.A.J.		B.L.A.	W.R.K. 8/18/76	9-12-78

MICROFILMED AUG 11 1978

BEAVER VALLEY ENGINEERING SUPPLIES CO. REORDER A-23079

MICROFILMED
AUG 11 1978

FED. RD. DIVISION	STATE	PROJECT	TYPE FUNDS
5	OHIO		

216/288

BEL. 470-5.90

Note: Bridge Seat Reinforcing: Reinforcing steel in the vicinity of the bridge seat shall be accurately placed to avoid interference with the drilling of bearing anchor holes or the pre-setting of bearing anchors.

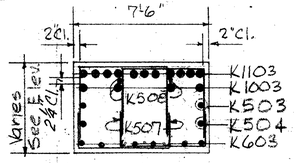

SECTION B—B

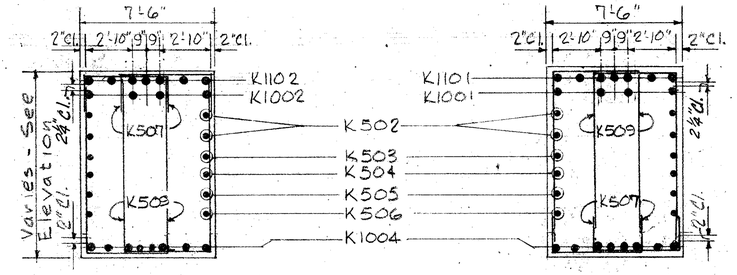

SECTION C—C

SECTION D—D

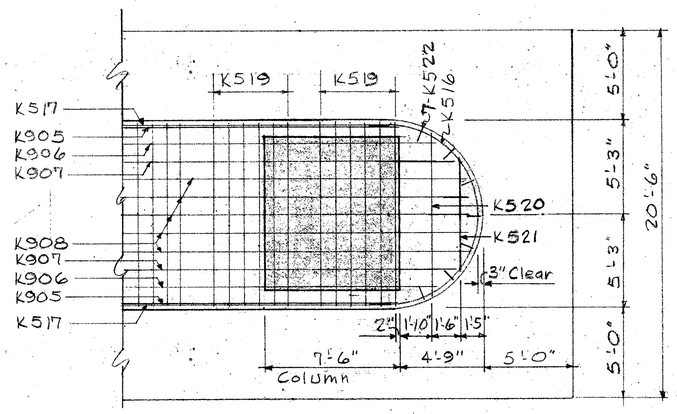

SECTION E—E

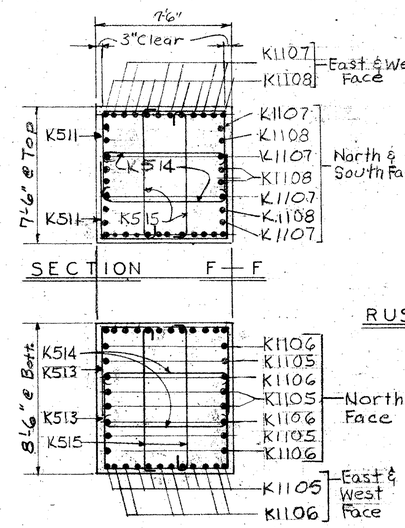

SECTION F—F

SECTION G—G

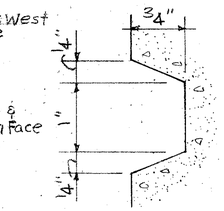

Run Groove All Around Column

RUSTICATION GROOVE

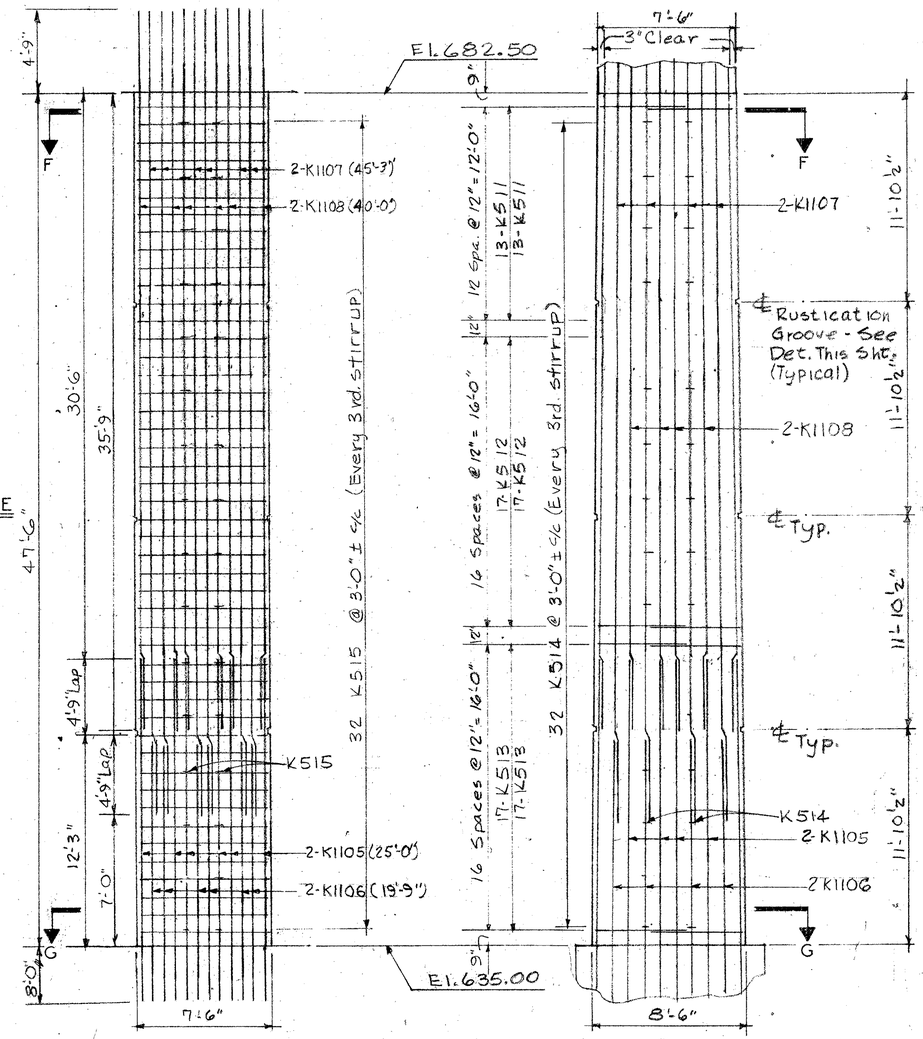

COLUMN ELEVATION EAST/WEST

COLUMN ELEVATION NORTH/SOUTH

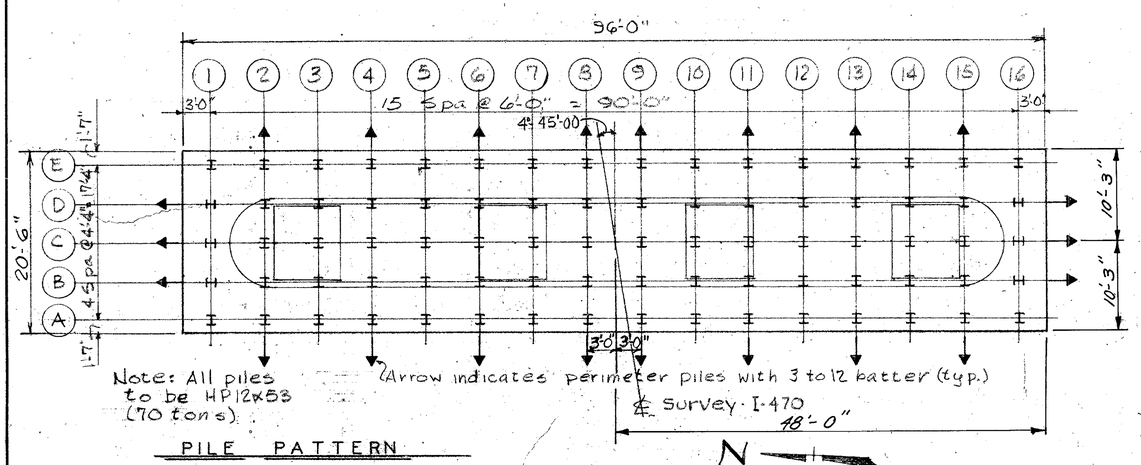

Note: All piles to be HP12x53 (70 tons).

(Arrow indicates perimeter piles with 3 to 12 batter (typ.)

℄ Survey I-470

PILE PATTERN

17/37

MICHAEL BAKER JR., CONSULTING ENGINEERS
ROCHESTER, PENNSYLVANIA

PIER NO. 6 — DETAILS

BRIDGE NO. BEL-470-0662
OVER
S.R.7, CONRAIL & CHESSIE SYSTEM
STA 1462+80.25 TO STA. 1468+69.60

DESIGNED	DRAWN	TRACED	CHECKED	REVIEWED	DATE	REVISED
T.M.W	JAJ		BLA	R.K.	8/18/76	

BEAVER VALLEY ENGINEERING SUPPLIES CO. REORDER A-23879

MICROFILMED
AUG 11 1988

See Std. Drwg. RB-1-55 for bearing details. Set bearings perpendicular to Beam 10, for Beams 7 thru. 13 Omit Keeper plates at beams 1, 6, 7, & 13. See Sheet 19/37 for Beveled Sole Plate Details

See Sheets 26/37 and 27/37 for details at hinge.

FED. RD. DIVISION	STATE	PROJECT	TYPE FUNDS
5	OHIO		

217/288

BEL. 470 5.90

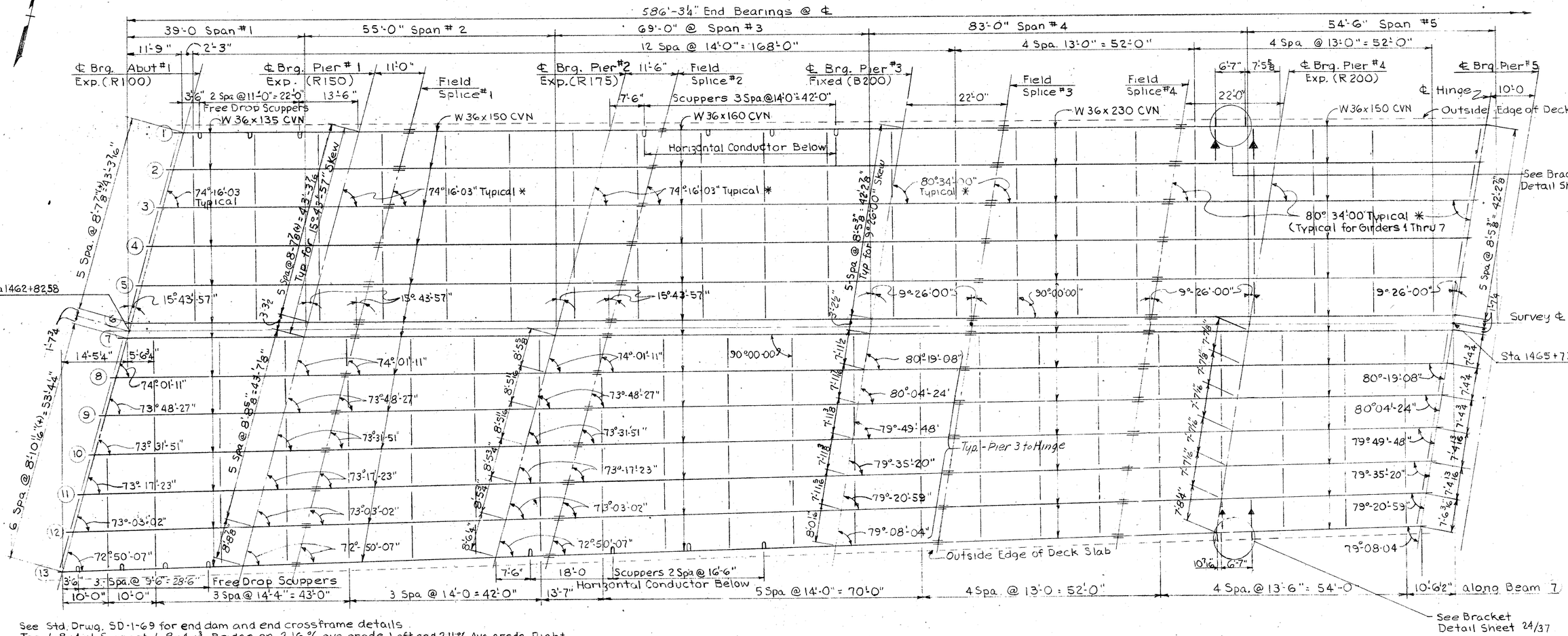

See Std. Drwg. SD-1-69 for end dam and end crossframe details
Top L-8x4x1 Support L-8x4x¾. Bridge on 2.16 % avg. grade Left and 2.11 % Avg. grade Right.
See Bevel Bar Detail on Sht. 7/37

FRAMING PLAN

BEAM SPAN LENGTHS

Span No / Bm No.	1	2	3	4	5 *
1	39'-0"	55'-0"	64'-0"	83'-0"	44'-6
2	39'-0"	55'-0"	64'-11 9/16"	83'-0"	44'-6
3	39'-0"	55'-0"	65'-11 5/8"	83'-0"	44'-6
4	39'-0"	55'-0"	66'-10 11/16"	83'-0"	44'-6
5	39'-0"	55'-0"	67'-10¼"	83'-0"	44'-6
6	39'-0"	55'-0"	68'-9 13/16"	83'-0"	44'-6
7	39'-0"	55'-0"	69'-2 3/16"	83'-0"	44'-6
8	39'-0 9/16"	55'-0 13/16"	70'-2⅛"	83'-0¾"	44'-6 7/16
9	39'-1⅛"	55'-1 5/8"	71'-2 1/16"	83'-1½"	44'-6 13/16
10	39'-1¾"	55'-2 7/16"	72'-2 1/16"	83'-2 3/16"	44'-7 3/16
11	39'-2 9/16"	55'-3¼"	73'-2 1/16"	83'-3	44'-7 7/16
12	39'-2 15/16"	55'-4⅛"	74'-2 1/16"	83'-3¾"	44'-8 1/16
13	39'-3½"	55'-4⅞"	75'-2⅛"	83'-4½"	44'-8 7/16

* To hinge - See Sheets 1/37 20/37 21/37 and 22/37 for ℞ Girder Continuation

BEAM COVER PLATES

	PIER 2				PIER 3				PIER 4			
BmNo.	B	C	D	E	B	C	D	E	B	C	D	E
1	–	–	–	–	1"	¾"	17'-0	9'-0	7/16"	½"	9'-9	4'-6
2	–	–	–	–	1¼"	1"	19'-9	10'-3	7/16"	½"	13'-0	6'-0
3	–	–	–	–	1¼"	1"	20'-3	10'-6	7/16"	½"	13'-0	6'-0
4	–	–	–	–	1¼"	1"	20'-9	10'-9	7/16"	½"	13'-0	6'-0
5	–	–	–	–	1¼"	1"	21'-3	11'-0	7/16"	½"	13'-0	6'-0
6	–	–	–	–	1"	¾	19'-9	10'-3	7/16"	½"	9'-0	4'-3
7	–	–	–	–	1"	¾	19'-9	10'-3	7/16"	½"	9'-0	4'-3
8	7/16"	½"	7'-9	4'-0	1¼"	1"	22'-6	11'-6	7/16"	½"	11'-6	5'-3
9	7/16"	½"	7'-9	4'-0	1¼"	1"	23'-0	11'-9	7/16"	½"	11'-6	5'-3
10	7/16"	½"	7'-9	4'-0	1¼"	1"	23'-6	12'-0	7/16"	½"	11'-6	5'-3
11	7/16"	½"	7'-9	4'-0	1¼"	1"	24'-0	12'-3	7/16"	½"	11'-6	5'-3
12	7/16"	½"	7'-9	4'-0	1¼"	1"	24'-6	12'-6	7/16"	½"	11'-6	5'-3
13	7/16"	½"	7'-9	4'-0	1¼"	1"	21'-6	11'-0	7/16"	½"	8'-0	4'-3

See Std. Drawing SD-1-69 for cover plate Welding details

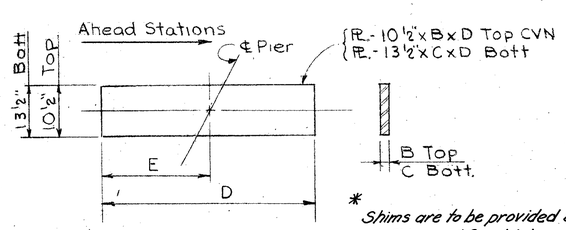

BEAM COVER PLATES

* SHIMS = Masonry Plate will be shimmed as follows –
Pier #1 use ½" + ½" + ⅜" + ⅜" + ¼" = 2" total thickness
Pier #2 use ⅜" + ⅜" + ¼" = 1" total thickness

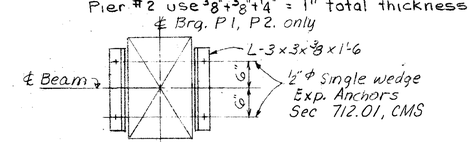

SHIM RETAINERS

* *Shims are to be provided under the bearings at Piers 1 & 2 which may be removed later for the equalization of stresses should the abutment settle.*

Where (CVN) follows a shape or plate size designation the material shall meet specified minimum notch toughness requirements.

18/37

MICHAEL BAKER JR., CONSULTING ENGINEERS
BEAVER, PENNSYLVANIA

FRAMING PLAN SPANS 1 THRU 5
BRIDGE NO. BEL-470-0662
OVER
S.R. 7 CONRAIL & CHESSIE SYSTEM
STA. 1462+80.25 TO STA. 1468+69.60

DESIGNED	DRAWN	TRACED	CHECKED	REVIEWED DATE	REVISED
DWP	D.W.		BLA	WRK 8/18/76	2/23/78

BEAVER VALLEY ENGINEERING SUPPLIES CO. REORDER 00258

MICROFILMED
AUG 11 1986

FED. RD. DIVISION	STATE	PROJECT	TYPE FUNDS
5	OHIO		

218/288

BEL: 470 - 5.90

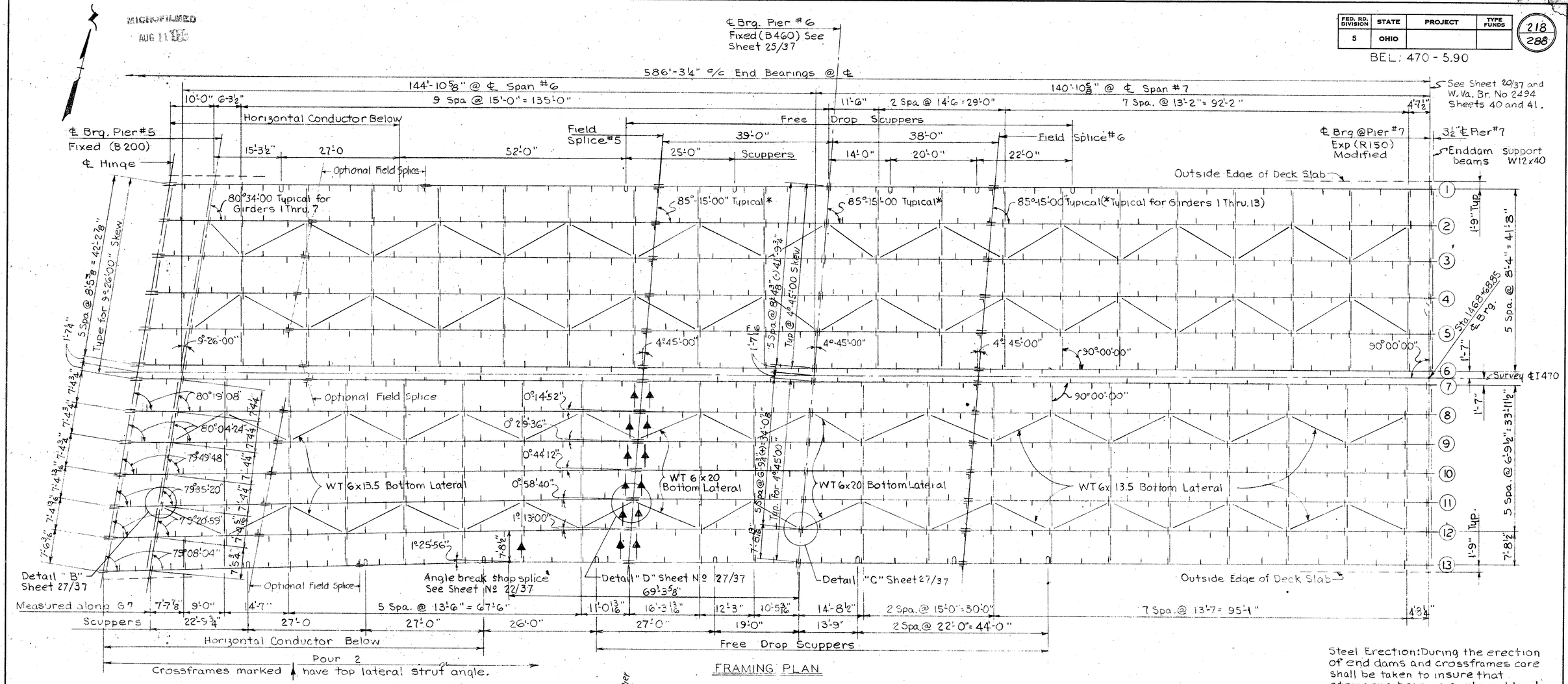

FRAMING PLAN

Steel Erection: During the erection of end dams and crossframes care shall be taken to insure that stringers, bearing parts and bridge seats remain in bearing contact.

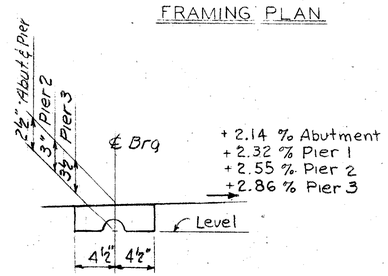

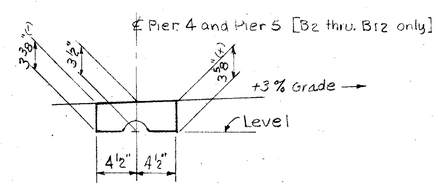

BEVELED SOLE PLATE DETAILS

No bevel required for sole plates at G1 and G13 at Piers 5 and 6. Grade at bottom of Girder is +0.85 % G1 and + 0.95 % G13.

19/37

MICHAEL BAKER JR., CONSULTING ENGINEERS
BEAVER, PENNSYLVANIA

FRAMING PLAN SPANS 6 AND 7
BRIDGE NO. BEL-470-0662
OVER
S.R.7, CONRAIL & CHESSIE SYSTEM
STA. 1462+80.25 TO STA. 1468+69.60

DESIGNED	DRAWN	TRACED	CHECKED	REVIEWED DATE	REVISED
DWP	O.W.		BLA	WRK 8/18/76	2/23/78

BEAVER VALLEY ENGINEERING SUPPLIES CO. REORDER 00258

FED. RD. DIVISION	STATE	PROJECT	TYPE FUNDS
5	OHIO		

219
288

BEL - 470-05.90

MICROFILMED AUG 11 1988

Finishing Machine Supports shall not be welded to 1 3/8x16 Top Flange Plate

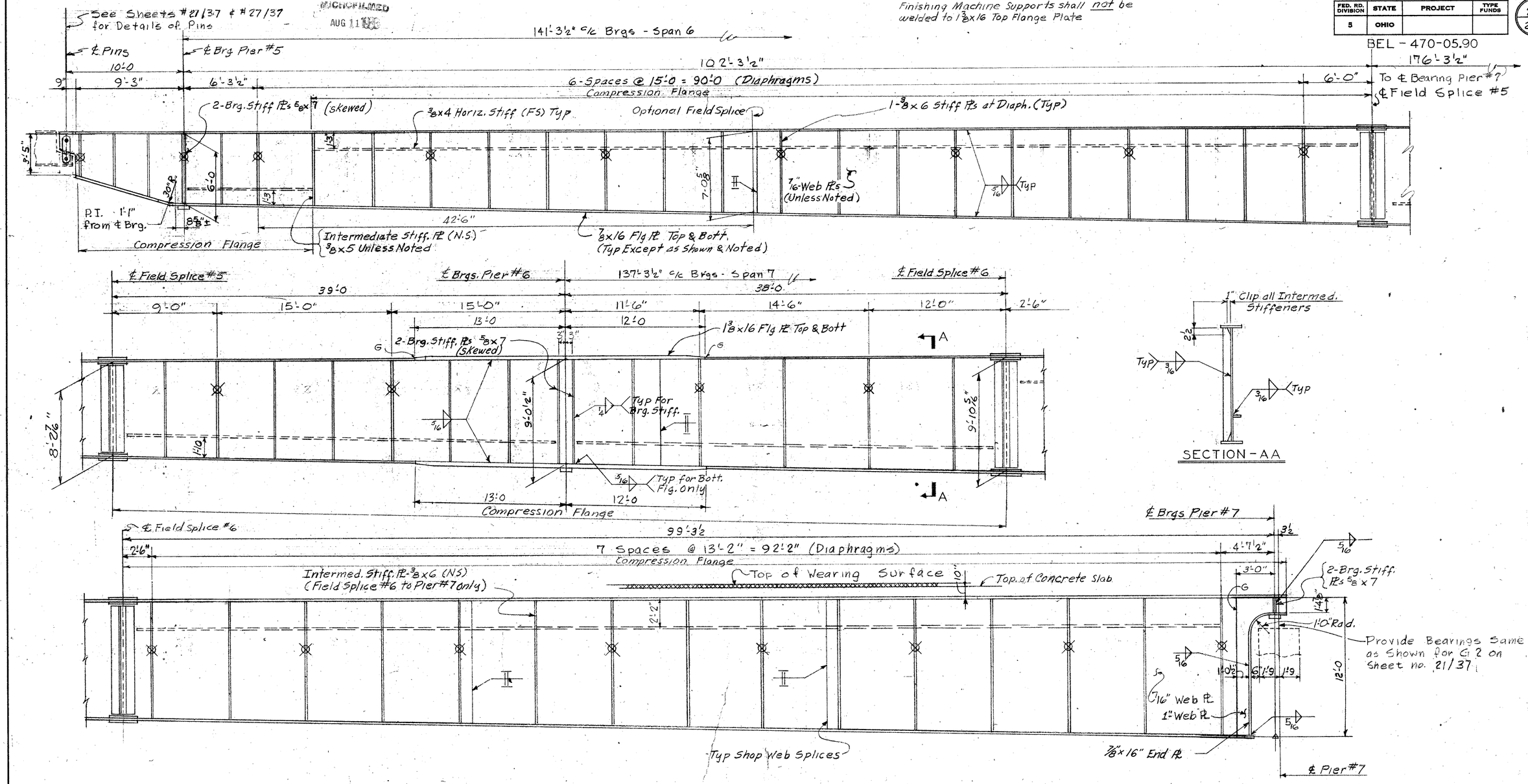

ELEVATION GIRDER LINE - 1

SECTION - AA

⊠ Denotes Diaphragm Stiffeners

NOTES:

- Contractor shall select welding process according to CMS Item No 513.17
- All butt welds shall be full penetration welds.
- Intermediate and Bearing Stiffeners shall be attached to girder flanges in accordance with C.M.S. Item No 513.08. Single Intermediate Stiffeners shall be welded to the Compression Flange with 3/16" fillet weld.
- All web plates and tension flange plates CVN
- See Girder Splice Details on Shts. 23 & 24/37
- See Blocking & Camber Data on Shts. 28 & 32/37
- For drainage system support details, see sheet no. 34/37

20/37

MICHAEL BAKER JR., CONSULTING ENGINEERS
ROCHESTER, PENNSYLVANIA

GIRDER NO.-1 DETAILS
BRIDGE NO. BEL - 470-0662
OVER
S.R.7, CONRAIL & CHESSIE SYSTEM
Sta. 1462+80.25 to Sta. 1468+69.60

DESIGNED	DRAWN	TRACED	CHECKED	REVIEWED	DATE	REVISED
BLA	TP		DWP	RK	3/18/76	

BEAVER VALLEY ENGINEERING SUPPLIES CO. REORDER A-25879

FED. RD. DIVISION	STATE	PROJECT	TYPE FUNDS
5	OHIO		

220/288

BEL-470-5.90

MICROFILMED AUG 11 1978

Finishing Machine Supports shall not be welded to top flange Pl's H, I, J, or K

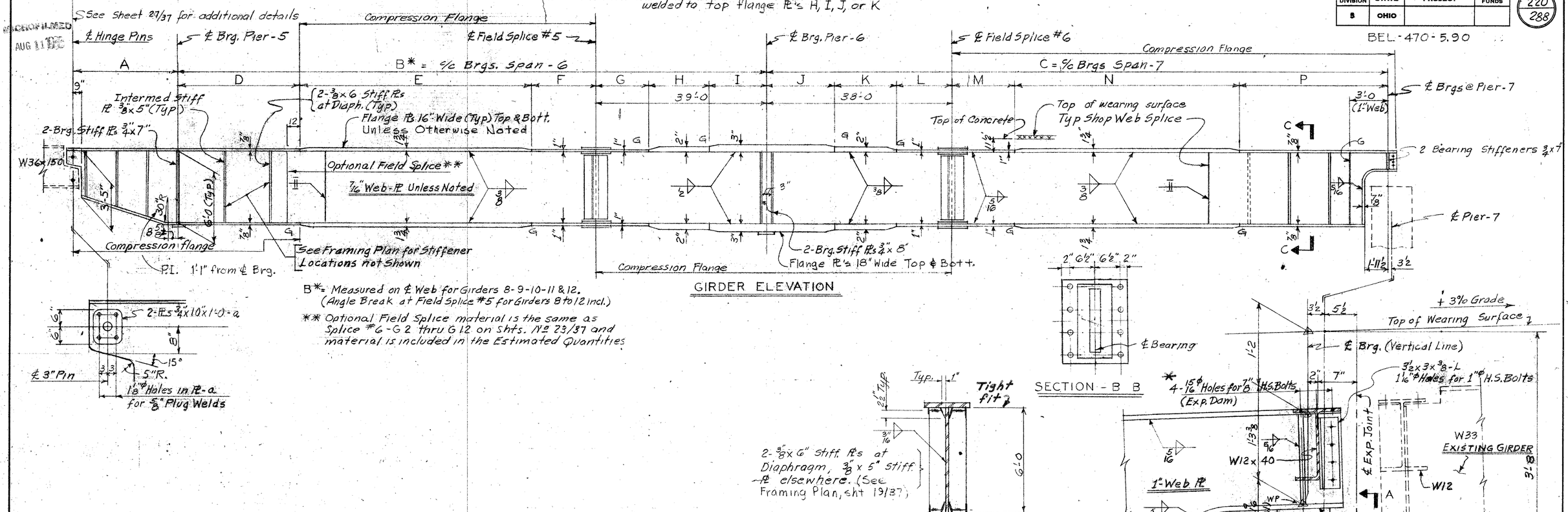

B* = Measured on ℄ Web for Girders 8-9-10-11 & 12. (Angle Break at Field Splice #5 for Girders 8 to 12 incl.)

** Optional Field Splice material is the same as Splice #6-G2 thru G12 on shts. №s 23/37 and material is included in the Estimated Quantities

GIRDER ELEVATION

SECTION - B B

SECTION - C C

BEARING STIFFENERS (TYP)

GIRDER DETAILS AT PIER-7

VIEW - AA

G2 Thru G6 Shown

G7 Thru G12 - Bevel Opp. Hand

* 4-15/16"φ holes for End Dam Support to be field drilled in top flange of Girders 6 & 7 by others.

GIRDER DIMENSION TABLE

DIMENSION	GIRDER NO 2	3	4	5	6	7	8	9	10	11	12
A	10'-0	10'-0	10'-0	10'-0	10'-0	10'-0	10'-0 1/16	10'-0 7/16	10'-0 1/4	10'-0 3/8	10'-0 7/16
B	141'-11 13/16	142'-8 1/8	143'-4 7/16	144'-0 3/4	144'-9 1/16	145'-0 3/16	145'-7 1/8	146'-3 5/8	146'-11 3/8	147'-7 1/8	148'-3"
C	137'-11 13/16	138'-8 1/8	139'-4 7/16	140'-0 3/4	140'-9 1/16	141'-0 3/16	141'-7	142'-1 3/4	142'-8 1/2	143'-3 5/16	143'-10 1/16
D	24'-9	24'-6	24'-3	24'-0	28'-3	30'-0	25'-9	25'-6	25'-3	25'-0	25'-0
E	60'-0	60'-3	60'-6	61'-0	50'-9	49'-3	56'-9	57'-0	57'-3	57'-6	57'-9
F	18'-2 15/16	18'-11 1/8	19'-7 1/16	20'-0 3/4	26'-9 1/16	25'-9 3/16	24'-1 7/8	24'-9 5/8	25'-5 3/8	26'-1 1/8	26'-6
G	14'-0	13'-6	13'-0	12'-9	12'-3	12'-9	12'-0	11'-6	11'-0	10'-6	10'-0
H	13'-3	13'-6	13'-9	13'-9	13'-6	16'-6	14'-0	14'-3	14'-6	14'-9	15'-0
I	11'-9	12'-0	12'-3	12'-6	10'-6	9'-9	13'-0	13'-3	13'-6	13'-9	14'-0
J	12'-9	13'-0	13'-3	13'-6	10'-9	9'-9	13'-0	13'-3	13'-6	13'-9	14'-0
K	13'-9	14'-0	14'-3	14'-3	15'-6	17'-3	13'-6	13'-9	14'-0	14'-3	14'-6
L	11'-6	11'-0	10'-6	10'-3	11'-9	11'-0	11'-6	11'-0	10'-6	10'-0	9'-6
M	16'-2 13/16	16'-11 1/8	17'-7 1/16	18'-3 3/4	21'-0 1/16	24'-6 3/16	22'-1	22'-1 3/4	22'-2 1/2	22'-3 5/16	22'-7 1/16
N	64'-6	64'-9	65'-0	65'-3	58'-0	50'-9	59'-9	60'-0	60'-3	60'-6	60'-9
P	19'-3	19'-0	18'-9	18'-6	23'-9	27'-9	21'-9	22'-0	22'-3	22'-6	22'-6

NOTES:

- Contractor shall select welding process according to CMS Item № 513.17
- All butt welds shall be full penetration welds - grind smooth, welds marked "G" on Elevation above.
- Intermediate and Bearing Stiffeners shall be attached to girder flanges in accordance with CMS Item № 513.08. Single Intermediate Stiffeners shall be welded to the compression flange with 5/16" fillet weld.
- All web plates and tension flange plates CVN.
- See Girder Splice Details on Shts 23 & 24/37
- See Blocking & Camber Data on Shts. 28 & 32/37

21/37

MICHAEL BAKER JR., CONSULTING ENGINEERS
ROCHESTER, PENNSYLVANIA

GIRDER DETAILS G2 THRU G12
BRIDGE NO. BEL-470-0662
OVER
S.R.7, CONRAIL & CHESSIE SYSTEM
Sta. 1462+80.25 to Sta. 1468+69.60

DESIGNED	DRAWN	TRACED	CHECKED	REVIEWED DATE	REVISED
BLA	TP		DWP	WRK 8/18/70	9-12-72 2/23/78

BEAVER VALLEY ENGINEERING SUPPLIES CO. REORDER A-23970

MICROFILMED
AUG 11 1978

FED. RD. DIVISION	STATE	PROJECT	TYPE FUNDS
5	OHIO		

BEL. 470-5.90

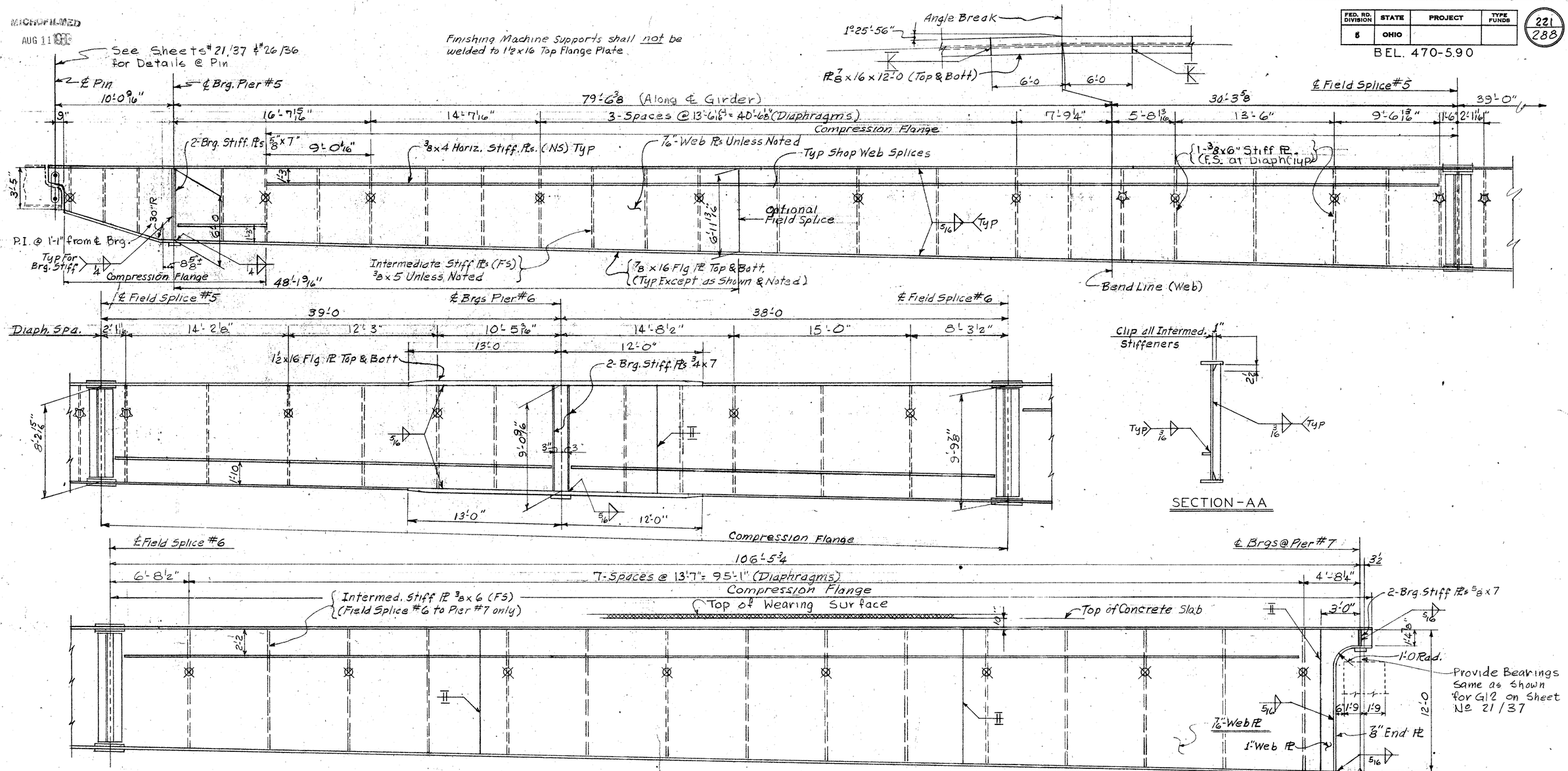

ELEVATION GIRDER LINE - 13

⊠ Denotes Diaphragm Stiffeners
☆ Denotes Top Horizontal Stiffener

NOTES:

- Contractor shall select welding process according to C.M.S. Item No. 513.17
- All butt welds shall be full penetration welds
- Intermediate and Bearing Stiffeners shall be attached to girder flanges in accordance with C.M.S. Item No 513.08. Single Intermediate Stiffeners shall be welded to the Compression Flange with 3/16" Fillet weld.
- All web plates and tension flange plates CVN
- See Girder Splice Details on Shts. 23 & 24/37
- See Blocking & Camber Data on Shts. 28 & 32/37
- For drainage system support details, see Sht No. 34/37

22/37

MICHAEL BAKER JR., CONSULTING ENGINEERS
ROCHESTER, PENNSYLVANIA

GIRDER NO. 13 DETAILS
BRIDGE NO. BEL - 470 - 0662
OVER
S.R.7, CONRAIL & CHESSIE SYSTEM
Sta. 1462+80.25 to Sta. 1468+69.60

DESIGNED	DRAWN	TRACED	CHECKED	REVIEWED DATE	REVISED
DWP	TP		BLA	WRK 8/18/76	

BEAVER VALLEY ENGINEERING SUPPLIES CO. REORDER A-23879

MICROFILMED
AUG 11 1980

FED. RD. DIVISION	STATE	PROJECT	TYPE FUNDS
5	OHIO		

222/288

BELMONT COUNTY
BEL.-470-5.90

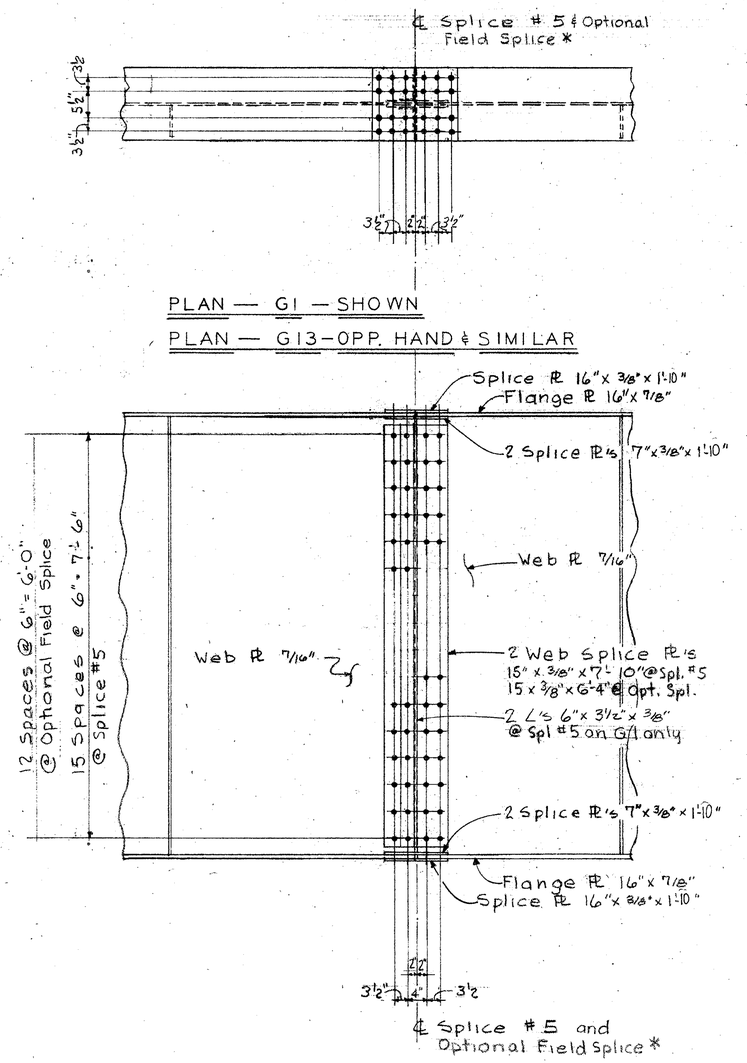

PLAN — G1 — SHOWN

PLAN — G13 — OPP. HAND & SIMILAR

ELEVATION — G1 — SHOWN

ELEVATION — G13 — OPP. HAND & SIMILAR

* Material for Optional Field Splice are included in estimated quantities.

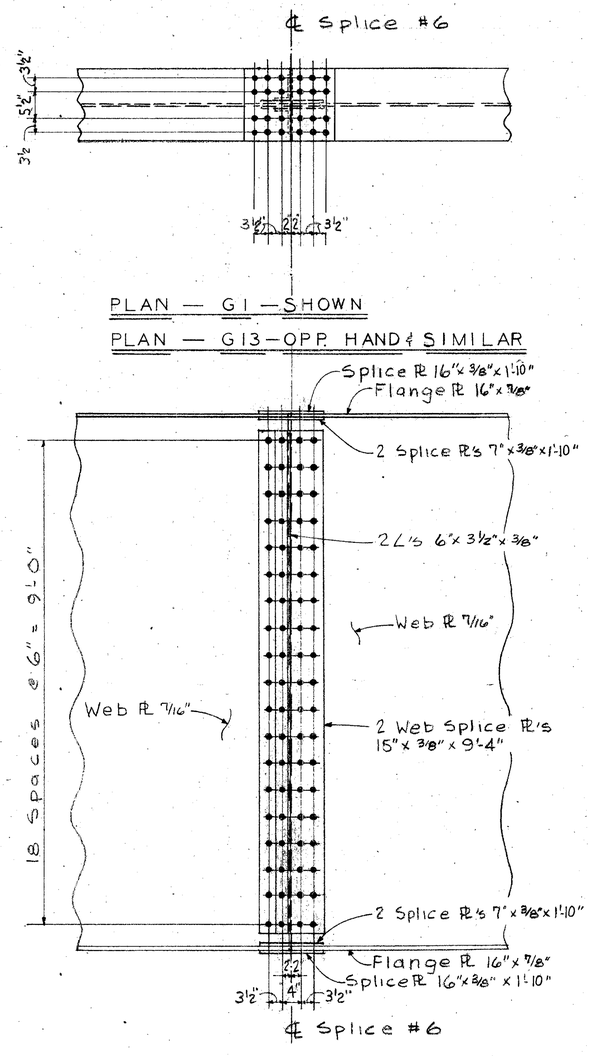

PLAN — G1 — SHOWN

PLAN — G13 — OPP. HAND & SIMILAR

ELEVATION — G1 — SHOWN

ELEVATION — G13 — OPP. HAND & SIMILAR

1" ϕ High Strength Bolts
Note: All Splice Plates CVN.

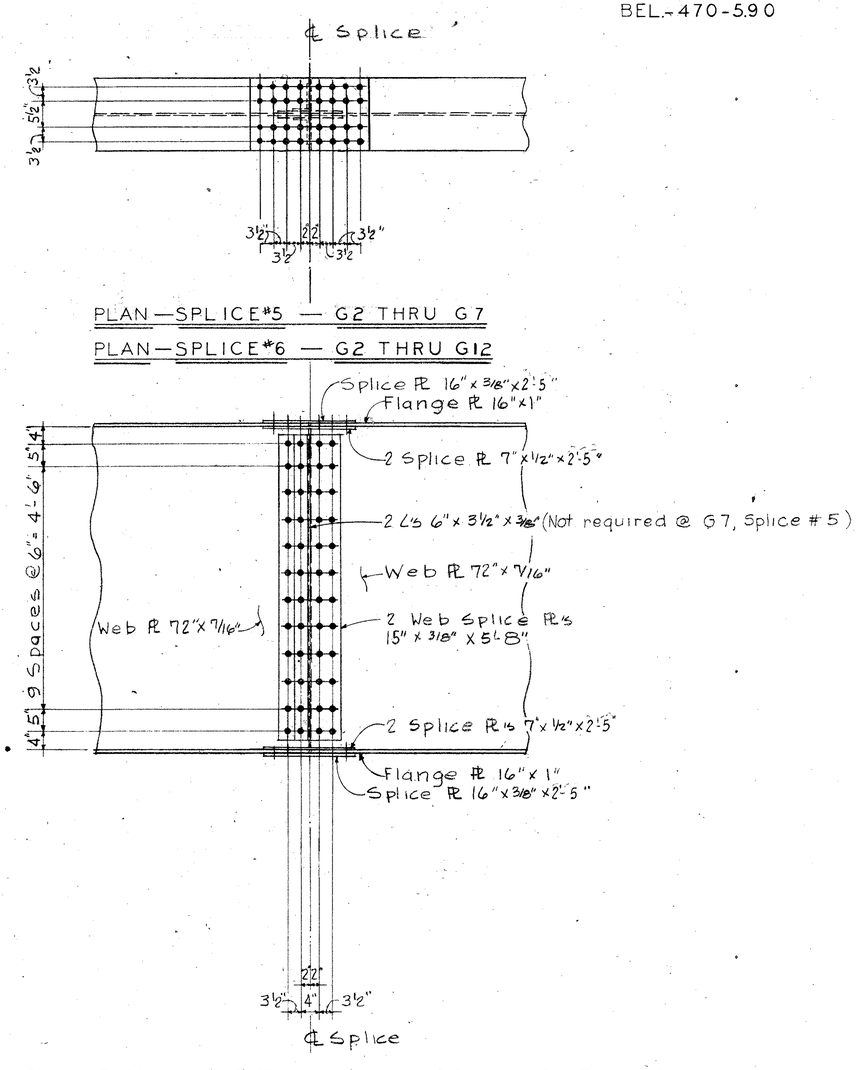

ELEVATION — OPTIONAL FIELD SPLICE - G2 THRU G12

ELEVATION — SPLICE #5 — G2 THRU G7

ELEVATION — SPLICE #6 — G2 THRU G12

NOTE: Use two angles with the splices only where required to attach crossframes. At other locations use on one side only.

23/37

MICHAEL BAKER JR., CONSULTING ENGINEERS
ROCHESTER, PENNSYLVANIA

GIRDER SPLICE DETAILS
BRIDGE NO. BEL-470-0662
OVER
S.R.7, CONRAIL & CHESSIE SYSTEM
STA. 1462+80.25 TO STA. 1468+69.60

DESIGNED	DRAWN	TRACED	CHECKED	REVIEWED	DATE	REVISED
BLA	JAJ		DWP	WRK	8/18/76	4-3-78 2/23/78

BEAVER VALLEY ENGINEERING SUPPLIES CO. REORDER A-23079

MICROFILMED
AUG 11 1978

FED. RD. DIVISION	STATE	PROJECT	TYPE FUNDS
5	OHIO		

223/288

BELMONT COUNTY
BEL-470-5.90

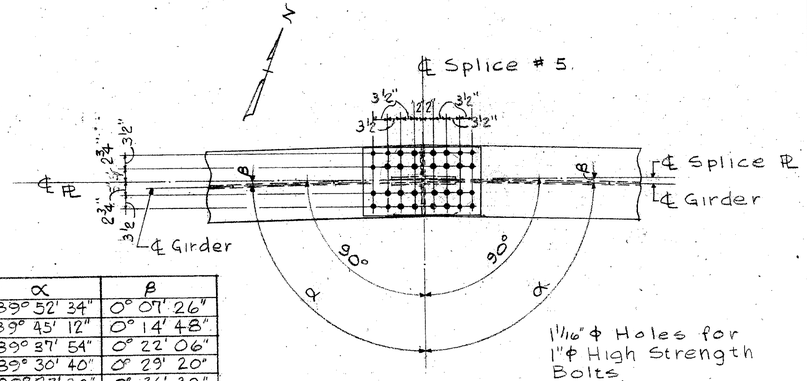

Girder No	α	β
G 8	89° 52' 34"	0° 07' 26"
G 9	89° 45' 12"	0° 14' 48"
G 10	89° 37' 54"	0° 22' 06"
G 11	89° 30' 40"	0° 29' 20"
G 12	89° 23' 30"	0° 36' 30"

PLAN — G8 THRU G12

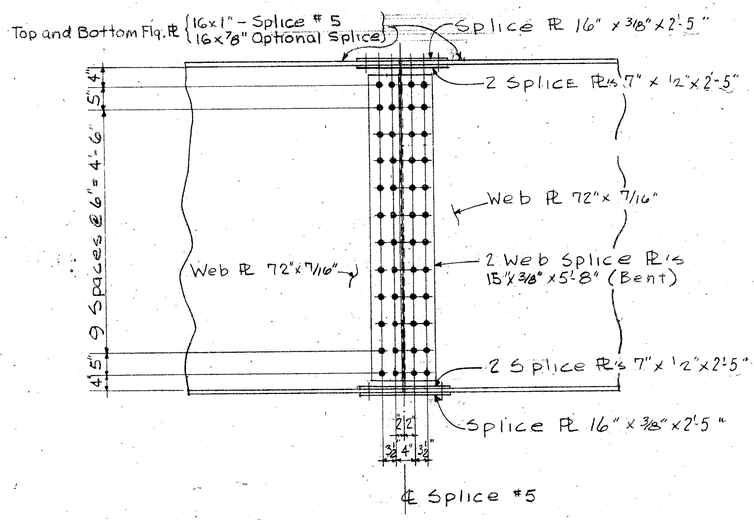

ELEVATION — G8 THRU G12

GIRDER SPLICE DETAIL

Note: All Splice Plates CVN

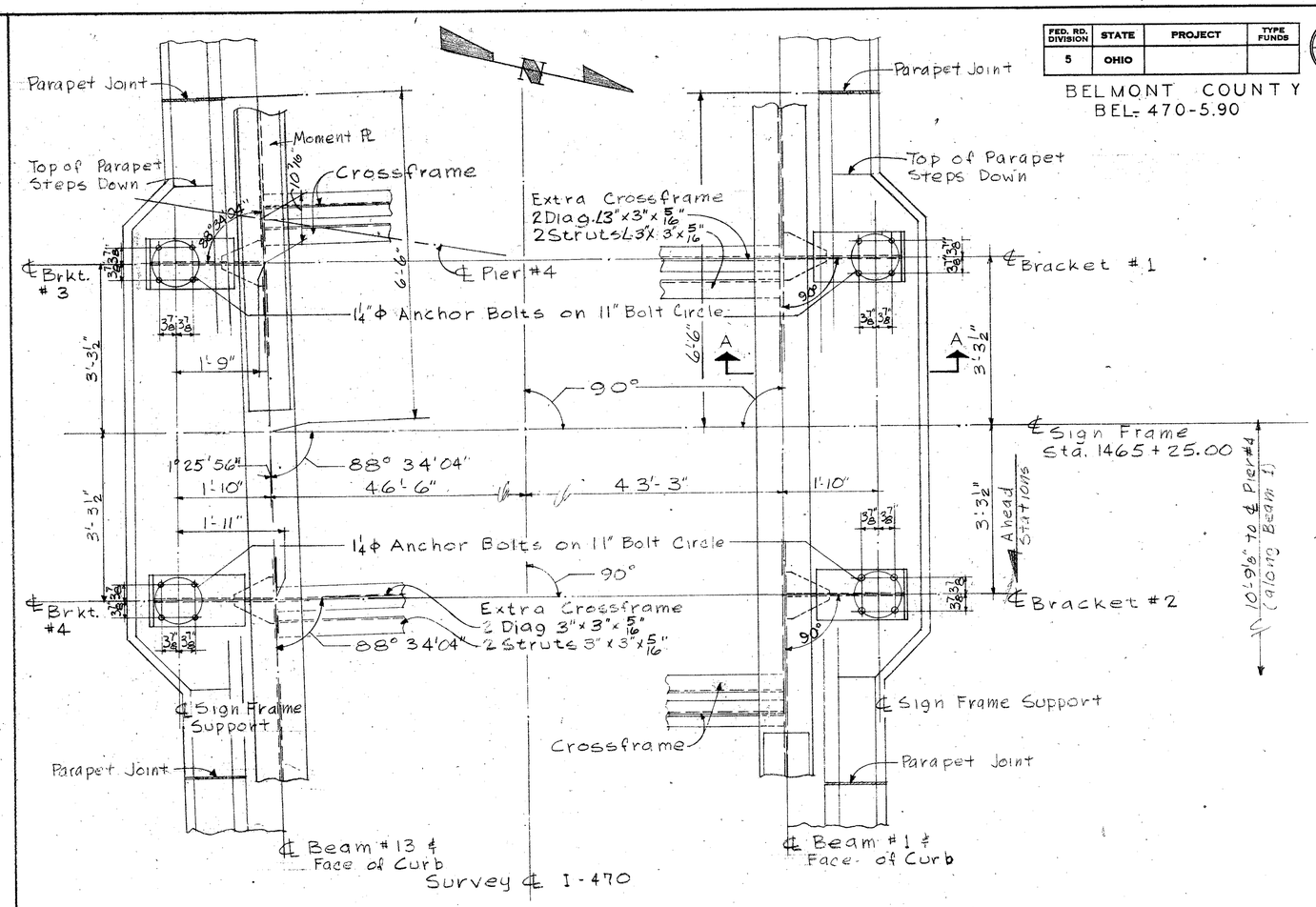

PLAN SIGN FRAME BRACKETS 1,2,3 & 4

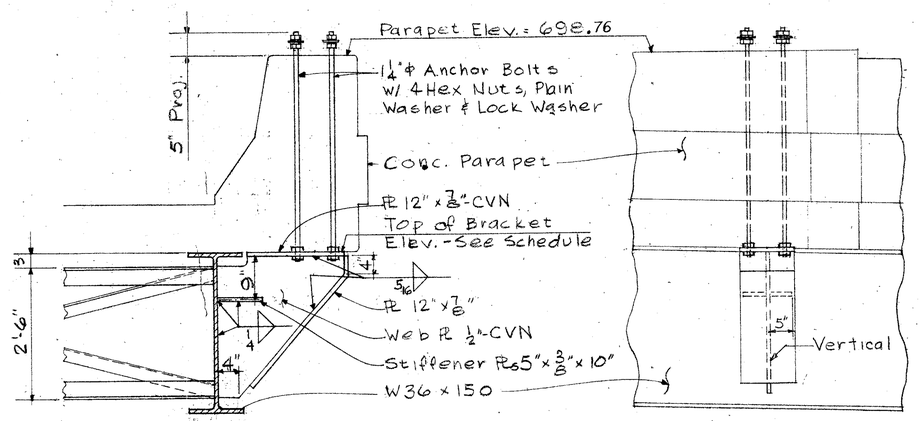

SECTION A-A

ELEVATION

Top of Bracket Elev.	
No.	Elevation
1	694.89
2	695.09
3	694.84
4	695.04

24/3.7

MICHAEL BAKER JR., CONSULTING ENGINEERS
ROCHESTER, PENNSYLVANIA

GIRDER SPLICES & BRACKETS
BRIDGE NO. BEL-470-0662
OVER
S.R.7, CONRAIL & CHESSIE SYSTEM
STA. 1462+80.25 TO STA. 1468+69.60

DESIGNED	DRAWN	TRACED	CHECKED	REVIEWED DATE	REVISED
BLA	JAJ		DWP	WRK 8/14/78	4-3-78 2/23/78

BEAVER VALLEY ENGINEERING SUPPLIES CO. REORDER A-23079

FED. RD. DIVISION	STATE	PROJECT	TYPE FUNDS
5	OHIO		

224/288

BEL-470-5.90

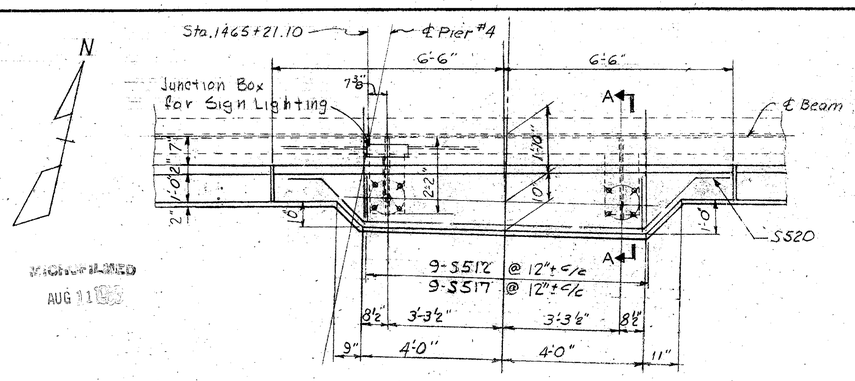

PLAN

RIGHT SIDE
DETAIL OF PARAPET AT
SIGN SUPPORT

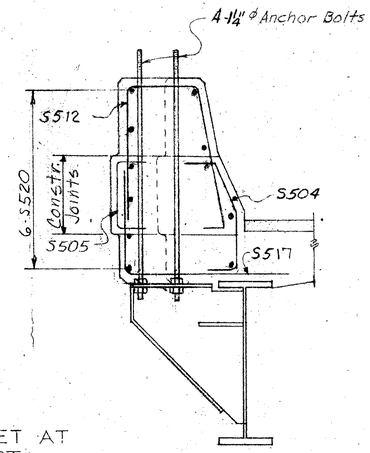

SECTION A-A

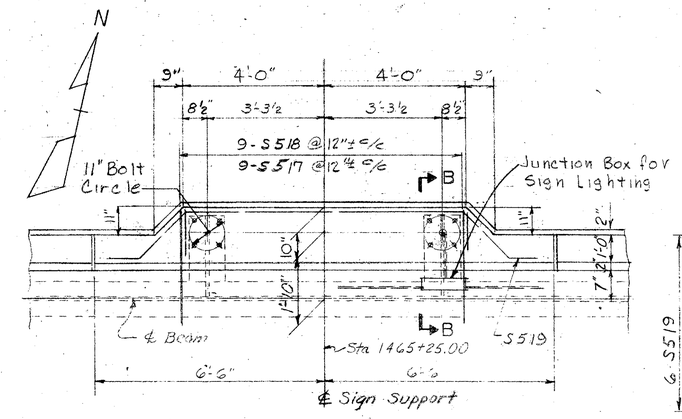

PLAN

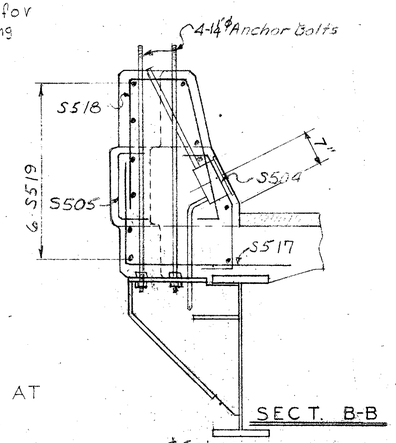

SECT. B-B

LEFT SIDE
DETAIL OF PARAPET AT
SIGN SUPPORT

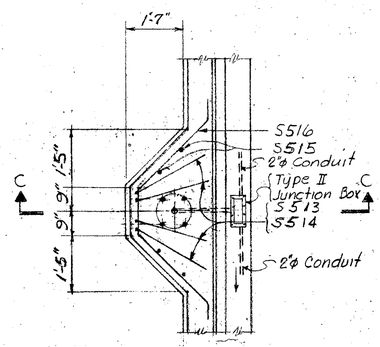

DETAIL OF PARAPET AT
LIGHT STANDARD

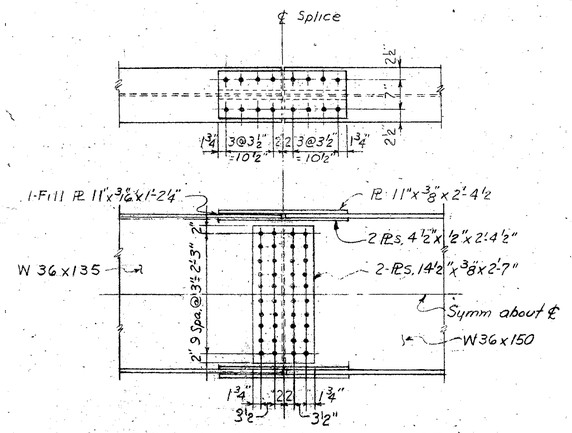

DETAIL OF FIELD SPLICE #1

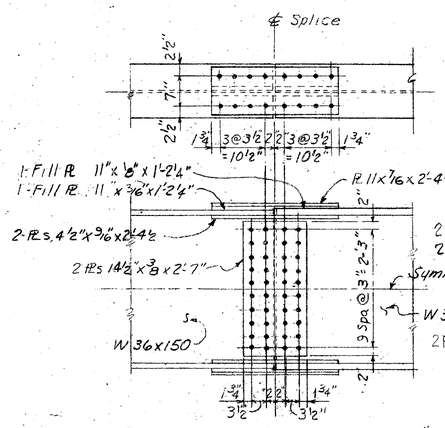

DETAIL OF FIELD SPLICE #2

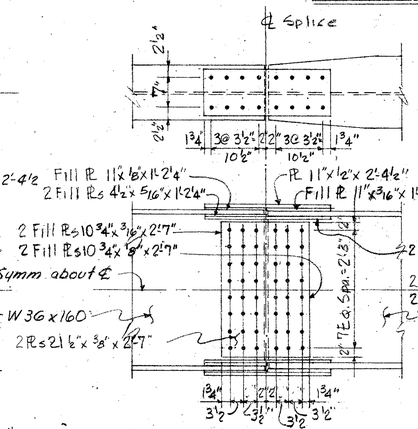

DETAIL OF FIELD SPLICE #3

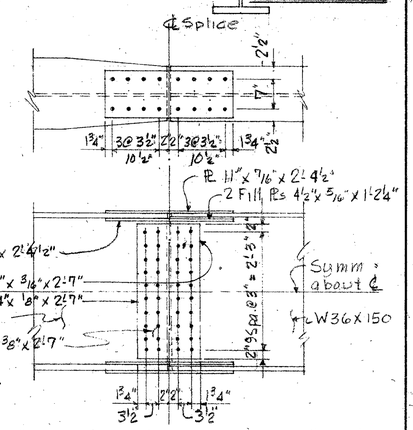

DETAIL OF FIELD SPLICE #4

• Note: All Splice Plates CVN
Except fill Pls.

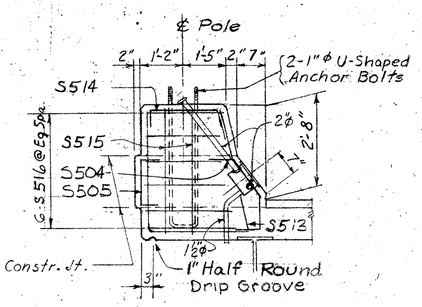

SECTION C-C

See Std. Construction Drwg. HL-4 for electrical details not shown.
See Sht. 31/37 for details of Parapet at Light Standard without Junction Box

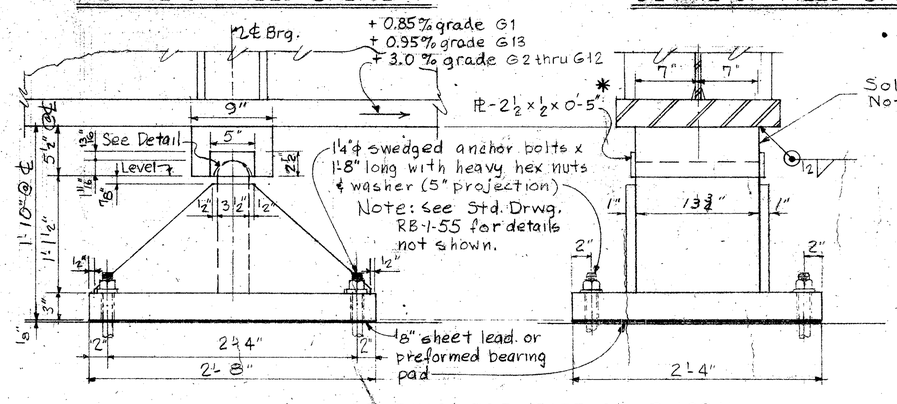

BEARING FOR PIER 6 R=460 Kips

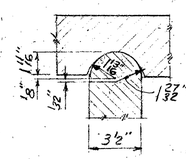

TOP BEARING DETAIL

* Omit Keeper plates at G1, G6, G7 & G13

25/37

MICHAEL BAKER JR., CONSULTING ENGINEERS
ROCHESTER, PENNSYLVANIA

SPLICES & BEARING DETAILS @ PIER #6
DECK DETAILS @ LIGHTS & SIGNS
BRIDGE NO. BEL-470-0662 OVER
S.R. 7, CONRAIL & CHESSIE SYSTEM
STA. 1462+80.25 TO STA. 1468+69.60

DESIGNED	DRAWN	TRACED	CHECKED	REVIEWED	DATE	REVISED
B.L.A.	O.W		D.W.P.	W.R.K	8/18/76	2/23/78

MICROFILMED AUG 11 1980

BEAVER VALLEY ENGINEERING SUPPLIES CO. REORDER A-53979

FED. RD. DIVISION	STATE	PROJECT	TYPE FUNDS
5	OHIO		

225/288

BEL-470-5.90

MICROFILMED AUG 11 1993

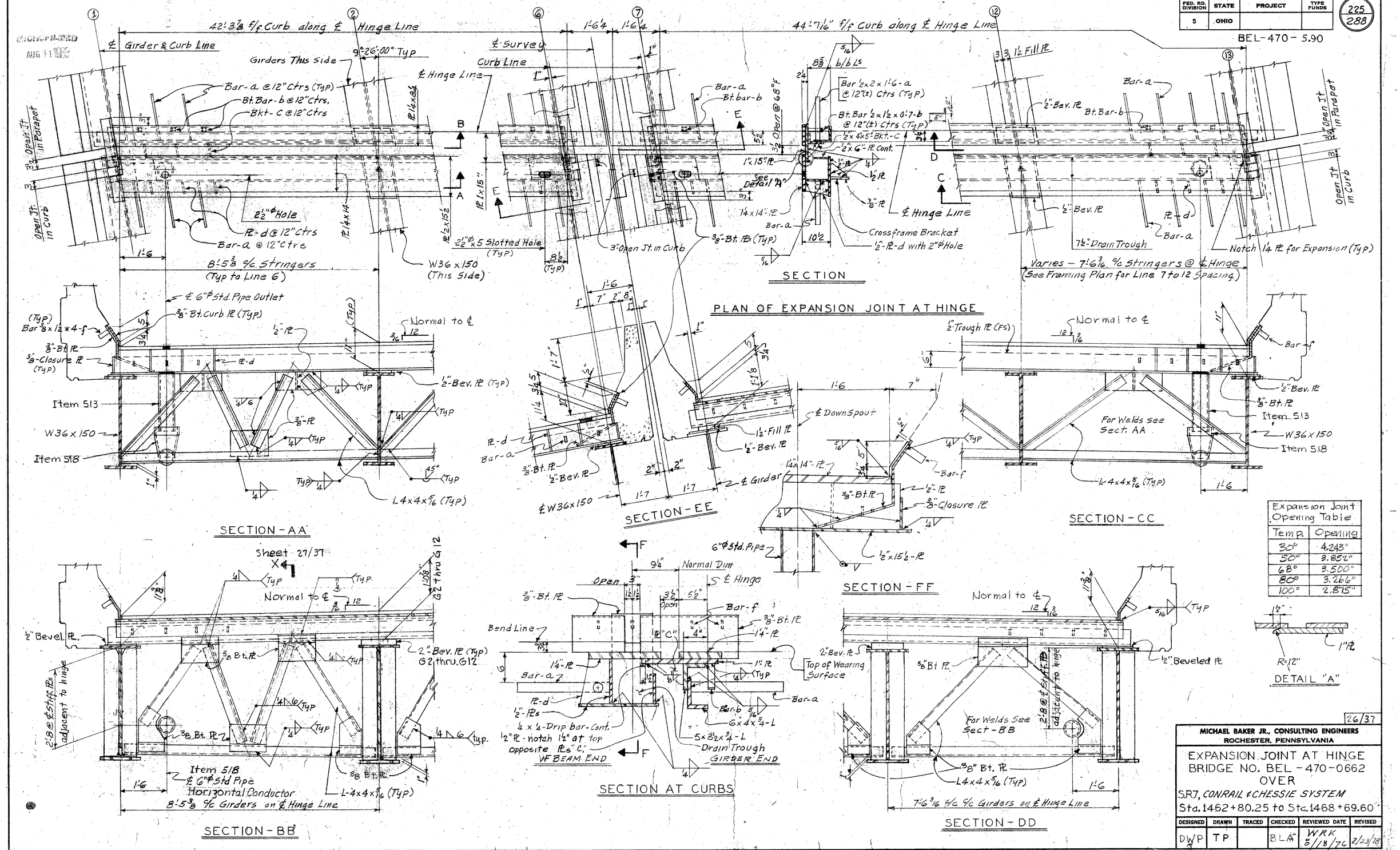

Expansion Joint Opening Table	
Temp.	Opening
30°	4.243"
50°	3.852"
68°	3.500"
80°	3.266"
100°	2.875"

26/37

MICHAEL BAKER JR., CONSULTING ENGINEERS
ROCHESTER, PENNSYLVANIA

EXPANSION JOINT AT HINGE
BRIDGE NO. BEL - 470 - 0662
OVER
S.R.T., CONRAIL & CHESSIE SYSTEM
Sta. 1462 + 80.25 to Sta. 1468 + 69.60

DESIGNED	DRAWN	TRACED	CHECKED	REVIEWED DATE	REVISED
DWP	TP		BLA	WRK 8/18/76	2/23/78

BEAVER VALLEY ENGINEERING SUPPLIES CO. REORDER A-33879

MICROFILMED
AUG 11

FED. RD. DIVISION	STATE	PROJECT	TYPE FUNDS
5	OHIO		

226/288

BEL 470 - 5.90

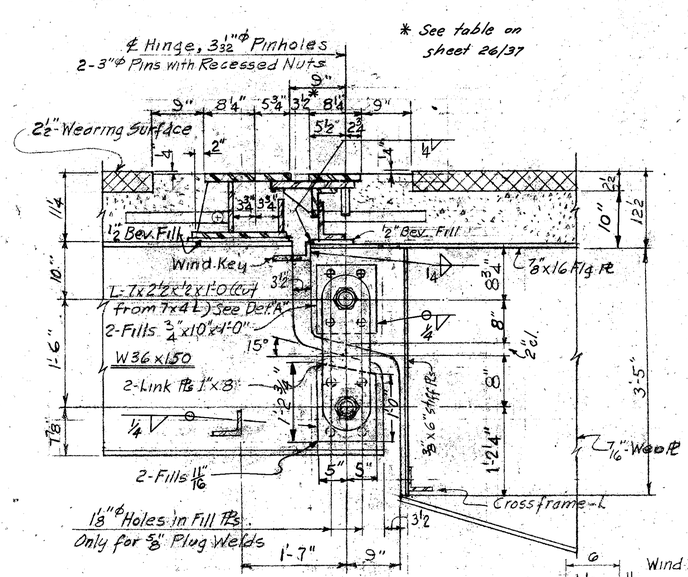

HINGE DETAILS AT LINE 1 & 13
(Line-1 Shown)

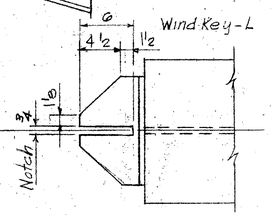

DETAIL - A

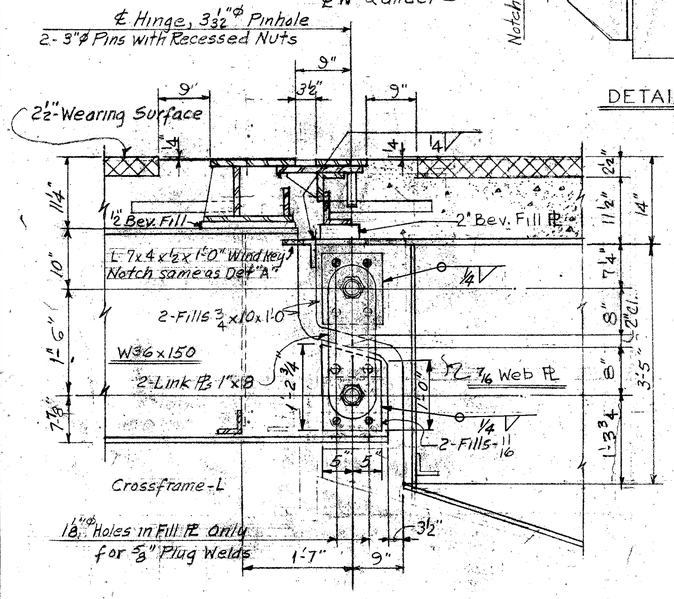

HINGE DETAIL AT LINES 2 THRU 12

NOTE:
Horizontal Dimensions are Measured along Grade & Perpendicular to 9°26'00" Skew.

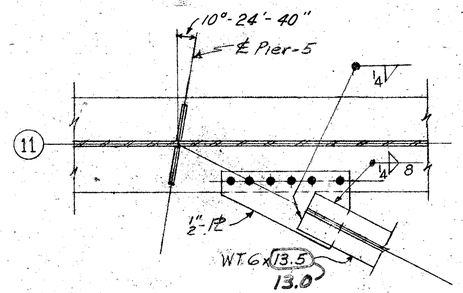

DETAIL - B **
(Typ at Pier-5)

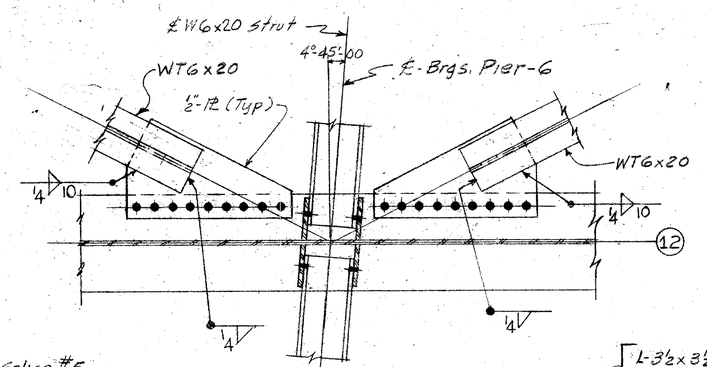

DETAIL - C **
(Typ at Pier-6)

NOTE:
Details "B" "C" & "D" are referenced to Sht. #18/37

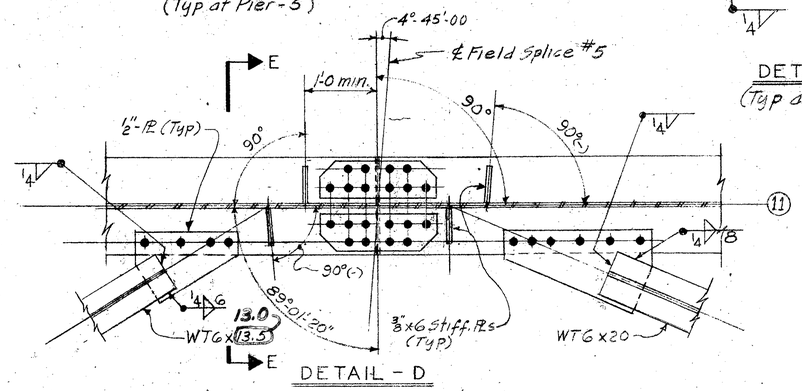

DETAIL - D

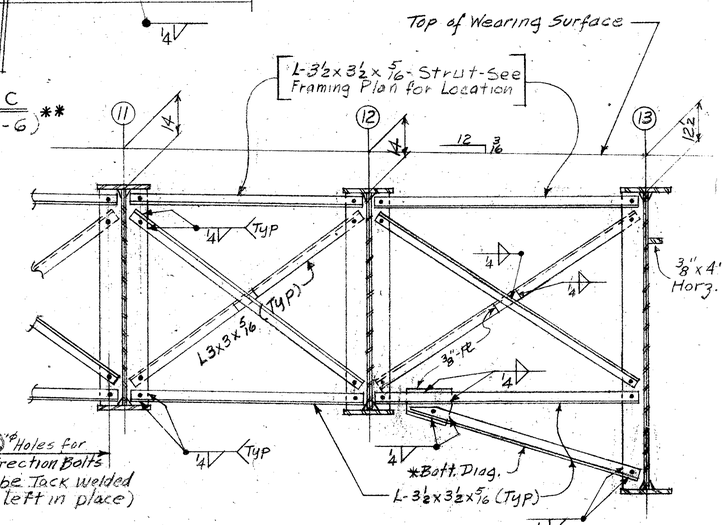

SECTION - EE
(At Field Splice #5)

* See Sheets 31/37 & 31/36 for Depth Controls
** Typ @ locations shown and elsewhere

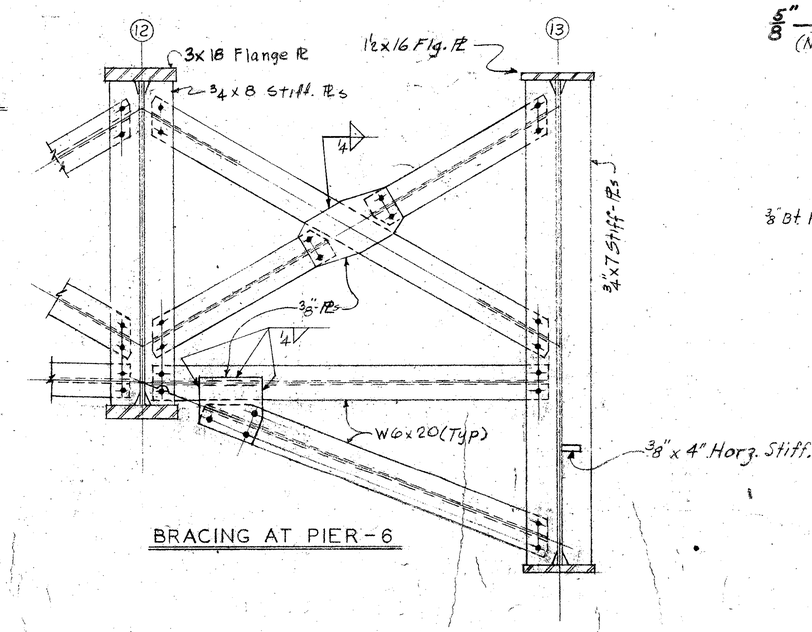

BRACING AT PIER-6

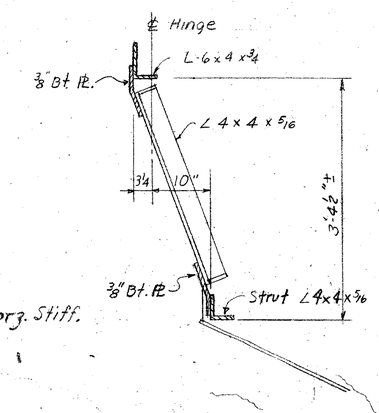

SECTION X-X
from Sheet 26/37

1 1/8"φ Holes Unless Noted
1"φ H.S. Bolts

27/37

MICHAEL BAKER JR., CONSULTING ENGINEERS
ROCHESTER, PENNSYLVANIA

HINGE & BRACING DETAILS
BRIDGE NO. BEL-470-0662
OVER
S.R.7, CONRAIL & CHESSIE SYSTEM
Sta. 1462+80.25 to Sta. 1468+69.60

DESIGNED	DRAWN	TRACED	CHECKED	REVIEWED	DATE	REVISED
DWT	TP		BLA	WRK	8/18/74	9-12-78 2/23/78

BEAVER VALLEY ENGINEERING SUPPLIES CO. REORDER A-23070

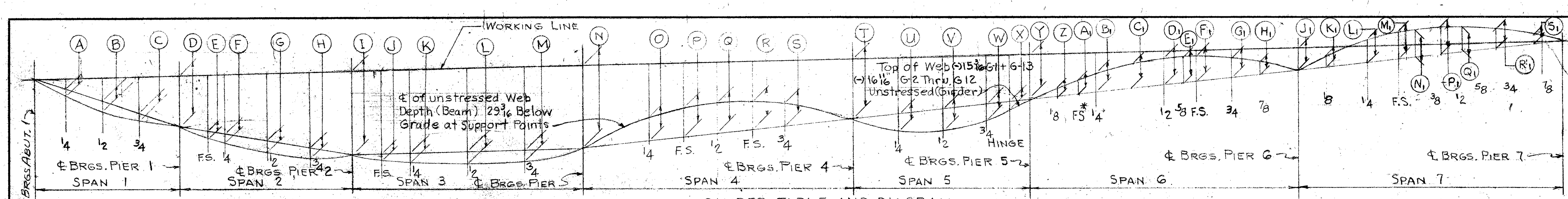

MICROFILMED AUG 11 19

FED. RD. DIVISION	STATE	PROJECT	TYPE FUNDS
5	OHIO		

227/288

BEL-470-5.90

CAMBER TABLE AND DIAGRAM

Beam No.		Span 1				Span 2					Span 3					Span 4					
		1/4 A	1/2 B	3/4 C	Pier 1 D	F.S. E	1/4 F	1/2 G	3/4 H	Pier 2 I	F.S. J	1/4 K	1/2 L	3/4 M	Pier 3 N	1/4 O	F.S. P	1/2 Q	F.S. R	3/4 S	Pier 4 T
1	Due To Wt. Of Steel		0			0		0	0		0	0	0	0		1/8	1/8	3/16	1/8	1/8	
	Due To Wt. Of Concrete		1/16			1/16		1/8	1/16		0	0	0	-1/16		5/16	5/16	1/2	7/16	7/16	
	Due To Vert Curve		-1/8			-1/8		-3/16	-1/8		-3/16	-3/16	-1/4	-3/16		-1/8	-1/8	-1/16	-1/16	-1/16	
	Total Camber (Blocking)		-1/16		(2 3/4)	-1/16		-1/16	-1/16	(5 1/4)	-3/16	-3/16	-1/4	-1/4	(6 1/4)	5/16	5/16	5/8	1/2	1/2	(5 1/8)
2	Due To Wt. Of Steel		0			0		1/16	0		0	0	0	0		1/8	1/8	3/16	1/8	1/8	
	Due To Wt. Of Concrete		1/16			1/8		3/16	1/8		0	0	0	-1/16		1/2	1/2	13/16	9/16	9/16	
	Due To Vert Curve		-1/8			-1/8		-3/16	-1/8		-3/16	-3/16	-1/4	-3/16		-1/8	-1/8	-1/16	-1/16	-1/16	
	Total Camber (Blocking)		-1/16		(2 13/16)	0		1/16	0	(5 3/8)	-3/16	-3/16	-1/4	-1/4	(6 3/8)	1/2	1/2	15/16	5/8	5/8	(5 1/4)
3	Due To Wt. Of Steel		0			0		1/16	0		0	0	0	0		1/8	1/8	3/16	1/8	1/8	
	Due To Wt. Of Concrete		1/16			1/8		3/16	1/8		0	0	1/16	-1/16		1/2	1/2	13/16	9/16	9/16	
	Due To Vert Curve		-1/8			-1/8		-3/16	-1/8		-3/16	-3/16	-5/16	-3/16		-1/8	-1/8	-1/8	-1/16	-1/16	
	Total Camber (Blocking)		-1/16		(2 13/16)	0		1/16	0	(5 7/16)	-3/16	-3/16	-1/4	-1/4	(6 1/2)	1/2	1/2	7/8	5/8	5/8	(5 3/8)
4	Due To Wt. Of Steel		0			0		1/16	0		0	0	0	0		1/8	1/8	3/16	1/8	1/8	
	Due To Wt. Of Concrete		1/16			1/8		3/16	1/8		0	0	0	-1/16		1/2	1/2	13/16	9/16	9/16	
	Due To Vert Curve		-1/8			-1/8		-3/16	-1/8		-3/16	-3/16	-5/16	-1/4		-1/8	-1/8	-1/8	-1/16	-1/16	
	Total Camber (Blocking)		-1/16		(2 7/8)	0		1/16	0	(5 9/16)	-3/16	-3/16	-5/16	-5/16	(6 5/8)	1/2	1/2	7/8	5/8	5/8	(5 1/2)
5	Due To Wt. Of Steel		0			0		1/16	0		0	0	0	0		1/8	1/8	3/16	1/8	1/8	
	Due To Wt. Of Concrete		1/16			1/8		3/16	1/8		0	0	0	-1/16		1/2	1/2	13/16	9/16	9/16	
	Due To Vert Curve		-1/8			-1/8		-3/16	-1/8		-3/16	-1/4	-5/16	-1/4		-3/16	-3/16	-1/8	-1/16	-1/16	
	Total Camber (Blocking)		-1/16		(2 15/16)	0		1/16	0	(5 5/8)	-3/16	-1/4	-5/16	-5/16	(6 13/16)	7/16	7/16	7/8	5/8	5/8	(5 5/8)
6	Due To Wt. Of Steel		0			0		1/16	0		0	0	0	0		1/8	1/8	3/16	1/8	1/8	
	Due To Wt. Of Concrete		1/16			1/8		3/16	1/8		0	0	0	-1/16		1/2	1/2	5/8	9/16	9/16	
	Due To Vert Curve		-1/8			-1/8		-3/16	-1/8		-3/16	-1/4	-5/16	-1/4		-3/16	-3/16	-1/8	-1/16	-1/16	
	Total Camber (Blocking)		-1/16		(2 15/16)	0		1/16	0	(5 3/4)	-3/16	-1/4	-5/16	-5/16	(7)	7/16	7/16	11/16	5/8	5/8	(5 13/16)
7	Due To Wt. Of Steel		0			0		0	0		0	1/16	1/16	0		1/8	1/8	3/16	1/8	1/8	
	Due To Wt. Of Concrete		1/16			1/16		1/8	1/16		1/8	1/4	3/8	1/8		3/8	3/8	5/8	7/16	7/16	
	Due To Vert Curve		-1/8			-1/8		-3/16	-1/8		-3/16	-1/4	-5/16	-1/4		-3/16	-3/16	-1/8	-1/16	-1/16	
	Total Camber (Blocking)		-1/16		(2 15/16)	-1/16		-1/16	-1/16	(5 3/4)	-1/16	1/16	1/8	-1/8	(7)	5/16	5/16	11/16	1/2	1/2	(5 13/16)
8	Due To Wt. Of Steel		0			0		0	0		0	1/16	1/16	0		1/8	1/8	1/4	3/16	3/16	
	Due To Wt. Of Concrete		1/16			1/16		1/8	1/16		1/8	1/4	3/8	1/8		1/2	1/2	13/16	5/8	5/8	
	Due To Vert Curve		-1/8			-1/8		-3/16	-1/8		-3/16	-1/4	-5/16	-1/4		-3/16	-3/16	-1/8	-1/16	-1/16	
	Total Camber (Blocking)		-1/16		(3)	-1/16		-1/16	-1/16	(5 13/16)	-1/16	1/16	1/8	-1/8	(7 1/8)	7/16	7/16	15/16	3/4	3/4	(5 15/16)
9	Due To Wt. Of Steel		0			0		0	0		0	1/16	1/16	0		1/8	1/8	1/4	3/16	3/16	
	Due To Wt. Of Concrete		1/16			1/16		1/8	1/16		1/8	1/4	3/8	1/8		1/2	1/2	13/16	5/8	5/8	
	Due To Vert. Curve **		-1/8			-1/8		-3/16	-1/8		-3/16	-1/4	-5/16	-1/4		-3/16	-3/16	-3/16	-1/16	-1/16	
	Total Camber (Blocking)		-1/16		(3)	-1/16		-1/16	-1/16	(5 7/8)	-1/16	1/16	1/8	-1/8	(7 1/4)	7/16	7/16	7/8	3/4	3/4	(6)
10	Due To Wt. Of Steel		0			0		0	0		0	1/16	1/16	0		1/8	1/8	1/4	3/16	3/16	
	Due To Wt. Of Concrete		1/16			1/16		1/8	1/16		1/8	1/4	3/8	1/8		1/2	1/2	13/16	5/8	5/8	
	Due To Vert Curve **		-1/8			-1/8		-3/16	-1/8		-3/16	-1/4	-3/8	-1/4		-3/16	-3/16	-3/16	-1/16	-1/16	
	Total Camber (Blocking)		-1/16		(3)	-1/16		-1/16	-1/16	(5 15/16)	-1/16	1/16	1/16	-1/8	(7 5/16)	7/16	7/16	7/8	3/4	3/4	(6 1/8)
11	Due To Wt. Of Steel		0			0		0	0		0	1/16	1/16	0		1/8	1/8	1/4	3/16	3/16	
	Due To Wt. Of Concrete		1/16			1/16		1/8	1/16		1/8	1/4	3/8	1/8		1/2	1/2	13/16	5/8	5/8	
	Due To Vert Curve **		-1/8			-1/8		-3/16	-1/8		-3/16	-1/4	-3/8	-1/4		-3/16	-3/16	-3/16	-1/8	-1/8	
	Total Camber (Blocking)		-1/16		(3 1/16)	-1/16		-1/16	-1/16	(6)	-1/16	1/16	1/16	-1/8	(7 7/16)	7/16	7/16	7/8	11/16	11/16	(6 3/16)
12	Due To Wt. Of Steel		0			0		0	0		0	1/16	1/16	0		1/8	1/8	1/4	3/16	3/16	
	Due To Wt. Of Concrete		1/16			1/16		1/8	1/16		1/8	1/4	3/8	1/8		1/2	1/2	13/16	5/8	5/8	
	Due To Vert Curve **		-1/8			-1/8		-3/16	-1/8		-3/16	-1/4	-3/8	-1/4		-3/16	-3/16	-3/16	-1/8	-1/8	
	Total Camber (Blocking)		-1/16		(3 1/8)	-1/16		-1/16	-1/16	(6 1/16)	-1/16	1/16	1/16	-1/8	(7 9/16)	7/16	7/16	7/8	11/16	11/16	(6 5/16)
13	Due To Wt. Of Steel		0			0		0	0		0	1/16	1/16	0		1/8	1/8	3/16	1/8	1/8	
	Due To Wt. Of Concrete		1/16			1/16		1/16	0		1/16	3/16	1/4	1/16		5/16	5/16	9/16	3/8	3/8	
	Due To Vert. Curve **		-1/8			-1/8		-3/16	-1/8		-3/16	-1/4	-3/8	-1/4		-3/16	-3/16	-3/16	-1/8	-1/8	
	Total Camber (Blocking)		-1/16		(3 1/8)	-1/16		-1/16	-1/8	(6 1/8)	-1/8	0	-1/16	-3/16	(7 1/16)	1/4	1/4	9/16	3/8	3/8	(6 7/16)

Beam No.		Span 5					Span 6										Span 7								
		1/4 U	1/2 V	3/4 W	Hinge X	Pier 5 Y	1/8 Z	F.S.* A1	1/4 B1	3/8 C1	1/2 D1	5/8 E1	F.S.* F1	3/4 G1	7/8 H1	Pier 6 J1	1/8 K1	1/4 L1	F.S.* M1	3/8 N1	1/2 P1	5/8 Q1	3/4 R1	7/8 S1	Pier 7
1	Due To Wt. Of Steel	0	0	-1/16	-1/16		1/8	3/16	1/4	1/4	1/4	3/16	1/8	1/16	0		0	0	0	1/16	1/16	1/16	1/16	1/16	
	Due To Wt. Of Concrete	-1/16	-1/16	-1/4	-1/4		5/8	3/4	7/8	1 1/16	1	3/4	1/2	7/16	1/8		1/16	1/16	1/8	3/16	5/16	3/8	5/16	3/16	
	Due To Vert Curve	0	0	0	0		0	0	0	0	0	0	0	0	0		0	0	0	0	0	0	0	0	
	Total Camber (Blocking)	-1/16	-1/8	5/16	-5/16	(4 1/4)	3/4	15/16	1 1/4	1 5/16	1 1/4	15/16	5/8	1/2	1/8	(2 1/8)	1/16	1/16	1/8	1/4	3/8	7/16	3/8	1/4	0
2	Due To Wt. Of Steel	0	-1/16	-1/16	-1/16		3/16	1/4	3/8	7/16	7/16	5/16	3/16	3/16	1/16		1/16	1/8	1/8	1/4	5/16	3/8	5/16	3/16	
	Due To Wt. Of Concrete	-1/8	-3/16	-3/8	-3/8		3/4	1	1 5/16	1 9/16	1 9/16	1 3/16	3/4	11/16	3/16		1/8	1/2	9/16	15/16	1 1/4	1 5/16	1 1/8	5/8	
	Due To Vert Curve	0	0	0	0		0	0	0	0	0	0	0	0	0		0	0	0	0	0	0	0	0	
	Total Camber (Blocking)	-1/8	-1/4	-7/16	-7/16	(4 3/8)	15/16	1 1/4	1 11/16	2	2	1 1/2	15/16	7/8	1/4	(2 3/16)	3/16	5/8	11/16	1 3/16	1 9/16	1 11/16	1 7/16	1 3/16	0
3	Due To Wt. Of Steel	0	-1/16	-1/16	-1/16		3/16	1/4	3/16	7/16	7/16	5/16	3/16	3/16	1/16		1/16	1/8	1/8	1/4	5/16	3/8	5/16	3/16	
	Due To Wt. Of Concrete	-1/8	-3/16	-3/8	-7/16		13/16	1	1 3/8	1 5/8	1 9/16	1 1/4	13/16	11/16	3/16		1/8	1/2	9/16	15/16	1 1/4	1 5/16	1 1/8	11/16	
	Due To Vert Curve	0	0	0	0		0	0	0	0	0	0	0	0	0		0	0	0	0	0	0	0	0	
	Total Camber (Blocking)	-1/8	-1/4	-7/16	-1/2	(4 1/2)	1	1 1/4	1 3/4	2 1/16	2	1 9/16	1	7/8	1/4	(2 1/4)	3/16	5/8	11/16	1 3/16	1 9/16	1 11/16	1 7/16	7/8	0
4	Due To Wt. Of Steel	0	-1/16	-1/16	-1/16		3/16	1/4	3/8	7/16	7/16	5/16	3/16	3/16	1/16		1/16	1/8	1/8	1/4	5/16	3/8	5/16	3/16	
	Due To Wt. Of Concrete	-1/8	-3/16	-3/8	-3/8		13/16	1	1 3/8	1 3/4	1 5/8	1 1/4	1 3/16	11/16	3/16		1/8	1/2	9/16	15/16	1 1/4	1 3/8	1 1/8	11/16	
	Due To Vert Curve	0	0	0	0		0	0	0	0	0	0	0	0	0		0	0	0	0	0	0	0	0	
	Total Camber (Blocking)	-1/8	-1/4	-7/16	-7/16	(4 5/8)	1	1 1/4	1 3/4	2 3/16	2 1/16	1 9/16	1	7/8	1/4	(2 5/16)	3/16	5/8	11/16	1 3/16	1 9/16	1 3/4	1 7/16	7/8	0
5	Due To Wt. Of Steel	0	-1/16	-1/16	-1/16		3/16	1/4	3/8	7/16	7/16	5/16	1/4	3/16	1/16		1/16	1/8	1/8	1/4	3/8	3/8	5/16	3/16	
	Due To Wt. Of Concrete	-1/8	-3/16	-3/8	3/8		13/16	1 1/16	1 7/16	1 11/16	1 5/8	1 1/4	13/16	11/16	3/16		1/8	1/2	9/16	15/16	1 1/4	1 3/8	1 1/8	11/16	
	Due To Vert Curve	0	0	0	0		0	0	0	0	0	0	0	0	0		0	0	0	0	0	0	0	0	
	Total Camber (Blocking)	-1/8	-1/4	-7/16	-7/16	(4 3/4)	1	1 5/16	1 13/16	2 1/8	2 1/16	1 9/16	1 1/16	7/8	1/4	(2 3/8)	3/16	5/8	11/16	1 3/16	1 5/8	1 3/4	1 7/16	7/8	0
6	Due To Wt. Of Steel	0	-1/16	-1/16	-1/16		1/4	5/16	7/16	1/2	7/16	3/8	1/4	3/16	1/16		1/16	1/8	3/16	5/16	3/8	7/16	3/8	1/4	
	Due To Wt. Of Concrete	-1/8	-3/16	-5/16	-3/8		11/16	15/16	1 1/8	1 3/8	1 5/16	1	5/8	9/16	3/16		1/8	7/16	1/2	13/16	1 1/16	1 1/8	1	9/16	
	Due To Vert Curve	0	0	0	0		0	0	0	0	0	0	0	0	0		0	0	0	0	0	0	0	0	
	Total Camber (Blocking)	-1/8	-1/4	-3/8	-7/16	(4 7/8)	15/16	1 1/4	1 9/16	1 7/8	1 3/4	1 3/8	7/8	3/4	1/4	(2 7/16)	3/16	9/16	11/16	1 1/8	1 7/16	1 9/16	1 3/8	13/16	0
7	Due To Wt. Of Steel	0	-1/16	-1/16	-1/16		1/4	3/8	7/16	1/2	1/2	3/8	1/4	3/16	1/16		1/16	1/8	3/16	5/16	3/8	7/16	3/8	3/16	
	Due To Wt. Of Concrete	-1/8	-3/16	-5/16	-3/8		9/16	7/8	1	1 3/16	1 1/8	7/8	9/16	1/2	1/8		1/16	3/8	7/16	11/16	15/16	1	7/8	1/2	
	Due To Vert Curve	0	0	0	0		0	0	0	0	0	0	0	0	0		0	0	0	0	0	0	0	0	
	Total Camber (Blocking)	-1/8	-1/4	-3/8	-7/16	(4 7/8)	13/16	1 1/4	1 7/16	1 11/16	1 5/8	1 1/4	13/16	11/16	3/16	(2 7/16)	1/8	1/2	5/8	1	1 5/16	1 7/16	1 1/4	11/16	0
8	Due To Wt. Of Steel	0	-1/16	-1/16	-1/16		1/4	5/16	7/16	1/2	1/2	3/8	1/4	3/16	1/16		1/16	3/16	3/16	5/16	7/16	7/16	3/8	1/4	
	Due To Wt. Of Concrete	-1/8	-3/16	-1/8	-3/8		3/4	1	1 5/16	1 9/16	1 1/2	1 3/16	11/16	5/8	3/16		1/8	1/2	9/16	15/16	1 1/4	1 5/16	1 1/8	11/16	
	Due To Vert Curve	0	0	0	0		0	0	0	0	0	0	0	0	0		0	0	0	0	0	0	0	0	
	Total Camber (Blocking)	-1/8	-1/4	-3/16	-7/16	(4 15/16)	1	1 5/16	1 3/4	2 1/16	2	1 9/16	15/16	13/16	1/4	(2 3/8)	3/16	11/16	3/4	1 1/4	1 11/16	1 3/4	1 1/2	15/16	0
9	Due To Wt. Of Steel	0	-1/16	-1/16	-1/16		1/4	5/16	7/16	1/2	1/2	3/8	1/4	3/16	1/16		1/16	3/16	3/16	5/16	7/16	7/16	3/8	1/4	
	Due To Wt. Of Concrete	-1/8	-3/16	-1/8	-3/8		13/16	1	1 3/8	1 9/16	1 9/16	1 3/16	3/4	11/16	3/16		1/8	1/2	9/16	15/16	1 1/4	1 5/16	1 1/8	11/16	
	Due To Vert. Curve **	0	0	0	0		0	0	0	0	1/16	1/16	1/16	1/16	0		0	0	0	0	0	0	0	0	
	Total Camber (Blocking)	-1/8	-1/4	-3/16	-7/16	(5)	1 1/16	1 5/16	1 13/16	2 1/16	2 1/8	1 5/8	1 1/16	15/16	1/4	(2 3/8)	3/16	11/16	3/4	1 1/4	1 11/16	1 3/4	1 1/2	15/16	0
10	Due To Wt. Of Steel	0	-1/16	-1/16	-1/16		1/4	5/16	7/16	1/2	1/2	3/8	1/4	1/4	1/16		1/16	3/16	3/16	5/16	7/16	7/16	3/8	1/4	
	Due To Wt. Of Concrete	-1/8	-3/16	-1/8	-3/8		13/16	1	1 3/8	1 5/8	1 9/16	1 3/16	3/4	11/16	3/16		1/8	1/2	9/16	15/16	1 1/4	1 5/16	1 1/8	11/16	
	Due To Vert Curve **	0	0	0	0		0	0	0	1/16	1/16	1/16	1/16	1/16	1/16		0	0	0	0	0	0	0	0	
	Total Camber (Blocking)	-1/8	-1/4	-3/16	-7/16	(5 1/16)	1 1/16	1 5/16	1 13/16	2 3/16	2 1/8	1 5/8	1 1/16	15/16	1/4	(2 3/8)	3/16	11/16	3/4	1 1/4	1 11/16	1 3/4	1 1/2	15/16	0
11	Due To Wt. Of Steel	0	-1/16	-1/16	-1/16		1/4	3/8	7/16	9/16	1/2	3/8	1/4	1/4	1/16		1/16	3/16	3/16	5/16	7/16	7/16	3/8	1/4	
	Due To Wt. Of Concrete	-1/8	-3/16	-1/8	-3/8		13/16	1	1 3/8	1 5/8	1 5/8	1 1/4	3/4	11/16	3/16		1/8	1/2	9/16	15/16	1 5/16	1 3/8	1 3/16	11/16	
	Due To Vert Curve **	0	0	0	0		0	0	0	1/16	1/16	1/16	1/16	1/16	1/16		0	0	0	0	0	0	0	0	
	Total Camber (Blocking)	-1/8	-1/4	-3/16	-7/16	(5 1/8)	1 1/16	1 3/8	1 13/16	2 1/4	2 3/16	1 11/16	1 1/16	1	5/16	(2 3/8)	3/16	11/16	3/4	1 1/4	1 3/4	1 13/16	1 9/16	15/16	0
12	Due To Wt. Of Steel	0	-1/16	-1/16	-1/16		1/4	5/16	7/16	9/16	1/2	7/16	3/16	3/16	0		1/16	3/16	3/16	5/16	7/16	7/16	3/8	1/4	
	Due To Wt. Of Concrete	-1/8	-3/16	-1/8	-3/8		13/16	1 1/8	1 1/2	1 11/16	1 5/8	1 1/8	5/8	9/16	1/8		1/16	1/2	9/16	1	1 5/16	1 7/16	1 3/16	3/4	
	Due To Vert Curve **	0	0	0	0		0	0	1/16	1/16	1/16	1/8	1/8	1/8	1/16		0	0	0	0	0	0	0	0	
	Total Camber (Blocking)	-1/8	-1/4	3/16	-7/16	(5 3/16)	1 1/16	1 7/16	2	2 5/16	2 3/16	1 11/16	15/16	7/8	1/4	(2 3/8)	1/8	11/16	3/4	1 5/16	1 3/4	1 7/8	1 9/16	1	0
13	Due To Wt. Of Steel	0	0	-1/16	-1/16		3/16	1/4	5/16	3/8	5/16	3/16	1/8	1/8	0		0	1/16	1/16	1/8	1/8	3/16	1/8	1/16	
	Due To Wt. Of Concrete	-1/16	-1/8	-1/8	-3/16		5/8	13/16	1	1 1/8	1	11/16	3/8	5/16	1/16		0	-1/8	1/8	1/4	3/8	3/8	5/16	3/16	
	Due To Vert. Curve **	0	0	0	0		1/16	1/16	1/16	1/8	3/16	1/8	1/8	1/16	1/16		0	0	0	0	0	0	0	0	
	Total Camber (Blocking)	-1/16	-1/8	-3/16	-1/4	(5 1/4)	7/8	1 1/8	1 3/8	1 5/8	1 1/2	1	5/8	1/2	1/8	(2 7/16)	0	3/16	3/16	3/8	1/2	9/16	7/16	1/4	0

* For location of Field Splices, (G-2 thru G-12) See Girder Elevation & Dimension Table on Sheet No. 21/37 (G-1 & G13 See Girder Elevation on Sheets No 20/37 22/37

** Span 6 ordinates shown for Girders 9, 10, 11, 12 & 13 are due to cross slope of deck in width between ℄ of Girder and span length chord connecting the ends. These Girders have horizontal bends. Ordinates for Girder 8 are negligible.

See sheet 32/37 for lateral blocking of girders 8 thru 13.

28/37

MICHAEL BAKER JR., CONSULTING ENGINEERS
ROCHESTER, PENNSYLVANIA

CAMBER TABLE
BRIDGE NO BEL-470-0662
OVER
SR.7, CONRAIL & CHESSIE SYSTEM
Sta. 1462+80.25 to Sta. 1468+69.60

DESIGNED	DRAWN	TRACED	CHECKED	REVIEWED DATE	REVISED
BLA	O.W.		DWP	WRK 8/18/76	

BEAVER VALLEY ENGINEERING SUPPLIES CO. REORDER A-23979

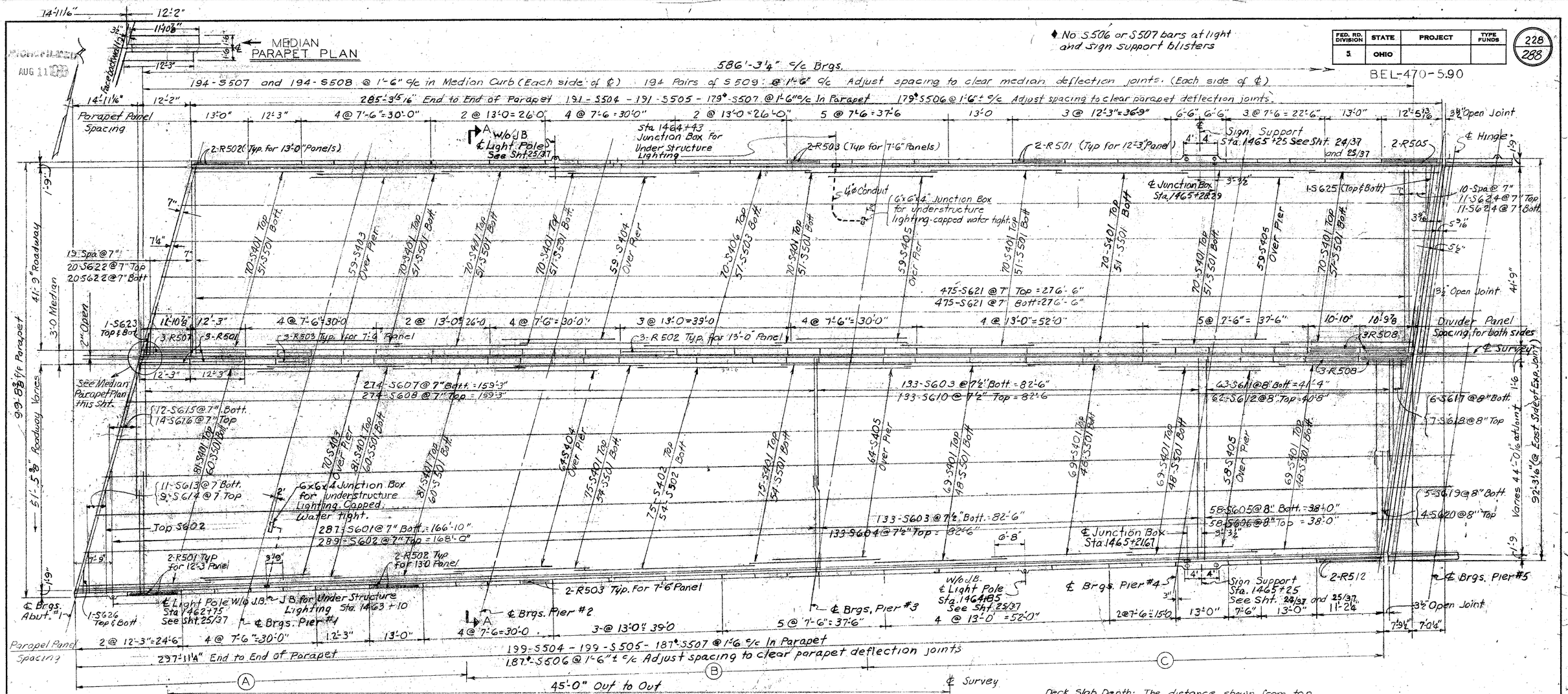

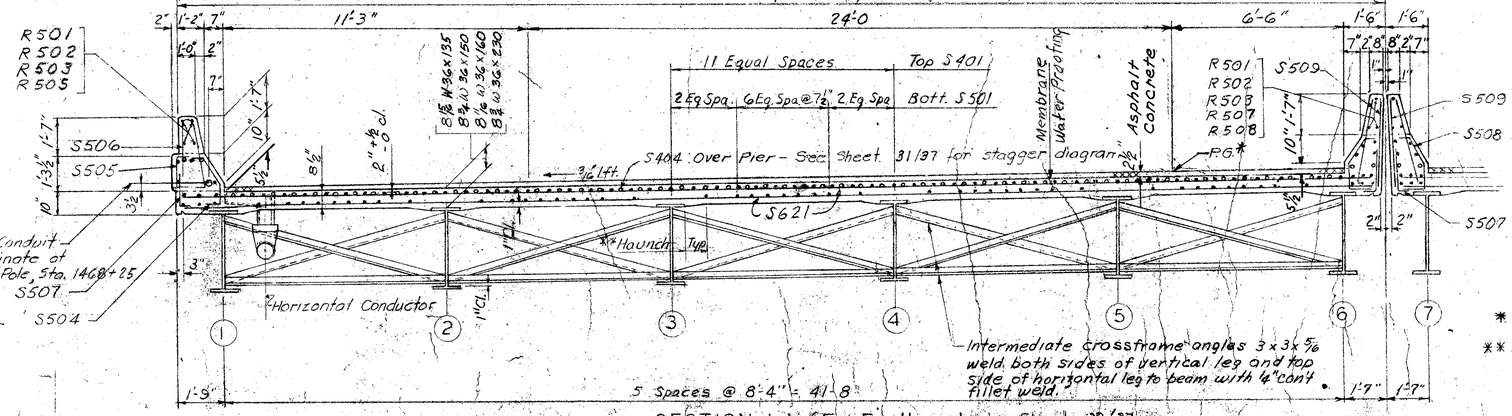

SECTION A-A (For Eastbound see Sheet 30/37)
WESTBOUND BEAM SPANS

Deck Slab Depth: The distance shown from top of deck slab to top of steel beam is the design dimension. The quantity of deck concrete to be paid for shall be based on this dimension, even though deviation from it may be necessary because the top flange of the beam may not have the exact camber or configuration required to place it parallel to the finished grade.

(A) (B) (C) are reinforcing zones for longitudinal bars. See sheet 30/37

See sheet 3/37 for sequence of concrete pour.

* P.G. = Top of Asphalt surface course.

** See deck slab haunch note on sht. 30/37

29/37

MICHAEL BAKER JR., CONSULTING ENGINEERS
ROCHESTER, PENNSYLVANIA

DECK PLAN
BRIDGE NO. BEL - 470 - 0662
OVER
S.R. 7, CONRAIL & CHESSIE SYSTEM
STA. 1462+80.25 TO STA. 1468+69.60

DESIGNED	DRAWN	TRACED	CHECKED	REVIEWED	DATE	REVISED
DWP	DW		BLA	WRK	8/18/76	2/23/78

BEAVER VALLEY ENGINEERING SUPPLIES CO. REORDER A-23079

FED. RD. DIVISION	STATE	PROJECT	TYPE FUNDS
5	OHIO		

229/288

BEL-470-5.90

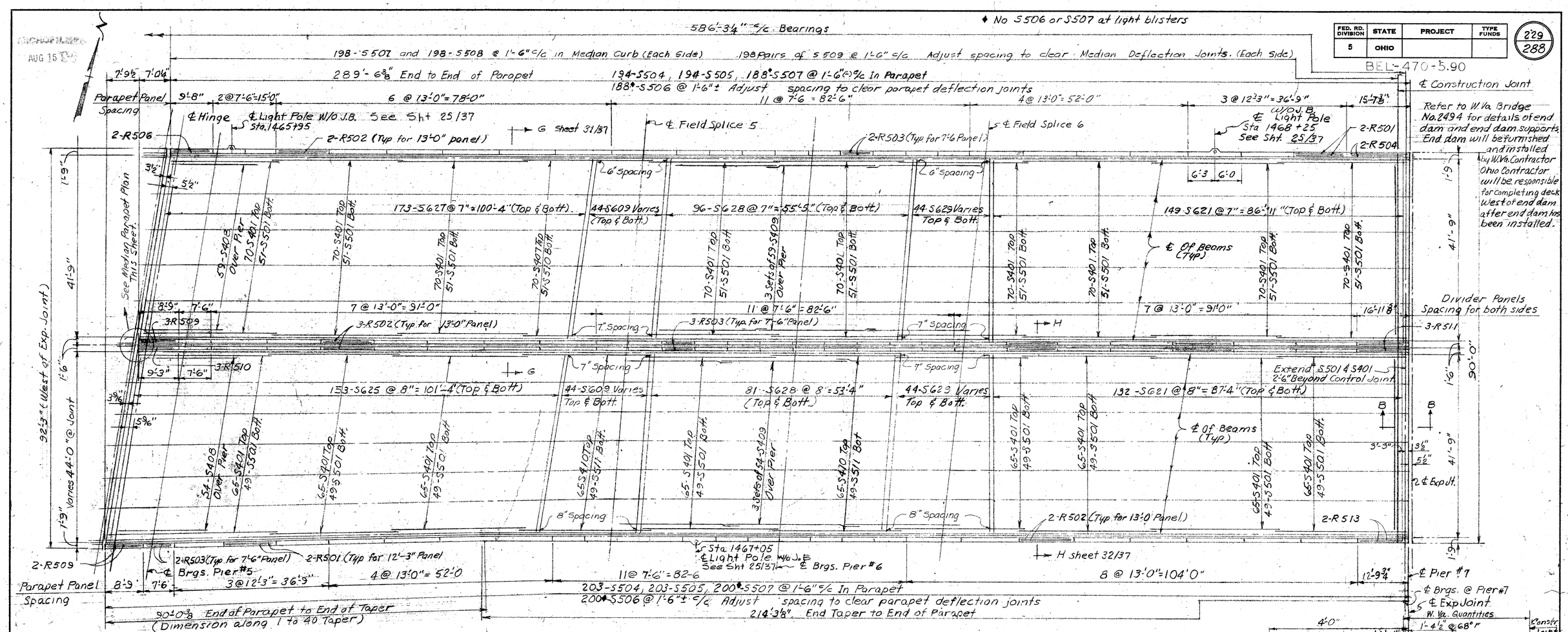

DECK PLAN

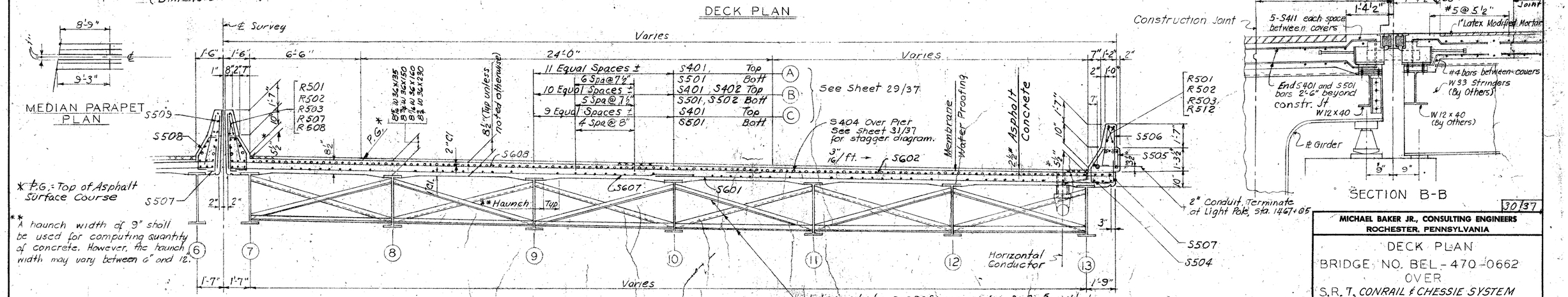

SECTION A-A (From Sht 29)
EASTBOUND BEAM SPANS

MICHAEL BAKER JR., CONSULTING ENGINEERS
ROCHESTER, PENNSYLVANIA

DECK PLAN
BRIDGE NO. BEL-470-0662
OVER
S.R. 7, CONRAIL & CHESSIE SYSTEM
STA. 1462+80.25 TO STA. 1468+69.60

DESIGNED	DRAWN	TRACED	CHECKED	REVIEWED DATE	REVISED
DWP			BLA	WAK 8/18/76	2/23/78

BEAVER VALLEY ENGINEERING SUPPLIES CO. REORDER A-23879

MICROFILMED
AUG 15 1980

FED. RD. DIVISION	STATE	PROJECT	TYPE FUNDS
5	OHIO		

230
288

BEL. 470·590

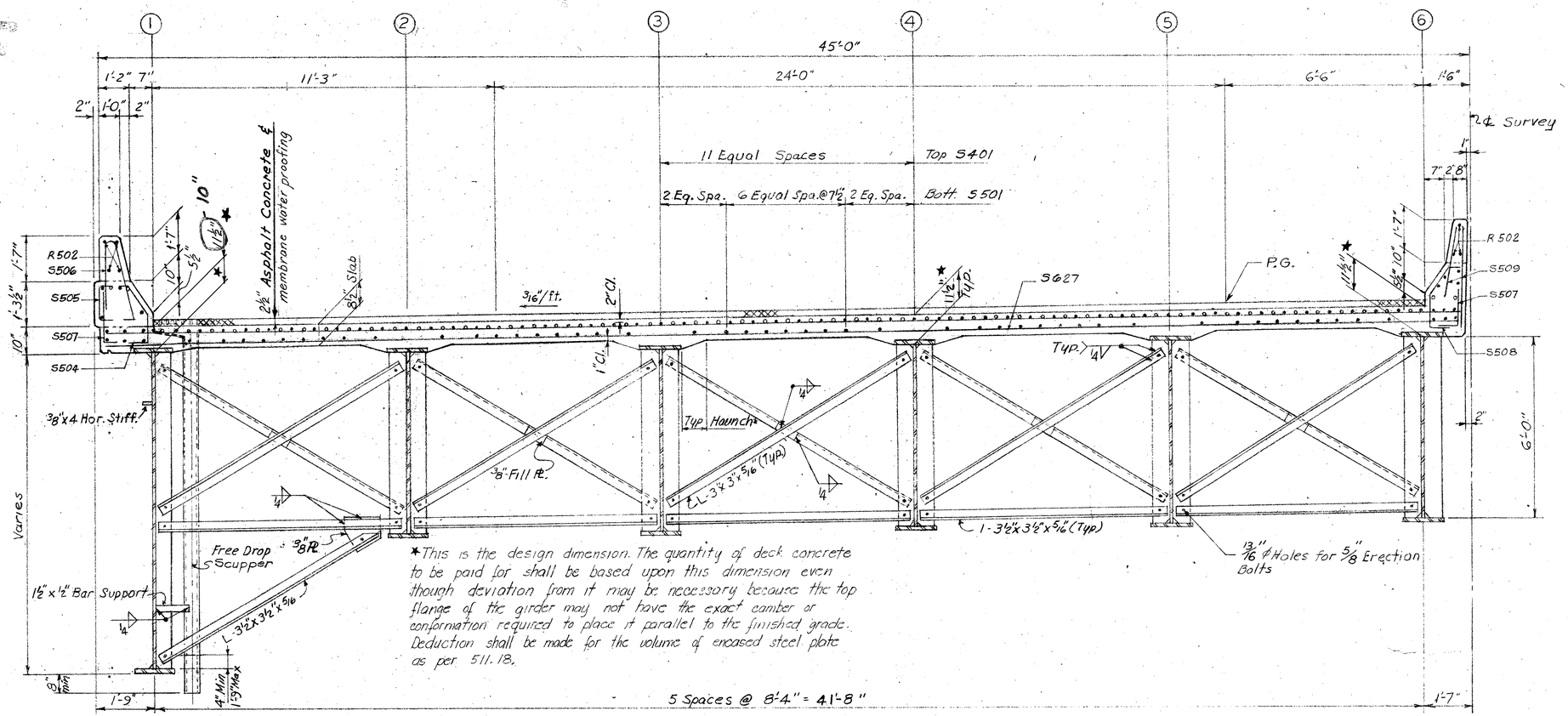

*This is the design dimension. The quantity of deck concrete to be paid for shall be based upon this dimension even though deviation from it may be necessary because the top flange of the girder may not have the exact camber or conformation required to place it parallel to the finished grade. Deduction shall be made for the volume of encased steel plate as per 511.18.

SECTION G-G (FROM SHEET 30/37

WESTBOUND GIRDER SPANS (FOR EASTBOUND SEE SHEET 32/37)

WEST BOUND LANES
TABLE OF DECK ELEVATIONS
@ TOP OF CONCRETE SLAB

STATION	℄ Brg @	Curb Constr.	Curb Final	Median Constr.**	Median Final
1462 + 83.01	Abut. 1			689.94	689.94
1462 + 94.76	Abut. 1	689.55	689.55		
1463 + 00.		689.66	689.66	690.32	690.31
1463 + 22.01	Pier 1			690.81	690.81
1463 + 25.00		690.24	690.23	690.88	690.88
1463 + 33.76	Pier 1	690.44	690.44		
1463 + 50.00		690.84	690.83	691.50	691.48
1463 + 75.00		691.46	691.45	692.10	692.10
1463 + 77.01	Pier 2			692.15	692.15
1463 + 88.76	Pier 2	691.81	691.81		
1464 + 00.		692.10	692.10	692.75	692.75
1464 + 25.00		692.78	692.78	693.43	693.43
1464 + 45.83	Pier 3			694.02	694.02
1464 + 50.00		693.49	693.49	694.14	694.14
1464 + 52.77	Pier 3	693.57	693.57		
1464 + 75.00		694.25	694.22	694.92	694.87
1465 + 00.		695.01	694.97	695.67	695.62
1465 + 25.00		695.74	695.72	696.37	696.37
1465 + 28.83	Pier 4			696.48	696.48
1465 + 35.76	Pier 4	696.04	696.04		
1465 + 50.00		696.46	696.47	697.10	697.12
1465 + 73.33	Hinge			697.79	697.82
1465 + 75.00		697.21	697.22	697.85	697.87
1465 + 80.27	Hinge	697.36	697.38		
1465 + 83.33	Pier 5			698.12	698.12
1465 + 90.27	Pier 5	697.68	697.68		
1466 + 00		697.99	697.97	698.64	698.62
1466 + 25.00		698.77	698.72	699.44	699.37
1466 + 50.00		699.53	699.47	700.21	700.12
1466 + 75.00		700.27	700.22	700.94	700.87
1467 + 00.		700.99	700.97	701.65	701.62
1467 + 25.00		701.72	701.72	702.37	702.37
1467 + 28.09	Pier 6			702.46	702.46
1467 + 31.56	Pier 6	701.92	701.92		
1467 + 50.00		702.47	702.47	703.13	703.12
1467 + 75.00		703.24	703.22	703.92	703.87
1468 + 00.		704.00	703.97	704.69	704.62
1468 + 25.00		704.75	704.72	705.44	705.37
1468 + 50.00		705.48	705.47	706.15	706.12
1468 + 68.85	Pier 7	706.04	706.04	706.69	706.69

*See Haunch note on sheet 30/37
**Deck elevations before deflection occurs due to slab, parapets and wearing surface.

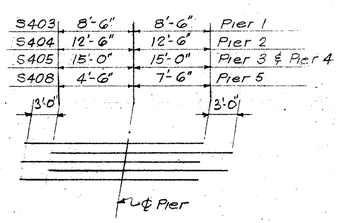

STAGGER DIAGRAM
#4 bars over Piers

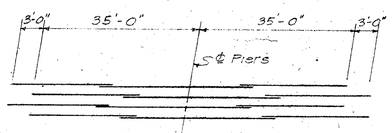

S409 bars over Pier 6

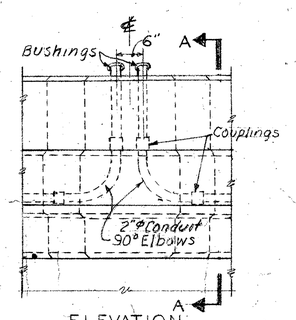

ELEVATION

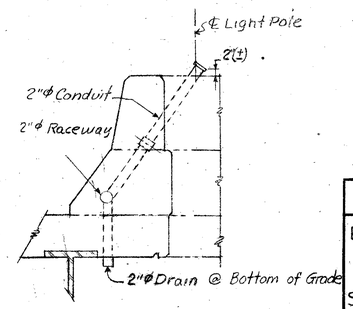

SECTION A-A

CURB DETAIL WITHOUT JUNCTION BOX

31/37

MICHAEL BAKER JR., CONSULTING ENGINEERS
ROCHESTER, PENNSYLVANIA

DECK SECTION-SPANS 6 & 7-LT.
BRIDGE NO. BEL-470 0662
OVER
S.R. 7, CONRAIL & CHESSIE SYSTEM
STA. 1462+80.25 TO STA 1468+68.60

DESIGNED	DRAWN	TRACED	CHECKED	REVIEWED	DATE	REVISED
DWP	OW		BLA	WRK	8/18/76	9-12-78 2/23/79

BEAVER VALLEY ENGINEERING SUPPLIES CO. REORDER A-23879

MICROFILMED
AUG 15 1990

FED. RD. DIVISION	STATE	PROJECT	TYPE FUNDS
5	OHIO		

231/288

BEL-470-5.90

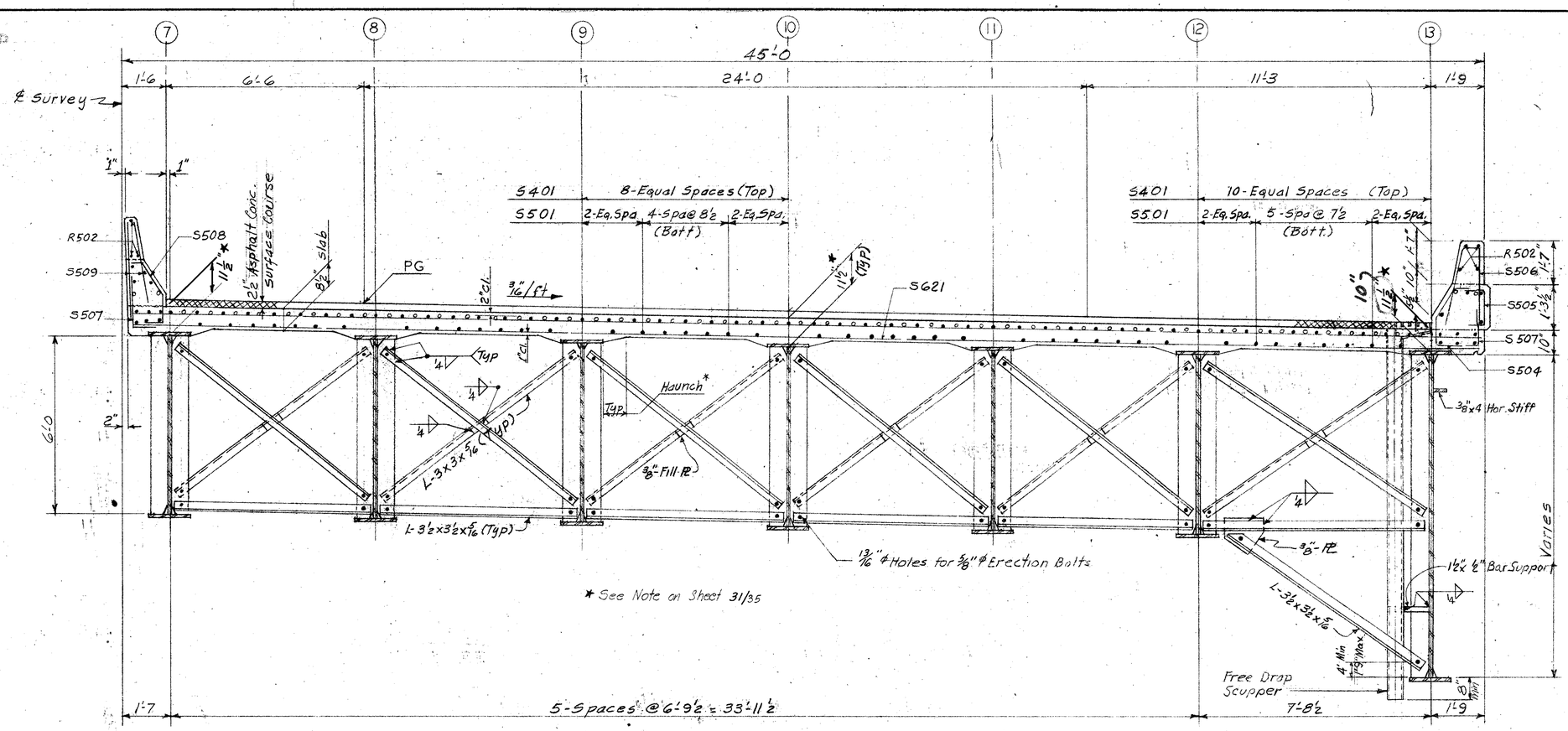

* See Note on Sheet 31/35

SECTION-HH (FROM SHEET 30/37)

EASTBOUND GIRDER SPANS
(FOR WESTBOUND SEE SHT 31/37)

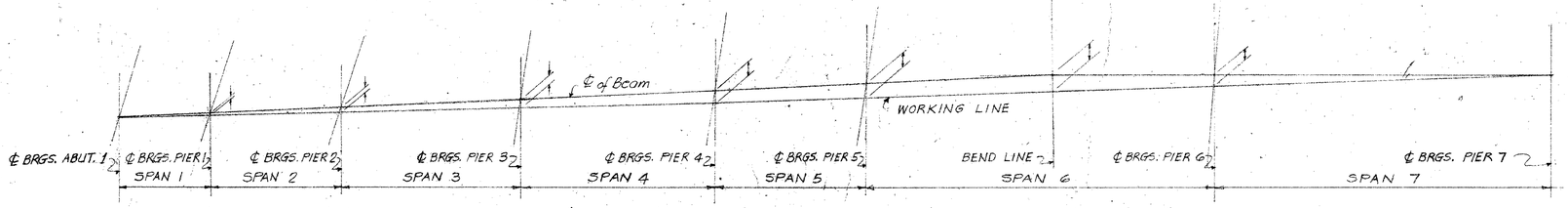

LATERAL BLOCKING - PLAN

EAST BOUND LANES
TABLE OF DECK ELEVATIONS
@ TOP OF CONCRETE SLAB

STATION	℄ Brg. @	Median Constr.	Median Final	Curb Constr.	Curb Final
1462+67.67	Abut. 1	—	—	688.82	688.82
1462+75.00	—	—	—	688.97	688.97
1462+82.12	Abut. 1	689.92	689.92	—	—
1463+00.	—	690.82	690.31	689.52	689.52
1463+06.94	Pier 1	—	—	689.68	689.68
1463+21.12	Pier 1	690.79	690.79	—	—
1463+25.00	—	690.88	690.88	690.11	690.10
1463+50.00	—	691.49	691.48	690.71	690.71
1463+62.33	Pier 2	—	—	691.02	691.02
1463+75.00	—	692.10	692.10	691.35	691.34
1463+76.12	Pier 2	692.19	692.19	—	—
1464+00.	—	692.78	692.75	692.02	692.00
1464+25.00	—	693.45	693.43	692.69	692.69
1464+37.49	Pier 3	—	—	693.04	693.04
1464+45.31	Pier 3	694.00	694.00	—	—
1464+50.00	—	694.14	694.14	693.42	693.41
1464+75.00	—	694.91	694.87	694.19	694.15
1465+00.	—	695.60	695.62	694.94	694.91
1465+20.84	Pier 4	—	—	695.54	695.54
1465+25.00	—	696.37	696.37	695.67	695.67
1465+28.31	Pier 4	696.47	696.47	—	—
1465+50.00	—	697.11	697.12	696.42	696.43
1465+65.52	Hinge	—	—	696.88	696.90
1465+72.82	Hinge	697.77	697.80	—	—
1465+75.00	—	697.84	697.87	697.19	697.19
1465+75.57	Pier 5	—	—	697.21	697.21
1465+82.82	Pier 5	698.10	698.10	—	—
1466+00.	—	698.65	698.62	697.99	697.95
1466+25.00	—	699.45	699.37	698.78	698.71
1466+50.00	—	700.21	700.12	699.53	699.47
1466+75.00	—	700.95	700.87	700.25	700.22
1467+00	—	701.65	701.62	700.98	700.97
1467+24.38	Pier 6	—	—	701.70	701.70
1467+25.00		702.37	702.37	701.72	701.72
1467+27.83	Pier 6	702.45	702.45	—	—
1467+50.00	—	703.13	703.12	702.47	702.47
1467+75.00	—	703.92	703.87	703.24	703.22
1468+00.	—	704.70	704.62	704.00	703.97
1468+25.00	—	705.44	705.37	704.76	704.72
1468+50.00	—	706.15	706.12	705.48	705.47
1468+68.85	Pier 7	706.69	706.69	706.03	706.03

*See Haunch note on sheet 30/37
** Deck elevations before deflection occurs, due to slab, parapets and wearing surface.

LATERAL BLOCKING TABLE (INCHES)

BEAM NO.	℄ ABUT. 1	℄ PIER 1	℄ PIER 2	℄ PIER 3	℄ PIER 4	℄ PIER 5	℄ BEND LINE	℄ PIER 6	℄ PIER 7
8	0	5/8	1/2	2 5/8	3 15/16	4 15/16	6 1/2	5 1/8	0
9	0	1 1/4	3	5 1/4	7 7/8	9 5/8	1'-1"	10 3/16	0
10	0	1 7/8	4 7/16	7 7/8	11 15/16	1'-2 3/8"	1'-7 7/16	1'-3 5/16"	0
11	0	2 7/16	5 15/16	10 1/2	1'-3 11/16"	1'-7 1/8"	2'-1 15/16"	1'-8 3/8"	0
12	0	3 1/16	7 3/8	1'-1 1/8"	1'-7 5/8"	1'-11 7/8"	2'-8 3/8"	2'-1 7/16"	0
13	0	4 3/16	10 1/8	1'-6 3/8"	2'-3"	2'-8 7/8"	3'-5 5/16"	2'-3 15/16"	0

32/37

MICHAEL BAKER JR., CONSULTING ENGINEERS
ROCHESTER, PENNSYLVANIA

DECK SECTION-SPANS 6 & 7-RT.
BRIDGE NO. BEL-470-0662
OVER
S.R. 7, CONRAIL & CHESSIE SYSTEM
STA. 1462+80.25 TO STA. 1468+69.60

DESIGNED	DRAWN	TRACED	CHECKED	REVIEWED	DATE	REVISED
DWP	T P		BLA	WRK.	8/16/76	9-16-78 2/23/78

BEAVER VALLEY ENGINEERING SUPPLIES CO. REORDER A-23979

MICROFILMED
AUG 15 '88

FED. RD. DIVISION	STATE	PROJECT	TYPE FUNDS
5	OHIO		

232/288

BEL. 470-5.90

Note: See Standard Drawing SD-1-69 for scupper details not shown.

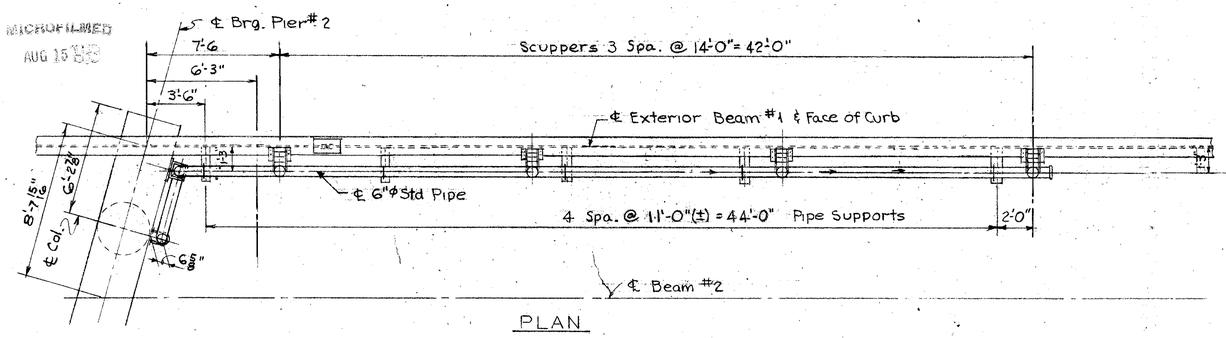

PLAN

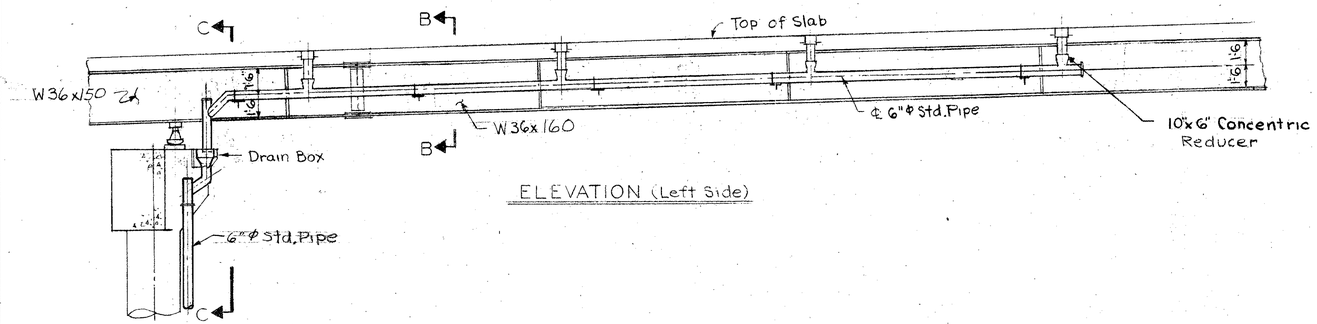

ELEVATION (Left Side)

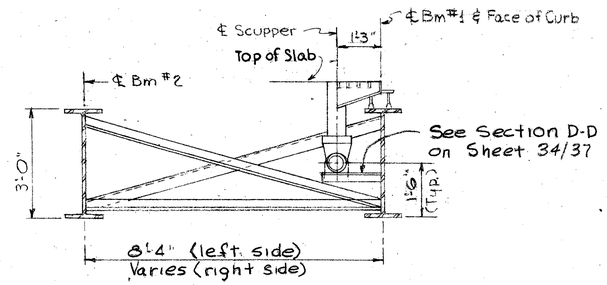

SECTION B-B (Left Side)

SECTION D-D (Right Side)

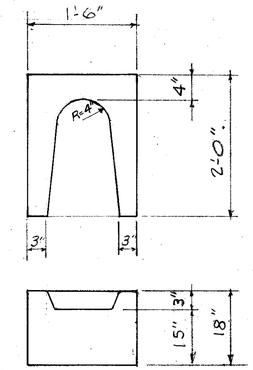

SPLASH BLOCK DETAIL

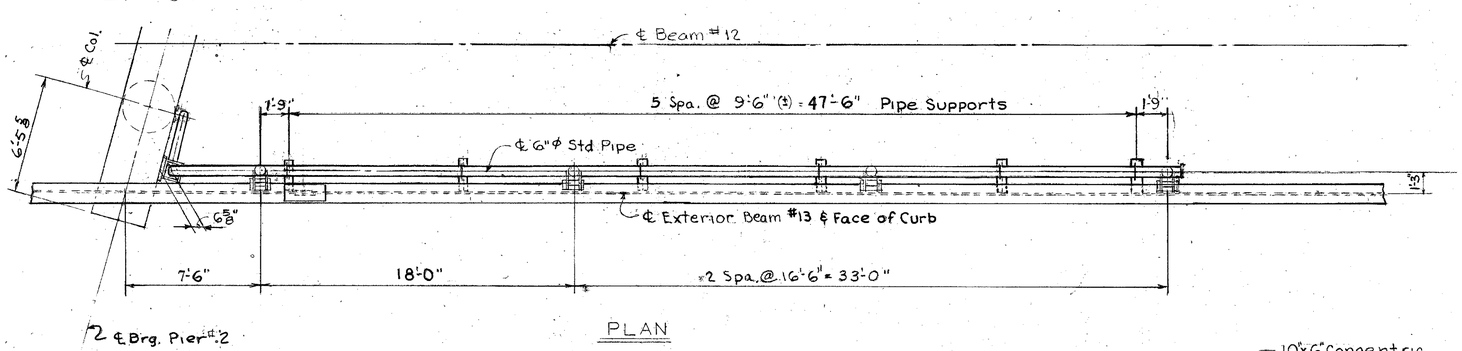

PLAN

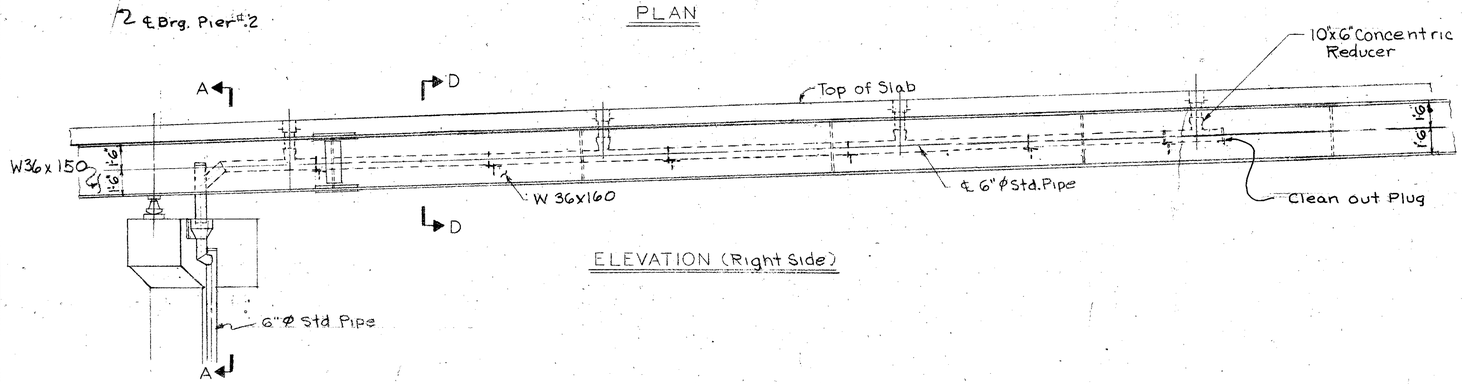

ELEVATION (Right Side)

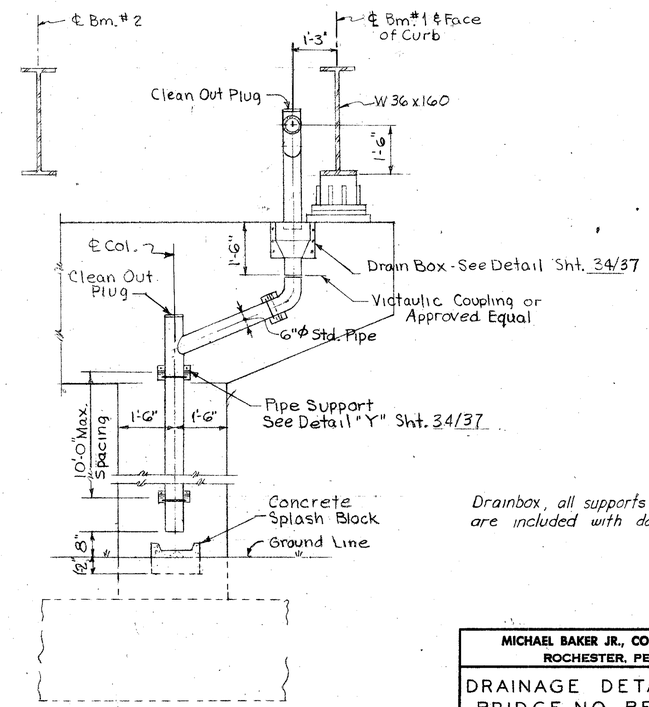

Drainbox, all supports and splash block are included with downspout for payment.

SECTION C-C (Left Side)

SECTION A-A (Right Side)

33/37

MICHAEL BAKER JR., CONSULTING ENGINEERS
ROCHESTER, PENNSYLVANIA

DRAINAGE DETAILS (SPAN 3)
BRIDGE NO. BEL-470-0662
OVER
S.R. 7, *CONRAIL & CHESSIE SYSTEM*
STA. 1462+80.25 TO STA. 1468+69.60

DESIGNED	DRAWN	TRACED	CHECKED	REVIEWED	DATE	REVISED
BLA	OW		TMW	WRK	8/10/76	

BEAVER VALLEY ENGINEERING SUPPLIES CO. REORDER A-33879

FED. RD. DIVISION	STATE	PROJECT	TYPE FUNDS
5	OHIO		

233/288

BEL. 470-5.90

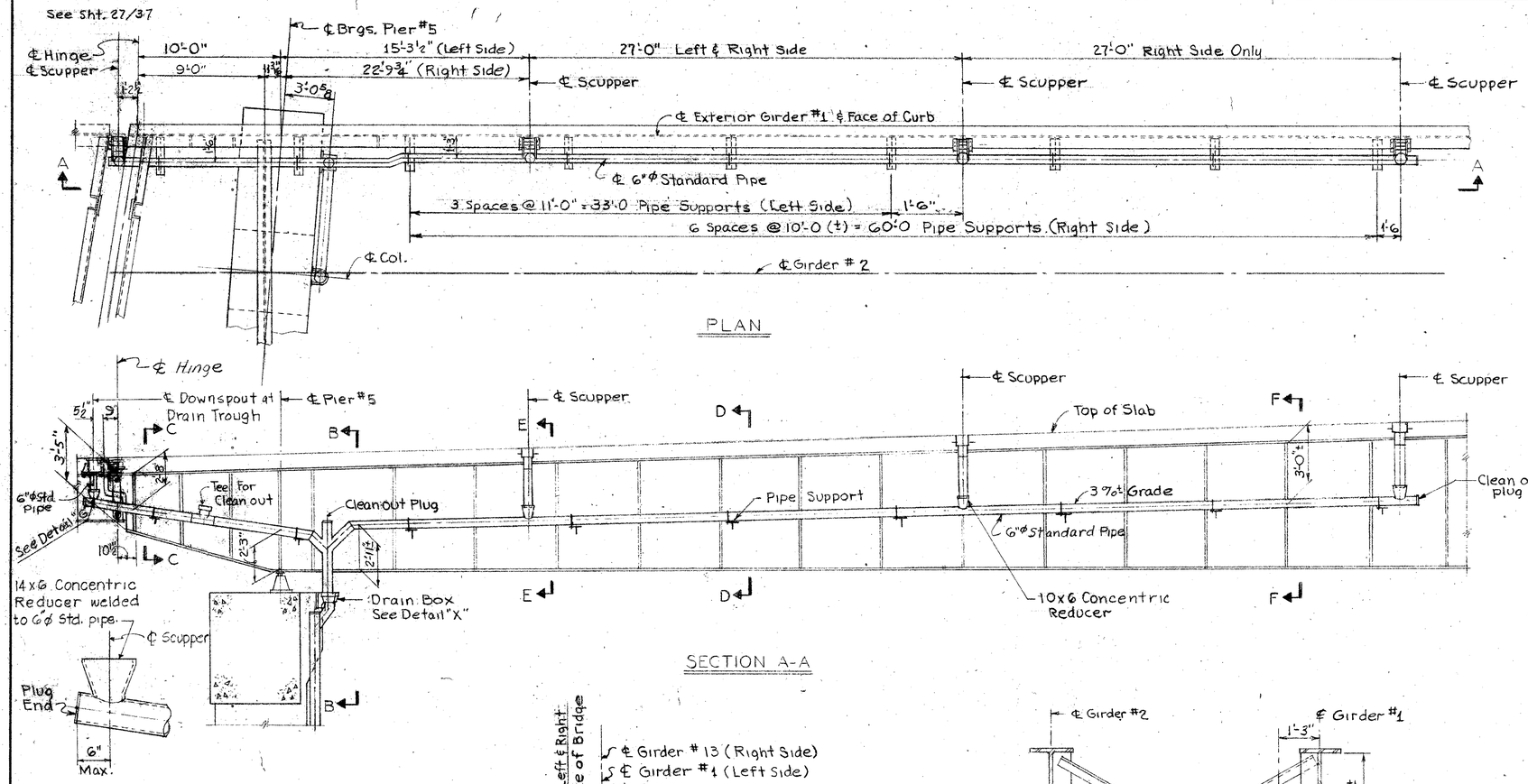

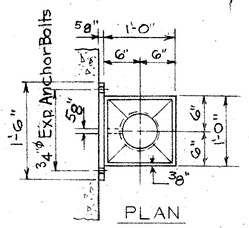

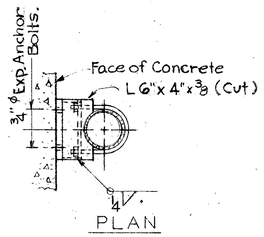

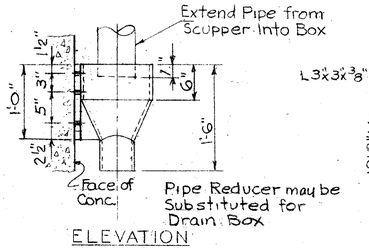

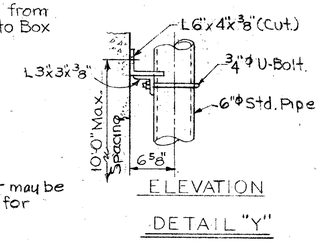

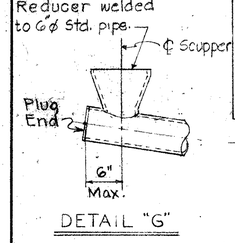

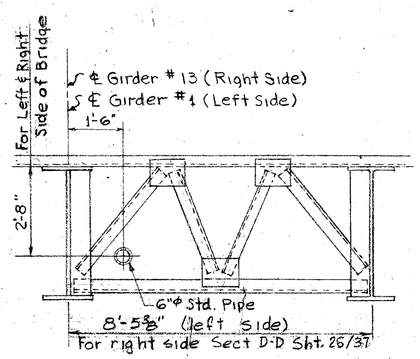

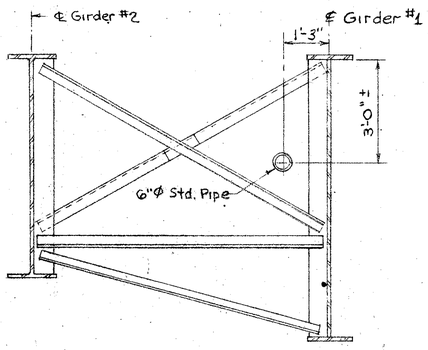

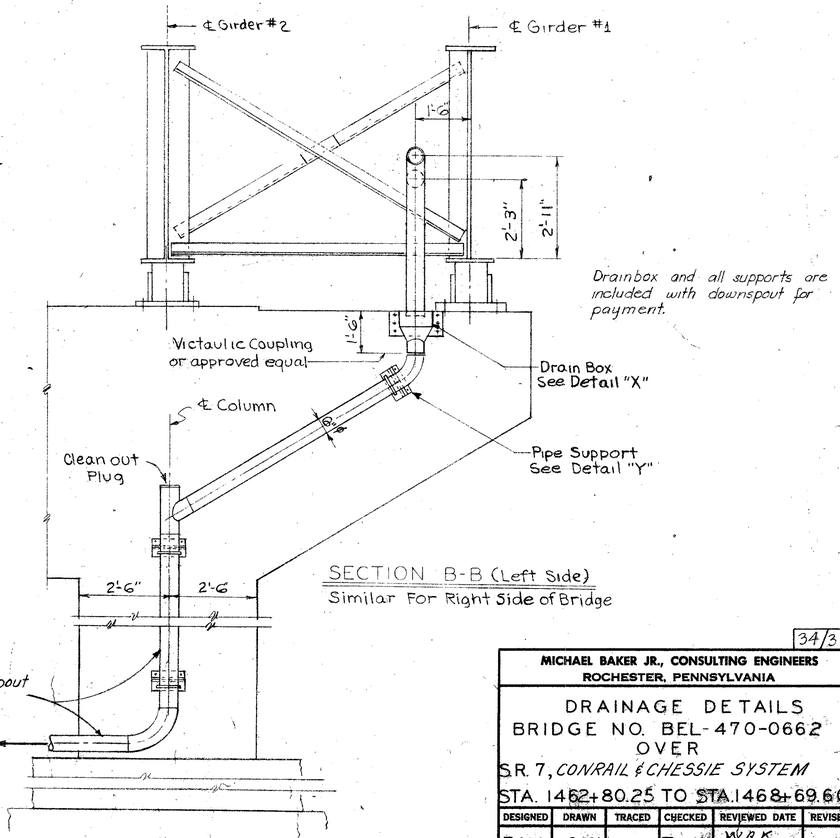

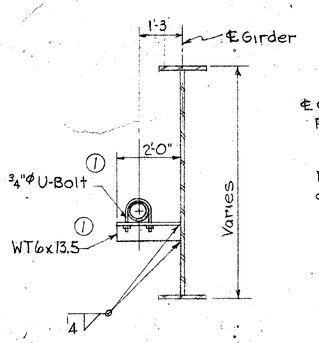

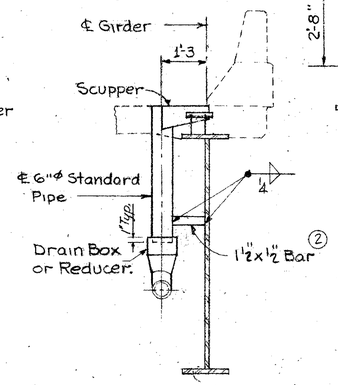

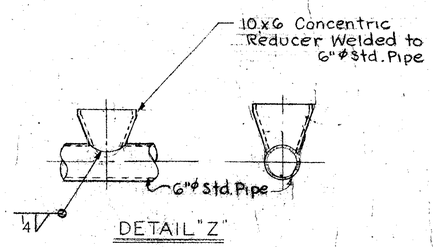

① Included with Item 513 for payment.
② Included with Item 518, Scuppers for payment.

34/37

MICHAEL BAKER JR., CONSULTING ENGINEERS
ROCHESTER, PENNSYLVANIA

DRAINAGE DETAILS
BRIDGE NO. BEL-470-0662
OVER
S.R. 7, CONRAIL & CHESSIE SYSTEM
STA. 1462+80.25 TO STA. 1468+69.60

DESIGNED	DRAWN	TRACED	CHECKED	REVIEWED	DATE	REVISED
BLA	OW		TMW	WRK	8/16/76	

MICROFILMED AUG 15 1977

BEAVER VALLEY ENGINEERING SUPPLIES CO. REORDER A-23879

MICROFILMED
AUG 15 ...

FHWA REGION	STATE	PROJECT	
5	OHIO		

234/288

BEL-470-5.90

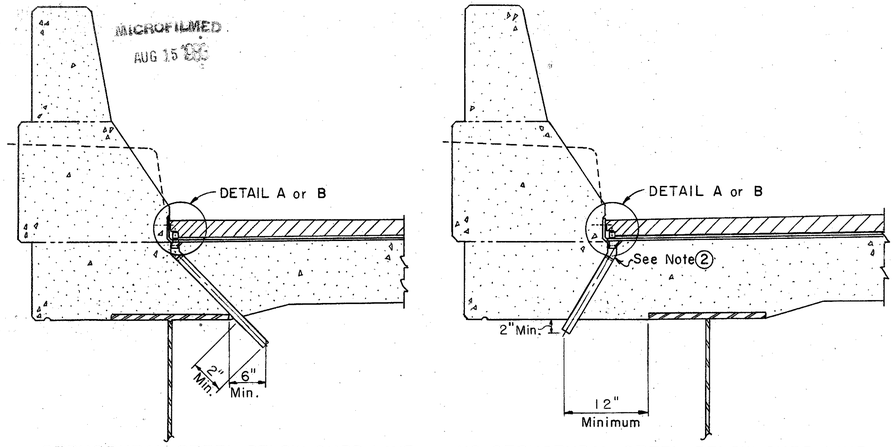

STRUCTURAL STEEL BELOW CURB LINE NO STRUCTURAL STEEL BELOW CURB LINE

DRAINAGE TUBE ARRANGEMENT

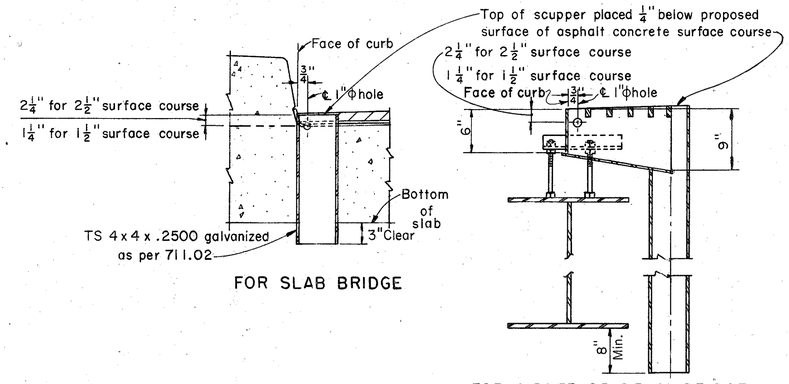

FOR SLAB BRIDGE

FOR GIRDER OR BEAM BRIDGE

SCUPPER DETAILS

(Scupper details conform to SD-1-69 except as noted)

SUBDRAINAGE FOR ASPHALT CONCRETE SURFACE COURSE

The subdrainage system shall consist of PVC pipes and fittings and structural tubes as specified on this sheet. The pipes shall be spaced at approximately six foot intervals with a pipe placed within one foot of each expansion joint, except that they shall be relocated or extended as necessary for any discharge to clear bridge seats, structural members such as beams, diaphragms and crossbracing by at least six (6) inches. Pipes shall not be placed over or within four (4) feet of a pavement or sidewalk, within ten (10) feet of the centerline of a railroad track or along curb lines where the deck configuration does not permit water to accumulate.

Where the plans specify a two and one half ($2\frac{1}{2}$) inch surface course, the subdrainage shall be as shown on Detail A. The structural tube may be placed in any convenient lengths using butt joints. The price bid per linear foot for this drainage system shall include all PVC pipe and fittings, structural tubes, and all labor necessary to complete the item. The quantity will be the actual length of structural tube required. Payment will be made at the contract price for: Item 518, Lin. Ft., Subdrainage for wearing course, as per plan.

Where the plans specify a one and one half ($1\frac{1}{2}$) inch surface course, the subdrainage shall be as shown in Detail B. The price bid for each drain shall include the PVC pipe and fitting, the hardware cloth and all necessary labor to complete the item. Payment will be made at the contract price for: Item 518, Ea., Subdrainage for wearing course, as per plan.

The 404 shall be either $2\frac{1}{2}$" placed in two $1\frac{1}{4}$" courses or $1\frac{1}{2}$" placed in one course.

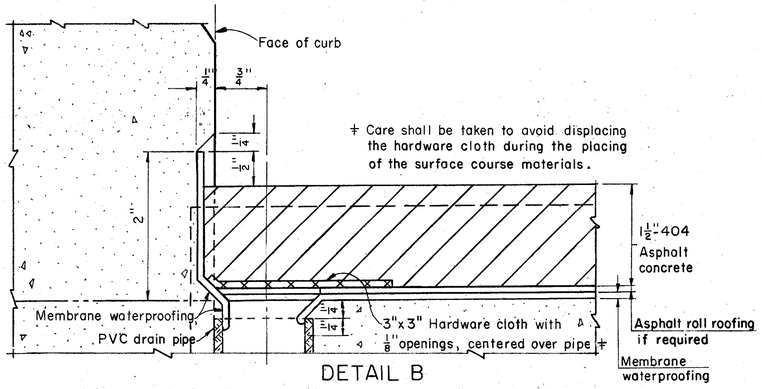

DETAIL B

SUBDRAINAGE FOR $1\frac{1}{2}$" SURFACE COURSE

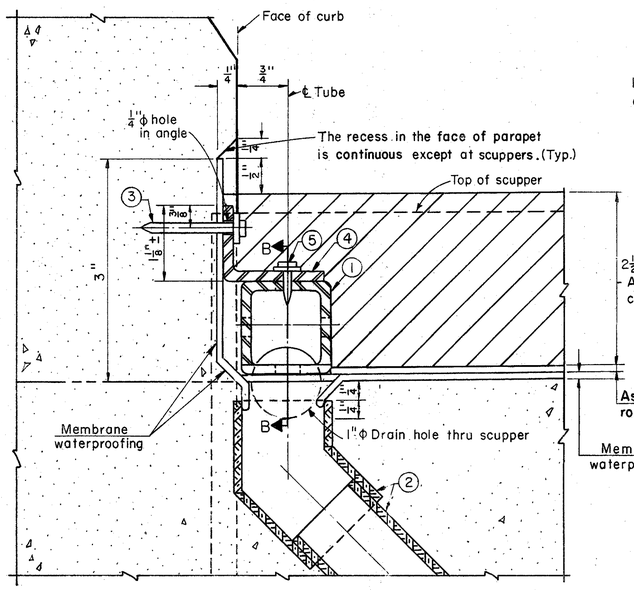

DETAIL A

SUBDRAINAGE FOR $2\frac{1}{2}$" SURFACE COURSE

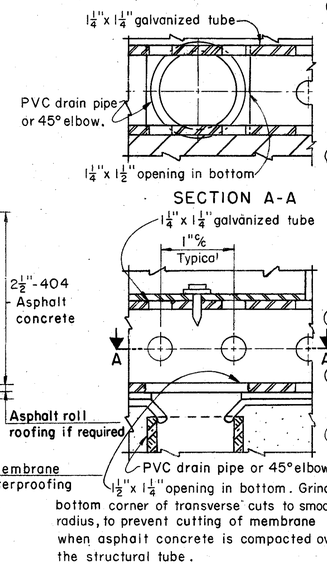

① - $1\frac{1}{4}$"x$1\frac{1}{4}$" galvanized, perforated, structural tube with $\frac{11}{32}$" ± Φ holes 1" on centers on all four sides as shown. Cut $1\frac{1}{2}$" ± x $1\frac{1}{4}$" opening in bottom, centered over each PVC drain pipe. The steel for the structural tube shall conform to the following:
PREGALVANIZED, ASTM A446, Grade A Steel, Galvanizing as per ASTM A525.
POSTGALVANIZED, ASTM A569 or A366, Galvanizing as per 711.02.
The minimum steel thickness shall be 0.105".
Any damaged galvanizing shall be repaired as per AASHO M36.
Install tubes with ⅛" expansion opening between pieces.

② - $1\frac{1}{4}$" PVC DRAIN PIPE AND 45° ELBOW. Position accurately to match $1\frac{1}{2}$" x $1\frac{1}{4}$" openings in perforated tube. Place membrane carefully at the pipe openings, making sure to completely seal around the lip of the pipe but taking care not to plug or constrict the opening. The drain pipe and elbow shall comply with ASTM D2661 or ASTM D2665.
The elbow shall be used only as required when structural steel is not below curb line.
Where the elbow is not adequate to provide clearance between the PVC pipe and the structural steel, the elbow shall be canted as required and cut on a line ¼" below and parallel with the deck surface. The solvent cement for the pipe and fittings shall conform to ASTM D2235 or ASTM D2564.

③ - $1\frac{1}{4}$" x $\frac{5}{32}$" x ¼" flat head drive pin and washer.
Fastening of the structural tube by methods other than shown shall be subject to approval by the Engineer. (Driving pins into bridge deck is prohibited.)

④ - L $1\frac{1}{2}$" x $1\frac{1}{2}$" x ⅛", 3" long, clipped and galvanized, or bent galvanized steel plate $2\frac{1}{2}$" x 3" x 0.105" thick. Attach to curb at approximately 5'-0"% except near joints, where the angle shall be placed within 6" of the end of each tube section.

⑤ - ½" x ⅛" x ¼" flat head drive pin and washer driven thru angle and tube.

Note: Wherever "PVC" appears it shall be considered to read "PVC or ABS".

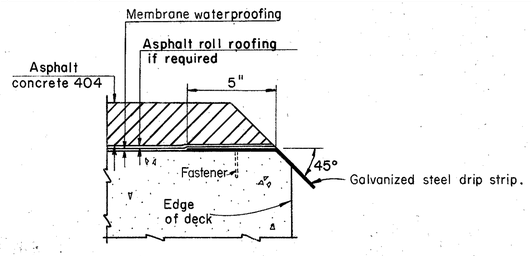

DRIP STRIP
BRIDGES WITHOUT CURBS

Galvanized Steel Drip Strip: Prior to applying deck membrane waterproofing, a bent galvanized steel drip strip, 8"x0.105" shall be installed along the edges of the deck as shown. The strips shall be fastened at 3'-0"% maximum with power driven pins or # 10 galvanized expansion screws, subject to the approval of the Engineer. The strips shall be placed the full length of the deck. Where splices are required a 3" (min.) lap shall be used, with a fastener through the lap. Steel shall meet the requirements of ASTM A568 and galvanizing shall be in accordance with 711.02. Payment shall be at the contract price bid for Item Special, Sq. Ft., Galvanized steel drip strip, which shall include all materials, labor, tools and incidentals necessary to complete the item.

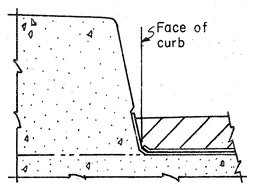

SHAPE OF SIDEWALK CURB

STATE OF OHIO
DEPARTMENT OF TRANSPORTATION
DIVISION OF HIGHWAYS
BUREAU OF BRIDGES

35/37

DECK DRAINAGE DETAILS
FOR BRIDGES WITH ASPHALT CONCRETE SURFACE COURSE

BRIDGE NO. BEL-470-0662

DESIGNED	DRAWN	TRACED	CHECKED	REVIEWED	DATE	REVISED
DLM	GF J	—	CPD	WJJ	12-3-75	

FED. RD. DIVISION	STATE	PROJECT	TYPE FUNDS
5	OHIO		

235/288

BEL-470-5.90

MARK	NO	LENGTH	WEIGHT	SH'P
ABUTMENT				
A 801	64	6'-11"	1182	Bt
A 701	1	4'-10"	10	Bt
A 702	1	4'-9"	10	Bt
A 703	1	4'-10"	10	Bt
A 704	1	5'-4"	11	Bt
A 705	1	6'-4"	13	Bt
A 601	8	23'-6"	282	S
A 602	27	13'-10"	561	Bt
A 603	100	8'-5"	1264	Bt
A 604	100	7'-3"	1089	Bt
A 605	100	7'-1"	1064	Bt
A 606	41	15'-7"	960	Bt
A 607	4	9'-8"	58	Bt
A 608	6	8'-4"	75	Bt
A 609	5	20'-11"	157	Bt
A 610	5	6'-9"	51	Bt
A 611	1	6'-2"	9	Bt
A 612	4	5'-1"	31	Bt
A 613	1	6'-10"	10	Bt
A 614	2	10'-11"	33	S
A 615	8	31'-6"	379	S
A 616	8	7'-4"	88	Bt
A 617	8	24'-5"	293	Bt
A 618	7	6'-3"	66	Bt
A 619	1	6'-7"	10	Bt
A 620	1	5'-1"	8	Bt
A 621	3	2'-9"	12	S
A 501	27	9'-3"	260	Bt
A 502	68	7'-4"	520	Bt
A 503	16	29'-0"	484	S
A 504	30	29'-6"	923	S
A 505	42	11'-1"	486	Bt
A 506	2	12'-9"	27	S
A 507	2	10'-10"	23	Bt
A 508	4	1'-6"	6	S
A 509	5	5'-6"	29	S
A 510	25	2'-3"	59	Bt
A 511	15	7'-0"	110	Bt
A 512 a	2 Set of 5	3'-2 to 3'-6"	35	S
A 513	1	4'-6"	5	S
A 514	4	3'-6"	15	S
A 515	1	5'-0"	5	S
A 516	10	8'-2"	85	S
A 517	2	8'-4"	17	S
A 518	4	8'-1"	34	S
A 519	12	14'-8"	184	S
A 520	18	24'-3"	455	S
A 521	16	22'-6"	375	S
A 522	16	22'-10"	381	S
A 523	7	5'-3"	38	S
A 524	1	5'-5"	6	S
A 525	1	4'-9"	5	S
A 526	1	3'-8"	4	S
A 527	3	3'-2"	10	S
A 528	12	12'-2"	152	S
A 529	12	18'-2"	227	S
A 530	4	12'-4"	51	S
A 531	2	8'-0"	17	S
A 532	2	12'-11"	27	Bt
A 533	10	3'-5"	36	S
A 534	2	15'-0"	31	S
A 535	2	8'-10"	18	Bt
PIER NO. 1				
B 1001	8	36'-11"	1240	S
B 1002	8	36'-8"	1262	S
B 1003	8	37'-4"	1316	S

BENDING DIAGRAMS

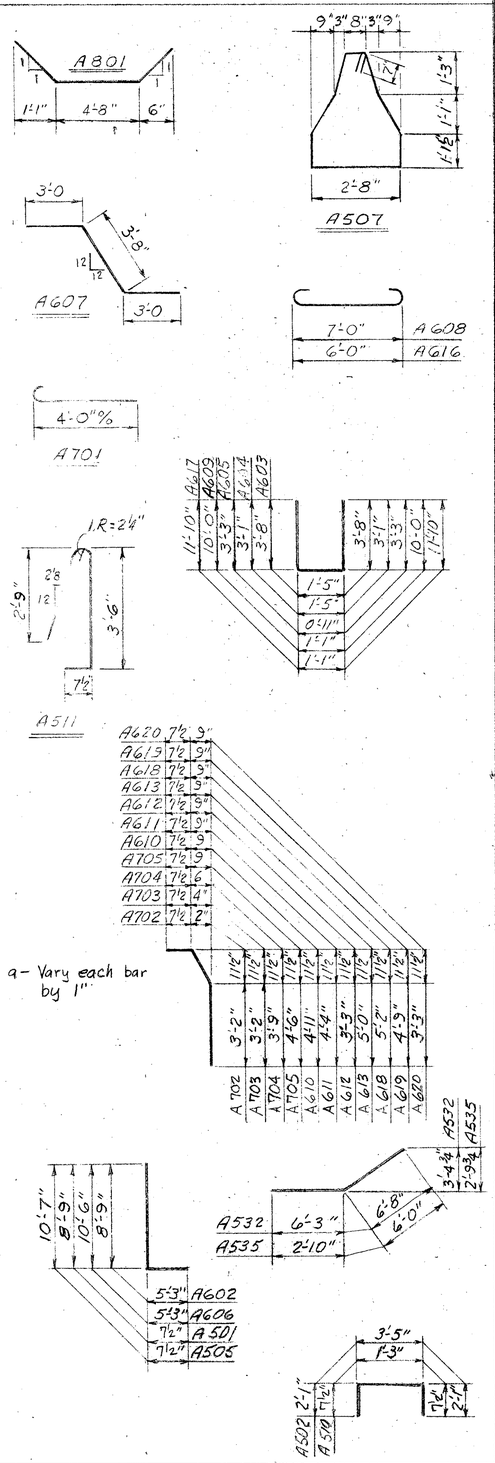

a - Vary each bar by 1"

MARK	NO	LENGTH	WEIGHT	SH'P
PIER NO. 1 (CONT.)				
B 1004	4	18'-0"	310	S
B 1005	6	30'-7"	790	S
B 1006	6	37'-3"	962	S
B 1007	6	40'-9"	1060	S
B 1008	4	46'-6"	800	S
B 1009	14	24'-7"	1487	S
B 1010	5	18'-4"	394	Bt
B 1011	5	35'-4"	760	Bt
B 1012	5	42'-4"	911	Bt
B 1013	5	20'-5"	439	Bt
B 1014	48	8'-7"	1773	Bt
B 1015	48	21'-0"	4337	S
B 801	4	36'-8"	392	S
B 601	3	5'-8"	26	Bt
B 602	3	6'-2"	27	Bt
B 603	3	6'-3"	28	Bt
B 604	3	6'-1"	27	Bt
B 501	138	6'-8"	960	Bt
B 502	4	29'-0"	121	S
B 503	2	27'-4"	57	S
B 504	4	28'-10"	120	S
B 505	2	27'-2"	57	S
B 506	8	24'-5"	204	S
B 507	2	40'-0"	83	S
B 508 b	1 Set of 4	6'-9 to 10'-3"	35	Bt
B 509	68	5'-7"	396	Bt
B 510	10	10'-3"	107	Bt
B 511	10	10'-7"	110	Bt
B 512 c	1 Set of 4	10'-7" to 6'-9"	36	Bt
B 513 c	1 Set of 4	6'-9" to 10'-7"	36	Bt
B 514	13	9'-11"	134	Bt
B 515	19	8'-9"	173	Bt
B 516 d	1 Set of 4	8'-9" to 6'-9"	33	Bt
PIER NO. 2				
C 1001	10	39'-6"	1700	S
C 1002	10	36'-0"	1549	S
C 1003	8	33'-0"	1136	S
C 1004	8	41'-0"	1411	S
C 1005	10	36'-6"	1571	S
C 1006	10	28'-8"	1234	S
C 1007	5	18'-4"	394	Bt
C 1008	5	35'-4"	760	Bt
C 1009	5	40'-10"	879	Bt
C 1010	5	20'-5"	439	Bt
C 1011	48	22'-6"	4647	S
C 1012	48	8'-7"	1773	Bt
C 1013	2	27'-0"	232	S
C 1014	14	23'-6"	1416	S
C 801	4	36'-8"	392	S
C 601	3	6'-2"	28	Bt
C 602	3	6'-3"	28	Bt
C 603	3	6'-7"	30	Bt
C 604	3	6'-3"	28	Bt
C 501	136	7'-8"	1088	Bt
C 502	4	21'-0"	88	S
C 503	4	34'-2"	143	S
C 504	2	20'-3"	42	S
C 505	2	31'-8"	66	S
C 506	8	24'-0"	200	S
C 507	4	22'-10"	95	S

BENDING DIAGRAMS

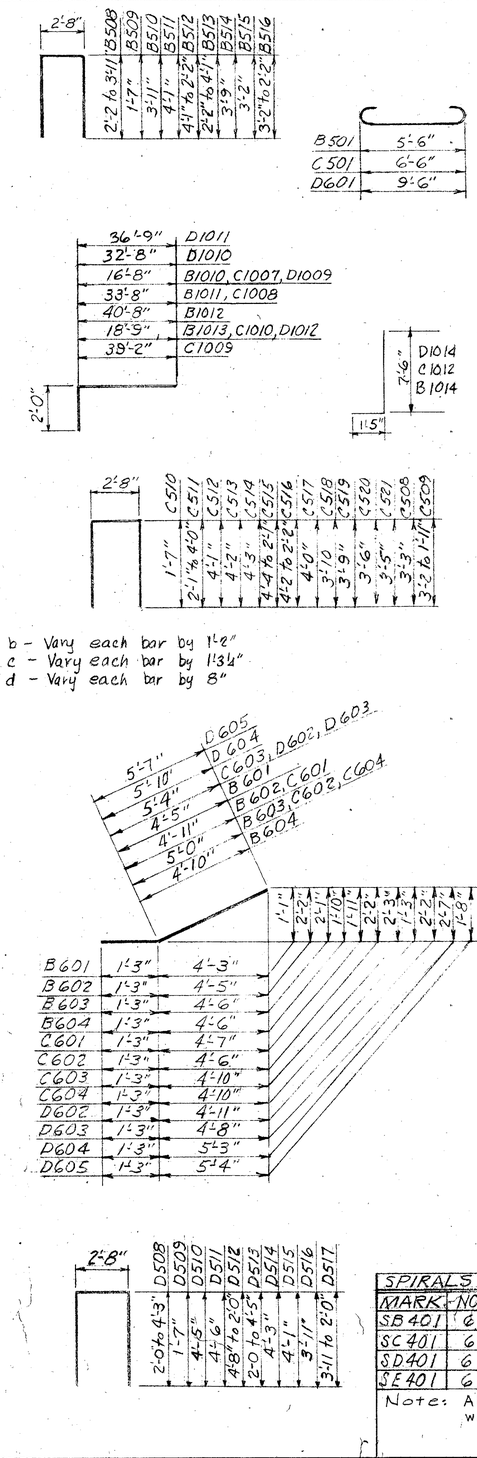

b - Vary each bar by 1'-2"
c - Vary each bar by 1'-3½"
d - Vary each bar by 8"

MARK	NO	LENGTH	WEIGHT	SH'P
PIER NO. 2 (CONT.)				
C 508	7	8'-11"	65	Bt
C 509 f	1 Set of 5	8'-9" to 6'-3"	39	Bt
C 510	88	5'-7"	512	Bt
C 511 g	1 Set of 5	6'-7" to 10'-3"	44	Bt
C 512	15	10'-7"	166	Bt
C 513	10	10'-9"	112	Bt
C 514	5	10'-11"	57	Bt
C 515 h	1 Set of 5	11'-1" to 6'-7"	46	Bt
C 516 k	1 Set of 5	6'-9 to 10'-9"	46	Bt
C 517	7	10'-5"	76	Bt
C 518	5	10'-1"	53	Bt
C 519	7	9'-11"	72	Bt
C 520	7	9'-5"	69	Bt
C 521	5	9'-3"	48	Bt
PIER NO. 3				
D 1001	8	32'-9"	1127	S
D 1002	8	38'-0"	1308	S
D 1003	8	32'-0	1102	S
D 1004	4	16'-0"	275	S
D 1005	8	26'-0"	895	S
D 1006	8	35'-0"	1205	S
D 1007	8	39'-5"	1357	S
D 1008	2	40'-0"	344	S
D 1009	7	18'-4"	552	Bt
D 1010	7	34'-4"	1034	Bt
D 1011	5	38'-5"	827	Bt
D 1012	5	20'-5"	439	Bt
D 1013	48	24'-3"	5009	S
D 1014	48	8'-7"	1773	Bt
D 1015	8	40'-0"	1377	S
D 1016	2	36'-9"	316	S
D 1017	2	18'-2"	156	S
D 801	5	35'-2"	470	S
D 601	196	10'-10"	3188	Bt
D 602	3	6'-7"	30	Bt
D 603	3	6'-7"	30	Bt
D 604	3	7'-1"	32	Bt
D 605	3	6'-10"	31	Bt
D 501	4	24'-1"	100	S
D 502	4	23'-10"	99	S
D 503	2	21'-3"	44	S
D 504	2	21'-0"	44	S
D 505	8	26'-2"	218	S
D 506	2	23'-0"	48	S
D 507	2	23'-11"	50	S
D 508 m	1 Set of 4	6'-5" to 10'-1"	36	Bt
D 509	68	5'-7"	396	Bt
D 510	11	11'-3"	129	Bt
D 511	24	11'-5"	286	Bt
D 512 n	1 Set of 4	11'-9" to 6'-5"	38	Bt
D 513 p	1 Set of 4	6'-5" to 11'-7"	38	Bt
D 514	5	10'-11"	57	Bt
D 515	5	10'-7"	55	Bt
D 516	12	10'-3"	128	Bt
D 517 c	1 Set of 4	10'-3" to 6'-5"	35	Bt

f - Vary each bar by 7½"
g - Vary each bar by 11½"
h - Vary each bar by 1'-1½"
k - Vary each bar by 1'-0"

NOTE:
Refer to CMS Sections 106.03, 700, 709.01 thru 709.05 and 709.08. Sufficient additional reinforcing steel shall be provided for sampling. Random samples shall be replaced in the structure by the additional steel, spliced in accordance with 509.08.

m - Vary each bar by 1'-6"
n - Vary each bar by 1'-9¼"
p - Vary each bar by 1'-8¾"

SPIRALS					
MARK	NO.	LENGTH	PITCH	CORE DIA.	WEIGHT
SB 401	6	18'-0"	4½"	32"	2032
SC 401	6	19'-6"	4½"	32"	2194
SD 401	6	21'-0"	4½"	32"	2356
SE 401	6	30'-0"	4½"	38"	3846

Note: All other details to be in accordance with C.R.S.I. standard practice.

36/37

MICHAEL BAKER JR., CONSULTING ENGINEERS
ROCHESTER, PENNSYLVANIA

REINFORCING STEEL LIST
BRIDGE NO. BEL-470-0662
OVER
S.R. 7, CONRAIL & CHESSIE SYSTEM
STA. 1462+80.25 TO STA. 1468+69.60

DESIGNED	DRAWN	TRACED	CHECKED	REVIEWED, DATE	REVISED
T.M.W.	D.W.		D.W.P.	WRK 8/18/76	

RECEIVED AUG 13 1982

BEAVER VALLEY ENGINEERING SUPPLIES CO. REORDER A-20734

FED. RD. DIVISION	STATE	PROJECT	TYPE FUNDS
5	OHIO		

236/288

BEL-470-5.90

MARK	NO	LENGTH	WEIGHT	SH'P
PIER NO. 4				
E 1101	6	19'-1	608	Bt
E 1102	6	34'-6	1100	Bt
E 1103	6	20'-4	648	Bt
E 1104	6	19'-6	622	Bt
E 1105	6	35'-2"	1121	S
E 1106	6	37'-2"	1185	S
E 1001	10	39'-5"	1696	S
E 1002	10	34'-4"	1477	S
E 1003	10	24'-5"	1050	S
E 1004	10	31'-4"	1348	S
E 1005	10	36'-2"	1556	S
E 1006	10	33'-8"	1427	S
E 1007	72	33'-0"	10224	S
E 1008	72	8'-11"	2764	Bt
E 801	18	28'-7	1374	S
E 802	2 of 8	28'-4 to 25'-8	1153	S
E 803	34	33'-1"	3003	S
E 804	18	35'-4"	1698	S
E 805	2 of 8	32'-5 to 35'-1	1442	S
E 601	215	11'-10"	3821	Bt
E 602	3	6'-2"	28	Bt
E 603	3	6'-5	29	Bt
E 604	3	7'-1	32	Bt
E 605	3	6'-8	30	Bt
E 606	166	5'-2"	1288	Bt
E 607	4 of 4	7'-0" to 12'-9	237	S
E 608	150	12'-9"	2873	S
E 501	8	24'-0"	200	S
E 502	4	22'-0"	92	S
E 503	8	25'-10	216	S
E 504	4	23'-8"	99	S
E 505	88	6'-5"	589	Bt
E 506 a	1 of 5	6'-11" to 10'-11"	47	Bt
E 507	32	11'-3"	375	Bt
E 508 b	1 of 5	11'-5" to 6'-11"	48	Bt
E 509 c	1 of 6	6'-11" to 11'-1"	56	Bt
E 510	17	10'-11"	194	Bt
E 511	17	10'-3"	182	Bt
E 512 d	1 of 6	9'-9" to 6'-11"	52	Bt
E 513	6	10'-2"	64	Bt
E 514	1	24'-9"	26	S
E 515	1	32'-3"	34	S
E 516	1	32'-6	34	S
E 517	34	3'-8"	130	Bt
SE 401	See	Sheet No. 35/37		
PIER No. 5				
H 1101	14	30'-2	2244	S
H 1102	112	32'-6	21720	S
H 1103	112	15'-10	9422	Bt
H 1104	28	34'-5"	5120	S
H 1105	26	51'-3"	7624	S
H 1106	28	21'-6"	3198	S
H 1001	16	26'-10	1847	Bt
H 1002	16	27'-10	1916	Bt
H 801	12	35'-4	1132	S
H 802	6	24'-2	387	S
H 701	90	11'-2	2054	Bt
H 702	180	8'-10	3250	Bt
H 703	98	16'-8	3337	Bt
H 601	5	9'-11	74	Bt
H 602	5	9'-11	74	Bt
H 603	5	10'-9	81	Bt
H 604	5	10'-6	79	Bt
H 605	16	31'-5	777	S
H 606	8	37'-8	453	S
H 607	196	6'-7	1790	B
H 501	8	15'-6	129	S
H 502	4	31'-0	129	S
H 603	4	15'-0	63	S
H 604	2	29'-7	62	S
H 505	4	13'-6	56	S

BENDING DIAGRAMS

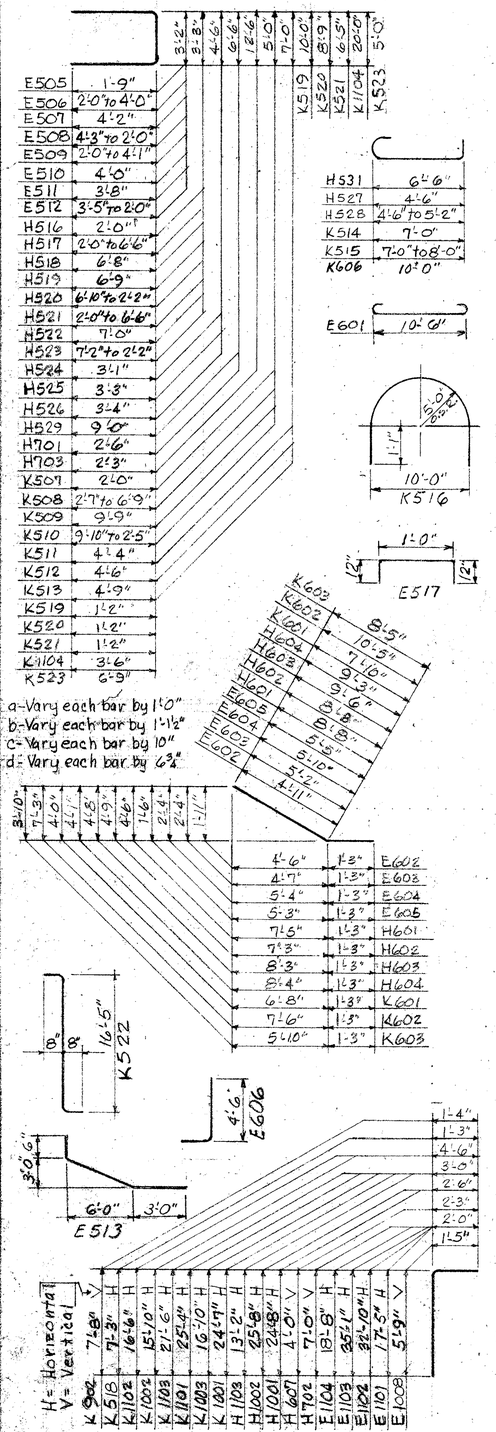

a-Vary each bar by 1'-0"
b-Vary each bar by 1'-1½"
c-Vary each bar by 10"
d-Vary each bar by 6¾"

MARK	NO	LENGTH	WEIGHT	SH'P
PIER NO. 5 (CONT.)				
H 506	2	28'-1	59	S
H 507	4	11'-6	48	S
H 508	2	26'-9	55	S
H 509	4	10'-0	42	S
H 510	2	25'-7	53	S
H 511	4	33'-0	138	S
H 512	2	32'-1	67	S
H 513	2	30'-5	64	S
H 514	2	28'-9	60	S
H 515	2	27'-3	57	S
H 516	128	7'-0	935	Bt
H 517 f	2 of 7	7'-0 to 16'-0	168	Bt
H 518	16	16'-4	273	Bt
H 519	26	16'-6	447	Bt
H 520 g	2 of 7	16'-8 to 7'-4	175	Bt
H 521 h	2 of 8	7'-0 to 16'-0	192	Bt
H 522	26	17'-0	461	Bt
H 523 k	2 of 8	17'-4 to 7'-4	206	Bt
H 524	26	10'-5	282	Bt
H 525	24	10'-9	269	Bt
H 526	26	10'-11	296	Bt
H 527	104	5'-10"	633	Bt
H 528 a f	8 of 13	5'-10 to 6'-6"	669	Bt
H 529	10	24'-3	253	Bt
H 530	20	37'-11	791	S
H 531	46	7'-10"	376	Bt
PIER NO. 6				
K 1101	14	28'-0	2083	Bt
K 1102	14	20'-8	1537	Bt
K 1103	22	24'-2"	2825	Bt
K 1104	94	26'-4	13151	Bt
K 1105	80	25'-0	10626	S
K 1106	80	19'-9	8395	S
K 1107	80	45'-3	19233	S
K 1108	80	40'-0	17002	S
K 1001	8	27'-3	938	Bt
K 1002	8	20'-0	688	Bt
K 1003	8	19'-6	671	Bt
K 1004	16	30'-2	2077	S
K 901	54	33'-5	6135	S
K 902	156	8'-9	4641	Bt
K 903	156	12'-9	6763	S
K 904	11	32'-2	1203	S
K 905	4	27'-11	380	S
K 906	4	30'-0	408	S
K 907	4	31'-3	425	S
K 908	10	32'-6	1105	S
K 601	6	9'-0	81	Bt
K 602	12	11'-8	210	Bt
K 603	6	9'-8	87	Bt
K 604	20	30'-6	916	S
K 605	10	37'-4	561	S
K 606	114	11'-6"	1969	Bt
K 501	4	36'-1	151	S
K 502	4	36'-9	153	S
K 503	4	43'-5	181	S
K 504	4	42'-0	175	S
K 505	4	40'-0	167	S
K 506	4	37'-7	157	S
K 507	200	8'-9	1825	Bt
K 508 m	4 of 8	9'-11 to 18'-3	470	Bt
K 509	126	24'-3	3187	Bt
K 510 n	4 of 9	24'-5 to 9'-7	638	Bt
K 511	104	15'-5	1672	Bt
K 512	136	15'-9	2234	Bt
K 513	136	16'-3	2305	Bt
K 514	128	8'-4"	1112	Bt

BENDING DIAGRAMS

f-Vary each bar by 1'-6" (2 sets of 7)
g-Vary each bar by 1'-6⅝ (+) (2 sets of 7)
h-Vary each bar by 1'-3⅜ (+) (2 sets of 8)
k-Vary each bar by 1'-5⅛ (+) (2 sets of 8)
aa-Vary each bar by ⅝" (+) (8 sets of 13)

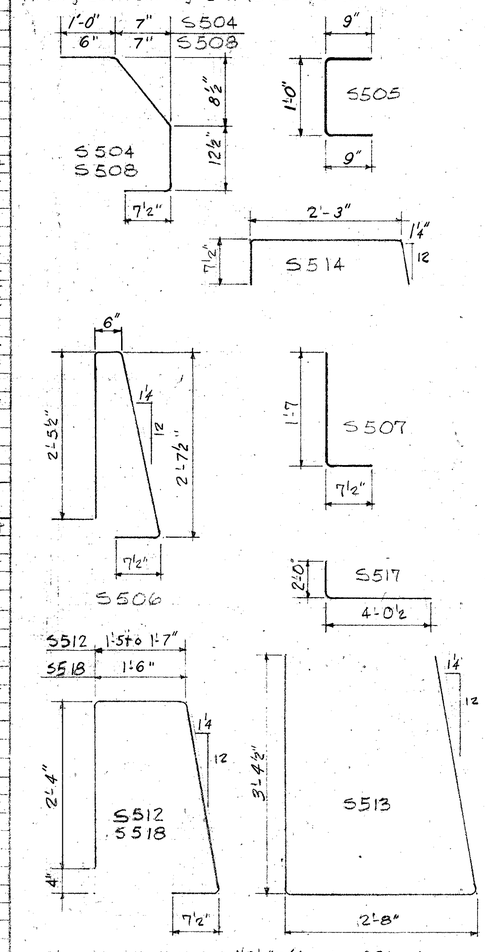

m-Vary each bar by 1'-2¼" (+) (4 sets of 8 bars)
n-Vary each bar by 1'-10¼" (4 sets of 9 bars)

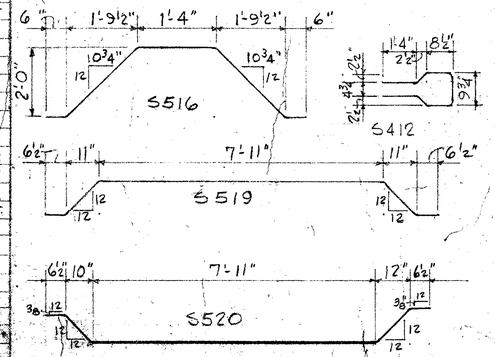

MARK	NO	LENGTH	WEIGHT	SH'P
PIER NO. 6 (CONT.)				
K 515 aa	8 of 16	8'-4 to 9'-4"	1179	Bt
K 516	30	17'-10	558	Bt
K 517	56	43'-7	2546	S
K 518	188	8'-4	1634	Bt
K 519	78	12'-1	983	Bt
K 520	2	10'-10	23	Bt
K 521	2	8'-5	18	Bt
K 522	14	17'-6	256	Bt
K 523	6	18'-3"	114	Bt
SUPERSTRUCTURE				
S 601 p	1 of 287	27'-7 to 25'-7	11,459	S
S 602 p	1 of 289	23'-4 to 21'-8	9767	S
S 603 p	2 of 133	25'-7 to 24'-6	10005	S
S 604 p	1 of 133	21'-8 to 20'-9	4237	S
S 605 p	1 of 58	24'-6 to 24'-0	2113	S
S 606 p	1 of 58	20'-9 to 20'-4	1790	S
S 607 p	1 of 274	27'-6 to 25'-7	10,923	S
S 608 p	1 of 274	31'-9 to 29'-6	12,604	S
S 609 p	4 of 44	45'-0 to 44'-8	11852	S
S 610 p	1 of 133	29'-6 to 28'-3	5768	S
S 611 p	1 of 63	24'-5 to 23'-8	2275	S
S 612 p	1 of 62	28'-3 to 27'-8	2604	S
S 613 q	1 of 11	5'-1 to 25'-6	253	S
S 614 q	1 of 9	5'-1 to 21'-4	179	S
S 615 r	1 of 12	3'-4 to 26'-1	265	S
S 616 r	1 of 14	3'-5 to 30'-4	355	S
S 617 s	1 of 6	22'-9 to 2'-11	116	S
S 618 s	1 of 7	26'-9 to 2'-11	156	S
S 619 t	1 of 5	19'-0 to 3'-10	89	S
S 620 t	1 of 4	16'-2 to 4'-2	61	S
S 621	1512	44'-6	101,061	S
S 622 v	2 of 20	2'-6 to 41'-10	1332	S
S 623	2	2'-6	8	S
S 624 w	2 of 11	40'-6 to 5'-5	759	S
S 625	2 of 153	47'-4 to 45'-0	21219	S
S 626	2	5'-1	15	S
S 627	346	45'-2	23473	S
S 628	354	44'-8	23,750	S
S 629 P	4 of 44	44'-8 to 44'-6	11786	S
S 501	1790	30'-0	56009	S
S 502 x	1 of 54	29'-7 to 36'-10	1870	S
S 503 y	1 of 51	24'-5 to 29'-4	1430	S
S 504	787	3'-6"	2873	Bt
S 505	787	2'-3"	1847	Bt
S 506	754	5'-11"	4653	Bt
S 507	1538	2'-1"	3342	Bt
S 508	784	3'-0"	2453	Bt
S 509	1568	3'-3	5315	S
S 510 x	1 of 51	28'-5 to 35'-5	1698	S
S 511 z	2 of 49	32'-5 to 36'-1	3501	S
S 512 aa	1 of 9	6'-8 to 6'-10	63	Bt
S 513	24	9'-5	236	Bt
S 514	24	3'-1	77	Bt
S 515	24	3'-4	83	S
S 516	36	7'-8	288	Bt
S 517	18	5'-11	111	Bt
S 518	9	6'-9	63	Bt
S 519	6	11'-6	72	Bt
S 520	6	11'-6	72	Bt

MARK	NO.	LENGTH	WEIGHT	SH'P.
SUPER STRUCTURE (CONT.)				
R 501	64	11'-11	795	S
R 502	298	12'-8	3937	S
R 503	402	7'-2	3005	S
R 504	4	15'-3"	64	S
R 505	4	12'-1	50	S
R 506	4	9'-4	39	S
R 507	3	11'-6	36	S
R 508	12	10'-6	131	S
R 509	7	8'-5	62	S
R 510	3	8'-9	27	S
R 511	6	16'-7	104	S
R 512	4	10'-10	45	S
R 513	4	12'-5	52	S
S 401	2449	30'-0	49078	S
S 402 y	1 of 75	29'-7 to 36'-1	1666	S
S 403	129	20'-0	1723	S
S 404	123	28'-0	2301	S
S 405	240	33'-0	5291	S
S 406 ab	1 of 70	25'-5 to 29'-3	1255	S
S 407 y	1 of 70	27'-4 to 34'-3	1440	S
S 408	113	15'-0	1132	S
S 409	339	25'-0	5661	S
S 410 ac	2 of 65	32'-5 to 36'-1	2974	S
S 411	94	5'-2"	324	Bt

p-Fabricate each set in approximately equal groups, varying length of each group by 1".
q-Vary each bar by 2'-0⅜"
r-Vary each bar by 2'-0¾" (±)
s-Vary each bar by 3'-11⅝ (±)
t-Vary each bar by 4'-0"
v-Vary each bar by 2'-0⅞ (+) (2 sets of 20)
w-Vary each bar by 3'-6⅛ (±) (2 sets of 11)
x-Vary each bar by 1⅝" (±)
y-Vary each bar by 1 3/16" (±)
z-Vary each bar by 1⅝" (-)
aa-Vary each bar by ¼"
ab-Vary each bar by 1 3/16" (+)
ac-Vary each bar by 11/16"

ag-Vary each bar by ¾" (±) (8 sets of 16)

S506 & S507 do not run at lights & signs.

37/37

MICHAEL BAKER JR., CONSULTING ENGINEERS
ROCHESTER, PENNSYLVANIA

REINFORCING STEEL LIST
BRIDGE NO. BEL-470-0662
OVER
S.R. 7, CONRAIL & CHESSIE SYSTEM
STA. 1462+80.25 TO STA. 1468+69.60

DESIGNED	DRAWN	TRACED	CHECKED	REVIEWED	DATE	REVISED
BLA	JAJ		DWP	WRK	8/18/76	2/23/78

BEAVER VALLEY ENGINEERING SUPPLIES CO. REORDER X-12879

PUBLIC ROADS DIV.	STATE DIST. NO.	STATE PROJ. NO.	FEDERAL PROJ. NO.	FISCAL YEAR	COUNTY	SHEET NO.	TOTAL SHEETS
W.VA.	6	335-470-0.00		197	OHIO	237	288

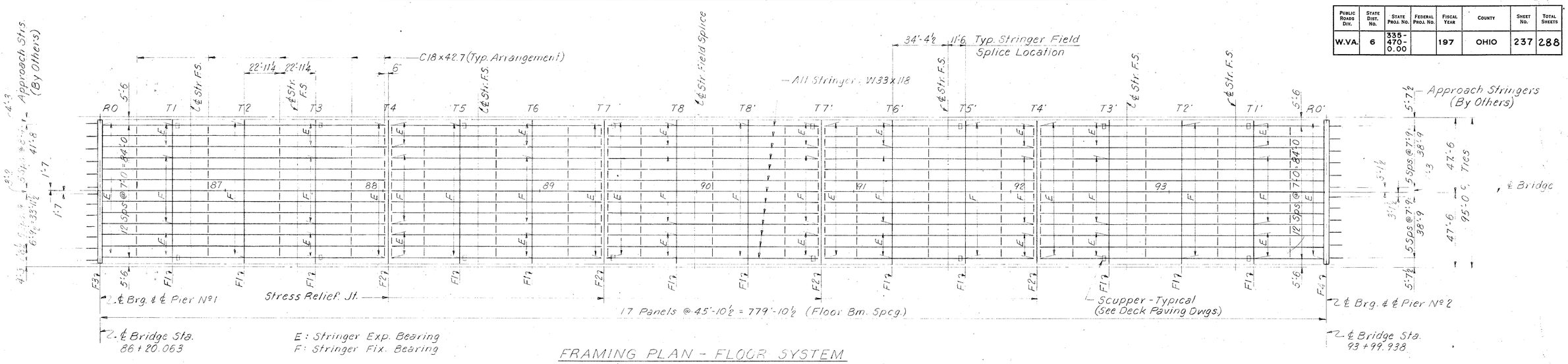

FRAMING PLAN - FLOOR SYSTEM

Scale: 1" = 30'

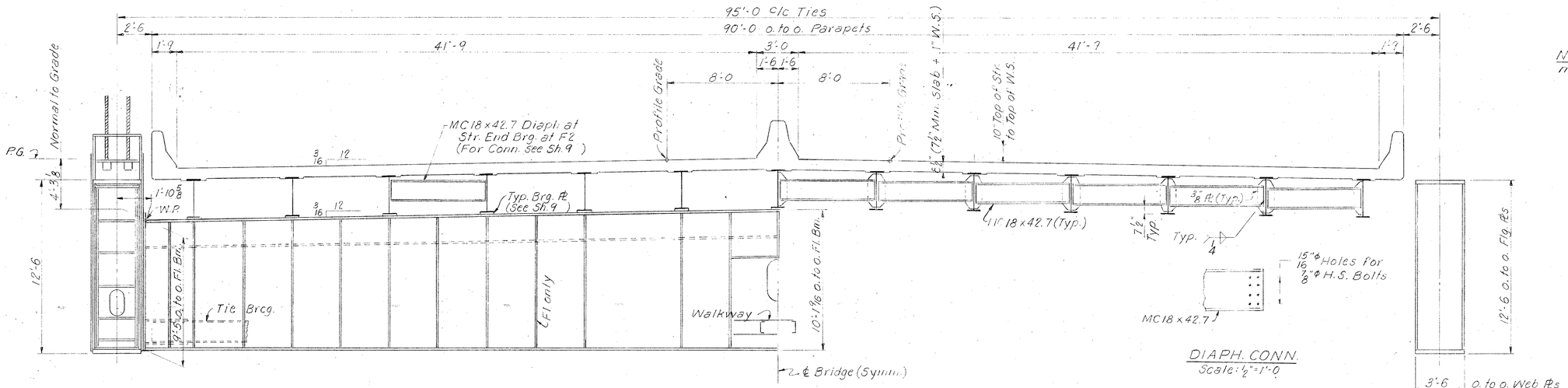

TYPICAL CROSS SECTION

Scale: ¼" = 1'-0

Note: All stringer and stringer splice material A36 steel (T)

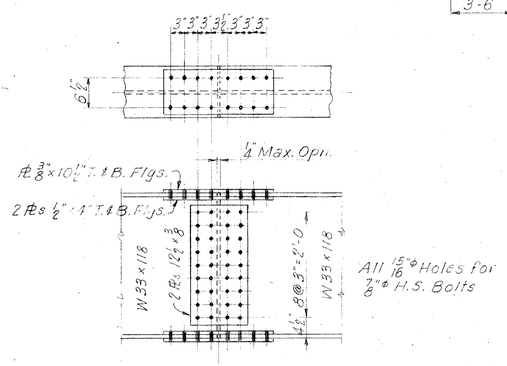

DIAPH. CONN.

Scale: ½" = 1'-0

SCHEDULE FOR STRINGER																						
Max. Reactions (Kips)								Max. Bending Moments (Kip Ft.)								Max. Shear	S.M. (in.³)	Section Furnished	Max. Stress (KSI) D+L+I		Allow. Stress (KSI)	
Int. Support				End Support				Positive				Negative										
D	L	I	Total	D	L	I	Total	D	L	I	Total	D	L	I	Total	D+L+I (Kips)			Shear	Bend.	Shear	Bend.
61	43	13	117	21	35	10	66	194	276	81	551	-260	-198	-58	-516	82	333	W33×118	4.7	18.6	12.0	20.0

∴ Camber not rqd - Turn Mill Camber up.

FLOOR BEAM SCHEDULE														
Mark	Max. Reaction @ ℄ Tie (Kips)				Max. Mom. @ ℄ Bridge (Kip Ft.)				S.M. @ ℄ (in.³)	Section & Material Furnished	Max. Stress D+L+I (KSI)		Allow. Stress (KSI)	
	D	L	I	Total	D	L	I	Total			Shear	Bend.	Shear	Bend.
F1	422	157	36	615	11135	4092	929	16156	7435	Billed on Shs. 9, 10, 11 & 12	11.3	26.1	17.0	27.0
F2	303	133	31	467	8062	3463	786	12311	5923		8.5	24.9	17.0	27.0
* F3 & F4	686	184	42	912	17152	4787	1087	23026	14492		** 6.4	19.1	12.0	20.0

* Max. values for F3 & F4. F3 Wind Load and Temperature stresses do not govern.

** Includes Torsional Shear

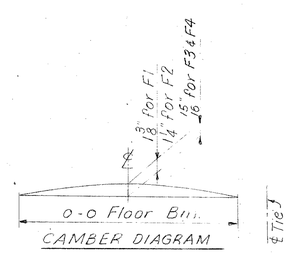

CAMBER DIAGRAM

STRINGER FIELD SPLICE

Scale: ¾" = 1'-0

FOR REFERENCE ONLY

REVISION NUMBER	SHEET NUMBER	REVISIONS	DATE	BY

WEST VIRGINIA DEPARTMENT OF HIGHWAYS
CHARLESTON, WEST VIRGINIA
INTERSTATE ROUTE NO. 470
OHIO COUNTY WEST VIRGINIA

I-470 BRIDGE OVER THE OHIO RIVER
FLOOR FRAMING & SECTION

SCALE Noted
MADE TFY DATE 5-73
TRCD. DATE
CKD. MCP DATE 12-31-73

RICHARDSON, GORDON & ASSOCIATES
CONSULTING ENGINEERS
PITTSBURGH, PA.

SHEET NO. 6
BRIDGE NO. 2494

Public Roads Div.	State Dist. No.	State Proj. No.	Federal Proj. No.	Fiscal Year	County	Sheet No.	Total Sheets
W.VA.	6	335-470-0.00		197	OHIO	238	288

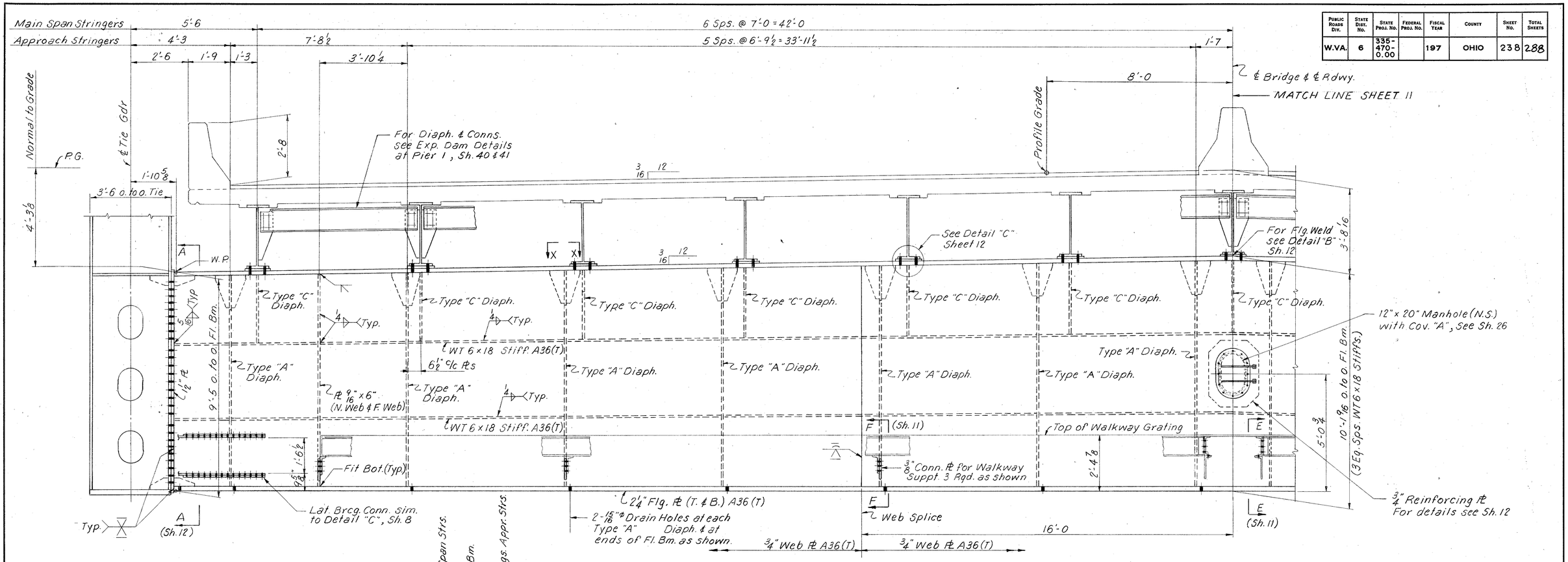

ELEVATION - FLOOR BEAM F3
Scale: ½" = 1'-0
Looking West

Note "C": Open holes shall be temporarily plugged with Bolt, Nut & Washers.

TYP. BOLT PLAN FOR APPR. STRINGERS
VIEW X-X (Noted)

TYPE "C" DIAPH.
Scale: ½" = 1'-0

TYPE "A" DIAPH.
Scale: ½" = 1'-0

SECTION B-B
Scale: 1" = 1'-0

SECTION C-C
Scale: 1" = 1'-0

NOTES

All Struct. Stl. ASTM A36 unless noted.
For camber see Sh. 6
Work this Dwg. with Sh. 11

FOR REFERENCE ONLY

Revision Number	Sheet Number	Revisions	Date	By

WEST VIRGINIA DEPARTMENT OF HIGHWAYS
CHARLESTON, WEST VIRGINIA
INTERSTATE ROUTE NO. 470
OHIO COUNTY — WEST VIRGINIA

I-470 BRIDGE OVER THE OHIO RIVER
END FLOOR BEAM F3

SCALE Noted
MADE T.E.Y. DATE 12-73
TRCD. ..... DATE .....
CKD. M.C.P. DATE 1-25-74

RICHARDSON, GORDON & ASSOCIATES
CONSULTING ENGINEERS
PITTSBURGH, PA.

SHEET NO. 10
BRIDGE NO. 2494

Public Roads Div.	State Dist. No.	State Proj. No.	Federal Proj. No.	Fiscal Year	County	Sheet No.	Total Sheets
W.VA.	6	335-470-0.00		197	OHIO	239	288

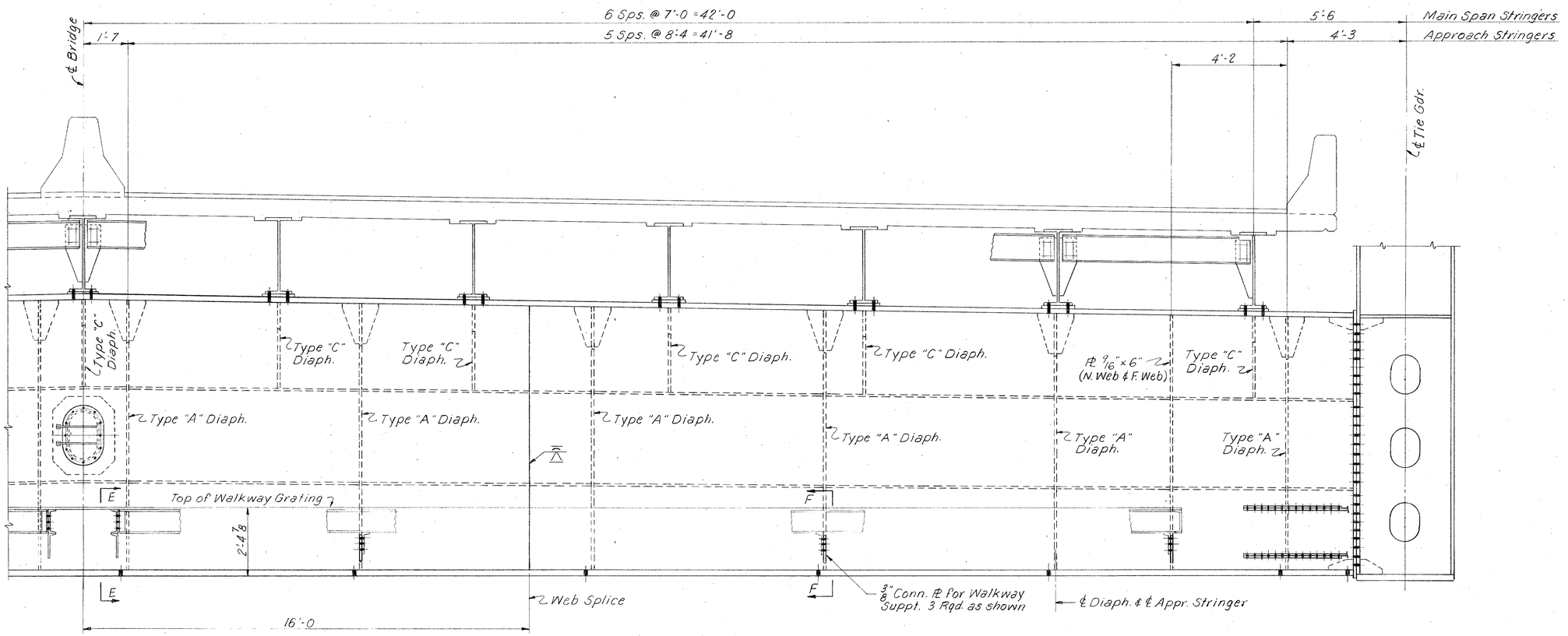

ELEVATION - FLOOR BEAM F3
Scale: 1/2" = 1'-0
Looking West

Note: This half of Fl. Bm. same as other half except as shown.

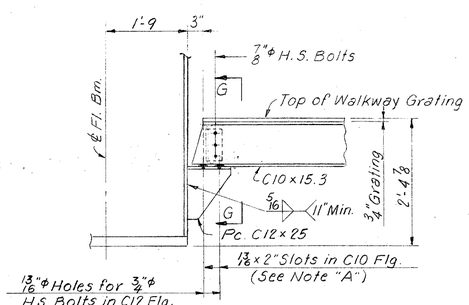

SECTION E-E
Scale: 3/4" = 1'-0

Note "A": Hand Tighten Nuts and check threads.

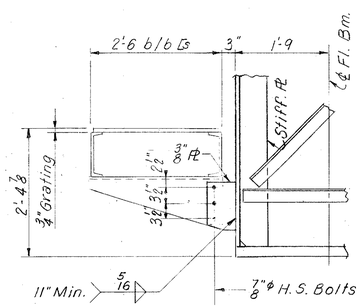

SECTION F-F
Scale: 3/4" = 1'-0

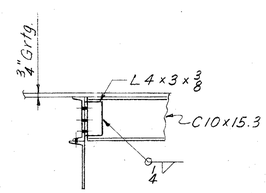

SECTION G-G
Scale: 3/4" = 1'-0

Note: Work this Dwg. with Sh. 10.

FOR REFERENCE ONLY

Revision Number	Sheet Number	Revisions	Date	By

WEST VIRGINIA DEPARTMENT OF HIGHWAYS
CHARLESTON, WEST VIRGINIA
INTERSTATE ROUTE NO. 470
OHIO COUNTY — WEST VIRGINIA

I-470 BRIDGE OVER THE OHIO RIVER
END FLOOR BEAM F3

SCALE Noted
MADE F.F.Y. DATE 1-74
TRCD. DATE
CKD. M.C.P. DATE 1-25-74

RICHARDSON, GORDON & ASSOCIATES
CONSULTING ENGINEERS
PITTSBURGH, PA.

SHEET NO. 11
BRIDGE NO. 2494

Public Roads Div.	State Dist. No.	State Proj. No.	Federal Proj. No.	Fiscal Year	County	Sheet No.	Total Sheets
W.VA.	6	335-470-0.00	I-470-1(12)10 C-2	1977	OHIO	240	288

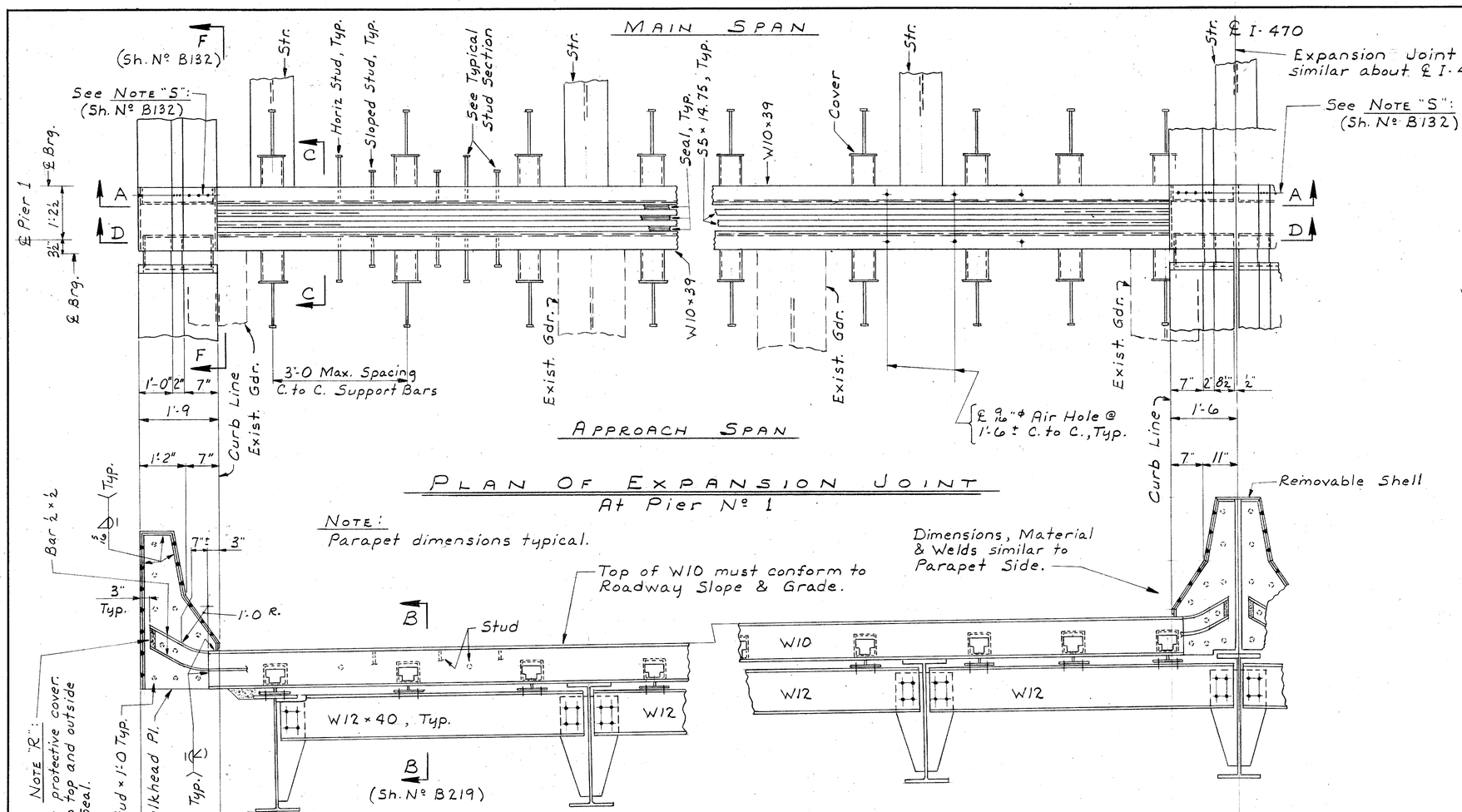

PLAN OF EXPANSION JOINT
At Pier Nº 1

NOTE:
Parapet dimensions typical.

Top of W10 must conform to Roadway Slope & Grade.

Dimensions, Material & Welds similar to Parapet Side.

SECTION A-A
For similar stringer & diaphragm details at existing Floor Beam at Pier Nº 1 not shown see Sh. Nº B220.

NOTE: For existing Steel in this area see Ohio Dept. of Trans. drawings for Bridge Nº BEL-470-0662 & Contract 1 drawings for Bridge Nº 2494. Existing details may be altered as required for Expansion Joint, Alternate A.

SECTION D-D
All dimensions, material, welds & notes for Exp. Joint not shown same as Sect. A-A.

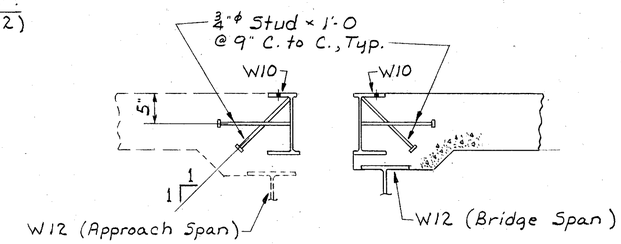

TYPICAL STUD SECTION
Scale: 1" = 1'-0

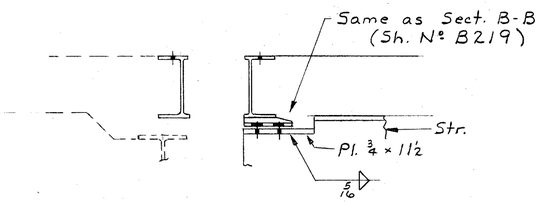

SECTION C-C
Scale: 1" = 1'-0

NOTE: All Structural Steel for Expansion Joint shall be A588 or A242 unless noted.

Payment for Modular Expansion Joint to be made under Item 624-13b.

Work this sheet with Sh. Nº B219.

FOR REFERENCE ONLY

Revision Number	Sheet Number	Revisions	Date	By

WEST VIRGINIA DEPARTMENT OF HIGHWAYS
CHARLESTON, WEST VIRGINIA
INTERSTATE ROUTE NO. 470
OHIO COUNTY — WEST VIRGINIA

I-470 BRIDGE OVER THE OHIO RIVER
EXPANSION DAM AT PIER 1
ALTERNATE A

SCALE 3/4" = 1'-0 U.N.
MADE A.V.G. DATE 5-76
TRCD. — DATE —
CKD. D.M.B. DATE 5-76

RICHARDSON, GORDON & ASSOCIATES
CONSULTING ENGINEERS
PITTSBURGH, PA.

SHEET NO. B218
BRIDGE NO. 2494

REV. 2/23/78

A. B. G. SMITH CO., PGH., PA.

PUBLIC ROADS DIV.	STATE DIST. NO.	STATE PROJ. NO.	FEDERAL PROJ. NO.	FISCAL YEAR	COUNTY	SHEET NO.	TOTAL SHEETS
W.VA.	6	335-470-0.00	I-470-1(12)0 C-2	1977	OHIO	241	288

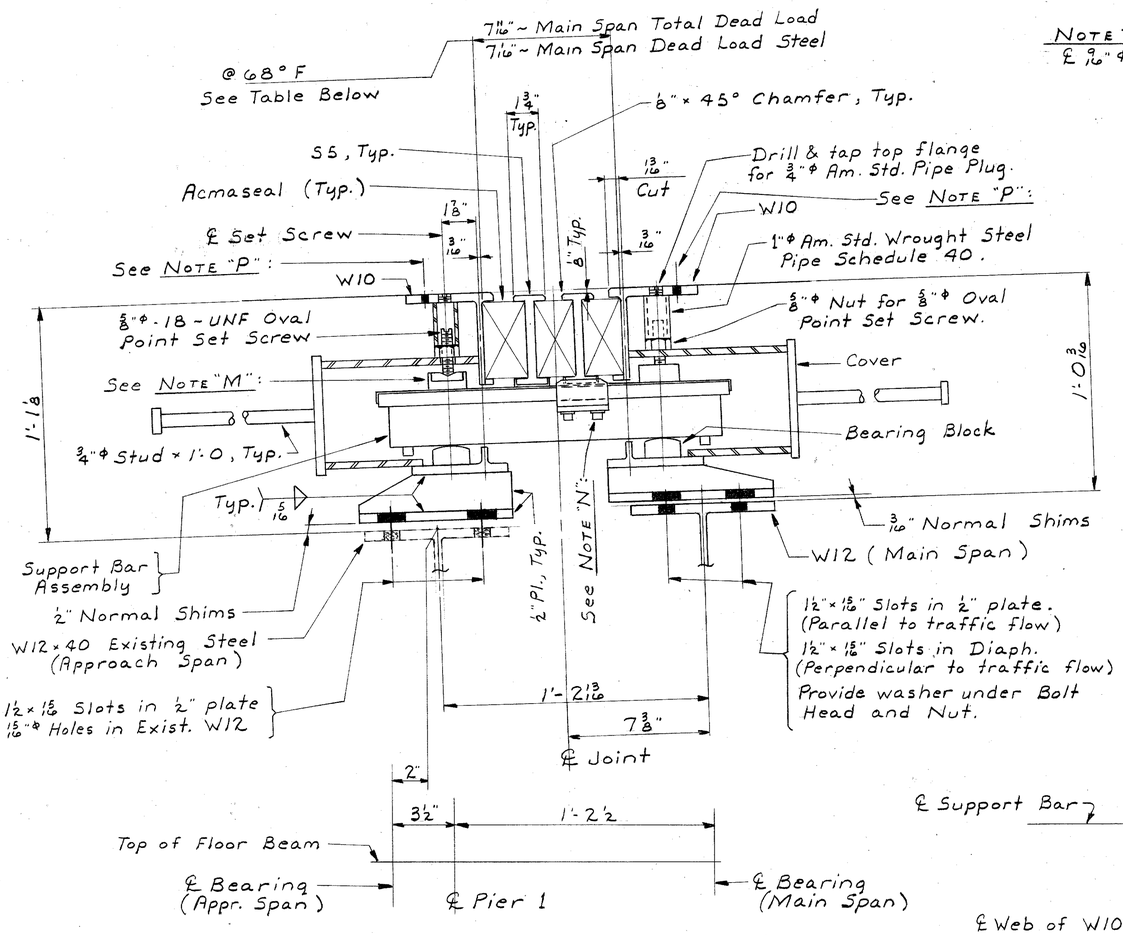

SECTION B-B

Scale : 3" = 1'-0

NOTE "P":
℄ 9/16" ϕ Air Holes @ 1'-6 ± C. to C., Typ.

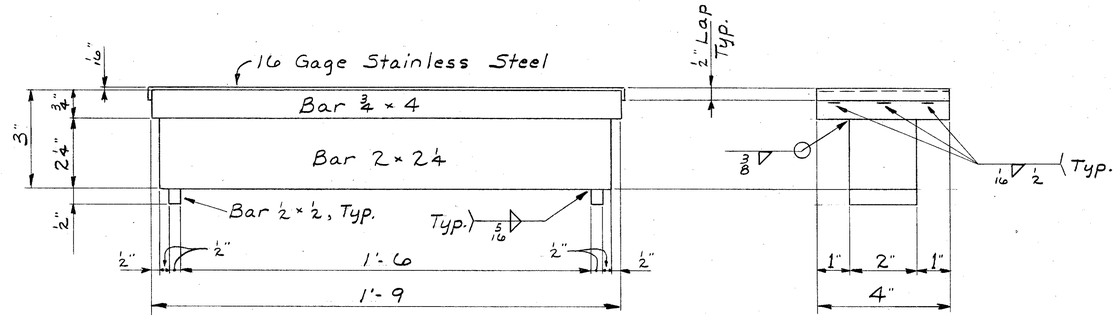

SIDE VIEW — END VIEW

SUPPORT BAR ASSEMBLY

No Scale

NOTE "M":
Pressure Pad Assembly with Molded Polyurethane Pad.

NOTE "N":
Uplift Restraint and Guide Assembly with Molded Polyurethane sliding surface.

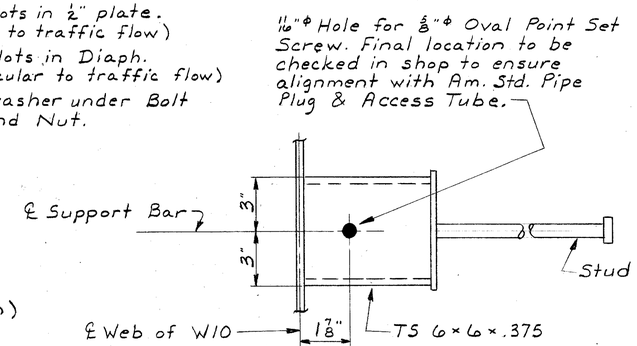

PLAN VIEW

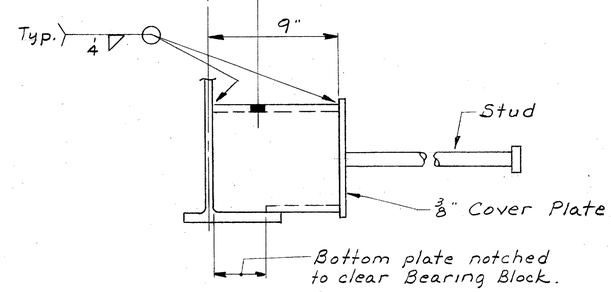

SIDE VIEW

SUPPORT BAR BOX COVER DETAIL

Scale : 3" = 1'-0

OPENING		ACME SEAL ~ ADJUSTMENT TABLE*							
MIN.	MAX.	20°F	30°F	40°F	50°F	60°F	70°F	80°F	90°F
5 3/16"	11 3/16"	8 3/8"	8 1/4"	8 1/8"	7 15/16"	7 13/16"	7 5/8"	7 1/2"	7 3/8"

Table is based on temperature range of -10°F to +110°F.

* = Dimensions in Table are for total Dead Load. Subtract 5/8" for Dead Load Steel.

NOTE:
For Typical Opening in Web of W10, Bearing Block, Set Screw Access Tube, Typical Splice for S5 and W10 see Sh. Nº B129.

For Parapet Hood Detail, Acmaseal, Uplift Restraint and Typical Painting see Sh. Nº B130.

Work this sheet with Sh. Nº B218.

FOR REFERENCE ONLY

REVISION NUMBER	SHEET NUMBER	REVISIONS	DATE	BY

WEST VIRGINIA DEPARTMENT OF HIGHWAYS
CHARLESTON, WEST VIRGINIA
INTERSTATE ROUTE NO. 470
OHIO COUNTY — WEST VIRGINIA

I-470 BRIDGE OVER THE OHIO RIVER
EXPANSION DAM AT PIER 1 - DETAILS ALTERNATE A

SCALE AS NOTED
MADE A.V.G. DATE 5-76
TRCD. ____ DATE ____
CKD. D.M.B. DATE 5-76

RICHARDSON, GORDON & ASSOCIATES
CONSULTING ENGINEERS
PITTSBURGH, PA.

SHEET NO. B219
BRIDGE NO. 2494

A.B.S. SMITH CO., PGH., PA.
PR 9726-376

Public Roads Div.	State Dist. No.	State Proj. No.	Federal Proj. No.	Fiscal Year	County	Sheet No.	Total Sheets
W.VA.	6	335-470-0.00	I-470-1(12)0 C-2	1977	OHIO	242	288

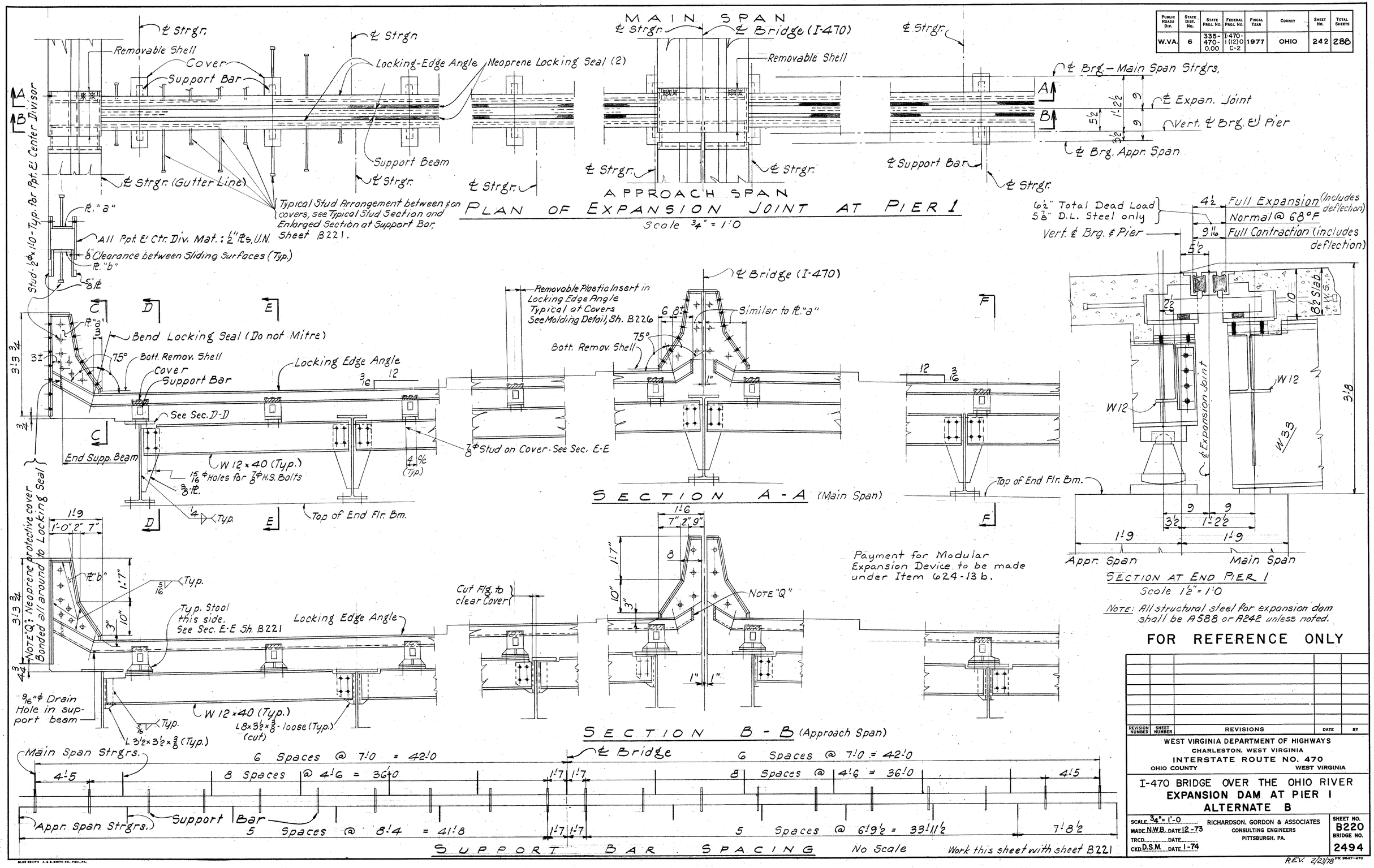

FOR REFERENCE ONLY

Revision Number	Sheet Number	Revisions	Date	By

WEST VIRGINIA DEPARTMENT OF HIGHWAYS
CHARLESTON, WEST VIRGINIA
INTERSTATE ROUTE NO. 470
OHIO COUNTY — WEST VIRGINIA

I-470 BRIDGE OVER THE OHIO RIVER
EXPANSION DAM AT PIER 1
ALTERNATE B

SCALE 3/4" = 1'-0
MADE N.W.B. DATE 12-73
TRCD. ..... DATE .....
CKD. D.S.M. DATE 1-74

RICHARDSON, GORDON & ASSOCIATES
CONSULTING ENGINEERS
PITTSBURGH, PA.

SHEET NO. B220
BRIDGE NO. 2494

REV. 2/23/78 PR 9647-470

BLUE ZENITH A. B. SMITH CO., PGH., PA.

Public Roads Div.	State Dist. No.	State Proj. No.	Federal Proj. No.	Fiscal Year	County	Sheet No.	Total Sheets
W.V.A.	6	335-470-0.00	I-470-1(12)0	1977	OHIO	243	288

C-2

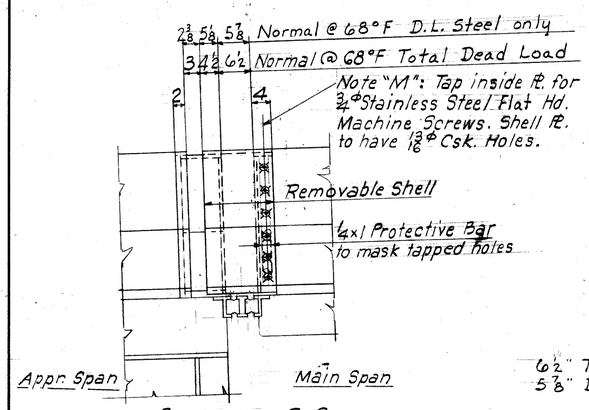

SECTION C-C

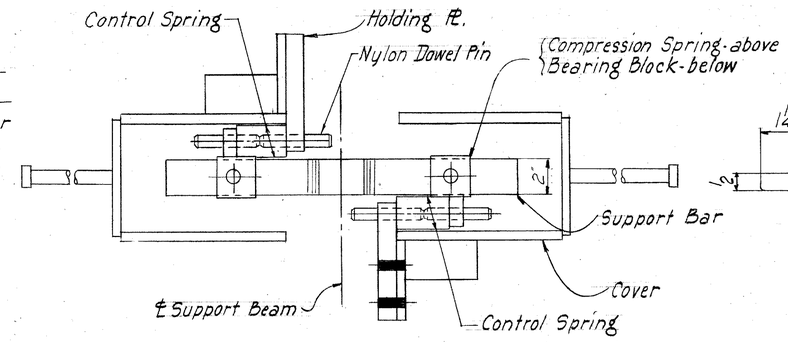

SECTION Y-Y
Scale: 3" = 1'-0

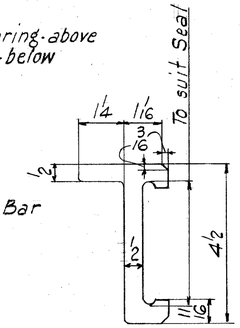

LOCKING EDGE ANGLE

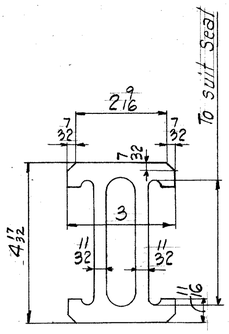

SUPPORT BEAM

A242 Steel

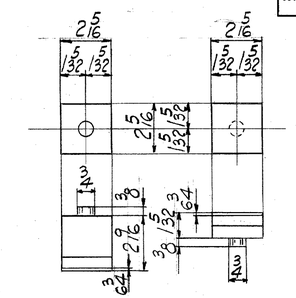

COMPRESSION SPRING

BEARING BLOCK

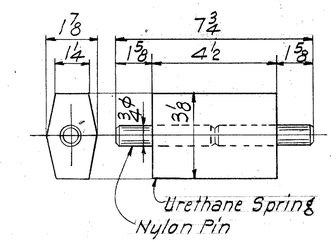

CONTROL SPRING

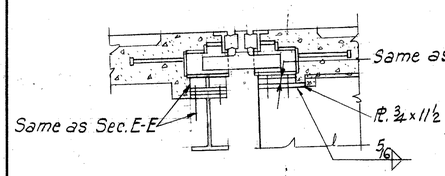

SECTION D-D

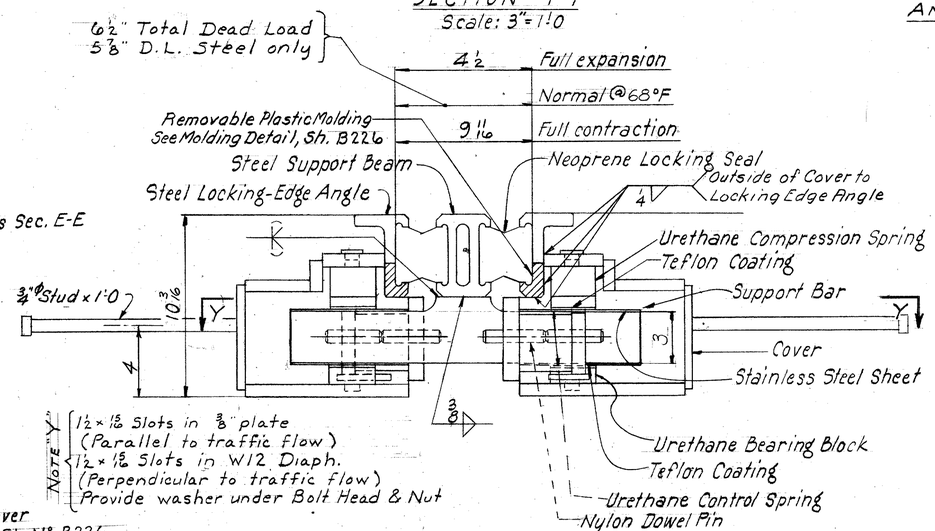

ENLARGED SECTION AT SUPPORT BAR
Scale: 3" = 1'-0

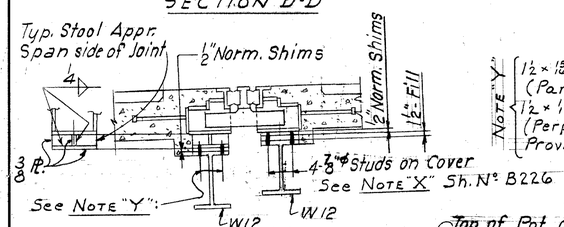

SECTION E-E

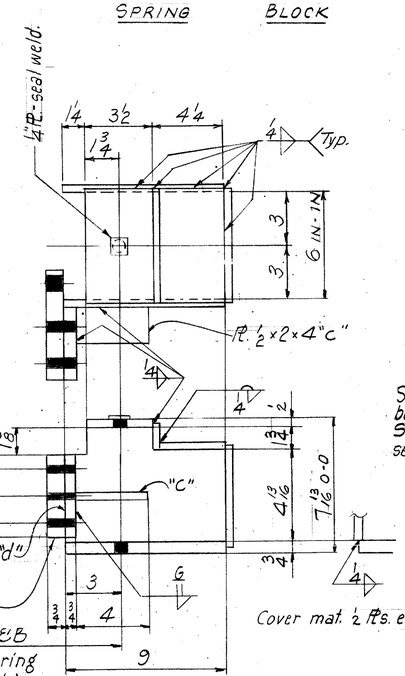

COVER
Scale: 3" = 1'-0
(With Holding Plate)

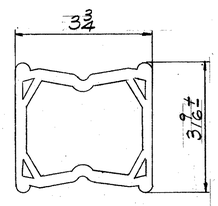

LOCKING SEAL (Neoprene)

Steel shall be sand blasted prior to bonding of seal element. Seal element shall be bonded to steel sections using Bon-Lastic Adhesive.

Cover mat. ½ Pl's. except as shown.

FOR REFERENCE ONLY
Work this sheet with sheet B220

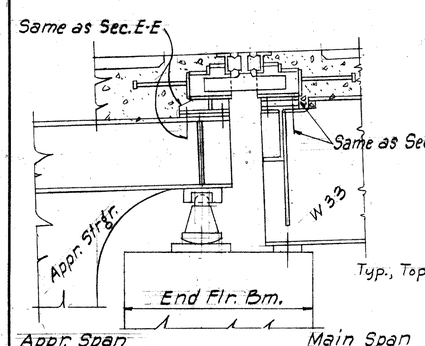

SECTION F-F

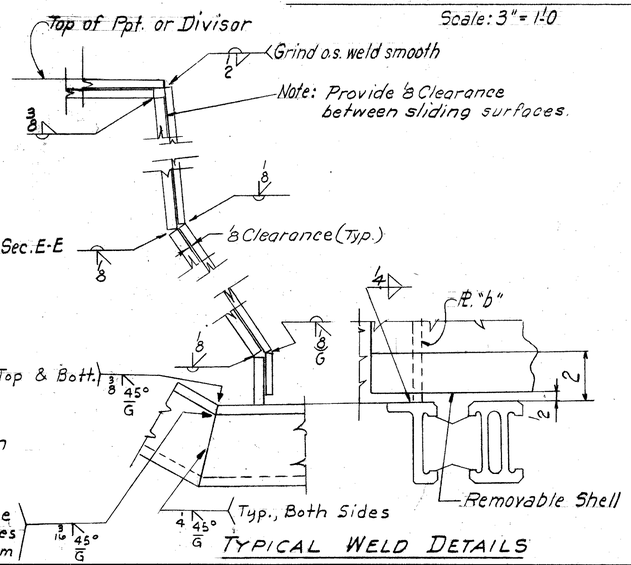

TYPICAL WELD DETAILS

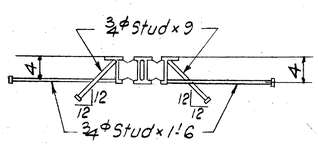

TYPICAL STUD SECTION

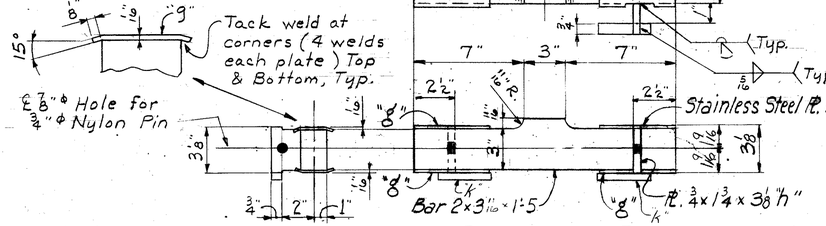

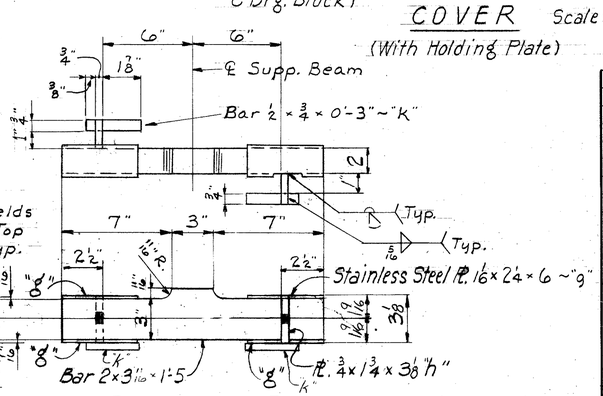

All Support Bar material A588 Steel. SUPPORT BAR (No Scale)

Revision Number	Sheet Number	Revisions	Date	By

WEST VIRGINIA DEPARTMENT OF HIGHWAYS
CHARLESTON, WEST VIRGINIA
INTERSTATE ROUTE NO. 470
OHIO COUNTY WEST VIRGINIA

T-470 BRIDGE OVER THE OHIO RIVER
EXPANSION DAM AT PIER 1 - DETAILS
ALTERNATE B

SCALE ¾" = 1'-0 U.N.
MADE N.W.B. DATE 12-73
TRCD. ..... DATE .....
CKD. D.S.M. DATE 1-74

RICHARDSON, GORDON & ASSOCIATES
CONSULTING ENGINEERS
PITTSBURGH, PA.

SHEET NO. B221
BRIDGE NO. 2494

BLUE ZENITH A. & B. SMITH CO., PGH., PA.
PR 9647-470

Public Roads Div.	State Dist. No.	State Proj. No.	Federal Proj. No.	Fiscal Year	County	Sheet No.	Total Sheets
W.V.A.	6	335-470-0.00	I-470-1(12)0	1977	OHIO	244	288

C-2

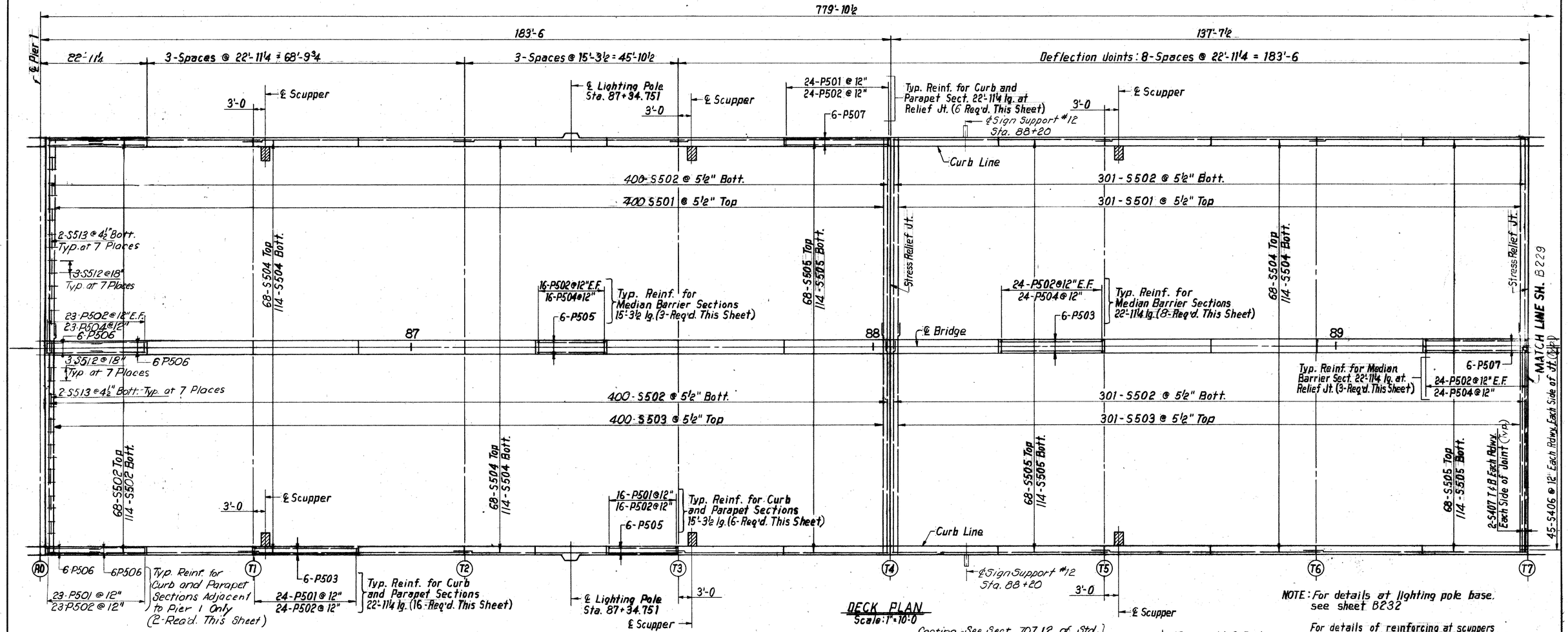

DECK PLAN
Scale: 1" = 10'-0

NOTE: For details at lighting pole base, see sheet B232

For details of reinforcing at scuppers and at stress relief jts. see sheet B231

For Sign Support Anchorage, See Sheet B178.

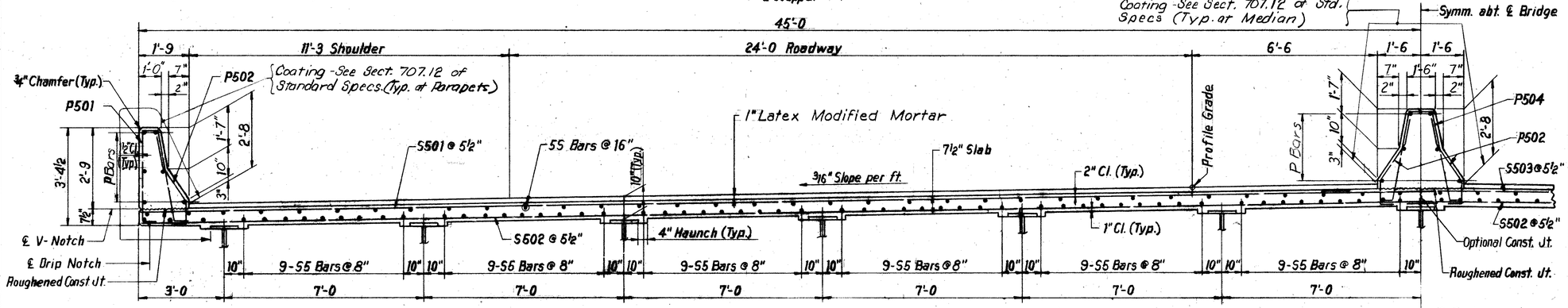

TYPICAL DECK SECTION
Scale: ½" = 1'-0

FOR REFERENCE ONLY

Revision Number	Sheet Number	Revisions	Date	By

WEST VIRGINIA DEPARTMENT OF HIGHWAYS
CHARLESTON, WEST VIRGINIA
INTERSTATE ROUTE NO. 470
OHIO COUNTY — WEST VIRGINIA

I-470 BRIDGE OVER THE OHIO RIVER
DECK PAVING PLAN

SCALE As Shown
MADE ..... DATE .....
TRCD. DAR DATE 6/11/73
CKD. MWB DATE 12/14/73

RICHARDSON, GORDON & ASSOCIATES
CONSULTING ENGINEERS
PITTSBURGH, PA.

SHEET NO. B228
BRIDGE NO. 2494

STR. 9847-470

REV. 2/23/78

BLUE ZENITH A. & B. SMITH CO., PGH., PA.

Public Roads Div.	State Dist. No.	State Proj. No.	Federal Proj. No.	Fiscal Year	County	Sheet No.	Total Sheets
W.VA.	6	335-470-0.00	I-470-1(12)0	1977	OHIO	245	288

C-2

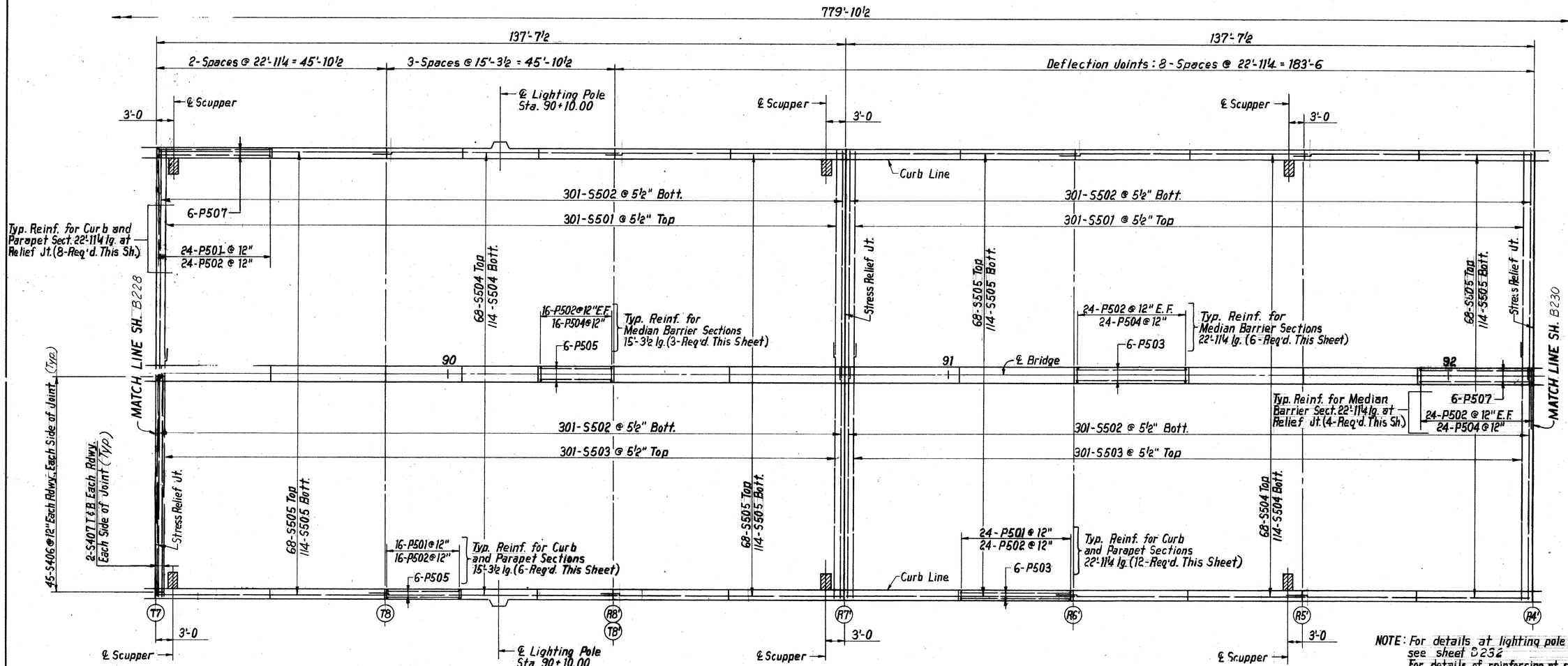

DECK PLAN

Scale: 1" = 10'-0

NOTE: For details at lighting pole base, see sheet B232
For details of reinforcing at scuppers and at stress relief joints, see sheet B231

FOR REFERENCE ONLY

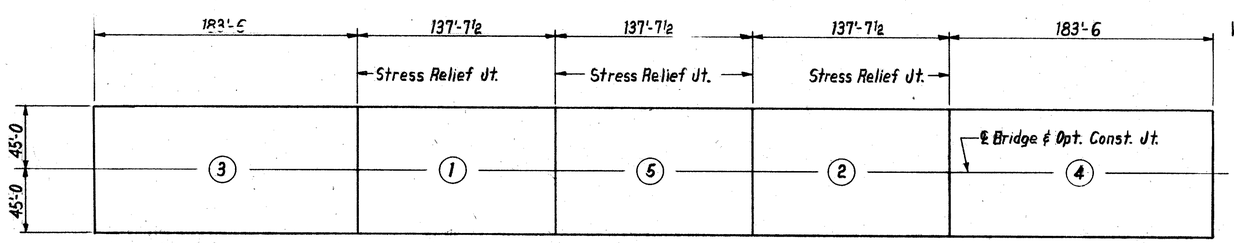

DECK POURING SEQUENCE

Scale: 1" = 50'-0

Bridge deck shall be placed as indicated. Each pour shall be completed full width of bridge before starting subsequent unit.

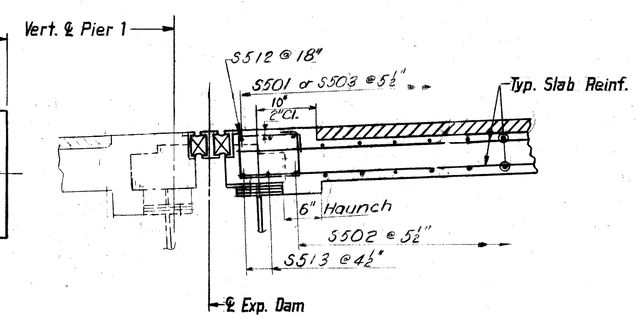

SECTION AT EXP. DAM PIER 1 (AT SUPPORTS)

Scale: 1" = 1'-0

Revision Number	Sheet Number	Revisions	Date	By

WEST VIRGINIA DEPARTMENT OF HIGHWAYS
CHARLESTON, WEST VIRGINIA
INTERSTATE ROUTE NO. 470
OHIO COUNTY — WEST VIRGINIA

I-470 BRIDGE OVER THE OHIO RIVER
DECK PAVING PLAN

SCALE As Shown
MADE ..... DATE .....
TRCD. DAR DATE 6/6/73
CKD. MWB DATE 12/14/73

RICHARDSON, GORDON & ASSOCIATES
CONSULTING ENGINEERS
PITTSBURGH, PA.

SHEET NO. B229
BRIDGE NO. 2494

BLUE ZENITH A.&B. SMITH CO., PGH., PA.

PR 9647-470

FED. RD. DIVISION	STATE	PROJECT	
5	OHIO		

246
288

BELMONT COUNTY
BEL-470-5.90

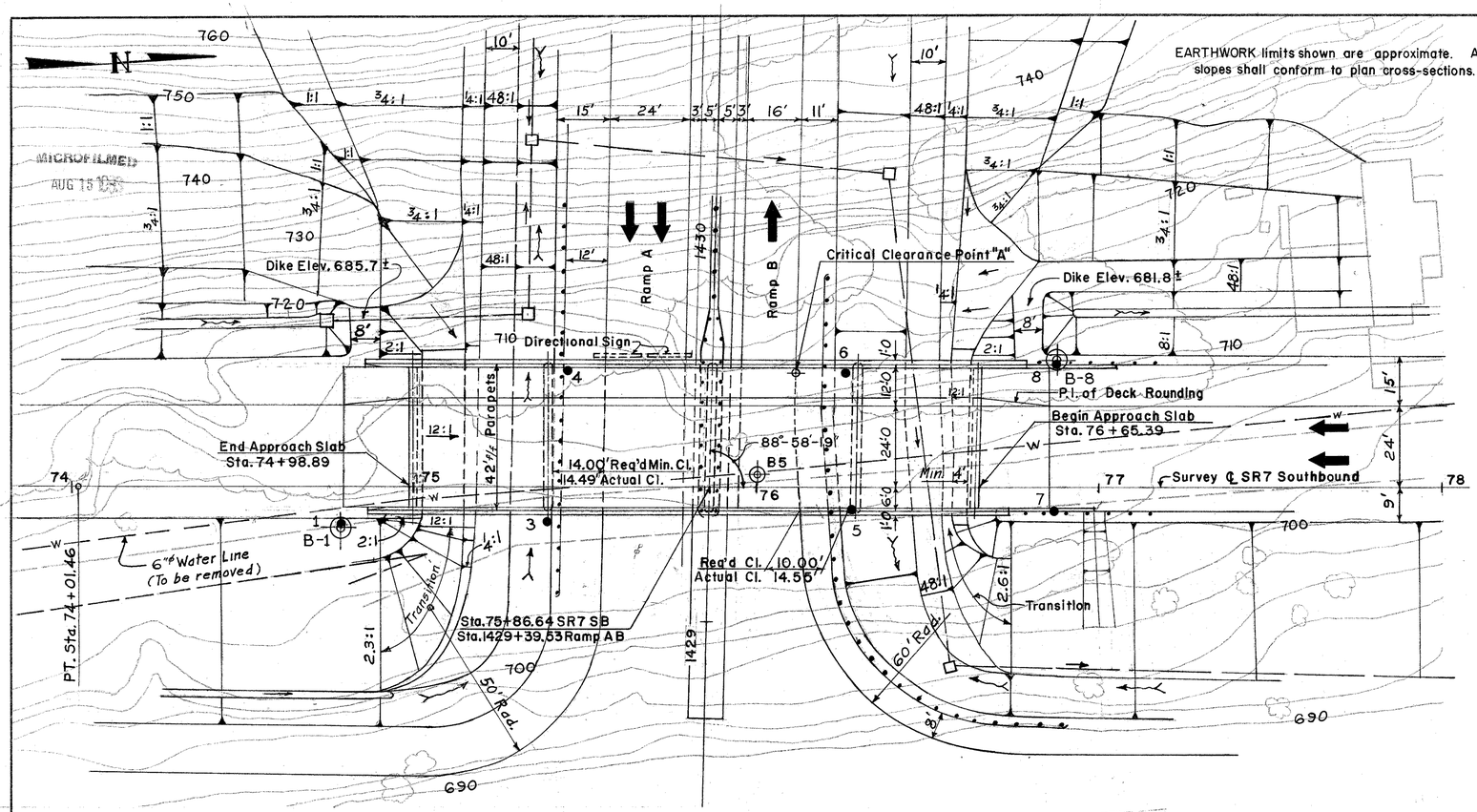

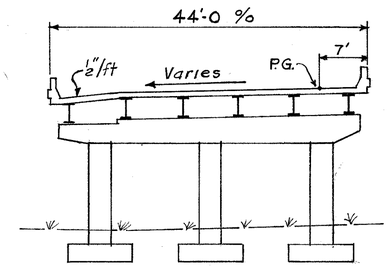

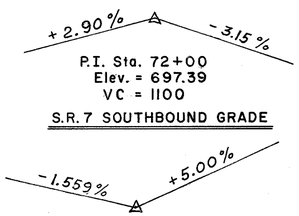

S.R. 7 SOUTHBOUND GRADE

RAMP AB GRADE

CURVE DATA – S.R. 7 (Southbound)

P.I. Sta. 72+63.27
Δ = 4-03-19 Rt.
D = 1°-28'-00"
R = 3906.53
T = 138.31
L = 276.50
E = 2.45
S.E. = .035 ft/ft

LEGEND

⊕ = Core Boring

● = Rod Sounding

PROPOSED STRUCTURE

TYPE: Continuous steel beams with reinforced concrete deck and substructure.
SPANS: 37.5'-48'-42.5'-34' ℄ Brgs.
ROADWAY: 42'-0 f/f parapets.
LOADING: HS-20-44.
SKEW: 1°-01'-41" Lt. Fwd.
WEARING SURFACE: 2½" Asphalt concrete.
APPROACH SLABS: AS-1-72 (20' Long)
ALIGNMENT: Tangent.
SUPERELEVATION: Runout on bridge.

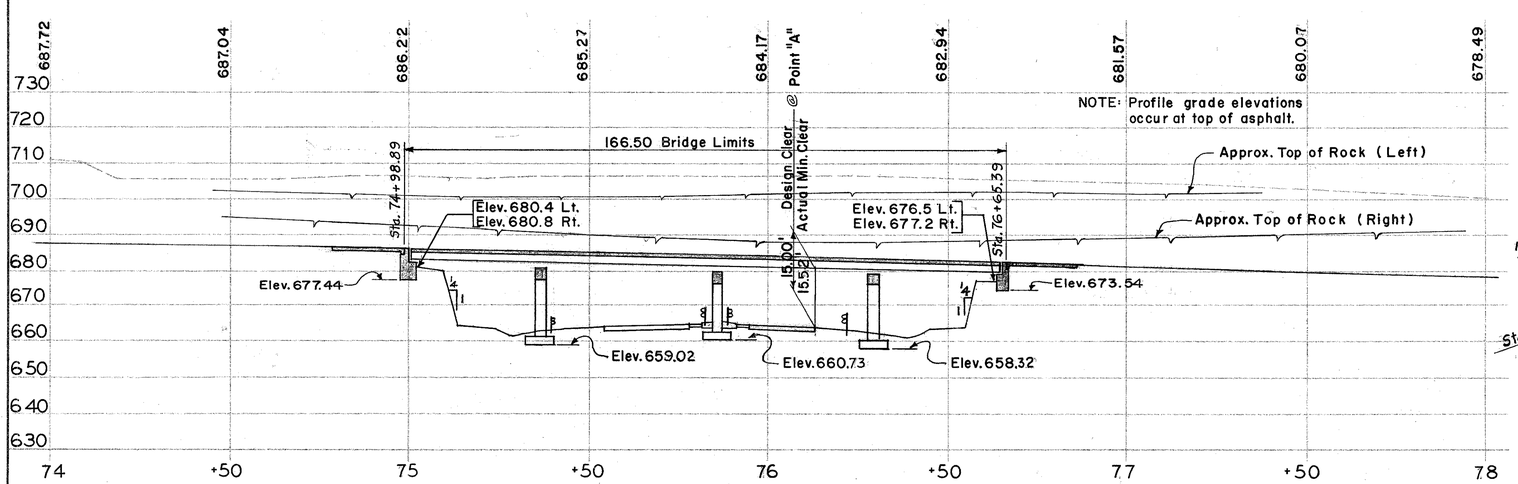

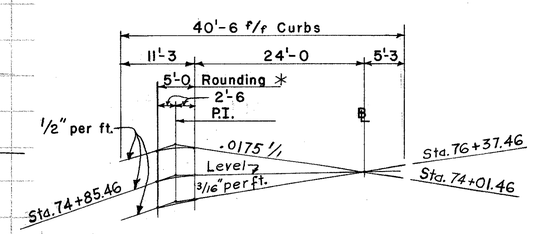

DECK CROSS SLOPE

* 5'-0" Bridge limit to bridge limit
0'-0" at end of approach slab.

1989 A.D.T. 8310

1/9

MICHAEL BAKER JR., CONSULTING ENGINEERS
ROCHESTER, PENNSYLVANIA

SITE PLAN
BRIDGE NO. BEL-7-1848Lt
OVER
RAMPS A & B
Sta. 1429+39.53 RAMP AB

PRESENT TOPOGRAPHY		PROPOSED WORK			
SURVEYED	DRAWN	DESIGNED	DRAWN	CHECKED	REVIEWED
Aerial Survey	R J P	DWP	DWP	YYC	DWK 8/18/92

MICROFILMED AUG 15 1992

BEAVER VALLEY ENGINEERING SUPPLIES COMPANY REORDER A-19928

FED. RD. DIVISION	STATE	PROJECT	TYPE FUNDS
5	OHIO		

247/288

BEL-470-5.90

MICROFILMED AUG 15 1980

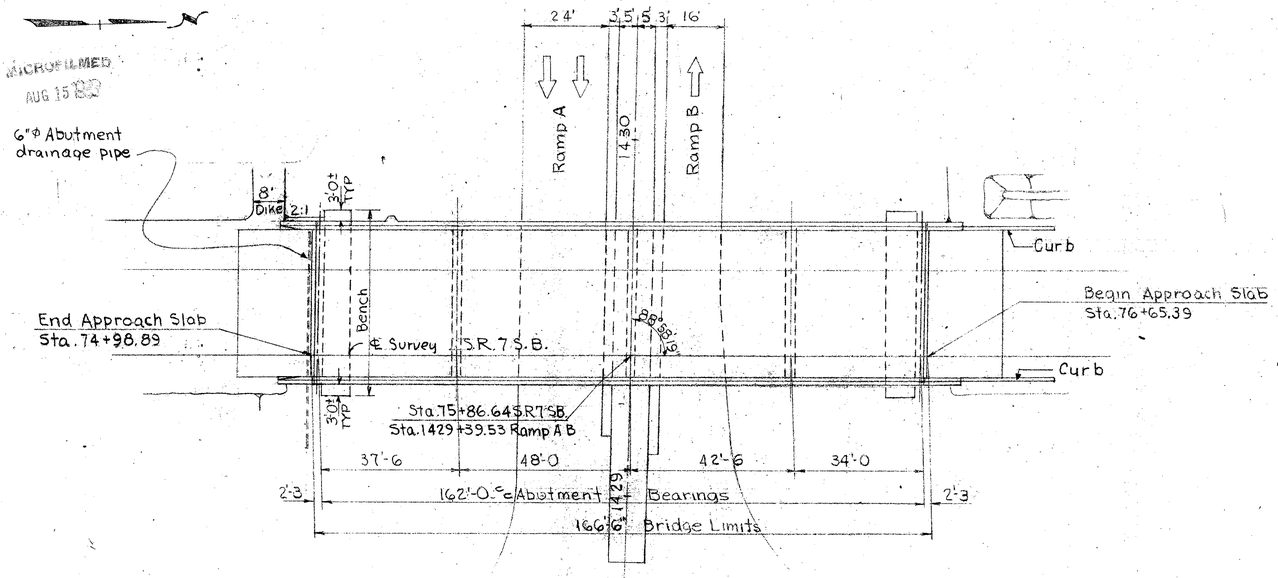

PLAN

NOTE:
Lengths are horizontal distances and do not reflect changes in elevation from point to point.

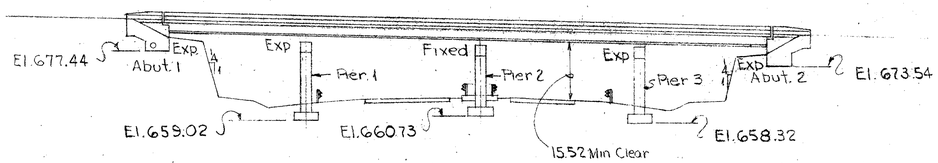

ELEVATION

Computed by	D W P	Date	5-73	Revised by	J.A.J.	Date	5-76
Checked by	B L A	Date	6-73	Checked by	D W P	Date	6-76

ESTIMATED QUANTITIES

Item	Total	Unit	Description	Superstr.	Abuts.	Piers	General
404	51	Cu. Yd.	Asphalt concrete, AC-20	51			
503	287	Cu. Yd.	Rock excavation		219	68	
509	86810	Lbs	Reinforcing steel	56927	8796	21087	
511	240	Cu. Yd.	Class "C" concrete, superstructure (See Proposal Note)	240			
511	86	Cu. Yd.	Class "C" concrete, pier caps and columns			86	
511	99	Cu. Yd.	Class "C" concrete abutments		99		
511	35	Cu. Yd.	Class "C" concrete, pier footings			35	
513	132,300	Lbs	Structural steel (PRIMER PER 846)	132,300			
846	132,300	Lbs	Painting for new structural steel	132,300			
518	9	Cu Yds	Porous backfill		9		
518	36	Lin. Ft.	6" Perforated helical CSP, 707.01		36		
518	16	Lin. Ft.	6" Non-perforatd helical CSP, including specials 707.01		16		
518	326	Lin. Ft.	Sub-drainage for wearing surface course (as per plan)	326			
518	4	Ea	Scuppers including supports	4			
5625			See Sht. # for Lighting Summary				
808	240	Units	Chemical admixture for concrete, Type A Bar D	240			
Special	734	Sq. Yds	Membrane Waterproofing, (See Proposal Note)	734			

GENERAL NOTES

REFERENCE Shall be made to Standard Drawing AS-1-72 dated 6-30-72; BR-1-67 revised 10-15-71; SD-1-69 dated 6-12-69 and to Supplemental Specifications 846, 950, & 951 dated 4-25-77; 808 dated 1-1-71, 836 dated 3-12-75 and 927 dated 1-1-71.

DESIGN SPECIFICATIONS: This structure conforms to "Standard Specifications for Highway Bridges" adopted by the American Association of State Highway Officials, 1973 and the Ohio "Supplement" to these specifications.

DESIGN DATA: DESIGN LOADING - HS 20-44
Concrete Class "C" - Unit stress 1200 p.s.i. for superstructure
unit stress 1333 psi for substructure
Structural Steel - ASTM - A 36 - Unit stress 20,000 p.s.i.

Reinforcing Steel - ASTM A615, A616 or A617 unit Stress 20,000 psi
Sprial reinforcement may be plain bars ASTM A-82, A 615.

FOUNDATION BEARING PRESSURE: Footings are designed for a maximum bearing pressure as follows:
Abutment #1 & #2 2.4 tons per sq. ft.
Piers #1 #2 & #3 5.0 tons per sq. ft.

ABUTMENT AND PIER FOOTINGS: shall be placed in bedrock at the elevations shown.

UTILITY LINES: All expense involved in relocating the affected utility lines shall be borne by the owners. The Contractor and owners are requested to cooperate by arranging their work in such a manner that inconvenience to either will be held to a minimum.

APPROACH SLAB DETAILS:
The jacking holes are not required.
The top reinforcing bars shall be 3" clear.

REINFORCIN BAR LAPPED SPLICES:
All splices shall be lapped 30 bar diameters.

ATTACHMENT OF GUARDRAIL TO CONCRETE PARAPETS:
Concrete insert anchor assemblies per Standard Construction Drawing GR-3 and GR-1 shall be placed during parapet construction.

2/9

MICHAEL BAKER JR., CONSULTING ENGINEERS
ROCHESTER, PENNSYLVANIA

GENERAL PLAN AND ELEVATION
BRIDGE NO. BEL-7-1848 LT.
OVER RAMP A & B
STA. 1429+39.53 RAMP A B

DESIGNED	DRAWN	TRACED	CHECKED	REVIEWED	DATE	REVISED
Y.Y.C.	D.W.		Dwp	WRK	8/18/76	2/23/78

BEAVER VALLEY ENGINEERING SUPPLIES CO. REORDER A-23878

FED. RD. DIVISION	STATE	PROJECT	TYPE FUNDS
5	OHIO		

248
288

BEL - 470 - 5.90

MICROFILMED
AUG 15 1978

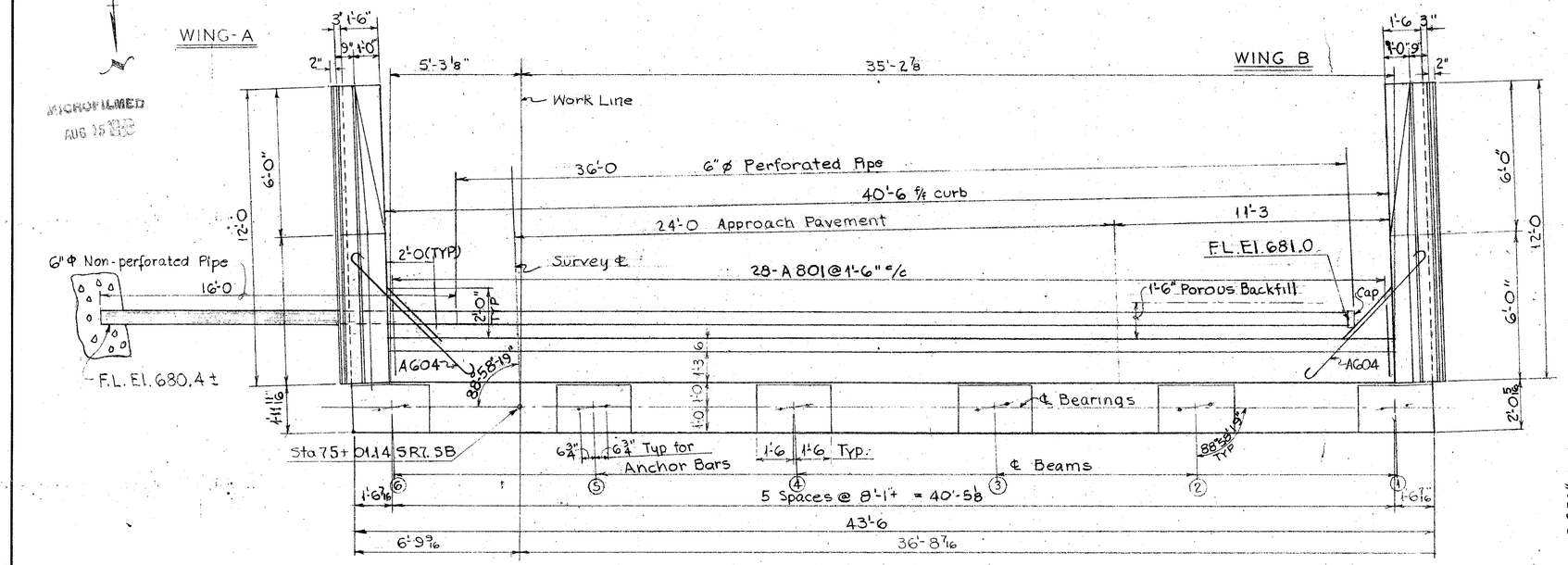

PLAN

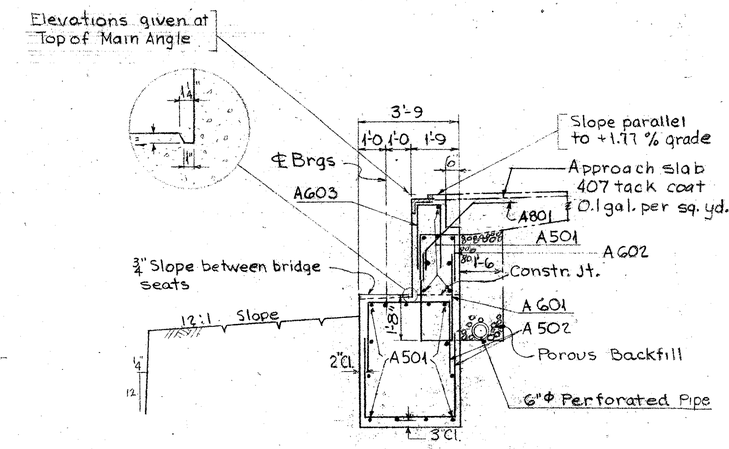

SECTION A-A

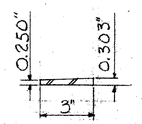

BEVEL BAR DETAIL—ABUT 1

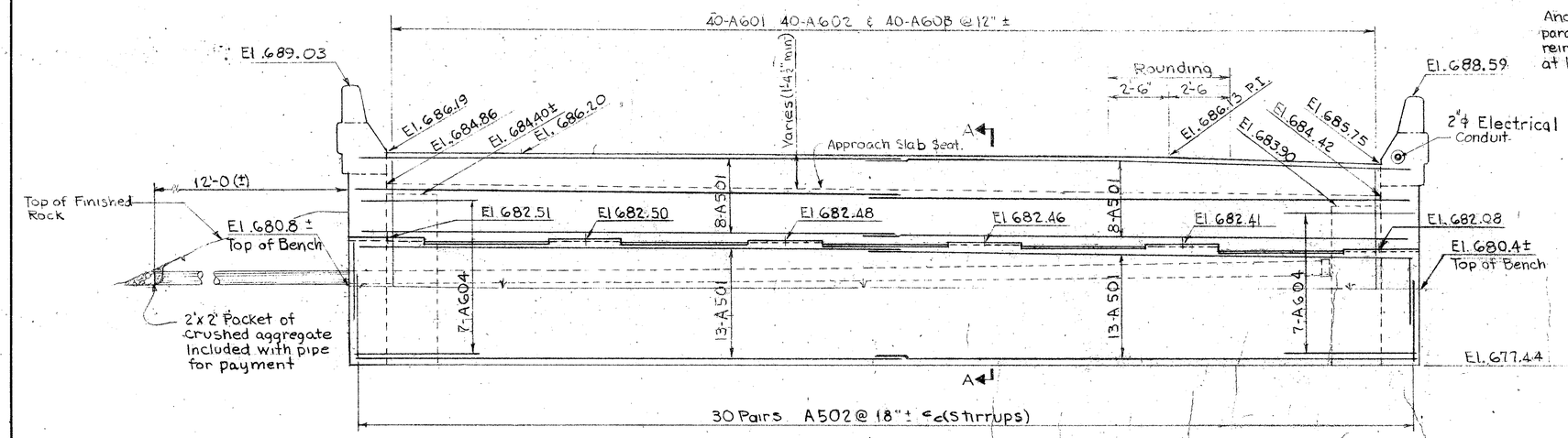

ELEVATION

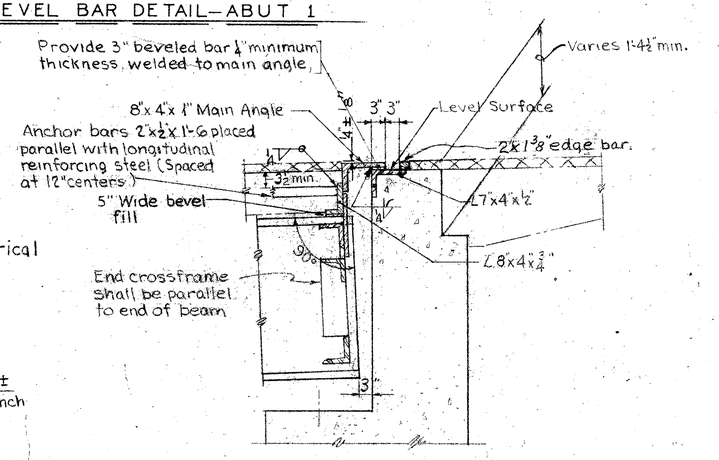

END DAM DETAIL

BACKWALL CONCRETE: In addition to the provisions of 511.08, backwall concrete above the bridge seat or backwall concrete above the optional construction joint at the approach slab seat shall not be placed until after the deck concrete in the span adjacent to the abutment has been placed.

BRIDGE SEAT REINFORCING

Special care shall be taken in placing reinforcing steel in the vicinity of the bridge seat so as to avoid interference with the drilling of anchor bar holes or the pre-setting of anchor bars.

BEARING ANCHORS: At the option of the Contractor, bearing anchors (or formed holes), located and supported by templates, may be cast in place.

3/9

MICHAEL BAKER JR., CONSULTING ENGINEERS
ROCHESTER, PENNSYLVANIA

ABUTMENT NO. 1
BRIDGE NO. BEL-7-1848 LT.
OVER RAMPS A&B

STA 1429+39.53 RAMP AB

DESIGNED	DRAWN	TRACED	CHECKED	REVIEWED	DATE	REVISED
V.Y.C.	C.W.		DWP	WRK	8/18/76	

BEAVER VALLEY ENGINEERING SUPPLIES CO. REORDER A-23979

MICROFILMED
AUG 15 1988

FED. RD. DIVISION	STATE	PROJECT	TYPE FUNDS
5	OHIO		

249/288

BEL-470-5.90

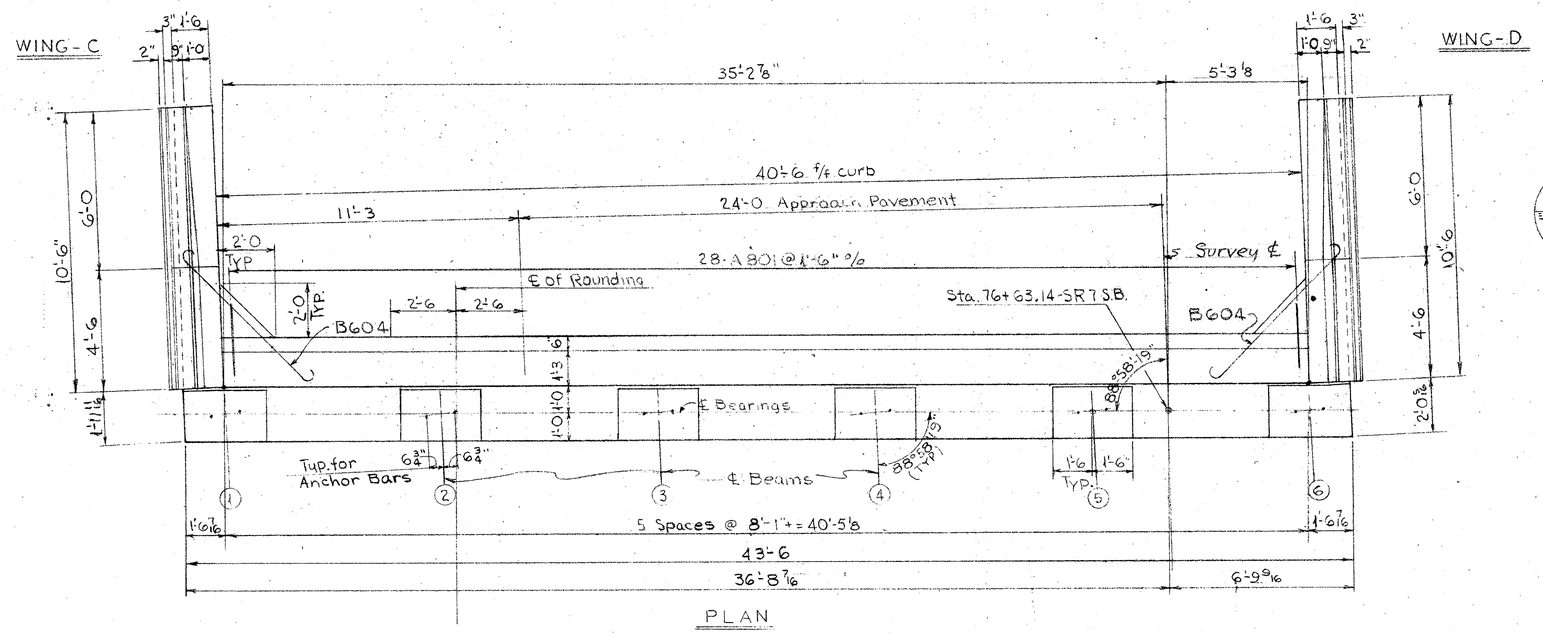

PLAN

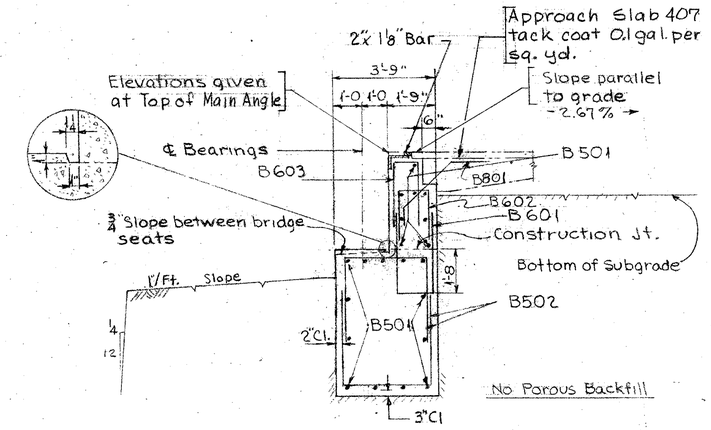

SECTION A-A

Footing Excavation - Neat (in Rock)

Special care shall be taken in placing reinforcing steel in the vicinity of the bridge seat so as to avoid interference with the drilling of anchor bar holes *or the pre-setting of anchor bars.*

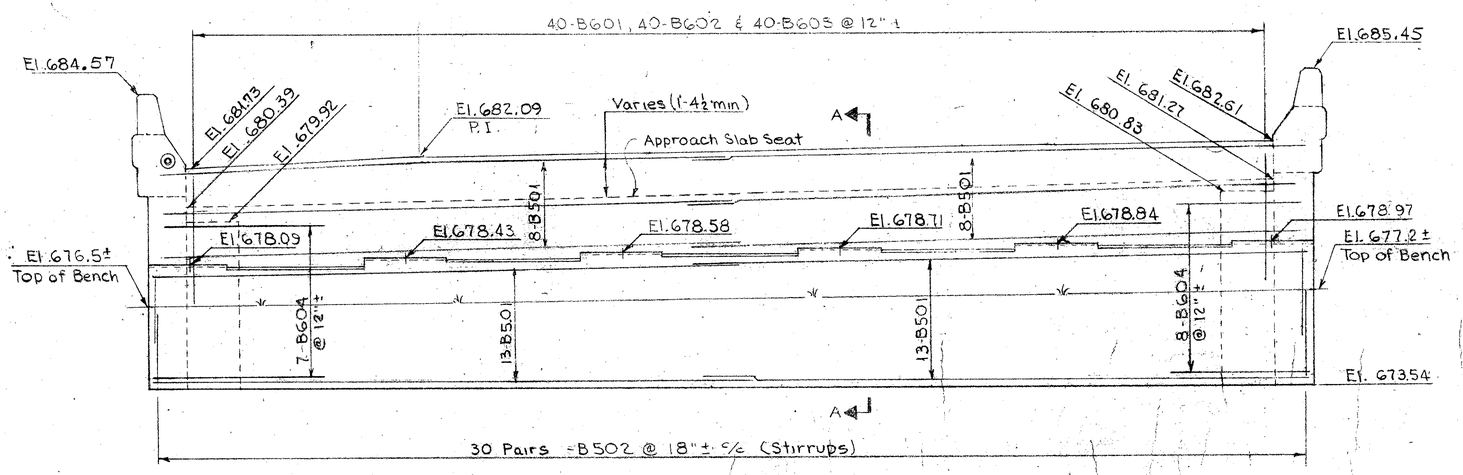

ELEVATION

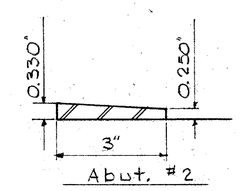

BEVEL BAR DETAIL

BEARING ANCHORS: At the option of the Contractor, bearing anchors (or formed holes), located and supported by templates, may be cast in place

4/9

MICHAEL BAKER JR., CONSULTING ENGINEERS
ROCHESTER, PENNSYLVANIA

ABUTMENT NO. 2
BRIDGE NO. BEL-7-1848 LT.
OVER RAMPS A&B

STA. 1429+39.53 RAMP AB

DESIGNED	DRAWN	TRACED	CHECKED	REVIEWED DATE	REVISED
YYC	O.D.		Dwp	WRK 8/18/76	

BEAVER VALLEY ENGINEERING SUPPLIES CO. REORDER A-23579

MICROFILMED
AUG 15 '88

FED. RD. DIVISION	STATE	PROJECT	TYPE FUNDS
5	OHIO		

250/288

BEL-470-5.90

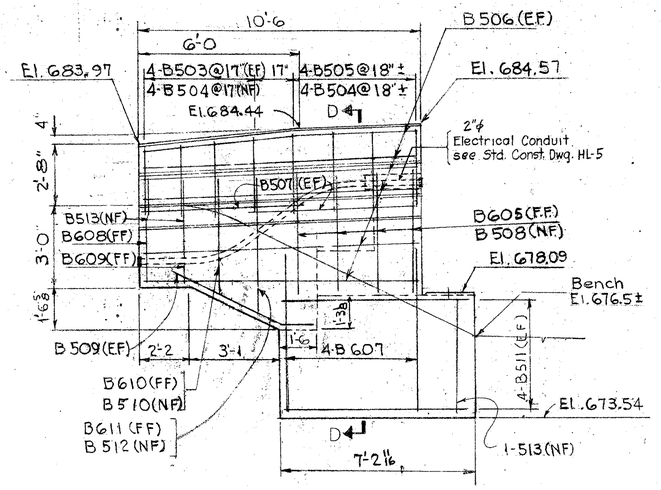

ELEVATION WING-C

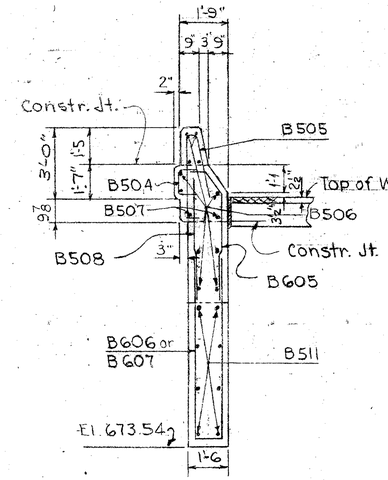

SECTION C-C (As Shown)
SECTION D-D (Similar)

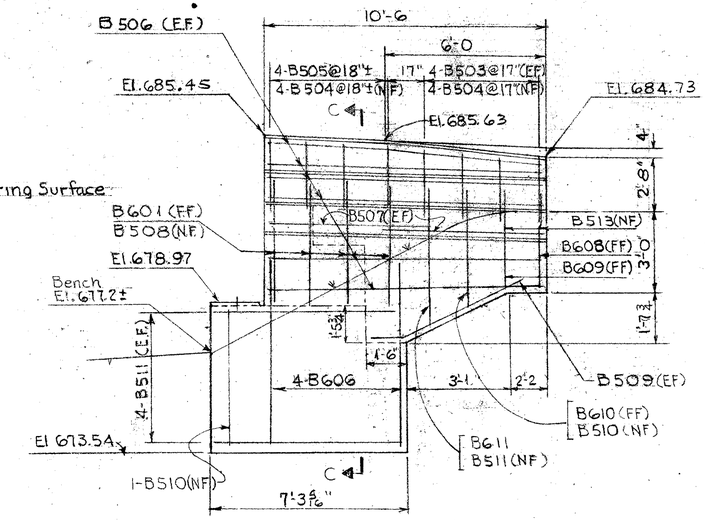

ELEVATION WING-D

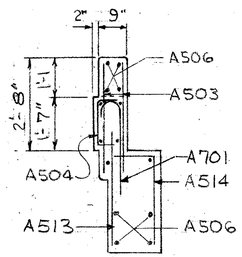

END VIEW
FOR WINGS A&B

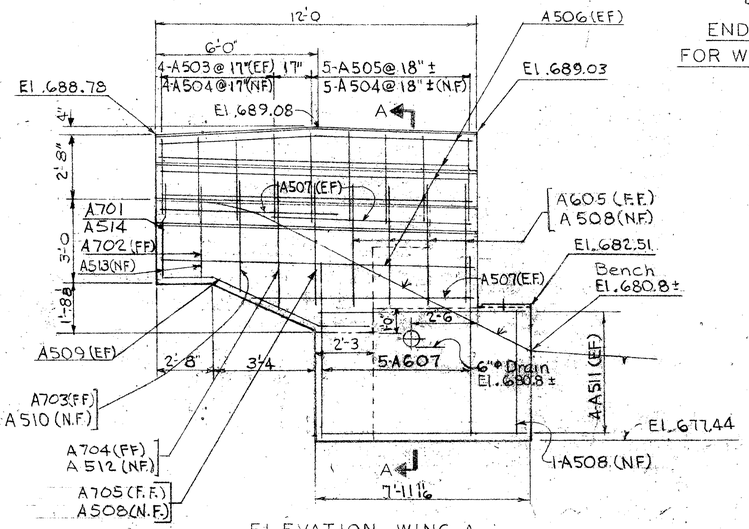

ELEVATION WING-A

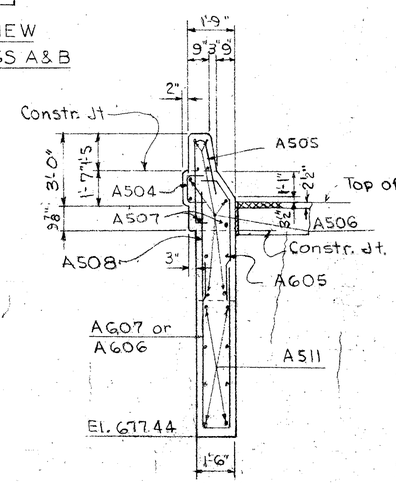

SECTION A-A (As Shown)
SECTION B-B (Similar)

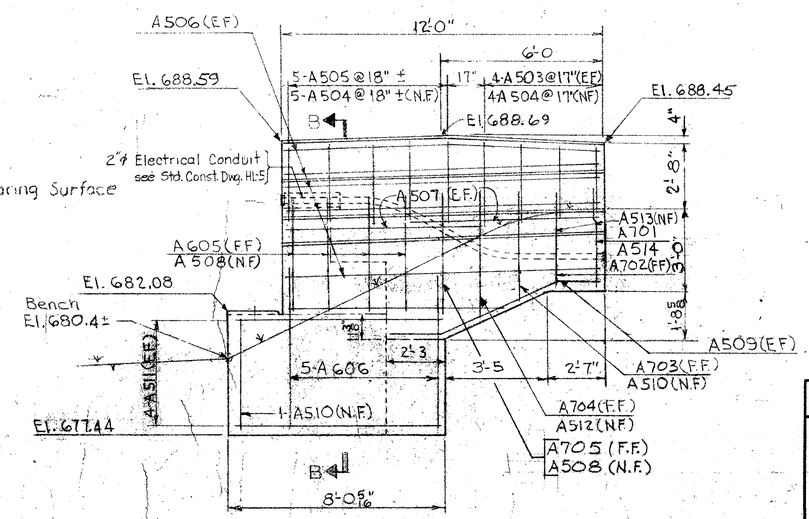

ELEVATION WING-B

LEGEND

NF = Near Face
FF = Far Face
EE = Each Face

5/9

MICHAEL BAKER JR., CONSULTING ENGINEERS
ROCHESTER, PENNSYLVANIA

WINGWALL DETAILS
BRIDGE NO. BEL-7-1848 LT.
OVER RAMPS A&B

STA. 1429+39.53 RAMP AB

DESIGNED	DRAWN	TRACED	CHECKED	REVIEWED	DATE	REVISED
YXC	Qwl.		DWP	WRK	8/18/76	

BEAVER VALLEY ENGINEERING SUPPLIES CO. REORDER A-23879

MICROFILMED
AUG 15 1983

FED. RD. DIVISION	STATE	PROJECT	TYPE FUNDS
5	OHIO		-

251/288

BEL-470-5.90

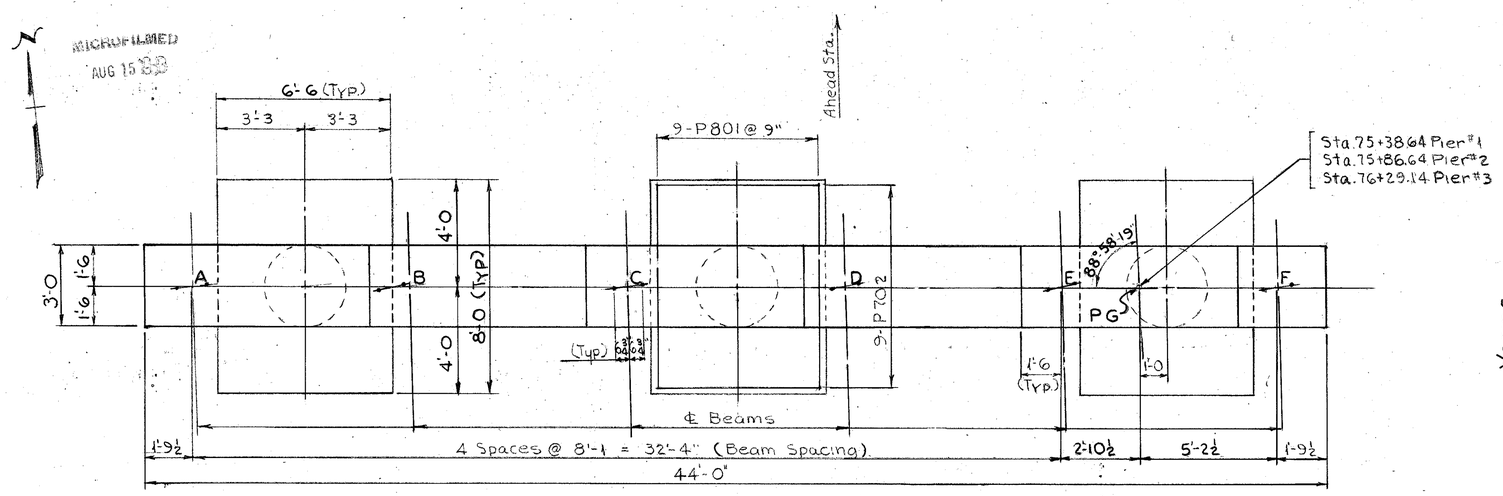

PLAN

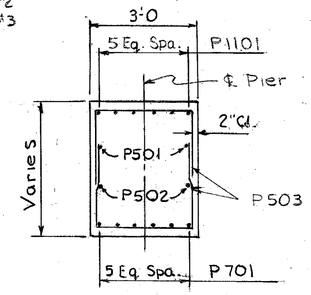

SECTION A-A

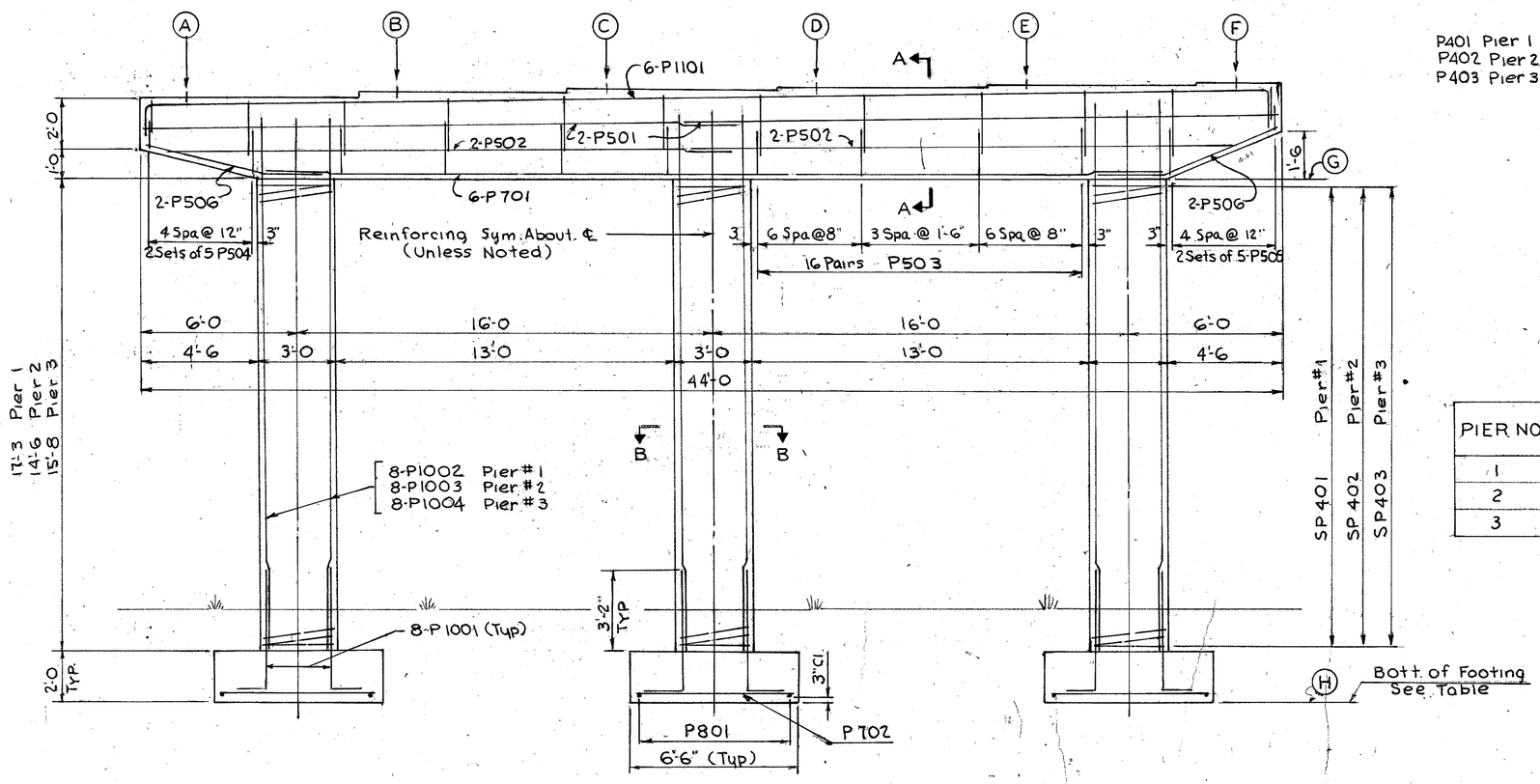

PIER NO. 1 (Shown)
PIER NO. 2 & 3 (Similar)

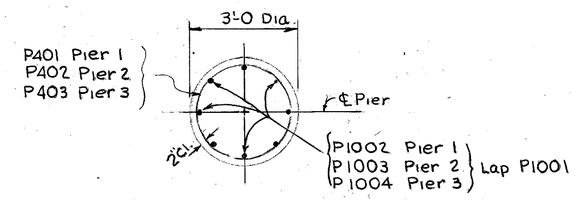

SECTION B-B

BRIDGE SEAT REINFORCING: Special care shall be taken in placing the reinforcing steel in the pier caps so as to avoid interference with the drilling of anchor bar holes. or the pre-setting of anchors bars.

BEARING ANCHORS: At the option of the Contractor, bearing anchors (or formed holes), located and supported by templates, may be cast in place.

PIER NO	PIER ELEVATIONS							
	A	B	C	D	E	F	G	H
1	681.27	681.60	681.68	681.73	681.78	681.82	678.27	659.02
2	680.23	680.56	680.67	680.76	680.85	680.94	677.23	660.73
3	678.99	679.32	679.47	679.60	679.72	679.84	675.99	658.32

6/9

MICHAEL BAKER JR., CONSULTING ENGINEERS
ROCHESTER, PENNSYLVANIA

PIER DETAILS
BRIDGE NO BEL-7-1848 LT.
OVER RAMPS A&B

STA. 1429+39.53 RAMP AB

DESIGNED	DRAWN	TRACED	CHECKED	REVIEWED	DATE	REVISED
YYC.	D.W.		Dwp	WRK	8/13/76	

BEAVER VALLEY ENGINEERING SUPPLIES CO. REORDER A-33970

MICROFILMED
AUG 15 1988

FED. RD. DIVISION	STATE	PROJECT	TYPE FUNDS
5	OHIO		

252
288

BEL-470-5.90

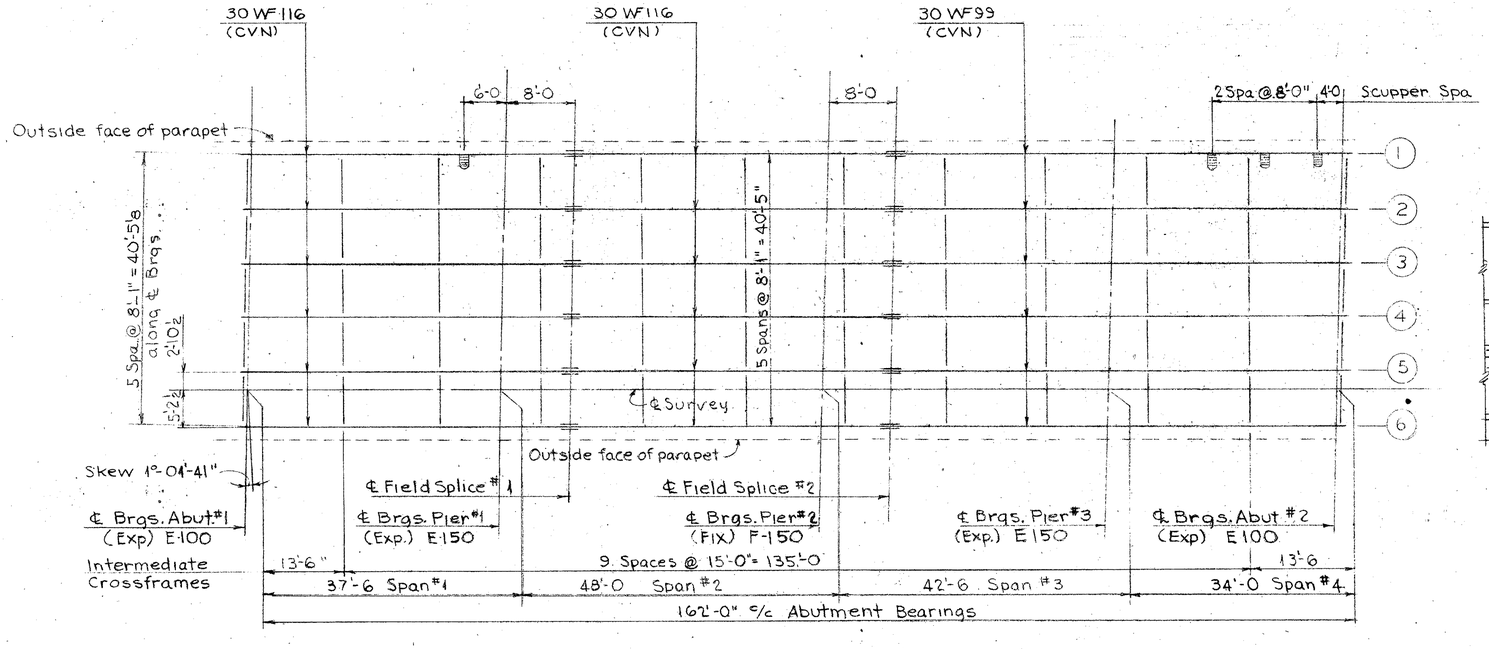

FRAMING PLAN

See Sheet 8/9 for Typical Deck Section

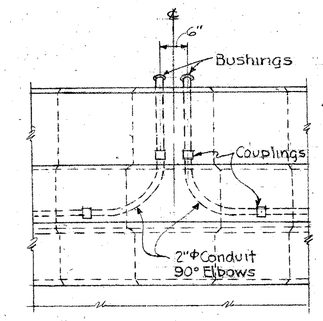

ELEVATION

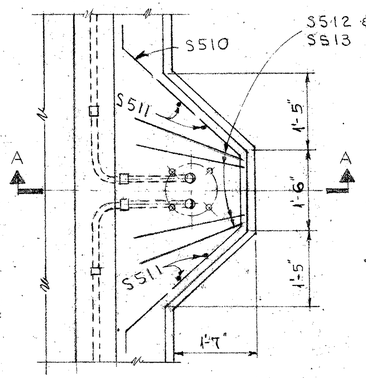

PLAN

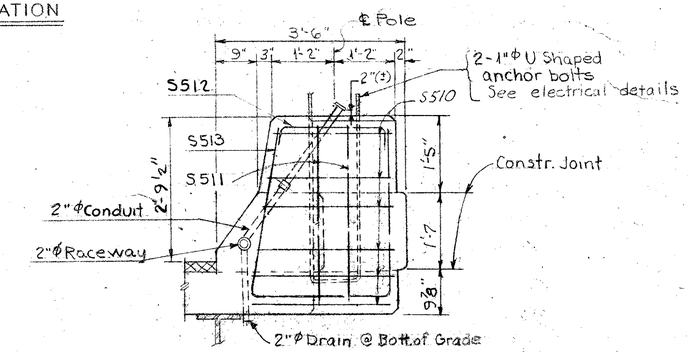

SECTION A-A

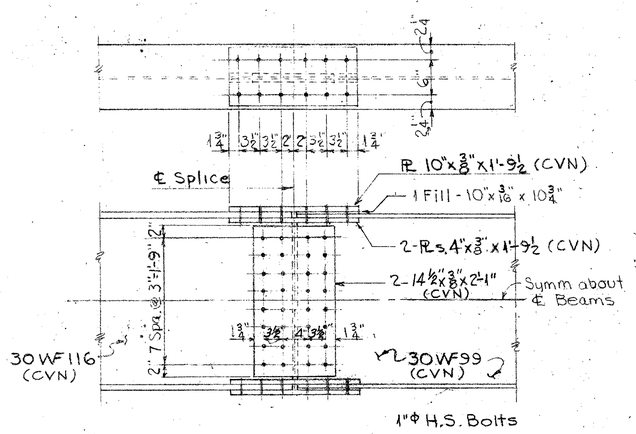

FIELD SPLICE #2

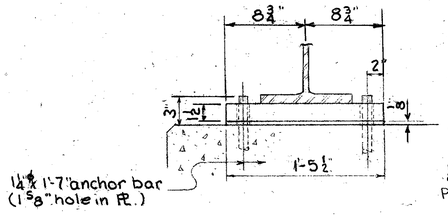

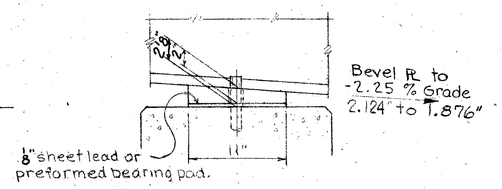

FIXED BEARING
PIER #2

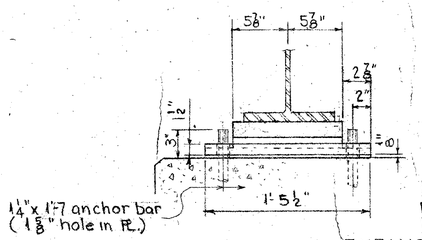

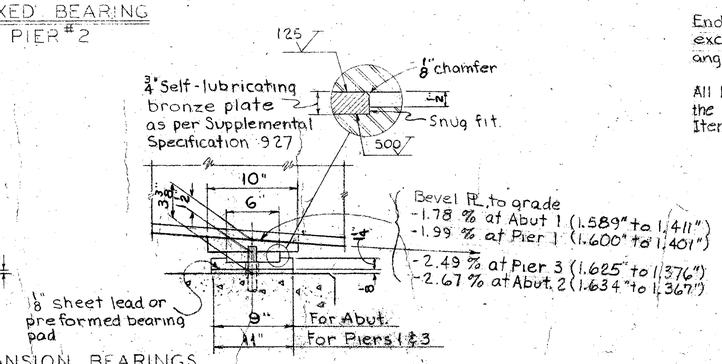

EXPANSION BEARINGS

NOTE:

See Std. Dwg SD-1-69 for cross frames, curb plates, and standard beam splice details.

End dam fabrication will be in accordance with SD-1-69 except that the top angle will be L 8x4x1 and support angle will be L 8x4x3/4

All beams and splice materials (except filler plates) shall meet the notch toughness requirements (CVN) as specified in Item 711.01 of the Construction and Materials Specifications.

7 / 9

MICHAEL BAKER JR., CONSULTING ENGINEERS
ROCHESTER, PENNSYLVANIA

SUPERSTRUCTURE DETAILS
BRIDGE NO. BEL-7-1848 LT.
OVER RAMPS A&B
STA. 1429+39.53 RAMP A B

DESIGNED	DRAWN	TRACED	CHECKED	REVIEWED DATE	REVISED
Y.Y.C.	O.W.		DMP	WRK 8/18/76	

BEAVER VALLEY ENGINEERING SUPPLIES CO. REORDER A-23079

MICROFILMED
AUG 15 1990

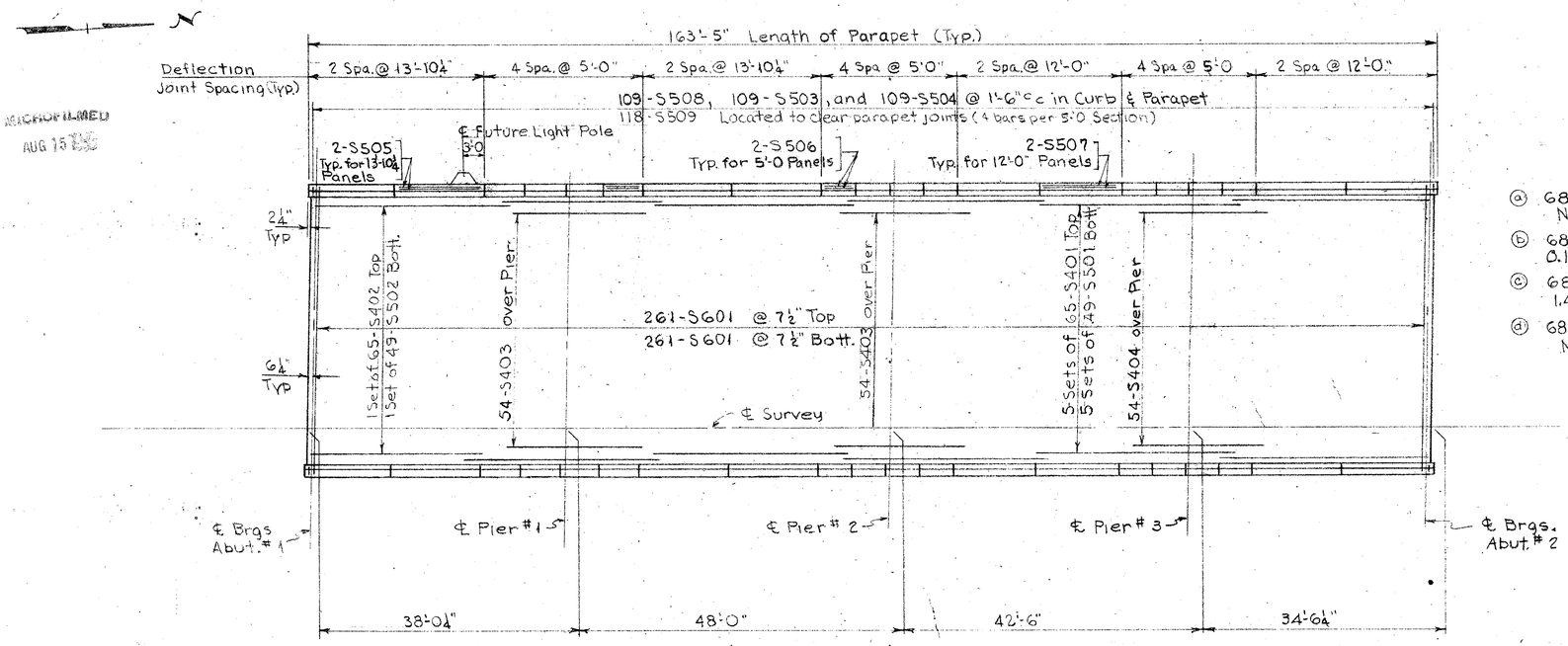

DECK PLAN

DECK ELEVATIONS ⊙ (Top of conc. slab)				
STATION	A	B	C	D
74+60.00	686.34	a	686.68	686.65
74+80.00	685.92	b	686.36	686.35
75+00.00	685.61	685.95	686.01	686.02
75+20.00	685.20	685.54	685.66	685.67
75+40.00	684.74	685.09	685.26	685.29
75+60.00	684.30	684.64	684.87	684.91
75+80.00	683.79	684.14	684.41	684.47
76+00.00	683.29	683.64	683.97	684.03
76+20.00	683.15	683.10	683.48	683.56
76+40.00	682.22	682.57	683.00	683.08
76+60.00	681.69	682.04	682.47	682.55
76+80.00	681.10	c	682.02	682.01
77+00.00	680.52	d	681.36	681.44

ⓐ 686.81 24' Lt. No Rounding

ⓑ 686.38 24.08' Lt. 0.17' of Rounding

ⓒ 684.54 24.73' Lt. 1.46' of Rounding

ⓓ 680.99 24' Lt. No Rounding

⊙ Adjusted at stations on structure to show elevations required prior to deck placement to attain profile grade elevations after structure is complete

DECK SLAB DEPTH The distance shown from the top of deck slab to the top of steel beam is the design dimension. The quantity of deck concrete to be paid for shall be based on this dimension even though deviation from it may be necessary because the top flange of the beam may not have the exact profile required to place it parallel to finished grade.

See sheet (234) for the Deck Drainage Details and the Scupper Details

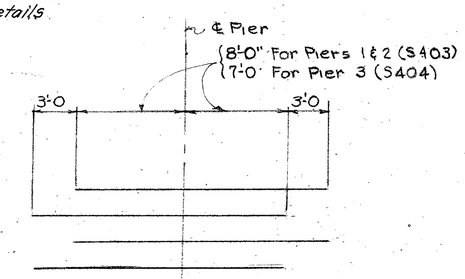

STAGGER OF S403 BARS AND S404 BARS OVER PIERS

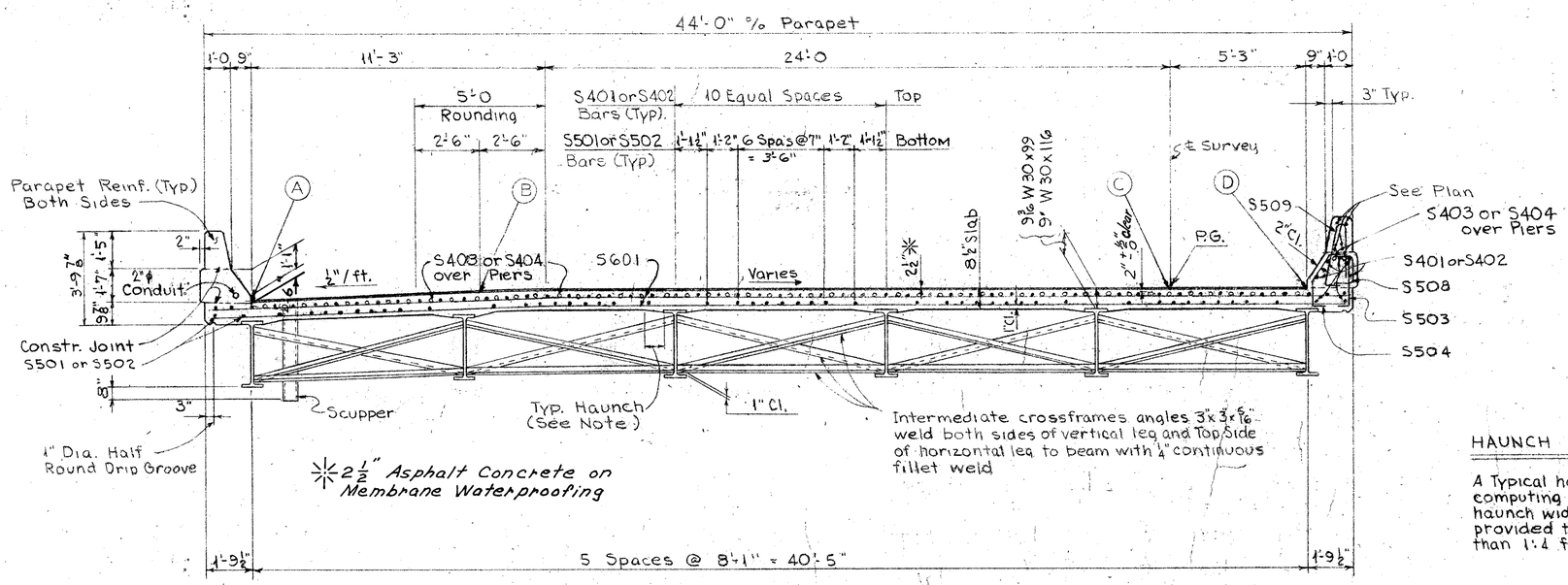

TYPICAL DECK SECTION

HAUNCH NOTE:

A Typical haunch width of 9" shall be used for computing quantity of concrete. However, the haunch width may vary between 6" and 12" provided that the slope shall be not more than 1:4 for a haunch less than 9" wide.

8/9

MICHAEL BAKER JR., CONSULTING ENGINEERS
ROCHESTER, PENNSYLVANIA

DECK DETAILS
BRIDGE NO. BEL-7-1848 LT.
OVER RAMPS A&B

STA. 1429+39.53 RAMP A B

DESIGNED	DRAWN	TRACED	CHECKED	REVIEWED	DATE	REVISED
Y.Y.C.	DWB		Dwp	WRK	8/18/76	

BEAVER VALLEY ENGINEERING SUPPLIES CO. REORDER A-23979

MICROFILMED
AUG 15 1996

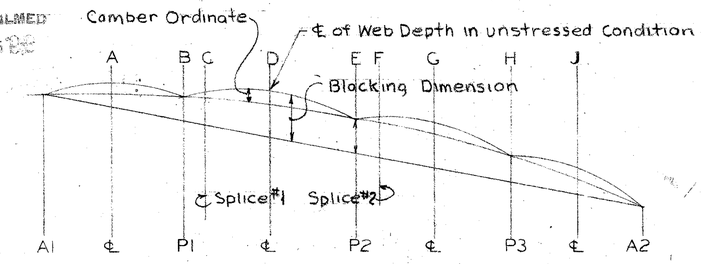

CAMBER DIAGRAM

* and/or Deck Cross slope

DEFLECTION and CAMBER —— BLOCKING DIMENSIONS

		A	B	C	D	E	F	G	H	J
BEAM NO. 1	Deflection due to Weight of Steel	.01		.01	.03		.01	.01		.01
	Deflection due to remaining D.L.	.09		.08	.17		.04	.09		.09
	Adjustment required for Vertical Curve *	.11		.13	.19		.11	.14		-.02
	Total Camber	.21 = 3/16"	0	.22 = 1/4"	.39 = 3/8"	0	.16 = 3/16"	.24 = 1/4"	0	.08 = 1/16"
	Blocking Distance	.88 = 7/8"	1.34 = 1 3/8"	1.635 = 1 5/8"	1.91 = 1 15/16"	1.70 = 1 11/16"	1.64 = 1 5/8"	1.47 = 1 1/2"	.76 = 3/4"	.46 = 7/16"
BEAM NO. 2	Deflection due to Weight of Steel	.01		.01	.03		.01	.01		.01
	Deflection due to remaining D.L.	.12		.10	.21		.05	.11		.12
	Adjustment required for Vertical Curve *	.12		.13	.19		.11	.14		-.04
	Total Camber	.25 = 1/4"	0	.24 = 1/4"	.43 = 7/16"	0	.17 = 3/16"	.26 = 1/4"	0	.09 = 1/16"
	Blocking Distance	.92 = 15/16"	1.34 = 1 3/8"	1.66 = 1 11/16"	1.96 = 1 15/16"	1.72 = 1 3/4"	1.66 = 1 11/16"	1.50 = 1 1/2"	.76 = 3/4"	.47 = 1/2"
BEAM NO. 3	Deflection due to Weight of Steel	.01		.01	.03		.01	.01		.01
	Deflection due to remaining D.L.	.12		.10	.21		.05	.11		.12
	Adjustment required for Vertical Curve *	.12		.12	.18		.11	.14		.00
	Total Camber	.25 = 1/4"	0	.23 = 1/4"	.42 = 7/16"	0	.17 = 3/16"	.26 = 1/4"	0	.13 = 1/8"
	Blocking Distance	.95 = 15/16"	1.40 = 1 3/8"	1.72 = 1 3/4"	2.04 = 2 1/16"	1.84 = 1 13/16"	1.80 = 1 13/16"	1.66 = 1 11/16"	.96 = 15/16"	.61 = 5/8"
BEAM NO. 4	Deflection due to Weight of Steel	.01		.01	.03		.01	.01		.01
	Deflection due to remaining D.L.	.12		.10	.21		.05	.11		.12
	Adjustment required for Vertical Curve *	.12		.12	.19		.11	.16		.05
	Total Camber	.25 = 1/4"	0	.23 = 1/4	.43 = 7/16	0	.17 = 3/16	.28 = 1/4"	0	.18 = 3/16"
	Blocking Distance	.87 = 7/8	1.45 = 1 7/16	1.79 = 1 13/16	2.14 = 2 1/8	1.98 = 2"	1.96 = 1 15/16	1.85 = 1 7/8"	1.16 = 1 3/16"	.76 = 3/4"
BEAM NO. 5	Deflection due to Weight of Steel	.01		.01	.03		.01	.01		.01
	Deflection due to remaining D.L.	.12		.10	.21		.05	.11		.12
	Adjustment required for Vertical Curve *	.11		.14	.20		.12	.16		.08
	Total Camber	.24 = 1/4"	0	.25 = 1/4"	.44 = 7/16"	0	.18 = 3/16"	.28 = 1/4"	0	.21 = 3/16"
	Blocking Distance	1.01 = 1"	1.54 = 1 9/16	1.91 = 1 15/16"	2.27 = 2 1/4	2.11 = 2 1/8"	2.12 = 2 1/8"	2.02 = 2"	1.37 = 1 3/8	.89 = 7/8"
BEAM NO. 6	Deflection due to Weight of Steel	.01		.01	.03		.01	.01		.01
	Deflection due to remaining D.L.	.09		.08	.17		.04	.09		.09
	Adjustment required for Vertical Curve *	.12		.12	.20		.12	.16		.13
	Total Camber	.22 = 1/4"	0	.21 = 3/16"	.40 = 3/8"	0	.17 = 3/16"	.26 = 1/4"	0	.23 = 1/4"
	Blocking Distance	1.00 = 1"	1.57 = 1 9/16	1.92 = 1 15/16	2.31 = 2 5/16"	2.24 = 2 1/4"	2.25 = 2 1/4	2.16 = 2 3/16	1.56 = 1 9/16	1.01 = 1"

BEAVER VALLEY ENGINEERING SUPPLIES CO. REORDER A-33879

REINFORCING STEEL LIST

Mark	No	Length	Weight	Ship
ABUTMENT NO.1				
A801	28	5'-3	392	B
A701	2	4'-6	18	B
A702	2	4'-9	19	B
A703	2	5'-0	20	B
A704	2	5'-7	23	B
A705	2	6'-6	27	B
A601	40	8'-6	511	B
A602	40	5'-2	310	B
A603	40	6'-3	401	B
A604	14	8'-0	168	B
A605	8	5'-8	68	B
A606	5	13'-4	100	B
A607	5	14'-2	106	B
A501	42	22'-4	978	S
A502	60	9'-0	563	B
A503	16	3'-2	53	S
A504	18	2'-3	42	B
A505	10	7'-0	73	B
A506	20	11'-8	243	S●
A507	12	7'-3	91	S
A508	11	4'-8	54	S
A509	4	8'-2	34	B
A510	3	4'-4	14	S
A511	16	7'-7	127	S
A512	2	5'-0	10	S
A513	4	4'-0	17	S
A514	2	4'-1	9	B
ABUTMENT NO.2				
B801	28	5'-3	392	B
B601	40	8'-6	511	B
B602	40	5'-2	310	B
B603	40	6'-8	401	B
B604	15	8'-0	180	B
B605	8	5'-7	67	B
B606	4	15'-0	90	B
B607	4	13'-2	79	B
B608	2	5'-2	16	B
B609	2	5'-1	15	B
B610	2	5'-6	17	B
B611	2	6'-4	19	B
B501	42	22'-4	978	S
B502	60	9'-10	615	B
B503	16	3'-2	53	S
B504	16	2'-3	38	B
B505	8	7'-0	58	B
B506	24	10'-2	254	S●
B507	8	6'-8	56	S
B508	8	4'-7	38	S
B509	4	6'-6	27	B
B510	3	4'-9	15	S
B511	16	6'-10	114	S
B512	2	5'-6	11	S
B513	5	4'-1	21	S
APPROACH SLABS				
AS902	122	20'-9	—	B
AS801	82	1'-6	—	S
AS501	62	40'-0	—	S
AS502	54	19'-6	—	S

● Bend in field as required

BENDING DIAGRAMS

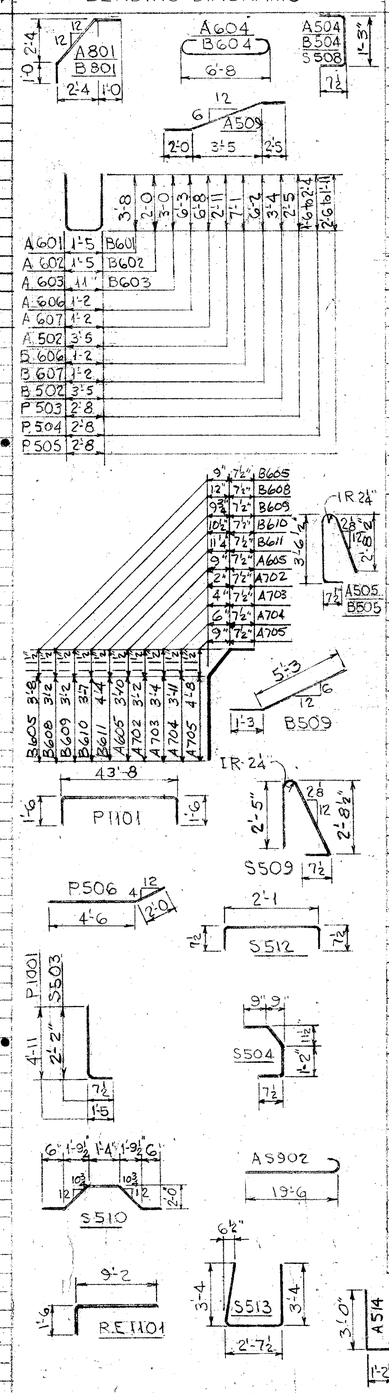

Mark	No	Length	Weight	Ship
PIERS				
P1101	18	46'-0	4399	B
P1001	72	6'-0	1859	B
P1002	24	20'-0	2065	S
P1003	24	17'-3	1781	S
P1004	24	18'-5	1902	S
P 801	81	7'-6	1622	S
P 701	18	34'-8	1275	S
P 702	81	6'-0	993	S
P 501	12	22'-7	283	S
P 502	12	21'-7	270	S
P 503	192	7'-3	1452	B
P 504 ⓐ	6 S of 5	5'-5 to 7'-1	196	B
P 505 ⓑ	6 S of 5	7'-5 to 6'-3	214	B
P 506	12	6'-6	81	B
Spirals - Core Diam .32" o/o - Pitch 4½" c/c other details in accordance with CRSI standard practice				
SP 401	3	17'-3	975	B
SP 402	3	14'-6	829	B
SP 403	3	15'-8	891	B
SUPERSTRUCTURE				
S601	522	43'-8	34239	S
S501	245	30'-0	7666	S
S502	49	20'-5	1043	S
S503	218	2'-8	606	B
S504	218	3'-6	796	B
S505	32	13'-6	451	S
S506	96	4'-8	467	S
S507	32	11'-8	389	S
S508	218	2'-3	512	B
S509	236	5'-5	1334	B
S510	6	7'-8	48	B
S511	4	3'-4	14	S
S512	4	3'-1	13	B
S513	4	9'-1	38	B
S401	325	30'-0	6513	S
S402	65	18'-9	814	S
S403	108	19'-0	1371	S
S404	54	17'-0	613	S

ⓐ Vary each bar by 5"
ⓑ Vary each bar by 3½"
6 S of 5 means
6 Sets of 5 bars

REINFORCING STEEL SAMPLES
Refer to CMS Sections 106.03, 700, 709.01 through 709.05 and 709.08. Sufficient additional reinforcing steel shall be provided for sampling. Random samples shall be replaced in the structures by the additional steel, spliced in accordance with 509.08.

FED. RD. DIVISION	STATE	PROJECT	TYPE FUNDS
5	OHIO		

254/288

BEL-470-5.90

9/9

MICHAEL BAKER JR., CONSULTING ENGINEERS
ROCHESTER, PENNSYLVANIA

CAMBER DATA AND BAR LIST
BRIDGE NO. BEL-7-1848 LT.
OVER RAMPS A & B

STA. 1429+39.53 RAMP A B

DESIGNED	DRAWN	TRACED	CHECKED	REVIEWED DATE	REVISED
Y.Y.G.	D.W.			WRK 8/18/76	

LIGHTING NOTES

SPECIFICATIONS

THESE NOTES ARE SUPPLEMENTAL TO ITEMS S625 & S713 OF THE STATE OF OHIO DEPARTMENT OF TRANSPORTATION CONSTRUCTION AND MATERIAL SPECIFICATIONS.

REFERENCE SHALL BE MADE TO STANDARD CONSTRUCTION DRAWINGS AS LISTED ON THE TITLE SHEET OF THESE PLANS.

PLAN SPECIFICATION REFERENCES

REFERENCES TO ITEM 625 AND 713 IN THESE PLANS SHALL BE CONSIDERED TO READ AS RESPECTIVE REFERENCES TO ITEMS S625 AND 57.3.

625.03- GENERAL

THE POWER SUPPLYING AGENCY FOR THIS PROJECT IS: OHIO POWER COMPANY
301 CLEVELAND AVENUE, S. W.
CANTON, OHIO 44700

THIS PROJECT HAS BEEN DESIGNED ON THE BASIS OF 5% VOLTAGE DROP PERMISSIBLE ON BRANCH CIRCUITS. THE PROJECT WILL RECEIVE 480 VOLT TWO-WIRE SECONDARY SERVICE, ONE SIDE GROUNDED FROM OHIO POWER COMPANY.

THE PROJECT HAS BEEN DESIGNED ON THE BASIS OF INTERMEDIATE LIGHTING WITH ULTIMATE POTENTIAL OF 1.2 AVERAGE FOOTCANDLE INITIAL, WITH A MAXIMUM UNIFORMITY RATIO 4.0 TO 1.

LIGHT POLE ANCHOR BOLTS FOR BRIDGES AND RETAINING WALLS

ANCHOR BOLTS FOR MOUNTING LIGHT POLES ON BRIDGES AND RETAINING WALLS SHALL CONFORM TO THE REQUIREMENTS OF 713.01 AND DETAILS SHOWN ON THE PLANS AND STANDARD DRAWINGS, OR THE APPROVED SHOP DRAWINGS FOR THE RESPECTIVE POLES TO BE PLACED THEREON. PAYMENT SHALL BE MADE AT THE UNIT PRICE BID FOR EACH SET OF THE SIZE REQUIRED AND NECESSARY TO INSTALL ONE POLE, AND THIS PAYMENT SHALL CONSTITUTE FULL COMPENSATION FOR FURNISHING AND PLACING THE BOLTS.

ELECTRICAL SERVICE FOR ILLUMINATED SIGNS

THE PAY ITEMS IN THE LIGHTING GENERAL SUMMARY INCLUDE THE PULL BOX OR THE JUNCTION BOX ADJACENT TO EACH LIGHTED SIGN AND THE ELECTRICAL SERVICE CONNECTIONS LEADING INTO THE BOX, INCLUDING CONNECTOR KITS IN THE PULL BOX OR JUNCTION BOX, QUANTITIES FOR ELECTRICAL SERVICE FROM THE CONNECTOR KITS IN THE PULL BOX OR THE JUNCTION BOX TO THE SIGN ARE INCLUDED IN THE TRAFFIC CONTROL GENERAL SUMMARY.

LIGHT POLE DATA

REFERENCE LETTER	DESIGN NUMBER	FOUNDATION ANCHOR BOLTS: SIZE DIA. x LENGTH	FOUNDATION ANCHOR BOLTS: BOLT CIRCLE DIAMETER	BASE STYLE
1.	A 15B-32.9	1"x40"	12½"	
2.	A 12B-32.9	1"x40"	12½"	
3.	ST 10B-41.7	1"x40"	15"	STEEL
4.	ST10B 34.2	1"x40"	15"	STEEL

HIGH VOLTAGE DIRECT CURRENT TEST

A HIGH VOLTAGE DIRECT CURRENT TEST, AS DESCRIBED IN SUPPLEMENTAL SPECIFICATION 839, SHALL BE PERFORMED ON ALL DISTRIBUTION CABLE AND DUCT CABLE SYSTEMS TO BE INSTALLED ON THIS PROJECT. THE TEST SHALL NOT BE PERFORMED UNTIL AFTER ALL NEW CONSTRUCTION, SUCH AS GUARD RAIL, FENCE, DELINEATOR POSTS, SIGN SUPPORTS, ETC., IN THE IMMEDIATE VICINITY OF THE DISTRIBUTION CABLE RUN BEING TESTED, HAS BEEN COMPLETED. THE TESTING REQUIREMENTS OF 625.22(5) ARE HEREBY WAIVED FOR THOSE CIRCUITS ON WHICH THE HIGH VOLTAGE TEST IS TO BE PERFORMED.

625 - CONDUIT JACKED UNDER EXISTING PAVEMENT

THIS ITEM SHALL CONSIST OF INSTALLING CONDUIT OF THE SIZE OR SIZES INDICATED UNDER EXISTING PAVEMENT AND CONTIGUOUS SHOULDERS BY AN APPROVED METHOD SUCH AS "DRILLING" OR "JACKING".

THE CONTRACTOR SHALL PLACE THE CONDUIT WITH THE LEAST AMOUNT OF DISTURBANCE TO THE EXISTING PAVEMENT, SUBBASE, BERM PAVEMENT, OR SHOULDERS OF THE ROADWAY. ALL PUSH PITS OR ANY NECESSARY EXCAVATIONS SHALL BE BACKFILLED AND RESTORED IN ACCORDANCE WITH 625.01. MEASUREMENT OF THE CONDUIT SHALL BE THE ACTUAL AMOUNT OF LINEAL FEET INSTALLED UNDER PAVEMENT AND SHOULDERS, MEASURED IN PLACE, AS ACCEPTED BY THE ENGINEER.

THE UNIT PRICE BID FOR ITEM 625 "CONDUIT JACKED UNDER EXISTING PAVEMENT, AS PER PLAN" SHALL BE FULL COMPENSATION FOR EXCAVATION, DRILLING OR JACKING, BACKFILLING, COMPACTION, RESTORATION, AND ALL LABOR, MATERIAL, EQUIPMENT, AND INCIDENTIALS NECESSARY TO COMPLETE THE WORK AS SPECIFIED.

ITEM - 625 SERVICE TO UNDERPASS LIGHTING, AS PER PLAN.

THIS ITEM SHALL CONSIST OF PROVIDING COMPLETE ELECTRICAL SERVICE, EXCEPT FOR LUMINAIRES, LAMPS, AND STRUCTURE GROUNDING, FOR UNDERPASS LIGHTING SYSTEM, BEL. 470-0662 (OVER) N.B. & S. B. SR.7. THE INSTALLATION WORK SHALL INCLUDE CONDUITS, CONDUIT GROUNDING, MOUNTINGS, FITTINGS, JUNCTION BOXES, CABLES, AND ALL INCIDENTALS NECESSARY TO COMPLETE READY FOR USE, THE SERVICE AS DETAILED ON HL-6. THE LUMP SUM PRICE BID FOR "ITEM 625 - SERVICE TO UNDERPASS LIGHTING AS PER PLAN" SHALL INCLUDE PAYMENT FOR ALL EQUIPMENT, LABOR, AND MATERIALS NECESSARY TO COMPLETE THE WORK AS SPECIFIED. COMPONENT PARTS NOT SPECIFICALLY MENTIONED BUT REQUIRED FOR SATISFACTORY OPERATION OF THIS ITEM SHALL BE FURNISHED AND CONSIDERED PAID FOR AS PART OF THE ITEM.

CONNECTOR KITS

AT THE OPTION OF THE CONTRACTOR, TYPE IX CABLE CONNECTIONS MAY BE SUBSTITUTED WHERE TYPE II OR III CABLE CONNECTIONS ARE SPECIFIED IN HAND HOLES OR TRANSFORMER BASES OF LIGHT POLES.

TYPE I THROUGH TYPE VII CABLE CONNECTIONS IN PULL BOXES, JUNCTION BOXES, AND OTHER ENCLOSURES BELOW GROUND MAY BE ACCOMPLISHED BY THE USE OF EITHER OF THE FOLLOWING:

1. A SLEEVE OR TEE CABLE CONNECTOR CONFORMING TO THE GENERAL REQUIREMENTS OF STYLE "S" OR "H", OR OTHER CONNECTING DEVICE APPROVED BY THE ENGINEER. THE CONNECTOR SHALL BE INSTALLED IN ACCORDANCE WITH THE MANUFACTURER'S DIRECTIONS AND THE CONNECTION SHALL BE SEALED AND WATERPROOFED WITH A HI-DIELECTRIC COMPOUND SUCH AS "AQUA SEAL" AS MANUFACTURED BY KEARNEY, OR EQUAL APPROVED BY THE ENGINEER. THE SEALING MATERIAL SHALL BE APPLIED IN ACCORDANCE WITH THE

CONNECTOR KITS, CONT.

MANUFACTURER'S DIRECTIONS TO MAKE A WATER-TIGHT CONNECTION. CONNECTIONS NOT ACCOMPLISHED IN-LINE OR IN TEE FORM SHALL BE ADDITIONALLY PROTECTED BY USE OF A HI-DIELECTRIC PVC, OR OTHER APPROVED MATERIAL, BOOT WITH AN APPROVED FASTENING DEVICE.

2. A PREASSEMBLED KIT, AS MANUFACTURED BY JOY OR BUSSMAN, OR APPROVED EQUAL, WITH A WATERPROOF OR WATER-TIGHT RATING ACCEPTABLE TO THE ENGINEER.

STRUCTURE LIGHTING
FOR DETAILS SEE HL-19, RACEWAY WITHOUT JUNCTION BOXES.

CONDUIT ON STRUCTURES

EXPANSION FITTINGS FOR CONDUIT ON STRUCTURES SHALL BE OZ TYPE AX, CROUSE-HINDS TYPE XJ-4 APPLETON TYPE XJ-4, OR EQUAL APPROVED BY THE ENGINEER.

EACH EXPANSION FITTING SHALL HAVE A COPPER BONDING JUMPER.

625.07 - 713.11 LUMINAIRES

23,000 LUMEN HORIZONTAL STYLE B LUMINAIRES, DESIGNED FOR USE WITH 250 W. HIGH PRESSURE SODIUM LAMPS, SHALL HAVE SINGLE RATED 480 VOLT, 250 W. INEGRAL REGULATOR TYPE BALLASTS. STYLE B LUMINAIRES SHALL BE GENERAL ELECTRIC M-400, WESTINGHOUSE OV-25, McGRAW EDISON "UNISTYLE"-400", OR EQUAL APPROVED BY THE ENGINEER.

FOR 200 WATT LAMPS, USE THE SAME LUMINAIRE AS ABOVE, EXCEPT 200 WATT SHALL APPLY IN PLACE OF 250 WATT

S625 BREAKAWAY SUPPORT AS PER PLAN

THIS ITEM CONSISTS OF INSTALLING 4 BREAKAWAY COUPLINGS ON ANCHOR BOLTS SUPPORTING LIGHT POLES TO BE INSTALLED ON THIS PROJECT.

PAYMENT AT THE UNIT PRICE BID "SET" FOR ITEM S625 BREAKAWAY SUPPORT SHALL INCLUDE A COVER SKIRT, AS CALLED FOR IN THE DETAILS FOR THE BREAKAWAY SUPPORT, 4 BREAKAWAY COUPLINGS PER LIGHT POLE, AND ALL LABOR, MATERIAL, AND EQUIPMENT, NECESSARY COMPLETE IN PLACE.

HIGH PRESSURE SODIUM LAMPS

HIGH PRESSURE SODIUM LAMPS SHALL BE GENERAL ELECTRIC "LUCALOX", SYLVANIA "LUMALUX", WESTINGHOUSE "CERMALUX", OR EQUAL APPROVED BY THE ENGINEER.

FED. RD. DIVISION	STATE	PROJECT	
2	OHIO		

256
280

BEL-470-5.90

* SEE THIS SHEET, 2 PLACES
** SEE THIS SHEET & SHEET 257

LIGHTING QUANTITIES SUB-SUMMARY

REFERENCE NO.	SIDE	STATION	STATION	LIGHT POLE DESIGN A 15B 32.9	LIGHT POLE DESIGN A 12B 32.9	LIGHT POLE DESIGN ST 10B 41.7	LIGHT POLE ANCHOR BOLTS FOR STRUCTURE	LIGHT POLE FOUNDATION 24"x 6'	LUMINAIRE, TYPE III 200 W.	LUMINAIRE, TYPE II 200 W.	LAMP, 250 W.	LAMP, 200 W.	HIGH VOLTAGE TEST	GROUND ROD	PULL BOX 18" DIA.	PULL BOX 24" DIA.	TRENCH, 24" DEEP	CONDUIT, 2"	CONDUIT, 3"	NO. 4 AWG, 600 V. DISTRIBUTION CABLE	NO. 10 AWG, POLE AND BRACKET CABLE	1½" DUCT CABLE WITH 2#4 AWG 600 V. CABLES	CONNECTOR KIT TYPE VII A	CONNECTOR KIT TYPE II	CONNECTOR KIT TYPE III	BREAKAWAY SUPPORT	STRUCTURE GND. SYSTEM FOR BRIDGE No. Bel. 470-0615	SERVICE POLE & CONTROL CENTER NO. 1	SERVICE POLE & CONTROL CENTER NO. 2	CONNECTOR KIT TYPE VII B	REMARKS
				EA.	EA.	EA.	SETS	EA.	EA.	EA.	EA.	EA.		EA.	EA.	EA.	L.F.	L.F.	L.F.	L.F.	L.F.	L.F.	EA.	EA.	EA.	EA.	EA.	LUMP		EA.	
1.	LT.	1431+55		1				1	1		1			1							98			1	1	1					
2.	LT.	1435+00		1				1	1		1			1							98			1	1	1					
3.	LT.	1438+35		1				1	1		1			1							98			1	1	1					
4.	RT.	1440+17		1				1	1		1			1							98			1	1	1					
5.	LT.	1431+55	1442+00														1050					1080									
6.	RT.	1440+17	1442+00														190					200									
7.																															
TOTALS		SHEET NO. 261		4				4	4			4		4			1240				392	1280		4	4	4					
8.	LT.	1444+30																										1			
9.	LT.	1442+00	1444+35 (RAMP B)														230					250									
10.	LT/RT.	1444+35 (RAMP B)													1	1	40		40			50	12								
11.	RT.	1442+00	1444+96														300					310									
12.	RT.	1444+96													1															3	
13.	LT.	1444+35	1449+00														470					490									
14.	LT/RT.	1449+00													3								9								
15.	LT.	1449+00	1450+80														180					200									
16.	LT.	1450+80		1				1	1		1			1							98			1	1	1					
17.	RT.	1444+96	1448+60														360					390									
18.	RT.	1446+67		1				1	1		1			1							98			1	1	1					
19.	RT.	1447+90													2		40		40			50	3							3	
20.	RT.	1448+09		1				1	1		1			1							98			1	1	1					
21.	RT.	1448+60			1			1		1	1			1							98			1	1	1					
22.	RT.	1450+09		1				1	1		1			1							98			1	1	1					
23.	RT.	1448+09	1452+00														400					430									
24.	LT.	1451+00													2				40			60	3							3	
25.	LT.	1450+67			1			1		1	1			1							98			1	1	1					
26.	LT.	1450+67	1452+00														140					160									
27.	RT/LT.	1447+07 (RAMP A-B)															62		62												
TOTALS		SHEET NO. 262 *		4	2			6	4	2		6		6	9	1	2222		182		588	2390	27	6	6	6		1		9	
28.	RT.	1452+09		1				1		1		1		1							98			1	1	1					
29.	RT.	1454+09		1				1		1		1		1							98			1	1	1					
30.	RT.	1456+09		1				1	1			1		1							98			1	1	1					
31.	RT.	1452+00	1456+09														410					440									
32.	RT/LT.	1456+50 (RAMP C)													2		60		40			50									
33.	RT.	1457+35		1				1	1		1			1							98			1	1	1					
34.	RT.	1459+00		1				1	1		1			1							98			1	1	1					
35.	RT.	1456+50 (RAMP C)	1457+35 M														80					90									
36.	RT.	1457+35	1460+00														270					290									
37.	LT.	1452+22		1				1	1		1			1							98			1	1	1					
38.	LT.	1453+45													1																
39.	LT.	1452+00	1453+45														150					170									
40.	LT.	1453+45															60					70									
41.	LT.	1455 75	1457 60														185					195									
42.	LT.	1454+00		1				1	1		1			1							98			1	1	1					
43.	LT.	1455+75		1				1	1		1			1							98			1	1	1					
44.	LT.	1454+00	1455+75														180					190									
45.	LT.	1457+60	1454+00	1				1	1		1			1							98			1	1	1					
46.	LT.	1459+55		1				1	1		1			1							98			1	1	1					
47.	LT.	1457+60	1460+00														250					270									
48.	RT/LT.	1453+50 (RAMP C)													2		40		40			50									
49.	RT.	1454+40 (RAMP C)			1			1		1	1			1							98			1	1	1					
50.	RT.	1455+85 (RAMP C)			1			1		1	1			1							98			1	1	1					
51.	RT.	1453+50	1455+85														240					270									
52.	LT.	1434+05			1			1	1		1			1							98			1	1	1					
53.	LT.	1431+30	1434+05														280					290									
54.	RT.	1431+60	1434+65														300					310									
55.	RT.	1434+65													1																
56.	RT.	1436+45 (RAMP A-B)			1			1	1		1			1	1						98			1	1	1					
57.	RT.	1435+65	1436+45 (RAMP A-B)														70					90									
58.	LT.	1439+75 (RAMP A-B)													1																
59.	RT.	1455+00 (RAMP D)													1		40		40												
60.	LT.	1440+29 (RAMP A-B)					1																								
61.	LT.	1441+87 (RAMP A-B)					1																								
62.	LT.	1440+29 (RAMP A-B)	1441+87 (RAMP A-B)															280													
63.																															
TOTALS		SHEET NO. 263 **		10	4		2	14	10	4		14		14	9		2615	280	120		1372	2775		14	14	14	1				

REFERENCE NO.	SIDE	STATION	STATION	LIGHT POLE DESIGN A 15B 32.9	LIGHT POLE DESIGN A 12B 32.9	LIGHT POLE DESIGN ST 10B 41.7	LIGHT POLE ANCHOR BOLTS FOR STRUCTURE	LIGHT POLE FOUNDATION 24"x 6'	LUMINAIRE, TYPE III 200 W.	LUMINAIRE, TYPE II 200 W.	LAMP, 250 W.	LAMP, 200 W.	LUMINAIRE TYPE III 250 W	GROUND ROD	PULL BOX 18" DIA.	PULL BOX 24" DIA.	TRENCH, 24" DEEP	CONDUIT, 2"	CONDUIT, 3"	NO. 4 AWG, 600 V. DISTRIBUTION CABLE	NO. 10 AWG, POLE AND BRACKET CABLE	1½" DUCT CABLE WITH 2#4 AWG, 600 V. CABLES	CONNECTOR KIT TYPE VII A	CONNECTOR KIT TYPE II	CONNECTOR KIT TYPE III	BREAKAWAY SUPPORT	STRUCTURE GND. SYSTEM FOR BRIDGE No. Bel. 470-0662	SERVICE POLE & CONTROL CENTER NO. 1	SERVICE POLE & CONTROL CENTER NO. 2	CONNECTOR KIT TYPE VII B	STRUCTURE GND. SYSTEM FOR BRIDGE No. Bel. 7-1848
				EA.	EA.	EA.	SETS	EA.	EA.	EA.	EA.	EA.	EA.	EA.	EA.	EA.	L.F.	L.F.	L.F.	L.F.	L.F.	L.F.	EA.	EA.	EA.	EA.	EA.	LUMP		EA.	
64.	RT.	1460+80 (I-470)		1				1	1			1		1							98				1	1					
65.	RT.	1460+00	1460+80 (I-470)														80													90	
66.	LT.	1460+00	1461+65 (I-470)														170													180	
67.	LT.	1461+65 (I-470)			1			1	1			1		1							98				1	1					
68.	RT.	1462+50 (I-470)														1								3							
69.	RT	1460+80	1462+50 (I-470)														170													190	
70.	LT.	1462+60 (I-470)														1								3							
71.	LT.	1461+65	1462+60 (I-470)														90													100	
72.						1	1				1		1								98				1	1					
73.						1	1				1		1								98				1	1					
74.	RT.	1462+75	1464+85															220		660											
75.						1	1				1		1								98				1	1					
76.	RT.	1464+85	1467+05															220		660											
77.	LT.	1462+60	1463+72															120		360											
78.						1	1				1		1								98				1	1					
79.						1	1				1		1								98				1	1					
80.	LT.	1463+72	1465+95															220		660											
81.						1	1				1		1								98				1	1					
82.	LT.	1465+95	1468+25 (I-470)															230		690											
83.	RT/LT.	1430+65 (RAMP A-B)														2			80			100								6	
84.	RT.	1430+65	1431+55 (RAMP A-B)														90					100									
85.	LT.	1430+65	1431+30 (RAMP A-B)														70					90									
86.	RT.	1430+25			1			1		1		1		1							98				1	1					
87.	RT.	1430+25 (RAMP A-B)	16+75 (S.B. COLL. DISTRIB.)														170					190									
88.	LT.	1428+91 (RAMP A-B)			1			1		1		1		1							98				1	1					
89.	LT.	1428+91	1430+65 (RAMP A-B)														170					190									
90.	LT.	16+75 (S.B. COLL. DISTRIB.)			1			1		1		1		1							98				1	1					
91.	RT/LT.	15+20 (N.B. & S.B. COLL. DISTRIB.)														2	80		80			100								6	
92.	LT.	1428+91 (RAMP A-B)	15+20 (S.B. COLL. DISTRIB.)														50					60									
93.	RT.	15+90 (N.B. COLL. DISTRIB.)			1			1		1		1		1							98				1	1					
94.	RT.	15+20	15+90 (N.B. COLL. DISTRIB.)														70					80									
95.	RT.	79+60 (N.B. SR.7)															45		45												
96.	RT.	85+65 (N.B. SR.7)			1			1		1		1		1							98										
97.	RT.	75+00	84+50 (N.B. SR.7)														950					960									
98.	RT/LT.	83+85 (S.B. SR.7)														2	45		45			50	6								
99.	RT.	83+15 (S.B. SR.7)			1			1		1		1		1							98				1	1					
100.	RT.	83+15 (S.B. SR.7)	84+20														110					130									
101.	LT.	23+65 (S.B. COLL. DISTRIB.)			1			1		1		1									98				1	1					
102.	LT.	23+65	23+85 (S.B. COLL. DISTRIB.)														20					30									
103.	LT	76+85														1															
104.	LT.	75+30					1																								
105.	LT	1465+28																													
106.	RT.	1465+22																													
107.	RT.	1463+10																													
108.	LT.	1464+43																													
109.	LT.	74+50														1															
110.	LT.	74+50	76+85															235		705											
111.	RT.	1430+25	1430+65														40					50									
112.	LT.	1429+80														1															
113.																															
114.																															
115.																															
TOTALS		SHEET NO. 264		2	7	6	7	9	2	7	6	9	6	9	11		2420	1245	250	3735	1470	2690	12	14	14		1		12	1
*		1444+30	1450+91 B														661					671									
	Lt.	1442+32		1				1	1			1		1							96			1	1	1					
	Lt.	1446+48		1				1	1			1		1							96			1	1	1					
	Lt	1448+64		1				1	1			1		1							96			1	1	1					
	Lt	1450+91	Ramp B		1			1		1		1		1							90			1	1	1					
	Lt	1448+25	Ramp A		1			1		1		1		1							90			1	1	1					
	Lt	1449+65	Ramp A		1			1		1		1		1							90			1	1	1					
	Rt	1446+05	Ramp AB		1			1		1		1		1							90			1	1	1					
		1450+91	1447+07 B												1		384					394									
		1447+07	1446+05 B														102					112									
		1446+05	1446+75 B														70					80									
		1447+07	1449+65 A														258					333									
OTHER		Totals sheet 262		3	4			7	3	4		7		7	1		814				648	919		7	7	7					
CARRIED		Totals sheet 262		4	2			6	4	2		6		6	9	1	2222		182		588	2390	27	6	6	6		1		9	
Grand		Totals sheet 262		7	6			13	7	6		13		13	10	1	3035		182		1236	3309	27	13	13	13		1		9	

FED. RD. DIVISION	STATE	PROJECT	
2	OHIO		

257/288

BELMONT COUNTY
BEL-470-5.90

LIGHTING QUANTITIES SUB-SUMMARY

REFERENCE NO.	SIDE	STATION	STATION	LIGHT POLE DESIGN A 15B 32.9	LIGHT POLE DESIGN A 12B 32.9	LIGHT POLE DESIGN ST 10B 41.7	LIGHT POLE ANCHOR BOLTS FOR STRUCTURE	LIGHT POLE FOUNDATION	LUMINAIRE, TYPE III 200W	LUMINAIRE, TYPE II 200 W.	LAMP, 250 W.	LAMP, 200 W.	LIGHT POLE DESIGN ST 10 B 34.2	GROUND ROD	PULL BOX 18" DIA.	PULL BOX 24" DIA.	TRENCH, 24" DEEP	CONDUIT, 2" TYPE III	CONDUIT, 3" TYPE III	DISTRIBUTION CABLE NO. 4	POLE & BRACKET CABLE, NO. 10	DUCT CABLE, 600 V. 1½" TWO NO. 8	CONNECTOR KIT TYPE VIIA	CONNECTOR KIT TYPE II	CONNECTOR KIT TYPE III	BREAKAWAY SUPPORT	STRUCTURE GROUND SYSTEM	SERVICE POLE & CONTROL	SERVICE POLE & CONTROL CENTER NO. 2	CONNECTOR KIT TYPE VII B	REMARKS
				EA.	EA.	EA.	SETS	EA.	EA.	EA	EA.	EA.	EA.	EA.	EA.	EA.	L.F.	L.F.	L.F.	L.F.	L.F.	L.F.	EA.	EA.	EA.	EA.	EA.	LUMP		EA.	
116	LT.	53+20 (S.B. SR.7)			1			1		1		1		1	1						98			1	1	1					
117	LT/RT	57+20 (S.B. SR.7)													2		55		55				3							6	
118	LT.	53+20	57+20 (S.B. SR.7)														400					420									
119	LT.	57+90 (S.B. SR.7)			1			1		1		1		1							98			1	1	1					
120	LT	57+20	57+90 (S.B. SR.7)														70					80									
121	LT.	61+30 (S.B. SR.7)			1			1		1		1		1							98			1	1	1					
122	LT.	57+90	61+30 (S.B. SR.7)														340					350									
123	RT.	56+10 (N.B. SR.7)													1															3	
124	RT/LT.	57+20 (N.B. SR.7)													1		45		45												
125	RT.	62+50 (N.B. SR.7)			1			1		1		1		1							98			1	1	1					
126	RT.	57+20	62+50 (N.B. SR.7)														530					540									
127	RT.	62+50	63+00 (N.B. SR.7)														50					50									
128																															
129																															
TOTALS		SHEET NO. 266			4			4		4		4		4	5		1490		100		392	1440	3	4	4	4				9	
130	RT/LT.	66+75 (S.B. SR.7)															45		40			45									
131	LT.	14+80 (S.B. COLL.) (DISTR.)			1			1		1		1		1							98			1	1	1					
132	RT.	66+50 (N.B. SR.7)													1															3	
133	RT.	63+00	66+50 (N.B. SR.7)														350					360									
134	RT.	69+00 (N.B. SR.7)			1			1		1		1		1							98			1	1	1					
135	RT.	66+50	69+00 (N.B. SR.7)														250					260									
136	RT/LT.	70+35 (N.B. SR.7)													2		45		60			60	9								
137	RT.	69+00	70+35 (N.B. SR.7)														135					150									
138	RT.	70+87 (N.B. SR.7)			1			1		1		1		1							98			1	1	1					
139	RT.	70+35	70+87 (N.B. SR.7)														55					80									
140	RT.	70+87	75+00 (N.B. SR.7)														415					425									
141	RT.	10+50 (N.B. COLL.) (DISTRIB.)			1			1		1		1		1							98			1	1	1					
142	RT.	10+50	15+00 (N.B. COLL.) (DISTR.)														450					460									
143	RT.	74+50																											1		
144	LT. RT.	70+35	10+50														20					30									
145																															
TOTALS		SHEET NO. 265			4			4		4		4		4	3		1765		100		392	1870	9	4	4	4			1	3	
146	RT.	87+05 (N.B. SR.7)			1			1		1		1		1							98			1	1	1					
147	RT/LT.	89+65 (N.B. SR.7)													2		50		50			60	3							3	
148	RT.	87+05	89+65 (N.B. SR.7)														260					270									
149	RT.	90+90			1			1		1		1		1							98			1	1	1					
150	RT.	89+65	90+90														125					140									
151	LT.	85+10 (S.B. SR.7)			1			1		1		1		1							98			1	1	1					
152	LT.	84+50	85+10 (S.B. SR.7)														60					70									
153	LT.	87+50 (S.B. SR.7)													1															3	
154	LT.	85+10	87+60 (S.B. SR.7)														250					260									
155	LT.	87+50	89+47 (S.B. SR.7)														200					210									
156	LT	89+47 (S.B. SR.7)													1				55			75								3	
157	LT.	89+47	91+85 (S.B. SR.7)														240					250									
158	LT.	91+85 (S.B. SR.7)			1			1		1		1		1							98			1	1	1					
159	LT.	91+85	98+25 (S.B. SR.7)														640					650									
160	LT.	98+15													1									1	1	1					
161																															
TOTALS		SHEET NO. 267			4			4		4		4		4	5		1825		105		392	1985	3	5	5	4				9	
*	*																														
	Rt.	1444+80	RAMP AB		1			1		1		1		1							90			1	1	1					
	Rt.	1443+48	RAMP AB		1			1		1		1		1							90			1	1	1					
	Lt	1441+87	RAMP AB							1		1	1								88			1	1						
	Lt	1440+29	RAMP AB							1		1	1								88			1	1						
	Lt	1439+15	RAMP AB		1			1		1		1		1							90			1	1	1					
	Lt	1437+80	RAMP AB		1			1		1		1		1							90			1	1	1					
	Lt	1435+65	RAMP AB		1			1		1		1		1			327				90			1	1	1					
	Rt	1446+75	1443+48														212			434		337									
	Lt	1441+87	1439+75														245														
	Lt	1439+75	1437+30														325					255									
	Lt	1455+00D	1434+05																			335									
OTHER	TOTALS	SHEET 263			5			5		7		7	2	5			1109			434	626			7	7	5					
CARRIED	TOTALS	SHEET 263		10	4		2	14	10	4		14		14	9		2615	280	120		1372	2775		14	14	14	1				
GRAND	TOTALS	SHEET 263		10	9		2	19	10	11		21	2	19	9		3724	280	120	434	1998	2775		21	21		1				

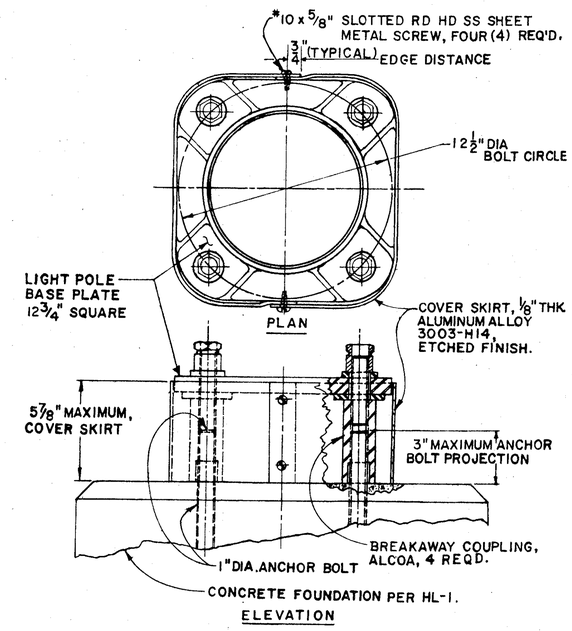

BREAKAWAY SUPPORT AND COVER

(2)

(3)

REVISED 9/17/75

FED. RD. DIVISION	STATE	PROJECT	
2	OHIO		

258/288

BELMONT COUNTY
BEL - 470 - 5.90

GENERAL SUMMARY - LIGHTING QUANTITIES

Calculated by J. M.
Checked by L. M.

LINE NO.	INTERSTATE	RURAL														PROJECT TOTAL	UNIT	ITEM	DESCRIPTION	LINE NO.
	STRUCTURES						ROADWAY													
		BEL. 7 - 1848 LT	BEL. 470-0615	BEL. 470-0662																
		SHEET 264	SHEET 263	SHEET 264			SHEET NO. 261	SHEET NO. 262	SHEET NO. 263	SHEET NO. 264	SHEET NO. 266	SHEET NO. 265	SHEET NO. 267	SHEET NO.						
1																				1
2																				2
3							4	7	10	2	0	0	0			23	Ea.	S625	Light Pole - Type 1 - Design No. A 15B 32.9	3
4								6	9	7	4	4	4			34	Ea.	S625	Light Pole - Type 2 - Design No. A 12B 32.9	4
5				6												6	Ea.	S625	Light Pole - Type 3 - Design No. ST10B 41.7	5
6			2													2	Ea.	S625	Light Pole - Type 4 - Design No. ST10B34.2	6
7																				7
8							4	13	19	9	4	4	4			57	Ea.	S625	Light Pole Foundation (24"x 6'-0")	8
9				6												6	Ea.	S625	Luminaire - Type III - Style B 250 W. HPS	9
10			2					6	9	7	4	4	4			36	Ea	S625	Luminaire - Type II - Style B 200 W. HPS	10
11							4	7	10	2						23	Ea.	S625	Luminaire - Type III - Style B 200 W. HPS	11
12																				12
13							4	13	19	9	4	4	4			57	Set	S625	BreaKaway Support, As Per Plan.	13
14																				14
15				6												6	Ea.	S625	Lamp - 250 Watt HPS	15
16			2				4	13	19	9	4	4	4			59	Ea.	S625	Lamp - 200 Watt HPS	16
17																				17
18																				18
19							4	13	19	9	4	4	4			57	Ea.	S625	Ground Rod.	19
20																				20
21								10	9	11	5	3	5			43	Ea.	S625	Pull Box 18" Circular-S 713.09	21
22																1	Ea.	S625	Pull Box 24" Circular-S 713.09	22
23																				23
24																				24
25																				25
26																				26
27							1240	3035	3724	2420	1490	1765	1825			15499	L.F.	S625	Trench - 24" Depth	27
28																				28
29																				29
30		245	280	1,000												1525	L.F.	S625	Conduit - 2"S713.04	30
31								182	120	200	55	40	55			652	L.F.	S625	Conduit - 3"S713.04	31
32										50	45	60	50			205	L.F.	S625	Conduit Jacked Under Existing Pavement- 3"-S713.04	32
33																				33
34																				34
35		705		3,030					434							4169	L.F.	S625	No. 4 AWG., 600V. Distribution Cable	35
36																				36
37							392	1236	1998	1470	392	392	392			6272	L.F.	S625	No. 10 AWG., Pole and Bracket Cable	37
38							1280	3309	2775	2690	1440	1870	1985			15349	L.F.	S625	1½" Duct Cable with 2-#4 AWG., 600V. Cables	38
39																				39
40																				40
41								27		12	3	9	3			54	Ea.	S625	Connector Kit Type VIIA	41
42			2				4	13	19	14	4	4	5			65	Ea.	S625	Connector Kit Type II	42
43			2				4	13	19	14	4	4	5			65	Ea.	S625	Connector Kit Type III	43
44																				44
45								9		12	9	3	9			42	Ea.	S625	Connector Kit Type VII B	45
46																				46
47								1								Lump	Lump	S625	Service Pole and Control Center No. 1	47
48												1				Lump	Lump	S625	Service Pole and Control Center No. 2	48
49																				49
50		1	1	1												3	Ea.	S625	Structure Grounding System For Bridges	50
51																				51
52																				52
53		1	2	6												9	Sets	S625	Lightpole Anchor Bolts For Structure - S 713.01	53
54																				54
55																Lump	Lump	839	High Voltage Test	55

Revised 7/17/70

FED. RD. DIVISION	STATE	PROJECT	
2	OHIO		

259
288

BELMONT COUNTY
BEL - 4.70 - 5.90

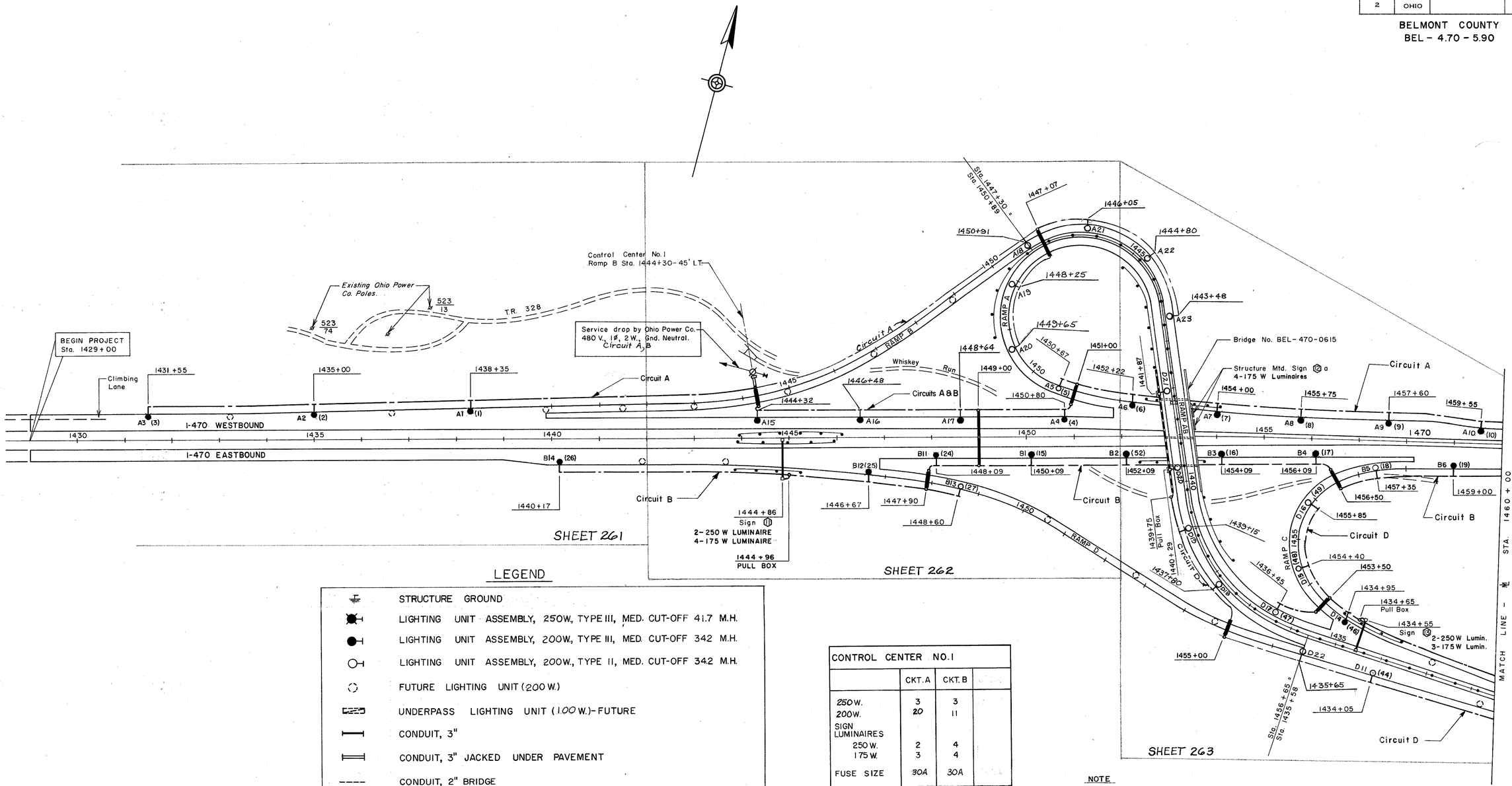

LEGEND

- STRUCTURE GROUND
- LIGHTING UNIT ASSEMBLY, 250W., TYPE III, MED. CUT-OFF 41.7 M.H.
- LIGHTING UNIT ASSEMBLY, 200W., TYPE III, MED. CUT-OFF 34.2 M.H.
- LIGHTING UNIT ASSEMBLY, 200W., TYPE II, MED. CUT-OFF 34.2 M.H.
- FUTURE LIGHTING UNIT (200 W.)
- UNDERPASS LIGHTING UNIT (100 W.)-FUTURE
- CONDUIT, 3"
- CONDUIT, 3" JACKED UNDER PAVEMENT
- CONDUIT, 2" BRIDGE
- PULL BOX- 18" DIA.
- PULL BOX- 24" DIA.
- 1½" DUCT-CABLE WITH TWO NO.4 AWG & GRD. NEU. 600V. VOLT CABLES.
- CONTROL CENTER
- ILLUMINATED OVERHEAD SIGN (CANTILEVER)
- ILLUMINATED SIGN

CONTROL CENTER NO. 1			
	CKT. A	CKT. B	
250 W.	3	3	
200 W.	20	11	
SIGN LUMINAIRES			
250 W.	2	4	
175 W.	3	4	
FUSE SIZE	30A	30A	

THIS CONTROL CENTER REQUIRES A PHOTOELECTRIC CELL & THE ENCLOSURE TYPE WILL BE AN SC-30/60. SEE HL-15.

NOTE
All Luminaires Shall Have a High Pressure Sodium Lamp Wattage as Indicated in Legend.

FOR PART 5 - CONTROL SHEETS
REFER TO PLAN SHEET
TITLE PLAN

SHEET BY CONTRACTOR			PROPOSED WORK		
SURVEYED	DRAWN	DESIGNED	DRAWN	CHECKED	REVIEWED

SCHEMATIC SCALE 1"=100' LIGHTING PLAN

REVISED 3/13/75

BEAVER VALLEY ENGINEERING SUPPLIES COMPANY REORDER A-19928

FED. RD. DIVISION	STATE	PROJECT	
2	OHIO		

260
288

BELMONT COUNTY
BEL - 4.70 - 5.90

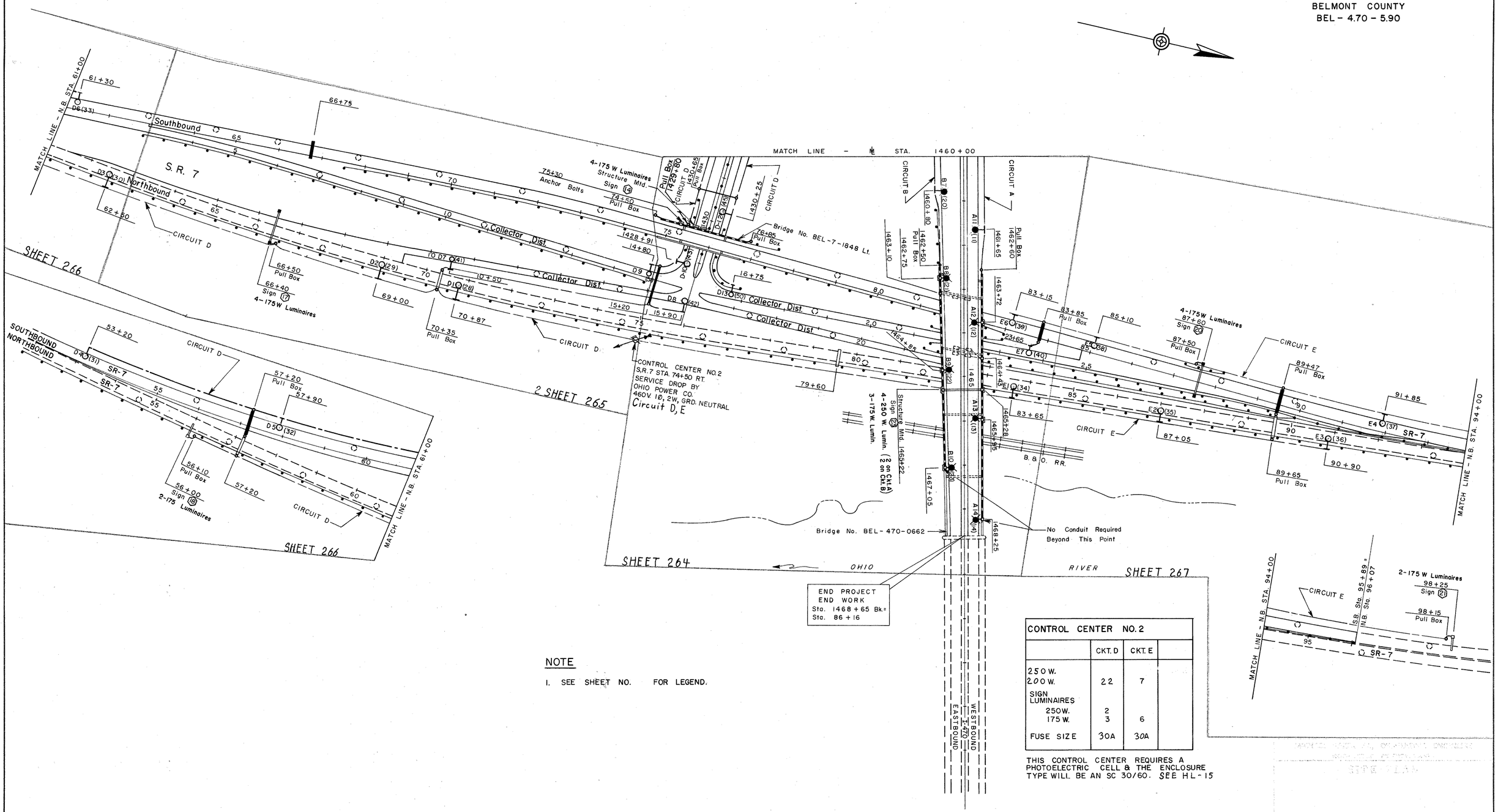

END PROJECT
END WORK
Sta. 1468+65 Bk.=
Sta. 86+16

CONTROL CENTER NO. 2			
	CKT. D	CKT. E	
250 W. 200 W.	22	7	
SIGN LUMINAIRES			
250W.	2		
175 W.	3	6	
FUSE SIZE	30A	30A	

THIS CONTROL CENTER REQUIRES A PHOTOELECTRIC CELL & THE ENCLOSURE TYPE WILL BE AN SC 30/60. SEE HL-15

NOTE

1. SEE SHEET NO. FOR LEGEND.

SCALE 1"=100' LIGHTING PLAN

BEAVER VALLEY ENGINEERING SUPPLIES COMPANY REORDER A-19920

FED. RD DIVISION	STATE	PROJECT	
5	OHIO		

261/288

BELMONT COUNTY
BEL-470-5.90

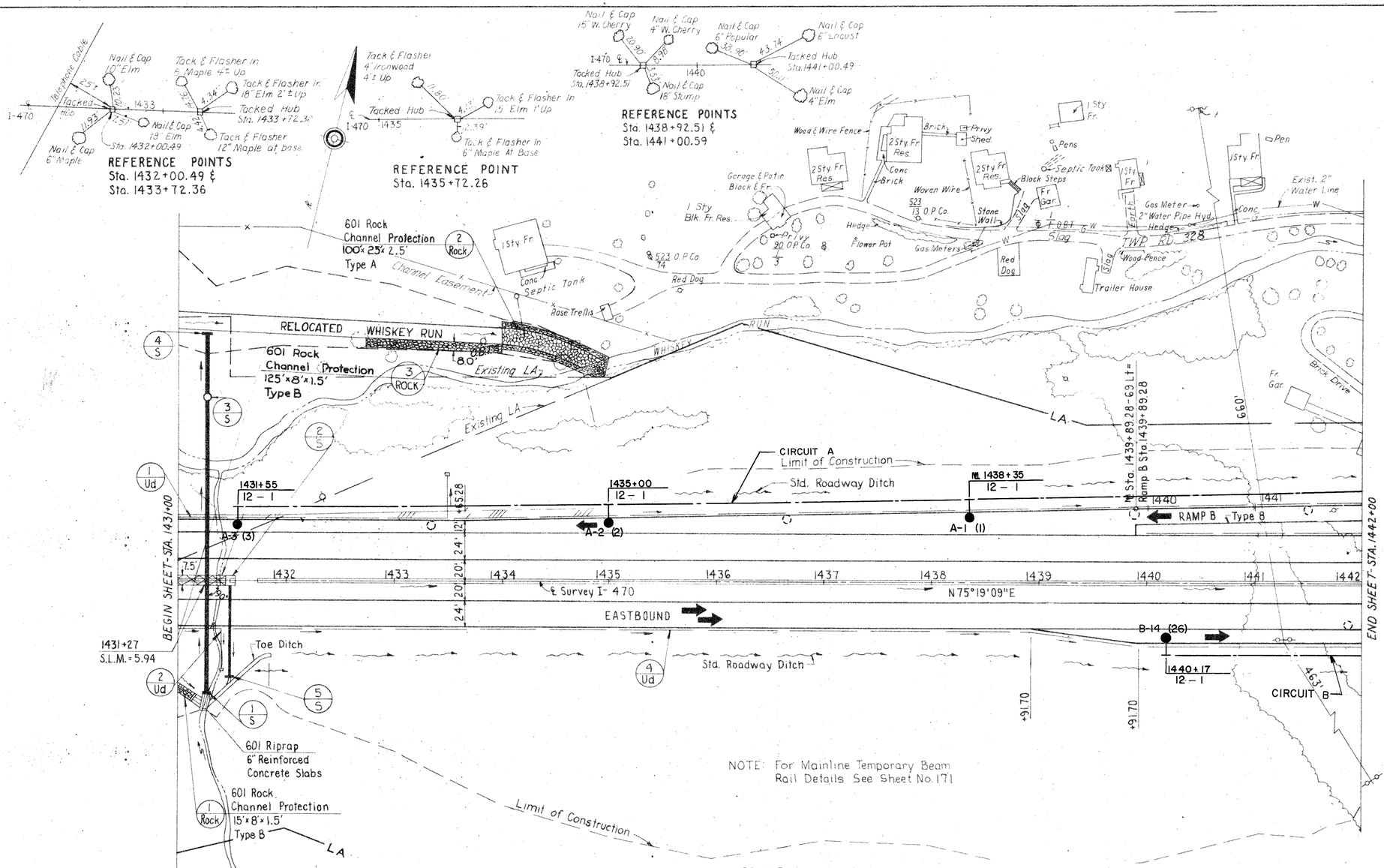

LEGEND

- LIGHTING UNIT ASSEMBLY, 250 W., TYPE III, MED. CUT-OFF 41.7 M.H.
- LIGHTING UNIT ASSEMBLY, 200 W, TYPE II, MED. CUT-OFF 32.9 M.H.
- LIGHTING UNIT ASSEMBLY, 200W, TYPE III, MED. CUT-OFF 32.9 M.H.
- FUTURE LIGHTING UNIT (200W)
- UNDERPASS LIGHTING UNIT (100 W.)-FUTURE
- CONDUIT, 3"
- CONDUIT, 3", JACKED UNDER PAVEMENT
- CONDUIT, 2", BRIDGE
- PULL BOX-18" DIA.
- PULL BOX-24" DIA.
- CONTROL CENTER
- ILLUMINATED OVERHEAD SIGN (CANTILEVER)
- ILLUMINATED SIGN
- 1½" DUCT-CABLE WITH TWO NO. 4 AWG 600 VOLT CABLES.
- STRUCTURE GROUND

NOTE: ALL LUMINAIRES SHALL HAVE A HIGH PRESSURE SODIUM LAMP, WATTAGE AS INDICATED.

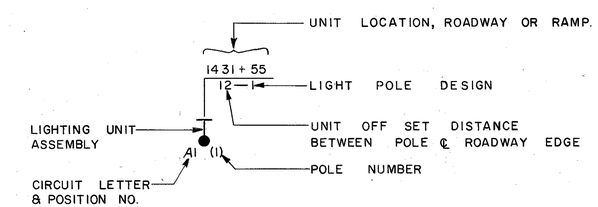

UNIT PLAN INFORMATION KEY

Calculated By J.D.F.	Date 12-5-68
Checked By P.J.B.	Date 4-8-69

PLAN SHEET - STA. 1431+00 TO STA. 1442+00

Revised 3/16/75

FED. RD. DIVISION	STATE	PROJECT	
5	OHIO	.	

BELMONT COUNTY
BEL-470-5.90

262/288

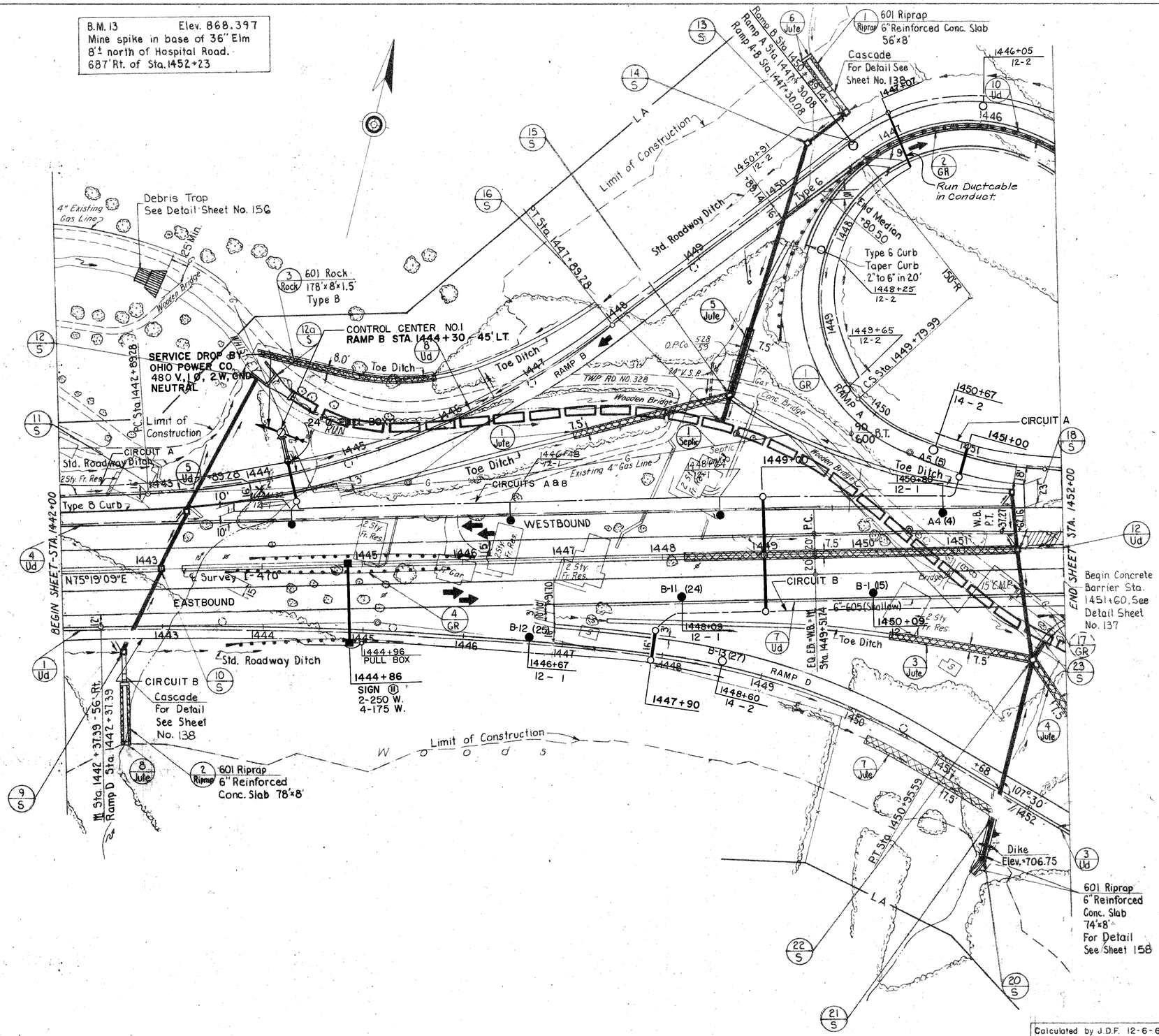

Calculated by J.D.F. 12-6-68
Checked by P.J.B. 4-8-69

PLAN SHEET - STA. 1442+00 TO STA. 1452+00

FED. RD. DIVISION	STATE	PROJECT	
5	OHIO		

263
288

BELMONT COUNTY
BEL-470-5.90

BM12 Elev. 811.013
Mine Spike in Base on South Side of 14" Elm 6'± North of Centerline of Hospital Road 150'± west of a Telephone Cable Crossing Hospital Road 515' Rt. of Sta. 1456+00.

BM11 Elev. 738.883
Mine Spike in Base on North Side of Pole (No Number) with Transformer Pole lies on South Side Hospital Road 293' Rt. of Sta. 1459+85.

Continued on this Sheet

DRAINAGE QUANTITIES

Ref. No.	See Sheet No.	Station to Station	Side	604 Ea. Std. No. 2-A-8 Paved Shoulder Inlet	604 Ea. Std. No. 2-A-10 Paved Shoulder Inlet
31S-32S	158	1456+64-1435+64	Lt.	1	
34S-35S	158	1433+08	Lt		1
		TOTALS		1	1

NOTE:
Slotted Holes are to be used in Guard Rail Panels that are placed over the Expansion Dams at the Abutment.

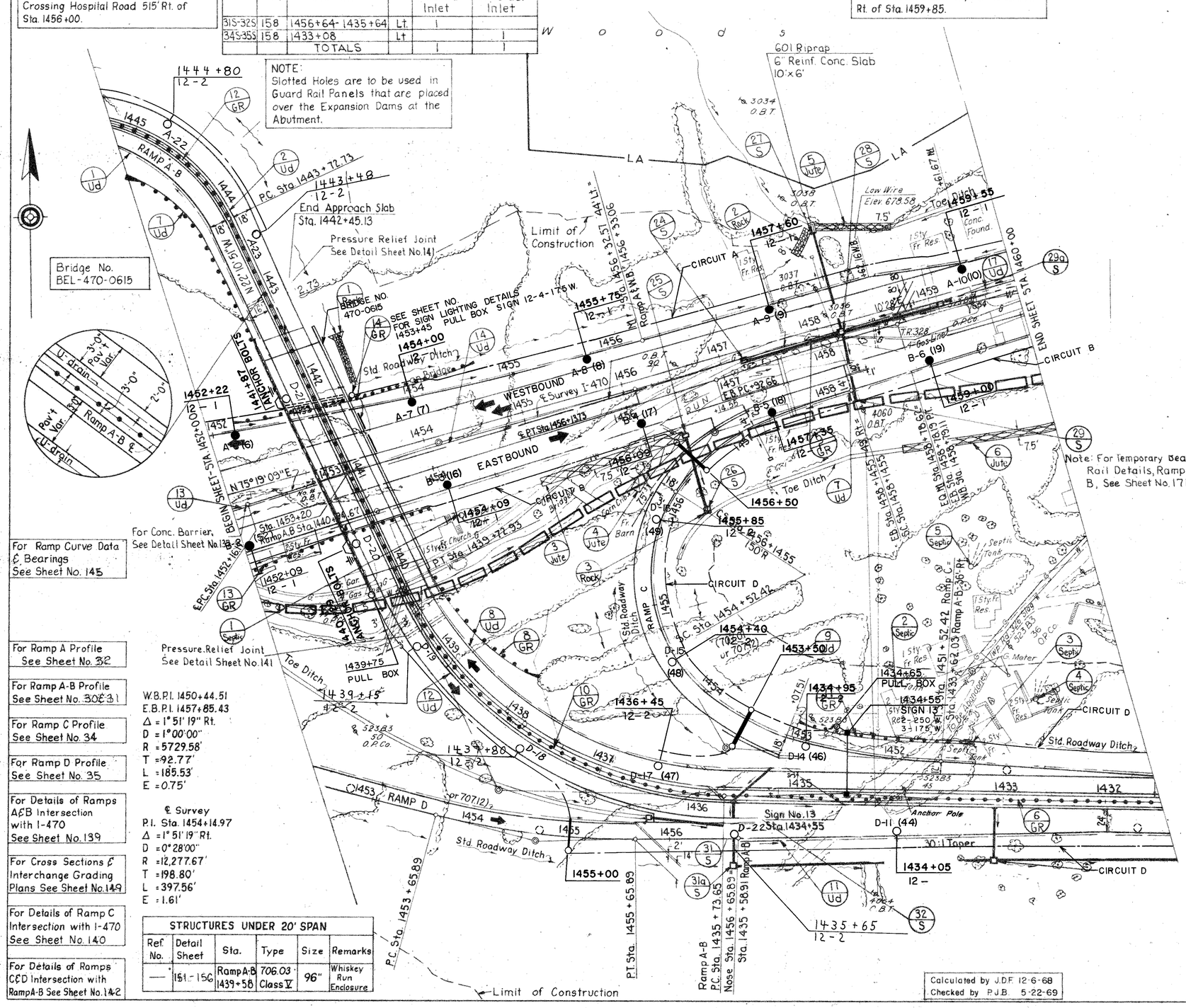

STRUCTURES UNDER 20' SPAN

Ref. No.	Detail Sheet	Sta.	Type	Size	Remarks
—	151-156	Ramp A-B 1439+58	706.03 Class V	96"	Whiskey Run Enclosure

Calculated by J.D.F. 12-6-68
Checked by P.J.B. 5-22-69

PLAN SHEET - STA. 1452+00 TO STA. 1460+00

FED. RD DIVISION	STATE	PROJECT	
5	OHIO		

264
288

BELMONT COUNTY
BEL-470-5.90

B.M. Elev. 646.403
S-115 U.S.G.S. 0.8 miles South along the B&O Railroad from the Station at Bridgeport at bridge 110 in the top of the East End of the North Concrete Abutment 3.5 feet East of the centerline of the East Track and about 1½ Feet Lower than the track. A standard Disc Stamped · S-115 1943.

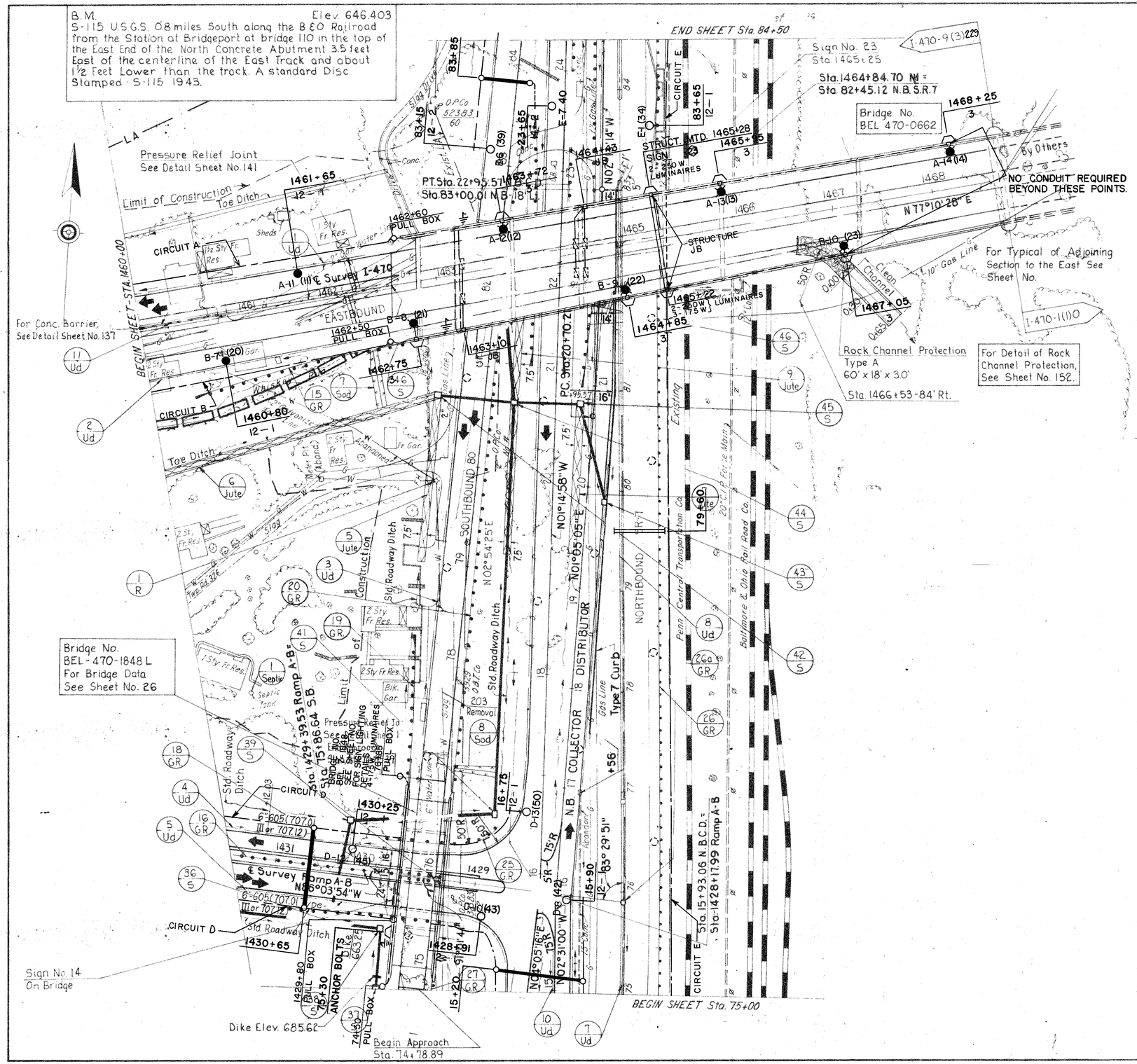

Checked By P.J.B. Date 5-23-69

PLAN SHEET STA. 1460 TO STA. 1468+65.08

FED. RL. DIVISION	STATE	PROJECT	
5	OHIO		

BELMONT COUNTY
BEL-470-5.90

265
288

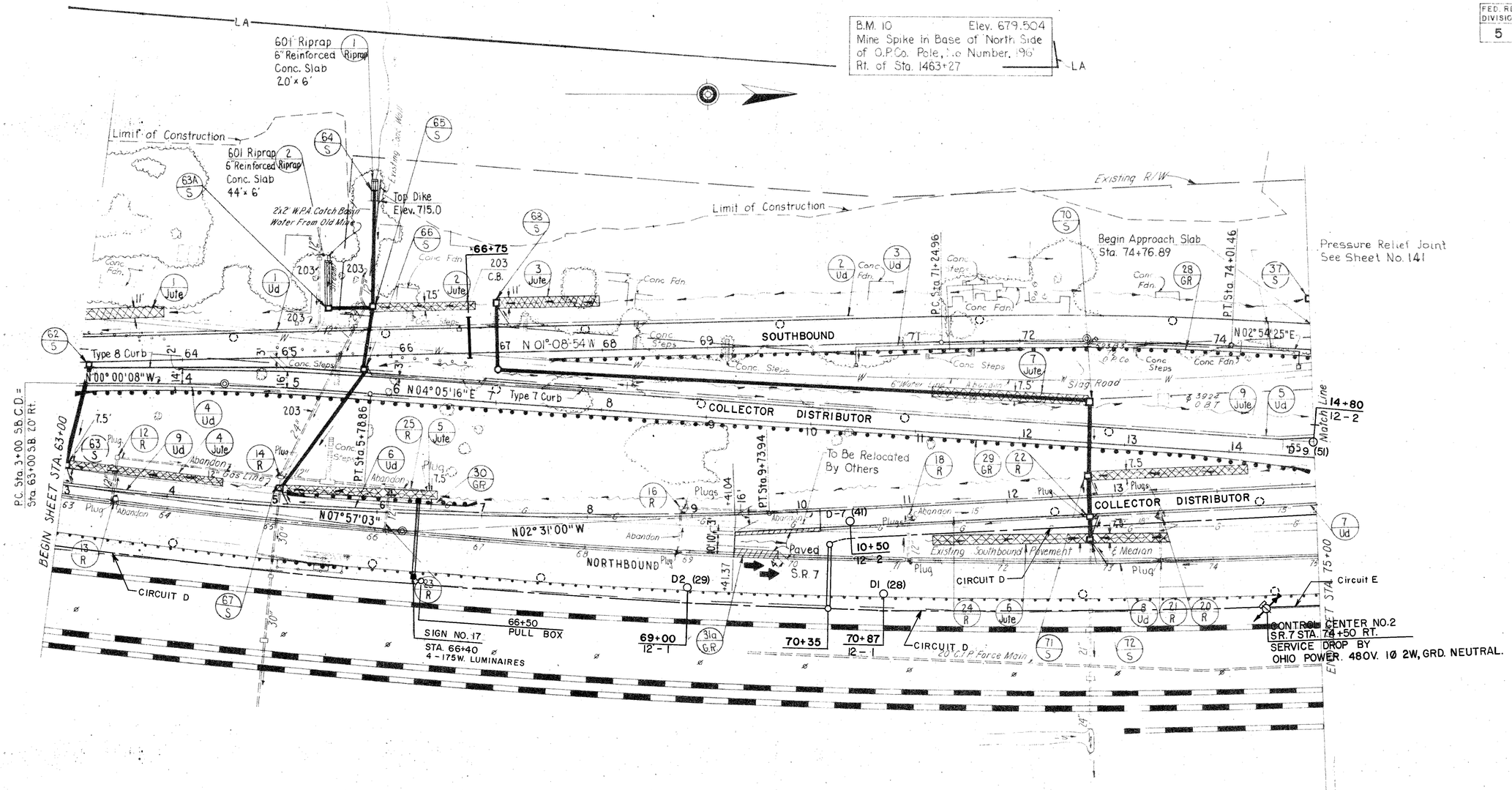

Calculated by JDF Date 12-20-68
Checked by PJB Date 5-28-69

SR-7 PLAN SHEET STA. 63+00 TO STA. 75+00

FED. RD. DIVISION	STATE	PROJECT	
5	OHIO		

BELMONT COUNTY
BEL-470-5.90

266
288

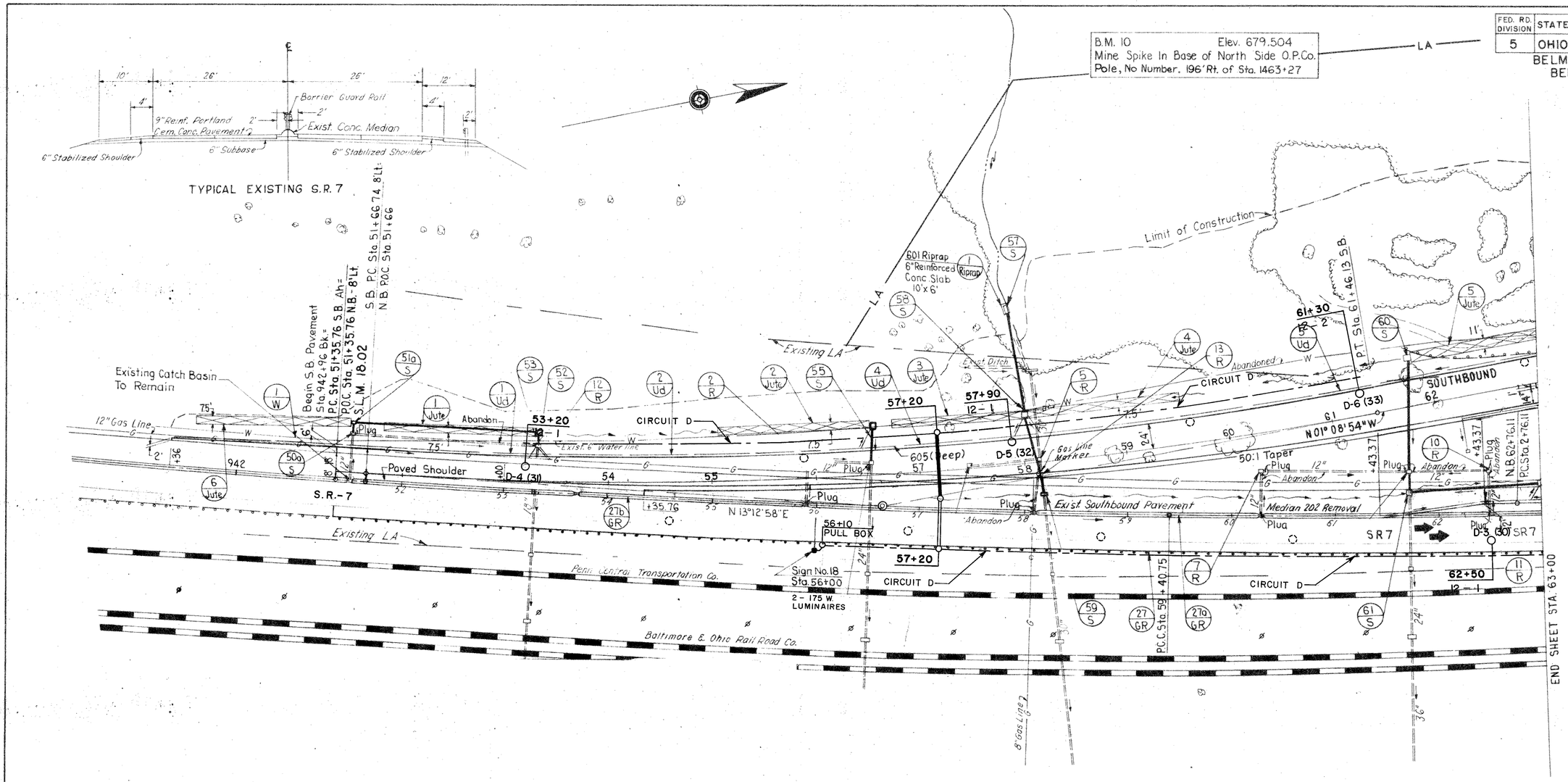

Calculated By J.D.F. Date 12-19-68
Checked By P.J.B. Date 5-28-69

SR-7 PLAN SHEET-STA. 49+00 TO STA. 63+00

FED. RD DIVISION	STATE	PROJECT	
5	OHIO		

267
288

BELMONT COUNTY
BEL-470-5.90

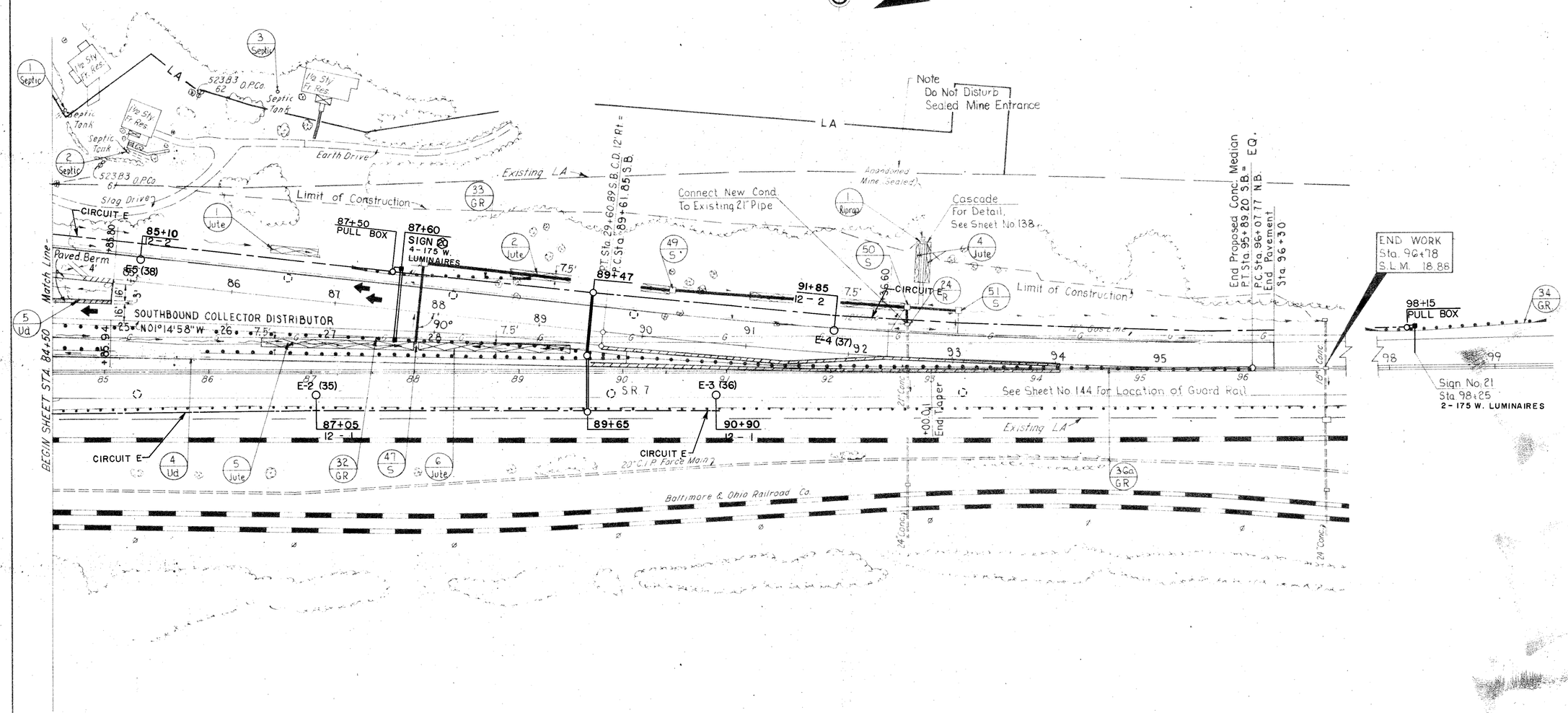

Calculated by	JDF	Date	12-23-68
Checked by	PJB	Date	5-29-69

SR-7 PLAN SHEET-STA. 84+50 TO STA. 97+00

SEE PLAT SHEET 2 OF 2 SHEETS FOR PROPOSED MONUMENT LOCATIONS

RE-RECORDING OF CENTERLINE SURVEY PLAT PREVIOUSLY RECORDED IN PLAT VOL. 13 PG. 61 DUE TO LOCATION CHANGE OF MONUMENTS

BEL-470-5.90

0 100 200
SCALE IN FEET

PULTNEY TOWNSHIP SEC. 20 T-3-N R-2-W
CITY OF BELLAIRE

CENTERLINE PLAT SHEET 1 OF 2 SHEETS

FED. RD DIVISION	STATE	PROJECT	
2	OHIO	I-470-9 (2)	

268/288

1/21

BEL-470-5.90
RIGHT OF WAY PLAN
LIMITED ACCESS

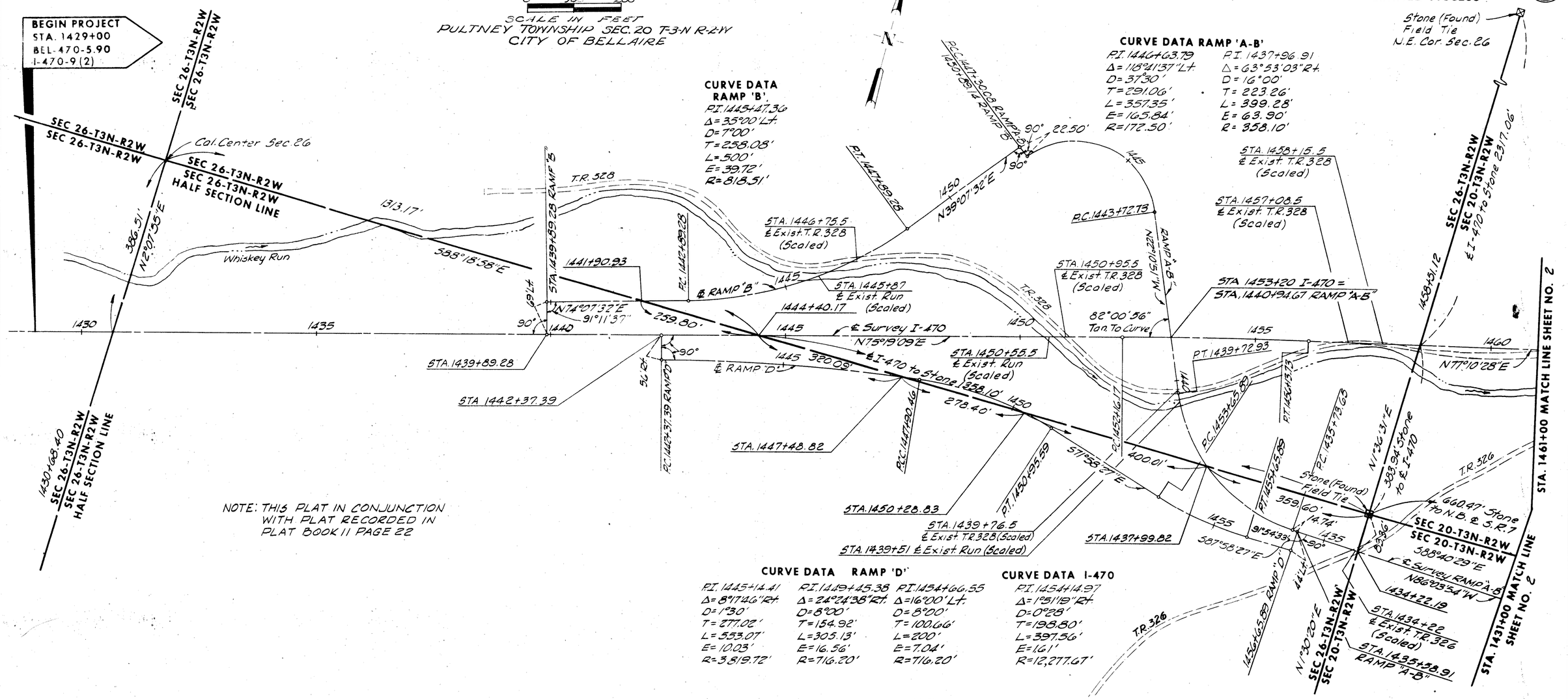

CURVE DATA RAMP 'D'

P.I. 1445+14.41	P.I. 1449+45.38	P.I. 1454+66.55
Δ=8°17'46" Rt.	Δ=24°24'38" Rt.	Δ=16°00' Lt.
D=1°30'	D=8°00'	D=8°00'
T=277.02'	T=154.92'	T=100.66'
L=553.07'	L=305.13'	L=200'
E=10.03'	E=16.56'	E=7.04'
R=3819.72'	R=716.20'	R=716.20'

CURVE DATA I-470

P.I. 1454+14.97
Δ=1°51'19" Rt.
D=0°28'
T=198.80'
L=397.56'
E=1.61'
R=12,277.67'

I HEREBY CERTIFY THAT THIS PLAT IS A TRUE DELINEATION OF A SURVEY MADE FOR THE OHIO DEPARTMENT OF HIGHWAYS IN _____
BY William E. Quicksall Jr.
DATE July 1, 1970

WILLIAM E. QUICKSALL, JR.
REG. SURVEYOR NO. 4710

APPROVED FOR RECORD

R. J. BOCCABELLA
COUNTY ENGINEER

DATE: _____

NO. _____
RECEIVED _____ 1972 AT _____ M.
RECORDED _____ 1972
BOOK _____ PAGE _____
COUNTY RECORDER

THIS IMPROVEMENT HAS BEEN DECLARED A LIMITED ACCESS HIGHWAY FROM STATION 1429+00 TO STATION 1465+65.08 BY ACTION OF THE DIRECTOR OF HIGHWAYS AND RECORDED IN VOLUME 50, PAGE 310 OF THE DIRECTOR'S JOURNAL PURSUANT TO LAW.

SIGNED _____
DATE _____ DIVISION DEPUTY DIRECTOR

CENTERLINE SURVEY PLAT

W.E. QUICKSALL & ASSOCIATES INC. Consulting Engineers

RE-RECORDING OF

CENTERLINE SURVEY PLAT

BEL-470-5.90

BELMONT COUNTY, OHIO

0 100 200

SCALE IN FEET

PULTNEY TOWNSHIP - SEC 20-T3N-R2W

CITY OF BELLAIRE

RE-RECORDING DUE TO LOCATION CHANGE OF MONUMENTS ON THIS SH.

CENTERLINE PLAT SHEET 2 OF 2 SHEETS

FED. RD. DIVISION	STATE	PROJECT	
2	OHIO	I-470-9(2)	

269 / 288

2 / 21

BEL-470-5.90
RIGHT OF WAY PLAN
LIMITED ACCESS

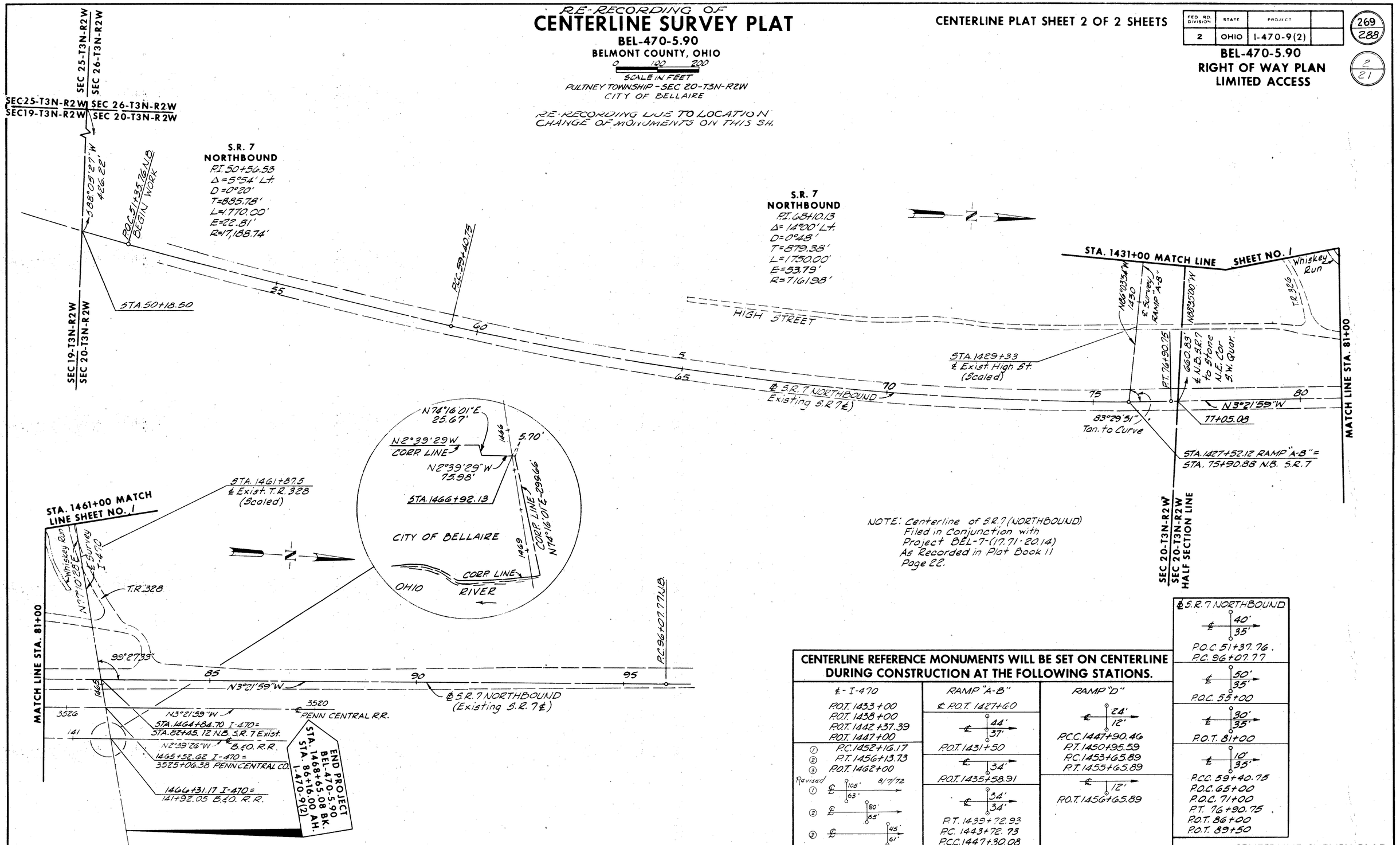

NOTE: Centerline of S.R. 7 (NORTHBOUND) Filed in Conjunction with Project BEL-7-(17.71-2014) As Recorded in Plat Book 11 Page 22.

CENTERLINE REFERENCE MONUMENTS WILL BE SET ON CENTERLINE DURING CONSTRUCTION AT THE FOLLOWING STATIONS.

℄ - I-470	RAMP "A-B"	RAMP "D"
P.O.T. 1433+00 P.O.T. 1438+00 P.O.T. 1442+37.39 P.O.T. 1447+00	℄ P.O.T. 1427+60	
① P.C. 1452+16.17 ② P.T. 1456+13.73 ③ P.O.T. 1462+00	℄ 44' 37' P.O.T. 1431+50	℄ 24' 12' P.C.C. 1447+90.46 P.T. 1450+95.59 P.C. 1453+65.89 P.T. 1455+65.89
Revised 8/7/72 ① ℄ 105' 68' ② ℄ 80' 65' ③ ℄ 45' 61'	℄ 34' P.O.T. 1435+58.91 ℄ 34' 34' P.T. 1439+72.93 P.C. 1443+72.73 P.C.C. 1447+30.08	℄ 12' P.O.T. 1456+65.89

℄ S.R. 7 NORTHBOUND
℄ 40' 35' P.O.C. 51+37.76 P.C. 96+07.77
℄ 50' 35' P.O.C. 55+00
℄ 30' 35' P.O.T. 81+00
℄ 10' 35' P.C.C. 59+40.75 P.O.C. 65+00 P.O.C. 71+00 P.T. 76+90.75 P.O.T. 86+00 P.O.T. 89+50

CENTERLINE SURVEY PLAT

PROPERTY PLAN

BEL-470-5.90

BELMONT COUNTY, OHIO

0 100 200

SCALE IN FEET

PULTNEY TOWNSHIP - SEC 20 & 26-T3N-R2W

SHEET 1 OF 2 SHEETS

FED. RD. DIVISION	STATE	PROJECT	
2	OHIO	I-470-9 (2)	

270 / 288

BEL-470-5.90
RIGHT OF WAY PLAN
LIMITED ACCESS

3 / 21

111 – Millard Malcolm Miller & Wanda Theresa Miller
112 – James J. & Rose M. Busack
113 – John Kohl
114 – Mary L. Gradler
115 – Joseph W. & Mildred A. (Rudish aka Ratacic)
116 – Clara M. Mellor
117 – Mary Pritchett
119 – Evelyn V. McGavin
123 Frances Snider
121 – John S. Lasure Jr.
122 – Charles & Mable Ochsenbein
123A – Frances Snider
124 – Elizabeth Bruney & Ella J. Gehrig
125 – Willard L. & Bertha V. Baker
126 – W.B. & V.A. Newlon

UTILITY OWNERS
Columbia Gas Transmission Corp., P.O. Box 1273, Charleston, W. Va. 25325
Bellaire Water Dept. Municipal Building, Bellaire, Ohio
Ohio Bell Telephone Co., 107 So. Marietta St., St. Clairsville, Ohio 43950
Ohio Power Co., 301-321 Cleveland Avenue, S.W., Canton, Ohio
Columbia Gas of Ohio, Inc. 99 N. Front St., Columbus, Ohio

127 – Paul Kreiter
129 – Paul Sigesmund
130 – Paul Sigesmund
131 – Genevieve Marie Jaquay
132 – Esther Morris
133 – Donald Louis & Sandra K. Nolte
134 – Ethel Hess
135 – Donald Louis & Sandra K. Nolte
136 – James Richard & Nancy June Gilli
137 – Paul Sigesmund
138 – George W. & Katherine Johnson

BEGIN PROJECT
STA. 1429+00
BEL-470-5.90
I-470-9(2)

BEGIN RIW ACQ.
STA. 1430+68.40
BEL-470-5.90
I-470-9(2)

70-EL ON BEL-470-0.00

SEC 26-T3N-R2W
SEC 20-T3N-R2W

Res. = 38.286 Ac.

0 400 800

SCALE IN FEET

(L) = 4.45 Ac.

(L) = 19.27 Ac.

(L) = 16.51 Ac.

(L) = 0.73 Ac.

Res. = 13.63 Ac.

Res. 1.59 Ac.

Res. = 47.16 Ac.

(L) = 3.06 Ac.

Whiskey Run

Reloc. Whiskey Run

Exist. LA

T.R. 326

MATCH LINE STA. 1460+00

MATCH LINE STA. 1430+00

139 – Thomas J. & Joann L. Brannan
* 123B – Frances Snider
141 – Richard L. & Alta D. McConn
142 – William J. Stone
143 – Howard F. Hixenbaugh
144 – Clifford L. Smith
145 – Jessie Mae Slay
146 – F.G. Williams
147 – James Dewey Neitzelt etal
148 – Jessie Mae Slay
149 – Jenny Pappano
152 – Columbia Gas Transmission Corp.

153 – Robert & Tressa Lee Westfall
154 – Joseph & Martha Fodor
155 – Dorothy May Monahan (Trustee)
156 – John J. Malik, Jr. & Charles F. Knapp
164 – William B. & Virgie A. Newlon
169 – Eleanor E. Livorno
172 – Beatrice Oberle Wiseman
173 – Irene F. Oberle
177 – Robert Fleagane
157 – W.B. & V.A. Newlon

75 – Trustees of Riverview Chapel, an unincorporated religious association
183 – Frank J. Sr. & Lillian M. Thomas
184 – Raymond & Eva Anna Butler
185 – Clarence C. Jr. & Sara B. Dietrich
187 – Charles L. & Emma Loew

For Residue Parcel 132 See Property Plat Sheet 2 of 2

(L) = Landlocked Residue

Added Par. 129-E and 130-E	11-8-76
Rev. Parcel & Ownership for Par. 155-WL	1-6-77
Rev. Ownership, Deed Area & Residue for Par. 111-WL	1-10-77
Revised Ownership for Parcel 134	3-1-77
Revised Ownership for Parcel 156-WL & 173-WL	4-1-77
Rev. Ownership for Par. 177 & Added Par. 177-E	4-21-77
Revised Ownership for Parcel 149-WL	9-23-77

Rev. Parcel 126-WL & Parcel 127-WL	9-23-74
Changed Ownership on Par. Nº 152	9-25-74
Rev. Residue Lt. for Par. 117 and Added Par. 117-E	3-17-76
Changed Parcel 117-E to 117-ER	3-29-76
Changed Ownership on Par. Nº 144	11-2-76

TYPE FUNDS
I

PLAN COMPLETED	7-1-70
Revised Parcel Nº 140	9-22-71
Changed Owner of Parcel 121	2-2-72
Rev. Par. Nº 112-WL - Deed Area & Residue Lt. and Par. Nº 112-WD - Gross Take & Net Take	3-7-72
Changed Par. 140 To Par. 123B	4-19 72
Deleted Parcel Nº 118-WL & Revised Parcel Nº 119-WL	6-14-72
Rev. Ownership on Par. Nº 123-WL, 123A-WL & 123B-WL	3-20-73
Added Parcels Nº 112-E and 116-E.	11-6-73
Changed Parcel Nº 116-E to 116-EL.	12-17-73
Changed Parcel 112-E to 112-EL	1-16-74

PROPERTY PLAN

W.E. QUICKSALL & ASSOCIATES INC. Consulting Engineers

PROPERTY PLAN

BEL-470-5.90

BELMONT COUNTY, OHIO

0 100 200
SCALE IN FEET

PULTNEY TOWNSHIP - SEC 20 - T3N - R2W

SHEET 2 OF 2 SHEETS

FED. RD. DIVISION	STATE	PROJECT	
2	OHIO	I-470-9(2)	

271 / 288

4 / 21

BEL-470-5.90
RIGHT OF WAY PLAN
LIMITED ACCESS

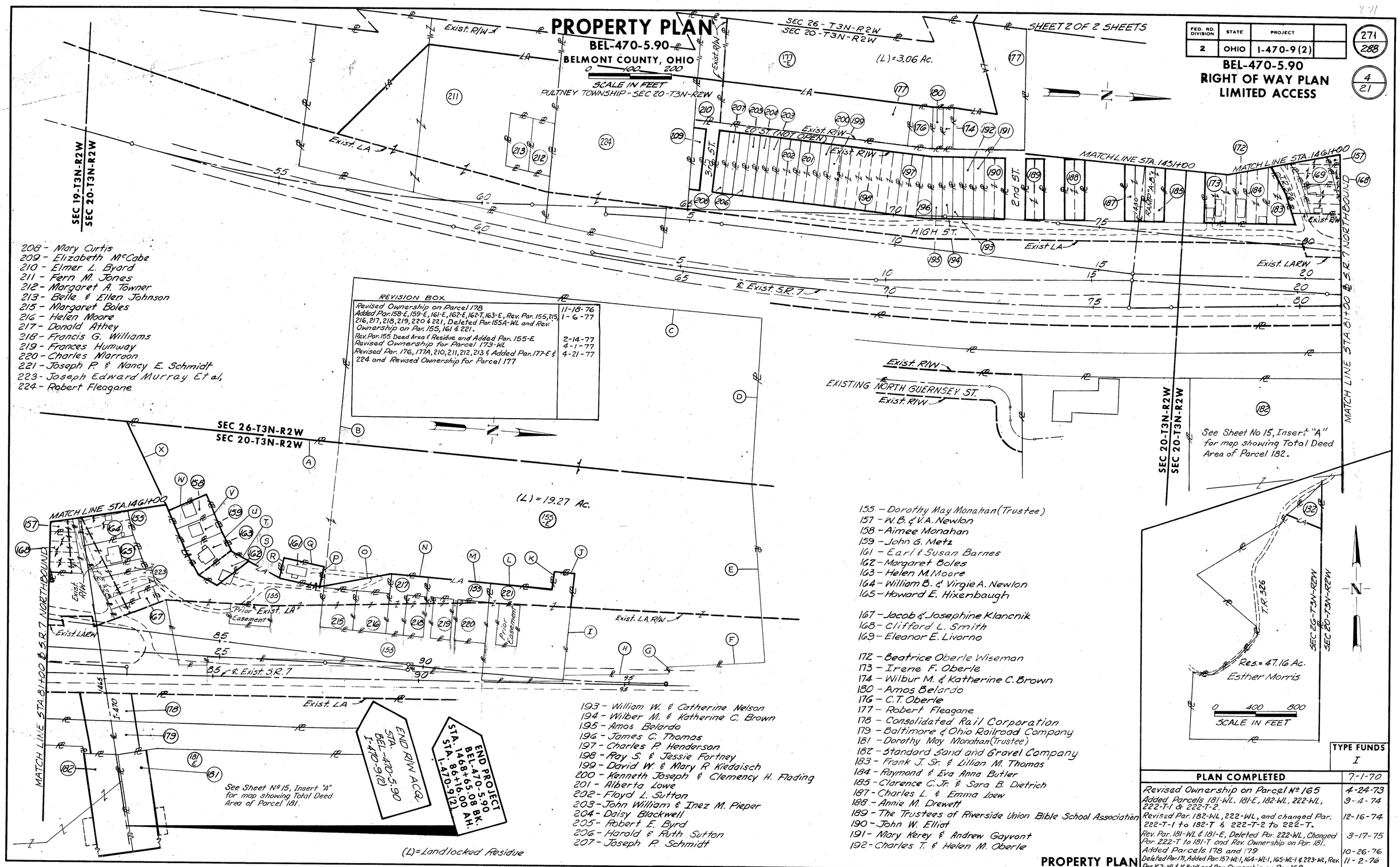

208 - Mary Curtis
209 - Elizabeth McCabe
210 - Elmer L. Byard
211 - Fern M. Jones
212 - Margaret A. Towner
213 - Belle & Ellen Johnson
215 - Margaret Boles
216 - Helen Moore
217 - Donald Athey
218 - Francis G. Williams
219 - Frances Humway
220 - Charles Marroon
221 - Joseph P. & Nancy E. Schmidt
223 - Joseph Edward Murray Et al.
224 - Robert Fleagane

REVISION BOX

Revised Ownership on Parcel 178.	11-18-76
Added Par. 158-E, 159-E, 161-E, 162-E, 162-T, 163-E, Rev. Par. 155, 215, 216, 217, 218, 219, 220 & 221, Deleted Par. 155A-WL and Rev. Ownership on Par. 155, 161 & 221.	1-6-77
Rev. Par. 155 Deed Area & Residue and Added Par. 155-E	2-14-77
Revised Ownership for Parcel 173-WL	4-1-77
Revised Par. 176, 177A, 210, 211, 212, 213 & Added Par. 177-E & 224 and Revised Ownership for Parcel 177	4-21-77

155 - Dorothy May Monahan (Trustee)
157 - W.B. & V.A. Newlon
158 - Aimee Monahan
159 - John G. Metz
161 - Earl & Susan Barnes
162 - Margaret Boles
163 - Helen M. Moore
164 - William B. & Virgie A. Newlon
165 - Howard E. Hixenbaugh

167 - Jacob & Josephine Klancnik
168 - Clifford L. Smith
169 - Eleanor E. Livorno

172 - Beatrice Oberle Wiseman
173 - Irene F. Oberle
174 - Wilbur M. & Katherine C. Brown
180 - Amos Belardo
176 - C.T. Oberle
177 - Robert Fleagane
178 - Consolidated Rail Corporation
179 - Baltimore & Ohio Railroad Company
181 - Dorothy May Monahan (Trustee)
182 - Standard Sand and Gravel Company
183 - Frank J. Sr. & Lillian M. Thomas
184 - Raymond & Eva Anna Butler
185 - Clarence C. Jr. & Sara B. Dietrich
187 - Charles L. & Emma Loew
188 - Annie M. Drewett
189 - The Trustees of Riverside Union Bible School Association
190 - John W. Elliot
191 - Mary Kerey & Andrew Gayvont
192 - Charles T. & Helen M. Oberle

193 - William W. & Catherine Nelson
194 - Wilber M. & Katherine C. Brown
195 - Amos Belardo
196 - James C. Thomas
197 - Charles P. Henderson
198 - Ray S. & Jessie Fortney
199 - David W. & Mary R. Kiedaisch
200 - Kenneth Joseph & Clemency H. Fading
201 - Alberta Lowe
202 - Floyd L. Sutton
203 - John William & Inez M. Pieper
204 - Daisy Blackwell
205 - Robert E. Byrd
206 - Harold & Ruth Sutton
207 - Joseph P. Schmidt

PROPERTY PLAN

TYPE FUNDS
I

PLAN COMPLETED	7-1-70
Revised Ownership on Parcel No 165	4-24-73
Added Parcels 181-WL, 181-E, 182-WL, 222-WL, 222-T-1 & 222-T-2.	9-4-74
Revised Par. 182-WL, 222-WL, and changed Par. 222-T-1 to 182-T & 222-T-2 to 222-T.	12-16-74
Rev. Par. 181-WL & 181-E, Deleted Par. 222-WL, Changed Par. 222-T to 181-T and Rev. Ownership on Par. 181.	3-17-75
Added Parcels 178 and 179	10-26-76
Deleted Par. 171, Added Par. 157-WL-1, 164-WL-1, 165-WL-1 & 223-WL, Rev. Par. 167-WL & 168-WL and Rev. Ownership on Par. 168.	11-2-76

REVISION BOX CONTINUED THIS SHEET

W.E. QUICKSALL & ASSOCIATES INC. Consulting Engineers

UTILITY PLAN
BEL-470-5.90
BELMONT COUNTY, OHIO

0 100 200
SCALE IN FEET

SHEET 1 OF 2 SHEETS

FED. RD. DIVISION	STATE	PROJECT	
2	OHIO	I-470-9(2)	

272 / 288

5 / 21

BEL-470-5.90
RIGHT OF WAY PLAN
LIMITED ACCESS

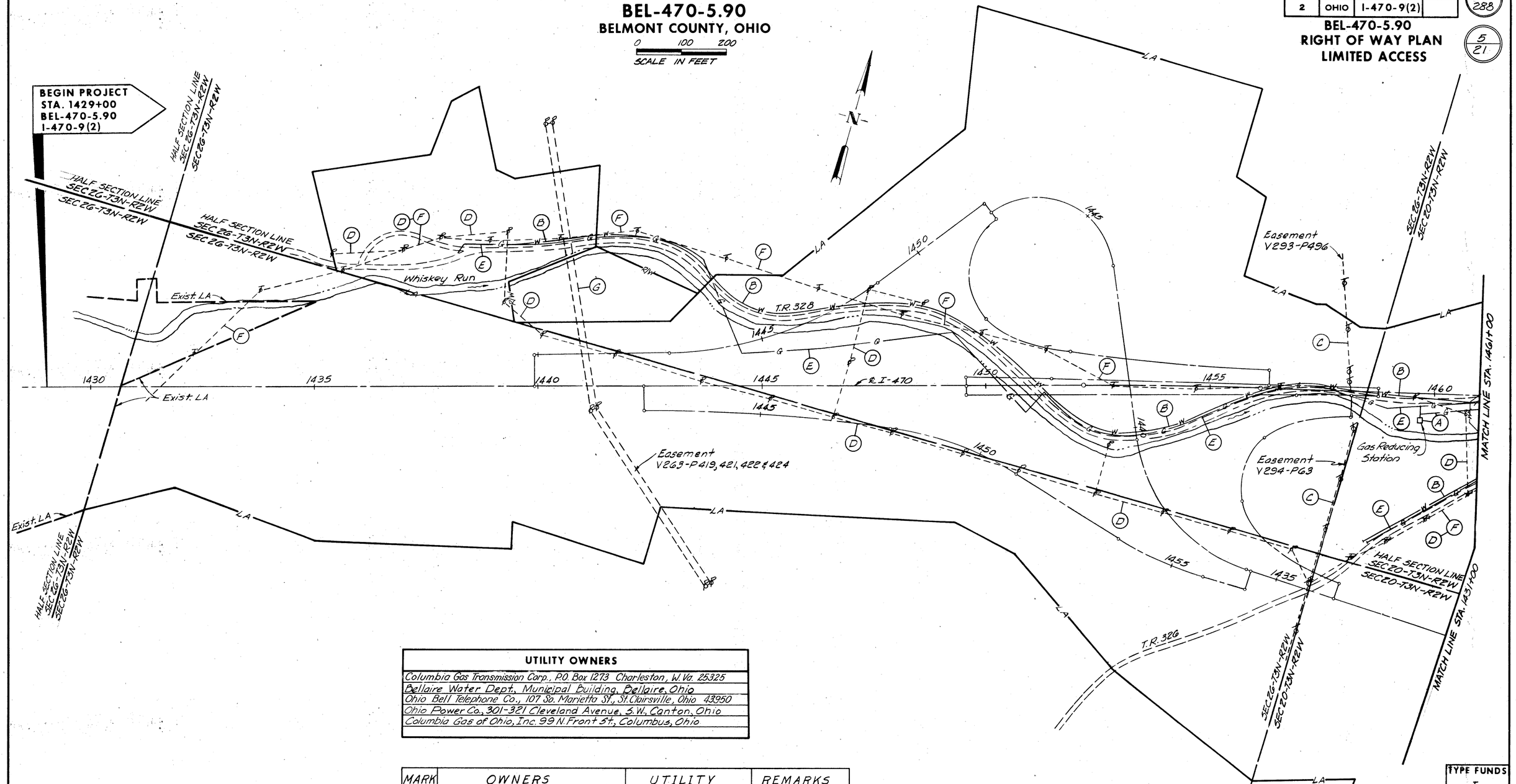

UTILITY OWNERS
Columbia Gas Transmission Corp., P.O. Box 1273 Charleston, W.Va. 25325
Bellaire Water Dept., Municipal Building, Bellaire, Ohio
Ohio Bell Telephone Co., 107 So. Marietta St., St. Clairsville, Ohio 43950
Ohio Power Co., 301-321 Cleveland Avenue, S.W., Canton, Ohio
Columbia Gas of Ohio, Inc. 99 N. Front St., Columbus, Ohio

MARK	OWNERS	UTILITY	REMARKS
A	Columbia Gas Transmission Corp.	Gas Lines	Transmission
B	City of Bellaire	Water Lines	
C	Ohio Bell Telephone Co.	Telephone Cable	
D	Ohio Power Co.	Power Lines	
E	Columbia Gas of Ohio, Inc.	Gas Lines	
F	Ohio Bell Telephone Co.	Telephone Lines	
G	Ohio Power Co.	Power Line	Transmission

TYPE FUNDS
I

PLAN COMPLETED	7-1-70

UTILITY PLAN

W.E. QUICKSALL & ASSOCIATES INC. Consulting Engineers

UTILITY PLAN

BEL-470-5.90

BELMONT COUNTY, OHIO

0 100 200
SCALE IN FEET

SHEET 2 OF 2 SHEETS

FED. RD. DIVISION	STATE	PROJECT	
2	OHIO	I-470-9 (2)	

273/288

BEL-470-5.90
RIGHT OF WAY PLAN
LIMITED ACCESS

6/21

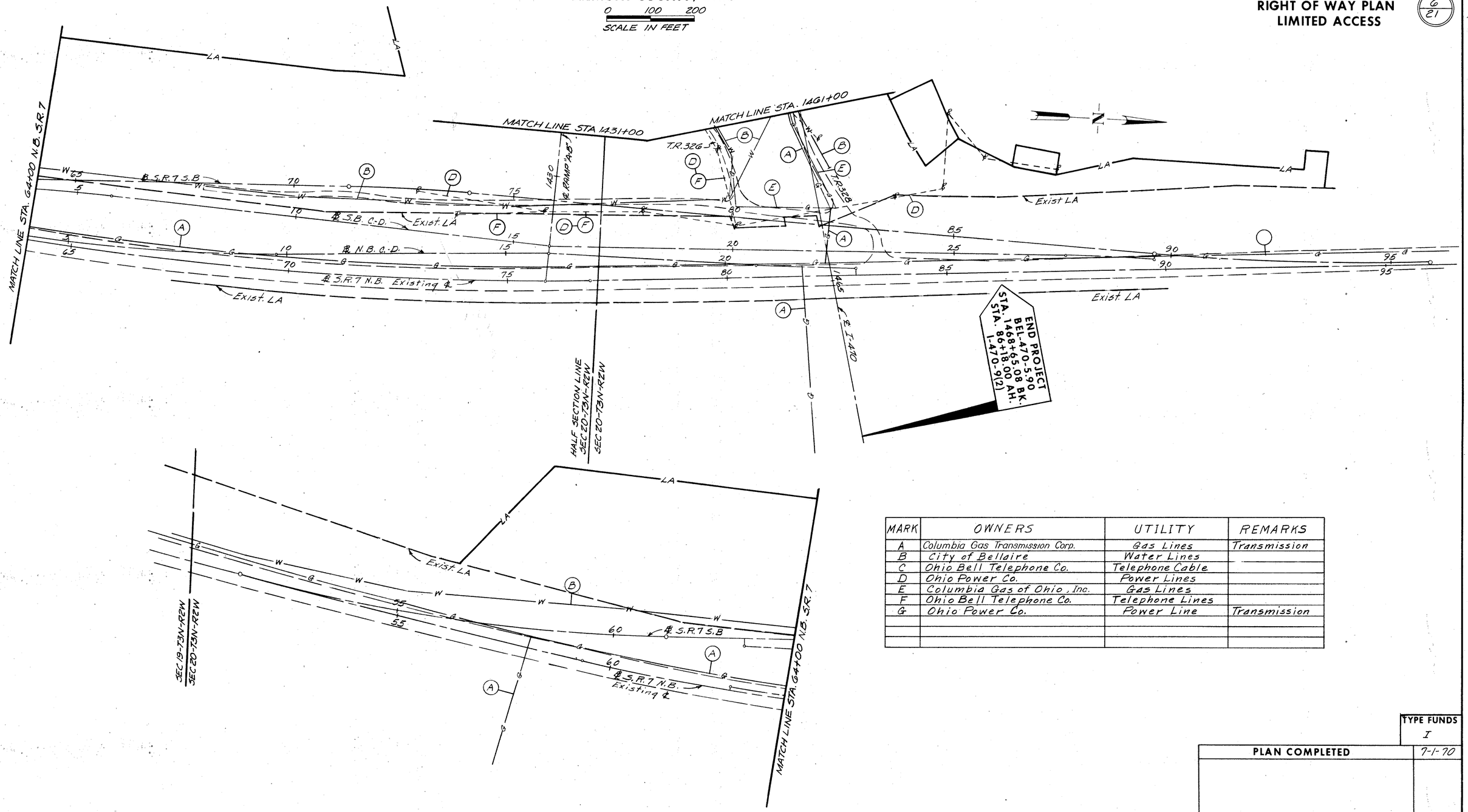

MARK	OWNERS	UTILITY	REMARKS
A	Columbia Gas Transmission Corp.	Gas Lines	Transmission
B	City of Bellaire	Water Lines	
C	Ohio Bell Telephone Co.	Telephone Cable	
D	Ohio Power Co.	Power Lines	
E	Columbia Gas of Ohio, Inc.	Gas Lines	
F	Ohio Bell Telephone Co.	Telephone Lines	
G	Ohio Power Co.	Power Line	Transmission

TYPE FUNDS
I

PLAN COMPLETED	7-1-70

UTILITY PLAN

W.E. QUICKSALL & ASSOCIATES INC. Consulting Engineers

SUMMARY OF ADDITIONAL RIGHT OF WAY REQUIRED

STATE JOB NO.	FED. RD. DIVISION	STATE	PROJECT	
11615(0)	2	OHIO	I-470-9(2)	

274
288

TOTAL NO. OF OWNERS 90 **TOTAL OWNERS WITH STRUCTURES** 38 **TOTAL TAKES** 77 **TOTAL TAKES WITH STRUCTURES** 36

BEL-470-5.90
RIGHT OF WAY PLAN
LIMITED ACCESS

7
21

	PARCEL NO.	PROPERTY OWNER	DEED RECORD VOL.	DEED RECORD PAGE	RECORD AREA AFTER OUTSALES	TOTAL P.R.O.	GROSS TAKE	P.R.O. IN TAKE	NET TAKE	NET RESIDUE LEFT	NET RESIDUE RIGHT	BLDG	SHEET NO.	REMARKS	TYPE FUNDS
	111-WL	Millard Malcolm Miller & Wanda Theresa Miller	542	4	46.886Ac.	0.72 Ac.	7.88 Ac.	-	7.88 Ac.	-	38.286Ac.	-	9		
**	112-WL	James J. & Rose M. Busack	432	491	* 7.58 Ac.	-	6.44 Ac.	-	6.44 Ac.	0.60 Ac.	-	Yes	9-10	* Cal. Area 7.62 Ac. Also see Par. Nº112-WD & 112-PR	
	112-PR	"	"	"	"	-	-	-	-	-	-	-	9	Also see Par. Nº 112-WL & 112-WD	
‡	113-PR	John Kohl	451	151	* 2.13 Ac.	-	-	-	-	-	-	Yes	9-15	* Cal. Area 1.96 Ac.	
‡	114-PR	Mary L. Gradler	455	442	0.51 Ac.	-	-	-	-	-	-	Yes	9-15		
‡	115-PR	Joseph W. & Mildred A. (Rudish aka Ratacic)	508	143	* 0.56 Ac.	-	-	-	-	-	-	Yes	9-15	* Cal. Area 0.59 Ac.	
‡	116-PR	Clara M. Mellor	509	735	* 1.017 Ac.	-	-	-	-	-	-	Yes	9-15	* Cal. Area 1.026 Ac.	
	117-WL	Mary Pritchett	465	589	* 18.66 Ac.	0.53 Ac.	2.46 Ac.	0.33 Ac.	2.13 Ac.	16.31 Ac.(L)	-	-	9-10	* Cal. Area 18.97Ac.	
	117-X	"	"	"	"	-	0.15 Ac.	0.04 Ac.	0.11 Ac.	-	-	-	9	Const. Debris Trap	
	117-ER	"	"	"	"	-	16.51 Ac.	0.20 Ac.	16.31 Ac.	-	-	-	3-9-10-19		
	119-WL	Evelyn V. McGavin	See Remarks		2.64 Ac.	0.01 Ac.	1.91 Ac.	0.01 Ac.	1.90 Ac.	-	0.73 Ac.(L)	Yes	9-10-11	V361-P194 V443-P120 V443-P121 ★ V531-P276	
	121-WL	John S. Lasure Jr.	522	136	16.38 Ac.	0.10 Ac.	2.65 Ac.	-	2.65 Ac.	-	13.63 Ac.	Yes	10-11		
	122-WL	Charles & Mable Ochsenbein	265	65	* 0.40 Ac.	-	0.48 Ac.	-	0.48 Ac.	-	-	Yes	10-11	* Cal. Area 0.48 Ac.	
	123-WL	Frances Snider	518	281	* 2.50 Ac.	-	0.95 Ac.	-	0.95 Ac.	-	-	Yes	10-11	* Cal. Area 0.95 Ac.	
**	123A-WL	"	518 320	281 245	0.37 Ac.	-	0.37 Ac.	-	0.37 Ac.	-	-	Yes	10-11		
	124-WL	Elizabeth Bruney & Ella J. Gehrig	375	263	* 8.31 Ac.	0.45 Ac.	11.74 Ac.	0.45 Ac.	11.29 Ac.	-	-	Yes	10-11	* Cal. Area 11.74 Ac.	
	125-WL	Willard L. & Bertha V. Baker	404	365	0.58 Ac.	-	0.58 Ac.	-	0.58 Ac.	-	-	Yes	10-11		
	126-WL	W. B. & V. A. Newlon	See Remarks		8.76 Ac.	0.22 Ac.	7.16 Ac.	0.21 Ac.	6.95 Ac.	-	1.59 Ac.	Yes	11	V361-P266 V342-P217 V345-P85	
	127-WL	Paul Kreiter	514	77	0.14 Ac.	-	0.14 Ac.	-	0.14 Ac.	-	-	-12- Yes	11		
‡	129-WL	Paul Sigesmund	416	568	* 6.01 Ac.	0.19 Ac.	1.27 Ac.	0.14 Ac.	1.13 Ac.	4.45 Ac.(L)	-	—	10-11	*Calc. Area 6.04 Ac.	
	129A-WL	"	"	"	"		0.32 Ac.	0.05 Ac.	0.27 Ac.	-	-	-	10-11		
‡	130-PR	Paul Sigesmund	416	568	* 6.80 Ac.	-	No Take	-	No Take	8.76 Ac.	-	-	9	Loss of access to T.R. 328 over Parcel 113-PR	
	131-WL	Genevieve Marie Jaquay	437	79	0.11 Ac.	0.02 Ac.	0.11 Ac.	0.02 Ac.	0.09 Ac.	-	-	Yes	10-11	*Calc. Area 8.76 Ac.	
	132-WL	Esther Morris	379	259	50.00 Ac.	1.11 Ac.	1.83 Ac.	0.10 Ac.	1.73 Ac.	-	47.16 Ac.	-	11		
	133-WL	Donald Louis & Sondra K. Nolte	480	536	* 1.74 Ac.	-	1.93 Ac.	-	1.93 Ac.	-	-	Yes	11-12	*Cal. Area 1.93 Ac.	
	134-WL	Ethel Hess	See Remarks		3689 S.F.	-	3689 S.F.	-	3689 S.F.	-	-	—	11-17	V204-P302 V556-P450 V556-P452	
	135-WL	Donald Louis & Sondra K. Nolte	480	536	6358 S.F.	-	6358 S.F.	-	6358 S.F.	-	-	Yes	11-17		
	136-WL	James Richard & Nancy June Gilli	445	539	9168 S.F.	-	9168 S.F.	-	9168 S.F.	-	-	Yes	11-17		
	137-WL	Paul Sigesmund	516	176	10,500 S.F.	-	10,500 S.F.	-	10,500 S.F.	-	-		11-12-17		
	138-WL	George W. & Katherine Johnson	See Remarks		9681 S.F.	-	9681 S.F.	-	9681 S.F.	-	-	Yes	11-12-17	V295-P377 V428-P77	
	139-WL	Thomas J. & Joann L. Brannan	448	323	8407 S.F.	-	8407 S.F.	-	8407 S.F.	-	-	Yes	11-17		
	140-WL	Not Used				-		-		-	-	—			
	141-WL	Richard L. & Alta D. McConn	445	615	7430 S.F.	-	7430 S.F.	-	7430 S.F.	-	-	Yes	11-17		
	142-WL	William J. Stone	423	428	6340 S.F.	-	6340 S.F.	-	6340 S.F.	-	-	Yes	11-17		
	143-WL	Howard E. Hixenbaugh	382	493	7894 S.F.	-	7894 S.F.	-	7894 S.F.	-	-	Yes	11-12-17		
	144-WL	Clifford L. Smith	555	795	7778 S.F.	-	7778 S.F.	-	7778 S.F.	-	-	-	11-18		
	145-WL	Jessie May Slay	334	398	4386 S.F.	-	4386 S.F.	-	4386 S.F.	-	-	-	11-18		
	146-WL	F. G. Williams	476	47	5058 S.F.	-	5058 S.F.	-	5058 S.F.	-	-	-	11-18		
	147-WL	James Dewey Neitzelt et al	See Remarks		6221 S.F.	-	6221 S.F.	-	6221 S.F.	-	-	-	11-18	V367-P513 V485-P282 V493-P211	
	148-WL	Jessie May Slay	334	398	9942 S.F.	-	9942 S.F.	-	9942 S.F.	-	-	—	11-12-17-18	See Note (B)	
	149-WL	Jenny Pappano	570	714&717	4246 S.F.	-	4246 S.F.	-	4246 S.F.	-	-	-	12-18		
	152-WL	Columbia Gas Transmission Corp.	526	638	* 0.07 Ac.	-	0.04 Ac.	-	0.04 Ac.	-	-	Yes	11-18	* Cal. Area 0.04 Ac.	
	153-WL	Robert & Tressa Lee Westfall	410	65	0.14 Ac.	-	0.14 Ac.	-	0.14 Ac.	-	-	Yes	10-11-18		
	154-WL	Joseph & Martha Fodor	498	74	0.32 Ac.	-	0.32 Ac.	-	0.32 Ac.	-	-	Yes	10-11-12-18		
	155-WL	Dorothy May Monahan(Trustee)	See Remarks		* 25.04 Ac.	3.49 Ac.	3.79 Ac.	1.92 Ac.	1.87 Ac.	19.27Ac.(L)	-	-	10-11-12-14-16-18-19	Vol. 552-Pages 200, 201, 203, 209, 215, 220, 225 & 230	
	155-E	" " " "					20.84 Ac.	1.57 Ac.	19.27Ac.	—	—	—	4-19	* Cal. Area 24.63 Ac.	
	156-WL	John J. Malik, Jr. & Charles F. Knapp	567	317	0.07 Ac.	-	0.07 Ac.	-	0.07 Ac.	-	-	—	11-12-18		
‡	157-WL	W. B. & V. A. Newlon	410	168	3168 S.F.	-	3168 S.F.	-	3168 S.F.	-	-	Yes	12-18		
‡	158-LA ONLY	Aimee Monahan	419	222	0.115 Ac.	-	-	-	-	-	-	Yes	12-16		
‡	159-LA ONLY	John G. Metz	494	720	0.115 Ac.	-	-	-	-	-	-	Yes	12-16		
‡	161-LA ONLY	Earl & Susan Barnes	See Remarks		0.115 Ac.	-	-	-	-	-	-	Yes	12-16	V366-P327 V396-P465 V347-P379	
‡	162-LA ONLY	Margaret Boles	419	364	0.115 Ac.	-	-	-	-	-	-	Yes	12-16		
‡	163-LA ONLY	Helen M. Moore	See Remarks		0.143 Ac.	-	-	-	-	-	-	Yes	12-16	V419-P366 V440-P674	
‡	164-WL	William B. & Virgie A. Newlon	See Remarks		0.29 Ac.	-	0.29 Ac.	-	0.29 Ac.	-	-	Yes	12-18	V342-P217 V419-P177 V422-P119 V-265-P-174	
‡	165-WL	Howard E. Hixenbaugh	See Remarks		* 0.32 Ac.	-	0.13 Ac.	-	0.13 Ac.	-	-	Yes	12-18	V450-P634 V536-P53, 386 & 389 *Cal. Area 0.13 Ac.	
	167-WL	Jacob & Josephine Klancnik	380	47	* 0.06 Ac.	0.022 Ac.	0.08 Ac.	0.022 Ac.	0.058 Ac.	-	-	-	12-18	* Cal. Area 0.080	
	168-WL	Clifford L. Smith	See Remarks		13.066 S.F.	2,001 S.F.	13,066 S.F.	2,001 S.F.	11,065 S.F.	-	-	Yes	12-18	Vol. 555-Pg. 795, 799, 801, 803, 805, 807 & 809	
	169-WL	Eleanor E. Livorno	395	290	6748 S.F.	-	6748 S.F.	-	6748 S.F.	-	-	-	12-18		
	123B-WL	Frances Snider	518 369	281 252	0.08Ac.	0.04 Ac.	0.08 Ac.	0.04Ac.	0.04Ac.	-	-	Yes	10		
	172-WL	Beatrice Oberle Wiseman	420	436	3750 S.F.	-	3750 S.F.	-	3750 S.F.	-	-	Yes	12-17		
	173-WL	Irene F. Oberle	See Remarks		11,250 S.F.	-	11,250 S.F.	-	11,250 S.F.	-	-	Yes	12-17	V420-P2 V392-P640 V530-P592 V530-P594	
	174-WL	Wilbur M. & Katherine C. Brown	392	405	0.06 Ac.	-	0.06 Ac.	-	0.06 Ac.	-	-	-	13-16		
	75-WL	Trustees of Riverview Chapel, an unincorporated religious association	427	672	0.61 Ac.	0.10 Ac.	0.61 Ac.	0.10 Ac.	0.51 Ac.	-	-	Yes	10-11		
	176-WL	C. T. Oberle	316	205	0.14 Ac.	-	0.14 Ac.	-	0.14 Ac.	-	-	-	13-16		
	177-WL	Robert Fleagane	533	191	* 4.915 Ac.	-	0.85 Ac.	-	0.85 Ac.	3.06Ac.(L)	-	-	11-12-13-19	* Cal. Area 4.94 Ac.	
	177A-WL	" "	"	"		-	1.03 Ac.	-	1.03 Ac.	-	-	-	13		
	177-E	" "	"	"		-	3.06 Ac.	-	3.06 Ac.	-	-	-	11-12-13-19		
	112-WD	James J. & Rose M. Busack	432	491	7.58 Ac.	-	0.58 Ac.	-	0.58 Ac.	-	-	Yes	9	Parcel to allow access to Debris Trap, See	
	112-EL	" " "	"	"		-	0.60 Ac.	-	0.60 Ac	-	-	-	9	Vol. 257-Pg. 400 for description, Also see Par. 112-WL & 112-PR	

INTERSTATE

GENERAL NOTES:

(B) Lot 17 purchased at Tax Sale and Transfered on Auditors Books 3-28-40 but not recorded.

Parcel No's. 120, 128, 150, 151, 160, 166, 170, 186 & 214 Not Used.

** A Parcel has been Added to the End of this Sheet.

★ Deed Area for Deed Vol. 531-P. 276 has been calculated to be 0.64 Ac.

‡ A Parcel has been Added to the End of the Summary.

(L) Landlocked Residue

RECORD AREA AFTER OUTSALES MINUS TOTAL P.R.O. MINUS NET TAKE = NET RESIDUE.

REVISIONS	BY	CHK.	DATE	BY	CHK.
Revised Ownership for Parcel 149-WL					9-23-77
Revised Par. 176-WL, 177A-WL & Added Par. 177-E and Rev. Ownership for Parcel 177					4-21-77
Revised Ownership for Parcel 156-WL & 173-WL					4-1-77
Revised Ownership for Parcel 134					3-1-77
Rev. Par. 155 Deed Area & Residue and Added Par. 155-E					2-14-77
Rev. Ownership, Deed Area & Residue for Par. 111-WL					1-10-77
Deleted Par. 155A, Rev. Par. 155, Rev. Ownership on Par. 155 & 161, Rev. Deed Area for Par. 158, 159, 161, 162, & 163 and Added Vol. & Page to Par. 161 & 163.					1-6-77
Rev. Deed Area & Residue for Par. 129 & 130					11-8-76
Deleted Par. 171, Rev. Par. 167-WL & 168-WL and Rev. Ownership on Par. 144 & 168					11-2-76
Removed Yes from Building Column for Par. 134-WL					5-10-76
Changed Parcel 117-E to 117-ER					3-29-76
Revised Deed Area & Residue Lt. for Par. 117-WL and Added Par. 117-E					3-17-76
Changed Ownership on Par. 152-WL.					9-25-74
Rev. Parcel 127-WL					4-30-74
Changed Parcel 112-E to 112-EL					1-16-74
Rev. Deed Area & Showed Calc. Area on Par. 116-PR & Revised Deed & Calculated Area and Residue Left on Parcel 112-WL; Added Parcel 112-E.					11-6-73
Changed Owner & Vol. & Pg. on Parcel 121-WL					2-2-72
Rev. Par. Nº 112-WL - Deed Area & Residue Lt. and Par. Nº 112-WD - Gross Take & Net Take					3-7-72
Removed Par. 140-WL & Added Par. 123B-WL					4-19-72
Deleted Parcel Nº 118-WL & Revised Parcel Nº 119-WL					6-14-72
Rev. Ownership on Par. Nº 123-WL, 123A-WL & 123B-WL					3-20-73
Rev. Ownership on Parcel Nº 135-WL					4-24-73
PLAN COMPLETED					7-1-70
Added "Remark" for Parcel 112-WD					10/3/70
Changed Parcels 112-WD, 113-EL, 114-EL, 115-EL, 116-EL, 158-EL, 159-EL, 161-EL, 162-EL, 163-EL To 112-PR, 113-PR, 114-PR, 115-PR, 116-PR, 158-LA ONLY, 159-LA ONLY, 161-LA ONLY, 162-LA ONLY, 163-LA ONLY, and Revised Parcel 112-WD.					12/14/70
Added Remark on Parcel 140-WL					9-22-71

SUMMARY OF ADDITIONAL RIGHT OF WAY REQUIRED

STATE JOB NO.	FED. RD. DIVISION	STATE	PROJECT	
11615(0)	2	OHIO	I-470-9(2)	

275 / 288

BEL-470-5.90
RIGHT OF WAY PLAN
LIMITED ACCESS

8 / 21

NOTE: Parcel No's. 120, 128, 150, 151, 160, 166, 170, 186 & 214 Not Used.

PARCEL NO.	PROPERTY OWNER	DEED RECORD VOL.	DEED RECORD PAGE	RECORD AREA AFTER OUTSALES	TOTAL P.R.O.	GROSS TAKE	P.R.O. IN TAKE	NET TAKE	NET RESIDUE LEFT	NET RESIDUE RIGHT	BLDG	SHEET NO.	REMARKS	TYPE FUNDS
178-R	Consolidated Rail Corporation				—	8986 S.F.	—	8986 S.F.	—	—	—	12 & 20	Aerial Easement	
178	" " "				—	263 S.F.	—	263 S.F.	—	—	—	12 & 20		
178-1	" " "				—	1500 S.F.	—	1500 S.F.	—	—	—	12 & 20		
179-R	Baltimore and Ohio Railroad Company				—	10,001 S.F.	—	10,001 S.F.	—	—	—	12 & 21	Aerial Easement	
179-X	" " " " "				—	2038 S.F.	—	2038 S.F.	—	—	—	12 & 21		
180-WL	Amos Belardo	455	467	0.06 Ac.	-	0.06 Ac.	-	0.06 Ac.	-	-	-	13-16		
181-WL	Dorothy May Monahan, Trustee	See Remarks		* 1.174 Ac.	-	0.516 Ac.	-	0.516 Ac.	2.154 Ac.	-	-	12-15	*Calculated Area 2.67 Ac.	
181-E	" " " "				-	2.154 Ac.	-	2.154 Ac				12-15	Vol. 552-Pages 200, 201, 203, 209, 215, 220, 225 & 230	
182-WL	Standard Sand and Gravel Company	459	433	4.70 Ac.	-	0.797 Ac.		0.797 Ac.	-	3.903 Ac.	-	12		
183-WL	Frank J. Sr. & Lillian M. Thomas	366	533	6275 S.F.	6275 S.F.	6275 S.F.	6275 S.F.	No Take	-	-	-	12		
184-WL	Raymond & Eva Anna Butler	335	468	7500 S.F.	7500 S.F.	7500 S.F.	7500 S.F.	No Take	-	-	-	12		
185-WL	Clarence C. Jr. & Sara B. Dietrich	329	235	7500 S.F.	7500 S.F.	7500 S.F.	7500 S.F.	No Take	-	-	-	12		
187-WL	Charles L. & Emma Loew	410	197	7500 S.F.	7500 S.F.	7500 S.F.	7500 S.F.	No Take	-	-	-	12		
188-WL	Annie M. Drewett	See Remarks		7500 S.F.	7500 S.F.	7500 S.F.	7500 S.F.	No Take	-	-	-	12	V323-P464 V209-P208	
189-WL	The Trustees of Riverside Union Bible School Association	See Remarks		7500 S.F.	7500 S.F.	7500 S.F.	7500 S.F.	No Take	-	-	-	12	V245-P423 V269-P153	
190-WL	John W. Elliott	365	192	7500 S.F.	7500 S.F.	7500 S.F.	7500 S.F.	No Take	-	-	-	12		
191-WL	Mary Kerey & Andrew Gayvont	404	446	3750 S.F.	3750 S.F.	3750 S.F.	3750 S.F.	No Take	-	-	-	12-13		
192-WL	Charles T. & Helen M. Oberle	342	235	3750 S.F.	3750 S.F.	3750 S.F.	3750 S.F.	No Take	-	-	-	13		
193-WL	William W. & Catherine Nelson	282	48	3750 S.F.	3750 S.F.	3750 S.F.	3750 S.F.	No Take	-	-	-	13		
194-WL	Wilber M. & Katherine C. Brown	392	405	3750 S.F.	3750 S.F.	3750 S.F.	3750 S.F.	No Take	-	-	-	13		
195-WL	Florence Potts Donley	370	67	3750 S.F.	3750 S.F.	3750 S.F.	3750 S.F.	No Take	-	-	-	13		
196-WL	James C. Thomas	374	327	3331 S.F.	3331 S.F.	3331 S.F.	3331 S.F.	No Take	-	-	-	13		
197-WL	Charles P. Henderson	413	433	7500 S.F.	7500 S.F.	7500 S.F.	7500 S.F.	No Take	-	-	-	13		
198-WL	Ray S. & Jessie Fortney	423	285	22,050 S.F.	22,050 S.F.	22,050 S.F.	22,050 S.F.	No Take	-	-	-	13		
199-WL	David W. & Mary R. Kiedaisch	See Remarks		4200 S.F.	4200 S.F.	4200 S.F.	4200 S.F.	No Take	-	-	-	13	V224-P515 V356-P8	
200-WL	Kenneth Joseph & Clemency H. Flading	387	394	3750 S.F.	3750 S.F.	3750 S.F.	3750 S.F.	No Take	-	-	-	13		
201-WL	Alberta Lowe	346	542	7500 S.F.	7500 S.F.	7500 S.F.	7500 S.F.	No Take	-	-	-	13		
202-WL	Floyd L. Sutton	203	312	7500 S.F.	7500 S.F.	7500 S.F.	7500 S.F.	No Take	-	-	-	13		
203-WL	John William & Inez M. Pieper	374	66	3750 S.F.	3750 S.F.	3750 S.F.	3750 S.F.	No Take	-	-	-	13		
204-WL	Daisy Blackwell	See Remarks		3750 S.F.	3750 S.F.	3750 S.F.	3750 S.F.	No Take	-	-	-	13	V320-P547 V380-P288	
205-WL	Robert E. Byrd	374	560	3750 S.F.	3750 S.F.	3750 S.F.	3750 S.F.	No Take	-	-	-	13		
206-WL	Harold & Ruth Sutton	368	576	3750 S.F.	3750 S.F.	3750 S.F.	3750 S.F.	No Take	-	-	-	13		
207-WL	Joseph P. Schmidt	390	516	3750 S.F.	3750 S.F.	3750 S.F.	3750 S.F.	No Take	-	-	-	13		
208-WL	Mary Curtis	397	310	3750 S.F.	3750 S.F.	3750 S.F.	3750 S.F.	No Take	-	-	-	13		
209-WL	Elizabeth McCabe	366	521	4389 S.F.	4389 S.F.	4389 S.F.	4389 S.F.	No Take	-	-	-	13		
210-WL	Elmer L. Byard	363	475	* 0.418 Ac.	0.415 Ac.	0.415 Ac.	0.415 Ac.	No Take	-	-	-	13	* Cal. Area 0.415 Ac.	
211-WL	Fern M. Jones	See Remarks		* 6.93 Ac.	6.93 Ac.	6.93 Ac.	6.93 Ac.	No Take	-	-	-	13-14	V404-P622 V251-P101 * Record Area Cal.	
212-WL	Margaret A. Towner	420	334	0.162 Ac.	0.162 Ac.	0.162 Ac.	0.162 Ac.	No Take	-	-	-	13		
213-WL	Belle & Ellen Johnson	420	335	0.162 Ac.	0.162 Ac.	0.162 Ac.	0.162 Ac.	No Take	-	-	-	13		
215-WL	Margaret Boles	See Remarks		0.187 Ac.	0.112 Ac.	0.187 Ac.	0.112 Ac.	0.075 Ac.	-	-	-	12-14	V334-P578 V396-P551	
216-WL	Helen Moore	See Remarks		0.187 Ac.	0.129 Ac.	0.187 Ac.	0.129 Ac.	0.058 Ac.	-	-	-	14	V334-P576 V396-P550	
217-WL	Donald Athey	445	554	0.200 Ac.	0.072 Ac.	0.200 Ac.	0.072 Ac.	0.128 Ac.	-	-	-	14		
218-WL	Francis G. Williams	482	703	0.115 Ac.	0.093 Ac.	0.115 Ac.	0.093 Ac.	0.022 Ac.	-	-	-	14		
219-WL	Frances Humway	334	583	0.115 Ac.	0.101 Ac.	0.115 Ac.	0.101 Ac.	0.014 Ac.	-	-	-	14		
220-WL	Charles Marroon	505	280	0.170 Ac.	0.163 Ac.	0.170 Ac.	0.163 Ac.	0.007 Ac.	-	-	-	14		
221-WL	Joseph P. & Nancy E. Schmidt	483	151	* 0.95 Ac.	0.751 Ac.	1.003 Ac.	0.751 Ac.	0.252 Ac.	-	-	-	14	* Cal. Area 1.003 Ac.	
116-EL	Clara M. Mellor	509	735	* 1.017 Ac.	0.15 Ac.	1.026 Ac.	0.15 Ac.	0.876 Ac.	-	-	Yes	9-15	* Cal. Area 1.026 Ac.	
223-WL	Joseph Edward Murray Et.AL.	228	512	0.07 Ac.	0.02 Ac.	0.07 Ac.	0.02 Ac.	0.05 Ac.	—	—	—	12-18		
158-E	Aimee Monahan			0.115 Ac.	—	0.115 Ac.	—	0.115 Ac.	—	—	Yes	12-16		
159-E	John G. Metz			0.115 Ac.		0.115 Ac.	—	0.115 Ac.	—	—	Yes	12-16		
181-T	Dorothy May Monahan, Trustee	-	-	-	—	0.040 Ac.	—	0.040 Ac.	—	—	-	12-15	Provide Work Area To Construct Bridge Pier	
162-T	Margaret Boles			0.115 Ac.	—	0.115 Ac.	—	0.115 Ac	0.115 Ac.	—	Yes	12-16	To Remove Structure	
162-E	" "				—	0.115 Ac	—	0.115 Ac	—	—	—	12-16		
182-T	Standard Sand and Gravel Company	459	433	-	—	0.040 Ac.	—	0.040 Ac.	—	—	—	12-15	Provide Work Area To Construct Bridge Pier	
182-X	" " " " "	459	433	-	-	0.086 Ac	-	0.086 Ac.	-	-	-	12-15		
224-WL	Robert Fleagane	528	745	* 4.46 Ac.	4.46 Ac.	4.46 Ac.	4.46 Ac.	No Take	—	—	—	13	* Record Area Cal.	
113-E	John Kohl	451	151	* 2.13 Ac.	—	1.96 Ac.	—	1.96 Ac.	—	—	Yes	9-15	* Cal. Area 1.96 Ac.	
114-E	Mary L. Gradler	455	442	0.51 Ac.	—	0.51 Ac.	—	0.51 Ac.	—	—	Yes	9-15		
115-E	Joseph W. & Mildred A. (Rudish aka Ratacic)	508	143	* 0.56 Ac.	—	0.59 Ac.	—	0.59 Ac.	—	—	Yes	9-15	* Cal. Area 0.59 Ac.	
157-WL-1	W.B. & V.A. Newlon				655 S.F.	655 S.F.	655 S.F.	0	—	—	—	12-18	To Obtain Underlying Fee	
164-WL-1	William B. & Virgie A. Newlon				1471 S.F.	1471 S.F.	1471 S.F.	0	—	—	—	12-18	To Obtain Underlying Fee	
165-WL-1	Howard E. Hixenbaugh				0.04 Ac.	0.04 Ac.	0.04 Ac.	0	—	—	—	12-18	To Obtain Underlying Fee	
129-E	Paul Sigesmund				—	4.45 Ac.	—	4.45 Ac.	—	—	—	10-19		
130-E	Paul Sigesmund				—	8.76 Ac.	—	8.76 Ac.	—	—	—	3-19		
161-E	Earl & Susan Barnes			0.115 Ac.	—	0.115 Ac.	—	0.115 Ac.	—	—	Yes	12-16		
163-E	Helen M. Moore			0.143 Ac.	—	0.143 Ac.	—	0.143 Ac.	—	—	Yes	12-16		

INTERSTATE

(L) Landlocked Residue

RECORD AREA AFTER OUTSALES MINUS TOTAL P.R.O. MINUS NET TAKE = NET RESIDUE

REVISIONS	
Revised Par. 210, 211, 212, 213 & Added Par. 224	4-21-77
Revised Parcels 215, 216, 217, 218, 219, 220, 221 and Added Parcels 158-E, 159-E, 161-E, 162-T, 162-E & 163-E.	1-6-77
Revised Ownership Par. 178-R, 178, 178-1	11-18-76
Added Par. 129-E and 130-E	11-8-76
Added Par. 157-WL-1, 164-WL-1, 165-WL-1 & 223-WL	11-2-76
Added Parcels 178-R, 178, 178-1, 179-R & 179-X.	10-26-76
Added Parcels 113-E, 114-E and 115-E	7-30-75
PLAN COMPLETED	7-1-70
Added Parcel Nº 116-E.	11-6-73
Changed Parcel Nº 116-E to 116-EL.	12-17-73
Added Parcels 181-WL, 181-E, 182-WL, 222-WL, 222-T-1, & 222-T-2.	9-4-74
Rev. Par. 182-WL, 222-WL; Changed Par. 222-T-2 to 222-T and Par. 222-T-1 to 182-T and Rev. Ownership	12-16-74
Added Parcel 182-X	1-30-75
Revised Area Parcel 182X	3-14-75
Rev. Par. 181-WL & 181-E, Deleted Par. 222-WL, Changed Par. 222-T to 181-T and Rev. Ownership on Par. 181	3-17-75

DETAILS			
BY	DATE	CHK.	

BY	DATE	CHK.

W.E. QUICKSALL & ASSOCIATES INC. Consulting Engineers

BELMONT COUNTY — PULTNEY TWP-SEC 26-T3N-R2W

FED. RD. DIVISION	STATE	PROJECT	
2	OHIO	I-470-9 (2)	

276 / 288

9 / 21

BEL-470-5.90
RIGHT OF WAY PLAN
LIMITED ACCESS
(L) = 16.51 Ac

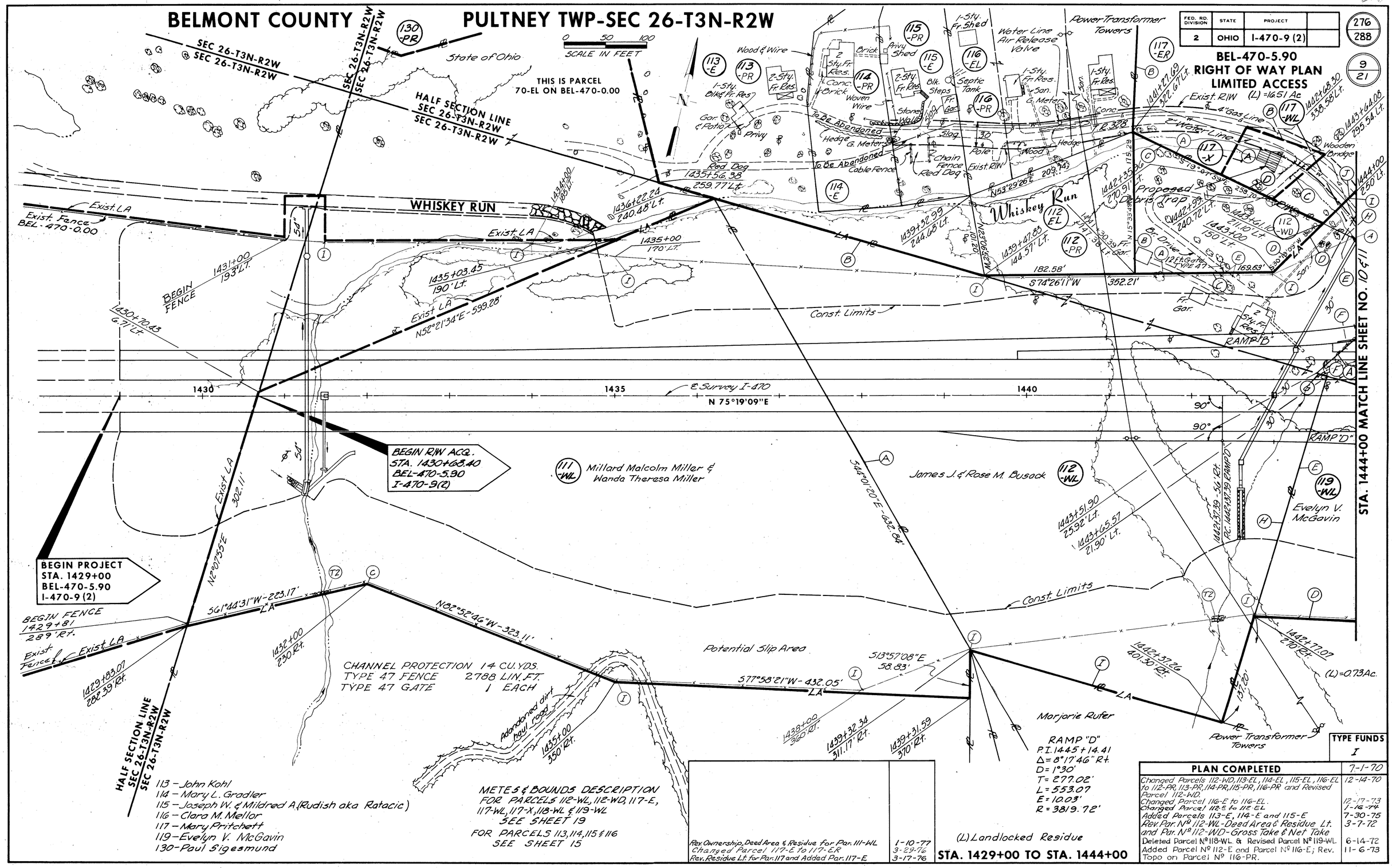

Rev. Ownership, Deed Area & Residue for Par. 111-WL	1-10-77
Changed Parcel 117-E to 117-ER	3-29-76
Rev. Residue Lt. for Par. 117 and Added Par. 117-E	3-17-76

TYPE FUNDS: I

PLAN COMPLETED	7-1-70
Changed Parcels 112-WD, 113-EL, 114-EL, 115-EL, 116-EL to 112-PR, 113-PR, 114-PR, 115-PR, 116-PR and Revised Parcel 112-WD.	12-14-70
Changed Parcel 116-E to 116-EL.	12-17-73
Changed Parcel 112-E to 112-EL	1-16-74
Added Parcels 113-E, 114-E and 115-E	7-30-75
Rev. Par. Nº 112-WL-Deed Area & Residue Lt. and Par. Nº 112-WD-Gross Take & Net Take	3-7-72
Deleted Parcel Nº 118-WL & Revised Parcel Nº 119-WL	6-14-72
Added Parcel Nº 112-E and Parcel Nº 116-E; Rev. Topo on Parcel Nº 116-PR.	11-6-73

BELMONT COUNTY — PULTNEY TWP-SEC 26 & 20-T3N-R2W

7-1-70	PLAN COMPLETED
9-22-71	Added Parcel Nº 140-WL
2-2-72	Changed Owner of Parcel 121-WL
3-7-72	Rev. Par. Nº 112-WL - Deed Area & Residue Lt.
4-19-72	Remove Par. 140-WL & Added Par. 123B-WL
6-14-72	Deleted Parcel Nº 118-WL & Revised Parcel Nº 119-WL
3-20-73	Rev. Ownership on Par. Nº 123-WL, 123A-WL, & 123B-WL
3-17-76	Rev. Residue Lt. for Par. 117 and Added Par. 117-E
3-29-76	Changed Parcel 117-E to 117-ER
11-8-76	Added Parcel 129-E
1-6-77	Rev. Parcel & Ownership for Par. 155-WL

TYPE FUNDS
I

FED. RD. DIVISION	STATE	PROJECT	
2	OHIO	I-470-9 (2)	

277/288

10/21

BEL-470-5.90
RIGHT OF WAY PLAN
LIMITED ACCESS

0 50 100
SCALE IN FEET

(L) Landlocked Residue

112 – James J. & Rose M. Busack

119 – Evelyn V. McGavin
121 – John S. Lasure Jr.
122 – Charles & Mable Ochsenbein
123 – Frances Snider
125 – Willard L. & Bertha V. Baker
123A – Frances Snider
131 – Genevieve Marie Jaquay
153 – Robert & Tressa Lee Westfall
154 – Joseph & Martha Fodor
155 – Dorothy May Monahan (Trustee)
175 – Trustees of Riverview Chapel, an unincorporated religious association
123B – Frances Snider

FOR PARCELS AND DESCRIPTIONS SEE SHEET 18 & 19

CURVE DATA
RAMP "A-B"
P.I. 1446+63.79
Δ=118°41'37" Lt.
D=37°30'
T=291.06'
L=357.35'
E=165.84'
R=172.50'

CURVE DATA I-470
P.I. 1454+14.97
Δ = 1°51'19" RT.
D = 0°28'
T = 198.80'
L = 397.56'
E = 1.61'
R = 12,277.67'

Potential Slip Area
Elizabeth Bruney & Ella J. Gehrig
Mary Pritchett
Paul Sigesmund
Whiskey Run
TYPE 47 FENCE 2240 LIN. FT.
(L)=4.45 Ac.
(L)=16.51 Ac.
(L)=19.27 Ac.
RAMP "A" 1450+51.30 17.33' Lt.
RAMP "B" 1449+34.39 316.28' Lt.
RAMP "A-B" 1446+59.07 441.97' Rt.
RAMP "A-B" 1446+83.17 190' Rt.
RAMP "A-B" 1444+67.91 479.20' Rt.
RAMP "A-B" 1444+28.62 327.87' Rt.
RAMP "A-B" 1444+05.55 375.68' Rt.
RAMP "A-B" 1443+08.57 291.53' Rt.
P.C. 1443+72.73
P.C. 1447+30.08 RAMP "A-B"
M. 15.01+22.71
1452+00 780' Lt.
1455+00 690' Lt.
N19°38'23"W - 273.62'
Const. Limits
Exist. R/W
Wooden Bridge
Conc. Bridge
Septic Tank
2-Sty. Fr. Res.
1-Sty. Fr. Res.
Fr. Gar.
Blk. Gar.
Brick Dr.
To Be Abandoned
4" Gas Line
40' EASEMENT
Conc. Found.
Exist. R/W
BEGIN SHEET STA. 1444+00
STA. 1460+00 MATCH LINE SHEET NO. 12
SEC 26-T3N-R2W
SEC 20-T3N-R2W
N 75°19'09"E
N 77°10'28"E
CENTERLINE MATCH LINE SHEET NO. 11
P.C. 1452+16.17
82°00'56" Tan to Curve
STA. 1453+20 I-470 = STA. 1440+94.67 RAMP "A-B"
P.T. 1456+13.73
℄ Survey I-470
STA. 1444+00 TO STA. 1460+00 LEFT

W.E. QUICKSALL & ASSOCIATES INC. Consulting Engineers

BELMONT COUNTY – PULTNEY TWP- SEC 26 & 20-T3N-R2W

FED. RD. DIVISION	STATE	PROJECT	
2	OHIO	I-470-9 (2)	

278
288

11
21

BEL-470-5.90
RIGHT OF WAY PLAN
LIMITED ACCESS

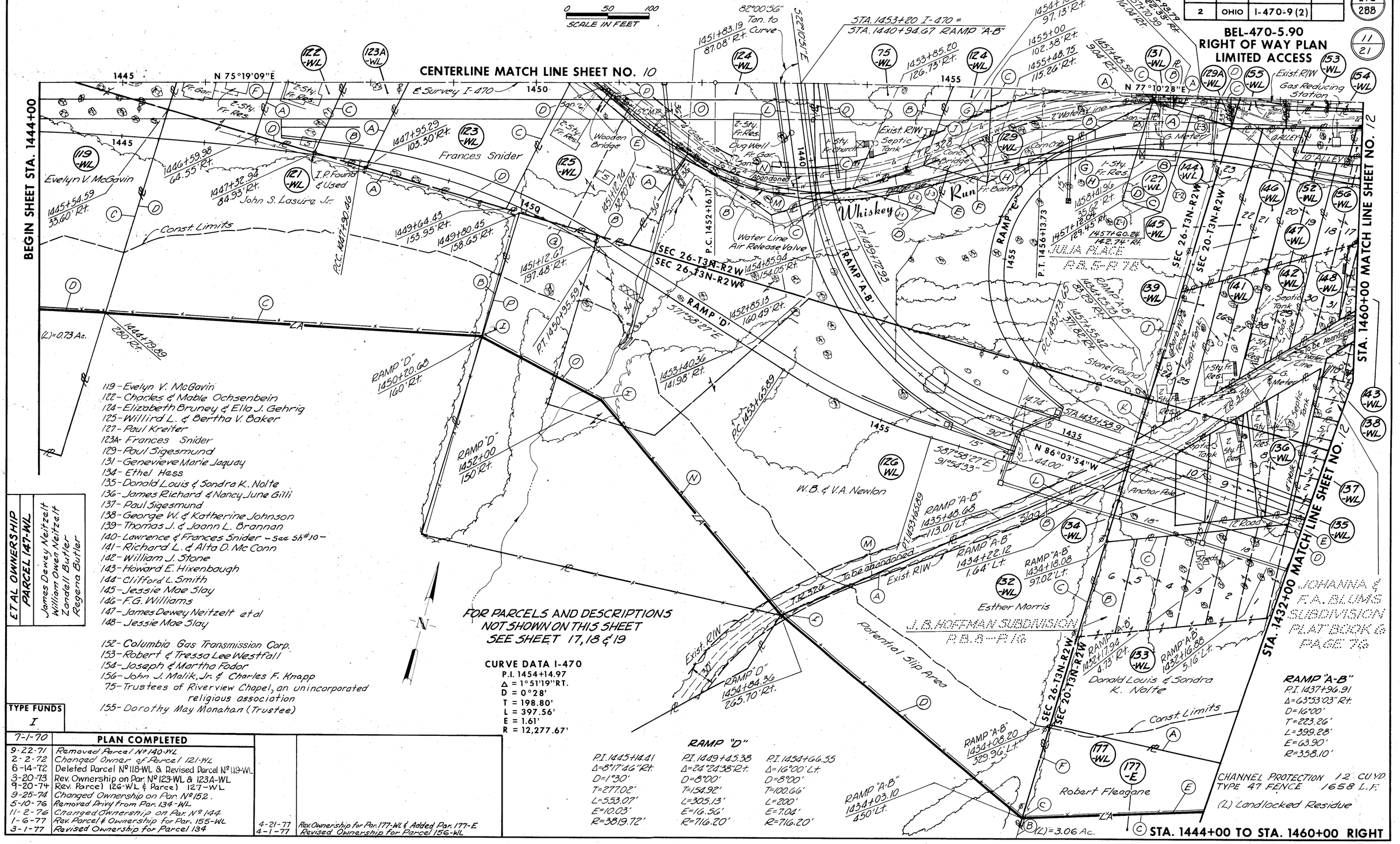

TYPE FUNDS
I

7-1-70	PLAN COMPLETED		
9-22-71	Removed Parcel Nº 140-WL		
2-2-72	Changed Owner of Parcel 121-WL		
6-14-72	Deleted Parcel Nº 118-WL & Revised Parcel Nº 119-WL		
3-20-73	Rev. Ownership on Par. Nº 123-WL & 123A-WL		
9-20-74	Rev. Parcel 126-WL & Parcel 127-WL		
9-25-74	Changed Ownership on Par. Nº 152.		
5-10-76	Removed Privy from Par. 134-WL		
11-2-76	Changed Ownership on Par. Nº 144		
1-6-77	Rev. Parcel & Ownership for Par. 155-WL		
3-1-77	Revised Ownership for Parcel 134	4-21-77	Rev. Ownership for Par. 177-WL & Added Par. 177-E
		4-1-77	Revised Ownership for Parcel 156-WL

W.E. QUICKSALL & ASSOCIATES INC. Consulting Engineers

BELMONT COUNTY—PULTNEY TWP-SEC 20-T3N-R2W—CITY OF BELLAIRE

FED. RD. DIVISION	STATE	PROJECT	
2	OHIO	I-470-9 (2)	

279 / 288

12 / 21

BEL-470-5.90
RIGHT OF WAY PLAN
LIMITED ACCESS

183-Frank J. Sr. & Lillian M. Thomas
184-Raymond & Eva Anna Butler
185-Clarence C. Jr. & Sara B. Dietrich
187-Charles L. & Emma Loew
188-Annie M. Drewett
189-The Trustees of Riverside Union Bible School Association
190-John W. Elliott
191-Mary Kerey & Andrew Gayvont

137-Paul Sigesmund
138-George W. & Katherine Johnson
143-Howard E. Hixenbaugh
148-Jessie Mae Slay
149-Jenny Pappano
154-Joseph & Martha Fodor

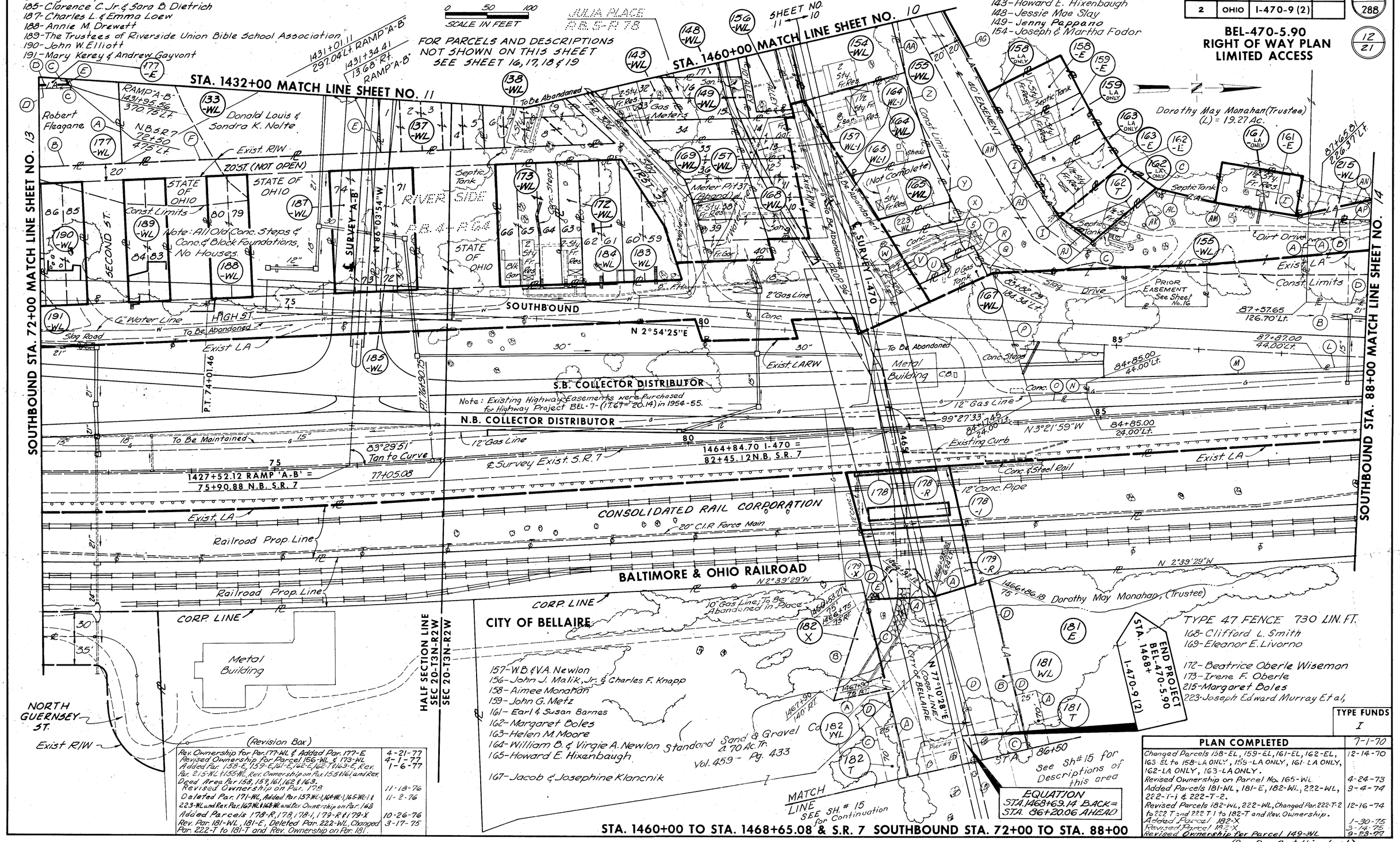

(Revision Box)

Rev. Ownership for Par. 177-WL & Added Par. 177-E	4-21-77
Revised Ownership for Parcel 156-WL & 173-WL	4-1-77
Added Par. 158-E, 159-E, 161-E, 162-E, 162-T & 163-E, Rev. Par. 215-WL & 155-WL, Rev. Ownership on Par. 155 & 161, and Rev. Deed Area Par. 158, 159, 161, 162 & 163.	1-6-77
Revised Ownership on Par. 178	11-18-76
Deleted Par. 171-WL, Added Par. 157-WL-1, 164-WL-1, 165-WL-1 & 223-WL and Rev. Par. 167-WL & 168-WL and Rev. Ownership on Par. 168	11-2-76
Added Parcels 178-R, 178, 178-1, 179-R & 179-X	10-26-76
Rev. Par. 181-WL, 181-E, Deleted Par. 222-WL, Changed Par. 222-T to 181-T and Rev. Ownership on Par. 181.	3-17-75

TYPE FUNDS
I

PLAN COMPLETED	7-1-70
Changed Parcels 158-EL, 159-EL, 161-EL, 162-EL, 163-EL to 158-LA ONLY, 159-LA ONLY, 161-LA ONLY, 162-LA ONLY, 163-LA ONLY.	12-14-70
Revised Ownership on Parcel No. 165-WL	4-24-73
Added Parcels 181-WL, 181-E, 182-WL, 222-WL, 222-T-i & 222-T-2.	9-4-74
Revised Parcels 182-WL, 222-WL, Changed Par. 222-T-2 to 222-T and 222-T-1 to 182-T and Rev. Ownership.	12-16-74
Added Parcel 182-X	1-30-75
Revised Parcel 182-X	3-16-76
Revised Ownership for Parcel 149-WL	9-23-77

(Rev. Box Cont. this sheet)

BELMONT COUNTY–PULTNEY TWP-SEC 20-T3N-R2W

FED. RD. DIVISION	STATE	PROJECT	
2	OHIO	I-470-9(2)	

280 / 288

13 / 21

BEL-470-5.90
RIGHT OF WAY PLAN
LIMITED ACCESS

FOR PARCEL 174-WL, 176-WL & 180-WL SEE SHEET 16

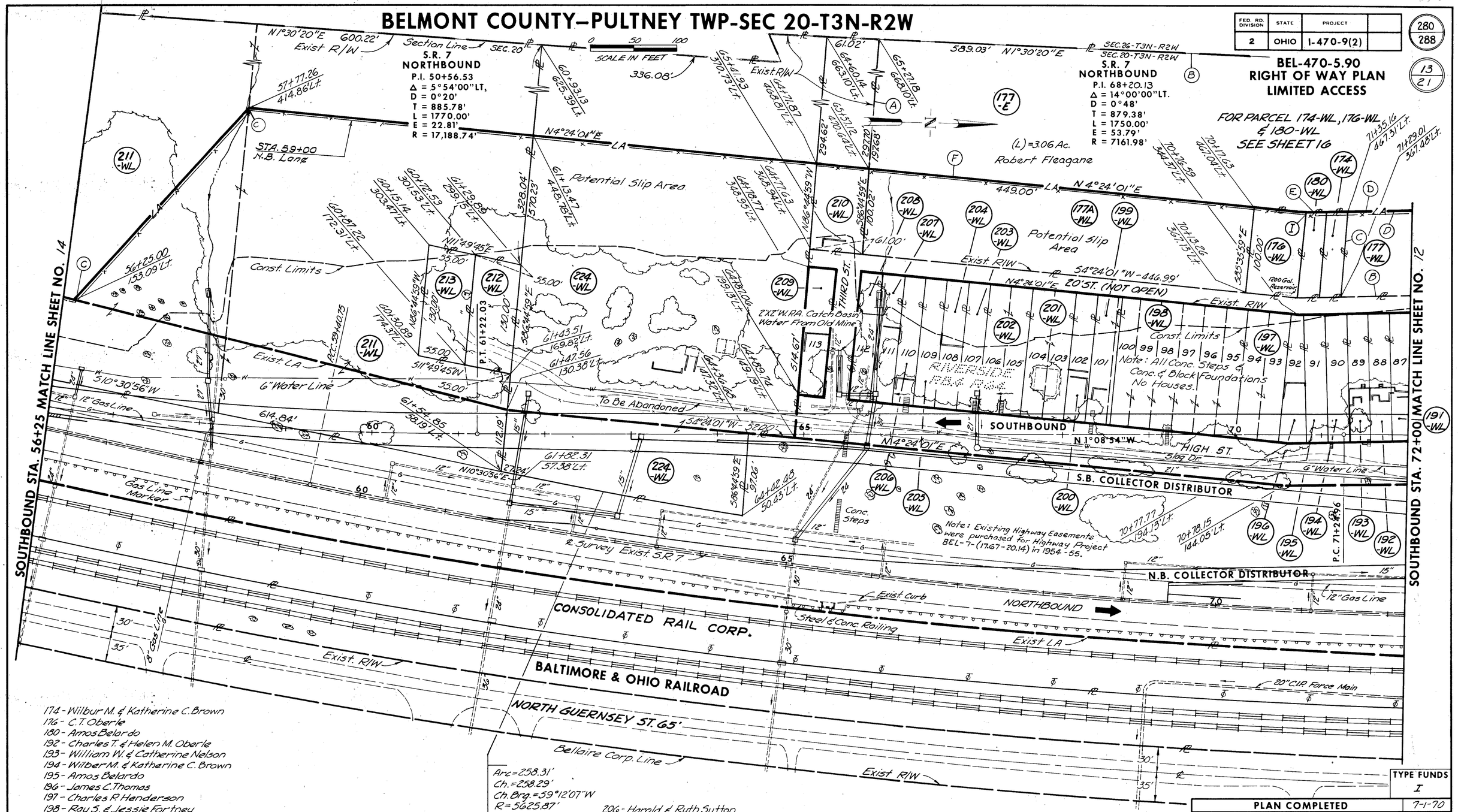

174 - Wilbur M. & Katherine C. Brown
176 - C.T. Oberle
180 - Amos Belardo
192 - Charles T. & Helen M. Oberle
193 - William W. & Catherine Nelson
194 - Wilber M. & Katherine C. Brown
195 - Amos Belardo
196 - James C. Thomas
197 - Charles R. Henderson
198 - Ray S. & Jessie Fortney
199 - David W. & Mary R. Kiedaisch
200 - Kenneth Joseph & Clemency H. Floding
201 - Alberta Lowe
202 - Floyd L. Sutton
203 - John William & Inez M. Pieper
204 - Daisy Blackwell
205 - Robert E. Byrd
206 - Harold & Ruth Sutton
207 - Joseph P. Schmidt
208 - Mary Curtis
209 - Elizabeth McCabe
210 - Elmer L. Byard
211 - Fern M. Jones
212 - Margaret A. Towner
213 - Belle & Ellen Johnson
224 - Robert Fleagane

CITY OF BELLAIRE

TYPE 47 FENCE 1680 LIN. FT.

Belmont County Sewer Authority

(L) Landlocked Residue

S.R. 7 SOUTHBOUND STA. 56+25 TO STA. 72+00

TYPE FUNDS
I

PLAN COMPLETED	7-1-70
Par. 176-WL - Added location of a 1200 Gal. Reservoir	3-16-77
Rev. Par. 176, 177A, 210, 211, 212, 213 & Added Par. 177-E & 224 and Rev. Ownership for Par. 177	4-21-77

W.E. QUICKSALL & ASSOCIATES INC. Consulting Engineers

BELMONT COUNTY—PULTNEY TWP-SEC 20-T3N-R2W

FED. RD. DIVISION	STATE	PROJECT	
2	OHIO	I-470-9 (2)	

281 / 288

14 / 21

BEL-470-5.90
RIGHT OF WAY PLAN
LIMITED ACCESS

155- Dorothy May Monahan (Trustee)
215- Margaret Boles
216- Helen Moore
217- Donald Athey
218- Francis G. Williams
219- Frances Humway
220- Charles Marroon
221- Joseph P. & Nancy E. Schmidt

0 50 100
SCALE IN FEET

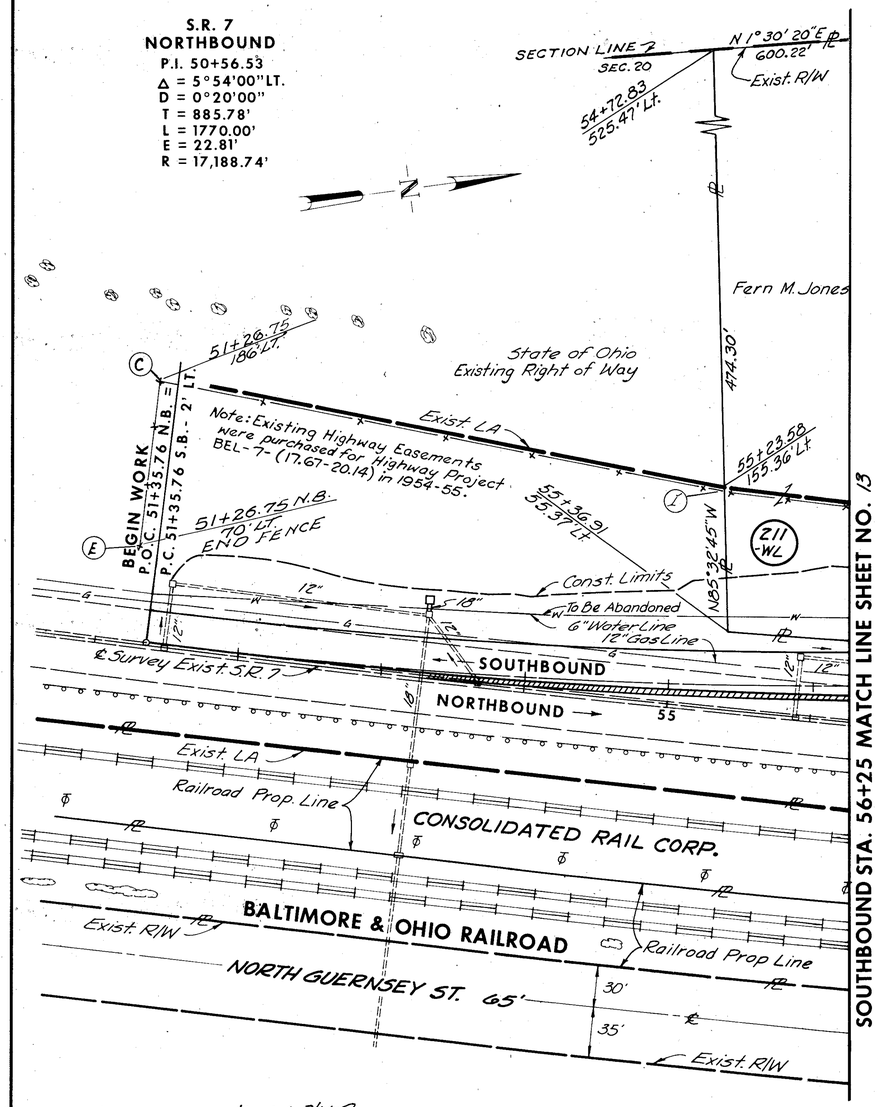

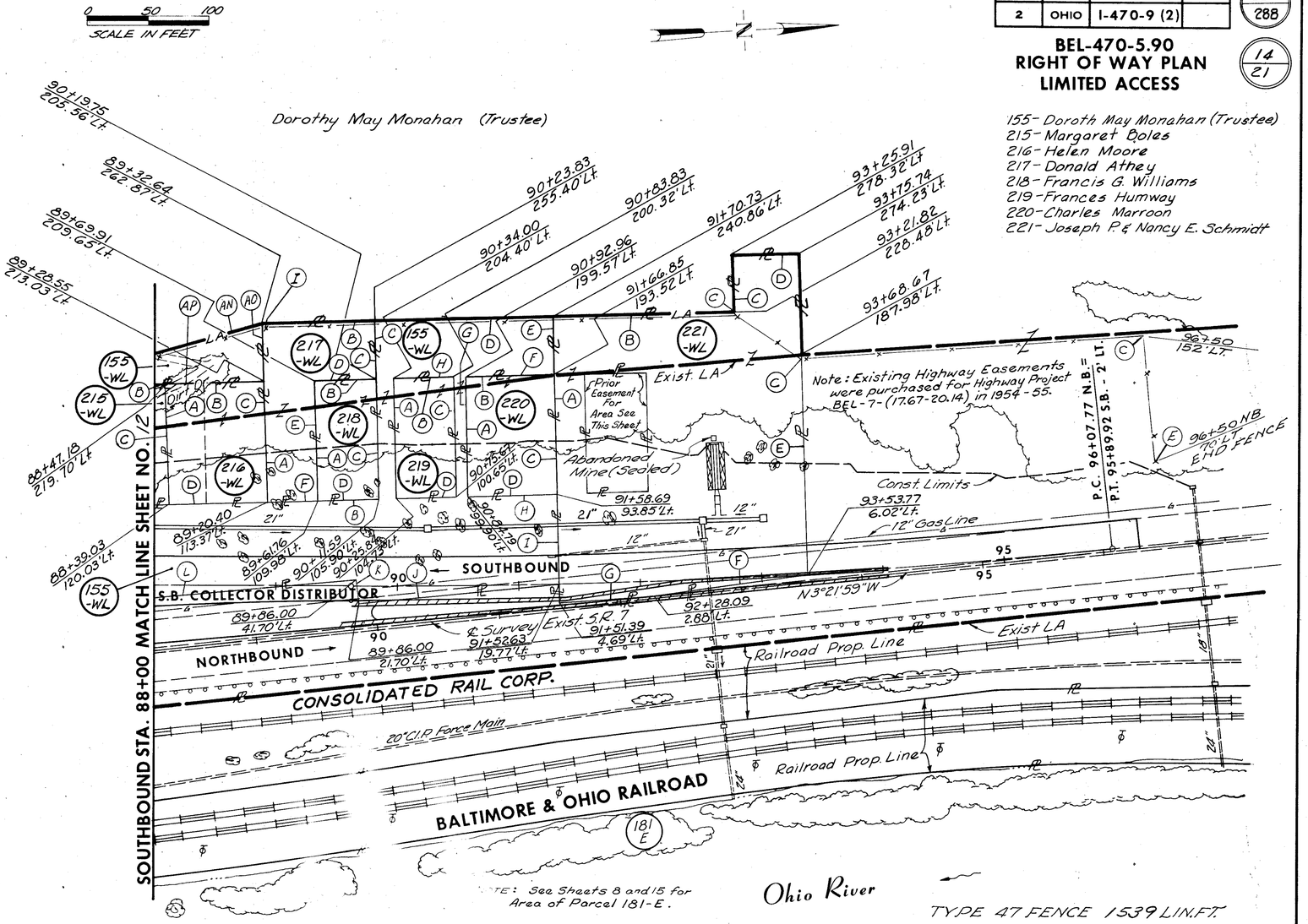

NOTE: See Sheets 8 and 15 for Area of Parcel 181-E.

TYPE 47 FENCE 1539 LIN.FT.

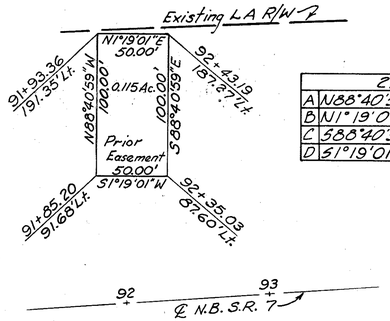

215-WL	
A	N88°40'59"W – 100.00'
B	N1°19'01"E – 81.64'
C	S88°40'59"E – 100.00'
D	S1°19'01" W – 81.64'

216-WL	
A	N88°40'59"W – 100.00'
B	N1°19'01" E – 81.64'
C	S88°40'59"E – 100.00'
D	S1°19'01" W – 81.64'

217-WL	
A	N88°40'59"W – 150.00'
B	N1°19'01" E – 91.50'
C	S88°40'59"E – 50.00'
D	S1°19'01"W – 50.00'
E	S88°40'59"E – 100.00'
F	S1°19'01"W – 41.50'

218-WL	
A	N88°40'59"W – 100.00'
B	N1°19'01"E – 50.00'
C	S88°40'59"E – 100.00'
D	S1°19'01" W – 50.00'

219	
A	100.00'
B	50.00'
C	100.00'
D	50.00'

220-WL	
A	N88°40'59" W – 100.00'
B	N1°19'01" E – 74.15'
C	S88°40'59"E – 100.00'
D	S1°19'01" W – 74.15'

221-WL	
A	N88°40'59"W – 236.96'
B	N1°19'01" E – 151.60'
C	N88°40'59"W – 50.00'
D	N1°19'01" E – 50.00'
E	S88°40'59"E – 269.11'
F	S4°47'59"E – 125.72'
G	S2°00'59"E – 76.73'

TYPE FUNDS
I

PLAN COMPLETED	7-1-70
Added Parcel 181-E.	9-4-74
Revised Parcel 181-E.	3-17-75
Revised Par. 155-WL, 215-WL, 216-WL, 217-WL, 218-WL, 219-WL, 220-WL, 221-WL, Deleted Par. 155A-WL and Revised Ownership on Par. 155-WL & 221-WL.	1-6-77
Revised Parcel 211-WL	4-21-77

S R 7 SOUTHBOUND STA. 51+35 TO STA. 56+25
S R 7 SOUTHBOUND STA. 88+00 TO STA. 95+90

W.E. QUICKSALL & ASSOCIATES INC. Consulting Engineers

BELMONT COUNTY- PULTNEY TWP-SEC 26 -T3N-R2W

FED. RD. DIVISION	STATE	PROJECT	
2	OHIO	I-470-9 (2)	

282/288

15/21

BEL-470-5.90
RIGHT OF WAY PLAN
LIMITED ACCESS

0 50 100
SCALE IN FEET

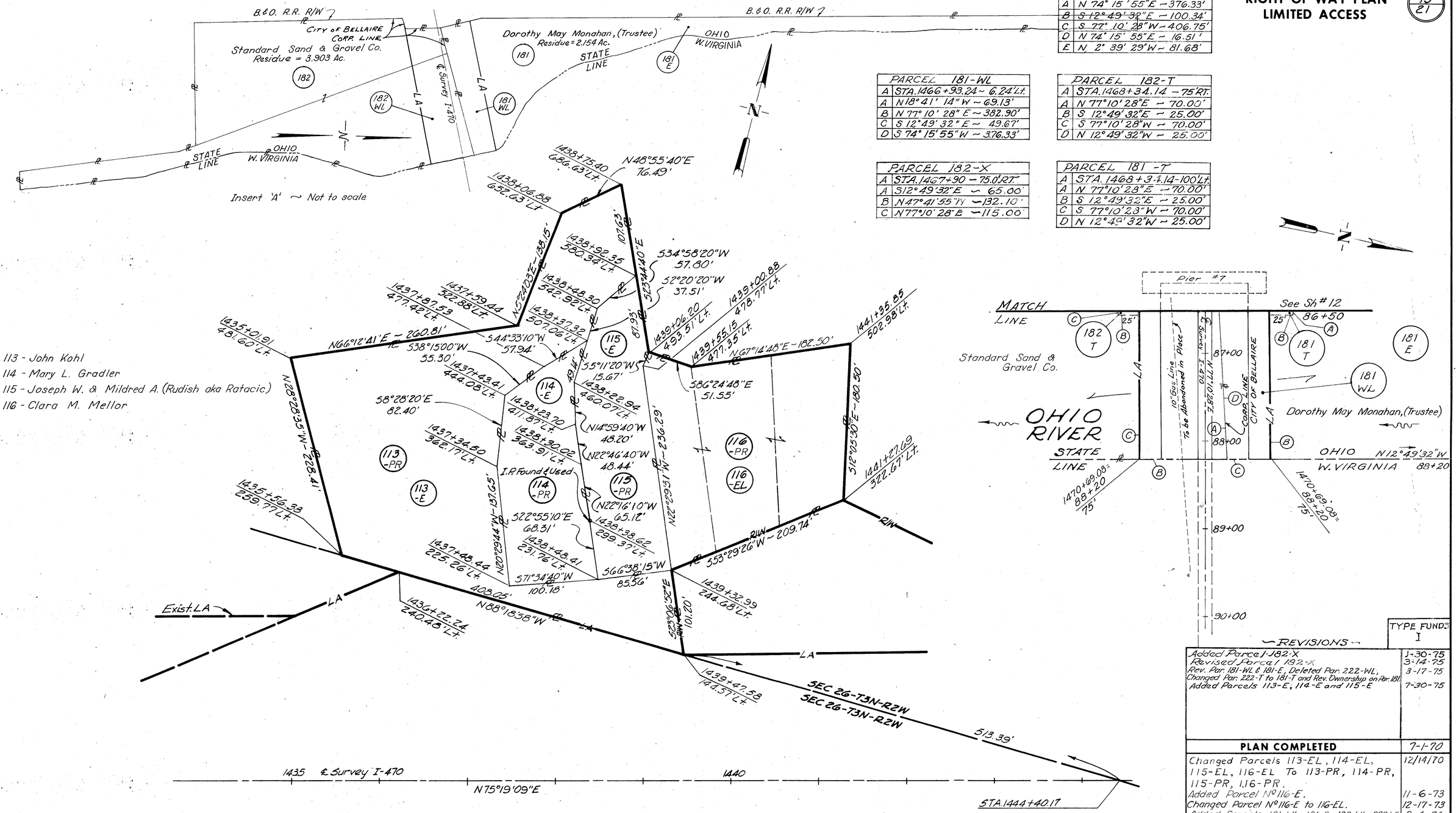

PARCEL 182-WL	
A	STA. 1466+93.24 ~ 6.24' Lt.
A	N 74° 15' 55" E ~ 376.33'
B	S 12° 49' 32" E ~ 100.34'
C	S 77° 10' 28" W ~ 406.75'
D	N 74° 15' 55" E ~ 16.51'
E	N 2° 39' 29" W ~ 81.68'

PARCEL 181-WL	
A	STA. 1466+93.24 ~ 6.24' Lt.
A	N 18° 41' 14" W ~ 69.13'
B	N 77° 10' 28" E ~ 382.90'
C	S 12° 49' 32" E ~ 49.67'
D	S 74° 15' 55" W ~ 376.33'

PARCEL 182-T	
A	STA. 1468+34.14 ~ 75' RT.
A	N 77° 10' 28" E ~ 70.00'
B	S 12° 49' 32" E ~ 25.00'
C	S 77° 10' 28" W ~ 70.00'
D	N 12° 49' 32" W ~ 25.00'

PARCEL 182-X	
A	STA. 1467+90 ~ 75.0' RT.
A	S 12° 49' 32" E ~ 65.00'
B	N 47° 41' 55" W ~ 132.10'
C	N 77° 10' 28" E ~ 115.00'

PARCEL 181-T	
A	STA. 1468+34.14 ~ 100' Lt.
A	N 77° 10' 28" E ~ 70.00'
B	S 12° 49' 32" E ~ 25.00'
C	S 77° 10' 28" W ~ 70.00'
D	N 12° 49' 32" W ~ 25.00'

TYPE FUNDS
I

~ REVISIONS ~

Added Parcel 182-X	1-30-75
Revised Parcel 182-X	3-14-75
Rev. Par. 181-WL & 181-E, Deleted Par. 222-WL, Changed Par. 222-T to 181-T and Rev. Ownership on Par. 181	3-17-75
Added Parcels 113-E, 114-E and 115-E	7-30-75
PLAN COMPLETED	7-1-70
Changed Parcels 113-EL, 114-EL, 115-EL, 116-EL To 113-PR, 114-PR, 115-PR, 116-PR.	12/14/70
Added Parcel N° 116-E.	11-6-73
Changed Parcel N° 116-E to 116-EL.	12-17-73
Added Parcels 181-WL, 181-E, 182-WL, 222-WL, 222-T-1 & 222-T-2.	9-4-74
Rev. Par 182-WL, 222-WL; Changed Par. 222-T-2 to 222-T and Par. 222-T-1 to 182-T and Rev. Ownership.	12-16-74

BELMONT COUNTY- PULTNEY TWP-SEC 20-T3N-R2W

0 20 40
SCALE IN FEET

FED. RD. DIVISION	STATE	PROJECT	
2	OHIO	I-470-9(2)	

283/288

BEL-470-5.90
RIGHT OF WAY PLAN
LIMITED ACCESS

16/21

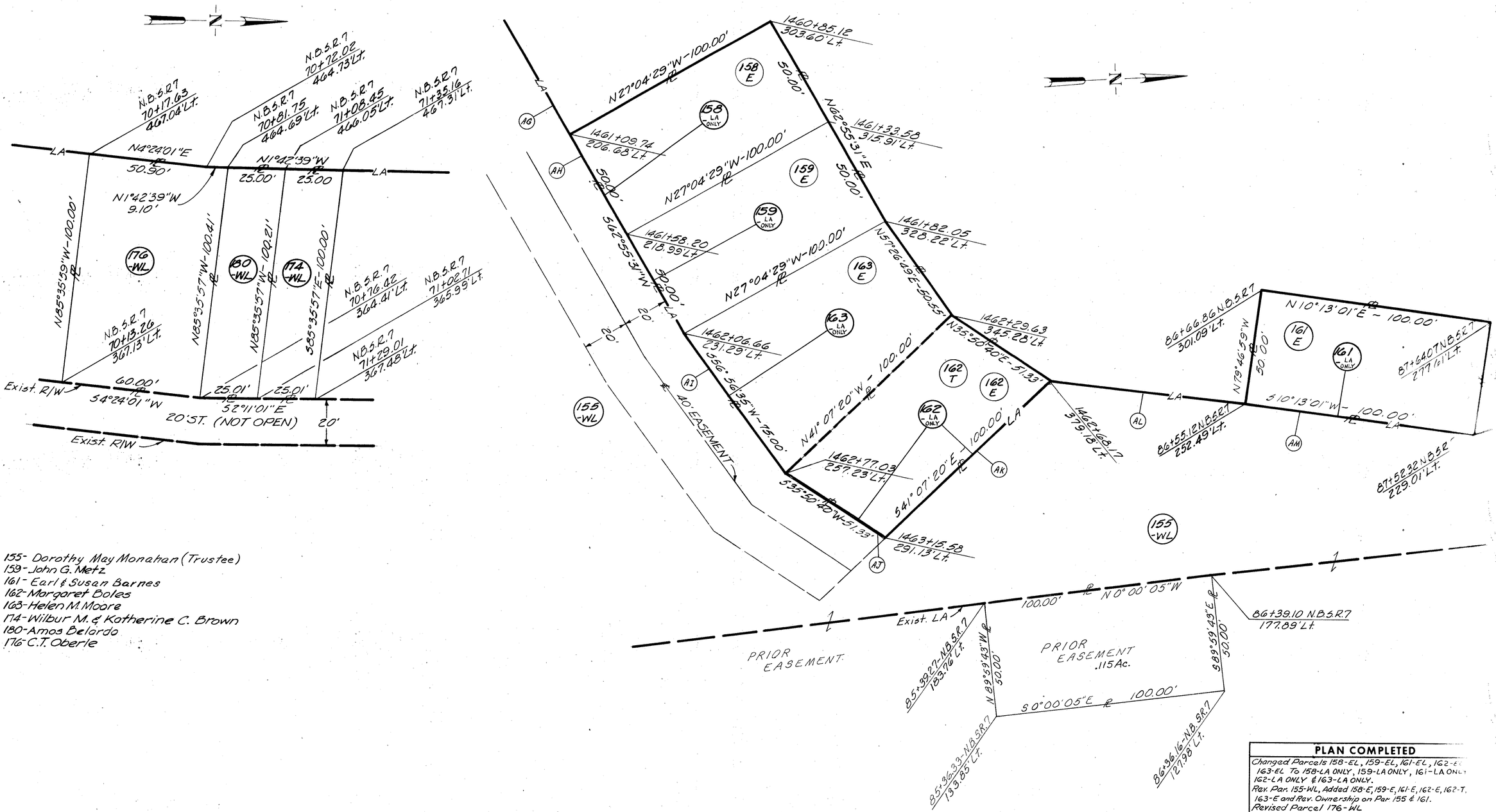

155- Dorothy May Monahan (Trustee)
159- John G. Metz
161- Earl & Susan Barnes
162- Margaret Boles
163- Helen M. Moore
174- Wilbur M. & Katherine C. Brown
180- Amos Belardo
176- C.T. Oberle

PLAN COMPLETED

Changed Parcels 158-EL, 159-EL, 161-EL, 162-EL, 163-EL To 158-LA ONLY, 159-LA ONLY, 161-LA ONLY, 162-LA ONLY & 163-LA ONLY.
Rev. Par. 155-WL, Added 158-E, 159-E, 161-E, 162-E, 162-T, 163-E and Rev. Ownership on Par 155 & 161.
Revised Parcel 176-WL

W.E. QUICKSALL & ASSOCIATES INC. Consulting Engineers

BELMONT COUNTY- PULTNEY TWP-SEC 20-T3N-R2W

FED. RD. DIVISION	STATE	PROJECT	
2	OHIO	I-470-9 (2)	

284/288

17/21

BEL-470-5.90
RIGHT OF WAY PLAN
LIMITED ACCESS

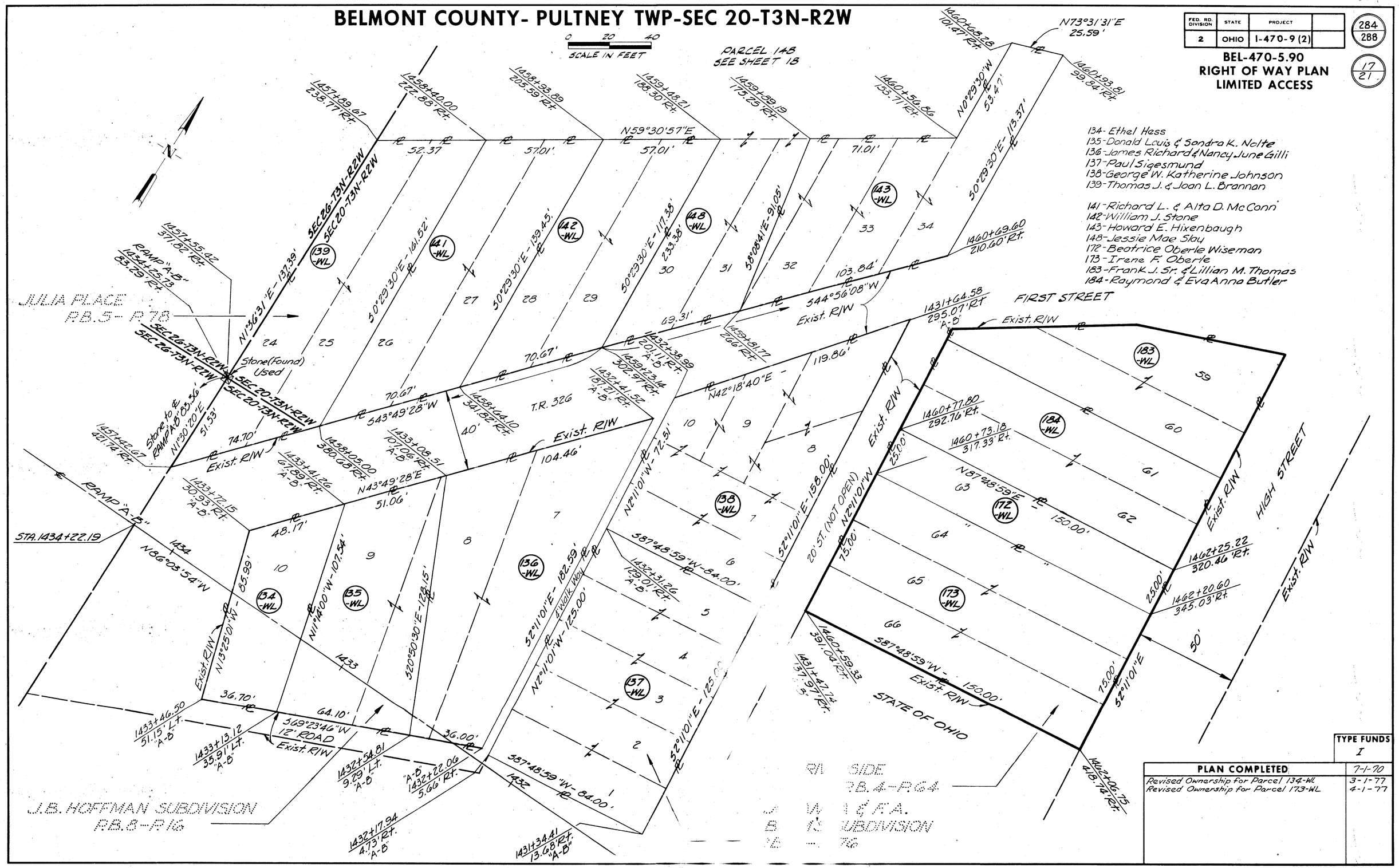

TYPE FUNDS
I

PLAN COMPLETED	7-1-70
Revised Ownership for Parcel 134-WL	3-1-77
Revised Ownership for Parcel 173-WL	4-1-77

W.E. QUICKSALL & ASSOCIATES INC. Consulting Engineers

BELMONT COUNTY - PULTNEY TWP-SEC 20-T3N-R2W

0 20 40
SCALE IN FEET

FED. RD. DIVISION	STATE	PROJECT	
2	OHIO	I-470-9 (2)	

285
288

BEL-470-5.90
RIGHT OF WAY PLAN
LIMITED ACCESS

18
21

144- Clifford L. Smith
145- Jessie Mae Slay
146- F.G. Williams
147- James Dewey Neitzelt et al
148- Jessie Mae Slay
149- Jenny Pappano
152- Columbia Gas Transmission Corp.
153- Robert & Tressa Lee Westfall
154- Joseph & Martha Fodor
155- Dorothy May Monahan (Trustee)
156- John J. Malik, Jr. & Charles F. Knapp
157- W.B. & V.A. Newlon
164- William B. & Virgie A. Newlon
165- Howard E. Hixenbaugh
167- Jacob & Josephine Klancnik
168- Clifford L. Smith
169- Eleanor E. Livorno

223- Joseph Edward Murray Et al,

TYPE FUNDS
I

PLAN COMPLETED	7-1-70
Revised Ownership on Parcel No 165-WL	4-24-73
Changed Ownership on Parcel No 152	9-25-74
Deleted Par. 171-WL, Added Par. 157-WL-1, 164-WL-1, 165-WL-1, 223-WL, Rev. Par. 167-WL & 168 WL and Rev. Ownership on Par. 144-WL & 168-WL	11-2-76
Rev. Parcel and Ownership for Parcel 155-WL	1-6-77
Revised Ownership for Parcel 156-WL	4-1-77
Revised Ownership for Parcel 149-WL	9-29-77

DETAILS				REVISIONS			
BY	DATE	CHK.	DATE	BY	CHK.	BY	CHK.

W.E. QUICKSALL & ASSOCIATES INC. Consulting Engineers

DEED DESCRIPTIONS

FED. RD. DIVISION	STATE	PROJECT	
2	OHIO	I-470-9 (2)	

286/288

BEL-470-5.90
RIGHT OF WAY PLAN
LIMITED ACCESS

19/21

112-WL	
A	N44°01'20"W-632.84'
B	S88°18'58"E-339.43'
C	N74°26'11"E-352.21'
D	N30°19'09"E-86.40'
E	S79°07'59"E-136.64'
F	S31°41'52"W-183.00'
G	S88°18'58"E-14.25'
H	S2°11'08"W-442.23'
I	N88°12'52"W-317.97'

112-WD	
A	S74°26'11"W-169.63'
B	N15°33'49"W-175.29'
C	S79°07'59"E-258.70'
D	S30°19'09"W-86.40'

117-WL	
A	N36°15'00"E-523.04'
B	S9°58'23"E-264.26'
C	S15°31'37"W-189.58'
D	S39°23'46"W-19.00'
E	N89°27'59"W-101.00'
F	S67°54'24"W-126.00'
G	S78°27'10"W-124.66'
H	N79°07'59"W-136.64'
I	N30°19'09"E-55.02'
J	N75°19'09"E-150.00

117-X	
A	N10°52'01"E-75.00'
B	S80°28'57"E-105.00'
C	S35°09'41"W-85.00'
D	N79°07'59"W-70.00'

117-ER	
A	N79°07'59"W-258.70'
B	N12°05'30"W-180.50'
C	S67°14'48"W-182.50'
D	N86°24'48"W-51.55'
E	N23°44'40"W-717.05'
F	S88°15'49"E-1235.67'
G	S9°58'23"E-273.64'
H	S36°15'00"W-523.04'
I	S75°19'09"W-150.00'
J	S30°19'09"W-55.02'

119-WL	
A	N31°41'52"E-183.00'
B	N78°27'10"E-124.66'
C	S2°11'08"W-444.47'
D	S78°08'31"W-203.06'
E	N2°11'08"E-305.03'
F	N88°18'58"W-14.25'

121-WL	
A	S88°18'58"E-334.00'
B	S2°11'08"W-155.89'
C	S78°49'06"W-456.18'
D	N2°11'08"E-444.47'
E	N67°54'24"E-126.00'
F	S3°23'41"W-237.90'

122-WL	
A	N3°23'41"E-237.90'
B	S89°27'59"E-101.00'
C	S9°23'46"W-241.00'
D	N88°18'58"W-75.75'

123-WL	
A	N9°24'17"E-268.00'
B	S64°12'04"E-193.02'
C	S12°25'51"W-191.00'
D	N88°18'58"W-176.56'

123A-WL	
A	S9°24'17"W-268.00'
B	N88°18'58"W-65.00'
C	N9°23'46"E-260.00'
D	N84°53'59"E-66.58'

124-WL	
A	N9°58'23"W-537.90'
B	S88°15'49"E-666.98'
C	S1°41'04"W-199.35'
D	S71°09'58"E-84.77'
E	S1°41'04"W-348.00
F	S88°21'09"E-20.00'
G	S12°20'56"E-206.15'
H	N88°18'58"W-50.00'
I	
J	N3°42'30"E-167.00'
K	S68°54'16"W-193.17'
L	S17°44'58"E-180.00'
M	S57°01'42"W-57.61'
N	N68°36'38"W-125.00'
O	N66°45'42"W-89.30'
P	N66°27'07"W-78.00'
Q	N64°12'04"W-193.02'
R	S84°53'59"W 1.58'
S	N15°31'37"E-37.00'
T	N63°16'25"W-62.00'
U	N15°31'37"E-117.58'

J-1 - N57°01'42"E-89.65'
J-2 - N88°18'58"W-103.27
J-3 - S1°41'02"W-53.51

125-WL	
A	S17°53'22"W-131.00'
B	N88°18'58"W-154.50'
C	N12°25'51"E-191.00'
D	S66°27'07"E-78.00'
E	S66°45'42"E-89.30'

126-WL	
A	N17°53'22"E-131.00'
B	S68°36'38"E-125.00'
C	N57°01'42"E-104.50'
D	S88°18'58"E-103.27'
E	N1°41'02"E-53.51'
F	S88°18'58"E-50.00'
G	N48°42'34"E-223.22'
H	S82°35'38"W-185.00'
I-1	S87°24'22"E-50.00'
I-2	N2°35'38"E-125.00'
I-3	S87°24'22"E-49.97'
J	S1°36'31"W-347.16'
K	S1°30'20"W-85.00'
L	S52°35'20"W-168.60
M	S51°14'04"W-289.94'
N	N54°37'50"W-343.17'
O	N76°33'45"W-163.01'
P	N2°11'08"E-155.89'
Q	S88°18'58"E-137.80'

127-WL	
A	S87°24'22"E-50.00'
B	S2°35'38"W-125.00'
C	N87°24'22"W-50.00'
D	N2°35'38"E-125.00'

129-WL	
A	S15°48'56"E-205.50'
B	S48°42'34"W-223.22'
C	N12°20'56"W-206.15'
D	N88°21'09"W-20.00'
E	N1°41'04"E-104.47'
F	S82°53'14"E-172.29'

129A-WL	
A	N15°48'56"W-213.82'
B	S66°33'58"E-90.20'
C	S15°48'56"E-180.00'
D	N87°24'22"W-73.62'

131-WL	
A	S15°48'56"E-213.82'
B	N87°24'22"W-26.35'
C	N15°48'56"W-205.50'
D	N74°11'07"E-25.00'

1238-WL	
A	S15°31'37"W-72.00'
B	N84°53'59"E-65.00'
C	N15°31'37"E-37.00'
T	N63°16'25"W-62.00'

75-WL	
A	N68°54'16"E-193.17'
B	S3°42'30"W-167.00'
C	S57°01'42"W-136.54'
D	N17°44'58"W-180.00'

132-WL	
A	N51°14'04"E-289.94'
B	N52°35'20"E-168.60'
C	S1°30'20"W-448.77'
D	N64°41'35"W-385.16'

133-WL	
A	S87°48'59"W-308.85'
B	N1°30'20"E-233.15'
C	N69°23'46"E-221.18'
D	N2°11'01"W-995'
E	N87°48'59"E-84.00'
F	S2°11'01"E-312.50'

177-WL	
A	N87°48'59"E-308.85'
B	S2°11'01"E-182.26'
C	N85°35'57"W-100.00'
D	N3°28'49"W-107.56'
E	S73°02'12"W-222.16'
F	N1°30'20"E-120.15'

155-WL			
A	S88°40'59"E-100.00'	V	S65°40'48"W-25.00'
B	N1°19'01"E-254.78'	W	S55°22'08"W-50.93'
C	N88°40'59"W-150.00'	X	N12°35'13"W-125.00'
D	N2°17'04"E-147.62'	Y	S65°40'48"W-85.91'
E	S88°40'59"E-47.50'	Z	S74°21'21"W-107.16'
F	S1°19'01"W-74.15'	AA	S75°16'25"W-160.00'
G	S88°40'59"E-100.00'	AB	S14°43'35"E-145.83'
H	N1°19'01"E-74.15'	AC	S74°15'55"W-66.73'
I	S88°40'59"E-74.32'	AD	N1°36'31"E-2.08'
J	S2°42'15"E-166.63'	AE	N15°48'56"W-180.00'
K	S86°38'01"W-20.00'	AF	N74°11'04"E-56.49'
L	S2°42'15"E-199.01'	AG	N62°04'01"E-228.66'
M	S3°21'59"E-302.00'	AH	N62°55'31"E-100.00'
N	N86°38'01"E-20.00'	AI	N56°56'35"E-75.00'
O	S3°21'59"E-67.55'	AJ	N35°50'40"E-51.33'
P	S74°15'55"W-164.15'	AK	N41°07'20"W-100.00'
Q	S24°18'40"E-8.84'	AL	N14°53'17"E-74.72'
R	S65°40'48"W-40.00'	AM	N10°13'01"E-100.00'
S	S24°18'40"E-39.50'	AN	N14°0'07"W-183.39'
T	N65°41'02"E-14.99'	AO	S88°40'59"E-50.00'
U	S24°19'59"E-76.10'	AP	S1°19'01"W-163.28'

177-E	
A	N86°44'59"W ~ 197.68'
B	N1°30'20"E ~ 589.03'
C	N73°02'12"E ~ 222.16'
D	S3°28'49"E ~ 107.56'
E	S1°42'39"E ~ 59.10'
F	S4°24'01"W ~ 499.90'

129-E	
A	S74°11'04"W-56.49'
B	N66°33'58"W-90.20'
C	S74°11'07"W-25.00'
D	N82°53'14"W-172.29'
E	N1°41'04"E-183.53'
F	N71°09'58"W-84.77'
G	N1°41'04"E-284.36'
H	S88°18'56"E-413.33'
I	S1°36'31"W-518.10'

130-E	
A	S48°55'40"W-76.49'
B	S5°24'03"W-138.15'
C	S66°12'41"W-260.81'
D	S65°07'14"W-102.50'
E	S60°07'55"W-167.78'
F	N84°59'28"W-42.96'
G	N2°07'57"E-906.00'
H	S88°15'49"E-346.35'
I	S23°44'40"E-523.25'

155-E	
A	N1°36'31"E ~ 518.10'
B	N88°18'56"W ~ 413.33'
C	N1°41'04"E ~ 999.18'
D	S88°18'56"E ~ 412.00'
E	N81°25'50"E ~ 416.34'
F	Arc Len. = 236.16' Chd. Len. = 236.14' Chd. Br. = S8°26'30"E Radius = 5051.44'
G	N85°01'33"E ~ 15.33'
H	Arc Len. = 252.82' Chd. Len. = 252.80' Chd. Br. = S5°39'51"E Radius = 5066.77'
I	N88°40'59"W ~ 255.84'
J	S1°19'01"W ~ 50.00'
K	S88°40'59"E ~ 50.00'
L	S1°19'01"W ~ 151.60'
M	S2°17'04"W ~ 147.62'
N	S1°19'01"W ~ 91.50'
O	S14°00'07"E ~ 183.46'
P	N79°46'59"W ~ 50.00'
Q	S10°13'01"W ~ 100.00'
R	S79°46'59"E ~ 50.00'
S	S14°53'17"W ~ 74.72'
T	S35°50'40"W ~ 51.33'
U	S57°26'49"W ~ 50.55'
V	S62°55'31"W ~ 100.00'
W	S27°04'29"E ~ 100.00'
X	S62°04'01"W ~ 228.66'

TYPE FUNDS
I

Added Parcel 177-E	4-21-77
PLAN COMPLETED	7-1-70
Revised Parcels N°140-WL & 124WL	9-22-70
Revised Parcel N° 112-WD	3-7-72
Revised Parcel N° 140-WL to 123B-WL	4-20-72
Deleted Par. N° 118-WL & Revised Par. N° 119-WL	6-14-72
Rev. Parcel 126-WL & Parcel 127-WL	9-20-74
Added Parcel 117-E	3-17-76
Changed Parcel 117-E to 117-ER	3-29-76
Added Parcels 129-E and 130-E	11-8-76
Revised Parcel 155-WL	1-6-77
Added Parcel 155-E	2-14-77

DETAILS				REVISIONS			
BY	DATE	CHK.	DATE	BY	CHK.	BY	CHK.

DEED DESCRIPTIONS

W.E. QUICKSALL & ASSOCIATES INC. Consulting Engineers

BELMONT COUNTY-PULTNEY TWP-SEC 20-T3N-R2W
PROPERTY PLAT
CONSOLIDATED RAIL CORPORATION

FHWA REGION	STATE	PROJECT	
5	OHIO	I-470-9(2)	

287 / 288

BEL-470-5.90
RIGHT OF WAY PLAN
LIMITED ACCESS

20 / 21

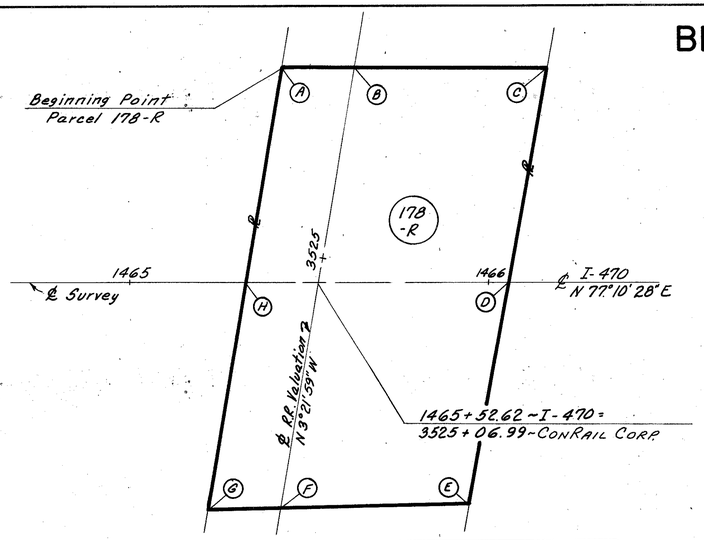

LINE	BEARING	DISTANCE	RADIUS	ARC LENGTH
PARCEL 178-R				
A-B	N 77°10'28"E	20.28'		
B-C	N 77°10'28"E	53.90'		
C-D	S 2°39'29"E	60.96'		
D-E	S 2°39'29"E	62.49'		
E-F	S 75°44'34"W	52.59'		
F-G	S 75°44'34"W	20.37'		
G-H	N 3°21'59"W	64.21'		
H-A	N 3°21'59"W	60.83'		
PARCEL 178				
I-J	N 86°36'28"E	2.76'		
J-K	S 3°23'32"E	94.33'		
K-L	S 86°36'28"W	2.81'		
L-I	N 3°21'59"W	94.33'		
PARCEL 178-1				
M-N	N 86°36'28"E	15.00'		
N-O	S 3°23'32"E	100.00'		
O-P	S 86°26'28"W	15.00'		
P-M	N 3°23'32"W	100.00'		

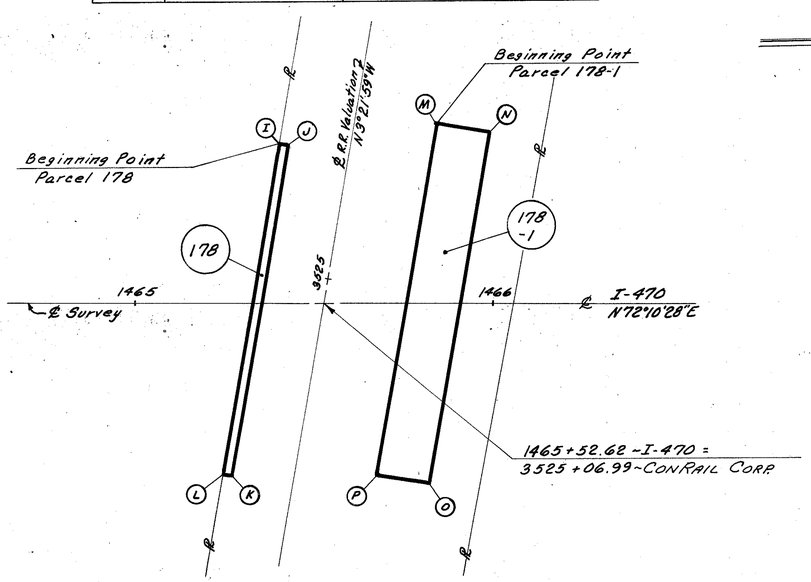

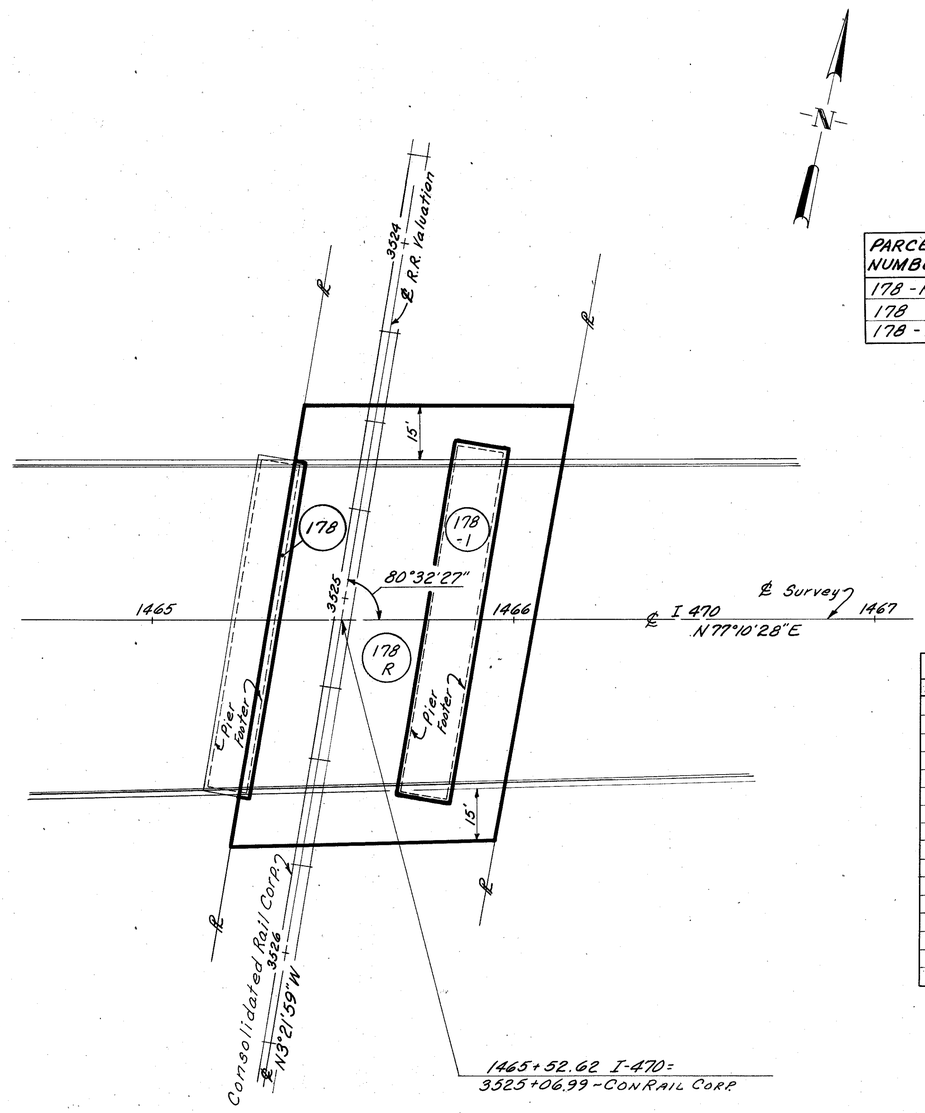

PARCEL NUMBER	EASEMENT REQUIRED	TOTAL AREA	AREA OF OVERLAP			
			178-R	178	178-1	
178-R	Aerial	8986 S.F.	—	263 S.F.	1500 S.F.	
178	Highway	263 S.F.	263 S.F.	—	—	
178-1	Highway	1500 S.F.	1500 S.F.	—	—	

PARCEL DESCRIPTION DATA				
POINT	HWY. STATION	OFFSET	R.R. STATION	OFFSET
A	1465+42.34	60.00' Lt.	3525+64.48	20.00' Lt.
B	1465+62.62	60.00' Lt.	3525+67.81	℄
C	1466+16.52	60.00' Lt.	3525+76.67	53.17' Rt.
D	1466+05.76	℄	3525+15.72	52.42' Rt.
E	1465+94.73	61.51' Rt.	3524+53.23	51.64' Rt.
F	1465+42.16	62.83' Rt.	3524+43.29	℄
G	1465+21.80	63.34' Rt.	3524+39.45	20.00' Lt.
H	1465+32.35	℄	3525+03.66	20.00' Lt.
I	1465+39.75	44.44' Lt.	3525+48.70	20.00' Lt.
J	1465+42.48	43.98' Lt.	3525+48.71	17.24' Lt.
K	1465+27.02	49.07' Rt.	3524+54.37	17.20' Lt.
L	1465+24.25	48.61' Rt.	3524+54.37	20.00' Lt.
M	1465+83.79	50.06' Lt.	3525+61.49	22.52' Rt.
N	1465+98.59	47.60' Lt.	3525+61.50	37.52' Rt.
O	1465+82.20	51.05' Rt.	3524+61.50	37.57' Rt.
P	1465+67.40	48.59' Rt.	3524+61.49	22.57' Rt.

0 20 40
SCALE IN FEET

Note : All bearings and angles shown are from highway survey.

Note : Right-of-Way to be obtained for pier footers is the overall width of footer plus one foot on all sides.

TYPE FUNDS
I

PLAN COMPLETED	10-26-76
Revised Ownership Par. 178	11-18-76

BELMONT COUNTY-PULTNEY TWP-SEC 20-T3N-R2W
PROPERTY PLAT
BALTIMORE AND OHIO RAILROAD COMPANY

FHWA REGION	STATE	PROJECT	
5	OHIO	I-470-9(2)	

288/288

BEL-470-5.90
RIGHT OF WAY PLAN
LIMITED ACCESS

21/21

PARCEL NUMBER	EASEMENT REQUIRED	TOTAL AREA	AREA OF OVERLAP			
			AERIAL	CHANNEL		
179-R	Aerial	10,001 S.F.	——	1939 S.F.		
179-X	Channel	2038 S.F.	1939 S.F.	——		

LINE	BEARING	DISTANCE	RADIUS	ARC LENGTH
PARCEL 179-R				
A-B	N 77°10'28" E	25.40'		
B-C	N 77°10'28" E	45.80'		
C-D	S 18°40'37" E	54.05'		
D-E	S 2°39'29" E	6.33'		
E-F	S 2°39'29" E	60.96'		
F-G	S 77°10'28" W	26.09'		
G-H	S 75°44'34" W	35.04'		
H-I	S 75°44'34" W	25.52'		
I-J	N 2°39'29" W	62.49'		
J-A	N 2°39'29" W	60.96'		
PARCEL 179-X				
D-E	S 2°39'29" E	6.33'		
E-K	S 2°39'29" E	75.35'		
K-L	N 51°57'59" W	49.41'		
L-M	N 1°21'32" W	28.00'		
M-N	N 57°5'49" E	24.48'		
N-D	N 57°5'49" E	18.15'		

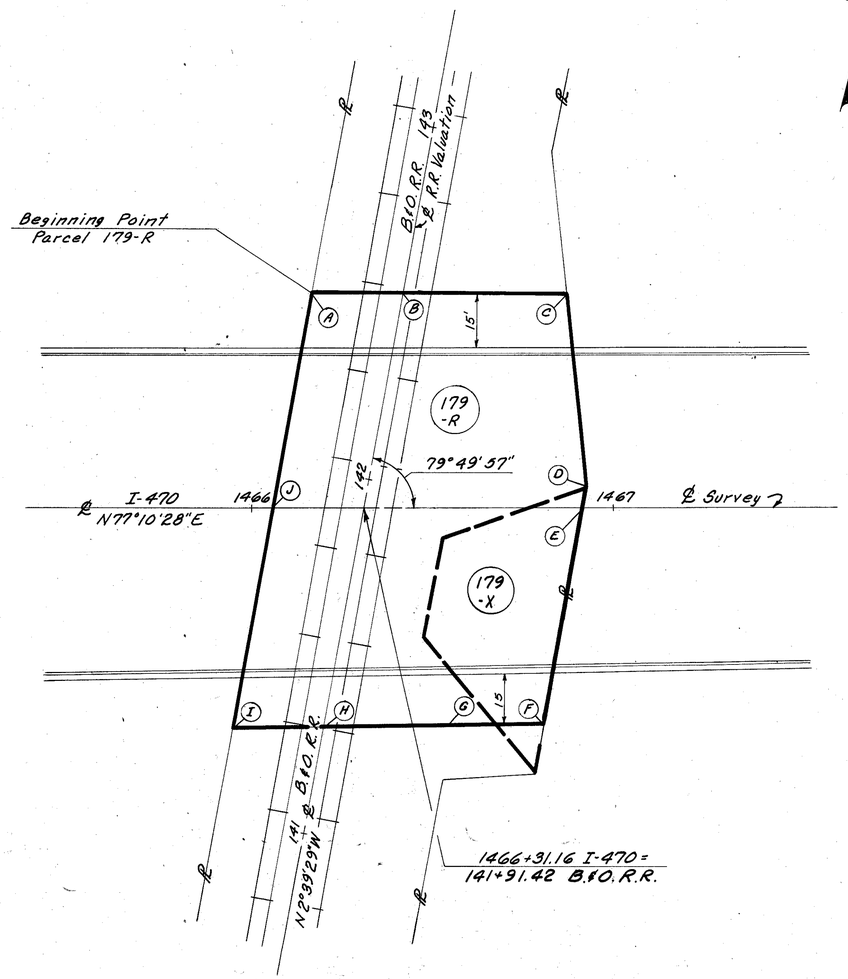

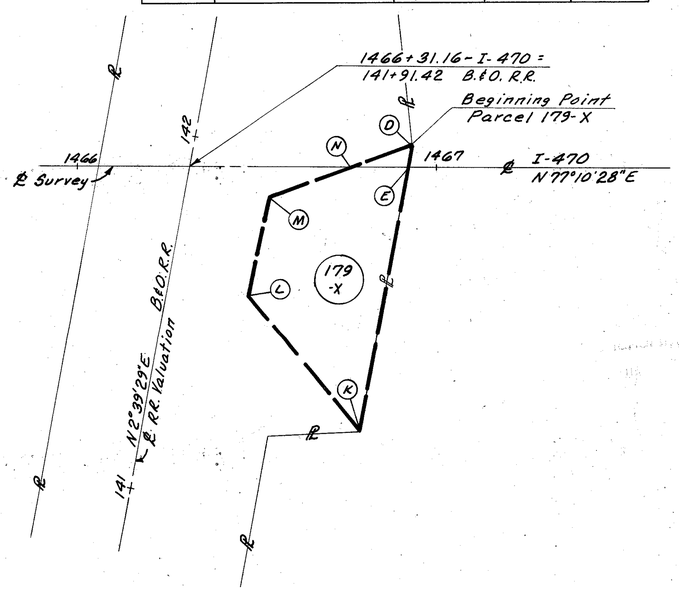

PARCEL DESCRIPTION DATA				
POINT	HWY. STATION	OFFSET	R.R. STATION	OFFSET
A	1466+16.52	60.00' Lt.	142+47.89	25.00' Lt.
B	1466+41.92	60.00' Lt.	142+52.37	℄
C	1466+87.72	60.00' Lt.	142+60.46	45.08' Rt.
D	1466+93.23	6.23' Lt.	142+08.51	60.00' Rt.
E	1466+92.12	℄	142+02.18	60.00' Rt.
F	1466+81.36	60.00' Rt.	141+41.22	60.00' Rt.
G	1466+55.27	60.00' Rt.	141+36.61	34.32' Rt.
H	1466+20.24	60.88' Rt.	141+29.57	℄
I	1465+94.73	61.51' Rt.	141+24.44	25.00' Lt.
J	1466+05.76	℄	141+86.93	25.00' Lt.
K	1466+78.82	74.17' Rt.	141+26.83	60.00' Rt.
L	1466+47.63	35.85' Rt.	141+59.04	22.54' Rt.
M	1466+53.20	8.41' Rt.	141+87.03	23.17' Rt.
N	1466+76.17	℄	141+09.37	44.33' Rt.

NOTE: All bearings and angles shown are from highway survey.

0 20 40
SCALE IN FEET

TYPE FUNDS
I

PLAN COMPLETED	10-26-76

GENERAL INFORMATION

INTRODUCTION

THE PROJECT CONSISTED OF THE CONSTRUCTION OF 0.7 MILE OF IR 470, BEGINNING 3600 FEET WEST OF EXISTING SR 7 AND TERMINATING AT THE OHIO RIVER APPROACH EAST OF EXISTING SR 7, APPROXIMATELY 1.2 MILES SOUTH OF BRIDGEPORT.

FOR PROPOSED CUTS AND FILLS SEE THE PROJECT INDEX ON THIS SHEET.

GEOLOGY AND OBSERVATIONS OF THE SITE

THE ALIGNMENT INCEPTS ON THE UPLAND PORTION OF THE OHIO RIVER IN A HIGHLY DISSECTED PORTION OF THE ALLEGHENY PLATEAU REGION, IN AN AREA WHERE SHALLOW RESIDUAL SOIL COVER OVERLIES BEDROCK. THE ALIGNMENT TERMINATES ON THE FLOODPLAIN OF THE OHIO RIVER, IN AN AREA WHERE MODERATELY DEEP ALLUVIUM OVERLIES BEDROCK. SEVERAL STRATOGRAPHIC ROCK SECTIONS WERE OBSERVED AND MEASURED ALONG THE PROJECT AS WELL AS AREAS OF STRIP MINE OPERATIONS. BEDROCK ALONG THIS PROJECT IS COMPOSED OF SHALES, SANDSTONES, LIMESTONES, AND ASSOCIATED MUDSTONES, COALS, UNDERCLAYS AND CLAY BEDROCK, OF PERMIAN AND PENNSYLVANIAN AGES.

EXPLORATION

EXPLORATORY BORINGS WERE MADE BY MEANS OF TRUCK-MOUNTED MECHANICAL SOIL AUGER, HAND AUGER (IN AREAS OF DIFFICULT ACCESS) AND ROTARY-TYPE DRILL RIGS, BETWEEN JANUARY 25 AND MAY 1, 1968. INCLUDED WITH THIS REPORT ARE THE LOGS OF BORINGS MADE FOR THE STRUCTURE FOUNDATION INVESTIGATIONS FOR THE PROJECT AND LOGS OF FOUR BORINGS MADE FOR THE SOIL PROFILE FOR BEL-470-0.00.

INVESTIGATIONAL FINDINGS

BORINGS DISCLOSED THAT THE MATERIALS OCCURRING IMMEDIATELY BELOW PROPOSED GRADE ARE PREDOMINANTLY COMPRISED OF BEDROCK AND CLAYS IN THE A-6a AND A-7-6 CLASSIFICATIONS, GENERALLY HAVING MOISTURE CONTENTS WITHIN THE PLASTIC RANGE.

BEDROCK IS ANTICIPATED TO BE ENCOUNTERED IN THE FOLLOWING EXCAVATIONS AREAS:

MAINLINE-IR 470

STATIONS 1429+00 TO 1430+00 - SHALE, LIMESTONE, AND COAL AT THE RIGHT GRADE AND IN THE RIGHT DITCH LINE AND RIGHT BACKSLOPE.

STATIONS 1432+00 TO 1433+00 - SHALE AND LIMESTONE AT THE RIGHT GRADE AND IN THE RIGHT DITCH LINE AND RIGHT BACKSLOPE.

STATIONS 1434+00 TO 1435+00 - SHALE AND LIMESTONE AT BOTH GRADES AND IN BOTH DITCH LINES AND IN THE RIGHT BACKSLOPE.

STATIONS 1435+00 TO 1443+00 - SHALE AND LIMESTONE AT BOTH GRADES AND IN BOTH DITCH LINES, IN THE LOWER PORTION OF THE LEFT BACKSLOPE, AND IN THE RIGHT BACKSLOPE, WITH SOME COAL.

STATIONS 1443+00 TO 1443+50 - SHALE, LIMESTONE, AND SANDSTONE AT BOTH GRADES AND IN THE RIGHT DITCH LINE, AND IN THE RIGHT BACKSLOPE WITH SOME COAL.

STATIONS 1443+50 TO 1444+50 - MUDSTONE, SHALE, SANDSTONE, LIMESTONE, AND COAL AT THE RIGHT GRADE, RIGHT DITCH LINE AND BACKSLOPE WITH SOME COAL.

STATIONS 1444+50 TO 1445+50 - MUDSTONE, SHALE, SANDSTONE, LIMESTONE, AND COAL AT BOTH GRADES AND IN THE RIGHT DITCH LINE AND RIGHT BACKSLOPE.

STATIONS 1445+50 TO 1448+00 - MUDSTONE, SHALE, SANDSTONE, LIMESTONE, AND COAL AT BOTH GRADES AND IN [illegible] RIGHT BACKSLOPE.

STATIONS 1451+00 TO 1451+50 - SANDSTONE IN THE LEFT DITCH LINE AND LOWER PORTION OF THE LEFT BACKSLOPE.

STATIONS 1451+50 TO 1455+50 - SANDSTONE IN THE LEFT GRADE, LEFT DITCH LINE, AND LEFT BACKSLOPE.

STATIONS 1455+50 TO 1457+00 - SANDSTONE IN THE LEFT DITCH LINE AND LOWER PORTION OF THE LEFT BACKSLOPE.

RAMP A

STATIONS 1428+50 TO 1438+50 - SANDSTONE AT GRADE AND IN THE DITCH LINES; SHALE, COAL, AND LIMESTONE IN THE MID-PORTION OF THE BACKSLOPES, AND SHALE AND LIMESTONE IN THE UPPER PORTION OF THE BACKSLOPE.

STATIONS 1441+50 TO 1449+50 - LIMESTONE AND SHALE AT GRADE AND IN BOTH DITCH LINES AND LEFT BACKSLOPE, WITH SANDSTONE BELOW ELEVATION 700 FEET.

STATIONS 1449+50 TO 1450+50 - SANDSTONE AT GRADE AND IN THE DITCH LINES AND LOWER PORTIONS OF THE LEFT BACKSLOPE.

STATIONS 1450+50 TO 1453+00 - SANDSTONE AT GRADE AND IN THE LEFT DITCH LINE AND LEFT BACKSLOPE.

STATIONS 1453+00 TO 1455+00 - SANDSTONE AT GRADE AND IN THE DITCH LINES AND LEFT BACKSLOPE.

RAMP B

STATIONS 1441+00 TO 1442+50 - SHALE AND LIMESTONE AT GRADE AND IN THE DITCH LINES.

STATIONS 1448+50 TO 1449+00 - LIMESTONE AND SHALE IN THE LEFT DITCH LINE AND LEFT BACKSLOPE.

STATIONS 1449+00 TO 1451+00 - SANDSTONE AT GRADE AND IN THE DITCH LINES AND LIMESTONE AND SHALE IN THE LEFT BACKSLOPE.

RAMP C

STATIONS 1451+00 TO 1456+00 - SANDSTONE AT GRADE AND IN THE DITCH LINES AND SHALE AND LIMESTONE IN THE BACKSLOPES.

RAMP D

STATIONS 1446+00 TO 1448+00 - MUDSTONE, SHALE, LIMESTONE, AND COAL AT GRADE AND IN THE DITCH LINES AND BACKSLOPES.

STATIONS 1448+00 TO 1451+00 - SANDSTONE AT GRADE AND IN THE LEFT DITCH LINE AND LEFT BACKSLOPES.

STATIONS 1452+60 TO 1456+00 - SANDSTONE AT GRADE AND IN THE DITCH LINES AND LOWER PORTIONS OF THE BACKSLOPES; SHALE AND LIMESTONE AT THE MID- AND UPPER PORTIONS OF THE BACKSLOPES, WITH SOME COAL HORIZONS.

RELOCATED WHISKEY RUN

STATIONS 1+50 TO 2+50 - SANDSTONE AT FLOWLINE.

STATIONS 4+00 TO 7+00 - SANDSTONE AT FLOWLINE.

STATIONS 12+25 TO 20+50 - SANDSTONE AT FLOWLINE.

PROPOSED SR 7 (SOUTHBOUND LANES)

STATIONS 68+00 TO 71+00 - POSSIBLE SANDSTONE AT GRADE AND IN THE DITCH LINES AND LOWER PORTION OF THE LEFT BACKSLOPE.

STATIONS 71+00 TO 79+00 - SANDSTONE AT GRADE AND IN THE DITCH LINES AND BACKSLOPES.

STATIONS 84+00 TO 90+00 - POSSIBLE SANDSTONE AT GRADE AND IN THE LEFT DITCH LINE, WITH SANDSTONE, LIMESTONE, AND COAL IN THE LEFT BACKSLOPE.

PROPOSED SOUTHBOUND CONNECTOR DISTRIBUTOR

STATIONS 11+00 TO 19+00 - POSSIBLE SANDSTONE AT GRADE AND IN THE DITCH LINES AND LEFT BACKSLOPE.

MATERIALS OCCURRING IN THE EMBANKMENT FOUNDATION AREAS ARE PREDOMINANTLY COMPRISED OF SILT CLAYS, ELASTIC CLAYS, AND CLAYS, IN THE A-6a, A-7-5, AND A-7-6 CLASSIFICATIONS, GENERALLY HAVING MOISTURE CONTENTS IN THE LOWER PORTIONS OF THE PLASTIC RANGE. THE EMBANKMENT FOUNDATION MATERIALS CONSISTS OF SHALLOW SOIL COVER OVERLYING BEDROCK SURFACE THROUGHOUT THE ENTIRE PROJECT.

AUG 15 1968

LEGEND FOR PROJECT AVERAGE RESULTS OF TESTS — SAMPLES TESTED

233

DESCRIPTION	H.R.B. CLASS	OHIO CLASS	% AGG.	% C. SAND	% F. SAND	% SILT	% CLAY	LIQUID LIMIT	PLASTICITY INDEX	WATER CONTENT	SAMPLES TESTED
GRAVEL WITH SAND	A-1-b(0)	A-1-b	37	25	26	- 12	-	NP	NP	9	6
STONE FRAGMENTS WITH SAND AND SILT	A-2-5(0)	A-2-5	44	13	13	14	16	42	7	12	2
STONE FRAGMENTS WITH SAND, SILT, AND CLAY	A-2-6(0)	A-2-6	59	7	9	11	14	32	12	19	2
SANDY SILT	A-4(2)	A-4a	28	7	18	27	20	23	4	17	5
SILT	A-4(8)	A-4b	4	1	17	52	26	28	5	20	3
SILT AND CLAY	A-6(8)	A-6a	18	4	7	30	41	36	12	19	54
SILTY CLAY	A-6(11)	A-6b	13	3	7	33	44	38	17	22	13
ELASTIC CLAY	A-7-5(15)	A-7-5	11	2	7	26	54	55	20	32	29
CLAY	A-7-6(14)	A-7-6	13	3	5	26	53	47	21	24	72
COAL BLOSSOM	VISUAL CLASSIFICATION										5
UNDERCLAY	VISUAL CLASSIFICATION										1
CLAY BEDROCK	VISUAL CLASSIFICATION										-
WEATHERED SHALE	VISUAL CLASSIFICATION										36
WEATHERED SANDSTONE	VISUAL CLASSIFICATION										1
SILTSTONE, MUDSTONE, MUDSHALE, OR CLAYSTONE	VISUAL CLASSIFICATION										-
SHALE	VISUAL CLASSIFICATION										1
SANDSTONE	VISUAL CLASSIFICATION										-
LIMESTONE; LEACHED LIMESTONE	VISUAL CLASSIFICATION										-
COAL	VISUAL CLASSIFICATION										1
BOULDERY ZONE	VISUAL CLASSIFICATION										-
RANDOM FILL	VISUAL CLASSIFICATION										-
VARIOUS OTHER MATERIALS	VISUAL CLASSIFICATION										2

SOD AND/OR TOPSOIL=4"=APPROXIMATE DEPTH.

AUGER BORING-PLAN VIEW.

DRIVE SAMPLE AND/OR CORE BORING-PLAN VIEW.

AUGER BORING PLOTTED TO VERTICAL SCALE ONLY.

DRIVE SAMPLE AND/OR CORE BORING PLOTTED TO VERTICAL SCALE ONLY.

WATER CONTENT NEARLY EQUAL TO OR GREATER THAN LIQUID LIMIT.

FREE WATER.

NUMBER OF BLOWS FOR "STANDARD PENETRATION" TEST.
X=NUMBER OF BLOWS FOR FIRST 6 INCHES.
Y=NUMBER OF BLOWS FOR SECOND 6 INCHES.

B INDICATES BROKEN ROCK INTERVAL.

NOTE: FIGURES BESIDE BORINGS INDICATE WATER CONTENT IN PERCENT, E.G. 15

"SOIL INFORMATION - ALL AVAILABLE SOIL AND BEDROCK INFORMATION WHICH CAN BE CONVENIENTLY SHOWN ON THE SOIL PROFILE AND/OR STRUCTURE FOUNDATION INVESTIGATION SHEETS HAS BEEN SO REPORTED. ADDITIONAL SUBSURFACE INVESTIGATIONS MAY HAVE BEEN MADE TO STUDY SOME SPECIAL ASPECT OF THE PROJECT. COPIES OF THIS DATA, IF ANY, MAY BE INSPECTED IN DISTRICT DEPUTY DIRECTOR'S OFFICE, THE BUREAU OF TESTS AT 1600 WEST BROAD STREET, THE PAVEMENT AND SOILS SECTION OF THE BUREAU OF ROADWAY DESIGN OR IN THE BRIDGE BUREAU AT 25 SOUTH FRONT STREET."

Revised 9/1/70

SOIL PROFILE

1/35

BELMONT COUNTY
BEL-470-5.90

1/21

OHIO STATE HIGHWAY TESTING LABORATORY
1620 W. BROAD ST. COLUMBUS 23, OHIO

NOTE: INFORMATION SHOWN BY THIS SUBGRADE PROFILE WAS OBTAINED SOLELY FOR USE IN ESTABLISHING DESIGN CONTROLS FOR THE PROJECT. THE STATE OF OHIO DOES NOT GUARANTEE THE ACCURACY OF THIS DATA AND IT IS NOT TO BE CONSTRUED AS A PART OF THE PLANS GOVERNING CONSTRUCTION OF THE PROJECT.

Fed. No. I-470-9 (3) 229

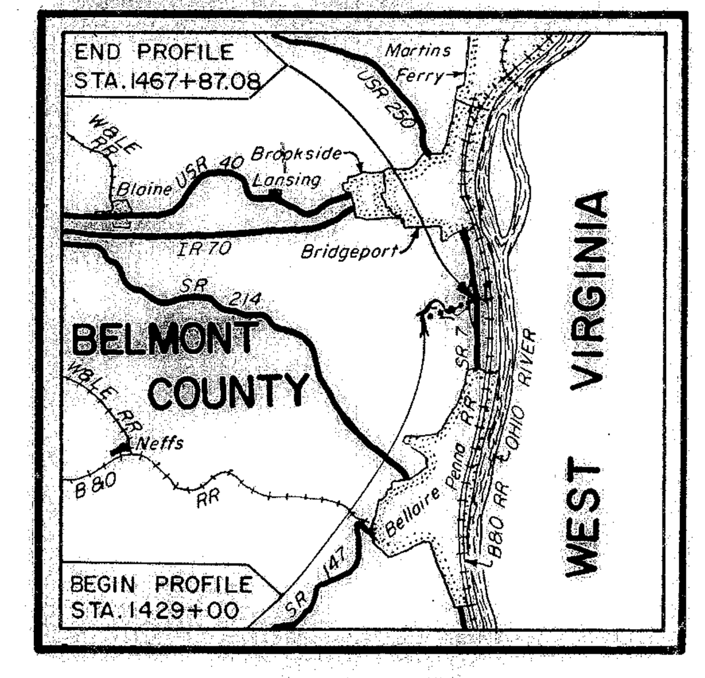

LOCATION MAP

Recon - J.S.M., J.F.S. - 11/2/67

Drilling - Auger - J.W.P., T.R.S. - 1/25/68 to 2/16/68, 4/19/68 to 5/1/68.
Core - G.L.E., J.A.G., W.F.H., E.F.L., H.D.P., J.H.S. - 1/31/68 to 4/22/68.

Drafting - D.E.M., R.A.P., K.J.S., C.L.I. - 7/16/68

Revised Drafting - L.N.L. - 9/1/70

PROJECT INDEX

STATIONS FROM	STATIONS TO	PLAN VIEW. SHEET	PROFILE SHEET	CUT MAX.	FILL EMB. MAX.
MAINLINE					
1429+00	1440+00	3	4	88'	46'
1440+00	1465+87.08	5	6	72'	44'
RAMP A					
1428+00	1457+00	5	7	176'	49'
RAMP B					
1441+00	1451+00	5	8	51'	32'
RAMP C					
1451+00	1460+00	5	8	115'	40'
RAMP D					
1445+00	1456+00	5	8	93'	15'
RELOCATED WHISKEY RUN					
1+00	21+00	5	9	65'	6'
PROPOSED SR 7 (SOUTHBOUND LANES)					
51+00	96+00	10 & 11	10 & 11	51'	5'
PROPOSED (SB) COLLECTOR DISTRIBUTOR					
1+00	26+00	10 & 15	12	23'	2'
PROPOSED (NB) COLLECTOR DISTRIBUTOR					
6+00	22+00	10	11	7'	2'

MICROFILMED
AUG 15 1980

SUMMARY OF SOIL TEST DATA

NOTE: NP SHOWN IN LIQUID LIMIT AND PLASTICITY INDEX COLUMNS INDICATES THAT THE MATERIAL IS NON-PLASTIC.
*DENOTES SAMPLE TAKEN AT OR NEAR GRADE.

STATION & OFFSET	DEPTH FROM	TO	% AGG.	% C.S.	% F.S.	% SILT	% CLAY	L.L.	P.I.	% W.C.	SHTL CLASS.
[illegible]											
1436+00 50'Lt	0.0	4.0	10	3	4	28	55	35	16	23	A-6b
1439+00 50'Lt	0.0	5.0	0	0	1	19	80	48	20	12	A-7-6
1442+00 38'Lt	0.0	2.0	0	2	4	37	57	40	15	22	A-6a
	2.0	4.0	13	2	6	42	37	44	19	24	A-7-6
	4.0	5.0	0	1	7	34	58	41	19	17	A-7-6
	5.0	7.0	(14	5	10	29	42	33	11	15)	
	BROWNISH-GRAY WEATHERED SHALE										VISUAL
1442+00 51'Rt	0.0	1.0	0	1	3	32	64	48	22	24	A-7-6
	1.0	4.0	(0	1	1	21	77	52	24	22)	
	GRAY WEATHERED SHALE										VISUAL
1447+85 CL	0.0	4.0	0	1	2	39	58	44	21	23	A-7-6*
	4.0	5.0	7	1	3	26	63	51	23	26	A-7-6
1451+60 CL	0.0	6.0	23	2	5	27	43	38	13	23	A-6a
1450+40 30'Rt	0.0	2.0	RED DOG								VISUAL
	2.0	7.0	15	12	11	26	36	45	17	24	A-7-6
	7.0	12.0	28	10	15	17	30	38	15	22	A-6a
	12.0	15.0	50	7	12	13	18	31	11	16	A-2-6
	15.0	19.0	39	10	14	17	20	29	9	19	A-4a
RAMP A											
1440+40 BL	0.0	4.0	5	2	5	33	55	46	22	24	A-7-6
	4.0	8.0	11	2	10	33	44	38	18	24	A-6b
[illegible]											
	4.0	7.0	42	4	4	18	32	34	11	14	A-4a
	7.0	13.0	7	5	7	28	53	40	18	31	A-6a
	13.0	19.0	18	13	13	12	44	34	14	13	A-6a
	19.0	22.0	(26	11	16	22	25	43	11	15)	
	COAL BLOSSOM										VISUAL
	22.0	23.0	20	2	4	42	32	36	15	14	A-6a
1454+00 25'Lt	0.0	5.0	0	2	4	24	70	50	33	32	A-7-6
	5.0	11.0	9	1	9	41	40	45	19	19	A-7-6
RAMP B											
1450+00 BL	0.0	5.0	12	4	6	21	57	52	26	29	A-7-6
	5.0	10.0	16	3	5	23	53	48	21	30	A-7-6
	10.0	12.0	0	4	5	29	62	55	27	34	A-7-6
	12.0	18.0	0	2	3	28	67	59	31	27	A-7-6
	18.0	23.0	10	4	4	19	63	43	21	18	A-7-6
	23.0	24.0	6	3	27	14	50	57	26	33	A-7-5
RAMP D											
1447+50 25'Rt	0.0	4.0	0	3	4	34	59	49	20	28	A-7-6
	4.0	6.0	4	2	3	26	65	46	22	25	A-7-6
	6.0	7.0	0	2	4	21	73	48	23	22	A-7-6
	7.0	8.0	0	0	2	28	70	42	16	21	A-7-6
	8.0	10.0	4	6	7	29	54	36	15	25	A-6a
	10.0	11.0	(49	10	5	22	14	30	9	8)	
	COAL BLOSSOM										VISUAL
1449+80 27'Rt	0.0	3.0	0	1	2	18	79	50	23	24	A-7-6
	3.0	4.0	0	1	2	20	77	54	25	26	A-7-6
	4.0	9.0	(28	28	20	22	12	--	-	12)	
	COAL										VISUAL
	9.0	10.5	(19	8	10	28	35	33	14	12)	
	GRAY UNDERCLAY										VISUAL
1454+70 CL	0.0	2.0	8	2	6	33	51	42	13	7	A-7-6
	2.0	6.0	20	6	7	31	36	41	15	18	A-7-6
	6.0	7.0	(14	4	5	23	54	44	11	20)	
	GRAY WEATHERED SHALE										VISUAL
	7.0	11.0	(8	4	4	19	65	39	14	23)	
	GRAY WEATHERED SHALE										VISUAL
RELOCATED WHISKEY RUN											
2+00 BL	0.0	4.0	34	11	15	16	24	32	12	15	A-6a
	4.0	8.0	67	6	6	10	11	33	13	22	A-2-6
5+00 19'Lt	0.0	3.0	17	6	10	30	37	40	13	22	A-6a
5+00 CL	0.0	4.0	16	2	3	37	42	36	11	19	A-6a
	4.0	8.0	17	3	16	28	42	38	13	23	A-6a

STATION & OFFSET	DEPTH FROM	TO	% AGG.	% C.S.	% F.S.	% SILT	% CLAY	L.L.	P.I.	% W.C.	SHTL CLASS.
49+30 62'Rt	0.0	2.0	0	3	11	34	52	49	20	32	A-7-6
	2.0	5.0	0	0	7	41	52	38	16	16	A-6b
	5.0	7.0	((0	6	16	43	35	29	6	11)	
	BROWN WEATHERED SHALE										VISUAL
PROPOSED SR 7 (SOUTHBOUND LANES)											
57+00 25'Lt	0.0	5.0	58	10	16	7	9	23	5	12	A-1-b *
	5.0	11.0	57	11	18	7	7	NP	NP	10	A-1-b
	11.0	12.0	29	21	20	15	15	48	14	17	A-2-5
	12.0	17.0	3	53	31	-	13 -	NP	NP	8	A-1-b
	17.0	20.0	17	42	32	-	9 -	NP	NP	5	A-1-b
65+00 30'Lt	0.0	5.0	44	4	5	12	35	57	30	26	A-7-6
	5.0	10.0	26	3	7	23	41	47	20	25	A-7-6
65+00 50'Rt	0.0	6.0	23	7	9	22	39	46	21	28	A-7-6
	6.0	12.0	14	3	5	20	58	55	28	32	A-7-6
	12.0	15.0	51	3	7	7	32	50	26	30	A-7-6
65+50 90'Lt	0.0	5.0	23	4	8	22	43	54	25	27	A-7-6
	5.0	8.0	9	2	8	53	28	44	18	26	A-7-6
	8.0	10.0	8	4	8	33	47	37	16	17	A-6b
72+00 CL	0.0	4.0	(63	11	12	8	-	5 -	-	28)	
	BLACK SLAG										VISUAL
	4.0	10.0	15	1	3	21	60	56	30	25	A-7-6
	10.0	16.0	7	1	3	29	60	48	23	20	A-7-6
	16.0	19.0	15	2	4	24	55	40	15	21	A-6a
	19.0	25.0	(2)	7	6	34	32	36	11	12)	
	BROWN WEATHERED SHALE										VISUAL
80+10 CL	0.0	6.0	39	1	9	28	23	32	12	20	A-6a *
	6.0	12.0	12	2	5	40	41	40	18	20	A-6b
83+42 CL	0.0	4.0	5	1	10	42	42	37	16	27	A-6b
	4.0	5.0	9	5	7	33	46	56	23	13	A-7-5
	5.0	10.0	17	1	5	27	50	45	21	23	A-7-6
90+00 CL	0.0	4.0	(30	3	29	33	5	21	6	12)	
	BROWN WEATHERED SANDSTONE										VISUAL *
PROPOSED SR 7 (SB) COLLECTOR DISTRIBUTOR											
10+50 CL	0.0	4.0	14	5	6	25	50	48	19	26	A-7-6
	4.0	9.0	8	2	4	33	53	42	18	20	A-7-6
	9.0	13.0	19	2	4	27	48	35	12	18	A-6a
	13.0	16.0	27	3	4	32	34	40	11	20	A-6a
	16.0	21.0	6	3	6	30	55	36	12	16	A-6a *
	21.0	26.0	45	3	7	25	20	NP	NP	15	A-4a *
	26.0	30.0	24	5	9	29	33	28	11	15	A-6a *

STATION & OFFSET	DEPTH FROM	TO	% AGG.	% C.S.	% F.S.	% SILT	% CLAY	L.L.	P.I.	% W.C.	SHTL CLASS.
21+00 40'Lt	0.0	4.0	7	1	9	52	31	28	9	17	A-4b
	4.0	10.0	14	3	7	29	47	44	22	21	A-7-6 *
26+00 CL	0.0	6.0	8	2	13	44	33	27	11	17	A-6a *
	6.0	10.0	19	12	21	24	24	NP	NP	12	A-4a
PROPOSED SR 7 (NB) COLLECTOR DISTRIBUTOR											
9+00 CL	0.0	5.0	40	23	26	-	11 -	NP	NP	11	A-1-b *
	5.0	9.0	53	9	30	-	8 -	NP	NP	9	A-1-b
	9.0	10.0	4	1	8	56	31	27	5	24	A-4b
19+00 CL	0.0	5.0	0	0	37	48	15	NP	NP	16	A-4a *
	5.0	10.0	0	0	34	50	16	NP	NP	18	A-4b
DRIVE SAMPLE SOIL TEST DATA											
MAINLINE											
1352+00 64'Rt	10.0	11.0	17	5	9	43	26	34	12	16	A-6a
1359+00 167'Rt	5.0	6.0	0	6	10	18	66	43	16	37	A-7-6
	10.0	11.0	(20	2	7	37	34	33	13	13)	
	BROWN WEATHERED SHALE										VISUAL
1373+00 76'Rt	5.0	6.0	0	2	5	30	63	48	20	41	A-7-6
	10.0	11.0	0	0	3	45	52	40	11	33	A-6a
	15.0	16.0	0	1	7	50	42	35	9	20	A-4b
	20.0	21.0	0	6	10	42	43	37	11	22	A-6a
	25.0	26.4	(17	2	1	42	38	36	13	12)	
	GRAY WEATHERED SHALE										VISUAL
1379+00 229'Lt	5.0	6.0	0	3	5	27	65	45	18	30	A-7-6
1385+00 50'Rt	5.0	6.0	27	4	2	29	38	40	12	18	A-6a
	10.0	11.0	19	1	2	28	50	37	11	28	A-6a
	15.0	16.5	(41	8	5	26	20	-	-	18)	
	GRAY WEATHERED SHALE										VISUAL
1385+00 234'Rt	5.0	6.0	27	2	12	33	26	31	11	16	A-6a
1397+00 170'Rt	5.0	6.0	17	3	4	20	56	62	33	36	A-7-6
	10.0	10.6	(31	6	6	32	25	34	8	13)	
	GRAY WEATHERED SHALE										VISUAL
1410+80 341'Rt	5.0	6.0	24	7	4	22	41	38	14	21	A-4a
1410+80 158'Rt	5.0	6.0	0	1	4	36	59	46	22	41	A-7-6
1418+00 218'Rt	5.0	6.0	29	5	7	13	46	53	20	23	A-7-5
	10.0	10.3	41	3	7	25	23	42	17	21	A-7-6
1418+50 64'Rt	5.0	6.0	12	3	4	24	57	50	22	32	A-7-6

STATION & OFFSET	DEPTH FROM	TO	% AGG.	% C.S.	% F.S.	% SILT	% CLAY	L.L.	P.I.	% W.C.	SHTL CLASS.
1424+50 72'Rt	5.0	6.0	5	5	7	31	52	47	18	22	A-7-6
	10.0	11.0	11	2	9	33	45	42	14	22	A-7-6
	15.0	15.5	-	-	-	-	-	32	11	17	A-6a
	20.0	21.0	22	3	7	27	41	35	13	22	A-6a
	25.0	26.0	19	4	8	31	38	30	8	18	A-4a
1426+00 290'Rt	5.0	6.0	3	1	3	31	62	44	16	28	A-7-6
	10.0	11.0	0	3	5	31	61	40	18	28	A-6b
	15.0	16.0	(71	9	7	7	6	NP	NP	22)	
	BROWN SHALE WITH COAL BLOSSOM										VISUAL
1435+00 330'Rt	5.0	6.0	0	6	7	41	46	40	15	16	A-6b
1441+00 247'Rt	10.0	11.0	3	4	4	28	61	44	16	23	A-7-6
	15.0	16.0	9	5	6	20	60	30	10	17	A-4a
1445+00 240'Rt	5.0	6.0	18	2	4	33	43	38	11	21	A-6a
	10.0	11.0	0	1	6	39	54	51	22	41	A-7-6
RAMP A											
1432+80 180'Lt	5.0	6.0	20	9	6	26	39	34	4	17	A-4a
1434+37 BL	5.0	6.0	25	3	4	15	53	58	30	36	A-7-6
	10.0	10.5	23	3	13	29	32	50	17	38	A-7-6
	15.0	15.7	14	3	13	43	27	37	11	20	A-6a
	20.0	21.0	(14	4	10	29	16	31	7	21)	
	GRAY WEATHERED SHALE										VISUAL
	25.0	25.5	(4	2	4	34	19	36	10	9)	
	GRAY WEATHERED SHALE										VISUAL
RAMP B											
1450+25 190'Lt	5.0	6.0	8	6	6	26	54	39	11	19	A-6a
RAMP C											
1454+80 BL	5.0	6.0	0	8	13	18	61	33	12	15	A-6a
RAMP D											
1454+80 BL	5.0	6.0	0	0	4	48	48	52	26	35	A-7-6
	10.0	11.0	0	0	3	37	60	53	28	31	A-7-6
PROPOSED SR 7 (SOUTHBOUND LANES)											
62+00 90'Lt	5.0	6.0	19	1	3	22	55	50	19	24	A-7-5
	10.0	11.0	15	13	5	24	43	43	15	23	A-7-6
	15.0	16.0	29	11	9	25	26	33	11	16	A-6a
	20.0	21.0	30	11	13	23	23	27	8	16	A-4a
	25.0	25.0	31	12	7	20	30	30	9	19	A-4a
	30.0	31.0	28	9	8	24	31	32	11	16	A-6a
	35.0	35.0	43	12	7	18	20	30	9	16	A-4a
	40.0	41.0	32	12	6	22	28	31	10	19	A-4a
	45.0	46.0	22	8	8	19	43	36	9	16	A-4a
	50.0	51.0	27	7	6	23	37	33	14	21	A-6a
69+36 13'Lt	5.0	6.0	9	2	4	23	62	45	22	18	A-7-6
	10.0	11.0	11	2	4	28	55	51	27	23	A-7-6
	30.0	31.0	11	3	5	35	46	37	14	20	A-6a
	35.0	35.5	27	5	5	23	40	31	14	18	A-6a
	40.0	40.7	31	1	2	39	27	38	12	14	A-6a
76+00 3'Lt	5.0	6.0	13	3	6	22	56	50	24	29	A-7-6
	10.0	11.0	10	4	9	34	43	34	16	19	A-6b
	15.0	15.9	28	12	14	27	19	29	7	14	A-4a
89+00 200'Lt	5.0	6.0	0	13	11	21	55	39	16	13	A-6b

MICROFILMED
AUG 25 '75

SOIL PROFILE
BELMONT COUNTY
BEL-470-5.90

OHIO STATE HIGHWAY TESTING LABORATORY
1620 W. BROAD ST. COLUMBUS 25, OHIO

3/35

3/21

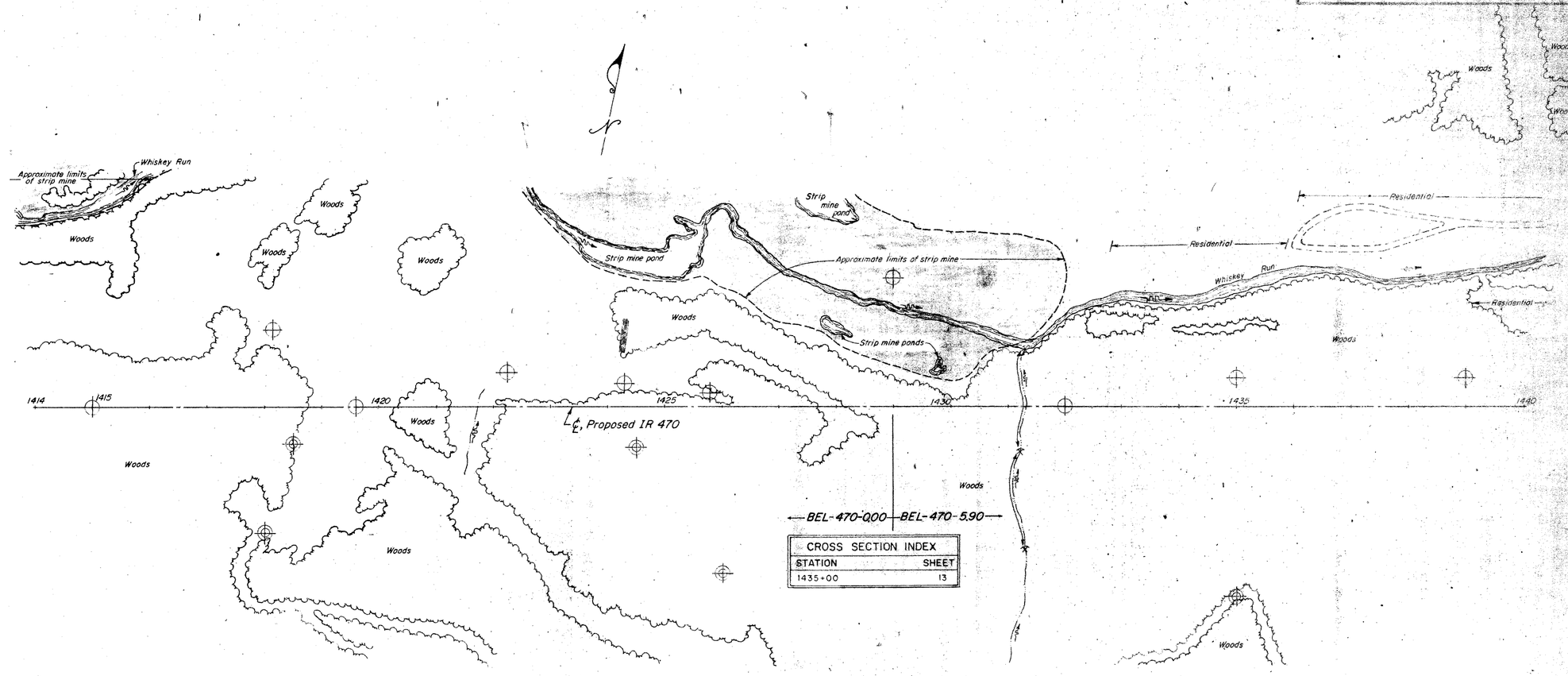

CROSS SECTION INDEX	
STATION	SHEET
1435+00	13

SOIL PROFILE

BELMONT COUNTY
BEL-470-5.90

OHIO STATE HIGHWAY TESTING LABORATORY
1620 W. BROAD ST., COLUMBUS 23, OHIO

4/35

4/21

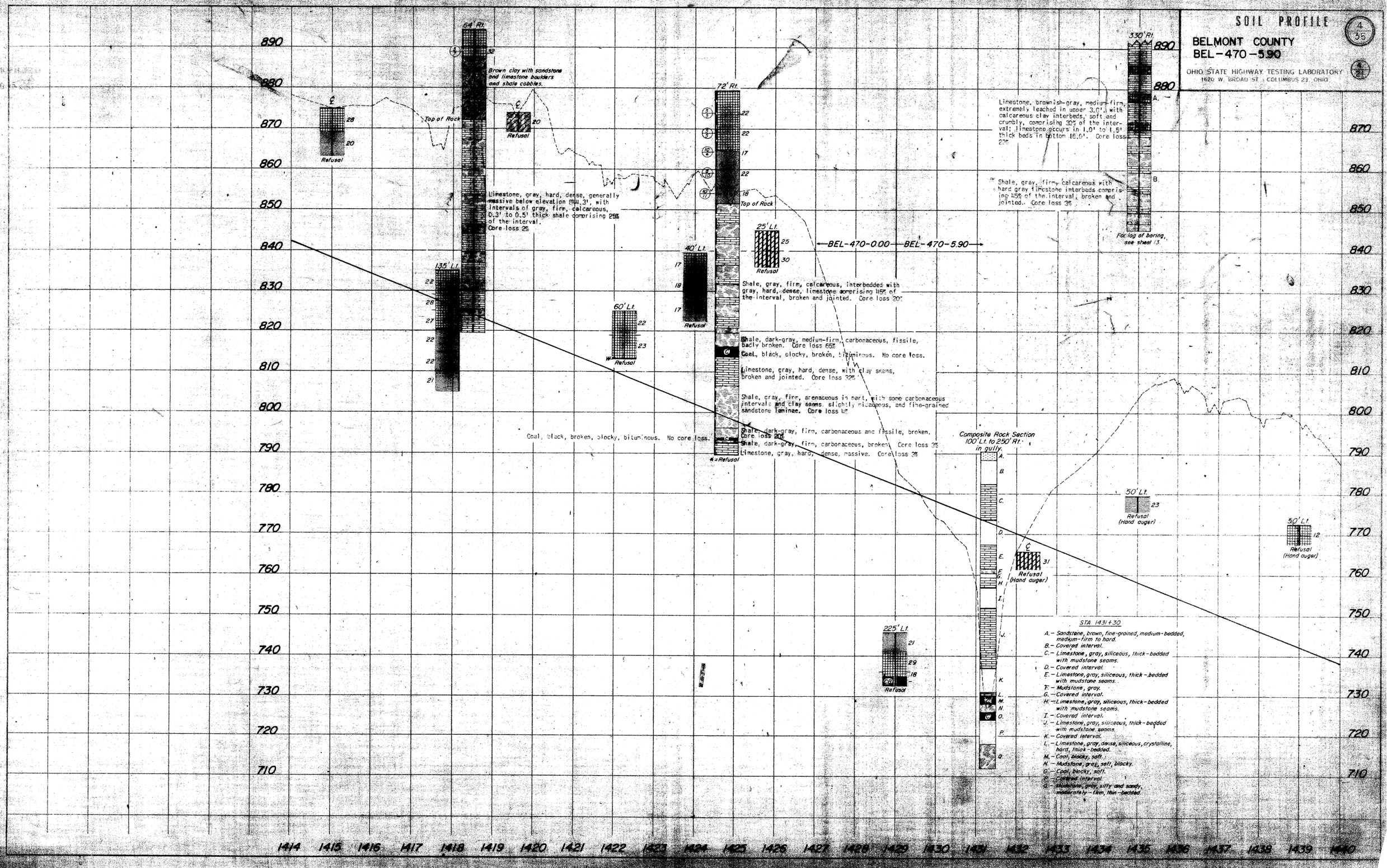

MICROFILMED
AUG 15

SOIL PROFILE

5

BELMONT COUNTY
BEL-470-5.90

OHIO STATE HIGHWAY TESTING LABORATORY
1620 W. BROAD ST. COLUMBUS 23, OHIO

5/21

CROSS SECTION INDEX

STATION	SHEET
IR 470	
1441+00	14
1445+00	15
Ramp A	
1433+00	16
1445+50	17
Ramp B	
1450+00	18
Ramp D	
1455+00	19

PROFILE INDEX

	SHEET
Ramp A	7
Ramp B	8
Ramp C	8
Ramp D	8
Relocated Whiskey Run	9
Proposed SR 7 (Southbound Lanes)	10 & 11
Proposed (SB) Collector Distributor	12
Proposed (NB) Collector Distributor	11

SOIL PROFILE

6

BELMONT COUNTY
BEL-470-5.90

6/21

OHIO STATE HIGHWAY TESTING LABORATORY
1620 W. BROAD ST. COLUMBUS 23, OHIO

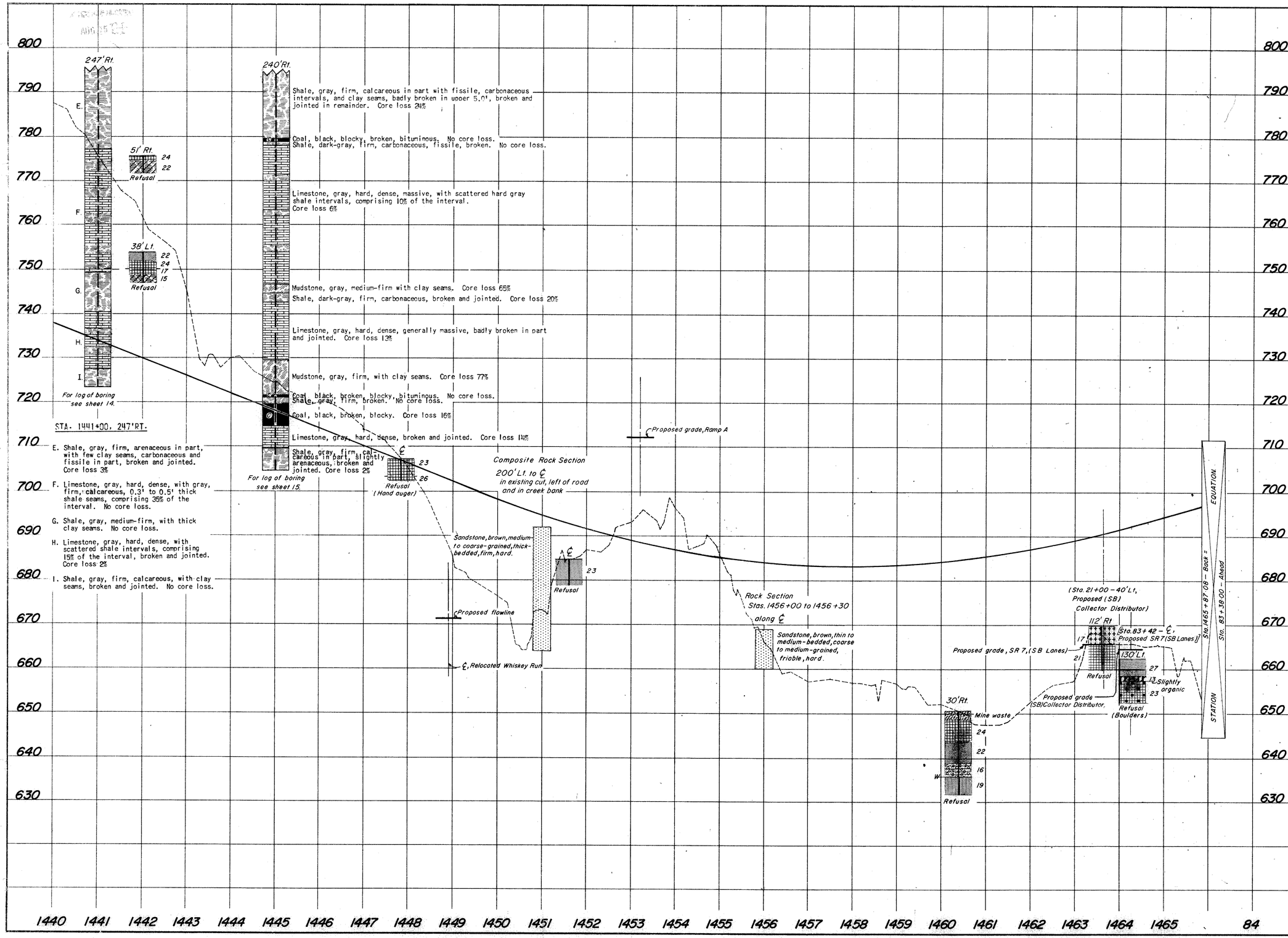

SOIL PROFILE

BELMONT COUNTY
BEL-470-5.90

OHIO STATE HIGHWAY TESTING LABORATORY
1620 W. BROAD ST. COLUMBUS 23, OHIO

7 / 7/21

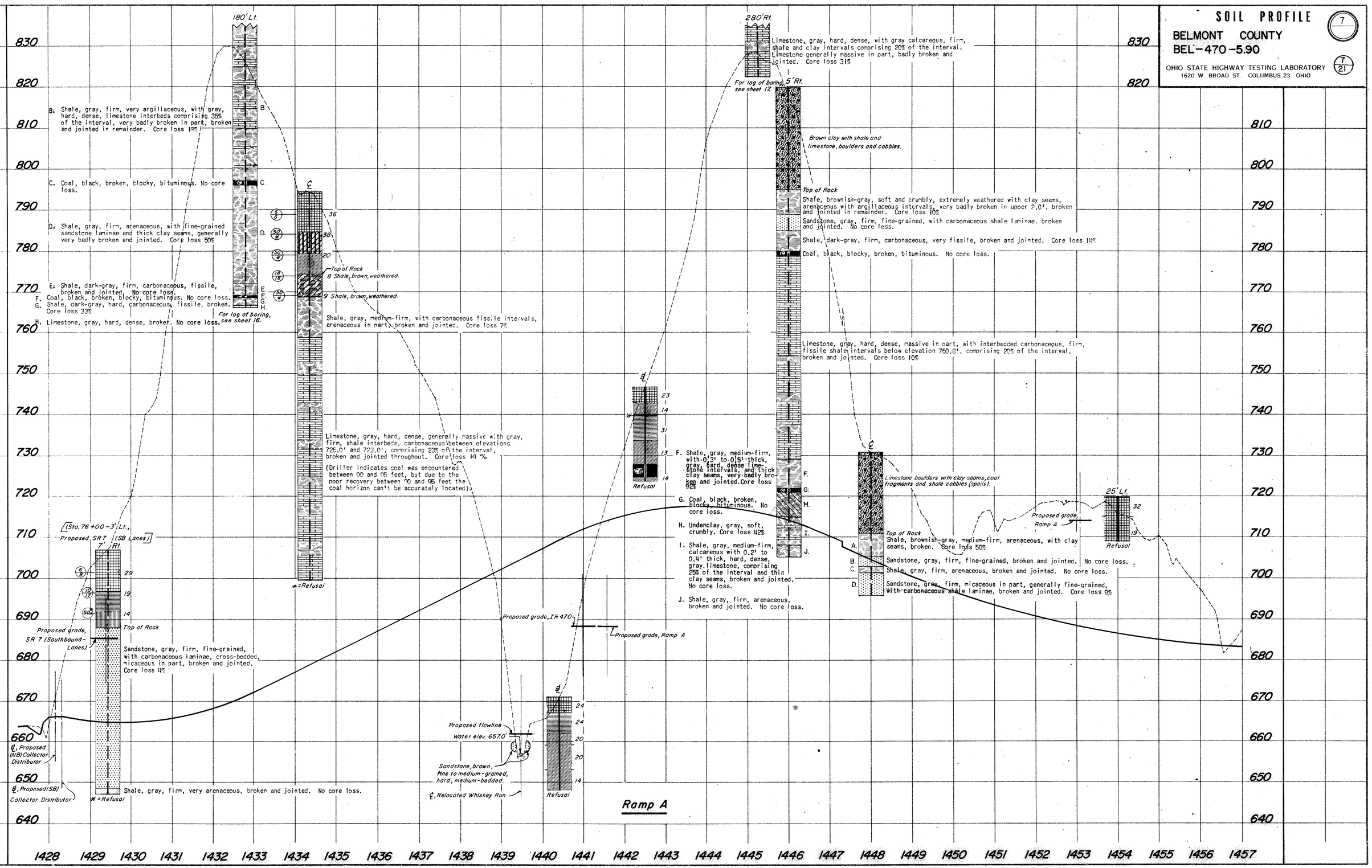

SOIL PROFILE

BELMONT COUNTY
BEL-470-5.90

OHIO STATE HIGHWAY TESTING LABORATORY
1620 W BROAD ST. COLUMBUS 23, OHIO

8 / 8/21

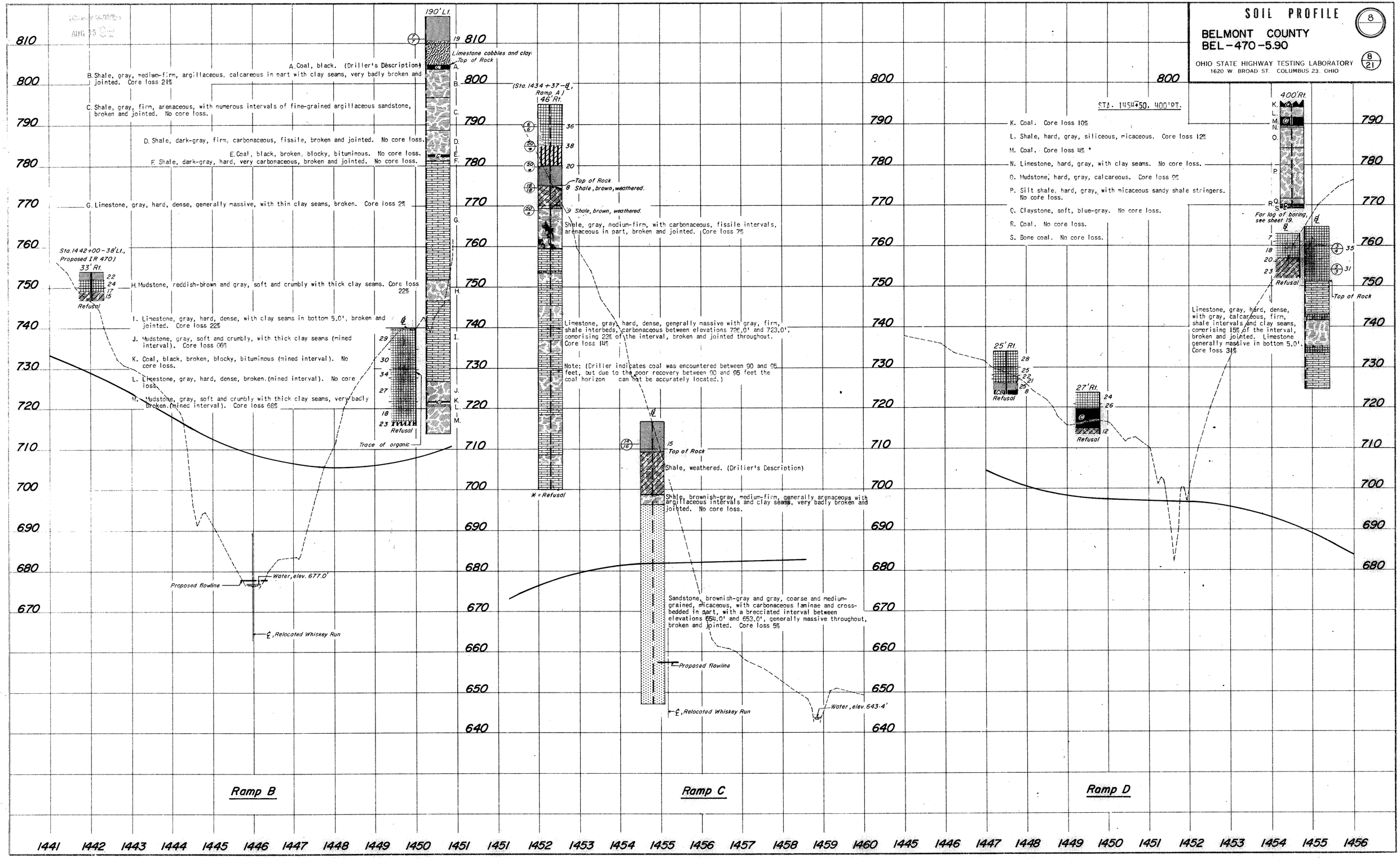

SOIL PROFILE

9

BELMONT COUNTY
BEL-470-5.90

9/21

OHIO STATE HIGHWAY TESTING LABORATORY
1620 W. BROAD ST. COLUMBUS 23, OHIO

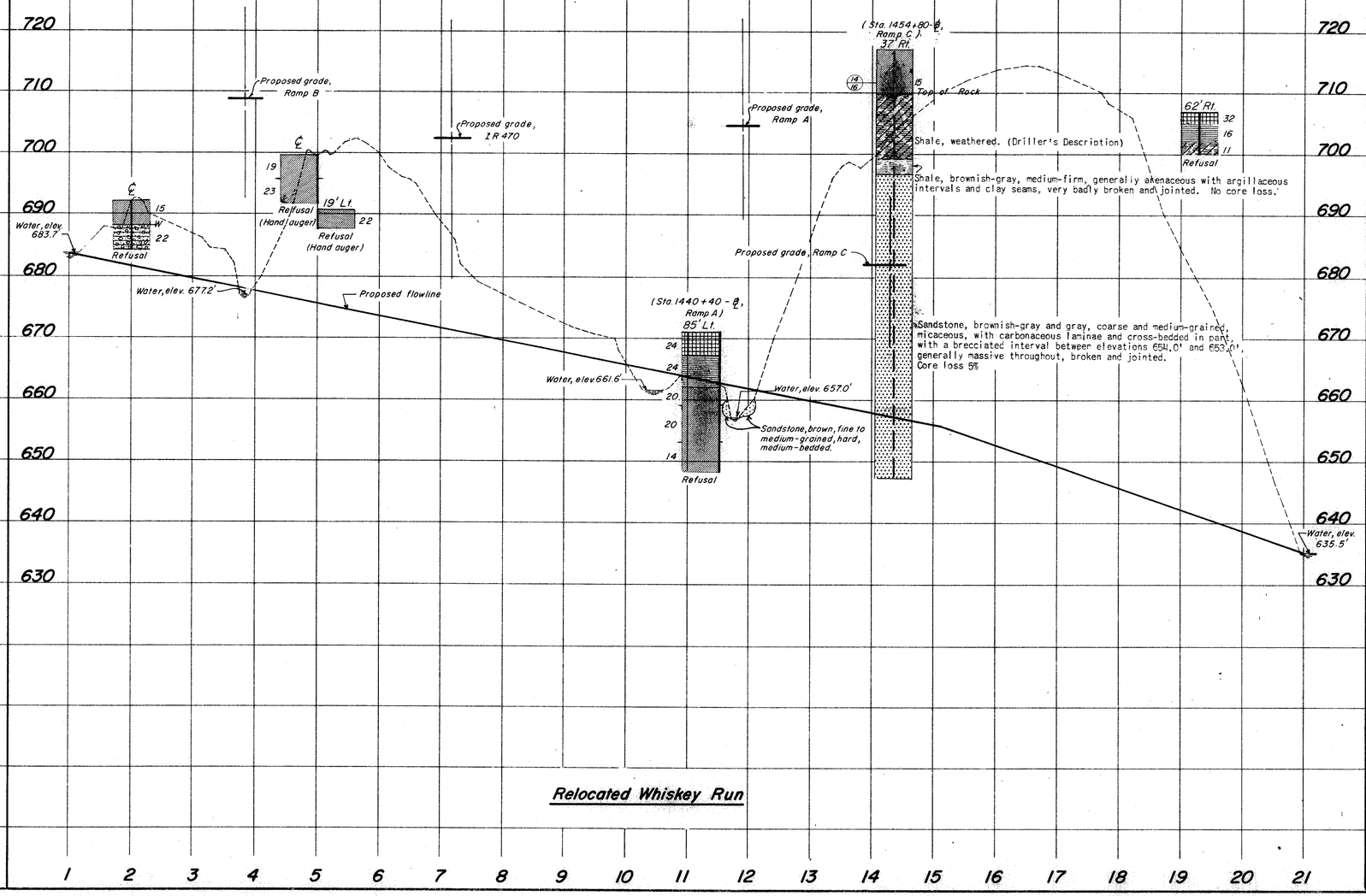

TE - 127
1500-12-66

SOIL PROFILE

BELMONT COUNTY
BEL-470-5.90

OHIO STATE HIGHWAY TESTING LABORATORY
1620 W. BROAD ST. COLUMBUS, OHIO 43223

10 / 10/21

CROSS SECTION INDEX	
STATION	SHEET
Proposed SR 7 (Southbound Lanes)	
62+00	20
65+00	20
69+00	20

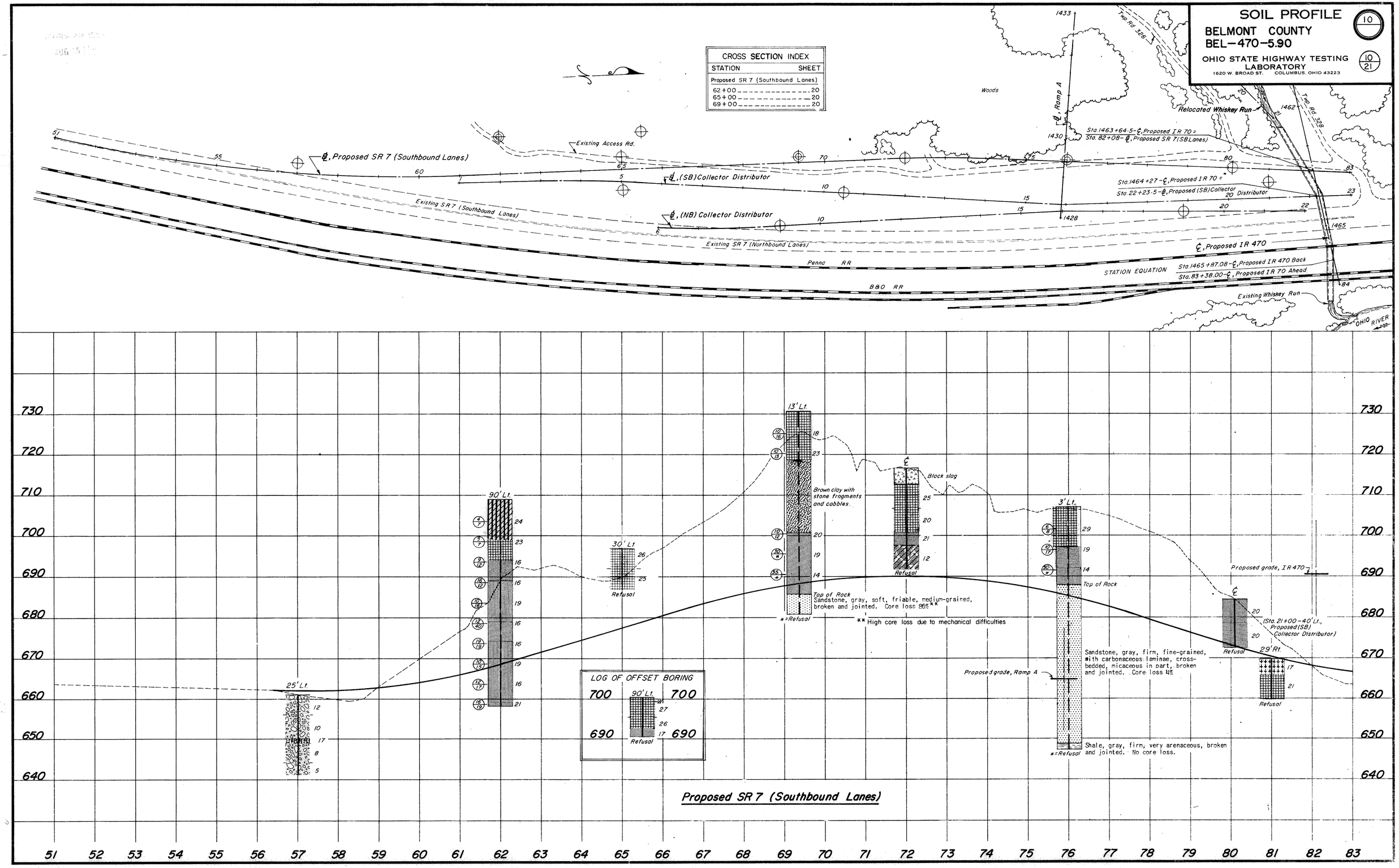

TE - 127
1500-12-69

SOIL PROFILE

BELMONT COUNTY
BEL-470-5.90

OHIO STATE HIGHWAY TESTING LABORATORY
1620 W. BROAD ST. COLUMBUS, OHIO 43223

11
11/21

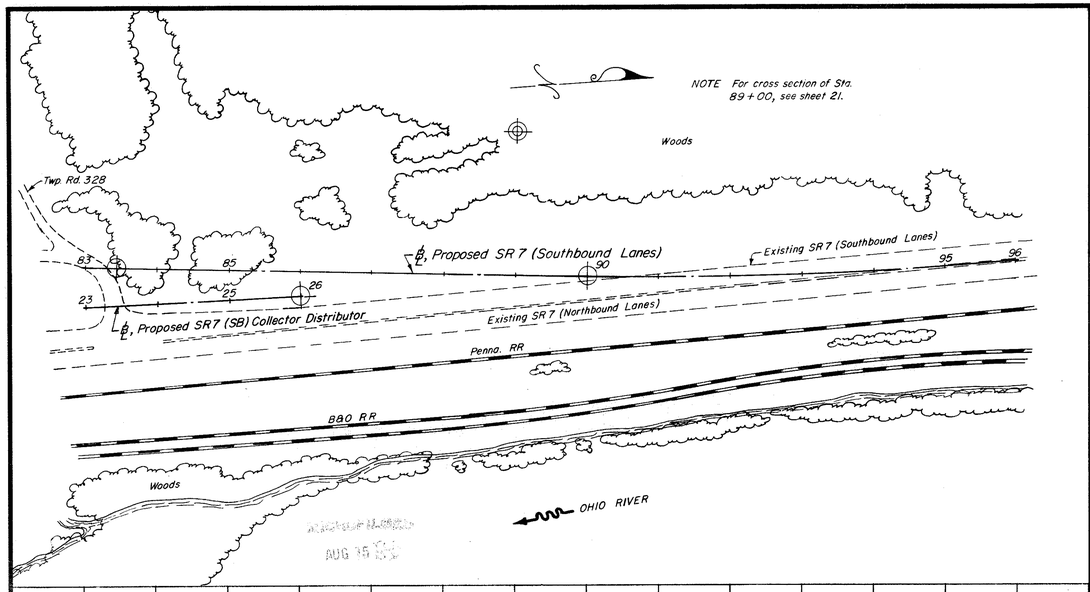

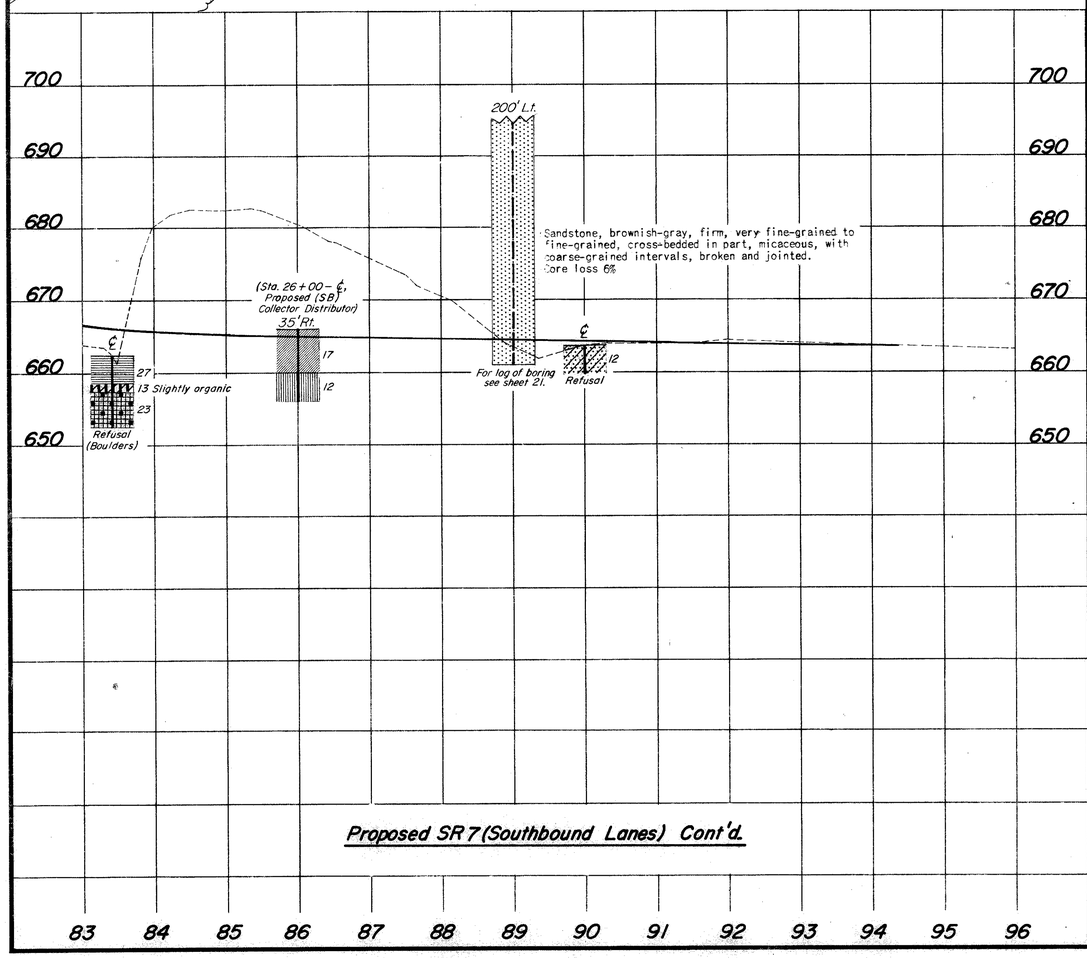

Proposed SR 7 (Southbound Lanes) Cont'd.

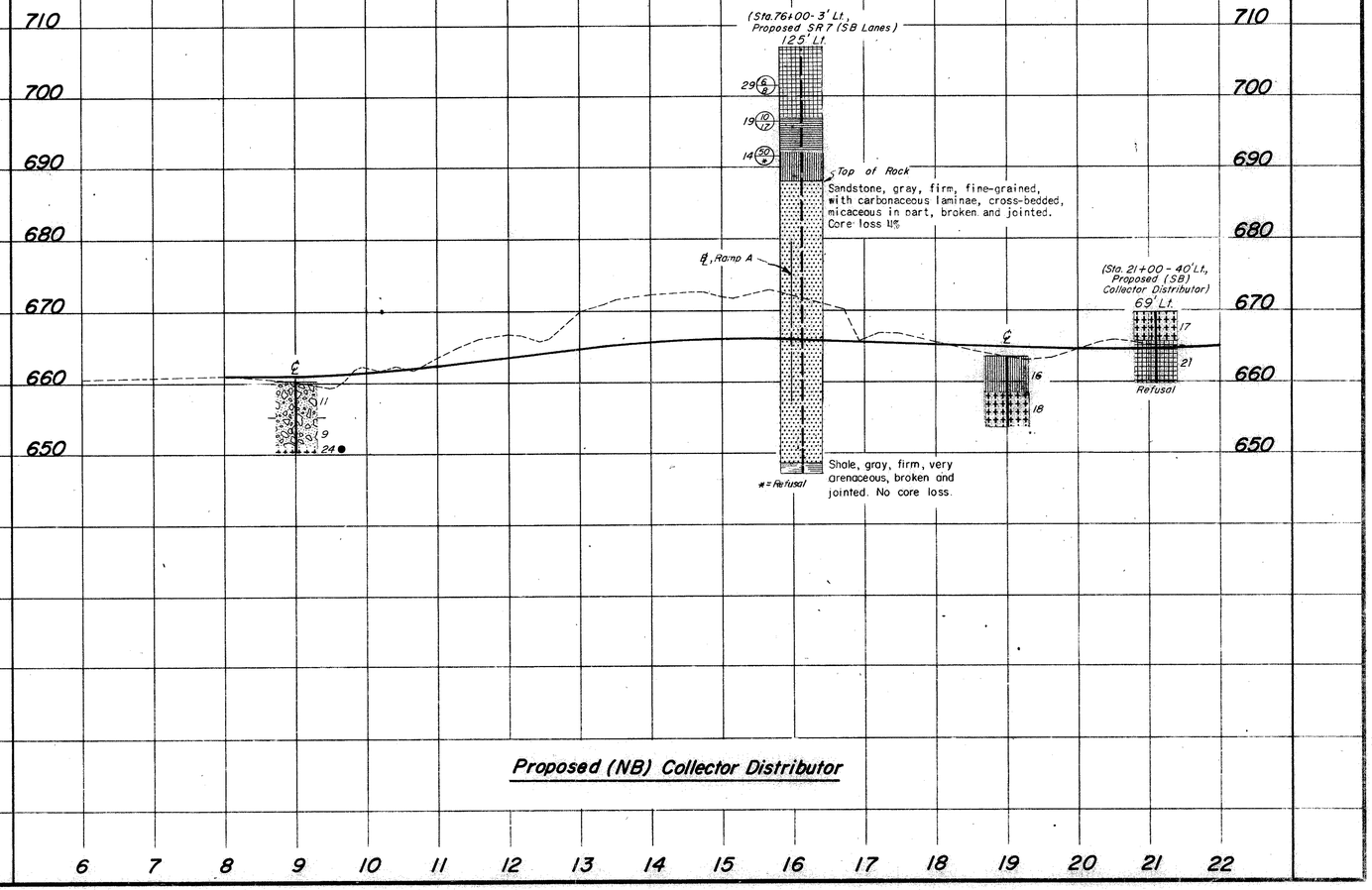

Proposed (NB) Collector Distributor

SOIL PROFILE

12

BELMONT COUNTY
BEL-470-5.90

OHIO STATE HIGHWAY TESTING LABORATORY
1620 W. BROAD ST. COLUMBUS 23, OHIO

12/21

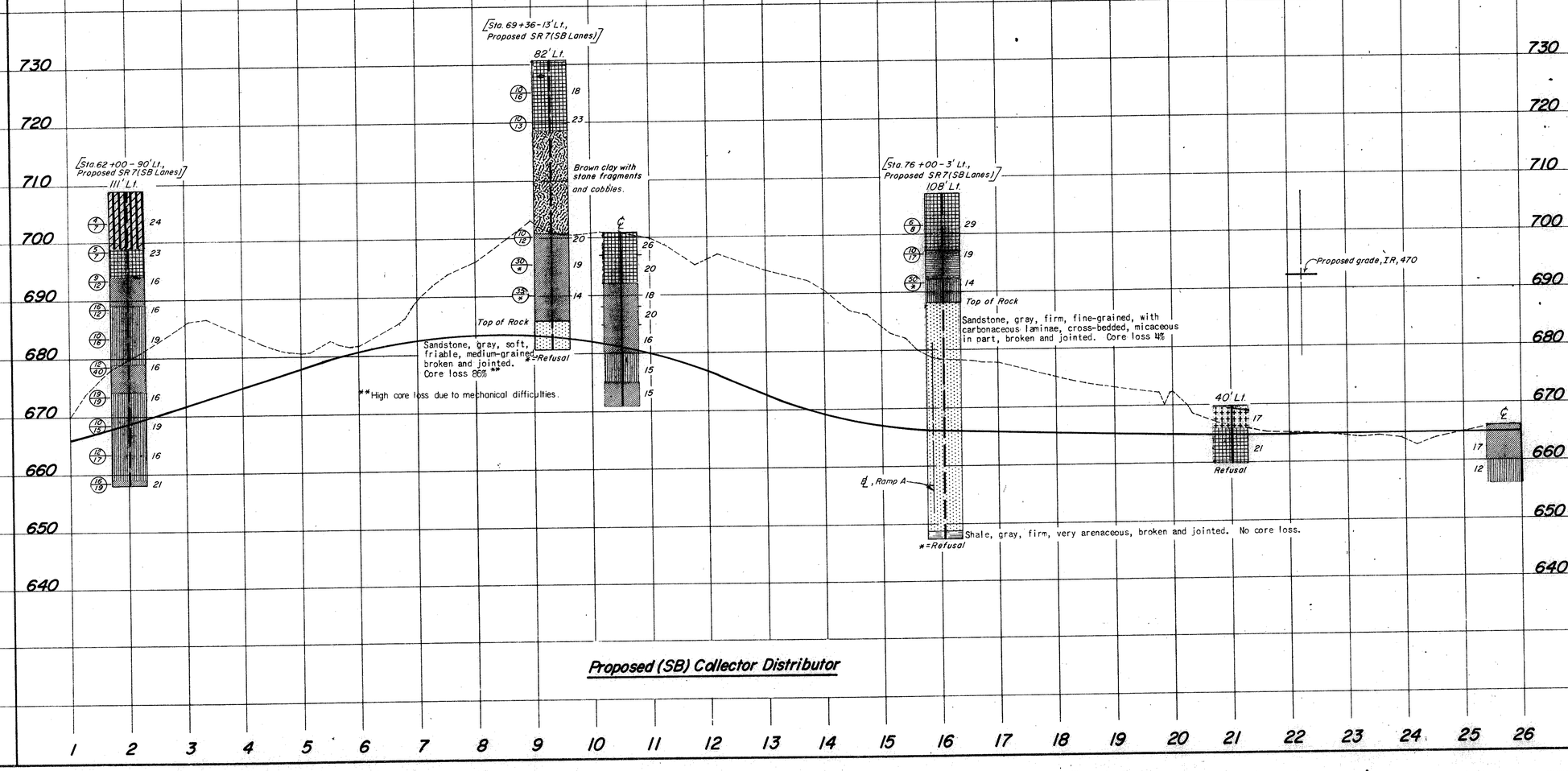

TE - 96
1500-12-66

AUG 15 '66

SOIL PROFILE

BELMONT COUNTY
BEL-470-5.90

13

OHIO STATE HIGHWAY TESTING LABORATORY
1620 W. BROAD ST. COLUMBUS, OHIO 43223

13
21

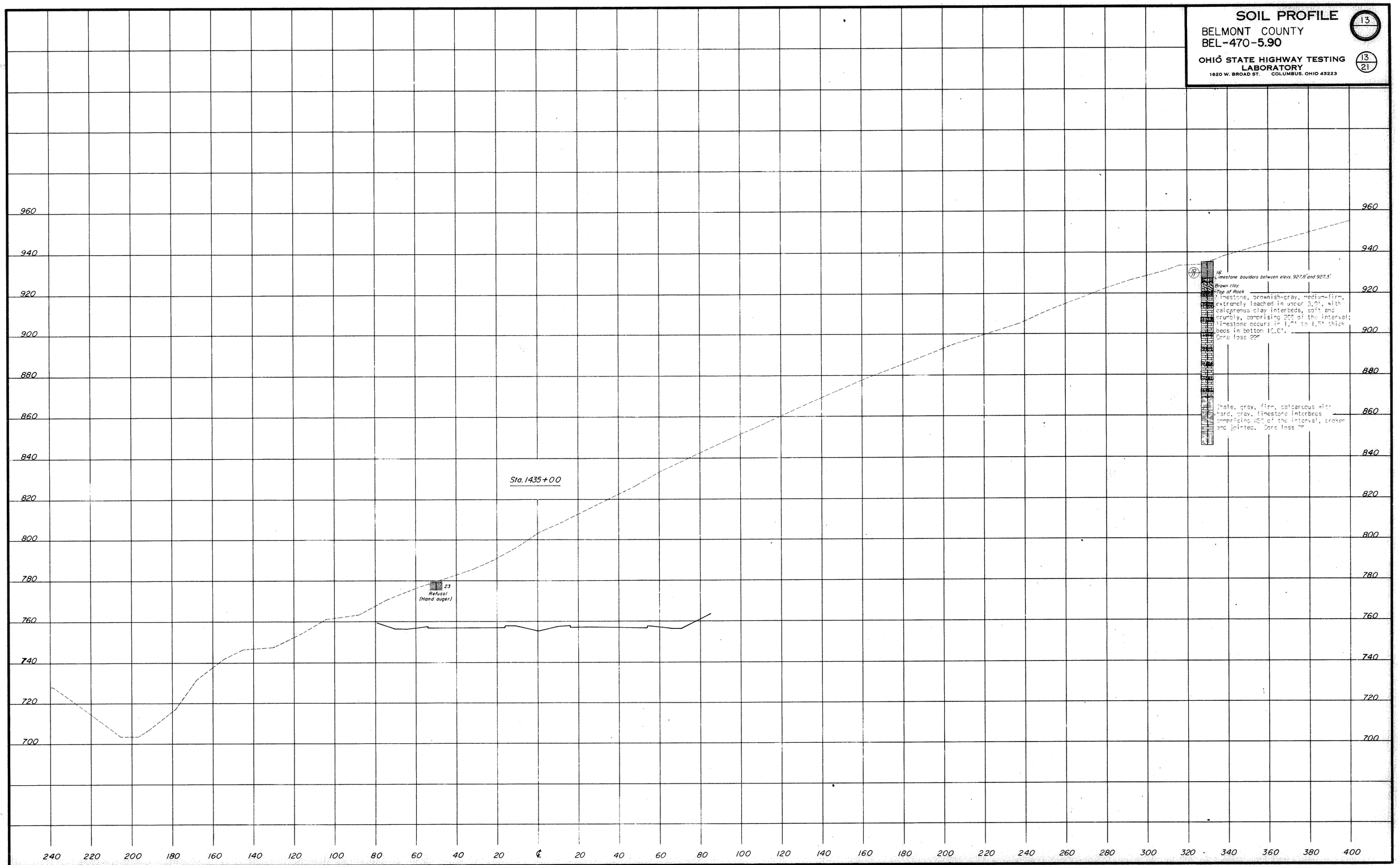

TE - 96
1500-12-66

SOIL PROFILE

BELMONT COUNTY
BEL-470-5.90

14

OHIO STATE HIGHWAY TESTING LABORATORY
1620 W. BROAD ST. COLUMBUS, OHIO 43223

14/21

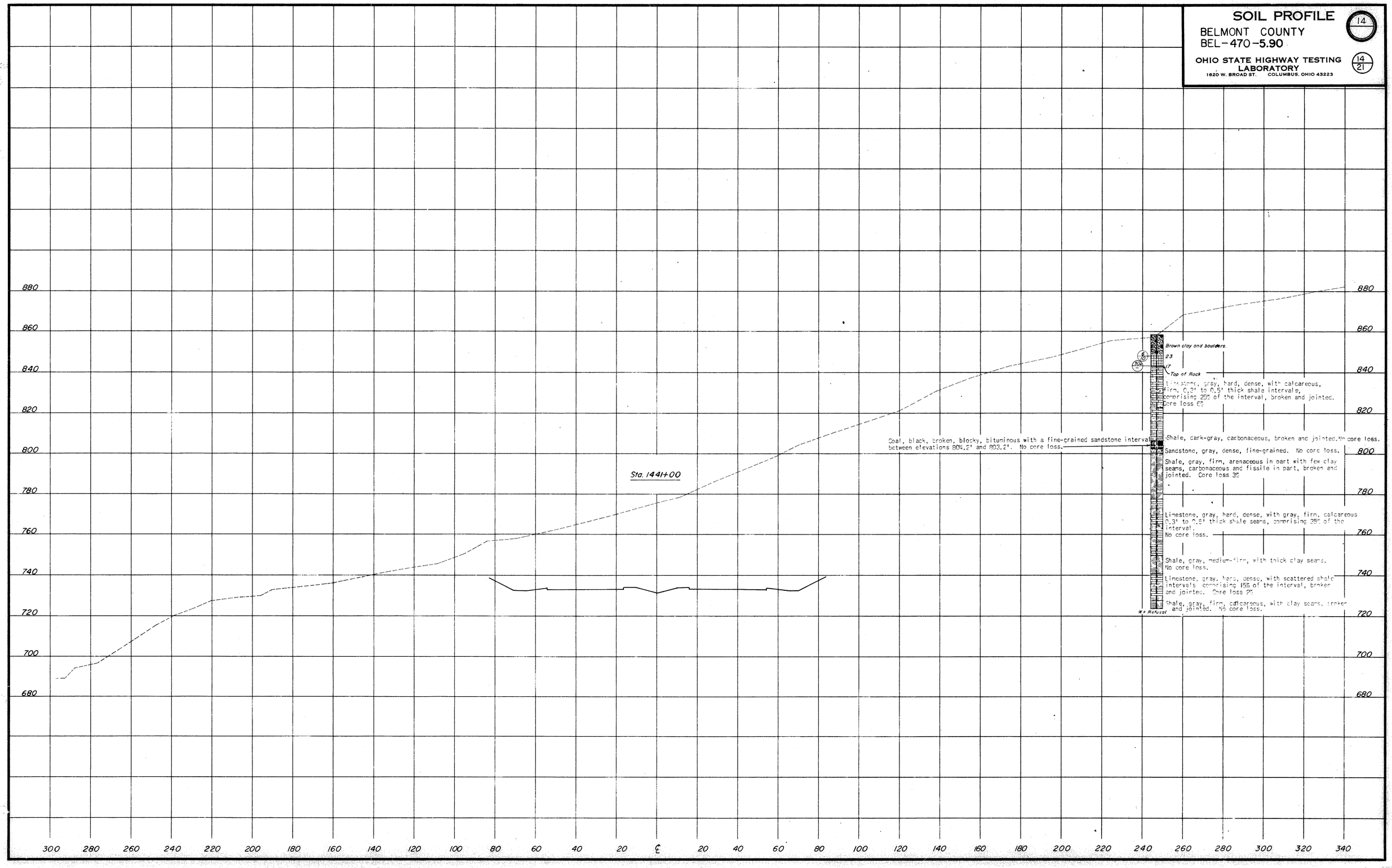

TE - 96
1500-12-66

SOIL PROFILE
BELMONT COUNTY

15

BEL -470 -5.90

15/21

OHIO STATE HIGHWAY TESTING LABORATORY
1620 W. BROAD ST. COLUMBUS, OHIO 43223

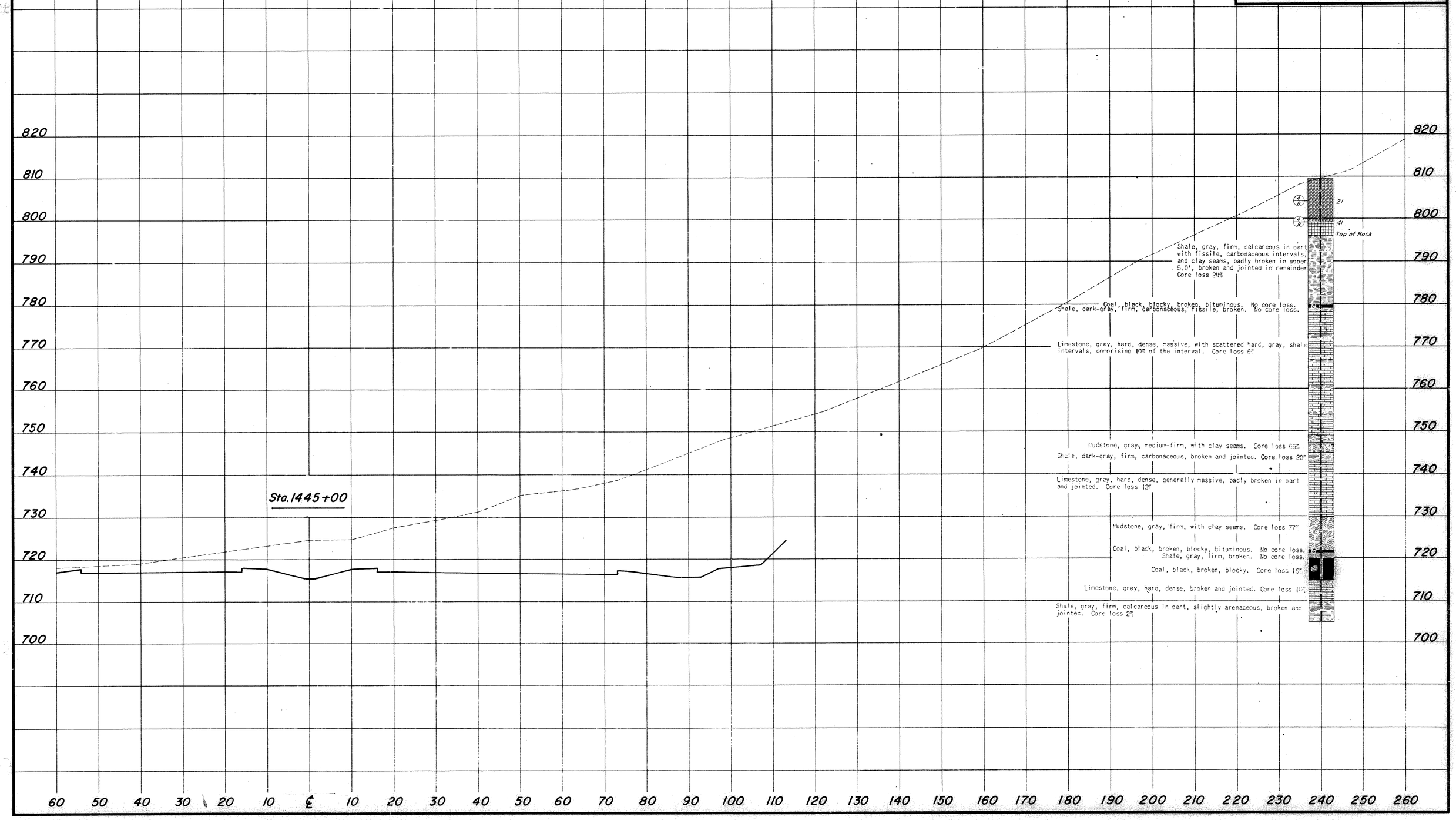

TE - 96
1990-12-66

SOIL PROFILE
BELMONT COUNTY
BEL - 470 - 5.90
OHIO STATE HIGHWAY TESTING LABORATORY
1620 W. BROAD ST. COLUMBUS, OHIO 43223

16

16/21

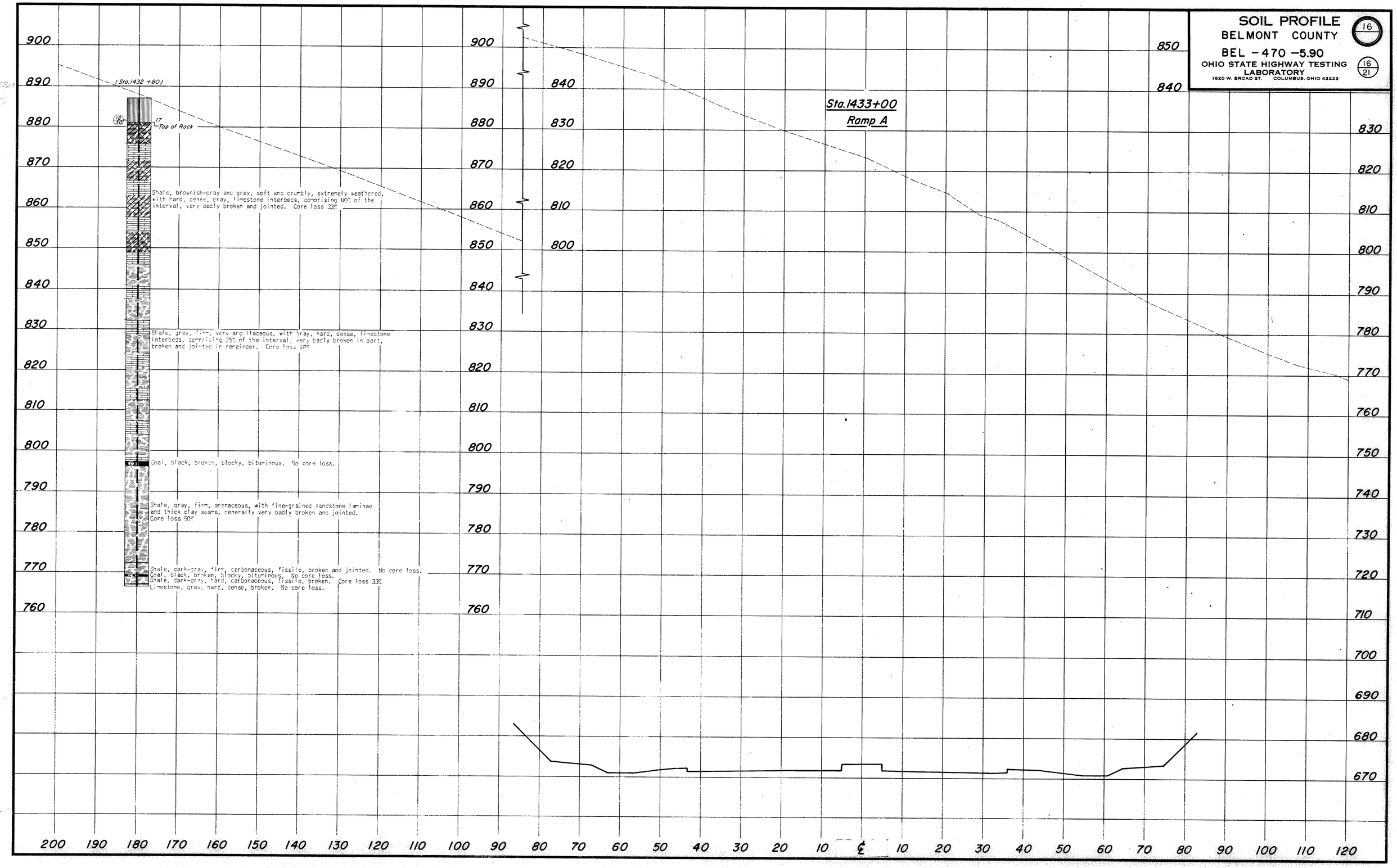

TE - 96
1500-12-66

AUG 15 2008

SOIL PROFILE
BELMONT COUNTY
BEL - 470 - 5.90

17

OHIO STATE HIGHWAY TESTING LABORATORY
1620 W. BROAD ST. COLUMBUS, OHIO 43223

17/21

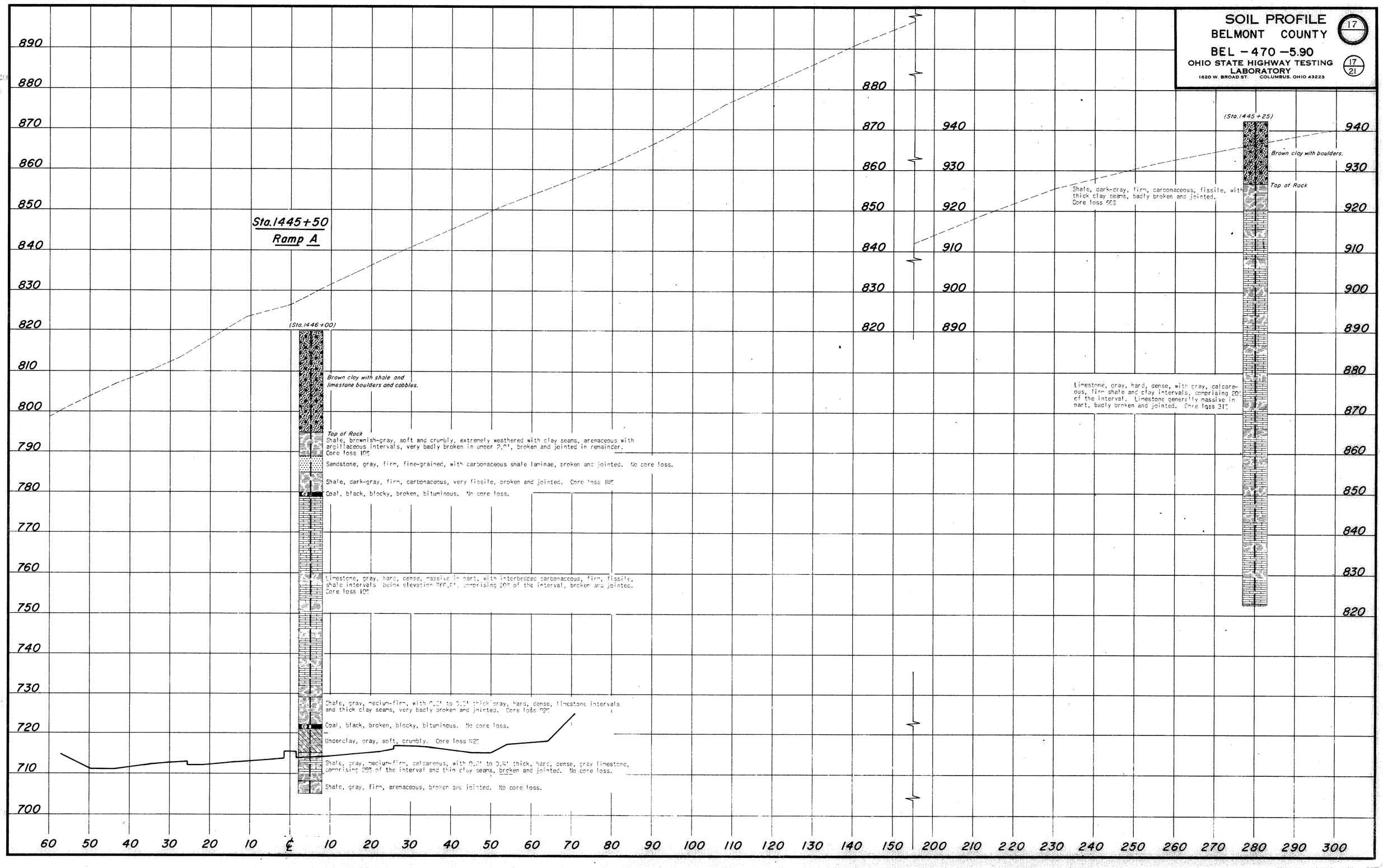

TE - 96
1500-12-66

SOIL PROFILE
BELMONT COUNTY
BEL – 470 – 5.90

18

OHIO STATE HIGHWAY TESTING LABORATORY
1620 W. BROAD ST. COLUMBUS, OHIO 43223

18/21

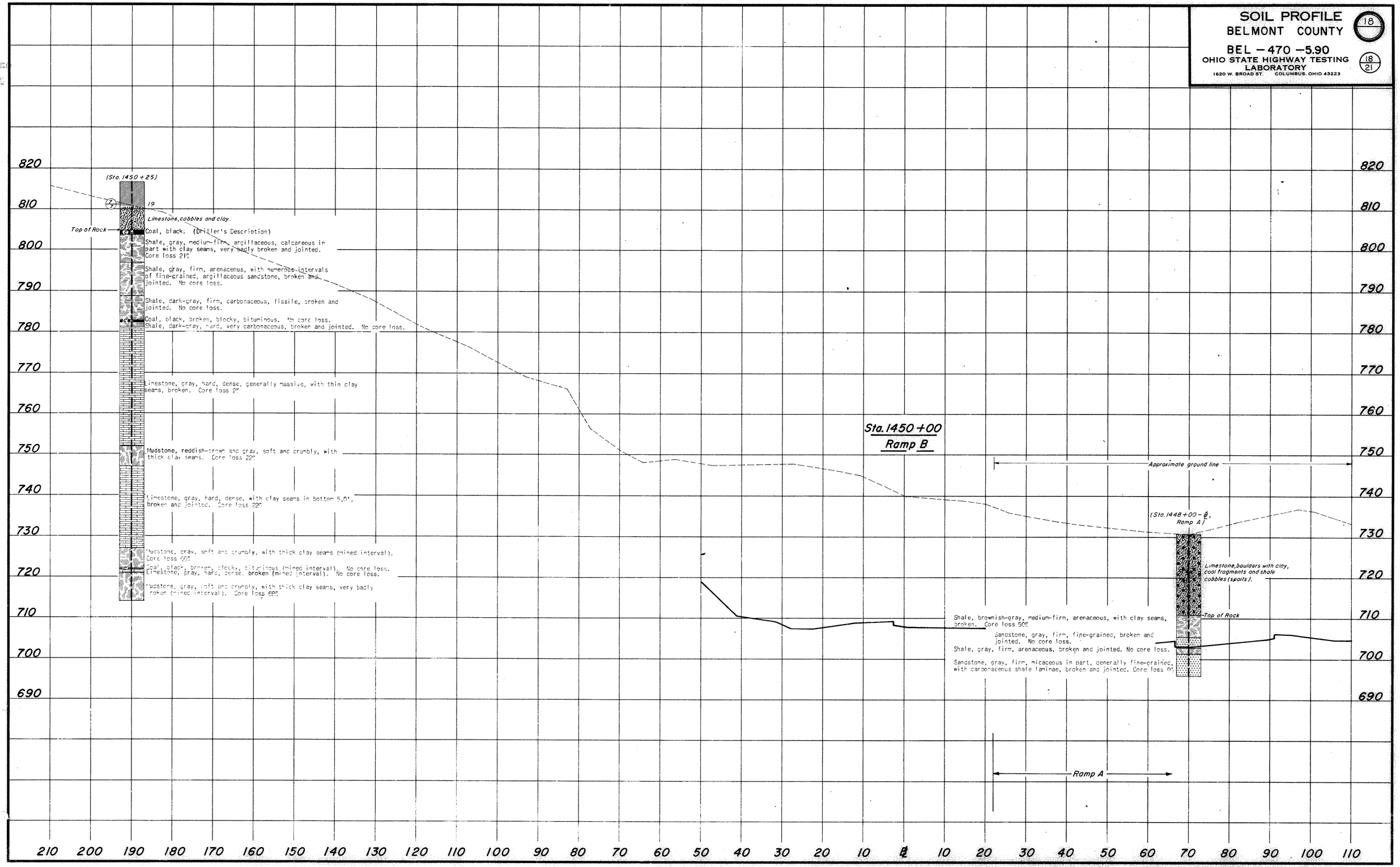

TE - 96
(REV. 12-68)

SOIL PROFILE
BELMONT COUNTY

19

BEL - 470 - 5.90

OHIO STATE HIGHWAY TESTING LABORATORY
1620 W. BROAD ST. COLUMBUS, OHIO 43223

19/21

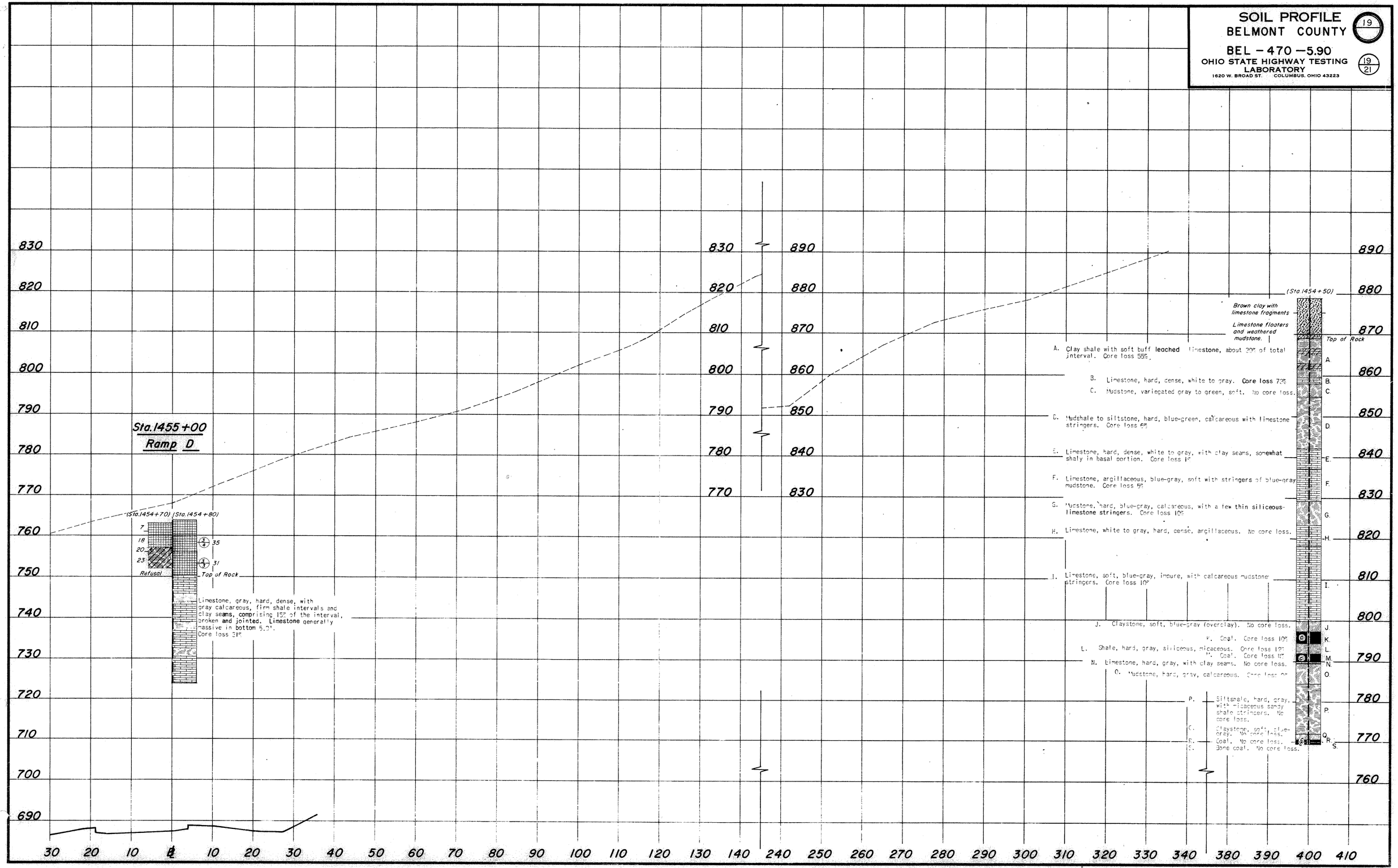

TE - 96
1900-12-66

SOIL PROFILE
BELMONT COUNTY
BEL - 470 - 5.90

OHIO STATE HIGHWAY TESTING LABORATORY
1620 W. BROAD ST. COLUMBUS, OHIO 43223

20

20/21

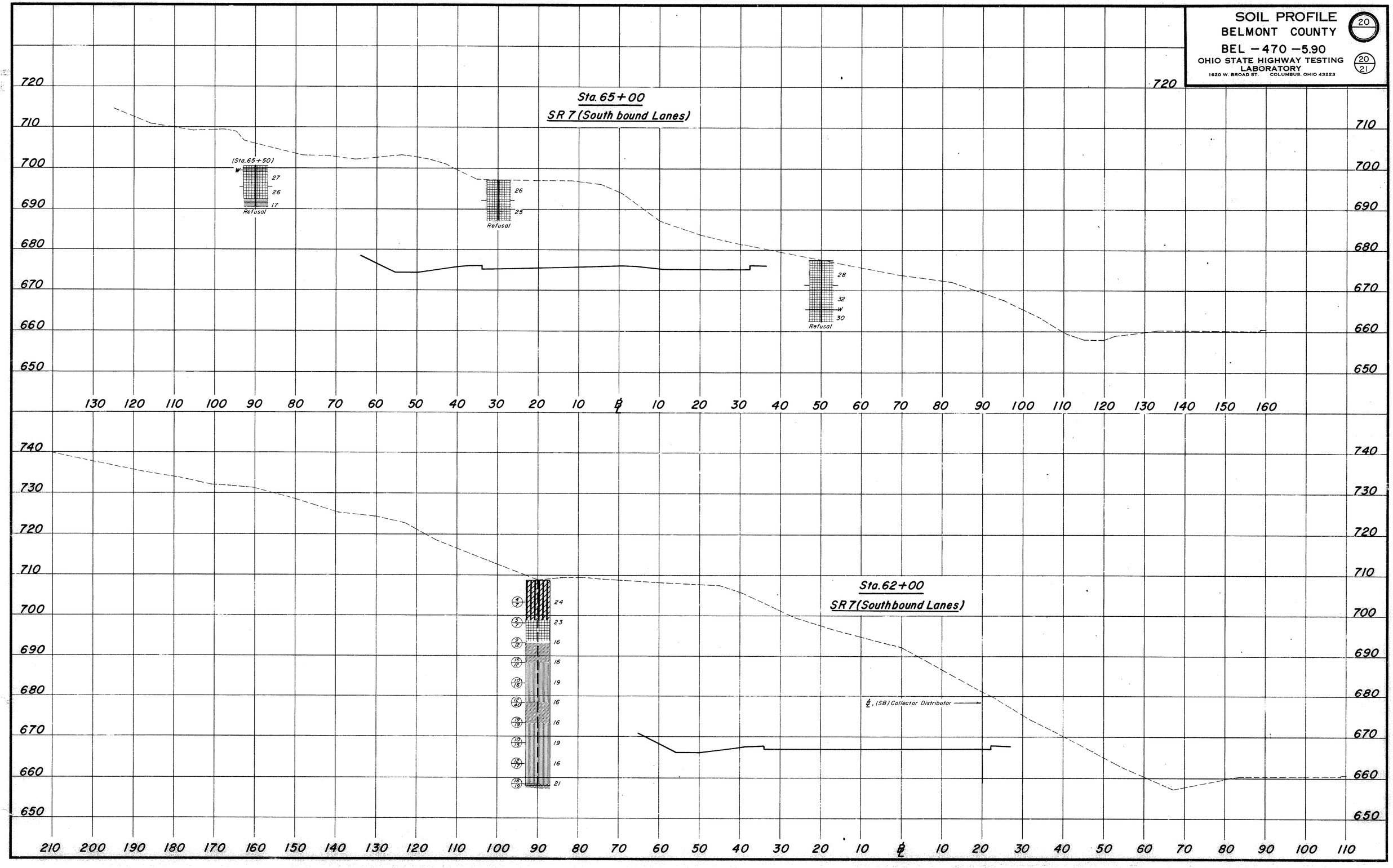

TE - 96
1500-12-86

SOIL PROFILE

BELMONT COUNTY
BEL-470-5.90

21

OHIO STATE HIGHWAY TESTING LABORATORY
1620 W. BROAD ST. COLUMBUS, OHIO 43223

21/21

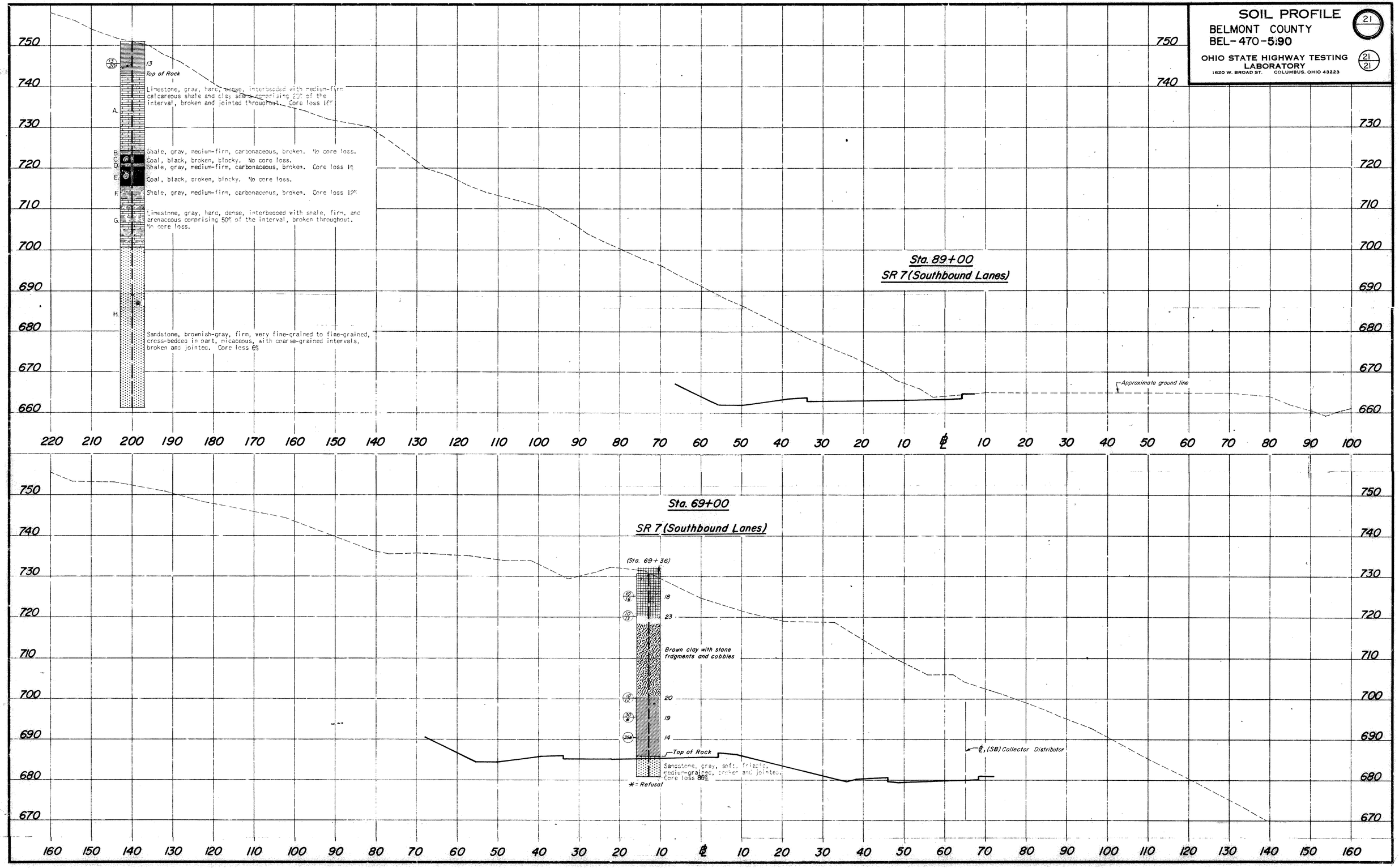

TE - 118
600 - 4 - 66

MICROFILMED
AUG 15 1968

GEOLOGY OF THE SITE

THE STRUCTURE SITE IS LOCATED ON THE HIGHLY DISSECTED ALLEGHENY PLATEAU, NEAR THE BASE OF THE VALLEY WALL OF THE OHIO RIVER, IN AN AREA WHERE THIN TO MODERATELY DEEP RESIDUAL SOILS OVERLIE SANDSTONE, SHALE, LIMESTONE, AND MUDSTONE BEDROCK, OF PENNSYLVANIAN AGE.

EXPLORATION

THE EXPLORATION CONSISTED OF TWO DRIVE SAMPLE-CORE BORINGS, MADE BETWEEN JUNE 19 AND 21, 1968 AND SEVEN DRIVE ROD PENETRATION TESTS, MADE ON JUNE 18, 1968. INCLUDED WITH THIS REPORT IS THE LOG OF A DRIVE SAMPLE-CORE BORING MADE FOR THE SOIL PROFILE INVESTIGATION OF THE PROJECT.

INVESTIGATIONAL FINDINGS

BORINGS DISCLOSED MEDIUM-STIFF CLAYS TO BEDROCK SURFACE, ENCOUNTERED AT 7 TO 19-FOOT DEPTHS, ELEVATIONS 703 to 688 FEET. THE BORINGS WERE TERMINATED AT 60 AND 66-FOOT DEPTHS, ELEVATIONS 647 TO 644 FEET, AFTER PENETRATING 41 TO 59 FEET OF BEDROCK.

THE ROD SOUNDINGS ENCOUNTERED RAPID INCREASE IN PENETRATION RESISTANCE WITH INCREASING DEPTH AND WERE TERMINATED DUE TO REFUSAL TO PENETRATION AT 5 TO 21-FOOT DEPTHS, ELEVATIONS 704 TO 684 FEET, CONSIDERED TO BE ON BEDROCK SURFACE, AS REVEALED BY THE BORINGS.

UNCONFINED COMPRESSION TESTS ON SIMILAR SANDSTONE BEDROCK INDICATES A CRUSHING STRENGTH ON THE ORDER OF 150 TONS PER SQUARE FOOT.

LEGEND

- Auger Boring Location - Plan View.
- Press and / or Drive Sample and / or Core Boring Location - Plan View.
- Drive Rod Penetration Resistance Sounding Location - Plan View.
- Capped Pile
- Footing
- Footing on Pile
- TR — Top of Rock
- Horizontal Bar on Boring Log Indicates the Depth the Sample Was Taken.
- X/Y — Figures Beside the Boring Log in Profile Indicate the Number of Blows for Standard Penetration Test.
  X = Number of Blows for First 6 inches.
  Y = Number of Blows for Second 6 inches.
- Drive Rod Penetration Resistance Sounding Log - Profile
- Casing
- Resistance "R" < 10,000 lbs.
- Resistance "R" > 10,000 lbs.
- Z — Indicates Final Measurement of Penetration, in Inches.
- W — Indicates Free Water Elevation.
- Indicates Static Water Elevation.

SYMBOLS OF ROCK TYPES

- Coal
- Weathered Indurated Clay
- Indurated Clay
- Weathered Shale
- Shale
- Weathered Sandstone
- Sandstone
- Leached Dolomite
- Dolomite
- Leached Limestone
- Limestone

GENERAL INFORMATION

Drive Rod Penetration Sounding Tests

Drive rod penetration resistance tests constitute driving a 1.315-inch diameter steel rod, with a 45° cone point, into the ground, using a 122-pound drop-hammer with a free fall of five feet. At one or two-foot depth intervals, a measurement is taken to determine the amount of penetration achieved in three hammer drops. This reading is converted to an empirical value for capacity "R", in thousands of pounds (which is a measure of both the point resistance and frictional resistance on the rod), by using charts prepared by the Ohio Department of Highways, Bureau of Bridges, on the basis of correlation study of rod penetration with past performance of pile driving. For interpretation, a graph is prepared by plotting the value "R" against the depth at which the reading was taken, and connecting the plotted points. The curve so obtained reflects the density of subsurface materials in a manner that can be readily compared with data from similar tests at other locations on the structure site. From this comparison, the overall uniformity of subsurface condition may be evaluated.

Drive Sample Borings - Drive-Press Sample Borings

Drive sample borings are made by means of a rotary-type drill rig, employing a 2" O.D., 1-3/8" I.D. sampler, at 2-1/2 and / or 5-foot depth intervals, driven by means of a 140 - pound drop-hammer with a free fall of 30 inches. The number of blows required to drive the sampler 12 inches is considered the standard penetration test.

Drive-press sample borings are made by means of a rotary-type drill rig, employing a 2" O.D., 1-3/8" I.D. drive sampler, and 3" O.D. thin-wall press sampler. The press sampler is advanced by continuous uniform pressure, applied by the drill rig.

The boring log sheets show a graphic plot of the information obtained, including depth and elevation of the sample, number of blows for the standard penetration tests in two 6-inch increments, depth of press samples, field sample number, sample description - based on laboratory tests and the Casagrande AC classification system - and gradation, plasticity, and moisture content determinations. Results of strength and consolidation testing, if performed, appear on separate enclosures.

At depths where materials are bouldery or gravelly to the extent that the sampler can not be driven, a wash sample is procured for visual classification, in order to determine the general character of the material. These samples are not considered sufficiently representative to warrant laboratory testing.

Particle Size Definitions

Boulders	8"	Cobbles	3"	Gravel	2.0mm (No. 10 sieve)	Coarse Sand	0.42mm (No. 40 sieve)	Fine Sand	0.074mm (No. 200 sieve)	Silt	0.005mm	Clay

NOTE: Information shown by this subsurface investigation was obtained solely for the use in establishing design controls for the project. The State of Ohio does not guarantee the accuracy of this data and it is not to be construed as a part of the plans governing construction of the project.

OHIO DEPARTMENT OF HIGHWAYS
TESTING LABORATORY
1620 WEST BROAD STREET, COLUMBUS 23, OHIO

STRUCTURE FOUNDATION INVESTIGATION

BRIDGE NO. BEL-7-1848 L
OVER RAMPS 'A' & 'B'
SEC. BEL-470-5.90

CHECKED BY	REVIEWED BY	DATE
L. N. L.	R. D. R.	7/12/68

TE - 119
1000 - 4 - 66

FILMED
AUG 15 1968

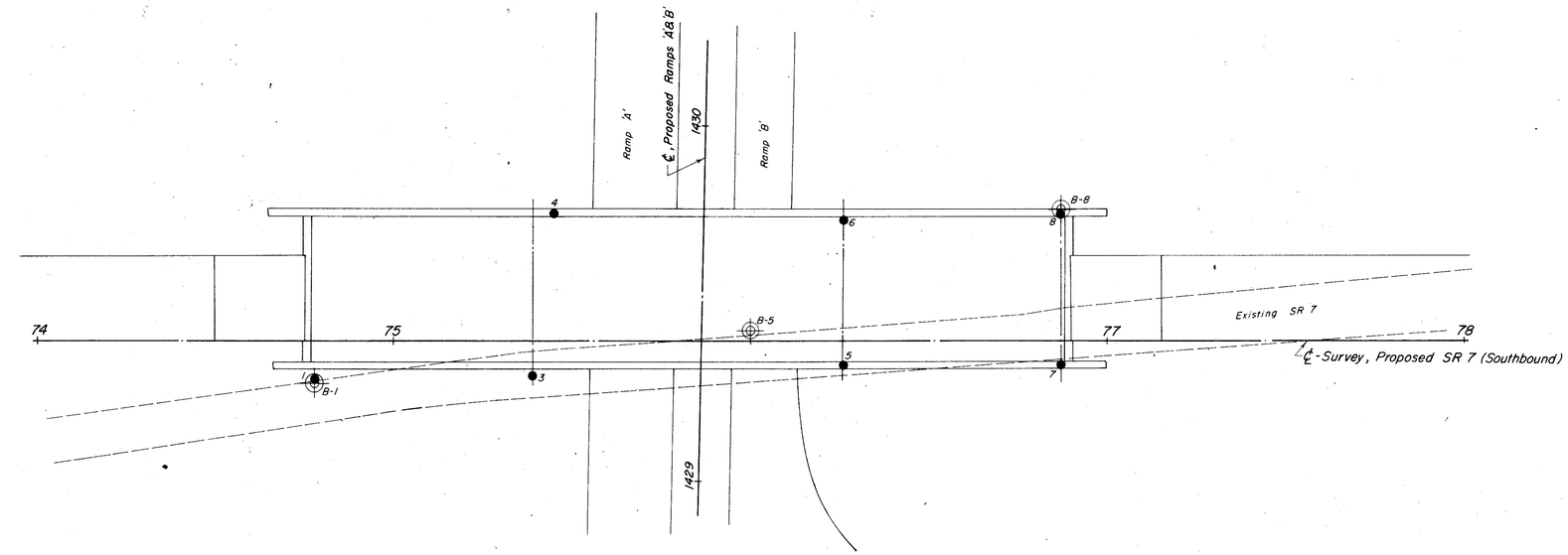

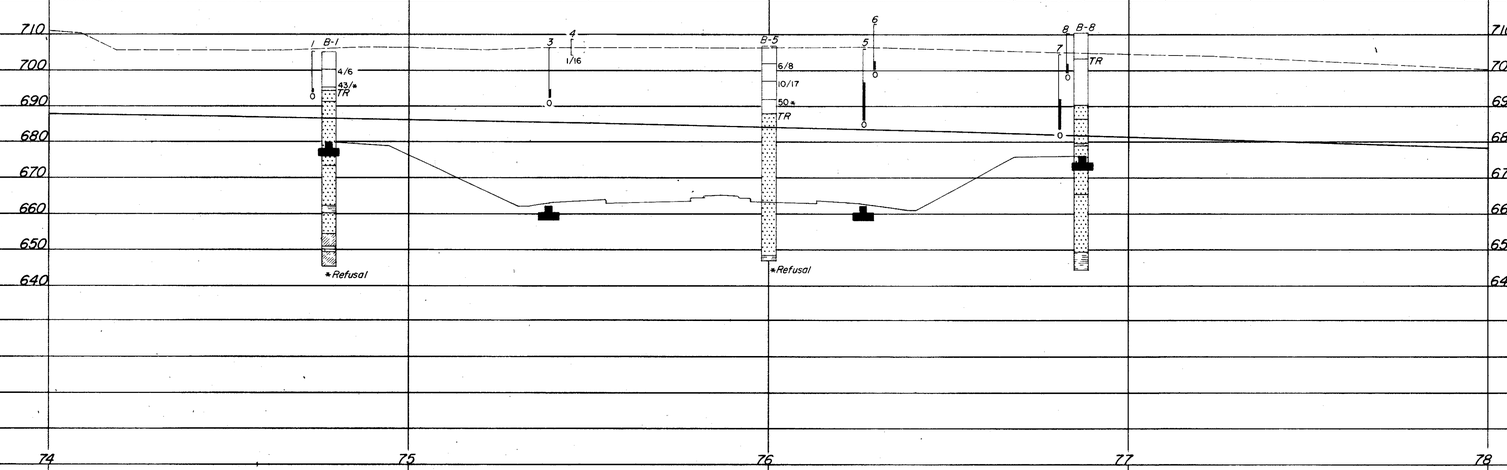

SCALE: 1" = 20'

OHIO DEPARTMENT OF HIGHWAYS
TESTING LABORATORY
1620 WEST BROAD STREET, COLUMBUS 23, OHIO

STRUCTURE FOUNDATION INVESTIGATION
BRIDGE NO. BEL-7-1848 L
OVER RAMPS 'A' & 'B'
SEC. BEL-470-5.90

PLAN AND PROFILE

DRAWN BY	CHECKED BY	REVIEWED BY	DATE
L.N.L.	L.N.L.	R.D.R.	7/12/68

TE - 122
600 - 11 - 64

PROCESSED
AUG 15 1968

LOG OF BORING

Date Started 6-19-68 | Sampler Type SS | Dia 1 3/8" | Water Elev
Date Completed 6-20-68 | Casing: Length 10' | Dia 3 1/2"
Boring No. B-1 | Station & Offset 74+78, 12' Rt. (Rear Abutment) | Surface Elev 705.2'

Elev.	Depth	Std. Pen. (N)	Rec. ft.	Loss ft.	Description	Sample No.	% Agg	% C.S.	% F.S.	% Silt	% Clay	L.L.	P.I.	W.C.	SHTL Class.
705.2	0														
	2														
	4														
700.2	6	4/6			Brownish-Gray Clay	1	0	1	2	23	74	57	25	32	A-7-5
	8														
695.2	10														
694.2		43/4			Brownish-Gray Sandy Silt	2	6	9	27	33	25	23	5	10	A-4a
	12				TOP OF ROCK										
691.2	14		3.7	0.8	Sandstone, brown, shaly, fine grained, brown clay seam at 12' & 14' micaceous, hard, thin bedding streaks. Core Loss 10%.										
	16														
	18		5.0	0.0	Sandstone, medium brown, medium to coarse grained, micaceous, 6" shaly zone at 18 feet, massive in general, some bedding streaks. No Core Loss.										
	20														
	22		5.0	0.0											
	24														
	26														
	28		5.0	0.0											
	30														
673.2	32														
	34		5.0	0.0	Sandstone, light gray, medium to coarse grained, hard, fairly dense, micaceous, few carbonaceous streaks, massive in general. No Core Loss.										
	36														
	38		5.0	0.0											
	40														
	42														
662.2	44		5.0	0.0	Shale, dark gray, hard, intact, silty dense. No Core Loss.										
660.2	46														
	48		5.0	0.0	Sandstone, shaly, light gray, carbonaceous streaks 45 to 46 feet, medium to coarse grained, micaceous. Core Loss 4%.										
	50														
654.2	52		4.7	0.3	Mudstone, gray, silty in part, some slickensides, hard, dense. Core Loss 5%.										
650.7	54														
649.2	56				Limestone, gray, hard, dense, ferruginous staining, on fractures. No Core Loss.										
	58		4.8	0.2	Mudstone, gray, nodular, hard dense, limestone nodules in crumbly zone 58' to 60'. Somewhat silty top portion. Core Loss 18%.										
645.2	60				BOTTOM OF BORING										

* Refusal

LOG OF BORING

Date Started 1-31-68 | Sampler Type SS | Dia 1 3/8" | Water Elev
Date Completed 2-1-68 | Casing: Length 19' | Dia 3 1/2"
Boring No. B-5 | Station & Offset 76+00, 3' Lt. (Forward Pier) | Surface Elev 707.0'

Elev.	Depth	Std. Pen. (N)	Rec. ft.	Loss ft.	Description	Sample No.	% Agg	% C.S.	% F.S.	% Silt	% Clay	L.L.	P	W.C.	SHTL Class.
707.0	0														
	2														
	4														
702.0	6	6/8			Brown Gravelly Clay with Coal Blossom	1	13	3	6	22	56	50	24	29	A-7-6
	8														
697.0	10	10/17			Brown Sandy Clay with Coal	2	10	4	9	34	43	34	16	19	A-6b
	12														
	14														
692.0	16	50" (0.9')			Grayish-Brown Sandy Gravelly Silt	3	28	12	14	27	19	29	7	14	A-4a
	18														
688.0	20		0.7	0.3											
	22		5.0	0.0											
	24														
	26														
	28		4.5	0.5	Sandstone, gray, firm, fine-grained, with carbonaceous laminae, cross-bedded, micaceous in part, broken and jointed. Core Loss 4%.										
	30														
	32														
	34		5.0	0.0											
	36														
	38		4.4	0.6											
	40														
	42														
	44		5.0	0.0											
	46														
	48		5.0	0.0											
	50														
	52														
	54		5.0	0.0											
	56														
648.5	58		4.9	0.1											
647.0	60				Shale, gray, firm, very arenaceous, broken and jointed. No Core Loss.										
					BOTTOM OF BORING										

*Refusal

LOG OF BORING

Date Started 6-20-68 | Sampler Type SS | Dia 1 3/8" | Water Elev
Date Completed 6-21-68 | Casing: Length 10' | Dia 3 1/2"
Boring No. B-8 | Station & Offset 76+87, 37' Lt. (Forward Abutment) | Surface Elev 710.3'

Elev.	Depth	Std. Pen. (N)	Rec. ft.	Loss ft.	Description	Sample No.	% Agg	% C.S.	% F.S.	% Silt	% Clay	L.L.	P	W.C.	SHTL Class.
710.3	0														
	2														
	4														
705.3	6	6/8			Brownish-Gray Sandy Clay	1	0	14	15	19	52	43	14	31	A-7-6
703.3	8				TOP OF ROCK										
	10		2.7	0.3	Mudstone, gray, crumbly when wet limestone nodules in top 6 feet, shaly, silty bottom 5 feet vertical fractures 16' to 19' filled with ferruginous material causing brown staining, breaks easily. Core Loss 9%.										
	12														
	14		4.7	0.3											
	16														
	18		4.3	0.7											
690.3	20														
	22		5.0	0.0	Sandstone, brownish gray, coarse grained, massive, micaceous, hard, dense, good recovery. Core Loss 2%.										
686.3	24														
	26				Sandstone, light gray, medium to coarse grained, massive and uniform in structure, hard, dense. No Core Loss.										
	28		5.0	0.0											
679.8	30														
679.0	32				Shale, medium to dark gray, fissile hard, silty. No Core Loss.										
	34		5.0	0.0	Sandstone, light brown, coarse grained dense, fairly hard, ferruginous streaks at 39' and 41', few bedding streaks, micaceous. No Core Loss.										
	36														
	38		5.0	0.0											
	40														
	42														
	44		5.0	0.0											
665.3	46														
	48		5.0	0.0	Sandstone, light gray, micaceous, medium to coarse grained, numerous carbonaceous bedding streaks, hard, dense, coarse grained 58' to 61'. No Core Loss.										
	50														
	52														
	54		5.0	0.0											
	56														
	58		5.0	0.0											
	60														
649.3	62				Siltstone, gray, hard, massive in structure, dense. No Core Loss.										
	64		6.0	0.0											
644.3	66				BOTTOM OF BORING										

OHIO DEPARTMENT OF HIGHWAYS
TESTING LABORATORY
1620 WEST BROAD STREET, COLUMBUS 23, OHIO

STRUCTURE FOUNDATION INVESTIGATION
BRIDGE NO. BEL-7-1848 L
OVER RAMPS 'A' & 'B'
SEC. BEL-470-5.90

BORING DATA

TYPED BY	CHECKED BY	REVIEWED BY	DATE
S.A.J.	L.N.L.	R.D.R.	7/12/68

TE-114
1000-9-67

25

BEL-470-5.90 4/4

Test Location No. _____
Station & Offset _____
Surface Elev. _____ Water Elev. _____
Piling _____
Hammer _____
Formula _____
Reference _____
Rod Condition _____

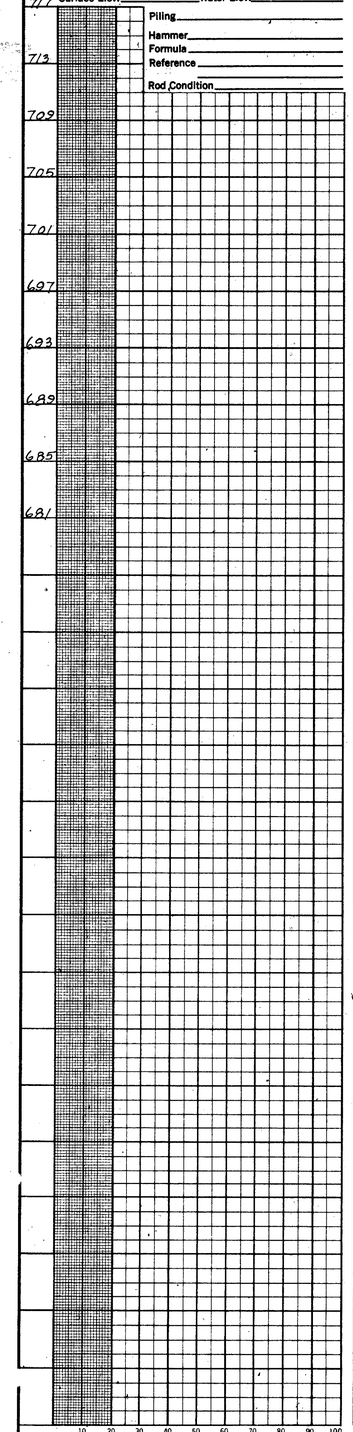

Test Location No. 1
Station & Offset 74+78.11' RT
REAR ABUTMENT
Surface Elev. 705.2' Water Elev. _____
Piling _____
Hammer _____
Formula _____
Reference _____
Rod Condition GOOD

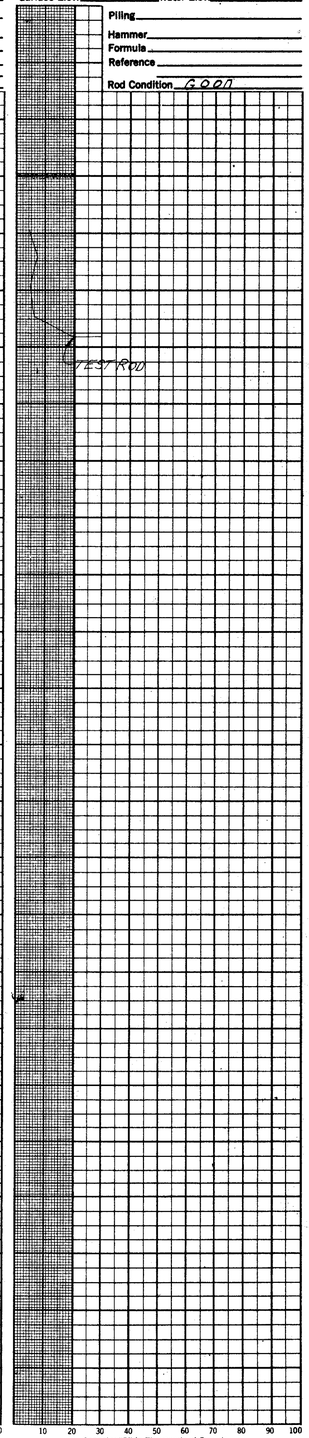

Test Location No. 3
Station & Offset 75+39.10' RT
REAR PIER
Surface Elev. 706.2' Water Elev. _____
Piling _____
Hammer _____
Formula _____
Reference _____
Rod Condition GOOD

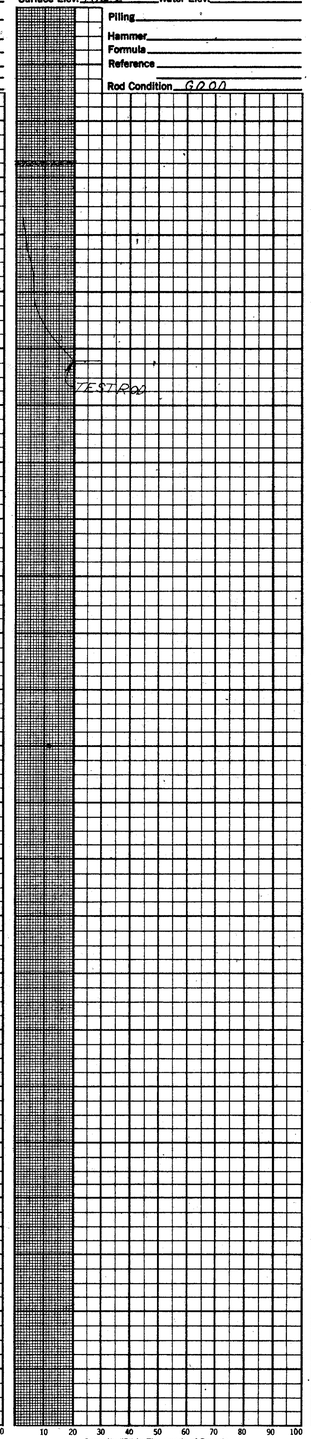

Test Location No. 4
Station & Offset 75+45.36' LT
REAR PIER
Surface Elev. 708.8' Water Elev. _____
Piling _____
Hammer _____
Formula _____
Reference _____
Rod Condition GOOD

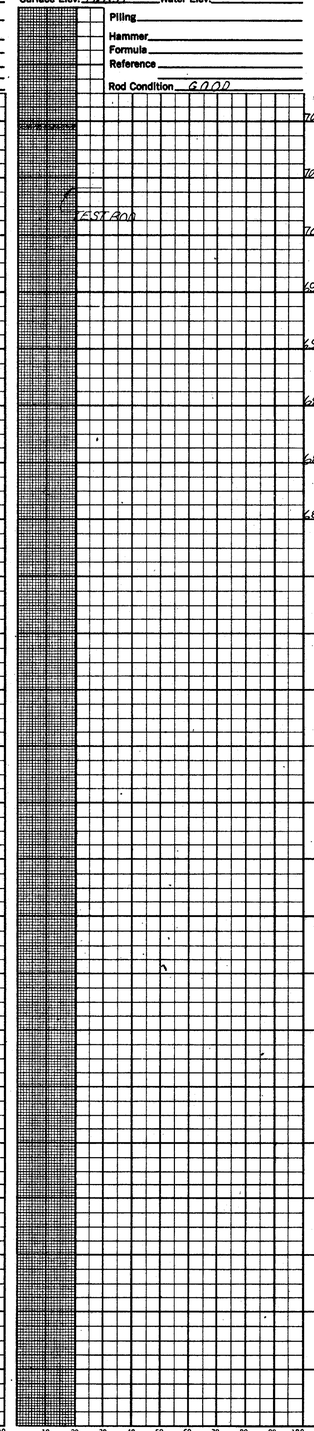

Test Location No. 5
Station & Offset 76+26.7' RT
FORWARD PIER
Surface Elev. 706.0' Water Elev. _____
Piling _____
Hammer _____
Formula _____
Reference _____
Rod Condition POINT ROD BENT

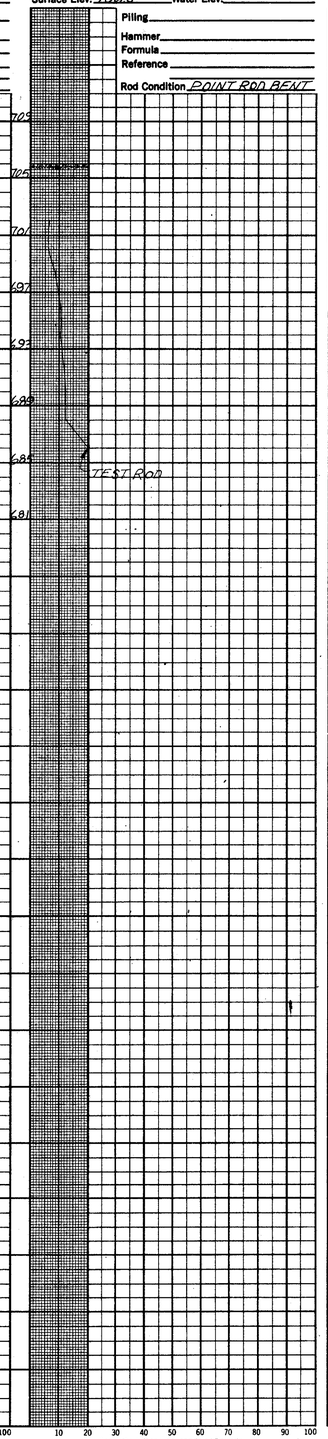

Test Location No. 6
Station & Offset 76+26.34' LT
FORWARD PIER
Surface Elev. 712.9' Water Elev. _____
Piling _____
Hammer _____
Formula _____
Reference _____
Rod Condition GOOD

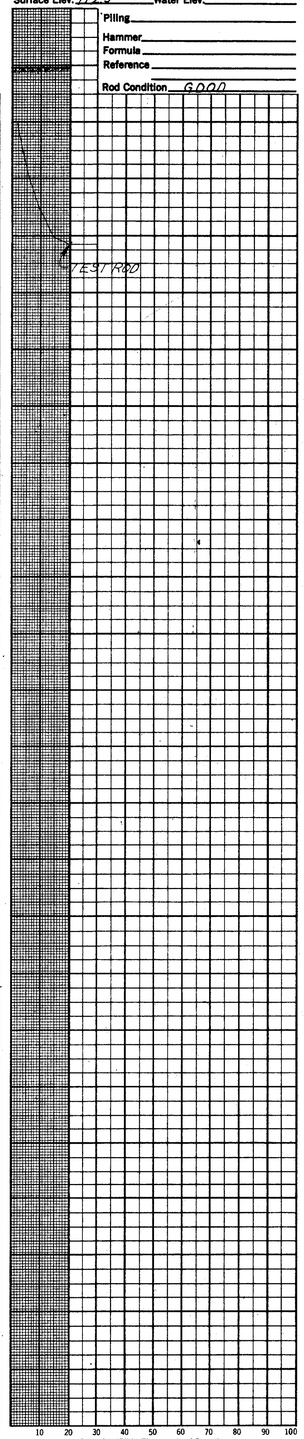

Test Location No. 7
Station & Offset 76+87.7' RT
FORWARD ABUTMENT
Surface Elev. 704.5' Water Elev. _____
Piling _____
Hammer _____
Formula _____
Reference _____
Rod Condition _____

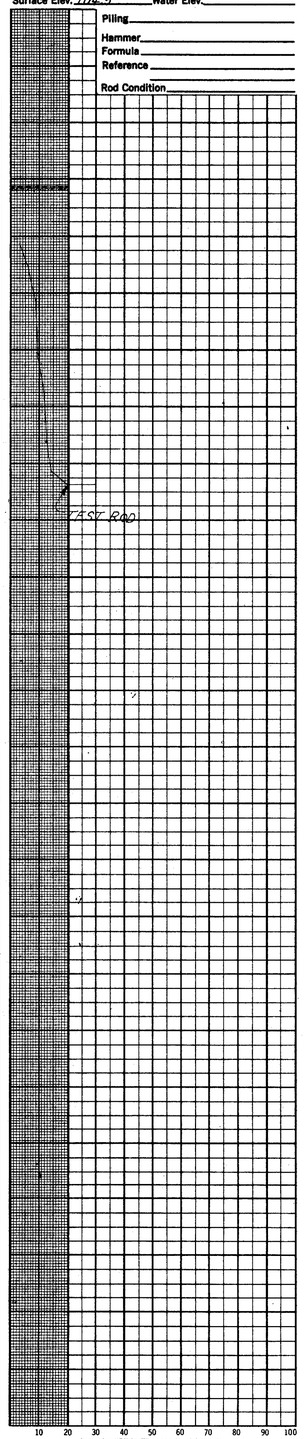

Test Location No. 8
Station & Offset 76+87.36' LT
FORWARD ABUTMENT
Surface Elev. 710.3 Water Elev. _____
Piling _____
Hammer _____
Formula _____
Reference _____
Rod Condition GOOD

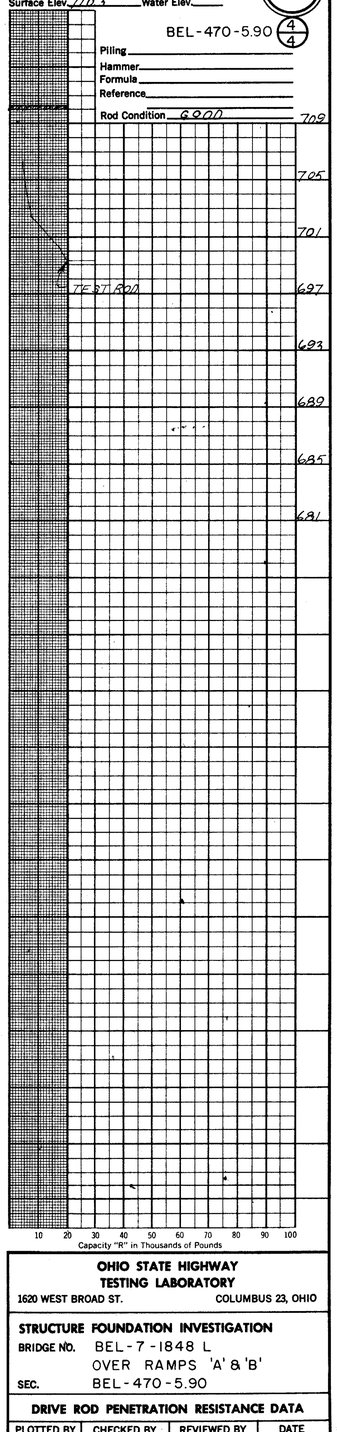

OHIO STATE HIGHWAY TESTING LABORATORY
1620 WEST BROAD ST. COLUMBUS 23, OHIO

STRUCTURE FOUNDATION INVESTIGATION
BRIDGE NO. BEL-7-1848 L
OVER RAMPS 'A' & 'B'
SEC. BEL-470-5.90

DRIVE ROD PENETRATION RESISTANCE DATA

PLOTTED BY	CHECKED BY	REVIEWED BY	DATE
R. C.	L.N.L.	R.D.R.	7/12/68

H. COLE CO. -80M-10-67-1000

TE - 118
600 - 4 - 66

RECEIVED
AUG 15 2

GEOLOGY OF THE SITE

THE STRUCTURE SITE IS LOCATED ON THE HIGHLY DISSECTED UNGLACIATED ALLEGHENY PLATEAU, ON THE NORTH VALLEY WALL OF WHISKEY RUN, IN AN AREA WHERE MODERATELY THICK RESIDUAL SOILS OVERLIE SHALE, SANDSTONE, LIMESTONE AND COAL BEDROCK, OF PENNSYLVANIAN AGE.

EXPLORATION

THE EXPLORATION CONSISTED OF THREE DRIVE SAMPLE-CORE BORINGS, MADE BETWEEN JUNE 19 AND 21, 1968, AND SIX DRIVE ROD PENETRATION TESTS, MADE ON MAY 16 AND JUNE 19, 1968.

INVESTIGATIONAL FINDINGS

BORING B-2, IN THE REAR PORTION OF THE SITE, DISCLOSED MEDIUM-DENSE SAND, SILT, GRAVEL, AND BOULDERS TO BEDROCK SURFACE, ENCOUNTERED AT 24-FOOT DEPTH, ELEVATION 642 FEET. THE BORING WAS TERMINATED AT 35-FOOT DEPTH, ELEVATION 631 FEET, AFTER PENETRATING 11 FEET OF BEDROCK. BORINGS B-5 AND B-10 DISCLOSED SOFT TO HARD CLAYS TO BEDROCK SURFACE, ENCOUNTERED AT 15 AND 21-FOOT DEPTHS, ELEVATIONS 677 AND 722 FEET. BORING B-5 WAS TERMINATED AT 26-FOOT DEPTH, ELEVATION 666 FEET, AFTER PENETRATING 11 FEET OF BEDROCK. BORING B-10 WAS TERMINATED AT 45-FOOT DEPTH, ELEVATION 698 FEET, AFTER PENETRATING 25 FEET OF BEDROCK.

ROD SOUNDINGS NUMBERS 2 AND 4 ENCOUNTERED GENERALLY MEDIUM-HIGH RESISTANCE WITH INCREASING DEPTH AND WERE TERMINATED DUE TO REFUSAL TO PENETRATION AT 24-FOOT DEPTHS, ELEVATIONS 647 AND 641 FEET, CONSIDERED TO BE ON BEDROCK SURFACE. THE REMAINING SOUNDINGS ENCOUNTERED RAPID INCREASE IN PENETRATION RESISTANCE WITH INCREASING DEPTH AND WERE TERMINATED DUE TO REFUSAL TO PENETRATION AT 5 TO 12-FOOT DEPTHS, ELEVATIONS 713 TO 683 FEET, CONSIDERED TO BE IN HARD CLAYS OR BOULDERS, AS REVEALED BY THE BORINGS.

NO FREE WATER WAS OBSERVED IN ANY OF THE ROD SOUNDING HOLES.

IF IT IS THE INTENTION TO FOUND THE CENTER PIER ON BEDROCK, IT IS CONSIDERED ADVISABLE THAT THE OPEN EXCAVATION BE INSPECTED IN THE FIELD IN ORDER TO INSURE THAT THE EXCAVATION HAS BEEN EXTENDED TO ROCK THROUGHOUT THE ENTIRE FOUNDING AREA.

UNCONFINED COMPRESSION TESTS ON SIMILAR SANDSTONE BEDROCK INDICATES A CRUSHING STRENGTH ON THE ORDER OF 150 TONS PER SQUARE FOOT.

LEGEND

- Auger Boring Location - Plan View.
- Press and / or Drive Sample and / or Core Boring Location - Plan View.
- Drive Rod Penetration Resistance Sounding Location - Plan View.
- Capped Pile
- Footing
- Footing on Pile
- TR — Top of Rock
- Horizontal Bar on Boring Log Indicates the Depth the Sample Was Taken.
- X/Y — Figures Beside the Boring Log in Profile Indicate the Number of Blows for Standard Penetration Test.
  X = Number of Blows for First 6 inches.
  Y = Number of Blows for Second 6 inches.
- Drive Rod Penetration Resistance Sounding Log - Profile
- Casing
- Resistance "R" < 10,000 lbs.
- Resistance "R" > 10,000 lbs.
- Z — Indicates Final Measurement of Penetration, in Inches.
- W — Indicates Free Water Elevation.
- Indicates Static Water Elevation.

SYMBOLS OF ROCK TYPES

- Coal
- Weathered Indurated Clay
- Indurated Clay
- Weathered Shale
- Shale
- Boulders
- Weathered Sandstone
- Sandstone
- Leached Dolomite
- Dolomite
- Leached Limestone
- Limestone

GENERAL INFORMATION

Drive Rod Penetration Sounding Tests

Drive rod penetration resistance tests constitute driving a 1.315-inch diameter steel rod, with a 45° cone point, into the ground, using a 122-pound drop-hammer with a free fall of five feet. At one or two-foot depth intervals, a measurement is taken to determine the amount of penetration achieved in three hammer drops. This reading is converted to an empirical value for capacity "R", in thousands of pounds (which is a measure of both the point resistance and frictional resistance on the rod), by using charts prepared by the Ohio Department of Highways, Bureau of Bridges, on the basis of correlation study of rod penetration with past performance of pile driving. For interpretation, a graph is prepared by plotting the value "R" against the depth at which the reading was taken, and connecting the plotted points. The curve so obtained reflects the density of subsurface materials in a manner that can be readily compared with data from similar tests at other locations on the structure site. From this comparison, the overall uniformity of subsurface condition may be evaluated.

Drive Sample Borings - Drive-Press Sample Borings

Drive sample borings are made by means of a rotary-type drill rig, employing a 2" O.D., 1-3/8" I.D. sampler, at 2-1/2 and / or 5-foot depth intervals, driven by means of a 140 - pound drop-hammer with a free fall of 30 inches. The number of blows required to drive the sampler 12 inches is considered the standard penetration test.

Drive-press sample borings are made by means of a rotary-type drill rig, employing a 2" O.D., 1-3/8" I.D. drive sampler, and 3" O.D. thin-wall press sampler. The press sampler is advanced by continuous uniform pressure, applied by the drill rig.

The boring log sheets show a graphic plot of the information obtained, including depth and elevation of the sample, number of blows for the standard penetration tests in two 6-inch increments, depth of press samples, field sample number, sample description - based on laboratory tests and the Casagrande AC classification system-and gradation, plasticity, and moisture content determinations. Results of strength and consolidation testing, if performed, appear on separate enclosures.

At depths where materials are bouldery or gravelly to the extent that the sampler can not be driven, a wash sample is procured for visual classification, in order to determine the general character of the material. These samples are not considered sufficiently representative to warrant laboratory testing.

Particle Size Definitions

Boulders	8"	Cobbles	3"	Gravel	2.0mm (No. 10 sieve)	Coarse Sand	0.42mm (No. 40 sieve)	Fine Sand	0.074mm (No. 200 sieve)	Silt	0.005mm	Clay

NOTE: Information shown by this subsurface investigation was obtained solely for the use in establishing design controls for the project. The State of Ohio does not guarantee the accuracy of this data and it is not to be construed as a part of the plans governing construction of the project.

OHIO DEPARTMENT OF HIGHWAYS
TESTING LABORATORY
1620 WEST BROAD STREET, COLUMBUS 23, OHIO

STRUCTURE FOUNDATION INVESTIGATION
BRIDGE NO. BEL-470-0615
UNDER RAMPS A & B
SEC. BEL-470-5.90

CHECKED BY	REVIEWED BY	DATE
L.N.L.	R.D.R.	7/11/68

TE - 119
1000 - 4 - 66

RECEIVED
AUG 15 2

27

BEL-470-5.90 2/4

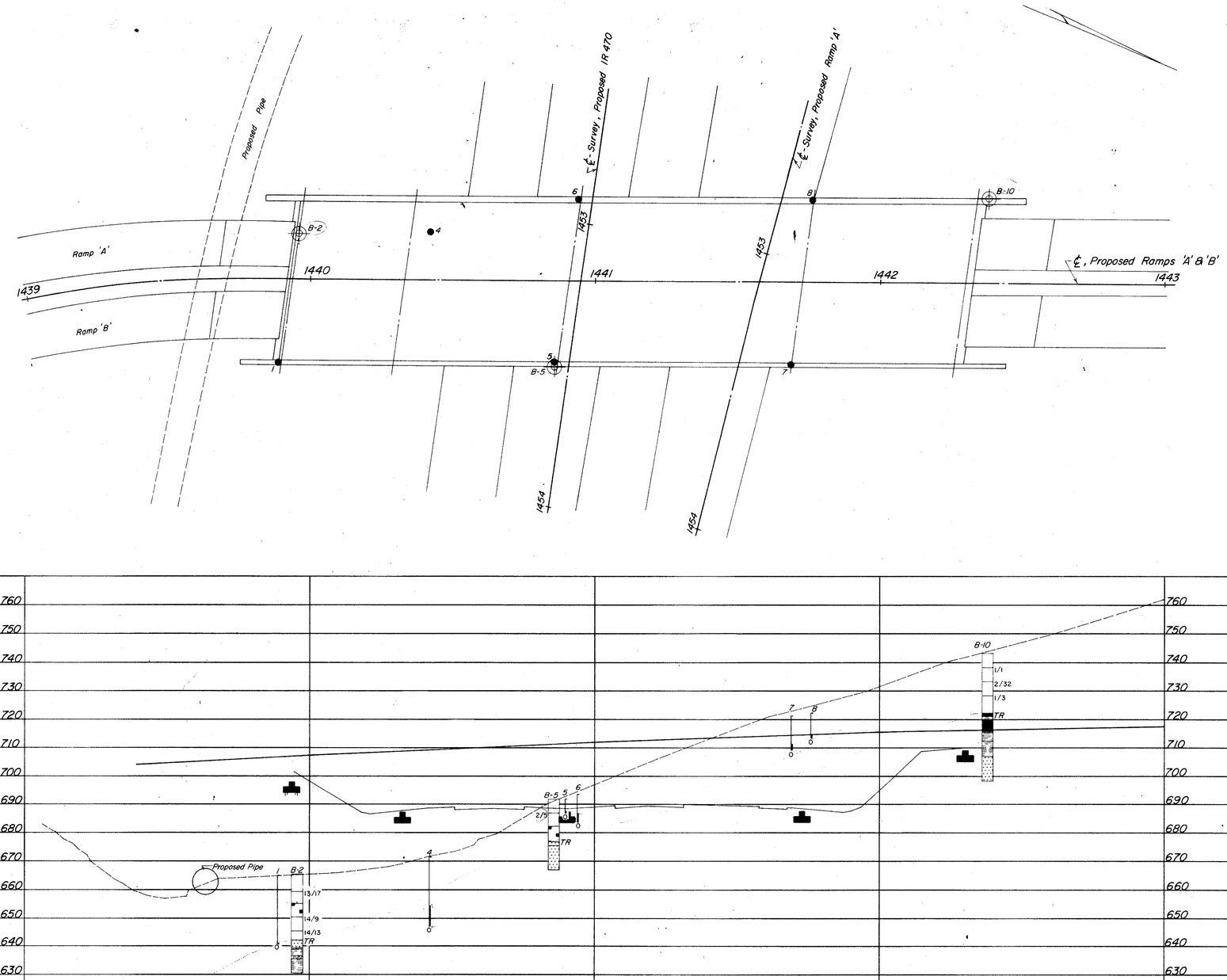

SCALE: 1" = 20'

OHIO DEPARTMENT OF HIGHWAYS TESTING LABORATORY 1620 WEST BROAD STREET, COLUMBUS 23, OHIO			
STRUCTURE FOUNDATION INVESTIGATION BRIDGE NO. BEL-470-0615 UNDER RAMPS 'A' & 'B' SEC. BEL-470-5.90			
PLAN AND PROFILE			
DRAWN BY L.N.L.	CHECKED BY L.N.L.	REVIEWED BY R.D.R.	DATE 7/11/68

TE - 122
600 - 11 - 64

28

BEL-470-5.90 3/4

LOG OF BORING

Date Started 6-19-68 | Sampler Type SS | Dia. 1 3/8"
Date Completed 6-19-68 | Casing Length 23' | Dia. 3 1/2"
Boring No. B-2 | Station & Offset 1439+96, 16' Lt. (Rear Abutment) | Water Elev. | Surface Elev. 665.5'

Elev	Depth	Std. Pen. (N)	Rec. Ft.	Loss Ft.	Description	Sample No.	% Agg.	% G	% S	% F	% Silt	% Clay	L.L.	P.I.	W.C.	AASHTO Class
665.5	0															
	2															
	4															
659.5	6	13/17			Brown Sand	1	11	62	18	9	-	NP	NP	25	A-1-b	
	8															
655.5	10				No Sample Recovered - Boulder (Driller's Description)		V	I	S	U	A	L				
	12															
650.5	14															
	16	14/9			Brown Silty Sandy Gravel	2	70	6	10	8	6	NP	NP	14	A-1-a	
	18															
645.5	20	14/13			Brown Silty Sand and Stone Fragments	3	47	13	16	11	13	25	7	10	A-2-4	
	22															
642.5	24				TOP OF ROCK											
			1.6	0.4	Sandstone, light-gray, numerous coaly bedding streaks, micaceous, medium-grained. No Core Loss.											
639.5	26															
639.0					Limestone, gray, hard, dense. No Core Loss.											
	28		2.6	2.4	Shale, silty calcareous, hard, nodular zone at 28.5 feet. Core Loss 82%.											
636.5																
635.5	30				Clay, dark-brown, soft, moist, plastic, fissile. Core Loss 35%.											
	32				Shale, silty, dark-gray, hard, fissile, sandy toward bottom of unit. No Core Loss.											
	34		5.0	0.0												
630.5					BOTTOM OF BORING											

LOG OF BORING

Date Started 6-20-68 | Sampler Type SS | Dia. 1 3/8"
Date Completed 6-20-68 | Casing Length None | Dia.
Boring No. B-5 | Station & Offset 1440+86, 30' Rt. (Center Pier) | Water Elev. | Surface Elev. 691.9'

Elev	Depth	Std. Pen. (N)	Rec. Ft.	Loss Ft.	Description	Sample No.	% Agg.	% G	% S	% F	% Silt	% Clay	L.L.	P.I.	W.C.	AASHTO Class
691.9	0															
	2															
	4															
686.9	6	2/5			Brown Silty Clay	1	6	2	5	37	50	47	20	27	A-4-7-6	
	8															
682.4	10															
	12				Brown Clay and Sandstone Boulders											
			1.6	3.9												
676.9	14															
	16				TOP OF ROCK											
675.4					Sandstone, light-brown, medium to coarse-grained, hard, angle-bedded, dark bedding streaks. No Core Loss.											
	18															
	20		5.0	0.0	Sandstone, gray, medium coarse-grained, micaceous, angle-bedded, dense, massive in part, dark bedding streaks, 7" vertical fracture 23.5 feet, yellow-brown stained to 25'. No Core Loss.											
	22															
	24		5.0	0.0												
665.9	26				BOTTOM OF BORING											

LOG OF BORING

Date Started 6-20-68 | Sampler Type SS | Dia. 1 3/8"
Date Completed 6-21-68 | Casing Length 20' | Dia. 3 1/2"
Boring No. B-10 | Station & Offset 1442+38, 30' Lt. (Forward Abutment) | Water Elev. | Surface Elev. 743.3'

Elev	Depth	Std. Pen. (N)	Rec. Ft.	Loss Ft.	Description	Sample No.	% Agg.	% G	% S	% F	% Silt	% Clay	L.L.	P.I.	W.C.	AASHTO Class
743.3	2															
	4															
738.3	6	1/1			Brownish-Gray Sandy Gravelly Clay	1	20	10	9	21	40	44	22	24	A-7-6	
	8															
733.3	10	2/32			Brownish-Gray Sandy Clay	2	4	9	9	24	54	42	18	19	A-7-6	
	12															
728.3	14	1/3			Brownish-Gray Sandy Clay	3	5	9	13	24	49	38	17	29	A-6b	
	16															
723.3	18				TOP OF ROCK											
722.3	20				Siltstone, black, hard, dense. No Core Loss.											
721.1	22				Coal, hard, blocky, good recovery. No Core Loss.											
720.1			5.0	0.0	Clay shale, soft, crumbly dark brown. No Core Loss.											
	24															
	26				Coal, good recovery, hard, blocky, marcasite in fractures. No Core Loss.											
715.6	28															
715.3			5.0	0.0	Under clay, dark brown, soft, thin-bedded. No Core Loss.											
	30															
712.3	32				Shale, silty, gray, fissile, hard, calcareous. No Core Loss.											
	34		4.8	0.2	Silt stone, gray, calcareous, crumbly somewhat nodular. Core Loss 5%.											
	36															
706.8	38		4.9	0.1	Sandstone, light gray, hard, dense, micaceous, shaly toward bottom of hole. No Core Loss.											
	40															
	42															
	44		5.0	0.0												
698.3					BOTTOM OF BORING											

OHIO DEPARTMENT OF HIGHWAYS
TESTING LABORATORY
1620 WEST BROAD STREET, COLUMBUS 23, OHIO

STRUCTURE FOUNDATION INVESTIGATION
BRIDGE NO. BEL-470-0615
UNDER RAMPS A & B
SEC. BEL-470-5.90

BORING DATA

TYPED BY	CHECKED BY	REVIEWED BY	DATE
S.A.J.	L.N.L.	R.D.R.	7/11/68

TE-114
1000-9-67

29

BEL-470-5.90 4/4

Test Location No. _____
Station & Offset _____
Surface Elev. _____ Water Elev. _____
Piling _____
Hammer _____
Formula _____
Reference _____
Rod Condition _____

Test Location No. _____
Station & Offset _____
Surface Elev. _____ Water Elev. _____
Piling _____
Hammer _____
Formula _____
Reference _____
Rod Condition _____

Test Location No. 1
Station & Offset 1439+89 29' RT
REAR ABUTMENT
Surface Elev. 664.8' Water Elev. _____
Piling _____
Hammer _____
Formula _____
Reference _____
Rod Condition GOOD

Test Location No. 4
Station & Offset 1440+42 17' LT
REAR PIER
Surface Elev. 671.6' Water Elev. _____
Piling _____
Hammer _____
Formula _____
Reference _____
Rod Condition GOOD

Test Location No. 5
Station & Offset 1440+86 29' RT
CENTER PIER
Surface Elev. 691.9' Water Elev. _____
Piling _____
Hammer _____
Formula _____
Reference _____
Rod Condition GOOD

Test Location No. 6
Station & Offset 1440+94 29' LT
CENTER PIER
Surface Elev. 693.4' Water Elev. _____
Piling _____
Hammer _____
Formula _____
Reference _____
Rod Condition GOOD

Test Location No. 7
Station & Offset 1441+69 29' RT
FORWARD PIER
Surface Elev. 721.9 Water Elev. _____
Piling _____
Hammer _____
Formula _____
Reference _____
Rod Condition _____

Test Location No. 8
Station & Offset 1441+76 29' LT
FORWARD PIER
Surface Elev. 722.3 Water Elev. _____
Piling _____
Hammer _____
Formula _____
Reference _____
Rod Condition GOOD

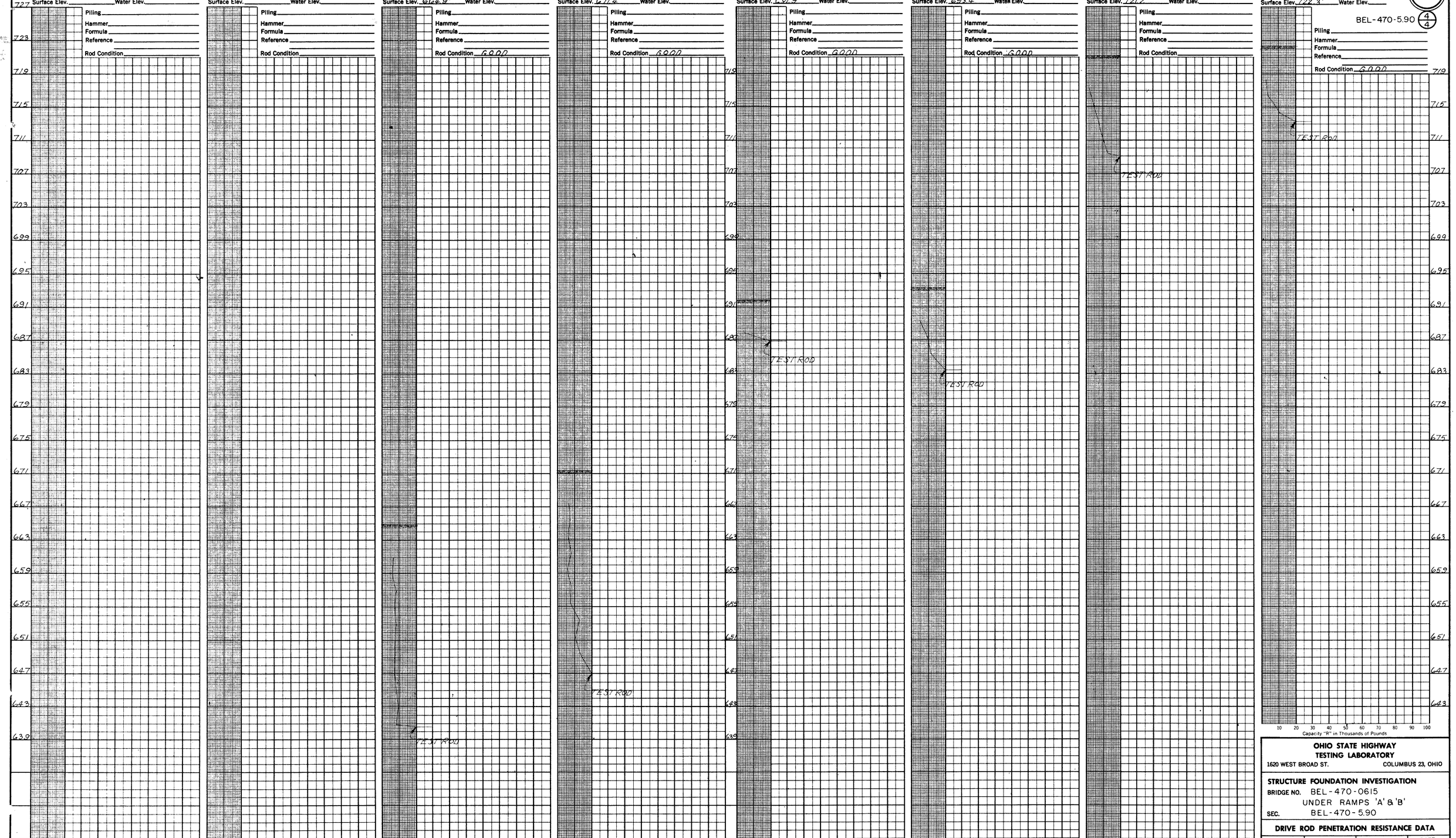

OHIO STATE HIGHWAY TESTING LABORATORY
1620 WEST BROAD ST. COLUMBUS 23, OHIO

STRUCTURE FOUNDATION INVESTIGATION
BRIDGE NO. BEL-470-0615
UNDER RAMPS 'A' & 'B'
SEC. BEL-470-5.90

DRIVE ROD PENETRATION RESISTANCE DATA

PLOTTED BY	CHECKED BY	REVIEWED BY	DATE
R.C.	L.N.L.	R.D.R.	7/11/68

H. COLE CO.-80M-10-67-1000

TE - 118
600 - 4 - 66

BELMONT COUNTY
BEL-470-5.90

590

GEOLOGY OF THE SITE

THE STRUCTURE SITE IS LOCATED ON THE TERRACED FLOODPLAIN OF THE OHIO RIVER, AT THE BASE OF THE WEST VALLEY WALL, IN AN AREA WHERE MODERATELY DEEP ALLUVIUM AND MAN-MADE FILL OVERLIES SHALE BEDROCK, OF PENNSYLVANIAN AGE.

EXPLORATION

THE EXPLORATION CONSISTED OF TWO DRIVE SAMPLE-CORE BORINGS, MADE BETWEEN JUNE 20 AND 25, 1968, AND SIX DRIVE ROD PENETRATION TESTS, MADE BETWEEN MAY 15 AND 17, 1968. ALSO INCLUDED IN THIS REPORT ARE TWO LOGS OF BORINGS MADE IN 1964 BY THE PENNSYLVANIAN DRILLING COMPANY.

INVESTIGATIONAL FINDINGS

BORINGS DISCLOSED STIFF TO HARD CLAYS AND MEDIUM-DENSE TO VERY DENSE SANDS, SILTS, AND GRAVELS TO BEDROCK SURFACE, ENCOUNTERED AT 43 AND 71-FOOT DEPTHS, ELEVATIONS 582 AND 594 FEET. THE BORINGS WERE TERMINATED AT 75 AND 90-FOOT DEPTHS, ELEVATIONS 585 AND 575 FEET, AFTER PENETRATING 10 AND 23 FEET OF BEDROCK.

ROD SOUNDINGS ENCOUNTERED INCREASING RESISTANCE TO PENETRATION WITH INCREASING DEPTH, AND WERE TERMINATED DUE TO REFUSAL AND NEAR-REFUSAL TO PENETRATION AT 26 TO 35-FOOT DEPTHS, ELEVATIONS 642 TO 630 FEET, CONSIDERED TO BE IN THE DENSE TO VERY DENSE CLAYS REVEALED BY THE BORINGS.

NO FREE WATER WAS OBSERVED IN ANY OF THE ROD SOUNDING HOLES.

LEGEND

- Boring by Pennsylvania Drilling Co. - Plan View.
- Press and / or Drive Sample and / or Core Boring Location - Plan View.
- Drive Rod Penetration Resistance Sounding Location - Plan View.
- Capped Pile
- Footing
- Footing on Pile
- TR — Top of Rock
- Horizontal Bar on Boring Log Indicates the Depth the Sample Was Taken.
- X/Y — Figures Beside the Boring Log in Profile Indicate the Number of Blows for Standard Penetration Test.
  X = Number of Blows for First 6 inches.
  Y = Number of Blows for Second 6 inches.
- Drive Rod Penetration Resistance Sounding Log - Profile
- Casing
- Resistance "R" < 10,000 lbs.
- Resistance "R" > 10,000 lbs.
- Z — Indicates Final Measurement of Penetration, in Inches.
- W — Indicates Free Water Elevation.
- Indicates Static Water Elevation.

SYMBOLS OF ROCK TYPES

- Coal
- Siltstone
- Mudstone
- Weathered Shale
- Shale
- Boulders
- Weathered Sandstone
- Sandstone
- Leached Dolomite
- Dolomite
- Leached Limestone
- Limestone

GENERAL INFORMATION

Drive Rod Penetration Sounding Tests

Drive rod penetration resistance tests constitute driving a 1.315-inch diameter steel rod, with a 45° cone point, into the ground, using a 122-pound drop-hammer with a free fall of five feet. At one or two-foot depth intervals, a measurement is taken to determine the amount of penetration achieved in three hammer drops. This reading is converted to an empirical value for capacity "R", in thousands of pounds (which is a measure of both the point resistance and frictional resistance on the rod), by using charts prepared by the Ohio Department of Highways, Bureau of Bridges, on the basis of correlation study of rod penetration with past performance of pile driving. For interpretation, a graph is prepared by plotting the value "R" against the depth at which the reading was taken, and connecting the plotted points. The curve so obtained reflects the density of subsurface materials in a manner that can be readily compared with data from similar tests at other locations on the structure site. From this comparison, the overall uniformity of subsurface condition may be evaluated.

Drive Sample Borings - Drive-Press Sample Borings

Drive sample borings are made by means of a rotary-type drill rig, employing a 2" O.D., 1-3/8" I.D. sampler, at 2-1/2 and / or 5-foot depth intervals, driven by means of a 140 - pound drop-hammer with a free fall of 30 inches. The number of blows required to drive the sampler 12 inches is considered the standard penetration test.

Drive-press sample borings are made by means of a rotary-type drill rig, employing a 2" O.D., 1-3/8" I.D. drive sampler, and 3" O.D. thin-wall press sampler. The press sampler is advanced by continuous uniform pressure, applied by the drill rig.

The boring log sheets show a graphic plot of the information obtained, including depth and elevation of the sample, number of blows for the standard penetration tests in two 6-inch increments, depth of press samples, field sample number, sample description - based on laboratory tests and the Casagrande AC classification system - and gradation, plasticity, and moisture content determinations. Results of strength and consolidation testing, if performed, appear on separate enclosures.

At depths where materials are bouldery or gravelly to the extent that the sampler can not be driven, a wash sample is procured for visual classification, in order to determine the general character of the material. These samples are not considered sufficiently representative to warrant laboratory testing.

Particle Size Definitions

Boulders	8"	Cobbles	3"	Gravel	2.0mm (No. 10 sieve)	Coarse Sand	0.42mm (No. 40 sieve)	Fine Sand	0.074mm (No. 200 sieve)	Silt	0.005mm	Clay

Revised 5/8/70

NOTE: Information shown by this subsurface investigation was obtained solely for the use in establishing design controls for the project. The State of Ohio does not guarantee the accuracy of this data and it is not to be construed as a part of the plans governing construction of the project.

OHIO DEPARTMENT OF HIGHWAYS
TESTING LABORATORY
1620 WEST BROAD STREET, COLUMBUS 23, OHIO

STRUCTURE FOUNDATION INVESTIGATION
BRIDGE NO. BEL-470-0662
OVER SR 7, PENNA. RR. & B.& O. RR.
SEC. BEL-470-5.90

CHECKED BY	REVIEWED BY	DATE
G.P.H.	G.P.H.	7/19/68

TE - 119
1000 - 4 - 66

BEL-470-5.90

31/35

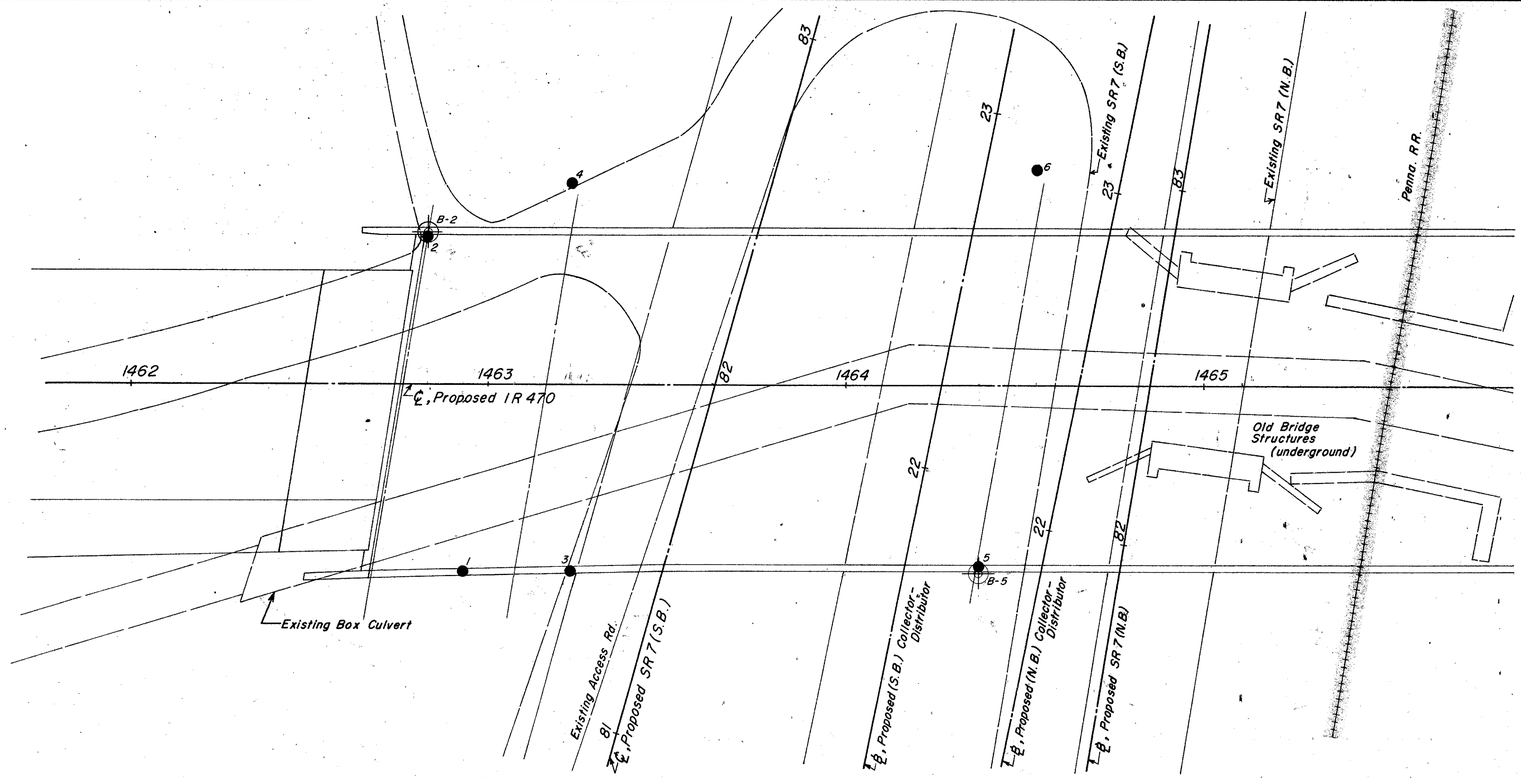

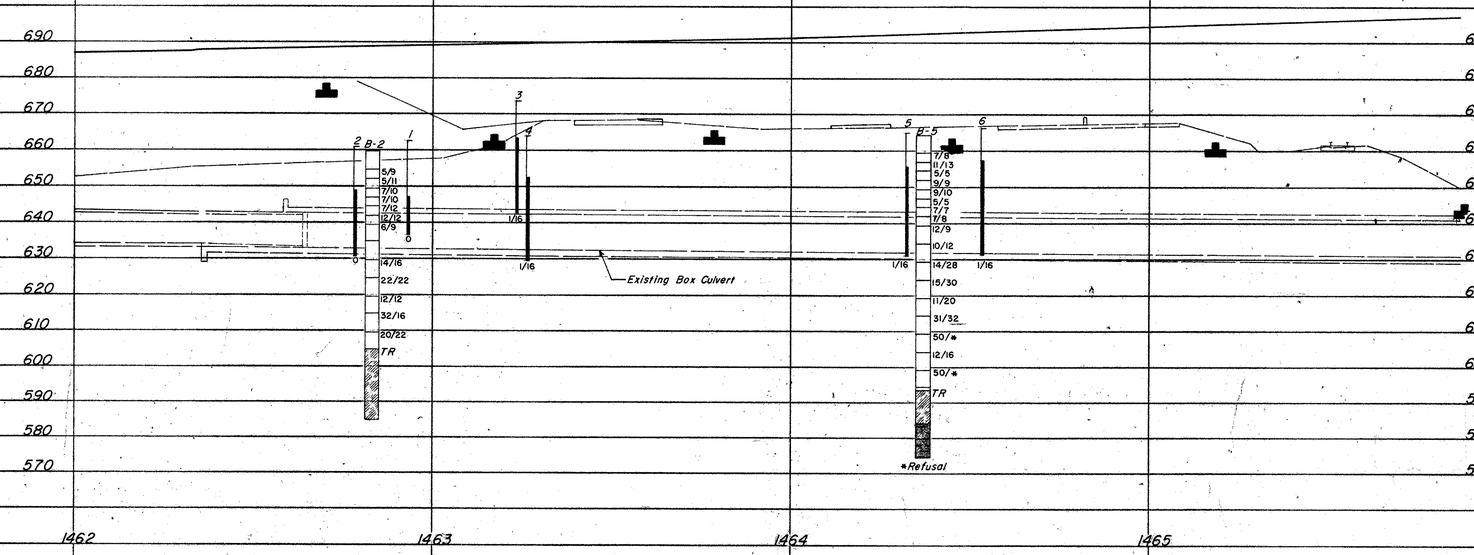

SCALE: 1" = 20'

Revised 5/8/70

OHIO DEPARTMENT OF HIGHWAYS
TESTING LABORATORY
1620 WEST BROAD STREET, COLUMBUS 23, OHIO

STRUCTURE FOUNDATION INVESTIGATION
BRIDGE NO. BEL-470-0662
OVER SR 7, PENNA. RR. & B.&O. RR.
SEC. BEL-470-5.90

PLAN AND PROFILE

DRAWN BY	CHECKED BY	REVIEWED BY	DATE
J.E.C.	G.P.H.	G.P.H.	7/19/68

TE - 119
1000 - 12- 69

BEL - 470 - 5.90

32/35

3/6

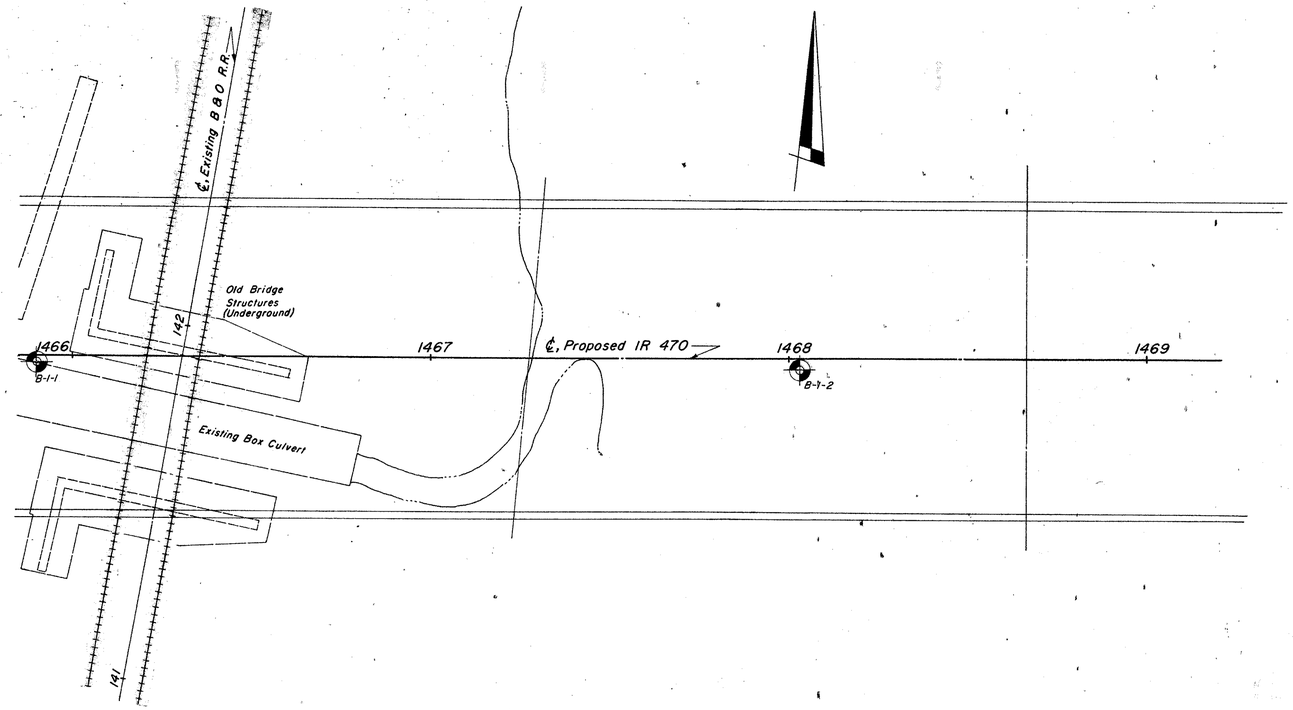

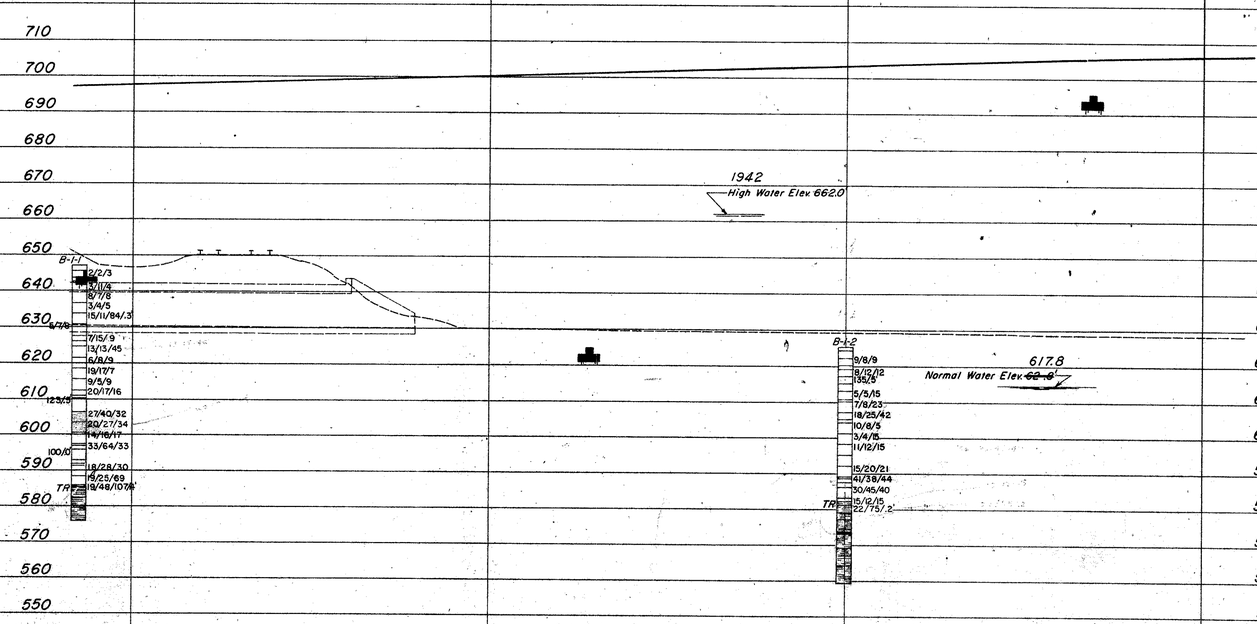

Supplement 5/8/70

OHIO DEPARTMENT OF HIGHWAYS
TESTING LABORATORY
1600 WEST BROAD STREET, COLUMBUS, OHIO 43223

STRUCTURE FOUNDATION INVESTIGATION

BRIDGE NO. BEL-470-0662
OVER SR 7, PENNA R.R. & B & O R.R.
SEC. BEL-470-5.90

PLAN AND PROFILE

SCALE: 1" = 20'

DRAWN BY	CHECKED BY	REVIEWED BY	DATE
L.L.L.	R.D.R.	G.P.H.	5/8/70

TE - 122
600 - 11 - 64

LOG OF BORING

Date Started 6-20-68 | Sampler Type SS Dia 1 3/8" | Water Elev.
Date Completed 6-25-68 | Casing: Length 50' Dia. 3 1/2"
Boring No. B-2 | Station & Offset 1462+83, 42' Lt. (Rear Abutment) | Surface Elev 659.9'

Elev.	Depth	Std. Pen. (N)	Rec. ft.	Loss ft.	Description	Sample No	% Agg	% C.S.	% F.S.	% Silt	% Clay	L.L.	P.I.	W.C.	SHTL Class
659.9	0														
	2														
	4														
654.9	6	5/9			Brownish-Gray Silt and Clay	1	0	1	11	34	54	32	12	18	A-6a
652.4	8	5/11			Brownish-Gray Silt and Clay	2	0	2	10	28	60	35	14	26	A-6a
649.9	10	7/10			Brownish-Gray Silt and Clay with Coal Blossom	3	0	4	7	25	64	36	15	21	A-6a
647.4	12	7/10			Brownish-Gray Silt and Clay with Coal Blossom	4	0	2	5	32	61	37	15	26	A-6a
644.9	14	7/12			Brownish-Gray Silt and Clay, with Coal Blossom	5	0	2	9	31	58	34	14	24	A-6a
642.4	16	12/12			Brownish-Gray Sandy Clay, with Coal Blossom	6	10	5	8	37	40	35	13	23	A-6a
639.9	18	6/9			Brown Sandy Clay, with Coal Blossom	7	9	2	10	38	41	37	14	28	A-6a
	20														
	22														
	24														
634.9	26				No Sample Recovered - Boulders (Driller's Description)	V	I		S		U	A		L	
	28														
629.9	30	14/16			Gray Silty Sandy Gravel	9	55	10	12	11	12	-	-	15	-
	32														
	34														
624.9	36	22/22			Brown Gravelly Sandy Silt	10	29	11	18	20	22	23	5	14	A-4a
	38														
619.9	40	12/12			Brown Silty Sandy Gravel	11	34	12	17	18	-	NP	NP	13	A-2-4
	42														
	44														
614.9	46	32/16			Gray Silty Sandy Gravel	12	35	18	20	12	15	NP	NP	8	A-2-4
	48														
609.9	50	20/22			Red and Gray Clayey Silt	13	0	2	2	49	47	29	9	20	A-4a
	52														
	54														
604.9	56				TOP OF ROCK										
	58		2.7	2.3											
	60														
	62														
	64		4.0	1.0	Mudstone, dark-brown, dry, crumbly, sandy, nodular in part, slightly calcareous, some slickensiding, black, clayey 74' to 75'. Core Loss 28%.										
	66														
	68		3.9	1.1											
	70														
	72		3.9	1.1											
584.9	74				BOTTOM OF BORING										

LOG OF BORING

Date Started 6-20-68 | Sampler Type SS Dia 1 3/8" | Water Elev.
Date Completed 6-25-68 | Casing: Length 60' Dia. 3 1/2"
Boring No. B-5 | Station & Offset 1464+37, 52' Rt. (Second Pier) | Surface Elev 664.6'

Elev.	Depth	Std. Pen. (N)	Rec. ft.	Loss ft.	Description	Sample No.	% Agg	% C.S.	% F.S.	% Silt	% Clay	L.L.	P.I.	W.C.	SHTL Class
664.6	0														
	2														
	4														
659.6	6	7/8			Brownish-Gray Silty Clay, with Coal Blossom	1	10	2	5	47	36	41	20	26	A-7-6
657.1	8	11/13			Brownish-Gray Gravelly Clay	2	18	2	5	26	49	41	20	23	A-7-6
654.6	10	5/5			Brown Silt and Clay	3	0	8	9	29	54	37	15	31	A-6a
652.1	12	9/9			Brownish-Gray Gravelly Clay, with Coal Blossom	4	26	3	7	26	38	39	19	24	A-6a
649.6	14	9/10			Brownish-Gray Clay, with Coal Blossom	5	5	4	6	27	58	47	23	28	A-7-6
647.1	16	5/5			Brownish-Gray Gravelly Clay, with Coal Blossom	6	28	4	10	33	25	35	15	24	A-6a
644.6	18	7/7			Brownish-Gray Gravelly Sandy Clay	7	23	10	14	20	33	-	-	24	A-6a
642.1	20	7/8			Brownish-Gray Gravelly Clay, with Coal Blossom	8	36	4	9	22	29	37	15	23	A-6a
639.6	22	12/9			Brown Sandy Gravelly Silt	9	31	12	19	21	17	26	9	14	A-4a
	24														
	26														
634.6	28	10/12			Brown Silty Gravelly Sand	10	27	12	20	21	20	29	8	13	A-4a
	30														
	32														
629.6	34	14/28			Brown Gravelly Sandy Silt	11	18	8	19	31	24	28	6	21	A-4a
	36														
	38														
624.6	40	18/24			Brown Sandy Gravelly Silt	12	28	8	19	31	22	28	5	13	A-4a
	42														
	44														
619.6	46	11/20			Brownish-Gray Gravelly Sandy Silt	13	21	10	20	27	22	27	6	10	A-4a
	48														
614.6	50	31/32			Brownish-Gray Silty Gravelly Sand	14	34	16	20	14	16	NP	NP	15	A-2-4
	52														
	54														
609.6	56	50/*			Brownish-Gray Clayey Sandy Gravel	15	51	8	14	13	14	30	11	12	A-2-6
	58														
604.6	60	12/16			Brown Sandy Silt	16	0	8	19	47	26	NP	NP	24	A-4a
	62														
	64														
599.6	66	50/*			Brown Sandy Clay	17	0	2	3	44	51	35	11	14	A-6a
	68														
594.6	70														
593.6	72				TOP OF ROCK										
	74		3.4	1.6	Mudstone, variegated highly ferruginous, crumbly, dry, fairly good recovery, nodular in part. Core Loss 5%.										
	76														
	78		1.2	3.8											
	80														
584.1	82				Siltstone, gray, hard, dense, few hard limestone nodules, silty in part. Core Loss 13%.										
	84		4.3	0.7											
	86														
	88		4.6	0.4											
574.6	90														

* Barrel | BOTTOM OF BORING

Revised 5/8/70

OHIO DEPARTMENT OF HIGHWAYS
TESTING LABORATORY
1620 WEST BROAD STREET, COLUMBUS 23, OHIO

STRUCTURE FOUNDATION INVESTIGATION
BRIDGE NO. BEL-470-0662
OVER SR 7, PENNA. RR. & B.& O. RR.
SEC. BEL-470-5.90

BORING DATA

TYPED BY	CHECKED BY	REVIEWED BY	DATE
S.A.J.	R.C.	G.P.H.	7/19/68

TE - 122
600 # 4 - 66

LOG OF BORING

Boring by Pennsylvania Drilling Company

Date Started 10-7-64 | Sampler Type SS | Dia. 1 3/8" | Water Elev.
Date Completed 10-9-64 | Casing: Length | Dia.
Boring No. B-1-1 | Station & Offset 1465+90, 2' Rt. (Fifth Pier) | Surface Elev 647.0'

Elev.	Depth	Std. Pen. (N)	Rec. ft.	Loss ft.	Description	Sample No.	% Agg.	% C.S.	% F.S.	% Silt	% Clay	L.L.	P.I.	W.C.	SHTL Class.
647.0	0														
645.5	2	2-2-3			Medium Gray and Black Silty Clay, with Some Cinders. Fill										
643.5	4														
642.5		3-11-4													
	6														
639.5	8	8-7-8													
636.5	10	3-4-5													
	12	15-11			Firm Gray Clay, with Rock and Red Brick Fragments, some Medium Slag, pieces of Steel. Miscellaneous Fill.										
633.7	14	34/13"													
630.5	16	5-7-8													
	18														
627.5	20	7-15-9													
626.0															
624.5	22	13 13-45													
	24				Loose Black and Gray Silty Sand, with Many Rock Fragments (High Blow Count Due to Rock Fragments)										
621.5	26	6-8-9													
620.0															
618.5	28	19-17-7													
	30				Compact Brownish-Gray Silty Sandy Gravel, with Some Weathered Limestone.										
615.5	32	9-5-9													
612.5	34	20 17-16													
611.0															
610.5	36	123/.5													
	38														
	40														
606.5		22 40-32													
	42														
603.5	44	20 27-34													
					Very Compact Brown and Gray Sand and Gravel, with Many Limestone Fragments.										
600.5	46	14 16-17													
	48	33													
597.5		64-33													
597.0	50	20%*													
596.0		100/.0													
	52				Compact Gray Sand, with Some Gravel, with Limestone and Sandstone Boulders.										
593.0	54	40%*													
592.0		18													
591.5	56	28-30													
	58	19			Hard Red and Gray Clay, with Many Sandstone Fragments.										
588.5		25-69													
	60														
586.0		19-48			TOP OF ROCK										
585.6	62	107/.4													
582.5	64	68%*			Very Soft Red Shale, Badly Broken, with Many Clay Seams.										
	66														
579.5	68	40%*													
					Medium Hard Red and Gray Shale, with Few Breaks.										
	70														
576.0		100%*													
					BOTTOM OF BORING										

Hole Caved in at Elevation 629.0' - 10-10-64

* % Core Recovery

LOG OF BORING

Boring by Pennsylvania Drilling Company

Date Started 8-17-64 | Sampler Type SS | Dia. 1 3/8" | Water Elev.
Date Completed 8-18-64 | Casing: Length | Dia.
Boring No. B-1-2 | Station & Offset 1468+08, 3' Rt. (Seventh Pier) | Surface Elev. 625.3'

Elev.	Depth	Std. Pen. (N)	Rec. ft.	Loss ft.	Description	Sample No.	% Agg.	% C.S.	% F.S.	% Silt	% Clay	L.L.	P.I.	W.C.	SHTL Class.
625.3	0														
624.3					Loose Brown Sand and Fine Gravel.										
	2														
622.3		9-8-9			Medium Compact Brown Silty Sand and Fine Gravel, with Some Limestone Fragments.										
	4														
620.3															
619.3	6	8-12-12													
					Medium Compact Gray Silty Sand, with Limestone Fragments.										
617.3	8	135/.5													
615.3	10														
613.3	12	5-5-15			Loose to Medium Compact Brown Silty Sand and Medium Gravel.										
610.8	14														
610.3		7-8-23													
	16														
		18													
607.3	18	25-42			Compact Brown Silty Gravelly Sand, with Some Limestone Fragments.										
605.3	20														
604.3		10-8-5													
	22				Loose Brown Silty Sandy Fine Gravel.										
601.3	24	3-4-15													
	26	11													
598.3		12-15			Medium Compact Brown Silty Sandy, Fine to Medium Gravel.										
	28														
595.3	30														
	32	15													
592.3		20-21													
	34				Compact Brown Medium Sandy Gravel.										
589.3		41													
588.8	36	38-44													
587.8		50%*													
	38	30													
585.3		45-40													
	40														
		15													
583.3	42	12-15													
582.3															
581.1	44	75/.2			TOP OF ROCK										
579.3	46	100%*													
					Soft Red and Gray Shale, Badly Broken.										
577.3	48	100%*													
573.6	50	92%*													
573.3	52														
	54				Very Soft Gray Rotten Shale, with Some Limestone Nodules Throughout.										
569.3	56	88%*													
	58														
	60				Hard Gray Fine Sandy Shale, with Few Breaks and Traces of Limestone.										
564.3		100%*													
	62														
	64														
559.3	66	96%*													
					BOTTOM OF BORING										

Hole Caved in at Elevation 621.3 feet - 8-18-64

* % Core Recovery

Supplement 5/8/70

OHIO DEPARTMENT OF HIGHWAYS
TESTING LABORATORY
1620 WEST BROAD STREET, COLUMBUS 23, OHIO

STRUCTURE FOUNDATION INVESTIGATION
BRIDGE NO. BEL-470-0662
OVER SR 7, PENNA. RR. & B.& O. RR.
SEC. BEL-470-5.90

BORING DATA

TYPED BY	CHECKED BY	REVIEWED BY	DATE
S.A.J.	R.D.R.	G.P.H.	5/8/70

35/35

BEL-470-5.90 6/6

Test Location No. _____
Station & Offset _____
Surface Elev. _____ Water Elev. _____
Piling _____
Hammer _____
Formula _____
Reference _____
Rod Condition _____

Test Location No. _____
Station & Offset _____
Surface Elev. _____ Water Elev. _____
Piling _____
Hammer _____
Formula _____
Reference _____
Rod Condition _____

Test Location No. 1
Station & Offset 1462+93.52' RT REAR ABUTMENT
Surface Elev. 662.6' Water Elev. _____
Piling _____
Hammer _____
Formula _____
Reference _____
Rod Condition GOOD

Test Location No. 2
Station & Offset 1462+83.42' LT REAR ABUTMENT
Surface Elev. 660.9' Water Elev. _____
Piling _____
Hammer _____
Formula _____
Reference _____
Rod Condition POINT ROD BENT

Test Location No. 3
Station & Offset 1463+23.52' RT FIRST PIER
Surface Elev. 673.5' Water Elev. _____
Piling _____
Hammer _____
Formula _____
Reference _____
Rod Condition GOOD

Test Location No. 4
Station & Offset 1463+23.56' LT FIRST PIER
Surface Elev. 662.0' Water Elev. _____
Piling _____
Hammer _____
Formula _____
Reference _____
Rod Condition POINT ROD BENT

Test Location No. 5
Station & Offset 1464+37.50' RT SECOND PIER
Surface Elev. 665.0' Water Elev. _____
Piling _____
Hammer _____
Formula _____
Reference _____
Rod Condition GOOD

Test Location No. 6
Station & Offset 1464+53.60' LT SECOND PIER
Surface Elev. 666.3' Water Elev. _____
Piling _____
Hammer _____
Formula _____
Reference _____
Rod Condition POINT ROD BENT

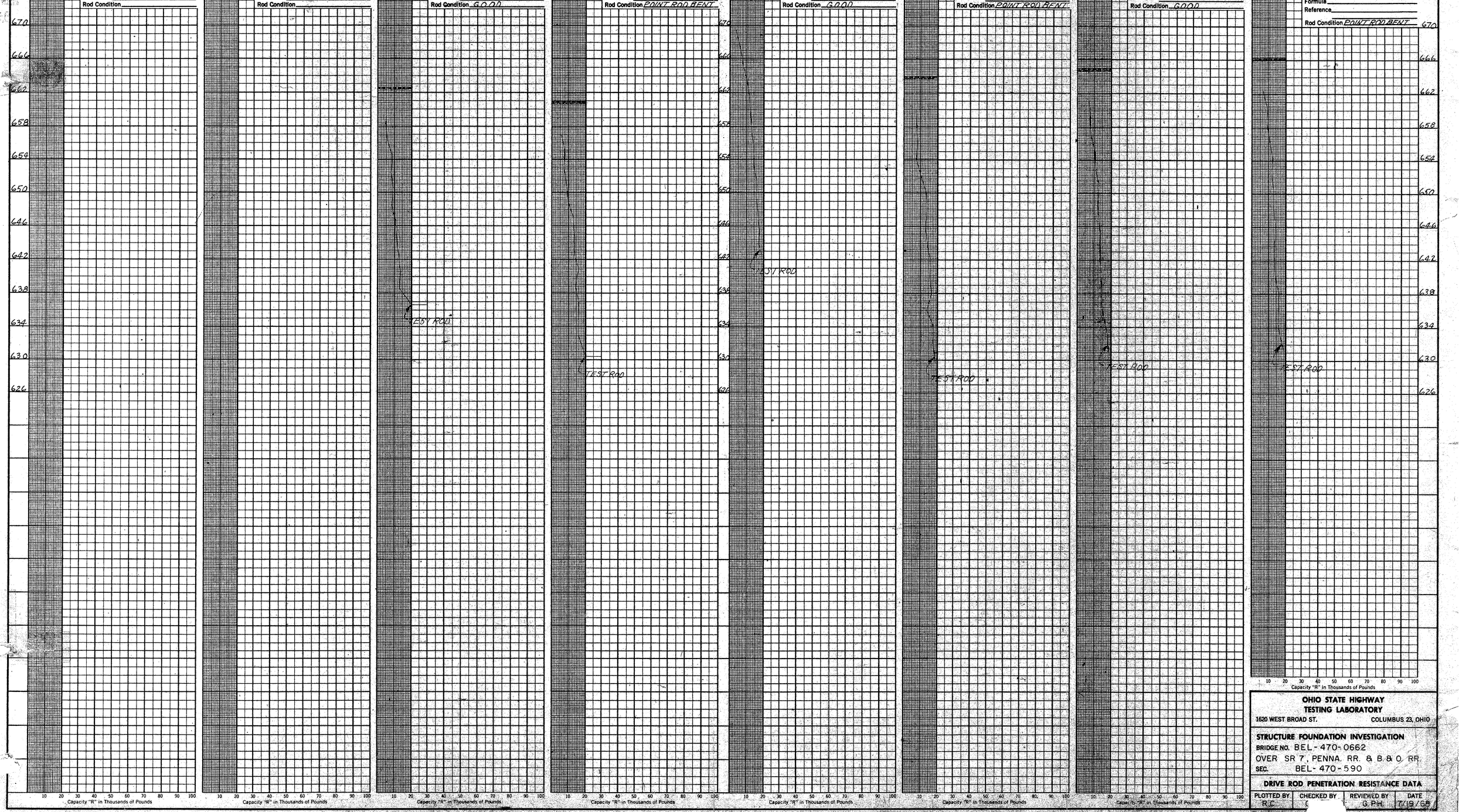

OHIO STATE HIGHWAY TESTING LABORATORY
1620 WEST BROAD ST. COLUMBUS 23, OHIO

STRUCTURE FOUNDATION INVESTIGATION
BRIDGE NO. BEL-470-0662
OVER SR 7, PENNA. RR. & B.&O. RR.
SEC. BEL-470-590

DRIVE ROD PENETRATION RESISTANCE DATA

PLOTTED BY	CHECKED BY	REVIEWED BY	DATE
R.C.		G.P.H.	7/19/68

Revised 5/

COLE CO.-RDM-10-47-1000