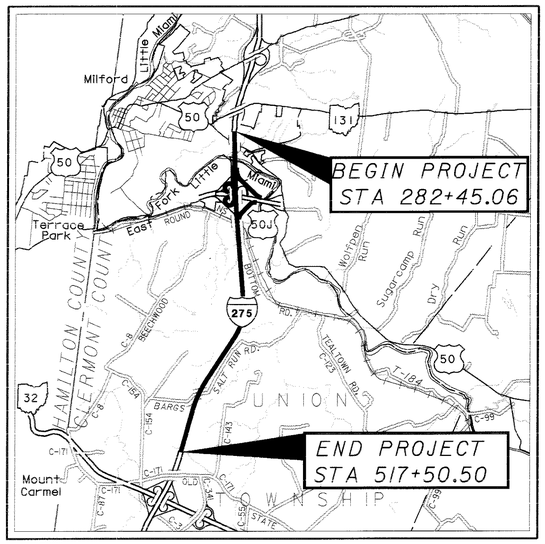

LOCATION MAP

LATITUDE: 39°09'55" LONGITUDE: 84°16'00"

SCALE IN MILES

0 1 2 3 4

N

PORTION TO BE IMPROVED _____

INTERSTATE & DIVIDED HIGHWAY _____

UNDIVIDED STATE & FEDERAL ROUTES _____

OTHER ROADS _____

DESIGN DESIGNATION I.R. 275 T.R. 211

CURRENT ADT (2002)	71040	710
DESIGN YEAR ADT (2022)	83460	1880
DESIGN HOURLY VOLUME (2022)	7928	226
DIRECTIONAL DISTRIBUTION	59%	55%
TRUCKS (24 HOUR B&C)	9%	3%
DESIGN SPEED	70 MPH	25 MPH
LEGAL SPEED	65 MPH	25 MPH

DESIGN FUNCTIONAL CLASSIFICATION -
IR-275 URBAN INTERSTATE
T.R. 211 RURAL LOCAL ROAD

DESIGN EXCEPTIONS:

NONE

UNDERGROUND UTILITIES
TWO WORKING DAYS
BEFORE YOU DIG
CALL 1-800-362-2764 (TOLL FREE)
OHIO UTILITIES PROTECTION SERVICE
NON-MEMBERS
MUST BE CALLED DIRECTLY

PLAN PREPARED BY:

BALKE ENGINEERS
1848 Summit Road
Cincinnati, Ohio 45237

Balke Engineers Project No. 9908

CLE-IR 275-5.35
020002
DIST 08
PID# 12436
01/23/02

STATE OF OHIO
DEPARTMENT OF TRANSPORTATION

CLE-275-5.35

UNION TOWNSHIP

CLERMONT COUNTY

INDEX OF SHEETS:

Title Sheet	1	Ramps A, C, D, G, H Plans	345-355
Schematic Plan	2-5	Bargs Salt Run (T.R. 211) Plan & Profile	356-359
Typical Sections	6-25	Storm Sewer Details	360-378, 378A
General Notes	26-34	Traffic Control	379-423
Maintenance of Traffic	35-209	I.R. 275 Cross Sections	424-589
General Summary	210-213	T.R. 211 Cross Sections	590-594
Sub-Summaries	214-239	Drive Cross Sections	595-596
Underdrain Details	240	Slide Area Cross Sections	597-607
Roadway Details	241	U.S.R. 50J Cross Sections	608-612
Superelevation Tables	242-245	Lighting	613-629
Storm Water Pollution Prevention Plan	246-256	Structures over 20'	630-818, *
Northbound I.R. 275 Plan & Profile Plan	257-306	Fence Plans	819-853
Southbound I.R. 275 Plan & Profile	307-340	Right of Way Plans	854-857
U.S.R. 50J Plans	341-344		

SHEETS NOT USED: 753-757

* ADDITIONAL SHEETS USED: 650A, 668A, 668A, 689A, 689B, 786A, 800A

ODOT ENGINEERS SEAL:	ENGINEERS SEAL:	ENGINEERS SEAL:	ENGINEERS SEAL:	ENGINEERS SEAL:
FOR SHEETS 668A, 689A, 689B	FOR ENTIRE PLAN EXCEPT STRUCTURES OVER 20 FT, LIGHTING, T.R. 211 BRIDGE PLANS, RIGHT-OF-WAY	FOR STRUCTURES OVER 20 FT, EXCEPT T.R. 211 BRIDGE PLAN SHEETS 802-818	FOR T.R. 211 BRIDGE PLAN SHEETS 802-818	FOR LIGHTING PLAN SHEETS 613-629
R. SCOTT KRAMER, JR. E-60504 REGISTERED PROFESSIONAL ENGINEER	ASVIN MANDADI 64089 REGISTERED PROFESSIONAL ENGINEER	MICHAEL R. STURDEVANT E-48664 REGISTERED PROFESSIONAL ENGINEER	MATTHEW J. LAWLER 65508 REGISTERED PROFESSIONAL ENGINEER	JOHN G. SCHALLERT 62718 REGISTERED PROFESSIONAL ENGINEER
SIGNED: [signature]	SIGNED: [signature]	SIGNED: [signature]	SIGNED: [signature]	SIGNED: [signature]
DATE: 08/06/01	DATE: 08/22/2001	DATE: 6/22/01	DATE: 06-15-01	DATE: 06-20-01

STANDARD CONSTRUCTION DRAWINGS

BP-3.1	7-28-00	RM-1.1	4-29-99			MT-35.10	4-20-01	TC-7.65	1-19-01	SUPPLEMENTAL SPECIFICATIONS	
BP-5.1	7-28-00	RM-4.3M	10-21-97	AS-1-81	9-15-94	MT-95.30M	4-25-94	TC-7.65	1-19-01		
BP-9.1	7-28-00	RM-4.4M	10-21-97	BR-1	1-6-99	MT-95.40M	4-25-94	TC-9.30	1-19-01		
		RM-4.5M	10-21-97	GSD-1-96	2-12-97	MT-98.12M	6-24-93	TC-12.30	1-19-01	SS806	9-9-97
F-1.1	7-28-00			PCB-91	7-6-99	MT-98.13M	6-24-93	TC-18.26M	2-1-94	SS815	5-30-96
F-2.1	7-28-00	CB-1.1M	7-12-95			MT-98-14M	6-24-93	TC-21.10	1-19-01	SS816	4-21-97
F-3.1	7-28-00	CB-2.1M	7-12-95			MT-98.15M	6-24-93	TC-21.20	1-19-01	SS830	10-21-98
F-3.3	7-28-00	CB-3.1M	7-12-95			MT-98.16M	6-24-93	TC-22.10	1-19-01	SS842	1-6-99
F-3.4	7-28-00	CB-3.3M	7-12-95	HL-10.11M	5-1-95	MT-98.17M	4-25-94	TC-22.20	1-19-01	SS846	9-9-97
				HL-10.12M	5-1-95	MT-98.18M	4-25-94	TC-31.21M	3-31-94	SS858	11-7-00
GR-1.1M	10-21-97	HW-2.1M	7-12-95	HL-10.13M	5-1-95	MT-98.19M	3-01-96	TC-32.10M	3-31-94	SS863	10-12-99
GR-1.2M	1-3-96	HW-2.2M	7-12-95	HL-10.31M	3-31-95	MT-99.20M	1-30-95	TC-32.11M	3-31-94	SS870	8-10-99
GR-1.3M	11-30-94			HL-20.11M	3-31-95	MT-101.20M	3-01-96	TC-41.10	1-19-01	SS877	4-13-99
GR-2.1M	4-14-98	I-2.1M	4-14-98	HL-20.21M	8-31-94	MT-101.60M	4-25-94	TC-41.20	1-19-01	SS894	10-12-99
GR-3.1M	10-21-97			HL-30.11M	3-31-95	MT-102.10M	1-30-95	TC-42.10	1-19-01	SS899	10-21-98
GR-3.2M	10-21-97	MH-1.2M	9-6-95	HL-30.21M	5-1-95	MT-102.20M	1-30-95	TC-42.20M	3-31-94	SS905	4-1-98
GR-3.5M	10-21-97			HL-30.22M	3-31-95	MT-105.10M	4-25-94	TC-51.11	9-30-94	SS906	5-5-98
GR-4.1M	11-30-94	DM-1.1M	10-21-97	HL-30.31M	5-1-95	MT-105.11M	4-25-94	TC-51.12M	3-31-94	SS907	10-21-98
GR-4.2M	10-21-97	DM-1.2M	10-21-97	HL-30.32M	8-14-96	MT-120.00	3-01-00	TC-52.10M	7-29-94	SS908	3-28-00
GR-4.3M	10-21-97	DM-4.1M	6-30-95					TC-52.20M	7-29-94	SS910	7-28-98
GR-4.4M	11-30-94	DM-4.3	4-29-99					TC-61.10	1-19-01	SS954	9-9-97
GR-5.1M	4-21-95	DM-4.4	4-29-99	HL-40.10M	3-31-95			TC-65.11M	11-1-95		
GR-5.2M	11-30-94			HL-50.11M	3-31-95			TC-65.12M	11-1-95	SPECIAL PROVISIONS	
GR-5.3M	11-30-94			HL-60.11M	5-1-95			TC-65.13M	11-3-93	NWP #14	7-13-01
GR-6.1M	1-3-96			HL-60.12M	3-31-95			TC-72.20	1-19-01		
GR-6.2M	1-3-96			HL-60.21M	3-31-95			TC-73.10	1-19-01	401 W&C	10-15-01
				HL-60.31M	3-31-95						

PROJECT DESCRIPTION

THIS IMPROVEMENT IS ESPECIALLY DESIGNED TO ACCOMODATE GROWING TRAFFIC VOLUMES BY ADDING A 12' MEDIAN LANE AND A 12' MEDIAN SHOULDER TO BOTH NORTH AND SOUTH BOUND LANES, RESURFACING OF THE ENTIRE MAINLINE, AND RESURFACING OF RAMPS A,C,D,G, & H AT THE US50J INTERCHANGE. DRAINAGE FACILITIES IN THE MEDIAN WILL BE REVISED. ALL GUARDRAIL, FENCING, SIGNS AND SUPPORTS SHALL BE RE-PLACED. THE US-50J INTERCHANGE RAMPS SHALL HAVE ALL NEW LIGHTING INSTALLED. EXISTING MAINLINE BRIDGES TO BE WIDENED IN THE MEDIAN AND CONCRETE DECK TO BE REPLACED. THE BRIDGE ON TR211 WILL BE JACKED TO MEET VERTICAL CLEARANCES OVER I-275.

LIMITED ACCESS

THIS IMPROVEMENT IS ESPECIALLY DESIGNED FOR THROUGH TRAFFIC AND HAS BEEN DECLARED A LIMITED ACCESS HIGHWAY OR FREEWAY BY ACTION OF THE DIRECTOR IN ACCORDANCE WITH THE PROVISIONS OF SECTION 5511.02 OF THE OHIO REVISED CODE.

1997 SPECIFICATIONS

THE STANDARD SPECIFICATIONS OF THE STATE OF OHIO, DEPARTMENT OF TRANSPORTATION, INCLUDING CHANGES AND SUPPLEMENTAL SPECIFICATIONS LISTED IN THE PROPOSAL SHALL GOVERN THIS IMPROVEMENT.

I HEREBY APPROVE THESE PLANS AND DECLARE THAT THE MAKING OF THIS IMPROVEMENT WILL NOT REQUIRE THE CLOSING TO TRAFFIC OF THE HIGHWAY AND THAT PROVISIONS FOR THE MAINTENANCE AND SAFETY OF TRAFFIC WILL BE AS SET FORTH ON THE PLANS AND ESTIMATES.

UNDER AUTHORITY OF SECTION 4511.21, DIVISION (I) OF THE OHIO REVISED CODE, THE REVISED PRIMA FACIE SPEED LIMITS AS INDICATED HEREIN ARE DETERMINED TO BE REASONABLE AND SAFE, AND ARE HEREBY ESTABLISHED FOR THE DURATION OF THIS PROJECT. THE PRIMA FACIE SPEED LIMIT OR LIMITS HEREBY ESTABLISHED SHALL BECOME EFFECTIVE WHEN APPROPRIATE SIGNS GIVING NOTICE THEREOF ARE ERECTED.

APPROVED [signature]

DATE 8/16/01 DISTRICT DEPUTY DIRECTOR

APPROVED Gordon Proctor Jr.

DATE 10-12-01 DIRECTOR, DEPARTMENT OF TRANSPORTATION

FEDERAL PROJECT NO. TE21 GOIO (597)

PID NO. 12436

CONSTRUCTION PROJECT NO.

RAILROAD INVOLVEMENT NORFOLK SOUTHERN RR

CLE-275-5.35

1-857

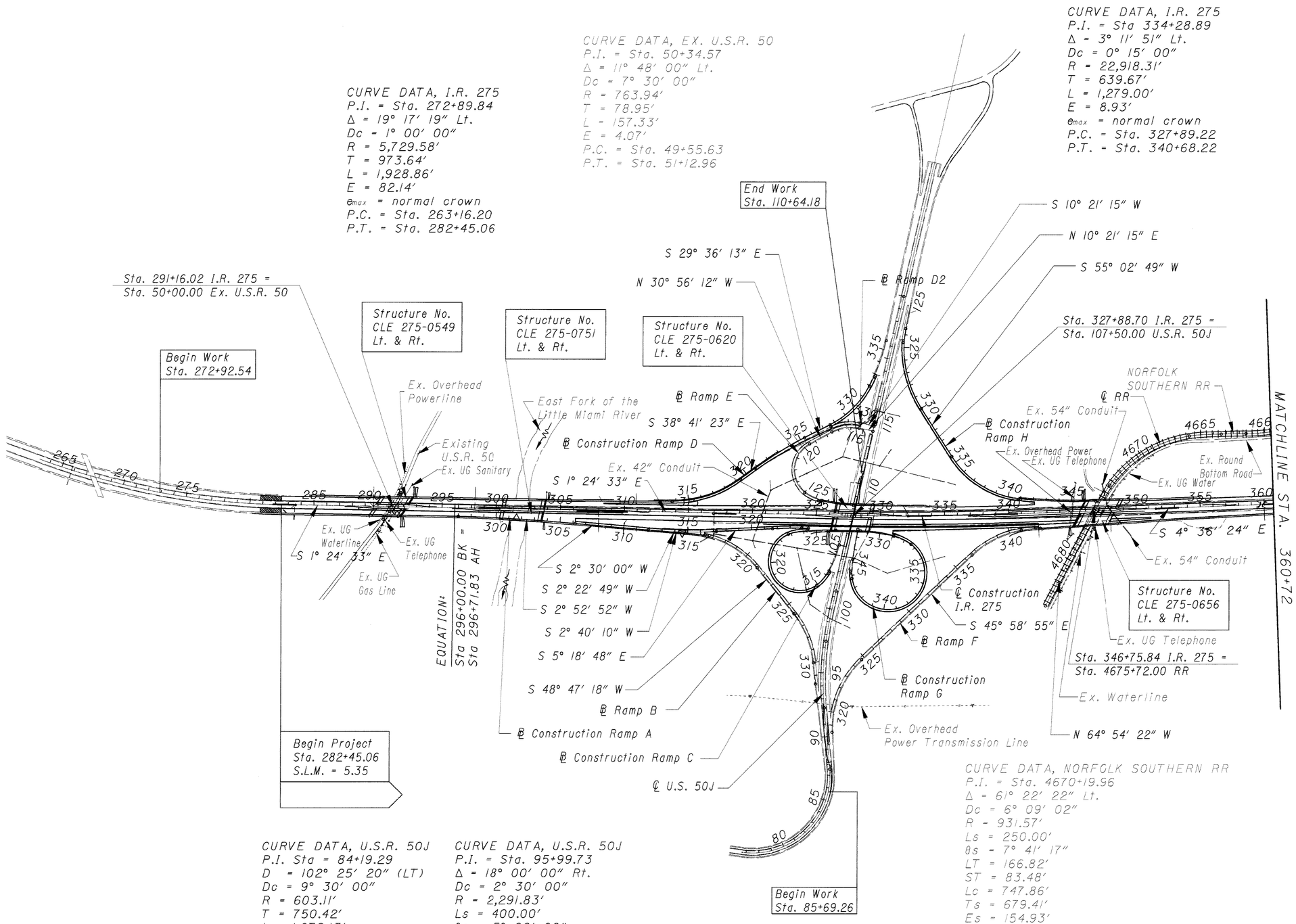

CURVE DATA, U.S.R. 50J
P.I. Sta = 84+19.29
D = 102° 25′ 20″ (LT)
Dc = 9° 30′ 00″
R = 603.11′
T = 750.42′
L = 1,078.13′
E = 359.63′
PC Sta. 76+68.87
PT Sta. 87+46.99

CURVE DATA, U.S.R. 50J
P.I. = Sta. 95+99.73
Δ = 18° 00′ 00″ Rt.
Dc = 2° 30′ 00″
R = 2,291.83′
Ls = 400.00′
θs = 5° 00′ 00″
LT = 266.77′
ST = 133.43′
Lc = 520.00′
T1 = 372.40′
T2 = 553.99′
P.C. = Sta. 92+27.33
C.S. = Sta. 97+47.33
S.T. = Sta. 101+47.33

For Ramp Curve Data see sheet no. 5

CURVE DATA, NORFOLK SOUTHERN RR
P.I. = Sta. 4670+19.96
Δ = 61° 22′ 22″ Lt.
Dc = 6° 09′ 02″
R = 931.57′
Ls = 250.00′
θs = 7° 41′ 17″
LT = 166.82′
ST = 83.48′
Lc = 747.86′
Ts = 679.41′
Es = 154.93′
T.S. = Sta. 4663+40.55
S.C. = Sta. 4665+90.55
C.S. = Sta. 4673+38.41
S.T. = Sta. 4675+88.41

HORIZONTAL SCALE IN FEET
0 200 400 800

CALCULATED JCB
CHECKED AM

SCHEMATIC PLAN
STA. 280+00.00 TO STA. 360+72.00

CLE-275-5.35

CURVE DATA, I.R. 275

P.I. = Sta. 378+04.87
Δ = 0° 00′ 56″ Rt.
NO CURVE

P.I. = Sta 406+84.38
Δ = 17° 49′ 07″ Rt.
Dc = 1° 27′ 42″
R = 3,920.00′
T = 614.51′
L = 1,219.10′
E = 47.87′
e_{max} = 0.0608
P.C. = Sta. 400+69.87
P.C.C. = Sta. 412+88.97

P.I. = Sta 416+06.90
Δ = 9° 29′ 06″ Rt.
Dc = 1° 29′ 42″
R = 3,832.29′
T = 317.94′
L = 634.42′
E = 13.17′
e_{max} = 0.0608
P.C.C. = Sta. 412+88.97
P.C.C. = Sta. 419+23.39

P.I. = Sta 422+88.15
Δ = 10° 18′ 30″ Rt.
Dc = 1° 25′ 01″
R = 4,043.83′
T = 364.76′
L = 727.55′
E = 16.42′
e_{max} = 0.0608
P.C.C. = Sta. 419+23.39
P.T. = Sta. 426+50.94

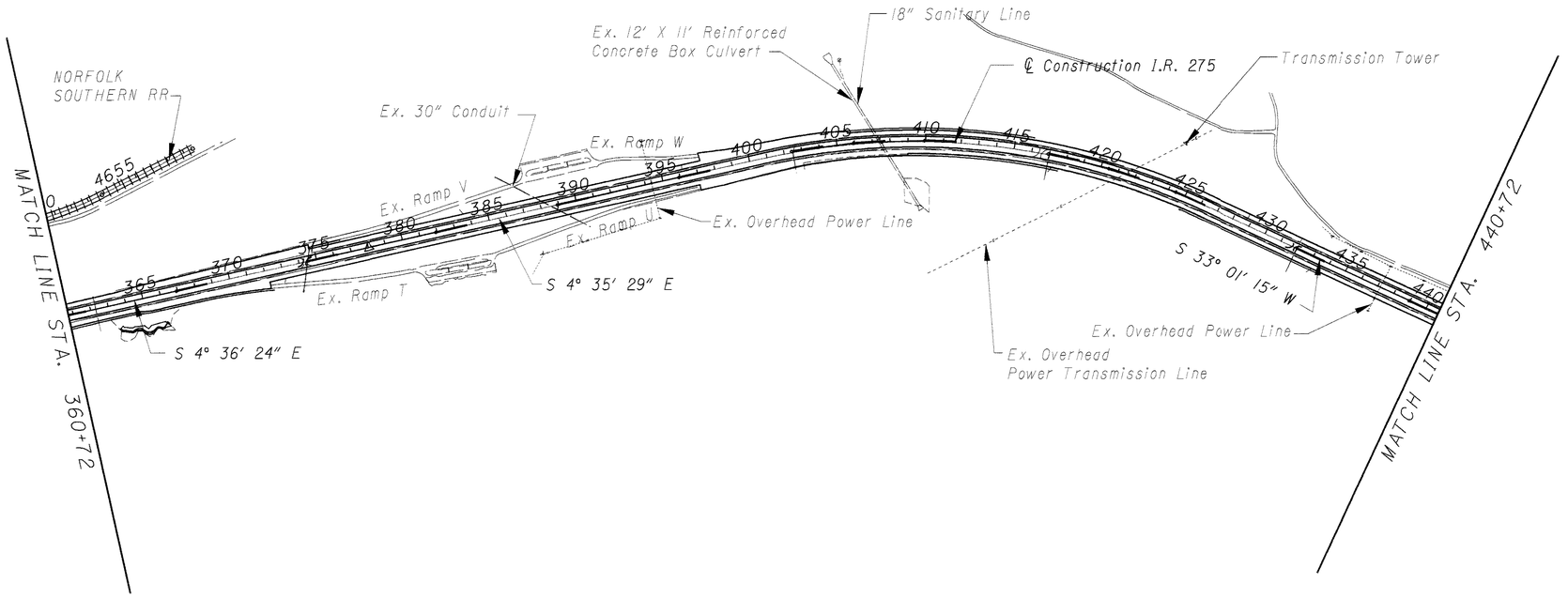

HORIZONTAL SCALE IN FEET
0 200 400 800

CALCULATED JCB
CHECKED AM

SCHEMATIC PLAN
STA. 360+72.00 TO STA. 440+72.00

CLE-275-5.35

3
857

CURVE DATA, I.R. 275

P.I. = Sta 473+48.57
Δ = 17° 26′ 10″ Lt.
Dc = 0° 44′ 40″
R = 7,696.45′
T = 1,180.20′
L = 2,342.16′
E = 89.96′
e_{max} = 0.0320
P.C. = Sta. 461+68.36
P.T. = Sta. 485+10.53

P.I. = Sta. 532+30.07
Δ = 13° 44′ 35″ Rt.
Dc = 0° 28′ 00″
R = 12,277.67′
T = 1,479.57′
L = 2,944.94′
E = 88.83′
e_{max} = normal crown
P.T. = Sta. 546+95.44
P.C. = Sta. 517+50.50

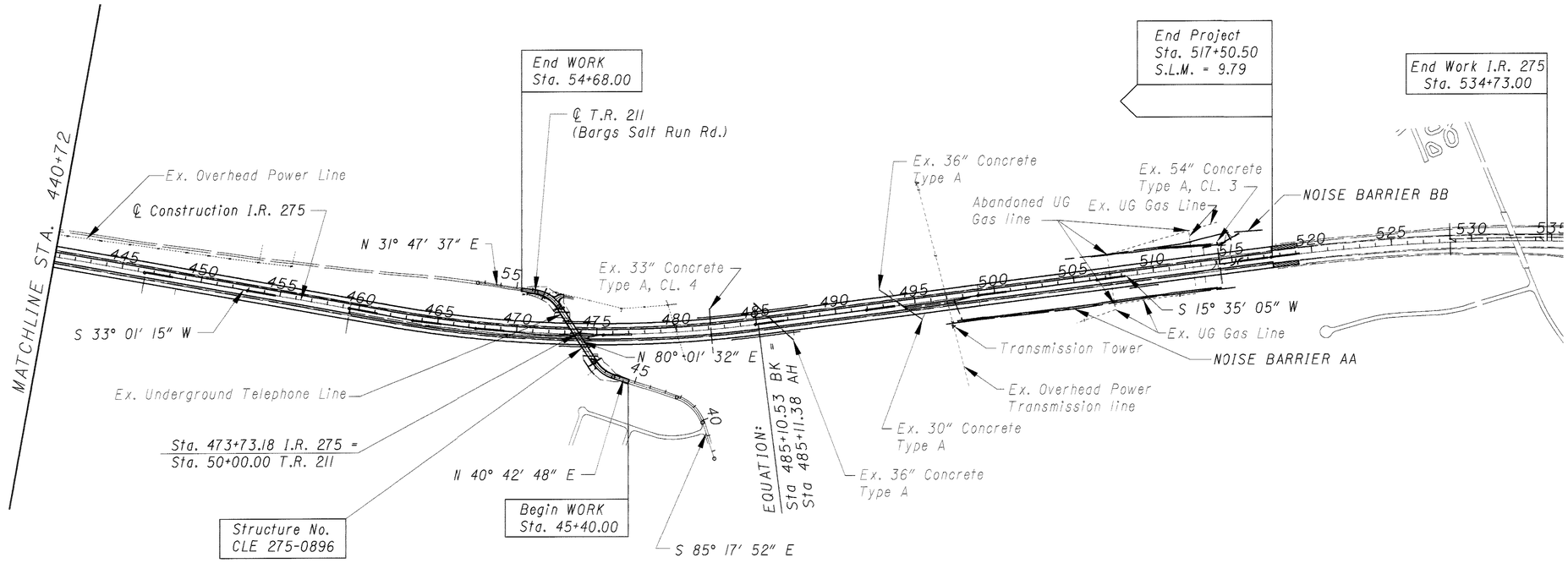

CURVE DATA, T.R. 211 (BARGS SALT RUN RD.)

P.I. = Sta. 41+14.68
Δ = 53° 59′ 20″ Lt.
Dc = 23° 00′ 00″
R = 249.11′
T = 126.90′
L = 234.73′
E = 30.46′
P.C. = Sta. 39+87.78
P.T. = Sta. 42+22.52

P.I. = Sta. 47+18.16
Δ = 39° 18′ 43″
Dc = 26° 00′ 00″
R = 220.37′
T = 78.71′
L = 151.20′
E = 13.64′
e_{max} = 0.0156
P.C. = Sta. 46+39.45
P.T. = Sta. 47+90.65

P.I. = Sta. 52+95.27
Δ = 48° 13′ 55″ Lt.
Dc = 28° 00′ 00″
R = 204.63′
T = 91.60′
L = 172.26′
E = 19.57′
e_{max} = 0.0156
P.C. = Sta. 52+03.66
P.T. = Sta. 53+75.92

HORIZONTAL
SCALE IN FEET
0 200 400 800

CALCULATED JGB
CHECKED AM

SCHEMATIC PLAN
STA. 440+72.00 TO STA. 520+01.00

CLE-275-5.35

4
857

RAMP A

P.I. = Sta. 301+58.98
Δ = 3° 42′ 48″ Rt.
Dc = 0° 24′ 17″
R = 14,159.40′
T = 458.98′
L = 917.64′
E = 7.44′
PC Sta. 297+00.00
PT Sta. 306+17.64

P.I. = Sta. 314+57.52
Δ = 7° 58′ 58″ Lt.
Dc = 1° 30′ 00″
R = 3,819.72′
T = 266.53′
L = 532.19′
E = 9.29′
PC Sta. 311+90.99
PT Sta. 317+23.19

P.I. = Sta. 322+76.08
Δ = 3° 45′ 37″ Rt.
Dc = 1° 40′ 00″
R = 3,437.75′
T = 112.85′
L = 225.62′
E = 1.85′
PC Sta. 321+63.23
PT Sta. 323+88.85

RAMP B

P.I. = Sta. 318+55.41
Δ = 46° 24′ 29″ Rt.
Dc = 8° 10′ 00″
R = 701.58′
Ls = 150.00′
θs = 6° 07′ 30″
LT = 100.06′
ST = 50.05′
Lc = 493.26′
T1 = 374.46′
T2 = 302.60′
T.S. = Sta. 314+80.95
S.C. = Sta. 316+30.95
P.T. = Sta. 321+24.21

P.I. = Sta. 327+99.43
Δ = 33° 21′ 15″ Rt.
Dc = 8° 00′ 00″
R = 716.20′
T = 214.56′
L = 416.93′
E = 31.45′
P.C. = Sta. 325+84.88
P.T. = Sta. 330+01.80

RAMP C

P.I. = Sta. 312+52.31
Δ = 17° 22′ 27″ Rt.
Dc = 8° 00′ 00″
R = 716.20′
T = 109.43′
L = 217.18′
E = 8.31′
P.C. = Sta. 311+42.88
C.S. = Sta. 313+60.06

P.I. = Sta. 314+49.10
Δ = 24° 45′ 00″ Rt.
D1 = 8° 00′ 00″
R1 = 716.20′
D2 = 25° 00′ 00″
R2 = 229.18′
Ls = 150.00′
P = 2.77′
Δ1 = 5° 59′ 07″
Δ2 = 18° 45′ 53″
T1 = 89.04′
T2 = 63.21′
C.S = Sta. 313+60.06
S.C. = Sta. 315+10.06

P.I. = Sta. 337+46.92
Δ = 191° 42′ 00″ Rt.
Dc = 25° 00′ 00″
R = 229.18′
T = 2,236.86′
L = 766.80′
E = 2,477.75′
S.C. = Sta. 315+10.06
C.S. = Sta. 322+76.86

P.I. = Sta. 323+31.21
Δ = 20° 15′ 00″ Rt.
D1 = 25° 00′ 00″
R1 = 229.18′
D2 = 2° 00′ 00″
R2 = 2,864.79′
Ls = 150.00′
P = 3.75′
Δ1 = 18° 45′ 18″
Δ2 = 1° 29′ 42″
T1 = 54.35′
T2 = 97.00′
C.S. = Sta. 322+76.86
S.C. = Sta. 324+26.86

P.I. = Sta. 325+39.71
Δ = 4° 30′ 42″ Rt.
Dc = 2° 00′ 00″
R = 2,864.79′
T = 112.85′
L = 225.59′
E = 2.22′
S.C. = Sta. 324+26.86
P.T. = Sta. 326+52.45

RAMP D

P.I. = Sta 316+66.24
Δ = 36° 05′ 13 Lt.
Dc = 6° 20′ 00″
R = 904.67′
T = 294.70′
L = 569.79′
E = 46.79′
P.C. = Sta. 313+71.54
P.T. = Sta. 319+41.33

P.I. = Sta 323+09.20
Δ = 9° 05′ 10″ Rt.
Dc = 2° 00′ 00″
R = 2,864.79′
T = 227.63′
L = 454.30′
E = 9.03′
P.C. = Sta. 320+81.57
P.T. = Sta. 325+35.87

RAMP D2

P.I. = Sta. 328+81.33
Δ = 39° 02′ 30″ Rt.
Dc = 16° 42′ 00″
R = 343.09′
T = 121.63′
L = 233.78′
E = 20.92′
P.C. = Sta. 327+59.70
P.T. = Sta. 329+93.48

RAMP E

P.I. = Sta. 116+48.64
Δ = 41° 17′ 27″ Lt.
Dc = 18° 54′ 01″
R = 303.15′
T = 114.22′
L = 218.47′
E = 20.80′
P.C. = Sta. 115+34.42
P.T. = Sta. 117+52.88

P.I. = Sta. 122+92.91
Δ = 112° 14′ 32″ Lt.
Dc = 25° 00′ 00″
R = 229.18′
T = 341.33′
L = 448.97′
E = 181.95′
P.C. STA. 119+51.58
C.S. STA. 124+00.55

P.I. = Sta. 124+61.21
Δ = 23° 16′ 13″ Rt.
D1 = 25° 00′ 00″
R1 = 229.18′
D2 = 6° 00′ 00″
R2 = 954.93′
Ls = 150.13′
P = 3.10′
Δ1 = 18° 45′ 59″
Δ2 = 4° 30′ 14″
T1 = 60.66′
T2 = 91.41′
C.S. = Sta. 124+00.55
S.C. = Sta. 125+50.68

P.I. = Sta. 126+76.06
Δ = 14° 57′ 37″ Lt.
Dc = 6° 00′ 00″
R = 954.93′
T = 125.38′
L = 249.34′
E = 8.20′
S.C. = Sta. 125+50.68
P.T. = Sta. 128+00.02

RAMP F

P.I. = Sta. 321+79.77
Δ = 48° 52′ 19″ Rt.
Dc = 7° 45′ 42″
R = 738.19′
T = 335.41′
L = 629.65′
E = 72.63′
P.C. = Sta. 318+44.35
P.T. = Sta. 324+74.01

P.I. = Sta. 339+26.75
Δ = 39° 34′ 28″ Rt.
Dc = 7° 45′ 00″
R = 739.30′
Ls = 150.00′
θs = 5° 48′ 45″
LT = 100.05′
ST = 50.05′
Lc = 435.64′
T1 = 267.97′
T2 = 339.42′
P.C. = Sta. 336+58.78
C.S. = Sta. 340+94.42
S.T. = Sta. 342+44.42

RAMP G

P.I. = Sta. 329+79.66
Δ = 17° 45′ 38″ Rt.
Dc = 6° 43′ 43″
R = 851.53′
T = 133.05′
L = 263.96′
E = 10.33′
P.C. = Sta. 328+46.61
C.S. = Sta. 331+10.57

P.I. = Sta. 344+27.06
Δ = 16° 22′ 24″ Rt.
D1 = 20° 02′ 28″
R1 = 3,200.66′
D2 = 1° 47′ 24″
R2 = 285.89′
Ls = 150.00′
P = 2.98′
Δ1 = 15° 02′ 01″
Δ2 = 1° 20′ 23″
T1 = 54.52′
T2 = 96.36′
C.S. = Sta. 343+72.54
S.C. = Sta. 345+22.54

P.I. = Sta. 331+98.76
Δ = 20° 04′ 38″ Rt.
D1 = 6° 43′ 43″
R1 = 851.53′
D2 = 20° 02′ 28″
R2 = 285.89′
Ls = 150.00′
P = 2.17′
Δ1 = 5° 02′ 19″
Δ2 = 15° 02′ 19″
T1 = 88.19′
T2 = 63.28′
C.S. = Sta. 331+10.57
S.C. = Sta. 332+60.57

P.I. = Sta. 346+40.92
Δ = 4° 14′ 10″ Rt.
Dc = 1° 47′ 24″
R = 3,200.66
T = 118.37′
L = 236.64′
E = 2.19′
S.C. = Sta. 345+22.54
P.T. = Sta. 347+59.18

P.I. = Sta. 339+89.09
Δ = 222° 51′ 09″ Rt.
Dc = 20° 02′ 28″
R = 285.89′
T = 728.52′
L = 1,111.97′
E = 1,068.50′
S.C. = Sta. 332+60.57
C.S. = Sta. 343+72.54

P.I. = Sta. 329+85.25
Δ = 34° 57′ 42″ Lt.
Dc = 8° 00′ 00″
R = 716.20′
T = 225.55′
L = 437.02′
E = 34.68′
P.C. = Sta. 327+59.70
P.C.C. = Sta. 331+96.72

P.I. = Sta. 333+86.39
Δ = 15° 05′ 11″ Lt.
Dc = 4° 00′ 00″
R = 1,432.39′
T = 189.68′
L = 377.16′
E = 12.50′
P.C.C. = Sta. 331+96.72
P.T. = Sta. 335+73.88

RAMP H

P.I. = Sta. 326+93.88
Δ = 42° 22′ 13″ Lt.
Dc = 6° 31′ 45″
R = 877.54′
T = 340.11′
L = 648.94′
E = 63.60′
P.C. = Sta. 323+53.76
P.T. = Sta. 330+02.70

P.I. = Sta. 337+98.27
Δ = 52° 06′ 48″ Lt.
Dc = 7° 58′ 30″
R = 718.44′
T = 351.29′
L = 653.46′
E = 81.28′
P.C. = Sta. 334+46.99
P.C.C. = Sta. 341+00.44

P.I. = Sta. 343+95.08
Δ = 7° 11′ 18″ Lt.
Dc = 1° 13′ 17″
R = 4,690.79′
T = 294.64′
L = 588.51′
E = 9.24′
P.C.C. = Sta. 341+00.44
P.T. = Sta. 346+88.95

CALCULATED JDB
CHECKED AM

CURVE AND SPIRAL DATA FOR RAMPS A THROUGH H

CLE-275-5.35

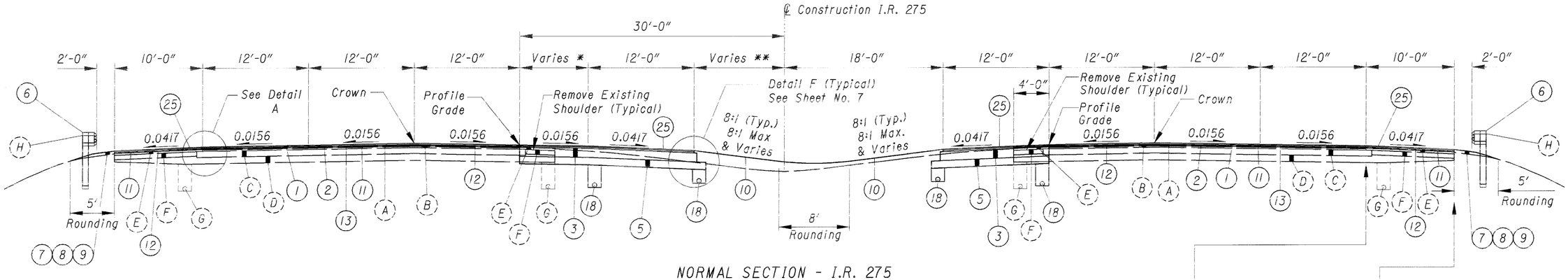

NORMAL SECTION - I.R. 275

* Width varies from 0'-0" at Sta. 292+45.06 to 11'-2 1/16" at Sta. 303+67.29.

** Width varies from 18'-0" at Sta. 292+45.06 to 6'-9 15/16" at Sta. 303+67.29.

SECTION APPLIES:

STA. 282+45.06 TO STA. 303+67.29	= 2122.23 L.F.
Deduct for Bridge and Approach Slabs	
STA. 289+76.85 TO STA. 292+21.55	= -244.70 L.F.
Deduct for Station Equation	
STA. 296+00.00 BK. = STA. 296+71.83 AHD.	= -71.83 L.F.
Deduct for Bridge and Approach Slabs	
STA. 300+41.46 TO STA. 303+67.29	= -325.83 L.F.
TOTAL =	1479.87 L.F.

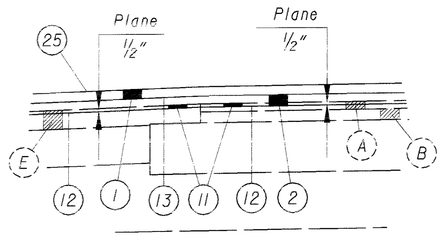

DETAIL A
PAVEMENT PLANING
(TYPICAL)

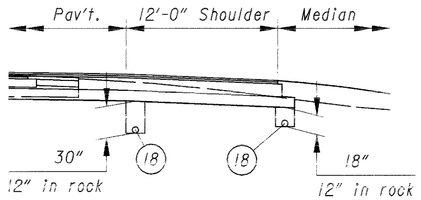

6" SHALLOW PIPE UNDERDRAIN
AT MEDIAN SHOULDER (TYPICAL)

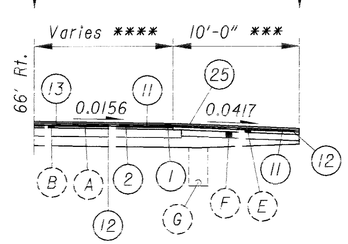

I.R. 275 SPEED CHANGE LANE (RAMP A)

*** Width varies from 10'-0" to 8'-0"

**** Width varies from 0'-0" to 23'-1 13/16"

LEGEND

(1) Item 858, 1 1/2" Asphalt Concrete Surface Course, 12.5MM, Type A(446)
(2) Item 858, 1 3/4" Asphalt Concrete Intermediate Course, 19MM, Type A(446)
(3) Item 302, 12" Bituminous Aggregate Base, PG64-22
(4) Item 408, Bituminous Prime Coat
(5) Item 304, 10" Aggregate Base
(6) Item 606, Guardrail, Type 5
(7) Item 617, Shoulder Preparation
(8) Item 617, Compacted Aggregate, Type A
(9) Item 617, Water
(10) Item 870, Seeding and Mulching
(11) Item 254, Pavement Planing, Bituminous (Depth = 1/2")
(12) Item 407, Tack Coat
(13) Item 407, Tack Coat for Intermediate Course
(14) Item 622, Concrete Barrier, Type C
(15) Item 301, 3" Bituminous Aggregate Base, PG64-22
(16) Item 304, 8" Aggregate Base
(17) Item 605, Aggregate Drain
(18) Item 605, 6" Shallow Pipe Underdrain
(19) Item 448, 1 1/4" Asphalt Concrete Surface Course, Type I, PG64-22
(20) Item 254, Pavement Planing, Bituminous (Depth = 1 1/4")
(21) Item 611, Reinforced Concrete Approach Slab (T = 15")
(22) Item 304, 6" Aggregate Base
(23) Item 202, Approach Slab Removed
(24) Item 203, Subgrade Compaction
(25) Rumble Strips, Type 2 (Asphalt)
(26) Item 301, 5 1/2" Bituminous Aggregate Base, PG64-22
(27) Item 304, Aggregate Base (6" Wedge)
(28) Item 448, 1 1/2" Asphalt Concrete Surface Course, Type I, PG64-22
(29) Item 448, 1 3/4" Asphalt Concrete Intermediate Course, Type 2, PG64-22

(A) 1 1/4" Asphalt Concrete (Item 404, 70-85)
(B) 1 3/4" Asphalt Concrete (Item 402, 70-85)
(C) 8" Bituminous Aggregate Base
(D) Subbase
(E) 3" Bituminous Aggregate Base
(F) 6" Aggregate Base
(G) 6" Shallow Pipe Underdrain
(H) Guardrail, Type 5
(I) Curb, Type 6
(J) Concrete Median Pavement
(K) Curb, Type 8
(L) 6" Deep Pipe Underdrain
(M) 6" 707.01 Type III or 707.12 Pipe Underdrain (IN ROCK)
(N) 1 1/4" Asphalt Concrete (Item 404, 85-100)
(O) 1 1/4" Asphalt Concrete (Item 402, 85-100)
(P) 12" Aggregate Base
(Q) Aggregate Drain
(R) Guardrail, Type 4
(S) 1 1/2" Asphalt Concrete Surface Course, Type IH
(T) 1 3/4" Asphalt Concrete Intermediate Course, Type 2, PG64-28
(U) 8" Bituminous Aggregate Base, PG64-22

EXISTING LANE WIDTHS, TRANSITIONS, AND PAVEMENT AND SHOULDER CROSS-SLOPES ARE BASED ON PREVIOUS PROJECT CLE-275-5.61 AND SHALL BE VERIFIED IN THE FIELD.

TYPICAL SECTIONS

CLE-275-5.35

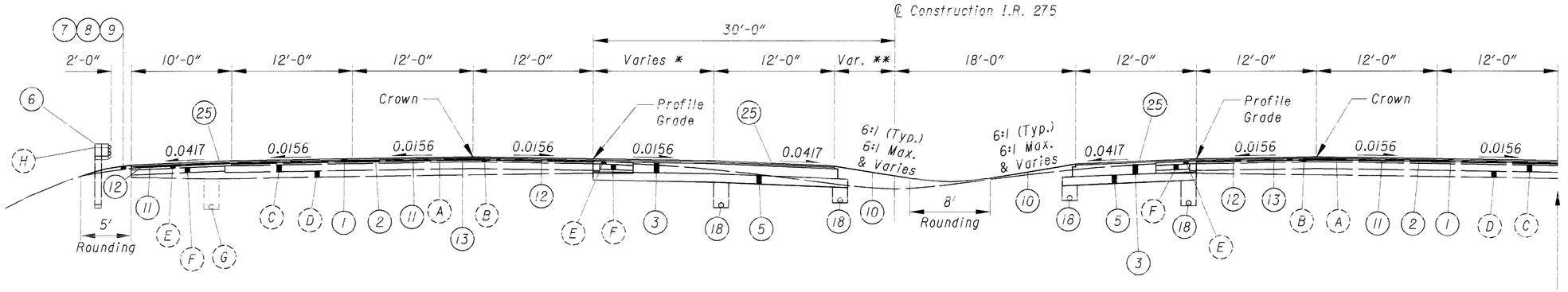

NORMAL SECTION - I.R. 275

* Width varies from 11'-2 1/16" at Sta. 303+67.29 to 12'-0" at Sta. 304+45.06.

** Width varies from 6'-9 15/16" at Sta. 303+67.29 to 6'-0" at Sta. 304+45.06.

SECTION APPLIES:

STA. 303+67.29 TO STA. 304+52.03 = 84.74 L.F.

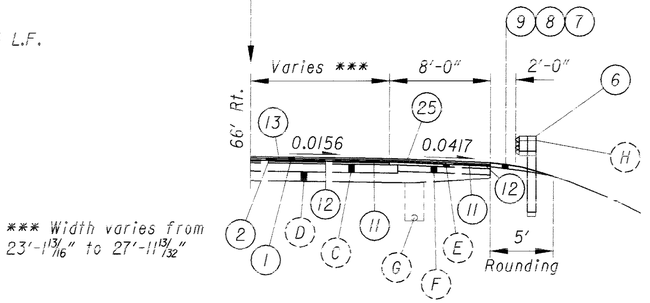

*** Width varies from 23'-11 3/16" to 27'-11 13/32"

I.R. 275 SPEED CHANGE LANE (RAMP A)

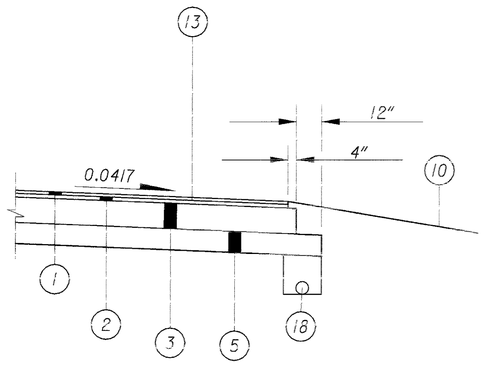

DETAIL F
SHOULDER STEPOUT TREATMENT
MAINLINE (TYPICAL)

EXISTING LANE WIDTHS, TRANSITIONS, AND PAVEMENT AND SHOULDER CROSS-SLOPES ARE BASED ON PREVIOUS PROJECT CLE-275-5.61 AND SHALL BE VERIFIED IN THE FIELD.

FOR PAVEMENT LEGEND SEE SH. NO. 6.

TYPICAL SECTIONS

CLE-275-5.35

7
85

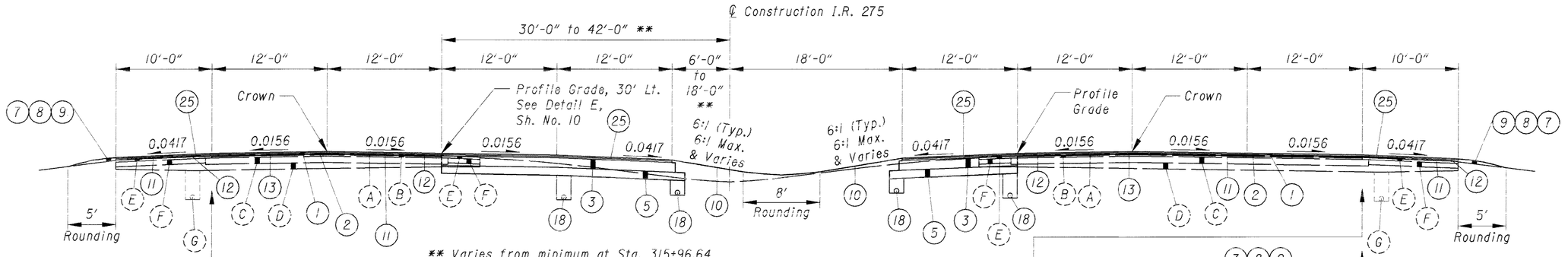

** Varies from minimum at Sta. 315+96.64 to maximum at Sta. 324+36.64.

NORMAL SECTION - I.R. 275

SECTION APPLIES:

STA. 304+52.03 TO STA. 315+96.64	= 1144.61 L.F.
STA. 315+96.64 TO STA. 324+36.64	= 840.00 L.F.
TOTAL	= 1984.61 L.F.

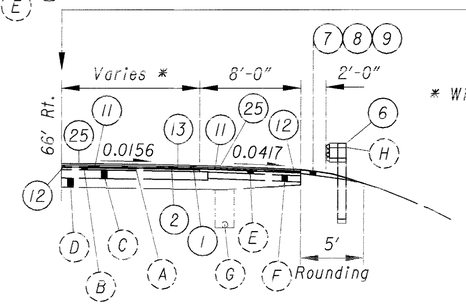

* Width varies from 27'-11 13/32" to 39'-0"

I.R. 275 SPEED CHANGE LANE (RAMP A)

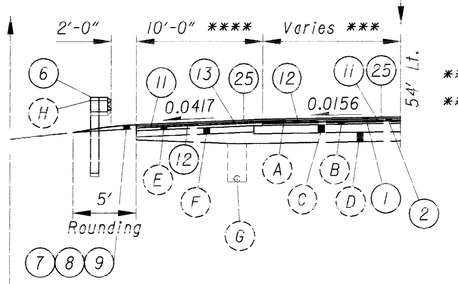

*** Width varies from 0'-0" to 39'-0"

**** Width varies from 10'-0" to 8'-0"

I.R. 275 SPEED CHANGE LANE (RAMP D)

•• Width varies from 20'-0" at Sta. 321+49.80 to 10'-0" at Sta. 324+28.94.

Remove Existing Median Pavement and Curbs. See Detail D, Sh. No. 16.

CONCRETE MEDIAN TRANSITION

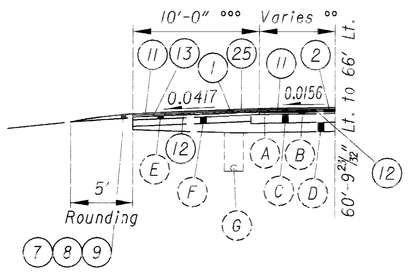

°°° Width varies from 10'-0" to 8'-0"

°° Width varies from 0'-0" to 9'-6"

I.R. 275 ACCELERATION TAPER

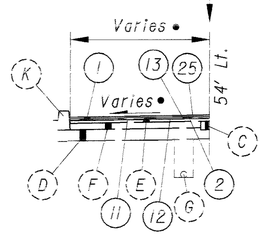

• Width varies from 10'-0" to 20'-0". Cross slope varies from 0.0156 to 0.034 (+/-).

TRANSITION OF PAVED BERM

EXISTING LANE WIDTHS, TRANSITIONS, AND PAVEMENT AND SHOULDER CROSS-SLOPES ARE BASED ON PREVIOUS PROJECT CLE-275-5.61 AND SHALL BE VERIFIED IN THE FIELD.

FOR PAVEMENT LEGEND SEE SH. NO. 6.

TYPICAL SECTIONS

CLE-275-5.35

8
857

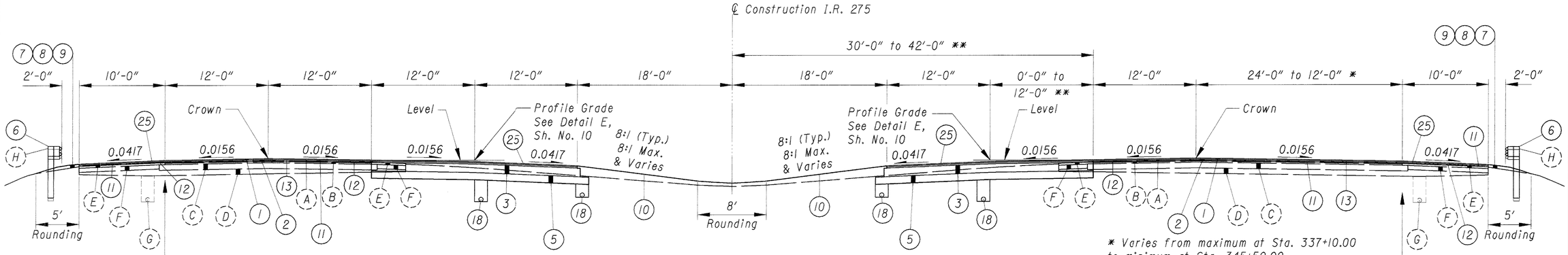

NORMAL SECTION - I.R. 275

* Varies from maximum at Sta. 337+10.00 to minimum at Sta. 345+50.00.

** Varies from minimum at Sta. 337+10.00 to maximum at Sta. 345+50.00.

SECTION APPLIES:

STA. 324+36.64 TO STA. 345+50.00 = 2113.36 L.F.
Deduct for Bridge and Approach Slabs = -292.60 L.F.
STA. 326+42.42 TO STA. 329+35.02
TOTAL = 1820.76 L.F.

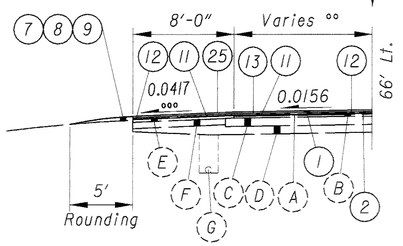

I.R. 275 ACCELERATION TAPER

°° Width varies from 9'-6" to 12'-0"

°°° Cross slope varies from 0.0417 to 0.029

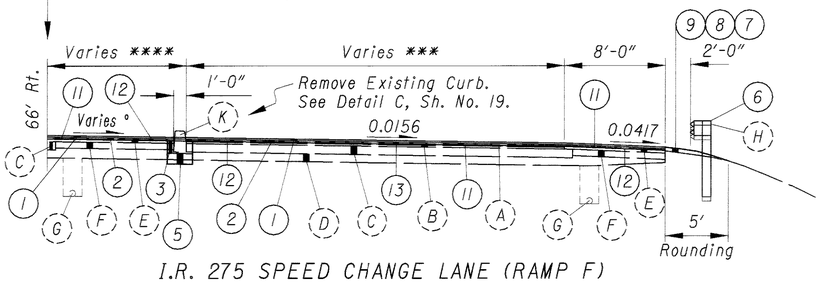

I.R. 275 SPEED CHANGE LANE (RAMP F) AND PAVED BERM TRANSITION

*** Width varies from 34'-0" to 25'-11 11/16"

**** Width varies from 20'-0" to 16'-7 1/32"

° Cross slope varies from 0.031 to 0.016

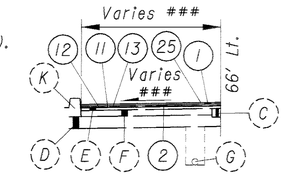

TRANSITION OF PAVED BERM

Width varies from 10'-0" to 20'-0". Cross slope varies from 0.015 (+/-) to 0.042 (+/-).

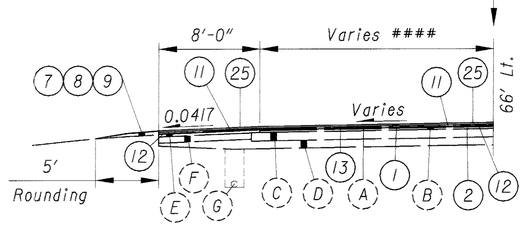

I.R. 275 SPEED CHANGE LANE (RAMP H)

Width varies from 39'-0" to 13'-0 23/32"

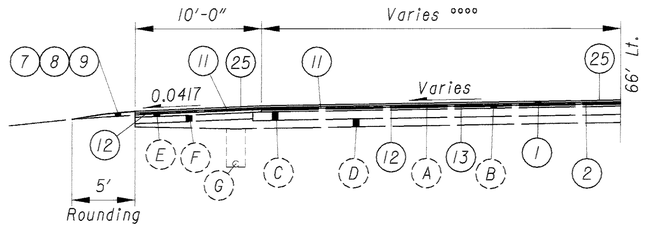

I.R. 275 SPEED CHANGE LANE (RAMP E)

°°°° Width varies from 45'-0" to 12'-0"

EXISTING LANE WIDTHS, TRANSITIONS, AND PAVEMENT AND SHOULDER CROSS-SLOPES ARE BASED ON PREVIOUS PROJECT CLE-275-5.61 AND SHALL BE VERIFIED IN THE FIELD.

FOR PAVEMENT LEGEND SEE SH. NO. 6.

TYPICAL SECTIONS

CLE-275-5.35

9
857

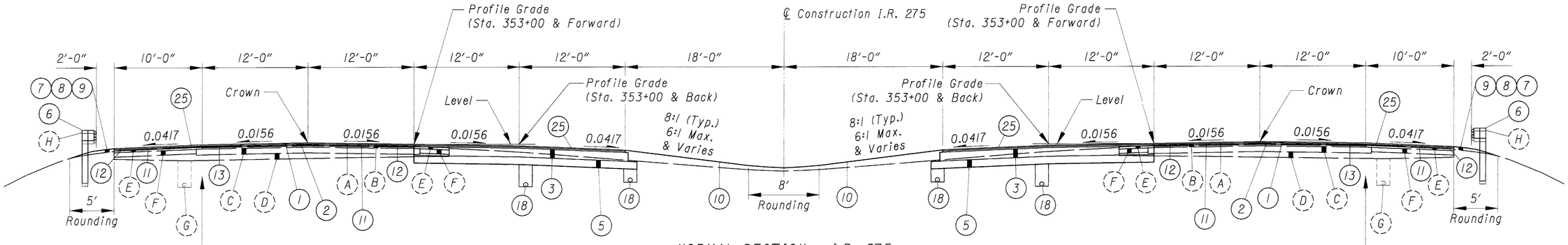

NORMAL SECTION - I.R. 275

SECTION APPLIES:

STA. 345+50.00 TO STA. 353+00.00 = 750.00 L.F.
Deduct for Bridge and Approach Slabs
STA. 345+60.08 TO STA. 348+52.72 = -292.64 L.F.
TOTAL = 457.36 L.F.

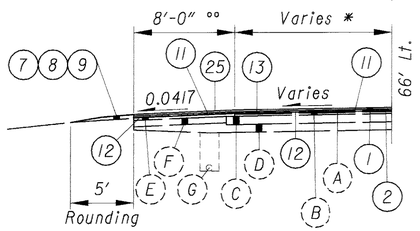

* Width varies from 13'-0 23/32" to 12'-0" and from 12'-0" to 0'-0"

°° Width varies from 8'-0" to 10'-0"

I.R. 275 SPEED CHANGE LANE (RAMP H)

*** Width varies from 25'-11 11/16" to 14'-0"

**** Width varies from 13'-7 7/8" to 10'-0"

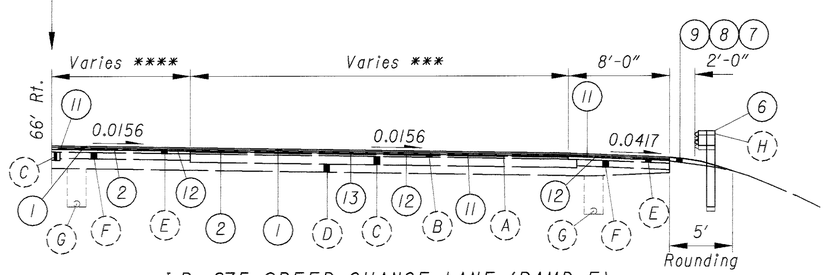

I.R. 275 SPEED CHANGE LANE (RAMP F) AND PAVED BERM TRANSITION

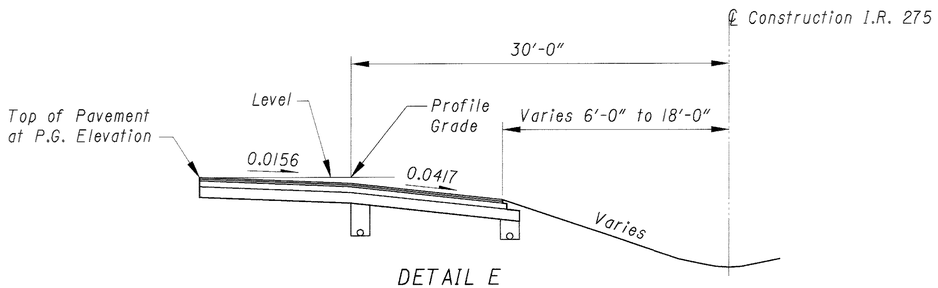

DETAIL E
PROFILE GRADE POINT IN RELATION TO PROPOSED PAVEMENT EDGE
(TYPICAL, RIGHT & LEFT, STA. 353+00.00 & BACK)

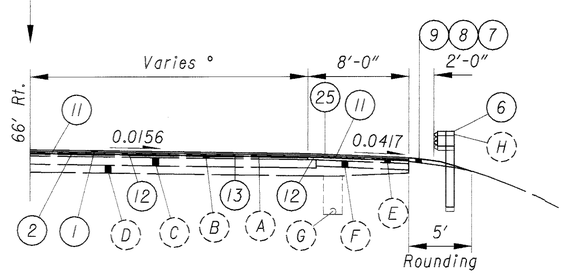

° Width varies from 25'-0" to 19'-4 7/32"

I.R. 275 SPEED CHANGE LANE (RAMP F)

EXISTING LANE WIDTHS, TRANSITIONS, AND PAVEMENT AND SHOULDER CROSS-SLOPES ARE BASED ON PREVIOUS PROJECT CLE-275-6.68 AND SHALL BE VERIFIED IN THE FIELD.

FOR PAVEMENT LEGEND SEE SH. NO. 6.

TYPICAL SECTIONS

CLE-275-5.35

10
857

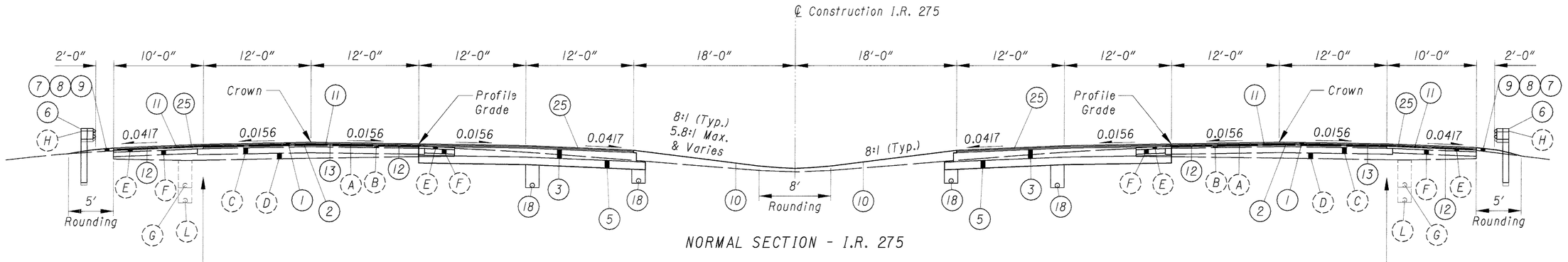

NORMAL SECTION - I.R. 275

SECTION APPLIES:

STA. 353+00.00 TO STA. 371+75.00	= 1875.00 L.F.
STA. 433+50.00 TO STA. 443+45.00	= 995.00 L.F.
STA. 450+75.00 TO STA. 453+25.00	= 250.00 L.F.
STA. 488+00.00 TO STA. 494+50.00	= 650.00 L.F.
STA. 511+50.00 TO STA. 517+00.00	= 550.00 L.F.
TOTAL	= 4320.00 L.F.

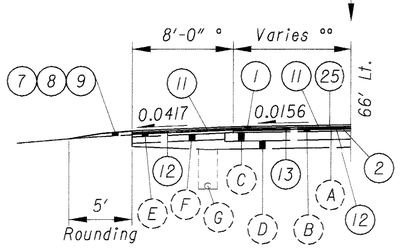

° Width varies from 10'-0" to 8'-0"

°° Width varies from 0'-0" to 18'-9"

I.R. 275 SPEED CHANGE LANE (RAMP V)

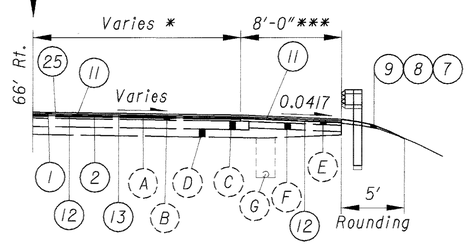

* Width varies from 0'-0" to 33'-0 1/32"

*** Width varies from 10'-0" to 8'-0"

I.R. 275 SPEED CHANGE LANE (RAMP T)

EXISTING LANE WIDTHS, TRANSITIONS, AND PAVEMENT AND SHOULDER CROSS-SLOPES ARE BASED ON PREVIOUS PROJECT CLE-275-6.68 AND SHALL BE VERIFIED IN THE FIELD.

FOR PAVEMENT LEGEND SEE SH. NO. 6.

TYPICAL SECTIONS

CLE-275-5.35

11
857

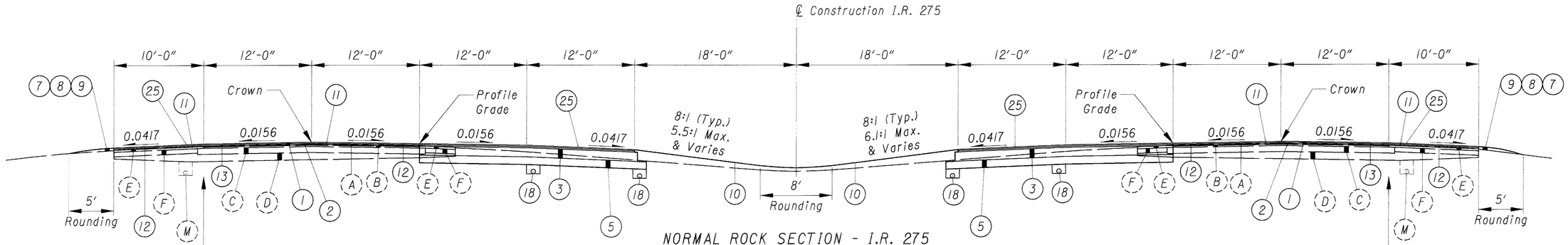

NORMAL ROCK SECTION - I.R. 275

SECTION APPLIES:

STA. 371+75.00 TO STA. 397+00.00	= 2525.00 L.F.
STA. 453+25.00 TO STA. 458+75.00	= 550.00 L.F.
STA. 494+50.00 TO STA. 511+50.00	= 1700.00 L.F.
STA. 517+00.00 TO STA. 517+50.50	= 50.50 L.F.
TOTAL = 4825.50 L.F.	

EXISTING LANE WIDTHS, TRANSITIONS, AND PAVEMENT AND SHOULDER CROSS-SLOPES ARE BASED ON PREVIOUS PROJECT CLE-275-6.68 AND SHALL BE VERIFIED IN THE FIELD.

FOR PAVEMENT LEGEND SEE SH. NO. 6.

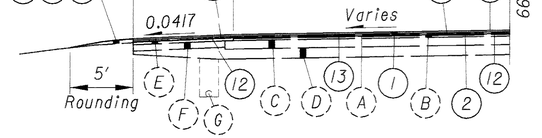

° Width varies from 18'-9" to 25'-0"

I.R. 275 SPEED CHANGE LANE (RAMP V)

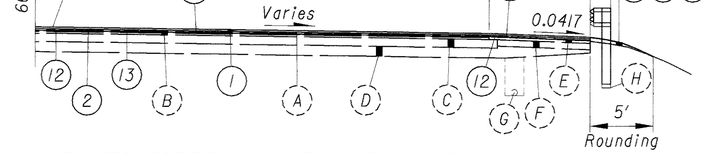

* Width varies from 33'-0 1/32" to 39'-0"

I.R. 275 SPEED CHANGE LANE (RAMP T)

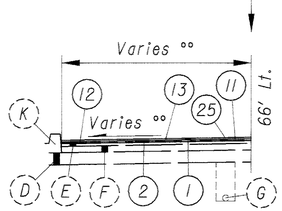

°° Width varies from 10'-0" to 20'-0". Cross slope varies from 0.016 (+/-) to 0.042 (+/-).

TRANSITION OF PAVED BERM

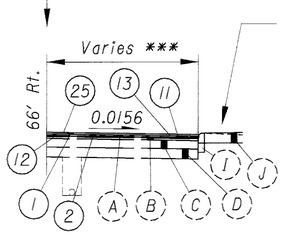

*** Width varies from 14'-0" to 10'-0"

I.R. 275 WIDTH TRANSITION AT RAMP T NOSE

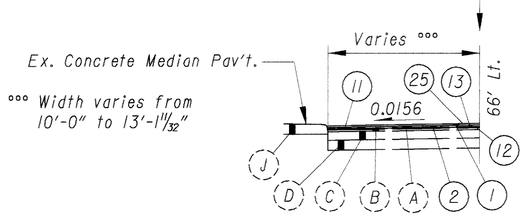

°°° Width varies from 10'-0" to 13'-1 11/32"

I.R. 275 WIDTH TRANSITION AT RAMP W NOSE

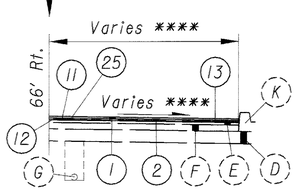

**** Width varies from 20'-0" to 10'-0". Cross slope varies from 0.042 (+/-) to 0.016 (+/-).

TRANSITION OF PAVED BERM

TYPICAL SECTIONS

CLE-275-5.35

12
85

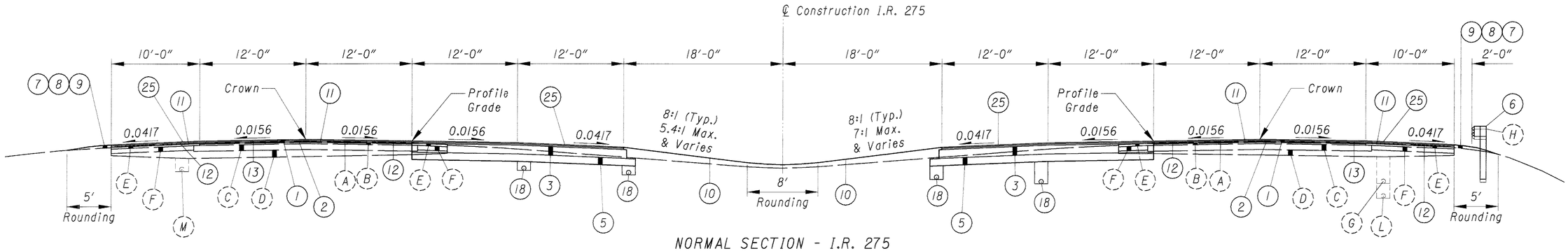

NORMAL SECTION - I.R. 275

SECTION APPLIES:

STA. 430+25.00 TO STA. 433+50.00 (ROCK, LT.) = 325.00 L.F.
STA. 443+45.00 TO STA. 450+75.00 (ROCK, LT.) = 730.00 L.F.
TOTAL = 1055.00 L.F.

EXISTING LANE WIDTHS, TRANSITIONS, AND PAVEMENT AND SHOULDER CROSS-SLOPES ARE BASED ON PREVIOUS PROJECT CLE-275-6.68 AND SHALL BE VERIFIED IN THE FIELD.

FOR PAVEMENT LEGEND SEE SH. NO. 6.

TYPICAL SECTIONS

CLE-275-5.35

13
857

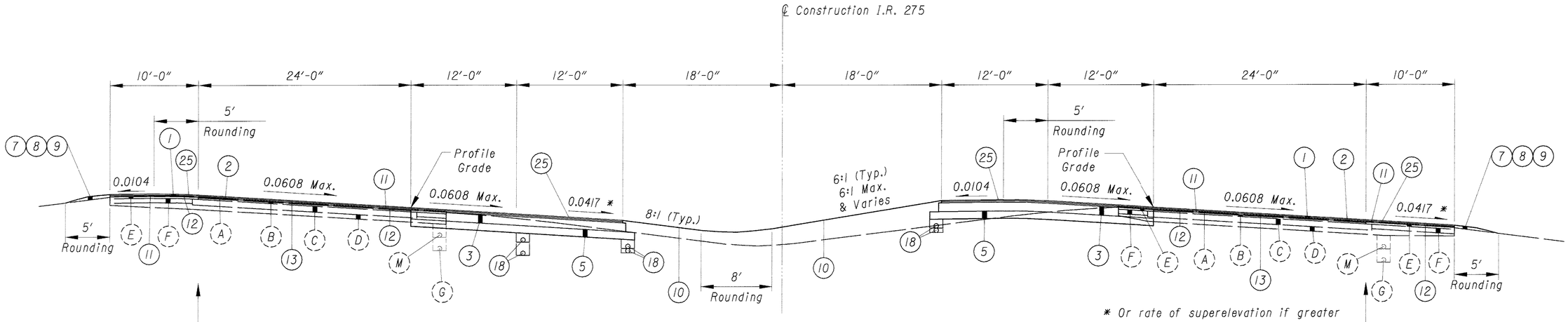

* Or rate of superelevation if greater

SUPERELEVATED SECTION - I.R. 275

SECTION APPLIES:

STA. 397+00.00 TO STA. 399+00.00 (ROCK, LT. & RT.)	= 200.00 L.F.
STA. 399+00.00 TO STA. 415+75.00	= 1675.00 L.F.
STA. 415+75.00 TO STA. 429+50.00 (ROCK, LT. & RT.)	= 1375.00 L.F.
STA. 429+50.00 TO STA. 430+25.00 (ROCK, LT.)	= 75.00 L.F.
TOTAL	= 3325.00 L.F.

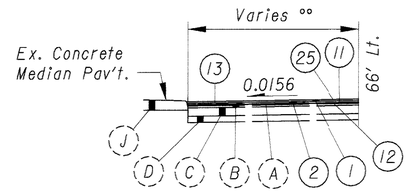

°° Width varies from 13'-11 31/32" to 14'-0"

I.R. 275 WIDTH TRANSITION AT RAMP W NOSE

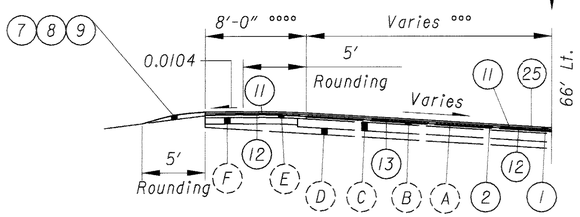

°°° Width varies from 39'-0" to 0'-0"

°°°° Width varies from 8'-0" to 10'-0"

I.R. 275 SPEED CHANGE LANE (RAMP W)

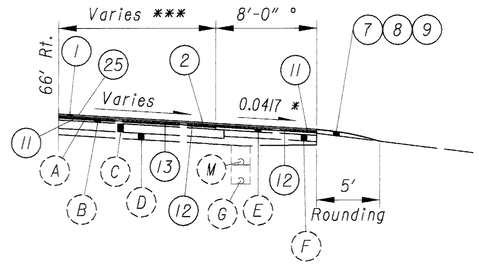

*** Width varies from 25'-0" to 0'-0"

° Width varies from 8'-0" to 10'-0"

I.R. 275 SPEED CHANGE LANE (RAMP U)

EXISTING LANE WIDTHS, TRANSITIONS, AND PAVEMENT AND SHOULDER CROSS-SLOPES ARE BASED ON PREVIOUS PROJECT CLE-275-6.68 AND SHALL BE VERIFIED IN THE FIELD.

FOR PAVEMENT LEGEND SEE SH. NO. 6.

TYPICAL SECTIONS

CLE-275-5.35

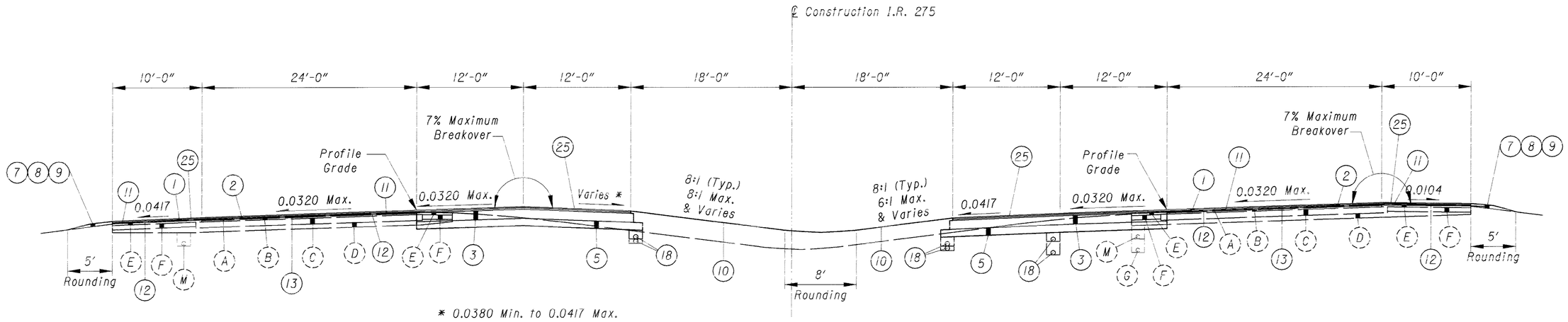

* 0.0380 Min. to 0.0417 Max.

SUPERELEVATED SECTION - I.R. 275

SECTION APPLIES:

STA. 458+75.00 TO STA. 459+00.00 (ROCK, LT. & RT.)	=	25.00 L.F.
STA. 459+00.00 TO STA. 461+25.00 (ROCK, LT.)	=	225.00 L.F.
STA. 461+25.00 TO STA. 480+75.00 (ROCK, LT. & RT.)	=	1950.00 L.F.
STA. 480+75.00 TO STA. 486+50.00	=	575.00 L.F.
STA. 486+50.00 TO STA. 487+35.00 (ROCK, LT.)	=	85.00 L.F.
STA. 487+35.00 TO STA. 488+00.00	=	65.00 L.F.
Deduct for Station Equation		
STA. 485+10.53 BK. = STA. 485+11.38 AHD.	=	-0.85 L.F.
TOTAL	=	2924.15 L.F.

EXISTING LANE WIDTHS, TRANSITIONS, AND PAVEMENT AND SHOULDER CROSS-SLOPES ARE BASED ON PREVIOUS PROJECT CLE-275-6.68 AND SHALL BE VERIFIED IN THE FIELD.

FOR PAVEMENT LEGEND SEE SH. NO. 6.

TYPICAL SECTIONS

CLE-275-5.35

15
857

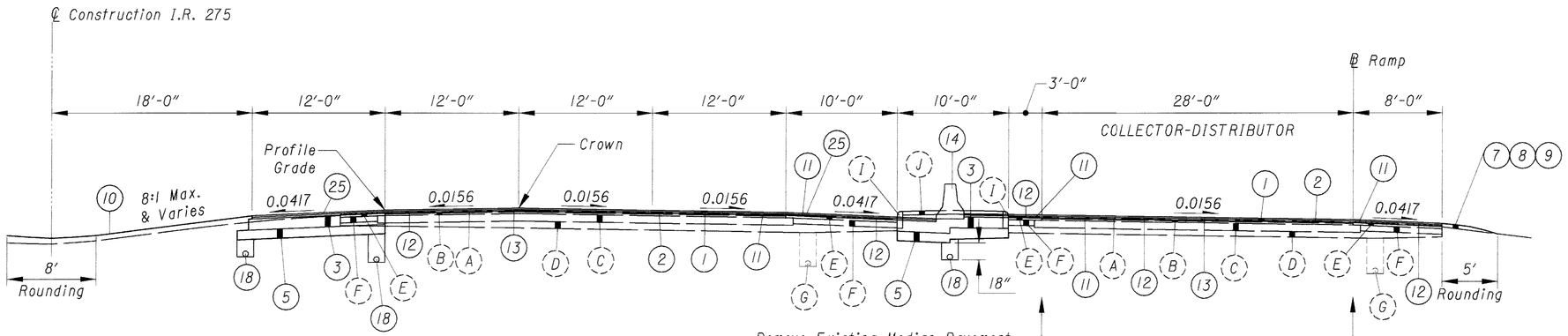

Remove Existing Median Pavement and Curbs. See Detail D.

COLLECTOR-DISTRIBUTOR NORMAL SECTION

SECTION APPLIES:

STA. 324+28.94 TO STA. 330+93.72	=	664.78 L.F.
Deduct for Bridge and Approach Slabs STA. 326+42.42 TO STA. 329+35.02	=	-292.60 L.F.
TOTAL	=	372.18 L.F.

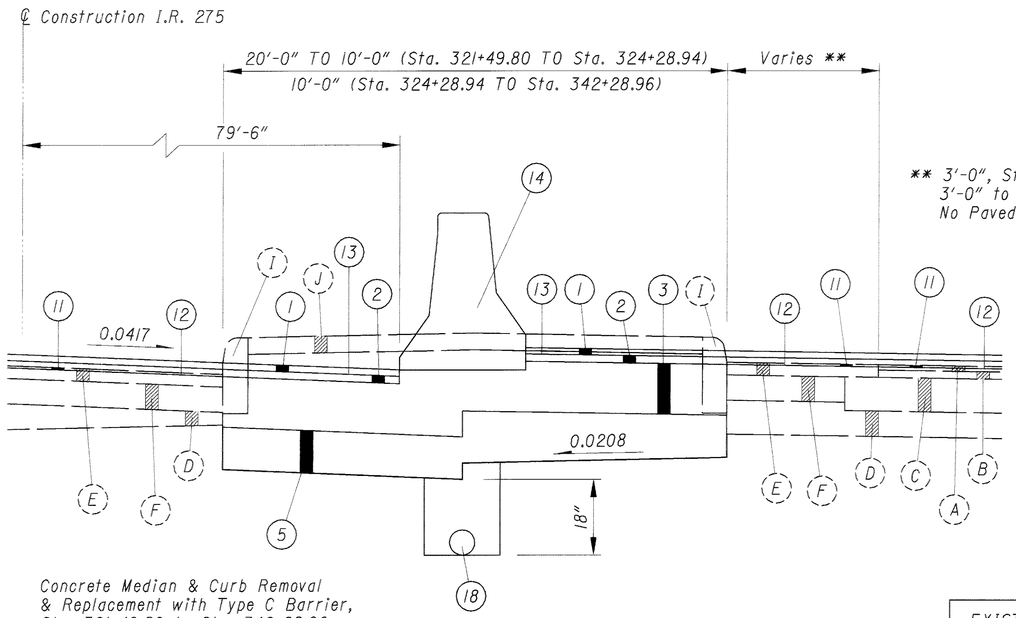

** 3'-0", Sta. 321+49.80 to Sta. 339+62.25
3'-0" to 2'-0", Sta. 339+62.25 to Sta. 340+52.79
No Paved Shoulder, Sta. 340+52.79 to Sta. 342+28.96

Concrete Median & Curb Removal & Replacement with Type C Barrier, Sta. 321+49.80 to Sta. 342+28.96.

Remove Type 6 Curb beginning at Sta. 316+89.83 I.R. 275 and Sta. 320+52.89 Ramp A

DETAIL D

EXISTING LANE WIDTHS, TRANSITIONS, AND PAVEMENT AND SHOULDER CROSS-SLOPES ARE BASED ON PREVIOUS PROJECT CLE-275-5.61 AND SHALL BE VERIFIED IN THE FIELD.

FOR PAVEMENT LEGEND SEE SH. NO. 6.

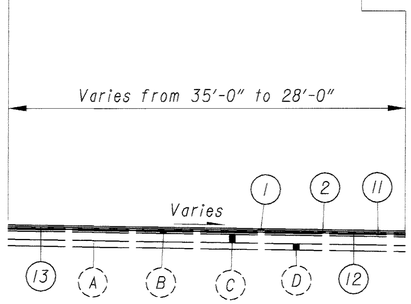

SPEED CHANGE LANE (RAMP C)

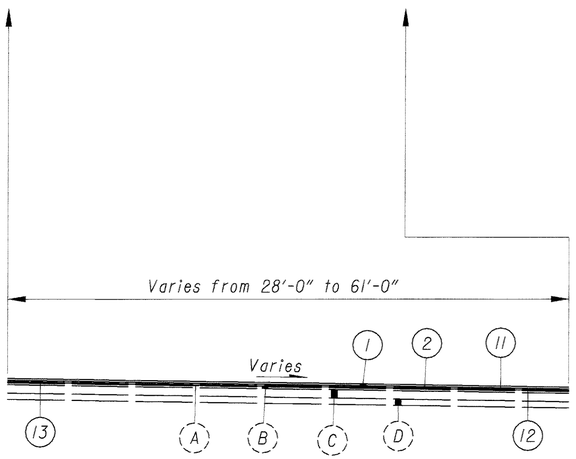

SPEED CHANGE LANE (RAMP G)

TYPICAL SECTIONS

CLE-275-5.35

16
857

℄ Construction I.R. 275

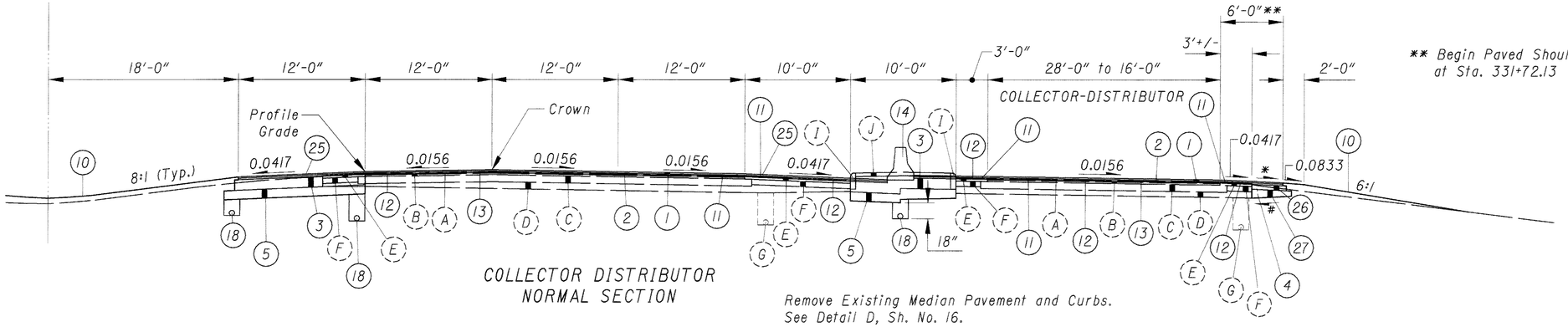

** Begin Paved Shoulder Widening at Sta. 331+72.13

COLLECTOR DISTRIBUTOR
NORMAL SECTION

Remove Existing Median Pavement and Curbs.
See Detail D, Sh. No. 16.

SECTION APPLIES:

STA. 330+93.72 TO STA. 335+73.72 = 480.00 L.F.

℄ Construction I.R. 275

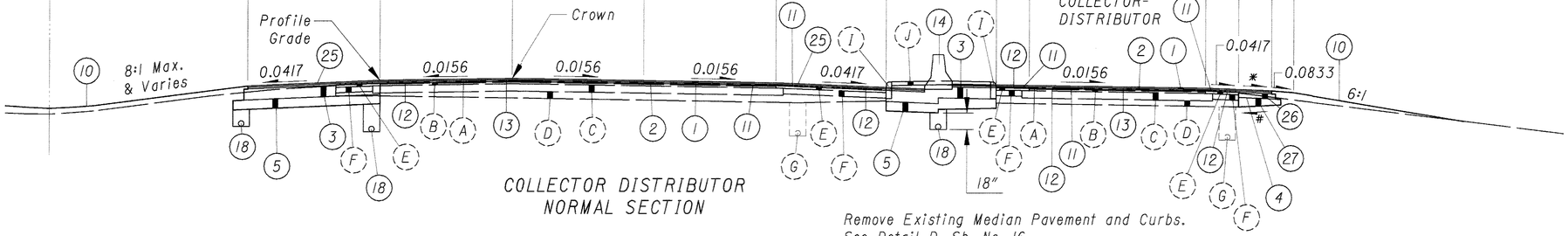

* Match existing paved shoulder cross-slope.

\# 0.0208 Min.

COLLECTOR DISTRIBUTOR
NORMAL SECTION

Remove Existing Median Pavement and Curbs.
See Detail D, Sh. No. 16.

SECTION APPLIES:

STA. 335+73.72 TO STA. 337+10.00 = 136.28 L.F.

EXISTING LANE WIDTHS, TRANSITIONS, AND PAVEMENT AND SHOULDER CROSS-SLOPES ARE BASED ON PREVIOUS PROJECT CLE-275-5.61 AND SHALL BE VERIFIED IN THE FIELD.

FOR PAVEMENT LEGEND SEE SH. NO. 6.

℄ Construction I.R. 275

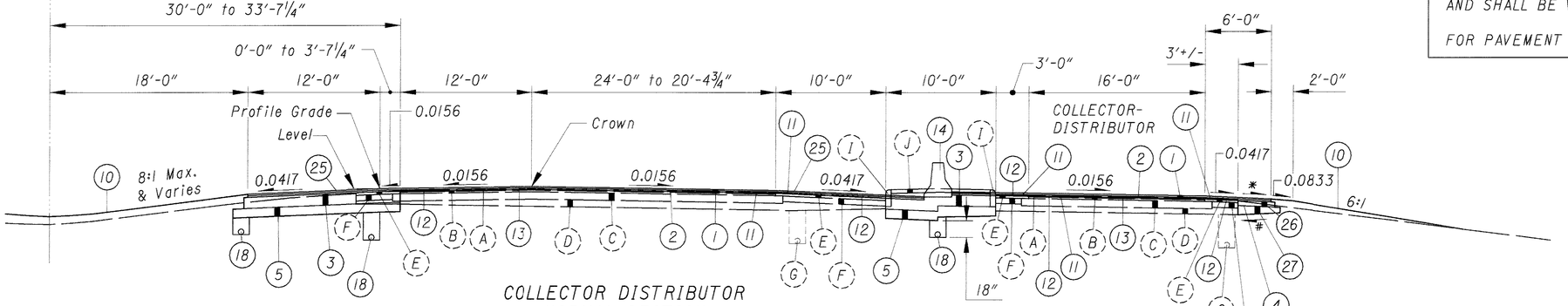

COLLECTOR DISTRIBUTOR
NORMAL SECTION

Remove Existing Median Pavement and Curbs.
See Detail D, Sh. No. 16.

SECTION APPLIES:

STA. 337+10.00 TO STA. 339+62.25 = 252.25 L.F.

TYPICAL SECTIONS

CLE-275-5.35

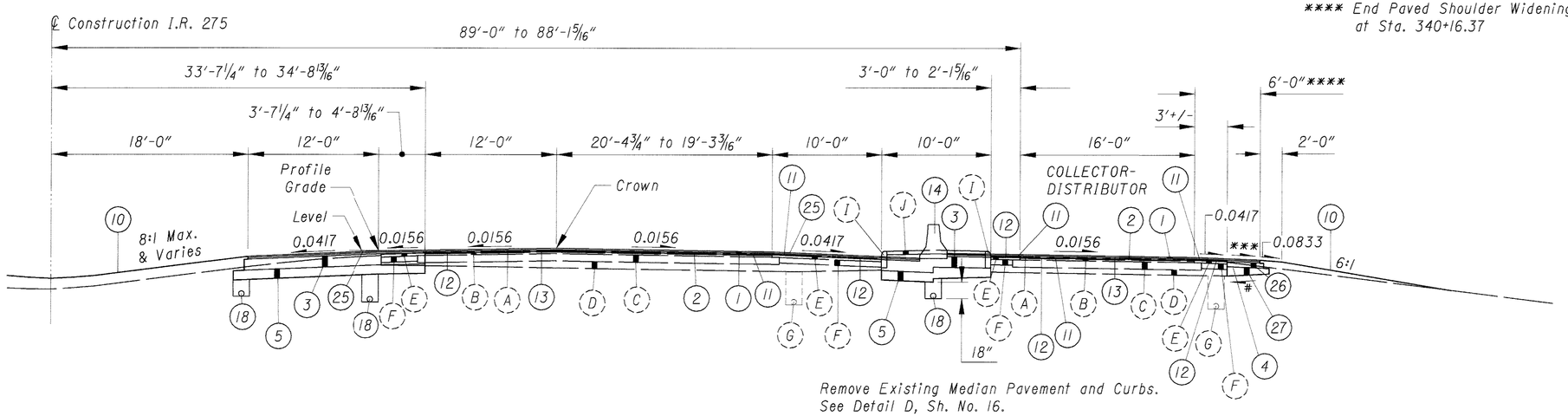

**** End Paved Shoulder Widening at Sta. 340+16.37

Remove Existing Median Pavement and Curbs. See Detail D, Sh. No. 16.

COLLECTOR DISTRIBUTOR NORMAL SECTION

SECTION APPLIES:

STA. 339+62.25 TO STA. 340+16.37 = 54.12 L.F.

*** Match existing paved shoulder cross-slope.

0.0208 Min.

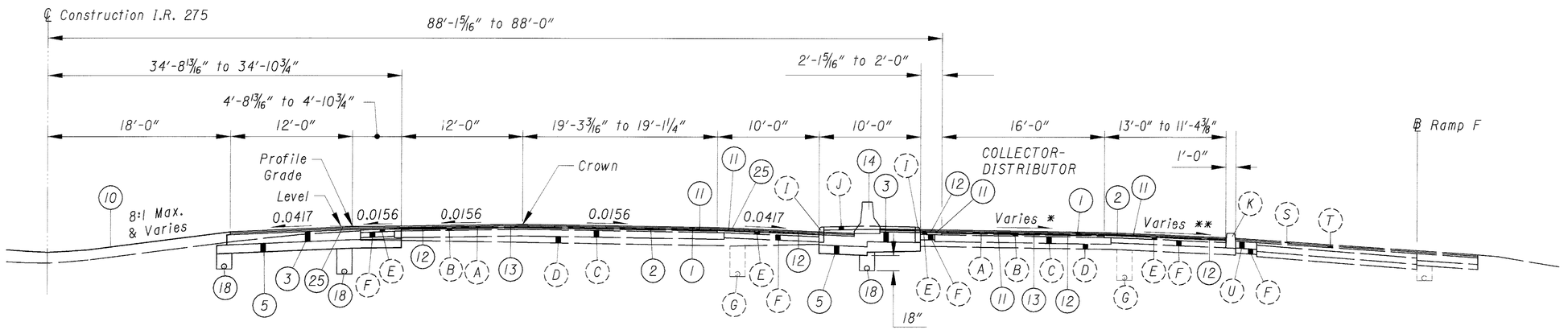

* Cross slope varies from 0.0166 to 0.0167.

** Cross slope varies from 0.0400 to 0.0414.

Remove Existing Median Pavement and Curbs. See Detail D, Sh. No. 16.

EXISTING LANE WIDTHS, TRANSITIONS, AND PAVEMENT AND SHOULDER CROSS-SLOPES ARE BASED ON PREVIOUS PROJECT CLE-275-5.61 AND SHALL BE VERIFIED IN THE FIELD.

FOR PAVEMENT LEGEND SEE SH. NO. 6.

COLLECTOR DISTRIBUTOR NORMAL SECTION

SECTION APPLIES:

STA. 340+16.37 TO STA. 340+52.79 = 36.42 L.F.

TYPICAL SECTIONS

CLE-275-5.35

18
857

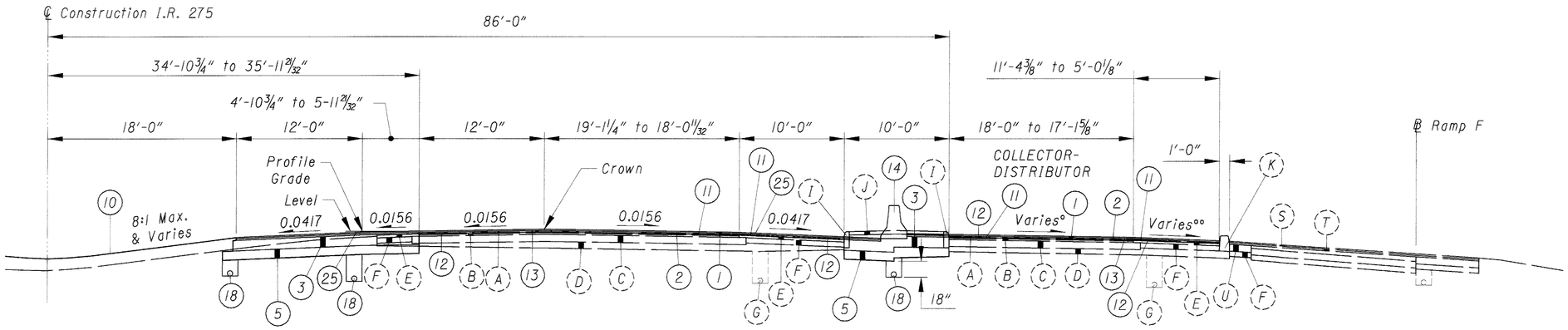

Remove Existing Median Pavement and Curbs.
See Detail D, Sh. No. 16.

° *Cross slope varies from 0.0167 to 0.0175.*

°° *Cross slope varies from 0.0414 to 0.0339.*

COLLECTOR DISTRIBUTOR NORMAL SECTION

SECTION APPLIES:

STA. 340+52.79 TO STA. 341+28.01 = 75.22 L.F.

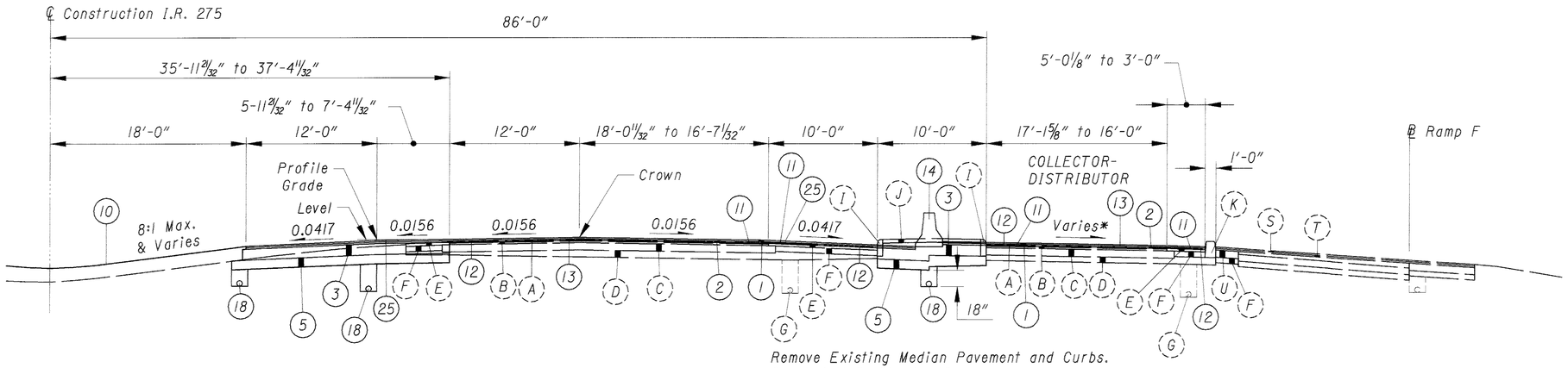

Remove Existing Median Pavement and Curbs.
See Detail D, Sh. No. 16.

* *Cross slope varies non-uniformly.*

EXISTING LANE WIDTHS, TRANSITIONS, AND PAVEMENT AND SHOULDER CROSS-SLOPES ARE BASED ON PREVIOUS PROJECT CLE-275-5.61 AND SHALL BE VERIFIED IN THE FIELD.

FOR PAVEMENT LEGEND SEE SH. NO. 6.

COLLECTOR DISTRIBUTOR NORMAL SECTION

SECTION APPLIES:

STA. 341+28.01 TO STA. 342+28.96 = 100.95 L.F.

Curb Removal
Sta. 342+28.96 to
Sta. 345+22.90

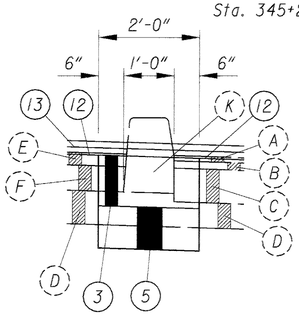

See Typical Section, Speed Change Lane (Ramp F), Sh. No. 9

DETAIL C

TYPICAL SECTIONS

CLE-275-5.35

19
857

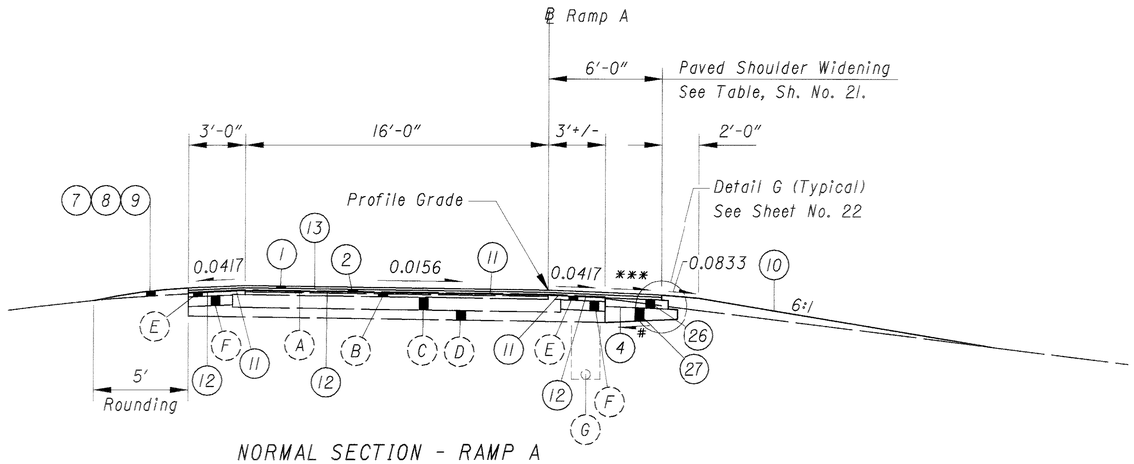

NORMAL SECTION - RAMP A

SECTION APPLIES:

RAMP A:

STA. 306+24.67 TO STA. 311+00.00	= 475.33 L.F.
STA. 318+00.00 TO STA. 321+50.00	= 350.00 L.F.
STA. 324+25.00 TO STA. 324+32.90	= 7.90 L.F.
TOTAL =	833.23 L.F.

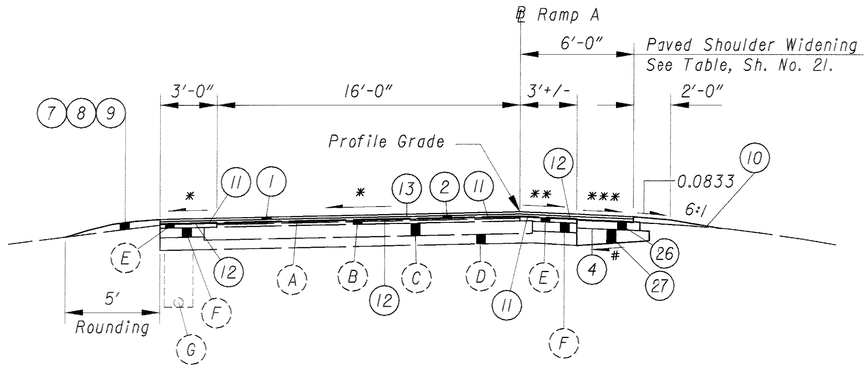

SUPERELEVATED SECTION - RAMP A

SECTION APPLIES:

RAMP A:

STA. 316+31.75 TO STA. 317+00.00	= 68.25 L.F.
STA. 317+00.00 TO STA. 318+00.00	= 100.00 L.F.
TOTAL =	168.25 L.F.

EXISTING PAVEMENT AND SHOULDER CROSS-SLOPES ARE BASED ON PREVIOUS PROJECT CLE-275-5.61 AND SHALL BE VERIFIED IN THE FIELD.

LIMITING STATIONS ARE BASED ON CLE-275-5.61.

FOR PAVEMENT LEGEND SEE SH. NO. 6.

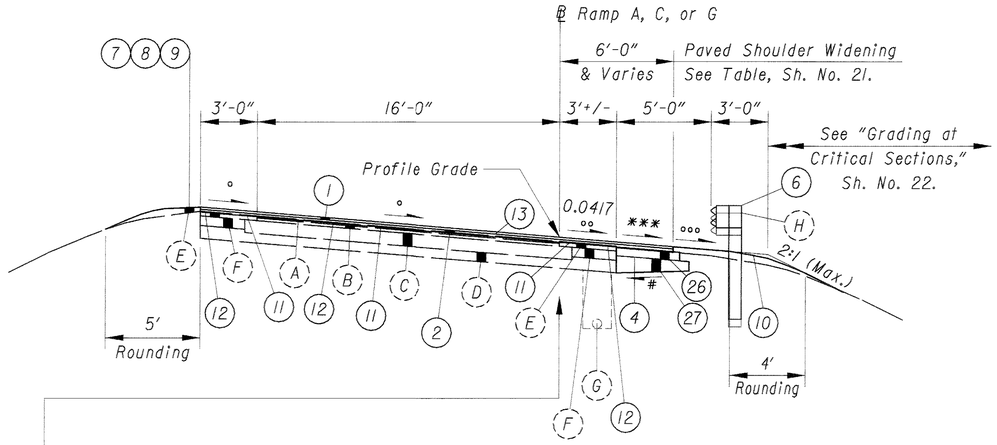

SUPERELEVATED SECTION - RAMPS A, C, & G

SECTION APPLIES:

RAMP A:

STA. 311+00.00 TO STA. 316+31.75	= 531.75 L.F.
STA. 321+50.00 TO STA. 321+75.00	= 25.00 L.F.
STA. 321+75.00 TO STA. 324+00.00	= 225.00 L.F.
STA. 324+00.00 TO STA. 324+25.00	= 25.00 L.F.

RAMP C:

STA. 313+63.00 TO STA. 314+50.00	= 87.00 L.F.
STA. 314+50.00 TO STA. 324+29.78	= 979.78 L.F.

RAMP G:

STA. 330+93.75 TO STA. 332+00.00	= 106.25 L.F.
STA. 332+00.00 TO STA. 345+17.62	= 1317.62 L.F.
TOTAL =	3297.40 L.F.

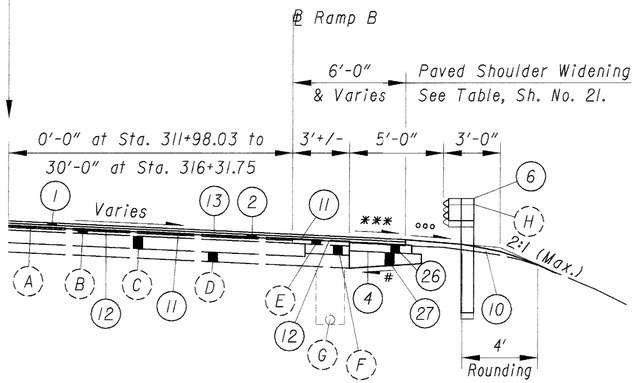

RAMP A WIDENING AT RAMP B ENTRANCE

\# 0.0208 Min.

° 0.0200 Max., Ramp A
° 0.0833 Max., Ramp C
° 0.0833 Max., Ramp G
°° Or rate of superelevation if greater
°°° 0.0833

* 0.0200 Max.
** 0.0417
*** Match existing paved shoulder cross-slope.

TYPICAL SECTIONS

CLE-275-5.35

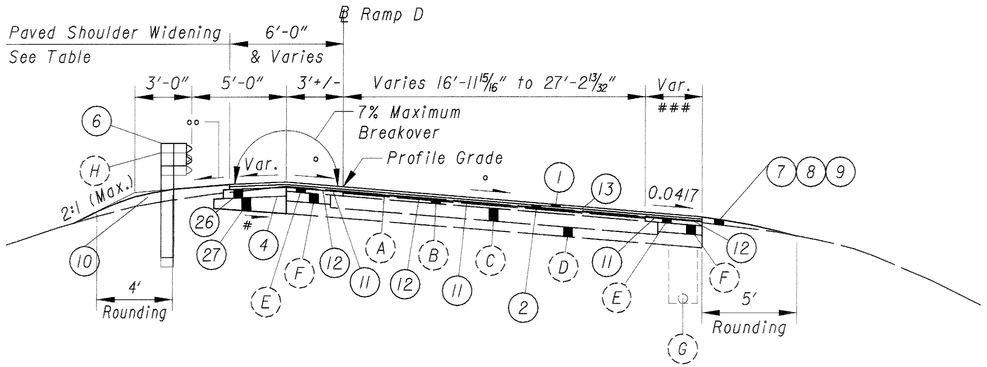

SUPERELEVATED SECTION - RAMP D

SECTION APPLIES:

RAMP D:

STA. 322+25.00 TO STA. 324+50.00 = 225.00 L.F.
STA. 324+50.00 TO STA. 325+88.64 = 138.64 L.F.
TOTAL = 363.64 L.F.

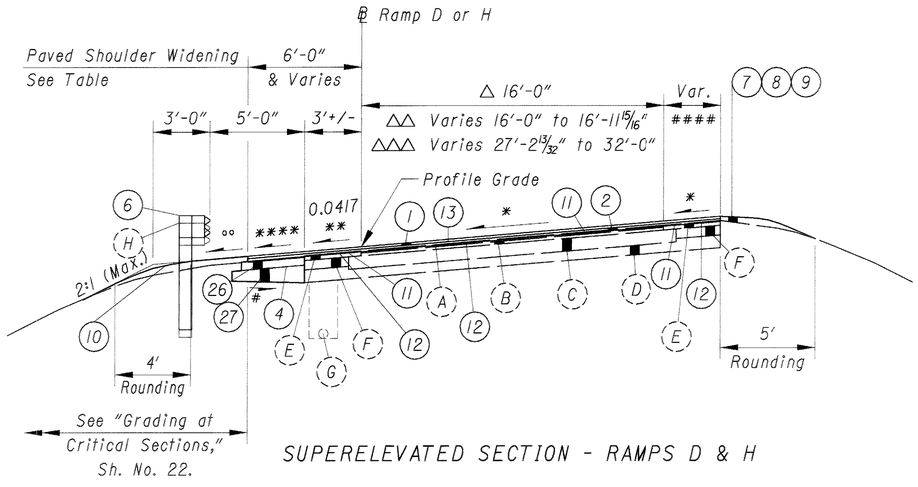

SUPERELEVATED SECTION - RAMPS D & H

SECTION APPLIES:

RAMP D:

△ STA. 312+76.03 TO STA. 315+00.00 = 223.97 L.F.
△ STA. 315+00.00 TO STA. 317+75.00 = 275.00 L.F.
△ STA. 317+75.00 TO STA. 321+89.54 = 414.54 L.F.
△△ STA. 321+89.54 TO STA. 322+25.00 = 35.46 L.F.
△△△ STA. 325+88.64 TO STA. 327+59.70 = 171.06 L.F.
△ STA. 328+48.23 TO STA. 329+00.00 = 51.77 L.F.
△ STA. 329+00.00 TO STA. 332+69.31 = 369.31 L.F.

RAMP H:

△ STA. 325+23.78 TO STA. 328+75.00 = 351.22 L.F.
△ STA. 328+75.00 TO STA. 335+75.00 = 700.00 L.F.
△ STA. 335+75.00 TO STA. 340+50.00 = 475.00 L.F.
△ STA. 340+50.00 TO STA. 341+86.52 = 136.52 L.F.
TOTAL = 3203.85 L.F.

0.0208 Min.
Begin shoulder overlay, Sta. 328+21.77 D
Existing width varies from 3' to 10'
Existing width varies from 8' to 3', Ramp D; Existing width = 3', Ramp H

° 0.0331 Max.
°° 0.0833

* 0.0833 Max.
** Or rate of superelevation if greater
*** 0.0751 Max.
**** Match existing paved shoulder cross-slope.

EXISTING PAVEMENT AND SHOULDER CROSS-SLOPES ARE BASED ON PREVIOUS PROJECT CLE-275-5.61 OR CLE-275-9.032/CLE-50J-2.665 AND SHALL BE VERIFIED IN THE FIELD.

LIMITING STATIONS ARE BASED ON CLE-275-5.61 AND CLE-275-9.032/CLE-50J-2.665

FOR PAVEMENT LEGEND SEE SH. NO. 6.

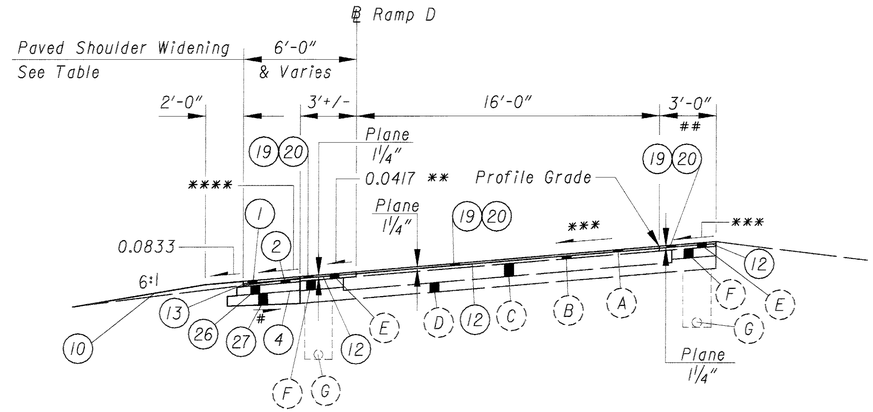

SUPERELEVATED SECTION - RAMP D

SECTION APPLIES:

RAMP D:

STA. 327+59.70 TO STA. 328+48.23 = 88.53 L.F.

RAMP PAVED SHOULDER WIDENING

RAMP	WIDTH ##	AT STATION
A	6'-0"	BEGIN: 307+33.53 A
	6'-0"	END: 315+92.55 A
	6'-0"	BEGIN: 316+31.63 A
	6'-0"	END: 323+45.63 A
C	6'-0"	BEGIN: 313+36.26 C
	6'-0"	323+76.86 C
	7'-10 3/16"	324+26.86 C
	7'-10 3/16"	END: 325+32.54 C
D	8'-0"	BEGIN: 311+09.31 1R-275
	8'-0"	313+71.54 D
	6'-0"	314+21.47 D
	6'-0"	END: 332+70.81 D
G	4'-10 5/16"	BEGIN: 330+96.27 G
	6'-0"	331+35.15 G
	6'-0"	344+41.43 G
	5'-3 5/32"	END: 344+65.00 G
H	6'-0"	BEGIN: 323+54.85 H
	6'-0"	END: 341+45.33 H

FINISHED SHOULDER WIDTH MEASURED FROM EDGE OF EXISTING PAVEMENT (INCLUDING EXISTING SHOULDER).

TYPICAL SECTIONS

CLE-275-5.35

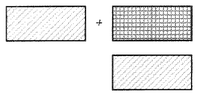

Item 203 Embankment

Item 203 Excavation not including Embankment Construction

**** Match existing paved shoulder cross-slope

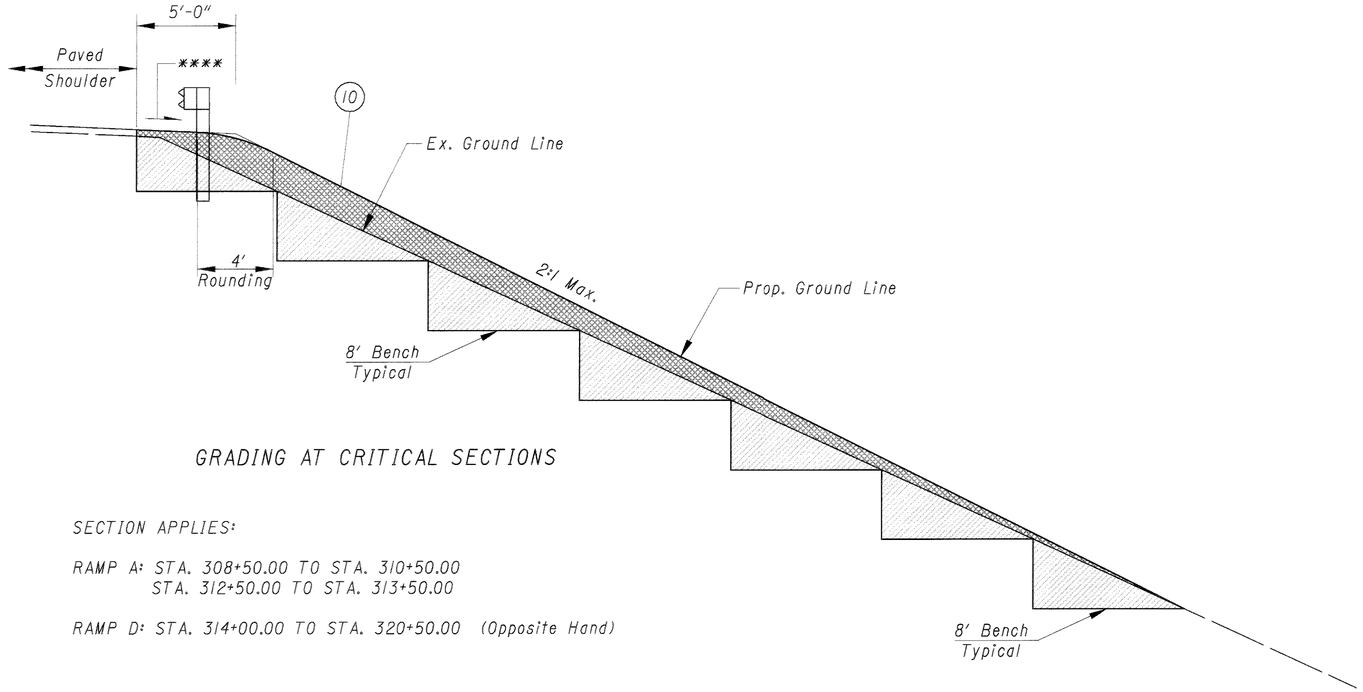

GRADING AT CRITICAL SECTIONS

SECTION APPLIES:

RAMP A: STA. 308+50.00 TO STA. 310+50.00
STA. 312+50.00 TO STA. 313+50.00

RAMP D: STA. 314+00.00 TO STA. 320+50.00 (Opposite Hand)

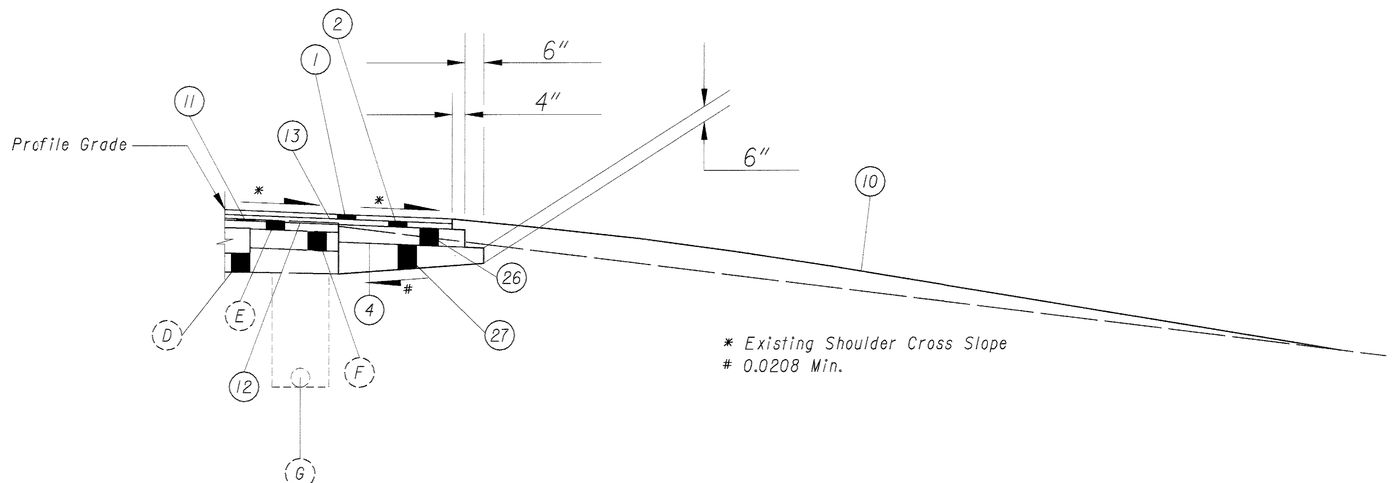

DETAIL G
SHOULDER STEPOUT TREATMENT
RAMPS (TYPICAL)

EXISTING PAVEMENT AND SHOULDER CROSS-SLOPES ARE BASED ON PREVIOUS PROJECT CLE-275-5.61 AND SHALL BE VERIFIED IN THE FIELD.

FOR PAVEMENT LEGEND SEE SH. NO. 6.

TYPICAL SECTIONS

CLE-275-5.35

22
857

℄ Construction I.R. 275

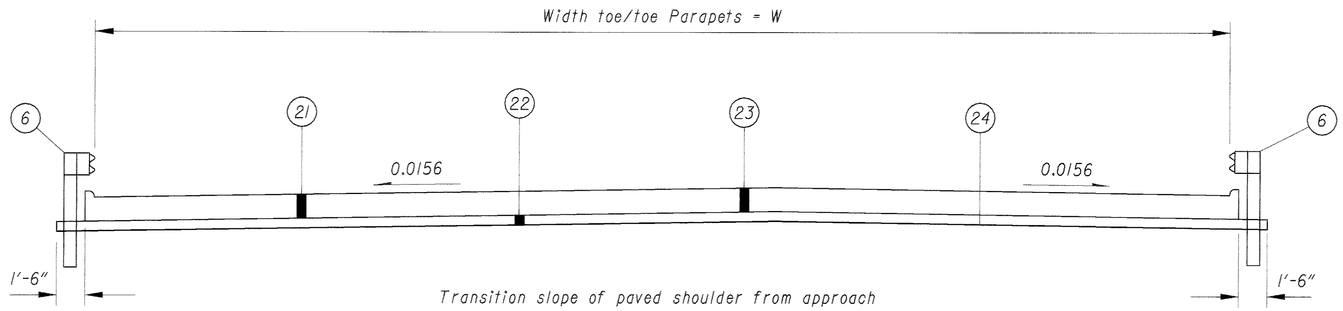

Transition slope of paved shoulder from approach slab x-slope to required shoulder slope in 20 feet.

APPROACH SLAB SECTION, MAINLINE

BRIDGE NUMBER AND LOCATION	APPROACH SLAB	BEGIN STATION	END STATION	WIDTH (W)
CLE-275-0549 L	REAR	289+76.85	290+01.85	62'-0"
OVER U.S.R. 50	FORWARD	291+96.55	292+21.55	62'-0"
CLE-275-0549 R	REAR	289+76.85	290+01.85	62'-0"
OVER U.S.R. 50	FORWARD	291+96.55	292+21.55	62'-0"
CLE-275-0568 L	REAR	300+41.46	300+66.46	69'-11 7/8"
OVER E. FORK, LITTLE MIAMI RIVER	FORWARD	303+42.29	303+67.29	72'-11 1/32"
CLE-275-0568 R	REAR	300+41.46	300+66.46	VARIES 65'-0 3/8" TO 65'-10 9/16"
OVER E. FORK, LITTLE MIAMI RIVER	FORWARD	303+42.29	303+67.29	VARIES 78'-0 23/32" TO 79'-5 5/32"
CLE-275-0618 L	REAR	326+42.42	326+67.42	VARIES 82'-8 13/32" TO 79'-9 3/8"
OVER U.S.R. 50 J	FORWARD	329+10.02	329+35.02	74'-4 3/32"
CLE-275-0618 R	REAR	326+42.42	326+67.42	109'-0 1/4"
OVER U.S.R. 50 J	FORWARD	329+10.02	329+35.02	VARIES 109'-7 13/16" TO 110'-11 1/32"
CLE-275-0654 L	REAR	345+60.08	345+85.08	70'-0"
OVER R/R AND ROUND BOTTOM RD.	FORWARD	348+27.72	348+52.72	70'-0"
CLE-275-0654 R	REAR	345+74.30	345+99.30	VARIES 102'-0 3/8" TO 101'-2 3/4"
OVER R/R AND ROUND BOTTOM RD.	FORWARD	348+11.94	348+36.94	VARIES 94'-2 7/8" TO 93'-5 9/32"

FOR PAVEMENT LEGEND SEE SH. NO. 6.

TYPICAL SECTIONS

CLE-275-5.35

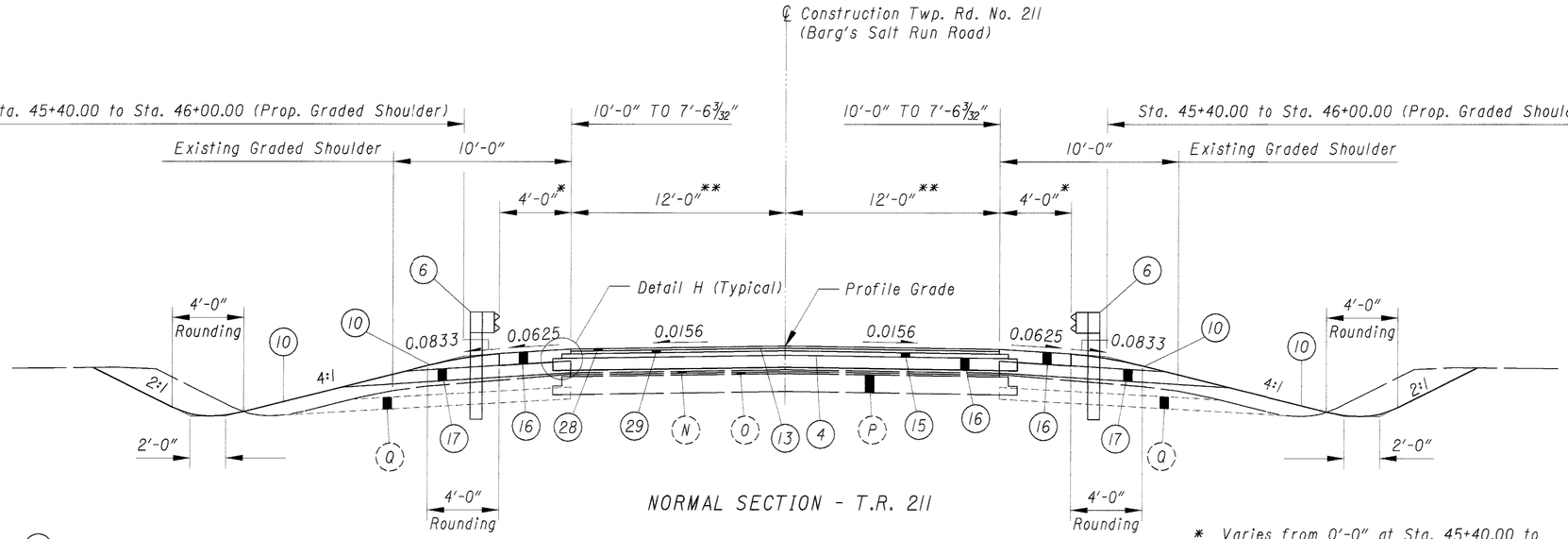

NORMAL SECTION - T.R. 211

SECTION APPLIES:

STA. 45+40.00 TO STA. 46+00.00	= 60.00 L.F.
STA. 48+11.74 TO STA. 51+87.39	= 375.65 L.F.
Deduct for Bridge and Approach Slabs STA. 48+11.74 TO STA. 51+87.39	= -375.65 L.F.
TOTAL =	60.00 L.F.

* Varies from 0'-0" at Sta. 45+40.00 to 4'-0" at Sta. 46+39.45

Varies from 4'-0" at Sta. 53+75.92 to 0'-0" at Sta. 54+68.00

** Varies from 11'-7" at Sta. 45+40.00 to 12'-0" at Sta. 46+39.45

Varies from 12'-0" at Sta. 53+75.92 to 8-4" at Sta. 54+68.00

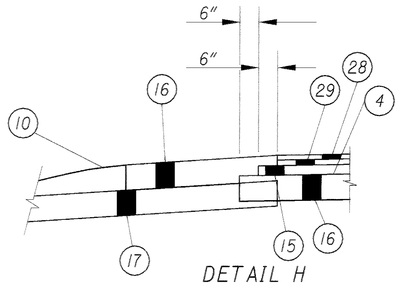

DETAIL H

SHOULDER STEPOUT TREATMENT (LT. & RT.)
TR-211 TYPICAL

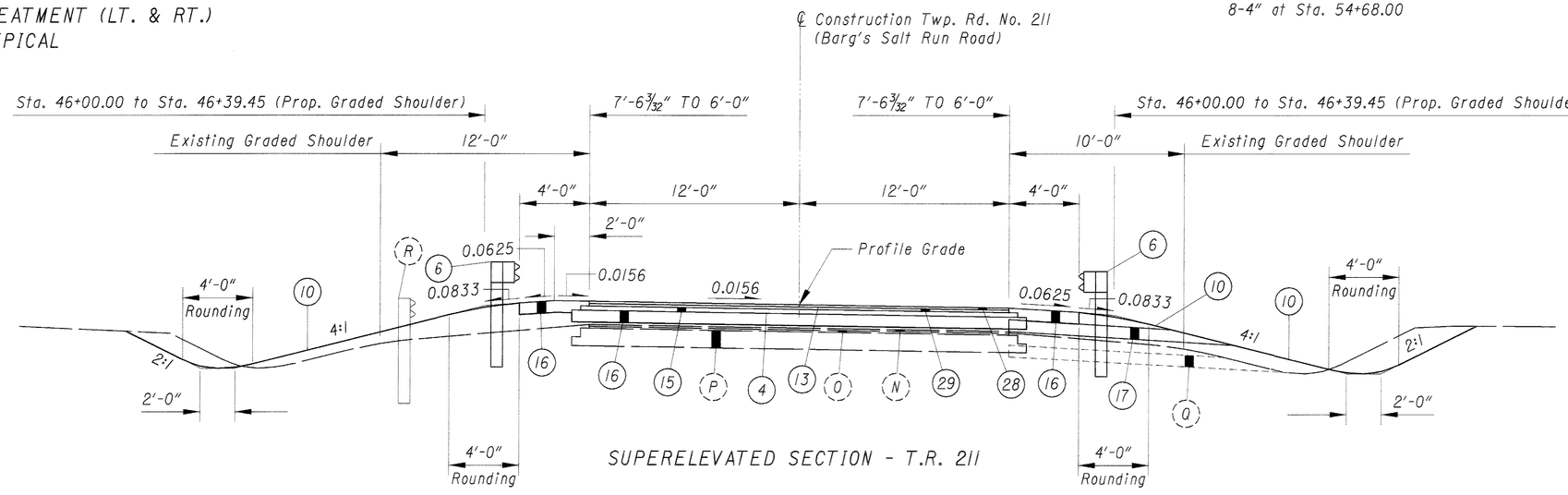

SUPERELEVATED SECTION - T.R. 211

SECTION APPLIES:

STA. 46+00.00 TO STA. 47+00.00 TRANSITION	= 100.00 L.F.
STA. 47+00.00 TO STA. 47+11.74	= 11.74 L.F.
STA. 47+11.74 TO STA. 48+11.74 TRANSITION	= 100.00 L.F.
TOTAL =	211.74 L.F.

FOR PAVEMENT LEGEND SEE SH. NO. 6.

TYPICAL SECTIONS

CLE-275-5.35

24
857

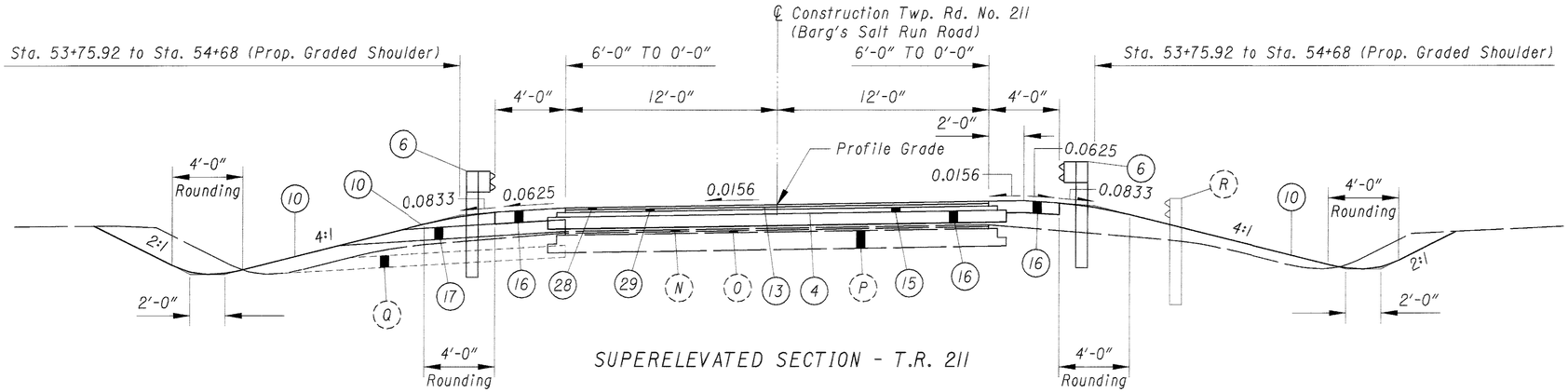

SUPERELEVATED SECTION - T.R. 211

SECTION APPLIES:

STA. 51+87.39 TO STA. 52+87.39 TRANSITION	= 100.00 L.F.
STA. 52+87.39 TO STA. 53+68.00	= 80.61 L.F.
STA. 53+68.00 TO STA. 54+68 TRANSITION	= 100.00 L.F.
TOTAL	= 280.61 L.F.

AGGREGATE DRAIN TABLE

STATION	SIDE	ITEM 605 AGGREGATE DRAINS UNIT L.F.
45+58.00	LT.	11.11
45+83.00	RT.	11.11
46+07.24	LT. & RT.	22.22
46+33.00	RT.	11.11
46+58.00	RT.	11.11
46+83.00	RT.	11.11
47+08.00	RT.	11.15
47+33.00	RT.	11.15
47+58.00	RT.	11.15
47+83.00	RT.	11.15
48+08.00	LT.	11.15
48+11.74	LT. & RT.	22.30
51+89.00	RT.	11.11
52+14.00	LT.	11.11
52+39.00	LT.	11.11
52+64.00	LT.	11.11
52+89.00	LT.	11.11
53+14.00	LT.	11.11
53+39.00	LT.	11.11
53+64.00	LT.	11.11
53+89.00	LT.	11.11
54+14.13	LT. & RT.	22.22
54+39.00	RT.	11.11
54+64.00	LT.	11.11
TOTALS CARRIED TO SUB-SUMMARY		300.25

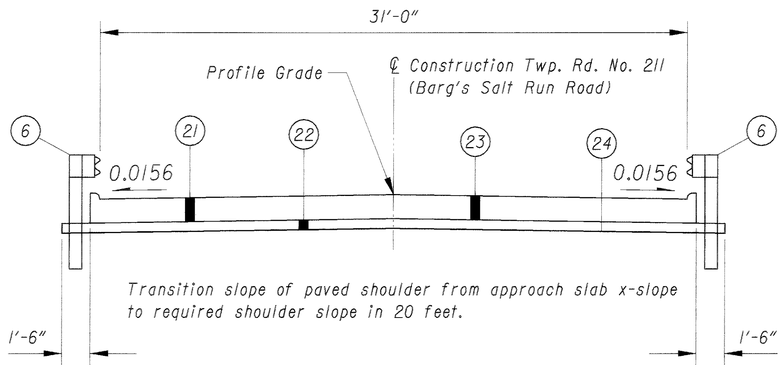

APPROACH SLAB SECTION - T.R. 211

SECTION APPLIES:

STA. 48+11.74 TO STA. 51+87.39	= 375.65 L.F.
Deduct for Bridge	
STA. 48+36.74 TO STA. 51+62.39	= -325.65 L.F.
TOTAL	= 50.00 L.F.

FOR PAVEMENT LEGEND SEE SH. NO. 6.

TYPICAL SECTIONS

CLE-275-5.35

25
857

ROUNDING

THE ROUNDING AT SLOPE BREAKPOINTS SHOWN ON THE TYPICAL SECTIONS APPLY TO ALL CROSS SECTIONS EVEN THOUGH OTHERWISE SHOWN.

UTILITIES

LISTED BELOW ARE ALL UTILITIES LOCATED WITHIN THE PROJECT CONSTRUCTION LIMITS TOGETHER WITH THEIR RESPECTIVE OWNERS:

ELECTRIC:
CINERGY CORP.
FOURTH & MAIN, ROOM 467A
CINCINNATI, OHIO 45201
PHONE: (513) 287-2454

GAS:
CINERGY CORP.
FOURTH & MAIN, ROOM 460A
CINCINNATI, OHIO 45201
PHONE: (513) 287-2762

TELEPHONE:
CINCINNATI BELL TELEPHONE
201 E. FOURTH STREET
CINCINNATI, OHIO 45202
PHONE: (513) 565-7043

WATER & WASTEWATER:
CLERMONT COUNTY WATER AND SEWER DISTRICT
4000 FILAGER ROAD
BATAVIA, OH 45103
PHONE: (513) 732-7930

CABLE TV:
TIME WARNER CABLE
11252 CORNELL PARK DRIVE
CINCINNATI, OHIO 45242
PHONE: (513) 469-5483

PROTECTION:
OHIO UTILITIES PROTECTION SERVICE
100 FEDERAL PLAZA EAST, LOWER LEVEL
YOUNGSTOWN, OHIO 44503
PHONE: (800) 362-2764

THE LOCATION OF THE UNDERGROUND UTILITIES SHOWN ON THE PLANS ARE AS OBTAINED FROM THE OWNERS AS REQUIRED BY SECTION 153.64 O.R.C.

CONTINGENCY QUANTITIES

THE CONTRACTOR SHALL NOT ORDER MATERIALS OR PERFORM WORK FOR ITEMS DESIGNATED BY PLAN NOTE TO BE USED "AS DIRECTED BY THE ENGINEER" UNLESS AUTHORIZED BY THE ENGINEER. THE ACTUAL WORK LOCATIONS AND QUANTITIES USED FOR SUCH ITEMS SHALL BE INCORPORATED INTO THE FINAL CHANGE ORDER GOVERNING COMPLETION OF THIS PROJECT.

CONSTRUCTION NOISE

ACTIVITIES AND LAND USE ADJACENT TO THIS PROJECT MAY BE AFFECTED BY CONSTRUCTION NOISE. IN ORDER TO MINIMIZE ANY ADVERSE CONSTRUCTION NOISE IMPACTS, ANY POWER-OPERATED CONSTRUCTION-TYPE DEVICE SHALL NOT BE OPERATED BETWEEN THE HOURS OF 8:00 PM AND 8:00 AM. IN ADDITION, ANY SUCH DEVICE SHALL NOT BE OPERATED AT ANY TIME IN SUCH A MANNER THAT THE NOISE CREATED SUBSTANTIALLY EXCEEDS THE NOISE CUSTOMARILY AND NECESSARILY ATTENDANT TO THE REASONABLE AND EFFICIENT PERFORMANCE OF SUCH EQUIPMENT.

ELEVATION DATUM

ALL ELEVATIONS ARE BASED ON U.S.G.S. DATUM (NAVD88).

WORK LIMITS

THE WORK LIMITS SHOWN ON THESE PLANS ARE FOR PHYSICAL CONSTRUCTION ONLY. THE INSTALLATION AND OPERATION OF ALL TEMPORARY TRAFFIC CONTROL AND TEMPORARY TRAFFIC CONTROL DEVICES REQUIRED BY THESE PLANS SHALL BE PROVIDED BY THE CONTRACTOR WHETHER INSIDE OR OUTSIDE THESE WORK LIMITS.

STREAM CHANNEL EXCAVATION

THE CONTRACTOR SHALL TAKE ALL PRECAUTIONS NECESSARY TO PREVENT ANY INCIDENTAL DISCHARGES ASSOCIATED WITH THE EXCAVATION AND HAULING OF MATERIAL FROM THE STREAM CHANNEL. THIS PERTAINS TO ANY EXCAVATION OPERATIONS SUCH AS, FOUNDATION PIER OR ABUTMENT EXCAVATION, CHANNEL CLEANOUT, EXCAVATION FOR ROCK CHANNEL PROTECTION AND REMOVAL OF ANY TEMPORARY FILL ASSOCIATED WITH CONSTRUCTION OPERATIONS.

PROTECTION OF RIGHT-OF-WAY LANDSCAPING

THE CONTRACTOR SHALL CONSTRICT ALL OF HIS/HER ACTIVITIES, EQUIPMENT STORAGE, AND STAGING TO WITHIN THE CONSTRUCTION LIMITS. UNLESS OTHERWISE IDENTIFIED IN THE PLANS OR PROPOSAL, THE CONSTRUCTION LIMITS ARE IDENTIFIED AS 30 FEET FROM THE EDGE OF PAVEMENT. SHOULD THE CONTRACTOR WISH TO USE ANY AREA OUTSIDE THESE LIMITS, A REQUEST IN WRITING MUST BE SUBMITTED TO THE PROJECT ENGINEER. THE DOCUMENT SUBMITTED MUST CLEARLY IDENTIFY THE AREA THAT THE CONTRACTOR PLANS TO USE AND EXPLAIN THE PROPOSED USE AND RESTORATION OF THE AREA. THE ENGINEER SHALL APPROVE THE REQUEST IN WRITING BEFORE THE CONTRACTOR HAS PERMISSION TO USE THE AREA. PRIOR TO BEGINNING WORK, THE CONTRACTOR, SUPERINTENDENT OR HIS REPRESENTATIVE, THE PROJECT ENGINEER, AND A REPRESENTATIVE OF THE MAINTAINING AGENCY SHALL REVIEW AND RECORD ALL LANDSCAPING ITEMS WITHIN THE RIGHT-OF-WAY (BOTH WITHIN AND OUTSIDE THE CONSTRUCTION LIMITS). A RECORD OF THIS REVIEW WILL BE KEPT IN THE PROJECT ENGINEER'S FILES. PRIOR TO FINAL ACCEPTANCE, A FINAL REVIEW OF LANDSCAPING ITEMS WILL BE MADE. ANY ITEMS DAMAGED BEYOND THE CONSTRUCTION LIMITS AS DEFINED ABOVE WILL BE REPLACED IN KIND OR AS DIRECTED BY THE PROJECT ENGINEER.

CONVERSION OF STANDARD CONSTRUCTION DRAWINGS

THE METRIC STANDARD DRAWINGS REFERENCED IN THIS PLAN SHALL BE CONVERTED TO ENGLISH UNITS USING THE SI (METRIC) TO ENGLISH CONVERSION FACTORS PROVIDED IN SECTION 109.011 OF THE 1997 CONSTRUCTION AND MATERIALS SPECIFICATIONS. THE APPENDIX OF ASTM E 380 SHALL BE UTILIZED FOR ANY ADDITIONAL CONVERSION FACTORS REQUIRED. CONVERSIONS SHALL BE APPROPRIATELY PRECISE AND SHALL REFLECT STANDARD INDUSTRY ENGLISH VALUES WHERE SUITABLE.

CLEARING AND GRUBBING

ALTHOUGH THERE ARE NO TREES OR STUMPS SPECIFICALLY MARKED FOR REMOVAL WITHIN THE LIMITS OF THE PROJECT, A LUMP SUM QUANTITY HAS BEEN INCLUDED IN THE GENERAL SUMMARY FOR ITEM 201, CLEARING AND GRUBBING. ALL PROVISIONS AS SET FORTH IN THE SPECIFICATIONS UNDER THIS ITEM SHALL BE INCLUDED IN THE LUMP SUM PRICE BID FOR ITEM 201, CLEARING AND GRUBBING.

604 - REFERENCE MONUMENT, AS PER PLAN

MONUMENTS SHALL BE CONSTRUCTED IN ACCORDANCE WITH DETAILS AS SHOWN ON THE STANDARD CONSTRUCTION DRAWINGS AND AT LOCATIONS ORIGINALLY SHOWN ON PREVIOUS PROJECTS' R/W PLANS: SH. NO. 156 OF 165 (CLE-275-4.53), SH. NO. 393 OF 412 (CLE-275-5.61) AND SH. NO. 598 OF 638 (CLE-275-6.68). FOR LOCATIONS BASED ON CURRENT PROJECT STATIONING, SEE SH. NO. 28

CENTERLINE MONUMENTS HAVE BEEN USED FOR TBM'S THROUGHOUT THE PROJECT. THE CONTRACTOR SHALL REPLACE ALL MONUMENTS AT PROPOSED GRADE AND IN THEIR CURRENT HORIZONTAL LOCATION ONLY AFTER RELOCATING TBM'S. THE FOLLOWING QUANTITY FOR MONUMENTS HAS BEEN CARRIED TO THE GENERAL SUMMARY.

604 REFERENCE MONUMENT, AS PER PLAN 43 EACH

ITEM 203 - PROOF ROLLING

AN ESTIMATED QUANTITY FOR THIS ITEM HAS BEEN PROVIDED IN THE GENERAL SUMMARY FOR USE AS DIRECTED BY THE ENGINEER.

CONNECTION BETWEEN EXISTING AND PROPOSED GUARDRAIL

WHEN IT IS NECESSARY TO SPLICE PROPOSED GUARDRAIL TO EXISTING GUARDRAIL, ONLY THE EXISTING GUARDRAIL SHALL BE CUT, DRILLED, OR PUNCHED. THE CONNECTION SHALL BE MADE USING A "W-BEAM RAIL SPLICE" AS SHOWN IN AASHTO M 180. PAYMENT SHALL BE INCLUDED IN THE CONTRACT PRICE FOR THE RESPECTIVE GUARDRAIL ITEMS.

ITEM 606 - ANCHOR ASSEMBLY, TYPE B-98

THIS ITEM SHALL CONSIST OF FURNISHING AND INSTALLING EITHER OF THE FOLLOWING GUARDRAIL END TERMINALS.

1) THE SRT-350, GUARDRAIL END TERMINAL AS MANUFACTURED BY SYRO INC., 1170 N. STATE STREET, GIRARD, OHIO 44420 (TELEPHONE: 330-545-4373).

THE LENGTH OF THE SRT-350 SYSTEM IS CONSIDERED TO BE 37'-6", INCLUSIVE OF THREE 12'-6" LONG RAIL ELEMENTS. INSTALLATION SHALL BE AT THE LOCATIONS SPECIFIED IN THE PLANS, IN ACCORDANCE WITH THE MANUFACTURER'S SPECIFICATIONS AS DETAILED ON THE FOLLOWING PRE-APPROVED SHOP DRAWINGS:

DWG. #	DRAWING NAME	DWG./ REV. DATE	ODOT APPROVAL DATE
SS444	SLOTTED RAIL TERMINAL POST	7/12/99 Rev. 1	8/27/99
SS444M	LAYOUT AND ERECTION DETAILS SRT-350(12.5, 8 POST)	7/12/99	
SS425M	SLOTTED RAIL TERMINAL SRT-350 POST LAYOUT AND ERECTION DETAILS (12.5, 9 POST)	6/21/97 Rev. 1	3/6/98

2) THE FLEAT-350 MANUFACTURED BY ROAD SYSTEMS, INC., 7631 NEW CASTLE DRIVE, FRANKFORT, IL 60423 (TELEPHONE: 815-464-5917).

THE LENGTH OF THE FLEAT-350 IS CONSIDERED TO BE 37'-6", INCLUSIVE OF THREE 12'-6" LONG RAIL ELEMENTS. INSTALLATION SHALL BE AT THE LOCATIONS SPECIFIED IN THE PLANS, IN ACCORDANCE WITH THE MANUFACTURER'S SPECIFICATIONS AS DETAILED ON THE FOLLOWING PRE-APPROVED SHOP DRAWINGS:

DWG. #	DRAWING NAME	DWG./ REV. DATE	ODOT APPROVAL DATE
FLT-M	FLARED ENERGY ABSORBING TERMINAL (FLEAT-350) ASSEMBLY	4/16/98	7/31/98

GRADING SHALL BE IN ACCORDANCE WITH STANDARD CONSTRUCTION DRAWING GR-4.3M.

THE FACE OF THE TYPE B-98 IMPACT HEAD SHALL BE COVERED WITH TYPE G REFLECTIVE SHEETING, PER CMS 730.19: APPROXIMATELY 36" W X 12" H FOR THE SRT-350 AND 14" W X 20" H FOR THE FLEAT.

PAYMENT FOR THE ABOVE WORK SHALL BE MADE AT THE UNIT PRICE BID FOR ITEM 606, ANCHOR ASSEMBLY, TYPE B-98, EACH, AND SHALL INCLUDE ALL LABOR, TOOLS, EQUIPMENT AND MATERIALS NECESSARY TO CONSTRUCT A COMPLETE AND FUNCTIONAL ANCHOR ASSEMBLY SYSTEM, INCLUDING REFLECTIVE SHEETING AND ALL RELATED HARDWARE, GRADING, EMBANKMENT AND EXCAVATION NOT SEPARATELY SPECIFIED, AS REQUIRED BY THE MANUFACTURER.

ITEM 606 - ANCHOR ASSEMBLY, TYPE E-98

THIS ITEM SHALL CONSIST OF FURNISHING AND INSTALLING EITHER OF THE FOLLOWING GUARDRAIL END TERMINALS.

1) THE ET-2000 (1997) MANUFACTURED BY SYRO, INC., 1170 N. STATE STREET, GIRARD, OHIO 44420 (TELEPHONE: 330-545-4373).

THE LENGTH OF THE ET-2000 (1997) SYSTEM IS CONSIDERED TO BE 50'-0", INCLUSIVE OF TWO 25'-0" LONG RAIL ELEMENTS. INSTALLATION SHALL BE AT THE LOCATIONS SPECIFIED IN THE PLANS, IN ACCORDANCE WITH THE MANUFACTURER'S SPECIFICATIONS AS DETAILED ON THE FOLLOWING PRE-APPROVED SHOP DRAWINGS:

DWG. #	DRAWING NAME	DWG./ REV. DATE	ODOT APPROVAL DATE
SSS265M	ET-2000 (1997) PLAN, ELEVATION & SECTIONS	6/20/97	3/6/98

2) THE SKT-350 MANUFACTURED BY ROAD SYSTEMS, INC., 7631 NEW CASTLE DRIVE, FRANKFORT, IL 60423 (TELEPHONE: 815-464-5917).

THE LENGTH OF THE SKT-350 SYSTEM IS CONSIDERED TO BE 50'-0", INCLUSIVE OF FOUR 12'-6" LONG RAIL ELEMENTS. INSTALLATION SHALL BE AT THE LOCATIONS SPECIFIED IN THE PLANS, IN ACCORDANCE WITH THE MANUFACTURER'S SPECIFICATIONS AS DETAILED ON THE FOLLOWING PRE-APPROVED SHOP DRAWINGS:

DWG. #	DRAWING NAME	DWG./ REV. DATE	ODOT APPROVAL DATE
SKT-4M	SEQUENTIAL KINKING TERMINAL (SKT-350) ASSEMBLY WITH 4 FOUNDATION TUBES	12/11/97	3/6/98

THE FACE OF THE TYPE E-98 IMPACT HEAD SHALL BE COVERED WITH A SHEET OF TYPE G REFLECTIVE SHEETING, PER CMS 730.19, APPROXIMATELY 18" X 18".

PAYMENT FOR THE ABOVE WORK SHALL BE MADE AT THE UNIT PRICE BID FOR ITEM 606, ANCHOR ASSEMBLY, TYPE E-98, EACH, AND SHALL INCLUDE ALL LABOR, TOOLS, EQUIPMENT AND MATERIALS NECESSARY TO CONSTRUCT A COMPLETE AND FUNCTIONAL ANCHOR ASSEMBLY SYSTEM, INCLUDING ALL RELATED TRANSITIONS, REFLECTIVE SHEETING, HARDWARE, GRADING, EMBANKMENT AND EXCAVATION NOT SEPARATELY SPECIFIED, AS REQUIRED BY THE MANUFACTURER.

CALCULATED JAG CHECKED AM

GENERAL NOTES

CLE-275-5.35

FENCE LENGTHS

THE LENGTHS OF FENCE SHOWN IN THE PLANS ARE HORIZONTAL DIMENSIONS. MEASUREMENTS OF THE FINAL QUANTITIES SHALL BE MADE IN ACCORDANCE WITH ITEM 607.

ITEM 606 - IMPACT ATTENUATOR, TYPE 1-98 (UNIDIRECTIONAL OR BIDIRECTIONAL)

THIS ITEM SHALL CONSIST OF FURNISHING AND INSTALLING EITHER OF THE FOLLOWING IMPACT ATTENUATORS:

1) THE C-A-T MANUFACTURED BY SYRO, INC., 1170 N. STATE STREET, GIRARD, OHIO 44420 (TELEPHONE: 330-545-4373).

THE LENGTH OF THE C-A-T SYSTEM IS CONSIDERED TO BE 31'-3" LONG. INSTALLATION SHALL BE AT THE LOCATIONS SPECIFIED IN THE PLANS, IN ACCORDANCE WITH THE MANUFACTURER'S SPECIFICATIONS AS DETAILED ON THE FOLLOWING PRE-APPROVED SHOP DRAWINGS:

DWG. #	DRAWING NAME	DWG./ REV. DATE	ODOT APPROVAL DATE
SS245M	CRASH-CUSHION ATTENUATING TERMINAL PLAN, ELEVATION & SECTIONS FOR USE AS A LONGITUDINAL MEDIAN BARRIER TERMINAL OR CRASH CUSHION ATTENUATOR	4/10/97 Rev. 4	3/6/98
SS224M	C-A-T TRANSITION TO MEDIAN BARRIER GUARDRAIL PLAN, ELEVATION & SECTIONS	4/26/96	3/6/98
SS226M	C-A-T TRANSITION TO VERTICAL WALL OR PIER PLAN, ELEVATION & SECTIONS	4/26/96	3/6/98

2) THE BRAKEMASTER MANUFACTURED BY ENERGY ABSORPTION SYSTEMS, INC., ONE EAST WACKER DRIVE, CHICAGO, IL 60601 (TELEPHONE: 312-467-6750).

THE LENGTH OF THE BRAKEMASTER SYSTEM IS CONSIDERED TO BE 32'-8" LONG. INSTALLATION SHALL BE AT THE LOCATIONS SPECIFIED IN THE PLANS, IN ACCORDANCE WITH THE MANUFACTURER'S SPECIFICATIONS AS DETAILED ON THE FOLLOWING PRE-APPROVED SHOP DRAWINGS:

DWG. #	DRAWING NAME	DWG./ REV. DATE	ODOT APPROVAL DATE
92-00-01	BRAKEMASTER GENERAL ASSEMBLY (UNIDIRECTIONAL SYSTEM)	3/6/97 Rev. K	3/6/98
92-00-81	BRAKEMASTER (UNIDIRECTIONAL) WITH FOUNDATION TUBES	2/9/98	3/6/98
92-00-02	BRAKEMASTER GENERAL ASSEMBLY (BIDIRECTIONAL SYSTEM)	3/10/97 Rev. K	3/6/98
92-00-82	BRAKEMASTER (BIDIRECTIONAL) WITH FOUNDATION TUBES	2/9/98	3/6/98
9202024	ANCHOR ASSEMBLY, FOUNDATION TUBE, 6 1/2 FT., BRS	6/12/97 Rev. D	3/6/98

THE FACE OF THE TYPE 1-98 IMPACT HEAD SHALL BE COVERED WITH A SHEET OF TYPE G REFLECTIVE SHEETING, PER CMS 730.19, APPROXIMATELY 36" X 12". PAYMENT FOR THE ABOVE WORK SHALL BE MADE AT THE UNIT PRICE BID FOR ITEM 606, IMPACT ATTENUATOR, TYPE 1-98 (UNIDIRECTIONAL OR BIDIRECTIONAL), EACH, AND SHALL INCLUDE ALL LABOR, TOOLS, EQUIPMENT AND MATERIALS NECESSARY TO CONSTRUCT A COMPLETE AND FUNCTIONAL ANCHOR ASSEMBLY SYSTEM, INCLUDING ALL RELATED TRANSITIONS, HARDWARE, REFLECTIVE SHEETING AND GRADING, NOT SEPARATELY SPECIFIED, AS REQUIRED BY THE MANUFACTURER.

ANCHOR ASSEMBLY REMOVED FOR STORAGE

THIS ITEM SHALL CONSIST OF REMOVING A TYPE E ANCHOR ASSEMBLY AND STORING IT IN ACCORDANCE WITH THE REQUIREMENTS OF ITEM 202. IN ADDITION TO THE REQUIREMENTS OF ITEM 202, THE ANCHOR ASSEMBLY SHALL BE STORED ON THE CONSTRUCTION SITE AT A NON WORK LOCATION TO BE PICKED UP BY STATE FORCES. THE SPECIFIC PARTS OF THE TYPE E ANCHOR ASSEMBLY TO BE STORED WILL BE "AS DIRECTED BY THE ENGINEER." ALL REMAINING PARTS WILLL BECOME THE PROPERTY OF THE CONTRACTOR AND DISPOSED ACCORDINGLY.

PART-WIDTH CONSTRUCTION

BECAUSE OF THE NECESSITY TO BUILD THIS PROJECT UNDER TRAFFIC AND TO CONSTRUCT THE FULL PAVEMENT WIDTH IN STAGES, EXTREME CARE SHALL BE TAKEN TO PREVENT THE CONSTRUCTION OF A BUTT JOINT IN THE BASE COURSES. LONGITUDINAL JOINTS SHALL BE LAPPED AS SHOWN ON STANDARD CONSTRUCTION DRAWING BP-3.1.

ITEM 407 - TACK COAT AND ITEM 407 - TACK COAT FOR INTERMEDIATE COURSE

THE RATE OF APPLICATION OF THE 407 TACK COAT SHALL BE SUBJECT TO ADJUSTMENT AS DIRECTED BY THE ENGINEER. FOR ESTIMATING PURPOSES ONLY, THE PLAN QUANTITIES INDICATE AN AVERAGE APPLICATION RATE OF:

407, TACK COAT	0.075 GAL. PER SQ. YARD
407, TACK COAT FOR INTERMEDIATE COURSE	0.05 GAL. PER SQ. YARD

SEEDING AND MULCHING

THE FOLLOWING QUANTITIES ARE PROVIDED TO PROMOTE GROWTH AND CARE OF PERMANENT SEEDED AREAS:

870, SOIL ANALYSIS TEST	2	EACH
870, PLACING TOPSOIL	5862	CU. YD.
870, COMMERCIAL FERTILIZER	14.23	TON
870, AGRICULTURAL LIME	43.65	TON
870, WATER	569	M. GAL.
870, MOWING	237	M. SQ. FT.

SEEDING AND MULCHING SHALL BE APPLIED TO ALL AREAS OF EXPOSED SOIL BETWEEN THE RIGHT-OF-WAY LINES, AND WITHIN THE CONSTRUCTION LIMITS FOR AREAS OUTSIDE THE RIGHT-OF-WAY LINES COVERED BY WORK AGREEMENT OR SLOPE EASEMENT. QUANTITY CALCULATIONS FOR SEEDING AND MULCHING, ARE BASED ON THESE LIMITS.

TEMPORARY SOIL EROSION AND SEDIMENT CONTROL

THE FOLLOWING ESTIMATED QUANTITIES ARE TO BE PLACED BY THE CONTRACTOR WITH THE ENGINEER'S CONCURRENCE FOR TEMPORARY EROSION AND SEDIMENT CONTROL MEASURES:

877, TEMPORARY SEEDING AND MULCHING	26359	SQ. YD.
877, TEMPORARY PERIMETER FILTER FABRIC FENCE	2923	LIN. FT.
877, TEMPORARY DITCH CHECK FILTER FABRIC FENCE	570	LIN. FT.
877, TEMPORARY INLET PROTECTION FILTER FABRIC FENCE	825	LIN. FT.
877, TEMPORARY DITCH PROTECTION	1129	SQ. YD.
601, ROCK CHANNEL PROTECTION, TYPE C WITHOUT FILTER	1604	CU. YD.
870, COMMERCIAL FERTILIZER	10.24	TON
870, REPAIR SEEDING AND MULCHING	5272	SQ. YD.
870, WATER	491	M. GAL.
870, INTER-SEEDING	5272	SQ. YD.

EROSION CONTROL

ITEMS 601, 660 AND 670 ARE PROVIDED IN THE PLANS FOR EROSION CONTROL. ROCK OF A STABLE NATURE SHALL NOT BE REMOVED IN ORDER TO PLACE ANY OF THESE ITEMS AND TURF OF A STABLE NATURE SHALL NOT BE REMOVED IN ORDER TO PLACE 660. THE ENGINEER SHALL CHECK AND NON-PERFORM QUANTITIES OR ADJUST LOCATIONS AND QUANTITIES OF THESE ITEMS WHERE INDICATED BY FIELD CONDITIONS DURING CONSTRUCTION. IN ADDITION, THESE ITEMS SHALL MEET THE REQUIREMENT OF 108.04.

STORM WATER POLLUTION PREVENTION PLAN

THE CONDITIONS OF THE NPDES CONSTRUCTION STORM WATER GENERAL PERMIT (SEE PROPOSAL) SHALL BE MET DURING ALL STAGES OF CONSTRUCTION. THE LOCATION AND TIMING OF ALL EROSION AND SEDIMENT CONTROL ITEMS SHALL BE FIELD ADJUSTED TO PREVENT SIGNIFICANT IMPACTS ON RECEIVING WATERS. IMPLEMENTATION OF THIS STORM WATER POLLUTION PREVENTION PLAN SHALL CONTINUE THROUGHOUT THE DURATION OF THE PROJECT OR UNTIL SUCH TIME THAT THE UPSLOPE DISTURBED AREAS ARE STABILIZED.

INSTALLATION OF SEDIMENT BASINS/DAMS, PERIMETER FILTER FABRIC FENCE, AND DITCH CHECKS SHALL BE CONCURRENT WITH CLEARING AND GRUBBING AND/OR GRADING OPERATIONS.

ALL REASONABLE ATTEMPTS SHOULD BE MADE TO MINIMIZE THE TOTAL AREA OF DISTURBED LAND.

AREAS TO REMAIN DORMANT FOR MORE THAN 45 DAYS SHOULD BE IMMEDIATELY STABILIZED WITH TEMPORARY SEEDING AND MULCHING, EROSION CONTROL MATTING OR OTHER APPROPRIATE EROSION CONTROL MEASURES.

ADDITIONAL QUANTITIES OF TEMPORARY SOIL EROSION AND AND SEDIMENT CONTROL ITEMS ARE GIVEN ON THIS SHEET.

ITEM SPECIAL - FILL AND PLUG EXISTING CONDUIT

THIS ITEM SHALL CONSIST OF THE CONSTRUCTION OF BULKHEADS IN AN EXISTING CONDUIT AND FILLING THE AREA THUS SEALED OFF WITH LEAN GROUT, ITEM 613, SAND OR OTHER MATERIAL APPROVED BY THE ENGINEER.

BULKHEADS SHALL BE LOCATED AT THE LIMITS OF THE AREA TO BE FILLED AS INDICATED ON THE PLANS. THE BULKHEADS SHALL CONSIST OF BRICK OR CONCRETE MASONRY WITH A MINIMUM THICKNESS OF 12 INCHES.

THE FILL MATERIAL SHALL BE PUMPED INTO PLACE, OR PLACED BY OTHER MEANS APPROVED BY THE ENGINEER, SO THAT, AFTER SETTLEMENT, AT LEAST 90 PERCENT OF THE CROSS-SECTIONAL AREA OF THE CONDUIT, FOR ITS ENTIRE LENGTH, SHALL BE FILLED. THE LENGTH OF FILLED AND PLUGGED CONDUIT TO BE PAID FOR SHALL BE THE ACTUAL NUMBER OF LINEAR FEET (MEASURED ALONG THE CENTERLINE OF EACH CONDUIT FROM OUTER FACE TO OUTER FACE OF BULKHEADS) FILLED AND PLUGGED AS DESCRIBED ABOVE.

IN LIEU OF FILLING AND PLUGGING THE EXISTING CONDUIT, THE PIPE MAY BE CRUSHED AND BACKFILLED IN ACCORDANCE WITH THE PROVISIONS OF 203, OR IT MAY BE REMOVED.

THE LENGTH, MEASURED AS PROVIDED ABOVE, SHALL BE PAID FOR AT THE CONTRACT PRICE PER LINEAR FOOT FOR, ITEM SPECIAL, FILL AND PLUG EXISTING CONDUIT.

CALCULATED JAG
CHECKED AM

GENERAL NOTES

CLE-275-5.35

PIPE CONNECTIONS TO CORRUGATED METAL STRUCTURES

CONNECTIONS OF PROPOSED LONGITUDINAL DRAINAGE TO CORRUGATED METAL STRUCTURES SHALL BE MADE BY MEANS OF A SHOP FABRICATED OR FIELD WELDED STUB ON THE STRUCTURE. THE STUB SHALL MEET THE REQUIREMENTS OF 707 AND HAVE A MINIMUM LENGTH OF 2 FEET AND A MINIMUM WALL THICKNESS OF 0.064 INCHES.

THE LOCATION AND ELEVATION OF THE STUB ARE TO BE CONSIDERED APPROXIMATE AND MAY BE ADJUSTED BY THE ENGINEER TO AVOID CUTTING THROUGH JOINTS IN THE STRUCTURE.

THE FIELD WELDED JOINT, IF USED, SHALL BE THOROUGHLY CLEANED AND REGALVANIZED OR OTHERWISE SUITABLY REPAIRED. WELDING SHALL MEET THE REQUIREMENTS OF 863.23.

A MASONRY COLLAR, AS PER STANDARD DRAWING DM-1.1M, WILL BE REQUIRED TO CONNECT THE LONGITUDINAL DRAINAGE TO THE STUB, WHEN PIPE OTHER THAN CORRUGATED METAL IS PROVIDED FOR THE LONGITUDINAL DRAINAGE.

PAYMENT FOR CUTTING INTO THE STRUCTURE AND PROVIDING THE CONNECTION DESCRIBED, SHALL BE INCLUDED IN THE CONTRACT PRICE FOR ITEM 603 OR 522.

ITEM 605 - AGGREGATE DRAINS (BARG'S SALT RUN ONLY)

AGGREGATE DRAINS SHALL BE PLACED AT 50 FOOT INTERVALS ON EACH SIDE OF NORMAL CROWNED SECTIONS, STAGGERED SO THAT EACH DRAIN IS 25 FEET FROM THE ADJACENT DRAIN ON THE OPPOSITE SIDE, AND AT 25 FOOT INTERVALS ON THE LOW SIDE ONLY OF SUPERELEVATED SECTIONS. AN AGGREGATE DRAIN SHALL BE PLACED AT THE LOW POINT OF EACH SAG VERTICAL CURVE.

NON-USE OF ASBESTOS-CONTAINING MATERIALS

THE CONTRACTOR SHALL AT NO TIME INCORPORATE ANY MATERIALS WHICH ARE COMPOSED OF OR CONTAIN ANY AMOUNTS OF ASBESTOS. THE SUBSTITUTION OF MATERIALS WHICH CONTAIN ANY AMOUNTS OF ASBESTOS WILL IN NO CIRCUMSTANCES BE ACCEPTABLE. UPON COMPLETION OF THE PROJECT, THE CONTRACTOR SHALL SUBMIT A WRITTEN STATEMENT OF CERTIFICATION ASSERTING THAT NO ASBESTOS-CONTAINING MATERIALS WERE USED IN ANY PORTION OF THE CONSTRUCTION.

CURRENT PROJECT STATIONS OF REFERENCE MONUMENTS

282+45.06	409+99.89
297+99.63	414+99.94
303+99.44	420+98.80
309+99.25	426+35.50
315+99.81	429+98.83
320+99.64	434+98.85
326+56.59	439+98.79
333+49.70	444+98.73
340+68.08	449+98.85
345+74.21	455+98.88
349+99.92	461+77.97
353+99.79	464+98.81
358+99.73	469.78.72
364+99.61	474+98.77
369+99.61	479+98.87
374+99.63	489+98.28
379+99.62	494+98.31
384+99.76	499+98.44
389+99.83	505+98.56
394+99.86	511+98.64
400+70.68	517+49.10
405+00.05	

REVIEW OF DRAINAGE FACILITIES

BEFORE ANY WORK IS STARTED ON THE PROJECT AND AGAIN BEFORE FINAL ACCEPTANCE BY THE STATE, REPRESENTATIVES OF THE STATE AND THE CONTRACTOR, ALONG WITH LOCAL REPRESENTATIVES, SHALL MAKE AN INSPECTION OF ALL EXISTING SEWERS WHICH ARE TO REMAIN IN SERVICE AND WHICH MAY BE AFFECTED BY THE WORK. THE CONDITION OF THE EXISTING CONDUITS AND THEIR APPURTENANCE SHALL BE DETERMINED FROM FIELD OBSERVATIONS. RECORDS OF THE INSPECTION SHALL BE KEPT IN WRITING BY THE STATE.

ALL NEW CONDUITS, INLETS, CATCH BASINS, AND MANHOLES CONSTRUCTED AS A PART OF THE PROJECT SHALL BE FREE OF ALL FOREIGN MATTER AND IN A CLEAN CONDITION BEFORE THE PROJECT WILL BE ACCEPTED BY THE STATE.

ALL EXISTING SEWERS INSPECTED INITIALLY BY THE ABOVE MENTIONED PARTIES SHALL BE MAINTAINED AND LEFT IN A CONDITION REASONABLY COMPARABLE TO THAT DETERMINED BY THE ORIGINAL INSPECTION. ANY CHANGE IN THE CONDITION RESULTING FROM THE CONTRACTOR'S OPERATIONS SHALL BE CORRECTED BY THE CONTRACTOR TO THE SATISFACTION OF THE ENGINEER.

PAYMENT FOR ALL OPERATIONS DESCRIBED ABOVE SHALL BE INCLUDED IN THE CONTRACT PRICE FOR THE PERTINENT 603 CONDUIT ITEMS.

MANHOLES, CATCH BASINS AND INLETS REMOVED OR ABANDONED

ALL CASTINGS SHALL BE CAREFULLY REMOVED AND STORED WITHIN THE RIGHT OF WAY FOR SALVAGE BY STATE FORCES.

PAYMENT FOR ALL OF THE ABOVE SHALL BE INCLUDED IN THE CONTRACT PRICE FOR THE PERTINENT 202 ITEM.

ITEM 604 - I-3B CATCH BASIN, AS PER PLAN

THE CONCRETE BARRIER AND INLET SHALL BE BUILT TO THE DIMENSIONS SHOWN IN THE DETAILS BELOW. PAYMENT FOR ALL ITEMS SHALL BE INCLUDED IN THE CONTRACT PRICE FOR ITEM 604 - I-3B CATCH BASIN, AS PER PLAN.

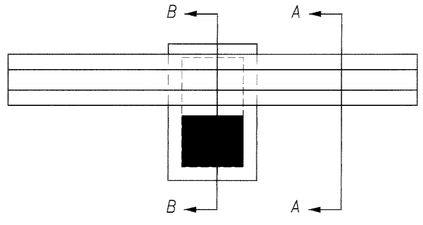

I-3B CATCH BASIN, AS PER PLAN

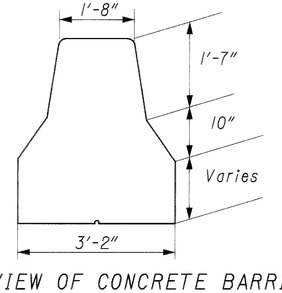

SECTIONAL VIEW OF CONCRETE BARRIER
SECTION A-A

ITEM 623 - CONSTRUCTION LAYOUT STAKES, AS PER PLAN

PRIOR TO THE START OF ROADWAY OPERATIONS, THE CONTRACTOR SHALL REFERENCE THE LENGTH OF THE PROJECT ON BOTH SIDES OF THE ROADWAY, IN A MANNER SATISFACTORY TO THE ENGINEER. THE PAVEMENT SHALL BE REFERENCED IN 100 FT. INCREMENTS, OR IN INCREMENTS ACCEPTABLE TO THE ENGINEER, IN A SEMIPERMANENT CONDITION.

UTILITY COORDINATION

DUE TO THE AMOUNT OF WORK INVOLVED, IT IS ANTICIPATED THAT SOME OF THE UTILITY WORK WILL TAKE PLACE CONCURRENT WITH THE ROADWAY IMPROVEMENTS. THE CONTRACTOR IS RESPONSIBLE FOR COORDINATION WITH UTILITY COMPANIES. THIS INCLUDES AN UNDERSTANDING OF WORK SCHEDULES, UTILITY ADJUSTMENTS AND RELOCATIONS.

COST FOR THE ABOVE DESCRIBED WORK SHALL BE INCIDENTAL TO THE OVERALL BID PRICE.

COOPERATION BETWEEN CONTRACTORS

THE CONTRACTOR'S ATTENTION IS CALLED TO THE POSSIBILITY OF OTHER FUTURE CONSTRUCTION PROJECTS WHICH MAY BE AWARDED ADJACENT TO HIS WORK. THE CONTRACTOR SHALL BE REQUIRED TO COORDINATE HIS OPERATIONS CONCURRENTLY WITH THESE CONTRACTORS IN SUCH A MANNER THAT WILL NOT RESULT IN A COMBINATION OF ADJACENT LANE RESTRICTIONS WHICH WILL EXCEED THE CONTRACT LIMITATIONS. THE CONTRACTOR SHALL SUBMIT A SCHEDULE OF PROPOSED OPERATIONS, IN WRITING, TO THE ENGINEER FOR HIS APPROVAL AT LEAST ONE WEEK PRIOR TO ANY LANE RESTRICTIONS.

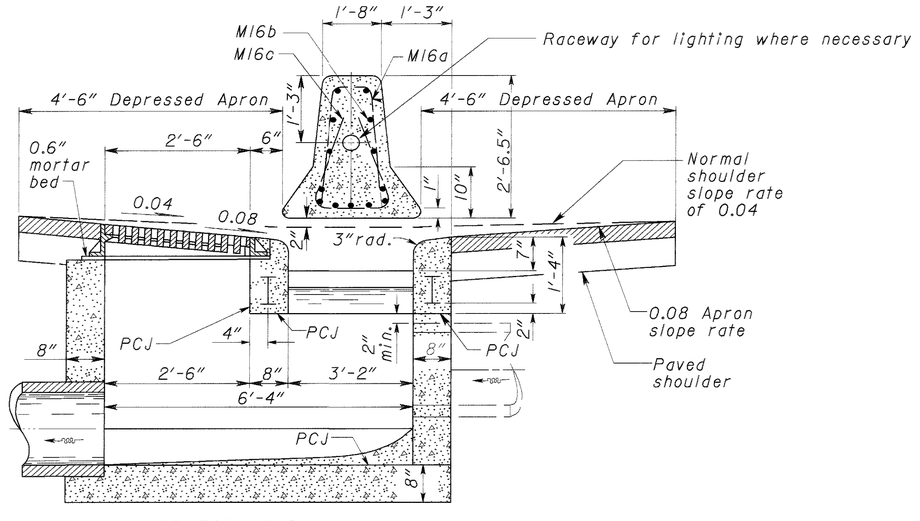

SECTION B-B

CALCULATED JAG
CHECKED AM

GENERAL NOTES

CLE-2.75-5.35

28
857

INTERIM COMPLETION DATE

AN INTERIM DATE OF COMPLETION FOR THIS CONTRACT IS SET FOR 45 DAYS PRIOR TO THE FINAL COMPLETION DATE. ALL CONTRACT ITEMS OF WORK MUST BE COMPLETED BY THE INTERIM COMPLETION DATE. THE INTERIM DATE WILL BE SUBJECT TO LIQUIDATED DAMAGES AS INDICATED BY SECTION 108.07 OF THE CONSTRUCTION AND MATERIALS SPECIFICATIONS BOOK. REQUEST FOR EXTENSIONS TO THE INTERIM COMPLETION DATE WILL BE PROCESSED AS PER SECTION 108.06 OF THE SPECIFICATIONS BOOK. THE PERIOD OF TIME BETWEEN THE INTERIM COMPLETION DATE AND THE FINAL COMPLETION DATE IS STRICTLY TO ALLOW FOR COMPLETION OF THE "PUNCH LIST" ITEMS AND REMOVAL OF THE PROJECT FIELD OFFICES. FAILURE TO COMPLETE THE "PUNCH LIST" AND REMOVE THE FIELD OFFICES BY THE FINAL COMPLETION DATE WILL RESULT IN ASSESSMENT OF LIQUIDATED DAMAGES AS PER SECTION 108.07 OF THE SPECIFICATIONS BOOK.

A GRANTED TIME EXTENSION TO THE INTERIM COMPLETION DATE WILL NOT INCLUDE A CORRESPONDING EXTENSION TO THE FINAL COMPLETION DATE. EXTENSIONS OF TIME TO THE FINAL COMPLETION DATE WILL ONLY BE GRANTED IF IT CAN BE JUSTIFIED THAT NOT ENOUGH TIME EXIST TO COMPLETE "PUNCH LIST" ITEMS AND REMOVE THE PROJECT FIELD OFFICES PRIOR TO THE FINAL COMPLETION DATE.

ITEM 202 - CATCH BASIN ABANDONED, AS PER PLAN

CATCH BASINS WITH EXISTING UNDERDRAIN OUTLETS SHALL BE ABANDONED IN ACCORDANCE WITH SECTION 202.09, OF THE CONSTRUCTION AND MATERIAL SPECIFICATIONS AND AT LOCATIONS CALLED FOR IN THE PLANS. THE UNDERDRAIN PIPES SHALL BE CONNECTED THROUGH TO THE MOUTH OF THE OUTLET PIPE WITH NEW PIPE OF A TYPE AND IN A MANNER ACCEPTABLE TO THE ENGINEER, WITHOUT ADDITIONAL COST TO THE STATE.

PAYMENT FOR THE ABOVE WORK SHALL BE MADE AT THE UNIT PRICE BID FOR ITEM 202, CATCH BASIN ABANDONED, AS PER PLAN.

ITEM SPECIAL - MISC.: SOILS CONSULTANT FOR FIELD TESTING & INSPECTION

ALL TESTING AND INSPECTION FOR THE EMBANKMENT, SUBGRADE COMPACTION, GRANULAR BASES AND SUBBASES AND TRENCH BACKFILL SHALL BE THE RESPONSIBILITY OF THE CONTRACTOR. ALL COMPACTION AND/OR DENSITY TESTS SHALL MEET PROVISIONS OF ITEM NO'S. 202, 203, 304, 503 OR 603. INSPECTION SHALL ASSURE COMPLIANCE TO THE APPROPRIATE BID ITEM OF WORK.

THE CONTRACTOR SHALL PROVIDE A SOILS CONSULTANT PRE-QUALIFIED BY ODOT WHO SHALL, THROUGH THE CONTRACTOR, BE RESPONSIBLE FOR ENSURING THAT THE CONSTRUCTION INCLUDING INSPECTION AND/OR DENSITY OF THE EMBANKMENT, BACKFILL OR BASE MATERIALS ARE IN COMPLIANCE WITH THE SPECIFICATIONS. THIS WORK SHALL BE IN ACCORDANCE WITH THE SPECIFICATIONS AND ODOT MANUAL OF PROCEDURES FOR EARTHWORK.

THE SOILS CONSULTANT SHALL PROVIDE A SOILS TECHNICIAN WHO HAS A BACKGROUND IN EMBANKMENT, BASE CONSTRUCTION, STRUCTURE BACKFILL AND PIPE INSTALLATION AND IS FAMILIAR WITH ODOT SPECIFICATIONS.

ALSO, THE SOILS CONSULTANT SHALL PROVIDE NECESSARY TRAINED OPERATORS AND EQUIPMENT AND FURNISH THE PROJECT ENGINEER WITH TWO (2) COPIES OF ACCEPTABLE TEST RESULTS WITHIN 24 HOURS AFTER THE TEST IS TAKEN. THE SOILS CONSULTANT TECHNICIANS SHALL DEMONSTRATE THEIR COMPETENCE TO THE ENGINEER BEFORE WORK BEGINS. THE ENGINEER WILL ORDER THE CONTRACTOR TO REPLACE THE SOILS CONSULTANT IF THEY ARE NOT FULLY VERSED IN THE REQUIRED TESTING AND INSPECTION PROCEDURES. THE CONSULTANT'S OPERATOR SHALL IMMEDIATELY NOTIFY THE ODOT INSPECTOR OR ENGINEER OF ANY FAILING TEST, IDENTIFY THE REMEDIAL ACTION PROPOSED AND PROVIDE DOCUMENTATION OF ACCEPTABLE RETEST OF THE FAILED AREA. COMPACTION TESTS SHALL BE TAKEN FOR EACH 500 CU. YDS. OF EMBANKMENT, EVERY 1000 SQ. YDS. OF SUBGRADE PREPARED AND EACH 1000 SQ. YDS. OF SUBBASE PLACED. THE ENGINEER MAY REQUIRE MORE FREQUENT TESTING IF THE CONDITIONS WARRANT. UPON COMPLETION OF THE ITEM, THE SOILS CONSULTANT SHALL ALSO PROVIDE THE ENGINEER WITH TWO (2) COPIES OF AN INSPECTION REPORT BY A REGISTERED PROFESSIONAL ENGINEER, WHICH CONTAINS THE TESTING RESULTS AND THE CONSULTANT'S CONCLUSIONS AS TO SPECIFICATION COMPLIANCE FOR ALL CONTRACT COMPACTION OR DENSITY WORK. THE SOILS CONSULTANT SHALL PROVIDE THE PROJECT ENGINEER WITH A DAILY INSPECTION REPORT WHICH WILL INCLUDE COMPACTION/DENSITY TEST TAKEN, ITEMS OF WORK INSPECTED, PAY ITEMS COMPLETED AND FINAL PAY QUANTITIES.

THE ENGINEER WILL MAKE UNANNOUNCED QUALITY CONTROL TESTS PERIODICALLY TO VERIFY PROCEDURES USED AND RESULTS BEING OBTAINED BY THE CONTRACTOR.

THE SOIL CONSULTANT'S FIELD REPRESENTATIVE SHALL WORK UNDER THE DIRECTION OF A REGISTERED PROFESSIONAL ENGINEER WHO WILL MONITOR THE EMBANKMENT CONSTRUCTION, BASE PLACEMENT, STRUCTURE BACKFILL AND PIPE INSTALLATION. THE REGISTERED PROFESSIONAL ENGINEER SHALL BE AVAILABLE TO DISCUSS QUESTIONS AND PROBLEMS WHICH MAY ARISE RELATIVE TO THE EMBANKMENT, BASE CONSTRUCTION AND INSPECTION SERVICES AND SHALL ALSO ATTEND THE MONTHLY PROGRESS MEETINGS FOR THE PROJECT. THE FINAL INSPECTION REPORT SHALL BE SIGNED BY A REGISTERED PROFESSIONAL ENGINEER AND CERTIFY THAT ALL COMPACTION AND DENSITY TESTS PROVIDED BY THE CONSULTANT MEET ALL APPLICABLE CONTRACT REQUIREMENTS.

PAYMENT FOR THIS WORK SHALL BE BID AS A LUMP SUM AND PAID FOR AS FOLLOWS:

UPON APPROVAL OF CONSULTANT	20%
UPON COMPLETION OF FIELD TESTING & INSPECTION	60%
UPON SUBMISSION OF FINAL REPORT	20%

A LUMP SUM QUANTITY HAS BEEN INCLUDED IN THE GENERAL SUMMARY FOR ITEM SPECIAL - MISC.: SOILS CONSULTANT FOR FIELD TESTING & INSPECTION.

SPECIAL REQUIREMENTS FOR PROTECTION OF ENDANGERED SPECIES HABITAT - INDIANA BAT

Specific dead trees, snags, and live trees or tree clusters with exfoliating bark (such as shagbark hickory and sycamore) within the project limits are potential summer roost tress for the Indiana bat, a federal endangered species. These trees have special requirements for timing of removal and protection during roosting season.

All potential roost trees shall be cut and removed from the project area before April 15. If the roost trees cannot be removed by April 15, then they shall remain protected and undisturbed for a period between April 15 and September 15, per the requirements below and subsequently removed after September 15.

If the trees described above are not removed prior to the next bat roosting season (April 15), they shall be protected by installing work limit fencing around each tree or tree group at a radius of not less than 15 meters from the nearest point of each roost tree trunk. If such protection is required due to the timing of construction, it shall not be cause for time dealy or extra compensation claims by the contractor, and the work shall be performed per bid for ITEM 201, CLEARING AND GRUBBING.

STREAM MITIGATION (401 WQC)

THE TEMPORARY FILL SHALL CONSIST OF SUITABLE NON-ERODIBLE MATERIAL OR SHALL BE STABILIZED TO PREVENT EROSION.

FILL USED IN THIS PROJECT SHALL CONSIST OF SUITABLE MATERIAL FREE FROM TOXIC CONTAMINANTS IN OTHER THAN TRACE QUANTITIES.

CARE MUST BE EMPLOYED THROUGHOUT THE COURSE OF THIS PROJECT TO AVOID THE CREATION OF UNNECESSARY TURBIDITY WHICH MAY DEGRADE WATER QUALITY OR ADVERSELY AFFECT AQUATIC LIFE OUTSIDE OF THE PROJECT AREA.

CALCULATED JAG
CHECKED AW

GENERAL NOTES

CLE-2.75-5.35

ITEM 614 - MAINTAINING TRAFFIC

LENGTH AND DURATION OF LANE CLOSURES AND RESTRICTIONS SHALL BE AT THE APPROVAL OF THE ENGINEER. IT IS THE INTENT TO MINIMIZE THE IMPACT TO THE TRAVELING PUBLIC. LANE CLOSURES OR RESTRICTIONS OVER SEGMENTS OF THE PROJECT IN WHICH NO WORK IS ANTICIPATED WITHIN A REASONABLE TIME FRAME, AS DETERMINED BY THE ENGINEER, SHALL NOT BE PERMITTED. THE LEVEL OF UTILIZATION OF MAINTENANCE OF TRAFFIC DEVICES SHALL BE COMMENSURATE WITH THE WORK IN PROGRESS.

ITEM 614 - MAINTAINING TRAFFIC

THE CONTRACTOR SHALL PROVIDE, ERECT AND MAINTAIN STANDARD 48" X 30" "ROAD CLOSED" SIGNS, SIGN SUPPORTS, BARRICADES, GATES, AND LIGHTS, AS DETAILED IN STANDARD CONSTRUCTION DRAWING MT-101.60M AT THE FOLLOWING LOCATIONS DURING PERIODS IN WHICH THE AFFECTED ROADS ARE CLOSED TO TRAFFIC:

RAMP A, AT RAMP B
IR-275, AT RAMP G
RAMP C, AT U.S.R. 50J
RAMP D-2, AT U.S.R. 50J
RAMP E, AT IR-275
RAMP F, AT U.S.R. 50J

ITEM 614 - MAINTAINING TRAFFIC

ALL WORK AND TRAFFIC CONTROL DEVICES SHALL BE IN ACCORDANCE WITH 614 AND OTHER APPLICABLE PORTIONS OF THE SPECIFICATIONS, AS WELL AS THE OHIO MANUAL OF UNIFORM TRAFFIC CONTROL DEVICES. PAYMENT FOR ALL LABOR, EQUIPMENT AND MATERIALS SHALL BE INCLUDED IN THE LUMP SUM CONTRACT PRICE FOR 614, MAINTAINING TRAFFIC, UNLESS SEPARATELY ITEMIZED IN THE PLAN.

SEQUENCE OF CONSTRUCTION

THE CONTRACTOR SHALL PERFORM ALL OF THE MAINLINE CONSTRUCTION IN ONE MOVEMENT. WITHIN THIS SECTION OF CONSTRUCTION, THE CONTRACTOR SHALL COMPLETE THE WORK IN FOUR PHASES. THE PROJECT LENGTH IS APPROXIMATELY 4.44 MILES WITHIN CLERMONT COUNTY, AND CONSISTS OF THE WIDENING OF EXISTING IR-275 FROM TWO LANES TO THREE LANES IN BOTH NORTHBOUND AND SOUTHBOUND DIRECTIONS, THIS SHALL BE ACCOMPLISHED BY CONSTRUCTING A 12' MEDIAN LANE AND A 12' MEDIAN SHOULDER. THE ENTIRE EXISTING PAVEMENT AND SHOULDER SURFACE ON THE MAIN LINE SHALL BE PLANED TO A DEPTH OF 0.5", AND OVERLAIN WITH 3.25" OF ASPHALT. THE EXISTING PAVEMENT AND SHOULDERS ON RAMPS A, C, D, G, AND H SHALL ALSO BE PLANED TO A DEPTH OF 0.5", AND OVERLAIN WITH 3.25" OF ASPHALT. THE EXISTING SHOULDERS OF THESE RAMPS SHALL BE WIDENED ON THE RIGHT SIDE, IN THE DIRECTION OF TRAFFIC, FROM 3' TO 6'. ALL EXISTING GUARDRAIL, FENCING, SIGNS AND SUPPORTS SHALL BE REPLACED, AS WELL AS, ALL DRAINAGE IN THE MEDIAN SHALL BE ADJUSTED OR REPLACED. ALL UNDERDRAIN OUTLETS SHALL BE REPLACED IN THE MEDIAN, AND ON THE OUTSIDE SLOPES ON MAINLINE IR-275. THE US-50J INTERCHANGE RAMPS SHALL HAVE ALL NEW LIGHTING INSTALLED. ALL THE MAINLINE BRIDGES SHALL BE WIDENED TO ACCOMMODATE THE PROPOSED MEDIAN LANE AND MEDIAN SHOULDER. THE AFFECTED IR-275 BRIDGES ARE, CLE-275-0549 (L & R) OVER US-50, CLE-275-0568 (L & R) OVER EAST FORK LITTLE MIAMI RIVER, CLE-275-0618 (L & R) OVER US50 J, CLE-275-0654 (L & R) OVER THE NORFOLK & WESTERN R/R AND ROUND BOTTOM ROAD. THE CROSS ROAD BRIDGE, CLE-275-0896 (BARG'S SALT RUN ROAD OVER IR-275), SHALL BE JACKED TO ATTAIN A 16.5' MINIMUM VERTICAL CLEARANCE OVER IR-275. THE BARG'S SALT RUN ROAD BRIDGE SHALL BE CLOSED TO TRAFFIC FOR THE PURPOSE OF JACKING THE EXISTING BRIDGE DECK AND CONSTRUCTING THE ROADWAY APPROACHES. SEE ATTACHED DETOUR PLAN.

THE SPEED LIMIT ON THE MAINLINE SHALL BE REDUCED TO 55 MPH. DUAL MOUNTED TEMPORARY SPEED LIMIT SIGNS SHALL BE PLACED 500 FEET IN ADVANCE OF THE LANE REDUCTION OR TRANSITION TAPER, IMMEDIATELY AFTER EACH ENTRANCE RAMP, AND AT ONE (1) MILE INTERVALS.

PHASE ONE
CONSTRUCTION SHALL BE CONFINED TO THE MEDIAN OF U.S.R. 50J ONLY. THIS SHALL INCLUDE THE U-TURN RELOCATION AT STATION 87+95, THE TEMPORARY PAVEMENT AT STATION 100+00, AND BRIDGE CLE-275-0618 PIER CONSTRUCTION AT IR-275. TRAFFIC SHALL BE MAINTAINED AS SHOWN IN THE PLANS, WITH PORTABLE CONCRETE BARRIER (PCB) AND 10' MINIMUM LANE WIDTHS. THIS CONFIGURATION IS EMPLOYED IN ORDER TO AVOID PLACING TRAFFIC ON THE EXISTING SHOULDERS.

PHASE ONE-A
EXISTING LANES OF TRAFFIC ON THE MAINLINE SHALL BE SHIFTED AND MAINTAINED ACCORDING TO STANDARD CONSTRUCTION DRAWING MT-102.20M. A MINIMUM LANE WIDTH OF 10' SHALL BE USED THROUGHOUT PHASE IA. SHOULDER BUILDUP AND / OR SHOULDER STABILIZATION WORK WILL BE PERFORMED ON THE MAINLINE AS SHOWN. ALSO, CURB AND CONCRETE CAP REMOVAL, AND FULL DEPTH SHOULDER REPLACEMENT, WITH THE PLANING OF THE EXISTING CONCRETE CAP ACROSS BRIDGE CLE-275-0618 WILL BE COMPLETED DURING THIS PHASE. THE PLANING OF THE CAP WILL ACCOMMODATE TRAFFIC DURING PHASE IB. AN IMPACT ATTENUATOR, WITH PCB, SHALL BE PLACED AT THE POSITION OF THE PROPOSED CONCRETE BARRIER, TYPE C, AND CONTINUED ACROSS THE BRIDGE, AS SHOWN. PROPOSED DRAINAGE WITHIN THE WORK AREA SHALL BE PERFORMED DURING THIS PHASE.

TEMPORARY RAMPS B AND F, AS WELL AS, ASSOCIATED DRAINAGE, GRADING, TEMPORARY SIGNALS, AND TRAFFIC CONTROL SHALL BE COMPLETED DURING PHASE IA. TRAFFIC ON U.S.R. 50J SHALL BE MAINTAINED AS PER MT-102.20M.

PHASE ONE-B
TRAFFIC SHALL BE MAINTAINED DURING THIS PHASE USING PLAN INSERT SHEET "2" AND PORTABLE CONCRETE BARRIER, AS SHOWN IN THE PLANS. IR-275 SOUTHBOUND WILL DROP ONE LANE AND SHIFT TWO LANES ONTO THE OUTSIDE LANES. THE SHOULDER SHALL BE USED ONLY WITHIN THE LIMITS WHERE SHOULDER BUILDUP WAS BUILT IN PHASE ONE-A, AS SHOWN IN THE PLANS. SIMILARLY, NORTHBOUND TRAFFIC WILL SHIFT ONTO THE OUTSIDE SHOULDER. MAINLINE CONSTRUCTION SHALL INCLUDE DRAINAGE, GRADING, UNDERDRAIN, AND SHOULDER STABILIZATION IN THE MEDIAN. ALSO, THE MEDIAN SHOULDER AND INSIDE LANE SHALL BE BUILT AND PAVED EXCLUDING THE SURFACE COURSE. AS SHOWN IN THE PLANS, TEMPORARY PAVEMENT SHALL BE CONSTRUCTED IN THE MEDIAN ADJACENT TO THE EXISTING INSIDE EDGES OF PAVEMENT, SO THAT TRAFFIC MAY BE SHIFTED DURING FUTURE PHASES. IN ADDITION, THE BRIDGE WIDENING IN THE MEDIAN ON ALL MAINLINE BRIDGES SHALL BE ACCOMPLISHED DURING THIS PHASE. THE PIER CONSTRUCTION FOR BRIDGE CLE-275-0549 SHALL BE PROTECTED BY PLACING PCB ALONG EXISTING U.S. 50 ADJACENT TO THE SOUTH EDGE OF PAVEMENT AND OFFSET 1.5 FEET. THE PCB SHALL CONTINUE PARALLEL TO THE EXISTING PAVEMENT FOR 300 FEET BEYOND THE WORK AREA IN EACH DIRECTION. THEN EACH END OF THE PCB SHALL EXTEND ACROSS THE SHOULDER WITH A 20:1 TAPER. THE PIER CONSTRUCTION FOR THIS BRIDGE SHALL BE COMPLETED, WITH PCB IN PLACE, DURING THIS PHASE. THE EXISTING GUARDRAIL ON THE SOUTH SIDE SHALL BE REMOVED, AS NEEDED TO COMPLETE THE WORK, AND STORED FOR REPLACEMENT. THE PIER WORK ON THE NORTH SIDE SHALL BE PERFORMED BEHIND EXISTING GUARDRAIL. THE PIER CONSTRUCTION FOR BRIDGE CLE-275-0654 SHALL BE PROTECTED BY PLACING PCB ALONG EXISTING ROUND BOTTOM ROAD ADJACENT TO THE NORTH EDGE OF PAVEMENT AND OFFSET 1.5 FEET. THE PCB SHALL CONTINUE PARALLEL TO THE EXISTING PAVEMENT FOR 300 FEET BEYOND THE WORK AREA IN EACH DIRECTION. THEN EACH END OF THE PCB SHALL EXTEND ACROSS THE SHOULDER WITH A 20:1 TAPER. THE PIER CONSTRUCTION FOR THIS BRIDGE SHALL BE COMPLETED, WITH PCB IN PLACE, DURING THIS PHASE. THE EXISTING GUARDRAIL ON THE NORTH SIDE SHALL BE REMOVED, AS NEEDED TO COMPLETE THE WORK, AND STORED FOR REPLACEMENT. THE PIER CONSTRUCTION ON THE SOUTH SIDE SHALL BE PERFORMED BEHIND EXISTING GUARDRAIL. SIGNING FOR U.S. 50 AND ROUND BOTTOM ROAD SHALL RECEIVE "ROAD CONSTRUCTION AHEAD" SIGNS,OW-128-36, WITH TYPE A WARNING LIGHTS, AND SHALL BE PLACED 1000 FEET IN ADVANCE OF THE PCB IN EACH DIRECTION. SHOULD THERE BE A NEED TO CLOSE ONE LANE ON US-50 OR ROUND BOTTOM ROAD, DURING PIER CONSTRUCTION, TRAFFIC SHALL BE MAINTAINED IN ACCORDANCE WITH MT-97.10M. THE FOLLOWING QUANTITIES HAVE BEEN CARRIED TO THE SUB-SUMMARY:

ITEM 622, PORTABLE CONCRETE BARRIER, 32" 1525 LIN. FT.

RAMPS C AND G, AS WELL AS PORTIONS OF RAMP A AND THE COLLECTOR DISTRIBUTOR SHALL BE CLOSED TO TRAFFIC DURING PHASE IB, AS PER MT-98.19M. ALL PROPOSED WORK SHALL BE COMPLETED IN THESE AREAS, AS SHOWN IN THE PLANS.
TRAFFIC SHALL BE MAINTAINED AS SHOWN IN THE DETOUR PLAN. ALL REMAINING RAMPS SHALL BE OPEN DURING THIS PHASE, AS WELL AS, TEMPORARY RAMPS B AND F.

PHASE TWO-A
TRAFFIC SHALL BE MAINTAINED DURING THIS PHASE USING PLAN INSERT SHEET "2" USING DRUMS. IR-275 SOUTHBOUND WILL DROP ONE LANE AND SHIFT TWO LANES ONTO THE INSIDE LANE AND SHOULDER CONSTRUCTED DURING PHASE ONE-B.
SIMILARLY, NORTHBOUND TRAFFIC WILL SHIFT ONTO THE INSIDE LANE AND SHOULDER. MILL AND RESURFACE THE OUTSIDE LANES AND SHOULDER, INCLUDING SURFACE COURSE. ALSO, RUMBLE STRIPS SHALL BE CONSTRUCTED ON THE OUTSIDE SHOULDER. REPLACE ALL GUARDRAIL AND SIGNS, AS WELL AS, PERFORM ALL UNDERDRAIN WORK.

ALL TEMPORARY PAVEMENT AND RELATED WORK IN THE MEDIAN OF U.S.R. 50J, WHICH WAS PERFORMED DURING PHASE ONE, SHALL BE REMOVED, AND THE MEDIAN SHALL BE RESTORED.

RAMPS E AND F SHALL BE CLOSED DURING THIS PHASE, AS PER MT-98-19M, AND USING PORTABLE CONCRETE BARRIER (PCB), AS SHOWN IN THE PLANS. RAMPS A, B, D, AND H SHALL BE

CALCULATED JGB
CHECKED AM

MAINTENANCE OF TRAFFIC GENERAL NOTES

CLE-2.75-5.35

OPEN TO TRAFFIC AT ALL TIMES, WHILE MAINTAINING TRAFFIC ON THE LEFT (DIRECTION OF TRAFFIC), AS PER MT-98.13M AND MT-98.16M. THE RIGHT SHOULDER OF THESE RAMPS SHALL BE WIDENED, AND PAVED INCLUDING SURFACE COURSE. ALSO, SHOULDER STABILIZATION SHALL BE COMPLETED. THE EXISTING PAVEMENT WITHIN THE WORK AREA SHALL BE MILLED AND PAVED TO INCLUDE SURFACE COURSE. ALL REMAINING BRIDGE CONSTRUCTION SHALL BE COMPLETED DURING PHASES TWO-A AND TWO-B. THE PLACEMENT OF CONCRETE BARRIER, TYPE C SHALL BE COORDINATED WITH THE BARRIER CONSTRUCTION ON BRIDGE CLE-275-0618.

PHASE TWO-B
MAINLINE IR-275 TRAFFIC AND WORK SHALL BE AS DESCRIBED IN PHASE TWO-A. TEMPORARY EDGE LINES, AND LANE LINES SHALL REMAIN, EXCEPT AS ALTERED FOR RAMP CONSTRUCTION. RAMPS D2, E AND F SHALL BE CLOSED, AS PER STANDARD MT-98.19M, AND USING PCB. RAMPS A, B, D, AND H SHALL BE OPEN TO TRAFFIC, WHILE MAINTAINING TRAFFIC ON THE RIGHT, IN THE DIRECTION OF TRAFFIC, AS PER MT-98.14M AND MT-98.15M. THE EXISTING PAVEMENT WITHIN THE WORK AREA SHALL BE MILLED AND PAVED TO INCLUDE SURFACE COURSE. ALSO ALL PROPOSED WORK WITHIN THE WORK AREA SHALL BE COMPLETED.

TEMPORARY RAMPS B AND F, AS WELL AS ALL ASSOCIATED WORK, SHALL BE REMOVED, AND THE ENTIRE WORK AREA SHALL BE RESTORED.

PHASE TWO-C
MAINLINE IR-275 TRAFFIC AND WORK SHALL BE AS DESCRIBED IN PHASE TWO-A. TEMPORARY EDGE LINES, AND LANE LINES SHALL REMAIN, EXCEPT AS ALTERED FOR RAMP CONSTRUCTION. MAINLINE IR-275 TRAFFIC SHALL BE SHIFTED SLIGHTLY,WHILE THE REMAINING AREAS AT RAMPS A, D, AND H ARE PAVED, AND WORK IS COMPLETED. ALSO, THE REMAINING CONCRETE BARRIER, TYPE C SHALL BE CONSTRUCTED DURING THIS PHASE. RAMP E SHALL BE CLOSED, AS PER MT-98-19M, AND USING DRUMS, AS SHOWN IN THE PLANS. RAMPS A, B, D, F, AND H SHALL BE OPEN TO TRAFFIC DURING THIS PHASE. TRAFFIC ON RAMPS A, D, AND H SHALL BE MAINTAINED ON THE RIGHT (DIRECTION OF TRAFFIC), AS PER MT-98.14M AND MT-98.15M. ALL BRIDGE CONSTRUCTION SHOULD BE COMPLETED PRIOR TO PHASE TWO-C.

PHASE THREE
TRAFFIC SHALL BE MAINTAINED ON THE OUTSIDE LANES OF MAINLINE IR-275, USING MT-95.30M, WITH DRUMS, AND 2-10' MINIMUM LANES. THE SHOULDER SHALL NOT BE USED FOR TRAFFIC IN PHASE THREE. SURFACE COURSE AND PERMANENT TRAFFIC MARKING SHALL BE PLACED ON THE MEDIAN SHOULDER AND INSIDE LANE. RUMBLE STRIPS SHALL BE CONSTRUCTED ON THE MEDIAN SHOULDER. ALL TEMPORARY PAVEMENT AND SHOULDER STABILIZATION, REMAINING FROM PREVIOUS PHASES, SHALL BE REMOVED ON THE MAINLINE AND RAMPS. ALL REMAINING FINISHED GRADING SHALL BE COMPLETED DURING PHASE 3. ALL RAMPS, INCLUDING RAMP E, SHALL BE OPEN TO TRAFFIC DURING PHASE 3.
PHASE FOUR
ALL REMAINING TRAFFIC CONTROL SHALL BE PERFORMED DURING PHASE FOUR.

BRIDGE CONSTRUCTION
THE FOLLOWING BRIDGES CLE-275-0549 (L & R) OVER US-50, CLE-275-0568 (L & R) OVER EAST FORK LITTLE MIAMI RIVER, CLE-275-0618 (L & R) OVER US50 J, CLE-275-0654 (L & R) OVER R/R AND ROUND BOTTOM ROAD, EACH ON IR-275 SHALL BE WIDENED TO ACCOMMODATE THE PROPOSED 12' MEDIAN LANE AND THE 12' MEDIAN SHOULDER. NONE OF THE MAINLINE BRIDGES SHALL BE JACKED. THE NEW CONCRETE DECKS SHALL BE BUILT TO THE PROPOSED PROFILE GRADE. BRIDGE DECK REPLACEMENT SHALL BE PERFORMED IN TWO PHASES EXCEPT FOR THE RIGHT BRIDGE OVER US-50J. WHERE NECESSARY PCB FROM THE BRIDGES WILL BE TRANSITIONED TO MATCH ITS PLACEMENT ON THE ROADWAY AT A FLARE RATE OF 48:1 (55 MPH DESIGN SPEED ASSUMED FOR MAINTENANCE OF TRAFFIC). PERMANENT PAVEMENT MARKING SHALL BE PERFORMED AS DISCUSSED IN PHASE 4.

BRIDGE OVER NORFOLK SOUTHERN RR AND ROUND BOTTOM ROAD

CLE-275-0654 (L & R) OVER R/R AND ROUND BOTTOM ROAD, SHALL BE WIDENED TO ACCOMMODATE THE PROPOSED 12' MEDIAN LANE AND THE 12' MEDIAN SHOULDER. THE NEW CONCRETE DECKS SHALL BE BUILT TO THE PROPOSED PROFILE GRADE. BRIDGE DECK REPLACEMENT SHALL BE PERFORMED IN TWO PHASES. MAINTENANCE OF TRAFFIC ON ROUND BOTTOM ROAD IS DISCUSSED UNDER THE NARRATIVE FOR PHASES ONE-B, TWO -A, AND TWO-B. PERMANENT PAVEMENT MARKING SHALL BE PERFORMED AS DISCUSSED IN PHASE 4.

BARG'S SALT RUN BRIDGE

BARG'S SALT RUN ROAD SHALL BE CLOSED TO THROUGH TRAFFIC DURING CONSTRUCTION OF THE BRIDGE AND APPROACHES. TRAFFIC SHALL BE DETOURED ACCORDING TO THE OFFICIAL DETOUR PROVIDED BY THE CLERMONT COUNTY ENGINEERS OFFICE. SEE ATTACHED DETOUR MAP. BUILD NEW DECK, ALL NEW GUARDRAIL AND SIGNS SHALL BE INSTALLED AS WELL AS DRAINAGE AND GRADING. PERMANENT PAVEMENT MARKING SHALL BE PERFORMED.

NOTICE OF CLOSURE SIGNS, AS DETAILED IN THESE PLANS, SHALL BE ERECTED BY THE CONTRACTOR AT LEAST ONE WEEK IN ADVANCE OF THE SCHEDULED ROAD OR RAMP CLOSURE. THE SIGNS SHALL BE ERECTED ON THE RIGHT HAND SIDE OF THE ROAD/RAMP FACING TRAFFIC. THEY SHALL BE PLACED SO AS NOT TO INTERFERE WITH THE VISIBILITY OF ANY OTHER TRAFFIC CONTROL SIGNS. ON ROADWAYS, THEY SHOULD BE ERECTED AT THE POINT OF CLOSURE. THE SIGNS MAY BE ERECTED ANYWHERE ON RAMPS AS LONG AS THEY ARE VISIBLE TO THE MOTORISTS USING THE RAMP. ON ENTRANCE RAMPS, THE SIGN SHALL BE ERECTED WELL IN ADVANCE OF THE MERGE AREA TO AVOID DISTRACTING MOTORISTS.

THE CONTRACTOR SHALL PROVIDE, ERECT AND MAINTAIN STANDARD 48" X 30" "ROAD CLOSED" SIGNS, SIGN SUPPORTS, BARRICADES, GATES, AND LIGHTS, AS DETAILED IN STANDARD CONSTRUCTION DRAWING MT-101.60M AT THE FOLLOWING LOCATIONS DURING PERIODS IN WHICH THE AFFECTED ROADS ARE CLOSED TO TRAFFIC:
ON BARG'S SALT RUN ROAD AT STA. 45+40 AND STA. 54+68, AS SHOWN ON SHEET NO. 42 .

THE CONTRACTOR SHALL PROVIDE, ERECT AND MAINTAIN SIGNS AND SIGN SUPPORTS, AS DETAILED IN THE OHIO MANUAL OF UNIFORM TRAFFIC CONTROL DEVICES, AND TYPE III BARRICADES OF THE TYPE AND LOCATION AS FOLLOWS:
FOR LOCATIONS SEE SHEET NO. 42 .

A MINIMUM OF ONE LANE OF TRAFFIC IN EACH DIRECTION SHALL BE MAINTAINED AT ALL TIMES, EXCEPT FOR A PERIOD NOT TO EXCEED 180 CONSECUTIVE CALENDAR DAYS, WHEN THROUGH TRAFFIC MAY BE DETOURED AS SHOWN ON SHEET 42 . LIQUIDATED DAMAGES SHALL BE ASSESSED IN ACCORDANCE WITH 108.07 FOR EACH CALENDAR DAY THE ROADWAY REMAINS CLOSED TO TRAFFIC BEYOND THE SPECIFIED LIMIT.

ITEM 614 - TRAFFIC CONTROL GENERAL
TEMPORARY GUIDE SIGNS

THE CONTRACTOR SHALL RELOCATE EXISTING OVERHEAD GUIDE SIGNS USING TEMPORARY GROUND MOUNTED SIGNS, IN ACCORDANCE WITH THE OMUTCD. TEMPORARY SIGN SUPPORT SHALL BE IN ACCORDANCE WITH THE STANDARD CONSTRUCTION DRAWINGS, MAINTENANCE OF TRAFFIC REFERENCE MT-105.10M AND MT-105.11M. ALL LABOR, EQUIPMENT AND MATERIALS SHALL BE INCLUDED IN THE LUMP SUM CONTRACT PRICE FOR 614, MAINTAINING TRAFFIC, UNLESS SEPARATELY ITEMIZED IN THE PLAN.

TEMPORARY PAVEMENT, AS PER PLAN

TEMPORARY PAVEMENT FOR MAINTAINING TRAFFIC ON SERVICE ROAD NO. 2, DURING BRIDGE CONSTRUCTION, SHALL BE 10" DEPTH ITEM 304, AGGREGATE BASE.

ITEM 614, PORTABLE CHANGEABLE MESSAGE SIGN

THE CONTRACTOR SHALL FURNISH, INSTALL AND MAINTAIN TWO (2) SOLAR POWERED PORTABLE CHANGEABLE MESSAGE SIGNS, CLASS I ON SITE FOR THE DURATION OF THE CONSTRUCTION. THE SIGN SHALL BE OF A TYPE SHOWN ON A LIST OF APPROVED PCMS UNITS MAINTAINED BY THE DIRECTOR. THE CLASS I UNITS HAVE A MINIMUM LEGIBILITY DISTANCE OF 1250 FEET. EACH SIGN SHALL BE TRAILER MOUNTED AND EQUIPPED WITH A FUNCTIONAL DIMMING MECHANISM TO DIM THE SIGN DURING DARKNESS AND A TAMPER AND VANDAL PROOF ENCLOSURE. EACH SIGN SHALL BE PROVIDED WITH APPROPRIATE TRAINING AND OPERATION INSTRUCTIONS TO ENABLE ON-SITE PERSONNEL TO OPERATE AND TROUBLESHOOT THE UNIT. THE SIGN SHALL ALSO BE CAPABLE OF BEING POWERED BY AN ELECTRICAL SERVICE DROP FROM A LOCAL UTILITY COMPANY. THE NUMBER, LOCATION, PLACEMENT, OPERATION, AND ALL ACTIVATION OF THE SIGNS BY THE CONTRACTOR SHALL BE A "DIRECTED BY THE ENGINEER". THE CONTRACTOR SHALL, AT THE DIRECTION OF THE ENGINEER, RELOCATE THE PCMS TO IMPROVE THE VISIBILITY OR ACCOMMODATE CHANGED CONDITIONS. WHEN NOT IN USE, THE PCMS WILL BE TURNED OFF FACING AWAY FROM ALL TRAFFIC AND SHALL DISPLAY ONE OR MORE HIGH INTENSITY YELLOW REFLECTIVE SHEETING SURFACES OF 9 INCH BY 15 INCH MINIMUM SIZE FACING TRAFFIC. THE ENGINEER SHALL BE PROVIDED ACCESS TO EACH UNIT AND SHALL BE PROVIDED WITH APPROPRIATE TRAINING AND OPERATION INSTRUCTIONS TO ENABLE ODOT PERSONNEL TO OPERATE AND TROUBLESHOOT THE UNIT AND TO REVISE SIGN MESSAGES, IF NECESSARY. ALL MESSAGES TO BE DISPLAYED ON THE SIGN WILL BE PROVIDED BY THE ENGINEER. A LIST OF ALL REQUIRED PREPROGRAMMED MESSAGES, SUCH AS "LANES NARROW - 10 FT LANES AHEAD," WILL BE GIVEN TO THE CONTRACTOR AT THE PROJECT PRE-CONSTRUCTION CONFERENCE. THE SIGN SHALL HAVE THE CAPABILITY TO STORE UP TO 99 MESSAGES. MESSAGE MEMORY OR PREPROGRAMMED DISPLAYS SHALL NOT BE LOST AS A RESULT OF POWER FAILURES TO THE ON BOARD COMPUTER. THE SIGN LEGEND SHALL BE CAPABLE OF BEING CHANGED IN THE FIELD. THREE-LINE PRESENTATION FORMATS WITH UP TO SIX MESSAGE

CALCULATED JGB CHECKED AM

MAINTENANCE OF TRAFFIC GENERAL NOTES

CLE-2.75-5.35

PHASES SHALL BE SUPPORTED, BUT NORMALLY, NOT MORE THAN TWO MESSAGE PHASES SHOULD BE EMPLOYED, ALTHOUGH THREE PHASES MAY BE USED IN UNUSUAL CONDITIONS. PCMS FORMAT SHALL PERMIT THE COMPLETE MESSAGE FOR EACH TO BE READ AT LEAST ONCE. THE PCMS SHALL CONTAIN A CELLULAR TELEPHONE DATA LINK WHICH WILL ALLOW REMOTE SIGN ACTIVATION, DEACTIVATION, MESSAGE CHANGES, MESSAGE ADDITIONS AND REVISIONS TO TIME OF DAY PROGRAMS. THE SYSTEM SHALL ALSO PERMIT VERIFICATION OF CURRENT AND PROGRAMMED MESSAGES. ONE REMOTE DATA INPUT DEVICE (LAPTOP COMPUTER PLUS MODEM OR EQUIVALENT) SHALL BE FURNISHED FOR USE BY THE ENGINEER AND SHALL BE INSURED AGAINST THEFT. THE PCMS UNIT SHALL BE MAINTAINED IN GOOD WORKING ORDER BY THE CONTRACTOR IN ACCORDANCE WITH THE PROVISIONS OF 614.02(B). THE CONTRACTOR SHALL, PRIOR TO ACTIVATING THE UNIT, MAKE ARRANGEMENTS WITH AN AUTHORIZED SERVICE AGENT FOR THE PCMS TO ASSURE PROMPT SERVICE IN THE EVENT OF FAILURE. ANY FAILURE SHALL NOT RESULT IN THE SIGN BEING OUT OF SERVICE FOR MORE THAN 12 HOURS, INCLUDING WEEKENDS. FAILURE TO COMPLY MAY RESULT IN AN ORDER TO STOP WORK AND OPEN ALL TRAFFIC LANES AND/OR IN THE DEPARTMENT TAKING ACTION TO SAFELY CONTROL TRAFFIC. THE ENTIRE COST TO CONTROL TRAFFIC, ACCRUED BY THE DEPARTMENT, WILL BE DEDUCTED FROM MONEYS DUE OR TO BECOME DUE THE CONTRACTOR IN HIS/HER CONTRACT. THE CONTRACTOR SHALL BE RESPONSIBLE FOR 24 HOURS PER DAY OPERATION AND MAINTENANCE OF THESE SIGNS ON THE PROJECT FOR THE DURATION OF THE PHASES WHEN THE ENGINEER REQUIRES THEIR USE. THE REQUIREMENT TO FURNISH, INSTALL, MAINTAIN, AND REMOVE A PCMS UNIT ON THE PROJECT SHALL NOT IN ANY WAY RELIEVE THE CONTRACTOR OF HIS/HER RESPONSIBILITIES AS OUTLINED IN 104.04. PAYMENT FOR THE ABOVE SHALL BE INCLUDED IN PORTABLE CHANGEABLE MESSAGE SIGN, AS PER PLAN 48 SIGN-MONTH.

SHORT DURATION CLOSING OF US-50, US-50J, ROUND BOTTOM ROAD

CLOSURES FOR ERECTION OF THE BEAMS WILL BE PERMITTED BETWEEN THE HOURS OF 12:00 MIDNIGHT AND 5:00 AM. THE MAXIMUM DURATION OF THE CLOSURE SHALL NOT EXCEED 30 MINUTES SUBJECT TO LIQUIDATED DAMAGES IN THE AMOUNT OF $500.00 PER 15 MINUTES OF ADDITIONAL CLOSURE PER 108.07 FOR EACH VIOLATION OF THE SPECIFIED TIME LIMIT. TRAFFIC SHALL BE COMPLETELY CLEARED BEFORE THE NEXT CLOSING. IN THE EVENT OF AN INCLEMENT WEATHER FORECAST (RAIN OR SNOW FORECAST AT 50% OR GREATER THE NIGHT THE CLOSURE WILL OCCUR IS DEFINED AS AN INCLEMENT FORECAST) THE CLOSURE SHALL NOT TAKE PLACE. THE ENGINEER WILL MAKE THE DETERMINATION BASED UPON THE WEATHER FORECAST PREDICTED BY THE NATIONAL WEATHER SERVICE.

"PREPARE TO STOP" (OW-152-48) SIGNS WITH TYPE B WARNING LIGHTS SHALL BE ERECTED ON EACH SIDE OF THE ROAD 1000 FEET IN ADVANCE OF THE STRUCTURE. THE CONTRACTOR SHALL FURNISH AND INSTALL TWO (2) STOP SIGNS (R-1-48) AT THE POINT OF CLOSURE.

TRENCH FOR WIDENING

TRENCH EXCAVATION FOR BASE WIDENING SHALL BE ONLY ON ONE SIDE OF THE PAVEMENT AT A TIME. THE OPEN TRENCH SHALL BE ADEQUATELY MAINTAINED AND PROTECTED WITH DRUMS OR BARRICADES AT ALL TIMES. PLACEMENT OF PROPOSED SUBBASE AND BASE MATERIAL SHALL FOLLOW AS CLOSELY AS POSSIBLE BEHIND EXCAVATION OPERATIONS. THE LENGTH OF WIDENING TRENCH WHICH IS OPEN AT ANY ONE TIME SHALL BE HELD TO A MINIMUM AND SHALL AT ALL TIMES BE SUBJECT TO APPROVAL OF THE ENGINEER.

OVERNIGHT TRENCH CLOSING

THE BASE WIDENING SHALL BE COMPLETED TO A DEPTH OF NO MORE THAN 3.25 INCHES BELOW THE EXISTING PAVEMENT BY THE END OF EACH WORK DAY. NO TRENCH SHALL BE LEFT OPEN OVERNIGHT EXCEPT FOR A SHORT LENGTH (25 FEET OR LESS) OF A WORK SECTION AT THE END OF THE TRENCH. IN CASE WORK MUST BE SUSPENDED BECAUSE OF INCLEMENT WEATHER OR OTHER REASONS, THE TRENCH FOR THE UNCOMPLETED BASE WIDENING SHALL BE BACKFILLED AT THE DIRECTION OF THE ENGINEER.

GUARDRAIL REPLACEMENT

NO HAZARD SHALL BE LEFT UNPROTECTED EXCEPT FOR THE ACTUAL TIME NECESSARY TO REMOVE THE EXISTING GUARDRAIL, PREPARE THE SITE, AND INSTALL NEW GUARDRAIL IN A CONTINUOUS OPERATION. THE REMOVAL OF ALL GUARDRAIL SHALL AT ALL TIMES BE AS DIRECTED BY THE ENGINEER. NO GUARDRAIL SHALL BE REMOVED UNTIL THE REPLACEMENT MATERIAL IS ON THE SITE, READY FOR INSTALLATION. FAILURE TO COMPLY WITH THIS REQUIREMENT SHALL BE DEEMED SUFFICIENT CAUSE TO ORDER WORK SUSPENDED UNTIL SUCH TIME AS THE ENGINEER IS ASSURED OF COMPLIANCE.

ITEM 614 - LAW ENFORCEMENT OFFICER WITH PATROL CAR

IN ADDITION TO THE REQUIREMENTS OF 614 AND THE OHIO MANUAL OF UNIFORM TRAFFIC CONTROL DEVICES (OMUTCD), A UNIFORMED LAW ENFORCEMENT OFFICER (AND OFFICIAL PATROL CAR WITH WORKING TOP MOUNTED EMERGENCY FLASHING LIGHTS) SHALL BE PROVIDED FOR CONTROLLING TRAFFIC FOR THE FOLLOWING TASKS:

FOR LANE CLOSURES: DURING INITIAL SET-UP PERIODS, TEAR DOWN PERIODS, SUBSTANTIAL SHIFTS OF A CLOSURE POINT OR WHEN NEW LANE CLOSURE ARRANGEMENTS ARE INITIATED.

DURING THE ENTIRE ADVANCE PREPARATION AND CLOSURE SEQUENCE WHERE COMPLETE BLOCKAGE OF TRAFFIC IS REQUIRED.

DURING A TRAFFIC SIGNAL INSTALLATION.

LAW ENFORCEMENT OFFICERS (L.E.O.'S) SHOULD NOT BE USED WHERE THE OMUTCD INTENDS THAT FLAGGERS BE USED. THE LEO'S ARE CONSIDERED TO BE EMPLOYED BY THE CONTRACTOR AND THE CONTRACTOR SHALL BE RESPONSIBLE FOR THEIR ACTIONS. ALTHOUGH THEY ARE EMPLOYED BY THE CONTRACTOR, THE PROJECT ENGINEER SHALL HAVE CONTROL OVER THEIR PLACEMENT. THE OFFICIAL PATROL CAR SHALL BE A PUBLIC SAFETY VEHICLE AS REQUIRED BY THE OHIO REVISED CODE. THE CONTRACTOR SHALL MAKE ARRANGEMENTS FOR THESE SERVICES WITH :

State Highway Patrol
1000 Hospital Drive
Batavia, OH - 45103
(513) 732-1510

LAW ENFORCEMENT OFFICERS WITH PATROL CAR REQUIRED BY THE TRAFFIC MAINTENANCE TASKS ABOVE SHALL BE PAID FOR ON A UNIT PRICE (HOURLY) BASIS UNDER ITEM 614 - LAW ENFORCEMENT OFFICER (WITH PATROL CAR). THE FOLLOWING ESTIMATED QUANTITIES HAVE BEEN CARRIED TO THE GENERAL SUMMARY.

ITEM 614, LAW ENFORCEMENT OFFICER WITH PATROL CAR 300 HOURS

THE HOURS PAID SHALL INCLUDE MINIMUM SHOW-UP TIME REQUIRED BY THE LAW ENFORCEMENT AGENCY INVOLVED.

IF CONTRACTORS WISH TO UTILIZE LEO'S FOR FLAGGING AND TRAFFIC CONTROL OTHER THAN FOR THAT REQUIRED IN THESE PLANS, THEY MAY DO SO AT THEIR OWN EXPENSE. PAYMENT FOR THE EXCESS ABOVE THE CONTRACT REQUIREMENTS WILL BE INCLUDED UNDER ITEM 614 MAINTAINING TRAFFIC.

DUST CONTROL

THE CONTRACTOR SHALL FURNISH AND APPLY WATER AND CALCIUM CHLORIDE FOR DUST CONTROL AS DIRECTED BY THE ENGINEER. THE FOLLOWING CONTINGENCY QUANTITIES HAVE BEEN INCLUDED FOR DUST CONTROL PURPOSES:

616, WATER 330 M. GAL.

616, CALCIUM CHLORIDE 7 TON

ITEM SPECIAL - REPLACEMENT SIGN

FLAT SHEET SIGNS FURNISHED BY THE CONTRACTOR IN ACCORDANCE WITH THE REQUIREMENTS OF THE PLANS, SPECIFICATIONS AND PROPOSAL WHICH BECOME DAMAGED BY TRAFFIC FOR REASONS BEYOND THE CONTROL TO THE CONTRACTOR SHALL BE REPLACED IN KIND WHEN ORDERED BY THE ENGINEER. REPLACEMENT SIGNS SHALL BE NEW. OTHER MATERIALS MAY BE IN USED BUT GOOD CONDITION SUBJECT TO APPROVAL BY THE ENGINEER.

PAYMENT FOR THE NEW SIGNS SHALL BE MADE AT THE CONTRACT PRICE PER SQUARE FEET FOR ITEM SPECIAL, REPLACEMENT SIGN, AND SHALL INCLUDE THE COST OF REMOVING AND DISPOSING OF DAMAGED SIGNS, HARDWARE AND SUPPORTS, AND PROVIDING THE NECESSARY REPLACEMENT HARDWARE, SUPPORTS, ETC.

AN ESTIMATED QUANTITY OF 20 SQUARE FEET HAS BEEN PROVIDED IN THE GENERAL SUMMARY.

ITEM SPECIAL - REPLACEMENT DRUM

DRUMS FURNISHED BY THE CONTRACTOR IN ACCORDANCE WITH THE REQUIREMENTS OF THE PLANS, SPECIFICATIONS AND PROPOSAL WHICH BECOME DAMAGED BY TRAFFIC FOR REASONS BEYOND THE CONTROL OF THE CONTRACTOR SHALL BE REPLACED IN KIND WHEN ORDERED BY THE ENGINEER. REPLACEMENT DRUMS SHALL BE NEW.

PAYMENT FOR THE NEW DRUMS SHALL BE MADE AT THE CONTRACT PRICE PER EACH FOR ITEM SPECIAL, REPLACEMENT DRUM, AND SHALL INCLUDE THE COST OF REMOVING AND DISPOSING OF THE DAMAGED DRUM, AND PROVIDING AND MAINTAINING THE REPLACEMENT DRUM IN ACCORDANCE WITH THE CONTRACT REQUIREMENTS FOR THE ORIGINAL DRUM.

CALCULATED JGB CHECKED AM

MAINTENANCE OF TRAFFIC GENERAL NOTES

CLE-2.75-5.35

AN ESTIMATED QUANTITY OF 100 EACH HAS BEEN PROVIDED IN THE GENERAL SUMMARY.

ITEM 614 - WORK ZONE SPEED LIMIT SIGN

THE CONTRACTOR SHALL FURNISH, INSTALL, MAINTAIN, COVER DURING SUSPENSION OF WORK, AND SUBSEQUENTLY REMOVE WORK ZONE SPEED LIMIT SIGNS AND SUPPORTS (R-10) (55 MPH SPEED LIMIT) WITHIN THE WORK LIMITS IN ACCORDANCE WITH THE FOLLOWING REQUIREMENTS.

THE CONTRACTOR SHALL COVER OR REMOVE ANY EXISTING SPEED LIMIT OR MINIMUM SPEED SIGNS WITHIN THE REDUCED SPEED ZONE. THESE SIGNS SHALL BE RESTORED DURING SUSPENSION OR TERMINATION OF THE REDUCED SPEED LIMIT. THE EXPENSE OF COVERING OR REMOVAL AND RESTORATION OF EXISTING SPEED LIMIT OR MINIMUM SPEED SIGNS SHALL BE INCLUDED IN THE PAY ITEM FOR THE WORK ZONE SPEED LIMIT SIGNS.

THE WORK ZONE SPEED LIMIT SIGNS MAY BE ERECTED OR UNCOVERED NO MORE THAN 4 HOURS BEFORE THE ACTUAL START OF WORK. THE SIGNS SHALL BE REMOVED OR COVERED NO LATER THAN 4 HOURS FOLLOWING RESTORATION OF ALL LANES TO TRAFFIC WITH NO RESTRICTIONS, OR SOONER AS DIRECTED BY THE ENGINEER.

THE CONTRACTOR SHALL ERECT A WORK ZONE SPEED LIMIT SIGN IN ADVANCE OF ANY LANE RESTRICTION EXPECTED TO LAST AT LEAST 30 DAYS, OR AS DIRECTED BY THE ENGINEER. THE SIGN SHALL BE MOUNTED ON BOTH SIDES OF DIVIDED HIGHWAYS, 500 FEET IN ADVANCE OF THE LANE REDUCTION TAPER. THE SIGN SHALL BE MOUNTED ON THE RIGHT SIDE, 250 FEET IN ADVANCE OF THE LANE REDUCTION TAPER ON UNDIVIDED HIGHWAYS. THE SIGN SHALL BE REPEATED, ON THE SIDE NEAREST TRAFFIC, EVERY 1 MILE FOR 55 MPH ZONES AND EVERY 1/2 MILE FOR 45 MPH ZONES. THESE SIGNS SHALL ALSO BE ERECTED IMMEDIATELY AFTER EACH OPEN ENTRANCE RAMP WITHIN THE ZONE.

A SIGN(S) TO INDICATE THE RESUMPTION OF THE STATUTORY SPEED LIMIT SHALL BE ERECTED AT THE END OF ANY REDUCED SPEED ZONE. R-10 SIGNS (SPEED LIMIT) SHALL BE USED ON UNDIVIDED ROADWAY. R-10 (SPEED LIMIT) AND R-9A SIGNS (SPEED LIMIT) SHALL BE USED ON DIVIDED ROADWAYS. WHEN USED THE R-10 AND R-9A SIGNS SHALL BE MOUNTED SIDE-BY-SIDE ON SEPARATE SUPPORTS. THE CONTRACTOR MAY USE SIGNS AND SUPPORTS IN USED BUT GOOD CONDITION PROVIDED THE SIGNS MEET CURRENT ODOT SPECIFICATIONS. SIGN FACES SHALL BE REFLECTORIZED WITH TYPE G SHEETING COMPLYING WITH THE REQUIREMENTS OF 730.19 AND U.S. DEPARTMENT OF TRANSPORTATION SUPPLEMENTAL SPECIFICATION FOR TYPE III-C SHEETING, FP-85.

WORK ZONE SPEED LIMIT SIGNS SHALL BE MOUNTED ON TWO (2) ITEM 630 GROUND MOUNTED SUPPORTS, NO. 3 POSTS.

WORK ZONE SPEED LIMIT SIGNS AND SUPPORTS WILL BE MEASURED AS THE NUMBER OF SIGN INSTALLATIONS, INCLUDING THE SIGNS AND NECESSARY SUPPORTS. IF A SIGN AND SUPPORT COMBINATION IS REMOVED AND REERECTED AT ANOTHER LOCATION WITHIN THE PROJECT DUE TO CHANGES IN THE SPEED ZONE DIRECTED BY THE ENGINEER, IT SHALL BE CONSIDERED ANOTHER UNIT.

PAYMENT FOR ACCEPTED QUANTITIES, COMPLETE IN PLACE, WILL BE MADE AT THE CONTRACT UNIT PRICE. PAYMENT SHALL BE FULL COMPENSATION FOR ALL MATERIALS, LABOR, INCIDENTALS AND EQUIPMENT FOR FURNISHING, ERECTING, MAINTAINING, COVERING DURING SUSPENSION OF WORK, AND REMOVING THE SIGNS AND SUPPORTS.

614, WORK ZONE SPEED LIMIT SIGN 44 EACH

ITEM 614 - BARRIER REFLECTORS AND/OR OBJECT MARKERS

BARRIER REFLECTORS AND/OR OBJECT MARKERS SHALL BE INSTALLED ON ALL PORTABLE CONCRETE BARRIER AND TEMPORARY GUARDRAIL USED FOR TRAFFIC CONTROL. BARRIER REFLECTORS, OBJECT MARKERS AND THEIR INSTALLATION SHALL CONFORM TO ITEM 626 EXCEPT THAT THE SPACING SHALL BE 25 FEET.

DOUBLE FINES IN WORK ZONES SIGN

R-180-48 SIGNS SHALL BE FURNISHED, ERECTED, AND MAINTAINED IN GOOD CONDITION AND/OR REPLACED AS NECESSARY AND SUBSEQUENTLY REMOVED BY THE CONTRACTOR. SIGNS SHALL BE MOUNTED AT THE APPROPRIATE OFFSETS AND ELEVATIONS AS PRESCRIBED BY THE OHIO MANUAL OF UNIFORM TRAFFIC CONTROL DEVICES. THEY SHALL BE MAINTAINED ON SUPPORTS MEETING CURRENT SAFETY CRITERIA.

THE SIGNS SHALL BE COVERED OR REMOVED WHEN THE CONSTRUCTION ZONE IS DISCONTINUED FOR 30 DAYS OR MORE.

(THE SIGNS SHALL BE DUAL MOUNTED. THE FIRST SIGN SHALL BE PLACED BETWEEN THE "ROAD CONSTRUCTION AHEAD" (OW-128) SIGN AND THE NEXT SIGN IN THE SEQUENCE. SIGNS SHALL BE ERECTED ON EACH ENTRANCE RAMP AND EVERY TWO MILES THROUGH THE CONSTRUCTION WORK LIMITS.)

THE CONTRACTOR MAY USE SIGNS AND SUPPORTS IN USED BUT GOOD CONDITION PROVIDED THE SIGNS MEET CURRENT ODOT SPECIFICATIONS. SIGN FACES SHALL BE REFLECTORIZED WITH TYPE G SHEETING COMPLYING WITH THE REQUIREMENTS OF 730.19 AND U.S. DEPARTMENT OF TRANSPORTATION SUPPLEMENTAL SPECIFICATION FOR TYPE III-C SHEETING, FP-85.

DOUBLE FINES IN WORK ZONES SIGNS AND SUPPORTS WILL BE MEASURED AS THE NUMBER OF SIGN INSTALLATIONS, INCLUDING THE SIGN AND NECESSARY SUPPORTS. IF A SIGN AND SUPPORT COMBINATION IS REMOVED AND REERECTED AT ANOTHER LOCATION AS DIRECTED BY THE ENGINEER, IT SHALL BE CONSIDERED ANOTHER UNIT.

PAYMENT FOR ACCEPTED QUANTITIES, COMPLETE, IN PLACE WILL BE MADE AT THE CONTRACT UNIT PRICE. PAYMENT SHALL BE FULL COMPENSATION FOR ALL MATERIALS, LABOR, INCIDENTALS AND EQUIPMENT FOR FURNISHING, ERECTING, MAINTAINING, COVERING DURING SUSPENSION OF WORK, AND REMOVAL OF THE SIGN AND SUPPORT.

ITEM 614 - DOUBLE FINES IN WORK ZONE SIGNS 19 EACH

FLOODLIGHTING

FLOODLIGHTING OF THE WORK SITE FOR OPERATIONS CONDUCTED DURING NIGHT TIME PERIODS SHALL BE ACCOMPLISHED SO THAT THE LIGHTS DO NOT CAUSE GLARE TO THE DRIVERS ON THE ROADWAY. TO ENSURE THE ADEQUACY OF THE FLOODLIGHT PLACEMENT, THE CONTRACTOR AND THE ENGINEER SHALL DRIVE THROUGH THE WORK SITE EACH NIGHT WHEN THE LIGHTING IS IN PLACE AND OPERATIVE PRIOR TO COMMENCING ANY WORK. IF GLARE IS DETECTED THE LIGHT PLACEMENT AND SHIELDING SHALL BE ADJUSTED TO THE SATISFACTION OF THE ENGINEER BEFORE WORK PROCEEDS.

PAYMENT FOR ALL LABOR, EQUIPMENT AND MATERIALS SHALL BE INCLUDED IN THE LUMP SUM CONTRACT PRICE FOR MAINTAINING TRAFFIC.

COVERING OF SIGNS

WHERE THE PLANS CALL FOR A PERMANENT SIGN TO BE COVERED, THE CONTRACTOR SHALL DO SO IN SUCH A MANNER AS TO AVOID DAMAGING THE PERMANENT SIGN WHEN THE COVER IS REMOVED. THE COVER SHALL BE TOTALLY OPAQUE. RIVETS MAY BE USED TO ATTACH RIGID OVERLAY PANELS SPECIFIED IN THE PLANS. NO ADHESIVE TAPES SHALL BE APPLIED DIRECTLY TO THE FACE OF THE SIGN.

ITEM 614 - TEMPORARY IMPACT ATTENUATOR, (UNIDIRECTIONAL OR BIDIRECTIONAL)

THIS ITEM SHALL CONSIST OF FURNISHING AND INSTALLING EITHER OF THE FOLLOWING IMPACT ATTENUATORS:

1) THE QUADGUARD CZ, (24" WIDE 6-BAY) TEMPORARY IMPACT ATTENUATOR MANUFACTURED BY ENERGY ABSORPTION SYSTEMS, INC., ONE EAST WACKER DRIVE, CHICAGO, IL 60601 (TELEPHONE: 312-467-6750).

   THE LENGTH OF THE 6-BAY QUADGUARD CZ IS 20'-9". INSTALLATION SHALL BE AT THE LOCATIONS SPECIFIED IN THE PLANS, IN ACCORDANCE WITH THE MANUFACTURER'S SPECIFICATIONS AS DETAILED ON THE FOLLOWING PRE-APPROVED SHOP DRAWINGS:

DWG. NO.	DRAWING NAME	DWG./ REV. DATE	ODOT APPROVAL DATE
QSCZCVR-T4	QUADGUARD CZ SYSTEM FOR CONSTRUCTION ZONES	5/13/99 Rev. J	8/27/99
35-40-10	QUADGUARD SYSTEM CONCRETE PAD, CZ, QG	11/19/97 Rev. D	8/27/99
35-40-16	QUADGUARD SYSTEM BACKUP ASSEMBLY, CZ, QG	7/30/99 Rev. F	8/27/99
35405IZ	QUADGUARD CZ SYSTEM NOSE ASSEMBLY, CZ, QG, 24,30,36	5/17/99	8/27/99
35-40-18	TRANSITION ASSEMBLY, 4 OFFSET, QG	6/25/99 Rev. F	8/27/99
35400260	QUADGUARD SYSTEM PCMB ANCHOR ASSEMBLY	11/19/97 Rev. C	8/27/99

2) THE TRACC (TRINITY ATTENUATING CRASH CUSHION) MANUFACTURED BY SYRO INC., 1170 N. STATE STREET, GIRARD, OHIO 44420 (TELEPHONE: 330-545-4373).

CALCULATED JGB CHECKED AM

MAINTENANCE OF TRAFFIC GENERAL NOTES

CLE-2.75-5.35

THE TRACC IS 21'-0" LONG AND 2'-7" WIDE. INSTALLATION SHALL BE AT THE LOCATIONS SPECIFIED IN THE PLANS, IN ACCORDANCE WITH THE MANUFACTURER'S SPECIFICATIONS AS DETAILED ON THE FOLLOWING PRE-APPROVED SHOP DRAWINGS:

DWG. NO.	DRAWING NAME	DWG./ REV. DATE	ODOT APPROVAL DATE
SS450	CRASH-CUSHION ATTENUATING TERMINAL PLAN, ELEVATION & SECTIONS	3/12/99 Rev. 1	8/27/99
SS455	TRACC TRANSITION TO W-BEAM MEDIAN BARRIER PLAN, ELEVATION & SECTIONS	2/18/99	8/27/99
SS461	TRACC TRANSITION TO CONCRETE SAFETY SHAPE BARRIER PLAN, ELEVATION & SECTIONS	6/30/99 Rev. 1	8/27/99
SS462	TRACC TRANSITION TO CONCRETE BARRIER SINGLE SLOPE PLAN, ELEVATION & SECTIONS	6/30/99	8/27/99

THE CONTRACTOR SHALL PROVIDE A REPLACEMENT UNIT WHEN AN IMPACT IS SEVERE ENOUGH TO REQUIRE COMPLETE REPLACEMENT OF THE ATTENUATOR. THE CONTRACTOR SHALL HAVE A SPARE PARTS PACKAGE AVAILABLE ON THE PROJECT SITE AT ALL TIMES WHEN AN ATTENUATOR IS IN PLACE. THE CONTRACTOR SHALL PROVIDE A MINIMUM OF ONE COMPLETE SPARE PARTS PACKAGE FOR EVERY 1 TO 6 UNITS INSTALLED ON THE PROJECT SITE. FOR EXAMPLE, 5 INSTALLED UNITS REQUIRE 1 SPARE PARTS PACKAGE AND 7 INSTALLED UNITS REQUIRE 2 SPARE PARTS PACKAGES.

WHEN BI-DIRECTIONAL DESIGNS ARE SPECIFIED, THE CONTRACTOR SHALL SUPPLY APPROPRIATE TRANSITIONS. PAYMENT FOR THE ABOVE WORK SHALL BE MADE AT THE UNIT PRICE BID FOR ITEM 614, TEMPORARY IMPACT ATTENUATOR, (UNIDIRECTIONAL OR BI-DIRECTIONAL), EACH, AND SHALL INCLUDE ALL LABOR, TOOLS, EQUIPMENT AND MATERIALS NECESSARY TO CONSTRUCT, MAINTAIN, REPAIR, REPLACE OR RELOCATE A COMPLETE AND FUNCTIONAL IMPACT ATTENUATOR SYSTEM, INCLUDING ALL RELATED BACKUPS, TRANSITIONS, LEVELING PADS, HARDWARE AND GRADING, NOT SEPARATELY SPECIFIED, AS REQUIRED BY THE MANUFACTURER.

SHOULDER BUILDUP

SHOULDER BUILDUP FOR MAINTAINING TRAFFIC ON SHOULDERS, DURING MAINTENANCE OF TRAFFIC, SHALL BE 10" DEPTH ITEM 301, BITUMINOUS AGGREGATE BASE, PG64-22. AN ESTIMATED QUANTITY OF 641 CUBIC YARDS HAS BEEN PROVIDED IN THE GENERAL SUMMARY.

CALCULATED JGB
CHECKED AM

MAINTENANCE OF TRAFFIC GENERAL NOTES

CLE-2.75-5.35

MAINTENANCE OF TRAFFIC SUB-SUMMARY

CALCULATED JAG
CHECKED AM

REFERENCE NO.	STATION TO STATION	SIDE	SPL		614																		615		620	622	625	
			TEMPORARY TRAFFIC SIGNAL	TEMPORARY GUARDRAIL	TEMPORARY IMPACT ATTENUATOR, (UNIDIRECTIONAL)	TEMPORARY RAISED PAVEMENT MARKER (1-WAY WHITE)	TEMPORARY RAISED PAVEMENT MARKER (1-WAY YELLOW)	BARRIER REFLECTOR, TYPE A	BARRIER REFLECTOR, TYPE B	OBJECT MARKER	MAINTAINING TRAFFIC, MISC.: DITCH EROSION PROTECTION	MAINTAINING TRAFFIC, MISC.: 24" CONDUIT, TYPE A	TEMPORARY LANE LINE, CLASS 1 (WHITE)	TEMPORARY LANE LINE, CLASS I, 740.06, TYPE 1 (WHITE)	TEMPORARY EDGE LINE, CLASS 1 (WHITE)	TEMPORARY EDGE LINE, CLASS 1 (YELLOW)	TEMPORARY EDGE LINE, CLASS I, 740.06, TYPE 1 (WHITE)	TEMPORARY EDGE LINE, CLASS I, 740.06, TYPE 1 (YELLOW)	TEMPORARY CHANNELIZING LINE, CLASS 1	TEMPORARY CHANNELIZING LINE, CLASS I, 740.06, TYPE 1	TEMPORARY DOTTED LINE, CLASS 1	TEMPORARY TRANSVERSE LINE, CLASS 1	TEMPORARY STOP LINE, CLASS 1	TEMPORARY LANE ARROW, CLASS 1	TEMPORARY WORD ON PAVEMENT, 72", CLASS 1	TEMPORARY PAVEMENT, CLASS A	TEMPORARY PAVEMENT, AS PER PLAN	TEMPORARY DELINEATOR, TYPE D	PORTABLE CONCRETE BARRIER, 32"	TEMPORARY ROAD	
			EACH	LIN FT	EACH	EACH	EACH	EACH	EACH	EACH	SQ FT	LIN FT	LIN FT	LIN FT	LIN FT	LIN FT	LIN FT	LIN FT	LIN FT	LIN FT	LIN FT	LIN FT	LIN FT	EACH	EACH	SQ YD	SQ YD	EACH	LIN FT	LUMP	
											NOTE: FUNDING FOR ALL MAINTENANCE OF TRAFFIC IS TO BE "INTERSTATE MAINTENANCE."																					
	PHASE ONE																													
ELT-1	94+90 50J TO 109+86.64 50J	RT																1497												
ELT-2	94+90 50J TO 104+06.17 50J	RT															916													
ELT-3	96+30 50J TO 102+82.59 50J	LT															653													
ELT-4	96+30 50J TO 113+03 50J	LT																1673												
ELT-5	313+58 C TO 113+03 50J	BL/LT															1020													
CHLT-1	313+58 C TO 104+19.67 50J	BL/LT																		137										
CHLT-2	102+82.59 50J TO 104+19.67 50J	LT																		137										
CHLT-3	104+06.17 50J TO 106+10.23 50J	RT																		204										
CHLT-4	104+06.17 50J TO 106+10.23 50J	RT																		204										
LLT-1	94+90 50J TO 108+53 50J	RT												1363																
LLT-2	99+30 50J TO 113+03 50J	LT												1373																
PCB-1	98+35.50 50J TO 108+53 50J	RT			1				42	42																		1018		
PCB-2	99+30 50J TO 109+53 50J	LT			1				42	42																		1023		
PCB-3	87+69 50J TO 90+75 50J	LT			1																							280		
PCB-4	85+40 50J TO 88+20 50J	RT			1																							306		
	TEMPORARY RAMPS																													
	FROM SHEET NO. 63						15									344				300				60	2	1	738			
	FROM SHEET NO. 54					13	44								242	604				145		250	83				1424		6		LUMP
	FROM SHEET NO. 56					18					359	75								176				24	4	2					LUMP
	FROM SHEET NO. 58					27	60				3036	64			525	1172											2509		12		
	FROM SHEET NO. 61					4					550		162																	LUMP
	FROM SHEET NO. 82		1																											
	PHASE ONE-A																													
ELT-1	255+52 ML TO 282+45.06 ML	RT																2693												
EL-1	282+45.06 ML TO 356+75 ML	RT														7358														
ELT-2	255+52 ML TO 282+45.06 ML	RT															2693													
EL-2	282+45.06 ML TO 305+79 A	RT/BL													2262															
EL-3	306+17.75 ML TO 353+62.05 ML	RT													4744															
EL-4	313+55 A TO 351+12.05 ML	RT														3761														
EL-5	316+31.80 A TO 324+43.43 A	BL													812															
ELT-6	316+30.21 B TO 328+45.00 B	LT																1215												
EL-7	330+98.20 ML TO 342+28.33 ML	RT													1130															
EL-8	337+49.00 H TO 365+15.00 ML	BL/LT													2770															
EL-9	352+09.43 ML TO 365+15.00 ML	LT														1306														
ELT-10	94+97 50J TO 103+13 50J	RT																816												
ELT-11	94+97 50J TO 103+13 50J	RT															816													
ELT-12	95+85.50 50J TO 102+82.36 50J	LT															697													
ELT-13	95+95.50 50J TO 104+50 50J	LT																865												
ELT-14	323+77 F TO 339+19 F	LT																1542												
CHL-1	303+00.00 ML TO 306+17.75 ML	RT																	318											
CHL-2	303+00.00 ML TO 306+17.64 A	RT/LT																	318											
CHL-3	315+53.67 A TO 316+31.80 A	BL																	78											
CHL-4	315+53.00 B TO 316+30.21 B	LT																	77											
CHLT-5	313+58.02 C TO 104+50 50J	LT/LT																		168										
CHLT-6	102+82.36 50J TO 104+50 50J	LT																		168										
CHL-7	351+12.05 ML TO 353+62.05 ML	RT																	250											
TOTALS THIS SHEET			1	0	4	62	119	0	84	84	3945	139	162	2736	12485	14545	6795	10301	1662	1018	250	83	84	6	3	4671	0	18	2627	LUMP	

CLE-275-5.35

REFERENCE NO.	STATION TO STATION	SIDE	SPL		614																				615		620	622		
			TEMPORARY TRAFFIC SIGNAL	TEMPORARY GUARDRAIL	TEMPORARY IMPACT ATTENUATOR, (UNIDIRECTIONAL)	TEMPORARY RAISED PAVEMENT MARKER (1-WAY WHITE)	TEMPORARY RAISED PAVEMENT MARKER (1-WAY YELLOW)	BARRIER REFLECTOR, TYPE A	BARRIER REFLECTOR, TYPE B	OBJECT MARKER	MAINTAINING TRAFFIC, MISC.: DITCH EROSION PROTECTION	MAINTAINING TRAFFIC, MISC.: 24" CONDUIT, TYPE A	TEMPORARY LANE LINE, CLASS I (WHITE)	TEMPORARY LANE LINE, CLASS I, 740.06, TYPE I (WHITE)	TEMPORARY EDGE LINE, CLASS I (WHITE)	TEMPORARY EDGE LINE, CLASS I (YELLOW)	TEMPORARY EDGE LINE, CLASS I, 740.06, TYPE I (WHITE)	TEMPORARY EDGE LINE, CLASS I, 740.06, TYPE I (YELLOW)	TEMPORARY CHANNELIZING LINE, CLASS I	TEMPORARY CHANNELIZING LINE, CLASS I, 740.06, TYPE I	TEMPORARY DOTTED LINE, CLASS I	TEMPORARY TRANSVERSE LINE, CLASS I	TEMPORARY STOP LINE, CLASS I	TEMPORARY LANE ARROW, CLASS I	TEMPORARY WORD ON PAVEMENT, 72", CLASS I	TEMPORARY PAVEMENT, CLASS A	TEMPORARY PAVEMENT, AS PER PLAN	TEMPORARY DELINEATOR, TYPE D	PORTABLE CONCRETE BARRIER, 32"		
			EACH	LIN FT	EACH	EACH	EACH	EACH	EACH	EACH	SQ FT	LIN FT	LIN FT	LIN FT	LIN FT	LIN FT	LIN FT	LIN FT	LIN FT	LIN FT	LIN FT	LIN FT	LIN FT	LIN FT	EACH	EACH	SQ YD	SQ YD	EACH	LIN FT		
LLT-1	255+52 ML TO 282+45.06 ML	RT												2693																	
LL-1	282+45.06 ML TO 356+75 ML	RT											7358																		
LLT-2	255+52 ML TO 282+45.06 ML	RT												2693																	
LL-2	282+45.06 ML TO 337+10 ML	RT											5393																		
LL-3	352+09.43 ML TO 365+15 ML	LT											1306																		
LLT-4	96+59.70 50J TO 101+63.72 50J	RT												504																	
LLT-5	100+14.23 50J TO 102+92.15 50J	LT												278																	
PCB-1	321+49.80 ML TO 342+29 ML	RT			1				85	85																				2079	
PCB-2	320+83.50 B TO 325+45.00 B	LT			1				20	20																				462	
PCB-3	97+54.97 50J TO 100+13 50J	RT			1				12	12																				258	
PCB-4	99+35.50 50J TO 102+42.50 50J	LT			1				14	14																				307	
PCB-5	327+31 F TO 335+69 F	LT			1				35	35																				838	
	FROM SHEET NO. 45			125				6	7	7																	46			130	
	PHASE ONE-B																														
EL-1	282+45.06 ML TO 517+50.50 ML	RT														23505															
EL-2	282+45.06 ML TO 318+58.56 B	RT/BL													3542																
EL-3	282+45.06 ML TO 313+42.03 ML	LT													3025																
EL-4	282+45.06 ML TO 517+50.50 ML	LT														23505															
EL-5	306+17.75 ML TO 351+12.05 ML	RT													4494																
EL-6	309+32.03 ML TO 325+36.68 ML	LT													1605																
EL-7	306+17.76 A TO 318+58.24 B	LT														1240															
EL-8	124+65.64 E TO 342+03.40 ML	BL/LT													1750																
EL-9	124+66.10 E TO 125+50.67 E	RT														85															
EL-10	342+08 H TO 517+50.50 ML	LT													17546																
EL-11	339+69.59 F TO 340+20.09 F	LT														51															
EL-12	342+28.35 ML TO 351+12.05 ML	RT														884															
EL-13	360+00 ML TO 517+50.50 ML	RT													15750																
ELT-16	102+82.58 50J TO 107+52.00 50J	LT															469														
ELT-1	247+22.00 ML TO 282+45.06 ML	RT																3523													
ELT-2	247+22.00 ML TO 282+45.06 ML	RT															3523														
ELT-3	269+62.00 ML TO 282+45.06 ML	LT															1283														
ELT-4	269+62.00 ML TO 282+45.06 ML	LT																1283													
ELT-5	517+50.50 ML TO 543+50 ML	RT																2600													
ELT-6	517+50.50 ML TO 536+71.00 ML	RT															1920														
ELT-7	517+50.50 ML TO 538+99.00 ML	LT																2149													
ELT-8	517+50.50 H TO 538+69.36 ML	LT															2119														
ELT-14	532+45.22 ML TO 538+99.00 ML	LT															654														
ELT-15	536+77.55 ML TO 543+50.00 ML	RT															672														
CHL-1	305+45.37 ML TO 306+17.75 ML	RT																	72												
CHL-2	305+45.37 ML TO 306+17.76 A	RT/LT																	74												
CHL-3	309+32.03 ML TO 313+42.03 ML	LT																	410												
CHL-4	125+50.67 E TO 326+35.36 ML	BL/LT																	99												
CHL-5	325+36.68 ML TO 326+35.36 ML	LT																	99												
CHL-6	342+08 H TO 343+89 H	RT																	181												
CHL-7	342+03.40 ML TO 343+84.25 ML	LT																	181												
CHL-8	340+20.09 F TO 342+28.72 F	LT																	209												
CHLT-9	532+45.22 ML TO 538+71.12 ML	LT																		626											
CHLT-10	534+52.98 ML TO 536+77.55 ML	RT																		225											
CHLT-11	534+52.98 ML TO 536+73.60 ML	RT																		221											
TOTALS THIS SHEET			0	125	5	0	0	6	173	173	0	0	14057	6168	47712	49270	10640	9555	1325	1072	0	0	0	0	0	0	46	0	4074		

CALCULATED JAG CHECKED AM

MAINTENANCE OF TRAFFIC SUB-SUMMARY

CLE-275-5.35

REFERENCE NO.	STATION TO STATION	SIDE	SPL		614																				615		620	622		
			TEMPORARY TRAFFIC SIGNAL	TEMPORARY GUARDRAIL	TEMPORARY IMPACT ATTENUATOR, (UNIDIRECTIONAL)	TEMPORARY RAISED PAVEMENT MARKER (1-WAY WHITE)	TEMPORARY RAISED PAVEMENT MARKER (1-WAY YELLOW)	BARRIER REFLECTOR, TYPE A	BARRIER REFLECTOR, TYPE B	OBJECT MARKER	MAINTAINING TRAFFIC, MISC.: DITCH EROSION PROTECTION	MAINTAINING TRAFFIC, MISC.: 24" CONDUIT, TYPE A	TEMPORARY LANE LINE, CLASS 1 (WHITE)	TEMPORARY LANE LINE, CLASS I, 740.06, TYPE 1 (WHITE)	TEMPORARY EDGE LINE, CLASS 1 (WHITE)	TEMPORARY EDGE LINE, CLASS 1 (YELLOW)	TEMPORARY EDGE LINE, CLASS I, 740.06, TYPE 1 (WHITE)	TEMPORARY EDGE LINE, CLASS I, 740.06, TYPE 1 (YELLOW)	TEMPORARY CHANNELIZING LINE, CLASS 1	TEMPORARY CHANNELIZING LINE, CLASS 1, 740.06, TYPE 1	TEMPORARY DOTTED LINE, CLASS 1	TEMPORARY TRANSVERSE LINE, CLASS 1	TEMPORARY STOP LINE, CLASS 1	TEMPORARY LANE ARROW, CLASS 1	TEMPORARY WORD ON PAVEMENT, 72", CLASS 1	TEMPORARY PAVEMENT, CLASS A	TEMPORARY PAVEMENT, AS PER PLAN	TEMPORARY DELINEATOR, TYPE D	PORTABLE CONCRETE BARRIER, 32"		
			EACH	LIN FT	EACH	EACH	EACH	EACH	EACH	EACH	SQ FT	LIN FT	LIN FT	LIN FT	LIN FT	LIN FT	LIN FT	LIN FT	LIN FT	LIN FT	LIN FT	LIN FT	LIN FT	LIN FT	EACH	EACH	SQ YD	SQ YD	EACH	LIN FT		
LL-1	282+45.06 ML TO 517+50.50 ML	RT											23505																		
LL-2	282+45.06 ML TO 517+50.50 ML	LT											23505																		
LL-3	345+79.50 ML TO 348+81.80 ML	LT											302																		
LLT-1	247+22.00 ML TO 282+45.06 ML	RT												3523																	
LLT-2	271+12.00 ML TO 282+45.06 ML	LT												1133																	
LLT-3	517+50.50 ML TO 543+50 ML	RT												2600																	
LLT-4	517+50.50 ML TO 538+99.00 ML	LT												2149																	
PCB-1	271+53 ML TO 534+83.00 ML	RT			1				1052	1052																				26257	
PCB-2	272+92.56 ML TO 535+49.00 ML	LT			1				1049	1049																				26184	
PCB-3	321+49.70 ML TO 342+33.22 ML	RT			1				85	85																				2084	
	FROM SHEET NO. 30								62	62																				1525	
TP-1	272+92.56 ML TO 282+45.06 ML	LT																								750					
TP-2	273+02.56 ML TO 282+45.06 ML	RT																								706					
TP-3	517+50.50 ML TO 534+73.00 ML	LT																								2423					
TP-4	517+50.50 ML TO 534+73.00 ML	RT																								2606					
	PHASE TWO-A																														
EL-1	282+45.06 ML TO 517+50.50 ML	RT														23505															
EL-2	282+45.06 ML TO 316+62.86 B	RT													3416																
ELT-21	316+62.86 B TO 318+98.00 B	RT															237														
EL-3	282+45.06 ML TO 312+35.36 ML	LT													2990																
EL-4	282+45.06 ML TO 517+50.50 ML	LT														23505															
EL-5	309+59.13 ML TO 338+34.93 ML	RT													2878																
EL-6	309+59.70 A TO 332+98.15 ML	LT/RT														2344															
EL-7	309+78.57 ML TO 340+46.96	LT													3068																
EL-8	330+99.16 ML TO 517+50.50 ML	RT													18651																
EL-9	324+39.61 H TO 517+50.50 ML	RT/LT													19313																
ELT-11	316+62.86 B TO 328+45.00 B	LT																1182													
ELT-12	332+98.86 D TO 335+01.00 D	LT															203														
EL-12	312+35.36 ML TO 332+98.86 D	LT													2074																
EL-13	312+35.36 ML TO 332+99.03 D	LT/RT														1926															
EL-14	324+39.59 H TO 342+08.54 H	RT														1769															
ELT-15	87+30.71 50J TO 92+21.00 50J	RT															490														
ELT-16	96+30.00 50J TO 102+82.55 50J	LT															653														
ELT-17	96+30.00 50J TO 106+88.00 50J	LT																1058													
ELT-18	94+90.00 50J TO 105+38.00 50J	RT																1048													
ELT-19	94+90.00 50J TO 104+06.17 50J	RT															916														
ELT-20	313+57.97 C TO 106+88.00 50J	BL/LT															401														
ELT-1	255+22.56 ML TO 282+45.06 ML	RT																2723													
ELT-2	255+22.56 ML TO 282+45.06 ML	RT															2723														
ELT-3	265+12.56 ML TO 282+45.06 ML	LT															1733														
ELT-4	272+92.56 ML TO 282+45.06 ML	LT																953													
ELT-5	517+50.50 ML TO 558+71.00 ML	LT																4121													
ELT-6	517+50.50 ML TO 534+73.00 ML	RT																1723													
ELT-7	517+50.50 ML TO 528+74.20	RT															1124														
ELT-8	517+50.50 ML TO 538+70.43 ML	RT/LT															2200														
ELT-9	324+39.61 H TO 124+41.55 50J	RT															269														
ELT-10	535+32.85 ML TO 538+73.25 ML	LT															340														
CHL-1	306+55.73 A TO 309+59.70 A	LT																	308												
CHL-2	306+59.13 ML TO 309+59.13 ML	RT																	300												
CHL-3	309+78.57 ML TO 312+35.57 ML	LT																	257												
CHL-4	315+78.12 A TO 316+79.66 A	BL/LT																	102												
CHL-5	315+76.48 B TO 316+62.86 B	LT																	86												
CHL-6	329+06.66 ML TO 330+99.16 ML	RT																	193												
CHL-7	329+06.26 G TO 330+95.82 G	LT																	190												
CHL-8	332+98.15 ML TO 338+34.93 ML	RT																	537												
CHL-9	342+08.54 H TO 343+79.04 H	RT																	174												
CHL-10	340+68.22 ML TO 343+72.00 ML	LT																	304												
CHLT-12	332+99.03 D TO 334+62.82 D	RT																		164											
TOTALS THIS SHEET			0	0	3	0	0	0	2248	2248	0	0	47312	9405	52390	53049	11289	12808	2451	164	0	0	0	0	0	6485	0	0	56050		

CALCULATED JAC
CHECKED AM

MAINTENANCE OF TRAFFIC SUB-SUMMARY

CLE-275-5.35

REFERENCE NO.	STATION TO STATION	SIDE	SPL		614																				615		620	622		
			TEMPORARY TRAFFIC SIGNAL	TEMPORARY GUARDRAIL	TEMPORARY IMPACT ATTENUATOR, (UNIDIRECTIONAL)	TEMPORARY RAISED PAVEMENT MARKER (1-WAY WHITE)	TEMPORARY RAISED PAVEMENT MARKER (1-WAY YELLOW)	BARRIER REFLECTOR, TYPE A	BARRIER REFLECTOR, TYPE B	OBJECT MARKER	MAINTAINING TRAFFIC, MISC.: DITCH EROSION PROTECTION	MAINTAINING TRAFFIC, MISC.: 24" CONDUIT, TYPE A	TEMPORARY LANE LINE, CLASS 1 (WHITE)	TEMPORARY LANE LINE, CLASS 1, 740.06, TYPE 1 (WHITE)	TEMPORARY EDGE LINE, CLASS 1 (WHITE)	TEMPORARY EDGE LINE, CLASS 1 (YELLOW)	TEMPORARY EDGE LINE, CLASS 1, 740.06, TYPE 1 (WHITE)	TEMPORARY EDGE LINE, CLASS 1, 740.06, TYPE 1 (YELLOW)	TEMPORARY CHANNELIZING LINE, CLASS 1	TEMPORARY CHANNELIZING LINE, CLASS 1, 740.06, TYPE 1	TEMPORARY DOTTED LINE, CLASS 1	TEMPORARY TRANSVERSE LINE, CLASS 1	TEMPORARY STOP LINE, CLASS 1	TEMPORARY LANE ARROW, CLASS 1	TEMPORARY WORD ON PAVEMENT, 72", CLASS 1	TEMPORARY PAVEMENT, CLASS A	TEMPORARY PAVEMENT, AS PER PLAN	TEMPORARY DELINEATOR, TYPE D	PORTABLE CONCRETE BARRIER, 32"		
			EACH	LIN FT	EACH	EACH	EACH	EACH	EACH	EACH	SQ FT	LIN FT	LIN FT	LIN FT	LIN FT	LIN FT	LIN FT	LIN FT	LIN FT	LIN FT	LIN FT	LIN FT	LIN FT	EACH	EACH	SQ YD	SQ YD	EACH	LIN FT		
CHLT-13	118+58.62 50J TO 120+22.79 50J	LT																		164										
CHLT-14	312+23.56 C TO 313+57.97 C	LT																		134										
CHLT-15	102+82.55 50J TO 104+19.67 50J	LT																		137										
CHLT-16	324+39.61 H TO 124+41.55 50J	LT/RT																		271										
CHLT-11	535+32.90 ML TO 538+71.33 ML	LT																		338										
LL-1	282+45.06 ML TO 517+50.50 ML	RT											23505																	
LL-2	282+45.06 ML TO 517+50.50 ML	LT											23505																	
LLT-5	94+90.00 50J TO 103+87.22 50J	RT												897																
LLT-6	99+30.00 50J TO 105+85.70 50J	LT												656																
LLT-1	255+22.58 ML TO 282+45.06 ML	RT												2722																
LLT-2	272+92.56 ML TO 282+45.06 ML	LT												953																
LLT-3	517+50.50 ML TO 534+74.32 ML	RT												1724																
LLT-4	517+50.50 ML TO 538+74.42 ML	LT												2124																
PCB-1	284+33.19 ML TO 303+59.13	RT							76	76																			1855	
PCB-2	289+91.00 ML TO 312+21.00 ML	LT							88	88																			2160	
PCB-3	320+13.51 ML TO 329+35.00 ML	RT							38	38																			923	
PCB-4	320+18.43 A TO 329+51.40 ML	LT/RT			1				39	39																			939	
PCB-5	325+26.67 ML TO 334+21.23	LT							37	37																			894	
PCB-6	330+98.55 ML TO 348+22.00 ML	RT							70	70																			1723	
PCB-7	345+72.00 ML TO 354+93.22 ML	LT							38	38																			921	
PCB-8	320+83.50 B TO 325+45.00 B	RT			1				20	20																			463	
PCB-9	99+30.00 50J TO 103+38.00 50J	LT			1				18	18																			409	
PCB-10	98+35.50 50J TO 102+30.00 50J	RT			1				18	18																			402	
	PHASE TWO-B																													
EL-1	303+59.13 ML TO 316+62.94 B	RT													1308															
ELT-1	316+62.94 B TO 317+80.00 B	RT															117													
EL-2	309+61.28 A TO 318+32.00 A	LT														871														
EL-3	308+75.65 ML TO 332+99.00 D	LT													2418															
ELT-3	332+99.00 D TO 335+34.99 D	LT															236													
EL-4	315+22.06 B TO 316+62.94 B	LT														142														
ELT-4	316+62.94 B TO 328+45.04 B	LT																1195												
EL-5	324+39.61 H TO 345+72.00 ML	LT/RT													1987															
ELT-5	123+48.25 50J TO 324+39.61 H	RT															268													
ELT-6	94+97.00 50J TO 103+13.00 50J	RT																812												
ELT-7	94+97.00 50J TO 103+13.00 50J	RT															808													
ELT-8	95+85.50 50J TO 102+82.36 50J	LT															703													
ELT-9	95+85.50 50J TO 104+50.00 50J	LT																868												
EL-10	314+95.48 D TO 332+99.00 D	RT														1808														
EL-11	324+39.61 H TO 342+08.80 H	LT														1776														
CHL-1	306+59.13 ML TO 309+60.59 A	RT/LT																	311											
CHL-2	309+78.63 ML TO 314+95.51 D	LT/RT																	524											
CHL-3	315+21.53 A TO 316+31.80 A	RT																	110											
CHL-4	342+05.30 ML TO 343+72.00 ML	LT																	176											
CHLT-5	102+85.35 50J TO 104+50.00 50J	LT																		167										
CHLT-6	102+82.36 50J TO 104+50.00 50J	LT																		168										
CHLT-7	332+99.00 D TO 335+35.00 D	RT																		238										
CHLT-8	118+58.62 50J TO 120+95.79 50J	LT																		237										
CHLT-9	324+39.61 H TO 124+41.55 50J	LT/RT																		269										
LLT-1	96+59.70 50J TO 101+63.46 50J	RT												500																
LLT-2	100+14.23 50J TO 102+92.15 50J	LT												278																
PCB-1	284+33.32 ML TO 303+59.13 ML	RT							76	76																			1854	
PCB-2	289+91.00 ML TO 312+21.00 ML	LT							88	88																			2158	
PCB-3	320+13.51 ML TO 329+35.00 ML	RT							38	38																			921	
PCB-4	320+18.35 A TO 329+51.40 ML	LT/RT			1				39	39																			938	
PCB-5	325+26.68 ML TO 334+21.23 ML	LT							37	37																			895	
PCB-6	330+98.43 ML TO 348+22.00 ML	RT							70	70																			1724	
TOTALS THIS SHEET			0	0	5	0	0	0	790	790	0	0	47010	9854	5713	4597	2132	2875	1121	2123	0	0	0	0	0	0	0	0	19179		

CALCULATED JAG
CHECKED AM

MAINTENANCE OF TRAFFIC SUB-SUMMARY

CLE-275-5.35

MAINTENANCE OF TRAFFIC SUB-SUMMARY

CALCULATED JAG CHECKED AM

CLE-275-5.35

REFERENCE NO.	STATION TO STATION	SIDE	SPL		614																			615		620	622	615	
			TEMPORARY TRAFFIC SIGNAL	TEMPORARY GUARDRAIL	TEMPORARY IMPACT ATTENUATOR, (UNIDIRECTIONAL)	TEMPORARY RAISED PAVEMENT MARKER (1-WAY WHITE)	TEMPORARY RAISED PAVEMENT MARKER (1-WAY YELLOW)	BARRIER REFLECTOR, TYPE A	BARRIER REFLECTOR, TYPE B	OBJECT MARKER	MAINTAINING TRAFFIC, MISC.: DITCH EROSION PROTECTION	MAINTAINING TRAFFIC, MISC.: 24" CONDUIT, TYPE A	TEMPORARY LANE LINE, CLASS 1 (WHITE)	TEMPORARY LANE LINE, CLASS 1, 740.06, TYPE I (WHITE)	TEMPORARY EDGE LINE, CLASS 1 (WHITE)	TEMPORARY EDGE LINE, CLASS 1 (YELLOW)	TEMPORARY EDGE LINE, CLASS 1, 740.06, TYPE I (WHITE)	TEMPORARY EDGE LINE, CLASS 1, 740.06, TYPE I (YELLOW)	TEMPORARY CHANNELIZING LINE, CLASS 1	TEMPORARY CHANNELIZING LINE, CLASS 1, 740.06, TYPE 1	TEMPORARY DOTTED LINE, CLASS 1	TEMPORARY TRANSVERSE LINE, CLASS 1	TEMPORARY STOP LINE, CLASS 1	TEMPORARY LANE ARROW, CLASS 1	TEMPORARY WORD ON PAVEMENT, 72", CLASS 1	TEMPORARY PAVEMENT, CLASS A	TEMPORARY PAVEMENT, AS PER PLAN	TEMPORARY DELINEATOR, TYPE D	PORTABLE CONCRETE BARRIER, 32"	TEMPORARY ROAD	
			EACH	LIN FT	EACH	EACH	EACH	EACH	EACH	EACH	SQ FT	LIN FT	LIN FT	LIN FT	LIN FT	LIN FT	LIN FT	LIN FT	LIN FT	LIN FT	LIN FT	LIN FT	LIN FT	EACH	EACH	SQ YD	SQ YD	EACH	LIN FT	LUMP	
PCB-7	345+72.00 ML TO 354+93.22 ML	LT							38	38																			921		
PCB-8	97+54.97 50J TO 100+13.00 50J	RT			1				12	12																			258		
PCB-9	99+35.50 50J TO 102+42.50 50J	LT			1				14	14																			307		
PCB-10	320+83.51 B TO 325+45.00 B	LT			1				20	20																			461		
PCB-11	316+46.00 C TO 319+48.00 C	RT			1				15	15																			328		
PCB-12	335+95.02 G TO 339+39.61 G	LT			1				16	16																			366		
	PHASE TWO-C																														
ELT-1	281+95.37 ML TO 309+64.00 A	RT/RT															2695														
ELT-2	286+93.40 ML TO 313+64.61 A	RT/LT																2597													
ELT-3	294+70.99 ML TO 317+83.60 D	LT/RT															2240														
ELT-4	299+24.20 ML TO 319+32.18 D	LT/RT																2016													
ELT-5	329+07.14 ML TO 367+85.23 ML	RT																3884													
ELT-6	335+45.00 H TO 350+56.31 ML	RT/LT																1525													
ELT-7	338+34.93 ML TO 345+45.58 ML	RT															711														
ELT-8	338+43.00 H TO 355+10.00 ML	LT/LT															1671														
ELT-9	351+12.11 ML TO 375+04.94 ML	RT															2393														
CHLT-1	350+56.31 ML TO 352+10.00 ML	LT																		154											
	PHASE THREE																														
-	248+98 ML TO 537+73 ML	RT														23433		5370													
-	248+98 ML TO 303+32.37 ML	RT													2015		3347														
-	269+67.56 ML TO 540+33 ML	LT														23433		3560													
-	277+31.63 ML TO 314+95.60 D	LT/BL													3179		513														
-	306+17.75 ML TO 351+12.05 ML	RT													4494																
-	311+36.15 ML TO 325+36.68 ML	LT													1401																
-	333+94.91 ML TO 342+03.40 ML	LT													808																
-	343+61.62 ML TO 538+72.95 ML	LT													17389		2122														
-	361+12.05 ML TO 529+15 ML	RT													15638		1165														
-	536+73.60 ML TO 537+73 ML	RT													99																
-	538+72.95 ML TO 540+33 ML	LT													160																
-	248+98 ML TO 537+73 ML	RT											23433	5370																	
-	269+67.56 ML TO 540+33 ML	LT											23433	3560																	
TOTALS THIS SHEET			0	0	5	0	0	0	115	115	0	0	46866	8930	45183	46866	16857	18952	0	154	0	0	0	0	0	0	0	0	2641		
TOTALS FROM SHEET NO. 35			1	0	4	62	119	0	84	84	3945	139	162	2736	12485	14545	6795	10301	1662	1018	250	83	84	6	3	4671	0	18	2627	LUMP	
TOTALS FROM SHEET NO. 36			0	125	5	0	0	6	173	173	0	0	14057	6168	47712	49270	10640	9555	1325	1072	0	0	0	0	0	0	46	0	4074		
TOTALS FROM SHEET NO. 37			0	0	3	0	0	0	2248	2248	0	0	47312	9405	52390	53049	11289	12808	2451	164	0	0	0	0	0	6485	0	0	56050		
TOTALS FROM SHEET NO. 38			0	0	5	0	0	0	790	790	0	0	47010	9854	5713	4597	2132	2875	1121	2123	0	0	0	0	0	0	0	0	19179		
GRAND TOTALS			1	125	22	62	119	6	3410	3410	3945	139	155407	37093	163483	168327	47713	54491	6559	4531	250	83	84	6	3	11156	46	18	84571	LUMP	
TOTALS CARRIED TO GENERAL SUMMARY			1	125	22	181		6	3410	3410	3945	139	29.43 MI	7.03 MI	62.84 MI		19.36 MI		6559	4531	250	83	84	6	3	11156	46	18	84571	LUMP	

GENERAL NOTES

1. It is intended that this drawing be used for treatment of drop-offs that develop during construction operations, and that are not otherwise provided for in the construction plans. Where the plans do not provide specific items for labor, equipment, or materials to implement the drop-off treatments specified hereon, they shall be included for payment in the lump sum bid for Item 614 - Maintaining Traffic.
2. While the need for certain advisory signing is noted hereon, it is not intended that this be indicative of all signing that may be required to advise or warn motorists, and all requirements of the Ohio Manual of Uniform Traffic Control Devices (OMUTCD) must be fulfilled.
3. In urban or otherwise heavily developed areas where pedestrians and/or bicyclists may be present in significant numbers, additional signing and protective measures other than those shown hereon may be required.
4. The drop-off treatment selected for use at any given location shall be as appropriate for the prevailing conditions at the site.
5. Where concrete barrier is specified, it shall be in accordance with Standard Construction Drawing MC-9.2 and Item 622.
6. When drums are specified for a dropoff condition, a minimum number of four drums shall be used. Spacing shall be as indicated in the plans or as specified in the OMUTCD.
7. When OW-15I (Low Shoulder) signs or OW-17I (Uneven Lanes) and OWP-17I signs are required, they shall be placed 750' in advance of the condition, on all intersecting entrance ramps within the limits of the condition and immediately beyond all intersecting roadways within the limits of the condition. When the dropoff condition extends more than one-half mile, additional signs should be erected at intervals of one mile or less.
8. For locations, such as at ramps, lane shifts, lane closures, etc., where traffic is required to negotiate any difference in elevation between pavements, a 3:1 slope treatment similar to the Optional Wedge Treatment shall be provided.
9. Portable concrete barrier shall be placed on the same level as the traffic surface and shall not encroach on lane width(s) designated as the minimum required for traffic use. Where drums are used, and their presence would reduce traveled lane widths to less than 10', drums may be placed on the opposite level from that of traffic provided the dropoff depth does not exceed 5" and approval is granted by the Project Engineer.
10. Pavement Repairs (or similar work):
    a. Lengths greater than 60 feet - utilize appropriate treatment from Condition I.
    b. Lengths of 60 feet or less - repairs shall be effected in accordance with 255.08. Drums may be used as a separator adjacent to the traveled lane.

OPTIONAL WEDGE TREATMENT
(MILLING OR RESURFACING)

1. This treatment may be used when permitted for Condition I only.
2. OW-17I and OWP-17I signs required.

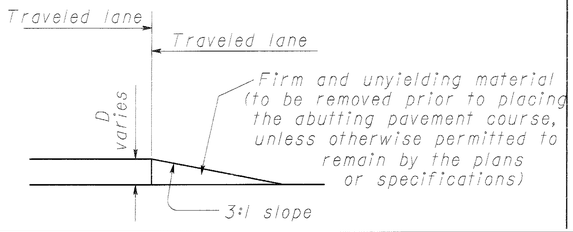

CONDITION I
DROPOFFS BETWEEN TRAVELED LANES

1. These treatments are to be used for resurfacing, pavement planing, excavation, etc. between or within traveled lanes.

D (In.)	Treatment
≤1½	Erect OW-17I and OWP-17I signs.
>1½-3	1) Lane closure utilizing drums* as shown below OR 2) Optional Wedge Treatment
>3-5	Lane closure utilizing drums as shown below.
>5	Lane closure utilizing portable concrete barrier as shown below.

*Cones may be used for daytime only conditions.

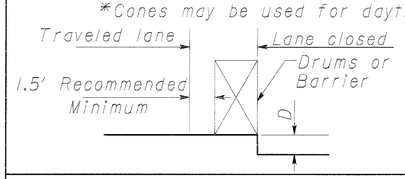

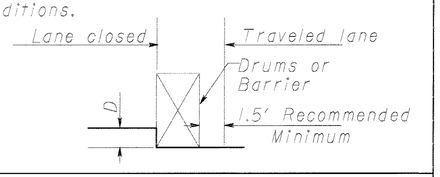

CONDITION II
DROPOFFS WITHIN GRADED SHOULDER AREA

1. The treatments indicated below are for use in conjunction with resurfacing, planing, or excavations within the graded shoulder area.
2. The graded shoulder area is that flat or gradually sloping area between the edge of a normally traveled lane and the more steeply sloping ditch foreslope or embankment slope. Its surface may be soil or turf, and/or it may be inclusive of a "treated" area (improved with aggregates, asphaltic materials, or concrete). For the purposes herein, its maximum width shall be considered to be twelve (12) feet.

D (In.)	Treatment
≤1½	1) If edgelines are present, no treatment necessary OR 2) Erect OW-17I and OWP-17I signs.
>1½-5	1) If min. lane width* requirements can be met, maintain lanes utilizing drums as shown below OR 2) If min. lane width requirements cannot be met, close adjacent lane utilizing drums OR 3) Optional Shoulder Treatment.
>5-12 Daylight only	If min. lane width* requirements can be met, maintain lanes utilizing drums as shown below.
>5-24	1) If min. lane width* requirements can be met, maintain lanes utilizing portable concrete barrier as shown below. OR 2) If min. lane width requirements cannot be met, close adjacent lane utilizing drums.
>24	Lane closure utilizing portable concrete barrier as shown below.

*Minimum lane widths shall be 10' unless otherwise specified in the plans.

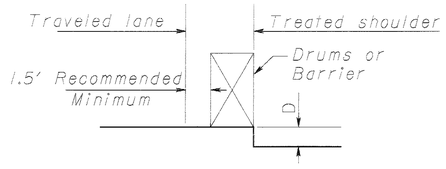

OPTIONAL SHOULDER TREATMENT

1. This treatment may not be used within a bituminous shoulder where a hot longitudnal joint per 401.15 is required.
2. OW-15I signs required.

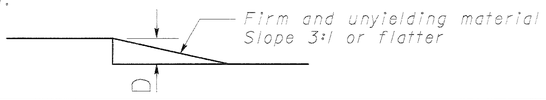

CONDITION III
DROPOFFS BEYOND GRADED SHOULDER OR BACK OF CURB

1. See Note 2 under Condition II.
2. Use Chart A or B below, as applicable.

CHART A

USE FOR: 1. Uncurbed Facilities.
2. Curbed Facilities, where:
   a. Curbs are less than 6" in height.
   b. Curbs are 6" or greater in height and the legal speed is greater than 40 mph.

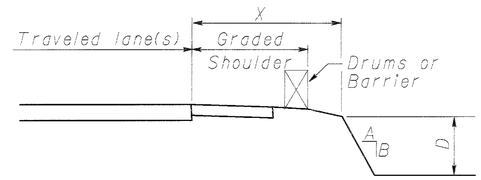

X (Ft.)	D (In.)	A/B	Treatment Required	
			Day	Night
0-4	Any	Any	(a)	(a)
4-30	Any	3:1 or Flatter	None	None
4-12	≤3	Steeper than 3:1	None	None
4-12	>3-≤12	Steeper than 3:1	Drums	Drums
4-12	>12	Steeper than 3:1	Drums	Barrier
>12-20	≤12	Steeper than 3:1	None	None
>12-20	>12-≤24	Steeper than 3:1	Drums	Drums
>12-20	>24	Steeper than 3:1	Drums	Barrier
>20-30	≤24	Steeper than 3:1	None	Drums
>20-30	>24	Steeper than 3:1	Drums	Barrier
>30	Any	Any	None	None

(a) Use treatment specified under Condition II.

CHART B

USE FOR: Curbed facilities, where the curb is 6" or greater in height and the legal speed is 40 mph or less.

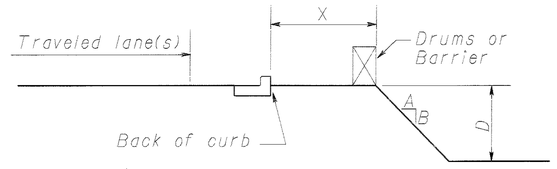

X (Ft.)	D (In.)	A/B	Treatment Required	
			Day	Night
0-10	≤12	Any	None	Drums
0-10	>12	Any	Drums	Drums
>10	Any	Any	None	None

STATE OF OHIO
DEPARTMENT OF TRANSPORTATION
BUREAU OF LOCATION AND DESIGN

--/--

DROPOFFS IN WORK ZONES

DESIGNED	DRAWN	TRACED	CHECKED	REVIEWED	DATE	REVISED

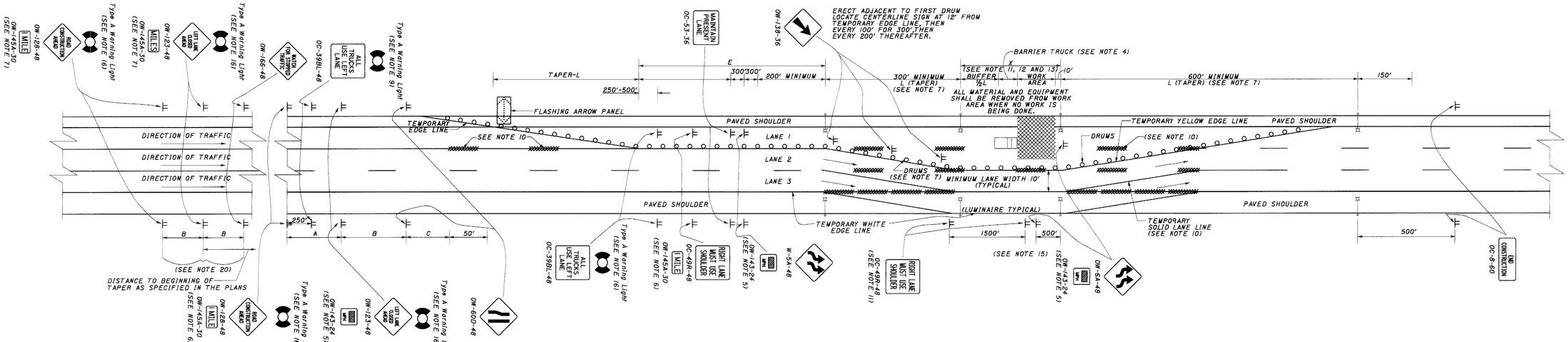

GENERAL NOTES:

1. THE LOCATION OF THE TRANSITION TAPER AND THE ADVANCE WARNING SIGNS SHOULD BE ADJUSTED TO PROVIDE FOR ADEQUATE SIGHT DISTANCE FOR THE EXISTING VERTICAL AND HORIZONTAL ROADWAY ALIGNMENT.

2. THE SPACING BETWEEN PROPOSED SIGNS SHOULD BE ADJUSTED TO NOT CONFLICT WITH AND TO PROVIDE A MINIMUM OF 200 FEET CLEARANCE TO EXISTING SIGNS.

3. THIS TRAFFIC CONTROL PLAN SHOULD BE USED WHEN THE WORK AREA EXTENDS INTO EITHER THE RIGHT OR THE LEFT HAND LANE OF A MULTIPLE LANE DIVIDED HIGHWAY AND IT IS NOT DESIRABLE, FOR CAPACITY REASONS, TO REDUCE THE NUMBER OF AVAILABLE LANES. THE MINIMUM RESULTANT WIDTH OF ANY LANE IS 10'-0". THE PLAN SHOWN IS FOR A LEFT-LANE CLOSURE. WHEN THERE IS A RIGHT-LANE CLOSURE, MAKE THE FOLLOWING SIGN SUBSTITUTIONS: AN OC-49L-48 "LEFT LANE MUST USE SHOULDER", FOR THE OC-49R-48; AN OC-39AR-48 "ALL TRUCKS USE RIGHT 2 LANES", FOR THE OC-39AL-48; AND OW-6A OR B-48 FOR THE OW-5A OR B-48; AND AN OW-5A OR B-48 FOR THE OW-6A OR B-48.

4. THE BARRIER TRUCK SHOWN AT THE BEGINNING OF THE WORK AREA SHALL BE IN PLACE AND UNOCCUPIED WHENEVER WORKERS ARE IN THE WORK AREA. THIS VEHICLE SHALL BE REMOVED FROM THE PAVEMENT WHENEVER WORKERS ARE NOT IN THE WORK AREA. OTHER PROTECTIVE DEVICES MAY BE USED IN LIEU OF THE BARRIER TRUCK SHOWN WHEN APPROVED BY THE ENGINEER. THE VEHICLE SHALL BE EQUIPPED WITH A 360 DEGREE ROTATING OR FLASHING AMBER BEACON CLEARLY VISIBLE A MINIMUM OF ¼ MILE.

5. THE ADVISORY SPEED SIGN OW-143-24 SHALL BE USED WHEN SPECIFIED IN THE PLAN OR AS DIRECTED BY THE ENGINEER. THE ADVISORY SPEED SHALL BE AS SPECIFIED IN THE PLAN, AS SHOWN IN TABLE II OR AS DIRECTED BY THE ENGINEER.

6. THE DISTANCE PLATE OW-143A-30 SHALL INDICATE THE DISTANCE TO THE BEGINNING OF THE PAVEMENT TAPER (L). DISTANCES LESS THAN ONE MILE MAY BE EXPRESSED IN FEET. THE PLAQUE MAY BE OMITTED IF EXTRA ADVANCE SIGN GROUPS ARE NOT USED.

7. THE TAPER RATE OF DRUMS SHALL BE BASED UPON THE AVERAGE APPROACH SPEED OR SPEED LIMIT WHICHEVER IS GREATER AND SHALL BE (R) AS SHOWN IN TABLE IV. EXCEPT THAT THE RESULTING LENGTH OF TAPER SHOULD NOT BE LESS THAN 600 FEET. THE TAPER (L) SHALL EQUAL THE TAPER RATE (R) MULTIPLIED BY THE OFFSET (O). A MINIMUM OF FIVE CHANNELIZING DEVICES SHALL BE USED TO FORM TAPER ON THE SHOULDER.

8. THE MAXIMUM DRUM SPACING SHALL BE IDENTICAL TO THE CHANNELIZING DEVICE SPACING REQUIREMENTS DESCRIBED IN NOTE 7.

9. THE TYPE A FLASHING WARNING LIGHTS SHOWN ON "ROAD CONSTRUCTION AHEAD" SIGN OW-128-48 AND "ALL TRUCKS CENTER LANE" SIGN, ARE REQUIRED.

10. THE EXISTING CONFLICTING PAVEMENT MARKINGS AND REFLECTORS FROM THE RAISED PAVEMENT MARKERS (RPM'S) SHALL BE REMOVED AND THE APPROPRIATE COLOR TEMPORARY LINES SHALL BE APPLIED. TEMPORARY LINES WHICH WOULD CONFLICT WITH FINAL TRAFFIC LANES SHALL BE REMOVABLE 1947.03 TYPE-C) TAPE UNLESS THE AREA WILL BE RESURFACED IN THE NEXT WORK PHASE. AFTER COMPLETION OF THE WORK, TEMPORARY MARKINGS SHALL BE REMOVED IN ACCORDANCE WITH 621J34 AND THE ORIGINAL MARKINGS AND RAISED PAVEMENT MARKER REFLECTORS SHALL BE RESTORED.

11. THE MAXIMUM SPACING OF THE OC-49R-48 "RIGHT LANE MUST USE SHOULDER", NEAR THE WORK AREA IS 1500 FEET. WHEN THE DISTANCE "X" IS LESS THAN 1700 FEET, THE SECOND OC-49R SHOULD BE DELETED. ALSO IF IT WOULD BE WITHIN 200 FEET OF THE OW-6A OR B-48 SIGN THE OC-49R SIGN SHOULD BE DELETED.

12. TEMPORARY LIGHTING WHEN CALLED FOR SHALL BE ON APPROVED BREAKAWAY SUPPORTS AT LEAST 3 FEET CLEAR DISTANCE BEHIND GUARDRAIL OR 30 FEET FROM EDGE OF THROUGH PAVEMENT. SPACING AND TYPE OF LUMINAIRES SHALL PROVIDE AN AVERAGE ILLUMINATION OF 1.0 TO 1.2 FOOT CANDLES WITH MAXIMUM UNIFORMITY RATIOS OF 4:1 AVERAGE TO MINIMUM AND 10:1 MAXIMUM TO MINIMUM THROUGHOUT THE LIGHTED AREA. WHEN TAPERS ARE REQUIRED TO BE LIGHTED AND DIMENSION "X" IS LESS THAN 2000 FEET LIGHTING SHALL BE CONTINUOUS BETWEEN TAPERS.

13. 36 INCH WARNING SIGN SIZES MAY BE USED ON DIVIDED ROADWAYS THAT ARE NOT CLASSIFIED AS FREEWAYS OR EXPRESSWAYS.

14. THE OC-8 SIGNS ARE ONLY REQUIRED FOR LANE CLOSURES OF MORE THAN ONE DAY AND MAY BE OMITTED IF THEY FALL WITHIN THE LIMITS OF A CONSTRUCTION PROJECT.

15. IF DISTANCE "X" IS LESS THAN 1000 FEET, PLACE THE OW-6A OR B-48 SIGN AT THE MID POINT OF DISTANCE "X".

16. TYPE A FLASHING WARNING LIGHTS SHOWN ON THE "ROAD CONSTRUCTION AHEAD" AND "RIGHT (OR LEFT) LANE CLOSED AHEAD" SIGNS ARE REQUIRED WHENEVER A NIGHT LANE CLOSURE IS NECESSARY.

17. WHEN WORK IS BEING PERFORMED IN THE LANE ADJACENT TO THE MEDIAN ON A DIVIDED HIGHWAY OW-123 SIGNS, SHALL BE SUBSTITUTED FOR THE OW-122-48 SIGNS AND OW-60D-48 SIGNS SHALL BE SUBSTITUTED FOR THE OW-60C-48 SIGNS.

18. THE TAPER LENGTH (L), NUMBER (N), AND SPACING (S) OF DRUMS SHALL CONFORM TO TABLE II. DRUM SPACING (S) SHALL BE USED FOR THE PAVEMENT TAPER. THE BUFFER AREA AND FOR THE FIRST 1000 FEET OF THE WORK AREA AND AT OTHER HAZARDOUS LOCATIONS AS DIRECTED BY THE ENGINEER. THE MAXIMUM DRUM SPACING FOR THE BALANCE OF THE WORK AREA IS TO BE TWO TIMES THE SPACING (S) IN TABLE IV. A MINIMUM OF 5 DRUMS SHALL BE USED IN THE SHOULDER TAPER.

19. CONES HAVING A MINIMUM HEIGHT OF 28 INCHES MAY BE SUBSTITUTED FOR DRUMS FOR DAYTIME LANE CLOSURES. PROVISIONS SHALL BE MADE TO SAFELY STABILIZE THE CONES TO PREVENT THEM FROM BLOWING OVER. IF THIS CANNOT BE ACHIEVED, DRUMS SHALL BE USED.

20. EXTRA ADVANCE WARNING SIGN GROUPS CONSISTING OF OW-128, OW-122 AND OW-166 SIGNS PLUS DISTANCE PLATES MAY BE SPECIFIED IN THE PLANS OR REQUIRED TO BE ERECTED AT THE DIRECTION OF THE ENGINEER.

TABLE I

MINIMUM DISTANCE	A	B	C
MAJOR STANDARD	500'	500'	500'
URBAN FREEWAY & EXPRESSWAY	500' TO 1000'	500' TO 1000'	500' TO 1000'
RURAL FREEWAY & EXPRESSWAY	2600'	1600'	1000'

TABLE II

NORMAL SPEED LIMIT MPH	MINIMUM TAPER (L) IN FEET	MINIMUM NUMBER (N) OF DRUMS	MAXIMUM SPACING (S) OF DRUMS	ADVISORY SPEED
30-40	320	9	40	------
45-55	660	13	60	------
60-65	780	13	60	55

TABLE III

MINIMUM DISTANCE	D	E
MAJOR STANDARD	500'	500'
URBAN FREEWAY & EXPRESSWAY	500' TO 1000'	500' TO 1000'
RURAL FREEWAY & EXPRESSWAY	2600'	1600'

TABLE IV

SPEED	TAPER RATE (R) (FT/FT)	MAXIMUM SPACING (S) OF DRUMS
30-40	2:1	40
45-55	5:1	60
60-65	6:1	60

ALL WORK AND TRAFFIC CONTROL DEVICES SHALL BE IN ACCORDANCE WITH 614 AND OTHER APPLICABLE PORTIONS OF THE C & M SPECIFICATIONS AS WELL AS IN ACCORDANCE WITH PART 7 OF OMUTCD. PAYMENT FOR ALL LABOR, EQUIPMENT AND MATERIALS TO PROVIDE THIS METHOD OF TRAFFIC CONTROL SHALL BE INCLUDED IN THE LUMP SUM BID FOR 614 MAINTAINING TRAFFIC, UNLESS SEPARATELY ITEMIZED IN THE PLAN.

STATE OF OHIO
DEPARTMENT OF TRANSPORTATION
DISTRICT 8 BRIDGE DEPARTMENT

TRANSITION PLAN FOR USE OF SHOULDER WITH DRUMS

PLAN INSERT SHEET "2"

DESIGNED	DRAWN	CHECKED	REVIEWED	DATE	REVISED
SDC	SDC	MLM	RLE		

LEGEND

PORTION TO BE IMPROVED
INTERSTATE & DIVIDED HIGHWAY
UNDIVIDED STATE & FEDERAL ROUTES
OTHER ROADS
DETOUR ROUTE
32" PORTABLE CONCRETE BARRIER
AREA TO BE CONSTRUCTED
TYPE A WARNING LIGHT

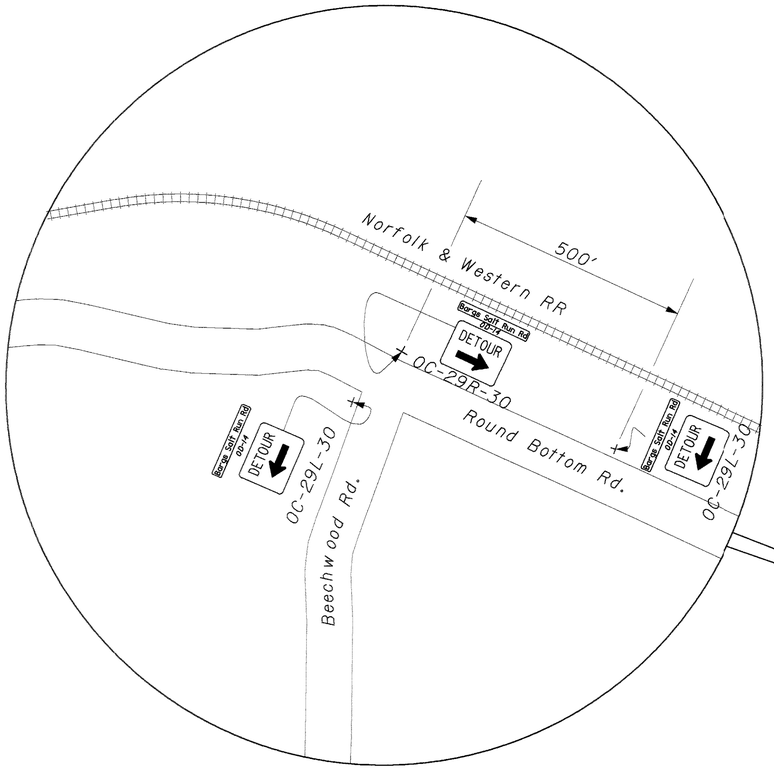

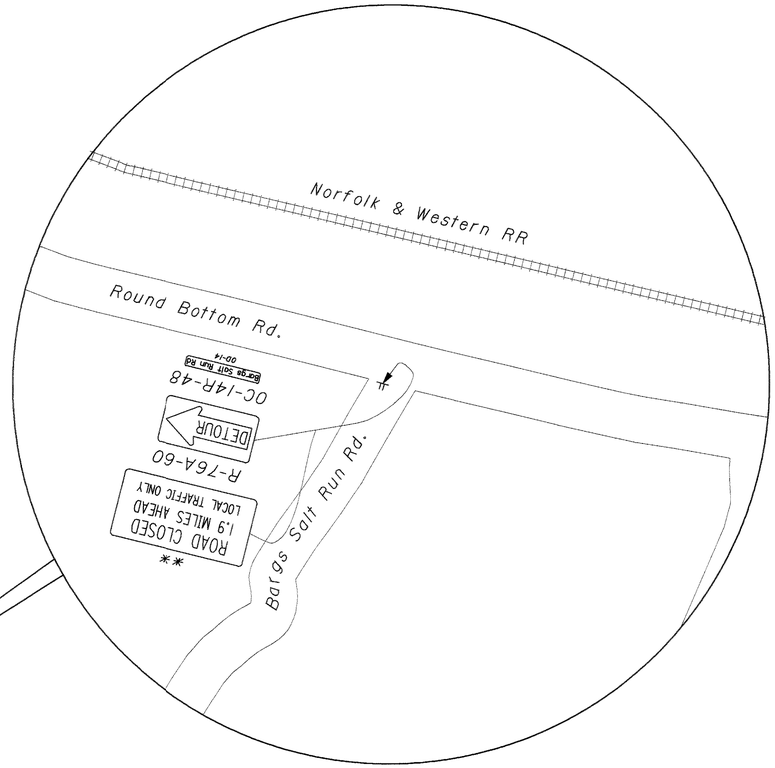

BEGIN PROJECT
STA 282+45.06

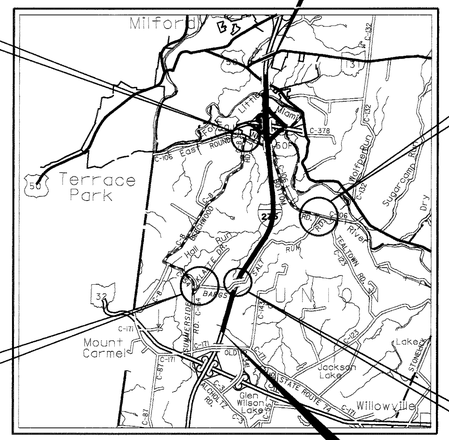

END PROJECT
STA 517+50.50

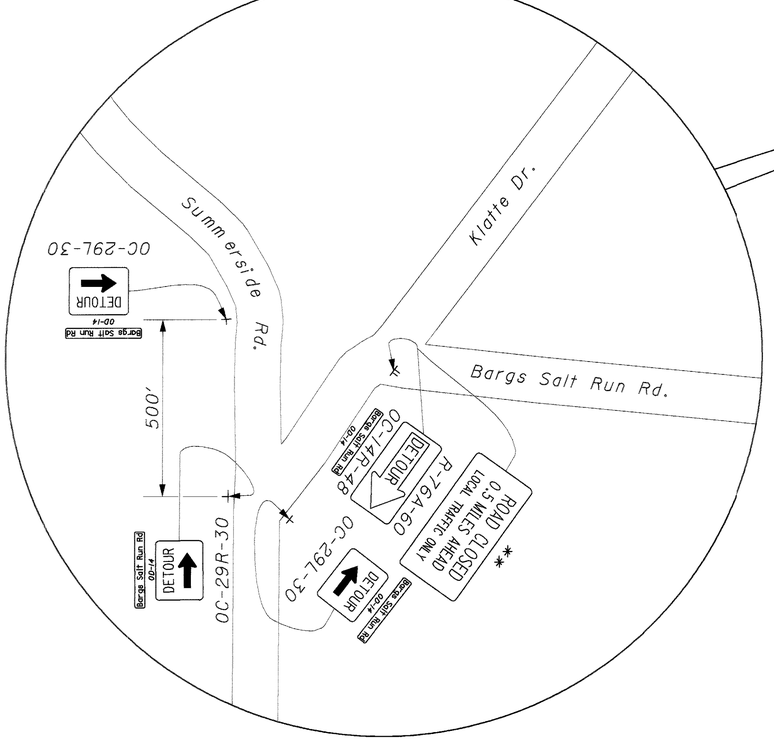

*** Install signs on
Type III barricades with
Gates and with Type B
warning lights, as per MT-101.60M

** Install signs on
Type III Barricade with
Type C warning lights

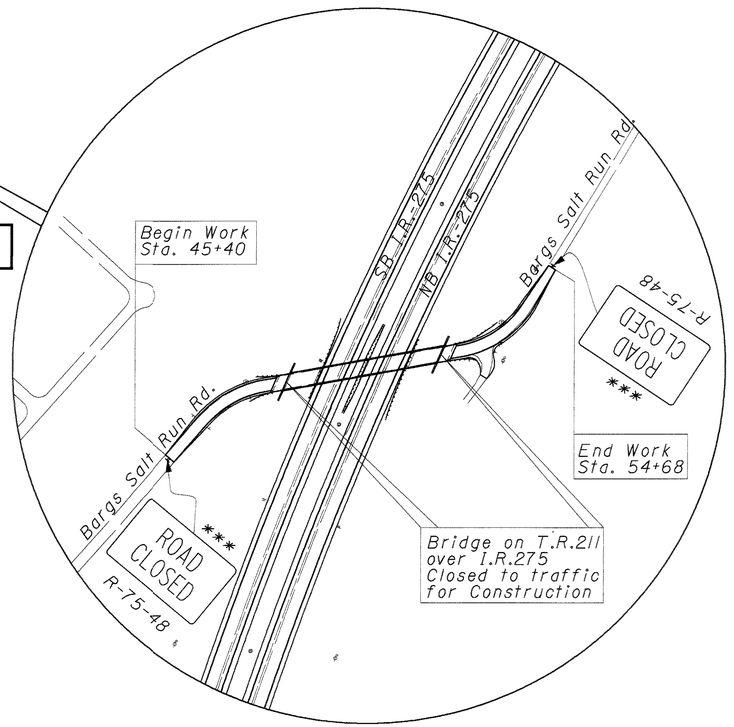

CALCULATED AM
CHECKED JTGB

BARGS SALT RUN RD. (TR-211) DETOUR PLAN

CLE-275-5.35

42
857

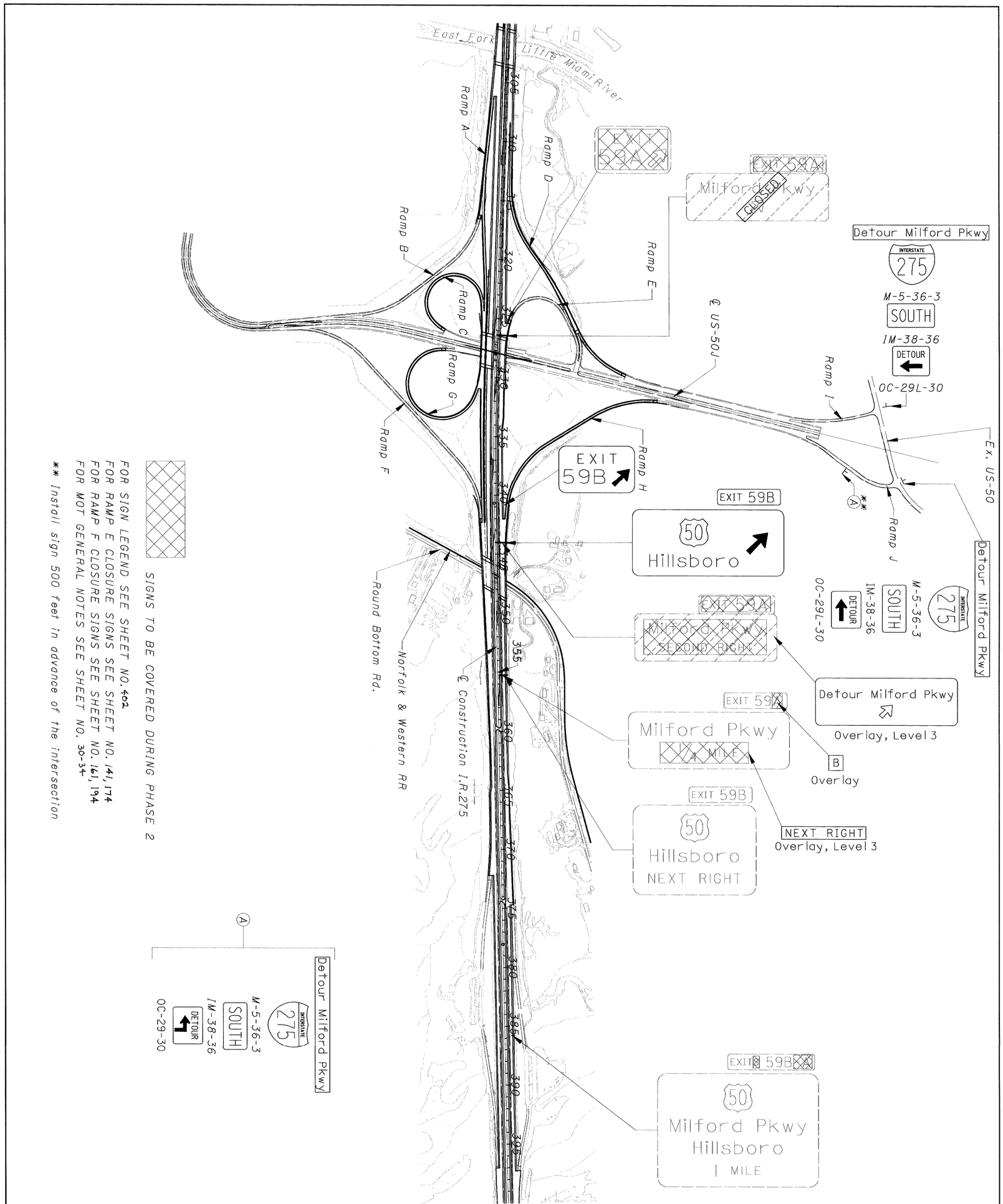

43 857	CLE-275-5.35	DETOUR FOR RAMPS E & F CLOSURE DURING MOT PAHSE 2A & 2B	CALCULATED AM / CHECKED JGB	0 400 200 800 HORIZONTAL SCALE IN FEET

CLE-275-5.35

DETOUR FOR RAMP D2 CLOSURE DURING MOT PHASE 2B

CALCULATED JGB
CHECKED AM

0 200 400 800
HORIZONTAL SCALE IN FEET

N

CURVE DATA
SERVICE RD. NO. 2 CURVE 1
P.I. Sta = 7+98.87
D = 13° 43′ 26″ (LT)
Dc = 10° 00′ 00″
R = 572.96′
T = 68.95′
L = 137.24′
E = 4.13′
P.C. STA. 7+29.92
P.T. STA. 8+67.16

CURVE DATA
SERVICE RD. NO. 2 CURVE 2
P.I. Sta = 11+17.65
D = 63° 52′ 31″ (LT)
Dc = 114° 35′ 30″
R = 50.00′
T = 31.17′
L = 55.74′
E = 8.92′
P.C. STA. 10+86.48
P.T. STA. 11+42.22

THE FOLLOWING QUANTITIES HAVE BEEN CARRIED TO THE MOT SUB-SUMMARY

PCB-1	ITEM 622 PORTABLE CONCRETE BARRIER, 22″	130	LIN FT
	ITEM 614 BARRIER REFLECTOR, TYPE B	7	EACH
	ITEM 614 OBJECT MARKER	7	EACH
GR-1	ITEM SPECIAL TEMPORARY GUARDRAIL	125	LIN FT
	ITEM 614 BARRIER REFLECTOR, TYPE A	6	EACH
TP-1	ITEM 615 TEMPORARY PAVEMENT, AS PER PLAN	46	SQ YD

TEMPORARY PAVEMENT, AS PER PLAN SEE SHEET NO. 31

TEMPORARY ROAD EARTHWORK FOR INFORMATION ONLY

ITEM 203	EXCAVATION NOT INCLUDING EMBANKMENT CONSTRUCTION	9 CU YD
ITEM 203	EMBANKMENT	3 CU YD
ITEM 877	TEMPORARY SEEDING AND MULCHING	55 SQ YD

℄ I.R.275
℄ EX. SERVICE RD. NO. 2
℄ NORFOLK SOUTHERN RR
Std. Hwy. Easement
Ex. LAR/W
Ex. RR R/W
Ex. Gravel Rd.
Ex. Round Bottom Rd.
Ex. Aerial Eas. Line
Ex. R/W
Ex. LA R/W
CURVE 1
CURVE 2
POT Sta. 6+56.78
POT Sta. 11+73.51
PT Sta. 346+88.95
POT Sta. 10+86.48
S 51° 30′ 48″ E
N 50° 53′ 15″ E
S 65° 14′ 14″ E
PCB
PCB-1
TP-1
GR-1
10′ TAPERED END SECTION
Begin Transition 8+94.00, 5.58 Lt.
End Transition 9+56.50, 0.83 Lt.
Begin Transition 9+79.84, 0.48 Lt.
End Transition 10+06.34, 2.19 Lt.
Begin Transition 10+40.00, 2.18 Lt.
End Transition 10+82.00, 6.36 Lt.
Begin Temporary Pavement Widening 9+05.06, 5.61 Rt.
BEGIN TEMP. GUARDRAIL TYPE 5 9+18.85, 7.02 Rt.
CONSTRUCTION LIMITS
TEMPORARY GUARDRAIL TYPE 5
End Temporary Pavement Widening 9+55.89, 10.82 Rt.
Begin Temporary Pavement Widening 9+80.09, 10.48 Rt.
Std. Hwy. Easement
CONSTRUCTION LIMITS
End Temporary Pavement Widening 10+06.59, 7.81 Rt.
POT Sta. 346+48.55 ℄ I.R.275 - ℄ Service Rd. No. 2
POT Sta. 10+00.00 ℄ EX. SERVICE RD. NO. 2
Begin Temporary Pavement Widening 10+40.47, 7.82 Rt.
END TEMP. GUARDRAIL TYPE 5 10+42.11, 7.66 Rt.
End Temporary Pavement Widening 10+58.04, 6.07 Rt.
344
345
346
347
348
4674
4675
4676
4677
4678
4679

SECTION BB @ 0.0156 '/'
10.00′ LANE (TYP.)
1.50′ BARR. OFFSET (TYP.)
0.50′ WORK OFFSET (TYP.)
2.00′(MIN.) SHORING OFFSET
2.00′ GRADED WIDTH @ 0.083 '/' (TYP.)
2:1 (TYP.)
℄ NORFOLK SOUTHERN RR
8.5′ FROM RR ℄
ZONE OF NO EXCAVATION
PROP. GR
PROP. FOOTING & COLUMN
SHORING
TEMPORARY PAVEMENT, AS PER PLAN (10″ THICK - 304 AGG. BASE)

SECTION AA @ 0.0156 '/'
10.00′ LANE (TYP.)
1.50′ BARR. OFFSET (TYP.)
0.50′ WORK OFFSET (TYP.)
2.00′(MIN.) SHORING OFFSET
2.00′ GRADED WIDTH @ 0.083 '/' (TYP.)
2:1 (TYP.)
℄ NORFOLK SOUTHERN RR
8.5′ FROM RR ℄
ZONE OF NO EXCAVATION
LT. EOP
PROP. GR
PROP. FOOTING & COLUMN
SHORING
TEMPORARY PAVEMENT, AS PER PLAN (10″ THICK - 304 AGG. BASE)
PCB

HORIZONTAL SCALE IN FEET
0 10 20 40
CALCULATED AM
CHECKED JGB

TEMPORARY PAVEMENT - SERVICE RD. NO. 2 DURING BRIDGE CONSTRUCTION

CLE-275-5.35

45
857

SEEDING	
END WIDTH	SQ. YDS.
4	1
0	0

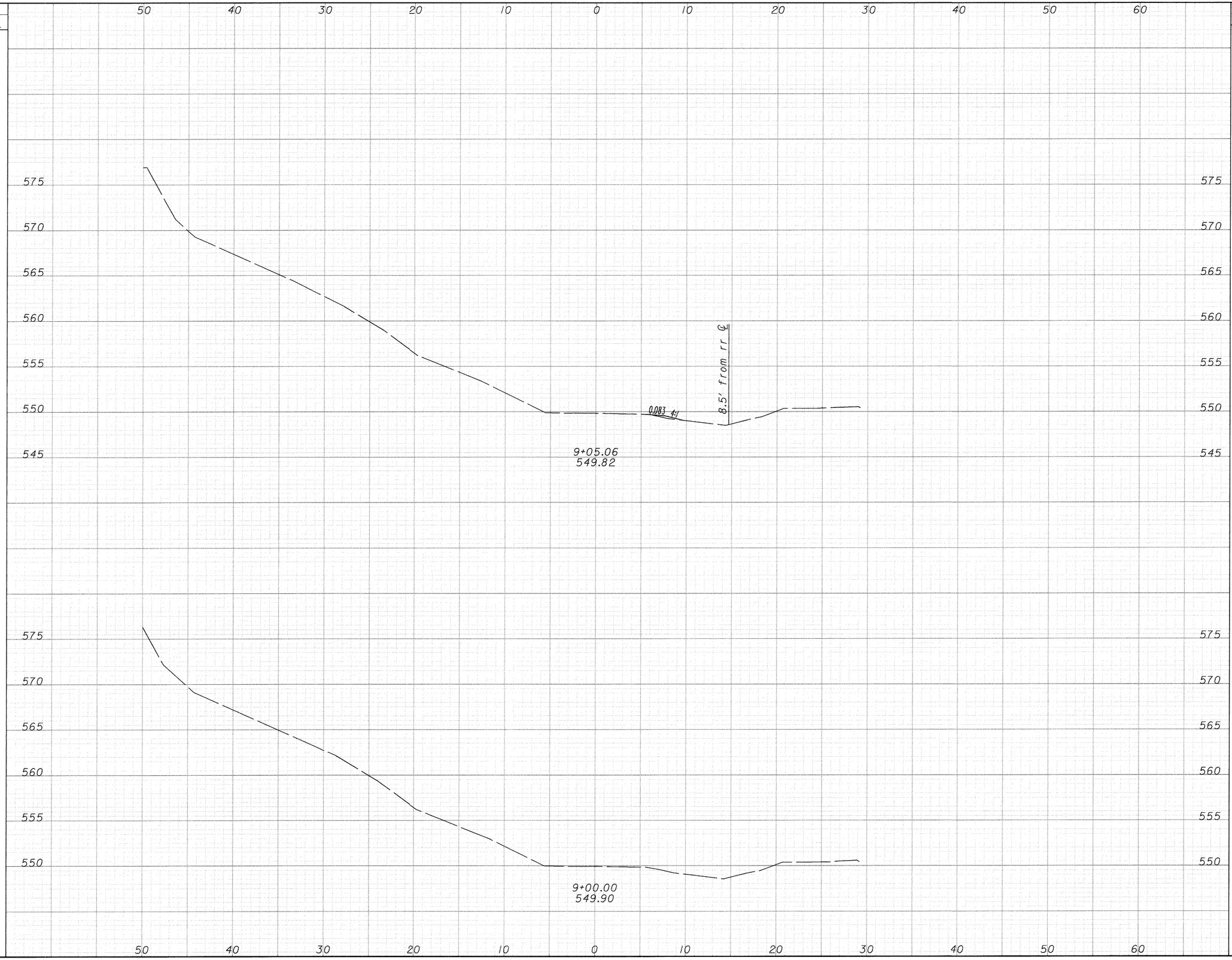

END AREA		VOLUME	
CUT	FILL	CUT	FILL
0	0		
		0	0
0	0		
		0	0

CALCULATED AM

CHECKED JGB

CROSS SECTIONS SERVICE ROAD NO. 2
ST. 9+00.00 TO STA. 9+05.06

CLE-275-5.35

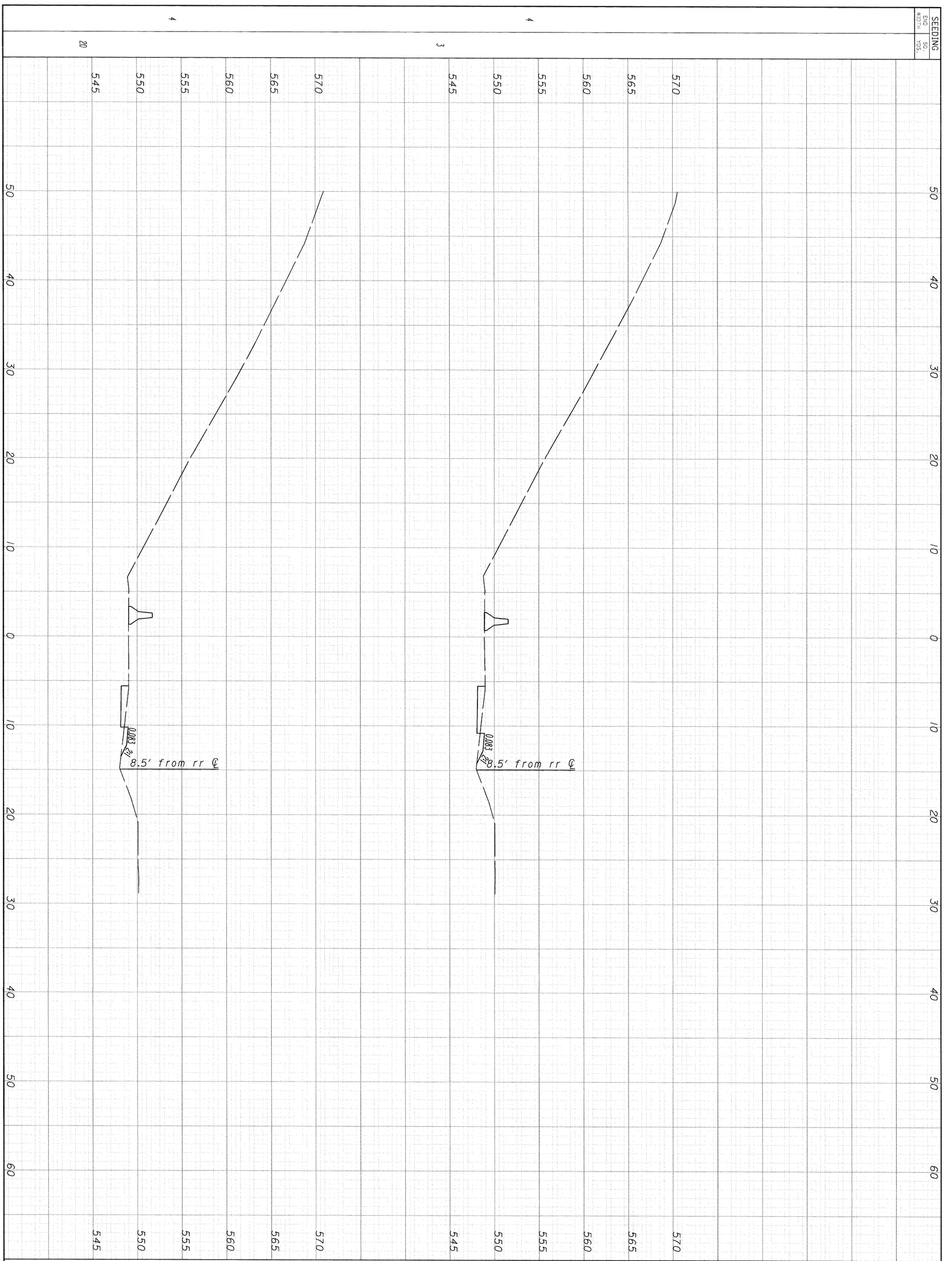

47
857

CLE-275-5.35

CROSS SECTIONS SERVICE ROAD NO. 2
STA. 9+50.00 TO STA. 9+55.89

CALCULATED AM

CHECKED JGB

SEEDING	
END WIDTH	SQ. YDS.
3	3
3	3

50 40 30 20 10 0 10 20 30 40 50 60

570 565 560 555 550 545

8.5' from rr ℄

0.083 2%

570 565 560 555 550 545

50 40 30 20 10 0 10 20 30 40 50 60

END AREA		VOLUME	
CUT	FILL	CUT	FILL
4	1	1	0
5	0	1	0

CALCULATED AM

CHECKED JGB

CROSS SECTIONS SERVICE ROAD NO. 2
STA. 9+63.57 TO STA. 9+71.83

CLE-275-5.35

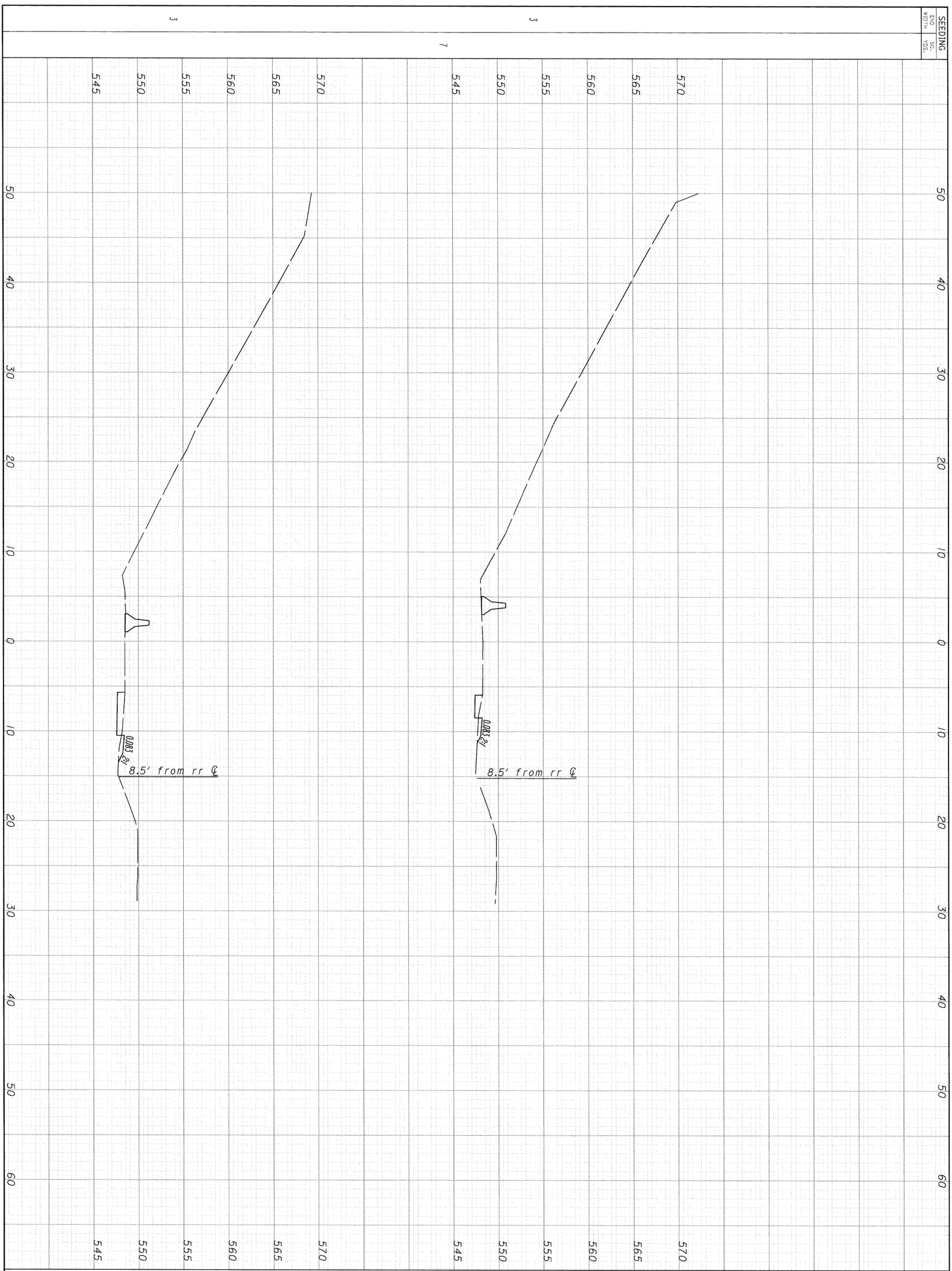

49 / 857	CLE-275-5.35	CROSS SECTIONS SERVICE ROAD NO. 2 STA. 9+80.09 TO STA. 10+00.00	CALCULATED AM CHECKED JGB

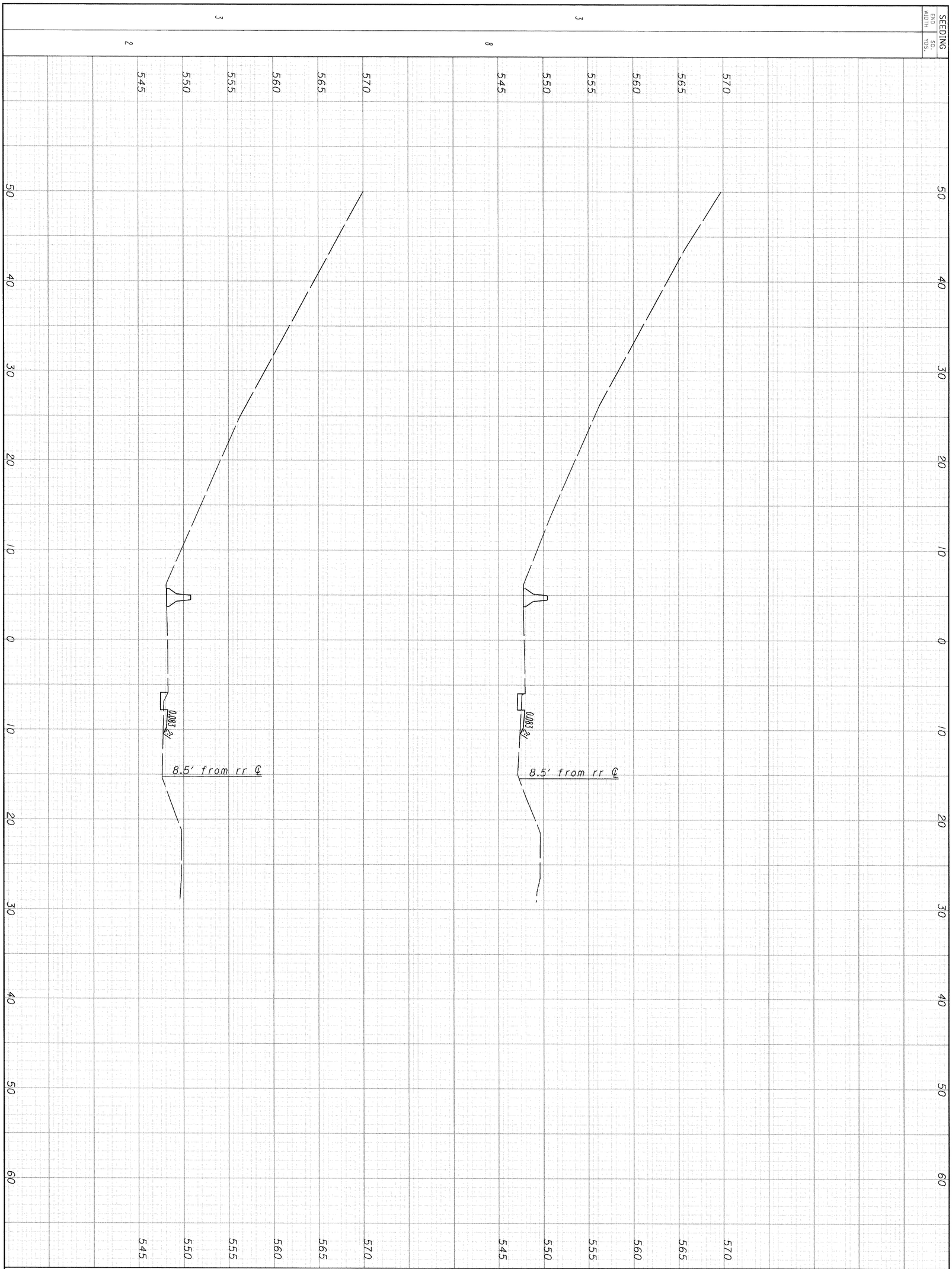

50/857

CLE-275-5.35

CROSS SECTIONS SERVICE ROAD NO. 2
STA. 10+06.59 TO STA. 10+29.89

CALCULATED AM

CHECKED JGB

SEEDING	
END WIDTH	SQ. YDS.
0	
	0
2	
5	

END AREA		VOLUME	
CUT	FILL	CUT	FILL
0	0		
		0	0
0	0		
		0	0

FOR INFORMATION ONLY

ITEM 203 EXCAVATION NOT INCLUDING EMBANKMENT CONSTRUCTION 9 CU YD

ITEM 203 EMBANKMENT 3 CU YD

ITEM 877 TEMPORARY SEEDING AND MULCHING 55 SQ YD

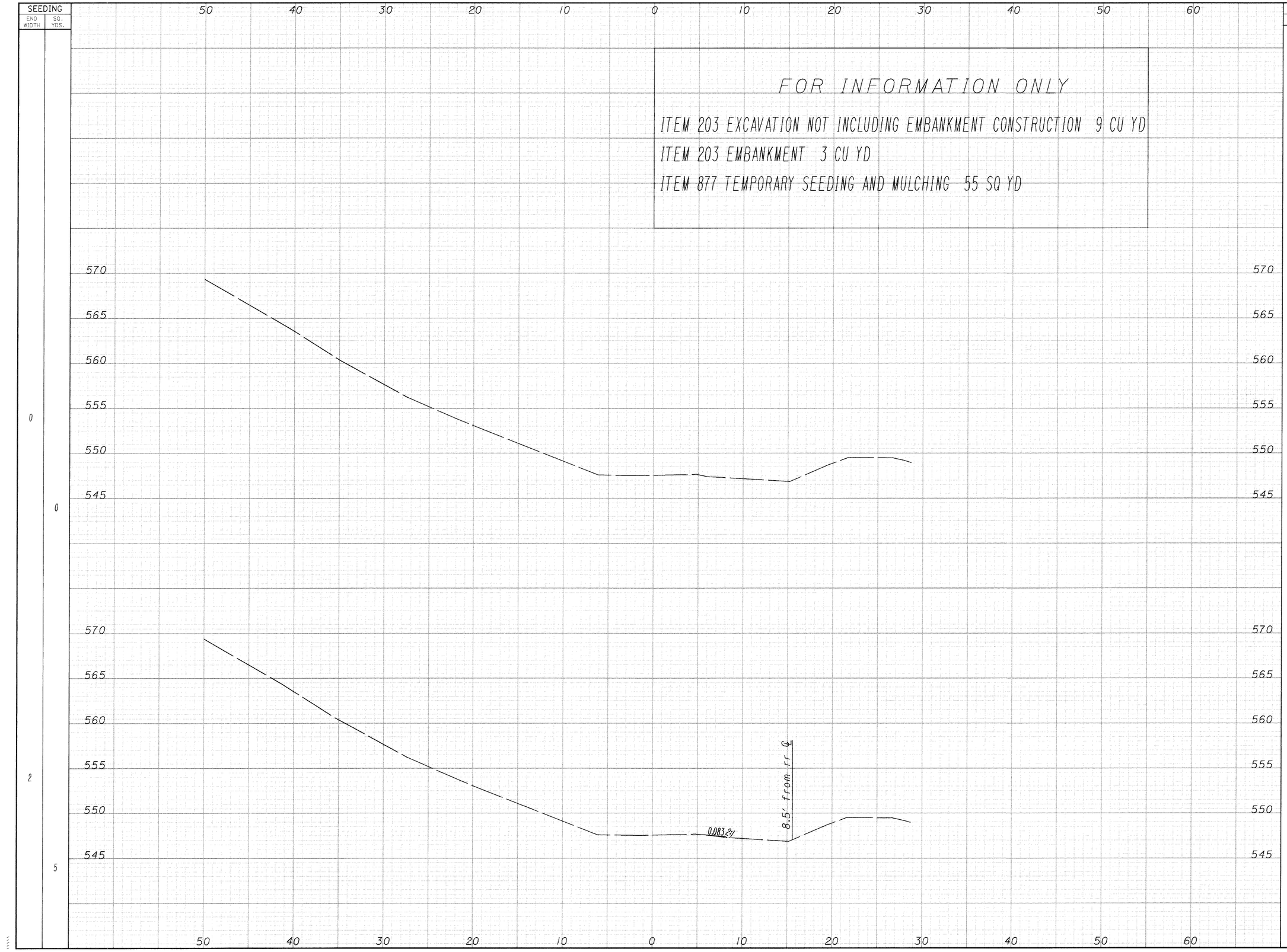

CALCULATED AM

CHECKED JGB

CROSS SECTIONS SERVICE ROAD NO. 2
STA. 10+48.80 TO STA. 10+50.00

CLE-275-5.35

51
857

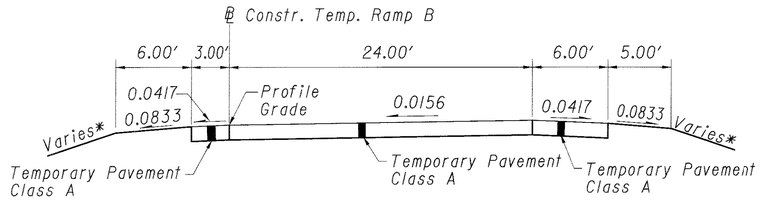

TEMPORARY RAMP B
NORMAL SECTION

SECTION APPLIES:

RAMP B:
STA. 327+44.83 to Sta. 327+83.79 = 38.96 Lin. Ft.

*For side slopes, see Cross Sections

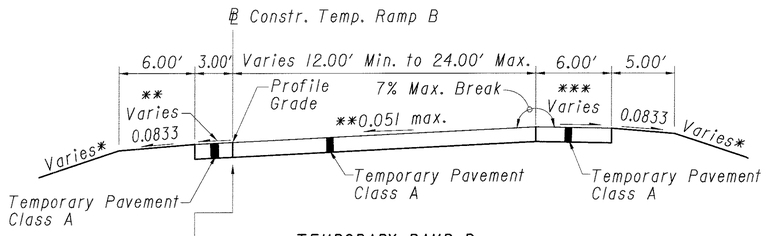

TEMPORARY RAMP B
SUPERELEVATED SECTION

*For side slopes, see Cross Sections
** Slope varies 0.0417 to 0.051
*** Slope varies 0.0417 to 0.019

SECTION APPLIES:

RAMP B:
Sta. 324+19.41 to Sta. 325+28.01 Transition = 108.60 Lin. Ft.
Sta. 325+28.01 to Sta. 326+25.10 Full Super = 97.09 Lin. Ft.
Sta. 326+25.10 to Sta. 327+44.83 Transition = 119.73 Lin. Ft.
Total Length = 325.42 Lin. Ft.

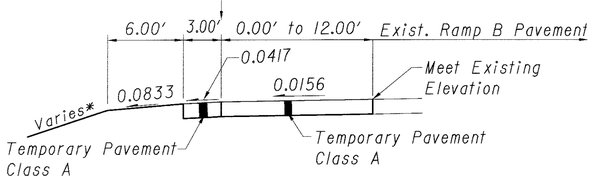

DECELERATION LANE TAPER

SECTION APPLIES:

RAMP B:
Sta. 321+69.43 to Sta. 324+19.41 = 250.00 Lin. Ft.

* For side slopes, see Cross Sections

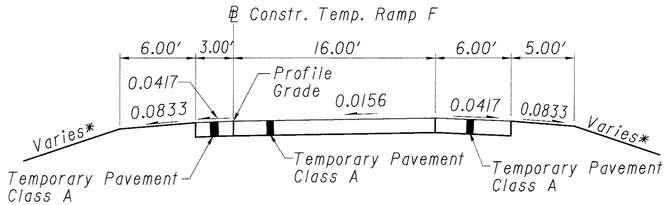

TEMPORARY RAMP F
NORMAL SECTION

SECTION APPLIES:

TEMPORARY RAMP F:
STA. 324+28.40 to Sta. 325+73.98 = 145.58 Lin. Ft.
Sta. 329+04.03 to Sta. 329+59.00 = 54.97 Lin.Ft.

*For side slopes, see Cross Sections

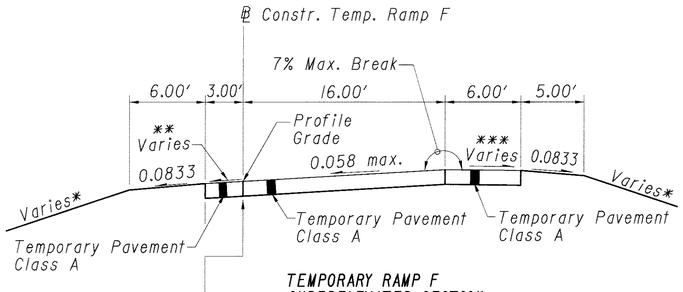

TEMPORARY RAMP F
SUPERELEVATED SECTION

* For side slopes, see Cross Sections
** Slope varies 0.0417 to 0.058
*** Slope varies 0.0417 to 0.012

SECTION APPLIES:

RAMP F:
Sta. 325+73.98 to Sta. 326+69.02 Transition = 95.04 Lin. Ft.
Sta. 326+69.02 to Sta. 328+09.00 Full Super = 139.98 Lin. Ft.
Sta. 328+09.00 to Sta. 329+04.03 Transition = 95.03 Lin. Ft.
Total Length = 330.05 Lin. Ft.

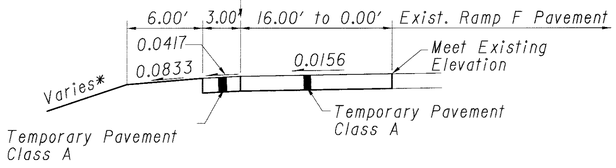

ACCELERATION LANE SECTION

SECTION APPLIES:

RAMP F:
Sta. 329+59.00 to Sta. 335+59.00 = 600.00 Lin. Ft.
* For side slopes, see Cross Sections

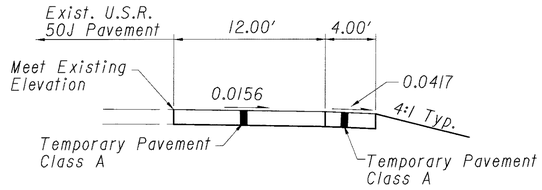

TEMPORARY LEFT TURN LANE, U.S.R. 50J
NORMAL SECTION

SECTION APPLIES:

U.S.R. 50J:
Sta. 99+88.58 to Sta. 102+37.85 = 249.27 Lin.Ft.

TEMPORARY RAMPS B&F, TEMPORARY LEFT TURN LANE U.S.R. 50J
TYPICAL SECTIONS

CLE-275-5.35

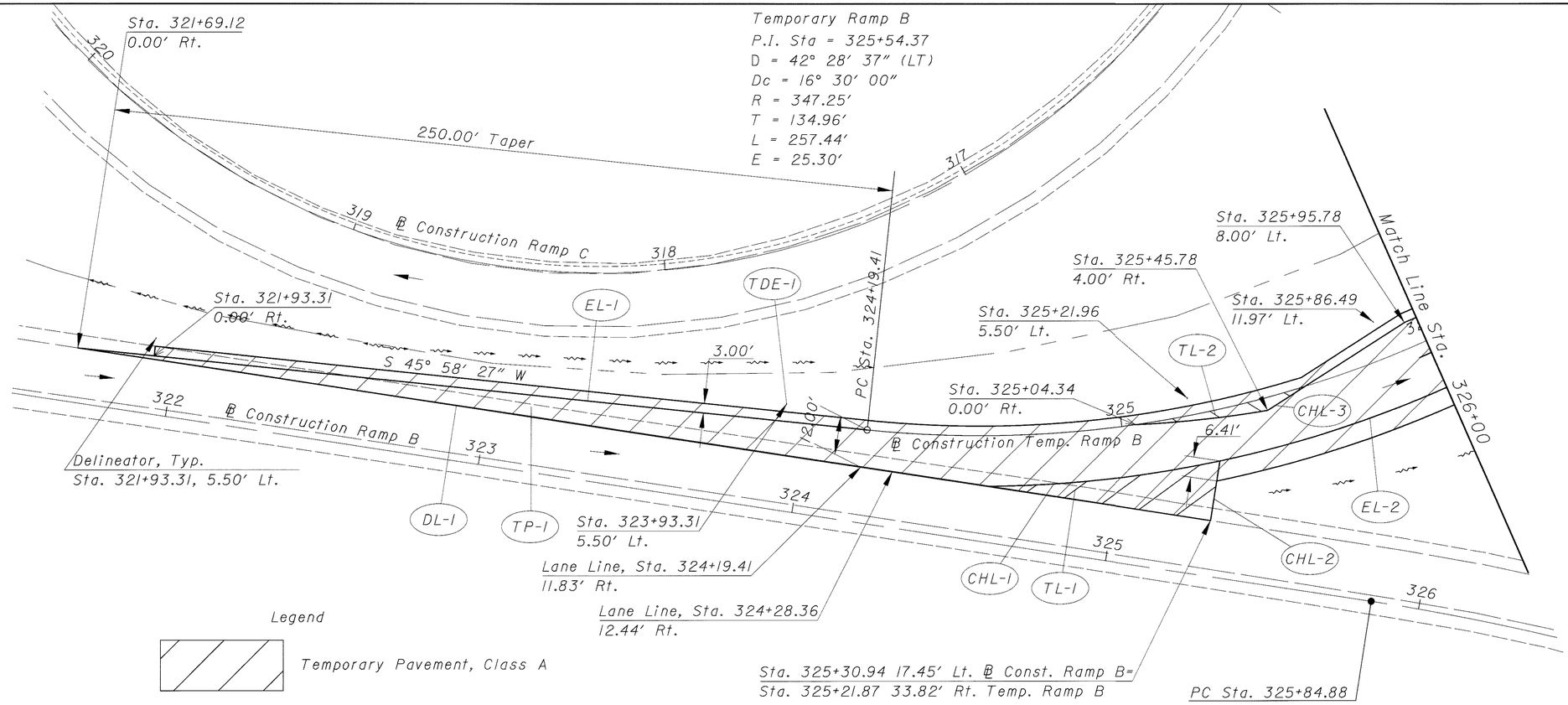

For Quantities see sheet no. 54

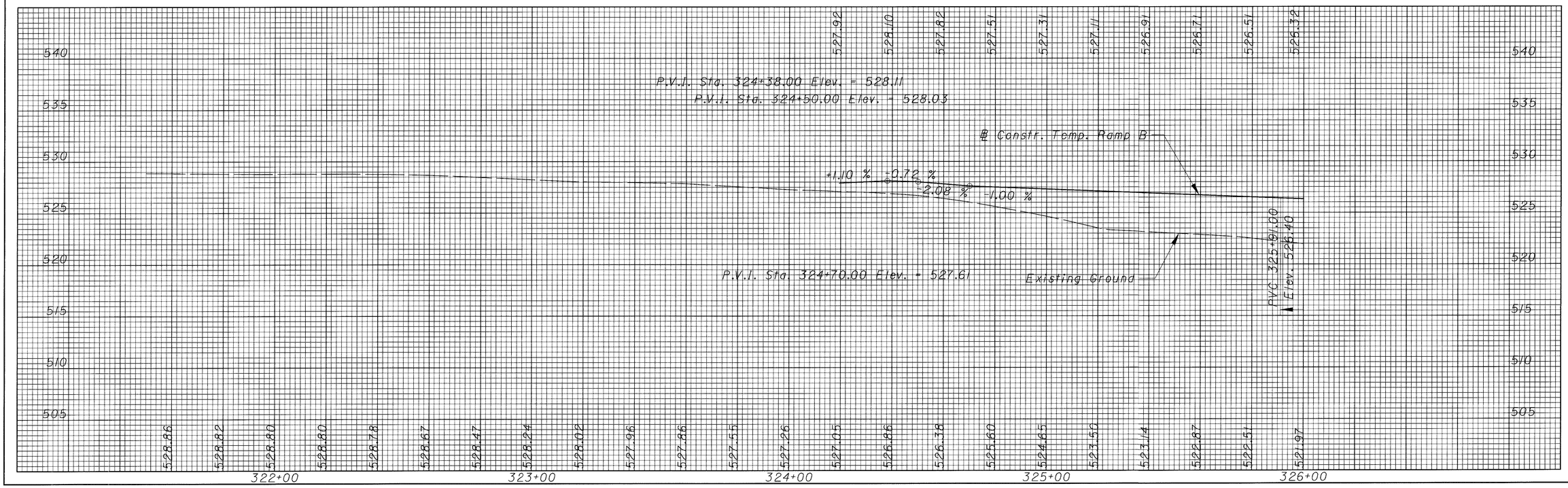

HORIZONTAL SCALE IN FEET
0 20 40

CALCULATED EF
CHECKED AM

TEMPORARY RAMP B PLAN AND PROFILE

CLE-275-5.35

53
857

REF NO.	SHEET NO.	STATION FROM	STATION TO	SIDE		614 TEMPORARY RAISED PAVEMENT MARKER, YELLOW EACH	614 TEMPORARY RAISED PAVEMENT MARKER, WHITE EACH		614 TEMPORARY EDGE LINE, YELLOW, CLASS I MILE	614 TEMPORARY EDGE LINE, WHITE, CLASS I MILE	614 TEMPORARY CHANNELIZING LINE, CLASS I L.F.	614 TEMPORARY DOTTED LINE, CLASS I L.F.	614 TEMPORARY TRANSVERSE LINE, CLASS I L.F.			615 TEMPORARY ROAD LUMP	615 TEMPORARY PAVEMENT CLASS A S.Y.	620 TEMPORARY DELINEATOR, TYPE D EACH
TP1	53	321+93.31	327+84.49	LT/RT												LUMP	1424.04	
DL-1	53	321+69.12	324+19.41	RT								250.00						
EL-1	53	321+69.12	327+73.01	CL/LT		31			604									
EL-2	53	325+30.94	327+73.01	RT		13				242								
TDE-1	53	321+93.31	327+18.00	LT														6
TL-1	53	324+57.64	325+28.01	RT			7						70.37					
TL-2	53	325+04.34	325+59.19	RT			6						12.96					
CHL-1	53	324+57.64	325+28.01	RT							71.00							
CHL-2	53	325+30.94		RT							19.00							
CHL-3	53	325+04.34	325+59.19	RT							54.85							
TOTALS CARRIED TO GENERAL SUMMARY						44	13		604	242	145	250	83			LUMP	1424	6

CALCULATED EF CHECKED AM

TEMPORARY RAMP B QUANTITIES

CLE-275-5.35

54
857

Ⓐ Sta. 326+52.95, 13.50' Lt.

Ⓑ Sta. 327+17.88, 13.50' Lt.

For Quantities see sheet no. 56

For PROP. 24" CONDUIT, SEE SHEET NO. 66

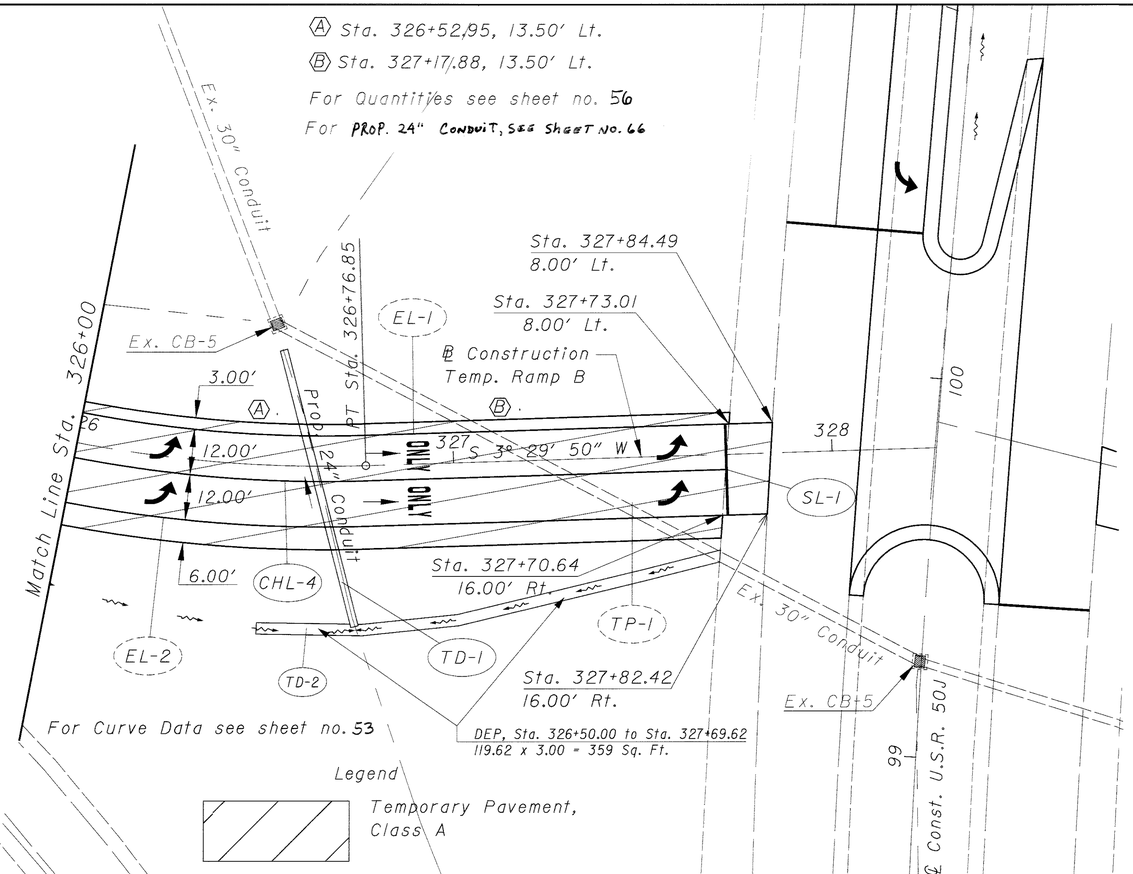

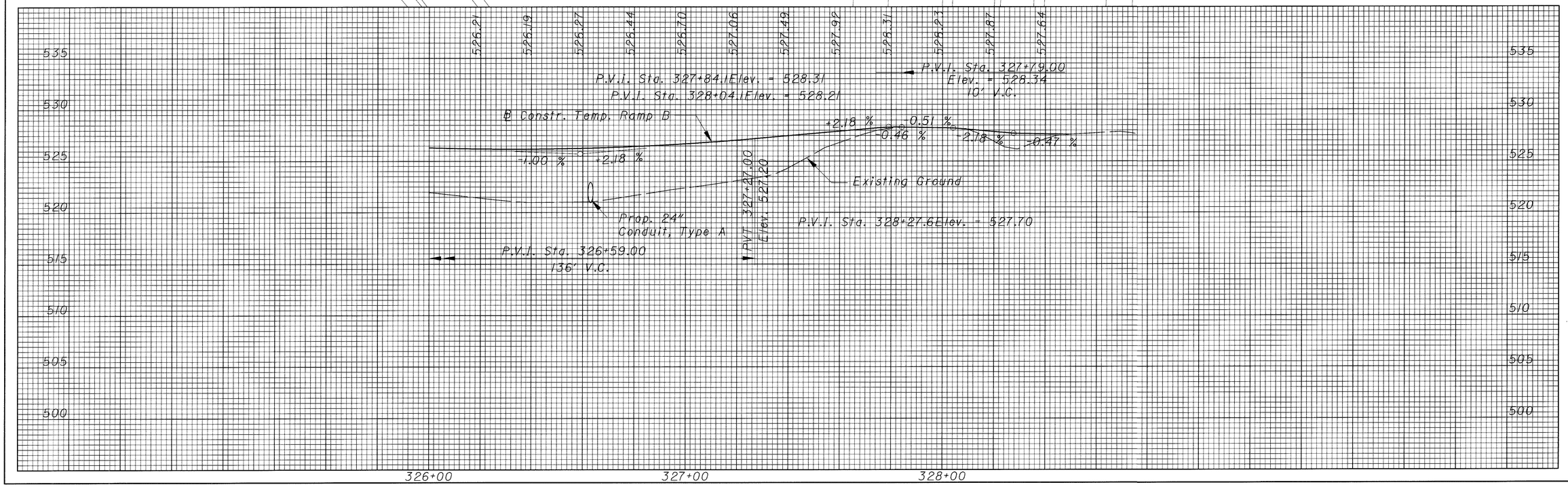

N

0 10 20 40
HORIZONTAL SCALE IN FEET

CALCULATED EF
CHECKED AM

TEMPORARY RAMP B PLAN AND PROFILE

CLE-275-5.35

55
857

REF NO.	SHEET NO.	STATION FROM	STATION TO	SIDE	614 MOT, MISC.: TEMPORARY DITCH EROSION PROTECTION S.F.	24" CONDUIT, TYPE A L.F.	TEMPORARY RAISED PAVEMENT MARKER, WHITE EACH				TEMPORARY CHANNELIZING LINE, CLASS I L.F.			TEMPORARY STOP LINE, CLASS I L.F.	TEMPORARY LANE ARROW, CLASS I EACH	TEMPORARY WORD ON PAVE., 72", CLASS I EACH		
TD1	55	326+63.04	0	LT/RT		75.32												
CHL-4	55	325+95.86	327+72.00	RT			18				176.14							
SL-1	55	327+72.00		LT/RT										24.00				
	55	326+27.75		LT/RT											2			
	55	327+62.00		LT/RT											2			
	55	326+93.75		LT/RT												2		
TD-2	55	326+50.00	327+69.62	RT	359													
TOTALS CARRIED TO GENERAL SUMMARY					359	75	18				176			24	4	2		

EF CHECKED AM

TEMPORARY RAMP B QUANTITIES

CLE-275-5.35

56
857

Curve Data Temporary Ramp F

P.I. Sta = 327+76.38
D = 63° 29′ 45″ (LT)
Dc = 25° 00′ 00″
R = 229.18′
Ls2 = 150.00′
Theta2 = 18° 45′ 00″
LT1 = 0.00′
LT2 = 100.57′
ST1 = 0.00′
ST2 = 50.52′
x1 = 0.00′
x2 = 148.40′
y1 = 0.00′
y2 = 16.24′
k1 = 0.00′
k2 = 74.73′
p1 = 0.00′
p2 = 4.08′
Dc = 44° 44′ 45″ (LT)
Lc = 178.98′
Ts1 = 146.36′
Ts2 = 214.51′
Es = 42.75′

Ramp G

Sta. 323+87.10
4.24′ Lt.

Sta. 323+97.58
3.24′ Lt.

DEP, Sta. 323+98.13 to Sta. 324+50.00
51.87 x 3.00 = 156 Sq. Ft.

Delineator, Typ.
Sta. 324+27.61, 5.88′ Lt.

Sta. 324+31.29
0.00′ Rt.

Sta. 324+00.91
16.00′ Rt.

Sta. 323+90.63
16.00′ Rt.

TD-2

TD-1

EL-1

EL-2

TDE-1

TP-1

TD-3

TD-5

TD-6

3.00′

16.00′

6.00′

Temp. 24″ Conduit

℄ Construction Ramp F
S 19° 28′ 49″ W

℄ Construction U.S.R. 50

Ex. 24″ Conduit

Ex. CB-5

Ex. CB-5

Sta. 325+27.59
5.50′ Lt.

Sta. 326+27.59
5.50′ Lt.

PC Sta. 326+30.02

Sta. 326+77.59
5.50′ Lt.

Sta. 327+27.59
5.50′ Lt.

Sta. 327+77.59
5.50′ Lt.

Match Line Sta. 328+00

DEP, Sta. 324+50.00 to Sat. 329+00.00
450 x 5.00 = 2250 Sq. Ft.

DEP, Sta. 327+50.00 to Sta. 328+00.00
50 x 3.00 = 150 Sq. Ft.

DEP, Sta. 326+30.00 to Sta. 327+50.00
120 x 4.00 = 480 Sq. Ft.

327 ℄ Construction Ramp F

Legend

Temporary Pavement, Class A

For Quantities see sheet no. 58
For Prop. 24″ Conduit see sheet no. 69

P.V.I. Sta. 323+98.00
Elev. = 528.02
10′ V.C.

℄ Constr. Temp. Ramp F

-1.92 %
0.49 %
+1.01 %
+1.44 %
-1.32 %
-1.32 %
+2.60 %

P.V.I. Sta. 323+43.6Elev. = 527.70
P.V.I. Sta. 323+65.2Elev. = 527.59
P.V.I. Sta. 323+87.8Elev. = 527.92

PVC 324+83.00
ELEV. 526.90

Prop. 24″
Conduit Type A

P.V.I. Sta. 325+73.00 Elev. = 525.71
180′ V.C.

PVT 326+63.00
ELEV. 528.05

Existing Ground

535 530 525 520 515 510 505 500

527.77 527.62 527.81 527.99 527.73 527.47 527.21 526.94 526.71 526.56 526.50 526.53 526.65 526.85 527.14 527.51 527.98 528.50 529.02 529.54 530.06 530.58 531.10 531.62

528.20 528.13 526.32 527.44 527.61 527.10 524.45 523.06 522.55 522.08 521.79 522.17 522.37 522.57 522.86 523.21 523.34 523.39 523.76 524.30 524.91 525.90 526.78 527.32 528.29 529.38

323+00 324+00 325+00 326+00 327+00 328+00

CALCULATED EF CHECKED AM

HORIZONTAL SCALE IN FEET
0 10 20 40

TEMPORARY RAMP F PLAN AND PROFILE

CLE-275-5.35

57
857

REF NO.	SHEET NO.	STATION FROM	STATION TO	SIDE	614 24" CONDUIT, TYPE A	614 MOT, MISC.: TEMPORARY DITCH EROSION PROTECTION	614 TEMPORARY RAISED PAVEMENT MARKER, YELLOW	614 TEMPORARY RAISED PAVEMENT MARKER, WHITE	614 TEMPORARY EDGE LINE, YELLOW, CLASS I	614 TEMPORARY EDGE LINE, WHITE, CLASS I	614	614	614	614	614	615 TEMPORARY ROAD	615 TEMPORARY PAVEMENT CLASS A	620 TEMPORARY DELINEATOR, TYPE D
					L.F.	S.F.	EACH	EACH	MILE	MILE						LUMP	S.Y.	EACH
TP1	57	323+87.10	335+59.00	LT/RT												LUMP	2508.95	
TD1	57	325+27.14		LT/RT	63.65													
EL-1	57	323+90.63	329+15.81	RT				27		525								
EL-2	57	323+87.10	335+59.00*	LT/CL			60		1172									
TDE-1	57	324+27.61	335+27.40*	LT														12
TD-2	57	323+98.13	324+50.00	LT		156												
TD-3	57	324+50.00	329+00.00	LT		2250												
TD-5	57	326+30.00	327+50.00	RT		480												
TD-6	57	327+50.00	328+00.00	RT		150												
*	RAMPF STATIONS																	
TOTALS CARRIED TO GENERAL SUMMARY					64	3036	60	27	1172	525						LUMP	2509	12

CALCULATED EF
CHECKED AM

TEMPORARY RAMP F QUANTITIES

CLE-275-5.35

58
857

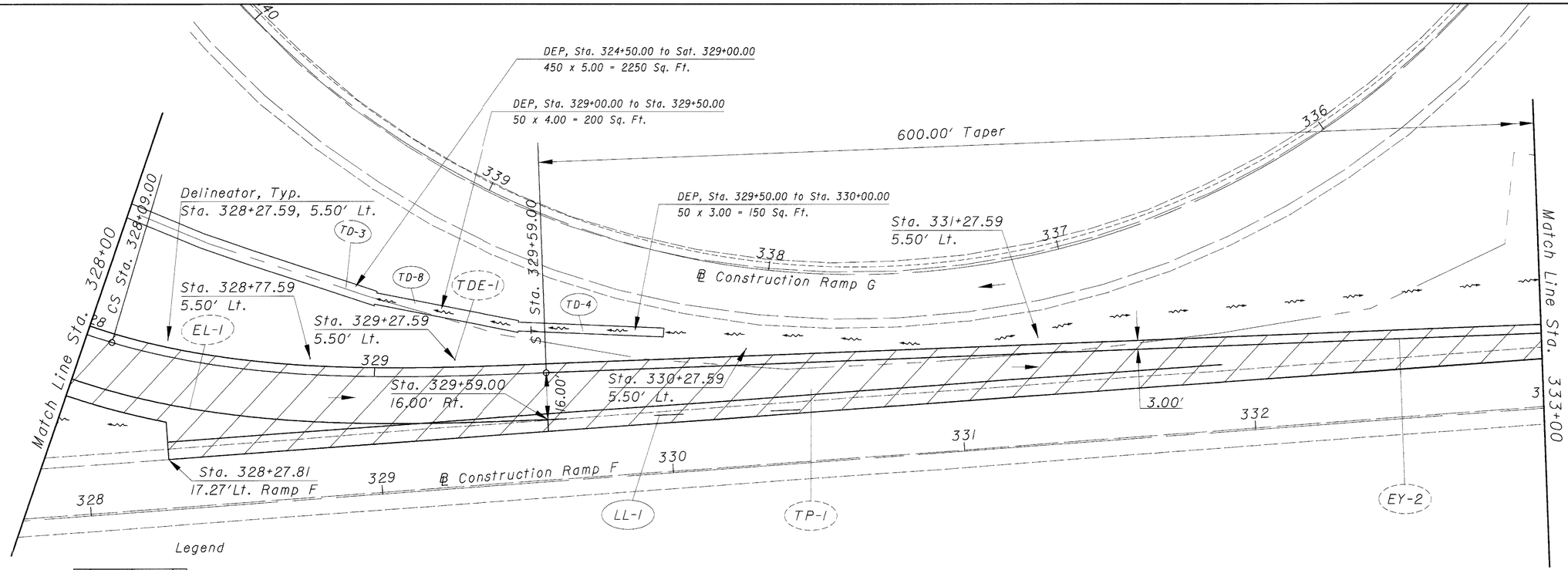

Legend

Temporary Pavement, Class A

For Curve Data see sheet no. 5

For Quantities see sheet no. 61

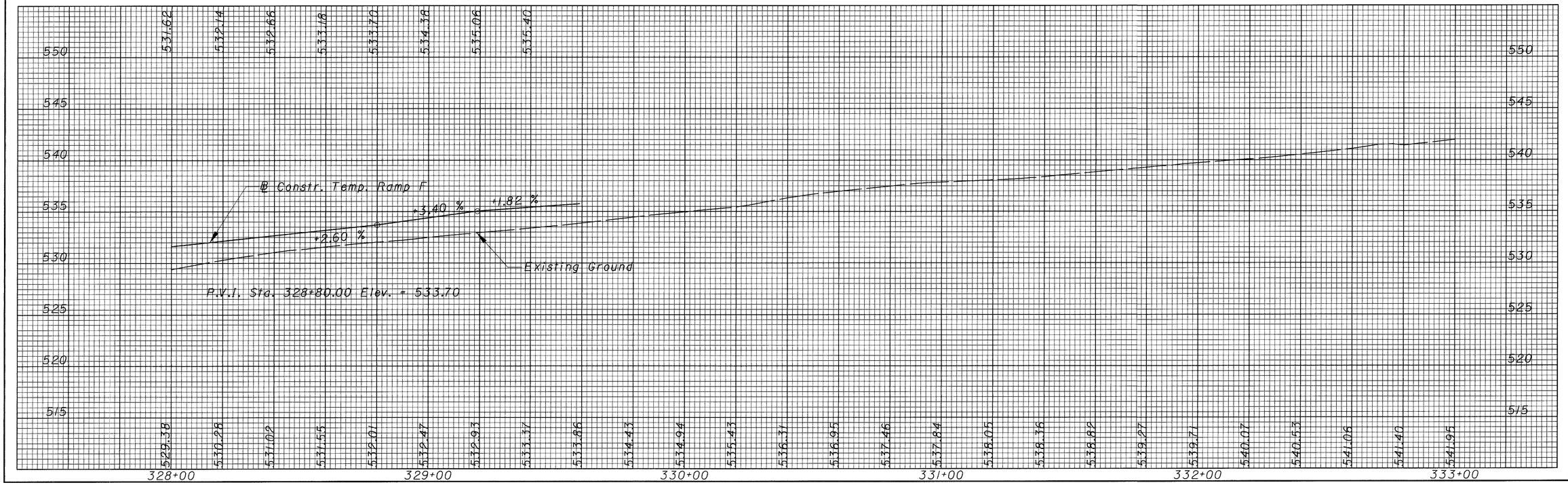

HORIZONTAL SCALE IN FEET
0 10 20 40

CALCULATED EF
CHECKED AM

TEMPORARY RAMP F PLAN AND PROFILE

CLE-275-5.35

59
857

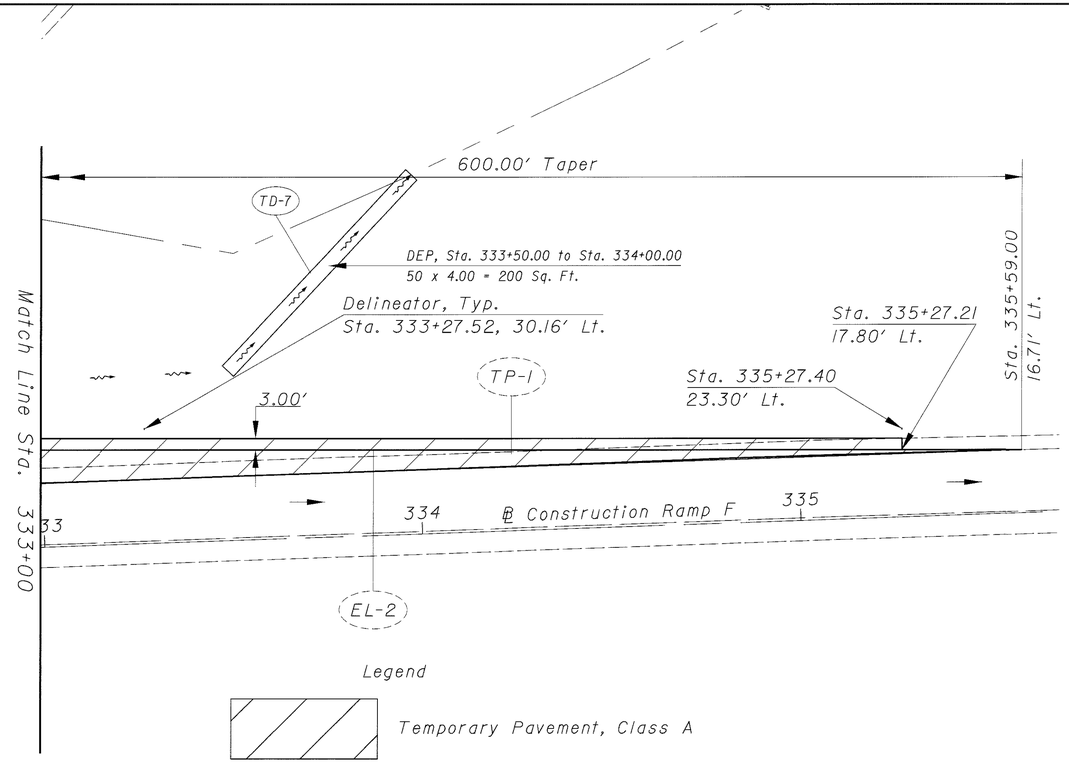

For Quantities see sheet no. 61

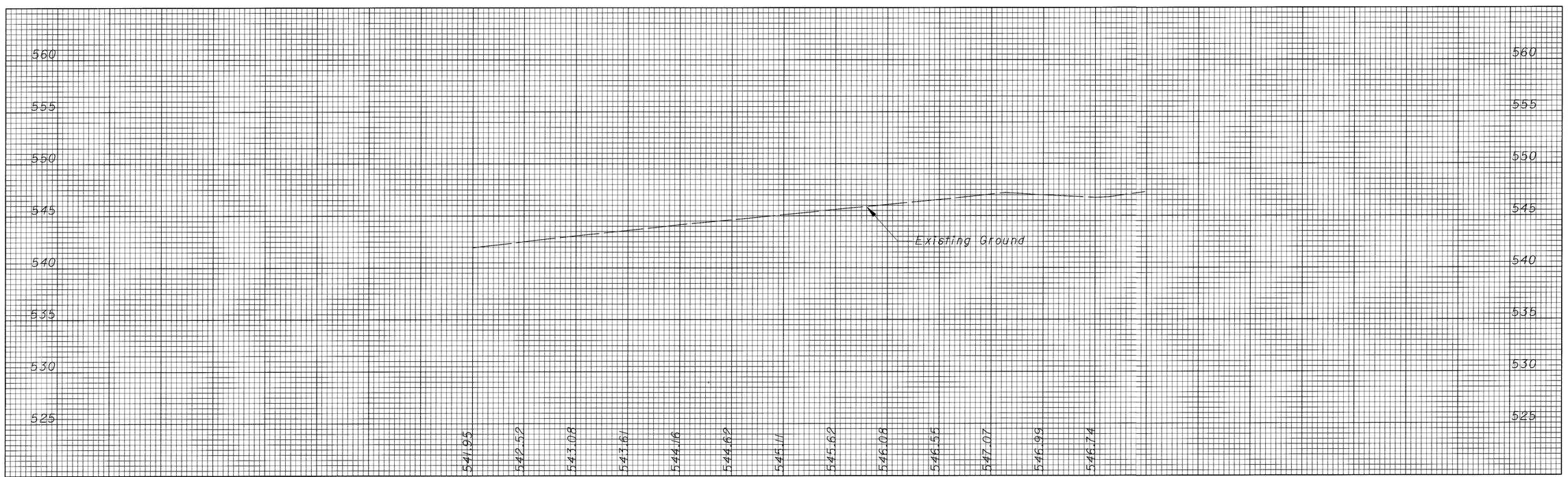

HORIZONTAL SCALE IN FEET
0 10 20 40

CALCULATED E.F
CHECKED A.M

TEMPORARY RAMP F PLAN AND PROFILE

CLE-275-5.35

09
857

REF NO.	SHEET NO.	STATION FROM	STATION TO	SIDE	614														
						MOT, MISC.: TEMPORARY DITCH EROSION PROTECTION	TEMPORARY RAISED PAVEMENT MARKER, WHITE	TEMPORARY LANE LINE, CLASS I											
						S.F.	EACH	MILE											
LL-1	59	329+15.81 F	330+78.11 F	LT/RT			4	162											
TD-4	59	329+50.00 F	330+00.00 F	LT		150													
TD-7	60	333+50.00 F	334+00.00 F	LT		200													
TD-8	59	329+00.00 F	329+50.00 F	LT		200													
TOTALS CARRIED TO GENERAL SUMMARY						550	4	162											

CALCULATED EF CHECKED AM

TEMPORARY RAMP F QUANTITIES

CLE-275-5.35

℄ Construction Ramp B
328
327
Prop. 24" Conduit
Ex. 30" Conduit
Ex. CB-5
PT Sta. 326+76.85
ONLY
ONLY
327
S 39° 29' 50" W
℄ Construction Temporary Ramp B
Ex. 30" Conduit
SC Sta. 315+10.06
315
℄ Construction Ramp C
E
314
Sta. 99+81.83 U.S.R.50J=
Sta. 328+27.61 Temp. Ramp B
Sta.99+88.58 U.S.R.50J=
Sta. 323+43.66 Temp. Ramp F
Sta. 102+37.85
20.42' Lt.
CHL-1
CHL-2
Sta. 99+41.55
20.20' Lt.
SL-2
12.00'
Traffic Signal
328
Sta. 101+87.85
8.37' Lt.
4.00'
ONLY
97
98
℄ Construction U.S.R.50J
99
R=19.79'
100
101
R=10'
102
Ex. CB-5
4.00'
EL-1
EL-2
4.00'
CS Sta. 97+47.33
SL-1
Sta. 99+41.55
19.38' Rt.
Traffic Signal
Sta. 100+86.47
19.52' Rt.
TPI
ST Sta. 101+47.33
324
Ex. 24" Conduit
℄ Construction Temporary Ramp F
S 19° 28' 49" W
325
Ex. CB-5
Prop. 24" Conduit
342
343
℄ Construction Ramp G
CS Sta. 343+72.54

Legend

Temporary Pavement, Class A

For Quantities see sheet no. 63

HORIZONTAL SCALE IN FEET
0 10 20 40

CALCULATED EF
CHECKED AM

TEMPORARY U.S.R. 50J PLAN

CLE-275-5.35

62
857

REF NO.	SHEET NO.	STATION FROM	STATION TO	SIDE		614 TEMPORARY RAISED PAVEMENT MARKER, YELLOW			614 TEMPORARY EDGE LINE, YELLOW, CLASS I		614 TEMPORARY CHANNELIZING LINE, CLASS I			614 TEMPORARY STOP LINE, CLASS I	614 TEMPORARY LANE ARROW, CLASS I	614 TEMPORARY WORD ON PAVE., 72", CLASS I	615 TEMPORARY PAVEMENT CLASS A	615 TEMPORARY ROAD
						EACH			MILE		L.F.			L.F.	EACH	EACH	S.Y.	LUMP
TPI	62	99+41.55	102+37.85	LT/RT													738.07	LUMP
SL-1	62	99+41.55		RT										24.00				
SL-2	62	100+37.85		LT										36.12				
EL-1	62	99+41.55		LT/RT					62									
EL-2	62	100+86.47	101+87.85	LT/RT		15			282									
CHL-1	62	100+37.85	101+87.85	LT							150.00							
CHL-2	62	100+37.85	101+87.85	LT							150.00							
	62	100+47.85		LT											1			
	62	101+66.00		LT											1			
	62	101+00.00		LT												1		
TOTALS CARRIED TO GENERAL SUMMARY						15			344		300			60	2	1	738	LUMP

CALCULATED EF CHECKED AM

TEMPORARY LEFT TURN LANE U.S.R. 50J QUANTITIES

CLE-275-5.35

63
857

SEEDING	
END WIDTH	SQ. YDS.
19	
19	86
13	54
	32

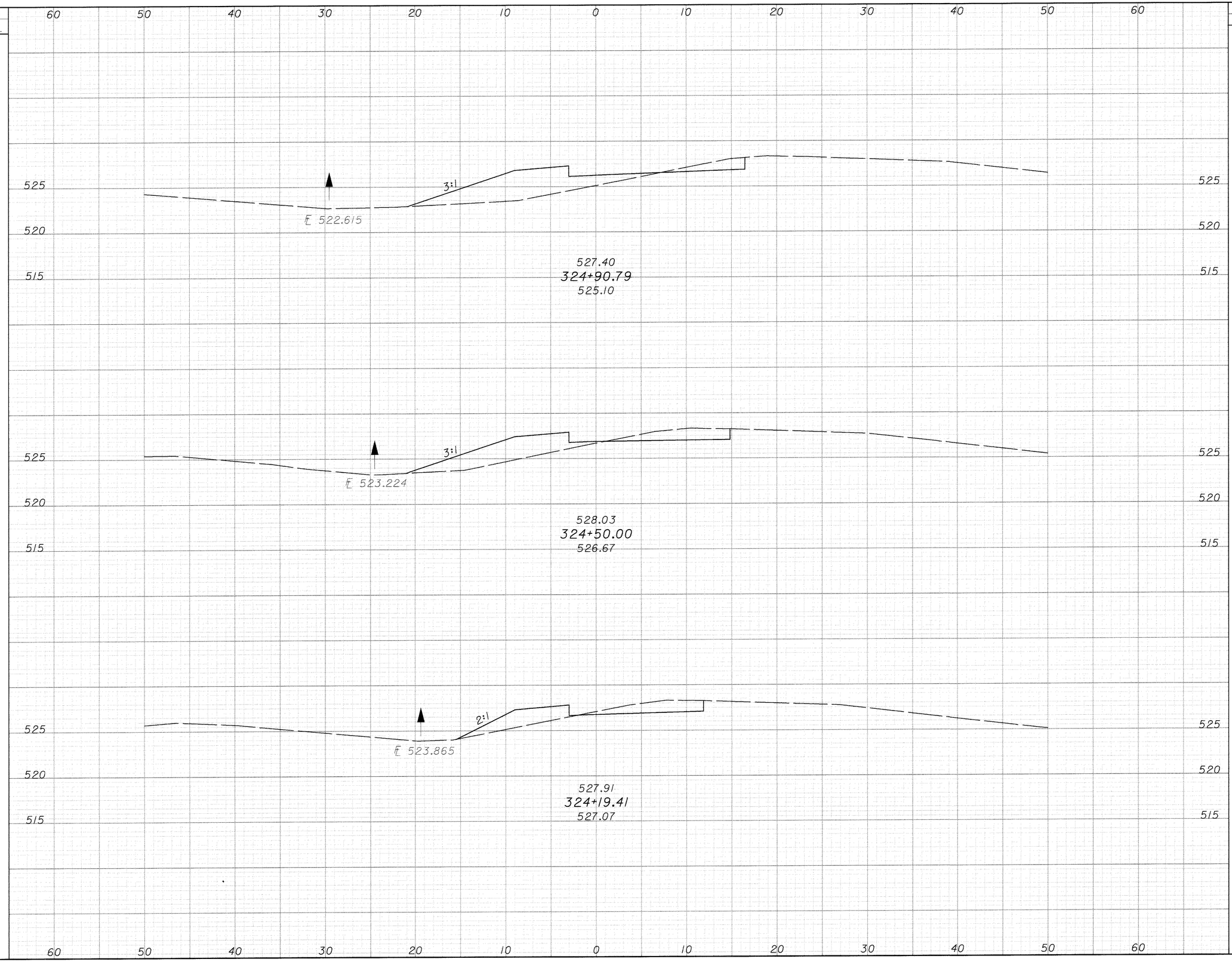

END AREA		VOLUME	
CUT	FILL	CUT	FILL
7	47		
		15	60
13	33		
		14	28
12	16		
		9	14

CALCULATED AM

CHECKED JKB

CROSS SECTIONS TEMPORARY RAMP B STA 324+19.41 TO STA 324+90.79

CLE-275-5.35

64
857

SEEDING		END AREA		VOLUME	
END WIDTH	SQ. YDS.	CUT	FILL	CUT	FILL
38	197	1	188	6	274
33	76	6	108	4	77
29	99	5	82	8	89

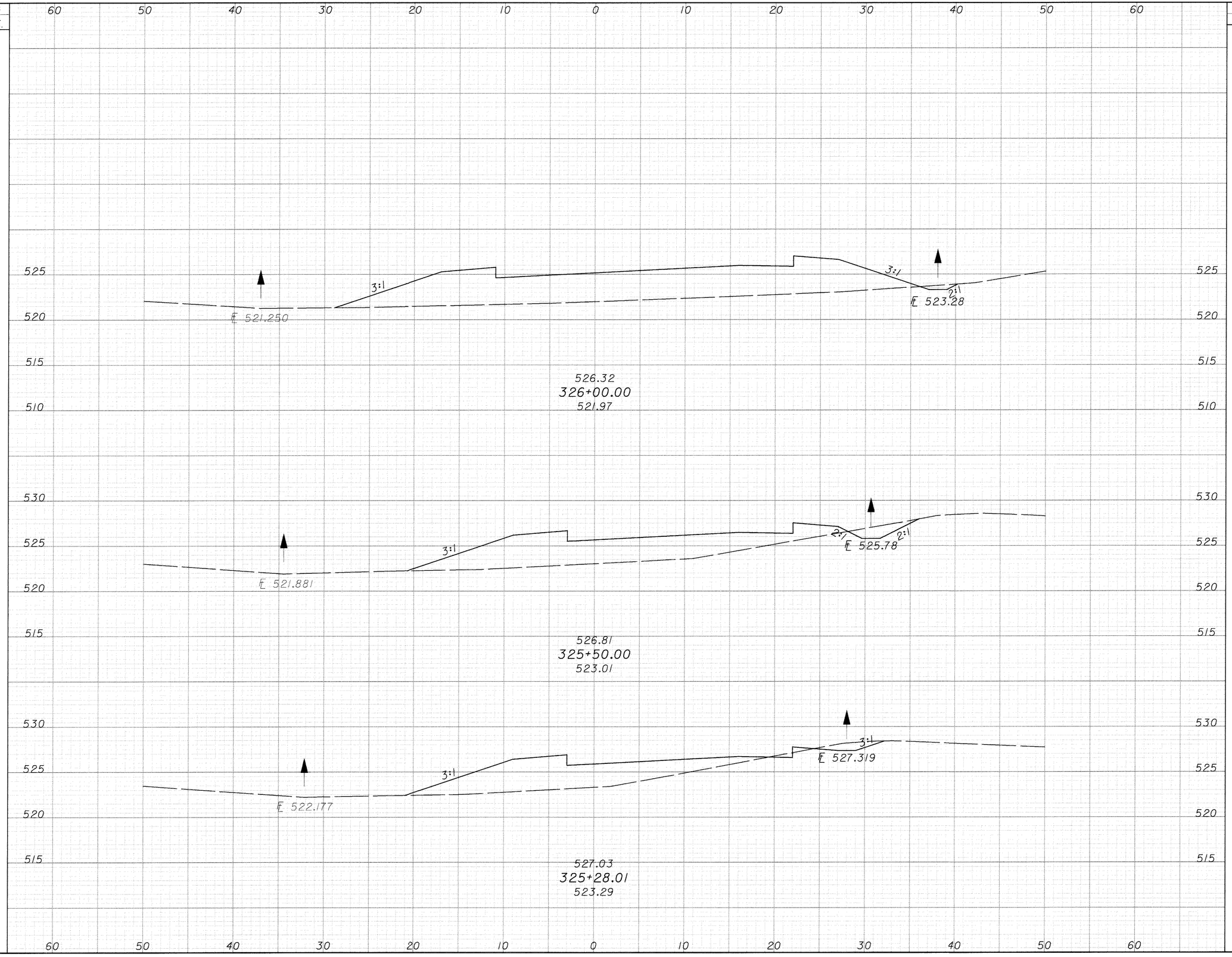

CALCULATED AM

CHECKED JGB

CROSS SECTIONS TEMPORARY RAMP B
STA 325+28.01 TO STA 326+00.00

CLE-275-5.35

65
857

SEEDING	
END WIDTH	SQ. YDS.
43	74
54	72
45	231

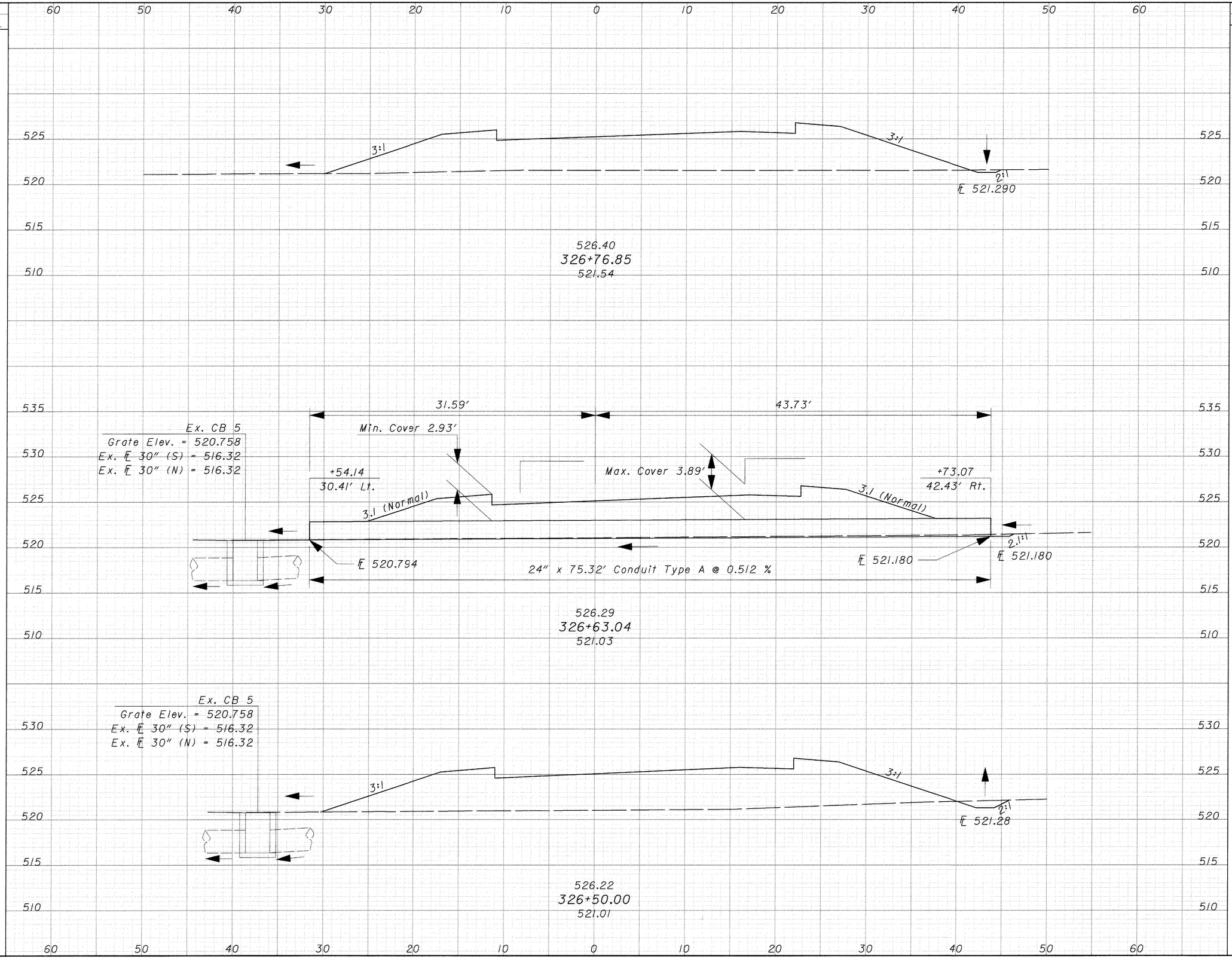

END AREA		VOLUME	
CUT	FILL	CUT	FILL
1	240		
		1	133
1	282		
		1	129
3	251		
		4	406

CALCULATED AM

CHECKED JGB

CROSS SECTIONS TEMPORARY RAMP B
STA 326+50.00 TO STA 326+76.85

CLE-275-5.35

66
857

SEEDING END WIDTH	SEEDING SQ. YDS.	END AREA CUT	END AREA FILL	VOLUME CUT	VOLUME FILL
0		0	0		
	4			6	0
7		28	1		
	35			12	19
21		2	46		
	175			4	227
42		2	199		
	109			1	188

FOR INFORMATION ONLY
ITEM 203 EXCAVATION NOT INCLUDING EMBANKMENT CONSTRUCTION 167 CU YD
ITEM 203 EMBANKMENT 1713 CU YD
ITEM 877 TEMPORARY SEEDING AND MULCHING 1516 SQ YD

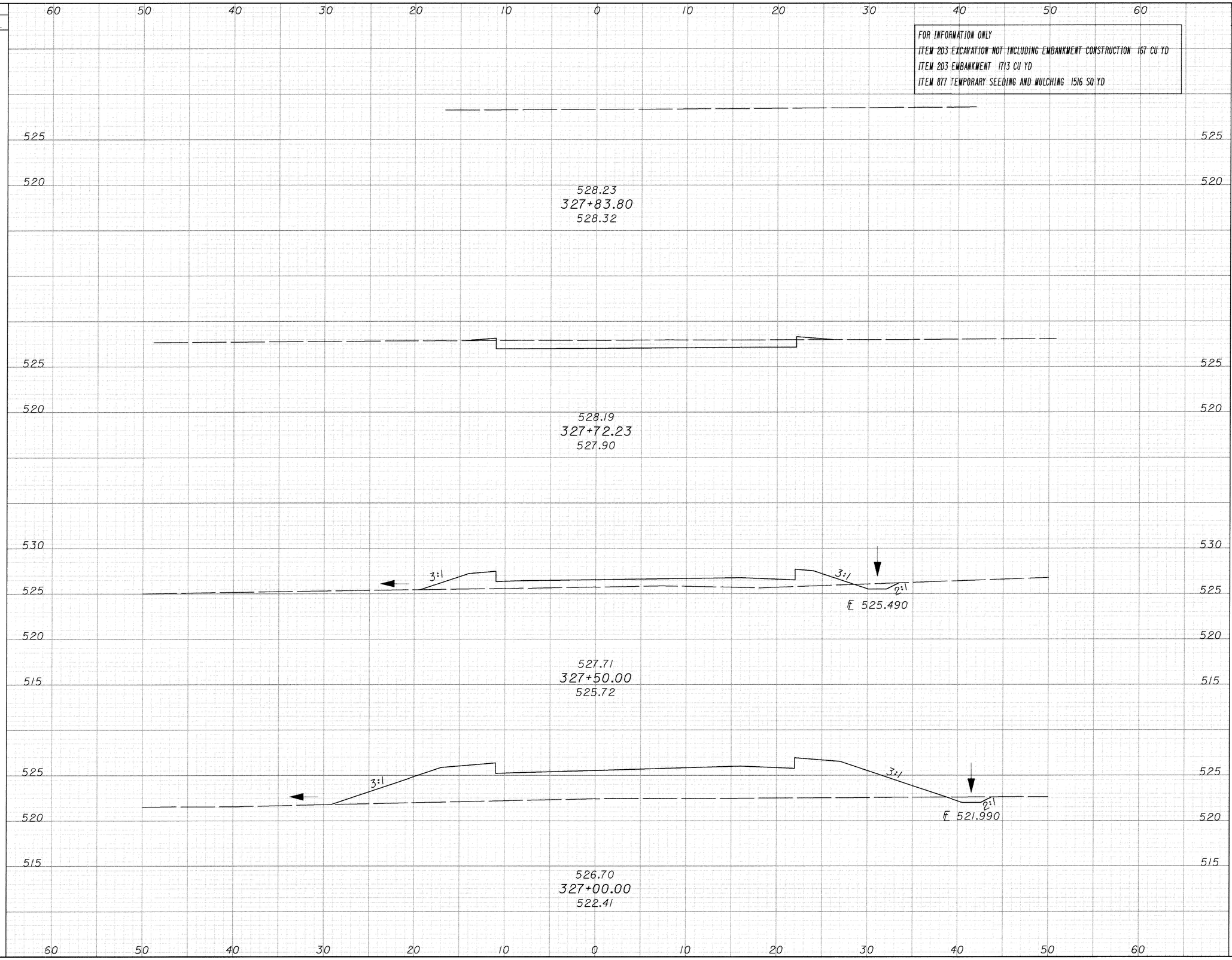

CALCULATED AM
CHECKED JGB

CROSS SECTIONS TEMPORARY RAMP B
STA 327+83.80
TO STA 327+00.00

CLE-275-5.35

67
857

SEEDING		END AREA		VOLUME	
END WIDTH	SQ. YDS.	CUT	FILL	CUT	FILL
46	161	4	183	21	179
10	6	18	3	3	1
0	0	0	0		

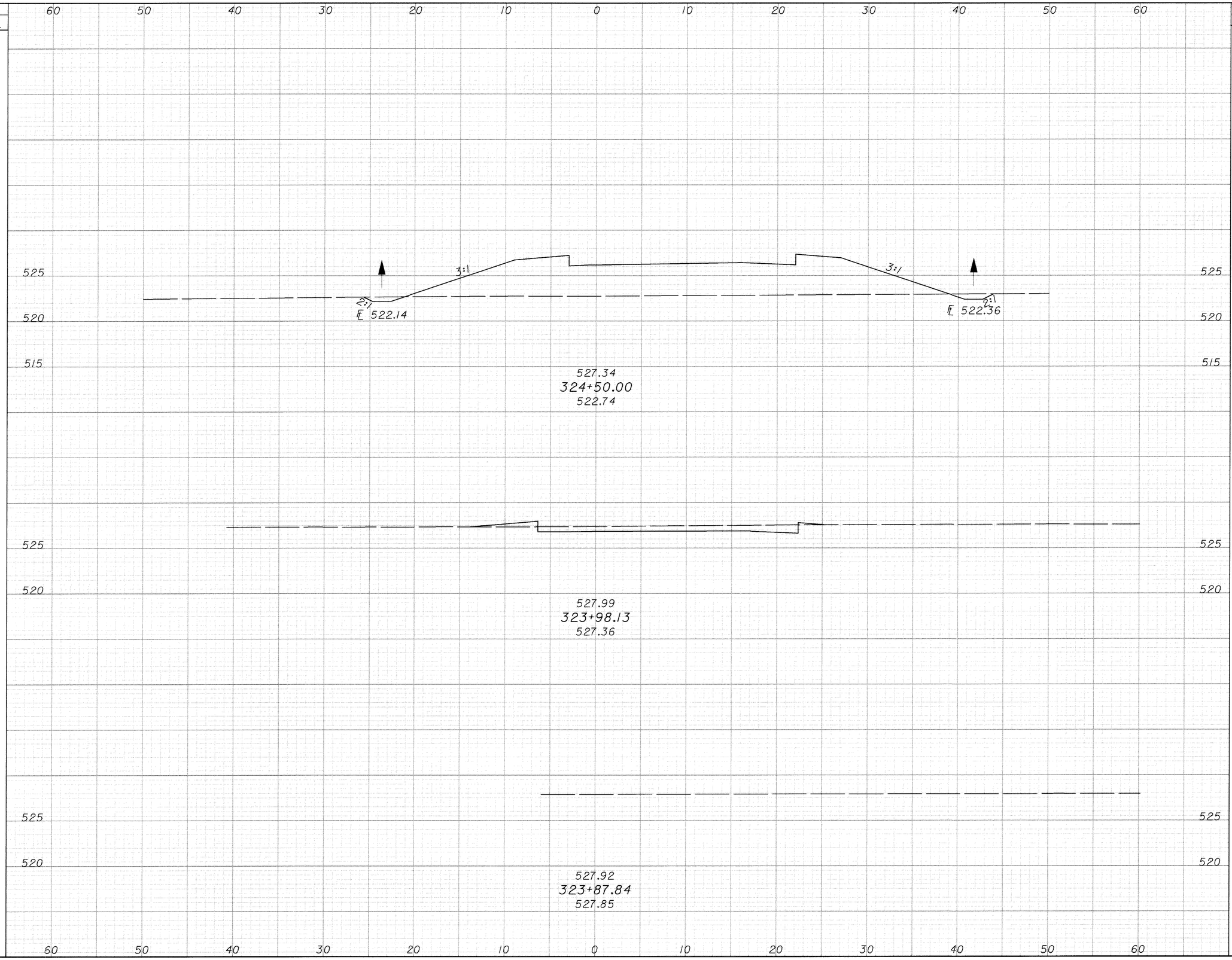

CALCULATED AM

CHECKED JGB

CROSS SECTIONS TEMPORARY RAMP F STA 323+87.84 TO STA 324+50.00

CLE-275-5.35

68
857

SEEDING	
END WIDTH	SQ. YDS.
73	181
47	258

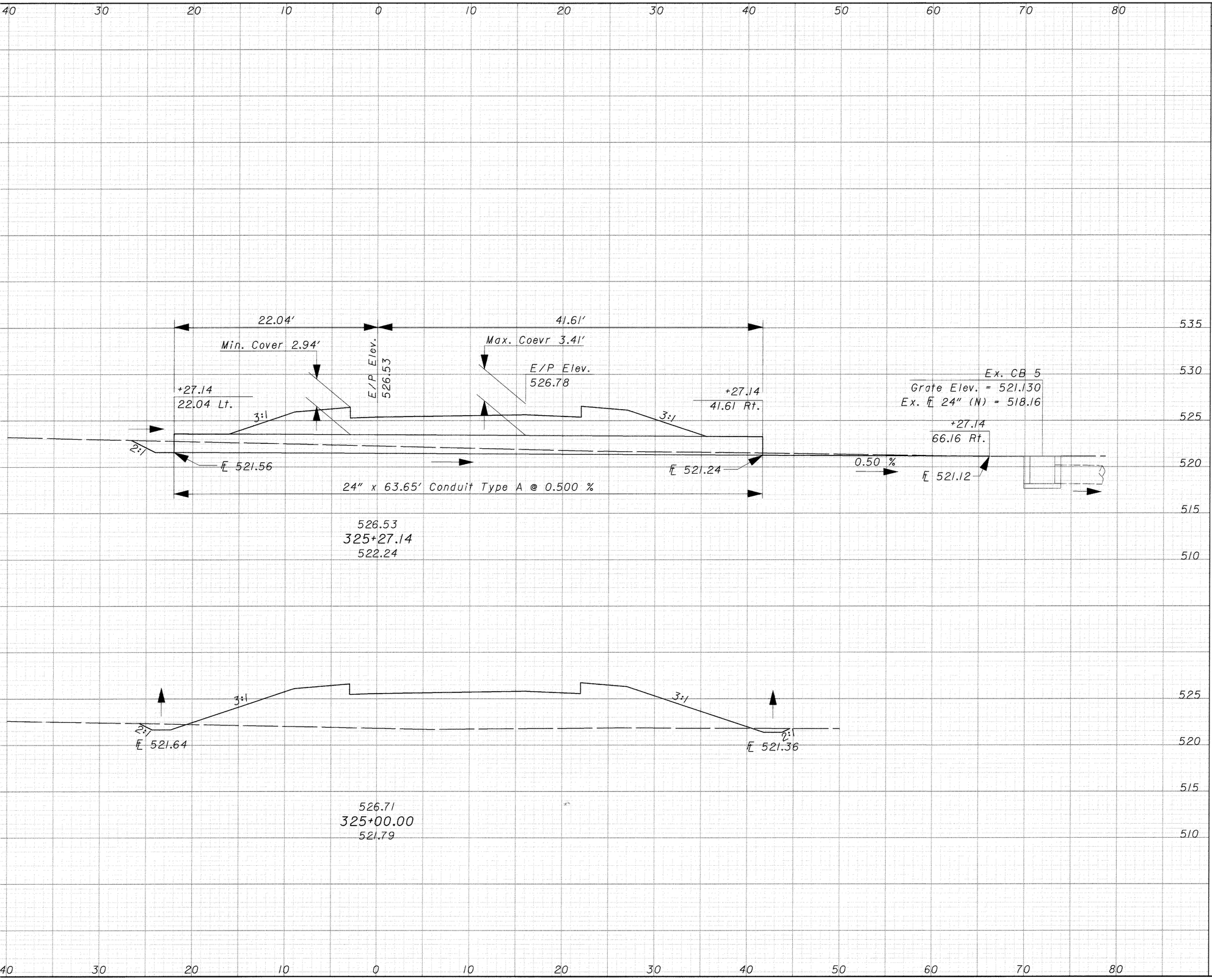

END AREA		VOLUME	
CUT	FILL	CUT	FILL
7	190		
4	202	6	197
		7	356

CALCULATED AM

CHECKED JGB

CROSS SECTIONS TEMPORARY RAMP F STA 325+00.00 TO STA 325+27.14

CLE-275-5.35

69
857

SEEDING		END AREA		VOLUME	
END WIDTH	SQ. YDS.	CUT	FILL	CUT	FILL
47	153	8	167	9	178
45	253	8	153	13	294
46	151	6	165	6	150

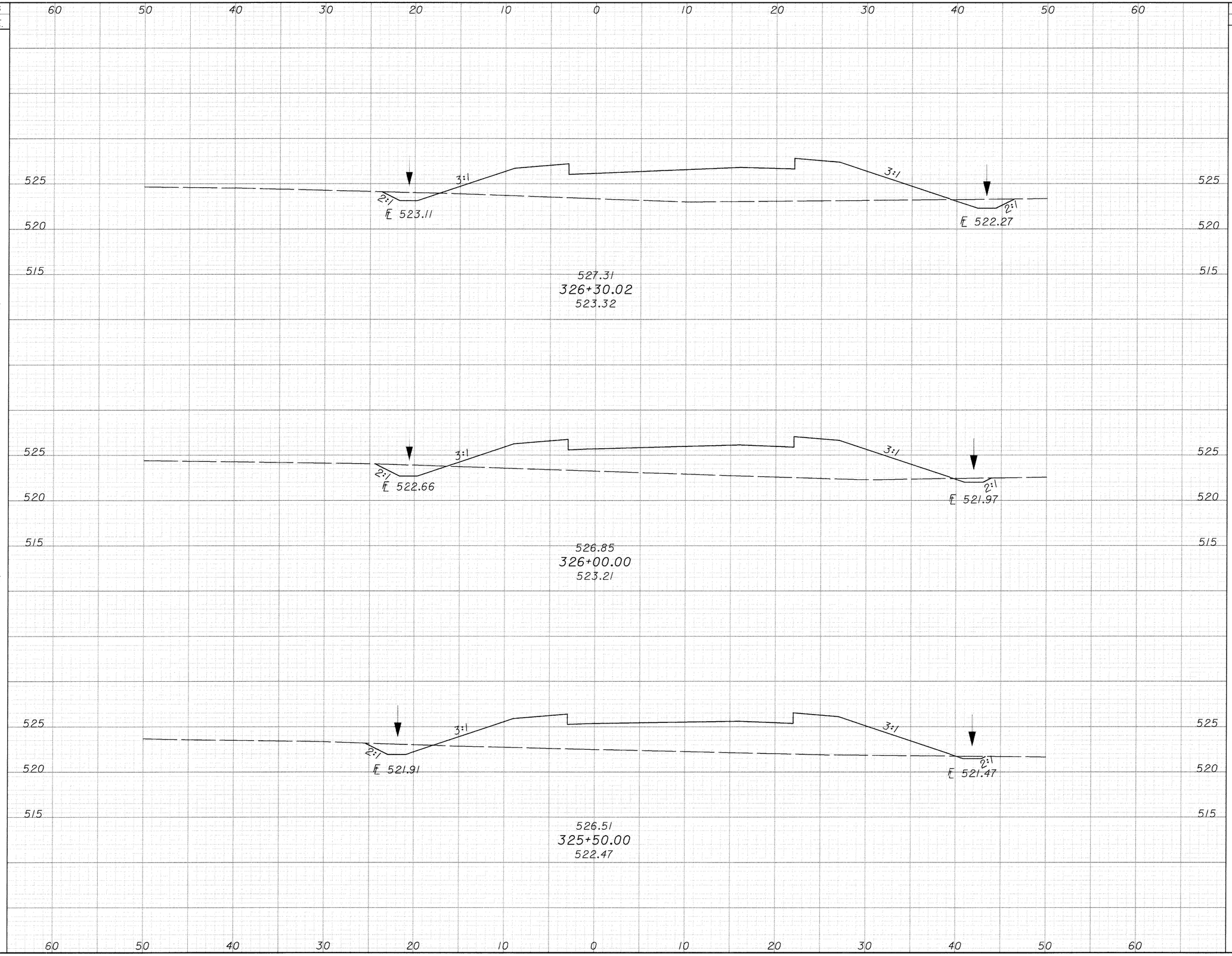

CALCULATED AM

CHECKED JGB

CROSS SECTIONS TEMPORARY RAMP F
STA 325+50.00 TO STA 326+30.02

CLE-275-5.35

70
857

SEEDING END WIDTH	SEEDING SQ. YDS.	END AREA CUT	END AREA FILL	VOLUME CUT	VOLUME FILL
42	242	16	114	18	264
45	253	3	171	8	318
46	103	6	172	5	125

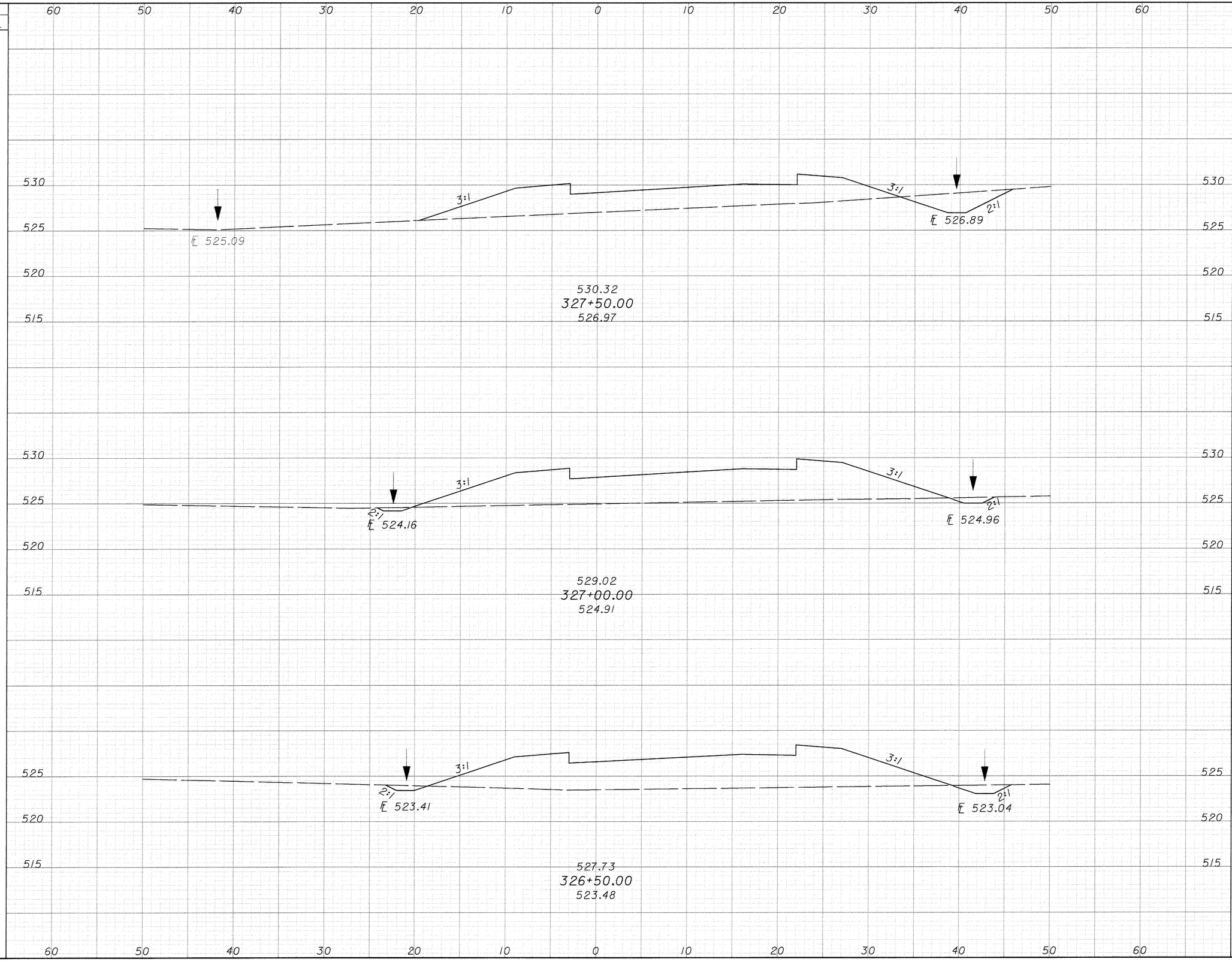

CALCULATED AM

CHECKED JGB

CROSS SECTIONS TEMPORARY RAMP F STA 326+50.00 TO STA 327+50.00

CLE-275-5.35

71
857

SEEDING		END AREA		VOLUME		CALCULATED AM	CHECKED JGB
END WIDTH	SQ. YDS.	CUT	FILL	CUT	FILL		
14	45	2	21	1	25		
20	21	0	37	0	14		
22	178	0	46	15	148		

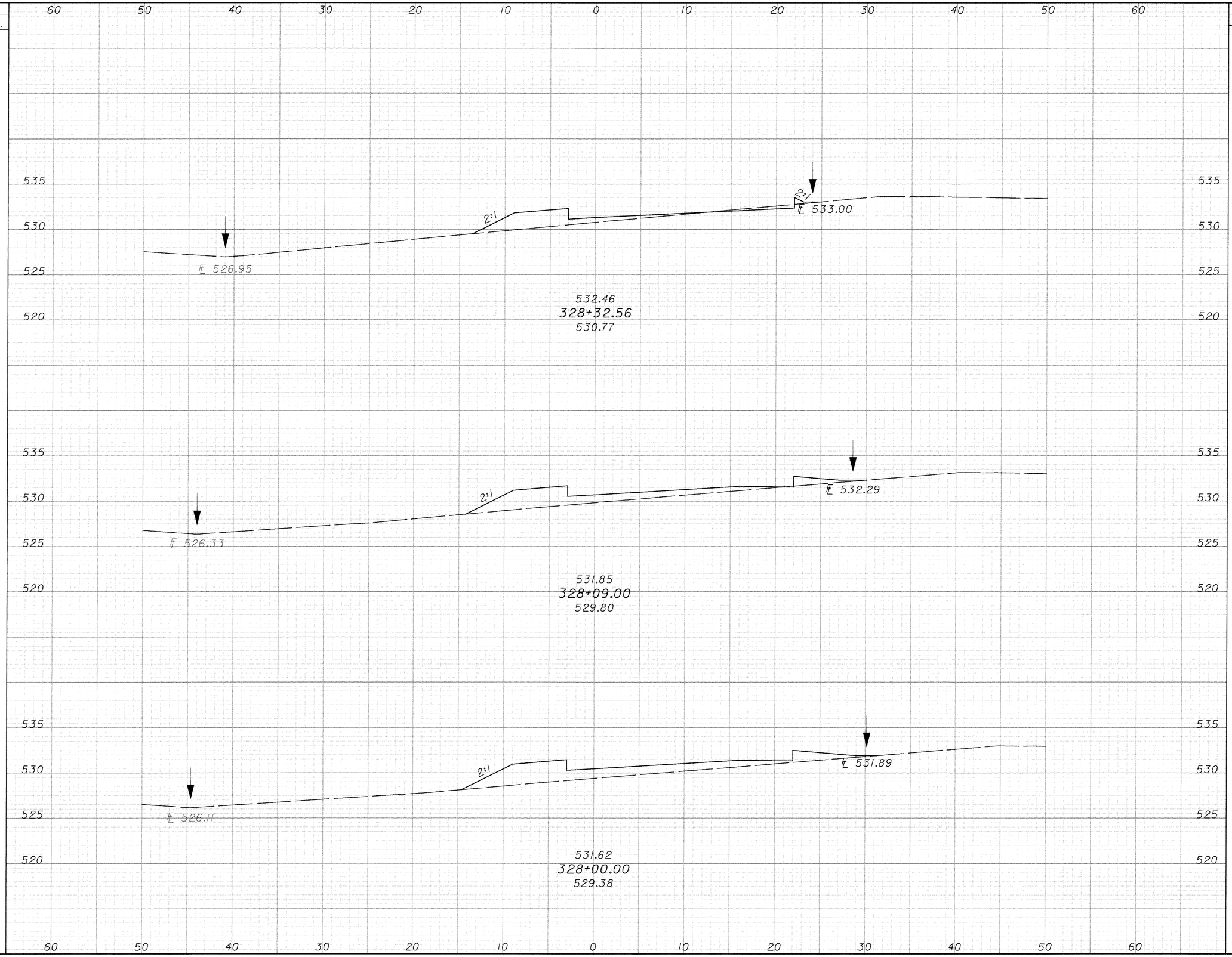

CROSS SECTIONS TEMPORARY RAMP F
STA 328+00.00 TO STA 328+32.56

CLE-275-5.35

72
857

FOR INFORMATION ONLY
ITEM 203 EXCAVATION NOT INCLUDING EMBANKMENT CONSTRUCTION 557 CU YD
ITEM 203 EMBANKMENT 2486 CU YD
ITEM 877 TEMPORARY SEEDING AND MULCHING 3045 SQ YD

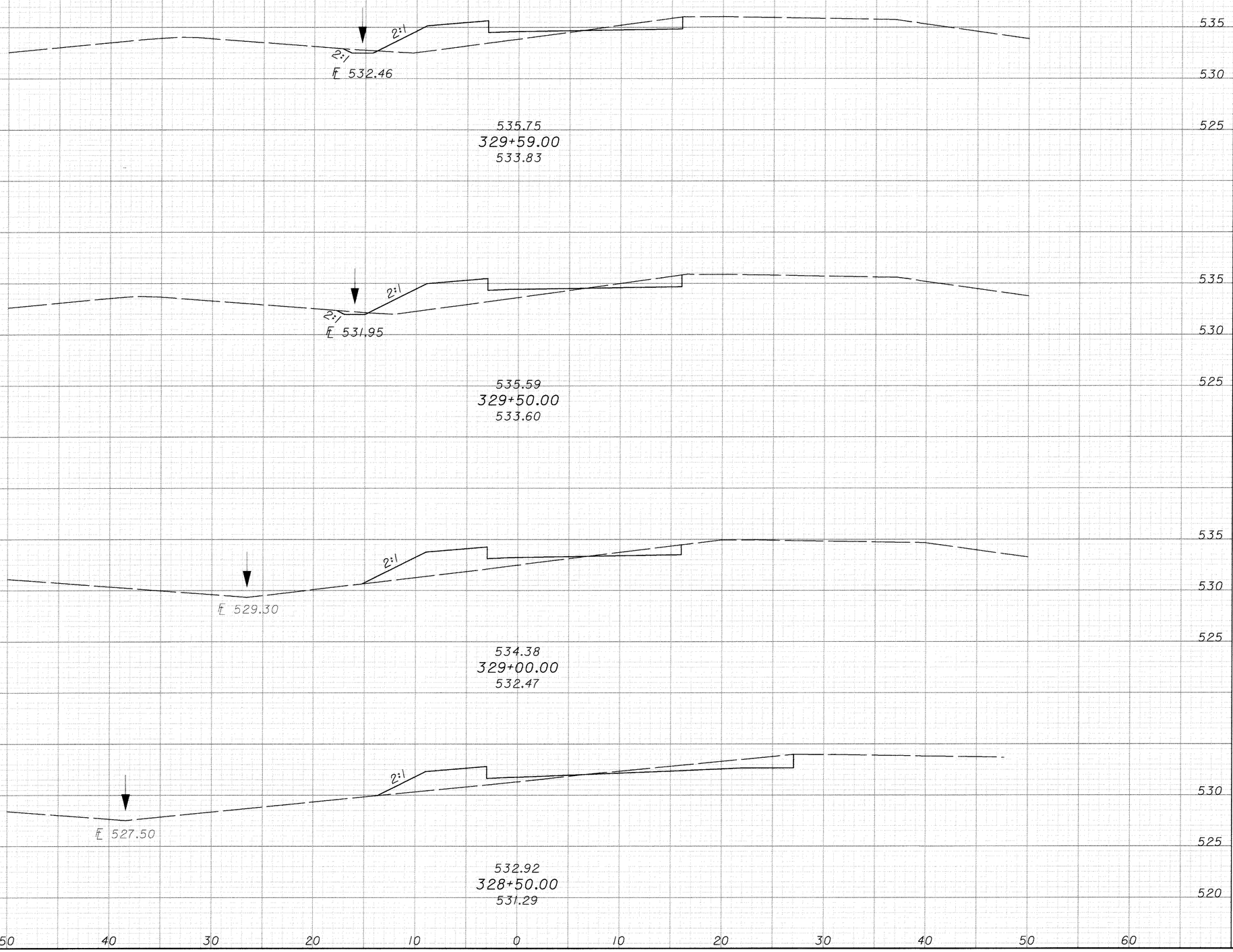

SEEDING END WIDTH	SEEDING SQ. YDS.	END AREA CUT	END AREA FILL	VOLUME CUT	VOLUME FILL
15	16	6	26	2	9
16	81	6	29	9	52
13	67	4	27	15	43
11	24	12	19	5	13

CALCULATED AM
CHECKED JGB

CROSS SECTIONS TEMPORARY RAMP F
STA 328+50.00 TO STA 329+59.00

CLE-275-5.35

73
857

SEEDING	
END WIDTH	SQ. YDS.
27	
	28
32	
	29
0	

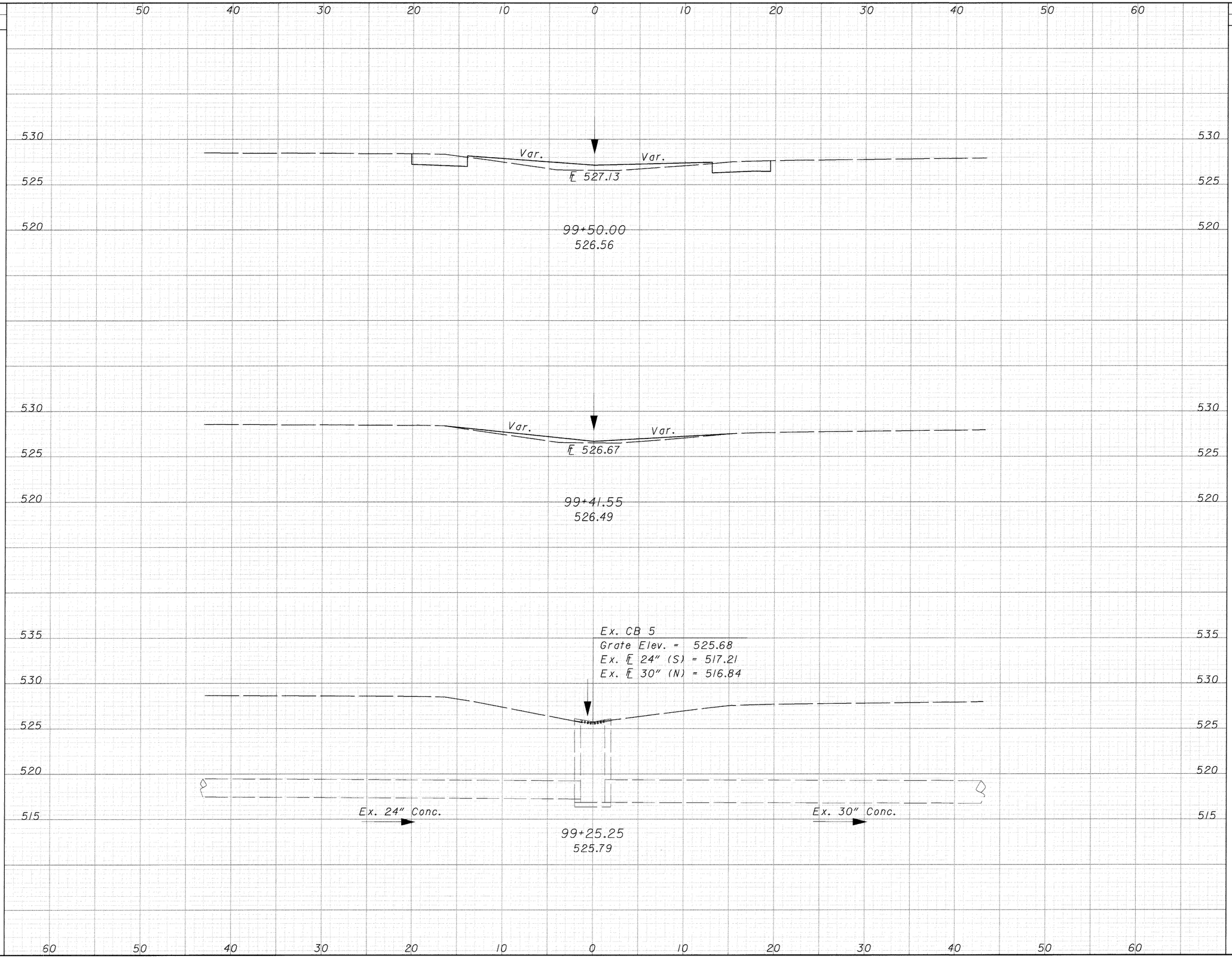

END AREA	
CUT	FILL
14	13
0	8
0	0

VOLUME	
CUT	FILL
2	3
0	2
0	0

CALCULATED AM

CHECKED JGB

CROSS SECTIONS TEMPORARY ROAD U.S. 50J
STA 99+25.25 TO STA 99+50.00

CLE-275-5.35

74
857

SEEDING	
END WIDTH	SQ. YDS.
0	0
0	0
0	17

60 50 40 30 20 10 0 10 20 30 40 50 60

530
525
520

100+28.02
525.59

100+00.00
525.81

99+61.33
526.47

END AREA		VOLUME	
CUT	FILL	CUT	FILL
17	7		
19	5	19	6
22	1	29	4
		8	3

CALCULATED AM

CHECKED JGB

CROSS SECTIONS TEMPORARY ROAD U.S. 50J
STA 99+61.33 TO STA 100+28.02

CLE-275-5.35

75
857

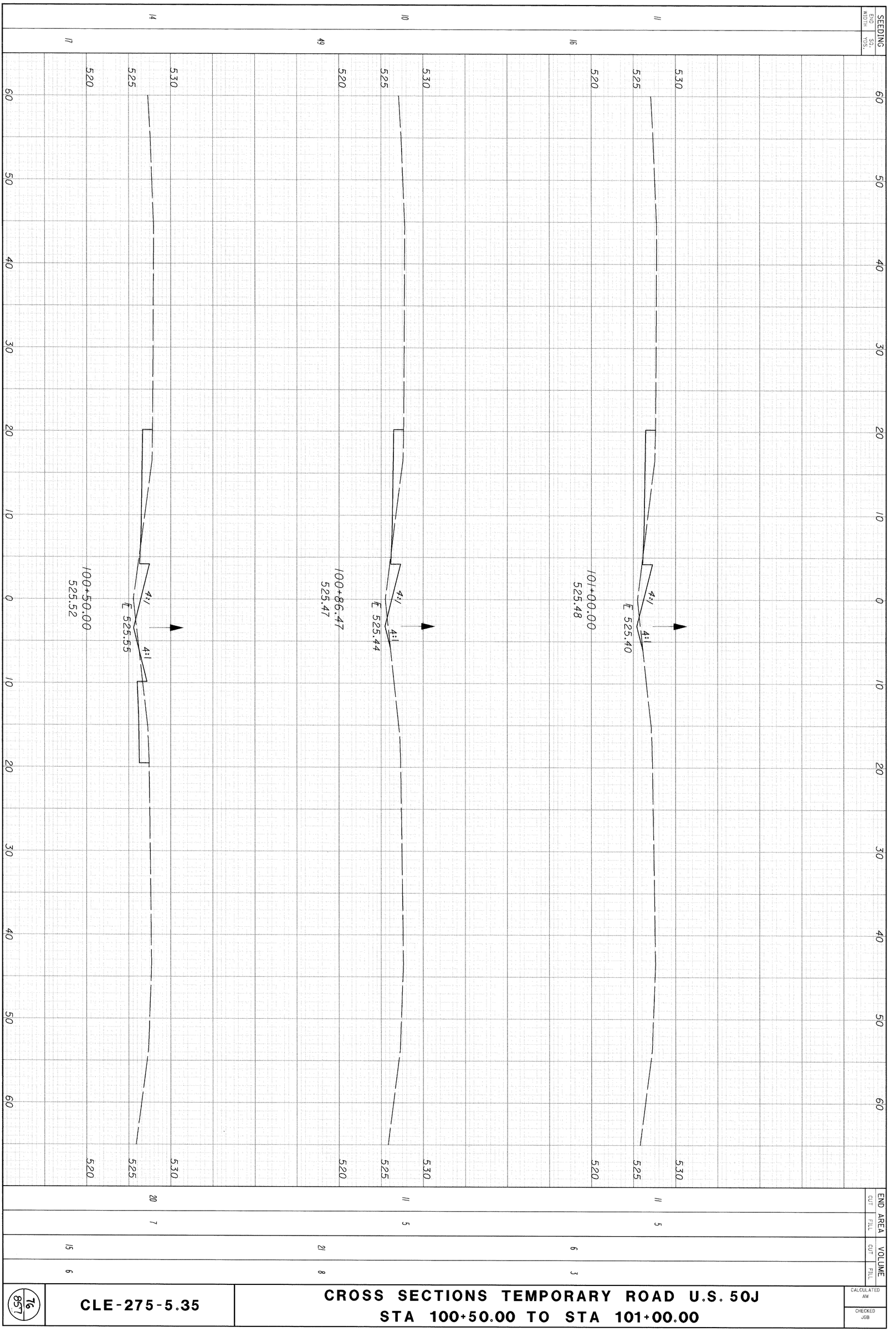

76
857

CLE-275-5.35

CROSS SECTIONS TEMPORARY ROAD U.S. 50J
STA 100+50.00 TO STA 101+00.00

CALCULATED AM

CHECKED JGB

FOR INFORMATION ONLY
ITEM 203 EXCAVATION NOT INCLUDING EMBANKMENT CONSTRUCTION 149 CU YD
ITEM 203 EMBANKMENT 54 CU YD
ITEM 877 TEMPORARY SEEDING AND MULCHING 285 SQ YD

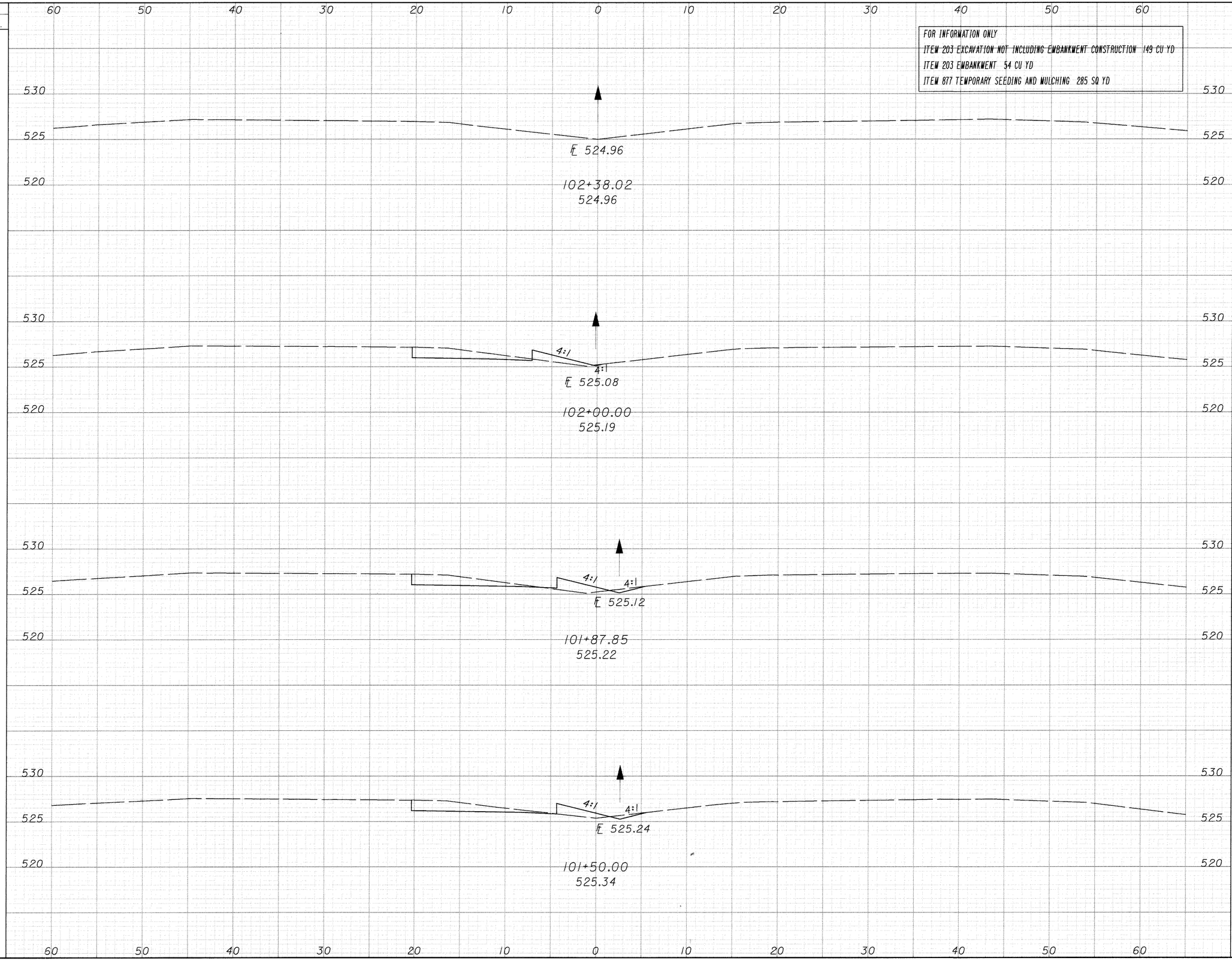

SEEDING END WIDTH	SEEDING SQ. YDS.	END AREA CUT	END AREA FILL	VOLUME CUT	VOLUME FILL
0	17	0	0	7	3
8	12	10	4	5	2
10	42	11	5	16	6
10	58	12	4	21	8

CALCULATED AM
CHECKED JGB

CROSS SECTIONS TEMPORARY ROAD U.S. 50J STA 101+50.00 TO STA 102+38.02

CLE-275-5.35

77
85

EOP ELEVATIONS ALONG DECELERATION LANE FOR TEMPORARY RAMP B			
RAMP B STATION	OFFSET	ELEVATION	SLOPE
321+69.43	17.05 LT.	528.84	-0.0156
322+00.00	18.55 LT.	528.73	-0.0156
322+50.00	21.01 LT.	528.61	-0.0156
323+00.00	23.47 LT.	528.29	-0.0156
323+50.00	25.93 LT.	528.10	-0.0156
323+73.61	27.09 LT.	528.09	END N.C. (-0.0156)
323+80.00	27.40 LT.	528.06	-0.0170
323+90.00	27.89 LT.	528.03	-0.0190
324+00.00	28.39 LT.	527.99	-0.0220
324+10.00	28.88 LT.	527.95	-0.0240

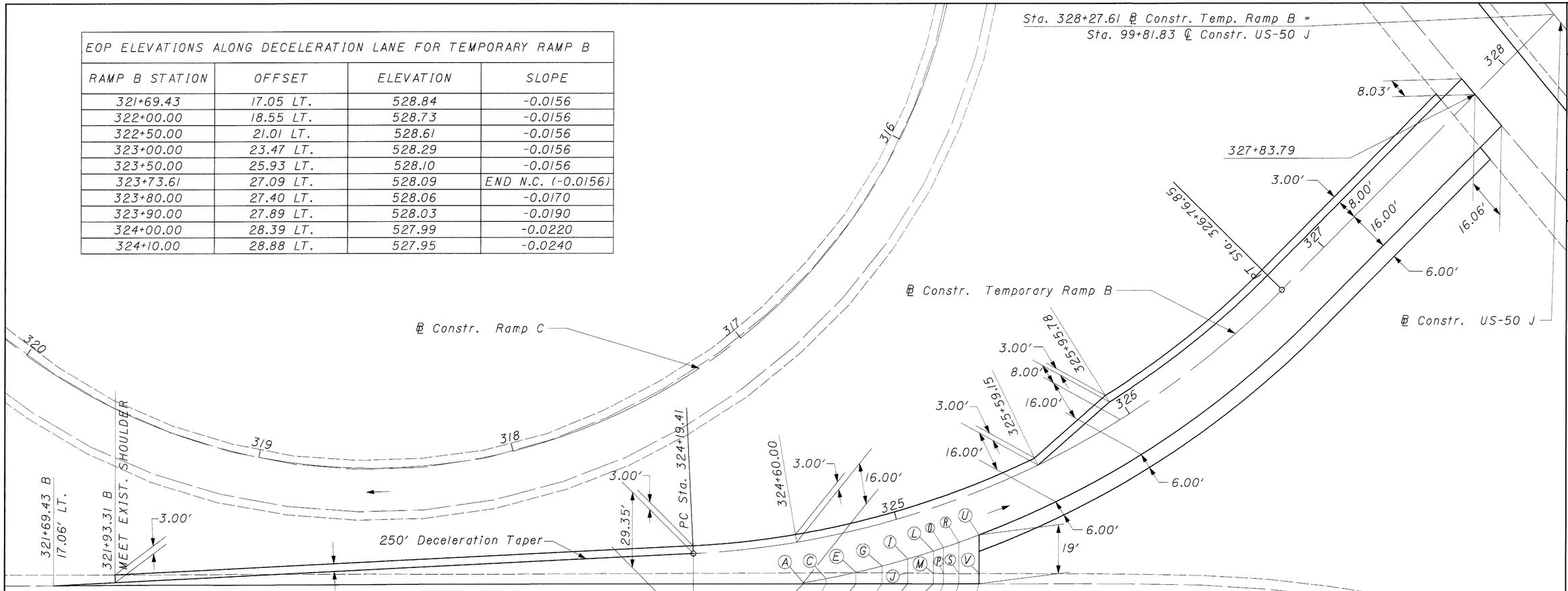

SUPERELEVATION TABLE TEMPORARY RAMP B								
P.I. STA. 325+54.37					DC = 16°30'00"			
LEFT SIDE			BASELINE CONTROL		RIGHT SIDE			
EDGE ELEVATION	SLOPE	WIDTH	STATION	PROFILE GRADE	WIDTH	SLOPE	EDGE ELEVATION	REMARKS
.	.	.	324+19.41	527.91	11.87	0.0216	MEET EXISTING	P.C.
.	.	.	324+30.00	528.03	12.57	0.0143	MEET EXISTING	
.	.	.	324+40.00	528.10	13.54	0.0081	MEET EXISTING	
.	.	.	324+50.00	528.03	14.81	0.0122	MEET EXISTING	
.	.	.	324+60.00	527.82	16.00	0.0246	528.21	
.	.	.	324+68.64	527.64	16.00	0.0374	528.24	
.	.	.	324+80.00	527.51	16.00	0.0400	528.15	
.	.	.	324+90.00	527.41	16.00	0.0423	528.09	
.	.	.	325+00.00	527.31	16.00	0.0446	528.02	
.	.	.	325+10.00	527.21	16.00	0.0469	527.96	
.	.	.	325+14.50	527.17	16.00	0.0479	527.94	
.	.	.	325+20.00	527.11	16.00	0.0492	527.90	
.	.	.	325+28.01	527.03	16.00	0.0510	527.85	BEGIN F.S. (AT NOSE)
.	.	.	325+50.00	526.81	16.00	0.0510	527.63	
526.70	-0.0510	0.23	325+60.00	526.71	16.00	0.0510	527.53	
526.36	-0.0510	3.98	325+75.00	526.56	16.00	0.0510	527.38	
525.91	-0.0510	8.00	326+00.00	526.32	16.00	0.0510	527.14	
525.79	-0.0510	8.00	326+25.10	526.20	16.00	0.0510	527.02	END F.S.
525.87	-0.0436	8.00	326+50.00	526.22	16.00	0.0436	526.92	
526.11	-0.0357	8.00	326+76.85	526.40	16.00	0.0357	526.97	P.T.
526.47	-0.0289	8.00	327+00.00	526.70	16.00	0.0289	527.16	
526.99	-0.0215	8.00	327+25.00	527.16	16.00	0.0215	527.50	
527.47	-0.0156	8.00	327+44.83	527.59	16.00	0.0156	527.84	BEGIN N.C.
527.59	-0.0156	8.00	327+50.00	527.71	16.00	0.0156	527.96	
527.82	-0.0120	8.00	327+60.00	527.92	16.00	0.0114	528.10	
528.06	-0.0096	8.00	327+70.00	528.14	16.00	0.0087	528.28	
528.25	-0.0073	8.00	327+80.00	528.31	16.00	0.0059	528.40	
528.27	-0.0062	8.03	327+83.79	528.32	16.06	0.0049	528.40	MEET EXISTING

PAVEMENT ELEVATIONS				
REFERENCE	STATION	BASELINE	OFFSET	ELEVATION
A	324+60.00	TEMP. RAMP B	16.00 RT.	528.21
B	324+62.39	RAMP B	17.52 LT.	528.20
C	324+68.64	TEMP. RAMP B	16.00 RT.	528.24
D	324+71.28	RAMP B	17.52 LT.	528.20
E	324+80.00	TEMP. RAMP B	16.00 RT.	528.15
F	324+82.91	RAMP B	17.52 LT.	528.21
G	324+90.00	TEMP. RAMP B	16.00 RT.	528.09
H	324+93.08	RAMP B	17.52 LT.	528.21
I	325+00.00	TEMP. RAMP B	16.00 RT.	528.02
J	325+03.17	RAMP B	21.68 LT.	528.31
K	325+03.17	RAMP B	17.52 LT.	528.21
L	325+10.00	TEMP. RAMP B	16.00 RT.	527.96
M	325+13.17	RAMP B	21.52 LT.	528.33
N	325+13.17	RAMP B	17.53 LT.	528.21
O	325+13.97	TEMP. RAMP B	16.00 RT.	527.94
P	325+17.12	RAMP B	21.37 LT.	528.34
Q	325+17.12	RAMP B	17.53 LT.	528.22
R	325+20.00	TEMP. RAMP B	16.00 RT.	527.90
S	325+23.08	RAMP B	21.39 LT.	528.35
T	325+23.08	RAMP B	17.45 LT.	528.22
U	325+28.01	TEMP. RAMP B	16.00 RT.	527.85
V	325+30.95	RAMP B	21.41 LT.	528.40
W	325+30.95	RAMP B	17.45 LT.	528.25

For Temporary Ramp B Typical Sections See Sheet No. 52
For Temporary Ramp B Plan & Profile See Sheet No. 53,55

HORIZONTAL SCALE IN FEET

CALCULATED JGB
CHECKED AM

TEMPORARY RAMP B PAVEMENT DETAIL PLAN

CLE-275-5.35

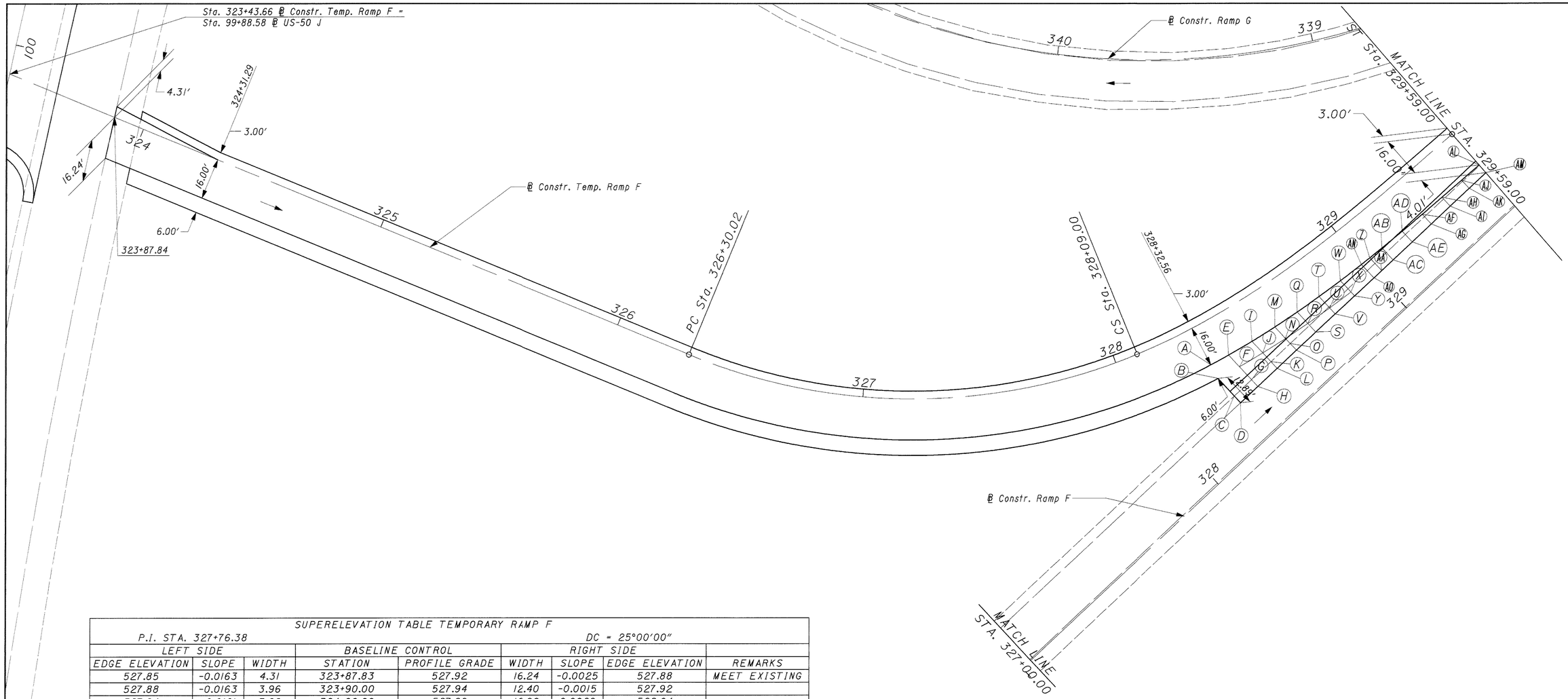

SUPERELEVATION TABLE TEMPORARY RAMP F

P.I. STA. 327+76.38 — DC = 25°00′00″

LEFT SIDE			BASELINE CONTROL		RIGHT SIDE			
EDGE ELEVATION	SLOPE	WIDTH	STATION	PROFILE GRADE	WIDTH	SLOPE	EDGE ELEVATION	REMARKS
527.85	-0.0163	4.31	323+87.83	527.92	16.24	-0.0025	527.88	MEET EXISTING
527.88	-0.0163	3.96	323+90.00	527.94	12.40	-0.0015	527.92	
527.94	-0.0161	3.00	324+00.00	527.99	16.00	0.0029	528.04	
527.83	-0.0159	2.04	324+10.00	527.86	16.00	0.0074	527.98	
527.62	-0.0156	0.28	324+28.40	527.62	16.00	0.0156	527.87	BEGIN N.C.
.	.	.	324+50.00	527.34	16.00	0.0156	527.59	
.	.	.	325+00.00	526.71	16.00	0.0156	526.96	
.	.	.	325+50.00	526.51	16.00	0.0156	526.76	
.	.	.	325+73.98	526.60	16.00	0.0156	526.85	END N.C.
.	.	.	326+00.00	526.85	16.00	0.0272	527.29	
.	.	.	326+30.02	527.31	16.00	0.0406	527.96	P.C.
.	.	.	326+50.00	527.73	16.00	0.0495	528.52	
.	.	.	326+69.02	528.21	16.00	0.0580	529.14	BEGIN F.S.
.	.	.	327+00.00	529.02	16.00	0.0580	529.95	
.	.	.	327+50.00	530.32	16.00	0.0580	531.25	
.	.	.	328+00.00	531.62	16.00	0.0580	532.55	
.	.	.	328+09.00	531.85	16.00	0.0580	532.78	END F.S. (T.S.)
.	.	.	328+32.56	532.46	16.00	0.0475	533.22	
.	.	.	328+40.00	532.66	16.00	0.0442	533.37	
.	.	.	328+50.00	532.92	16.00	0.0397	533.56	
.	.	.	328+60.00	533.18	16.00	0.0353	533.74	
.	.	.	328+70.00	533.44	16.00	0.0308	533.93	
.	.	.	328+80.00	533.70	16.00	0.0263	534.12	
.	.	.	328+90.00	534.04	16.00	0.0219	534.39	
.	.	.	329+00.00	534.38	16.00	0.0174	534.66	
.	.	.	329+04.03	534.51	16.00	0.0156	534.76	BEGIN N.C.
.	.	.	329+10.00	534.72	16.00	0.0156	534.97	
.	.	.	329+20.00	535.04	16.00	0.0156	535.29	
.	.	.	329+30.00	535.22	16.00	0.0156	535.47	
.	.	.	329+40.00	535.40	16.00	0.0156	535.65	
.	.	.	329+50.00	535.59	16.00	0.0156	535.84	
.	.	.	329+59.00	535.75	16.00	0.0156	536.00	S.T.

PAVEMENT ELEVATIONS

REFERENCE	STATION	BASELINE	OFFSET	ELEVATION
A	328+32.56	TEMP. RAMP F	16.00 RT.	533.22
B	328+27.81	RAMP F	30.16 LT.	533.50
C	328+27.81	RAMP F	20.84 LT.	533.66
D	328+27.81	RAMP F	17.27 LT.	533.67
E	328+40.00	TEMP. RAMP F	16.00 RT.	533.37
F	328+37.00	RAMP F	27.79 LT.	533.65
G	328+37.00	RAMP F	20.83 LT.	533.65
H	328+37.00	RAMP F	17.27 LT.	533.82
I	328+50.00	TEMP. RAMP F	16.00 RT.	533.56
J	328+47.28	RAMP F	25.51 LT.	533.83
K	328+47.28	RAMP F	20.83 LT.	533.83
L	328+47.28	RAMP F	17.27 LT.	534.00
M	328+60.00	TEMP. RAMP F	16.00 RT.	533.74
N	328+57.57	RAMP F	23.55 LT.	534.01
O	328+57.57	RAMP F	20.83 LT.	534.01
P	328+57.57	RAMP F	17.28 LT.	534.18
Q	328+70.00	TEMP. RAMP F	16.00 RT.	533.93
R	328+67.85	RAMP F	21.89 LT.	534.14
S	328+67.85	RAMP F	17.29 LT.	534.36
T	328+80.00	TEMP. RAMP F	16.00 RT.	534.12
U	328+78.15	RAMP F	20.45 LT.	534.40
V	328+78.15	RAMP F	17.28 LT.	534.55
W	328+90.00	TEMP. RAMP F	16.00 RT.	534.39
X	328+88.42	RAMP F	19.32 LT.	534.64
Y	328+88.42	RAMP F	17.26 LT.	534.74
AN	329+00.00	TEMP. RAMP F	16.00 RT.	534.66

PAVEMENT ELEVATIONS CONTINUED...

REFERENCE	STATION	BASELINE	OFFSET	ELEVATION
Z	329+04.03	TEMP. RAMP F	16.00 RT.	534.76
AO	328+98.69	RAMP F	17.25 LT.	534.93
AA	329+02.81	RAMP F	17.26 LT.	535.01
AB	329+10.00	TEMP. RAMP F	16.00 RT.	534.97
AC	329+08.91	RAMP F	17.26 LT.	535.12
AD	329+20.00	TEMP. RAMP F	16.00 RT.	535.29
AE	329+19.10	RAMP F	17.26 LT.	535.31
AF	329+30.00	TEMP. RAMP F	16.00 RT.	535.47
AG	329+29.24	RAMP F	17.28 LT.	535.49
AH	329+40.00	TEMP. RAMP F	16.00 RT.	535.65
AI	329+39.35	RAMP F	17.29 LT.	535.68
AJ	329+50.00	TEMP. RAMP F	16.00 RT.	535.84
AK	329+49.40	RAMP F	17.30 LT.	535.86
AL	329+59.00	TEMP. RAMP F	16.00 RT.	536.00
AM	329+59.00	RAMP F	17.31 LT.	536.02

HORIZONTAL SCALE IN FEET
0 10 20 50

CALCULATED JGB
CHECKED AM

TEMPORARY RAMP F PAVEMENT DETAIL PLAN

CLE-275-5.35

79
857

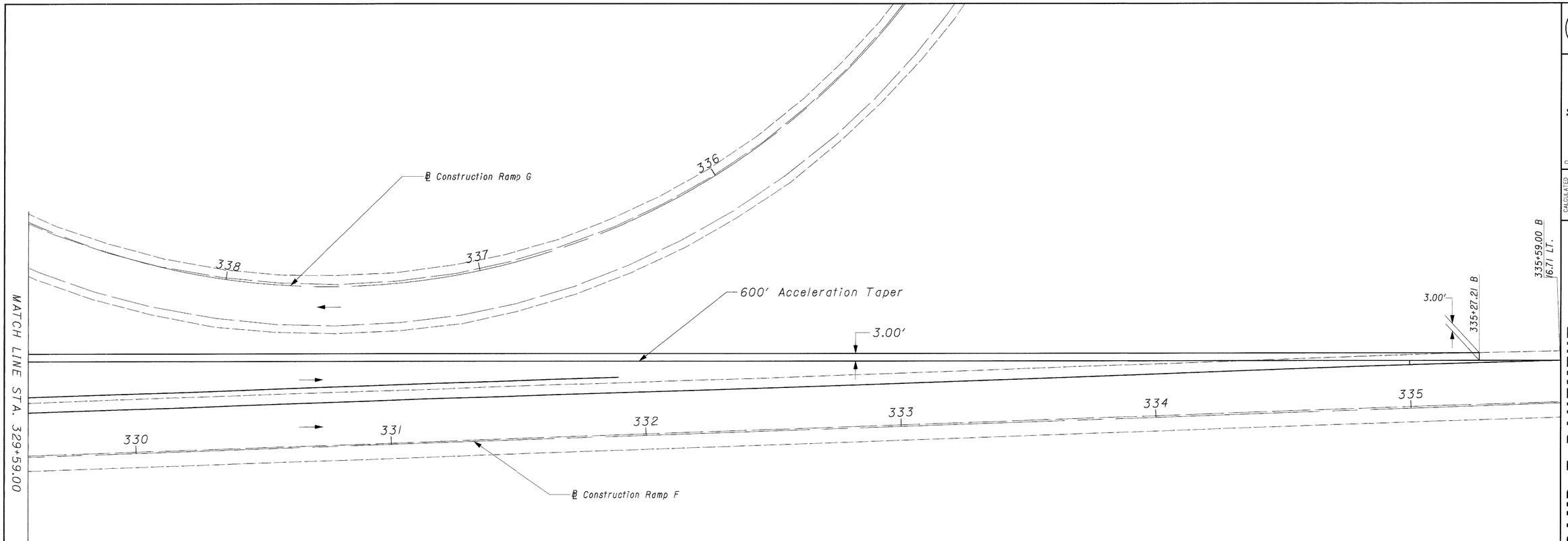

EOP ELEVATIONS ALONG ACCELERATION LANE FOR TEMPORARY RAMP F			
RAMP F STATION	OFFSET	ELEVATION	SLOPE
330+00.00	35.90 LT.	537.09	-0.0156
330+50.00	34.18 LT.	537.99	-0.0156
331+00.00	32.47 LT.	538.93	-0.0156
331+50.00	30.75 LT.	539.92	-0.0156
332+00.00	29.03 LT.	540.83	-0.0156
332+50.00	27.32 LT.	541.83	-0.0156
333+00.00	25.60 LT.	542.89	-0.0156
333+50.00	23.88 LT.	543.91	-0.0156
334+00.00	22.17 LT.	544.85	-0.0156
334+50.00	20.45 LT.	545.91	-0.0156
335+00.00	18.73 LT.	547.12	-0.0156
335+50.00	17.02 LT.	546.99	-0.0156
335+59.00	16.71 LT.	547.29	MEET EXISTING

N

0 20 40
HORIZONTAL SCALE IN FEET

CALCULATED JGB
CHECKED AM

TEMPORARY RAMP F PAVEMENT DETAIL PLAN

CLE-275-5.35

80
857

℄ Construction Ramp B

℄ Construction Temp. Ramp B

PT Sta. 326+76.85

℄ Construction Ramp C

SC Sta. 315+10.06

CS Sta. 313+60.06

328+27.61 ℄ Constr. Temp. Ramp B

323+43.66 ℄ Constr. Temp. Ramp F

Sta 99+41.55 ℄ U.S.R. 50 J
Off 20.20 Lt.
Ele 528.44

Sta 100+28.02 ℄ U.S.R. 50 J
Ele 527.70

Sta 100+50.00 ℄ U.S.R. 50 J
Off 8.15 Lt.
Ele 527.62

Sta 100+86.47 ℄ U.S.R. 50 J
Off 8.21 Lt.
Ele 527.46

Sta 101+00.000 ℄ U.S.R. 50 J
Off 8.23 Lt.
Ele 527.41

Sta 101+50.000 ℄ U.S.R. 50 J
Off 8.33 Lt.
Ele 527.15

Sta 101+87.85 ℄ U.S.R. 50 J
Off 8.37 Lt.
Ele 527.00

Sta 102+00.00 ℄ U.S.R. 50 J
Off 11.29 Lt.
Ele 527.00

Sta 102+37.85 ℄ U.S.R. 50 J
Off 20.42 Lt.
Ele 526.93

3.72′

4.01′

12.00′

4.00′

℄ Construction U.S.R. 50 J

Sta 99+50.00 ℄ U.S.R. 50 J
Off 18.29 Lt.
Ele 528.32

Sta 99+50.00 ℄ U.S.R. 50 J
Off 17.49 Rt.
Ele 527.63

R 19.74′

R 15.94′

3.97′

CS Sta. 97+47.33

ST Sta. 101+47.33

Sta 99+41.55 ℄ U.S.R. 50 J
Off 19.38 Rt.
Ele 527.63

Sta 99+61.33 ℄ U.S.R. 50 J
Ele 527.70

Sta 99+81.83 ℄ U.S.R. 50 J
Ele 527.70

Sta 99+88.58 ℄ U.S.R. 50 J
Ele 527.70

Sta 100+00.00 ℄ U.S.R. 50 J
Ele 527.70

Sta 100+50.00 ℄ U.S.R. 50 J
Off 13.90 Rt.
Ele 527.32

Sta 100+86.47 ℄ U.S.R. 50 J
Off 8.20 Rt.
Ele 527.29

For Temp. Left Turn Lane U.S.R. 50 J Plan See Sheet No. 62

℄ Construction Temp. Ramp F

CS Sta. 343+72.54

326 327 328 324 325 343 344

98 99 100 101 102 103

315 314

HORIZONTAL SCALE IN FEET
0 20 40

CALCULATED JGB
CHECKED AM

US-50 J TEMPORARY TURN LANE PAVEMENT

CLE-275-5.35

81
857

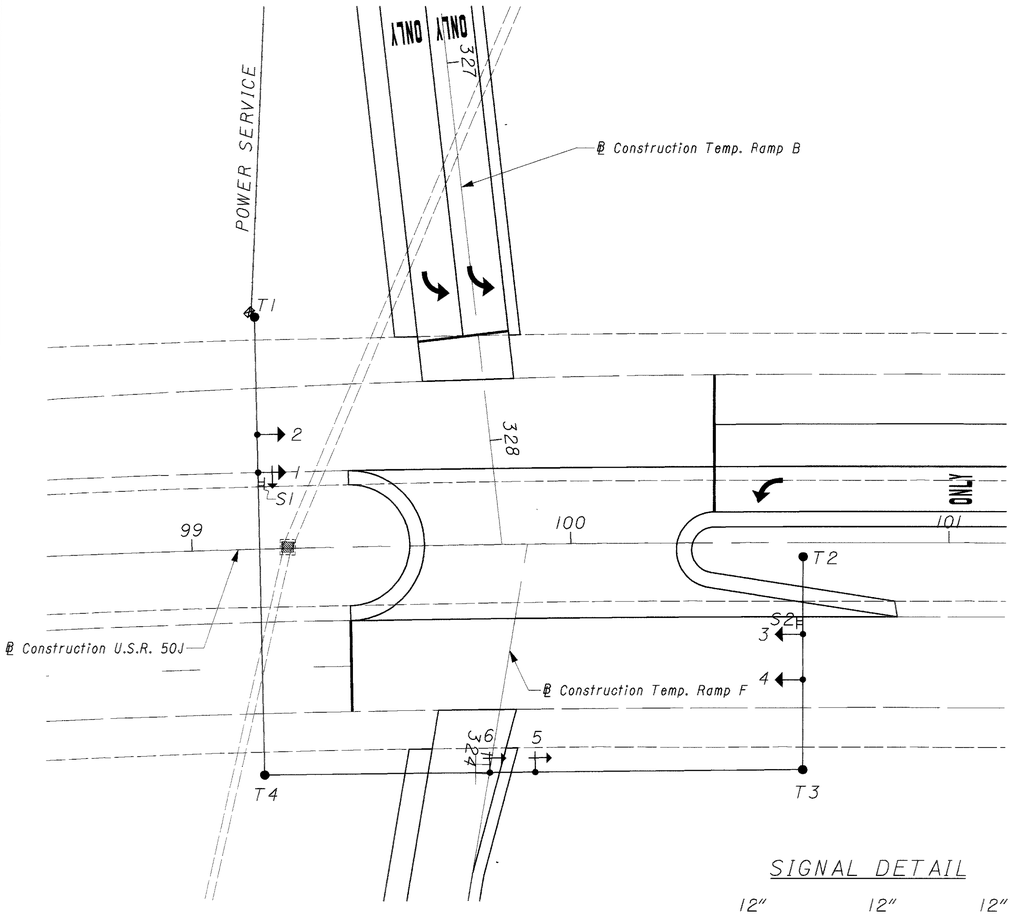

PROPOSED INTERSECTION

PHASING DIAGRAM

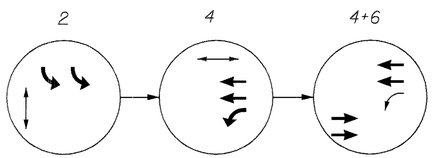

LEGEND

- PROPOSED TEMPORARY SIGNAL
- TEMPORARY SIGNAL POLE
- PROPOSED TEMPORARY SIGN
- CONTROLLER POLE MOUNTED
- PULL BOX

SIGNAL DETAIL

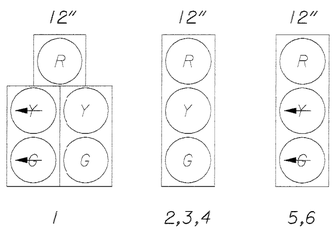

SIGN DETAIL

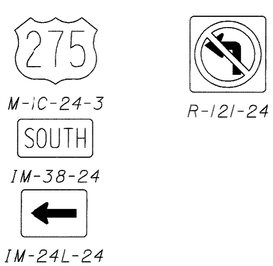

TRAFFIC SIGNAL CONTROLLER TIMING CHART

U.S.R. 50 J AND TEMPORARY RAMPS B & F
MAINTAINING AGENCY: ODOT

START UP

START IN: Y/R FLASH ○ ; ALL RED ⊗
TIME FOR FLASH OR ALL RED X SEC.
FIRST PHASE 2
COLOR DISPLAYED: GREEN ⊗ ; YELLOW ○

DUAL ENTRY
REST IN RED: R1 ○ ; R2 ○

OVERLAP PHASES

INTERVAL OR FEATURE	CONTROLLER MOVEMENT N° 1	2	3	4	5	6
INTERSECTION MOVEMENT		↰		←		→
MINIMUM GREEN (INITIAL) (sec.)		31.7		11		15.3
ADDED INITIAL (sec./actuation)		--		--		--
PASSAGE TIME (PRESET GAP)						
MINIMUM GAP (sec.)						
TIME TO REDUCE (sec.)		--		--		--
MAXIMUM GREEN I (sec.)						
MAXIMUM GREEN II (sec.)		--		--		--
YELLOW CHANGE (sec.)		3.4		3.4		3.4
ALL RED CLEARANCE (sec.)		1.6		1.6		1.6
WALK (sec.)		--		--		--
PEDESTRIAN CLEARANCE (sec.)		--		--		--
RECALL MAXIMUM (ON/OFF)						
RECALL MINIMUM (ON/OFF)						
RECALL PEDESTRIAN (ON/OFF)						
MEMORY No. 1						
CALL TO NON-ACTUATED No. 2						

SIGNAL WIRING DIAGRAM

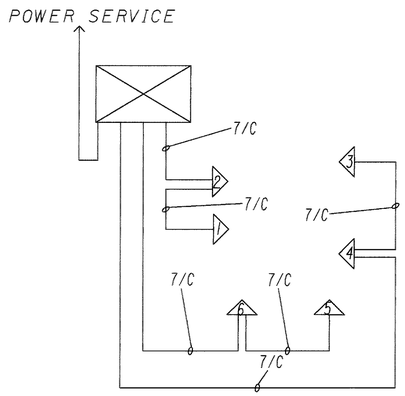

SIGNAL PLACEMENT DETAIL

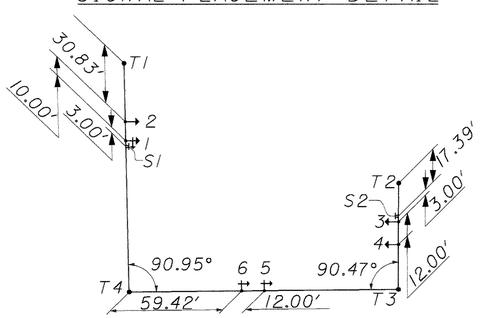

SIGNAL DISPLAY CHART

HEAD	PHASE 2 RW	PHASE 2 CLR	PHASE 2 RED	PHASE 4 RW	PHASE 4 CLR	PHASE 4 RED	PHASE 4 & 6 RW	PHASE 4 & 6 CLR	PHASE 4 & 6 RED	FLASH
1	R	R	R	~~G~~	~~Y~~	R	G	Y	R	Y
2	R	R	R	G	Y	R	G	Y	R	Y
3	R	R	R	R	R	R	G	Y	R	Y
4	R	R	R	R	R	R	G	Y	R	Y
5	~~G~~	~~Y~~	R	R	R	R	R	R	R	R
6	~~G~~	~~Y~~	R	R	R	R	R	R	R	R

POLE CHART

POLE NO.	LOCATION	DESIGN NO.	POLE HT. (FT.)	INDEX ANGLE (DEG.) @ HANDHOLE	POWER SERVICE	CABLE ENTRANCE (24" FROM TOP)
T1	STA. 99+17.85, 61.11 LT.	2	24	135	240	180
T2 *	STA. 100+61.55, 3.70 RT.	2	24	90	--	180
T3	STA. 100+61.55, 59.80 RT.	2	24	135	--	180
T4	STA. 99+17.85, 59.48 RT.	2	24	225	--	180

* Base Plate for strain pole T2 shall be located square with ℄ US-50 J

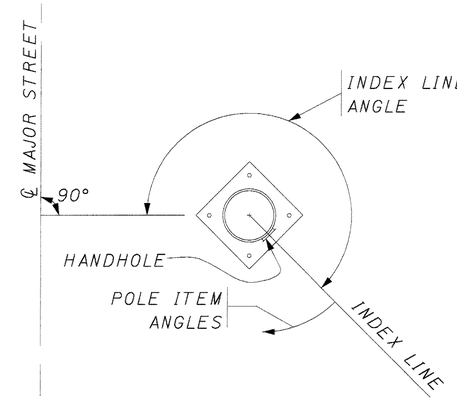

NOTES:
1. ALL ANGLES MEASURED CLOCKWISE
2. BASE PLATE IS ORIENTED 45° TO ℄ US-50 J UNLESS OTHERWISE NOTED

NOTES

1. ALL SIGNAL HEADS AND SIGNS SHALL BE FIELD ADJUSTED BY THE CONTRACTOR AS DIRECTED BY THE ENGINEER TO INSURE VISIBILITY.
2. ALL CONDUIT IS 2" PVC, UNLESS NOTED.
3. ALL PULL BOXES ARE 18".
4. ALL DIMENSIONS ARE IN FEET.
5. OBTAIN SERVICE FROM POLE #
6. CLEARANCE SHALL BE 16' MINIMUM AND 18' MAXIMUM BETWEEN THE BOTTOM OF THE SIGNAL HEAD HOUSING, SIGN AND THE PAVEMENT BELOW THEM.

N

HORIZONTAL SCALE IN FEET
0 20 40

CALCULATED JGB
CHECKED AM

TEMPORARY SIGNAL PLAN U.S.R. 50 J & TEMPORARY RAMPS B & F

CLE-275-5.35

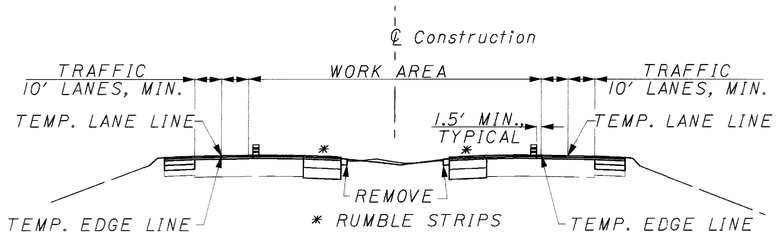

PHASE 3

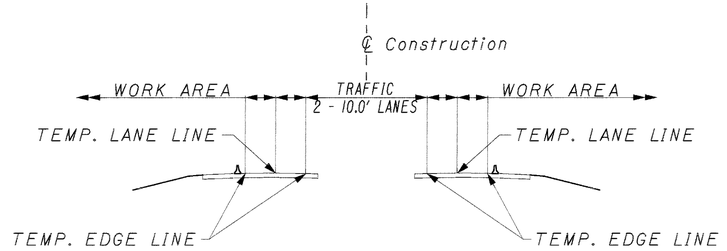

PHASE 2B

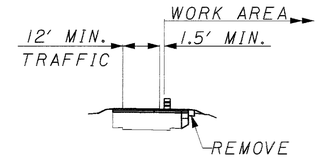

PHASE 3

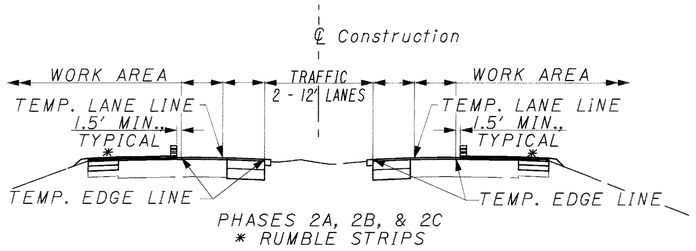

PHASES 2A, 2B, & 2C
* RUMBLE STRIPS

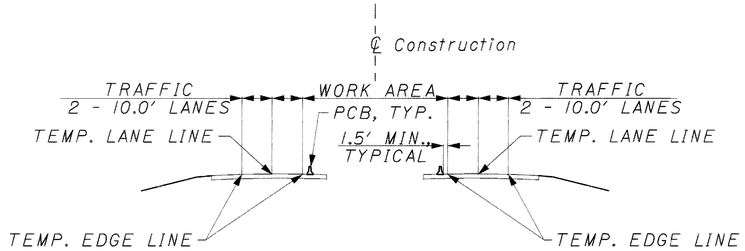

PHASE 2A

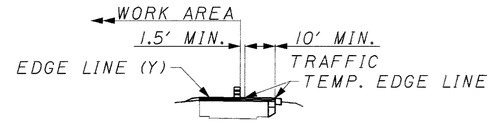

PHASES 2A & 2B

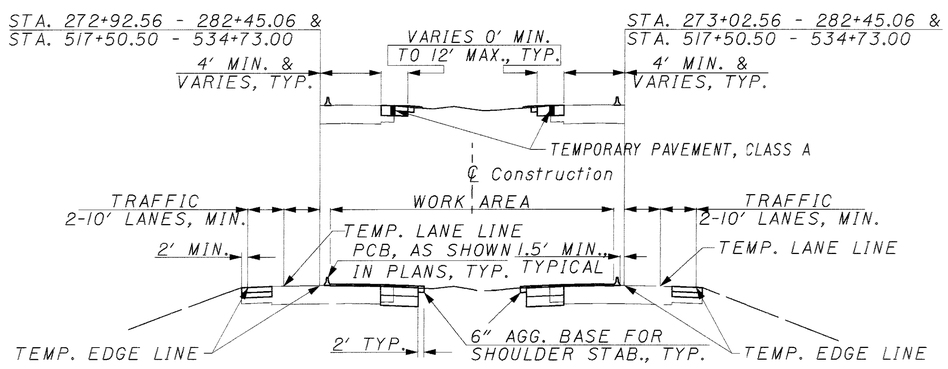

PHASE 1B

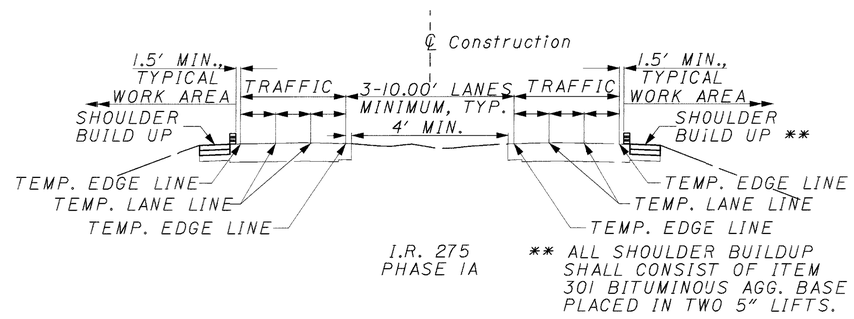

I.R. 275
PHASE 1A

** ALL SHOULDER BUILDUP SHALL CONSIST OF ITEM 301 BITUMINOUS AGG. BASE PLACED IN TWO 5" LIFTS.

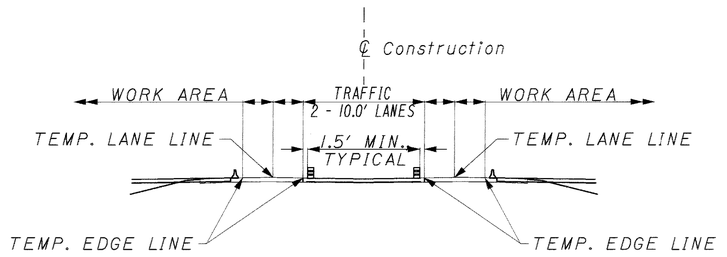

PHASE 1A

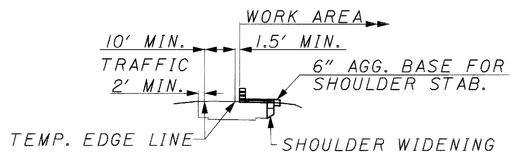

PHASE 2A

RAMPS A, B, D, E, F, & H
DIRECTION OF TRAVEL

NOTE: RAMP E CLOSED PHASES 2A, 2B, & 2C.
RAMP F CLOSED PHASES 2A & 2B.

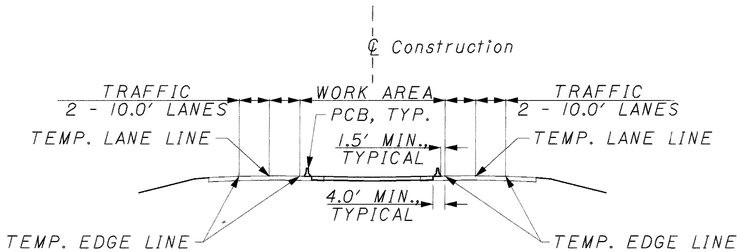

U.S.R. 50J
PHASE 1

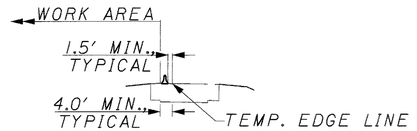

PHASE 1

RAMPS B & F
DIRECTION OF TRAVEL

CALCULATED JGB
CHECKED AM

MAINTENANCE OF TRAFFIC TYPICAL SECTIONS

CLE-275-5.35

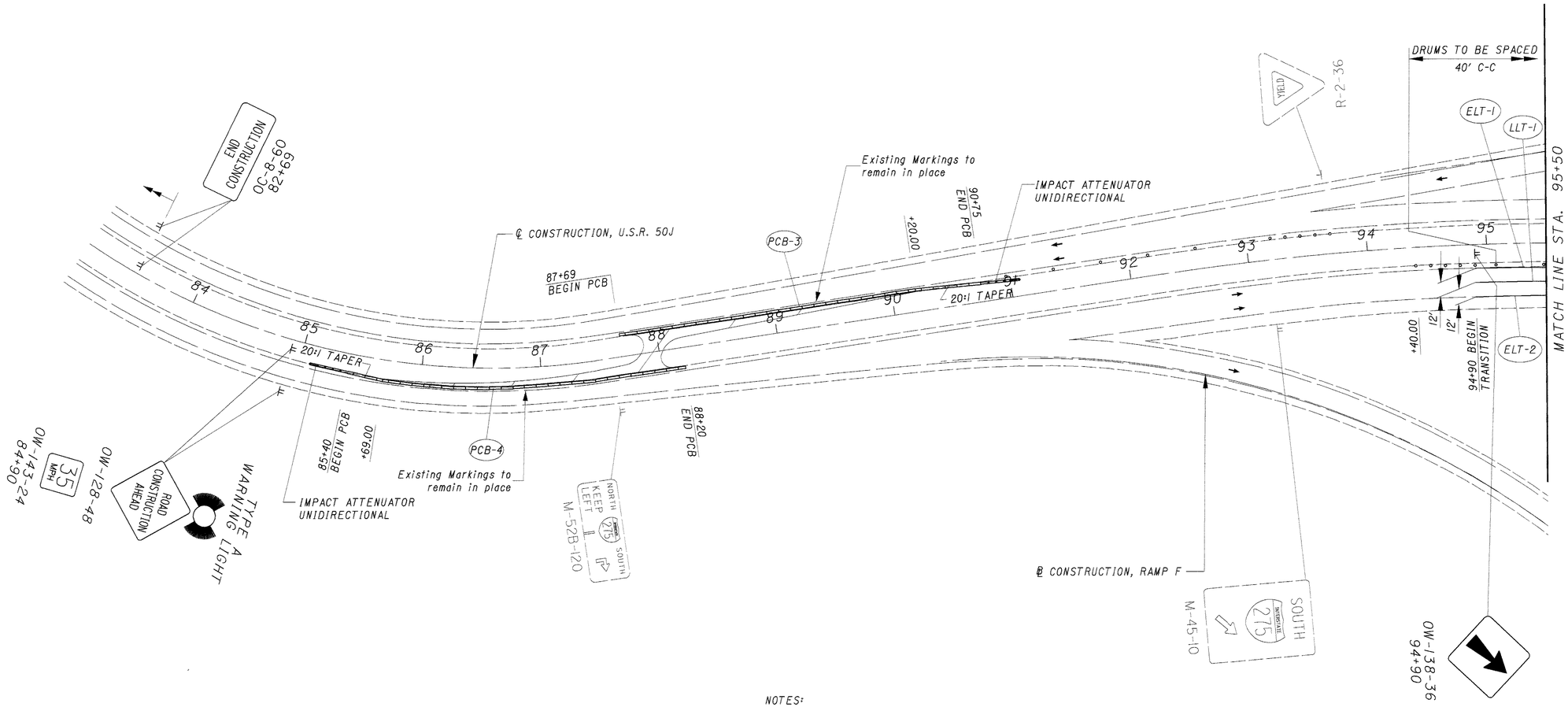

NOTES:

FOR QUANTITIES, SEE M.O.T. SUBSUMMARY.
FOR M.O.T. TYPICAL SECTIONS, SEE SHEET NO. 83

LEGEND

- 32" PORTABLE CONCRETE BARRIER
- AREA TO BE CONSTRUCTED
- TEMPORARY PAVEMENT, CLASS A

N

0 25 50 100
HORIZONTAL SCALE IN FEET

CALCULATED JGB
CHECKED AM

MAINTENANCE OF TRAFFIC PHASE ONE, U.S.R. 50J

CLE-275-5.35

84
857

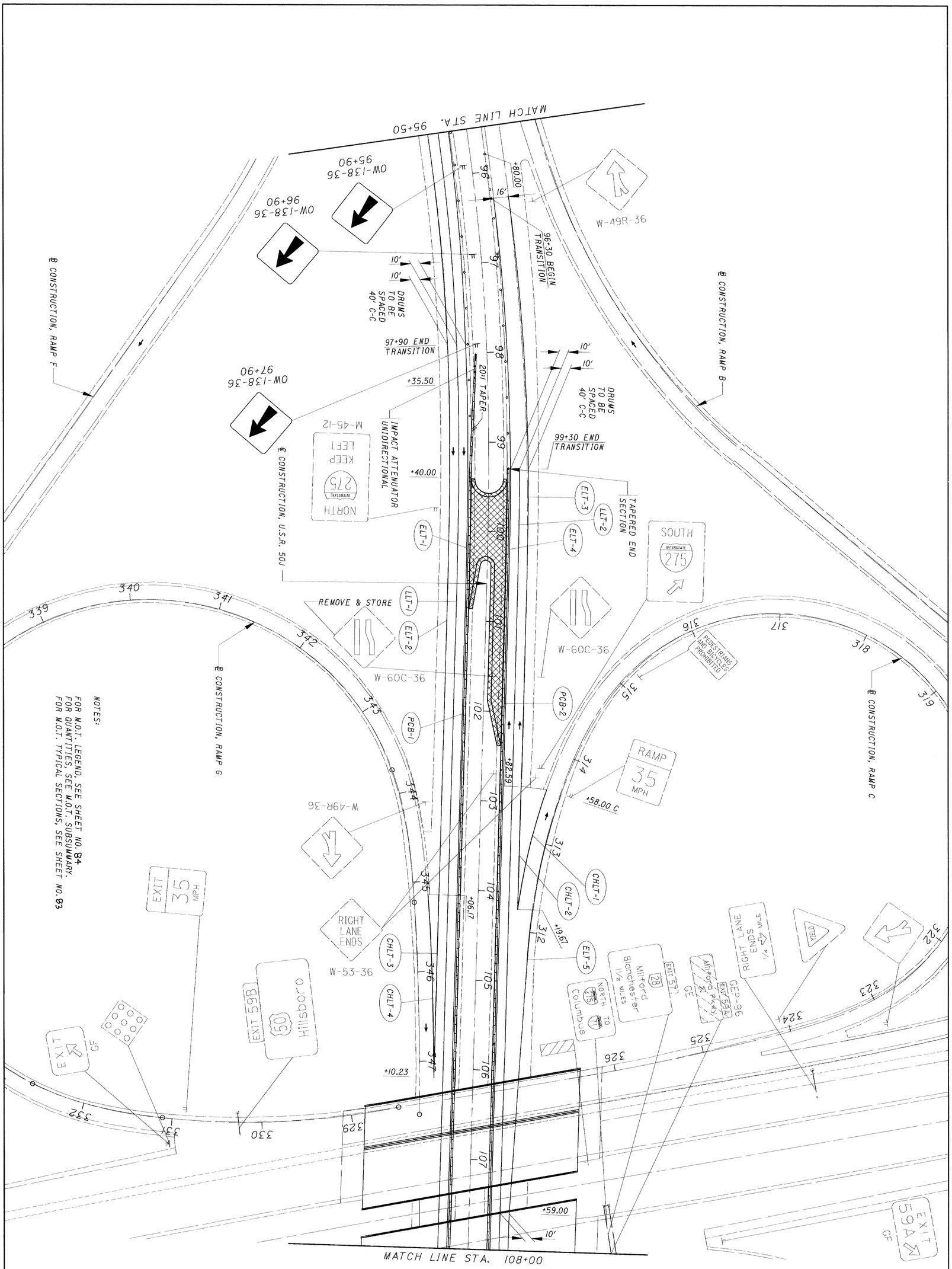

NOTES:

FOR M.O.T. LEGEND, SEE SHEET NO. 84
FOR QUANTITIES, SEE M.O.T. SUBSUMMARY.
FOR M.O.T. TYPICAL SECTIONS, SEE SHEET NO. 83

85 / 858	CLE-275-5.35	**MAINTENANCE OF TRAFFIC PHASE ONE, U.S.R. 50J**	CALCULATED JGB / CHECKED AM	HORIZONTAL SCALE IN FEET (0, 25, 50, 100)

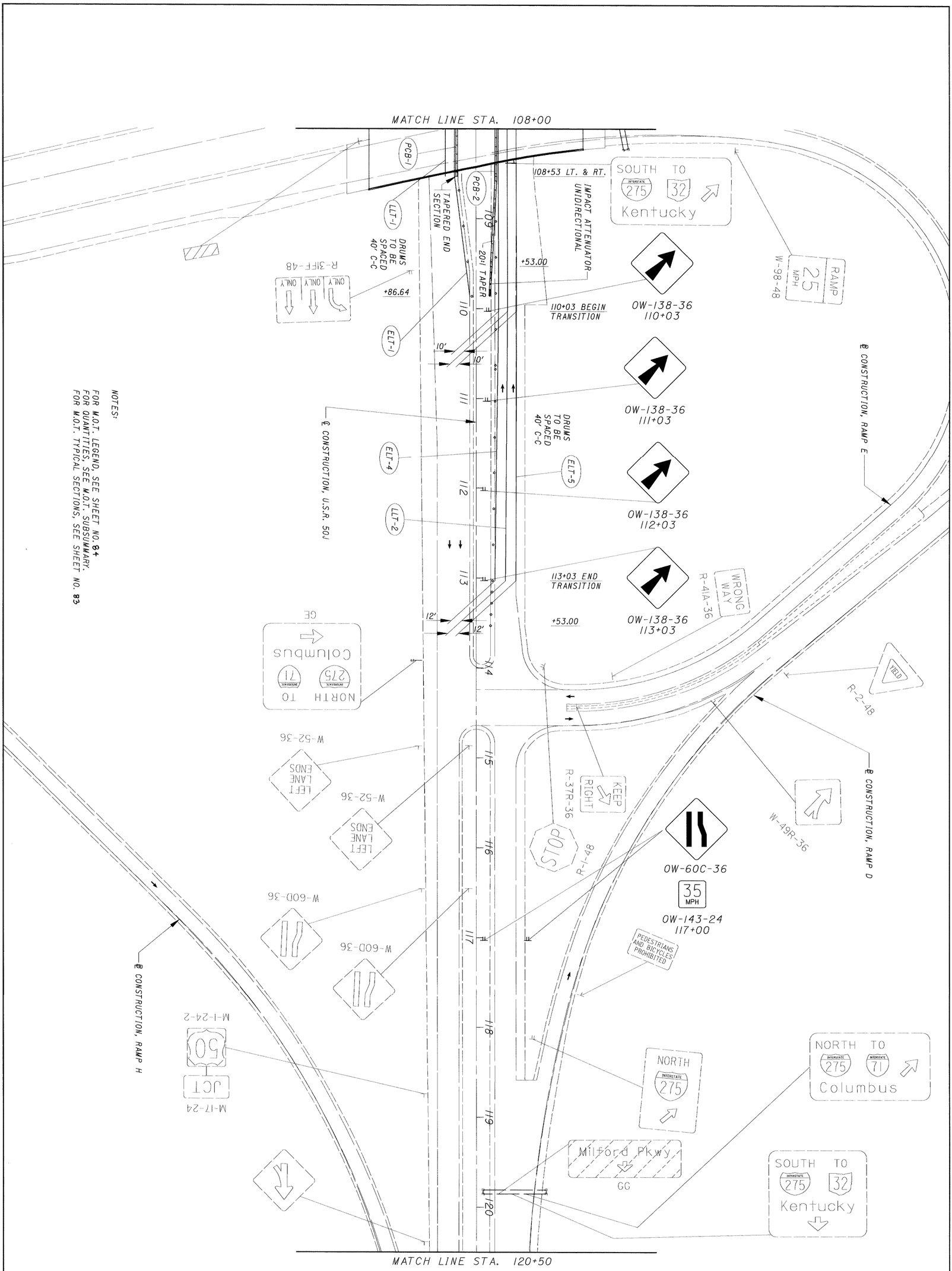

NOTES:

FOR M.O.T. LEGEND, SEE SHEET NO. 84.
FOR QUANTITIES; SEE M.O.T. SUBSUMMARY.
FOR M.O.T. TYPICAL SECTIONS, SEE SHEET NO. 83.

857 / 86	CLE-275-5.35	MAINTENANCE OF TRAFFIC PHASE ONE, U.S.R. 50J	CALCULATED JGB / CHECKED AM	0 50 25 100 HORIZONTAL SCALE IN FEET	N

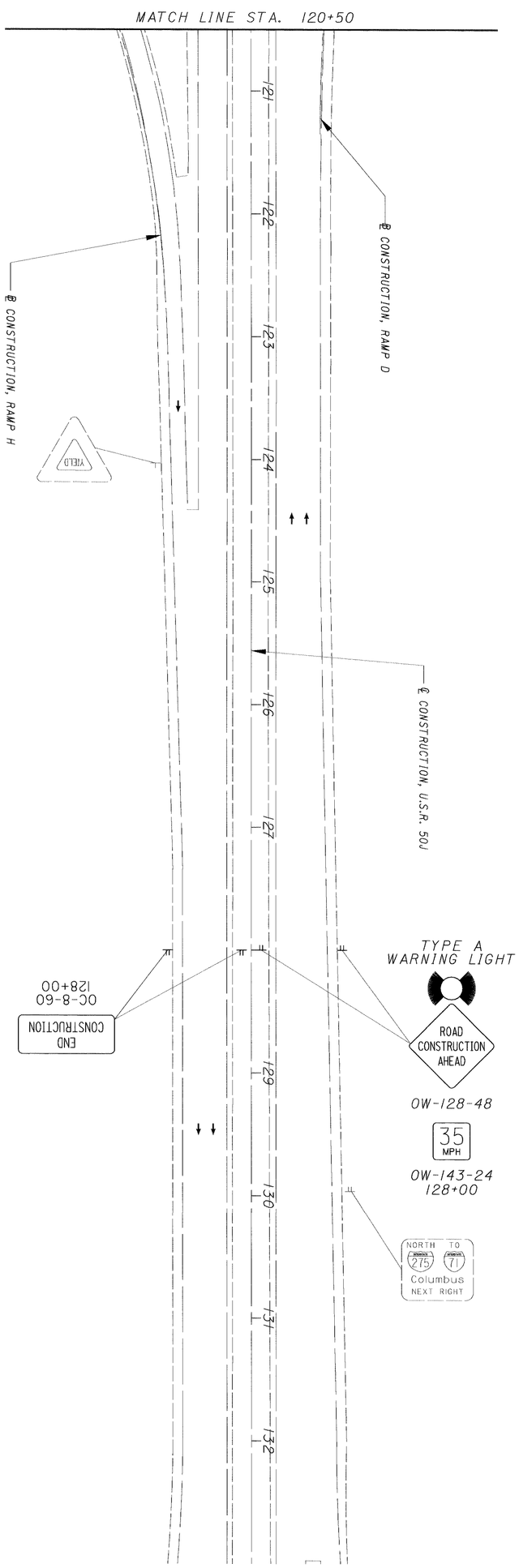

NOTES:

FOR M.O.T. LEGEND, SEE SHEET NO. 84
FOR QUANTITIES, SEE M.O.T. SUBSUMMARY.
FOR M.O.T. TYPICAL SECTIONS, SEE SHEET NO. 83

87 / 85	CLE-275-5.35	MAINTENANCE OF TRAFFIC PHASE ONE, U.S.R. 50J	CALCULATED JGB CHECKED AM	0 25 50 100 HORIZONTAL SCALE IN FEET

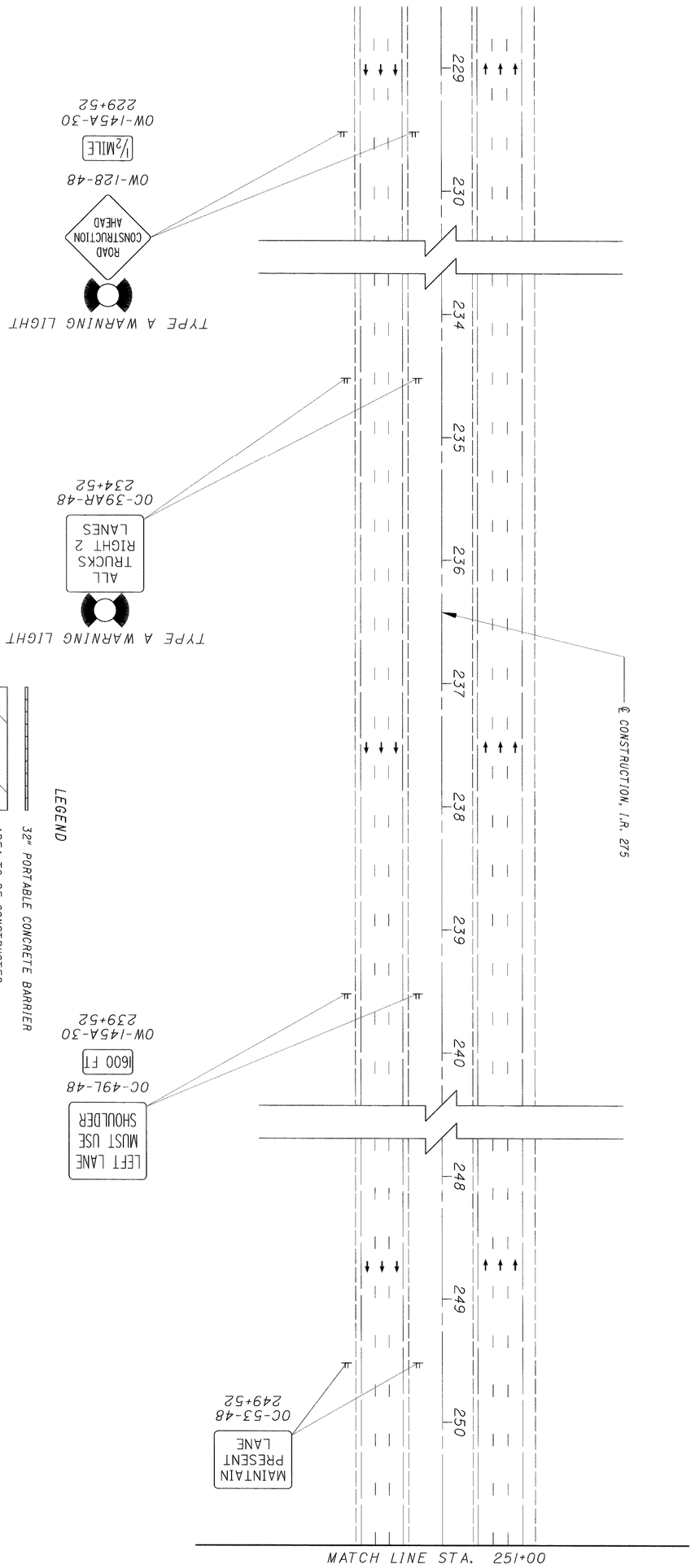

NOTE:

ALL TEMPORARY PAVEMENT MARKINGS WITHIN THE STATION RANGE OF STA. 255+52 TO STA. 282+45.06 ARE TO BE 740.06, TYPE 1.

FOR QUANTITIES, SEE M.O.T. SUBSUMMARY.
FOR M.O.T. TYPICAL SECTIONS, SEE SHEET NO. 83

CLE-275-5.35

MAINTENANCE OF TRAFFIC
PHASE ONE-A, I.R. 275

CALCULATED JGB
CHECKED AM

0 50
25 100
HORIZONTAL SCALE IN FEET

N

NOTES:

FOR M.O.T. LEGEND, SEE SHEET NO. 88
FOR QUANTITIES, SEE M.O.T. SUBSUMMARY.
FOR M.O.T. TYPICAL SECTIONS, SEE SHEET NO. 83

N

0 25 50 100
HORIZONTAL SCALE IN FEET

CALCULATED JGB
CHECKED AM

MAINTENANCE OF TRAFFIC
PHASE ONE-A, I.R. 275

CLE-275-5.35

89
85

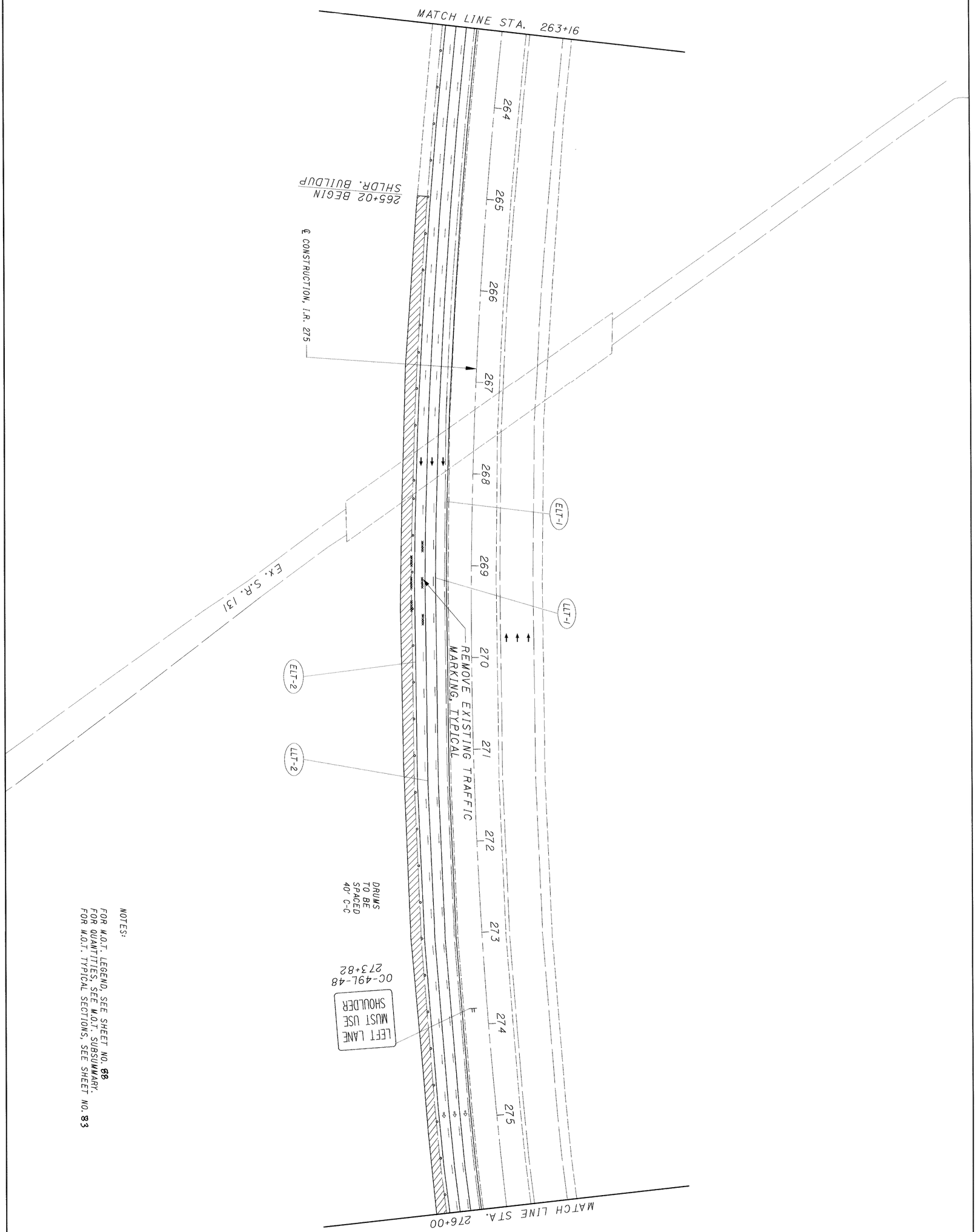

NOTES:

FOR M.O.T. LEGEND, SEE SHEET NO. 82
FOR QUANTITIES, SEE M.O.T. SUBSUMMARY.
FOR M.O.T. TYPICAL SECTIONS, SEE SHEET NO. 83

90 / 583	CLE-275-5.35	MAINTENANCE OF TRAFFIC PHASE ONE-A, I.R. 275	CALCULATED JGB CHECKED AM	0 50 25 100 HORIZONTAL SCALE IN FEET	N

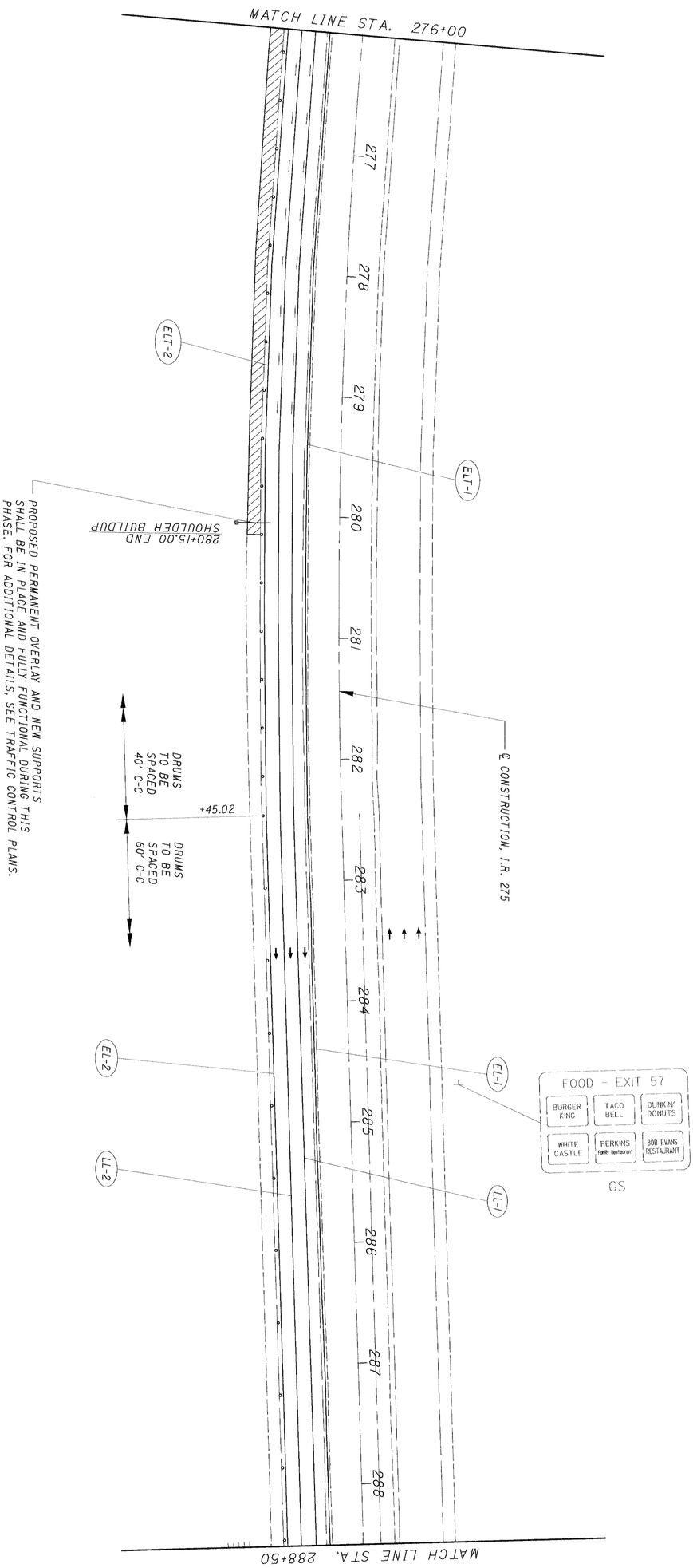

NOTES:

FOR M.O.T. LEGEND, SEE SHEET NO. **88**
FOR QUANTITIES, SEE M.O.T. SUBSUMMARY.
FOR M.O.T. TYPICAL SECTIONS, SEE SHEET NO. **83**

58 / 16	**CLE-275-5.35**	**MAINTENANCE OF TRAFFIC PHASE ONE-A, I.R. 275**	CALCULATED JGB / CHECKED AM	0 50 / 25 100 HORIZONTAL SCALE IN FEET

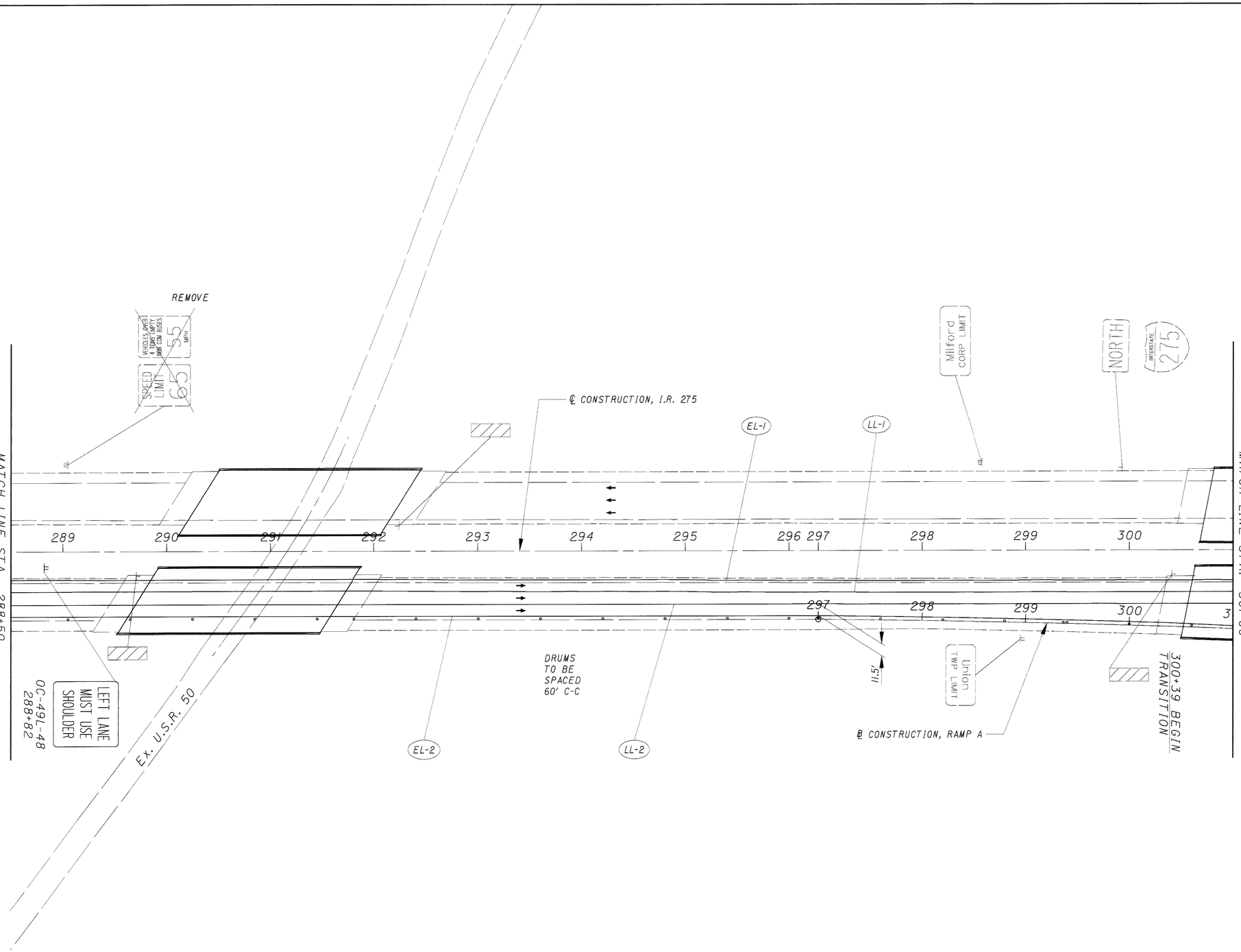

NOTES:

FOR M.O.T. LEGEND, SEE SHEET NO. 88
FOR QUANTITIES, SEE M.O.T. SUBSUMMARY.
FOR M.O.T. TYPICAL SECTIONS, SEE SHEET NO. 83

N

0 25 50 100
HORIZONTAL SCALE IN FEET

CALCULATED JGB
CHECKED AM

MAINTENANCE OF TRAFFIC
PHASE ONE-A, I.R. 275

CLE-275-5.35

92
857

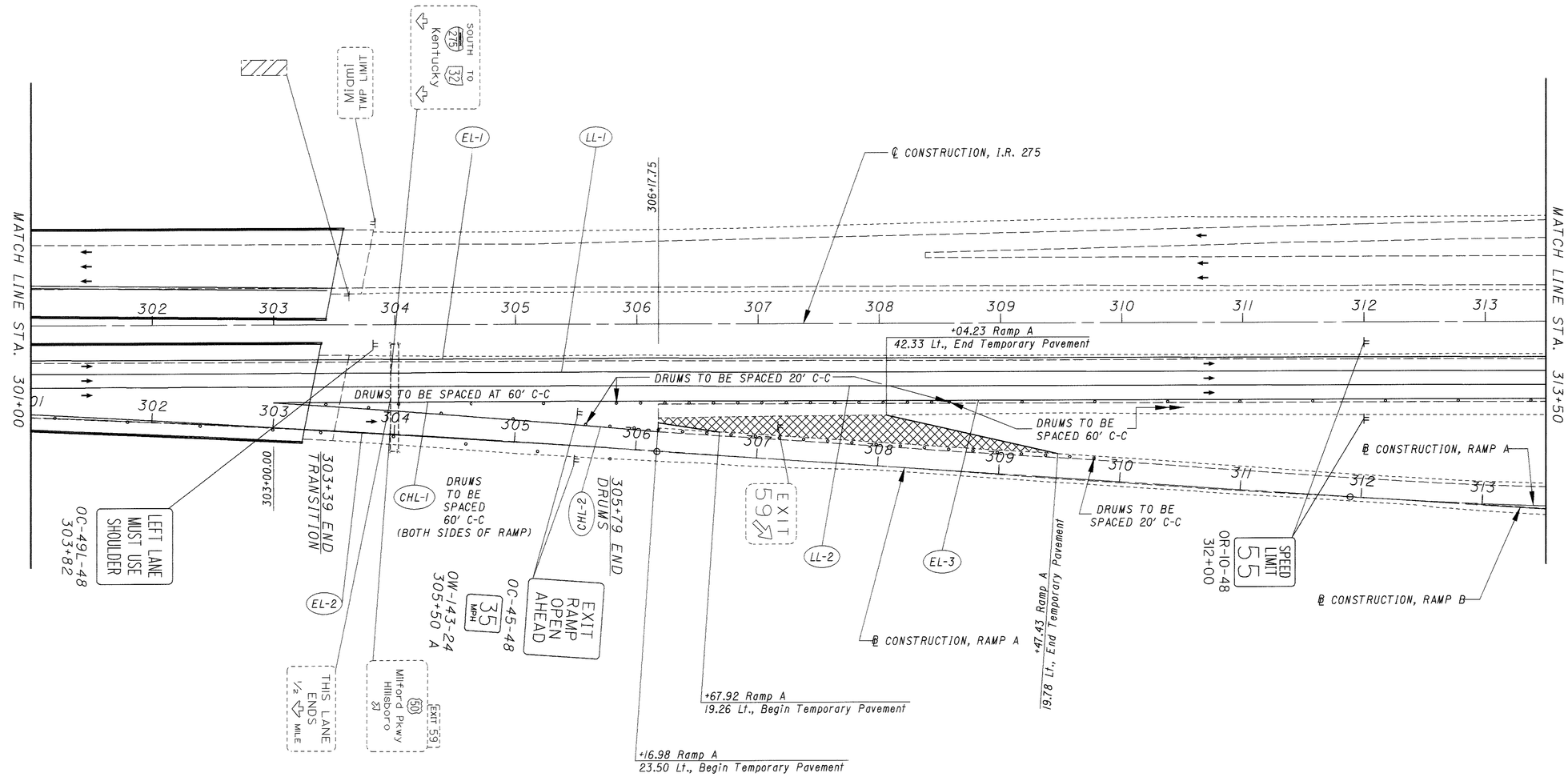

NOTES:

FOR M.O.T. LEGEND, SEE SHEET NO. 88
FOR QUANTITIES, SEE M.O.T. SUBSUMMARY.
FOR M.O.T. TYPICAL SECTIONS, SEE SHEET NO. 83

N

0 25 50 100
HORIZONTAL SCALE IN FEET

CALCULATED JGB
CHECKED AM

MAINTENANCE OF TRAFFIC
PHASE ONE-A, I.R. 275

CLE-275-5.35

93
857

MAINTENANCE OF TRAFFIC
PHASE ONE-A, I.R. 275

CLE-275-5.35

94
85

CALCULATED JGB
CHECKED AM

HORIZONTAL SCALE IN FEET
0 25 50 100

N

℄ CONSTRUCTION, RAMP D
℄ CONSTRUCTION, RAMP E
℄ CONSTRUCTION, I.R. 275
℄ CONSTRUCTION, RAMP A
℄ CONSTRUCTION, RAMP B
℄ CONSTRUCTION, RAMP C

WILDFLOWER AREA
RESTRICTED MOWING

MILE 59

EXIT 59A GF

RAMP 25 MPH W-98-48

MATCH LINE STA. 313+50
MATCH LINE STA. 326+00
MATCH LINE STA. 320+50 SEE SHEET NO.

EL-1 LL-1 EL-4 CHL-3 LL-2 EL-3 EL-5 ELT-6 CHL-4 PCB-1

313+55 A BEGIN DRUMS
315+55 A, BEGIN TRANSITION
+89.83, BEGIN CURB REMOVAL
DRUMS TO BE SPACED 60' C-C
+49.29 END CURB REMOVAL
321+49.80 BEGIN SHOULDER REPLACEMENT
321+49.80 BEGIN PCB
+55.00 A
+43.43 A
+31.80 A
+30.21 B
+53.67 A
+53.00 B
315+86 B BEGIN DRUMS
317+20 B, BEGIN TRANSITION
318+55 A, END TRANSITION
DRUMS TO BE SPACED 20' C-C
DRUMS TO BE SPACED 20' C-C
16.0'
12.0'
12.0'
320+20 B, END TRANSITION

OC-96-48 318+82

LEFT LANE MUST USE SHOULDER

IMPACT ATTENUATOR, UNIDIRECTIONAL

OW-138-36 315+55 A AND 100 FT. INTERVAL

OW-138-36 317+20 B AND 100 FT. INTERVAL

OW-143-24 316+07 B

OC-96-48

OW-138-36 102+50

EXIT 50 Hillsboro

Milford Pkwy

EXIT GF

EXIT

RAMP 35 MPH

YIELD

RIGHT LANE ENDS 1/4 MILE

REMOVE

NOTES:

FOR M.O.T. LEGEND, SEE SHEET NO. 88
FOR QUANTITIES, SEE M.O.T. SUBSUMMARY.
FOR M.O.T. TYPICAL SECTIONS, SEE SHEET NO. 83

MAINTENANCE OF TRAFFIC
PHASE ONE-A, I.R. 275

CLE-275-5.35

95
857

CALCULATED JGB
CHECKED AM

HORIZONTAL SCALE IN FEET
0 25 50 100

N

MATCH LINE STA. 326+00

MATCH LINE STA. 338+50

TYPE A WARNING LIGHT

OW-122-48
326+07

RIGHT LANE CLOSED AHEAD

OW-143-24
109+50

MPH 45

OW-60C-48

END CONSTRUCTION
OC-8-60
112+00

NORTH TO 71 275 Columbus

EXIT 59A Milford Pkwy

EXIT 57 28 Milford Blanchester 1½ MILES

℄ CONSTRUCTION, U.S.R. 50J

SOUTH TO 32 275 KENTUCKY

ONLY ONLY ONLY
R-31FF-48

℄ CONSTRUCTION, I.R. 275

EL-1 LL-1 PCB-1

PLANE CONCRETE CAP AND PLACE PCB

PCB

℄ CONSTRUCTION, RAMP H

END CONSTRUCTION
OC-8-60
335+49 H

OW-60C-48
337+07

EL-8

337+49.00

EL-3 LL-2 EL-4

OW-138-36
103+50

50 Hillsboro EXIT 59B

W-53-36

℄ CONSTRUCTION, RAMP C
DRUMS TO BE SPACED 40' C-C

RIGHT LANE ENDS

103+13 END TRANSITION

W-49R-36

EXIT 35 MPH

SOUTH 275 INTERSTATE

IMPACT ATTENUATOR UNIDIRECTIONAL

*42.50

13' MIN.

104+50 END TRANSITION

DRUMS TO BE SPACED 20' C-C

℄ CONSTRUCTION, RAMP G

EXIT GF

DRUMS TO BE SPACED 60' C-C

DRUMS TO BE SPACED 20' C-C

LEFT LANE MUST USE SHOULDER

OC-49L-48
333+82

EL-7

RIGHT LANE ENDS MERGE LEFT

EL-14

DRUMS TO BE SPACED 20' C-C

3 11.5' LANES

MATCH LINE STA. 338+50, SEE SHEET NO.

℄ CONSTRUCTION, RAMP F

NOTES:

FOR M.O.T. LEGEND, SEE SHEET NO. 88.
FOR QUANTITIES, SEE M.O.T. SUBSUMMARY.
FOR M.O.T. TYPICAL SECTIONS, SEE SHEET NO. 83.

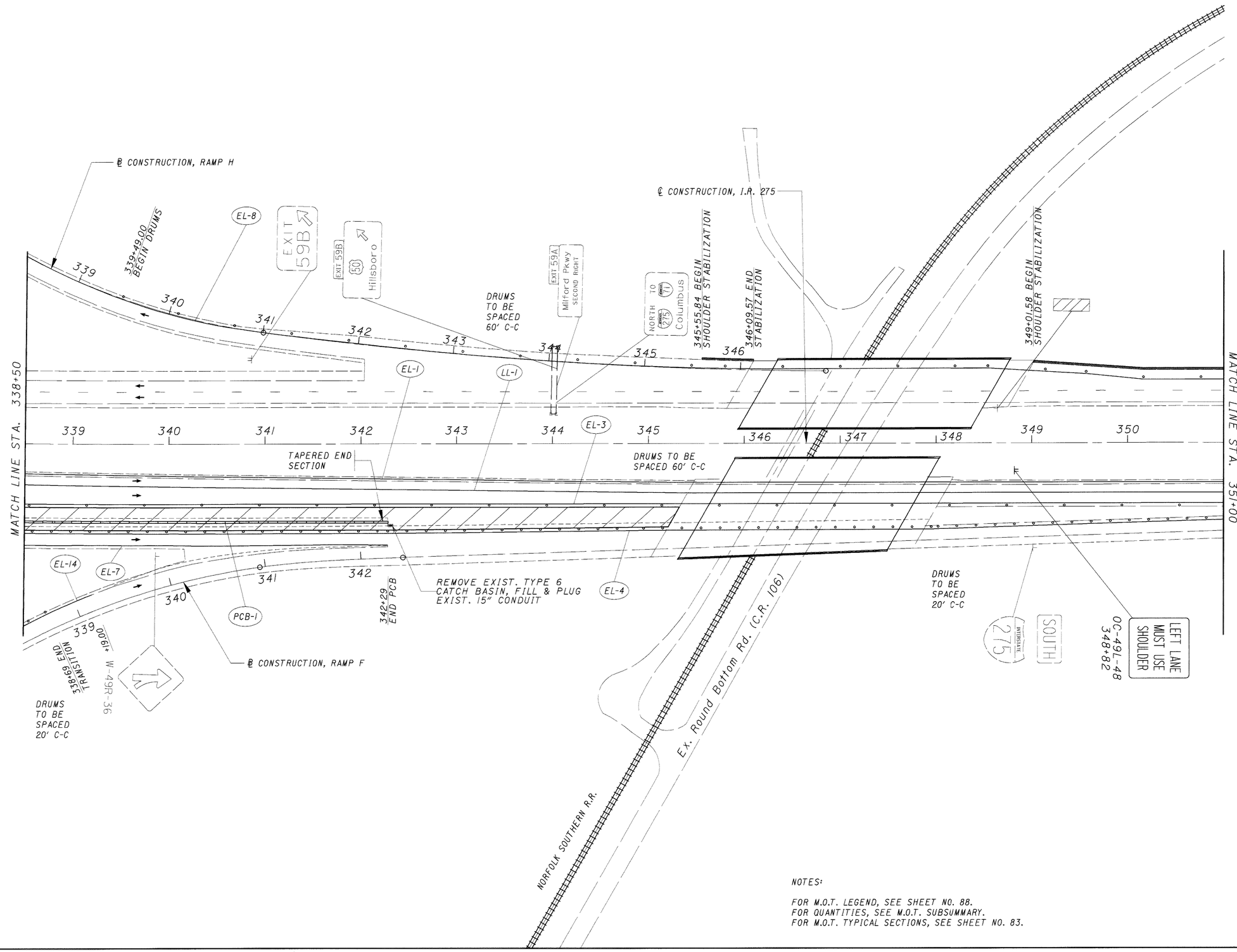

NOTES:

FOR M.O.T. LEGEND, SEE SHEET NO. 88.
FOR QUANTITIES, SEE M.O.T. SUBSUMMARY.
FOR M.O.T. TYPICAL SECTIONS, SEE SHEET NO. 83.

HORIZONTAL SCALE IN FEET
0 25 50 100

CALCULATED JGB
CHECKED AM

MAINTENANCE OF TRAFFIC PHASE ONE-A, I.R. 275

CLE-275-5.35

96
857

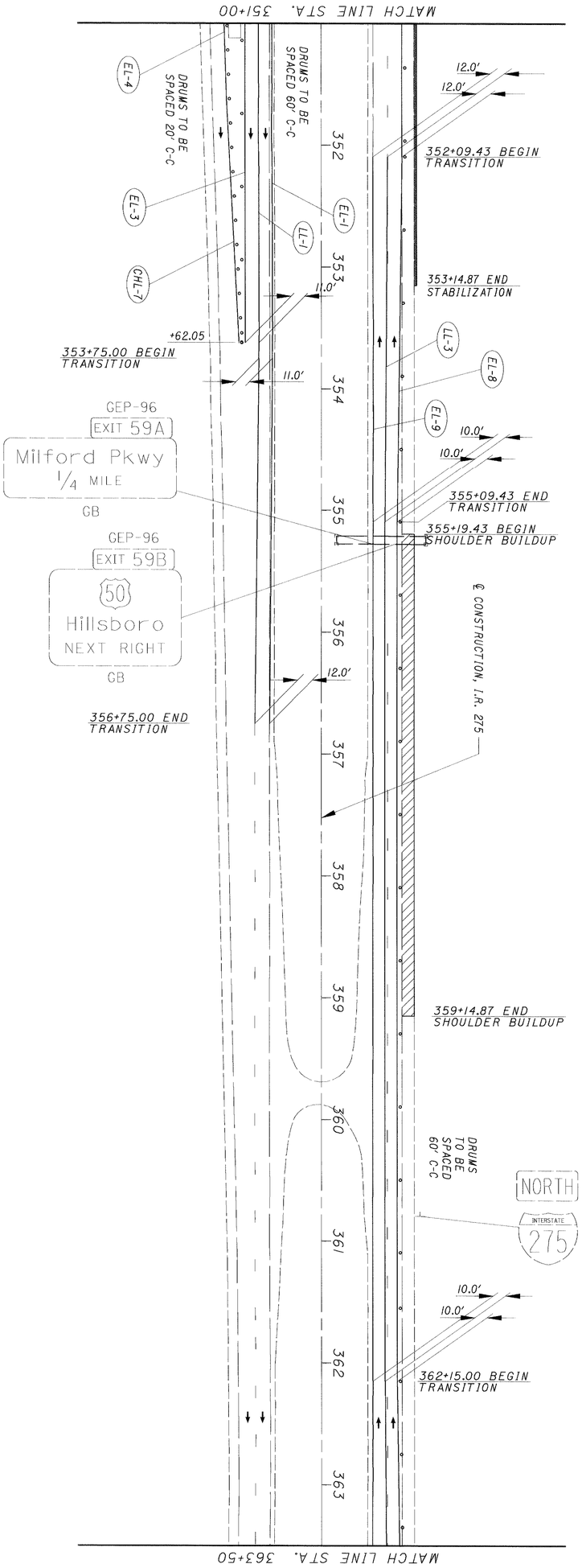

NOTES:

FOR M.O.T. LEGEND, SEE SHEET NO. 88
FOR QUANTITIES, SEE M.O.T. SUBSUMMARY.
FOR M.O.T. TYPICAL SECTIONS, SEE SHEET NO. 83

97 / 857	CLE-275-5.35	**MAINTENANCE OF TRAFFIC** **PHASE ONE-A, I.R. 275**	CALCULATED JGB CHECKED AM	0 50 25 100 HORIZONTAL SCALE IN FEET

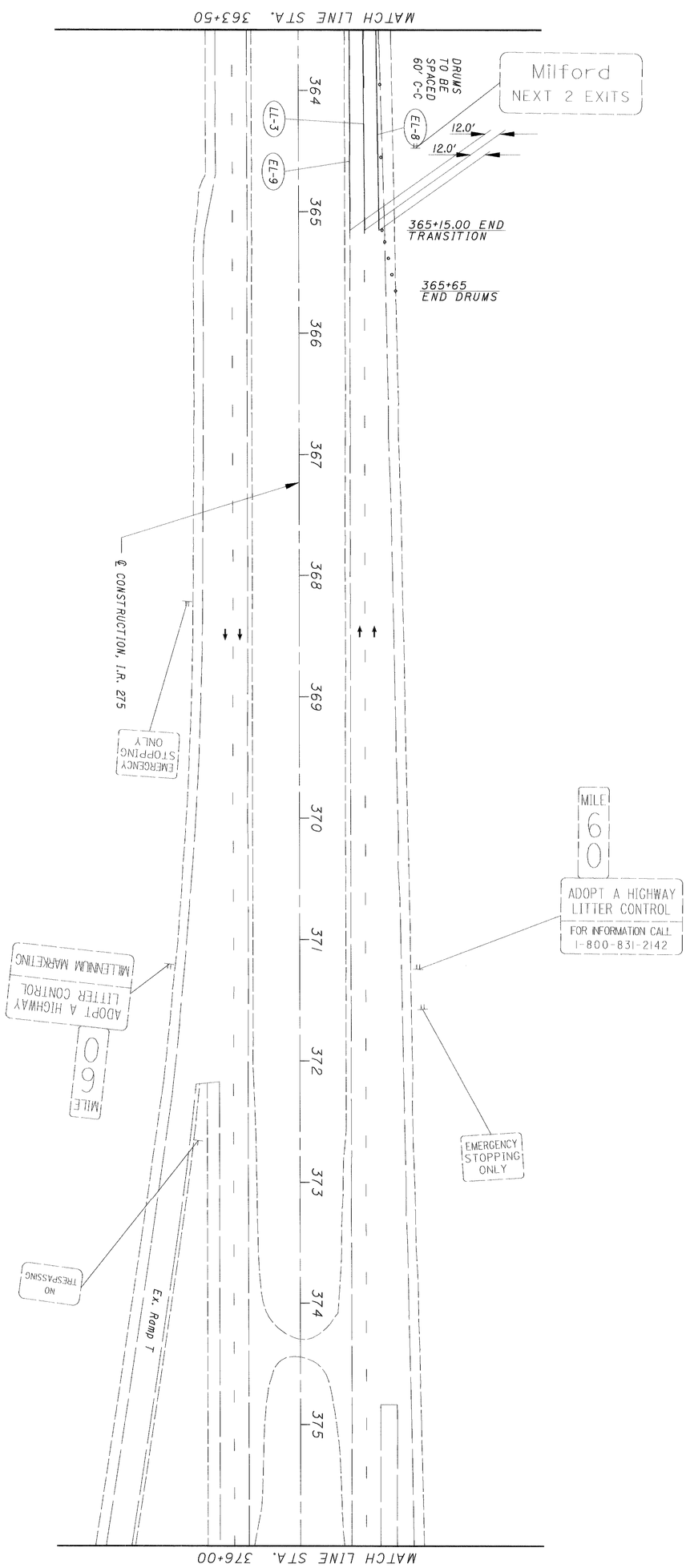

NOTES:

FOR M.O.T. LEGEND, SEE SHEET NO. 88
FOR QUANTITIES, SEE M.O.T. SUBSUMMARY.
FOR M.O.T. TYPICAL SECTIONS, SEE SHEET NO. 83

98
857

CLE-275-5.35

MAINTENANCE OF TRAFFIC
PHASE ONE-A, I.R. 275

CALCULATED JGB
CHECKED AM

0 25 50 100
HORIZONTAL SCALE IN FEET

N

NOTES:

FOR M.O.T. LEGEND, SEE SHEET NO. 88
FOR QUANTITIES, SEE M.O.T. SUBSUMMARY.
FOR M.O.T. TYPICAL SECTIONS, SEE SHEET NO. 83

N

0 25 50 100
HORIZONTAL SCALE IN FEET

CALCULATED JGB
CHECKED AM

MAINTENANCE OF TRAFFIC
PHASE ONE-A, I.R. 275

CLE-275-5.35

99
857

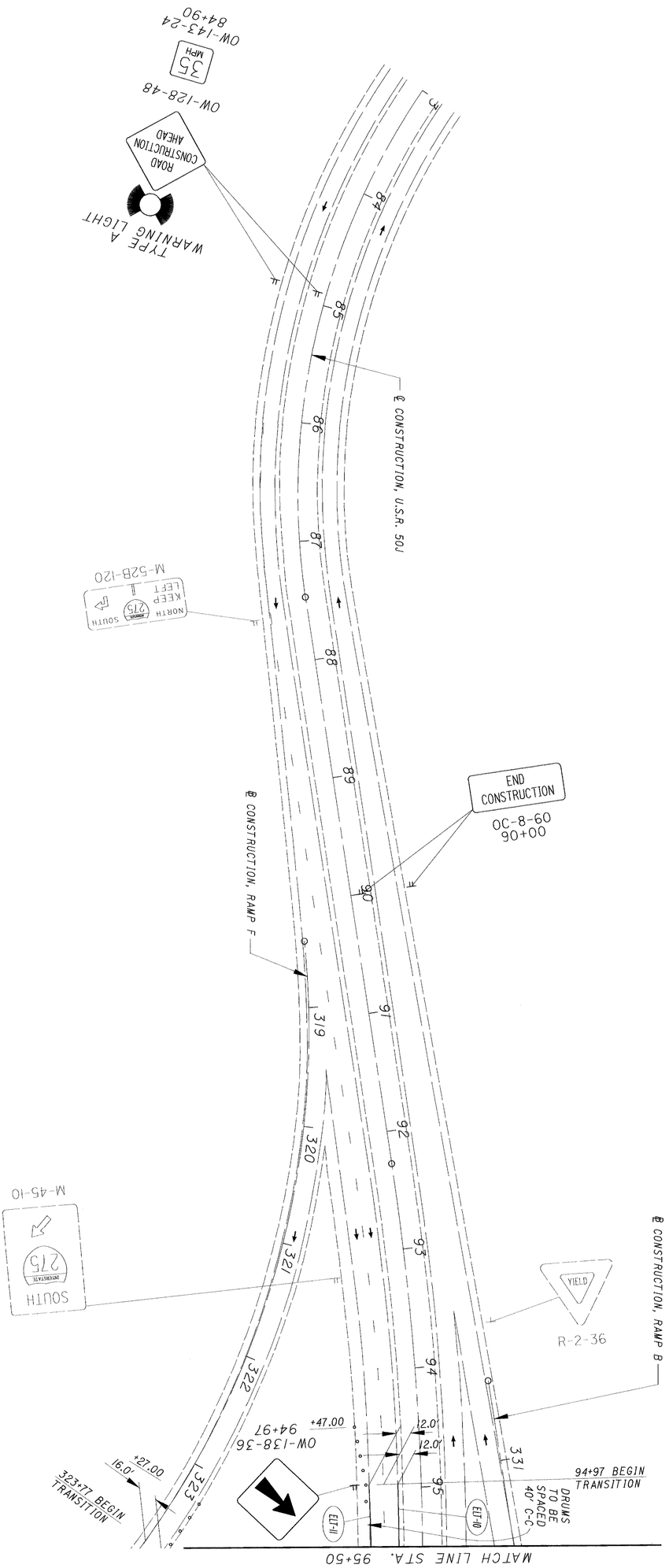

NOTES:

FOR M.O.T. LEGEND, SEE SHEET NO. 88
FOR QUANTITIES, SEE M.O.T. SUBSUMMARY.
FOR M.O.T. TYPICAL SECTIONS, SEE SHEET NO. 83

100 / 857	CLE-275-5.35	MAINTENANCE OF TRAFFIC PHASE ONE-A, U.S.R. 50J	CALCULATED JGB CHECKED AM	0 50 25 100 HORIZONTAL SCALE IN FEET

OR-41B-36
OR-43R-36
ONE WAY
DO NOT ENTER
ONE WAY
OR-43L-36
OR-120-36
327+30
OD-11A-48
HILLSBORO
325+45.00 BEGIN TRANSITION END PCB
℄ CONSTRUCTION, RAMP B
W-49R-36
328+45.00 END TRANSITION
DRUMS TO BE SPACED 40' C-C
℄ CONSTRUCTION RAMP C
PCB-2
W-60C-36
PEDESTRIANS AND BICYCLES PROHIBITED
OW-138-36 102+50
SOUTH
INTERSTATE 275
NORTH LANE ENDS
REMOVE
YIELD
EXIT 59A
GF
EL-4
EL-5
PCB-1
EL-1
LL-1
LL-2
EL-3
RAMP
35 MPH
CHLT-5
CHLT-6
OW-138-36 103+50
+82.35
104+50 END TRANSITION
13' MIN.
DRUMS TO BE SPACED 20' C-C
99+35.50 END TRANSITION END PCB
96+35.50 BEGIN TRANSITION
+85.50
ELT-6
ELT-12
ELT-13
LLT-5
20:1 TAPER
101+50 BEGIN TRANSITION
PCB-4
+42.50
Tapered End Section
IMPACT ATTENUATOR UNIDIRECTIONAL
MATCH LINE STA. 95+50
ELT-10
LLT-4
96
97
98
99
100
101
102
103
104
105
106
107
PCB
MATCH LINE STA. 108+00
ELT-11
OW-138-36 95+97
+54.97 BEGIN PCB
97+97 END TRANSITION
PCB-3
20:1 TAPER
Tapered End Section
100+13 BEGIN TRANSITION END PCB
℄ CONSTRUCTION U.S.R. 50J
RELOCATE TO STA. 99+00.00
103+13 END TRANSITION
W-45-12
KEEP LEFT
NORTH 275
RIGHT LANE ENDS
W-53-36
W-49R-36
OW-138-36 96+77
OW-138-36 323+77
OW-138-36 325+77
ELT-14
324
325
326
OW-138-36 324+77
℄ CONSTRUCTION RAMP F
MATCH LINE STA. 326+50 SEE SHEET NO. 104
Hillsboro
50
EXIT 59B
35 MPH
EXIT
EXIT
GF
EL-7

NOTES:

FOR M.O.T. LEGEND, SEE SHEET NO. 88
FOR QUANTITIES, SEE M.O.T. SUBSUMMARY.
FOR M.O.T. TYPICAL SECTIONS, SEE SHEET NO. 83

HORIZONTAL SCALE IN FEET
0 25 50 100

CALCULATED JGB
CHECKED AM

MAINTENANCE OF TRAFFIC PHASE ONE-A, U.S.R. 50J

CLE-275-5.35

101
859

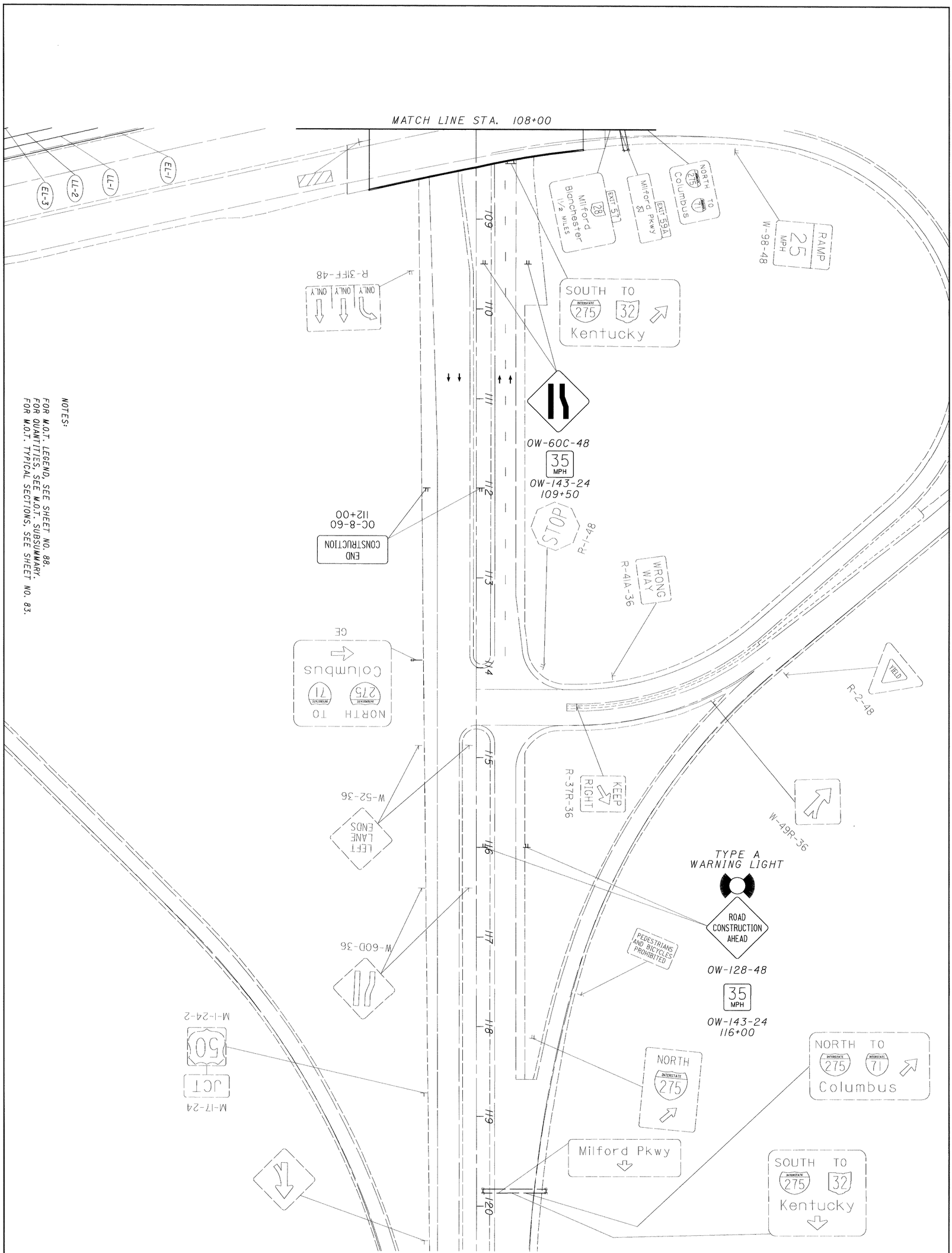

NOTES:

FOR M.O.T. LEGEND, SEE SHEET NO. 88.
FOR QUANTITIES, SEE M.O.T. SUBSUMMARY.
FOR M.O.T. TYPICAL SECTIONS, SEE SHEET NO. 83.

857 / 102	CLE-275-5.35	MAINTENANCE OF TRAFFIC PHASE ONE-A, U.S.R. 50J	CALCULATED JGB CHECKED AM	0 50 25 100 HORIZONTAL SCALE IN FEET	N

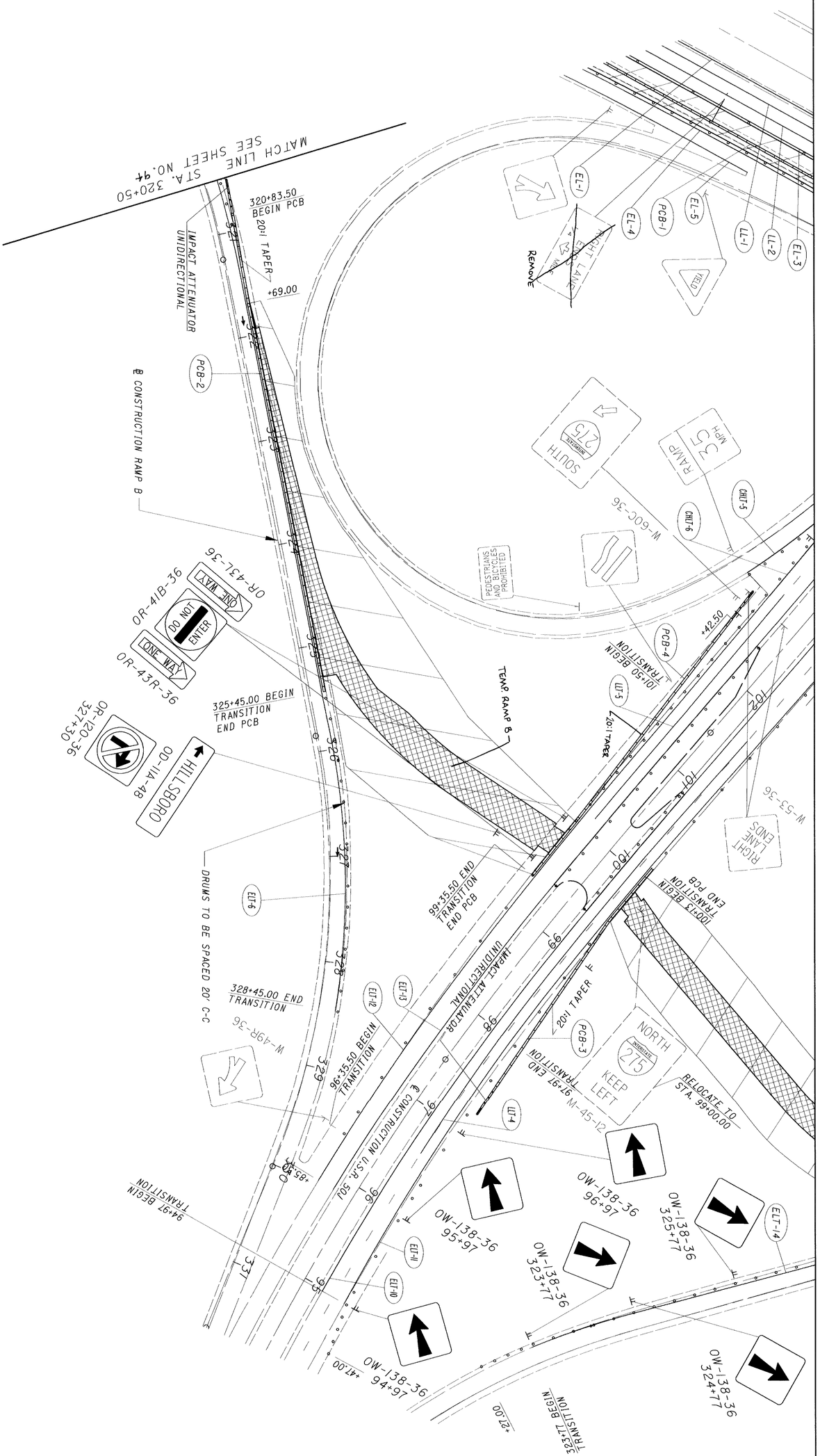

NOTES:

FOR M.O.T. LEGEND, SEE SHEET NO. 88.
FOR QUANTITIES, SEE M.O.T. SUBSUMMARY.
FOR M.O.T. TYPICAL SECTIONS, SEE SHEET NO. 83

85 / 103	CLE-275-5.35	MAINTENANCE OF TRAFFIC PHASE ONE-A, RAMP B	CALCULATED JGB CHECKED AM	0 50 25 100 HORIZONTAL SCALE IN FEET

NOTES:

FOR M.O.T. LEGEND, SEE SHEET NO. 88
FOR QUANTITIES, SEE M.O.T. SUBSUMMARY.
FOR M.O.T. TYPICAL SECTIONS, SEE SHEET NO. 83

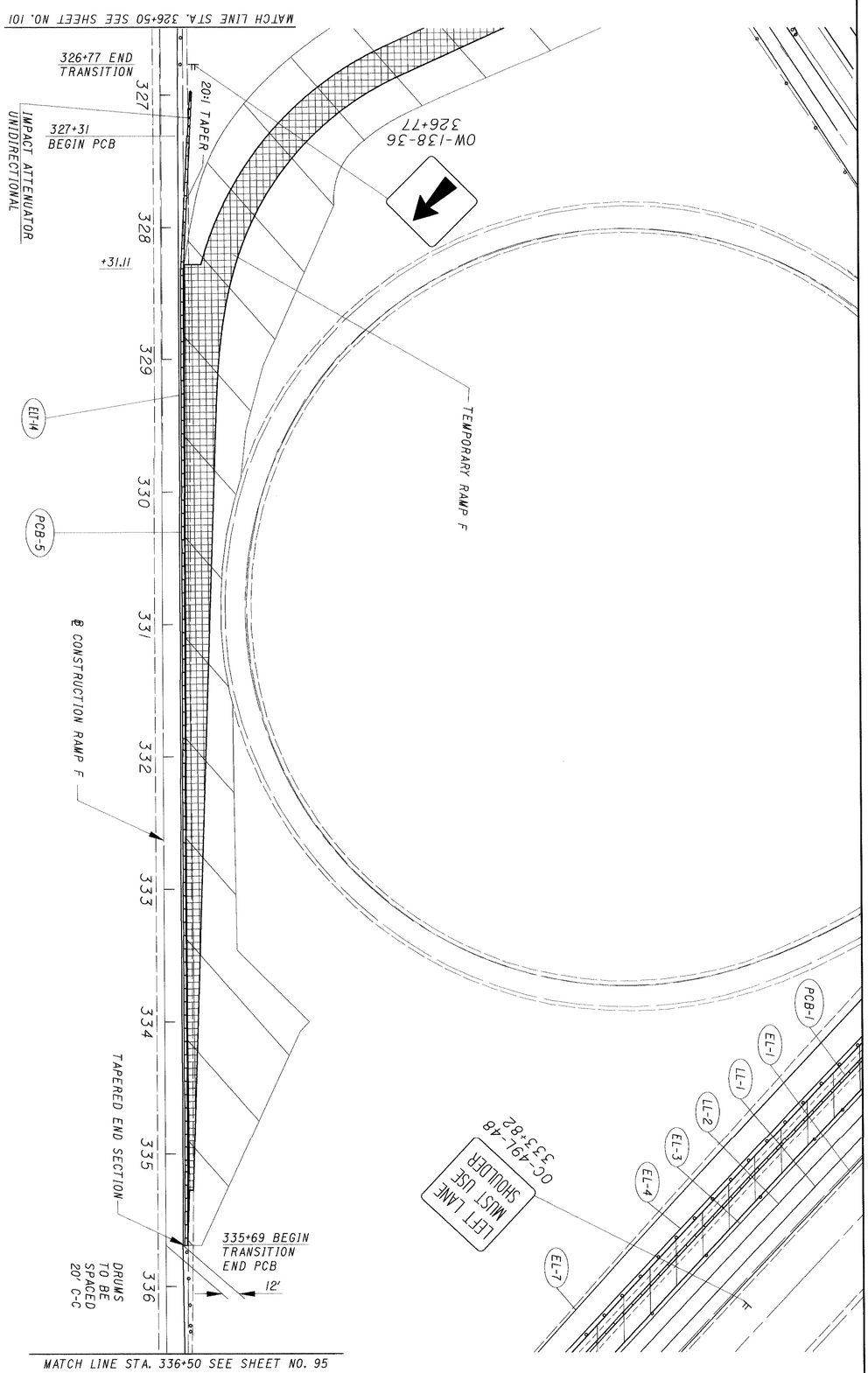

104 / 858	CLE-275-5.35	MAINTENANCE OF TRAFFIC PHASE ONE-A, RAMP F	CALCULATED JGB CHECKED AM	0 50 25 100 HORIZONTAL SCALE IN FEET

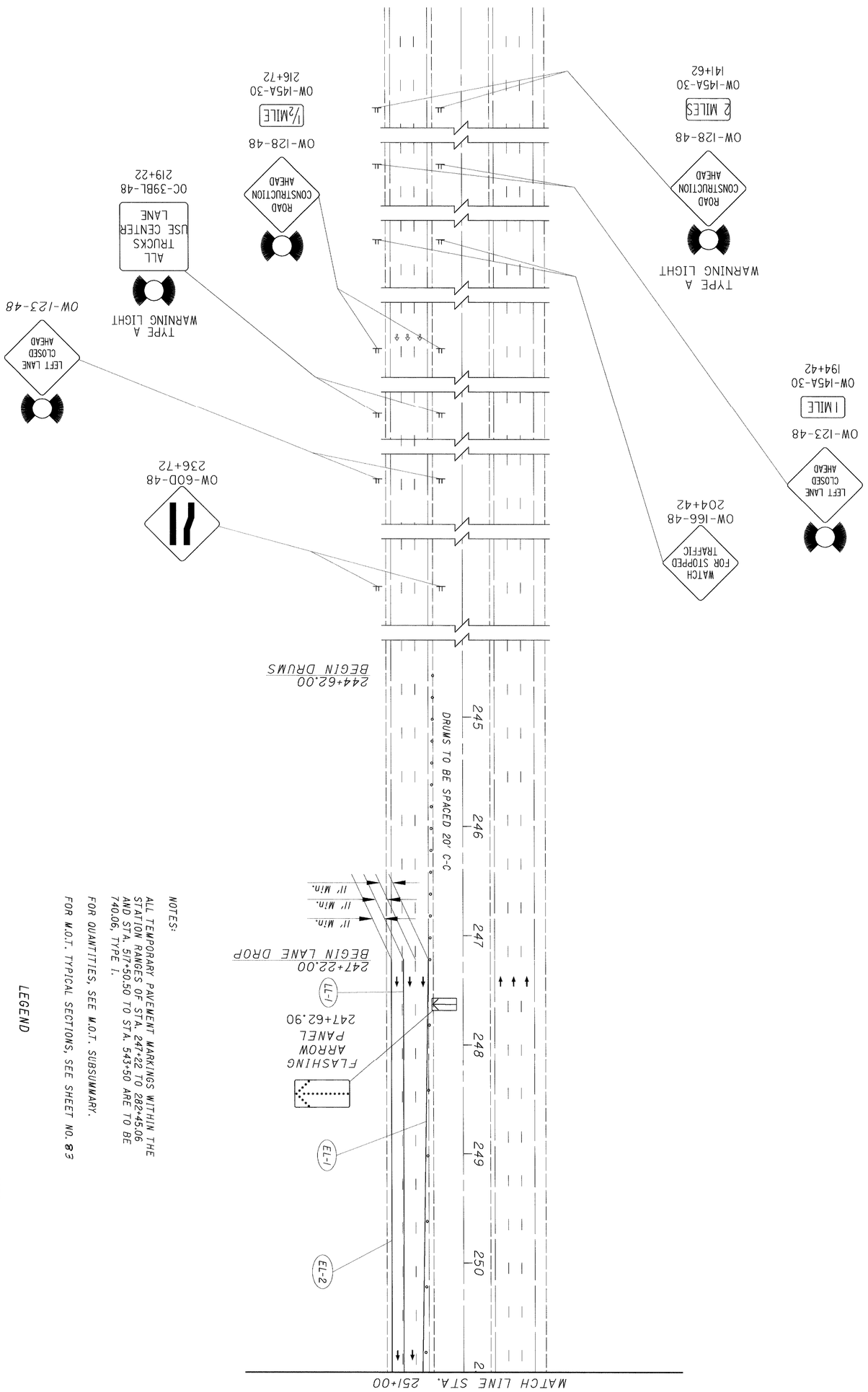

NOTES:

ALL TEMPORARY PAVEMENT MARKINGS WITHIN THE STATION RANGES OF STA. 247+22 TO 282+45.06 AND STA. 5/7+50.50 TO STA. 543+50 ARE TO BE 740.06, TYPE 1.

FOR QUANTITIES, SEE M.O.T. SUBSUMMARY.

FOR M.O.T. TYPICAL SECTIONS, SEE SHEET NO. 83

LEGEND

32" PORTABLE CONCRETE BARRIER

AREA TO BE CONSTRUCTED

TEMPORARY PAVEMENT, CLASS A

83 / 105	CLE-275-5.35	MAINTENANCE OF TRAFFIC PHASE ONE-B, I.R. 275	CALCULATED JGB CHECKED AM	0 50 25 100 HORIZONTAL SCALE IN FEET	N

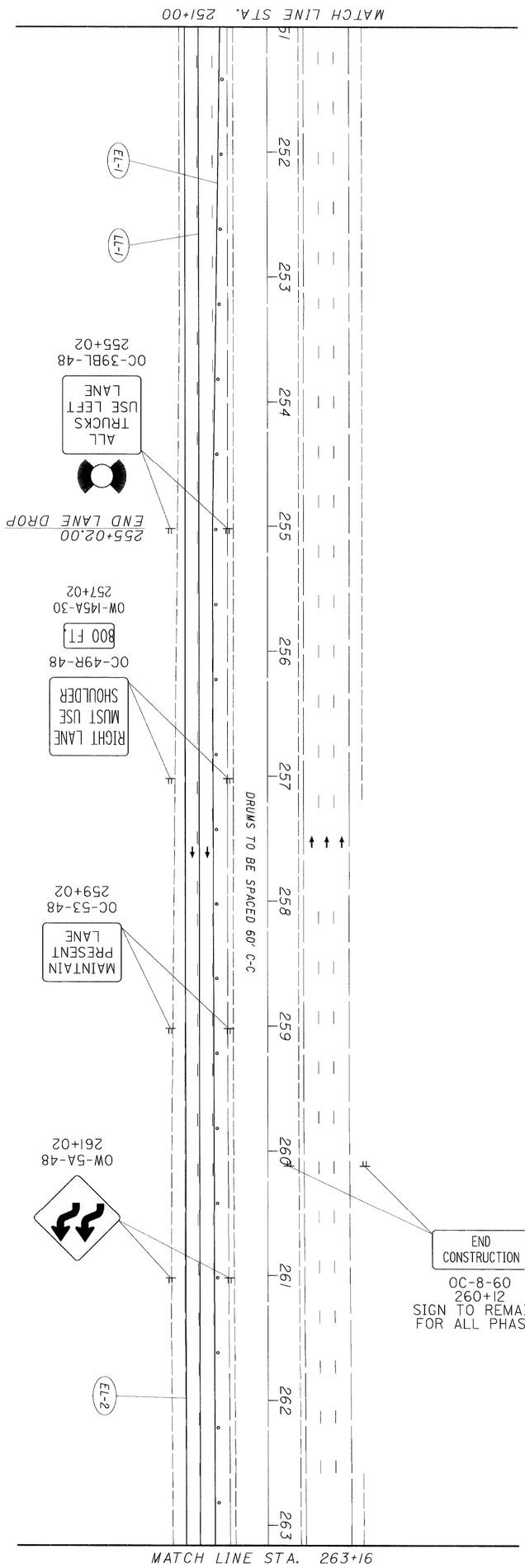

NOTES:

FOR M.O.T. LEGEND, SEE SHEET NO. 105
FOR QUANTITIES, SEE M.O.T. SUBSUMMARY.
FOR M.O.T. TYPICAL SECTIONS, SEE SHEET NO. 83

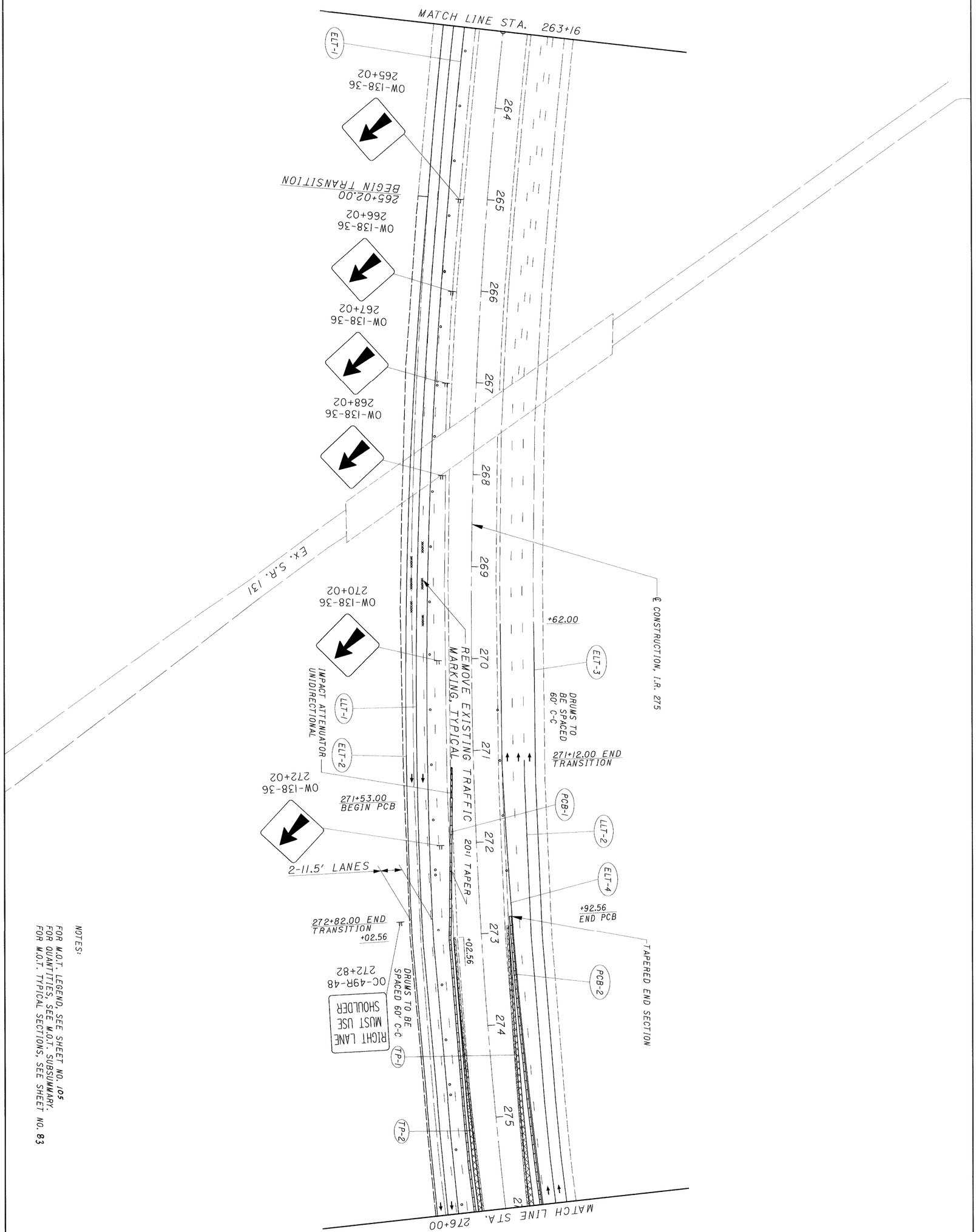

NOTES:

FOR M.O.T. LEGEND, SEE SHEET NO. 105
FOR QUANTITIES, SEE M.O.T. SUBSUMMARY.
FOR M.O.T. TYPICAL SECTIONS, SEE SHEET NO. 83

107 / 858	CLE-275-5.35	MAINTENANCE OF TRAFFIC PHASE ONE-B, I.R. 275	CALCULATED JGB CHECKED AM	0 50 25 100 HORIZONTAL SCALE IN FEET	N

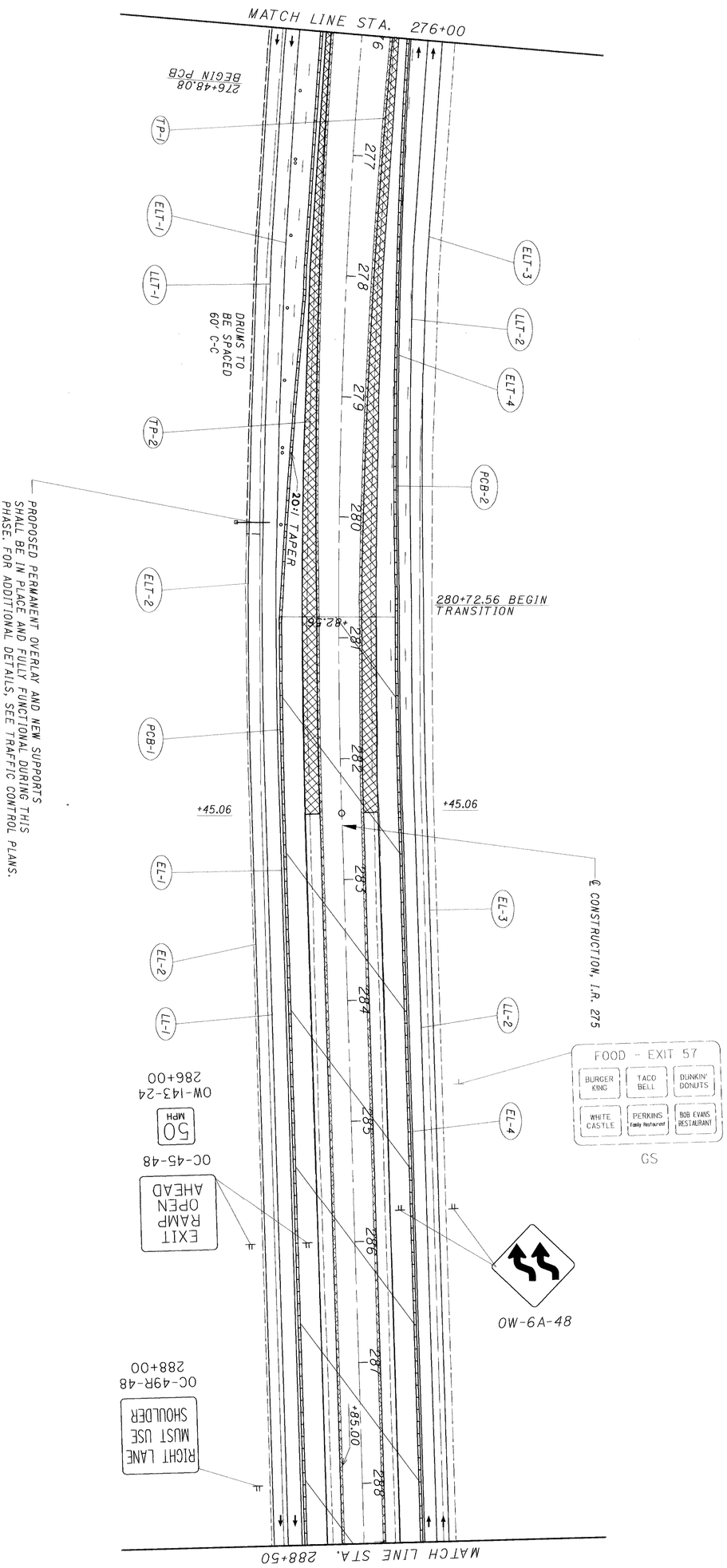

PROPOSED PERMANENT OVERLAY AND NEW SUPPORTS SHALL BE IN PLACE AND FULLY FUNCTIONAL DURING THIS PHASE. FOR ADDITIONAL DETAILS, SEE TRAFFIC CONTROL PLANS.

NOTES:

FOR M.O.T. LEGEND, SEE SHEET NO. 105
FOR QUANTITIES, SEE M.O.T. SUBSUMMARY.
FOR M.O.T. TYPICAL SECTIONS, SEE SHEET NO. 83

108 / 857	CLE-275-5.35	MAINTENANCE OF TRAFFIC PHASE ONE-B, I.R. 275	CALCULATED JGB CHECKED AM	0 25 50 100 HORIZONTAL SCALE IN FEET N

NOTES:

FOR M.O.T. LEGEND, SEE SHEET NO. 105
FOR QUANTITIES, SEE M.O.T. SUBSUMMARY.
FOR M.O.T. TYPICAL SECTIONS, SEE SHEET NO. 83

N

0 25 50 100
HORIZONTAL SCALE IN FEET

CALCULATED JGB
CHECKED AM

MAINTENANCE OF TRAFFIC
PHASE ONE-B, I.R. 275

CLE-275-5.35

109
857

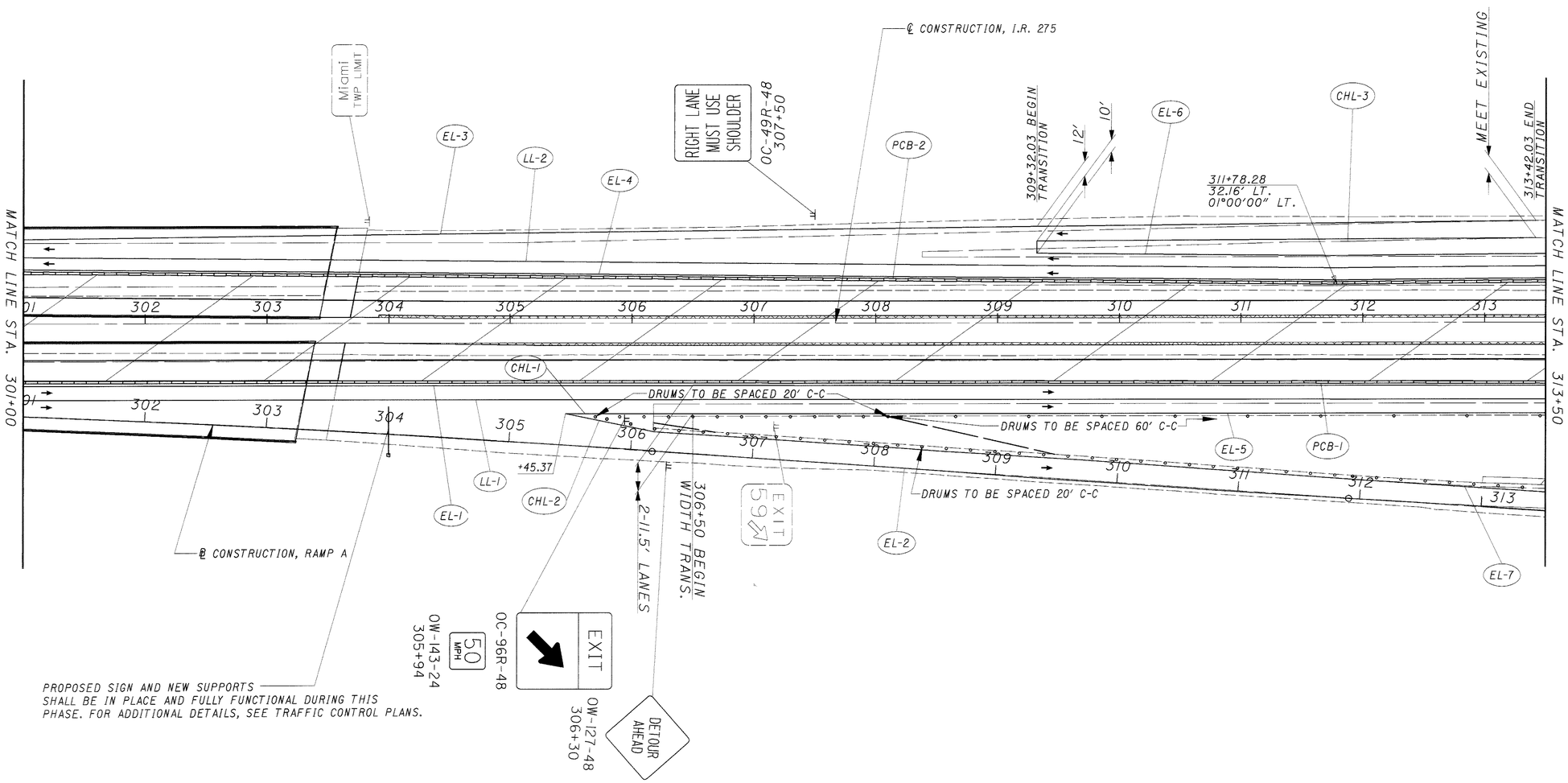

NOTES:

FOR M.O.T. LEGEND, SEE SHEET NO. 105
FOR QUANTITIES, SEE M.O.T. SUBSUMMARY.
FOR M.O.T. TYPICAL SECTIONS, SEE SHEET NO. 83

N

0 25 50 100
HORIZONTAL SCALE IN FEET

CALCULATED JGB
CHECKED AM

MAINTENANCE OF TRAFFIC
PHASE ONE-B, I.R. 275

CLE-275-5.35

110
857

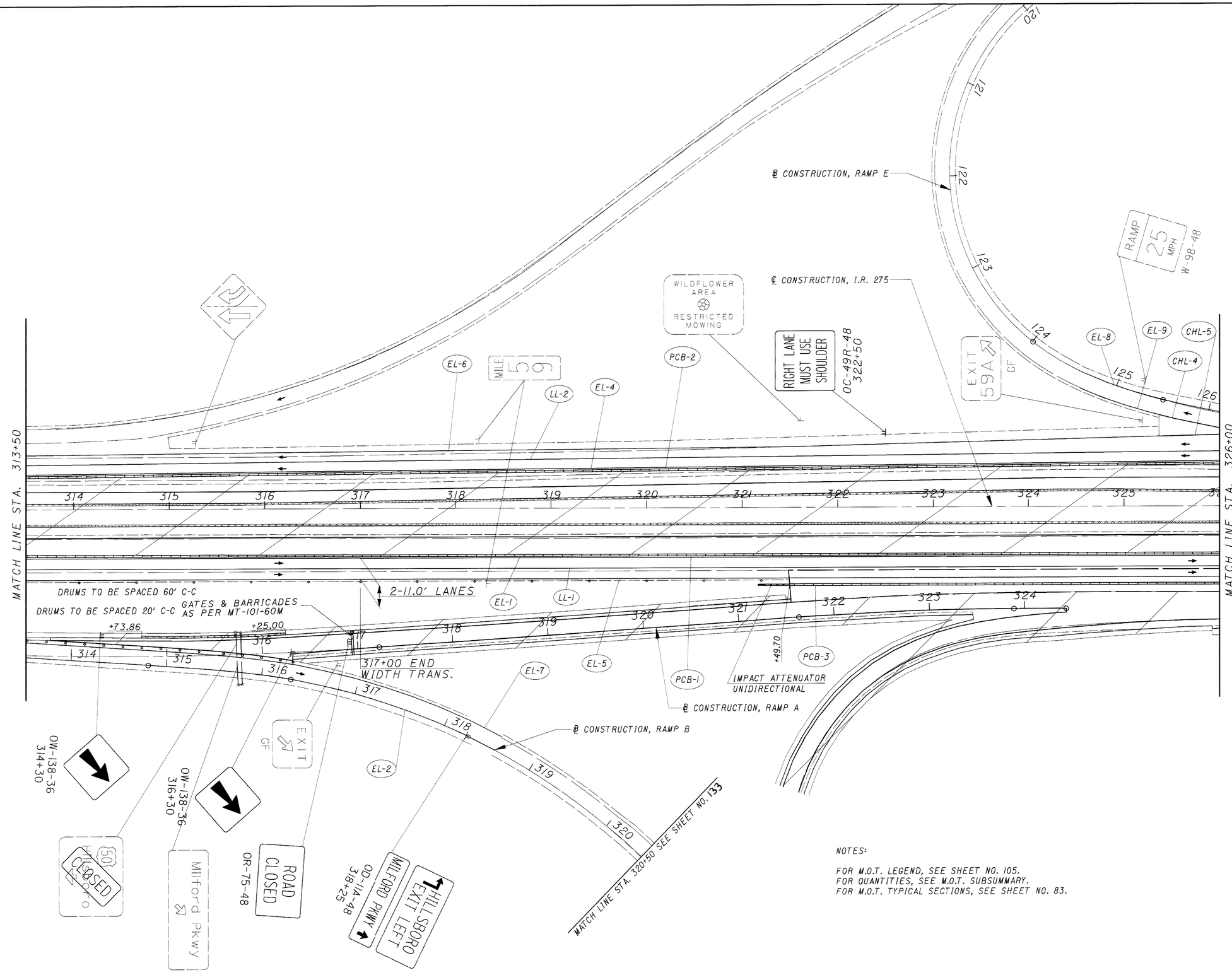

NOTES:

FOR M.O.T. LEGEND, SEE SHEET NO. 105.
FOR QUANTITIES, SEE M.O.T. SUBSUMMARY.
FOR M.O.T. TYPICAL SECTIONS, SEE SHEET NO. 83.

N

0 25 50 100
HORIZONTAL SCALE IN FEET

CALCULATED JGB
CHECKED AM

MAINTENANCE OF TRAFFIC PHASE ONE-B, I.R. 275

CLE-275-5.35

111
859

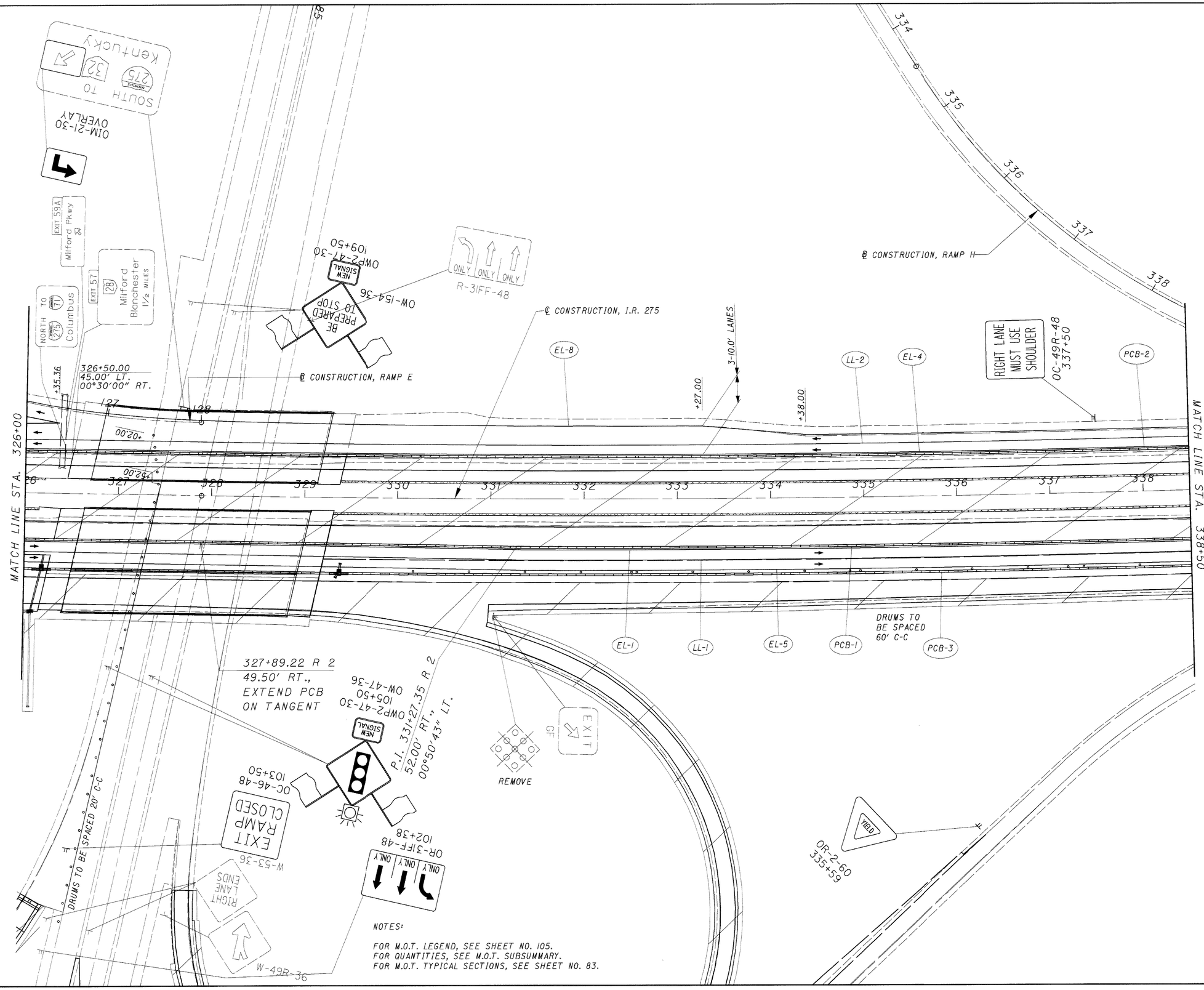

N

0 25 50 100
HORIZONTAL SCALE IN FEET

CALCULATED JGB
CHECKED AM

MAINTENANCE OF TRAFFIC
PHASE ONE-B, I.R. 275

CLE-275-5.35

112
857

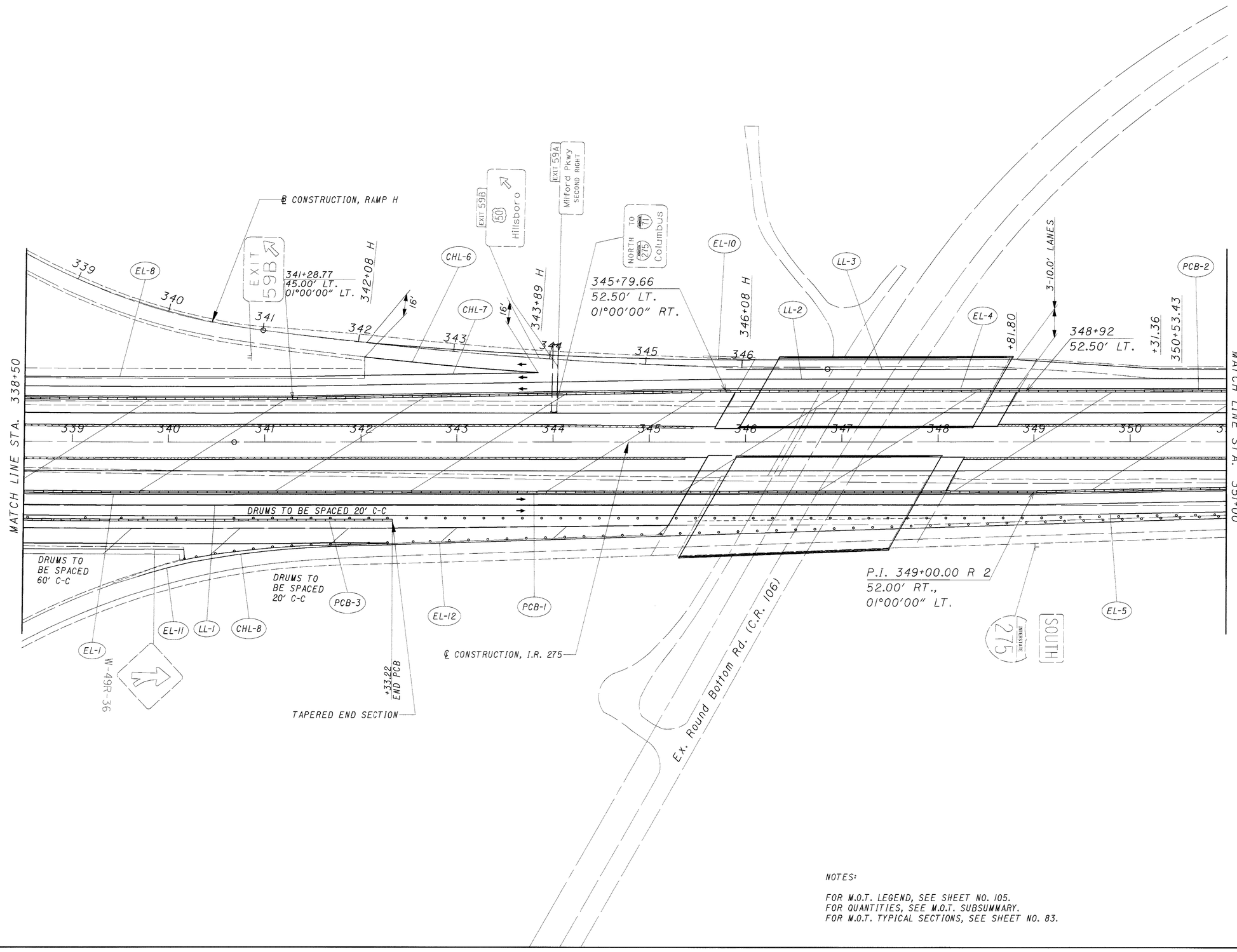

NOTES:

FOR M.O.T. LEGEND, SEE SHEET NO. 105.
FOR QUANTITIES, SEE M.O.T. SUBSUMMARY.
FOR M.O.T. TYPICAL SECTIONS, SEE SHEET NO. 83.

N

0 25 50 100
HORIZONTAL SCALE IN FEET

CALCULATED JGB
CHECKED AM

MAINTENANCE OF TRAFFIC
PHASE ONE-B, I.R. 275

CLE-275-5.35

113
857

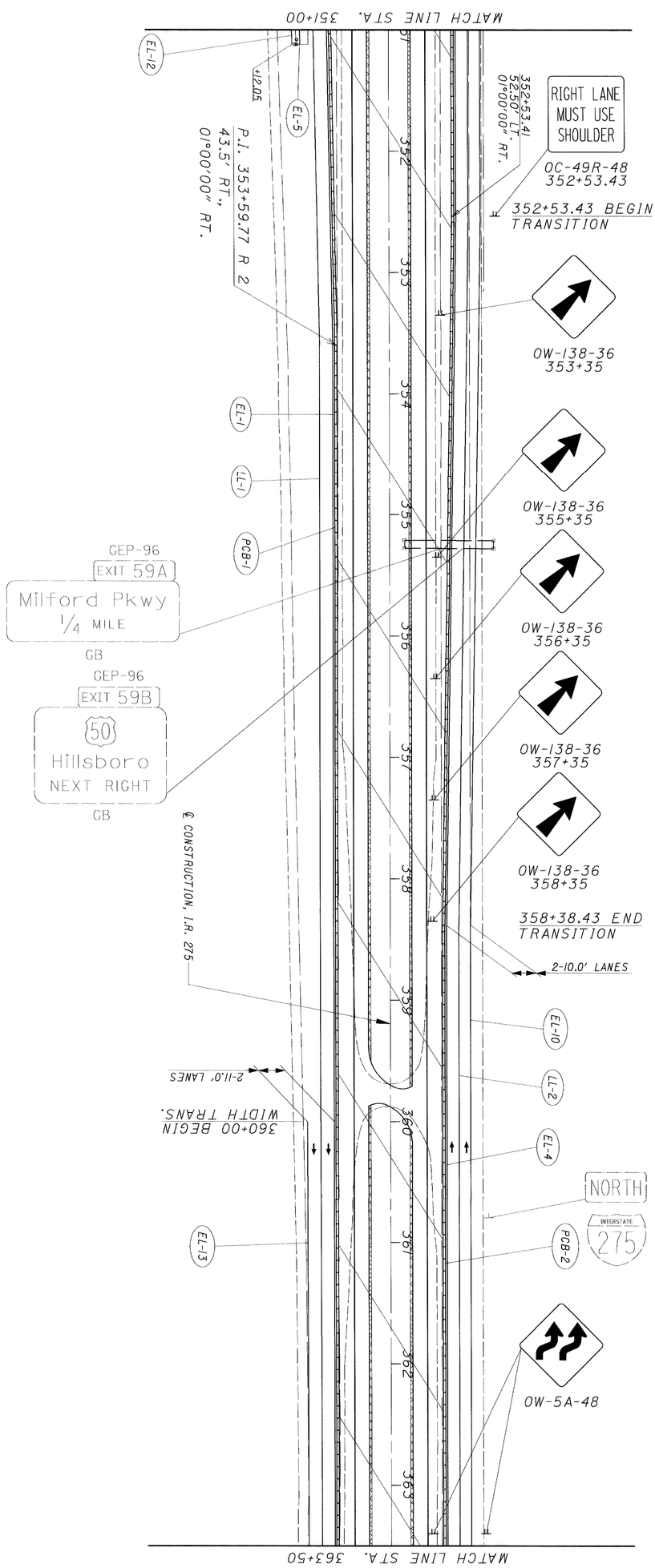

NOTES:

FOR M.O.T. LEGEND, SEE SHEET NO. 105
FOR QUANTITIES, SEE M.O.T. SUBSUMMARY.
FOR M.O.T. TYPICAL SECTIONS, SEE SHEET NO. 83

114 / 857	CLE-275-5.35	MAINTENANCE OF TRAFFIC PHASE ONE-B, I.R. 275	CALCULATED JGB CHECKED AM	0 50 25 100 HORIZONTAL SCALE IN FEET	N

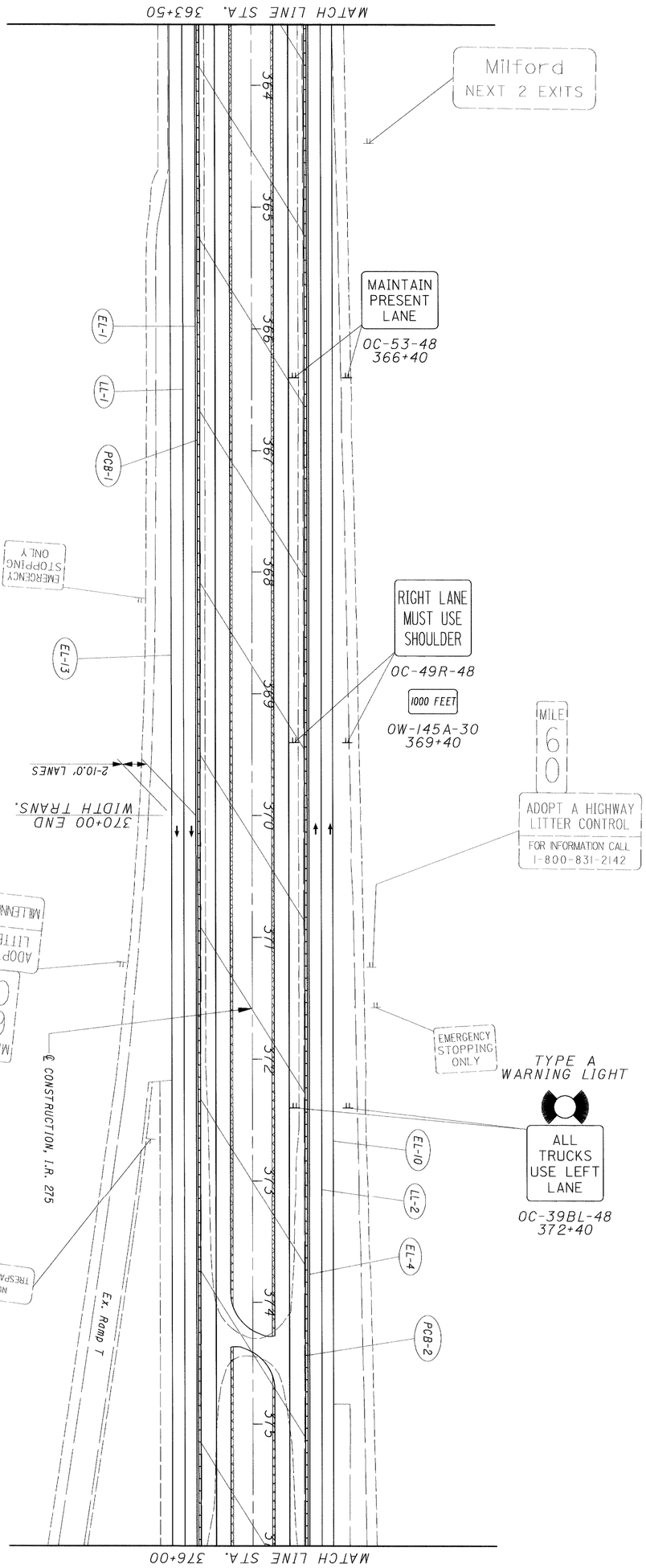

NOTES:

FOR M.O.T. LEGEND, SEE SHEET NO. 105
FOR QUANTITIES, SEE M.O.T. SUBSUMMARY.
FOR M.O.T. TYPICAL SECTIONS, SEE SHEET NO. 83

115 857	CLE-275-5.35	MAINTENANCE OF TRAFFIC PHASE ONE-B, I.R. 275	CALCULATED JGB CHECKED AM	0 50 25 100 HORIZONTAL SCALE IN FEET	N

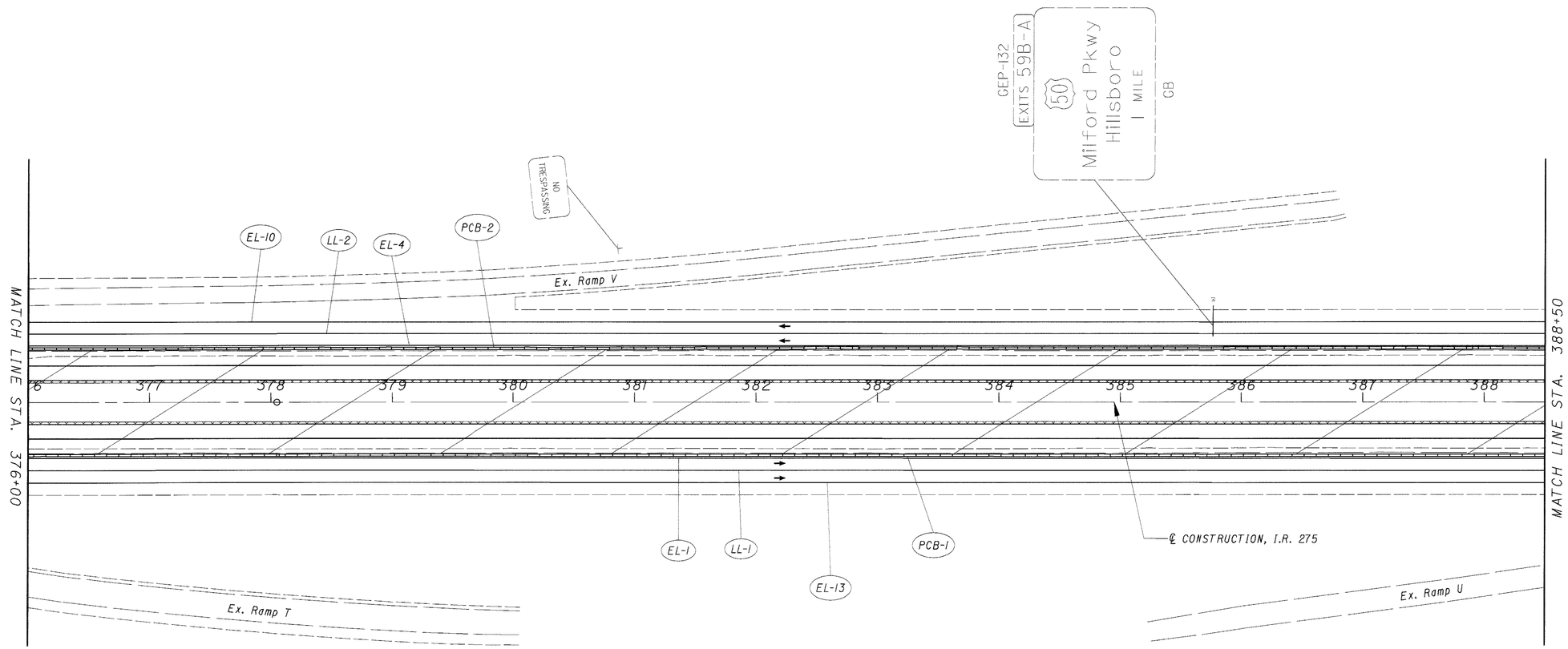

NOTES:

FOR M.O.T. LEGEND, SEE SHEET NO. 105
FOR QUANTITIES, SEE M.O.T. SUBSUMMARY.
FOR M.O.T. TYPICAL SECTIONS, SEE SHEET NO. 83

N

0 25 50 100
HORIZONTAL SCALE IN FEET

CALCULATED JGB
CHECKED AM

MAINTENANCE OF TRAFFIC PHASE ONE-B, I.R. 275

CLE-275-5.35

116
857

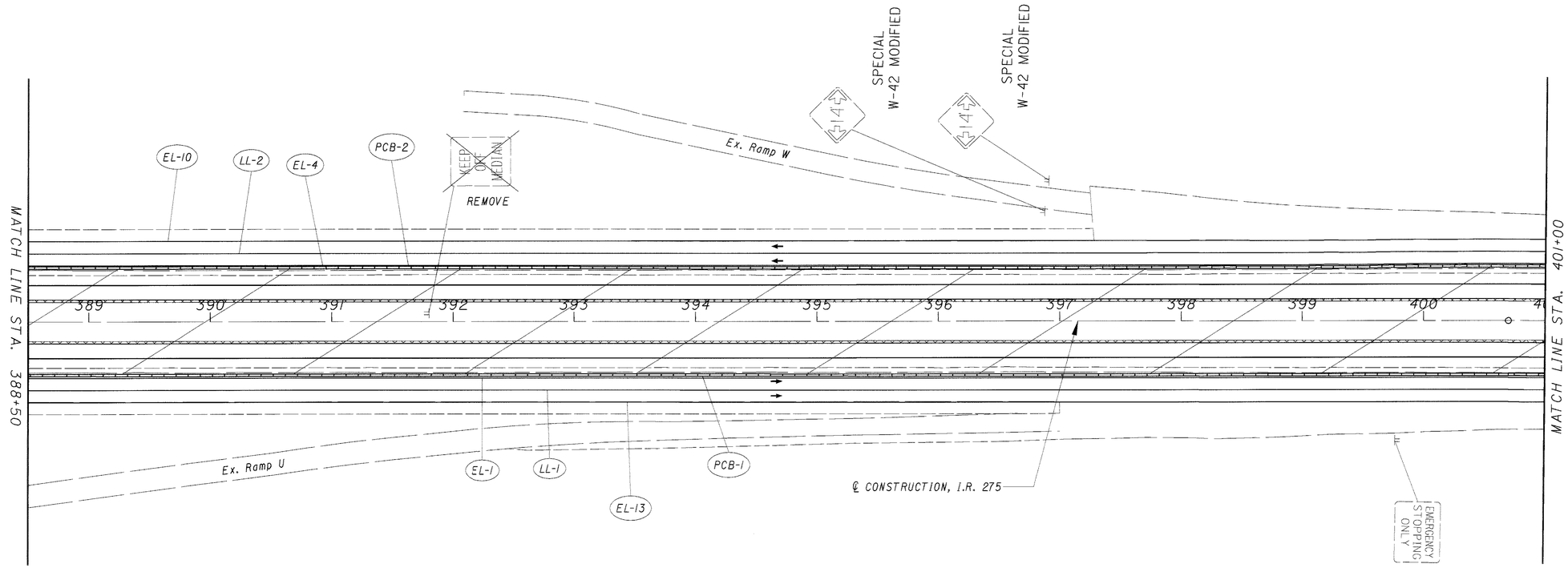

NOTES:

FOR M.O.T. LEGEND, SEE SHEET NO. 105
FOR QUANTITIES, SEE M.O.T. SUBSUMMARY.
FOR M.O.T. TYPICAL SECTIONS, SEE SHEET NO. 83

N

0 25 50 100
HORIZONTAL SCALE IN FEET

CALCULATED JGB
CHECKED AM

MAINTENANCE OF TRAFFIC
PHASE ONE-B, I.R. 275

CLE-275-5.35

117
857

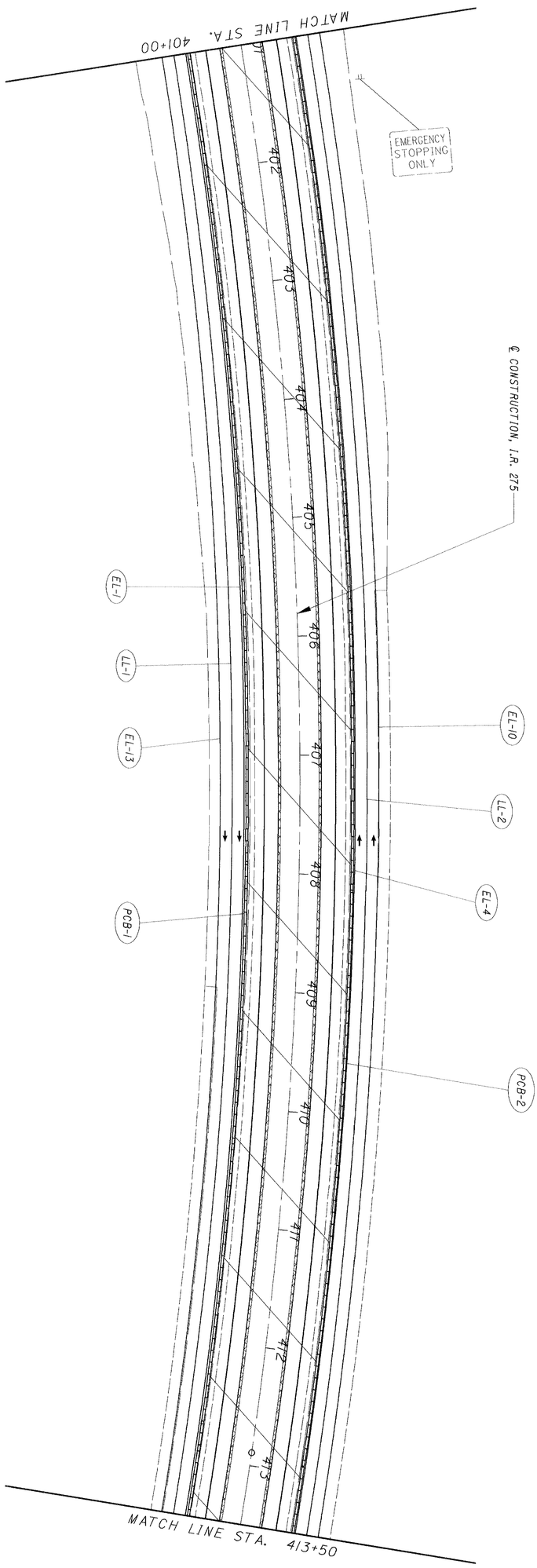

NOTES:

FOR M.O.T. LEGEND, SEE SHEET NO. 105
FOR QUANTITIES, SEE M.O.T. SUBSUMMARY.
FOR M.O.T. TYPICAL SECTIONS, SEE SHEET NO. 83

118 / 857	CLE-275-5.35	MAINTENANCE OF TRAFFIC PHASE ONE-B, I.R. 275	CALCULATED JGB CHECKED AM	0 50 25 100 HORIZONTAL SCALE IN FEET

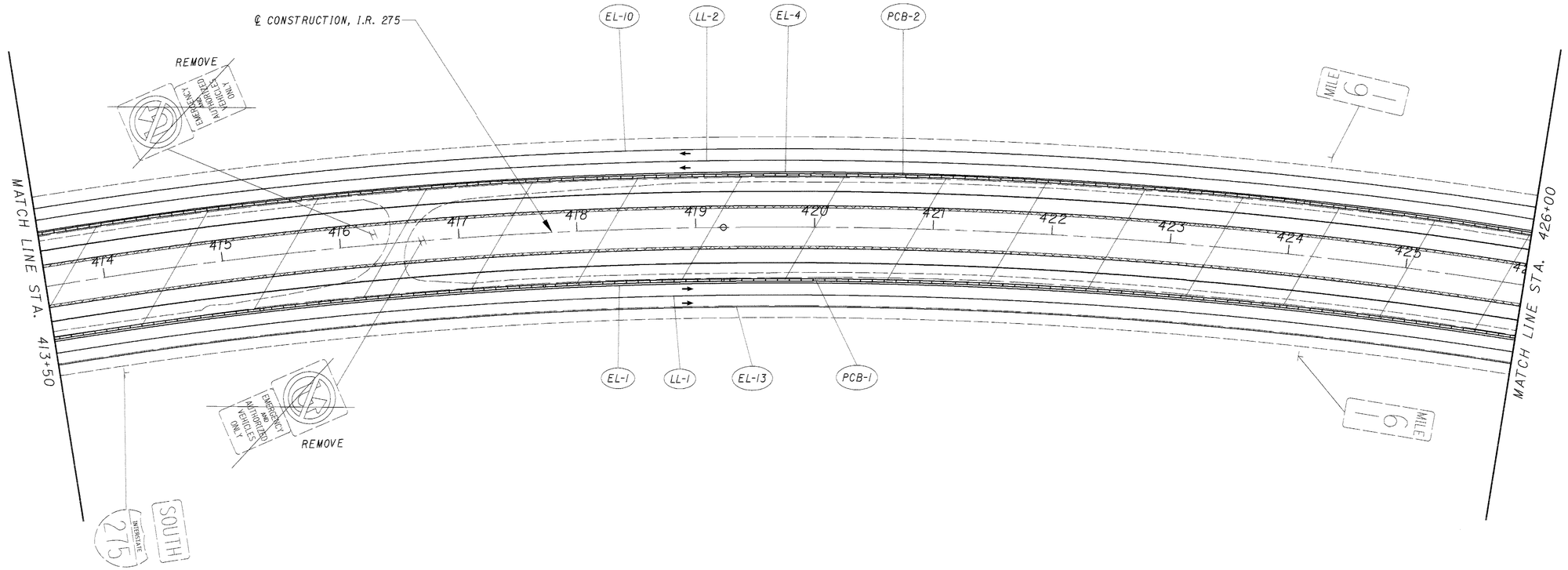

NOTES:

FOR M.O.T. LEGEND, SEE SHEET NO. 105
FOR QUANTITIES, SEE M.O.T. SUBSUMMARY.
FOR M.O.T. TYPICAL SECTIONS, SEE SHEET NO. 83

N

0 25 50 100
HORIZONTAL SCALE IN FEET

CALCULATED JGB
CHECKED AM

MAINTENANCE OF TRAFFIC PHASE ONE-B, I.R. 275

CLE-275-5.35

119
857

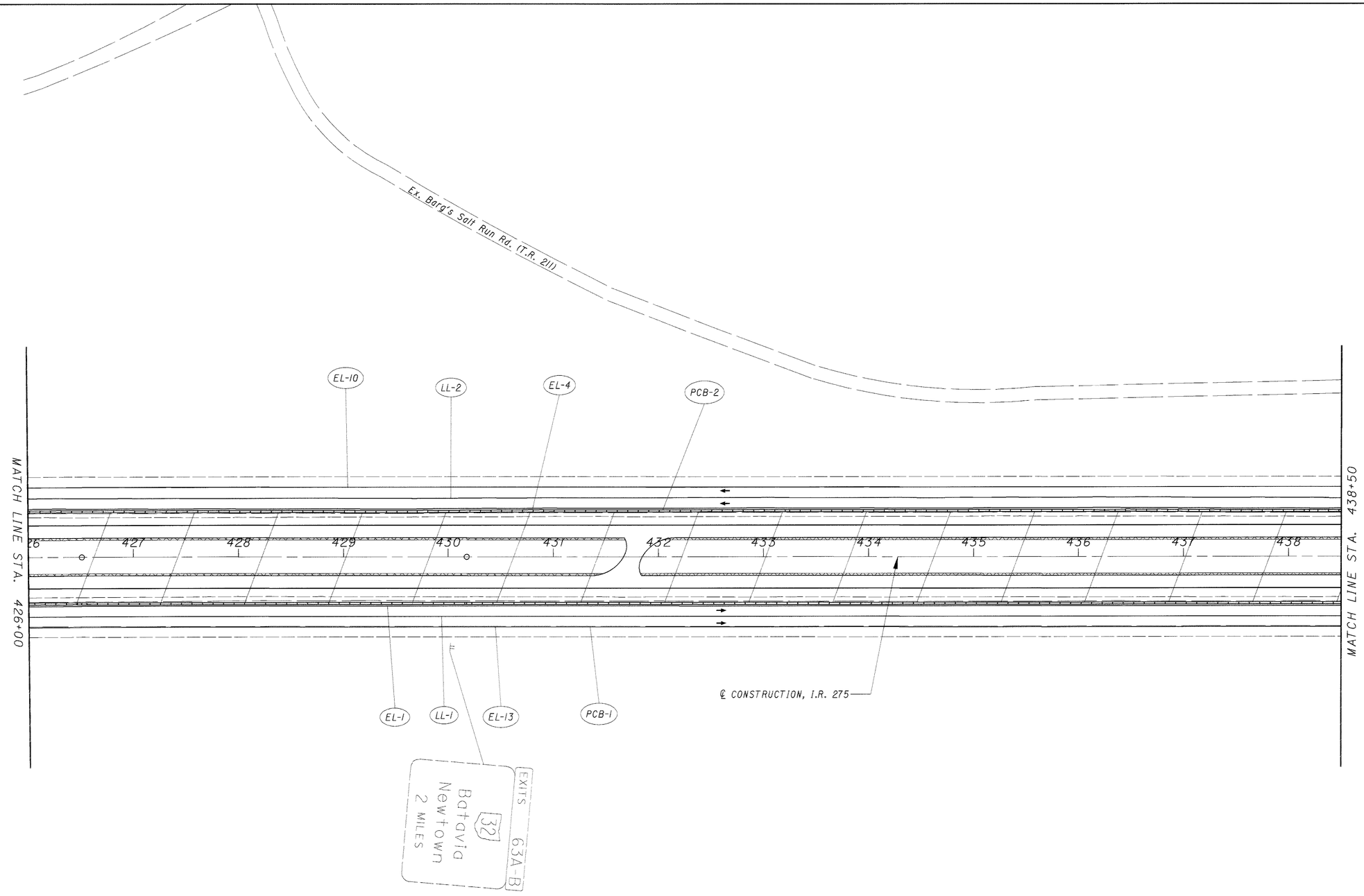

NOTES:

FOR M.O.T. LEGEND, SEE SHEET NO. **105**
FOR QUANTITIES, SEE M.O.T. SUBSUMMARY.
FOR M.O.T. TYPICAL SECTIONS, SEE SHEET NO. **83**

N

0 25 50 100
HORIZONTAL SCALE IN FEET

CALCULATED JGB
CHECKED AM

MAINTENANCE OF TRAFFIC
PHASE ONE-B, I.R. 275

CLE-275-5.35

120
857

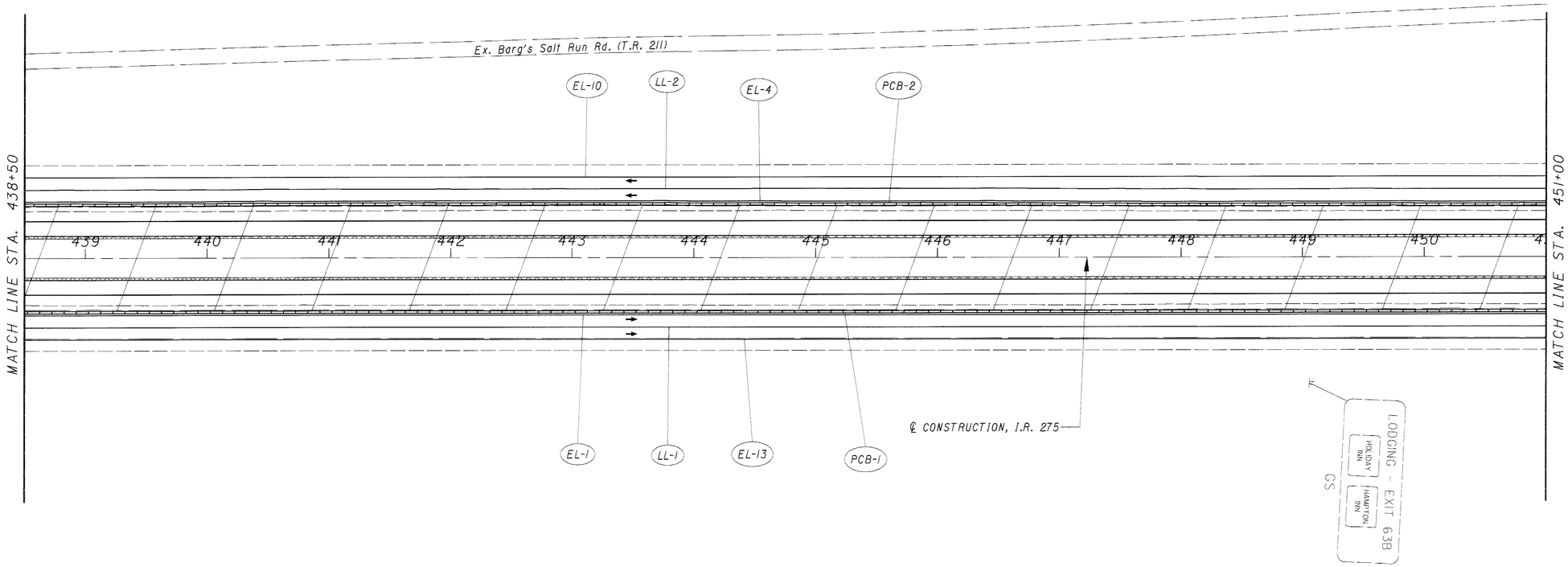

NOTES:

FOR M.O.T. LEGEND, SEE SHEET NO. **105**
FOR QUANTITIES, SEE M.O.T. SUBSUMMARY.
FOR M.O.T. TYPICAL SECTIONS, SEE SHEET NO. **83**

N

0 25 50 100
HORIZONTAL SCALE IN FEET

CALCULATED JGB
CHECKED AM

MAINTENANCE OF TRAFFIC
PHASE ONE-B, I.R. 275

CLE-275-5.35

121
859

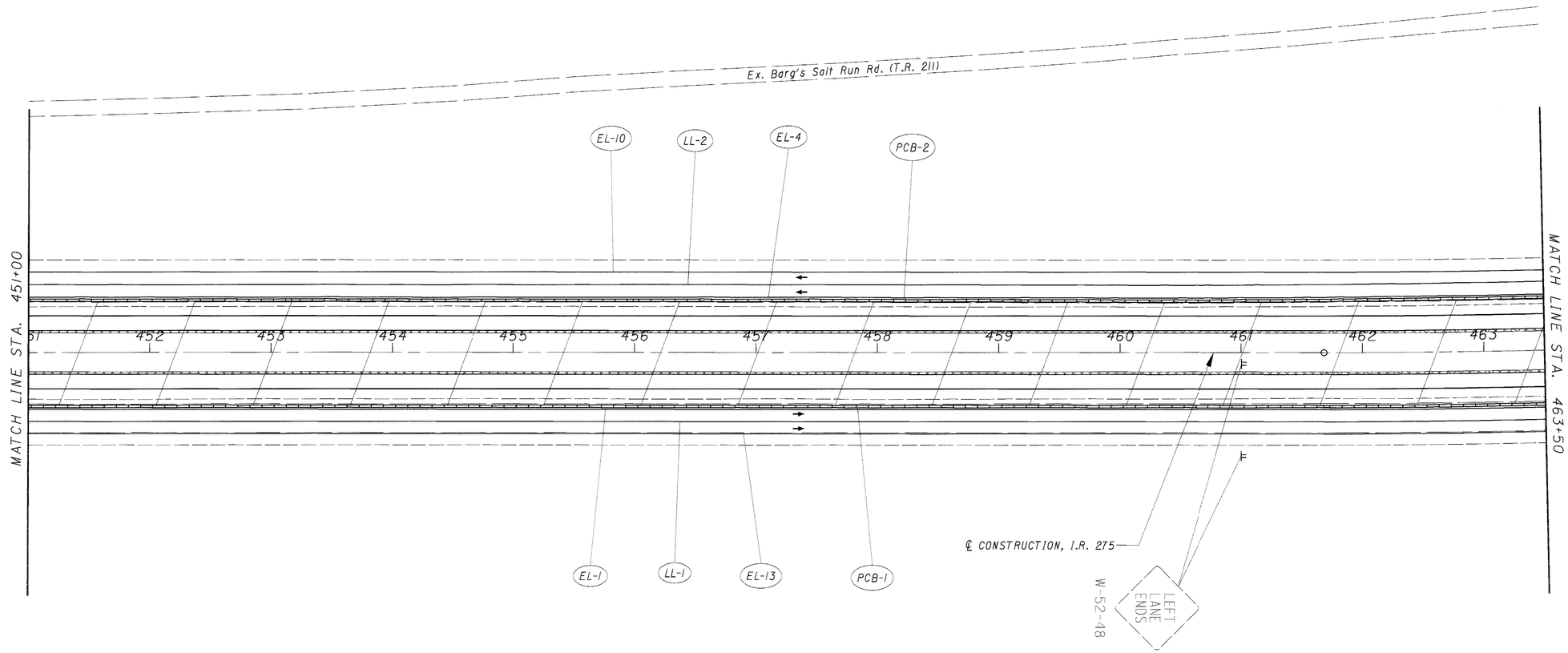

NOTES:

FOR M.O.T. LEGEND, SEE SHEET NO. 105
FOR QUANTITIES, SEE M.O.T. SUBSUMMARY.
FOR M.O.T. TYPICAL SECTIONS, SEE SHEET NO. 83

N

0 25 50 100
HORIZONTAL SCALE IN FEET

CALCULATED JGB
CHECKED AM

MAINTENANCE OF TRAFFIC
PHASE ONE-B, I.R. 275

CLE-275-5.35

122
857

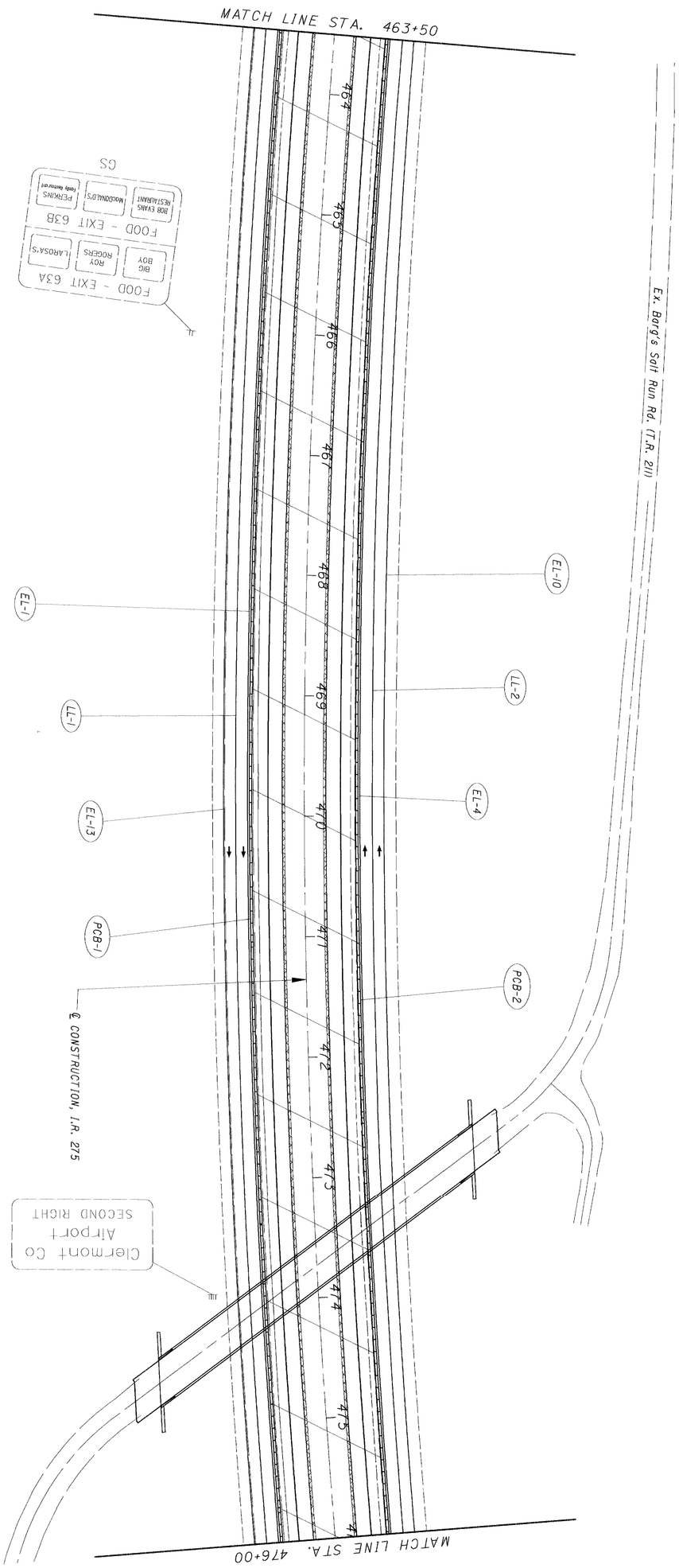

NOTES:

FOR M.O.T. LEGEND, SEE SHEET NO. **105**
FOR QUANTITIES, SEE M.O.T. SUBSUMMARY.
FOR M.O.T. TYPICAL SECTIONS, SEE SHEET NO. **83**

123 / 857	**CLE-275-5.35**	**MAINTENANCE OF TRAFFIC PHASE ONE-B, I.R. 275**	CALCULATED JGB / CHECKED AM	0 50 25 100 HORIZONTAL SCALE IN FEET	N

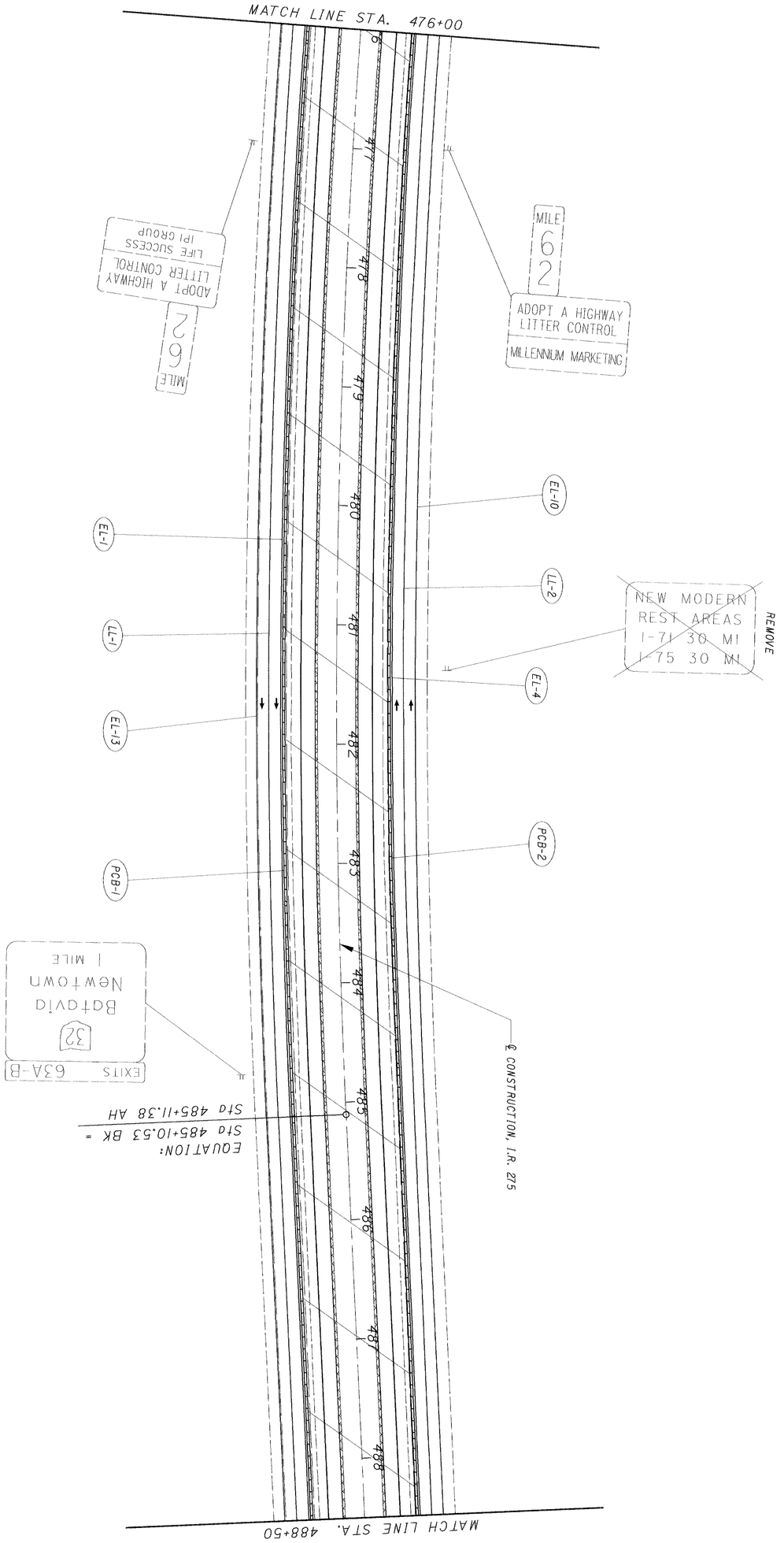

NOTES:

FOR M.O.T. LEGEND, SEE SHEET NO. 105
FOR QUANTITIES, SEE M.O.T. SUBSUMMARY.
FOR M.O.T. TYPICAL SECTIONS, SEE SHEET NO. 83

124 / 857	CLE-275-5.35	MAINTENANCE OF TRAFFIC PHASE ONE-B, I.R. 275	CALCULATED JGB / CHECKED AM	0 50 25 100 HORIZONTAL SCALE IN FEET	N

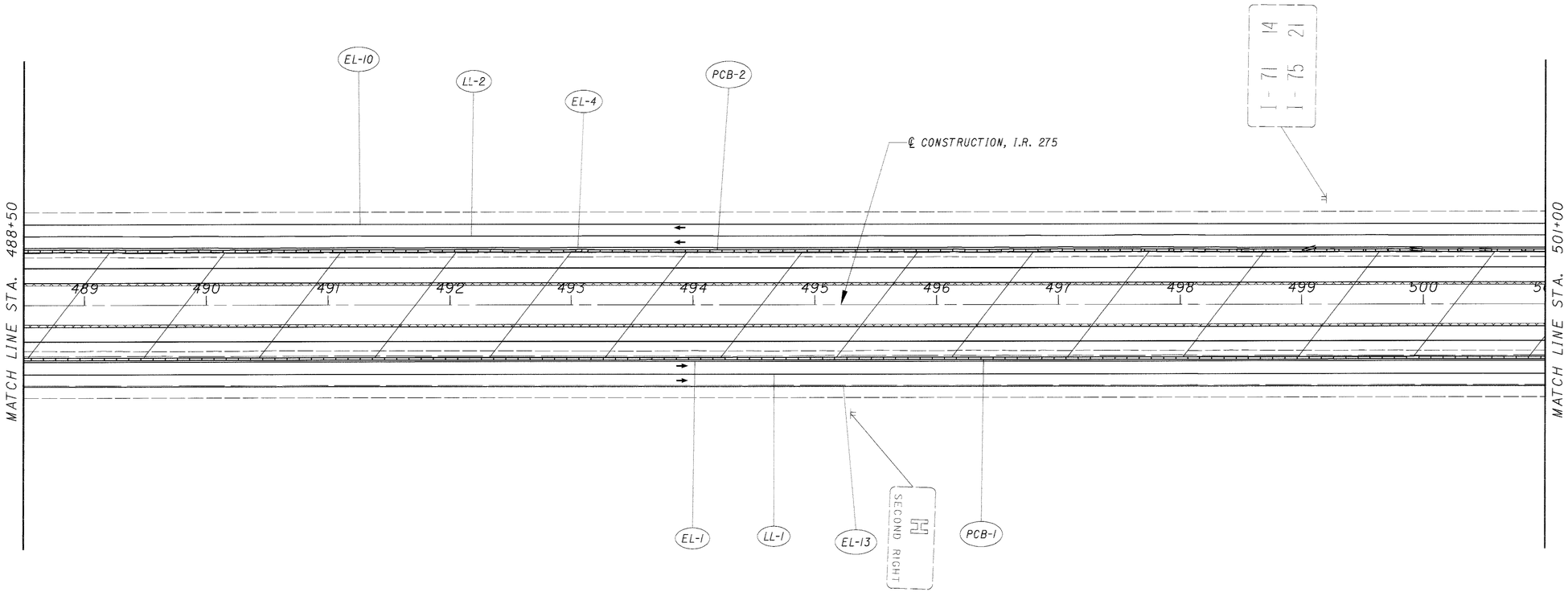

NOTES:

FOR M.O.T. LEGEND, SEE SHEET NO. **105**
FOR QUANTITIES, SEE M.O.T. SUBSUMMARY.
FOR M.O.T. TYPICAL SECTIONS, SEE SHEET NO. **83**

N

0 25 50 100
HORIZONTAL SCALE IN FEET

CALCULATED JGB
CHECKED AM

MAINTENANCE OF TRAFFIC
PHASE ONE-B, I.R. 275

CLE-275-5.35

125
857

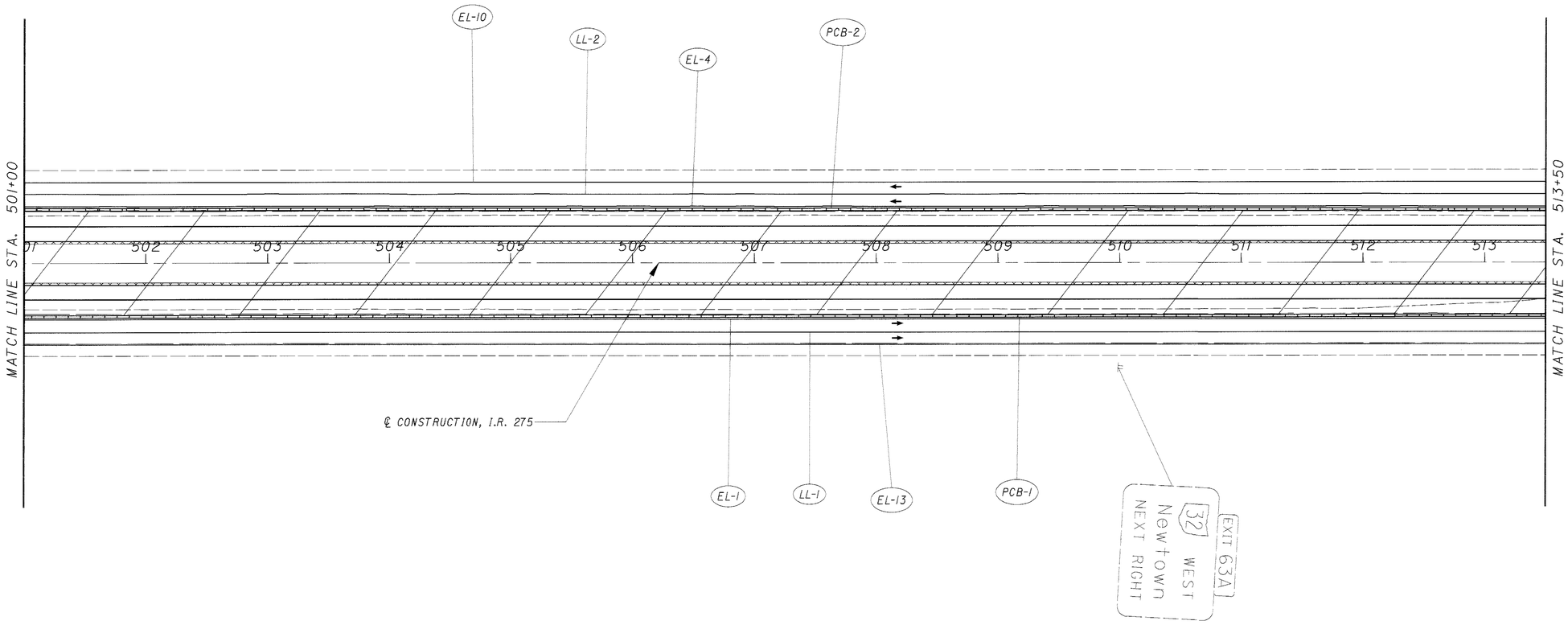

NOTES:

FOR M.O.T. LEGEND, SEE SHEET NO. **105**
FOR QUANTITIES, SEE M.O.T. SUBSUMMARY.
FOR M.O.T. TYPICAL SECTIONS, SEE SHEET NO. **83**

N

0 25 50 100
HORIZONTAL SCALE IN FEET

CALCULATED JGB
CHECKED AM

MAINTENANCE OF TRAFFIC
PHASE ONE-B, I.R. 275

CLE-275-5.35

126
859

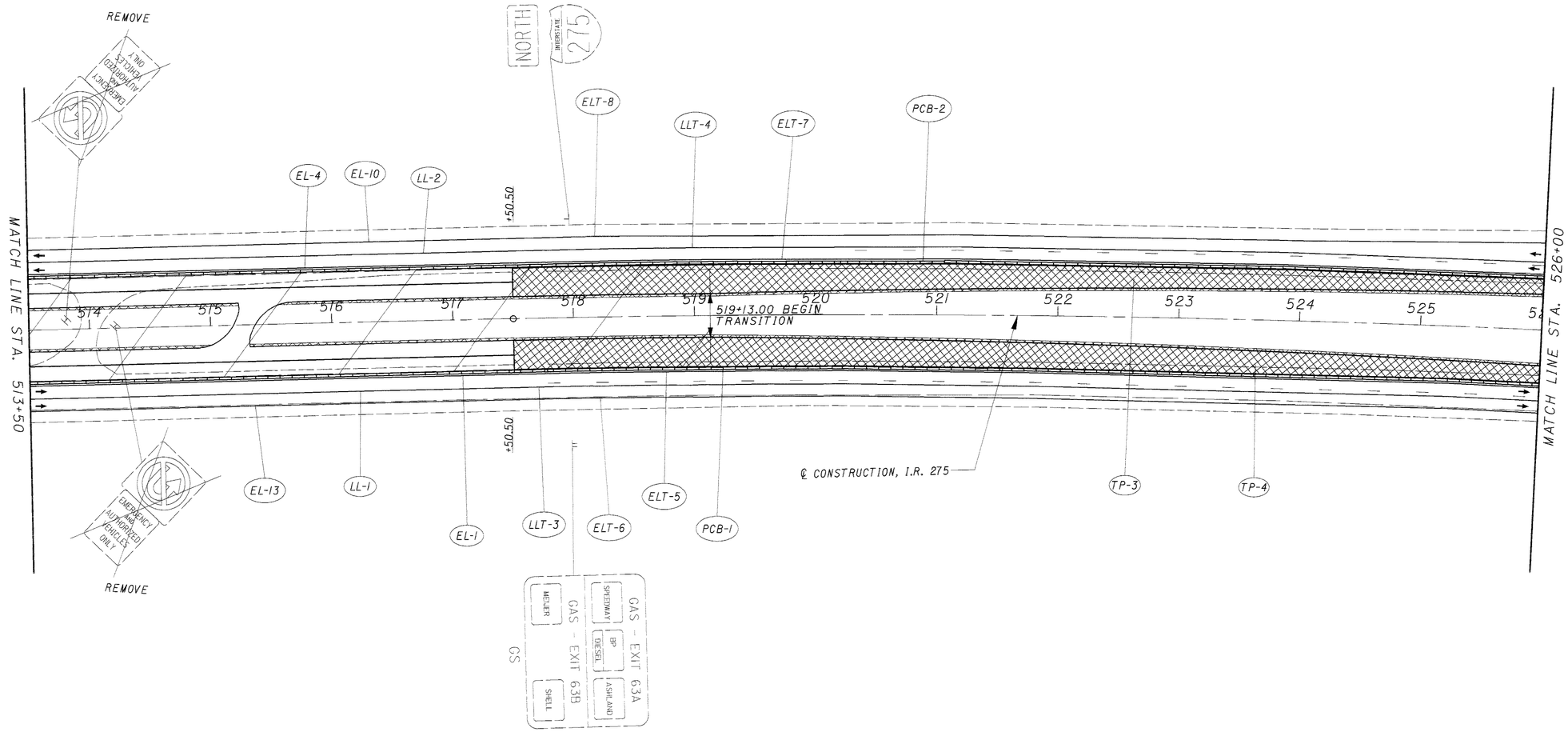

NOTES:

FOR M.O.T. LEGEND, SEE SHEET NO. **105**
FOR QUANTITIES, SEE M.O.T. SUBSUMMARY.
FOR M.O.T. TYPICAL SECTIONS, SEE SHEET NO. **83**

N

0 25 50 100
HORIZONTAL SCALE IN FEET

CALCULATED JGB
CHECKED AM

MAINTENANCE OF TRAFFIC
PHASE ONE-B, I.R. 275

CLE-275-5.35

127
857

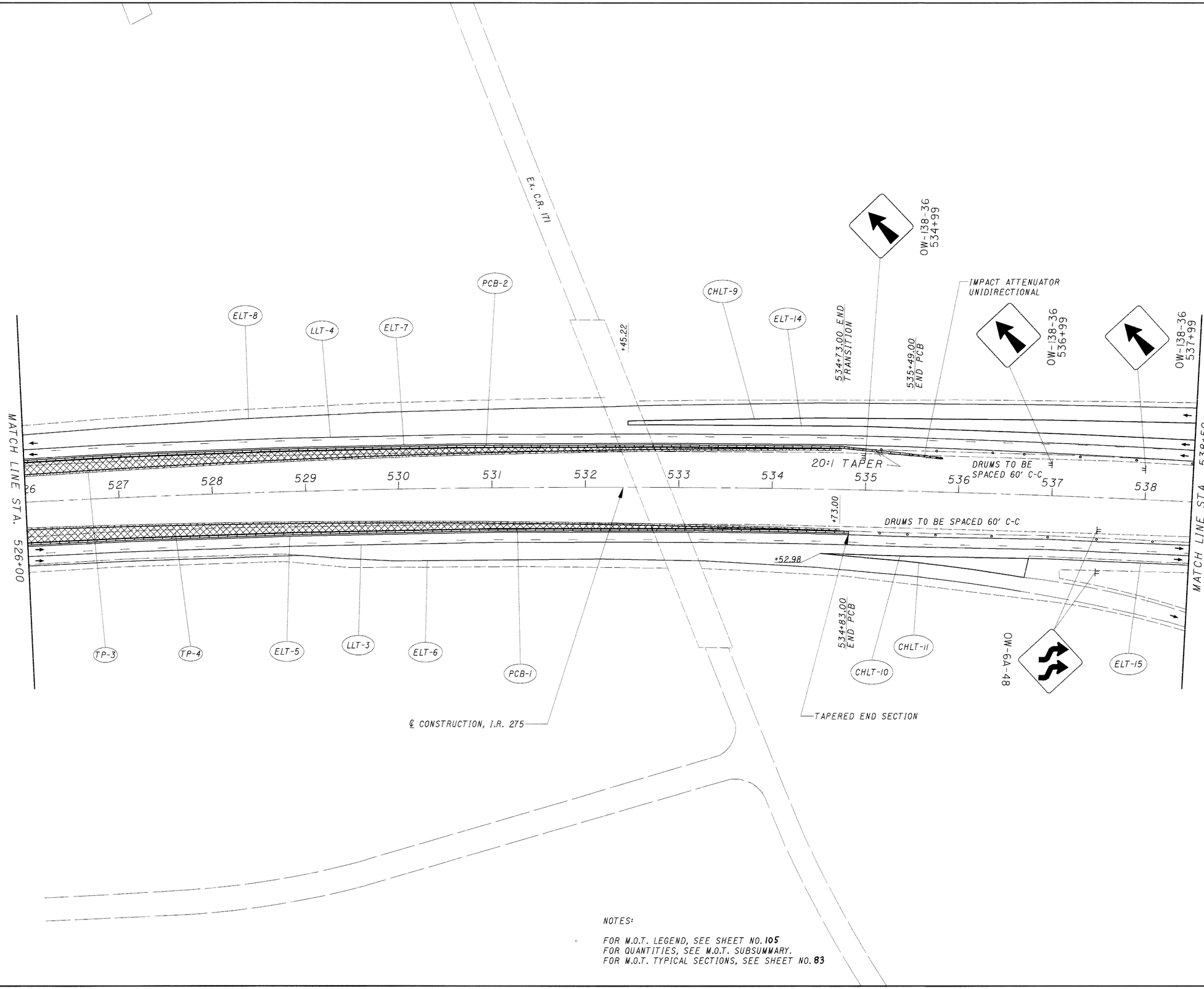

NOTES:

FOR M.O.T. LEGEND, SEE SHEET NO. 105
FOR QUANTITIES, SEE M.O.T. SUBSUMMARY.
FOR M.O.T. TYPICAL SECTIONS, SEE SHEET NO. 83

0 25 50 100
HORIZONTAL SCALE IN FEET

CALCULATED JGB
CHECKED AM

MAINTENANCE OF TRAFFIC PHASE ONE-B, I.R. 275

CLE-275-5.35

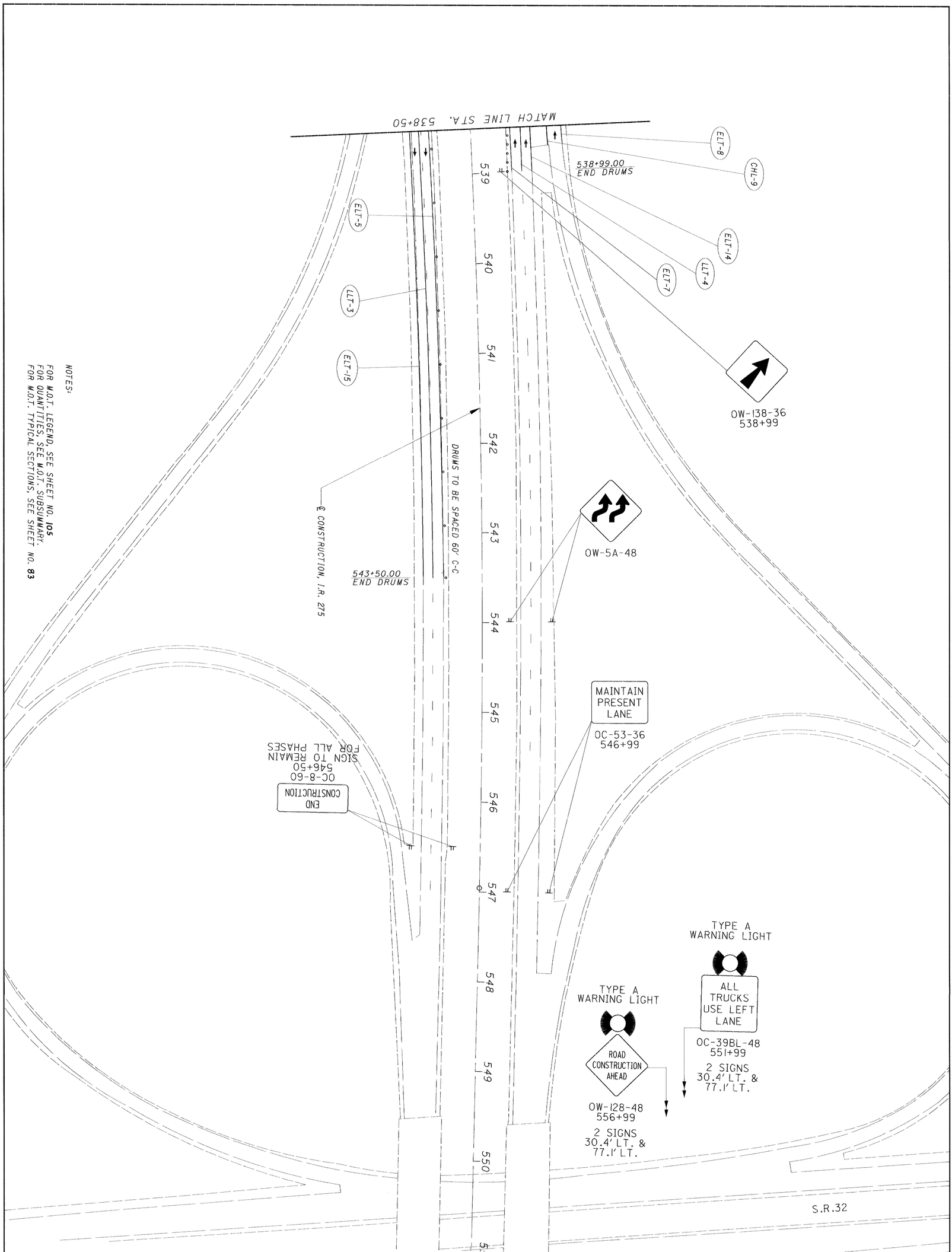

NOTES:

FOR M.O.T. LEGEND, SEE SHEET NO. **105**
FOR QUANTITIES, SEE M.O.T. SUBSUMMARY.
FOR M.O.T. TYPICAL SECTIONS, SEE SHEET NO. **83**

129 / 85	CLE-275-5.35	**MAINTENANCE OF TRAFFIC** **PHASE ONE-B, I.R. 275**	CALCULATED JGB CHECKED AM	0 50 25 100 HORIZONTAL SCALE IN FEET

NOTES:

FOR M.O.T. LEGEND, SEE SHEET NO. **105**
FOR QUANTITIES, SEE M.O.T. SUBSUMMARY.
FOR M.O.T. TYPICAL SECTIONS, SEE SHEET NO. **83**

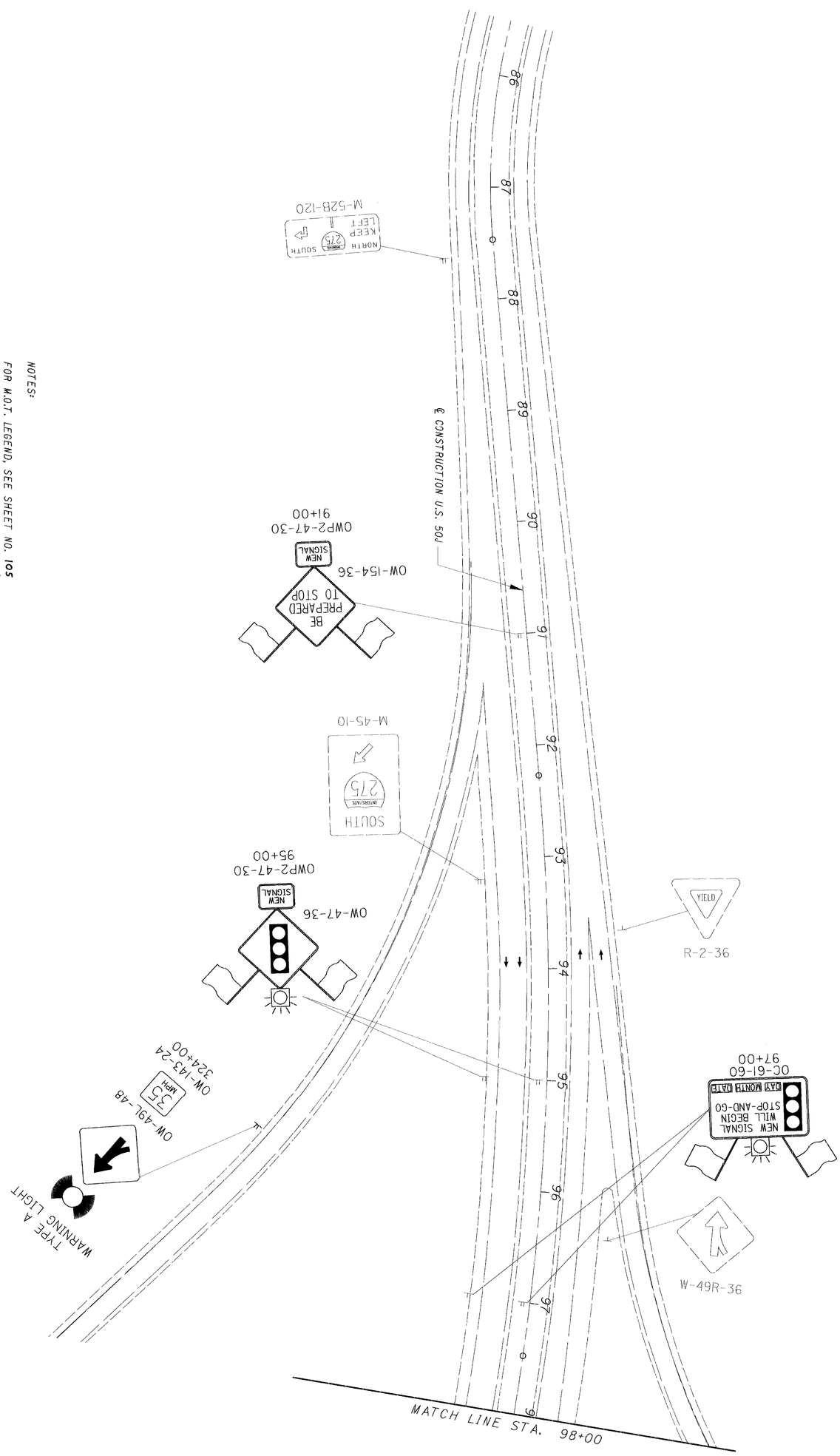

130 / 857	**CLE-275-5.35**	**MAINTENANCE OF TRAFFIC PHASE ONE-B, U.S. 50J**	CALCULATED JGB / CHECKED AM	0 50 / 25 100 HORIZONTAL SCALE IN FEET	N

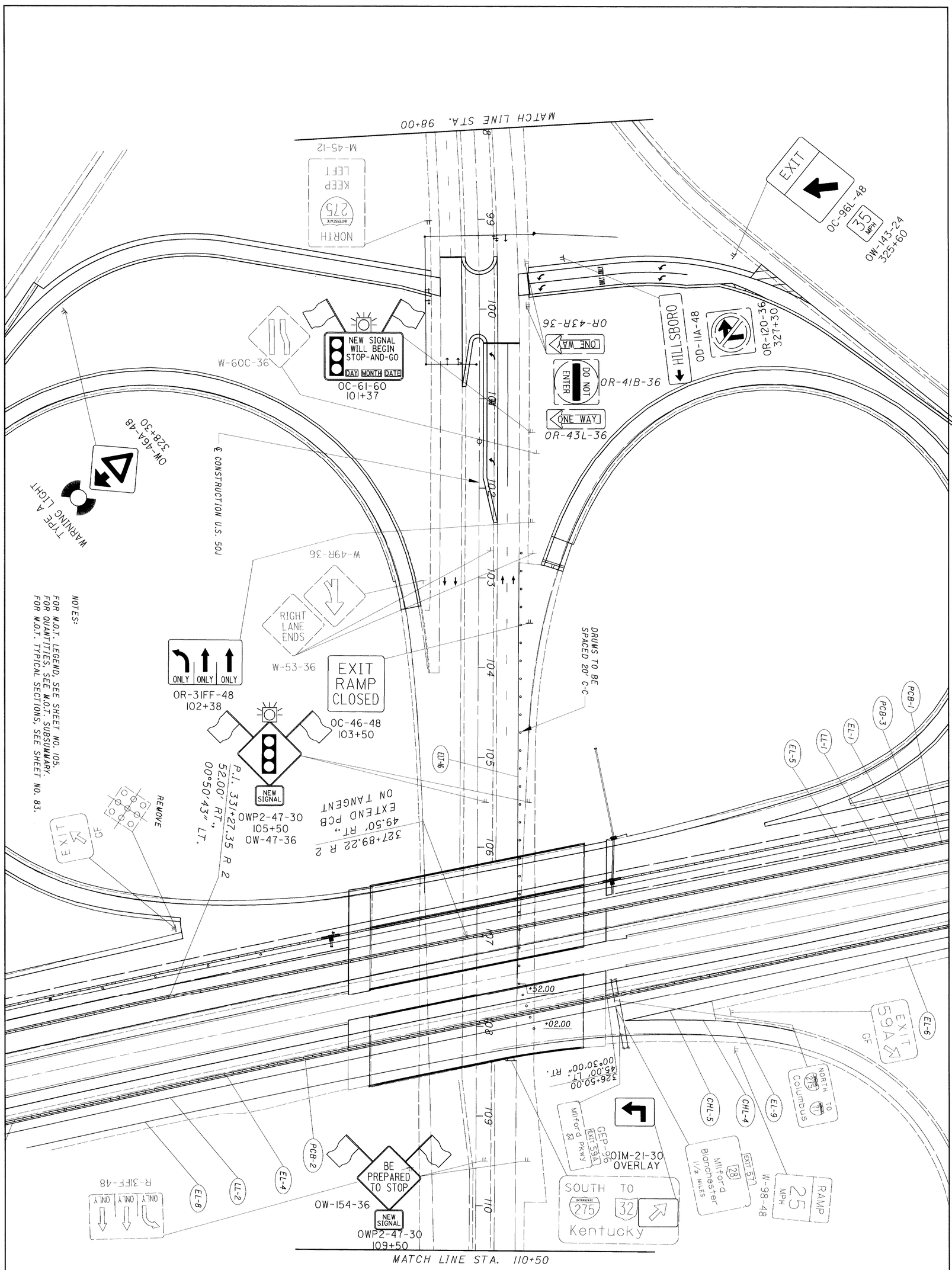

131 / 857	CLE-275-5.35	**MAINTENANCE OF TRAFFIC PHASE ONE-B, U.S. 50J**	CALCULATED JGB CHECKED AM	0 50 25 100 HORIZONTAL SCALE IN FEET

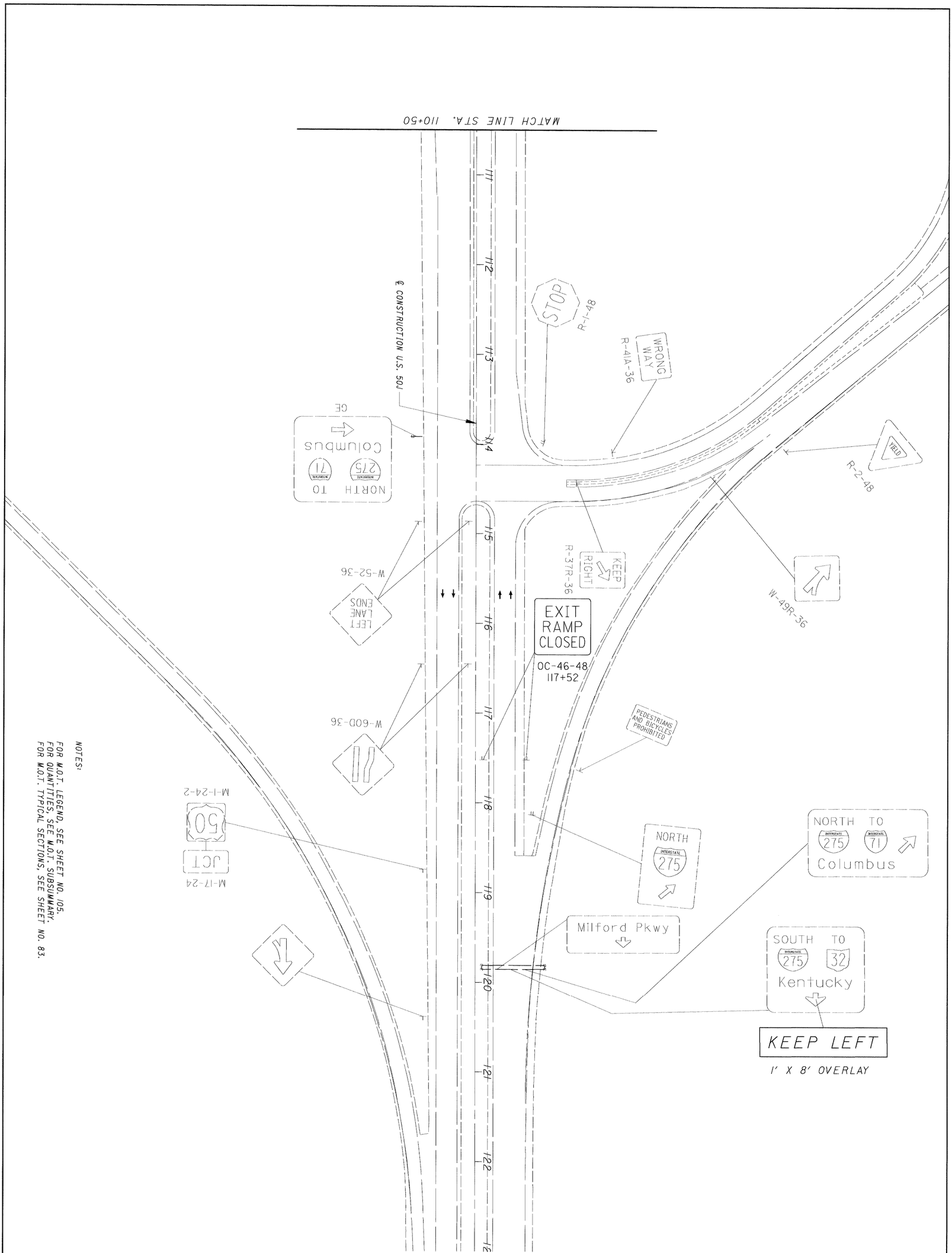

NOTES:
FOR M.O.T. LEGEND, SEE SHEET NO. 105.
FOR QUANTITIES, SEE M.O.T. SUBSUMMARY.
FOR M.O.T. TYPICAL SECTIONS, SEE SHEET NO. 83.

132 / 857	CLE-275-5.35	MAINTENANCE OF TRAFFIC PHASE ONE-B, U.S. 50J	CALCULATED JGB CHECKED AM	0 50 25 100 HORIZONTAL SCALE IN FEET

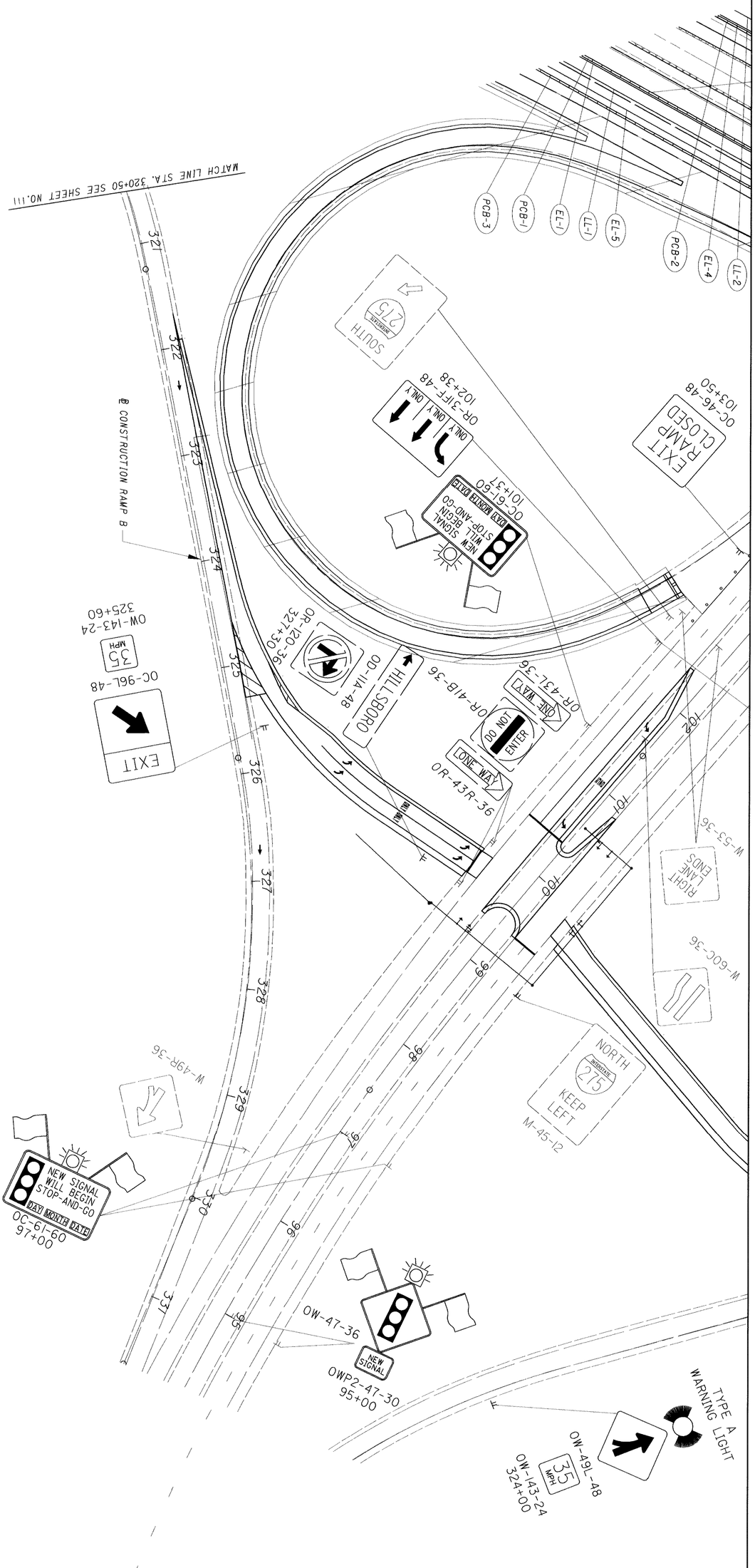

NOTES:

FOR M.O.T. LEGEND, SEE SHEET NO. 105.
FOR QUANTITIES, SEE M.O.T. SUBSUMMARY.
FOR M.O.T. TYPICAL SECTIONS, SEE SHEET NO. 83.

133 857	CLE-275-5.35	MAINTENANCE OF TRAFFIC PHASE ONE-B, RAMP B	CALCULATED JGB	0 50	
			CHECKED AM	25 100 HORIZONTAL SCALE IN FEET	

NOTES:

FOR M.O.T. LEGEND, SEE SHEET NO. 105
FOR QUANTITIES, SEE M.O.T. SUBSUMMARY.
FOR M.O.T. TYPICAL SECTIONS, SEE SHEET NO. 83

0 25 50 100
HORIZONTAL
SCALE IN FEET

DALC.A.Y.E.D. JGB
CHECKED AM

MAINTENANCE OF TRAFFIC
PHASE ONE-B, RAMP F

CLE-275-5.35

134
857

NOTES:

ALL TEMPORARY PAVEMENT MARKINGS WITHIN THE STATION RANGES OF STA. 255+22.56 TO STA. 282+45.06 AND STA. 517+50.50 TO STA. 538+71.00 ARE TO BE 740.06 TYPE I

FOR M.O.T. TYPICAL SECTIONS, SEE SHEET NO. 83

LEGEND

32" PORTABLE CONCRETE BARRIER

AREA TO BE CONSTRUCTED

TYPE C BARRIER CONSTRUCTION

N

0 25 50 100
HORIZONTAL SCALE IN FEET

CALCULATED JGB
CHECKED AM

MAINTENANCE OF TRAFFIC PHASE TWO-A, I.R. 275

CLE-275-5.35

135
BSJ

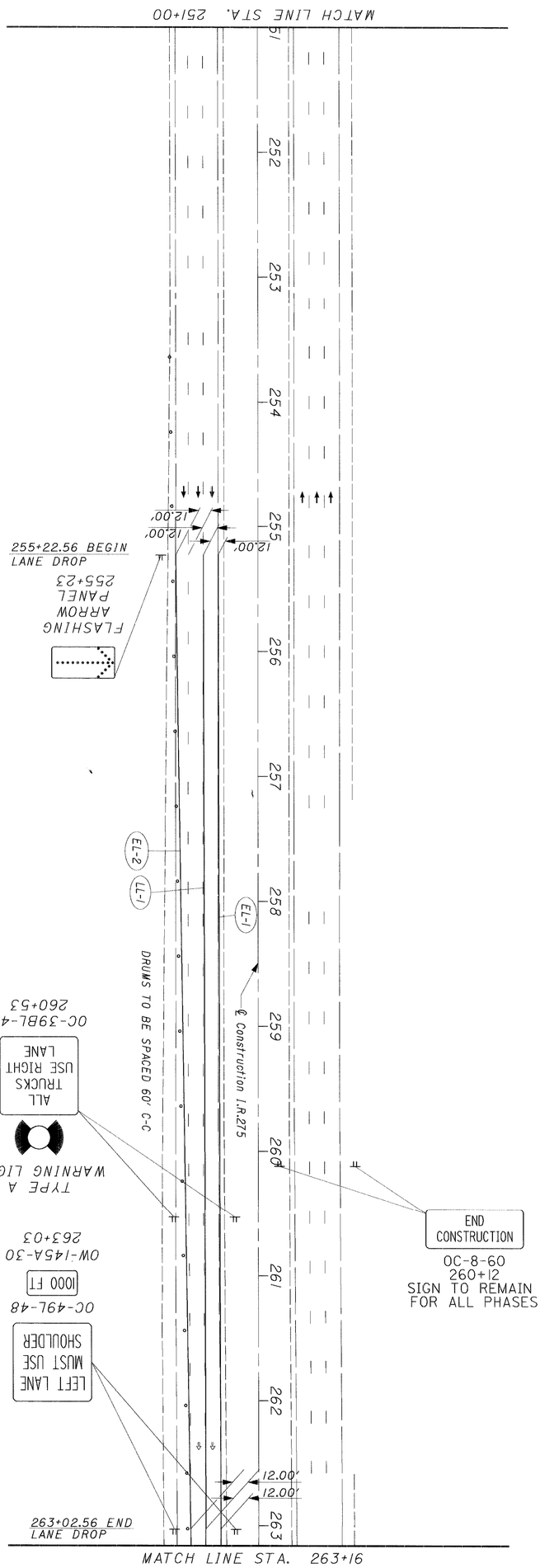

FOR M.O.T. LEGEND, SEE SHEET NO. 135
FOR QUANTITIES, SEE M.O.T. SUBSUMMARY
FOR M.O.T. TYPICAL SECTIONS, SEE SHEET NO. 83

136
85

CLE-275-5.35

MAINTENANCE OF TRAFFIC
PHASE TWO-A, I.R. 275

CALCULATED JGB
CHECKED AM

0 50
25 100
HORIZONTAL SCALE IN FEET

N

MATCH LINE STA. 263+16

264 265 266 267 268 269 270 271 272 273 274 275

MATCH LINE STA. 276+00

36.00'

265+12.56 END TRANSITION

℄ Construction I.R.275

DRUMS TO BE SPACED 60' C-C

ELT-3 LLT-2 ELT-4

12.00' 12.00'

ELT-1 ELT-2 LLT-1

OC-53-48 265+53

MAINTAIN PRESENT LANE

OW-6A-48

OW-138-36 273+03

273+02.56 BEGIN TRANSITION

OW-138-36 274+03

OW-138-36 275+03

DRUMS TO BE SPACED 60' C-C

EX. S.R. 131

FOR M.O.T. LEGEND, SEE SHEET NO. 135
FOR QUANTITIES, SEE M.O.T. SUBSUMMARY
FOR M.O.T. TYPICAL SETIONS, SEE SHEET NO. 83

N

0 25 50 100
HORIZONTAL SCALE IN FEET

CALCULATED JGB
CHECKED AM

MAINTENANCE OF TRAFFIC PHASE TWO-A, I.R. 275

CLE-275-5.35

137
857

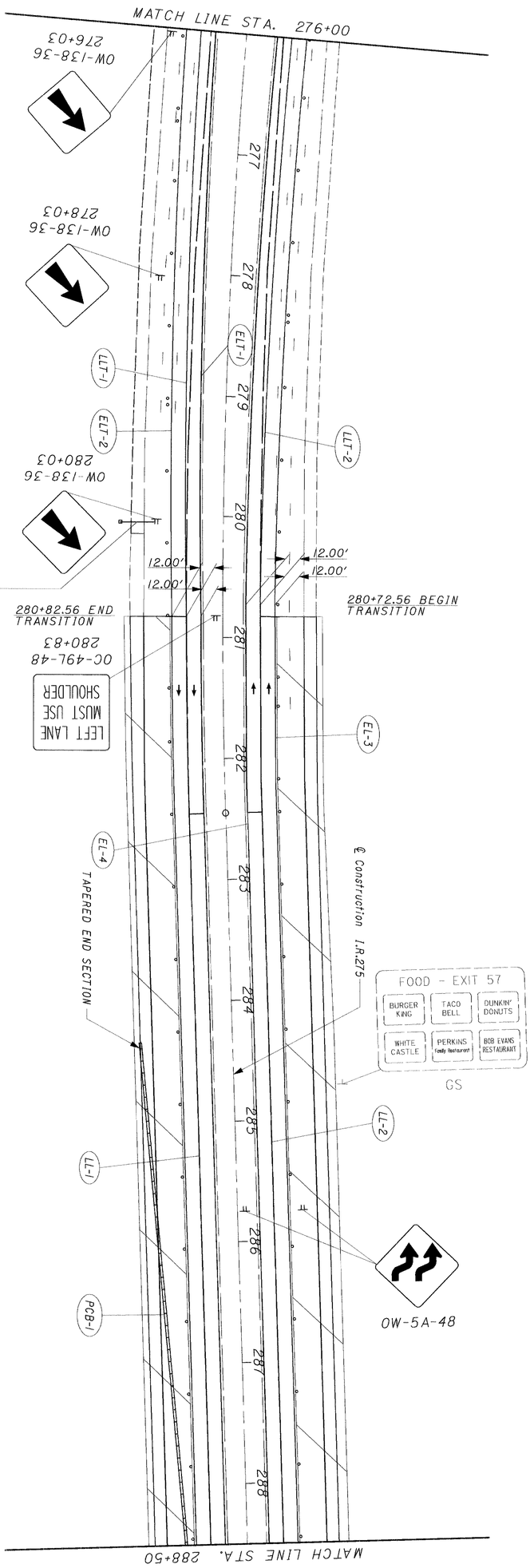

PROPOSED PERMANENT OVERLAY AND NEW SUPPORTS SHALL BE IN PLACE AND FULLY FUNCTIONAL DURING THIS PHASE. FOR ADDITIONAL DETAILS, SEE TRAFFIC CONTROL PLANS.

FOR M.O.T. LEGEND, SEE SHEET NO. **135**
FOR QUANTITIES, SEE M.O.T. SUBSUMMARY
FOR M.O.T. TYPICAL SETIONS, SEE SHEET NO. **83**

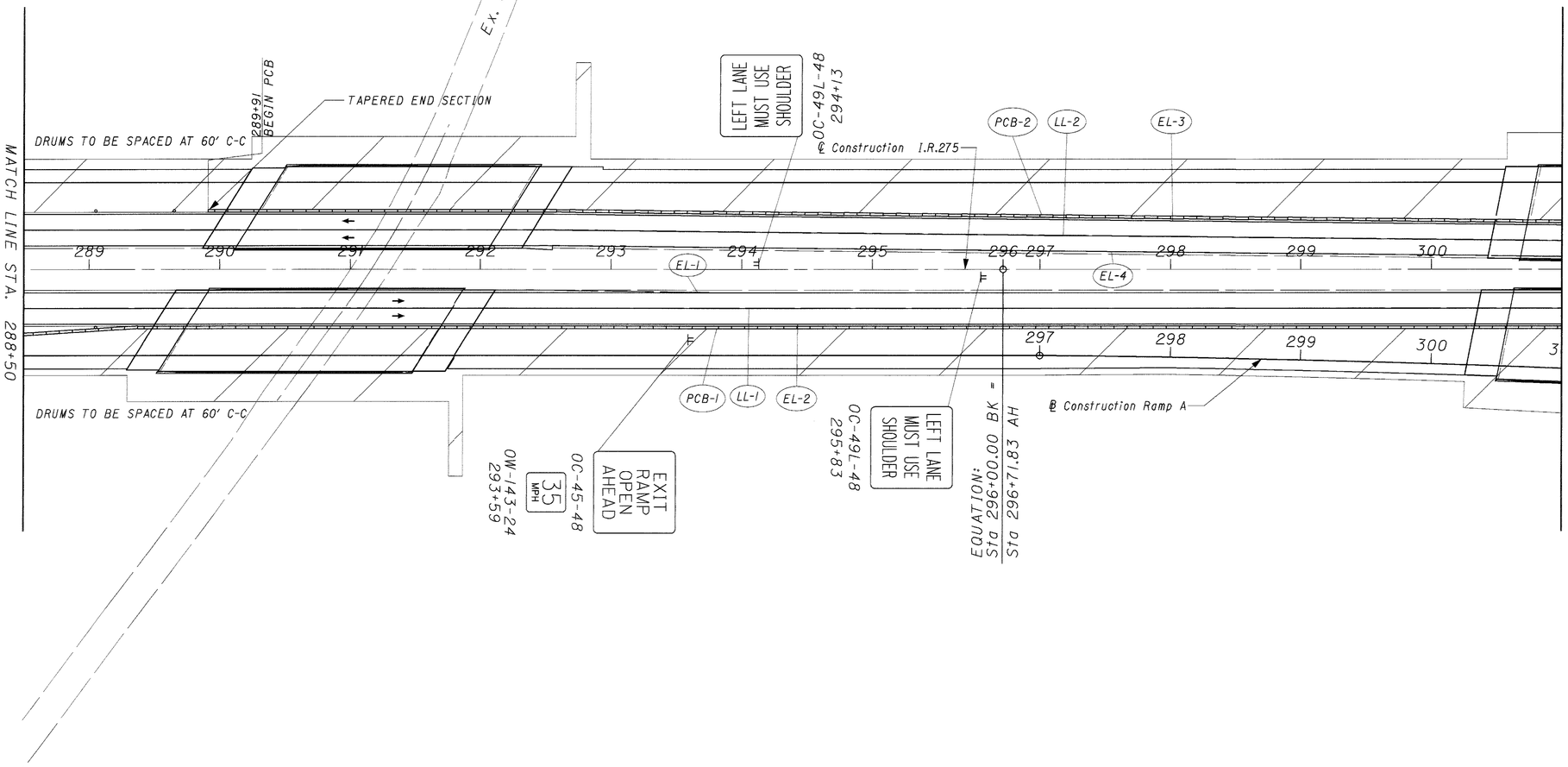

FOR M.O.T. LEGEND, SEE SHEET NO. 135
FOR QUANTITIES, SEE M.O.T. SUBSUMMARY
FOR M.O.T. TYPICAL SETIONS, SEE SHEET NO. 83

N

0 25 50 100
HORIZONTAL SCALE IN FEET

CALCULATED JGB
CHECKED AM

MAINTENANCE OF TRAFFIC PHASE TWO-A, I.R. 275

CLE-275-5.35

139
85

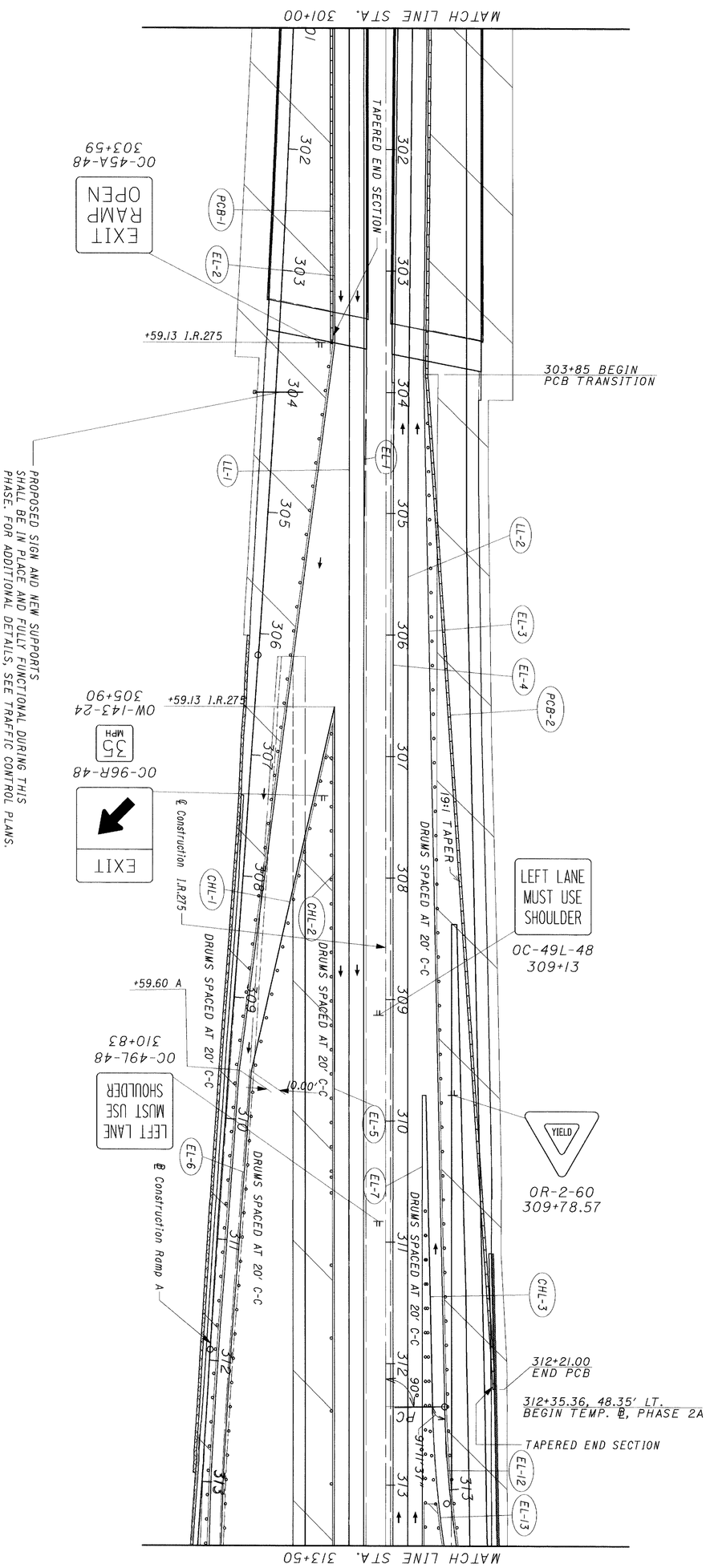

FOR M.O.T. LEGEND, SEE SHEET NO. 135
FOR QUANTITIES, SEE M.O.T. SUBSUMMARY
FOR M.O.T. TYPICAL SETIONS, SEE SHEET NO. 83

140 / 857	CLE-275-5.35	**MAINTENANCE OF TRAFFIC PHASE TWO-A, I.R. 275**	CALCULATED JGB / CHECKED AM	0 25 50 100 HORIZONTAL SCALE IN FEET

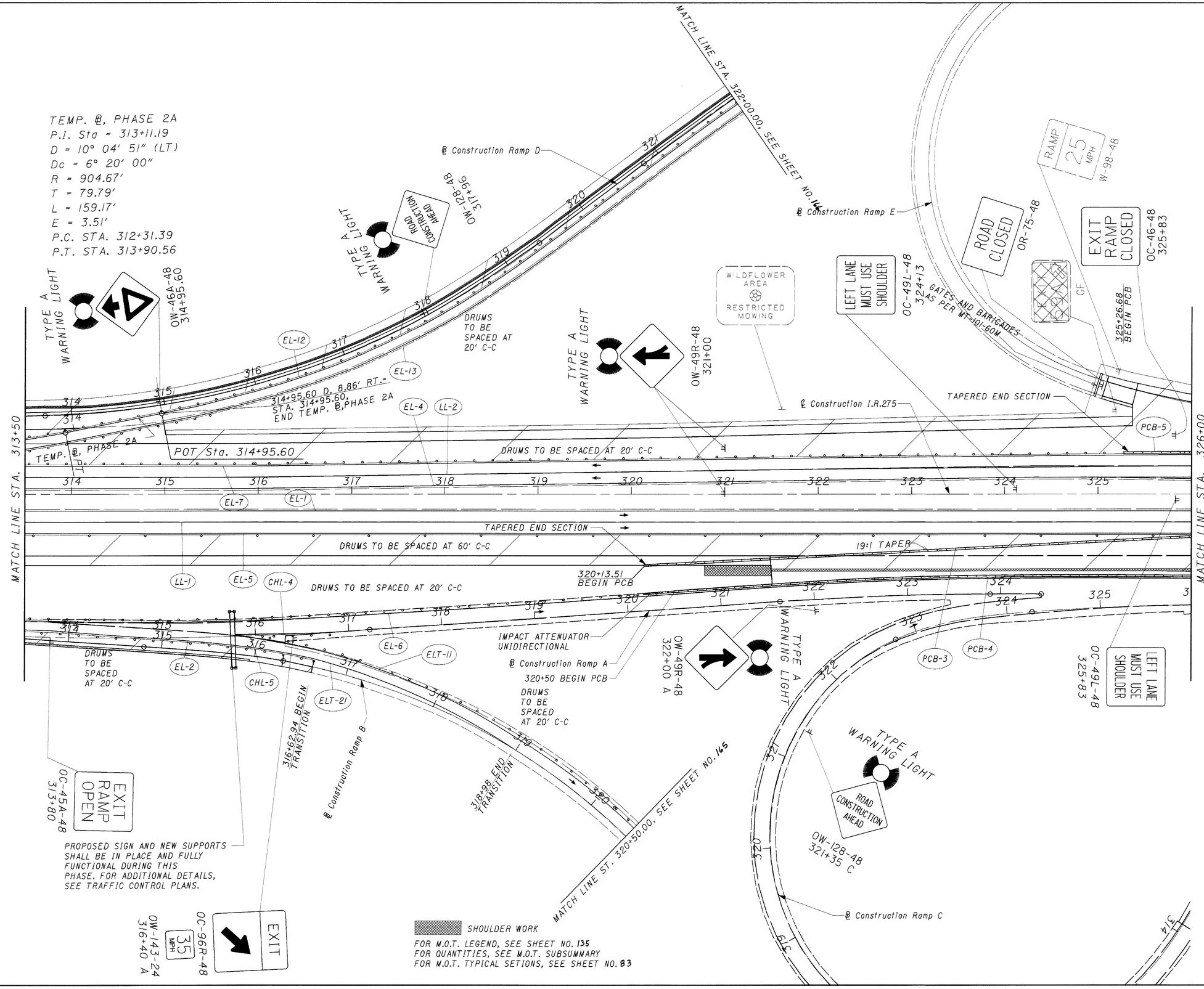

MAINTENANCE OF TRAFFIC PHASE TWO-A, I.R. 275

CLE-275-5.35

CALCULATED JGB
CHECKED AM

HORIZONTAL SCALE IN FEET
0 25 50 100

141

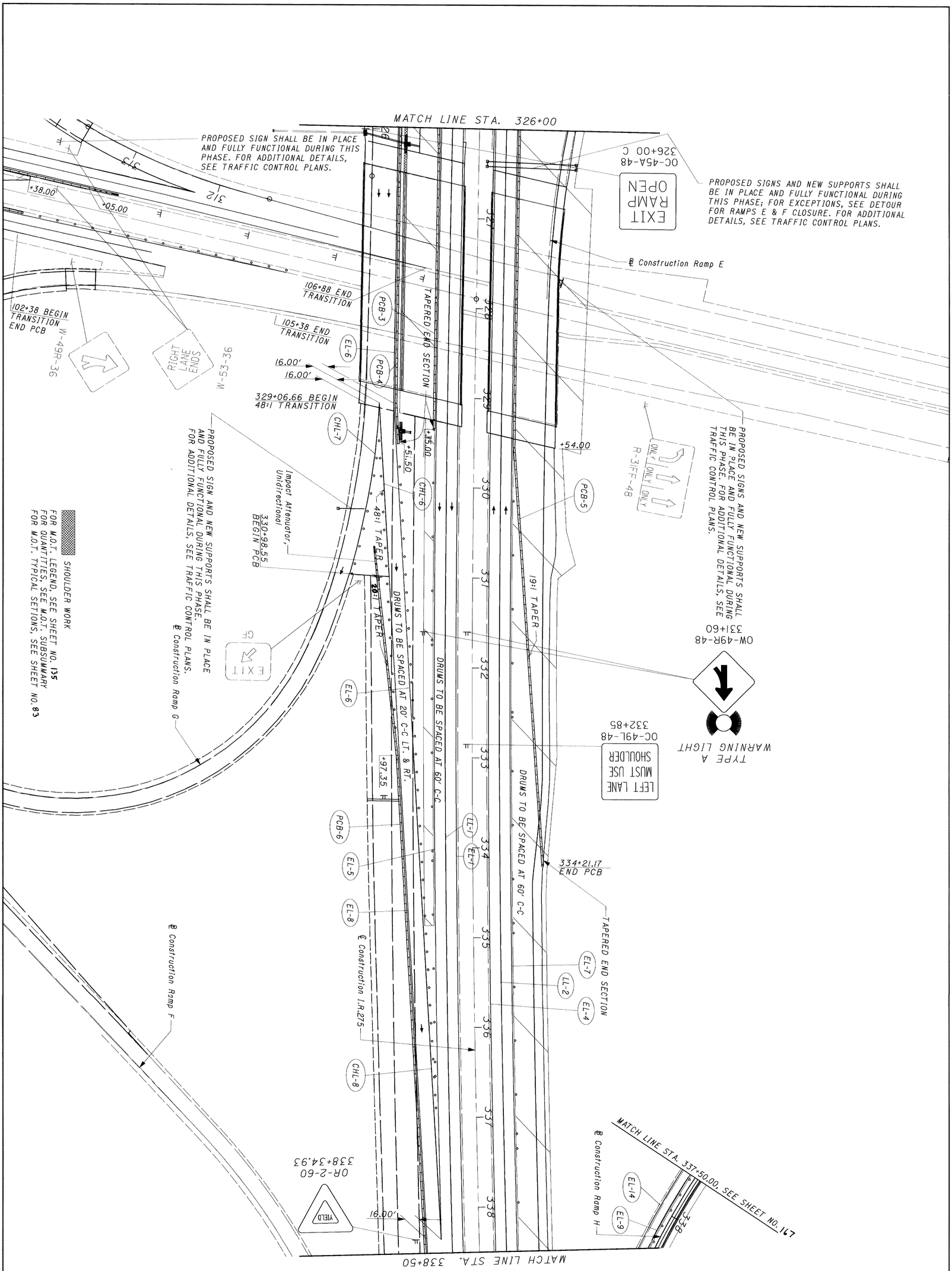

142 / 659	CLE-275-5.35	MAINTENANCE OF TRAFFIC PHASE TWO-A, I.R. 275	CALCULATED JGB / CHECKED AM	0 50 25 100 HORIZONTAL SCALE IN FEET	N

PROPOSED SIGNS AND NEW SUPPORTS SHALL BE IN PLACE AND FULLY FUNCTIONAL DURING THIS PHASE; FOR EXCEPTIONS, SEE DETOUR FOR RAMPS E & F CLOSURE. FOR ADDITIONAL DETAILS, SEE TRAFFIC CONTROL PLANS.

LEFT LANE MUST USE SHOULDER
OC-49L-48
339+13

EXIT 59B

EXIT
OC-96R-48
35 MPH
OW-143-24
343+20

EXIT RAMP OPEN
OC-45A-48
345+72

℄ Norfolk Southern RR

MATCH LINE STA. 338+50

339 340 341 342 343 344 345 346

EL-14 EL-7 EL-4 LL-2 EL-9

℄ Construction Ramp H

CHL-10 CHL-9

+72.00 I.R. 275

+72.00 I.R. 275

TAPERED END SECTION

PCB-7

+89.00

DRUMS TO BE SPACED AT 20' C-C

DRUMS TO BE SPACED AT 20' C-C

339 340 341 342 343 344 345 346 347 348 349 350

MATCH LINE STA. 351+00

EL-1 LL-1 PCB-6 EL-8

LEFT LANE MUST USE SHOULDER
OC-49L-48
340+83

℄ Construction I.R.275

345+45.58 END 48:1 TRANSITION

TAPERED END SECTION

348+22.00 END PCB

W-49R-36

℄ Construction Ramp F

E.X. Round Bottom Rd. (C.R. 106)

FOR M.O.T. LEGEND, SEE SHEET NO. 135
FOR QUANTITIES, SEE M.O.T. SUBSUMMARY
FOR M.O.T. TYPICAL SETIONS, SEE SHEET NO. 83

N

0 25 50 100
HORIZONTAL SCALE IN FEET

CALCULATED JGB
CHECKED AM

MAINTENANCE OF TRAFFIC PHASE TWO-A, I.R. 275

CLE-275-5.35

143
859

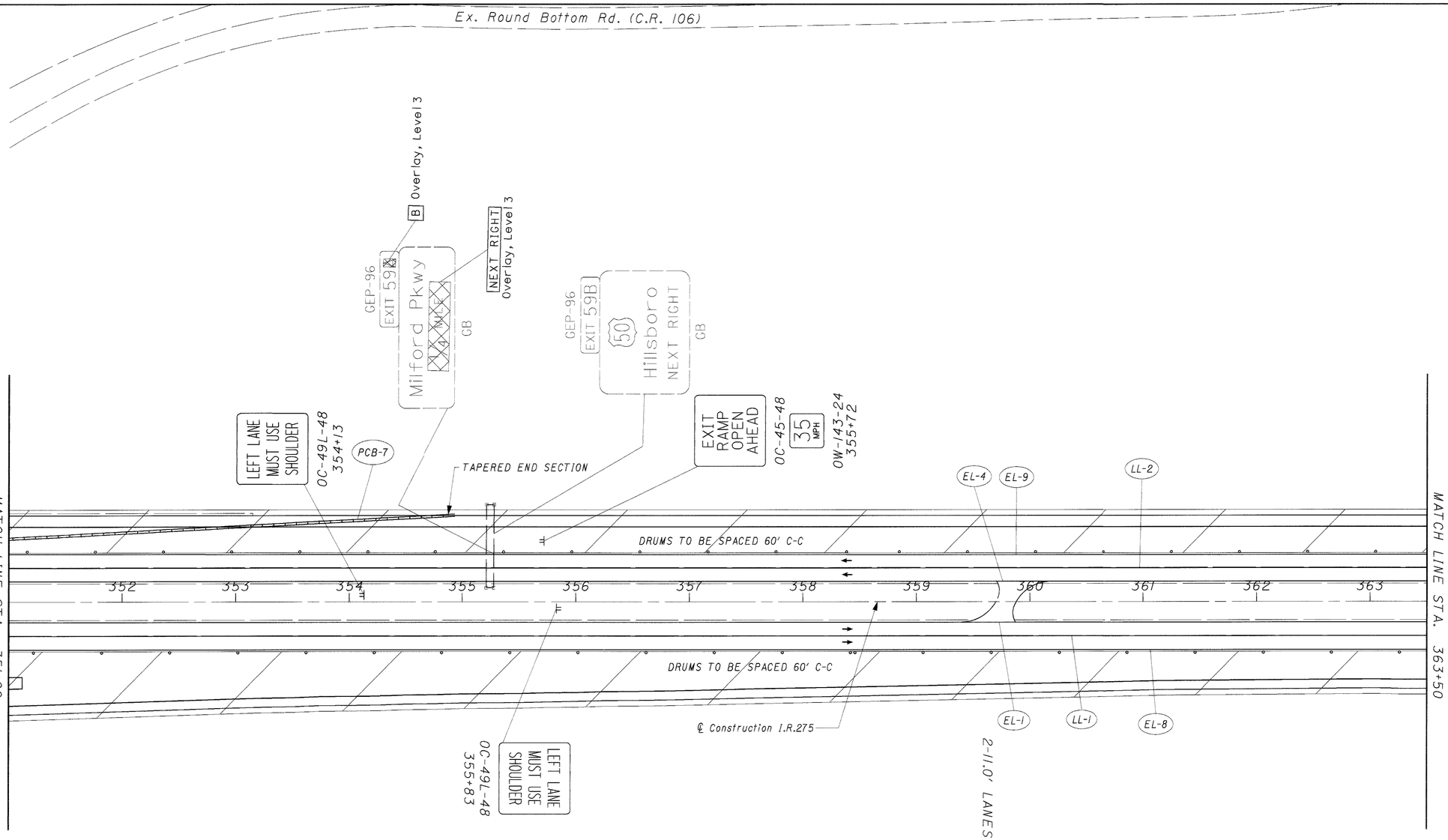

FOR M.O.T. LEGEND, SEE SHEET NO. 135
FOR QUANTITIES, SEE M.O.T. SUBSUMMARY
FOR M.O.T. TYPICAL SETIONS, SEE SHEET NO. 83

N

0 25 50 100
HORIZONTAL SCALE IN FEET

CALCULATED JGB
CHECKED AM

MAINTENANCE OF TRAFFIC PHASE TWO-A, I.R. 275

CLE-275-5.35

144
857

FOR M.O.T. LEGEND, SEE SHEET NO. 135
FOR QUANTITIES, SEE M.O.T. SUBSUMMARY
FOR M.O.T. TYPICAL SETIONS, SEE SHEET NO. 83

N

0 25 50 100
HORIZONTAL
SCALE IN FEET

CALCULATED JGB
CHECKED AM

MAINTENANCE OF TRAFFIC
PHASE TWO-A, I.R. 275

CLE-275-5.35

145
857

FOR M.O.T. LEGEND, SEE SHEET NO. 135
FOR QUANTITIES, SEE M.O.T. SUBSUMMARY
FOR M.O.T. TYPICAL SETIONS, SEE SHEET NO. 83

N

0 25 50 100
HORIZONTAL SCALE IN FEET

CALCULATED JGB
CHECKED AM

MAINTENANCE OF TRAFFIC PHASE TWO-A, I.R. 275

CLE-275-5.35

146
857

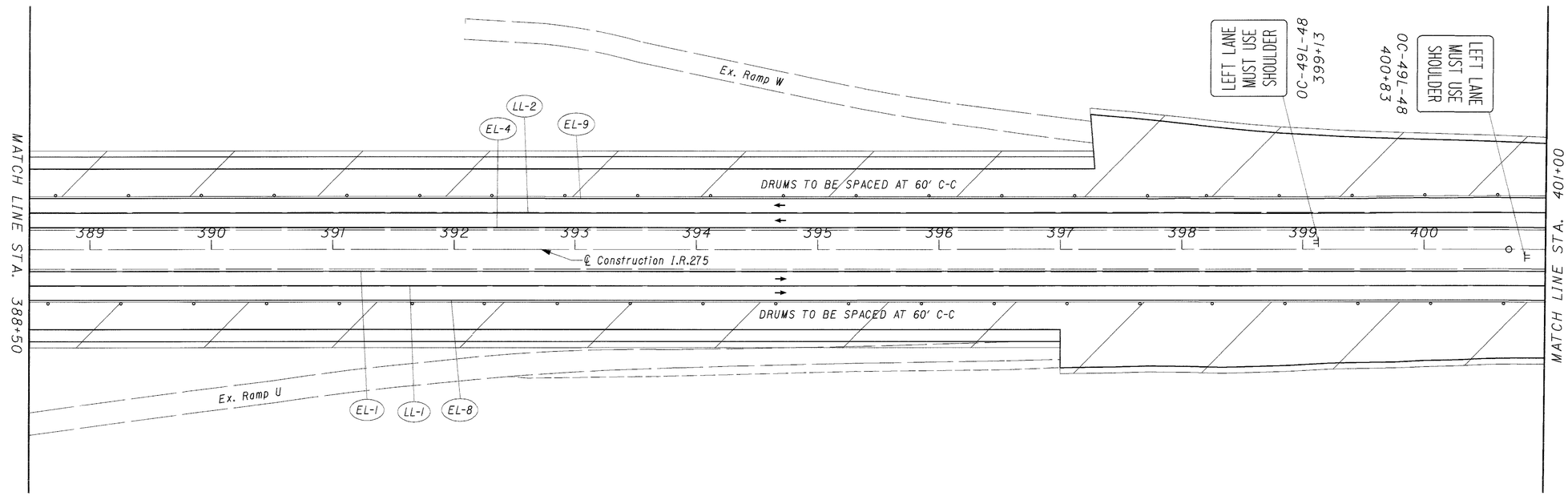

FOR M.O.T. LEGEND, SEE SHEET NO. 135
FOR QUANTITIES, SEE M.O.T. SUBSUMMARY
FOR M.O.T. TYPICAL SETIONS, SEE SHEET NO. 83

N

0 25 50 100
HORIZONTAL SCALE IN FEET

CALCULATED JGB
CHECKED AM

MAINTENANCE OF TRAFFIC PHASE TWO-A, I.R. 275

CLE-275-5.35

147
857

FOR M.O.T. LEGEND, SEE SHEET NO. 135
FOR QUANTITIES, SEE M.O.T. SUBSUMMARY
FOR M.O.T. TYPICAL SETIONS, SEE SHEET NO. 83

N

0 25 50 100
HORIZONTAL
SCALE IN FEET

CALCULATED JGB
CHECKED AM

MAINTENANCE OF TRAFFIC
PHASE TWO-A, I.R. 275

CLE-275-5.35

148
857

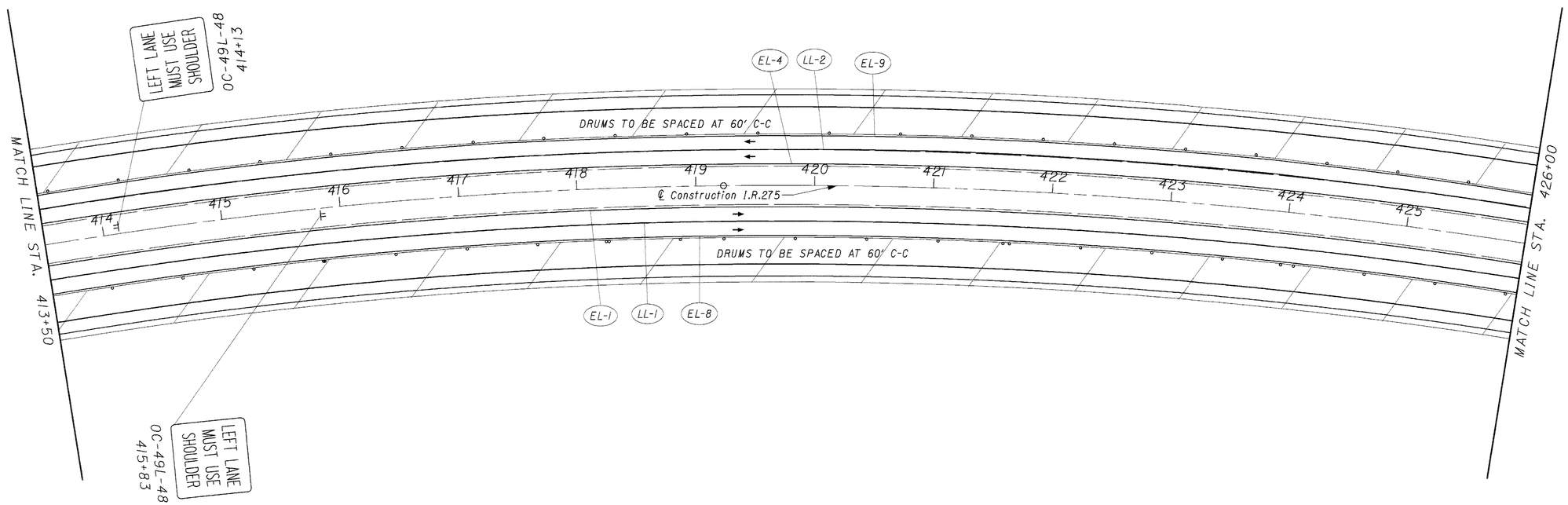

FOR M.O.T. LEGEND, SEE SHEET NO. 135
FOR QUANTITIES, SEE M.O.T. SUBSUMMARY
FOR M.O.T. TYPICAL SETIONS, SEE SHEET NO. 83

0 25 50 100
HORIZONTAL SCALE IN FEET

CALCULATED JGB
CHECKED AM

MAINTENANCE OF TRAFFIC PHASE TWO-A, I.R. 275

CLE-275-5.35

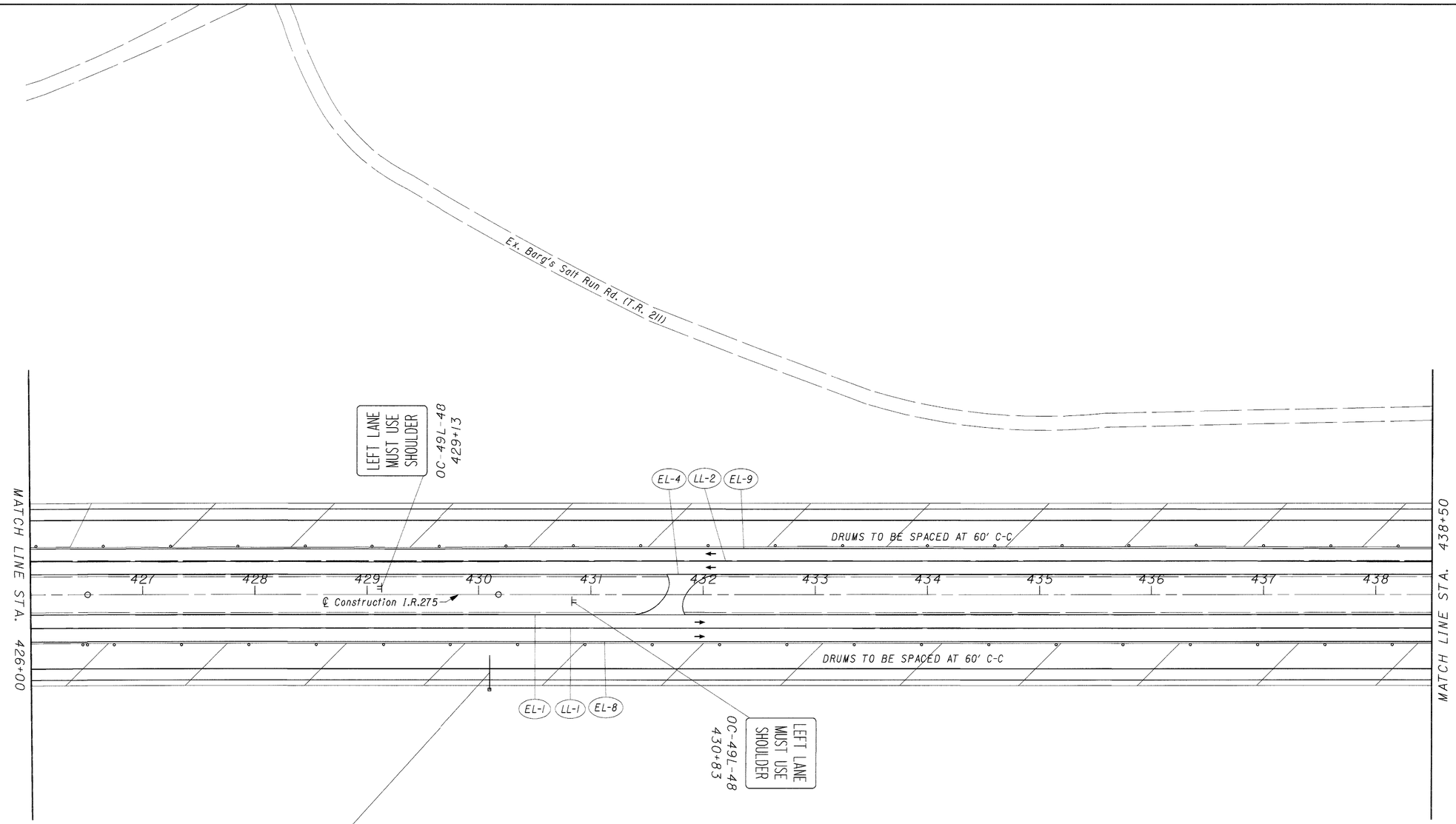

FOR M.O.T. LEGEND, SEE SHEET NO. 135
FOR QUANTITIES, SEE M.O.T. SUBSUMMARY
FOR M.O.T. TYPICAL SETIONS, SEE SHEET NO. 83

0 25 50 100
HORIZONTAL SCALE IN FEET

CALCULATED JGB
CHECKED AM

MAINTENANCE OF TRAFFIC PHASE TWO-A, I.R. 275

CLE-275-5.35

150
857

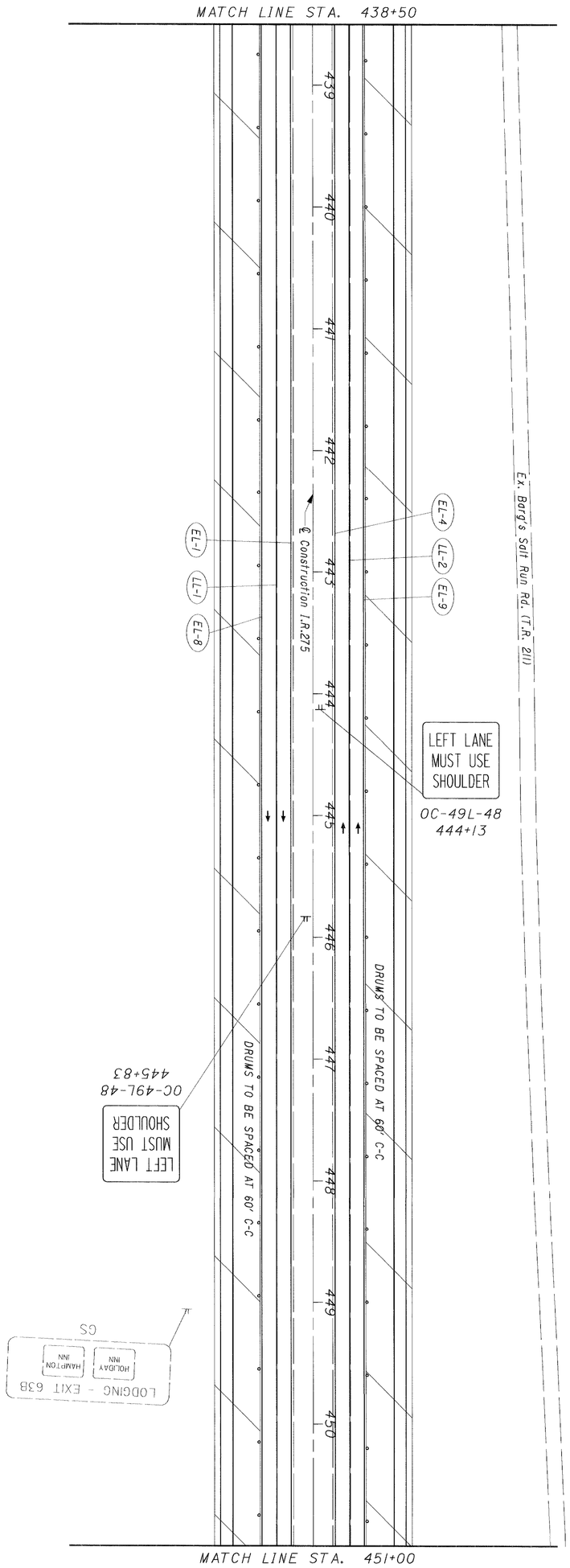

FOR M.O.T. LEGEND, SEE SHEET NO. 135
FOR QUANTITIES SEE M.O.T. SUBSUMMARY
FOR M.O.T. TYPICAL SECTIONS, SEE SHEET NO. 83

151 857	CLE-275-5.35	MAINTENANCE OF TRAFFIC PHASE TWO-A, I.R. 275	CALCULATED JGB CHECKED AM	0 50 25 100 HORIZONTAL SCALE IN FEET	N

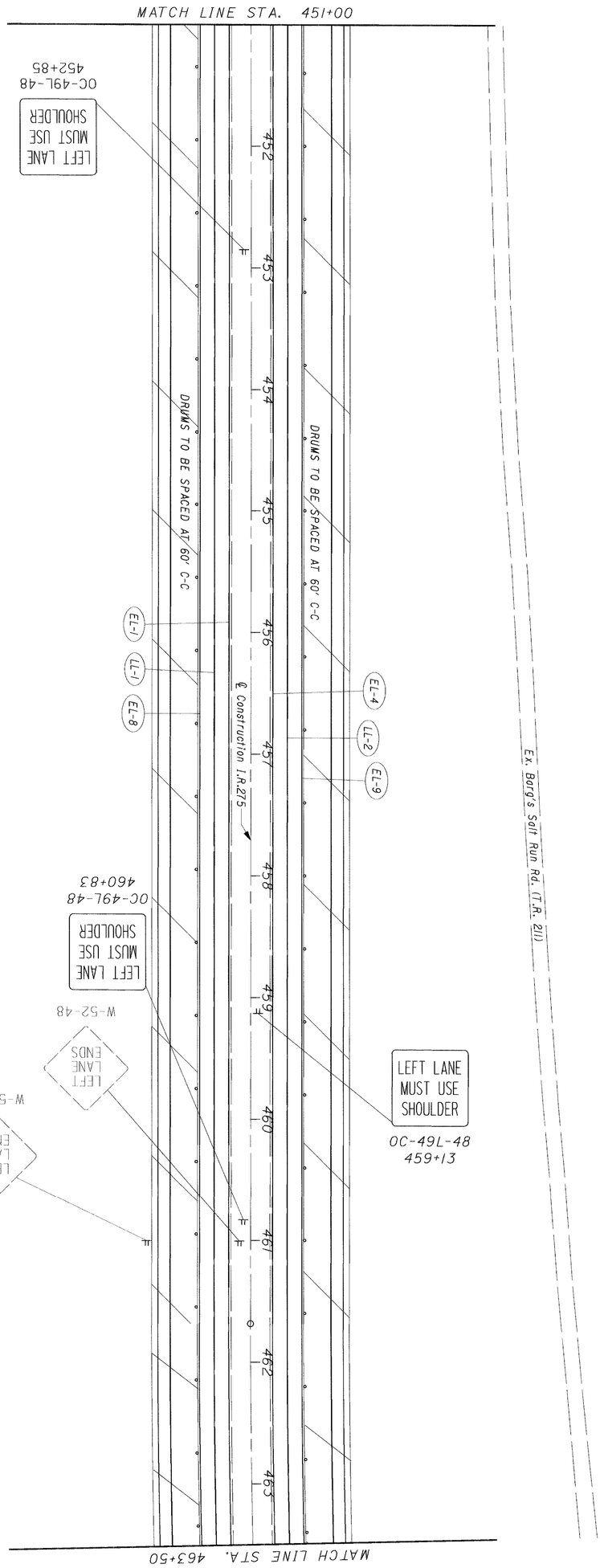

FOR M.O.T. LEGEND, SEE SHEET NO. 135
FOR QUANTITIES, SEE M.O.T. SUBSUMMARY
FOR M.O.T. TYPICAL SECTIONS, SEE SHEET NO. 83

152 / 859	CLE-275-5.35	**MAINTENANCE OF TRAFFIC** **PHASE TWO-A, I.R. 275**	CALCULATED JGB CHECKED AM	0 50 25 100 HORIZONTAL SCALE IN FEET

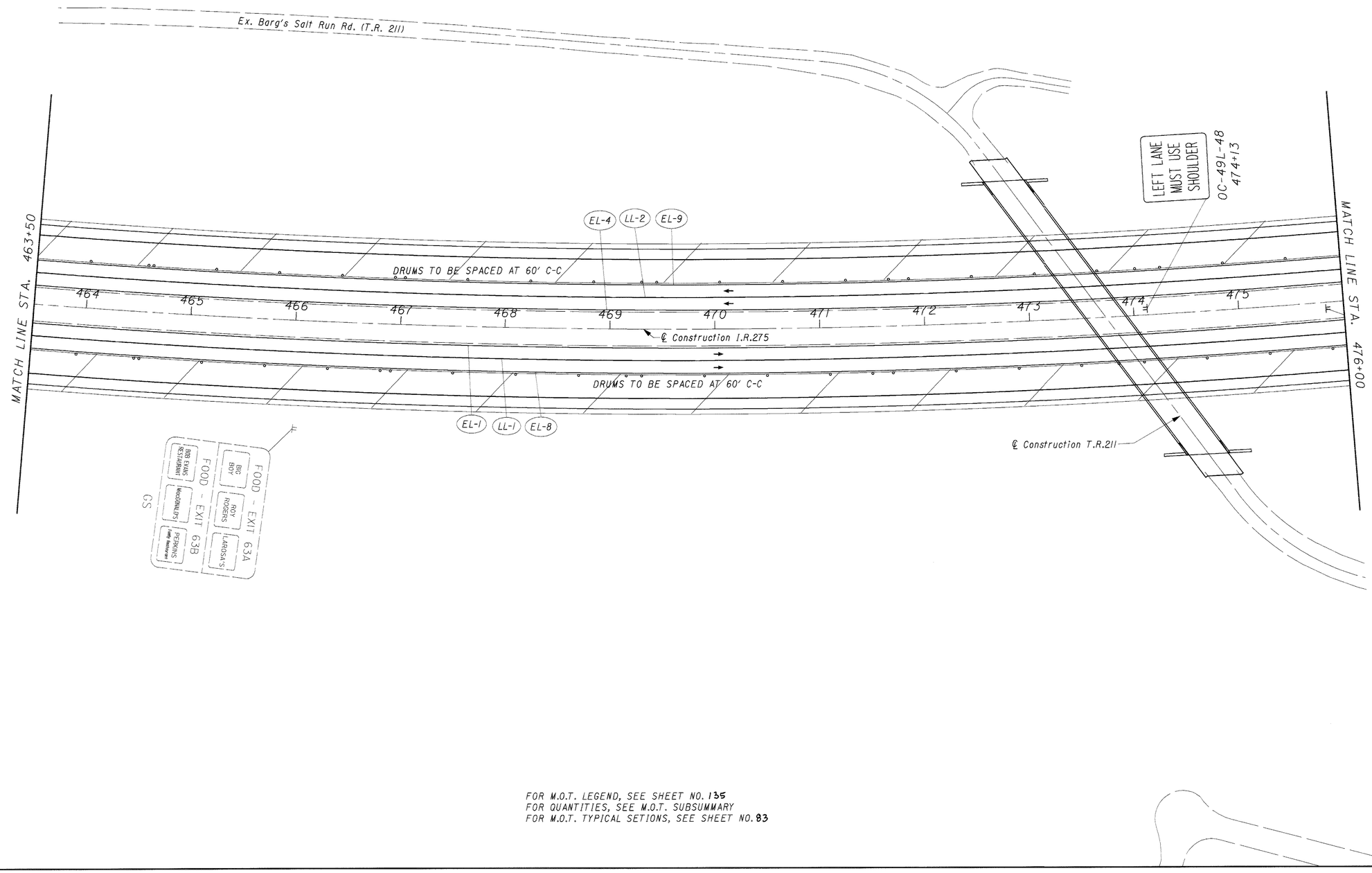

FOR M.O.T. LEGEND, SEE SHEET NO. 135
FOR QUANTITIES, SEE M.O.T. SUBSUMMARY
FOR M.O.T. TYPICAL SETIONS, SEE SHEET NO. 83

HORIZONTAL SCALE IN FEET
0 25 50 100

CALCULATED JGB
CHECKED AM

MAINTENANCE OF TRAFFIC PHASE TWO-A, I.R. 275

CLE-275-5.35

153
85

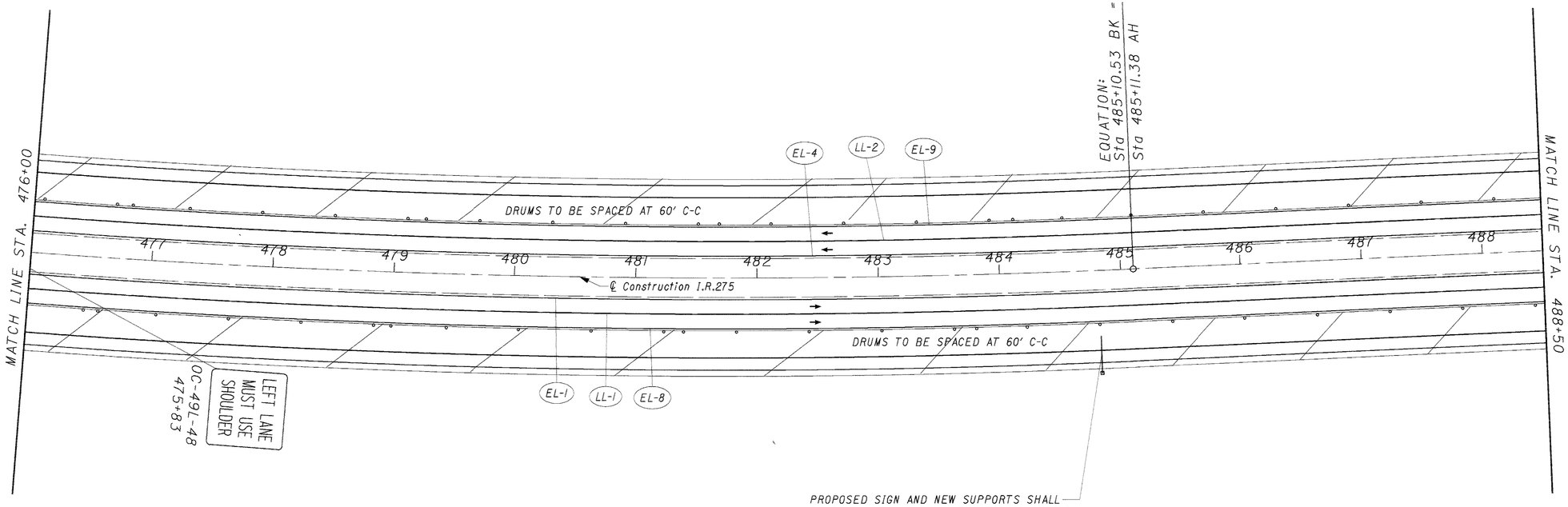

FOR M.O.T. LEGEND, SEE SHEET NO. **135**
FOR QUANTITIES, SEE M.O.T. SUBSUMMARY
FOR M.O.T. TYPICAL SETIONS, SEE SHEET NO. **83**

N

0 25 50 100
HORIZONTAL
SCALE IN FEET

CALCULATED JGB
CHECKED AM

MAINTENANCE OF TRAFFIC
PHASE TWO-A, I.R. 275

CLE-275-5.35

154
857

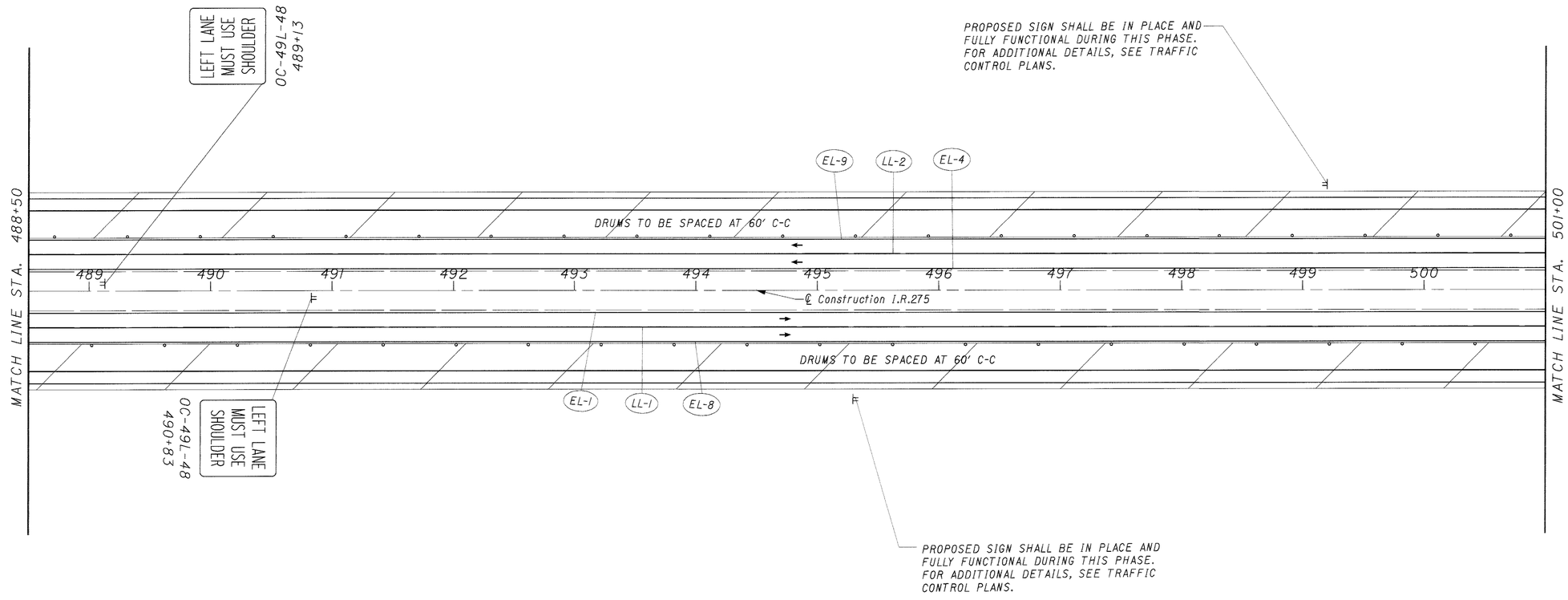

FOR M.O.T. LEGEND, SEE SHEET NO. 135
FOR QUANTITIES, SEE M.O.T. SUBSUMMARY
FOR M.O.T. TYPICAL SETIONS, SEE SHEET NO. 83

N

0 25 50 100
HORIZONTAL SCALE IN FEET

CALCULATED JGB
CHECKED AM

MAINTENANCE OF TRAFFIC PHASE TWO-A, I.R. 275

CLE-275-5.35

155
857

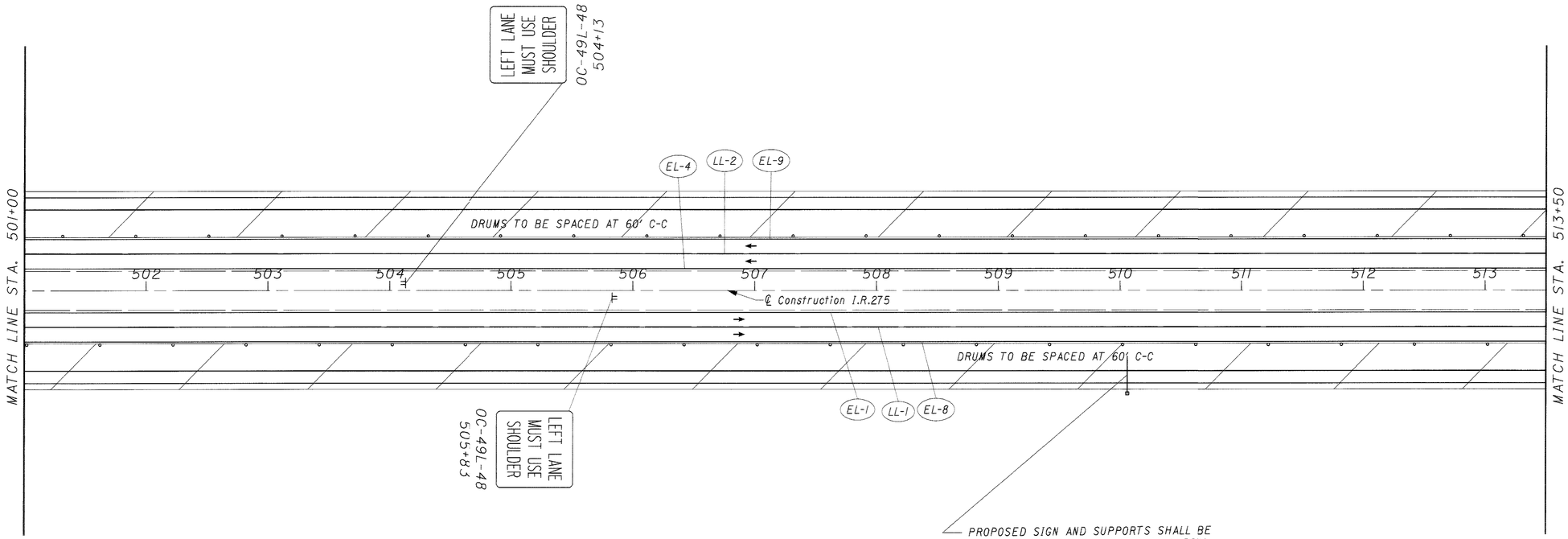

FOR M.O.T. LEGEND, SEE SHEET NO. 135
FOR QUANTITIES, SEE M.O.T. SUBSUMMARY
FOR M.O.T. TYPICAL SETIONS, SEE SHEET NO. 83

N

0 25 50 100
HORIZONTAL SCALE IN FEET

CALCULATED JGB
CHECKED AM

MAINTENANCE OF TRAFFIC PHASE TWO-A, I.R. 275

CLE-275-5.35

156
857

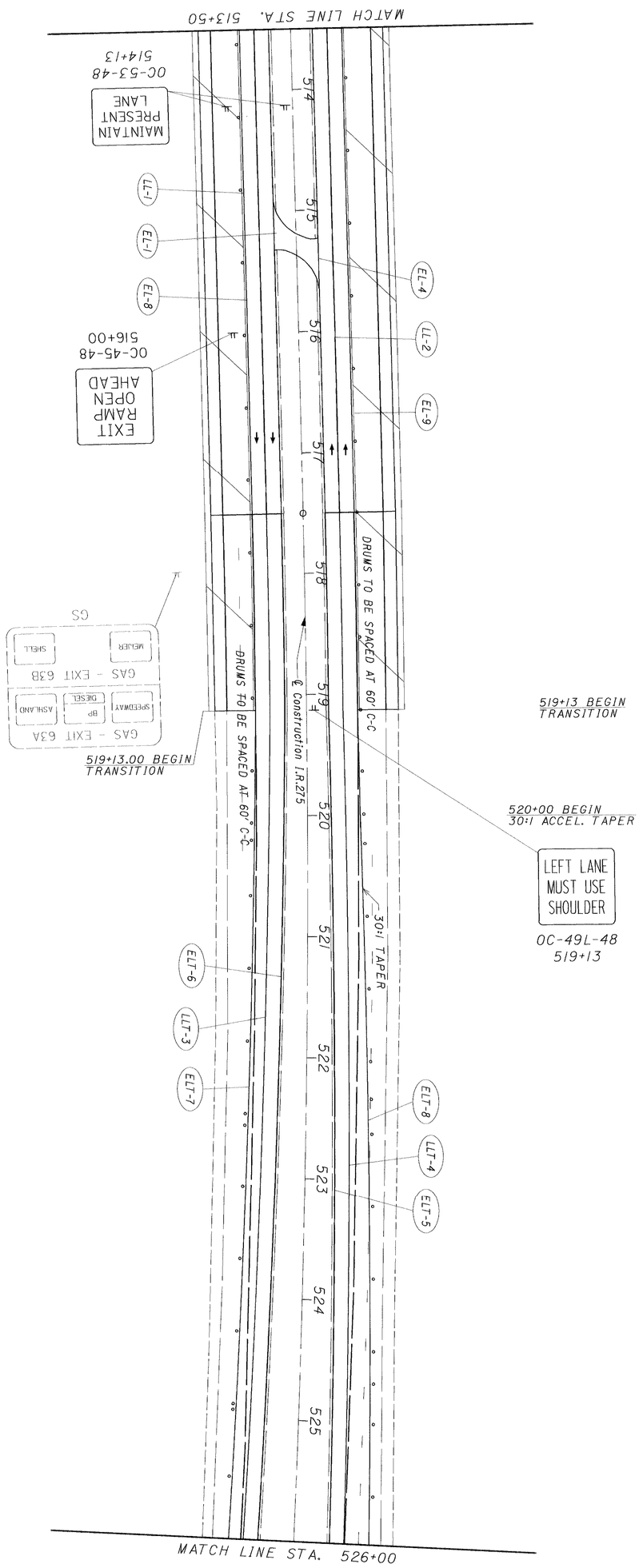

FOR M.O.T. LEGEND, SEE SHEET NO. 135
FOR QUANTITIES, SEE M.O.T. SUBSUMMARY
FOR M.O.T. TYPICAL SECTIONS, SEE SHEET NO. 83

157 / 857	CLE-275-5.35	MAINTENANCE OF TRAFFIC PHASE TWO-A, I.R. 275	CALCULATED JGB CHECKED AM	0 50 25 100 HORIZONTAL SCALE IN FEET	N

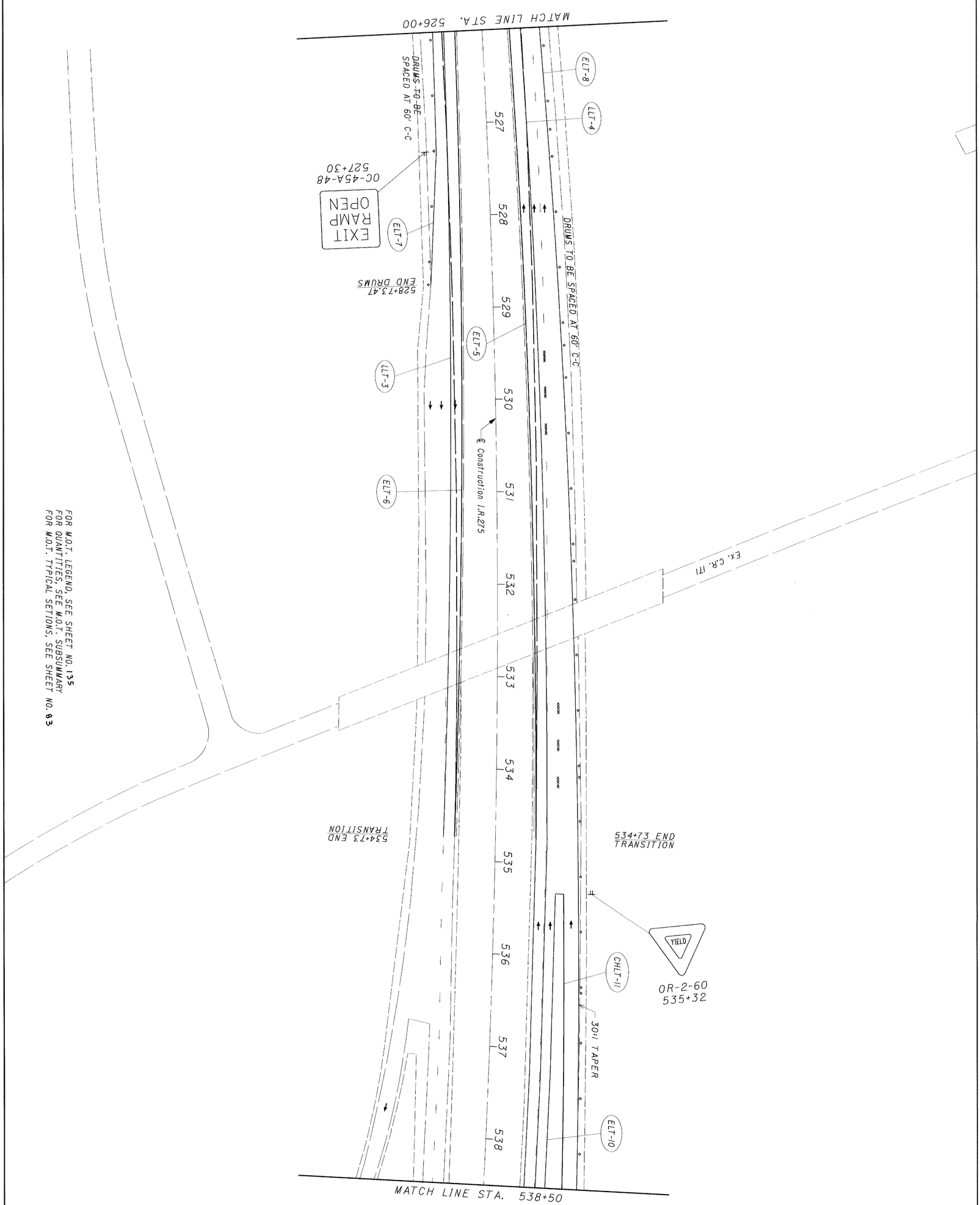

FOR M.O.T. LEGEND, SEE SHEET NO. 135
FOR QUANTITIES, SEE M.O.T. SUBSUMMARY
FOR M.O.T. TYPICAL SETIONS, SEE SHEET NO. 93

158	CLE-275-5.35	MAINTENANCE OF TRAFFIC PHASE TWO-A, I.R. 275	CALCULATED JGB CHECKED AM	0 50 25 100 HORIZONTAL SCALE IN FEET

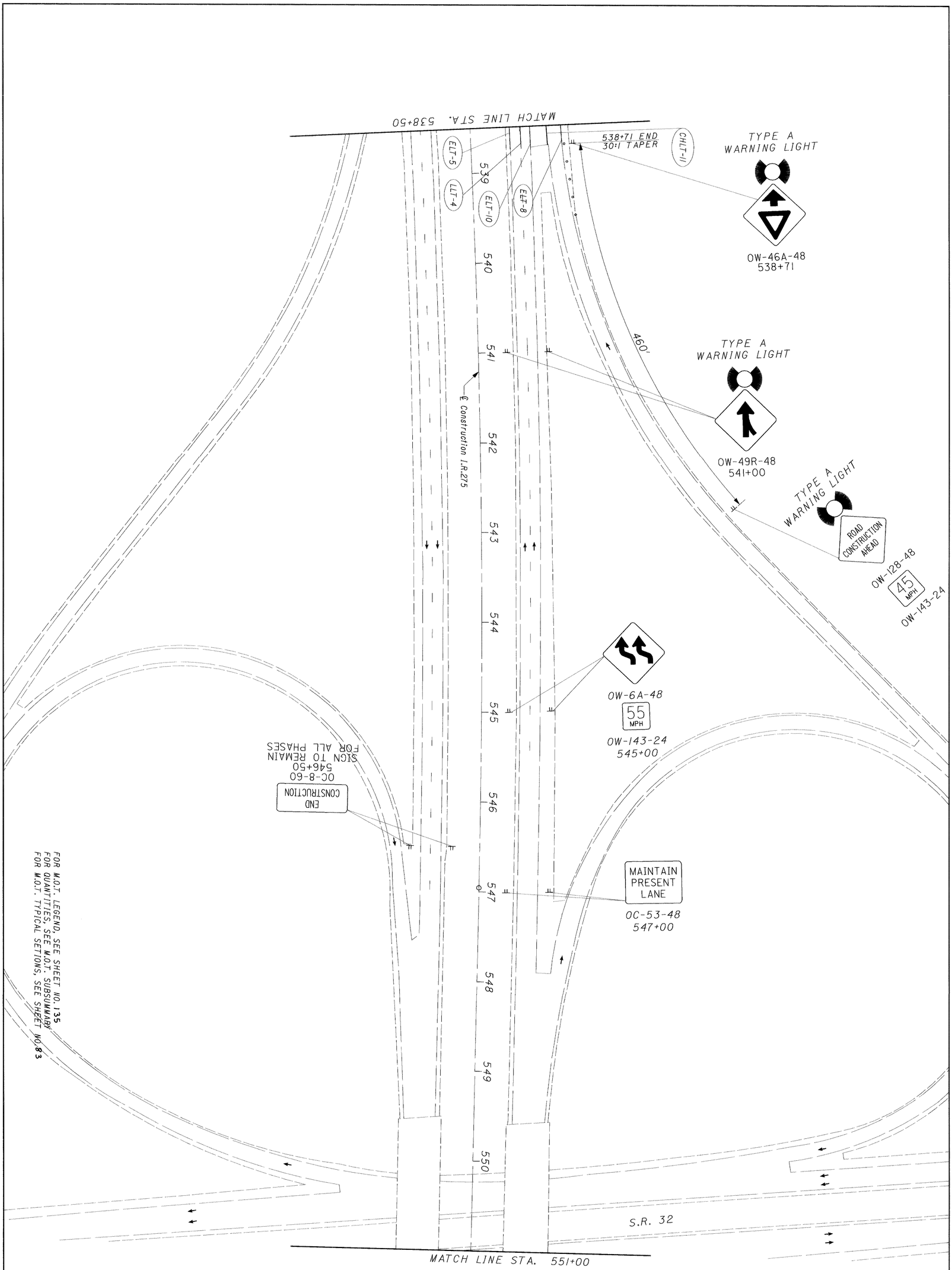

159 / 159	CLE-275-5.35	**MAINTENANCE OF TRAFFIC** **PHASE TWO-A, I.R. 275**	CALCULATED JGB CHECKED AM	0 25 50 100 HORIZONTAL SCALE IN FEET

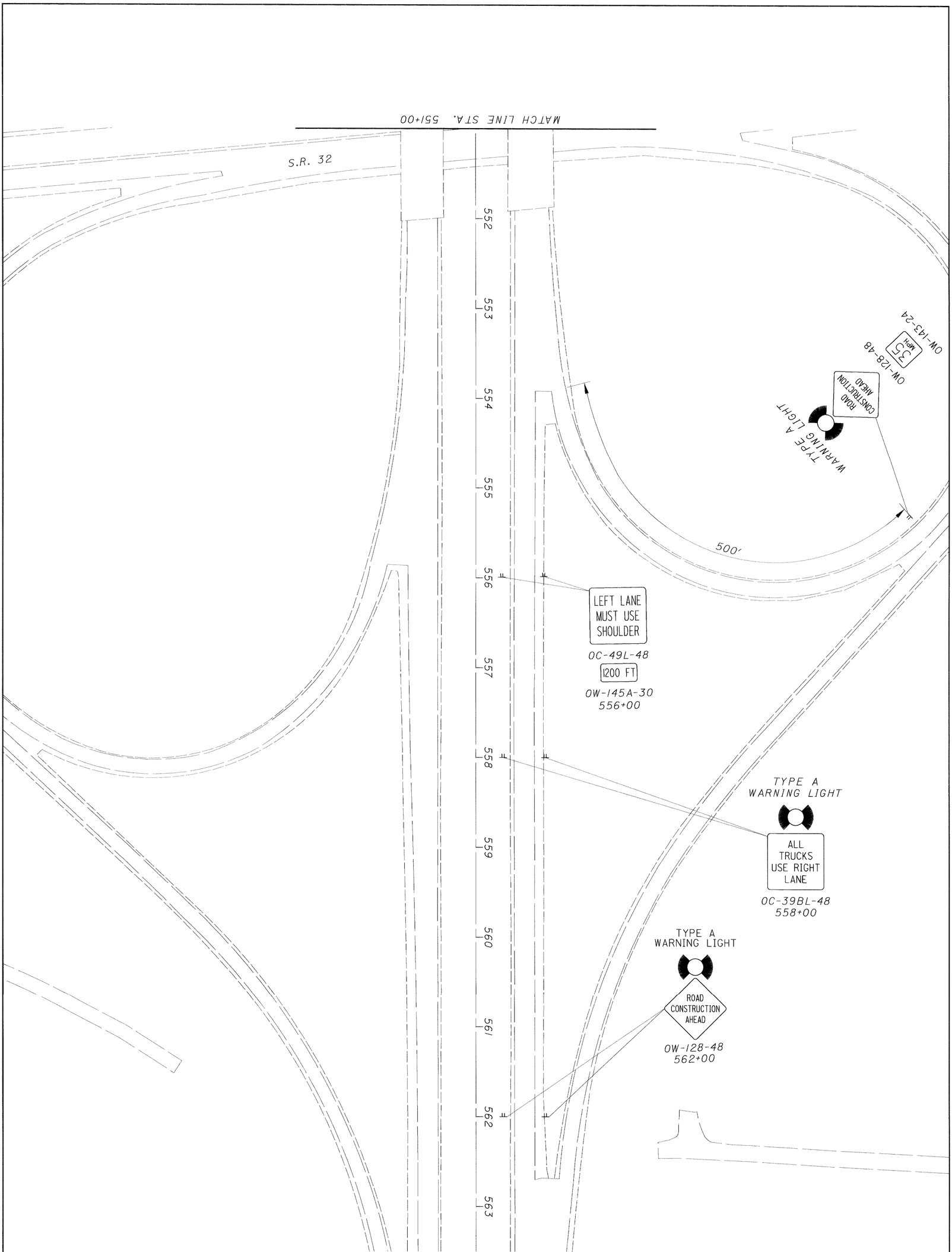

160 / 857	CLE-275-5.35	**MAINTENANCE OF TRAFFIC** **PHASE TWO-A, I.R. 275**	CALCULATED JGB CHECKED AM	0 25 50 100 HORIZONTAL SCALE IN FEET

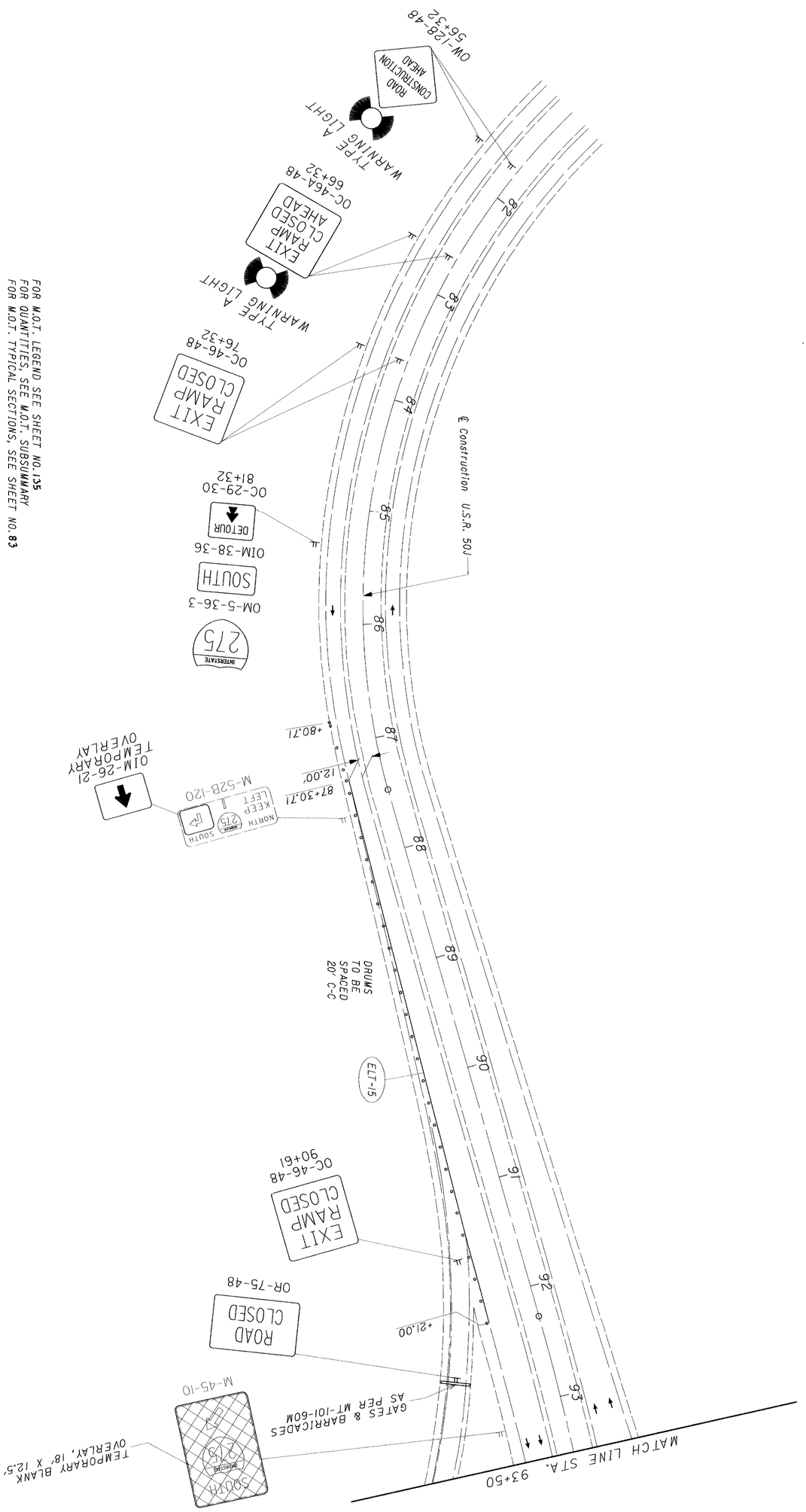

138 / 191	CLE-275-5.35	MAINTENANCE OF TRAFFIC PHASE TWO A, U.S.R. 50J	CALCULATED JOB CHECKED AM	0 50 25 100 HORIZONTAL SCALE IN FEET

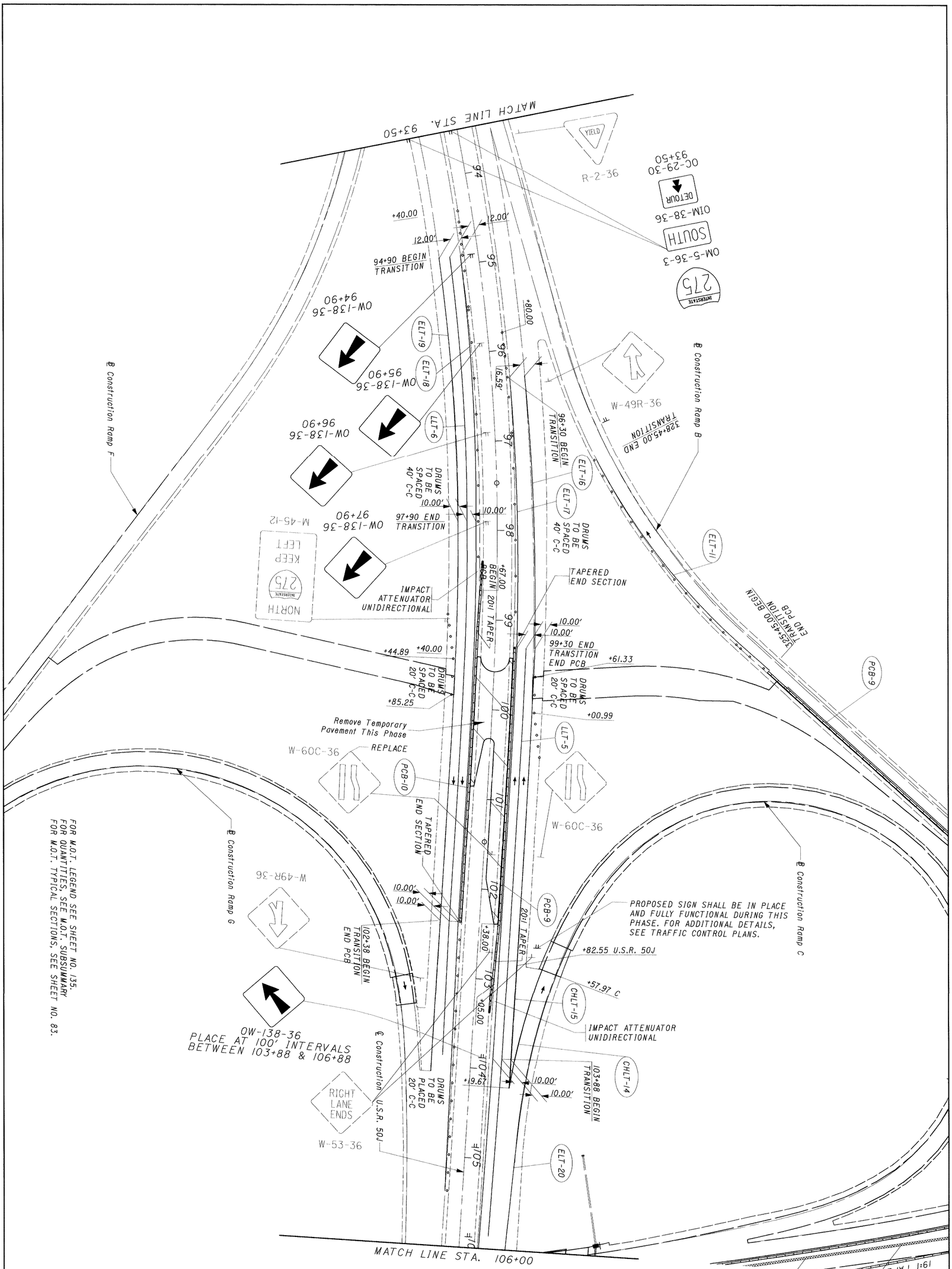

83 / 162	CLE-275-5.35	**MAINTENANCE OF TRAFFIC PHASE TWO A, U.S.R. 50J**	CALCULATED JGB CHECKED AM	0 50 25 100 HORIZONTAL SCALE IN FEET

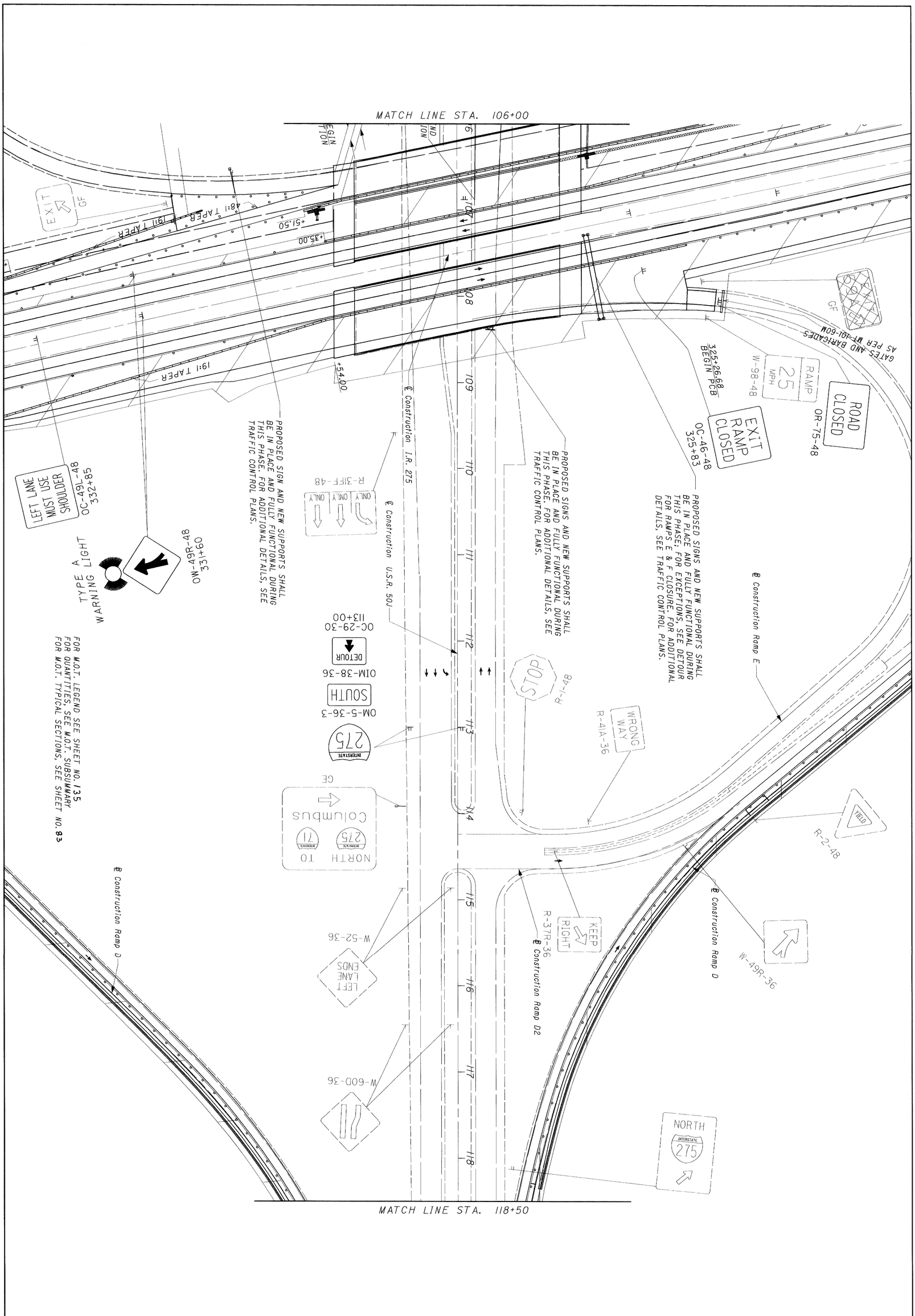

163 / 857	CLE-275-5.35	MAINTENANCE OF TRAFFIC PHASE TWO A, U.S.R. 50J	CALCULATED JGB CHECKED AM	0 50 25 100 HORIZONTAL SCALE IN FEET

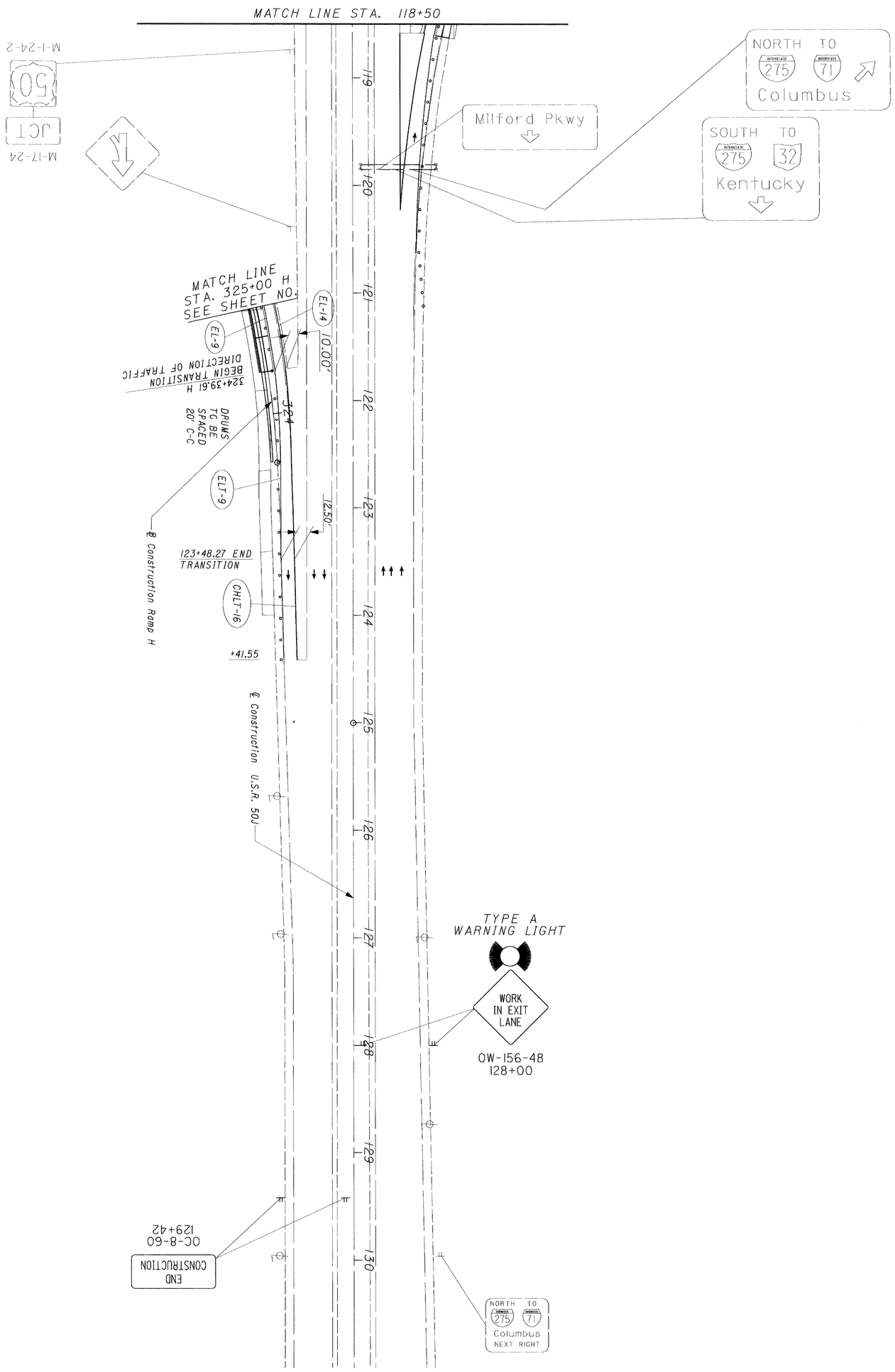

FOR M.O.T. LEGEND SEE SHEET NO. 135.
FOR QUANTITIES, SEE M.O.T. SUBSUMMARY
FOR M.O.T. TYPICAL SECTIONS, SEE SHEET NO. 83.

164 / 85	CLE-275-5.35	MAINTENANCE OF TRAFFIC PHASE TWO A, U.S.R. 50J	CALCULATED JGB CHECKED AM	0 50 25 100 HORIZONTAL SCALE IN FEET

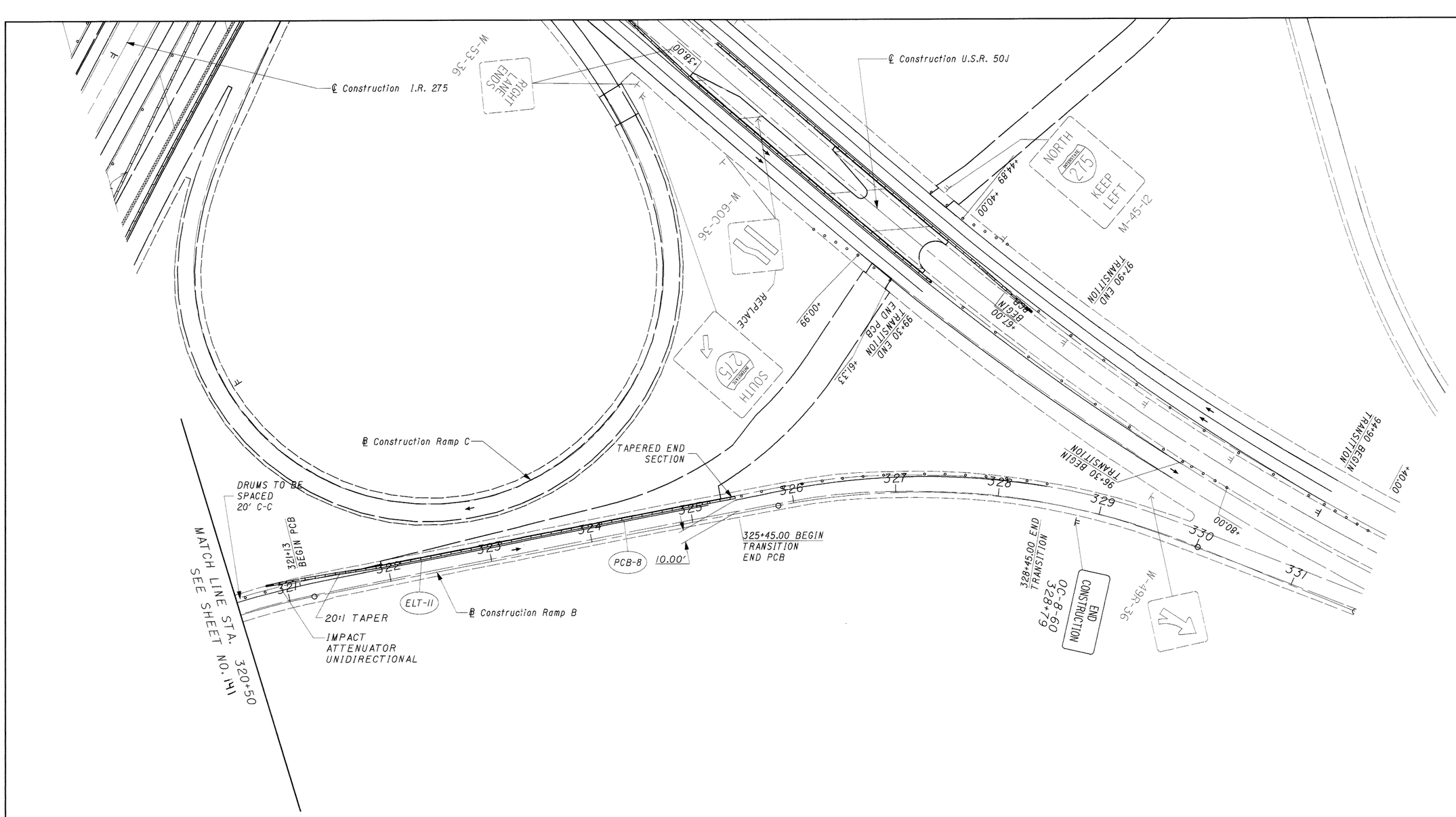

FOR M.O.T. LEGEND, SEE SHEET NO. 135.
FOR QUANTITIES, SEE M.O.T. SUBSUMMARY
FOR M.O.T. TYPICAL SECTIONS, SEE SHEET NO. 83.

HORIZONTAL SCALE IN FEET
0 25 50 100

CALCULATED JDB
CHECKED AM

MAINTENANCE OF TRAFFIC PHASE TWO A, RAMP B

CLE-275-5.35

165
857

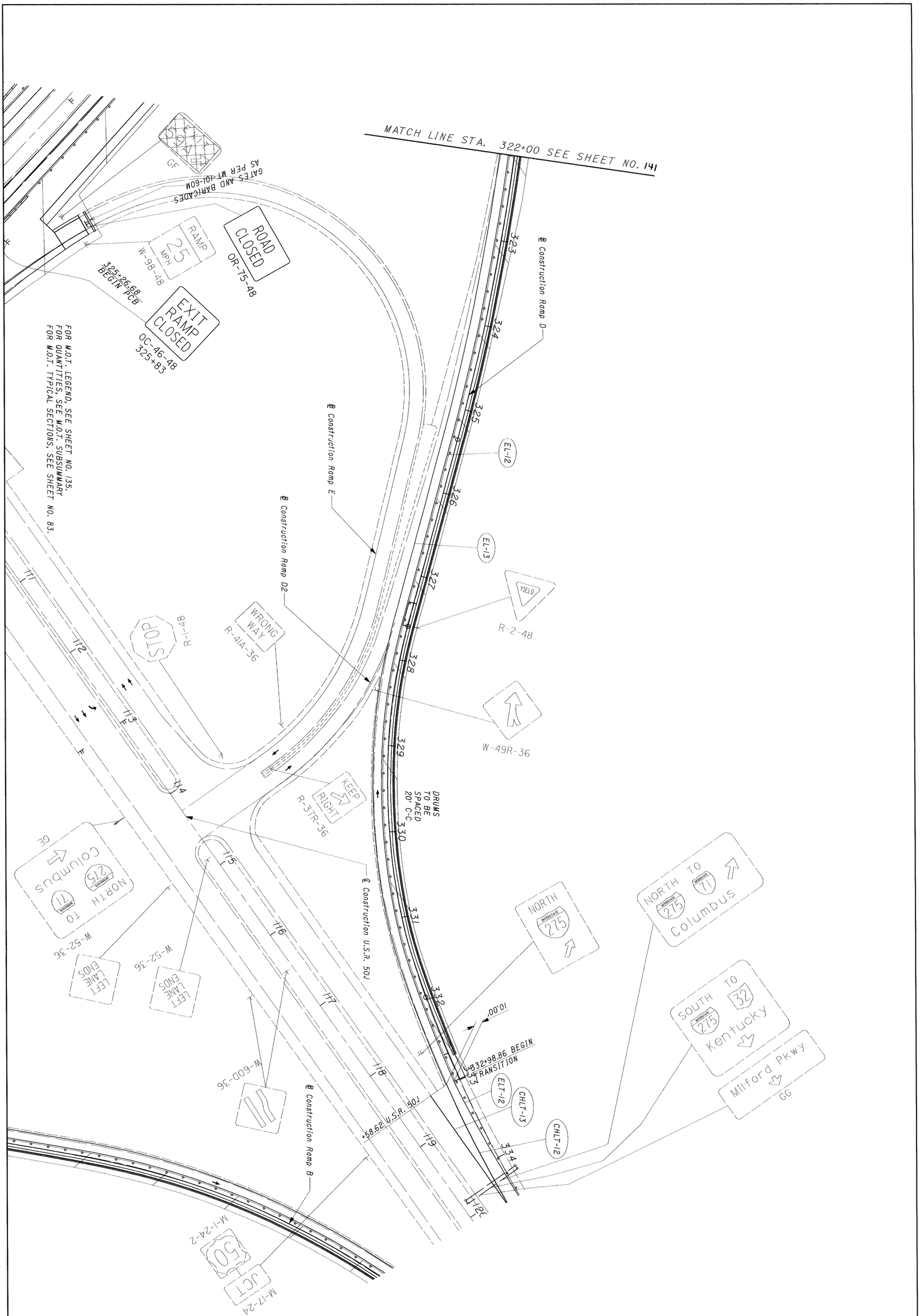

166 / 857	CLE-275-5.35	MAINTENANCE OF TRAFFIC PHASE TWO A, RAMP D	CALCULATED JGB CHECKED AM	0 25 50 100 HORIZONTAL SCALE IN FEET

FOR M.O.T. LEGEND, SEE SHEET NO. 135.
FOR QUANTITIES, SEE M.O.T. SUBSUMMARY
FOR M.O.T. TYPICAL SECTIONS, SEE SHEET NO. 83.

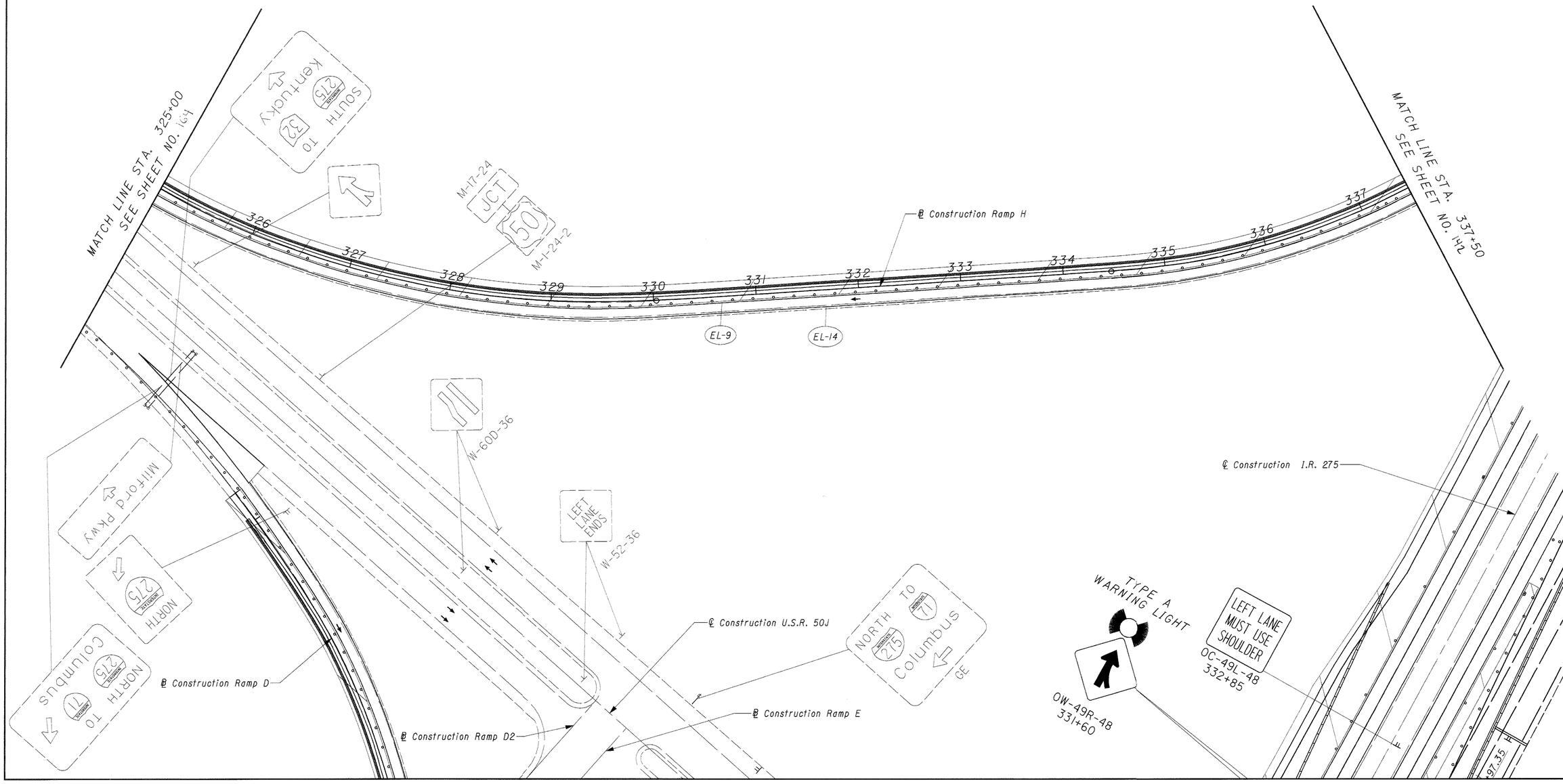

HORIZONTAL SCALE IN FEET
0 25 50 100

CALCULATED JGB
CHECKED AM

MAINTENANCE OF TRAFFIC
PHASE TWO A, RAMP H

CLE-275-5.35

167
859

NOTES:

FOR M.O.T. TYPICAL SECTIONS, SEE SHEET NO. 83

LEGEND

32" PORTABLE CONCRETE BARRIER

AREA TO BE CONSTRUCTED

TYPE C BARRIER CONSTRUCTION

N

0 25 50 100
HORIZONTAL SCALE IN FEET

CALCULATED JGB
CHECKED AM

MAINTENANCE OF TRAFFIC PHASE TWO-B, I.R. 275

CLE-275-5.35

168
857

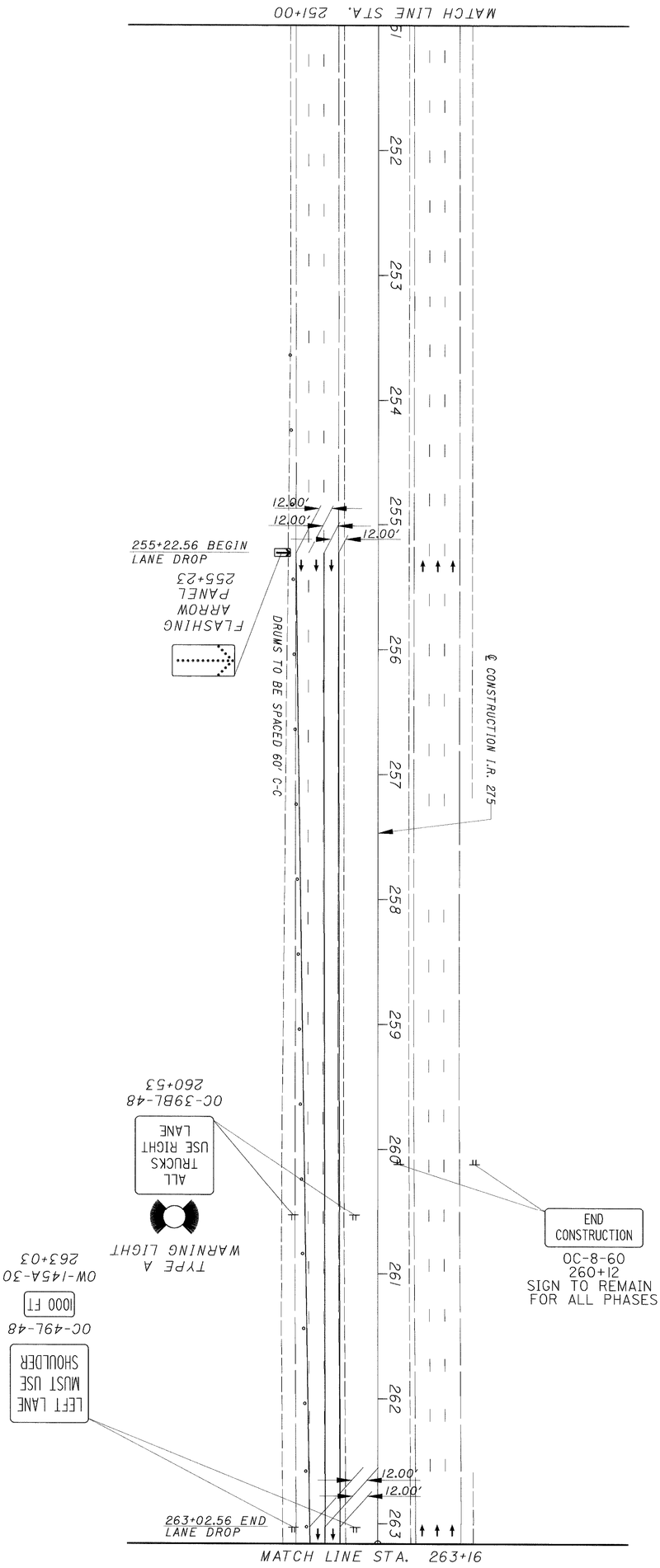

FOR M.O.T. LEGEND, SEE SHEET NO. 148
FOR QUANTITIES, SEE M.O.T. SUBSUMMARY
FOR M.O.T. TYPICAL SECTIONS, SEE SHEET NO. 83

169 / 857	CLE-275-5.35	MAINTENANCE OF TRAFFIC PHASE TWO-B, I.R. 275	CALCULATED JGB CHECKED AM	0 25 50 100 HORIZONTAL SCALE IN FEET

FOR M.O.T. LEGEND, SEE SHEET NO. 68
FOR QUANTITIES, SEE M.O.T. SUBSUMMARY
FOR M.O.T. TYPICAL SECTIONS, SEE SHEET NO. 83

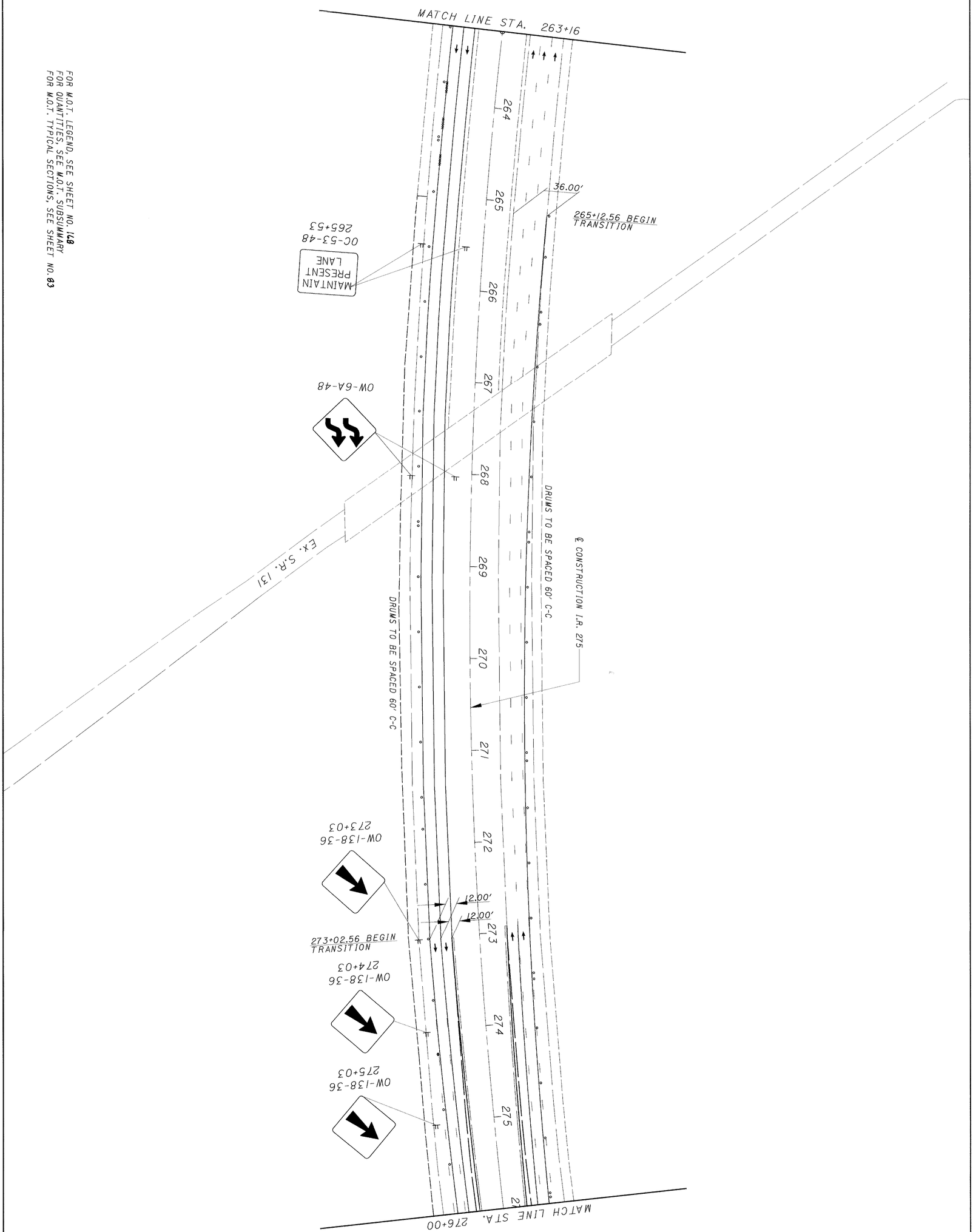

170 / 857	CLE-275-5.35	MAINTENANCE OF TRAFFIC PHASE TWO-B, I.R. 275	CALCULATED JGB CHECKED AM	0 50 25 100 HORIZONTAL SCALE IN FEET	N

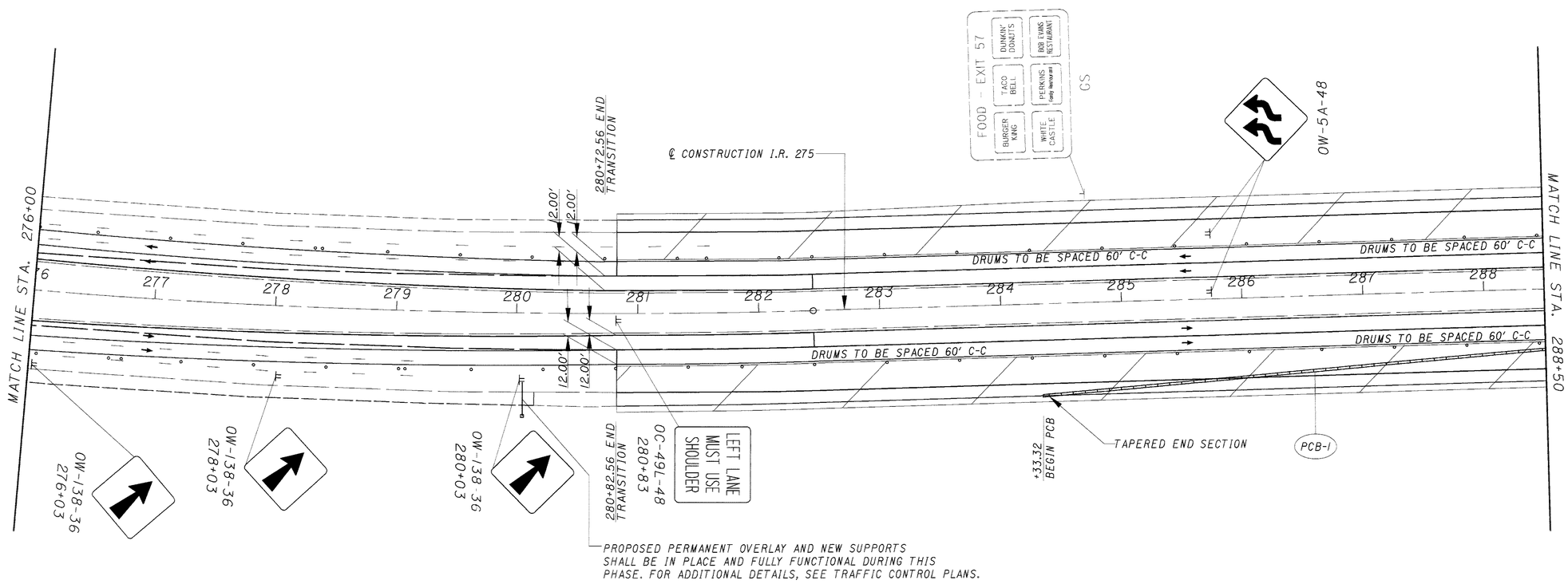

PROPOSED PERMANENT OVERLAY AND NEW SUPPORTS SHALL BE IN PLACE AND FULLY FUNCTIONAL DURING THIS PHASE. FOR ADDITIONAL DETAILS, SEE TRAFFIC CONTROL PLANS.

FOR M.O.T. LEGEND, SEE SHEET NO. 148
FOR QUANTITIES, SEE M.O.T. SUBSUMMARY
FOR M.O.T. TYPICAL SECTIONS, SEE SHEET NO. 93

N

0 25 50 100
HORIZONTAL SCALE IN FEET

CALCULATED JGB
CHECKED AM

MAINTENANCE OF TRAFFIC
PHASE TWO-B, I.R. 275

CLE-275-5.35

171
857

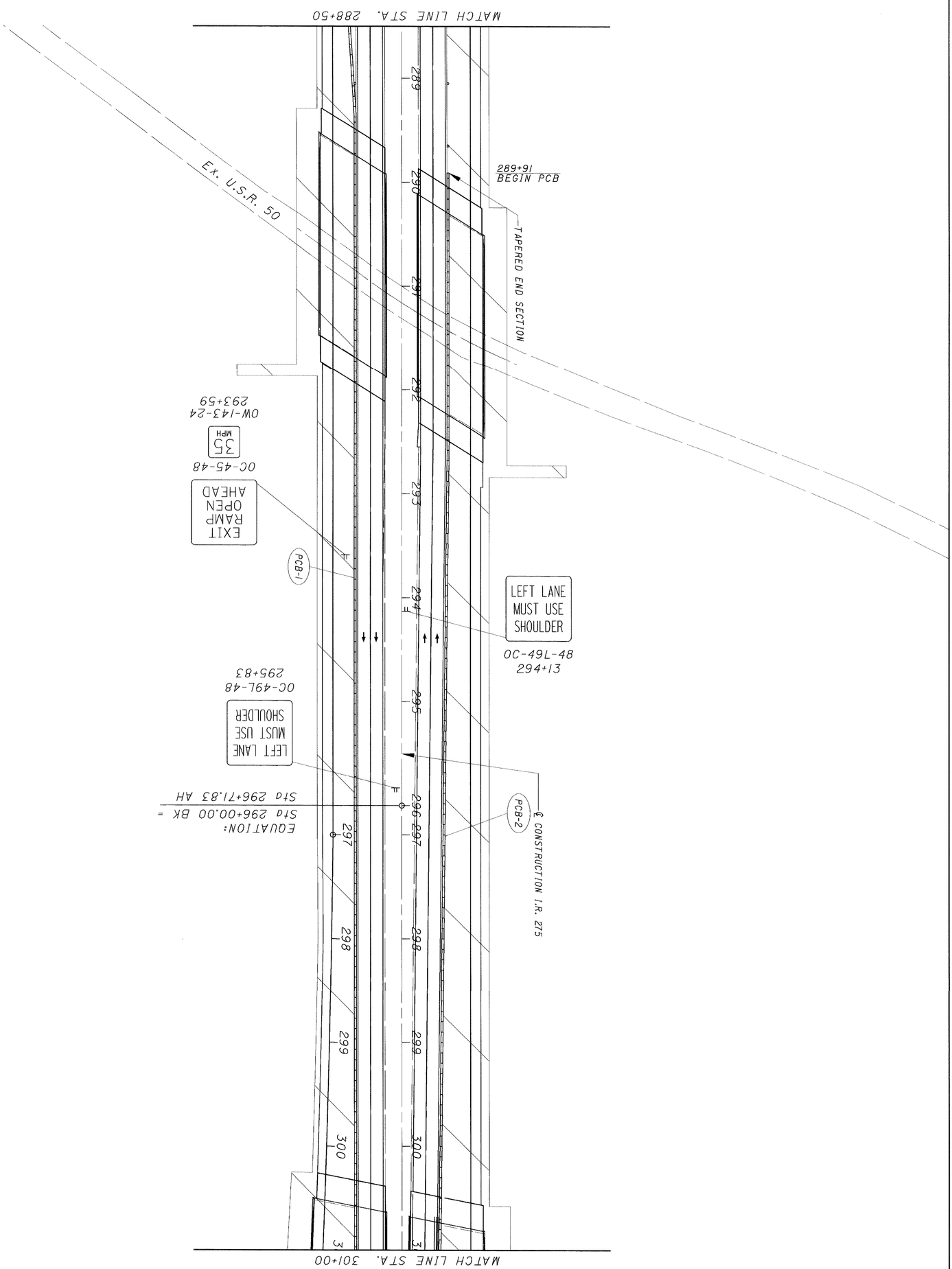

FOR M.O.T. LEGEND, SEE SHEET NO. 168
FOR QUANTITIES, SEE M.O.T. SUBSUMMARY
FOR M.O.T. TYPICAL SECTIONS, SEE SHEET NO. 83

172 / 85	CLE-275-5.35	**MAINTENANCE OF TRAFFIC** **PHASE TWO-B, I.R. 275**	CALCULATED JGB CHECKED AM	0 25 50 100 HORIZONTAL SCALE IN FEET N

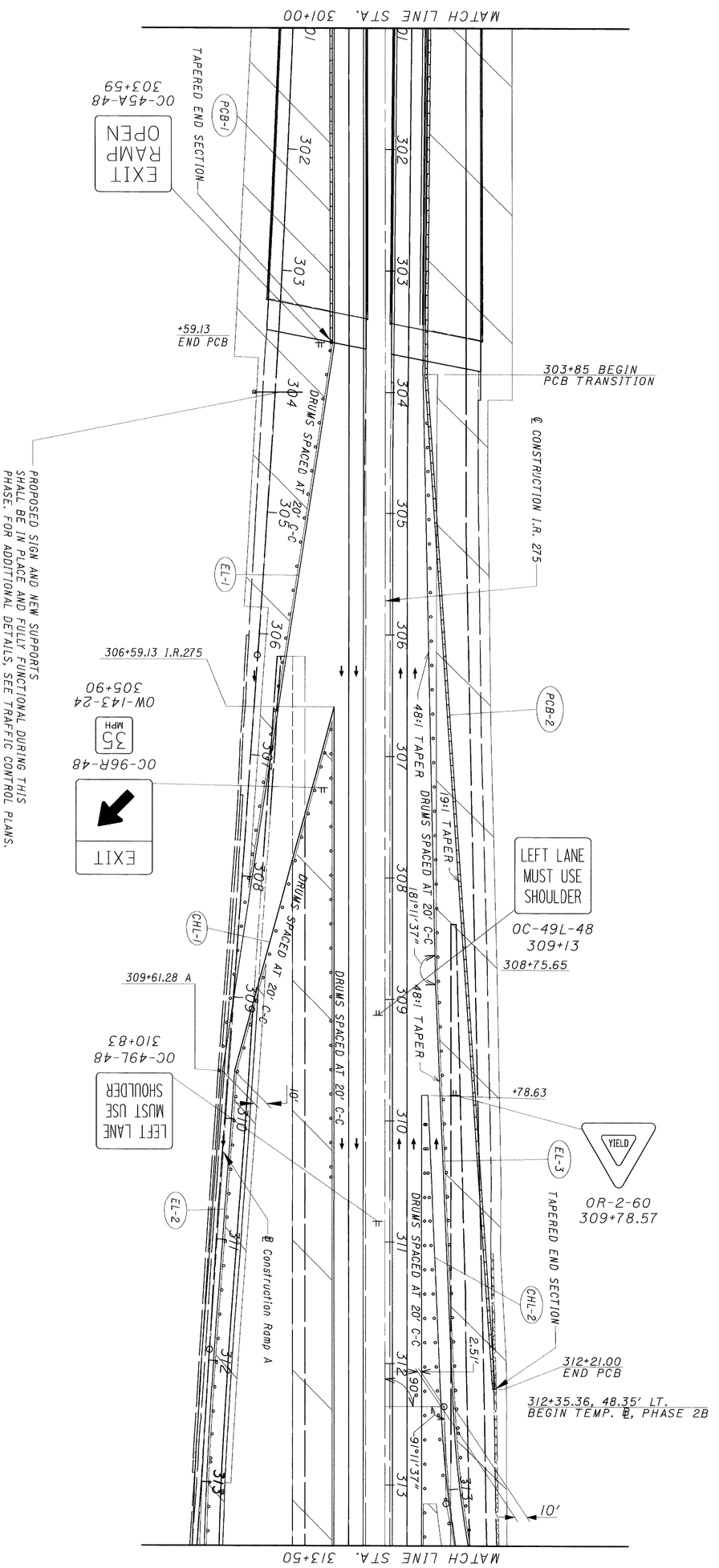

PROPOSED SIGN AND NEW SUPPORTS SHALL BE IN PLACE AND FULLY FUNCTIONAL DURING THIS PHASE. FOR ADDITIONAL DETAILS, SEE TRAFFIC CONTROL PLANS.

FOR M.O.T. LEGEND, SEE SHEET NO. **168**
FOR QUANTITIES, SEE M.O.T. SUBSUMMARY
FOR M.O.T. TYPICAL SECTIONS, SEE SHEET NO. **83**

173 / 857	CLE-275-5.35	MAINTENANCE OF TRAFFIC PHASE TWO-B, I.R. 275	CALCULATED JGB / CHECKED AM	0 50 25 100 HORIZONTAL SCALE IN FEET	N

TEMP. ℄, PHASE 2B
P.I. Sta = 313+11.19
D = 10° 04′ 51″ (LT)
Dc = 6° 20′ 00″
R = 904.67′
T = 79.79′
L = 159.17′
E = 3.51′
P.C. STA. 312+31.39
P.T. STA. 313+90.56

MATCH LINE STA. 322+00.00, SEE SHEET NO. 169

℄ Construction Ramp D

TYPE A WARNING LIGHT
OW-46A-48 314+95.60

TYPE A WARNING LIGHT
ROAD CONSTRUCTION AHEAD
OW-128-48 317+96

EL-10

DRUMS TO BE SPACED AT 20′ C-C

+95.60 TEMP. ℄ 13.00′ LT., END 48:1 TAPER

EL-3

CHL-2

DRUMS TO BE SPACED AT 20′ C-C

+95.51

314+95.60 D, 8.86′ RT.= STA. 314+95.60, END TEMP. ℄, PHASE 2B

℄ CONSTRUCTION I.R. 275

TYPE A WARNING LIGHT
OW-49R-48 321+00

WILDFLOWER AREA
RESTRICTED MOWING

LEFT LANE MUST USE SHOULDER
OC-49L-48 324+13

GATES AND BARRICADES AS PER MT-101.60M

ROAD CLOSED
OR-75-48

RAMP
25 MPH
W-98-48

EXIT RAMP CLOSED
OC-46-48 325+83

325+26.68 BEGIN PCB

GF

PCB-3

TAPERED END SECTION

PCB-5

26.68

TEMP. ℄, PHASE 2B

DRUMS TO BE SPACED AT 20′ C-C

MATCH LINE STA. 313+50

MATCH LINE STA. 326+00

314 315 316 317 318 319 320 321 322 323 324 325

TAPERED END SECTION

320+13.51 BEGIN PCB 20:1 TAPER

EL-2 EL-4

DRUMS TO BE SPACED AT 20′ C-C

IMPACT ATTENUATOR UNIDIRECTIONAL

320+18.35 A BEGIN PCB

℄ Construction Ramp A

EL-1 CHL-3

316+62.94 BEGIN TRANSITION

ELT-1 ELT-4

317+80 END TRANSITION

DRUMS TO BE SPACED AT 20′ C-C

TYPE A WARNING LIGHT
OW-49R-48 322+00A

PCB-4

LEFT LANE MUST USE SHOULDER
OC-49L-48 325+83

EXIT RAMP OPEN
OC-45A-48 313+80

PROPOSED SIGN AND NEW SUPPORTS SHALL BE IN PLACE AND FULLY FUNCTIONAL DURING THIS PHASE. FOR ADDITIONAL DETAILS, SEE TRAFFIC CONTROL PLANS.

℄ Construction Ramp B

MATCH LINE ST. 320+50.00, SEE SHEET NO. 190

EXIT
35 MPH
OC-96R-48
OW-143-24 316+40 A

319+48

OW-138-36 102+50

FOR M.O.T. LEGEND, SEE SHEET NO. 168
FOR QUANTITIES, SEE M.O.T. SUBSUMMARY
FOR M.O.T. TYPICAL SECTIONS, SEE SHEET NO. 83

N

0 25 50 100
HORIZONTAL SCALE IN FEET

CALCULATED JGB
CHECKED AM

MAINTENANCE OF TRAFFIC
PHASE TWO-B, I.R. 275

CLE-275-5.35

174
857

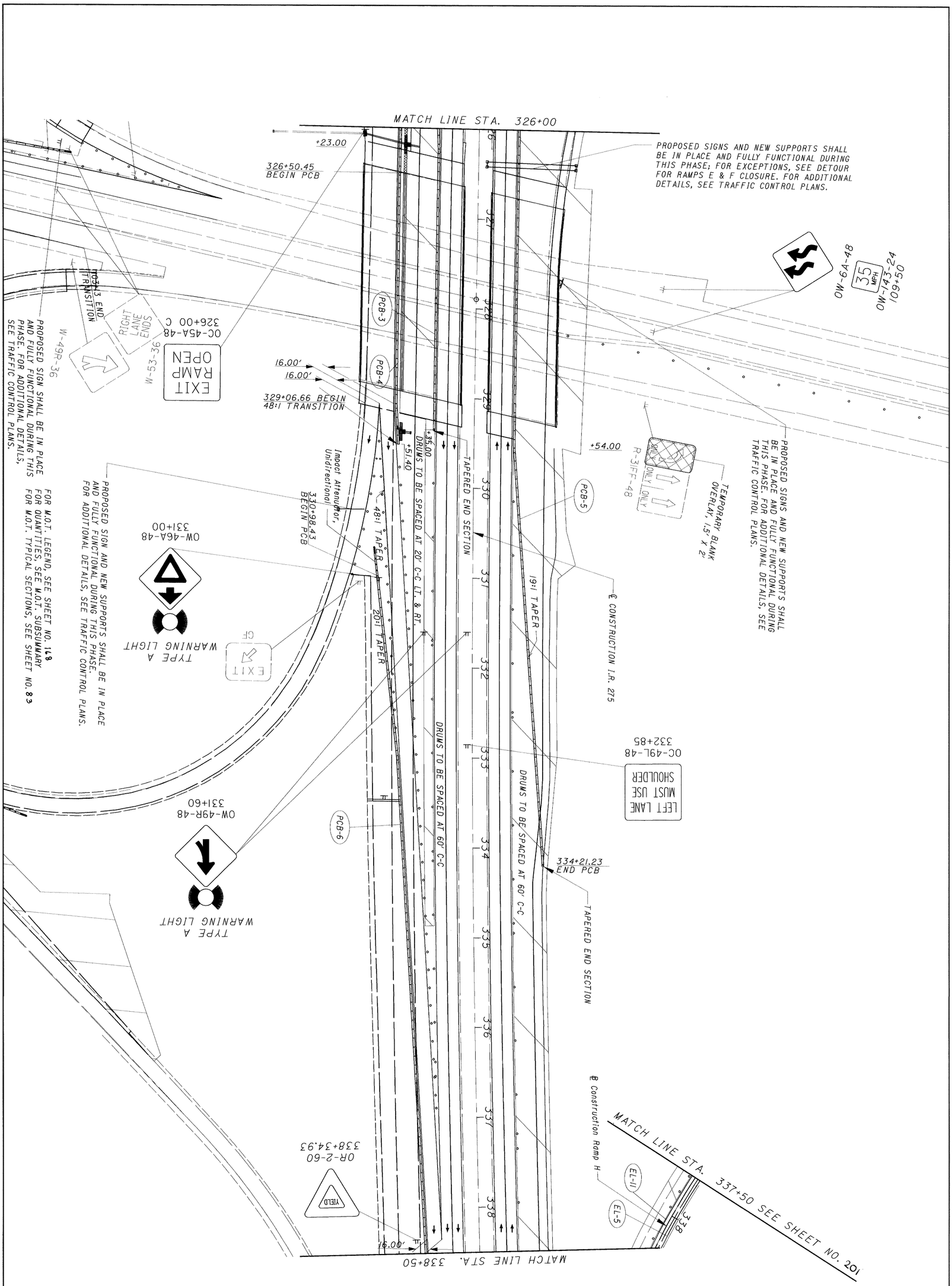

175 / 857	CLE-275-5.35	**MAINTENANCE OF TRAFFIC PHASE TWO-B, I.R. 275**	CALCULATED JGB / CHECKED AM	0 50 25 100 HORIZONTAL SCALE IN FEET

PROPOSED SIGNS AND NEW SUPPORTS SHALL BE IN PLACE AND FULLY FUNCTIONAL DURING THIS PHASE; FOR EXCEPTIONS, SEE DETOUR FOR RAMPS E & F CLOSURE. FOR ADDITIONAL DETAILS, SEE TRAFFIC CONTROL PLANS.

LEFT LANE MUST USE SHOULDER
OC-49L-48
339+13

℄ Construction Ramp H

℄ CONSTRUCTION I.R. 275

EXIT

OC-96R-48

35 MPH

OW-143-24
343+20

EXIT RAMP OPEN

OC-45A-48
345+72

CHL-4

EL-11

EL-5

+08.80

+72.00

345+72.00
BEGIN PCB

TAPERED END SECTION

PCB-7

DRUMS TO BE SPACED 20' C-C

DRUMS TO BE SPACED AT 60' C-C

DRUMS TO BE SPACED 20' C-C

DRUMS TO BE SPACED AT 60' C-C

DRUMS TO BE SPACED AT 60' C-C

MATCH LINE STA. 338+50

MATCH LINE STA. 351+00

339 340 341 342 343 344 345 346 347 348 349 350

W-49R-36

LEFT LANE MUST USE SHOULDER
OC-49L-48
340+83

PCB-6

345+45.58 END
48:1 TRANSITION

TAPERED END SECTION

348+22.00
END PCB

Ex. Round Bottom Rd. (C.R. 106)

FOR M.O.T. LEGEND, SEE SHEET NO. 168
FOR QUANTITIES, SEE M.O.T. SUBSUMMARY
FOR M.O.T. TYPICAL SECTIONS, SEE SHEET NO. 83

N

0 25 50 100
HORIZONTAL SCALE IN FEET

CALCULATED JGB
CHECKED AM

MAINTENANCE OF TRAFFIC PHASE TWO-2B, I.R. 275

CLE-275-5.35

176
857

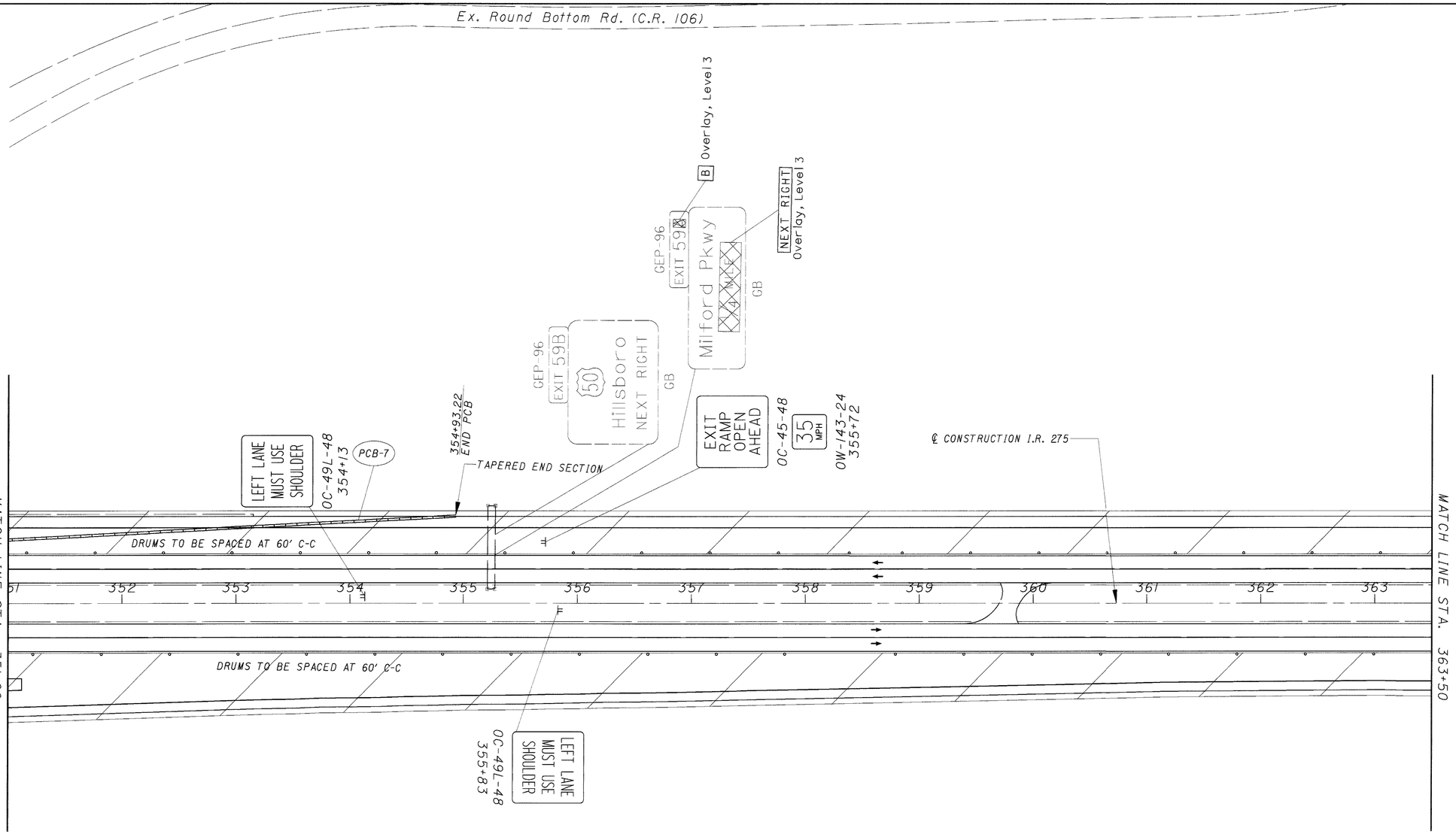

FOR M.O.T. LEGEND, SEE SHEET NO. 168
FOR QUANTITIES, SEE M.O.T. SUBSUMMARY
FOR M.O.T. TYPICAL SECTIONS, SEE SHEET NO. 83

N

0 25 50 100
HORIZONTAL SCALE IN FEET

CALCULATED JGB
CHECKED AM

MAINTENANCE OF TRAFFIC PHASE TWO-B, I.R. 275

CLE-275-5.35

177
857

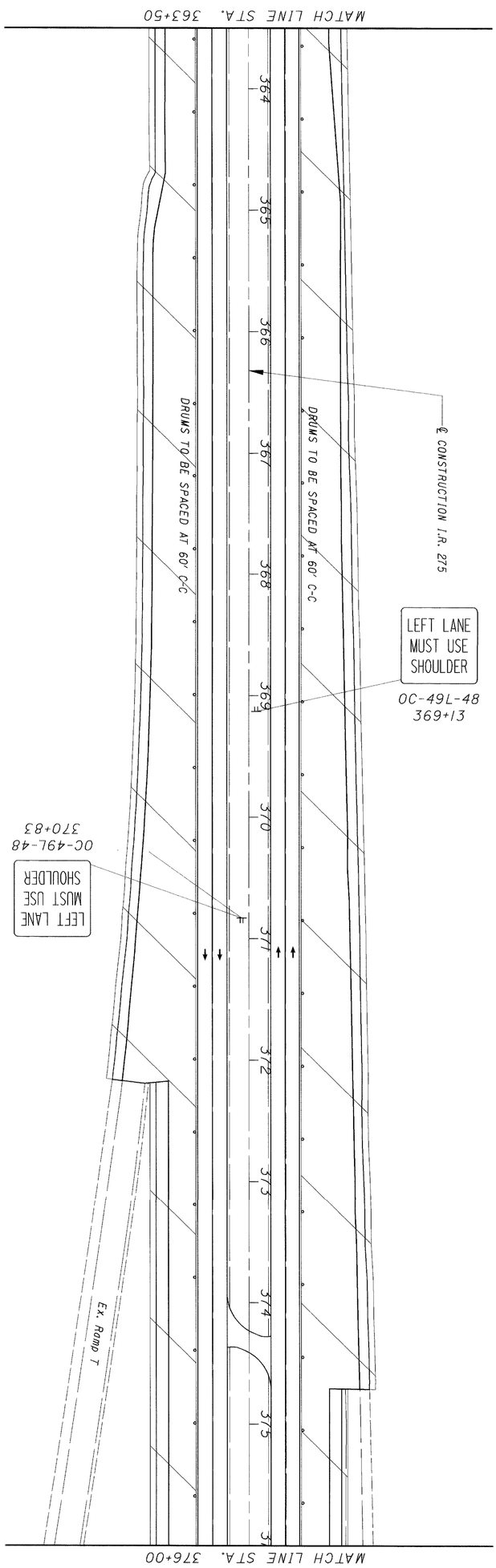

FOR M.O.T. LEGEND, SEE SHEET NO. 168
FOR QUANTITIES, SEE M.O.T. SUBSUMMARY
FOR M.O.T. TYPICAL SECTIONS, SEE SHEET NO. 83

178 857	CLE-275-5.35	MAINTENANCE OF TRAFFIC PHASE TWO-B, I.R. 275	CALCULATED JGB CHECKED AM	0 50 25 100 HORIZONTAL SCALE IN FEET	N

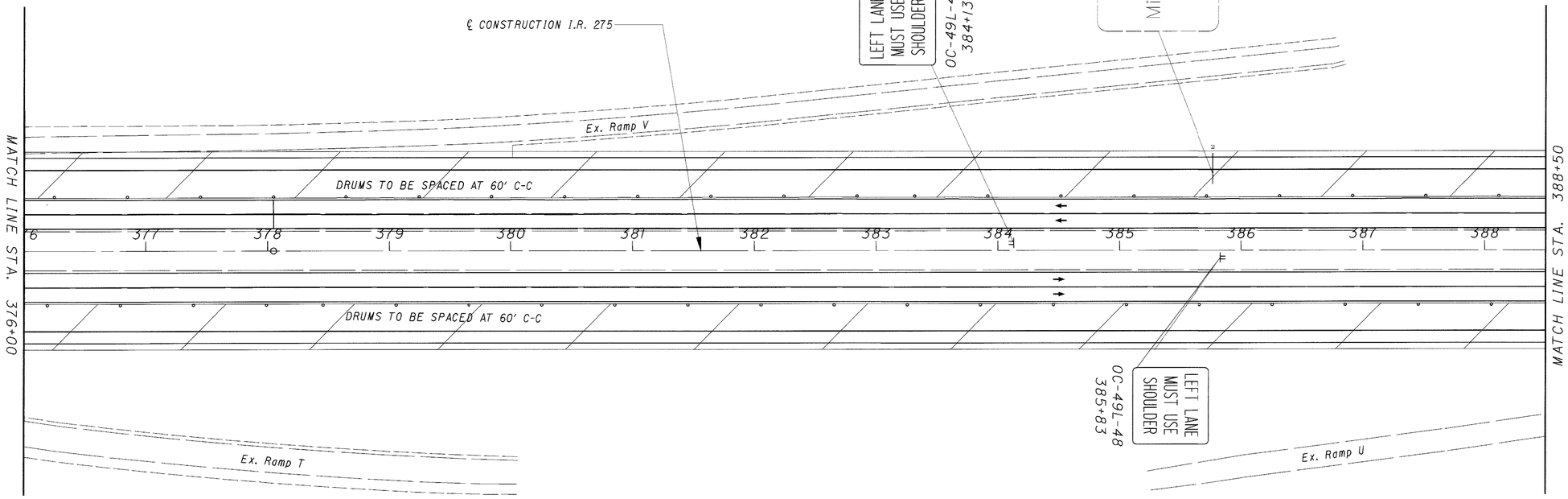

FOR M.O.T. LEGEND, SEE SHEET NO. 168
FOR QUANTITIES, SEE M.O.T. SUBSUMMARY
FOR M.O.T. TYPICAL SECTIONS, SEE SHEET NO. 83

N

0 25 50 100
HORIZONTAL SCALE IN FEET

CALCULATED JGB
CHECKED AM

MAINTENANCE OF TRAFFIC PHASE TWO-B, I.R. 275

CLE-275-5.35

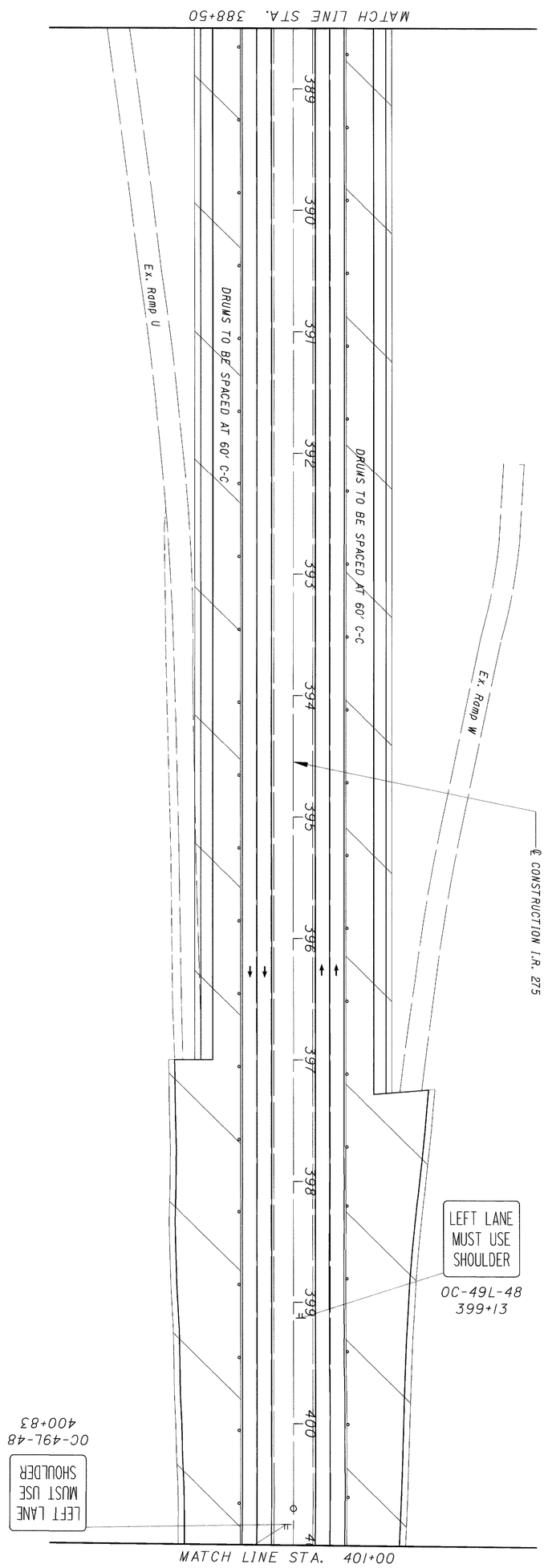

FOR M.O.T. LEGEND, SEE SHEET NO. 81
FOR QUANTITIES, SEE M.O.T. SUBSUMMARY
FOR M.O.T. TYPICAL SECTIONS, SEE SHEET NO. 83

180	CLE-275-5.35	MAINTENANCE OF TRAFFIC PHASE TWO-B, I.R. 275	CALCULATED JGB CHECKED AM	0 50 25 100 HORIZONTAL SCALE IN FEET	N

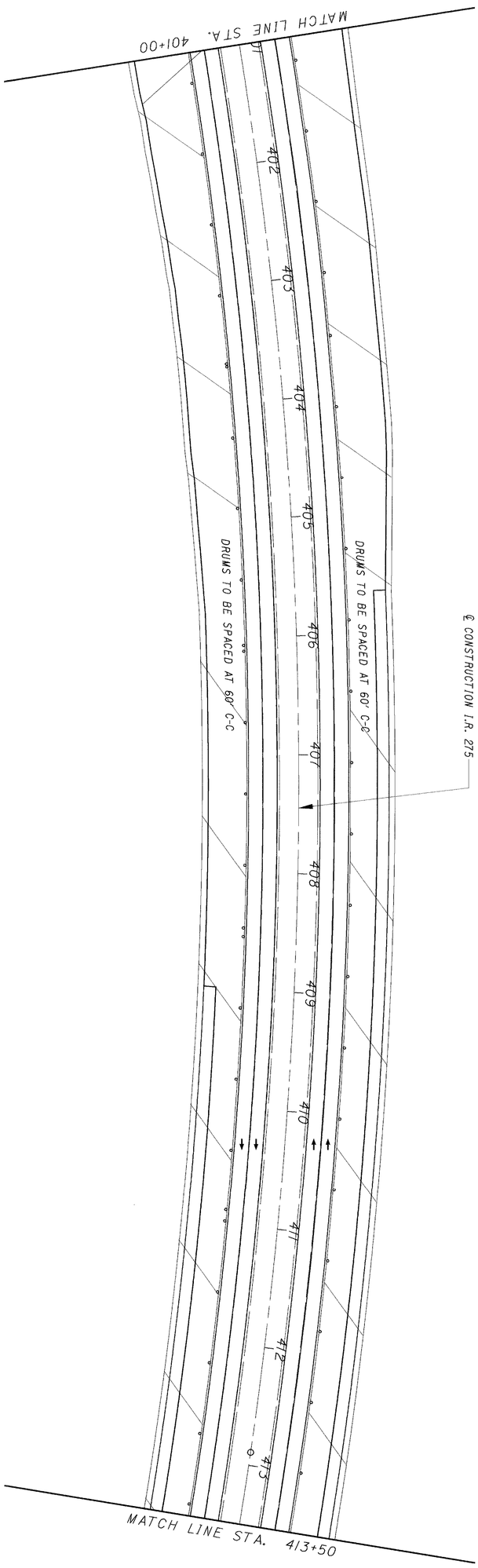

FOR M.O.T. LEGEND, SEE SHEET NO. 118
FOR QUANTITIES, SEE M.O.T. SUBSUMMARY
FOR M.O.T. TYPICAL SECTIONS, SEE SHEET NO. 93

181 / 857	CLE-275-5.35	MAINTENANCE OF TRAFFIC PHASE TWO-B, I.R. 275	CALCULATED JGB CHECKED AM	0 50 25 100 HORIZONTAL SCALE IN FEET	N

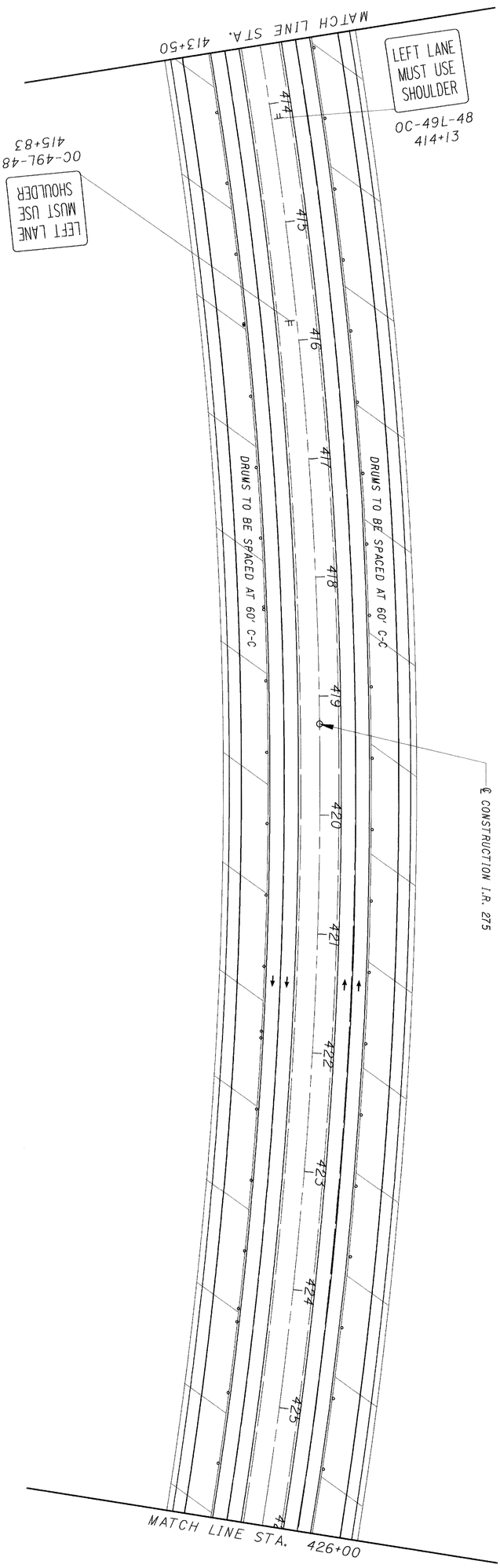

FOR M.O.T. LEGEND, SEE SHEET NO. 168
FOR QUANTITIES, SEE M.O.T. SUBSUMMARY
FOR M.O.T. TYPICAL SECTIONS, SEE SHEET NO. 83

182
857

CLE-275-5.35

MAINTENANCE OF TRAFFIC
PHASE TWO-B, I.R. 275

CALCULATED JGB
CHECKED AM

0 50
25 100
HORIZONTAL SCALE IN FEET

N

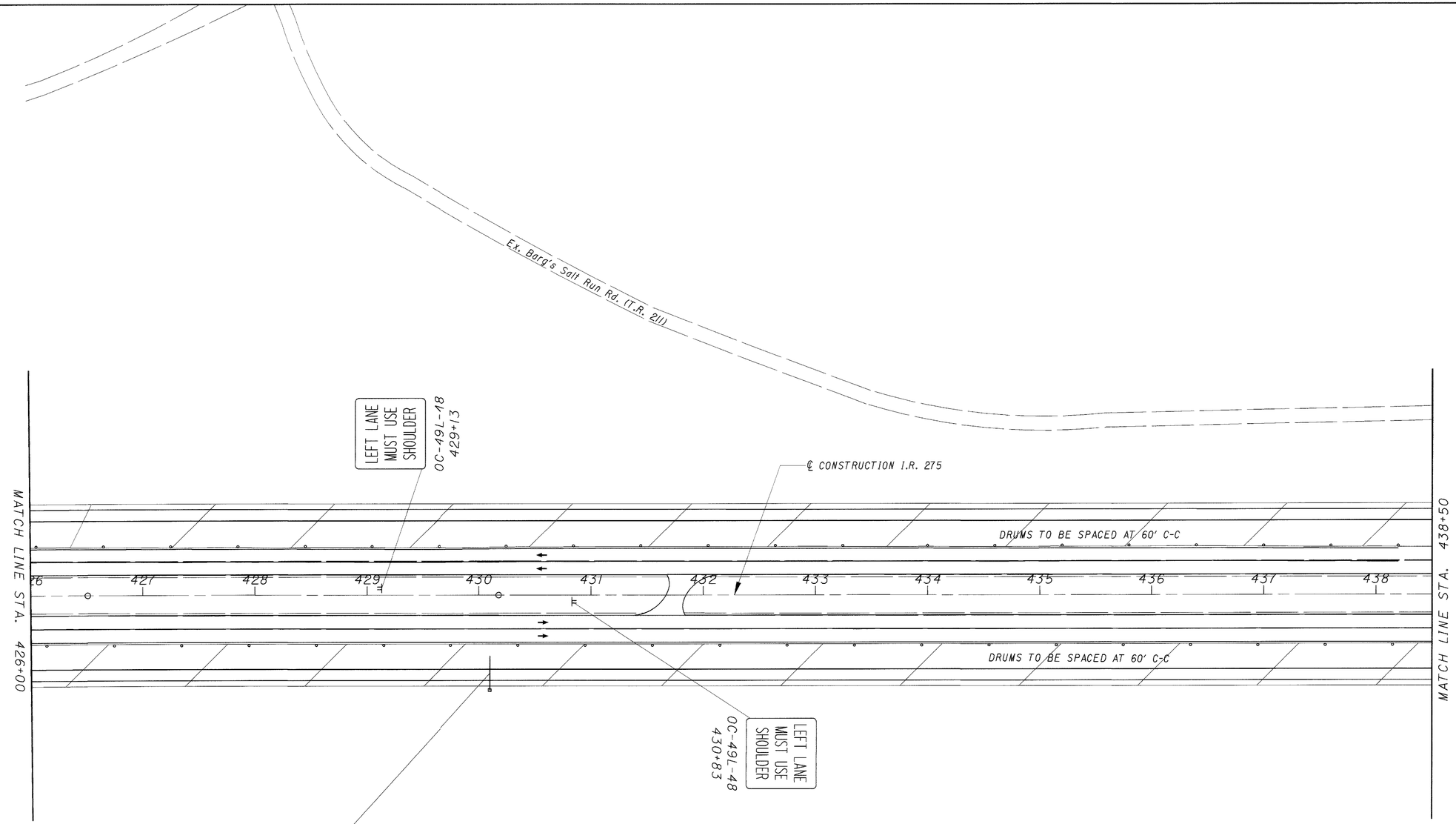

FOR M.O.T. LEGEND, SEE SHEET NO. 168
FOR QUANTITIES, SEE M.O.T. SUBSUMMARY
FOR M.O.T. TYPICAL SECTIONS, SEE SHEET NO. 83

N

0 25 50 100
HORIZONTAL SCALE IN FEET

CALCULATED JGB
CHECKED AM

MAINTENANCE OF TRAFFIC
PHASE TWO-B, I.R. 275

CLE-275-5.35

183
857

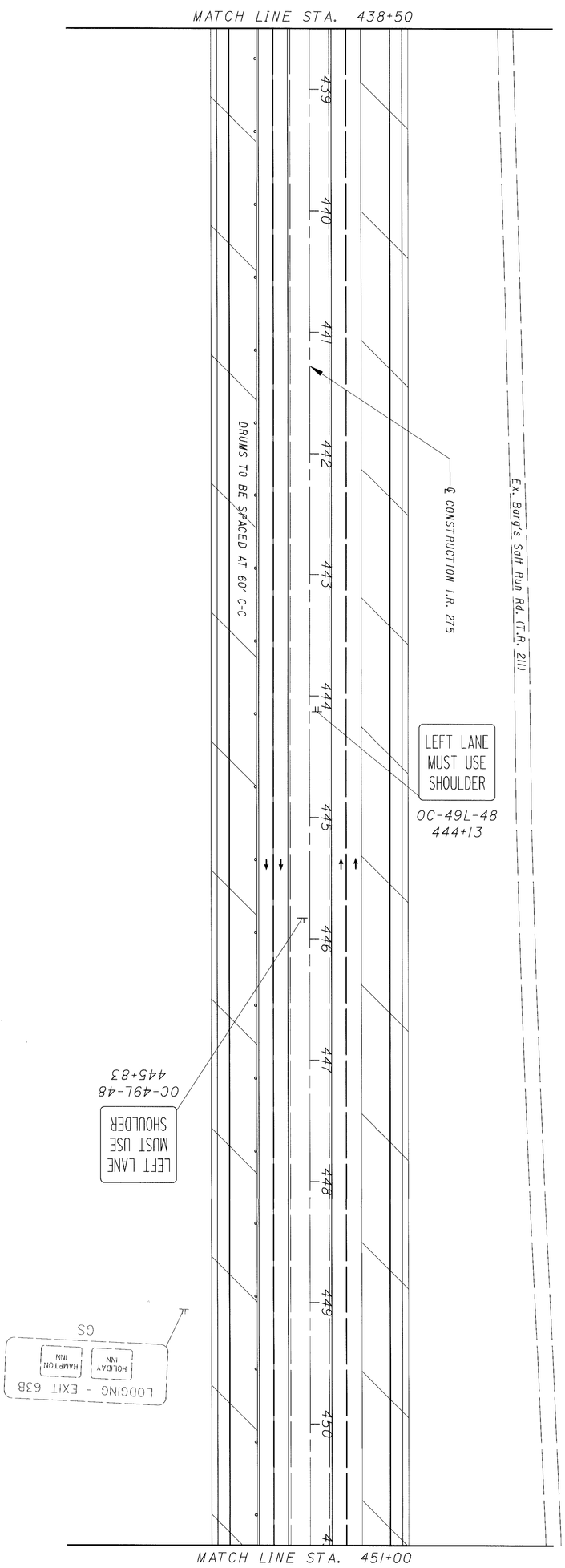

FOR M.O.T. LEGEND, SEE SHEET NO. 168
FOR QUANTITIES, SEE M.O.T. SUBSUMMARY
FOR M.O.T. TYPICAL SECTIONS, SEE SHEET NO. 83

184 / 67	CLE-275-5.35	**MAINTENANCE OF TRAFFIC** **PHASE TWO-B, I.R. 275**	CALCULATED JGB CHECKED AM	0 50 25 100 HORIZONTAL SCALE IN FEET

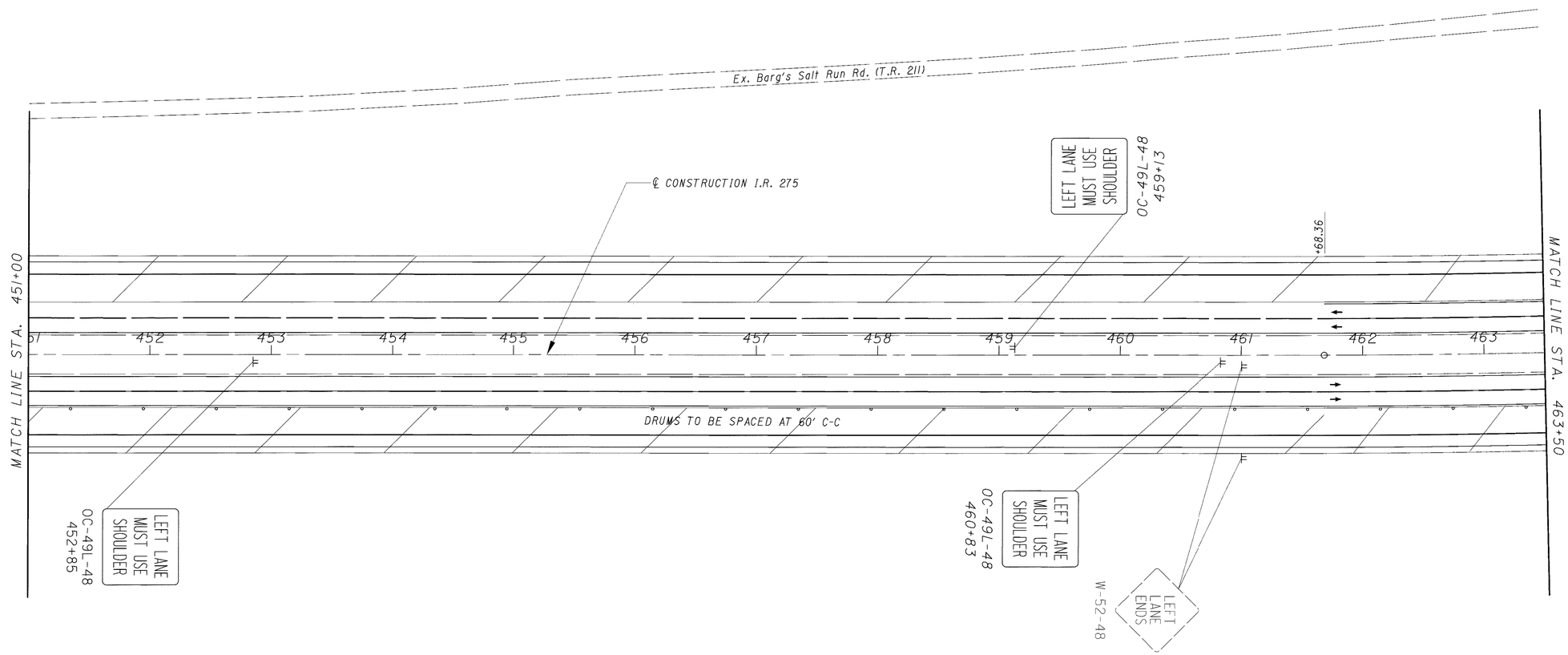

FOR M.O.T. LEGEND, SEE SHEET NO. 168
FOR QUANTITIES, SEE M.O.T. SUBSUMMARY
FOR M.O.T. TYPICAL SECTIONS, SEE SHEET NO. 83

N

0 25 50 100
HORIZONTAL SCALE IN FEET

CALCULATED JGB
CHECKED AM

MAINTENANCE OF TRAFFIC
PHASE TWO-B, I.R. 275

CLE-275-5.35

185
857

FOR M.O.T. LEGEND, SEE SHEET NO. **168**
FOR QUANTITIES, SEE M.O.T. SUBSUMMARY
FOR M.O.T. TYPICAL SECTIONS, SEE SHEET NO. **83**

N

0 25 50 100
HORIZONTAL SCALE IN FEET

CALCULATED JGB
CHECKED AM

MAINTENANCE OF TRAFFIC PHASE TWO-B, I.R. 275

CLE-275-5.35

186
857

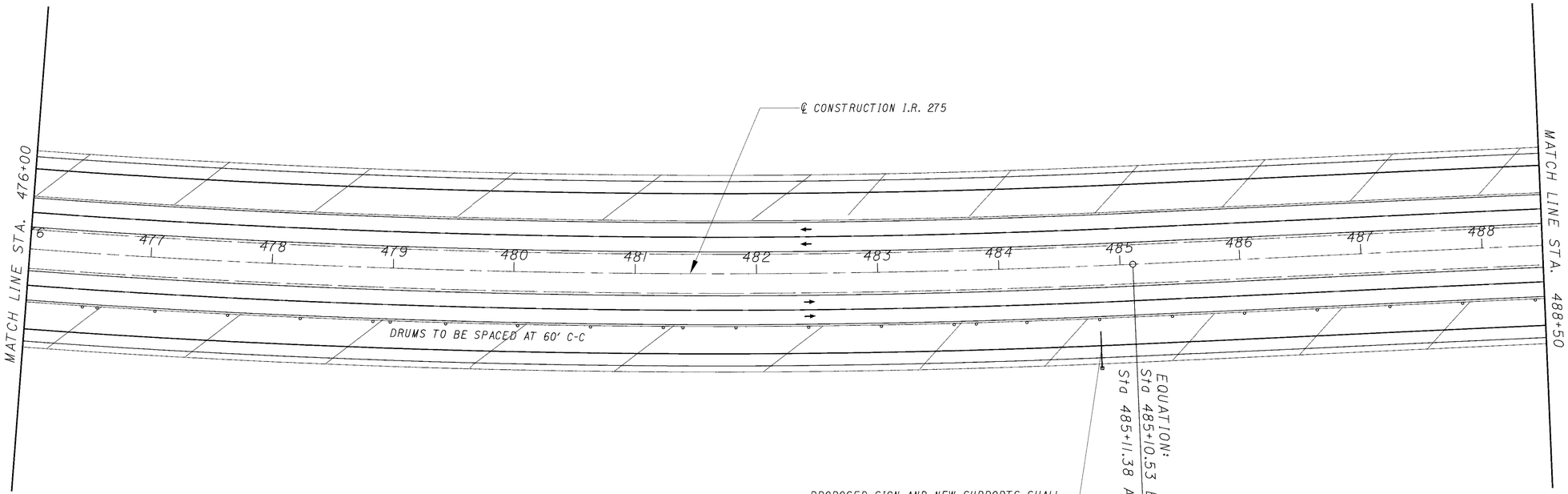

FOR M.O.T. LEGEND, SEE SHEET NO. 168
FOR QUANTITIES, SEE M.O.T. SUBSUMMARY
FOR M.O.T. TYPICAL SECTIONS, SEE SHEET NO. 83

N

0 25 50 100
HORIZONTAL SCALE IN FEET

CALCULATED JGB
CHECKED AM

MAINTENANCE OF TRAFFIC
PHASE TWO-B, I.R. 275

CLE-275-5.35

187
857

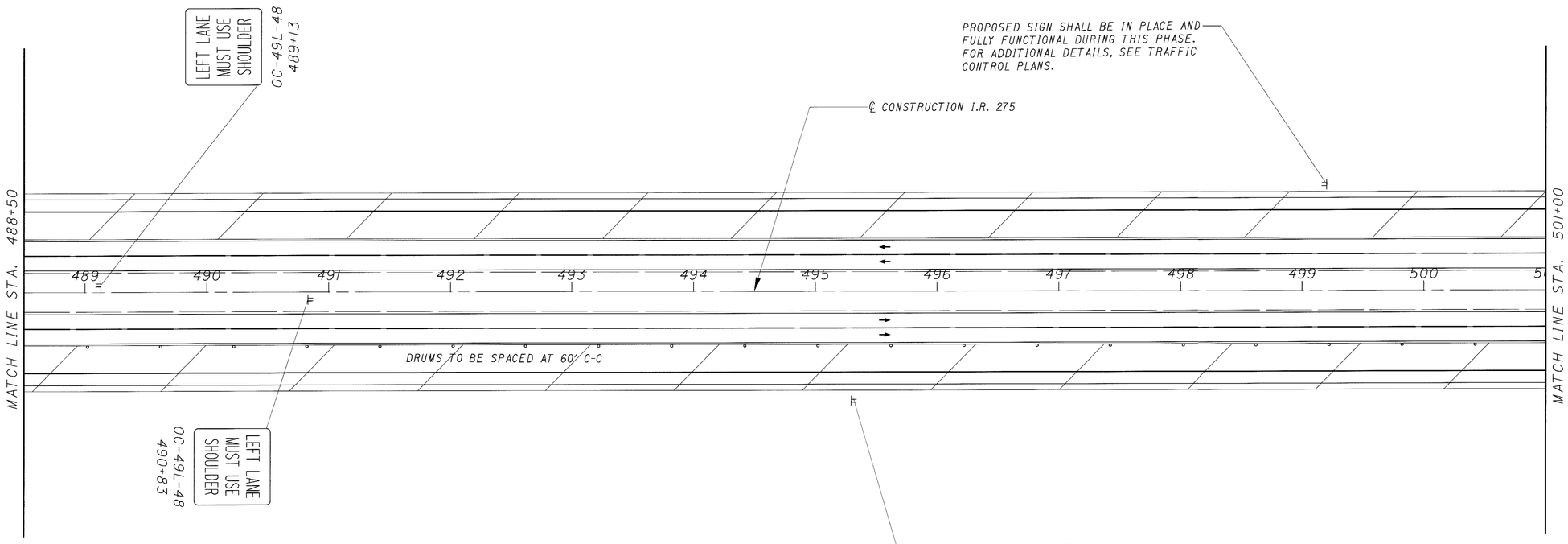

FOR M.O.T. LEGEND, SEE SHEET NO. 168
FOR QUANTITIES, SEE M.O.T. SUBSUMMARY
FOR M.O.T. TYPICAL SECTIONS, SEE SHEET NO. 83

N

0 25 50 100
HORIZONTAL SCALE IN FEET

CALCULATED JGB
CHECKED AM

MAINTENANCE OF TRAFFIC
PHASE TWO-B, I.R. 275

CLE-275-5.35

188
857

FOR M.O.T. LEGEND, SEE SHEET NO. 168
FOR QUANTITIES, SEE M.O.T. SUBSUMMARY
FOR M.O.T. TYPICAL SECTIONS, SEE SHEET NO. 83

N

0 25 50 100
HORIZONTAL SCALE IN FEET

CALCULATED JGB
CHECKED AM

MAINTENANCE OF TRAFFIC PHASE TWO-B, I.R. 275

CLE-275-5.35

189
857

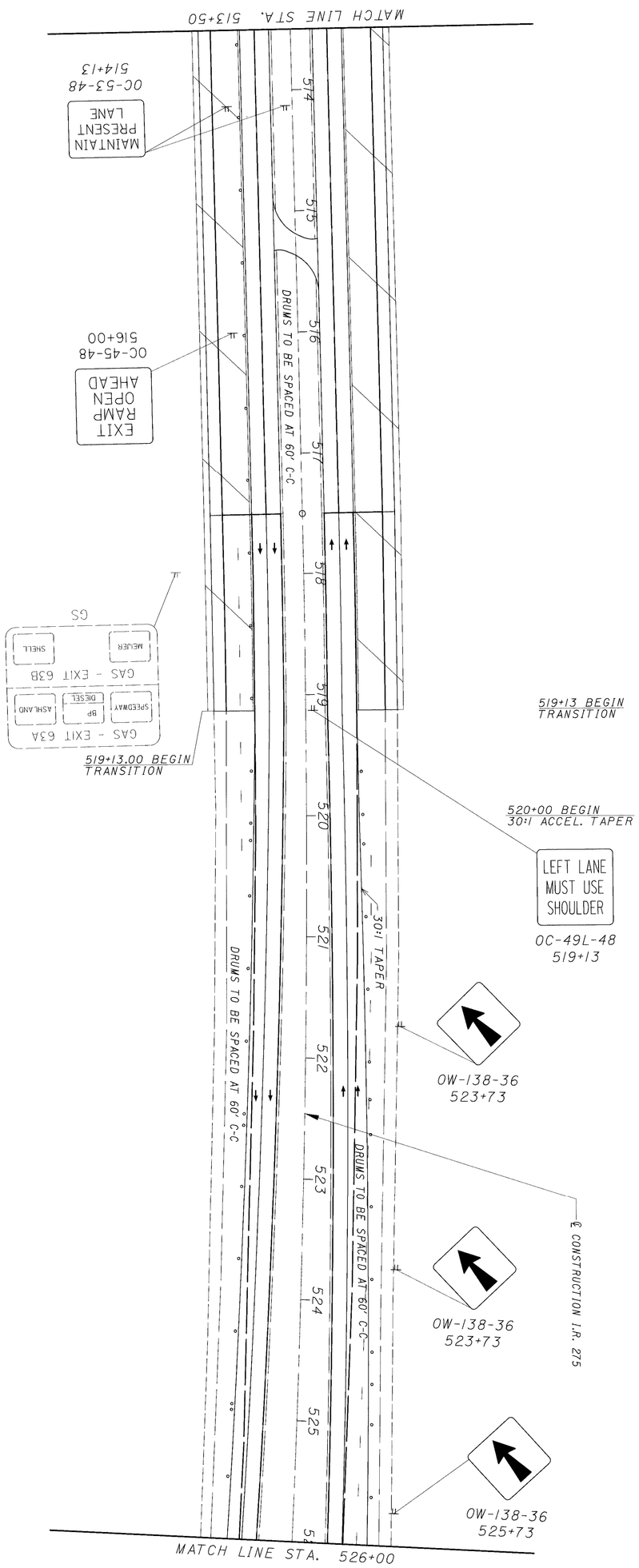

FOR M.O.T. LEGEND, SEE SHEET NO. 168
FOR QUANTITIES, SEE M.O.T. SUBSUMMARY
FOR M.O.T. TYPICAL SECTIONS, SEE SHEET NO. 83

190 857	CLE-275-5.35	MAINTENANCE OF TRAFFIC PHASE TWO-B, I.R. 275	CALCULATED JGB CHECKED AM	0 25 50 100 HORIZONTAL SCALE IN FEET

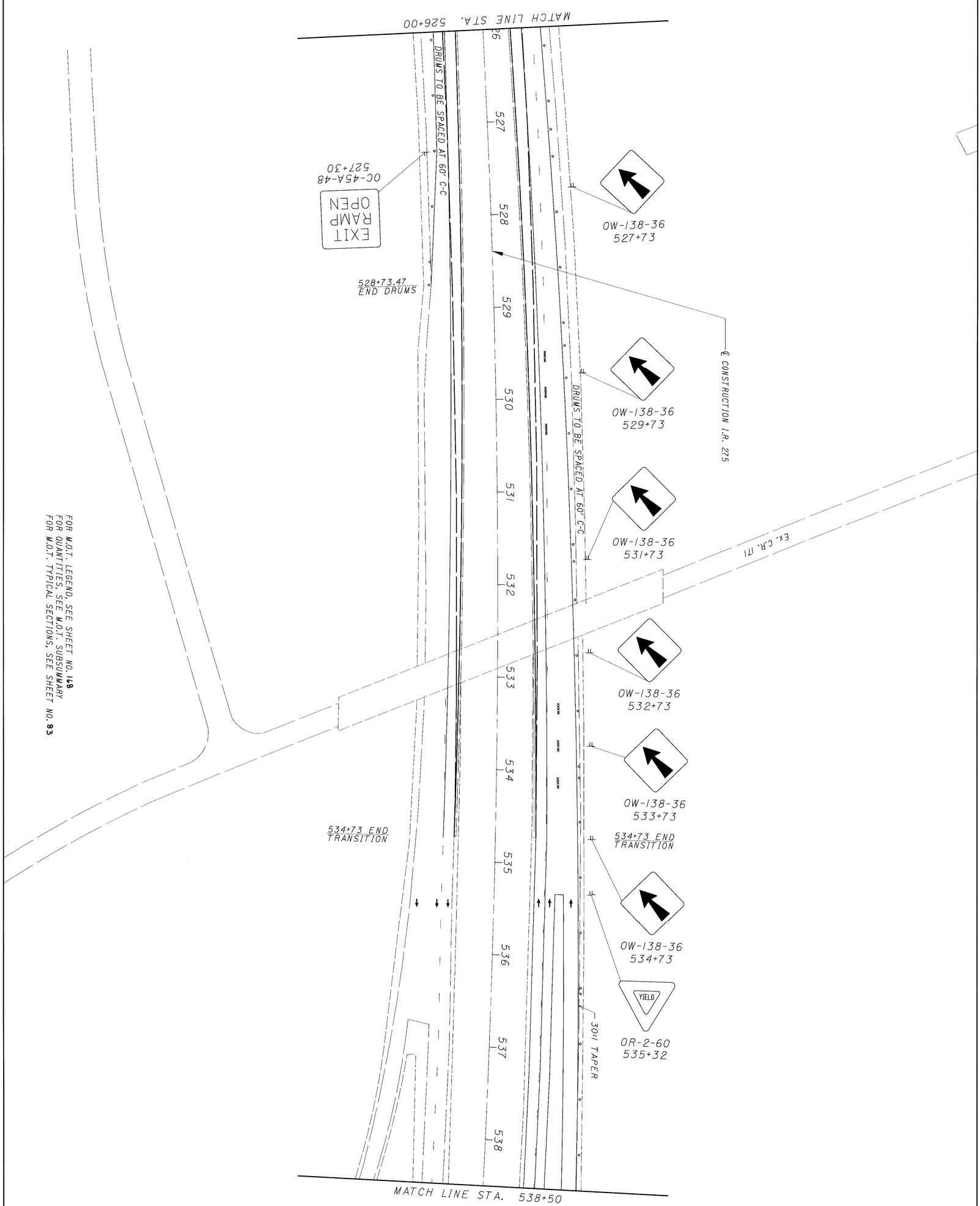

58 / 191	CLE-275-5.35	**MAINTENANCE OF TRAFFIC** **PHASE TWO-B, I.R. 275**	CALCULATED JGB CHECKED AM	0 50 25 100 HORIZONTAL SCALE IN FEET

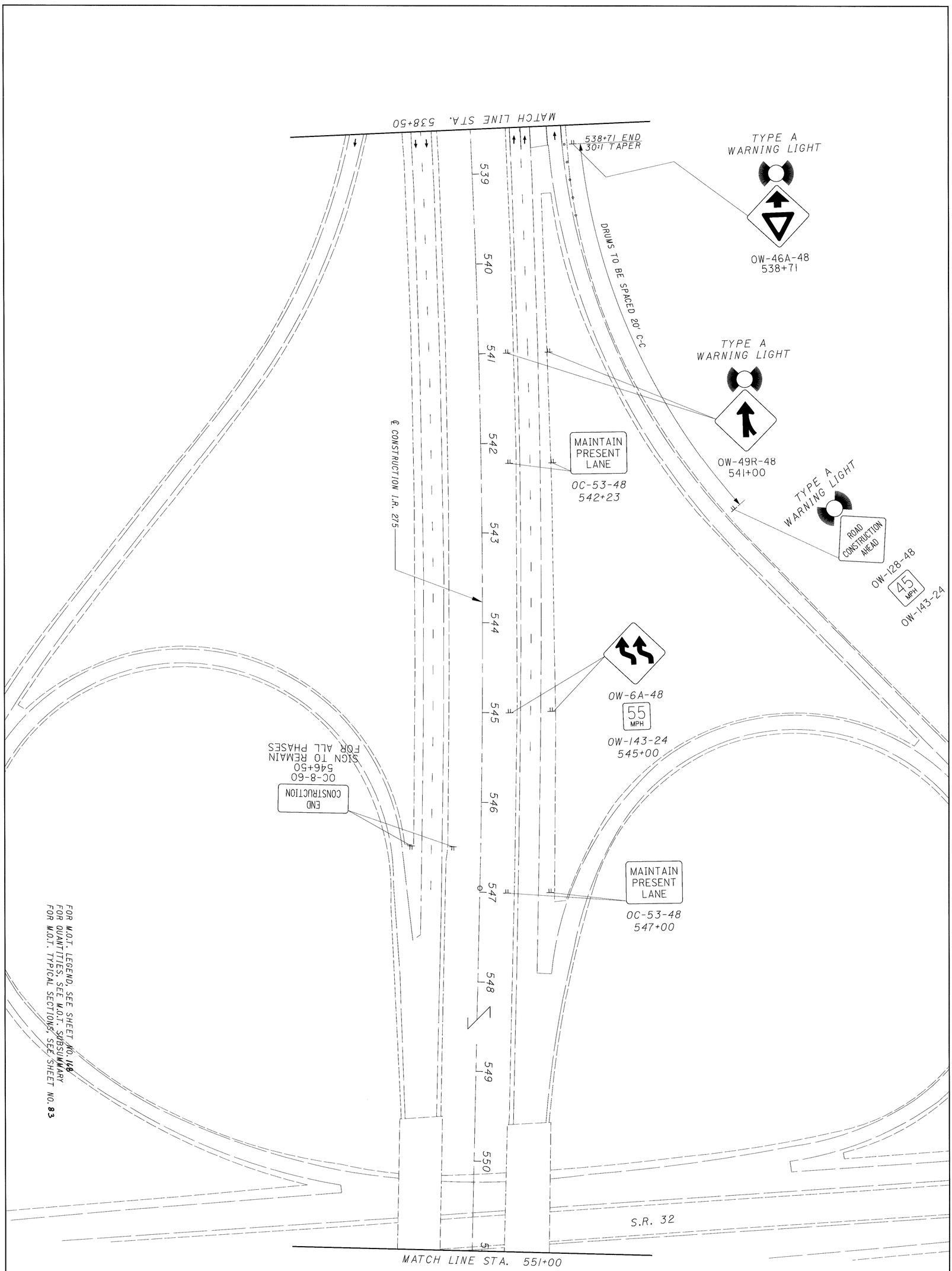

192 / 857	CLE-275-5.35	MAINTENANCE OF TRAFFIC PHASE TWO-B, I.R. 275	CALCULATED JGB CHECKED AM	0 50 25 100 HORIZONTAL SCALE IN FEET	N

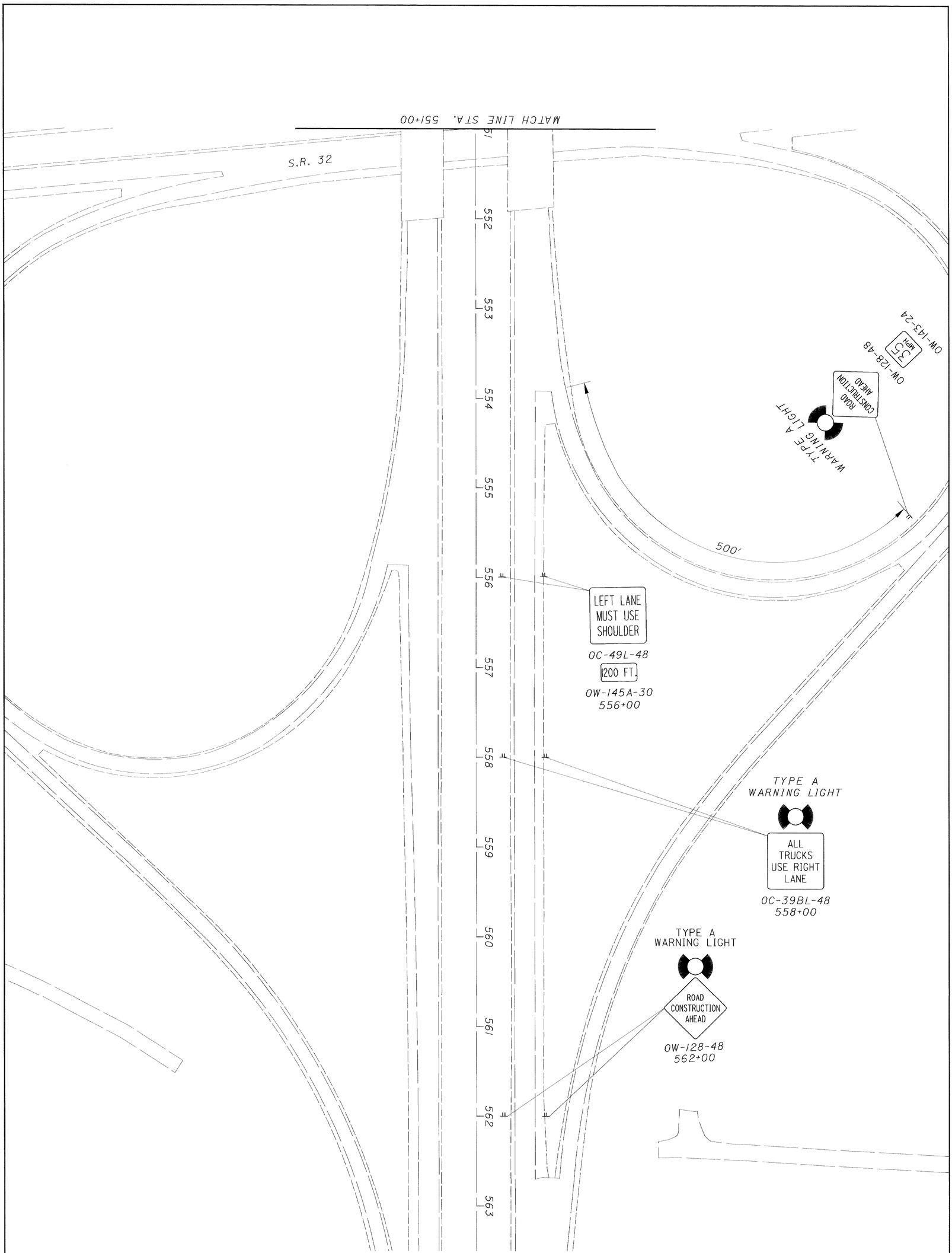

193 857	CLE-275-5.35	**MAINTENANCE OF TRAFFIC PHASE TWO-B, I.R. 275**	CALCULATED JGB / CHECKED AM	0 50 25 100 HORIZONTAL SCALE IN FEET

FOR M.O.T. LEGEND SEE SHEET NO. 168
FOR QUANTITIES, SEE M.O.T. SUBSUMMARY
FOR M.O.T. TYPICAL SECTIONS, SEE SHEET NO. 83

N

0 25 50 100
HORIZONTAL SCALE IN FEET

CALCULATED JGB
CHECKED AM

MAINTENANCE OF TRAFFIC
PHASE TWO-B, U.S.R. 50J

CLE-275-5.35

194
857

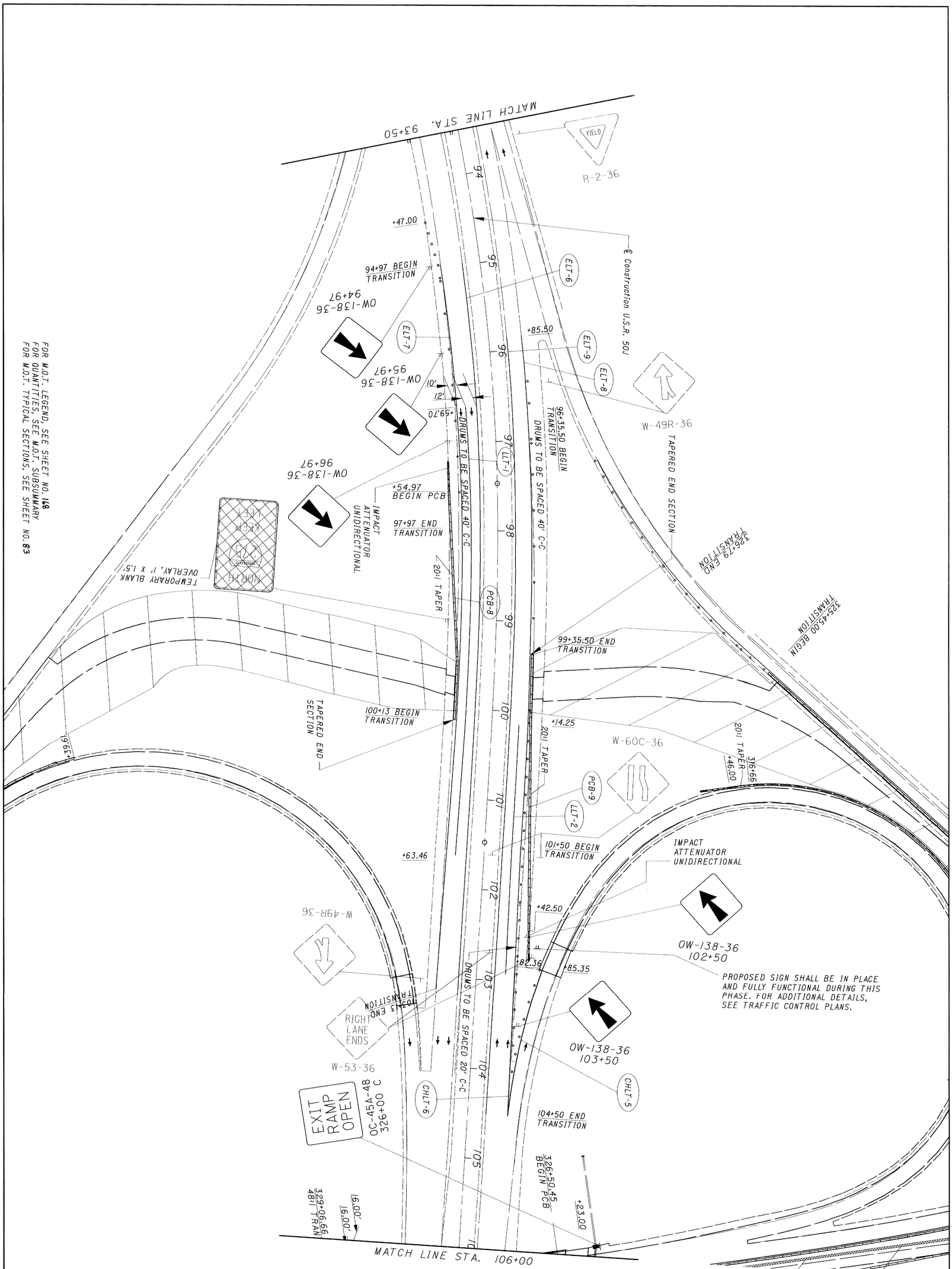

195 / 857	CLE-275-5.35	MAINTENANCE OF TRAFFIC PHASE TWO-B, U.S.R. 50J	CALCULATED JGB CHECKED AM	0 50 25 100 HORIZONTAL SCALE IN FEET	N

ROAD CLOSED
OR-75-48

RAMP
25
MPH
W-98-48

EXIT RAMP CLOSED
OC-46-48
325+83

325+26.68
BEGIN PCB

+26.68

GATES AND BARRICADES AS PER MT-401-00M

PROPOSED SIGNS AND NEW SUPPORTS SHALL BE IN PLACE AND FULLY FUNCTIONAL DURING THIS PHASE; FOR EXCEPTIONS, SEE DETOUR FOR RAMPS E & F CLOSURE. FOR ADDITIONAL DETAILS, SEE TRAFFIC CONTROL PLANS.

PROPOSED SIGNS AND NEW SUPPORTS SHALL BE IN PLACE AND FULLY FUNCTIONAL DURING THIS PHASE. FOR ADDITIONAL DETAILS, SEE TRAFFIC CONTROL PLANS.

WRONG WAY
R-41A-36

R-1-48
STOP

YIELD
R-2-48

℄ Construction Ramp D

W-49R-36

PROPOSED SIGN SHALL BE IN PLACE AND FULLY FUNCTIONAL DURING THIS PHASE. FOR ADDITIONAL DETAILS, SEE TRAFFIC CONTROL PLANS.

TYPE A WARNING LIGHT

ROAD CONSTRUCTION AHEAD
OW-128-48

35
MPH
OW-143-24
116+00

KEEP RIGHT
R-37R-36

EL-3
EL-10

MATCH LINE STA. 106+00

MATCH LINE STA. 118+50 SEE SHEET NO. 199

DRUMS TO BE SPACED 40' C-C

+58.20

+98.20

+58.6

℄ Construction U.S.R. 50J

+54.00

R-31F-48
ONLY
ONLY

TEMPORARY BLANK OVERLAY, 1.5" X 2"

OBM-26-30 OVERLAY

NORTH TO
Columbus
275
71

W-52-36
LEFT LANE ENDS

W-60D-36

EL-11

℄ Construction Ramp H

EL-5

BEGIN SITION

+35.00

+51.40

Impact Attenuator, Unidirectional
330+98.43
BEGIN PCB

48:1 TAPER

19:1 TAPER

20:1 TAPER

EXIT

PROPOSED SIGN AND NEW SUPPORTS SHALL BE IN PLACE AND FULLY FUNCTIONAL DURING THIS PHASE. FOR ADDITIONAL DETAILS, SEE TRAFFIC CONTROL PLANS.

FOR M.O.T. LEGEND, SEE SHEET NO. 168
FOR QUANTITIES, SEE M.O.T. SUBSUMMARY
FOR M.O.T. TYPICAL SECTIONS, SEE SHEET NO. 83

N

0 25 50 100
HORIZONTAL SCALE IN FEET

CALCULATED JGB
CHECKED AM

MAINTENANCE OF TRAFFIC
PHASE TWO-B, U.S.R. 50J

CLE-275-5.35

196
857

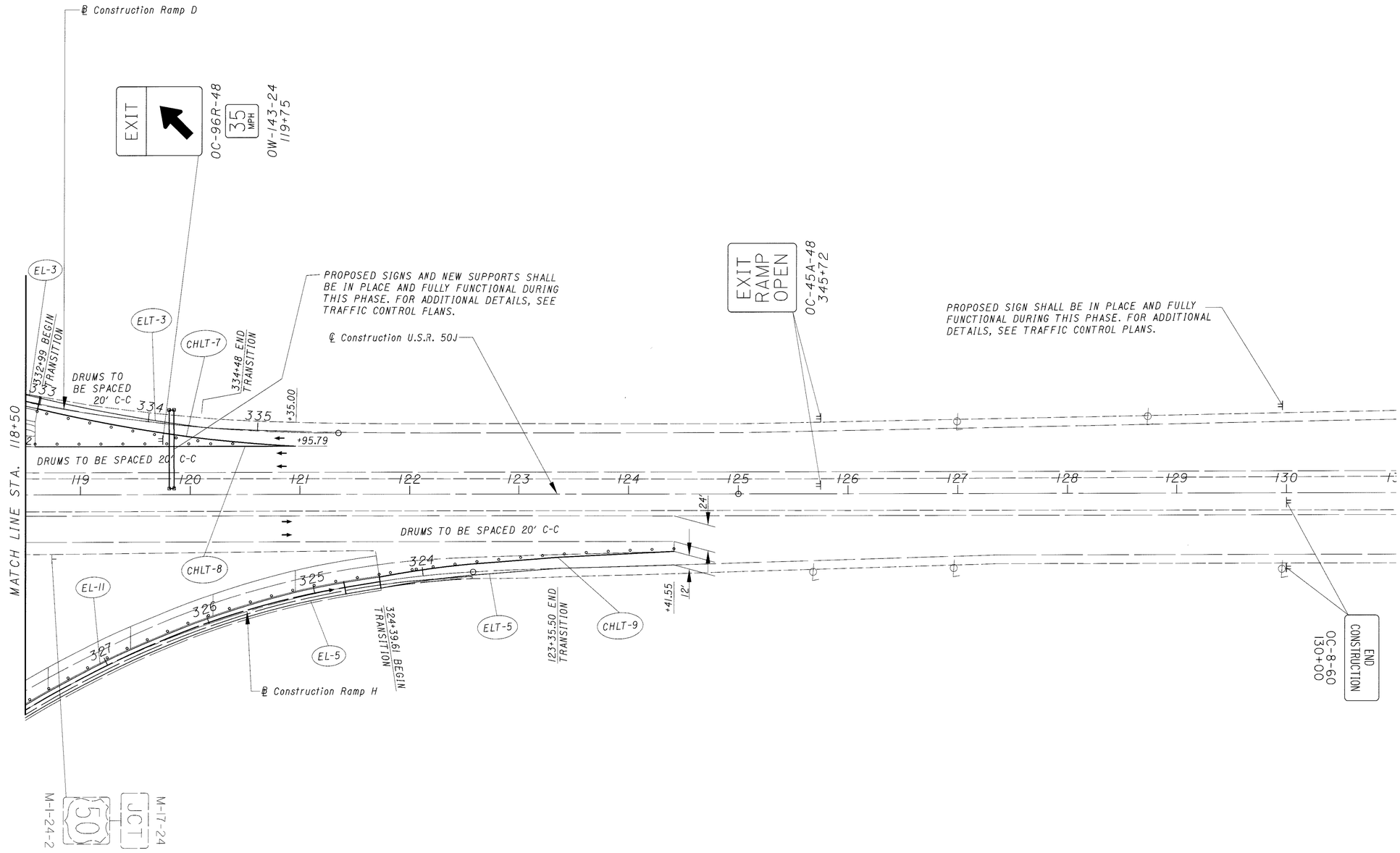

FOR M.O.T. LEGEND, SEE SHEET NO. 168
FOR QUANTITIES, SEE M.O.T. SUBSUMMARY
FOR M.O.T. TYPICAL SECTIONS, SEE SHEET NO. 83

FOR RAMP D CONTINUATION SEE SHEET NO. 199
FOR RAMP H CONTINUATION SEE SHEET NO. 201

N

0 25 50 100
HORIZONTAL SCALE IN FEET

CALCULATED JGB
CHECKED AM

MAINTENANCE OF TRAFFIC PHASE TWO-B, U.S.R. 50J

CLE-275-5.35

197
857

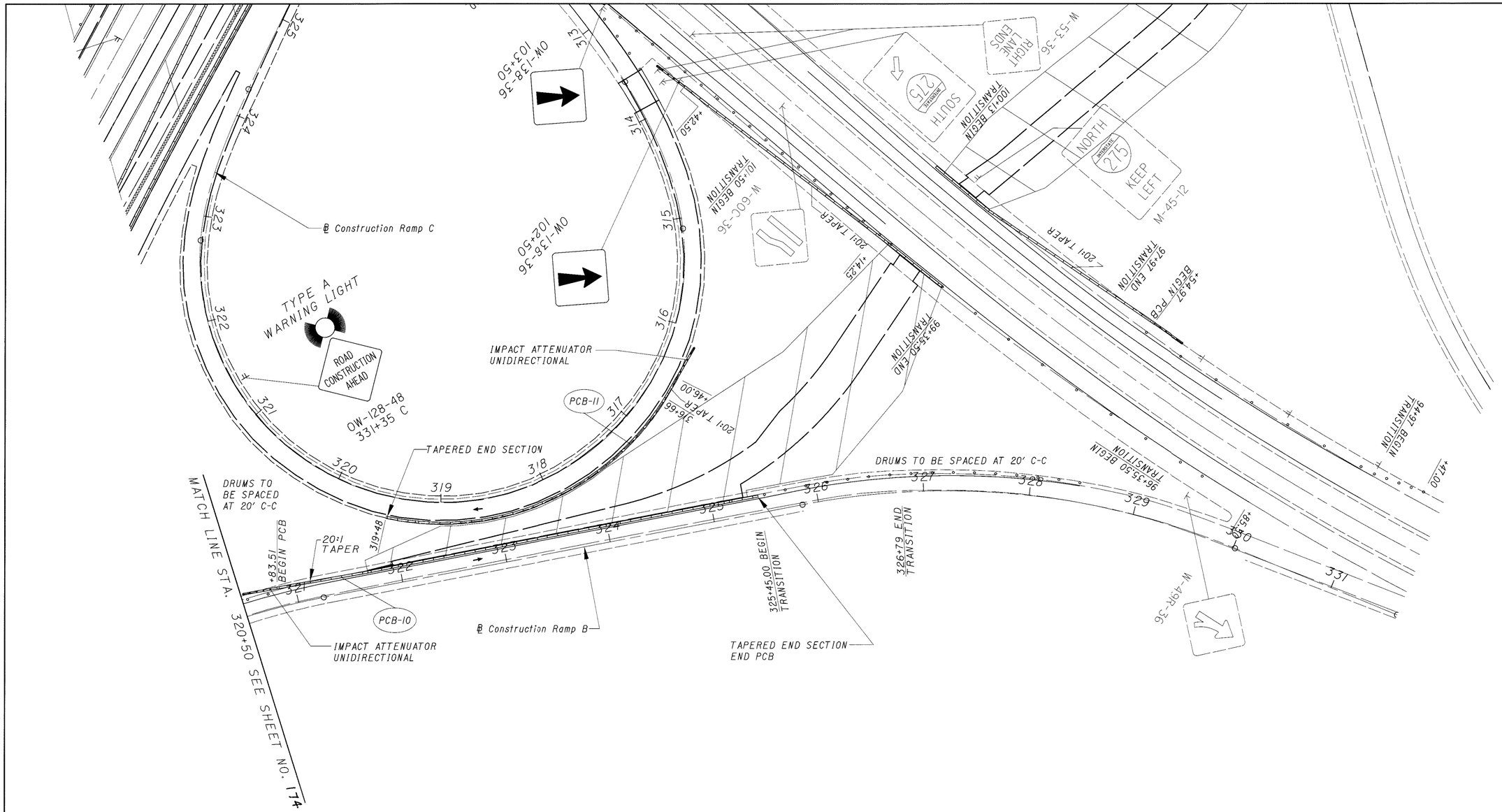

FOR M.O.T. LEGEND, SEE SHEET NO. 148
FOR QUANTITIES, SEE M.O.T. SUBSUMMARY
FOR M.O.T. TYPICAL SECTIONS, SEE SHEET NO. 83

0 25 50 100
HORIZONTAL SCALE IN FEET

CALCULATED JGB
CHECKED AM

MAINTENANCE OF TRAFFIC PHASE TWO-B, RAMP B

CLE-275-5.35

198
857

FOR M.O.T. LEGEND, SEE SHEET NO. 168
FOR QUANTITIES, SEE M.O.T. SUBSUMMARY
FOR M.O.T. TYPICAL SECTIONS, SEE SHEET NO. 83

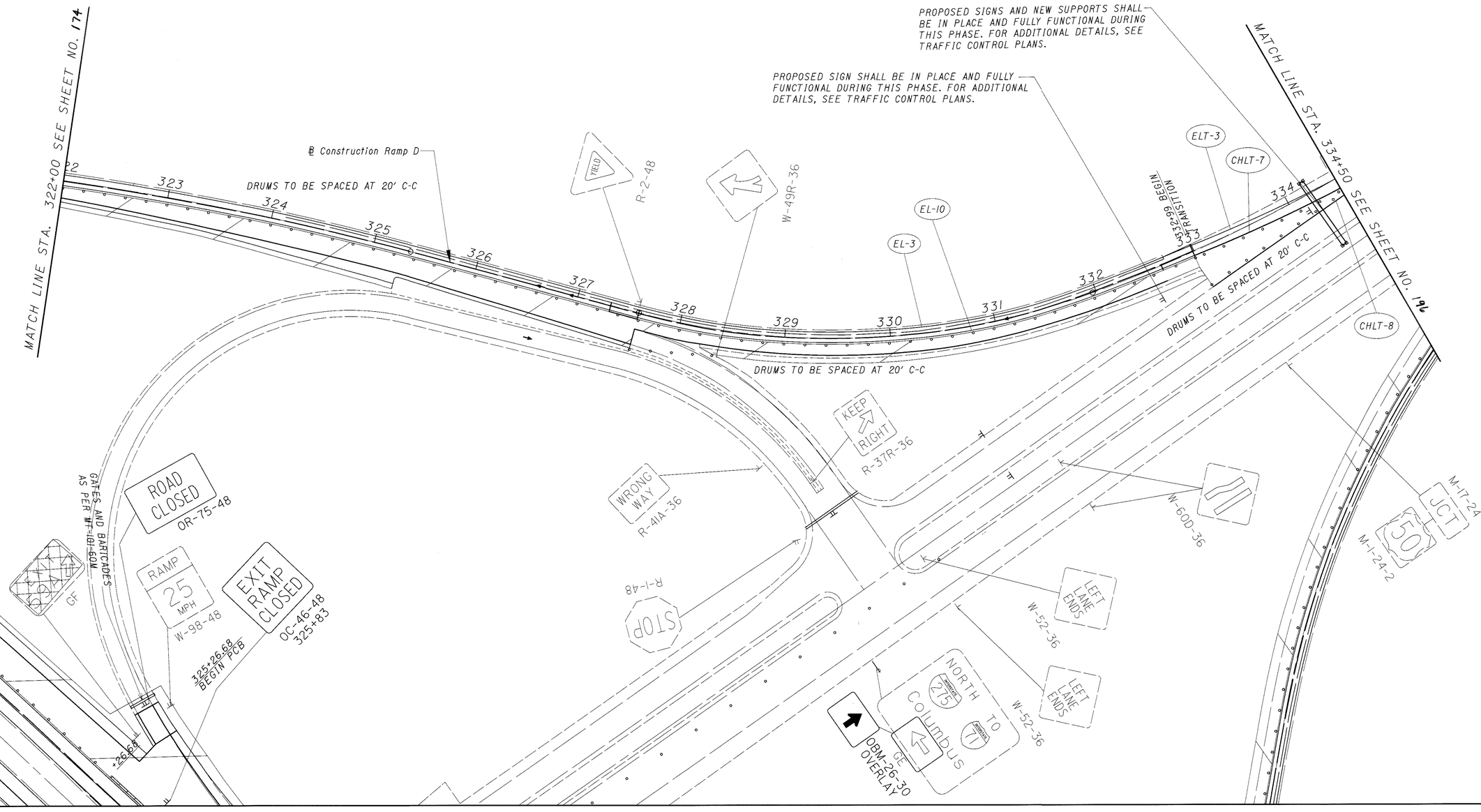

HORIZONTAL SCALE IN FEET
0 25 50 100

CALCULATED JGB
CHECKED AM

MAINTENANCE OF TRAFFIC
PHASE TWO-B, RAMP D

CLE-275-5.35

199
857

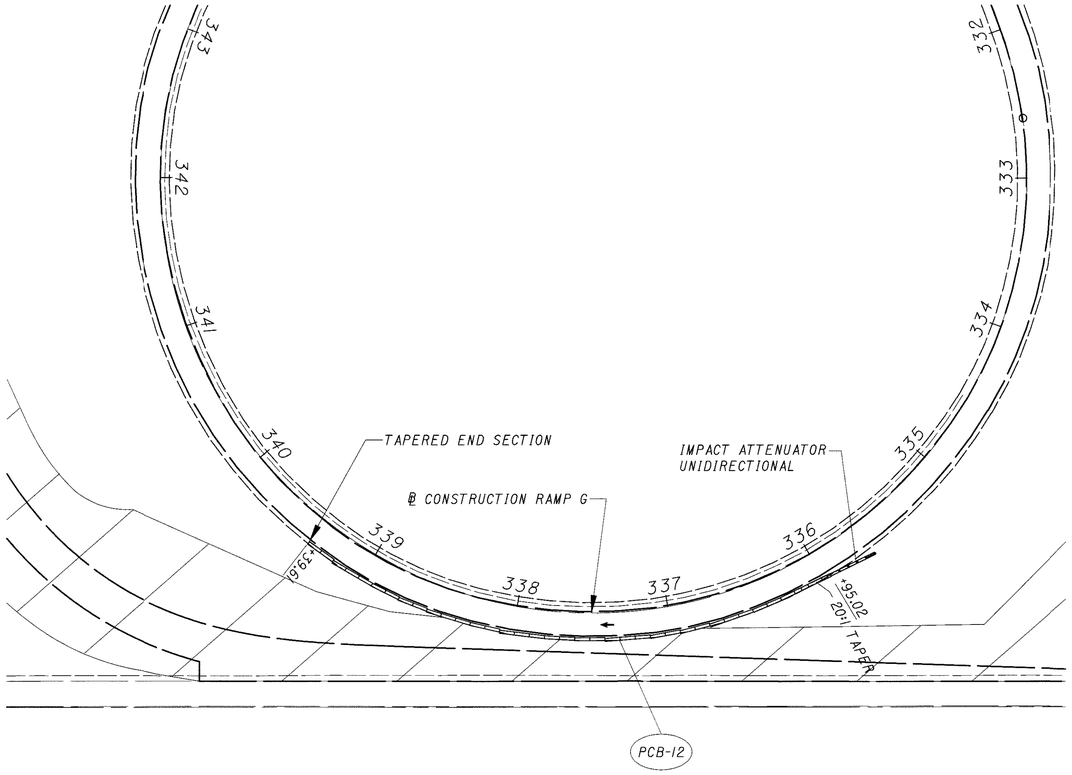

FOR M.O.T. LEGEND, SEE SHEET NO. 168
FOR QUANTITIES, SEE M.O.T. SUBSUMMARY
FOR M.O.T. TYPICAL SETIONS, SEE SHEET NO. 83

HORIZONTAL SCALE IN FEET
0 25 50 100

CALCULATED JGB
CHECKED AM

MAINTENANCE OF TRAFFIC
PHASE TWO-B, RAMP G

CLE-275-5.35

200
857

FOR M.O.T. LEGEND, SEE SHEET NO. 148
FOR QUANTITIES, SEE M.O.T. SUBSUMMARY
FOR M.O.T. TYPICAL SECTIONS, SEE SHEET NO. 83

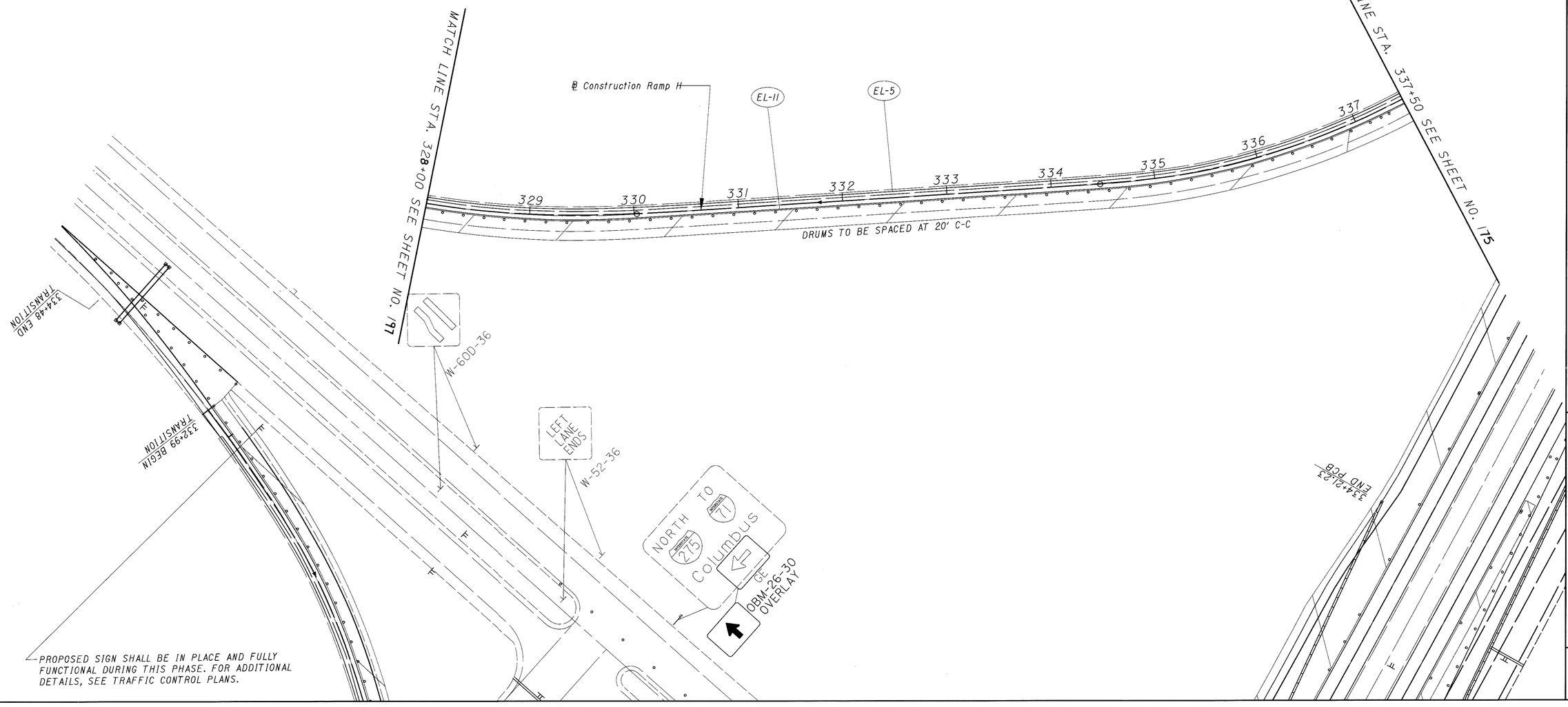

0 25 50 100
HORIZONTAL SCALE IN FEET

CALCULATED JGB
CHECKED AM

MAINTENANCE OF TRAFFIC
PHASE TWO-B, RAMP H

CLE-275-5.35

201
857

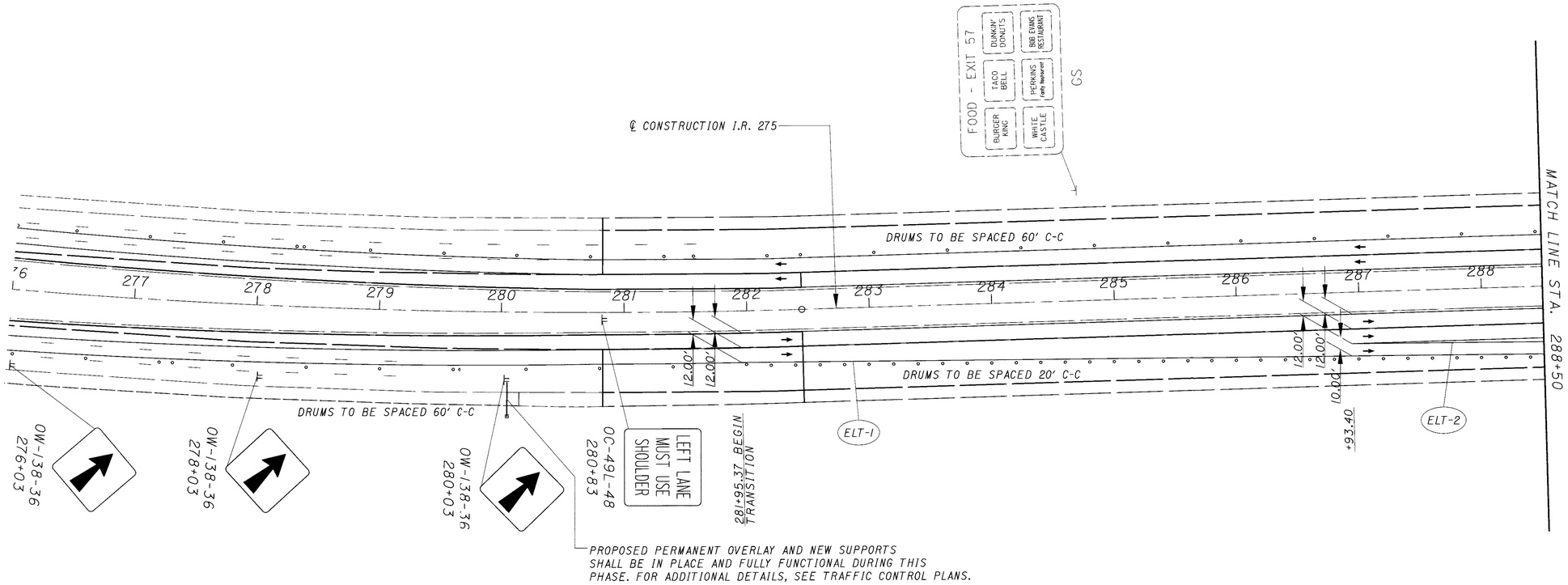

NOTES:

FOR QUANTITIES, SEE M.O.T. SUBSUMMARY.
FOR M.O.T. TYPICAL SECTIONS, SEE SHEET NO. 83

LEGEND

- 32" PORTABLE CONCRETE BARRIER
- AREA TO BE CONSTRUCTED
- TEMPORARY PAVEMENT REMOVAL

N

0 25 50 100
HORIZONTAL SCALE IN FEET

CALCULATED JGB
CHECKED AM

MAINTENANCE OF TRAFFIC PHASE TWO-C, I.R. 275

CLE-275-5.35

202
857

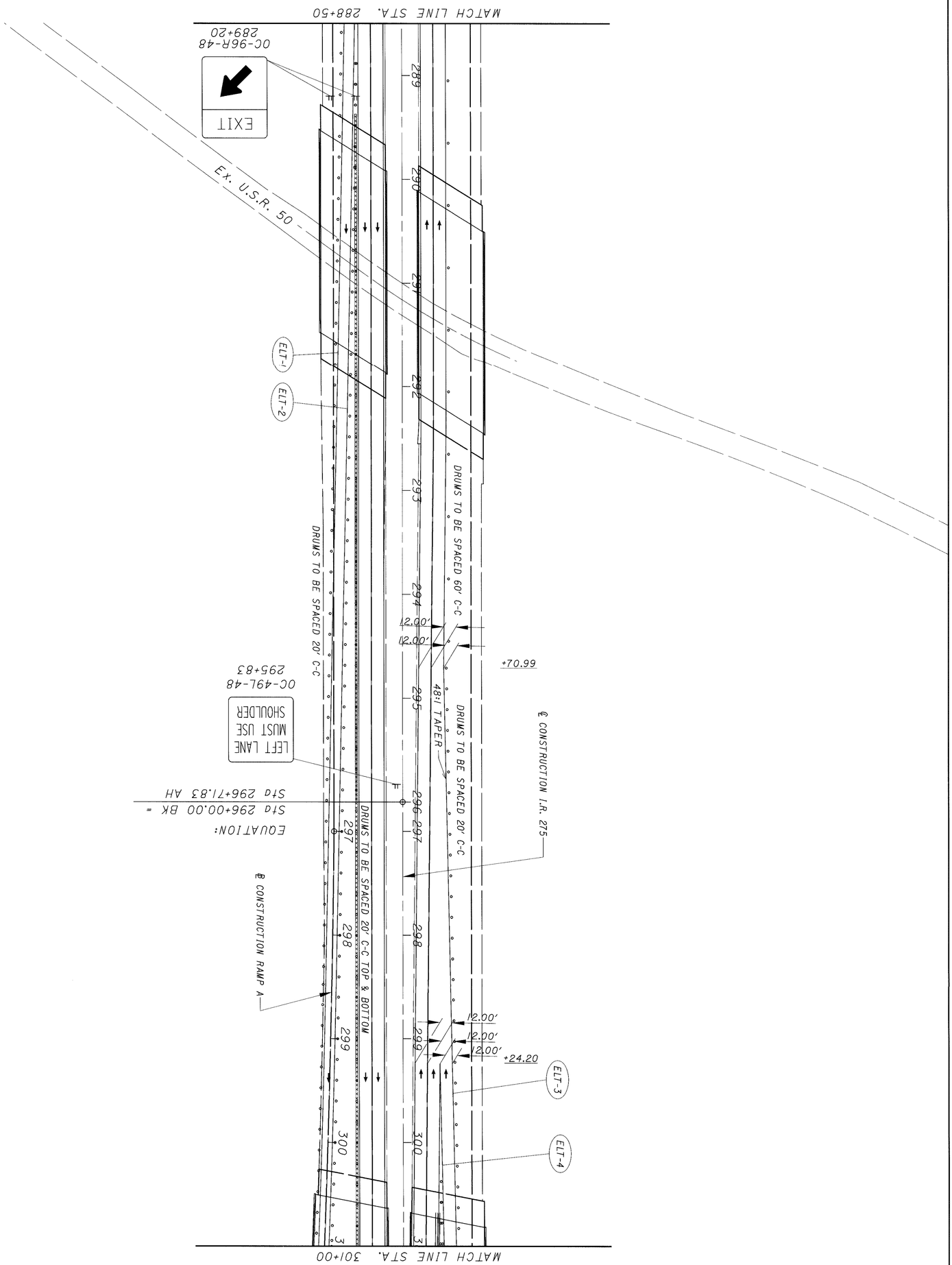

FOR M.O.T. LEGEND, SEE SHEET NO. **202**
FOR QUANTITIES, SEE M.O.T. SUBSUMMARY
FOR M.O.T. TYPICAL SECTIONS, SEE SHEET NO. **83**

TEMP. ℄, PHASE 2C
P.I. Sta = 313+44.10
D = 7° 51′ 27″ (LT)
Dc = 6° 20′ 00″
R = 904.67′
T = 62.13′
L = 124.06′
E = 2.13′
PC Sta. 312+81.97
PT Sta. 314+06.03

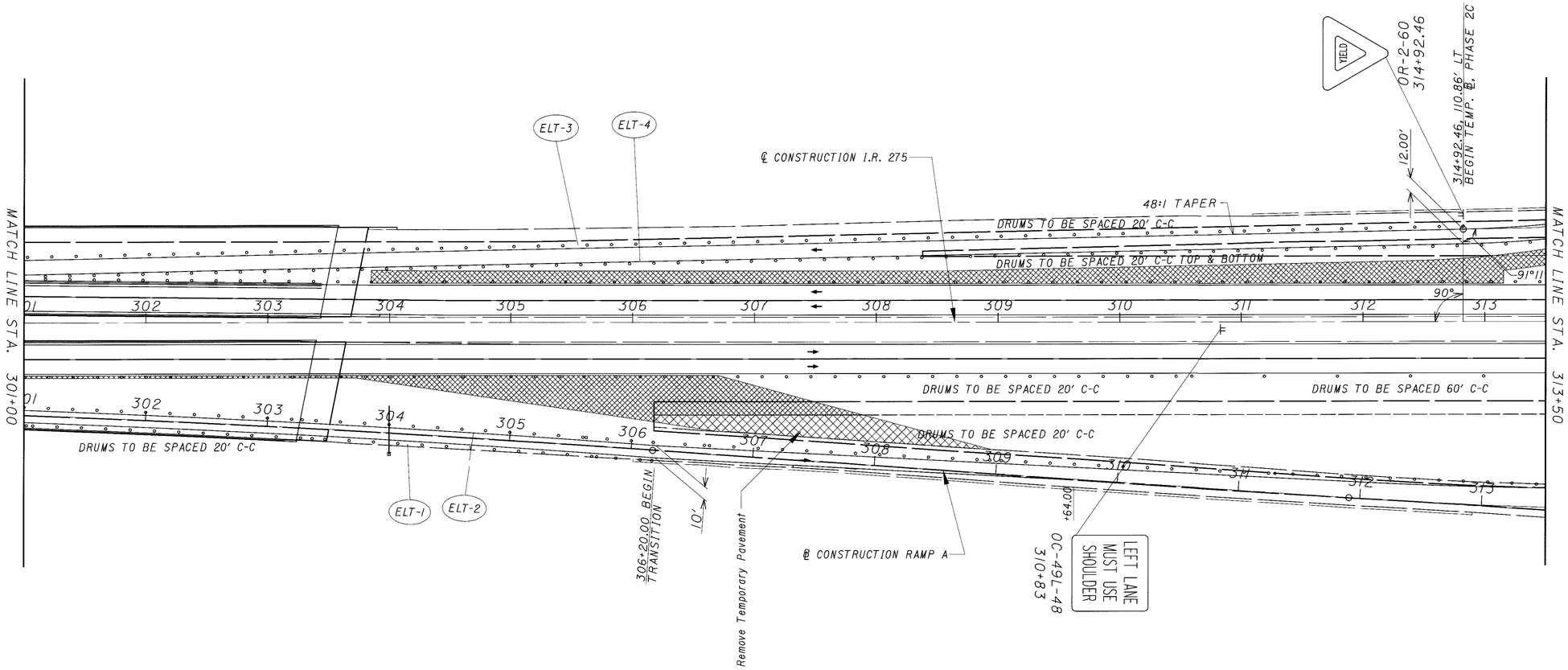

FOR M.O.T. LEGEND, SEE SHEET NO. 202
FOR QUANTITIES, SEE M.O.T. SUBSUMMARY
FOR M.O.T. TYPICAL SECTIONS, SEE SHEET NO. 83

N

0 25 50 100
HORIZONTAL SCALE IN FEET

CALCULATED JGB
CHECKED AM

MAINTENANCE OF TRAFFIC PHASE TWO-C, I.R. 275

CLE-275-5.35

204
857

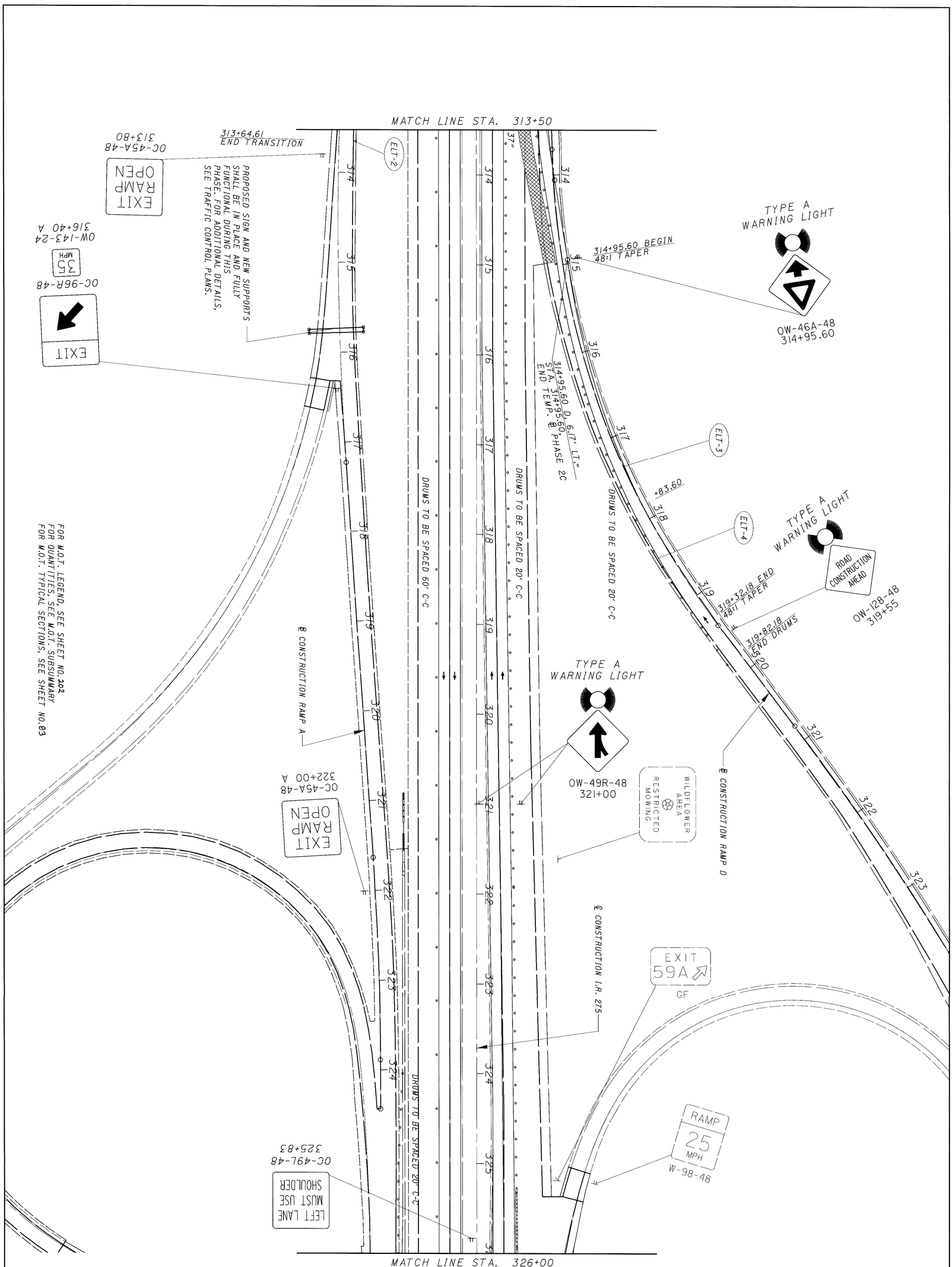

205 / 858	CLE-275-5.35	MAINTENANCE OF TRAFFIC PHASE TWO-C, I.R. 275	CALCULATED JGB CHECKED AM	0 50 25 100 HORIZONTAL SCALE IN FEET

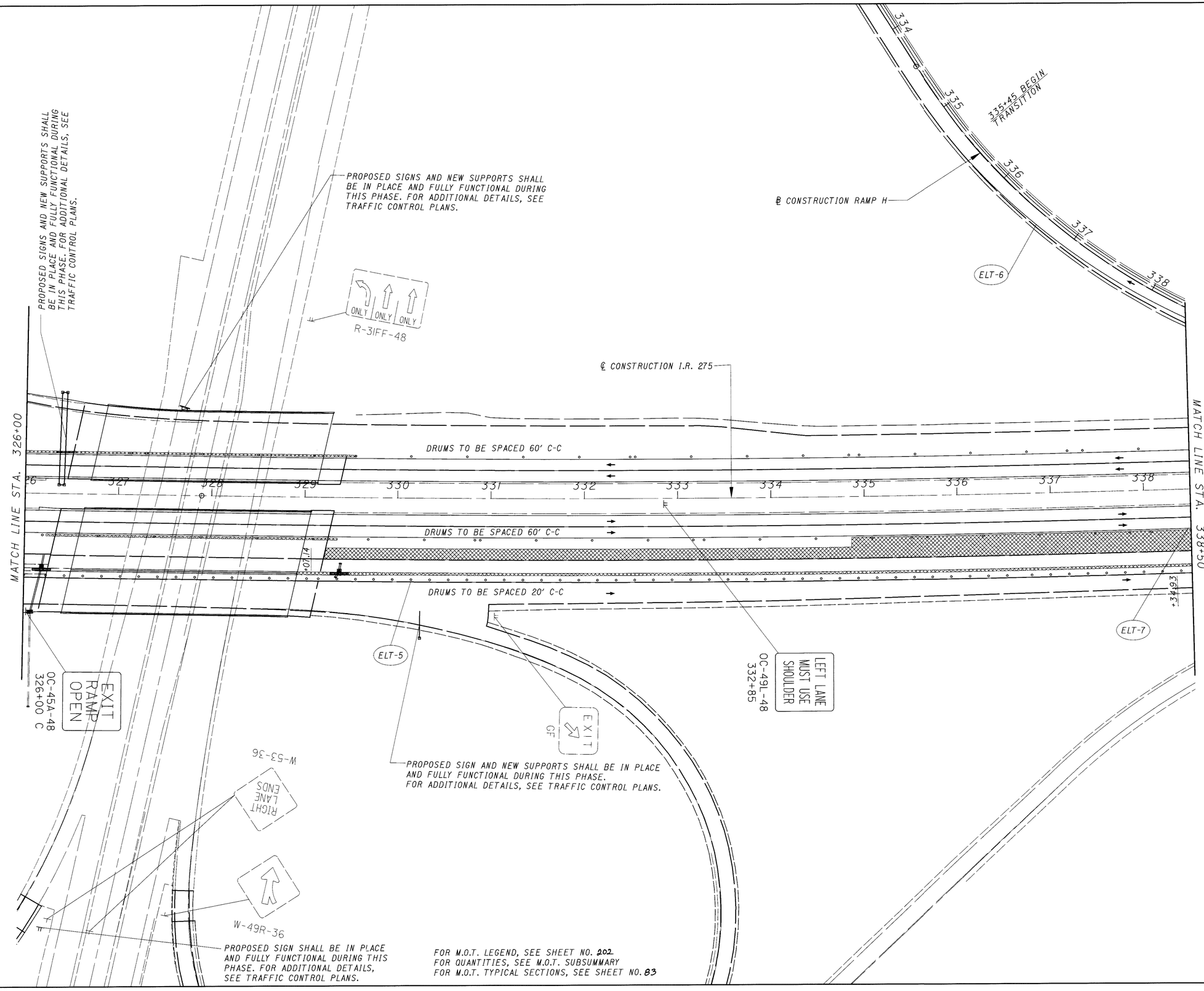

N

0 25 50 100
HORIZONTAL SCALE IN FEET

CALCULATED JGB
CHECKED AM

MAINTENANCE OF TRAFFIC
PHASE TWO-C, I.R. 275

CLE-275-5.35

206
857

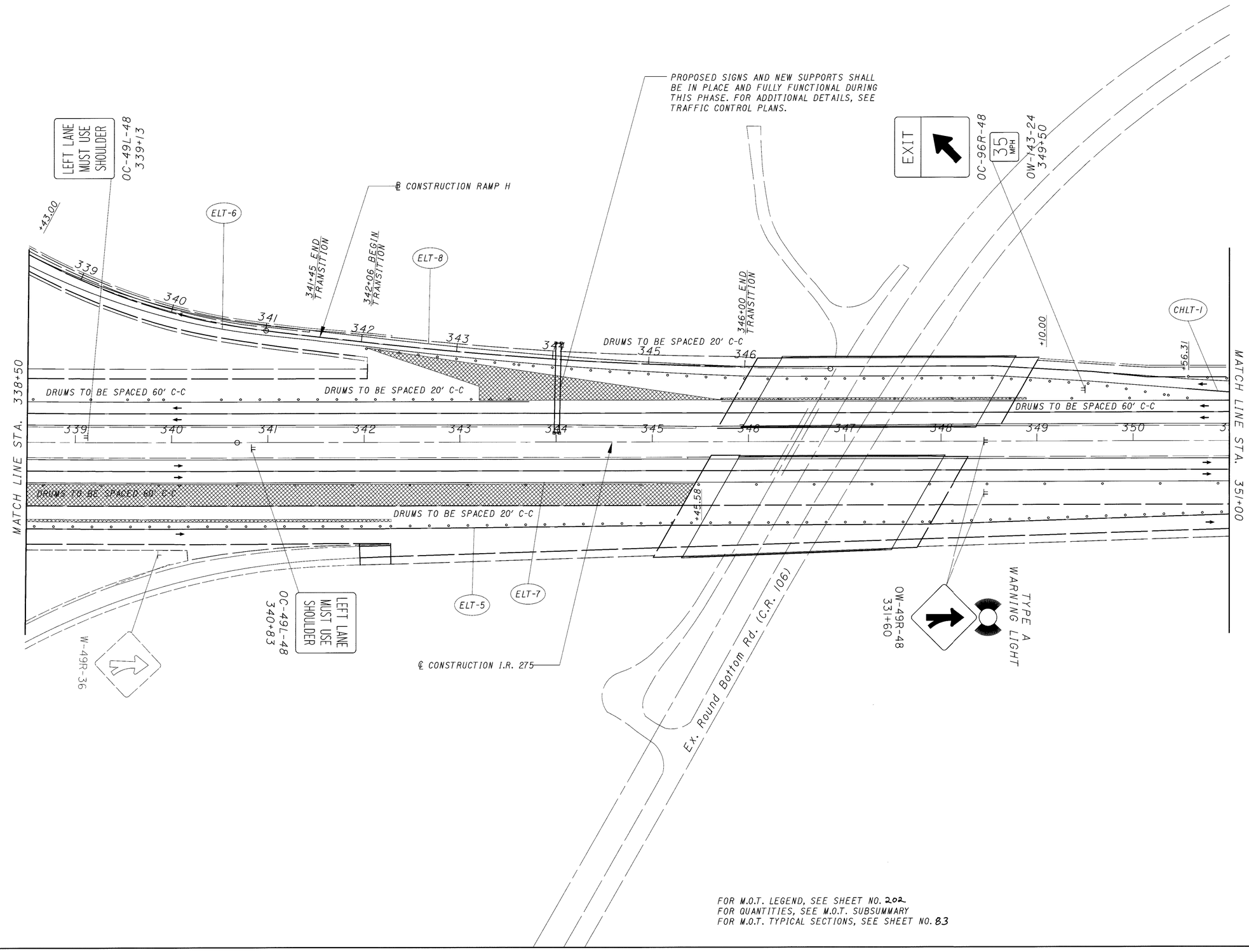

FOR M.O.T. LEGEND, SEE SHEET NO. 202
FOR QUANTITIES, SEE M.O.T. SUBSUMMARY
FOR M.O.T. TYPICAL SECTIONS, SEE SHEET NO. 83

N

0 25 50 100
HORIZONTAL SCALE IN FEET

CALCULATED JGB
CHECKED AM

MAINTENANCE OF TRAFFIC PHASE TWO-C, I.R. 275

CLE-275-5.35

207
857

Ex. Round Bottom Rd. (C.R. 106)

MATCH LINE STA. 351+00

MATCH LINE STA. 363+50

+10.00

CHLT-1

ELT-8

LEFT LANE MUST USE SHOULDER
OC-49L-48
354+13

EXIT RAMP OPEN
OC-45A-48
355+10

GEP-96
EXIT 59B
50
Hillsboro
NEXT RIGHT
GB

GEP-96
EXIT 59A
Milford Pkwy
1/4 MILE
GB

℄ CONSTRUCTION I.R. 275

DRUMS TO BE SPACED 20' C-C

DRUMS TO BE SPACED 60' C-C

351 352 353 354 355 356 357 358 359 360 361 362 363

DRUMS TO BE SPACED 60' C-C

DRUMS TO BE SPACED 20' C-C

11'-2"+

OW-128-48
351+45
ROAD CONSTRUCTION AHEAD
TYPE A WARNING LIGHT

OW-46A-48
354+45
TYPE A WARNING LIGHT

OC-49L-48
355+83
LEFT LANE MUST USE SHOULDER

ELT-9

ELT-5

OR-2-60
362+28.91
YIELD

FOR M.O.T. LEGEND, SEE SHEET NO. 202
FOR QUANTITIES, SEE M.O.T. SUBSUMMARY
FOR M.O.T. TYPICAL SECTIONS, SEE SHEET NO. 83

N

0 25 50 100
HORIZONTAL SCALE IN FEET

CALCULATED JGB
CHECKED AM

MAINTENANCE OF TRAFFIC
PHASE TWO-C, I.R. 275

CLE-275-5.35

208
857

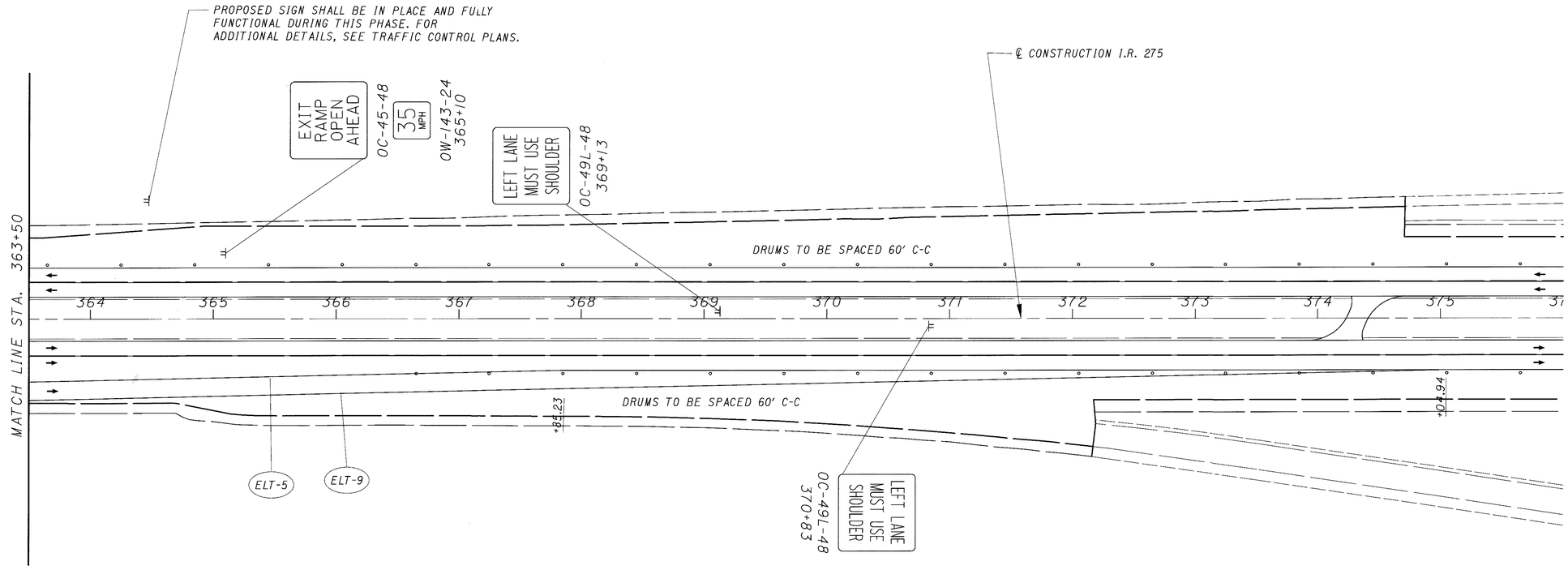

FOR M.O.T. LEGEND, SEE SHEET NO. 202
FOR QUANTITIES, SEE M.O.T. SUBSUMMARY
FOR M.O.T. TYPICAL SECTIONS, SEE SHEET NO. 83

N

0 25 50 100
HORIZONTAL SCALE IN FEET

CALCULATED JGB
CHECKED AM

MAINTENANCE OF TRAFFIC PHASE TWO-C, I.R. 275

CLE-275-5.35

209
857

SHEET NUMBER															FUNDING		ITEM	ITEM EXT.	GRAND TOTAL	UNIT	DESCRIPTION	SEE SHEET NO.
26-29	30-34	39	214	215	216	217	220	226	232	238	378A	239	247	341	INTERSTATE MAINTENANCE	NATIONAL HIGHWAY						
																					----------ROADWAY----------	
LUMP															LUMP		201	11000	LUMP		CLEARING AND GRUBBING	
			1													1	202	11004	1	EACH	STRUCTURE REMOVED	
			2138													2138	202	35100	2138	LIN FT	PIPE REMOVED, 24" AND UNDER	
			361													361	202	35200	361	LIN FT	PIPE REMOVED, OVER 24"	
			18493.52												18493.52		202	38000	18493.52	LIN FT	GUARDRAIL REMOVED	
			753.48												753.48		202	38300	753.48	LIN FT	GUARDRAIL REMOVED, BARRIER DESIGN	
			4													4	202	58000	4	EACH	MANHOLE REMOVED	
			11													11	202	58100	11	EACH	CATCH BASIN REMOVED	
			2													2	202	58200	2	EACH	INLET REMOVED	
			1													1	202	58500	1	EACH	CATCH BASIN ABANDONED	
			3													3	202	58501	3	EACH	CATCH BASIN ABANDONED, AS PER PLAN	29
			618													618	SPECIAL	20270000	618	LIN FT	FILL AND PLUG EXISTING CONDUIT	
					47786										47786		202	75000	47786	LIN FT	FENCE REMOVED	
												55094				55094	203	12000	55094	CU YD	EXCAVATION NOT INCLUDING EMBANKMENT CONSTRUCTION	
												55014				55014	203	20000	55014	CU YD	EMBANKMENT	
43																43	604	40501	43	EACH	REFERENCE MONUMENT, AS PER PLAN	26, 28
			21107.61												21107.61		606	13000	21107.61	LIN FT	GUARDRAIL, TYPE 5	
			1062.50												1062.50		606	15500	1062.50	LIN FT	GUARDRAIL, BARRIER DESIGN, TYPE 5	
			10												10		606	20000	10	EACH	FLARED END SECTION	
			3												3		606	22000	3	EACH	ANCHOR ASSEMBLY, TYPE B-98	
			13												13		606	22010	13	EACH	ANCHOR ASSEMBLY, TYPE E-98	
			2												2		606	25000	2	EACH	ANCHOR ASSEMBLY, TYPE A	
			25												25		606	26500	25	EACH	ANCHOR ASSEMBLY, TYPE T	
			21												21		606	35000	21	EACH	BRIDGE TERMINAL ASSEMBLY, TYPE 1	
			3												3		606	35004	3	EACH	BRIDGE TERMINAL ASSEMBLY, TYPE 1, BARRIER DESIGN	
			16												16		606	35100	16	EACH	BRIDGE TERMINAL ASSEMBLY, TYPE 2	
			1												1		606	60000	1	EACH	IMPACT ATTENUATOR, TYPE 1-98 (UNIDIRECTIONAL)	
				13											13		606	60010	13	EACH	IMPACT ATTENUATOR, TYPE 1-98 (BIDIRECTIONAL)	
					40842										40842		607	15000	40842	LIN FT	FENCE, TYPE 47	
					4908										4908		607	23000	4908	LIN FT	FENCE, TYPE CLT	
				317											317		622	23300	317	LIN FT	CONCRETE BARRIER, TYPE A	
				50											50		622	23302	50	LIN FT	CONCRETE BARRIER, TYPE A, REINFORCED	
				5											5		622	23400	5	LIN FT	CONCRETE BARRIER, TYPE B	
				25											25		622	23402	25	LIN FT	CONCRETE BARRIER, TYPE B, REINFORCED	
				1771											1771		622	23500	1771	LIN FT	CONCRETE BARRIER, TYPE C	
				156											156		622	24000	156	LIN FT	CONCRETE BARRIER, TYPE D	
					27										27		625	32000	27	EACH	GROUND ROD	
																					----------EROSION CONTROL----------	
						1									1		601	11000	1	SQ YD	RIPRAP USING 6" REINFORCED CONCRETE SLAB	
					114										114		601	32100	114	CU YD	ROCK CHANNEL PROTECTION, TYPE B WITH FILTER	
						11									11		601	32200	11	CU YD	ROCK CHANNEL PROTECTION, TYPE C WITH FILTER	
1604																1604	601	34200	1604	CU YD	ROCK CHANNEL PROTECTION, TYPE C WITHOUT FILTER	
						804									412	392	660	20000	804	SQ YD	SODDING REINFORCED	
						4515									450	4065	670	40000	4515	SQ YD	DITCH EROSION PROTECTION	

CALCULATED JAG
CHECKED AM

GENERAL SUMMARY

CLE-275-5.35

210
857

SHEET NUMBER															FUNDING		ITEM	ITEM EXT.	GRAND TOTAL	UNIT	DESCRIPTION	SEE SHEET NO.
26-29	30-34	39	214	215	216	217	220	226	232	238	378A	239	247	341	INTERSTATE MAINTENANCE	NATIONAL HIGHWAY						
						46									46		839	10000	46	SQ YD	SEEDING AND EROSION CONTROL WITH REVEGETATION MAT	
2																2	870	00100	2	EACH	SOIL ANALYSIS TEST	
5862																5862	870	00200	5862	CU YD	PLACING TOPSOIL	
												105434				105434	870	10000	105434	SQ YD	SEEDING AND MULCHING	
5272																5272	870	14000	5272	SQ YD	REPAIR SEEDING AND MULCHING	
5272																5272	870	15000	5272	SQ YD	INTER-SEEDING	
24.47																24.47	870	20000	24.47	TON	COMMERCIAL FERTILIZER	
43.65																43.65	870	30000	43.65	TON	AGRICULTURAL LIME	
1060																1060	870	35000	1060	M GAL	WATER	
237																237	870	40000	237	M SQ FT	MOWING	
26359															26359		877	10000	26359	SQ YD	TEMPORARY SEEDING AND MULCHING	
2923													5846		5846	2923	877	30100	8769	LIN FT	TEMPORARY PERIMETER FILTER FABRIC FENCE	
570													1140		240	1470	877	30200	1710	LIN FT	TEMPORARY DITCH CHECK FILTER FABRIC FENCE	
825													1650		540	1935	877	30300	2475	LIN FT	TEMPORARY INLET PROTECTION FILTER FABRIC FENCE	
1129																1129	877	55500	1129	SQ YD	TEMPORARY DITCH PROTECTION	
																					----------DRAINAGE----------	
						3.5									3.5		602	20000	3.5	CU YD	CONCRETE MASONRY	
							144								28	116	603	00900	144	LIN FT	6" CONDUIT, TYPE B	
							2031								240	1791	603	01500	2031	LIN FT	6" CONDUIT, TYPE F	
						12									12		603	05700	12	LIN FT	15" CONDUIT, TYPE A, 706.01 OR 706.08	
						710									334	376	603	05900	710	LIN FT	15" CONDUIT, TYPE B	
						7245									61	7184	603	06100	7245	LIN FT	15" CONDUIT, TYPE C	
						505									505		603	06700	505	LIN FT	15" CONDUIT, TYPE F	
						89									89		603	07200	89	LIN FT	18" CONDUIT, TYPE A, 706.01 OR 706.08	
						16										16	603	07400	16	LIN FT	18" CONDUIT, TYPE B	
						1751									6	1745	603	07600	1751	LIN FT	18" CONDUIT, TYPE C	
						30										30	603	08900	30	LIN FT	21" CONDUIT, TYPE B	
						405										405	603	09100	405	LIN FT	21" CONDUIT, TYPE C	
						316										316	603	12100	316	LIN FT	27" CONDUIT, TYPE C	
						44										44	603	14900	44	LIN FT	33" CONDUIT, TYPE B	
						10										10	603	16400	10	LIN FT	36" CONDUIT, TYPE B	
						16									8	8	604	00400	16	EACH	CATCH BASIN, NO. 3	
						19										19	604	01200	19	EACH	CATCH BASIN, NO. 4	
						3										3	604	02800	3	EACH	CATCH BASIN, NO. 8	
						3									1	2	604	09000	3	EACH	CATCH BASIN ADJUSTED TO GRADE	
						12										12	604	09500	12	EACH	CATCH BASIN RECONSTRUCTED TO GRADE	
						2									2		604	14601	2	EACH	INLET, NO. 3B, AS PER PLAN	28
						7									2	5	604	31500	7	EACH	MANHOLE, NO. 3	
							24								24		604	36600	24	EACH	PRECAST REINFORCED CONCRETE OUTLET	
							78755								1750	77005	605	11100	78755	LIN FT	6" SHALLOW PIPE UNDERDRAIN	
							7356								18	7338	605	13300	7356	LIN FT	6" UNCLASSIFIED PIPE UNDERDRAIN	
						300									300		605	31100	300	LIN FT	AGGREGATE DRAIN	
																					----------PAVEMENT----------	
								3033							3033		202	22900	3033	SQ YD	APPROACH SLAB REMOVED	
								3226							3226		202	23000	3226	SQ YD	PAVEMENT REMOVED	
								4134							4134		202	32000	4134	LIN FT	CURB REMOVED	
								130293						340	10792	119841	203	50000	130633	SQ YD	SUBGRADE COMPACTION	

CALCULATED JAG
CHECKED AM

GENERAL SUMMARY

CLE-275-5.35

211
857

SHEET NUMBER															FUNDING		ITEM	ITEM EXT.	GRAND TOTAL	UNIT	DESCRIPTION	SEE SHEET NO.
26-29	30-34	39	214	215	216	217	220	226	232	238	378A	239	247	341	INTERSTATE MAINTENANCE	NATIONAL HIGHWAY						
								210625							210625		254	01000	210625	SQ YD	PAVEMENT PLANING, BITUMINOUS	
	641							615						88	1344		301	46000	1344	CU YD	BITUMINOUS AGGREGATE BASE, PG64-22	
								38409							775	37634	302	46000	38409	CU YD	BITUMINOUS AGGREGATE BASE, PG64-22	
									35318					57	2401	32974	304	20000	35375	CU YD	AGGREGATE BASE	
									15827						15827		407	10000	15827	GALLON	TACK COAT	
									16604					13	11052	5565	407	14000	16617	GALLON	TACK COAT FOR INTERMEDIATE COURSE	
									1869					115	1984		408	10000	1984	GALLON	BITUMINOUS PRIME COAT	
								66						13	79		448	46050	79	CU YD	ASPHALT CONCRETE INTERMEDIATE COURSE, TYPE 2, PG64-22	
								65						11	76		448	47020	76	CU YD	ASPHALT CONCRETE SURFACE COURSE, TYPE 1, PG64-22	
		*								3994					3033	961	611	25000	3994	SQ YD	REINFORCED CONCRETE APPROACH SLAB (T=15")	
										2751					1544	1207	617	10100	2751	CU YD	COMPACTED AGGREGATE, TYPE A	
										58954					33098	25856	617	20000	58954	SQ YD	SHOULDER PREPARATION	
										64					36	28	617	25000	64	M GAL	WATER	
										89603					45120	44483	618	40100	89603	LIN FT	RUMBLE STRIPS, TYPE 2 (ASPHALT)	
										245					122	123	830	26000	245	LIN FT	CURB, TYPE 6	
									13918						9245	4673	858	10000	13918	CU YD	ASPHALT CONCRETE SURFACE COURSE, 12.5MM, TYPE A (446)	
										16146					10695	5451	858	10100	16146	CU YD	ASPHALT CONCRETE INTERMEDIATE COURSE, 19MM, TYPE A (446)	
																					----------MAINTENANCE OF TRAFFIC----------	
	300														300		614	11100	300	HOUR	LAW ENFORCEMENT OFFICER WITH PATROL CAR	
		1													1		SPECIAL	61411300	1	EACH	TEMPORARY TRAFFIC SIGNAL	
		125													125		SPECIAL	61412200	125	LIN FT	TEMPORARY GUARDRAIL	
		22													22		614	12336	22	EACH	TEMPORARY IMPACT ATTENUATOR, (UNIDIRECTIONAL)	
	44														44		614	12470	44	EACH	WORK ZONE SPEED LIMIT SIGN	
	19														19		614	12480	19	EACH	DOUBLED FINES IN WORK ZONE SIGN	
	20														20		SPECIAL	61412500	20	SQ FT	REPLACEMENT SIGN	
	100														100		SPECIAL	61412600	100	EACH	REPLACEMENT DRUM	
		181													181		614	12800	181	EACH	TEMPORARY RAISED PAVEMENT MARKER	
		6													6		614	13200	6	EACH	BARRIER REFLECTOR, TYPE A	
		3410													3410		614	13300	3410	EACH	BARRIER REFLECTOR, TYPE B	
		3410													3410		614	13350	3410	EACH	OBJECT MARKER	
		3945													3945		614	18010	3945	SQ FT	MAINTAINING TRAFFIC, MISC.: DITCH EROSION PROTECTION	
		139													139		614	18030	139	LIN FT	MAINTAINING TRAFFIC, MISC.: 24" CONDUIT, TYPE A	
	48														48		614	18601	48	SIGN MNTH	PORTABLE CHANGEABLE MESSAGE SIGN, AS PER PLAN	31-32
		29.43													29.43		614	20000	29.43	MILE	TEMPORARY LANE LINE, CLASS I	
		7.03													7.03		614	20200	7.03	MILE	TEMPORARY LANE LINE, CLASS I, 740.06, TYPE I	
		62.84													62.84		614	22000	62.84	MILE	TEMPORARY EDGE LINE, CLASS I	
		19.36													19.36		614	22200	19.36	MILE	TEMPORARY EDGE LINE, CLASS I, 740.06, TYPE I	
		6559													6559		614	23000	6559	LIN FT	TEMPORARY CHANNELIZING LINE, CLASS I	
		4531													4531		614	23400	4531	LIN FT	TEMPORARY CHANNELIZING LINE, CLASS I, 740.06, TYPE I	
		250													250		614	24000	250	LIN FT	TEMPORARY DOTTED LINE, CLASS I	
		83													83		614	25000	83	LIN FT	TEMPORARY TRANSVERSE LINE, CLASS I	
		84													84		614	26000	84	LIN FT	TEMPORARY STOP LINE, CLASS I	
		6													6		614	30000	6	EACH	TEMPORARY LANE ARROW, CLASS I	

CALCULATED JAG
CHECKED AM

GENERAL SUMMARY

CLE-275-5.35

212
857

SHEET NUMBER															FUNDING		ITEM	ITEM EXT.	GRAND TOTAL	UNIT	DESCRIPTION	SEE SHEET NO.
26-29	30-34	39	214	215	216	217	220	226	232	238	378A	239	247	341	INTERSTATE MAINTENANCE	NATIONAL HIGHWAY						
		3													3		614	31000	3	EACH	TEMPORARY WORD ON PAVEMENT, 72", CLASS I	
		LUMP													LUMP		615	10000	LUMP	LUMP	TEMPORARY ROAD	
		11156													11156		615	20000	11156	SQ YD	TEMPORARY PAVEMENT, CLASS A	
		46													46		615	35001	46	SQ YD	TEMPORARY PAVEMENT, AS PER PLAN	31
	330														330		616	10000	330	M GAL	WATER	
	7														7		616	20000	7	TON	CALCIUM CHLORIDE	
		18													18		620	30300	18	EACH	TEMPORARY DELINEATOR, TYPE D	
		84571													84571		622	40020	84571	LIN FT	PORTABLE CONCRETE BARRIER, 32"	
																					----------LANDSCAPING----------	
											5				5		661	20060	5	EACH	DECIDUOUS SHRUB, 3' HEIGHT, SILKY DOGWOOD (CORNUS AMOMUM)	
																					BALLED & BURLAPPED (1' MIN. BALL)	
											10				10		661	20060	10	EACH	DECIDUOUS SHRUB, 3' HEIGHT, ARROW WOOD (VIBURNUM DENTATUM)	
																					BALLED & BURLAPPED (1' MIN. BALL)	
											5				5		661	20060	5	EACH	DECIDUOUS SHRUB, 3' HEIGHT, ELDERBERRY (SAMBUCUS CANADENSIS)	
																					BALLED & BURLAPPED (1' MIN. BALL)	
											15				15		661	40080	15	EACH	DECIDUOUS TREE, 2" CALIPER, GREEN ASH (FRAXINUS PENNSYLVANICA)	
																					BALLED & BURLAPPED (2' MIN. BALL)	
											10				10		661	40080	10	EACH	DECIDUOUS TREE, 2" CALIPER, RED MAPLE (ACER RUBRUM)	
																					BALLED & BURLAPPED (2' MIN. BALL)	
											10				10		661	40080	10	EACH	DECIDUOUS TREE, 2" CALIPER, BLACK CHERRY (PRUNUS SEROTINA)	
																					BALLED & BURLAPPED (2' MIN. BALL)	
											653				653		870	10100	653	SQ YD	SEEDING AND MULCHING FOR WILDLIFE	
																					FOR LIGHTING GENERAL SUMMARY	614
																					FOR TRAFFIC CONTROL GENERAL SUMMARY	380-381
																					FOR STRUCTURES OVER 20'	630-818
															LUMP		614	11000	LUMP		MAINTAINING TRAFFIC	
															LUMP		623	10001	LUMP		CONSTRUCTION LAYOUT STAKES, AS PER PLAN	28
															LUMP		624	10000	LUMP		MOBILIZATION	
LUMP															LUMP		SPECIAL	69098400	LUMP		MISC.: SOILS CONSULTANT FOR FIELD TESTING & INSPECTION	29
															24		806	16010	24	MONTH	FIELD OFFICE, TYPE B	

CALCULATED JAG
CHECKED AM

GENERAL SUMMARY

CLE-275-5.35

213
857

SHEET NO.	202 STRUCTURE REMOVED	202 PIPE REMOVED 24" AND UNDER	202 PIPE REMOVED OVER 24"	202 GUARDRAIL REMOVED	202 GUARDRAIL REMOVED BARRIER DESIGN	202 MANHOLE REMOVED	202 CATCH BASIN REMOVED	202 INLET REMOVED	202 CATCH BASIN ABANDONED	202 CATCH BASIN ABANDONED, AS PER PLAN	202 FILL AND PLUG EXISTING CONDUIT	606 GUARDRAIL TYPE 5	606 GUARDRAIL, BARRIER DESIGN, TYPE 5	606 FLARED END SECTION	606 ANCHOR ASSEMBLY TYPE B-98	606 ANCHOR ASSEMBLY TYPE E-98	606 ANCHOR ASSEMBLY TYPE A	606 ANCHOR ASSEMBLY TYPE T	606 BRIDGE TERMINAL ASSEMBLY, TYPE 1	606 BRIDGE TERMINAL ASSEMBLY, TYPE 1 BARRIER DESIGN	606 BRIDGE TERMINAL ASSEMBLY, TYPE 2	606 IMPACT ATTENUATOR TYPE 1-98 (UNIDIRECTIONAL)
	*EACH	*LF	*LF	LF	LF	*EACH	*EACH	*EACH	*EACH	*EACH	*LF	LF	LF	EACH	EACH	EACH	EACH	EACH	EACH	EACH	EACH	EACH
257				575.81								575.00						1			1	
259		117.00		862.63	74.89		1					911.48	75.00	1					2		1	
261		30.71		350.59	75.75		1				133.41	1412.50	125.00	1		1		1	2		1	
263		79.08					3		1	1	50.00											
265				104.02								87.50						2			2	
267				325.10	100.68					1	88.00	262.50	75.00	1	1				2			
269				226.65								575.00						1			1	
271		44.72		655.10	100.67							893.75	150.00	2					3			
281		8.00		1225.84			1					1400.00				1		1				
283		20.00					1															
293		1028.19				2																
295		610.12		377.59	37.72	1	1					193.75				1	1	1	1			
297				564.45								625.00				1		1				
299	1		341.24																			
301		155.51	20.00			1																
303		8.00					1															
307				567.86								931.25							1			
308				926.30	74.92							1321.13	150.00	1				1	3		2	
310		13.00		226.75	75.08		1				153.00	637.50						1			1	
314		8.00		428.52	75.12			1				143.75	75.00						1	1		1
316		16.00		455.69				1														
318				699.95	100.92		1				104.00	1287.50	75.00	1	1				2			
320				2469.12						1	90.00	2737.50						1			2	
328				1625.79								1675.00				1		1				
330				727.00								800.00				1		1				
335				376.91	37.73							181.25				1	1	1	1			
336				228.57								362.50				1		1				
339												112.50				1		1				
341												75.00	187.50	2				2				
343				951.27									150.00							2		
345				1349.43								1375.00						1			1	
346				151.40								212.50				1		1				
348				150.86								143.75			1				1			
349				939.68								1000.00				1		1				
352				151.67								150.00						1			1	
354				526.36								537.50						1			1	
356				105.07								218.75				1		1	1		1	
358				167.54								268.75		1		1		1	1		1	
*NATIONAL HIGHWAY FUNDS																						
TOTALS CARRIED TO GENERAL SUMMARY	1	2138	361	18493.52	753.48	4	11	2	1	3	618	21107.61	1062.50	10	3	13	2	25	21	3	16	1

CALCULATED EF
CHECKED AM

ROADWAY SUB-SUMMARY

CLE-275-5.35

214
857

SHEET NO.	606 IMPACT ATTENUATOR TYPE I-98 (BIDIRECTIONAL) EACH	622 CONCRETE BARRIER TYPE A LF	622 CONCRETE BARRIER TYPE A, REINFORCED LF	622 CONCRETE BARRIER TYPE B LF	622 CONCRETE BARRIER TYPE B, REINFORCED LF	622 CONCRETE BARRIER TYPE C LF	622 CONCRETE BARRIER TYPE D LF
257							
259	1						
261	1						
263							
265							
267	1						
269							
271	2						36.00
281							
283							
293							
295							60.08
297							
299							
301							
303							
307							
308	2						
310							
314	1			5.00	25.00	450.63	
316						1320.64	
318	1						
320							
328							
330							
335							59.89
336							
339							
341	2						
343	2	317.35	50.00				
345							
346							
348							
349							
352							
354							
356							
358							
TOTALS CARRIED TO GENERAL SUMMARY	13	317	50	5	25	1771	156

CALCULATED EF CHECKED AM

ROADWAY SUB-SUMMARY

CLE-275-5.35

215/857

PLAN SHEET NO.	202	601	607	607	625	FOR INFORMATION ONLY															
	FENCE REMOVED	R.C.P. TYPE B W/FILTER	FENCE TYPE 47	FENCE TYPE CLT	GROUND ROD	FENCE TERMINAL TYPE A	FENCE TERMINAL TYPE C	C.P.A.	E.P.A.	I.A.P.A.	L.P.E.C.	H.W.C.A.	A.C.	STREAM CROSSING TYPE 1	STREAM CROSSING TYPE 2	STREAM CROSSING TYPE 3					
	L.F.	C.Y.	L.F.	L.F.	EACH	EACH	EACH	EACH	EACH	EACH	EACH	EACH	EACH	EACH	EACH	EACH					
819	2098.01		1493.06	604.95				1		7			1								
820	1554.49			1554.49				4		3			4								
821	2012.10		1480.64	531.46				5		3			4	1							
822	1872.89	6.0	1872.89					1		4		2		3							
825	976.64	4.0	352.82	623.82	3			1		4			2	2							
826	2173.48	4.0	2173.48					3		7	1	2	2	2		1					
827	1936.31	6.0	1936.31					2		4					3						
828	2483.05	8.0	2483.05					1		5				2	2						
829	917.95	4.0	917.95					1		1				1	1						
830	1053.81	4.0	1053.81					1		1				2							
831	2693.92	12.0	2693.92		3			4		2				6							
832	880.00	4.0	880.00					1		1				2							
833	1176.82	4.0	1176.82				1	2	1	1				1	1						
834	1599.68	6.0	1599.68		1		1	3	1	1				3							
835	1866.01		1866.01		3					4											
836	1943.51	2.0	1943.51		2			2		2				1							
837	2019.65	4.0	2019.65		6					3	4			1	1						
838	2003.43	10.0	2003.43		3					4				5							
839	2118.78	8.0	2118.78							3	2			3	1						
840	2535.97	4.0	2535.97		3	2		4		6	2	2	4	2							
841	1682.63	12.0	1682.63			2		2		1		2		5	1						
842	2700.55	4.0	1751.26		3			1		3	2			2							
843	600.08		525.37					1		1		1									
844	2743.37	8.0	1730.66			4		4		4		6			4						
846	609.04		609.04							1											
848	1105.77		1105.77							2											
849	835.12		835.12					1		2											
852	415.46			415.46						1											
853	1177.32			1177.32				1		2											
TOTALS CARRIED TO GENERAL SUMMARY	47786	114	40842	4908	27	8	2	46	2	83	11	15	17	44	14	1					

CALCULATED EF CHECKED AM

FENCING SUB-SUMMARY

CLE-275-5.35

DRAINAGE SUBSUMMARY

CALCULATED EF
CHECKED AM

SHEET NO.	601		602	603															604										605	660		670		839	INFO. ONLY
	RIPRAP USING 6" REINFORCED CONCRETE SLAB	ROCK CHANNEL PROTECTION TYPE C W/ FILTER	CONCRETE MASONRY	15" CONDUIT, TYPE A, 706.01 OR 706.08	15" CONDUIT TYPE B *	15" CONDUIT TYPE B	15" CONDUIT TYPE C *	15" CONDUIT TYPE C	15" CONDUIT TYPE F	18" CONDUIT, TYPE A, 706.01 OR 706.08	18" CONDUIT TYPE B *	18" CONDUIT TYPE C *	18" CONDUIT TYPE C	21" CONDUIT TYPE B *	21" CONDUIT TYPE C *	27" CONDUIT TYPE C *	33" CONDUIT TYPE B *	36" CONDUIT TYPE B *	CATCH BASIN NO. 3 *	CATCH BASIN NO. 3	CATCH BASIN NO. 4 *	CATCH BASIN NO. 8 *	CATCH BASIN ADJUSTED TO GRADE *	CATCH BASIN ADJUSTED TO GRADE	CATCH BASIN RECONSTRUCTED TO GRADE *	BARRIER MEDIAN INLET I-3B AS PER PLAN	MANHOLE NO. 3 *	MANHOLE NO. 3	AGGREGATE DRAIN	REINFORCED SODDING *	REINFORCED SODDING	DITCH EROSION PROTECTION *	DITCH EROSION PROTECTION	SEEDING AND EROSION CONTROL W/MATTING	22.5° BENDS
* NATIONAL HIGHWAY FUNDS	SQ. YD.	CU. YD.	CU. YD.	LIN. FT.	LIN. FT.	LIN. FT.	LIN. FT.	LIN. FT.	LIN. FT.	LIN. FT.	LIN. FT.	LIN. FT.	LIN. FT.	LIN. FT.	LIN. FT.	LIN. FT.	LIN. FT.	LIN. FT.	EACH	EACH	EACH	EACH	EACH	EACH	EACH	EACH	EACH	EACH	LIN. FT.	SQ. YD.	SQ. YD.	SQ. YD.	SQ. YD.	SQ. YD.	NO.
258																							1									119.57			
260			0.29		72.62			20.18	54.88										1	1			1							102.21			4.17	2
262			0.29			74.14			59.4			8.00							1	1		1			1					64.27		239.14	4.17	2
264							8.00					51.00										1										119.57			
266		2.50	0.29		84.47				98.56										1	1		1								132.21		119.57			
268							678.25																	1	1							119.57			
270			0.29		81.51				79.37										1	1	1									93.39		119.57	4.17	2
272									48.44																2			2				119.57			
274							699.98																		1							119.57			
276							750.00														1				1							239.14			
278																					1											119.57			
280							700.00														1				1							239.14			
282							400.45					358.85									2											239.14			
284																					1											119.57			
286							751.72					20.00									3											358.71			
288							703.57																		1							119.57			
290							653.69														1				1							239.14			
292																					1											119.57			
294												400.17		30.00	404.96						1				1							239.14			
296							797.64														2						2					239.14			
298							699.15									315.86	24.00	10.00							1							119.57			
300																	20.00				1						1					119.57			
302												906.69									1				1		1					239.14			
304							308.02														1						1					119.57			
306																					1											119.57			
309			0.29		72.62			19.72	62.01										1	1										107.15			4.17	
311						83.09		21.61											1	1										62.73				
313						8.00																													
315		2.60	0.29		64.95	48.51			101.99										1	1						1				135.89				
317											16.00															1									
319						119.69	33.33												1	1										75.33				
321																																	27.28		
323		6.18																														915.1			
325			0.35										6.00																				1.67		
357	1.33		0.83							88.89																						24.34			
359			0.58	12.00																										31.10					
TYPICAL SECTION SHEET NO. 25																													300.25						
TOTALS	1.33	11.28	3.50	12.00	376.17	333.43	7183.80	61.51	504.65	88.89	16.00	1744.71	6.00	30.00	404.96	315.86	44.00	10.00	8	8	19	3	2	1	12	2	5	2	300.25	392.08	412.20	4065.38	939.44	45.63	6
GRAND TOTALS					709.60		7245.31					1750.71							16				3				7			804.28		5004.82			
ALLOCATED TOTALS CARRIED TO GENERAL SUMMARY					376	334	7184	61				1745	6						8	8			2	1			5	2		392	412	4065	450		
TOTALS CARRIED TO GENERAL SUMMARY	1	11	3.5	12	710		7245		505	89	16	1751		30	405	316	44	10	16		19	3	3		12	2	7		300	804		4515		46	

CLE-275-5.35

217
857

REF NO.	SHEET NO.	STATION TO STATION	SIDE	603			604	605		FOR INFORMATION ONLY							
				6" CONDUIT, TYPE B *	6" CONDUIT, TYPE F *	6" CONDUIT, TYPE F	PRECAST REINFORCED CONCRETE OUTLET	6" SHALLOW PIPE UNDERDRAIN *	6" UNCLASSIFIED PIPE UNDERDRAIN *	6" PLUG *	6" TEE *	45 BEND *	90 BEND *	UNDERDRAIN CONNECTION I *			
		* NATIONAL HIGHWAY FUNDS		LIN. FT.	LIN. FT.	LIN. FT.	EACH	LIN. FT.	LIN. FT.	EACH	EACH	EACH	EACH	EACH			
		NORTHBOUND I.R. 275															
U1	257/259	STA 282+45.06 to STA 289+94.13	LT		36.46			704.94	44.13	2	1	1					
U2	257/259	STA 282+45.06 to STA 289+86.74	LT					704.94	36.73	2				1			
U3	257	STA 285+50.00	LT			10.00	1										
U4	259	STA 290+36.76	LT			10.00	1										
U5	259/261	STA 292+41.21 TO STA 300+44.64	LT		22.30			687.23	44.42	2	1						
U6	259/261	STA 292+31.55 TO STA 300+42.59	LT					672.25	59.91	4				1			
U7	261	STA 300+68.29	LT			10.00	1										
U8	261/263	STA 303+71.80 TO STA 308+51.00	LT		24.23			462.52	16.81	1	1						
U9	261/263	STA 303+68.22 TO STA 308+51.00	LT					443.24	32.46	3				1			
U10	263	STA 308+00.00	LT			10.00	1										
U11	263/265	STA 308+51.00 TO STA 317+23.54	LT					823.71	49.00	1							
U12	263/265	STA 308+51.00 TO STA 317+11.88	LT					811.88	49.00	1							
U13	265	STA 317+24.54TO STA 326+47.51	LT		34.79			922.89		1		1					
U14	265	STA 317+12.87 TO STA 326+44.26	LT					920.15	4.25	2				1			
U15	267/269	STA 329+42.32 TO STA 338+99.00	LT		30.19			922.82	32.64	2	1						
U16	267/269	STA 329+39.18 TO STA 338+99.00	LT					923.30	35.80	2				1			
U17	269	STA 339+00.00 TO STA 345+76.34	LT		28.63			676.13		1			1				
U18	269	STA 339+00.00 TO STA 345+67.62	LT					656.37	4.04	2				1			
U19	271	STA 348+71.52 TO STA 351+59.83	LT		29.57			259.83	28.48	2	1						
U20	271	STA 348+63.70 TO STA 351+59.83	LT					259.83	36.30	2				1			
U21	271	STA 349+50.00	LT			10.00	1										
U22	271/273	STA 351+60.83 TO STA 359+99.02	LT		29.29			838.19		1			1				
U23	271/273	STA 351+60.83 TO STA 359+99.02	LT					838.19		1				1			
U24	273	STA 360+00.02 TO STA 366+99.00	LT		29.33			698.98		1			1				
U25	273	STA 360+00.02 TO STA 366+99.00	LT					698.98		1				1			
U26	275	STA 367+00.00 TO STA 374+49.00	LT		30.27			659.94	89.06	1			1				
U27	275	STA 367+00.00 TO STA 374+49.00	LT					685.09	63.91	1				1			
U28	275/277	STA 374+50.00 TO STA 381+99.00	LT		11.83			749.00		1			1				
U29	275/277	STA 374+50.00 TO STA 381+99.00	LT		17.42			749.00		1	1						
U30	277	STA 383+49.98	LT			10.00	1										
U31	277/279	STA 382+00.00 TO STA 388+99.00	LT		11.83			699.00		1			1				
U32	277/279	STA 382+00.00 TO STA 388+99.00	LT		18.16			699.00		1	1						
U33	279	STA 389+00.00 TO STA 395+99.00	LT		11.83			699.00		1			1				
U34	279	STA 389+00.00 TO STA 395+99.00	LT		17.42			699.00		1	1						
U35	281	STA 396+00.00 TO STA 402+48.61	LT		11.25			300.00	349.94	1			1				
U36	281	STA 396+00.00 TO STA 402+48.62	LT		17.14			300.00	349.42	1	1						
U37	281/283	STA 402+49.60 TO STA 409+99.00	LT		23.04			754.99		1			1				
U38	281/283	STA 402+49.60 TO STA 409+99.00	LT					752.73		1				1			
U39	283	STA 410+00.00 TO STA 416+97.96	LT		23.81			562.72	140.51	1			1				
U40	283	STA 410+00.00 TO STA 416+97.96	LT					629.80	71.30	1				1			
U41	285	STA 416+98.95 TO STA 424+49.01	LT		11.83			755.57		1			1				
U42	285	STA 416+98.95 TO STA 424+49.00	LT		12.32			753.34		1	1						
U43	285/287	STA 424+50.00 TO STA 431+95.52	LT	12.11	11.83			746.97		1	1		1				
U44	285/287	STA 424+50.00 TO STA 431+95.52	LT		11.34			746.38		1	1						
U45	287/289	STA 431+96.52 TO STA 438+99.00	LT	38.91	11.83			609.26	93.22	1	1		1				
U46	287/289	STA 431+96.52 TO STA 438+99.00	LT		16.94			625.83	76.65	1	1						
U47	289	STA 439+00.00 TO STA 446+45.31	LT		28.88			601.28	144.03	1			1				
U48	289	STA 439+00.00 TO STA 446+45.31	LT					593.15	152.16	1				1			
U49	291	STA 446+46.31 TO STA 452+99.00	LT		11.83			478.66	174.04	1			1				
U50	291	STA 446+46.31 TO STA 452+99.00	LT		16.67			573.59	79.10	1	1						
U51	291/293	STA 453+00.00 TO STA 459+44.16	LT		29.03			619.19	24.97	1			1				
U52	291/293	STA 453+00.00 TO STA 459+44.16	LT					619.23	24.93	1				1			
U53	293	STA 459+45.16 TO STA 462+75.00	LT	39.05	11.83			329.44		1	1		1				
TOTALS CARRIED TO SHEET NO. 220				90.07	633.12	60.00	6	30917.53	2307.21	61	16	2	17	14			

CALCULATED AM CHECKED WT

UNDERDRAIN SUB-SUMMARY

CLE-275-5.35

218
857

REF NO.	SHEET NO.	STATION TO STATION * NATIONAL HIGHWAY FUNDS	SIDE	603				604	605				FOR INFORMATION ONLY				
				6" CONDUIT, TYPE B *	6" CONDUIT, TYPE B	6" CONDUIT, TYPE F *	6" CONDUIT, TYPE F	PRECAST REINFORCED CONCRETE OUTLET	6" SHALLOW PIPE UNDERDRAIN *	6" SHALLOW PIPE UNDERDRAIN	6" UNCLASSIFIED PIPE UNDERDRAIN *	6" UNCLASSIFIED PIPE UNDERDRAIN	6" PLUG *	6" TEE *	45 BEND *	90 BEND *	UNDERDRAIN CONNECTION 1 *
				LIN. FT.	LIN. FT.	LIN. FT.	LIN. FT.	EACH	LIN. FT.	LIN. FT.	LIN. FT.	LIN. FT.	EACH	EACH	EACH	EACH	EACH
		NORTHBOUND I.R. 275 CONT'D.															
U54	293/295	STA 459+45.16 TO STA 467+49.00	LT			15.53			802.53				1	1			
U55	295	STA 467+50.00 TO STA 475+45.43	LT			20.54			793.63				1			1	
U56	295/297	STA 475+46.43 TO STA 484+98.97	LT			20.54			850.61		99.77		1			1	
U57	297	STA 484+00.00 TO STA 484+99.96	LT								99.58		1	1			
U58	297/299	STA 484+99.96 TO STA 491+99.00	LT			29.24			499.00		199.15		1				
U59	297/299	STA 484+99.98 TO STA 491+99.00	LT						698.15				1				1
U60	299	STA 493+50.00	LT				10.00	1									
U61	299/301	STA 492+00.00 TO STA 498+99.58	LT			29.25			599.58		100.00		1			1	
U62	299/301	STA 492+00.00 TO STA 498+99.58	LT						599.58		100.00		1				1
U63	301	STA 499+00.58 TO STA 506+49.00	LT		13.39	11.83			748.42				1	1			
U64	301	STA 499+00.58 TO STA 506+49.00	LT			17.42			748.42				1	1			
U65	303	STA 506+50.00 TO STA 515+49.00	LT			11.83			724.00		175.00		1			1	
U66	303	STA 506+50.00 TO STA 515+49.00	LT			17.30			724.00		175.00		1	1			
U67	303	STA 513+27.00	LT				10.00	1									
U68	303/305	STA 515+50.00 TO STA 517+50.50	LT			28.82			200.50				1			1	
U69	303/305	STA 515+50.00 TO STA 517+50.50	LT						200.50				1				1
		SOUTHBOUND I.R. 275															
U70	307	STA 282+35.53 to STA 283+50.00	RT			24.63			101.06						3		
U71	307	STA 283+44.00	RT				10.00	1									
U72	307/308	STA 283+33.58 TO STA 289+64.50	RT						566.42		64.50		2				1
U73	307/308	STA 282+45.06 TO STA 289+57.58	RT			36.46			654.94		57.57		2	1	1		
U74	308	STA 289+35.00	RT				10.00	1									
U75	308/310	STA 292+11.45 TO STA 300+36.82	RT						704.27		42.20		3				1
U76	308/310	STA 292+04.20 TO STA 300+34.78	RT			28.61			723.66		35.09		1	1			
U77	310	STA 300+38.61	RT				10.00	1									
U78	310/312	STA 303+64.18 TO STA 308+51.00	RT						465.73		14.02		2				1
U79	310/312	STA 303+62.61 TO STA 308+51.00	RT			22.27			478.76		9.63		1	1			
U80	312	STA 308+56.12	RT				10.00	1									
U81	312	STA 310+96.47	RT				10.00	1									
U82	312/314	STA 308+51.00 TO STA 317+10.89	RT						810.89		49.00		1				
U83	312/314	STA 308+51.00 TO STA 317+22.73	RT						822.73		49.00		1				
U84	314	STA 317+11.89 TO STA 326+37.86	RT						902.34		16.63		3				1
U85	314	STA 317+23.73 TO STA 326+35.33	RT			33.55			911.61				1		1		
U86	314	STA 321+51.88 TO STA 326+07.90	RT		13.12					456.02			1			1	
U87	316	STA 330+79.43	RT				10.00	1									
U88	316/318	STA 329+32.00 TO STA 338+99.00	RT						899.68		68.06		2				1
U89	316/318	STA 329+29.74 TO STA 338+99.00	RT			35.15			900.15		70.35		2	1	1		
U90	316/318	STA 329+17.46 TO STA 342+29.00	RT		15.05					1293.27		18.01	2		1		
U91	318	STA 339+00.00 TO STA 345+60.15	RT						636.05		17.15		3				1
U92	318	STA 339+00.00 TO STA 345+52.43	RT			29.87			652.64				1			1	
U93	318	STA 342+54.00	RT				10.00	1									
U94	320	STA 348+49.99	RT				10.00	1									
U95	320	STA 348+28.60 TO STA 351+59.83	RT						259.83		71.40		2				1
U96	320	STA 348+22.61 TO STA 351+59.83	RT			28.93			259.83		77.39		2	1			
U97	320/322	STA 351+60.83 TO STA 360+16.36	RT						855.53				1				1
U98	320/322	STA 351+60.83 TO STA 360+28.19	RT			29.21			867.36				1			1	
U99	322	STA 360+17.36 TO STA 366+99.00	RT						681.64				1				1
U100	322	STA 360+29.19 TO STA 366+99.00	RT			41.25			669.81				1		1		
U101	324	STA 367+00.00 TO STA 374+49.00	RT						639.98		109.02		1				1
U102	324	STA 367+00.00 TO STA 374+49.00	RT			28.23			586.23		162.77		1			1	
U103	324	STA 373+00.00	RT				10.00	1									
U104	324/326	STA 374+50.00 TO STA 381+99.00	RT			17.42			749.00				1	1			
U105	324/326	STA 374+50.00 TO STA 381+99.00	RT			11.83			749.00				1			1	
TOTALS CARRIED TO SHEET NO. 220				13.39	28.17	569.71	110.00	11	24738.06	1749.29	1862.28	18.01	54	11	8	10	13

CALCULATED AM CHECKED MT

UNDERDRAIN SUB-SUMMARY

CLE-275-5.35

2.19
857

REF NO.	SHEET NO.	STATION TO STATION * NATIONAL HIGHWAY FUNDS	SIDE	603 6" CONDUIT, TYPE B * LIN. FT.	603 6" CONDUIT, TYPE B LIN. FT.	603 6" CONDUIT, TYPE F * LIN. FT.	603 6" CONDUIT, TYPE F LIN. FT.	604 PRECAST REINFORCED CONCRETE OUTLET EACH	605 6" SHALLOW PIPE UNDERDRAIN * LIN. FT.	605 6" SHALLOW PIPE UNDERDRAIN LIN. FT.	605 6" UNCLASSIFIED PIPE UNDERDRAIN * LIN. FT.	605 6" UNCLASSIFIED PIPE UNDERDRAIN LIN. FT.	FOR INFORMATION ONLY 6" PLUG * EACH	6" TEE * EACH	45 BEND * EACH	90 BEND * EACH	UNDERDRAIN CONNECTION 1 * EACH
		SOUTHBOUND I.R. 275 CONT'D.															
U106	326/327	STA 382+00.00 TO STA 388+99.00	RT			16.67			699.00				1	1			
U107	326/327	STA 382+00.00 TO STA 388+99.00	RT			11.83			699.00				1			1	
U108	327	STA 389+00.00 TO STA 395+99.00	RT			17.42			699.00				1	1			
U109	327	STA 389+00.00 TO STA 395+99.00	RT			11.83			699.00				1			1	
U110	327/328	STA 396+00.00 TO STA 399+00.00	RT			11.83			300.00				1			1	
U111	327/328	STA 396+00.00 TO STA 402+48.59	RT			18.27			514.71		133.07		1	1			
U112	328	STA 403+00.00	RT				10.00	1									
U113	328/329	STA 402+49.60 TO STA 409+99.00	RT			23.63			746.06				1			1	
U114	329	STA 410+00.00 TO STA 417+20.53	RT			22.85			609.22		108.06		1			1	
U115	330	STA 417+10.00	RT				10.00	1									
U116	330	STA 417+21.54 TO STA 424+49.00	RT			31.88			724.27				1		1		
U117	330/331	STA 424+50.00 TO STA 432+13.29	RT						640.84		121.57		1				1
U118	330/331	STA 424+50.00 TO STA 432+25.12	RT			35.33			609.08		164.59		1			1	
U119	331	STA 433+00.00	RT				10.00	1									
U120	331/332	STA 432+14.29 TO STA 438+99.00	RT						684.71				1				1
U121	331/332	STA 432+26.12 TO STA 438+99.00	RT			41.99			672.88				1		1		
U122	332	STA 439+00.00 TO STA 446+63.46	RT						763.46				1				1
U123	332	STA 439+00.00 TO STA 446+75.30	RT			29.62			775.30				1			1	
U124	333	STA 448+50.00	RT				10.00	1									
U125	333	STA 446+64.46 TO STA 452+99.00	RT						634.54				1				1
U126	333	STA 446+76.30 TO STA 452+99.00	RT			42.41			622.70				1		1		
U127	333/334	STA 453+00.00 TO STA 459+63.47	RT						374.33		289.14		1				1
U128	333/334	STA 453+00.00 TO STA 459+75.31	RT			29.47			352.51		322.80		1			1	
U129	334/335	STA 459+64.47 TO ST 467+49.00	RT						625.31		160.53		1				1
U130	334/335	STA 459+76.31 TO STA 467+49.00	RT			44.01			626.21		148.69		1		1		
U131	335	STA 467+50.00 TO STA 475+45.43	RT			14.29			797.23				1	1			
U132	335	STA 467+50.00 TO STA 475+45.43	RT			11.83			798.46				1			1	
U133	335/336	STA 475+46.43 TO STA 484+99.00	RT			14.30			454.60		500.13		1	1			
U134	335/336	STA 475+46.43 TO STA 484+99.00	RT			11.83			455.29		500.90		1			1	
U135	336/337	STA 485+00.00 TO STA 491+99.00	RT						698.17				1				1
U136	156/157	STA 485+00.00 TO STA 491+99.00	RT			29.25			698.19				1			1	
U137	337	STA 487+25.00	RT				10.00	1									
U138	337/338	STA 492+00.00 TO STA 498+99.58	RT						600.00		99.58		1				1
U139	337/338	STA 492+00.00 TO STA 498+99.58	RT			29.25			549.87		149.71		1			1	
U140	337	STA 495+33.00	RT				10.00	1									
U141	338	STA 499+00.58 TO STA 506+49.00	RT			17.42			748.42				1	1			
U142	338	STA 499+00.58 TO STA 506+49.00	RT		12.67	11.83			748.42				1	1			
U143	339	STA 506+50.00 TO STA 515+49.00	RT			17.53			644.48		254.52		1	1			
U144	339	STA 506+50.00 TO STA 515+49.00	RT			11.83			683.41		215.59		1			1	
U145	339	STA 513+16.00	RT				10.00	1									
U146	339/340	STA 515+50.00 TO STA 517+50.50	RT						200.50				1				1
U147	339/340	STA 515+50.00 TO STA 517+50.50	RT			29.68			200.50				1			1	
TOTALS THIS SHEET					12.67	0.00	588.08	70.00		7		21349.67	0.00	3168.88	0.00		35	8	4	14	9	
TOTALS FROM SHEET NO. 218					90.07	0.00	633.12	60.00		6		30917.53	0.00	2307.21	0.00		61	16	2	17	14	
TOTALS FROM SHEET NO. 219					13.39	28.17	569.71	110.00		11		24738.06	1749.29	1862.28	18.01		54	11	8	10	13	
TOTALS					116.13	28.17	1790.91	240.00		24		77005.26	1749.29	7338.37	18.01		150	35	14	41	36	
GRAND TOTALS					144.30		2030.91					78754.55		7356.38								
ALLOCATED TOTALS CARRIED TO GENERAL SUMMARY					116	28	1791	240				77005	1750	7338	18							
GRAND TOTALS CARRIED TO GENERAL SUMMARY					144		2031			24		78755		7356								

CALCULATED AM CHECKED MT

UNDERDRAIN SUB-SUMMARY

CLE-275-5.35

220
857

STATION TO STATION	LENGTH L	AVERAGE WIDTH W · USED %	AVERAGE DEPTH D	AREA A A=LxW	AREA CADD OR ADDITIONAL AREA a	ITEM 304 AVERAGE SHOULDER WIDTH WS	202 (23) APPROACH SLAB REMOVED A/9	202 CURB REMOVED L	202 PAVEMENT REMOVED a/9	203 (24) SUBGRADE COMPACTION LX(W+16")/9 A LX(W+18")/9 B LX(W+10")/9 C LX(W+24")/9 D	203 * (24) SUBGRADE COMPACTION LX(W+16")/9 A LX(W+18")/9 B	254 (11) PAVEMENT PLANING, BITUMINOUS (DEPTH - 1/2") AREA/9	254 (20) PAVEMENT PLANING, BITUMINOUS (DEPTH - 1¼") A/9	301 (15) 3" BITUMINOUS AGGREGATE BASE, P664-22 (3/12)*(L*(W+(12/12)))/27	301 (26) 5½" BITUMINOUS AGGREGATE BASE, P664-22 (5.5/12)*(L*(W+(4/12)))/27	302 (3) 12" BITUMINOUS AGGREGATE BASE, P664-22 L*(W+(4/12))/27	302 * (3) 12" BITUMINOUS AGGREGATE BASE, P664-22 L*(W+(4/12))/27	448 (19) 1¼" ASPHALT CONCRETE SURFACE COURSE, TYPE 1, PG64-22 1.25A/(12X27)	448 (28) 1½" ASPHALT CONCRETE SURFACE COURSE, TYPE 1, PG64-22 1.5A/(12X27)	448 (29) 1¾" ASPHALT CONCRETE INTERMEDIATE COURSE, TYPE 2, PG64-22 1.75A/(12X27)
* NATIONAL HIGHWAY FUNDS ONLY.	FEET	FEET	FEET	SQ.FT.	SQ.FT.	FEET	SQ.YD.	FEET	SQ.YD.	SQ.YD.	SQ.YD.	SQ.YD.	SQ.YD.	CU.YD.	CU.YD.	CU.YD.	CU.YD.	CU.YD.	CU.YD.	CU.YD.
I.R. 275 SOUTHBOUND																				
280 + 82.56 TO 281 + 57.56	75.00	50.00	0.14	3750.00	1875.00				208.33											
281 + 57.56 TO 282 + 45.06	87.50	50.00	0.14	4375.00																
282 + 45.06 TO 289 + 61.86	716.80	12.00	0.14	8601.60							1061.93 A						327.43			
282 + 45.06 TO 289 + 43.74	698.68	46.00	0.14	32139.28								3571.03								
289 + 76.85 TO 290 + 01.85	25.00	16.43	0.14	410.75							49.81 B									
289 + 76.85 TO 290 + 01.85	25.00	56.68	0.14	1417.00			157.44			161.61 B										
291 + 96.47 TO 292 + 21.47	25.00	16.45	0.14	411.25							49.86 B									
291 + 96.47 TO 292 + 21.47	25.00	56.63	0.14	1415.75			157.31			161.47 B										
292 + 07.06 TO 293 + 74.95	167.89	13.00	0.14	2182.57							267.38 A						82.91			
293 + 74.95 TO 296 + 00.00	225.05	12.00	0.14	2700.60							333.41 A						102.80			
296 + 71.83 TO 300 + 36.80	364.97	12.00	0.14	4379.64							540.70 A						166.71			
291 + 87.73 TO 293 + 36.22	148.49	47.00	0.14	6979.03								775.45								
293 + 36.22 TO 296 + 00.00	263.78	46.00	0.14	12133.88								1348.21								
296 + 71.83 TO 300 + 30.64	358.81	48.69	0.14	17470.46								1941.16								
300 + 41.46 TO 300 + 66.46	25.00	14.29	0.14	357.25							43.86 B									
300 + 41.46 TO 300 + 66.46	25.00	55.23	0.14	1380.75			153.42			157.58 B										
303 + 42.29 TO 303 + 67.29	25.00	14.29	0.14	357.25							43.86 B									
303 + 42.29 TO 303 + 67.29	25.00	67.45	0.14	1686.25			187.36			191.53 B										
303 + 62.82 TO 303 + 87.68	24.86	14.00	0.14	348.04							42.35 A						13.20			
303 + 87.68 TO 305 + 27.72	140.04	13.00	0.14	1820.52							223.03 A						69.16			
305 + 27.72 TO 326 + 15.23	2087.51	12.00	0.14	25050.12							3092.61 A						953.55			
326 + 15.23 TO 326 + 37.27	22.04	14.65	0.14	322.886							39.14 A						12.23			
303 + 48.36 TO 306 + 17.75	269.39	73.80	0.14		19884.13							2209.35								
306 + 17.75 TO 316 + 89.83	1072.08	46.00	0.14	49315.58								5479.52								
316 + 89.83 TO 321 + 49.80	459.97	46.00	0.14	21158.62				459.97				2350.96								
321 + 49.80 TO 326 + 31.02	481.22	46.00	0.14	22136.12								2459.57								
321 + 49.80 TO 326 + 25.12	475.32	12.42			5903.39			475.32	655.93	726.35 A•						224.51 •				
326 + 42.06 TO 326 + 67.06	25.00	14.31	0.14	357.75							43.92 B									
326 + 42.06 TO 326 + 67.06	25.00	98.63	0.14	2465.75			273.97			278.14 B										
329 + 09.44 TO 329 + 34.44	25.00	14.31	0.14	357.75							43.92 B									
329 + 09.44 TO 329 + 34.44	25.00	99.38	0.14	2484.50			276.06			280.22 B										
329 + 29.29 TO 345 + 36.92	1607.63	12.00	0.14	19291.56							2381.67 A						734.35			
345 + 36.92 TO 345 + 55.85	18.93	14.44	0.14		273.44						33.19 A•						10.36			
329 + 23.08 TO 337 + 10.00	786.92	46.00		36198.32								4022.04								
337 + 10.00 TO 345 + 55.85	845.85	7.13			6029.90						795.30 A•						233.77 •			
337 + 10.00 TO 342 + 28.96	518.96	40.97	0.14		21263.29							2362.59								
329 + 16.99 TO 342 + 28.96	1311.97	10.48			13747.70			1311.97	1527.52	1721.89 A•						525.37 •				
342 + 28.96 TO 345 + 23.31	294.35	79.96	0.14		24122.15							2680.24								
342 + 28.96 TO 345 + 23.31	294.35	2.00	0.14		586.54				65.17	108.78 A•						25.36 •				
329 + 16.99 TO 330 + 98.20	181.21	54.02	0.14		9788.41			181.21				1087.60								
330 + 98.20 TO 331 + 72.12	73.92	32.15	0.14	2376.53				73.92				264.06								
331 + 72.12 TO 333 + 16.82	144.70	28.34		4100.80	169.36			144.7	18.82			455.64								
331 + 72.12 TO 333 + 16.82	144.70	2.00	0.14	289.40							53.59 A				5.73					
333 + 16.82 TO 335 + 78.53	261.71	19.00		4972.49				261.71				552.50								
333 + 16.82 TO 335 + 78.53	261.71	3.00	0.14	785.13							126.01 A				14.81					
335 + 78.53 TO 340 + 16.13	437.60	19.00		8314.40				437.6				923.82								
335 + 78.53 TO 340 + 16.13	437.60	3.00	0.14	1312.80							210.70 A				24.76					
340 + 16.13 TO 342 + 28.96	212.83	24.39			5190.22			212.83				576.69								
345 + 69.22 TO 345 + 94.22	25.00	30.16	0.14	754.00							87.94 B									
345 + 69.22 TO 345 + 94.22	25.00	88.37	0.14	2209.25			245.47			249.64 B										
348 + 12.00 TO 348 + 37.00	25.00	31.17	0.14	779.25							90.75 B									
348 + 12.00 TO 348 + 37.00	25.00	78.23	0.14	1955.75			217.31			221.47 B										
348 + 20.01 TO 362 + 99.88	1479.87	24.00	0.14	35516.88							4165.56 A						1333.71			
TOTALS THIS SHEET							1668.34	3559.23	2475.77	4258.68	13820.49	33060.43			45.30	775.24	4040.18			

CALCULATED JGB
CHECKED AM

PAVEMENT CALCULATIONS

CLE-275-5.35

STATION TO STATION	LENGTH L	AVERAGE WIDTH W - USED a/L	AVERAGE DEPTH D	AREA A A=LxW	AREA CADD OR ADDITIONAL AREA a	ITEM 304 AVERAGE SHOULDER WIDTH WS	202 (23) APPROACH SLAB REMOVED A/9	202 CURB REMOVED L	202 PAVEMENT REMOVED a/9	203 (24) SUBGRADE COMPACTION LX(W+16")/9 A LX(W+18")/9 B LX(W+10")/9 C LX(W+24")/9 D	203 * (24) SUBGRADE COMPACTION LX(W+16")/9 A LX(W+18")/9 B	254 (11) PAVEMENT PLANING, BITUMINOUS (DEPTH - 1/2") AREA/9	254 (20) PAVEMENT PLANING, BITUMINOUS (DEPTH - 1¼") A/9	301 (15) 3" BITUMINOUS AGGREGATE BASE, P664-22 (3/12)*(L*(W+(12/12)))/27	301 (26) 5½" BITUMINOUS AGGREGATE BASE, P664-22 (5.5/12)*(L*(W+(4/12)))/27	302 (3) 12" BITUMINOUS AGGREGATE BASE, P664-22 L*(W+(4/12))/27	302 * (3) 12" BITUMINOUS AGGREGATE BASE, P664-22 L*(W+(4/12))/27	448 (19) 1¼" ASPHALT CONCRETE SURFACE COURSE, TYPE 1, PG64-22 1.25A/(12X27)	448 (28) 1½" ASPHALT CONCRETE SURFACE COURSE, TYPE 1, PG64-22 1.5A/(12X27)	448 (29) 1¾" ASPHALT CONCRETE INTERMEDIATE COURSE, TYPE 2, PG64-22 1.75A/(12X27)
* NATIONAL HIGHWAY FUNDS ONLY.	FEET	FEET	FEET	SQ.FT.	SQ.FT.	FEET	SQ.YD.	FEET	SQ.YD.	SQ.YD.	SQ.YD.	SQ.YD.	SQ.YD.	CU.YD.	CU.YD.	CU.YD.	CU.YD.	CU.YD.	CU.YD.	CU.YD.
I.R. 275 SOUTHBOUND																				
348 + 06.41 TO 362 + 99.88	1493.47	24.00	0.14	35843.28								3982.59								
347 + 87.30 TO 362 + 99.88	1512.58	22.71	0.14		34344.21							3816.02								
359+78.89 U-TURN	113.00		0.14		889.32						115.55 A •						34.33 •			
362 + 99.88 TO 485 + 10.53	12210.65	24.00	0.14	293055.60							34370.72 A						11004.66			
485 + 11.38 TO 517 + 50.00	3238.62	24.00	0.14	77726.88							9116.12 A						2918.76			
374+32.32 U-TURN	113.00		0.14		889.32						115.55 A •						34.33 •			
431+75.58 U-TURN	113.00		0.14		889.32						115.55 A •						34.33 •			
515+27.90 U-TURN	113.00		0.14		889.32						115.55 A •						34.33 •			
362 + 99.88 TO 364 + 69.27	169.39	34.00	0.14	5759.26								639.92								
364 + 69.27 TO 372 + 17.33	748.06	24.00	0.14	17953.44								1994.83								
364 + 69.27 TO 372 + 17.33	748.06	24.30	0.14		18151.61							2016.85								
372 + 17.33 TO 397 + 00.00	2482.67	34.00	0.14	84410.78								9378.98								
397 + 00.00 TO 408 + 98.22	1198.22	24.00	0.14	28757.28								3195.25								
397 + 00.00 TO 408 + 98.22	1198.22	18.43	0.14		22086.33							2454.04								
408 + 98.22 TO 485 + 10.53	7612.31	34.00	0.14	258818.54								28757.62								
485 + 11.38 TO 517 + 50.00	3238.62	34.00	0.14	110113.08								12234.79								
517 + 50.00 TO 518 + 37.50	87.50	38.00	0.14	3325.00																
518 + 37.50 TO 519 + 12.50	75.00	38.00	0.14	2850.00	1425.00				158.33											
I.R. 275 NORTHBOUND																				
280 + 82.56 TO 281 + 57.56	75.00	50.00	0.14	3750.00	1875.00				208.33											
281 + 57.56 TO 282 + 45.06	87.50	50.00	0.14	4375.00																
282 + 45.06 TO 289 + 91.85	746.79	12.00	0.14	8961.48							1106.36 A						341.13			
282 + 45.06 TO 290 + 09.97	764.91	46.00	0.14	35185.86								3909.54								
289 + 76.85 TO 290 + 01.85	25.00	16.61	0.14	415.25							50.31 B									
289 + 76.85 TO 290 + 01.85	25.00	56.45	0.14	1411.25			156.81			160.97 B										
291 + 96.47 TO 292 + 21.47	25.00	16.47	0.14	411.75							49.92 B									
291 + 96.47 TO 292 + 21.47	25.00	56.63	0.14	1415.75			157.31			161.47 B										
292 + 35.92 TO 292 + 55.07	19.15	13.00	0.14	248.95							30.50 A						9.46			
292 + 55.07 TO 296 + 00.00	344.93	12.00	0.14	4139.16							511.01 A						157.56			
292 + 45.06 TO 296 + 00.00	354.94	1.89			670.31						127.06 A •						29.21 •			
296 + 71.83 TO 300 + 44.62	372.79	12.00	0.14	4473.48							552.28 A						170.29			
296 + 71.83 TO 300 + 46.54	374.71	5.77			2161.69						295.70 A •						84.69 •			
292 + 54.51 TO 292 + 93.56	23.50	46.00	0.14		1840.63						208.00 A •	204.51								
292 + 93.56 TO 296 + 00.00	306.44	46.00	0.14	14096.24								1566.25								
296 + 71.83 TO 300 + 51.77	379.94	46.00	0.14	17477.24								1941.92								
300 + 41.46 TO 300 + 66.46	25.00	22.39	0.14	559.75							66.36 B									
300 + 41.46 TO 300 + 66.46	25.00	48.91	0.14	1222.75			135.86			140.03 B										
303 + 42.29 TO 303 + 67.29	25.00	25.51	0.14	637.75							75.03 B									
303 + 42.29 TO 303 + 67.29	25.00	48.77	0.14	1219.25			135.47			139.64 B										
303 + 69.59 TO 303 + 91.73	22.14	14.00	0.14		310.01						37.73 A •						11.76 •			
303 + 72.04 TO 304 + 45.06	73.02	11.61	0.14		847.99						105.04 A •						32.31 •			
303 + 91.73 TO 304 + 45.06	53.33	12.00	0.14	639.96							79.01 A						24.36			
304 + 45.06 TO 326 + 48.29	2203.23	24.00	0.14	52877.52							6201.68 A						1985.63			
303 + 75.46 TO 315 + 00.48	1125.02	24.00	0.14	27000.48								3000.05								
303 + 80.12 TO 308 + 37.90	457.78	24.28	0.14		11115.29							1235.03								
308 + 37.90 TO 311 + 09.35	271.45	31.34	0.14		8507.73							945.30								
311 + 09.35 TO 312 + 00.34	90.99	2.00	0.14	181.98	91.00				10.11		33.70 A				3.60					
312 + 00.34 TO 313 + 71.54	171.20	3.50	0.14	599.20							91.94 A				11.14					
311 + 09.35 TO 315 + 00.48	391.13	33.82			13229.41							1469.93								
315 + 00.48 TO 320 + 34.38	533.90	34.00	0.14	18152.60								2016.96								
320 + 34.38 TO 325 + 36.68	502.30	37.00	0.14	18585.10								2065.01								
325 + 36.68 TO 326 + 56.63	121.77	65.12	0.14		7814.14							868.24								
326 + 42.06 TO 326 + 67.06	25.00	26.78	0.14	669.50							78.56 B									
TOTALS THIS SHEET							585.45		376.77	602.11	53649.23	87693.63			14.74		16907.14			

CALCULATED JGB
CHECKED AM

PAVEMENT CALCULATIONS

CLE-275-5.35

222
857

PAVEMENT CALCULATIONS

CALCULATED JGB
CHECKED AM

CLE-275-5.35

223
857

STATION TO STATION	LENGTH L	AVERAGE WIDTH W • USED ℄	AVERAGE DEPTH D	AREA A A=LxW	AREA CADD OR ADDITIONAL AREA a	ITEM 304 AVERAGE SHOULDER WIDTH WS	202 (23) APPROACH SLAB REMOVED A/9	202 CURB REMOVED L	202 PAVEMENT REMOVED a/9	203 (24) SUBGRADE COMPACTION LX(W+16")/9 A LX(W+18")/9 B LX(W+10")/9 C LX(W+24")/9 D	203 * (24) SUBGRADE COMPACTION LX(W+16")/9 A LX(W+18")/9 B	254 (11) PAVEMENT PLANING, BITUMINOUS (DEPTH - 1/2") AREA/9	254 (20) PAVEMENT PLANING, BITUMINOUS (DEPTH - 1¼") A/9	301 (15) 3" BITUMINOUS AGGREGATE BASE, PG64-22 (3/12)*(L*(W+(12/12)))/27	301 (26) 5½" BITUMINOUS AGGREGATE BASE, PG64-22 (5.5/12)*(L*(W+(4/12)))/27	302 (3) 12" BITUMINOUS AGGREGATE BASE, PG64-22 L*(W+(4/12))/27	302 * (3) 12" BITUMINOUS AGGREGATE BASE, PG64-22 L*(W+(4/12))/27	448 (19) 1¼" ASPHALT CONCRETE SURFACE COURSE, TYPE 1, PG64-22 1.25A/(12X27)	448 (28) 1½" ASPHALT CONCRETE SURFACE COURSE, TYPE 1, PG64-22 1.5A/(12X27)	448 (29) 1¾" ASPHALT CONCRETE INTERMEDIATE COURSE, TYPE 2, PG64-22 1.75A/(12X27)
* NATIONAL HIGHWAY FUNDS ONLY.	FEET	FEET	FEET	SQ.FT.	SQ.FT.	FEET	SQ.YD.	FEET	SQ.YD.	SQ.YD.	SQ.YD.	SQ.YD.	SQ.YD.	CU.YD.	CU.YD.	CU.YD.	CU.YD.	CU.YD.	CU.YD.	CU.YD.
I.R. 275 NORTHBOUND																				
326 + 42.06 TO 326 + 67.06	25.00	53.78	0.14	1344.50			149.39			153.56 B										
329 + 09.44 TO 329 + 34.44	25.00	26.99	0.14	674.75							79.14 B									
329 + 09.44 TO 329 + 34.44	25.00	48.60	0.14	1215.00			135.00			139.17 B										
329 + 40.89 TO 345 + 76.96	1636.07	24.00	0.14	39265.68							4605.23 A						1474.48			
329 + 46.11 TO 334 + 37.84	491.73	24.00	0.14	11801.52								1311.28								
329 + 51.11 TO 334 + 37.84	486.73	19.94	0.14		9705.91							1078.43								
334 + 37.84 TO 342 + 03.39	765.55	24.00	0.14	18373.20								2041.47								
342 + 03.39 TO 345 + 87.26	383.87	24.00	0.14	9212.88								1023.65								
342 + 03.39 TO 346 + 03.50	400.11	30.02	0.14		12010.17							1334.46								
345 + 59.81 TO 345 + 84.81	25.00	30.05	0.14	751.25							87.64 B									
345 + 59.81 TO 345 + 84.81	25.00	51.59	0.14	1289.75			143.31			147.47 B										
348 + 27.79 TO 348 + 52.79	25.00	29.91	0.14	747.75							87.25 B									
348 + 27.79 TO 348 + 52.79	25.00	51.60	0.14	1290.00			143.33			147.50 B										
348 + 69.85 TO 485 + 10.53	13640.68	24.00	0.14	327376.32							38395.99 A						12293.45			
485 + 11.38 TO 517 + 50.00	3238.62	24.00	0.14	77726.88							9116.12 A						2918.76			
348 + 83.51 TO 350 + 16.40	132.89	24.00	0.14	3189.36								354.37								
348 + 95.36 TO 350 + 16.40	121.04	14.04	0.14		1699.35							188.82								
350 + 16.40 TO 363 + 61.87	1345.47	34.00	0.14	45745.98								5082.89								
363 + 61.87 TO 374 + 70.60	1108.73	20.87	0.14		23146.60							2571.84								
363 + 61.87 TO 374 + 70.60	1108.73	24.00		26609.52								2956.61								
374 + 70.60 TO 397 + 28.11	2257.51	34.00	0.14	76755.34								8528.37								
397 + 28.11 TO 405 + 64.11	836.00	24.00		20064.00								2229.33								
397 + 28.11 TO 405 + 64.11	851.40	22.49	0.14		19804.14							2200.46								
405 + 64.11 TO 485 + 10.53	7946.42	34.00	0.14	270178.28								30019.81								
485 + 11.38 TO 517 + 50.00	3238.62	34.00	0.14	110113.08								12234.79								
517 + 50.00 TO 518 + 37.50	87.50	38.00	0.14	3325.00																
518 + 37.50 TO 519 + 12.50	75.00	38.00	0.14	2850.00	1425.00				158.33											
RAMP A																				
306 + 18.34 TO 307 + 33.53 - LT	115.19	19.20	0.14		2213.93							245.99								
306 + 18.34 TO 307 + 33.53 - RT	115.19	7.25	0.14		835.59							92.84								
307 + 33.53 TO 307 + 85.52 - LT	51.99	19.00	0.14	987.81								109.76								
307 + 33.53 TO 307 + 85.52 - RT	51.99	4.00		207.96								23.11								
307 + 33.53 TO 307 + 85.52 - RT	51.99	2.00	0.14	103.98	55.39				6.15	16.37 C					2.06					
307 + 85.52 TO 320 + 52.89 - LT	1267.37	19.00	0.14	24080.03								2675.56								
320 + 52.89 TO 321 + 55.97 - LT	103.08	19.00	0.14	1958.52				103.08				217.61								
321 + 55.97 TO 324 + 43.43 - LT	287.46	19.00	0.14	5461.74				287.46				606.86								
307 + 85.52 TO 307 + 98.78 - RT	13.26	2.50		33.15								3.68								
307 + 85.52 TO 307 + 98.78 - RT	13.26	2.50	0.14	33.15						4.91 C					0.64					
307 + 98.78 TO 311 + 90.99 - RT	392.21	3.00	0.14	1176.63						167.05 C					22.19					
311 + 90.99 TO 316 + 31.80 - RT	440.81		0.14		4770.80							530.09								
311 + 90.99 TO 315 + 92.55 - RT	401.56	3.00	0.14	1204.68						171.03 C					22.72					
316 + 31.80 TO 323 + 45.19 - RT	713.39	3.00		2140.17								237.80								
316 + 31.80 TO 323 + 45.19 - RT	713.39	3.00	0.14	2140.17						303.85 C					40.37					
RAMP B																				
316 + 30.44 TO 316 + 47.94 - LT	17.50	19.00	0.14	332.50																
316 + 47.94 TO 316 + 62.94 - LT	15.00	19.00	0.14	285.00	142.50				15.83											
316 + 30.44 TO 316 + 47.94 - RT	17.50	3.00	0.14	52.50																
316 + 47.94 TO 316 + 62.94 - RT	15.00	3.00	0.14	45.00	22.50				2.50											
RAMP C																				
313 + 57.96 TO 313 + 72.96 - LT	15.00	20.376	0.14	305.64	152.82				16.98											
313 + 72.96 TO 313 + 90.46 - LT	17.50	19.00	0.14		356.77															
313 + 57.96 TO 313 + 72.96 - RT	15.00	4.00	0.14	60.00	30.00				3.33											
313 + 72.96 TO 313 + 90.46 - RT	17.50	4.00	0.14	70.00																
TOTALS THIS SHEET							571.03	390.54	203.12	1250.91	52371.37	77899.88			87.98		16686.69			

STATION TO STATION	LENGTH L	AVERAGE WIDTH W • USED ℄	AVERAGE DEPTH D	AREA A A=LxW	AREA CADD OR ADDITIONAL AREA a	ITEM 304 AVERAGE SHOULDER WIDTH WS	202 (23) APPROACH SLAB REMOVED A/9	202 CURB REMOVED L	202 PAVEMENT REMOVED A/9	203 (24) SUBGRADE COMPACTION LX(W+16")/9 A LX(W+18")/9 B LX(W+10")/9 C LX(W+24")/9 D	203 * (24) SUBGRADE COMPACTION LX(W+16")/9 A LX(W+18")/9 B	254 (11) PAVEMENT PLANING, BITUMINOUS (DEPTH - 1/2") AREA/9	254 (20) PAVEMENT PLANING, BITUMINOUS (DEPTH - 1¼") A/9	301 (15) 3" BITUMINOUS AGGREGATE BASE, PG64-22 (3/12)*L*(W+(12/12)))/27	301 (26) 5½" BITUMINOUS AGGREGATE BASE, PG64-22 (5.5/12)*L*(W+(4/12)))/27	302 (3) 12" BITUMINOUS AGGREGATE BASE, PG64-22 L*(W+(4/12))/27	302 * (3) 12" BITUMINOUS AGGREGATE BASE, PG64-22 L*(W+(4/12))/27	448 (19) 1¼" ASPHALT CONCRETE SURFACE COURSE, TYPE 1, PG64-22 1.25A/(12X27)	448 (28) 1½" ASPHALT CONCRETE SURFACE COURSE, TYPE 1, PG64-22 1.5A/(12X27)	448 (29) 1¾" ASPHALT CONCRETE INTERMEDIATE COURSE, TYPE 2, PG64-22 1.75A/(12X27)
* NATIONAL HIGHWAY FUNDS ONLY.	FEET	FEET	FEET	SQ.FT.	SQ.FT.	FEET	SQ.YD.	FEET	SQ.YD.	SQ.YD.	SQ.YD.	SQ.YD.	SQ.YD.	CU.YD.	CU.YD.	CU.YD.	CU.YD.	CU.YD.	CU.YD.	CU.YD.
RAMP C																				
313 + 90.46 TO 313 + 97.21 - RT	6.75	4.00		27.00								3.00								
313 + 36.27 TO 313 + 97.21 - RT	60.94	2.00	0.14	121.88	62.42				6.94	19.18 C					2.41					
313 + 90.46 TO 323 + 42.57 - LT	952.11	19.00	0.14	18090.09								2010.01								
323 + 42.57 TO 324 + 36.46 - LT	93.89	25.58			2402.14							266.90								
324 + 36.46 TO 326 + 18.14 - LT	181.68	34.81			6324.72			184.62				702.75								
313 + 97.21 TO 314 + 48.88 - RT	51.67	3.00		155.01								17.22								
313 + 97.21 TO 314 + 48.88 - RT	51.67	3.00	0.14	155.01						22.01 C					2.92					
314 + 48.88 TO 323 + 76.86 - RT	927.98	3.00		2783.94								309.33								
314 + 48.88 TO 323 + 76.86 - RT	927.98	3.00	0.14	2783.94						395.25 C					52.51					
323 + 76.86 TO 324 + 26.86 - RT	50.00	4.00		200.00								22.22								
323 + 76.86 TO 324 + 26.86 - RT	50.00	4.00	0.14	200.00						26.85 C					3.68					
324 + 26.86 TO 325 + 32.54 - RT	105.68	5.00		528.40								58.71								
324 + 26.86 TO 325 + 32.54 - RT	105.68	3.00	0.14	317.04						45.01 C					5.98					
325 + 32.54 TO 326 + 13.82 - RT	81.28	2.24	0.14		181.70							20.19								
RAMP G																				
330 + 96.27 TO 331 + 35.15 - LT	38.88	20.12	0.14		782.38							86.93								
330 + 96.27 TO 331 + 35.15 - RT	38.88	3.43		133.36								14.82								
331 + 35.15 TO 331 + 46.30 - LT	11.15	19.00	0.14	211.85								23.54								
331 + 35.15 TO 331 + 46.30 - RT	11.15	4.00		44.60								4.96								
330 + 96.27 TO 331 + 46.30 - RT	50.03	2.00	0.14	100.06	43.77				4.86	15.75 C					1.98					
331 + 46.30 TO 332 + 09.39 - LT	63.09	19.00	0.14	1198.71								133.19								
331 + 46.30 TO 332 + 09.39 - RT	63.09	2.50		157.72								17.52								
331 + 46.30 TO 332 + 09.39 - RT	63.09	3.00	0.14	189.27						26.87 C					3.57					
332 + 09.39 TO 344 + 08.90 - LT	1199.51	19.00	0.14	22790.69								2532.30								
332 + 09.39 TO 344 + 08.90 - RT	1199.51	3.00		3598.53								399.84								
332 + 09.39 TO 344 + 08.90 - RT	1199.51	3.00	0.14	3598.53						510.90 C					67.87					
344 + 08.90 TO 344 + 26.40 - LT	17.50	19.00	0.14	332.50																
344 + 26.40 TO 344 + 41.40 - LT	15.00	19.00	0.14	285.00	142.50				15.83											
344 + 08.90 TO 344 + 26.40 - RT	17.50	3.00		52.50																
344 + 26.40 TO 344 + 41.40 - RT	15.00	3.00		45.00	22.50				2.50											
344 + 08.90 TO 344 + 64.92 - RT	56.02	3.00	0.14	168.06	37.18				4.13	23.86 C					3.17					
RAMP F																				
341 + 95.81 TO 342 + 10.81 - LT	15.00	19.00		285.00	142.50				15.83											
342 + 10.81 TO 342 + 28.31 - LT	17.50	19.00	0.14	332.50																
341 + 95.81 TO 342 + 10.81 - RT	15.00	7.00	0.14	105.00	52.50				5.83											
342 + 10.81 TO 342 + 28.31 - RT	17.50	7.00	0.14	122.50																
RAMP H																				
323 + 54.85 TO 323 + 96.94 - LT	42.09	2.00	0.14	84.18	42.10				4.68	13.25 C					1.67					
323 + 96.94 TO 324 + 39.61 - LT	42.67	2.50	0.14	106.68						15.80 C					2.05					
324 + 39.61 TO 324 + 54.61 - LT	15.00	3.00		45.00	22.50				2.50			5.00								
324 + 39.61 TO 324 + 54.61 - LT	15.00	3.00	0.14	45.00						6.39 C					0.85					
324 + 39.61 TO 324 + 54.61 - RT	15.00	19.00	0.14	285.00	142.50				15.83			31.67								
324 + 54.61 TO 324 + 72.11 - LT	17.50	3.00		52.50								5.83								
324 + 54.61 TO 324 + 72.11 - LT	17.50	3.00	0.14	52.50						7.45 C					0.99					
324 + 54.61 TO 324 + 72.11 - RT	17.50	19.00	0.14	332.50																
324 + 72.11 TO 340 + 76.03 - LT	1603.92	3.00	0.14	4811.76						683.15 C					90.76					
324 + 72.11 TO 340 + 76.03 - LT	1603.92	3.00		4811.76								534.64								
324 + 72.11 TO 340 + 76.03 - RT	1603.92	19.00	0.14	30474.48																
340 + 76.03 TO 341 + 04.65 - LT	28.62	2.50	0.14	71.55						10.60 C					1.38					
340 + 76.03 TO 341 + 04.65 - LT	28.62	2.50		71.55								7.95								
340 + 76.03 TO 341 + 04.65 - RT	28.62	19.00	0.14	543.78																
341 + 04.65 TO 341 + 45.28 - LT	40.63	2.00	0.14	81.26	40.48				4.50	12.79 C					1.61					
341 + 04.65 TO 341 + 45.28 - LT	40.63	2.00		81.26								9.03								
TOTALS THIS SHEET								184.62	83.43	1835.11		7217.55			243.40					

CALCULATED JGB
CHECKED AM

PAVEMENT CALCULATIONS

CLE-275-5.35

STATION TO STATION	LENGTH L	AVERAGE WIDTH W • USED ℄	AVERAGE DEPTH D	AREA A A=LxW	AREA CADD OR ADDITIONAL AREA a	ITEM 304 AVERAGE SHOULDER WIDTH WS	202 (23) APPROACH SLAB REMOVED A/9	202 CURB REMOVED L	202 PAVEMENT REMOVED a/9	203 (24) SUBGRADE COMPACTION LX(W+16")/9 A LX(W+18")/9 B LX(W+10")/9 C LX(W+24")/9 D	203 * (24) SUBGRADE COMPACTION LX(W+16")/9 A LX(W+18")/9 B	254 (11) PAVEMENT PLANING, BITUMINOUS (DEPTH - ½") AREA/9	254 (20) PAVEMENT PLANING, BITUMINOUS (DEPTH - 1¼") A/9	301 (15) 3" BITUMINOUS AGGREGATE BASE, PG64-22 (3/12)*(L*(W+(12/12)))/27	301 (26) 5½" BITUMINOUS AGGREGATE BASE, PG64-22 (5.5/12)*(L*(W+(4/12)))/27	302 (3) 12" BITUMINOUS AGGREGATE BASE, PG64-22 L*(W+(4/12))/27	302 * (3) 12" BITUMINOUS AGGREGATE BASE, PG64-22 L*(W+(4/12))/27	448 (19) 1¼" ASPHALT CONCRETE SURFACE COURSE, TYPE 1, PG64-22 1.25A/(12X27)	448 (28) 1½" ASPHALT CONCRETE SURFACE COURSE, TYPE 1, PG64-22 1.5A/(12X27)	448 (29) 1¾" ASPHALT CONCRETE INTERMEDIATE COURSE, TYPE 2, PG64-22 1.75A/(12X27)
* NATIONAL HIGHWAY FUNDS ONLY.	FEET	FEET	FEET	SQ.FT.	SQ.FT.	FEET	SQ.YD.	FEET	SQ.YD.	SQ.YD.	SQ.YD.	SQ.YD.	SQ.YD.	CU.YD.	CU.YD.	CU.YD.	CU.YD.	CU.YD.	CU.YD.	CU.YD.
RAMP H																				
341 + 04.65 TO 341 + 45.28 - RT	40.63	19.00	0.14	771.97																
341 + 45.28 TO 342 + 08.08 - LT	62.80	7.00	0.14	439.60																
341 + 45.28 TO 342 + 08.08 - RT	62.80	19.00	0.14	1193.20																
RAMP E																				
125 + 17.83 TO 125 + 32.83 - LT	15.00	7.00	0.14	105.00	52.50				5.83											
125 + 17.83 TO 125 + 32.83 - RT	15.00	19.00	0.14	285.00	142.50				15.83											
125 + 32.83 TO 125 + 50.33 - LT	17.50	7.00	0.14	122.50																
125 + 32.83 TO 125 + 50.33 - RT	17.50	19.00	0.14	332.50																
RAMP D																				
313 + 71.54 TO 314 + 21.54 - LT	50.00	4.00	0.14	200.00						26.85 C					3.68					
314 + 21.54 TO 314 + 96.08 - LT	74.54	3.00	0.14	223.62						31.75 C					4.22					
314 + 96.08 TO 327 + 32.20 - LT	1236.12	3.00	0.14	3708.36						526.50 C					69.95					
314 + 96.08 TO 321 + 89.54 - RT	1236.12	3.00		3708.36								412.04								
321 + 89.54 TO 325 + 27.08 - RT	693.46	19.00	0.14	13175.74								1463.97								
325 + 27.08 TO 327 + 32.20 - RT	337.54	26.43	0.14		8921.54							991.28								
327 + 32.20 TO 327 + 47.20 - LT	205.12	29.73			6097.66															
327 + 32.20 TO 327 + 47.20 - LT	15.00	3.00	0.14	45.00						6.39 C					0.85					
327 + 32.20 TO 327 + 47.20 - RT	15.00	3.00		45.00								5.00								
327 + 47.20 TO 327 + 59.70 - LT	15.00	34.50		517.50								57.50								
327 + 47.20 TO 327 + 59.70 - LT	12.50	3.00	0.14	37.50						5.32 C					0.71					
327 + 47.20 TO 327 + 59.70 - RT	12.50	3.00		37.50	18.75				2.08			4.17								
327 + 59.70 TO 328 + 48.23 - LT	12.50	34.84		435.50	217.75				24.19			48.39								
327 + 59.70 TO 328 + 48.23 - LT	88.53	3.00	0.14	265.59						37.71 C					5.01					
327 + 59.70 TO 328 + 22.03 - RT	88.53	3.00		265.59									29.51					1.02		
328 + 22.03 TO 328 + 48.23 - RT	62.33	16.00		997.28									110.81					3.85		
328 + 48.23 TO 328 + 60.73 - LT	26.20	19.00	0.14	497.80									55.31					1.92		
328 + 48.23 TO 328 + 60.73 - LT	12.50	3.00	0.14	37.50						5.32 C					0.71					
328 + 60.73 TO 328 + 75.73 - RT	12.50	3.00		37.50	18.75				2.08				4.17					0.14		
328 + 75.73 TO 332 + 11.99 - LT	15.00	19.00	0.14	285.00	142.50				15.83				31.67					1.10		
328 + 75.73 TO 332 + 11.99 - LT	336.26	3.00	0.14	1008.78						143.22 C					19.03					
328 + 75.73 TO 332 + 11.99 - RT	336.26	3.00		1008.78								112.09								
332 + 11.99 TO 332 + 32.33 - LT	336.26	34.50	0.14	11600.97								1289.00								
332 + 11.99 TO 332 + 32.33 - LT	20.34	2.50	0.14	50.85						7.53 C					0.98					
332 + 11.99 TO 332 + 32.33 - RT	20.34	3.50		71.19								7.91								
332 + 70.81 TO 332 + 83.87 - LT	20.34	19.00	0.14	386.46								42.94								
332 + 66.37 TO 332 + 83.87 - RT	13.06		0.14		79.99							8.89								
332 + 83.87 TO 332 + 98.87 - LT	17.50	19.00	0.14	332.50								36.94								
332 + 83.87 TO 332 + 98.87 - RT	15.00	6.00	0.14	90.00	45.00				5.00			10.00								
T.R. 211	15.00	19.00	0.14	285.00	142.50				15.83			31.67								
45 + 40.00 TO 46 + 39.45 - LT&RT	99.45	23.56		2343.04						282.44 D				22.62					10.85	12.66
45 + 40.00 TO 46 + 39.45 - LT&RT	99.45		0.271			2.00														
45 + 40.00 TO 46 + 39.45 - LT&RT	99.45		0.25			1.50														
45 + 40.00 TO 46 + 39.45 - LT&RT	99.45		0.146			1.00														
46 + 39.45 TO 48 + 11.74 - LT&RT	172.29	24.00		4134.96						497.73 D				39.88					19.14	22.33
46 + 39.45 TO 48 + 11.74 - LT&RT	172.29		0.271			4.00														
46 + 39.45 TO 48 + 11.74 - LT&RT	172.29		0.25			3.50														
46 + 39.45 TO 48 + 11.74 - LT&RT	172.29		0.146			3.00														
48 + 11.74 TO 48 + 36.74 - LT&RT	25.00	37.39		934.75			103.86													
48 + 11.74 TO 48 + 36.74 - LT&RT	25.00	40.39		1009.75						116.36 B										
51 + 87.39 TO 52 + 12.39 - LT&RT	25.00	37.39		934.75			103.86													
51 + 87.39 TO 52 + 12.39 - LT&RT	25.00	40.39		1009.75						116.36 B										
52 + 12.39 TO 53 + 75.92 - LT&RT	163.53	24.00		3924.72						472.42 D				37.85					18.17	21.20
TOTALS THIS SHEET							207.72		86.67	2275.90		4521.79	231.47	100.35	105.14			8.03	48.16	56.19

CALCULATED: JGB
CHECKED: AM

PAVEMENT CALCULATIONS

CLE-275-5.35

225
857

STATION TO STATION	LENGTH L	AVERAGE WIDTH W • USED %	AVERAGE DEPTH D	AREA A A=LxW	AREA CADD OR ADDITIONAL AREA a	ITEM 304 AVERAGE SHOULDER WIDTH WS	202 (23) APPROACH SLAB REMOVED A/9	202 CURB REMOVED L	202 PAVEMENT REMOVED a/9	203 (24) SUBGRADE COMPACTION LX(W+16")/9 A LX(W+8")/9 B LX(W+10")/9 C LX(W+24")/9 D	203 * (24) SUBGRADE COMPACTION LX(W+16")/9 A LX(W+8")/9 B	254 (11) PAVEMENT PLANING, BITUMINOUS (DEPTH = 1/2") AREA/9	254 (20) PAVEMENT PLANING, BITUMINOUS (DEPTH = 1¼") A/9	301 (15) 3" BITUMINOUS AGGREGATE BASE, P664-22 (3/12)*(L*(W+(12/12)))/27	301 (26) 5½" BITUMINOUS AGGREGATE BASE, P664-22 (5.5/12)*(L*(W+(14/12)))/27	302 (3) 12" BITUMINOUS AGGREGATE BASE, P664-22 L*(W+(14/12))/27	302 * (3) 12" BITUMINOUS AGGREGATE BASE, P664-22 L*(W+(14/12))/27	448 (19) 1¼" ASPHALT CONCRETE SURFACE COURSE, TYPE 1, P664-22 1.25A/(12X27)	448 (28) 1½" ASPHALT CONCRETE SURFACE COURSE, TYPE 1, P664-22 1.5A/(12X27)	448 (29) 1¾" ASPHALT CONCRETE INTERMEDIATE COURSE, TYPE 2, P664-22 1.75A/(12X27)
* NATIONAL HIGHWAY FUNDS ONLY.	FEET	FEET	FEET	SQ.FT.	SQ.FT.	FEET	SQ.YD.	FEET	SQ.YD.	SQ.YD.	SQ.YD.	SQ.YD.	SQ.YD.	CU.YD.	CU.YD.	CU.YD.	CU.YD.	CU.YD.	CU.YD.	CU.YD.
T.R. 211																				
52 + 12.39 TO 53 + 75.92 - LT&RT	163.53		0.2708			4.00														
52 + 12.39 TO 53 + 75.92 - LT&RT	163.53		0.25			3.50														
52 + 12.39 TO 53 + 75.92 - LT&RT	163.53		0.146			3.00														
53 + 75.92 TO 54 + 68.00 - LT&RT	92.08	20.36	0.27	1874.75						228.77 D				18.21					8.68	10.13
53 + 75.92 TO 54 + 68.00 - LT&RT	92.08		0.271			2.00														
53 + 75.92 TO 54 + 68.00 - LT&RT	92.08		0.25			1.50														
53 + 75.92 TO 54 + 68.00 - LT&RT	92.08		0.146			1.00														
TOTALS THIS SHEET										228.77				18.21					8.68	10.13
TOTALS FROM SHEET NO. 221							1668.34	3559.23	2475.77	4258.68	13820.49	33060.43			45.30	775.24	4040.18			
TOTALS FROM SHEET NO. 222							585.45		376.77	602.11	53649.23	87693.63			14.74		16907.14			
TOTALS FROM SHEET NO. 223							571.03	390.54	203.12	1250.91	52371.37	77899.88			87.98		16686.69			
TOTALS FROM SHEET NO. 224								184.62	83.43	1835.11		7217.55			243.40					
TOTALS FROM SHEET NO. 225							207.72		86.67	2275.90		4521.79	231.47	100.35	105.14			8.03	48.16	56.19
TOTALS							3032.54	4134.39	3225.76	10451.48	119841.09	210393.28	231.47	118.56	496.56	775.24	37634.01	8.03	56.84	66.32
GRAND TOTALS							3032.54	4134.39	3225.76	130292.57		210624.75		615.12		38409.25		64.87		66.32
ALLOCATED TOTALS CARRIED TO GENERAL SUMMARY										10452	119841					775	37634			
GRAND TOTALS CARRIED TO GENERAL SUMMARY							3033	4134	3226	130293		210625		615		38409		65		66

CALCULATED JGB
CHECKED AM

PAVEMENT CALCULATIONS

CLE-275-5.35

226
857

STATION TO STATION	LENGTH L	AVERAGE WIDTH W • USED ℄	AVERAGE DEPTH D	AREA A A=LxW	AREA CADD OR ADDITIONAL AREA a	ITEM 304 AVERAGE SHOULDER WIDTH WS	304 * (5) 10" AGGREGATE BASE (10/12)*(L*(W+(16/12)))/27	304 * (22) 6" AGGREGATE BASE (6/12)*(L*(W+(18/12)))/27	304 (5) 10" AGGREGATE BASE (10/12)*AREA/27	304 (27) 6" AGGREGATE BASE WEDGE (8" AVERAGE DEPTH) (8/12)*(L*(W+(10/12)))/27	304 (16) 8" AGGREGATE BASE L*WS*D/27 OR (8/12)*(L*(W+(24/12)))/27 D	304 (22) 6" AGGREGATE BASE (6/12)*(L*(W+(18/12)))/27	407 (12) TACK COAT AREA/9 X 0.075	407 (13) TACK COAT FOR INTERMEDIATE COURSE AREA/9 X 0.050	407 * (13) TACK COAT FOR INTERMEDIATE COURSE AREA/9 X 0.050	408 (4) BITUMINOUS PRIME COAT 0.4*(L*(W+(14/12)))/9 0.4*(L*(W+(12/12)))/9 D			858 (1) 1½" ASPHALT CONCRETE SURFACE COURSE, TYPE A (446) 1.5A/(12X27)	858 * (1) 1½" ASPHALT CONCRETE SURFACE COURSE, TYPE A (446) 1.5A/(12X27)
* NATIONAL HIGHWAY FUNDS ONLY.	FEET	FEET	FEET	SQ.FT.	SQ.FT.	FEET	CU.YD.	CU.YD.	CU.YD.	CU.YD.	CU.YD.	CU.YD.	GAL.	GAL.	GAL.	GAL.			CU.YD.	CU.YD.
I.R. 275 SOUTHBOUND																				
280 + 82.56 TO 281 + 57.56	75.00	50.00	0.14	3750.00	1875.00									20.83					17.36	
281 + 57.56 TO 282 + 45.06	87.50	50.00	0.14	4375.00										24.31					20.25	
282 + 45.06 TO 289 + 61.86	716.80	12.00	0.14	8601.60			294.98								47.79					39.82
282 + 45.06 TO 289 + 43.74	698.68	46.00	0.14	32139.28									267.83	178.55					148.79	
289 + 76.85 TO 290 + 01.85	25.00	16.43	0.14	410.75				8.30												
289 + 76.85 TO 290 + 01.85	25.00	56.68	0.14	1417.00								26.94								
291 + 96.47 TO 292 + 21.47	25.00	16.45	0.14	411.25				8.31												
291 + 96.47 TO 292 + 21.47	25.00	56.63	0.14	1415.75								26.91								
292 + 07.06 TO 293 + 74.95	167.89	13.00	0.14	2182.57			74.27								12.13					10.10
293 + 74.95 TO 296 + 00.00	225.05	12.00	0.14	2700.60			92.61								15.00					12.50
296 + 71.83 TO 300 + 36.80	364.97	12.00	0.14	4379.64			150.19								24.33					20.28
291 + 87.73 TO 293 + 36.22	148.49	47.00	0.14	6979.03									58.16	38.77					32.31	
293 + 36.22 TO 296 + 00.00	263.78	46.00	0.14	12133.98									101.12	67.41					56.18	
296 + 71.83 TO 300 + 30.64	358.81	48.69	0.14	17470.46									145.59	97.06					80.88	
300 + 41.46 TO 300 + 66.46	25.00	14.29	0.14	357.25				7.31												
300 + 41.46 TO 300 + 66.46	25.00	55.23	0.14	1380.75								26.26								
303 + 42.29 TO 303 + 67.29	25.00	14.29	0.14	357.25				7.31												
303 + 42.29 TO 303 + 67.29	25.00	67.45	0.14	1686.25								31.92								
303 + 62.82 TO 303 + 87.68	24.86	14.00	0.14	348.04			11.77								1.93					1.61
303 + 87.68 TO 305 + 27.72	140.04	13.00	0.14	1820.52			61.95								10.11					8.43
305 + 27.72 TO 326 + 15.23	2087.51	12.00	0.14	25050.12			859.06								139.17					115.97
326 + 15.23 TO 326 + 37.27	22.04	14.65	0.14	322.886			10.87								1.79					1.49
303 + 48.36 TO 306 + 17.75	269.39	73.80	0.14		19884.13								165.70	110.47					92.06	
306 + 17.75 TO 316 + 89.83	1072.08	46.00	0.14	49315.68									410.96	273.98					228.31	
316 + 89.83 TO 321 + 49.80	459.97	46.00	0.14	21158.62									176.32	117.55					97.96	
321 + 49.80 TO 326 + 31.02	481.22	46.00	0.14	22136.12									184.47	122.98					102.48	
321 + 49.80 TO 326 + 25.12	475.32	12.42			5903.39				182.20					32.80					27.33	
326 + 42.06 TO 326 + 67.06	25.00	14.31	0.14	357.75				7.32												
326 + 42.06 TO 326 + 67.06	25.00	98.63	0.14	2465.75								46.36								
329 + 09.44 TO 329 + 34.44	25.00	14.31	0.14	357.75				7.32												
329 + 09.44 TO 329 + 34.44	25.00	99.38	0.14	2484.50								46.70								
329 + 29.29 TO 345 + 36.92	1607.63	12.00	0.14	19291.56			661.58								107.18					89.31
345 + 36.92 TO 345 + 55.85	18.93	14.44	0.14		273.44		9.22								1.52					1.27
329 + 23.08 TO 337 + 10.00	786.92	46.00		36198.32									301.65	201.10					167.58	
337 + 10.00 TO 345 + 55.85	845.85	7.13			6029.90		220.92 •								33.50					27.92
337 + 10.00 TO 342 + 28.96	518.96	40.97	0.14		21263.29								177.19	118.13					98.44	
329 + 16.99 TO 342 + 28.96	1311.97	10.48			13747.70				424.31					76.38					63.65	
342 + 28.96 TO 345 + 23.31	294.35	79.96	0.14		24122.15								201.02	134.01					111.68	
342 + 28.96 TO 345 + 23.31	294.35	2.00	0.14		586.54				18.10											
329 + 16.99 TO 330 + 98.20	181.21	54.02	0.14		9788.41								81.57	54.38					45.32	
330 + 98.20 TO 331 + 72.12	73.92	32.15	0.14	2376.53									19.80	13.20					11.00	
331 + 72.12 TO 333 + 16.82	144.70	28.34		4100.80	169.36								34.17	22.78					18.99	
331 + 72.12 TO 333 + 16.82	144.70	2.00	0.14	289.40						10.12				1.61		15.01				1.34
333 + 16.82 TO 335 + 78.53	261.71	19.00		4972.49									41.44	27.62					23.02	
333 + 16.82 TO 335 + 78.53	261.71	3.00	0.14	785.13						24.77				4.36		38.77				3.63
335 + 78.53 TO 340 + 16.13	437.60	19.00		8314.40									69.29	46.19					38.49	
335 + 78.53 TO 340 + 16.13	437.60	3.00	0.14	1312.80						41.42				7.29		64.83				6.08
340 + 16.13 TO 342 + 28.96	212.83	24.39			5190.22								43.25	28.83					24.03	
345 + 69.22 TO 345 + 94.22	25.00	30.16	0.14	754.00				14.66												
345 + 69.22 TO 345 + 94.22	25.00	88.37	0.14	2209.25								41.61								
348 + 12.00 TO 348 + 37.00	25.00	31.17	0.14	779.25				15.13												
348 + 12.00 TO 348 + 37.00	25.00	78.23	0.14	1955.75								36.91								
348 + 20.01 TO 362 + 99.88	1479.87	24.00	0.14	35516.88			1157.10													164.43
TOTALS THIS SHEET							3604.52	75.66	624.61	76.31		283.61	2479.53	1820.59	394.45	118.61			1506.11	504.18

CALCULATED JGB
CHECKED AM

PAVEMENT CALCULATIONS

CLE-275-5.35

227
857

STATION TO STATION	LENGTH L	AVERAGE WIDTH W *USED %	AVERAGE DEPTH D	AREA A A=LxW	AREA CADD OR ADDITIONAL AREA a	ITEM 304 AVERAGE SHOULDER WIDTH WS	304 * (5) 10" AGGREGATE BASE (10/12)*(L*(W+(16/12)))/27	304 * (22) 6" AGGREGATE BASE (6/12)*(L*(W+(18/12)))/27	304 (5) 10" AGGREGATE BASE (10/12)*AREA/27	304 (27) 6" AGGREGATE BASE WEDGE (8" AVERAGE DEPTH) (8/12)*(L*(W+(10/12)))/27	304 (16) 8" AGGREGATE BASE L*WS*D/27 OR (8/12)*(L*(W+(24/12)))/27 D	304 (22) 6" AGGREGATE BASE (6/12)*(L*(W+(18/12)))/27	407 (12) TACK COAT AREA/9 X 0.075	407 (13) TACK COAT FOR INTERMEDIATE COURSE AREA/9 X 0.050	407 * (13) TACK COAT FOR INTERMEDIATE COURSE AREA/9 X 0.050	408 (4) BITUMINOUS PRIME COAT 0.4*(L*(W+(4/12)))/9 0.4*(L*(W+(12/12)))/9 D			858 (1) 1½" ASPHALT CONCRETE SURFACE COURSE, TYPE A (446) 1.5A/(12X27)	858 * (1) 1½" ASPHALT CONCRETE SURFACE COURSE, TYPE A (446) 1.5A/(12X27)
* NATIONAL HIGHWAY FUNDS ONLY.	FEET	FEET	FEET	SQ.FT.	SQ.FT.	FEET	CU.YD.	CU.YD.	CU.YD.	CU.YD.	CU.YD.	CU.YD.	GAL.	GAL.	GAL.	GAL.			CU.YD.	CU.YD.
I.R. 275 SOUTHBOUND																				
348 + 06.41 TO 362 + 99.88	1493.47	24.00	0.14	35843.28											199.13				165.94	
347 + 87.30 TO 362 + 99.88	1512.58	22.71	0.14		34344.21								286.20	190.80					159.00	
359+78.89 U-TURN	113.00		0.14		889.32		32.10 •								4.94					4.12
362 + 99.88 TO 485 + 10.53	12210.65	24.00	0.14	293055.60			9547.42								1628.09					1356.74
485 + 11.38 TO 517 + 50.00	3238.62	24.00	0.14	77726.88			2532.25								431.82					359.85
374+32.32 U-TURN	113.00		0.14		889.32		32.10 •								4.94					4.12
431+75.58 U-TURN	113.00		0.14		889.32		32.10 •								4.94					4.12
515+27.90 U-TURN	113.00		0.14		889.32		32.10 •								4.94					4.12
362 + 99.88 TO 364 + 69.27	169.39	34.00	0.14	5759.26									47.99	32.00					26.66	
364 + 69.27 TO 372 + 17.33	748.06	24.00	0.14	17953.44									149.61	99.74					83.12	
364 + 69.27 TO 372 + 17.33	748.06	24.30	0.14		18151.61								151.26	100.84					84.04	
372 + 17.33 TO 397 + 00.00	2482.67	34.00	0.14	84410.78									703.42	468.95					390.79	
397 + 00.00 TO 408 + 98.22	1198.22	24.00	0.14	28757.28									239.64	159.76					133.14	
397 + 00.00 TO 408 + 98.22	1198.22	18.43	0.14		22086.33								184.05	122.70					102.25	
408 + 98.22 TO 485 + 10.53	7612.31	34.00	0.14	258818.54									2156.82	1437.88					1198.23	
485 + 11.38 TO 517 + 50.00	3238.62	34.00	0.14	110113.08									917.61	611.74					509.78	
517 + 50.00 TO 518 + 37.50	87.50	38.00	0.14	3325.00										18.47					15.39	
518 + 37.50 TO 519 + 12.50	75.00	38.00	0.14	2850.00	1425.00									15.83					13.19	
I.R. 275 NORTHBOUND																				
280 + 82.56 TO 281 + 57.56	75.00	50.00	0.14	3750.00	1875.00									20.83					17.36	
281 + 57.56 TO 282 + 45.06	87.50	50.00	0.14	4375.00										24.31					20.25	
282 + 45.06 TO 289 + 91.85	746.79	12.00	0.14	8961.48			307.32								49.79					41.49
282 + 45.06 TO 290 + 09.97	764.91	46.00	0.14	35185.86									293.22	195.48					162.90	
289 + 76.85 TO 290 + 01.85	25.00	16.61	0.14	415.25				8.38												
289 + 76.85 TO 290 + 01.85	25.00	56.45	0.14	1411.25								26.83								
291 + 96.47 TO 292 + 21.47	25.00	16.47	0.14	411.75				8.32												
291 + 96.47 TO 292 + 21.47	25.00	56.63	0.14	1415.75								26.91								
292 + 35.92 TO 292 + 55.07	19.15	13.00	0.14	248.95			8.47								1.38					1.15
292 + 55.07 TO 296 + 00.00	344.93	12.00	0.14	4139.16			141.95								23.00					19.16
292 + 45.06 TO 296 + 00.00	354.94	1.89			670.31		35.30 •								3.72					3.10
296 + 71.83 TO 300 + 44.62	372.79	12.00	0.14	4473.48			153.41								24.85					20.71
296 + 71.83 TO 300 + 46.54	374.71	5.77			2161.69		82.14 •								12.01					10.01
292 + 54.51 TO 292 + 93.56	23.50	46.00	0.14		1840.63								15.34	10.23					8.52	
292 + 93.56 TO 296 + 00.00	306.44	46.00	0.14	14096.24									117.47	78.31					65.26	
296 + 71.83 TO 300 + 51.77	379.94	46.00	0.14	17477.24									145.64	97.10					80.91	
300 + 41.46 TO 300 + 66.46	25.00	22.39	0.14	559.75				11.06												
300 + 41.46 TO 300 + 66.46	25.00	48.91	0.14	1222.75								23.34								
303 + 42.29 TO 303 + 67.29	25.00	25.51	0.14	637.75				12.50												
303 + 42.29 TO 303 + 67.29	25.00	48.77	0.14	1219.25								23.27								
303 + 69.59 TO 303 + 91.73	22.14	14.00	0.14		310.01		10.48 •								1.72					1.44
303 + 72.04 TO 304 + 45.06	73.02	11.61	0.14		847.99		29.18 •								4.71					3.93
303 + 91.73 TO 304 + 45.06	53.33	12.00	0.14	639.95			21.95								3.56					2.96
304 + 45.06 TO 326 + 48.29	2203.23	24.00	0.14	52877.52			1722.69								293.76					244.80
303 + 75.46 TO 315 + 00.48	1125.02	24.00	0.14	27000.48									225.00	150.00					125.00	
303 + 80.12 TO 308 + 37.90	457.78	24.28	0.14		11115.29								92.63	61.75					51.46	
308 + 37.90 TO 311 + 09.35	271.45	31.34	0.14		8507.73								70.90	47.27					39.39	
311 + 09.35 TO 312 + 00.34	90.99	2.00	0.14	181.98	91.00					6.37					1.01	9.44				0.84
312 + 00.34 TO 313 + 71.54	171.20	3.50	0.14	599.20						18.32					3.33	29.17				2.77
311 + 09.35 TO 315 + 00.48	391.13	33.82			13229.41								110.25	73.50					61.25	
315 + 00.48 TO 320 + 34.38	533.90	34.00	0.14	18152.60									151.27	100.85					84.04	
320 + 34.38 TO 325 + 36.68	502.30	37.00	0.14	18585.10									154.88	103.25					86.04	
325 + 36.68 TO 326 + 56.63	121.77	65.12	0.14		7814.14								65.12	43.41					36.18	
326 + 42.06 TO 326 + 67.06	25.00	26.78	0.14	669.50				13.09												
TOTALS THIS SHEET							14720.96	53.35		24.69		100.35	6278.32	4265.00	2701.64	38.61			3720.09	2085.43

CALCULATED JGB
CHECKED AM

PAVEMENT CALCULATIONS

CLE-275-5.35

228
857

STATION TO STATION	LENGTH L	AVERAGE WIDTH W *USED 2%	AVERAGE DEPTH D	AREA A A=LxW	AREA CADD OR ADDITIONAL AREA a	ITEM 304 AVERAGE SHOULDER WIDTH WS	304 * (5) 10" AGGREGATE BASE (10/12)*(L*(W+(16/12)))/27	304 * (22) 6" AGGREGATE BASE (6/12)*(L*(W+(18/12)))/27	304 (5) 10" AGGREGATE BASE (10/12)*AREA/27	304 (27) 6" AGGREGATE BASE WEDGE (8" AVERAGE DEPTH) (8/12)*(L*W+(10/12)))/27	304 (16) 8" AGGREGATE BASE L*WS*D/27 OR (8/12)*(L*(W+(24/12)))/27 D	304 (22) 6" AGGREGATE BASE (6/12)*(L*(W+(18/12)))/27	407 (12) TACK COAT AREA/9 X 0.075	407 (13) TACK COAT FOR INTERMEDIATE COURSE AREA/9 X 0.050	407 * (13) TACK COAT FOR INTERMEDIATE COURSE AREA/9 X 0.050	408 (4) BITUMINOUS PRIME COAT 0.4*(L*(W+(4/12)))/9 0.4*(L*(W+(12/12)))/9 D			858 (1) 1½" ASPHALT CONCRETE SURFACE COURSE, TYPE A (446) 1.5A/12X27)	858 * (1) 1½" ASPHALT CONCRETE SURFACE COURSE, TYPE A (446) 1.5A/12X27)
* NATIONAL HIGHWAY FUNDS ONLY.	FEET	FEET	FEET	SQ.FT.	SQ.FT.	FEET	CU.YD.	CU.YD.	CU.YD.	CU.YD.	CU.YD.	CU.YD.	GAL.	GAL.	GAL.	GAL.			CU.YD.	CU.YD.
I.R. 275 NORTHBOUND																				
326 + 42.06 TO 326 + 67.06	25.00	53.78	0.14	1344.50								25.59								
329 + 09.44 TO 329 + 34.44	25.00	26.99	0.14	674.75				13.19												
329 + 09.44 TO 329 + 34.44	25.00	48.60	0.14	1215.00								23.19								
329 + 40.89 TO 345 + 76.96	1636.07	24.00	0.14	39265.68			1279.23								218.14					181.79
329 + 46.11 TO 334 + 37.84	491.73	24.00	0.14	11801.52									98.35	65.56					54.64	
329 + 51.11 TO 334 + 37.84	486.73	19.94	0.14		9705.91								80.88	53.92					44.93	
334 + 37.84 TO 342 + 03.39	765.55	24.00	0.14	18373.20									153.11	102.07					85.06	
342 + 03.39 TO 345 + 87.26	383.87	24.00	0.14	9212.88									76.77	51.18					42.65	
342 + 03.39 TO 346 + 03.50	400.11	30.02	0.14		12010.17								100.08	66.72					55.60	
345 + 59.81 TO 345 + 84.81	25.00	30.05	0.14	751.25				14.61												
345 + 59.81 TO 345 + 84.81	25.00	51.59	0.14	1289.75								24.58								
348 + 27.79 TO 348 + 52.79	25.00	29.91	0.14	747.75				14.54												
348 + 27.79 TO 348 + 52.79	25.00	51.60	0.14	1290.00								24.58								
348 + 69.85 TO 485 + 10.53	13640.68	24.00	0.14	327376.32			10665.55								1818.76					1515.63
485 + 11.38 TO 517 + 50.00	3238.62	24.00	0.14	77726.88			2532.25								431.82					359.85
348 + 83.51 TO 350 + 16.40	132.89	24.00	0.14	3189.36									26.58	17.72					14.77	
348 + 95.36 TO 350 + 16.40	121.04	14.04	0.14		1699.35								14.16	9.44					7.87	
350 + 16.40 TO 363 + 61.87	1345.47	34.00	0.14	45745.98									381.22	254.14					211.79	
363 + 61.87 TO 374 + 70.60	1108.73	20.87	0.14		23146.60								192.89	128.59					107.16	
363 + 61.87 TO 374 + 70.60	1108.73	24.00		26609.52									221.75	147.83					123.19	
374 + 70.60 TO 397 + 28.11	2257.51	34.00	0.14	76755.34									639.63	426.42					355.35	
397 + 28.11 TO 405 + 64.11	836.00	24.00		20064.00									167.20	111.47					92.89	
397 + 28.11 TO 405 + 64.11	851.40	22.49	0.14		19804.14								165.03	110.02					91.69	
405 + 64.11 TO 485 + 10.53	7946.42	34.00	0.14	270178.28									2251.49	1500.99					1250.83	
485 + 11.38 TO 517 + 50.00	3238.62	34.00	0.14	110113.08									917.61	611.74					509.78	
517 + 50.00 TO 518 + 37.50	87.50	38.00	0.14	3325.00										18.47					15.39	
518 + 37.50 TO 519 + 12.50	75.00	38.00	0.14	2850.00	1425.00									15.83					13.19	
RAMP A																				
306 + 18.34 TO 307 + 33.53 - LT	115.19	19.20	0.14		2213.93								18.45	12.30					10.25	
306 + 18.34 TO 307 + 33.53 - RT	115.19	7.25	0.14		835.59								6.96	4.64					3.87	
307 + 33.53 TO 307 + 85.52 - LT	51.99	19.00	0.14	987.81									8.23	5.49					4.57	
307 + 33.53 TO 307 + 85.52 - RT	51.99	4.00		207.96									1.73	1.16					0.96	
307 + 33.53 TO 307 + 85.52 - RT	51.99	2.00	0.14	103.98	55.39					3.64				0.58		5.39			0.48	
307 + 85.52 TO 320 + 52.89 - LT	1267.37	19.00	0.14	24080.33									200.67	133.78					111.48	
320 + 52.89 TO 321 + 55.97 - LT	103.08	19.00	0.14	1958.52									16.32	10.88					9.07	
321 + 55.97 TO 324 + 43.43 - LT	287.46	19.00	0.14	5461.74									45.51	30.34					25.29	
307 + 85.52 TO 307 + 98.78 - RT	13.26	2.50		33.15									0.28	0.18					0.15	
307 + 85.52 TO 307 + 98.78 - RT	13.26	2.50	0.14	33.15						1.09				0.18		1.67			0.15	
307 + 98.78 TO 311 + 90.99 - RT	392.21	3.00	0.14	1176.63						37.12				6.54		58.11			5.45	
311 + 90.99 TO 316 + 31.80 - RT	440.81		0.14		4770.80								39.76	26.50					22.09	
311 + 90.99 TO 315 + 92.55 - RT	401.56	3.00	0.14	1204.68						38.01				6.69		59.49			5.58	
316 + 31.80 TO 323 + 45.19 - RT	713.39	3.00		2140.17									17.83	11.89					9.91	
316 + 31.80 TO 323 + 45.19 - RT	713.39	3.00	0.14	2140.17						67.52				11.89		105.69			9.91	
RAMP B																				
316 + 30.44 TO 316 + 47.94 - LT	17.50	19.00	0.14	332.50										1.85					1.54	
316 + 47.94 TO 316 + 62.94 - LT	15.00	19.00	0.14	285.00	142.50									1.58					1.32	
316 + 30.44 TO 316 + 47.94 - RT	17.50	3.00	0.14	52.50										0.29					0.24	
316 + 47.94 TO 316 + 62.94 - RT	15.00	3.00	0.14	45.00	22.50									0.25					0.21	
RAMP C																				
313 + 57.96 TO 313 + 72.96 - LT	15.00	20.376	0.14	305.64	152.82									0.85					1.42	
313 + 72.96 TO 313 + 90.46 - LT	17.50	19.00	0.14		356.77									1.98					1.65	
313 + 57.96 TO 313 + 72.96 - RT	15.00	4.00	0.14	60.00	30.00									0.17					0.28	
313 + 72.96 TO 313 + 90.46 - RT	17.50	4.00	0.14	70.00										0.39					0.32	
TOTALS THIS SHEET							14477.03	42.34		147.38		97.94	5842.49	3962.51	2468.72	230.35			3302.97	2057.27

CALCULATED JGB
CHECKED AM

PAVEMENT CALCULATIONS

CLE-275-5.35

STATION TO STATION	LENGTH L	AVERAGE WIDTH W *USED %	AVERAGE DEPTH D	AREA A A=LxW	AREA CADD OR ADDITIONAL AREA a	ITEM 304 AVERAGE SHOULDER WIDTH WS	304 * (5) 10" AGGREGATE BASE (10/12)*(L*(W+(16/12)))/27	304 * (22) 6" AGGREGATE BASE (6/12)*(L*(W+(18/12)))/27	304 (5) 10" AGGREGATE BASE (10/12)*AREA/27	304 (27) 6" AGGREGATE BASE WEDGE (8" AVERAGE DEPTH) (8/12)*(L*(W+(10/12)))/27	304 (16) 8" AGGREGATE BASE L*WS*D/27 OR (8/12)*(L*(W+(24/12)))/27 D	304 (22) 6" AGGREGATE BASE (6/12)*(L*(W+(18/12)))/27	407 (12) TACK COAT AREA/9 X 0.075	407 (13) TACK COAT FOR INTERMEDIATE COURSE AREA/9 X 0.050	407 * (13) TACK COAT FOR INTERMEDIATE COURSE AREA/9 X 0.050	408 (4) BITUMINOUS PRIME COAT 0.4*(L*(W+(14/12)))/9 0.4*(L*(W+(12/12)))/9 D			858 (1) 1½" ASPHALT CONCRETE SURFACE COURSE, TYPE A (446) 1.5A/(12X27)	858 * (1) 1½" ASPHALT CONCRETE SURFACE COURSE, TYPE A (446) 1.5A/(12X27)
* NATIONAL HIGHWAY FUNDS ONLY.	FEET	FEET	FEET	SQ.FT.	SQ.FT.	FEET	CU.YD.	CU.YD.	CU.YD.	CU.YD.	CU.YD.	CU.YD.	GAL.	GAL.	GAL.	GAL.			CU.YD.	CU.YD.
RAMP C																				
313 + 90.46 TO 313 + 97.21 - RT	6.75	4.00		27.00									0.23	0.15					0.13	
313 + 36.27 TO 313 + 97.21 - RT	60.94	2.00	0.14	121.88	62.42					4.26				0.68		6.32			0.56	
313 + 90.46 TO 323 + 42.57 - LT	952.11	19.00	0.14	18090.09									150.75	100.50					83.75	
323 + 42.57 TO 324 + 36.46 - LT	93.89	25.58			2402.14								20.02	13.35					11.12	
324 + 36.46 TO 326 + 18.14 - LT	181.68	34.81			6324.72								52.71	35.14					29.28	
313 + 97.21 TO 314 + 48.88 - RT	51.67	3.00		155.01									1.29	0.86					0.72	
313 + 97.21 TO 314 + 48.88 - RT	51.67	3.00	0.14	155.01						4.89				0.86		7.65			0.72	
314 + 48.88 TO 323 + 76.86 - RT	927.98	3.00		2783.94									23.20	15.47					12.89	
314 + 48.88 TO 323 + 76.86 - RT	927.98	3.00	0.14	2783.94						87.83				15.47		137.48			12.89	
323 + 76.86 TO 324 + 26.86 - RT	50.00	4.00		200.00									1.67	1.11					0.93	
323 + 76.86 TO 324 + 26.86 - RT	50.00	4.00	0.14	200.00						5.97				1.11		9.63			0.93	
324 + 26.86 TO 325 + 32.54 - RT	105.68	5.00		528.40									4.40	2.94					2.45	
324 + 26.86 TO 325 + 32.54 - RT	105.68	3.00	0.14	317.04						10.00				1.76		15.66			1.47	
325 + 32.54 TO 326 + 13.82 - RT	81.28	2.24	0.14		181.70								1.51	1.01					0.84	
RAMP G																				
330 + 96.27 TO 331 + 35.15 - LT	38.88	20.12	0.14		782.38								6.52	4.35					3.62	
330 + 96.27 TO 331 + 35.15 - RT	38.88	3.43		133.36									1.11	0.74					0.62	
331 + 35.15 TO 331 + 46.30 - LT	11.15	19.00	0.14	211.85									1.77	1.18					0.98	
331 + 35.15 TO 331 + 46.30 - RT	11.15	4.00		44.60									0.37	0.25					0.21	
330 + 96.27 TO 331 + 46.30 - RT	50.03	2.00	0.14	100.06	43.77					3.50				0.56		5.19			0.46	
331 + 46.30 TO 332 + 09.39 - LT	63.09	19.00	0.14	1198.71									9.99	6.66					5.55	
331 + 46.30 TO 332 + 09.39 - RT	63.09	2.50		157.72									1.31	0.88					0.73	
331 + 46.30 TO 332 + 09.39 - RT	63.09	3.00	0.14	189.27						5.97				1.05		9.35			0.88	
332 + 09.39 TO 344 + 08.90 - LT	1199.51	19.00	0.14	22790.69									189.92	126.61					105.51	
332 + 09.39 TO 344 + 08.90 - RT	1199.51	3.00		3598.53									29.99	19.99					16.66	
332 + 09.39 TO 344 + 08.90 - RT	1199.51	3.00	0.14	3598.53						113.53				19.99		177.71			16.66	
344 + 08.90 TO 344 + 26.40 - LT	17.50	19.00	0.14	332.50										1.85					1.54	
344 + 26.40 TO 344 + 41.40 - LT	15.00	19.00	0.14	285.00	142.50								2.38						1.32	
344 + 08.90 TO 344 + 26.40 - RT	17.50	3.00		52.50										0.29					0.24	
344 + 26.40 TO 344 + 41.40 - RT	15.00	3.00		45.00	22.50								0.38						0.21	
344 + 08.90 TO 344 + 64.92 - RT	56.02	3.00	0.14	168.06	37.18					5.30				0.93		8.30			0.78	
RAMP F																				
341 + 95.81 TO 342 + 10.81 - LT	15.00	19.00		285.00	142.50								2.38						1.32	
342 + 10.81 TO 342 + 28.31 - LT	17.50	19.00	0.14	332.50										1.85					1.54	
341 + 95.81 TO 342 + 10.81 - RT	15.00	7.00	0.14	105.00	52.50								0.88						0.49	
342 + 10.81 TO 342 + 28.31 - RT	17.50	7.00	0.14	122.50										0.68					0.57	
RAMP H																				
323 + 54.85 TO 323 + 96.94 - LT	42.09	2.00	0.14	84.18	42.10					2.94				0.47		4.36			0.39	
323 + 96.94 TO 324 + 39.61 - LT	42.67	2.50	0.14	106.68						3.51				0.59		5.37			0.49	
324 + 39.61 TO 324 + 54.61 - LT	15.00	3.00		45.00	22.50								0.38						0.21	
324 + 39.61 TO 324 + 54.61 - LT	15.00	3.00	0.14	45.00						1.42				0.25		2.22			0.21	
324 + 39.61 TO 324 + 54.61 - RT	15.00	19.00	0.14	285.00	142.50								2.38						1.32	
324 + 54.61 TO 324 + 72.11 - LT	17.50	3.00		52.50										0.29					0.24	
324 + 54.61 TO 324 + 72.11 - LT	17.50	3.00	0.14	52.50						1.66				0.29		2.59			0.24	
324 + 54.61 TO 324 + 72.11 - RT	17.50	19.00	0.14	332.50										1.85					1.54	
324 + 72.11 TO 340 + 76.03 - LT	1603.92	3.00	0.14	4811.76						151.81				26.73		237.62			22.28	
324 + 72.11 TO 340 + 76.03 - LT	1603.92	3.00		4811.76									40.10	26.73					22.28	
324 + 72.11 TO 340 + 76.03 - RT	1603.92	19.00	0.14	30474.48									253.95	169.30					141.09	
340 + 76.03 TO 341 + 04.65 - LT	28.62	2.50	0.14	71.55						2.36				0.40		3.60			0.33	
340 + 76.03 TO 341 + 04.65 - LT	28.62	2.50		71.55									0.60	0.40					0.33	
340 + 76.03 TO 341 + 04.65 - RT	28.62	19.00	0.14	543.78									4.53	3.02					2.52	
341 + 04.65 TO 341 + 45.28 - LT	40.63	2.00	0.14	81.26	40.48					2.84				0.45		4.21			0.38	
341 + 04.65 TO 341 + 45.28 - LT	40.63	2.00		81.26									0.68	0.45					0.38	
TOTALS THIS SHEET										407.79			805.40	609.49		637.26			512.80	

CALCULATED JGB
CHECKED AM

PAVEMENT CALCULATIONS

CLE-275-5.35

230
857

STATION TO STATION	LENGTH L	AVERAGE WIDTH W • USED %	AVERAGE DEPTH D	AREA A A=LxW	AREA CADD OR ADDITIONAL AREA a	ITEM 304 AVERAGE SHOULDER WIDTH WS	304 * (5) 10" AGGREGATE BASE (10/12)*(L*(W+(16/12)))/27	304 * (22) 6" AGGREGATE BASE (6/12)*(L*(W+(18/12)))/27	304 (5) 10" AGGREGATE BASE (10/12)* AREA/27	304 (27) 6" AGGREGATE BASE WEDGE (8" AVERAGE DEPTH) (8/12)*(L*(W+(10/12)))/27	304 (16) 8" AGGREGATE BASE L*WS*D/27 OR (8/12)*(L*(W+(24/12)))/27 D	304 (22) 6" AGGREGATE BASE (6/12)*(L*(W+(18/12)))/27	407 (12) TACK COAT AREA/9 X 0.075	407 (13) TACK COAT FOR INTERMEDIATE COURSE AREA/9 X 0.050	407 * (13) TACK COAT FOR INTERMEDIATE COURSE AREA/9 X 0.050	408 (4) BITUMINOUS PRIME COAT 0.4*(L*(W+(4/12)))/9 0.4*(L*(W+(12/12)))/9 D			858 (1) 1½" ASPHALT CONCRETE SURFACE COURSE, TYPE A (446) 1.5A/(12X27)	858 * (1) 1½" ASPHALT CONCRETE SURFACE COURSE, TYPE A (446) 1.5A/(12X27)
* NATIONAL HIGHWAY FUNDS ONLY.	FEET	FEET	FEET	SQ.FT.	SQ.FT.	FEET	CU.YD.	CU.YD.	CU.YD.	CU.YD.	CU.YD.	CU.YD.	GAL.	GAL.	GAL.	GAL.			CU.YD.	CU.YD.
RAMP H																				
341 + 04.65 TO 341 + 45.28 - RT	40.63	19.00	0.14	771.97									6.43	4.29					3.57	
341 + 45.28 TO 342 + 08.08 - LT	62.80	7.00	0.14	439.60									3.66	2.44					2.04	
341 + 45.28 TO 342 + 08.08 - RT	62.80	19.00	0.14	1193.20									9.94	6.63					5.52	
RAMP E																				
125 + 17.83 TO 125 + 32.83 - LT	15.00	7.00	0.14	105.00	52.50								0.88						0.49	
125 + 17.83 TO 125 + 32.83 - RT	15.00	19.00	0.14	285.00	142.50								2.38						1.32	
125 + 32.83 TO 125 + 50.33 - LT	17.50	7.00	0.14	122.50										0.68					0.57	
125 + 32.83 TO 125 + 50.33 - RT	17.50	19.00	0.14	332.50										1.85					1.54	
RAMP D																				
313 + 71.54 TO 314 + 21.54 - LT	50.00	4.00	0.14	200.00						5.97				1.11		9.63				0.93
314 + 21.54 TO 314 + 96.08 - LT	74.54	3.00	0.14	223.62						7.06				1.24		11.04				1.04
314 + 96.08 TO 327 + 32.20 - LT	1236.12	3.00	0.14	3708.36						117.00				20.60		183.13				17.17
314 + 96.08 TO 327 + 32.20 - LT	1236.12	3.00		3708.36									30.90	20.60					17.17	
314 + 96.08 TO 321 + 89.54 - RT	693.46	19.00	0.14	13175.74									109.80	73.20					61.00	
321 + 89.54 TO 325 + 27.08 - RT	337.54	26.43	0.14		8921.54								74.35	49.56					41.30	
325 + 27.08 TO 327 + 32.20 - RT	205.12	29.73			6097.66								50.81	33.88						
327 + 32.20 TO 327 + 47.20 - LT	15.00	3.00	0.14	45.00						1.42				0.25		2.22				0.21
327 + 32.20 TO 327 + 47.20 - LT	15.00	3.00		45.00										0.25					0.21	
327 + 32.20 TO 327 + 47.20 - RT	15.00	34.50		517.50										2.88					2.40	
327 + 47.20 TO 327 + 59.70 - LT	12.50	3.00	0.14	37.50						1.18				0.21		1.85				0.17
327 + 47.20 TO 327 + 59.70 - LT	12.50	3.00		37.50	18.75								0.31						0.17	
327 + 47.20 TO 327 + 59.70 - RT	12.50	34.84		435.50	217.75								3.63						2.02	
327 + 59.70 TO 328 + 48.23 - LT	88.53	3.00	0.14	265.59						8.38				1.48		13.12				1.23
327 + 59.70 TO 328 + 48.23 - LT	88.53	3.00		265.59									2.21	1.48						
327 + 59.70 TO 328 + 22.03 - RT	62.33	16.00		997.28									8.31	5.54						
328 + 22.03 TO 328 + 48.23 - RT	26.20	19.00	0.14	497.80									4.15	2.77						
328 + 48.23 TO 328 + 60.73 - LT	12.50	3.00	0.14	37.50						1.18				0.21		1.85				0.17
328 + 48.23 TO 328 + 60.73 - LT	12.50	3.00		37.50	18.75								0.31							
328 + 60.73 TO 328 + 75.73 - RT	15.00	19.00	0.14	285.00	142.50									1.58						
328 + 75.73 TO 332 + 11.99 - LT	336.26	3.00	0.14	1008.78						31.83				5.60		49.82				4.67
328 + 75.73 TO 332 + 11.99 - LT	336.26	3.00		1008.78									8.41	5.60					4.67	
328 + 75.73 TO 332 + 11.99 - RT	336.26	34.50	0.14	11600.97									96.67	64.45					53.71	
332 + 11.99 TO 332 + 32.33 - LT	20.34	2.50	0.14	50.85						1.67				0.28		2.56				0.24
332 + 11.99 TO 332 + 32.33 - LT	20.34	3.50		71.19									0.59	0.40					0.33	
332 + 11.99 TO 332 + 32.33 - RT	20.34	19.00	0.14	386.46									3.22	2.15					1.79	
332 + 70.81 TO 332 + 83.87 - LT	13.06		0.14		79.99								0.67	0.44					0.37	
332 + 66.37 TO 332 + 83.87 - RT	17.50	19.00	0.14	332.50										1.85					1.54	
332 + 83.87 TO 332 + 98.87 - LT	15.00	6.00	0.14	90.00	45.00								0.75						0.42	
332 + 83.87 TO 332 + 98.87 - RT	15.00	19.00	0.14	285.00	142.50								2.38						1.32	
T.R. 211																				
45 + 40.00 TO 46 + 39.45 - LT&RT	99.45	23.56		2343.04							62.76 D			13.02		108.56 D				
45 + 40.00 TO 46 + 39.45 - LT&RT	99.45		0.271			2.00					2.00									
45 + 40.00 TO 46 + 39.45 - LT&RT	99.45		0.25			1.50					1.38									
45 + 40.00 TO 46 + 39.45 - LT&RT	99.45		0.146			1.00					0.54									
46 + 39.45 TO 48 + 11.74 - LT&RT	172.29	24.00		4134.96							110.61 D			22.97		191.43 D				
46 + 39.45 TO 48 + 11.74 - LT&RT	172.29		0.271			4.00					6.91									
46 + 39.45 TO 48 + 11.74 - LT&RT	172.29		0.25			3.50					5.58									
46 + 39.45 TO 48 + 11.74 - LT&RT	172.29		0.146			3.00					2.79									
48 + 11.74 TO 48 + 36.74 - LT&RT	25.00	37.39		934.75																
48 + 11.74 TO 48 + 36.74 - LT&RT	25.00	40.39		1009.75								19.39								
51 + 87.39 TO 52 + 12.39 - LT&RT	25.00	37.39		934.75																
51 + 87.39 TO 52 + 12.39 - LT&RT	25.00	40.39		1009.75								19.39								
52 + 12.39 TO 53 + 75.92 - LT&RT	163.53	24.00		3924.72							104.98 D			21.80		181.70 D				
TOTALS THIS SHEET										175.69	297.55	38.78	420.76	371.29		756.91			203.47	25.83

CALCULATED JGB
CHECKED AM

PAVEMENT CALCULATIONS

CLE-275-5.35

231
857

STATION TO STATION	LENGTH L	AVERAGE WIDTH W *USED %	AVERAGE DEPTH D	AREA A A=LxW	AREA CADD OR ADDITIONAL AREA a	ITEM 304 AVERAGE SHOULDER WIDTH WS	304 * (5) 10" AGGREGATE BASE (10/12)*(L*(W+(16/12)))/27	304 * (22) 6" AGGREGATE BASE (6/12)*(L*(W+(18/12)))/27	304 (5) 10" AGGREGATE BASE (10/12)* AREA/27	304 (27) 6" AGGREGATE BASE WEDGE (8" AVERAGE DEPTH) (8/12)*(L*(W+(10/12)))/27	304 (16) 8" AGGREGATE BASE L*WS*D/27 OR (8/12)*(L*(W+(24/12)))/27 D	304 (22) 6" AGGREGATE BASE (6/12)*(L*(W+(18/12)))/27	407 (12) TACK COAT AREA /9 X 0.075	407 (13) TACK COAT FOR INTERMEDIATE COURSE AREA/9 X 0.050	407 * (13) TACK COAT FOR INTERMEDIATE COURSE AREA/9 X 0.050	408 (4) BITUMINOUS PRIME COAT 0.4*(L*(W+(4/12)))/9 0.4*(L*(W+(12/12)))/9 D			858 (1) 1½" ASPHALT CONCRETE SURFACE COURSE, TYPE A (446) 1.5A/12X27)	858 * (1) 1½" ASPHALT CONCRETE SURFACE COURSE, TYPE A (446) 1.5A/12X27)
* NATIONAL HIGHWAY FUNDS ONLY.	FEET	FEET	FEET	SQ.FT.	SQ.FT.	FEET	CU.YD.	CU.YD.	CU.YD.	CU.YD.	CU.YD.	CU.YD.	GAL.	GAL.	GAL.	GAL.			CU.YD.	CU.YD.
T.R. 211																				
52 + 12.39 TO 53 + 75.92 - LT&RT	163.53		0.2708			4.00					6.56									
52 + 12.39 TO 53 + 75.92 - LT&RT	163.53		0.25			3.50					5.30									
52 + 12.39 TO 53 + 75.92 - LT&RT	163.53		0.146			3.00					2.65									
53 + 75.92 TO 54 + 68.00 - LT&RT	92.08	20.36	0.27	1874.75							50.84 D			10.42		87.41 D				
53 + 75.92 TO 54 + 68.00 - LT&RT	92.08		0.271			2.00					1.85									
53 + 75.92 TO 54 + 68.00 - LT&RT	92.08		0.25			1.50					1.28									
53 + 75.92 TO 54 + 68.00 - LT&RT	92.08		0.146			1.00					0.50									
TOTALS THIS SHEET											68.98			10.42		87.41				
TOTALS FROM SHEET NO. 227							3604.52	75.66	624.61	76.31		283.61	2479.53	1820.59	394.45	118.61			1506.11	504.18
TOTALS FROM SHEET NO. 228							14720.96	53.35		24.69		100.35	6278.32	4265.00	2701.64	38.61			3720.09	2085.43
TOTALS FROM SHEET NO. 229							14477.03	42.34		147.38		97.94	5842.49	3962.51	2468.72	230.35			3302.97	2057.27
TOTALS FROM SHEET NO. 230										407.79			805.40	609.49		637.26			512.80	
TOTALS FROM SHEET NO. 231										175.69	297.55	38.78	420.76	371.29		756.91			203.47	25.83
TOTALS							32802.51	171.35	624.61	831.86	366.53	520.68	15826.50	11039.30	5564.81	1869.15			9245.44	4672.71
GRAND TOTALS							32973.86		2343.68				15826.50	16604.11		1869.15			13918.15	
ALLOCATED TOTALS CARRIED TO GENERAL SUMMARY							32974		2344					11039	5565				9245	4673
GRAND TOTALS CARRIED TO GENERAL SUMMARY							35318						15827	16604		1869			13918	

CALCULATED JGB
CHECKED AM

PAVEMENT CALCULATIONS

CLE-275-5.35

232
857

STATION TO STATION	LENGTH L	AVERAGE WIDTH W	AVERAGE DEPTH D	AREA A A=LxW	AREA CADD OR ADDITIONAL AREA a	ITEM 304 AVERAGE SHOULDER WIDTH WS	858 (2) 1¾" ASPHALT CONCRETE INTERMEDIATE COURSE, TYPE A (446) .75 X AREA/(12X27)	858 * (2) 1¾" ASPHALT CONCRETE INTERMEDIATE COURSE, TYPE A (446) .75 X AREA/(12X27)	611 (21) REINFORCED CONCRETE APPROACH SLAB (T=15") A/9	611 * (21) REINFORCED CONCRETE APPROACH SLAB (T=15") A/9	617 (7) SHOULDER PREPARATION L X 5 / 9	617 * (7) SHOULDER PREPARATION L X 5 / 9	617 (8) COMPACTED AGGREGATE 5 X L X D / 27	617 * (8) COMPACTED AGGREGATE 5 X L X D / 27	617 (9) WATER (5 X L / 1000) X 120 (120 GAL. / 1000 SQ.FT.	617 * (9) WATER (5 X L / 1000) X 120 (120 GAL. / 1000 SQ.FT.	618 RUMBLE STRIPS, TYPE 2	618 * RUMBLE STRIPS, TYPE 2	830 CURB, TYPE 6	830 * CURB, TYPE 6
* NATIONAL HIGHWAY FUNDS ONLY.	FEET	FEET	FEET	SQ.FT.	SQ.FT.	FEET	CU.YD.	CU.YD.	SQ.YD.	SQ.YD.	SQ.YD.	SQ.YD.	CU.YD.	CU.YD.	M GAL.	M GAL.	FEET	FEET	FEET	FEET
I.R. 275 SOUTHBOUND																				
280 + 82.56 TO 281 + 57.56	75.00	50.00	0.14	3750.00	1875.00						41.67		1.94		0.05					
281 + 57.56 TO 282 + 45.06	87.50	50.00	0.14	4375.00			23.63				48.61		2.27		0.05					
282 + 45.06 TO 289 + 61.86	716.80	12.00	0.14	8601.60				46.46				398.22		18.58		0.43		666.80		
282 + 45.06 TO 289 + 43.74	698.68	46.00	0.14	32139.28			173.59				388.16		18.11		0.42		648.68			
289 + 76.85 TO 290 + 01.85	25.00	16.43	0.14	410.75						45.64		13.89		0.65		0.02				
289 + 76.85 TO 290 + 01.85	25.00	56.68	0.14	1417.00					157.44		13.89		0.65		0.02					
291 + 96.47 TO 292 + 21.47	25.00	16.45	0.14	411.25						45.69		13.89		0.65		0.02				
291 + 96.47 TO 292 + 21.47	25.00	56.63	0.14	1415.75					157.31		13.89		0.65		0.02					
292 + 07.06 TO 293 + 74.95	167.89	13.00	0.14	2182.57				11.79				93.27		4.35		0.10		167.89		15.33
293 + 74.95 TO 296 + 00.00	225.05	12.00	0.14	2700.60				14.59				125.03		5.83		0.14		225.05		
296 + 71.83 TO 300 + 36.80	364.97	12.00	0.14	4379.64				23.66				202.76		9.46		0.22		314.97		
291 + 87.73 TO 293 + 36.22	148.49	47.00	0.14	6979.03			37.70				82.49		3.85		0.09		148.49		15.33	
293 + 36.22 TO 296 + 00.00	263.78	46.00	0.14	12133.98			65.54				146.54		6.84		0.16		263.78			
296 + 71.83 TO 300 + 30.64	358.81	48.69	0.14	17470.46			94.36				199.34		9.30		0.22		358.81			
300 + 41.46 TO 300 + 66.46	25.00	14.29	0.14	357.25						39.69		13.89		0.65		0.02				
300 + 41.46 TO 300 + 66.46	25.00	55.23	0.14	1380.75					153.42		13.89		0.65		0.02					
303 + 42.29 TO 303 + 67.29	25.00	14.29	0.14	357.25						39.69		13.89		0.65		0.02				
303 + 42.29 TO 303 + 67.29	25.00	67.45	0.14	1686.25					187.36		13.89		0.65		0.02					
303 + 62.82 TO 303 + 87.68	24.86	14.00	0.14	348.04				1.88				13.81		0.64		0.01		24.86		15.33
303 + 87.68 TO 305 + 27.72	140.04	13.00	0.14	1820.52				9.83				77.80		3.63		0.08		140.04		
305 + 27.72 TO 326 + 15.23	2087.51	12.00	0.14	25050.12				135.30				1159.73		54.12		1.25		2087.51		
326 + 15.23 TO 326 + 37.27	22.04	14.65	0.14	322.886				1.74				12.24		0.57		0.01		22.04		15.33
303 + 48.36 TO 306 + 17.75	269.39	73.80	0.14		19884.13		107.40				149.66		6.98		0.16		169.39		15.33	
306 + 17.75 TO 316 + 89.83	1072.08	46.00	0.14	49315.68			266.37				595.60		27.79		0.64		1172.08			
316 + 89.83 TO 321 + 49.80	459.97	46.00	0.14	21158.62			114.28				255.54		11.93		0.28		459.97			
321 + 49.80 TO 326 + 31.02	481.22	46.00	0.14	22136.12			119.56										481.22			
321 + 49.80 TO 326 + 25.12	475.32	12.42			5903.39		31.89													
326 + 42.06 TO 326 + 67.06	25.00	14.31	0.14	357.75						39.75		13.89		0.65		0.02				
326 + 42.06 TO 326 + 67.06	25.00	98.63	0.14	2465.75					273.97		13.89		0.65		0.02					
329 + 09.44 TO 329 + 34.44	25.00	14.31	0.14	357.75						39.75		13.89		0.65		0.02				
329 + 09.44 TO 329 + 34.44	25.00	99.38	0.14	2484.50					276.06		13.89		0.65		0.02					
329 + 29.29 TO 345 + 36.92	1607.63	12.00	0.14	19291.56				104.20				893.13		41.68		0.96		1607.63		
345 + 36.92 TO 345 + 55.85	18.93	14.44	0.14		273.44			1.48				10.52		0.49		0.01		18.93		15.33
329 + 23.08 TO 337 + 10.00	786.92	46.00		36198.32			195.52										786.92			
337 + 10.00 TO 345 + 55.85	845.85	7.13			6029.90			32.57												
337 + 10.00 TO 342 + 28.96	518.96	40.97	0.14		21263.29		114.85				288.31		13.45		0.31		518.96			
329 + 16.99 TO 342 + 28.96	1311.97	10.48			13747.70		74.25													
342 + 28.96 TO 345 + 23.31	294.35	79.96	0.14		24122.15		130.29				163.53		7.63		0.18				15.33	
342 + 28.96 TO 345 + 23.31	294.35	2.00	0.14		586.54															
329 + 16.99 TO 330 + 98.20	181.21	54.02	0.14		9788.41		52.87				100.67		4.70		0.11		81.21			
330 + 98.20 TO 331 + 72.12	73.92	32.15	0.14	2376.53			12.84				41.07		1.92		0.04		173.92			
331 + 72.12 TO 333 + 16.82	144.70	28.34		4100.80	169.36		22.15													
331 + 72.12 TO 333 + 16.82	144.70	2.00	0.14	289.40				1.56				80.39		3.75		0.09	144.70			
333 + 16.82 TO 335 + 78.53	261.71	19.00		4972.49			26.86													
333 + 16.82 TO 335 + 78.53	261.71	3.00	0.14	785.13				4.24				145.39		6.79		0.16	261.71			
335 + 78.53 TO 340 + 16.13	437.60	19.00		8314.40			44.91													
335 + 78.53 TO 340 + 16.13	437.60	3.00	0.14	1312.80				7.09				243.11		11.35		0.26	437.60			
340 + 16.13 TO 342 + 28.96	212.83	24.39			5190.22		28.03													
345 + 69.22 TO 345 + 94.22	25.00	30.16	0.14	754.00						83.78		13.89		0.65		0.02				
345 + 69.22 TO 345 + 94.22	25.00	88.37	0.14	2209.25					245.47		13.89		0.65		0.02					
348 + 12.00 TO 348 + 37.00	25.00	31.17	0.14	779.25						86.58		13.89		0.65		0.02				
348 + 12.00 TO 348 + 37.00	25.00	78.23	0.14	1955.75					217.31		13.89		0.65		0.02					
348 + 20.01 TO 362 + 99.88	1479.87	24.00	0.14	35516.98				191.83				822.15		38.37		0.89		1479.87		
TOTALS THIS SHEET							1736.89	588.22	1668.34	420.57	2612.31	4388.67	121.91	204.81	2.87	4.77	6107.44	6755.59	45.99	61.32

CALCULATED JGB
CHECKED AM

PAVEMENT CALCULATIONS

CLE-275-5.35

233
857

STATION TO STATION	LENGTH L	AVERAGE WIDTH W	AVERAGE DEPTH D	AREA A A=LxW	AREA CADD OR ADDITIONAL AREA a	ITEM 304 AVERAGE SHOULDER WIDTH WS	858 (2) 1¾" ASPHALT CONCRETE INTERMEDIATE COURSE, TYPE A (446) 1.25xAREA/(12x27)	858 * (2) 1¾" ASPHALT CONCRETE INTERMEDIATE COURSE, TYPE A (446) 1.75xAREA/(12x27)	611 (21) REINFORCED CONCRETE APPROACH SLAB (T=15") A/9	611 * (21) REINFORCED CONCRETE APPROACH SLAB (T=15") A/9	617 (7) SHOULDER PREPARATION L x 5 / 9	617 * (7) SHOULDER PREPARATION L x 5 / 9	617 (8) COMPACTED AGGREGATE 5 x L x D / 27	617 * (8) COMPACTED AGGREGATE 5 x L x D / 27	617 (9) WATER (5 x L / 1000) x 120 (120 GAL. / 1000 SQ.FT.	617 * (9) WATER (5 x L / 1000) x 120 (120 GAL. / 1000 SQ.FT.	618 RUMBLE STRIPS, TYPE 2	618 * RUMBLE STRIPS, TYPE 2	830 CURB, TYPE 6	830 * CURB, TYPE 6
* NATIONAL HIGHWAY FUNDS ONLY.	FEET	FEET	FEET	SQ.FT.	SQ.FT.	FEET	CU.YD.	CU.YD.	SQ.YD.	SQ.YD.	SQ.YD.	SQ.YD.	CU.YD.	CU.YD.	M GAL.	M GAL.	FEET	FEET	FEET	FEET
I.R. 275 SOUTHBOUND																				
348 + 06.41 TO 362 + 99.88	1493.47	24.00	0.14	35843.28			193.60										412.00			
347 + 87.30 TO 362 + 99.88	1512.58	22.71	0.14		34344.21		185.50				840.32		39.22		0.91		1076.58			
359+78.89 U-TURN	113.00		0.14		889.32			4.80				62.78		2.93		0.07				
362 + 99.88 TO 485 + 10.53	12210.65	24.00	0.14	293055.60				1582.86				6783.69		316.57		7.33		12210.65		
485 + 11.38 TO 517 + 50.00	3238.62	24.00	0.14	77726.88				419.82				1799.23		83.96		1.94		3238.62		
374+32.32 U-TURN	113.00		0.14		889.32			4.80				62.78		2.93		0.07				
431+75.58 U-TURN	113.00		0.14		889.32			4.80				62.78		2.93		0.07				
515+27.90 U-TURN	113.00		0.14		889.32			4.80				62.78		2.93		0.07				
362 + 99.88 TO 364 + 69.27	169.39	34.00	0.14	5759.26			31.11				94.11		4.39		0.10		169.39			
364 + 69.27 TO 372 + 17.33	748.06	24.00	0.14	17953.44			96.97													
364 + 69.27 TO 372 + 17.33	748.06	24.30	0.14		18151.61		98.04				415.59		19.39		0.45		748.06			
372 + 17.33 TO 397 + 00.00	2482.67	34.00	0.14	84410.78			455.92				1379.26		64.37		1.49		2482.67			
397 + 00.00 TO 408 + 98.22	1198.22	24.00	0.14	28757.28			155.32													
397 + 00.00 TO 408 + 98.22	1198.22	18.43	0.14		22086.33		119.29				665.68		31.06		0.72		1198.22			
408 + 98.22 TO 485 + 10.53	7612.31	34.00	0.14	258818.54			1397.94				4229.06		197.36		4.57		7612.31			
485 + 11.38 TO 517 + 50.00	3238.62	34.00	0.14	110113.08			594.75				1799.23		83.96		1.94		3238.62			
517 + 50.00 TO 518 + 37.50	87.50	38.00	0.14	3325.00			17.96				48.61		2.27		0.05					
518 + 37.50 TO 519 + 12.50	75.00	38.00	0.14	2850.00	1425.00						41.67		1.94		0.05					
I.R. 275 NORTHBOUND																				
280 + 82.56 TO 281 + 57.56	75.00	50.00	0.14	3750.00	1875.00						41.67		1.94		0.05					
281 + 57.56 TO 282 + 45.06	87.50	50.00	0.14	4375.00			23.63				48.61		2.27		0.05					
282 + 45.06 TO 289 + 91.85	746.79	12.00	0.14	8961.48				48.40				414.88		19.36		0.45		746.79		
282 + 45.06 TO 290 + 09.97	764.91	46.00	0.14	35185.86			190.05				424.95		19.83		0.46		764.91			
289 + 76.85 TO 290 + 01.85	25.00	16.61	0.14	415.25						46.14		13.89		0.65		0.02				
289 + 76.85 TO 290 + 01.85	25.00	56.45	0.14	1411.25					156.81		13.89		0.65		0.02					
291 + 96.47 TO 292 + 21.47	25.00	16.47	0.14	411.75						45.75		13.89		0.65		0.02				
291 + 96.47 TO 292 + 21.47	25.00	56.63	0.14	1415.75					157.31		13.89		0.65		0.02					
292 + 35.92 TO 292 + 55.07	19.15	13.00	0.14	248.95				1.34				10.64		0.50		0.01		19.15		15.33
292 + 55.07 TO 296 + 00.00	344.93	12.00	0.14	4139.16				22.36				191.63		8.94		0.21		344.93		
292 + 45.06 TO 296 + 00.00	354.94	1.89			670.31			3.62												
296 + 71.83 TO 300 + 44.62	372.79	12.00	0.14	4473.48				24.16				207.11		9.66		0.22		372.79		
296 + 71.83 TO 300 + 46.54	374.71	5.77			2161.69			11.68												
292 + 54.51 TO 292 + 93.56	23.50	46.00	0.14		1840.63		9.94				13.06		0.61		0.01		23.50		15.33	
292 + 93.56 TO 296 + 00.00	306.44	46.00	0.14	14096.24			76.14				170.24		7.94		0.18		306.44			
296 + 71.83 TO 300 + 51.77	379.94	46.00	0.14	17477.24			94.40				211.08		9.85		0.23		379.94			
300 + 41.46 TO 300 + 66.46	25.00	22.39	0.14	559.75						62.19		13.89		0.65		0.02				
300 + 41.46 TO 300 + 66.46	25.00	48.91	0.14	1222.75					135.86		13.89		0.65		0.02					
303 + 42.29 TO 303 + 67.29	25.00	25.51	0.14	637.75						70.86		13.89		0.65		0.02				
303 + 42.29 TO 303 + 67.29	25.00	48.77	0.14	1219.25					135.47		13.89		0.65		0.02					
303 + 69.59 TO 303 + 91.73	22.14	14.00	0.14		310.01			1.67				12.30		0.57		0.01		22.14		15.33
303 + 72.04 TO 304 + 45.06	73.02	11.61	0.14		847.99			4.58												
303 + 91.73 TO 304 + 45.06	53.33	12.00	0.14	639.96				3.46				29.63		1.38		0.03		53.33		
304 + 45.06 TO 326 + 48.29	2203.23	24.00	0.14	52877.52				285.60				1224.02		57.12		1.32		2203.23		15.33
303 + 75.46 TO 315 + 00.48	1125.02	24.00	0.14	27000.48			145.84										562.58			
303 + 80.12 TO 308 + 37.90	457.78	24.28	0.14		11115.29		60.04				254.32		11.87		0.27		357.78		15.33	
308 + 37.90 TO 311 + 09.35	271.45	31.34	0.14		8507.73		45.95				150.81		7.04		0.16					
311 + 09.35 TO 312 + 00.34	90.99	2.00	0.14	181.98	91.00			0.98				50.55		2.36		0.05				
312 + 00.34 TO 313 + 71.54	171.20	3.50	0.14	599.20				3.24				95.11		4.44		0.10				
311 + 09.35 TO 315 + 00.48	391.13	33.82			13229.41		71.46													
315 + 00.48 TO 320 + 34.38	533.90	34.00	0.14	18152.60			98.05				296.61		13.84		0.32		533.90			
320 + 34.38 TO 325 + 36.68	502.30	37.00	0.14	18585.10			100.38				279.06		13.02		0.30		602.30			
325 + 36.68 TO 326 + 56.63	121.77	65.12	0.14		7814.14		42.21				67.65		3.16		0.07		21.77		15.33	
326 + 42.06 TO 326 + 67.06	25.00	26.78	0.14	669.50						74.39		13.89		0.65		0.02				
TOTALS THIS SHEET							4304.49	2432.97	585.45	299.33	11527.15	11139.36	537.93	519.83	12.46	12.05	20490.97	19211.63	45.99	45.99

CALCULATED JGB
CHECKED AM

PAVEMENT CALCULATIONS

CLE-275-5.35

STATION TO STATION	LENGTH L	AVERAGE WIDTH W	AVERAGE DEPTH D	AREA		ITEM 304 AVERAGE SHOULDER WIDTH WS	858	858 *	611	611 *	617	617 *	617	617 *	617	617 *	618	618 *	830	830 *
				AREA A A=LxW	CADD OR ADDITIONAL AREA a		(2) 3/4" ASPHALT CONCRETE INTERMEDIATE COURSE, TYPE A (446) 1.25 X AREA/(12X27)	(2) 3/4" ASPHALT CONCRETE INTERMEDIATE COURSE, TYPE A (446) 1.75 X AREA/(12X27)	(21) REINFORCED CONCRETE APPROACH SLAB (T=15") A/9	(21) REINFORCED CONCRETE APPROACH SLAB (T=15") A/9	(7) SHOULDER PREPARATION L X 5 / 9	(7) SHOULDER PREPARATION L X 5 / 9	(8) COMPACTED AGGREGATE 5 X L X D / 27	(8) COMPACTED AGGREGATE 5 X L X D / 27	(9) WATER (5 X L / 1000) X 120 (120 GAL. / 1000 SQ.FT.	(9) WATER (5 X L / 1000) X 120 (120 GAL. / 1000 SQ.FT.	RUMBLE STRIPS, TYPE 2	RUMBLE STRIPS, TYPE 2	CURB, TYPE 6	CURB, TYPE 6
* NATIONAL HIGHWAY FUNDS ONLY.	FEET	FEET	FEET	SQ.FT.	SQ.FT.	FEET	CU.YD.	CU.YD.	SQ.YD.	SQ.YD.	SQ.YD.	SQ.YD.	CU.YD.	CU.YD.	M GAL.	M GAL.	FEET	FEET	FEET	FEET
I.R. 275 NORTHBOUND																				
326 + 42.06 TO 326 + 67.06	25.00	53.78	0.14	1344.50					149.39		13.89		0.65		0.02					
329 + 09.44 TO 329 + 34.44	25.00	26.99	0.14	674.75						74.97		13.89		0.65		0.02				
329 + 09.44 TO 329 + 34.44	25.00	48.60	0.14	1215.00					135.00		13.89		0.65		0.02					
329 + 40.89 TO 345 + 76.96	1636.07	24.00	0.14	39265.68				212.08				908.93		42.42		0.98		1636.07		15.33
329 + 46.11 TO 334 + 37.84	491.73	24.00	0.14	11801.52			63.74													
329 + 51.11 TO 334 + 37.84	486.73	19.94	0.14		9705.91		52.42				270.41		12.62		0.29		486.73			
334 + 37.84 TO 342 + 03.39	765.55	24.00	0.14	18373.20			99.24				425.31		19.85		0.46		865.55			
342 + 03.39 TO 345 + 87.26	383.87	24.00	0.14	9212.88			49.76													
342 + 03.39 TO 346 + 03.50	400.11	30.02	0.14		12010.17		64.87				222.28		10.37		0.24		300.11		15.33	
345 + 59.81 TO 345 + 84.81	25.00	30.05	0.14	751.25						83.47		13.89		0.65		0.02				
345 + 59.81 TO 345 + 84.81	25.00	51.59	0.14	1289.75					143.31		13.89		0.65		0.02					
348 + 27.79 TO 348 + 52.79	25.00	29.91	0.14	747.75						83.08		13.89		0.65		0.02				
348 + 27.79 TO 348 + 52.79	25.00	51.60	0.14	1290.00					143.33		13.89		0.65		0.02					
348 + 69.85 TO 485 + 10.53	13640.68	24.00	0.14	327376.32				1768.24				7578.16		353.65		8.18		13640.68		
485 + 11.38 TO 517 + 50.00	3238.62	24.00	0.14	77726.88				419.82				1799.23		83.96		1.94		3238.62		
348 + 83.51 TO 350 + 16.40	132.89	24.00	0.14	3189.36			17.23													
348 + 95.36 TO 350 + 16.40	121.04	14.04	0.14		1699.35		9.18				67.24		3.14		0.07		121.04			
350 + 16.40 TO 363 + 61.87	1345.47	34.00	0.14	45745.98			247.08				747.48		34.88		0.81		1345.47			
363 + 61.87 TO 374 + 70.60	1108.73	20.87	0.14		23146.60		125.02				615.96		28.74		0.67		1108.73			
363 + 61.87 TO 374 + 70.60	1108.73	24.00		26609.52			143.72													
374 + 70.60 TO 397 + 28.11	2257.51	34.00	0.14	76755.34			414.57				1254.17		58.53		1.35		2257.51			
397 + 28.11 TO 405 + 64.11	836.00	24.00		20064.00			108.37													
397 + 28.11 TO 405 + 64.11	851.40	22.49	0.14		19804.14		106.97				473.00		22.07		0.51		851.40			
405 + 64.11 TO 485 + 10.53	7946.42	34.00	0.14	270178.28			1459.30				4414.68		206.02		4.77		7946.42			
485 + 11.38 TO 517 + 50.00	3238.62	34.00	0.14	110113.08			594.75				1799.23		83.96		1.94		3238.62			
517 + 50.00 TO 518 + 37.50	87.50	38.00	0.14	3325.00			17.96				48.61		2.27		0.05					
518 + 37.50 TO 519 + 12.50	75.00	38.00	0.14	2850.00	1425.00						41.67		1.94		0.05					
RAMP A																				
306 + 18.34 TO 307 + 33.53 - LT	115.19	19.20	0.14		2213.93		11.96				63.99		2.99		0.07					
306 + 18.34 TO 307 + 33.53 - RT	115.19	7.25	0.14		835.59		4.51				63.99		2.99		0.07					
307 + 33.53 TO 307 + 85.52 - LT	51.99	19.00	0.14	987.81			5.34				28.88		1.35		0.03					
307 + 33.53 TO 307 + 85.52 - RT	51.99	4.00		207.96			1.12													
307 + 33.53 TO 307 + 85.52 - RT	51.99	2.00	0.14	103.98	55.39		0.56				28.88		1.35		0.03					
307 + 85.52 TO 320 + 52.89 - LT	1267.37	19.00	0.14	24080.03			130.06				704.09		32.86		0.76					
320 + 52.89 TO 321 + 55.97 - LT	103.08	19.00	0.14	1958.52			10.58				57.27		2.67		0.06					
321 + 55.97 TO 324 + 43.43 - LT	287.46	19.00	0.14	5461.74			29.50													
307 + 85.52 TO 307 + 98.78 - RT	13.26	2.50		33.15			0.18													
307 + 85.52 TO 307 + 98.78 - RT	13.26	2.50	0.14	33.15			0.18				7.37		0.34		0.01					
307 + 98.78 TO 311 + 90.99 - RT	392.21	3.00	0.14	1176.63			6.36				217.89		10.17		0.24					
311 + 90.99 TO 316 + 31.80 - RT	440.81		0.14		4770.80		25.77				244.89		11.43		0.26					
311 + 90.99 TO 315 + 92.55 - RT	401.56	3.00	0.14	1204.68			6.51													
316 + 31.80 TO 323 + 45.19 - RT	713.39	3.00		2140.17			11.56													
316 + 31.80 TO 323 + 45.19 - RT	713.39	3.00	0.14	2140.17			11.56				396.33		18.50		0.43					
RAMP B																				
316 + 30.44 TO 316 + 47.94 - LT	17.50	19.00	0.14	332.50			1.80				9.72		0.45		0.01					
316 + 47.94 TO 316 + 62.94 - LT	15.00	19.00	0.14	285.00	142.50						8.33		0.39		0.01					
316 + 30.44 TO 316 + 47.94 - RT	17.50	3.00	0.14	52.50			0.28				9.72		0.45		0.01					
316 + 47.94 TO 316 + 62.94 - RT	15.00	3.00	0.14	45.00	22.50						8.33		0.39		0.01					
RAMP C																				
313 + 57.96 TO 313 + 72.96 - LT	15.00	20.376	0.14	305.64	152.82						8.33		0.39		0.01					
313 + 72.96 TO 313 + 90.46 - LT	17.50	19.00	0.14		356.77		1.93				9.72		0.45		0.01					
313 + 57.96 TO 313 + 72.96 - RT	15.00	4.00	0.14	60.00	30.00															
313 + 72.96 TO 313 + 90.46 - RT	17.50	4.00	0.14	70.00			0.38													
TOTALS THIS SHEET							3834.32	2400.14	571.03	241.52	12303.33	10327.99	574.16	481.98	13.31	11.16	18521.58	18515.37	15.33	15.33

CALCULATED JGB
CHECKED AM

PAVEMENT CALCULATIONS

CLE-275-5.35

STATION TO STATION	LENGTH L	AVERAGE WIDTH W	AVERAGE DEPTH D	AREA A A=LxW	AREA CADD OR ADDITIONAL AREA a	ITEM 304 AVERAGE SHOULDER WIDTH WS	858 (2) 1¾" ASPHALT CONCRETE INTERMEDIATE COURSE, TYPE A (446) 1.25 X AREA/(12X27)	858 * (2) 1¾" ASPHALT CONCRETE INTERMEDIATE COURSE, TYPE A (446) 1.25 X AREA/(12X27)	611 (21) REINFORCED CONCRETE APPROACH SLAB (T=15") A/9	611 * (21) REINFORCED CONCRETE APPROACH SLAB (T=15") A/9	617 (7) SHOULDER PREPARATION L X 5 / 9	617 * (7) SHOULDER PREPARATION L X 5 / 9	617 (8) COMPACTED AGGREGATE 5 X L X D / 27	617 * (8) COMPACTED AGGREGATE 5 X L X D / 27	617 (9) WATER (5 X L / 1000) X 120 (120 GAL. / 1000 SQ.FT.	617 * (9) WATER (5 X L / 1000) X 120 (120 GAL. / 1000 SQ.FT.	618 RUMBLE STRIPS, TYPE 2	618 * RUMBLE STRIPS, TYPE 2	830 CURB, TYPE 6	830 * CURB, TYPE 6
* NATIONAL HIGHWAY FUNDS ONLY.	FEET	FEET	FEET	SQ.FT.	SQ.FT.	FEET	CU.YD.	CU.YD.	SQ.YD.	SQ.YD.	SQ.YD.	SQ.YD.	CU.YD.	CU.YD.	M GAL.	M GAL.	FEET	FEET	FEET	FEET
RAMP C																				
313 + 90.46 TO 313 + 97.21 - RT	6.75	4.00		27.00			0.15													
313 + 36.27 TO 313 + 97.21 - RT	60.94	2.00	0.14	121.88	62.42		0.66				33.86		1.58		0.04					
313 + 90.46 TO 323 + 42.57 - LT	952.11	19.00	0.14	18090.09			97.71				528.95		24.68		0.57					
323 + 42.57 TO 324 + 36.46 - LT	93.89	25.58			2402.14		12.97													
324 + 36.46 TO 326 + 18.14 - LT	181.68	34.81			6324.72		34.16													
313 + 97.21 TO 314 + 48.88 - RT	51.67	3.00		155.01			0.84													
313 + 97.21 TO 314 + 48.88 - RT	51.67	3.00	0.14	155.01			0.84				28.71		1.34		0.03					
314 + 48.88 TO 323 + 76.86 - RT	927.98	3.00		2783.94			15.04													
314 + 48.88 TO 323 + 76.86 - RT	927.98	3.00	0.14	2783.94			15.04				515.54		24.06		0.56					
323 + 76.86 TO 324 + 26.86 - RT	50.00	4.00		200.00			1.08													
323 + 76.86 TO 324 + 26.86 - RT	50.00	4.00	0.14	200.00			1.08				27.78		1.30		0.03					
324 + 26.86 TO 325 + 32.54 - RT	105.68	5.00		528.40			2.85													
324 + 26.86 TO 325 + 32.54 - RT	105.68	3.00	0.14	317.04			1.71				58.71		2.74		0.06					
325 + 32.54 TO 326 + 13.82 - RT	81.28	2.24	0.14		181.70		0.98				45.16		2.11		0.05				15.33	
RAMP G																				
330 + 96.27 TO 331 + 35.15 - LT	38.88	20.12	0.14		782.38		4.23				21.60		1.01		0.02					
330 + 96.27 TO 331 + 35.15 - RT	38.88	3.43		133.36			0.72													
331 + 35.15 TO 331 + 46.30 - LT	11.15	19.00	0.14	211.85			1.14				6.19		0.29		0.01					
331 + 35.15 TO 331 + 46.30 - RT	11.15	4.00		44.60			0.24													
330 + 96.27 TO 331 + 46.30 - RT	50.03	2.00	0.14	100.06	43.77		0.54				27.79		1.30		0.03					
331 + 46.30 TO 332 + 09.39 - LT	63.09	19.00	0.14	1198.71			6.47				35.05		1.64		0.04					
331 + 46.30 TO 332 + 09.39 - RT	63.09	2.50		157.72			0.85													
331 + 46.30 TO 332 + 09.39 - RT	63.09	3.00	0.14	189.27			1.02				35.05		1.64		0.04					
332 + 09.39 TO 344 + 08.90 - LT	1199.51	19.00	0.14	22790.69			123.10				666.39		31.10		0.72					
332 + 09.39 TO 344 + 08.90 - RT	1199.51	3.00		3598.53			19.44													
332 + 09.39 TO 344 + 08.90 - RT	1199.51	3.00	0.14	3598.53			19.44				666.39		31.10		0.72					
344 + 08.90 TO 344 + 26.40 - LT	17.50	19.00	0.14	332.50			1.80				9.72		0.45		0.01					
344 + 26.40 TO 344 + 41.40 - LT	15.00	19.00	0.14	285.00	142.50						8.33		0.39		0.01					
344 + 08.90 TO 344 + 26.40 - RT	17.50	3.00		52.50			0.28													
344 + 26.40 TO 344 + 41.40 - RT	15.00	3.00		45.00	22.50															
344 + 08.90 TO 344 + 64.92 - RT	56.02	3.00	0.14	168.05	37.18		0.91				31.12		1.45		0.03					
RAMP F																				
341 + 95.81 TO 342 + 10.81 - LT	15.00	19.00		285.00	142.50															
342 + 10.81 TO 342 + 28.31 - LT	17.50	19.00	0.14	332.50			1.80													
341 + 95.81 TO 342 + 10.81 - RT	15.00	7.00	0.14	105.00	52.50						8.33		0.39		0.01					
342 + 10.81 TO 342 + 28.31 - RT	17.50	7.00	0.14	122.50			0.66													
RAMP H																				
323 + 54.85 TO 323 + 96.94 - LT	42.09	2.00	0.14	84.18	42.10		0.45				23.38		1.09		0.03					
323 + 96.94 TO 324 + 39.61 - LT	42.67	2.50	0.14	106.68			0.58				23.71		1.11		0.03					
324 + 39.61 TO 324 + 54.61 - LT	15.00	3.00		45.00	22.50		0.24													
324 + 39.61 TO 324 + 54.61 - LT	15.00	3.00	0.14	45.00							8.33		0.39		0.01					
324 + 39.61 TO 324 + 54.61 - RT	15.00	19.00	0.14	285.00	142.50		1.54				8.33		0.39		0.01					
324 + 54.61 TO 324 + 72.11 - LT	17.50	3.00		52.50			0.28													
324 + 54.61 TO 324 + 72.11 - LT	17.50	3.00	0.14	52.50			0.28				9.72		0.45		0.01					
324 + 54.61 TO 324 + 72.11 - RT	17.50	19.00	0.14	332.50			1.80				9.72		0.45		0.01					
324 + 72.11 TO 340 + 76.03 - LT	1603.92	3.00	0.14	4811.76			25.99				891.07		41.58		0.96					
324 + 72.11 TO 340 + 76.03 - LT	1603.92	3.00		4811.76			25.99													
324 + 72.11 TO 340 + 76.03 - RT	1603.92	19.00	0.14	30474.48			164.60				891.07		41.58		0.96					
340 + 76.03 TO 341 + 04.65 - LT	28.62	2.50	0.14	71.55			0.39				15.90		0.74		0.02					
340 + 76.03 TO 341 + 04.65 - LT	28.62	2.50		71.55			0.39													
340 + 76.03 TO 341 + 04.65 - RT	28.62	19.00	0.14	543.78			2.94				15.90		0.74		0.02					
341 + 04.65 TO 341 + 45.28 - LT	40.63	2.00	0.14	81.26	40.48		0.44				22.57		1.05		0.02					
341 + 04.65 TO 341 + 45.28 - LT	40.63	2.00		81.26			0.44													
TOTALS THIS SHEET							594.10				4674.37		218.14		5.06				15.33	

CALCULATED JGB
CHECKED AM

PAVEMENT CALCULATIONS

CLE-275-5.35

236
857

STATION TO STATION	LENGTH L	AVERAGE WIDTH W	AVERAGE DEPTH D	AREA A A=LxW	AREA CADD OR ADDITIONAL AREA a	ITEM 304 AVERAGE SHOULDER WIDTH WS	858 (2) 1¾" ASPHALT CONCRETE INTERMEDIATE COURSE, TYPE A (446) 1.75xAREA/(12x27)	858 * (2) 1¾" ASPHALT CONCRETE INTERMEDIATE COURSE, TYPE A (446) 1.75xAREA/(12x27)	611 (21) REINFORCED CONCRETE APPROACH SLAB (T=15") A/9	611 * (21) REINFORCED CONCRETE APPROACH SLAB (T=15") A/9	617 (7) SHOULDER PREPARATION L x 5 / 9	617 * (7) SHOULDER PREPARATION L x 5 / 9	617 (8) COMPACTED AGGREGATE 5 x L x D / 27	617 * (8) COMPACTED AGGREGATE 5 x L x D / 27	617 (9) WATER (5 x L / 1000) x 120 (120 GAL. / 1000 SQ.FT.	617 * (9) WATER (5 x L / 1000) x 120 (120 GAL. / 1000 SQ.FT.	618 RUMBLE STRIPS, TYPE 2	618 * RUMBLE STRIPS, TYPE 2	830 CURB, TYPE 6	830 * CURB, TYPE 6
* NATIONAL HIGHWAY FUNDS ONLY.	FEET	FEET	FEET	SQ.FT.	SQ.FT.	FEET	CU.YD.	CU.YD.	SQ.YD.	SQ.YD.	SQ.YD.	SQ.YD.	CU.YD.	CU.YD.	M GAL.	M GAL.	FEET	FEET	FEET	FEET
RAMP H																				
341 + 04.65 TO 341 + 45.28 - RT	40.63	19.00	0.14	771.97			4.17				22.57		1.05		0.02					
341 + 45.28 TO 342 + 08.08 - LT	62.80	7.00	0.14	439.60			2.37				34.89		1.63		0.04					
341 + 45.28 TO 342 + 08.08 - RT	62.80	19.00	0.14	1193.20			6.44				34.89		1.63		0.04					
RAMP E																				
125 + 17.83 TO 125 + 32.83 - LT	15.00	7.00	0.14	105.00	52.50						8.33		0.39		0.01					
125 + 17.83 TO 125 + 32.83 - RT	15.00	19.00	0.14	285.00	142.50						8.33		0.39		0.01					
125 + 32.83 TO 125 + 50.33 - LT	17.50	7.00	0.14	122.50			0.66				9.72		0.45		0.01					
125 + 32.83 TO 125 + 50.33 - RT	17.50	19.00	0.14	332.50			1.80				9.72		0.45		0.01					
RAMP D																				
313 + 71.54 TO 314 + 21.54 - LT	50.00	4.00	0.14	200.00				1.08			27.78		1.30		0.03					
314 + 21.54 TO 314 + 96.08 - LT	74.54	3.00	0.14	223.62				1.21			41.41		1.93		0.04					
314 + 96.08 TO 327 + 32.20 - LT	1236.12	3.00	0.14	3708.36				20.03			686.73		32.05		0.74					
314 + 96.08 TO 327 + 32.20 - LT	1236.12	3.00		3708.36			20.03													
314 + 96.08 TO 321 + 89.54 - RT	693.46	19.00	0.14	13175.74			71.17				385.26		17.98		0.42					
321 + 89.54 TO 325 + 27.08 - RT	337.54	26.43	0.14		8921.54		48.19				187.52		8.75		0.20					
325 + 27.08 TO 327 + 32.20 - RT	205.12	29.73			6097.66															
327 + 32.20 TO 327 + 47.20 - LT	15.00	3.00	0.14	45.00				0.24			8.33		0.39		0.01					
327 + 32.20 TO 327 + 47.20 - LT	15.00	3.00		45.00			0.24													
327 + 32.20 TO 327 + 47.20 - RT	15.00	34.50		517.50			2.80													
327 + 47.20 TO 327 + 59.70 - LT	12.50	3.00	0.14	37.50				0.20			6.94		0.32		0.01					
327 + 47.20 TO 327 + 59.70 - LT	12.50	3.00		37.50	18.75															
327 + 47.20 TO 327 + 59.70 - RT	12.50	34.84		435.50	217.75															
327 + 59.70 TO 328 + 48.23 - LT	88.53	3.00	0.14	265.59				1.43			49.18		2.30		0.05					
327 + 59.70 TO 328 + 48.23 - LT	88.53	3.00		265.59																
327 + 59.70 TO 328 + 22.03 - RT	62.33	16.00		997.28																
328 + 22.03 TO 328 + 48.23 - RT	26.20	19.00	0.14	497.80							14.56		0.68		0.02					
328 + 48.23 TO 328 + 60.73 - LT	12.50	3.00	0.14	37.50				0.20			6.94		0.32		0.01					
328 + 48.23 TO 328 + 60.73 - LT	12.50	3.00		37.50	18.75															
328 + 60.73 TO 328 + 75.73 - RT	15.00	19.00	0.14	285.00	142.50						8.33		0.39		0.01					
328 + 75.73 TO 332 + 11.99 - LT	336.26	3.00	0.14	1008.78				5.45			186.81		8.72		0.20					
328 + 75.73 TO 332 + 11.99 - LT	336.26	3.00		1008.78																
328 + 75.73 TO 332 + 11.99 - RT	336.26	34.50	0.14	11600.97			62.66				186.81		8.72		0.20					
332 + 11.99 TO 332 + 32.33 - LT	20.34	2.50	0.14	50.85				0.27			11.30		0.53		0.01					
332 + 11.99 TO 332 + 32.33 - LT	20.34	3.50		71.19			0.38													
332 + 11.99 TO 332 + 32.33 - RT	20.34	19.00	0.14	386.46			2.09				11.30		0.53		0.01					
332 + 70.81 TO 332 + 83.87 - LT	13.06		0.14		79.99		0.43				7.26		0.34		0.01					
332 + 66.37 TO 332 + 83.87 - RT	17.50	19.00	0.14	332.50			1.80				9.72		0.45		0.01					
332 + 83.87 TO 332 + 98.87 - LT	15.00	6.00	0.14	90.00	45.00						8.33		0.39		0.01					
332 + 83.87 TO 332 + 98.87 - RT	15.00	19.00	0.14	285.00	142.50						8.33		0.39		0.01					
T.R. 211																				
45 + 40.00 TO 46 + 39.45 - LT&RT	99.45	23.56		2343.04																
45 + 40.00 TO 46 + 39.45 - LT&RT	99.45		0.271			2.00														
45 + 40.00 TO 46 + 39.45 - LT&RT	99.45		0.25			1.50														
45 + 40.00 TO 46 + 39.45 - LT&RT	99.45		0.146			1.00														
46 + 39.45 TO 48 + 11.74 - LT&RT	172.29	24.00		4134.96																
46 + 39.45 TO 48 + 11.74 - LT&RT	172.29		0.271			4.00														
46 + 39.45 TO 48 + 11.74 - LT&RT	172.29		0.25			3.50														
46 + 39.45 TO 48 + 11.74 - LT&RT	172.29		0.146			3.00														
48 + 11.74 TO 48 + 36.74 - LT&RT	25.00	37.39		934.75					103.86											
48 + 11.74 TO 48 + 36.74 - LT&RT	25.00	40.39		1009.75																
51 + 87.39 TO 52 + 12.39 - LT&RT	25.00	37.39		934.75					103.86											
51 + 87.39 TO 52 + 12.39 - LT&RT	25.00	40.39		1009.75																
52 + 12.39 TO 53 + 75.92 - LT&RT	163.53	24.00		3924.72																
TOTALS THIS SHEET							225.23	30.11	207.72		1981.29		92.47		2.14					

CALCULATED JGB
CHECKED AM

PAVEMENT CALCULATIONS

CLE-275-5.35

237
857

STATION TO STATION	LENGTH L	AVERAGE WIDTH W	AVERAGE DEPTH D	AREA A A=LxW	AREA CADD OR ADDITIONAL AREA a	ITEM 304 AVERAGE SHOULDER WIDTH WS	858 (2) 1¾" ASPHALT CONCRETE INTERMEDIATE COURSE, TYPE A (446) .75XAREA/(12X27)	858 * (2) 1¾" ASPHALT CONCRETE INTERMEDIATE COURSE, TYPE A (446) .75XAREA/(12X27)	611 (21) REINFORCED CONCRETE APPROACH SLAB (T=15") A/9	611 * (21) REINFORCED CONCRETE APPROACH SLAB (T=15") A/9	617 (7) SHOULDER PREPARATION L X 5 / 9	617 * (7) SHOULDER PREPARATION L X 5 / 9	617 (8) COMPACTED AGGREGATE 5 X L X D / 27	617 * (8) COMPACTED AGGREGATE 5 X L X D / 27	617 (9) WATER (5 X L / 1000) X 120 (1120 GAL. / 1000 SQ.FT.	617 * (9) WATER (5 X L / 1000) X 120 (1120 GAL. / 1000 SQ.FT.	618 RUMBLE STRIPS, TYPE 2	618 * RUMBLE STRIPS, TYPE 2	830 CURB, TYPE 6	830 * CURB, TYPE 6
* NATIONAL HIGHWAY FUNDS ONLY.	FEET	FEET	FEET	SQ.FT.	SQ.FT.	FEET	CU.YD.	CU.YD.	SQ.YD.	SQ.YD.	SQ.YD.	SQ.YD.	CU.YD.	CU.YD.	M GAL.	M GAL.	FEET	FEET	FEET	FEET
T.R. 211																				
52 + 12.39 TO 53 + 75.92 - LT&RT	163.53		0.2708			4.00														
52 + 12.39 TO 53 + 75.92 - LT&RT	163.53		0.25			3.50														
52 + 12.39 TO 53 + 75.92 - LT&RT	163.53		0.146			3.00														
53 + 75.92 TO 54 + 68.00 - LT&RT	92.08	20.36	0.27	1874.75																
53 + 75.92 TO 54 + 68.00 - LT&RT	92.08		0.271			2.00														
53 + 75.92 TO 54 + 68.00 - LT&RT	92.08		0.25			1.50														
53 + 75.92 TO 54 + 68.00 - LT&RT	92.08		0.146			1.00														
TOTALS THIS SHEET																				
TOTALS FROM SHEET NO. 233							1736.89	588.22	1668.34	420.57	2612.31	4388.67	121.91	204.81	2.87	4.77	6107.44	6755.59	45.99	61.32
TOTALS FROM SHEET NO. 234							4304.49	2432.97	585.45	299.33	11527.15	11139.36	537.93	519.83	12.46	12.05	20490.97	19211.63	45.99	45.99
TOTALS FROM SHEET NO. 235							3834.32	2400.14	571.03	241.52	12303.33	10327.99	574.16	481.98	13.31	11.16	18521.58	18515.37	15.33	15.33
TOTALS FROM SHEET NO. 236							594.10				4674.37		218.14		5.06				15.33	
TOTALS FROM SHEET NO. 237							225.23	30.11	207.72		1981.29		92.47		2.14					
TOTALS							10695.03	5451.44	3032.54	961.42	33098.45	25856.02	1544.61	1206.62	35.84	27.98	45119.99	44482.59	122.64	122.64
GRAND TOTALS							16146.47		3993.96		58954.47		2751.23		63.82		89602.58		245.28	
ALLOCATED TOTALS CARRIED TO GENERAL SUMMARY							10695	5451	3033	961	33098	25856	1544	1207	36	28	45120	44483	122	123
GRAND TOTALS CARRIED TO GENERAL SUMMARY							16146		3994		58954		2751		64		89603		245	

CALCULATED JGB CHECKED AM

PAVEMENT CALCULATIONS

CLE-275-5.35

238
857

STATION TO STATION	ITEM 203		SEEDING	DEDUCTIONS					ITEM 870
				ITEM 601	ITEM 660	ITEM 670	ITEM 839	ITEM 870	
	EXCAVATION NOT INCLUDING EMBANKMENT CONSTRUCTION	EMBANKMENT		RIPRAP AND ROCK CHANNEL PROTECTION	REINFORCED SODDING	DITCH EROSION PROTECTION	SEEDING AND EROSION CONTROL WITH MATTING	SEEDING AND MULCHING FOR WILDLIFE	SEEDING AND MULCHING
	C.Y.	C.Y.	S.Y.	S.Y.	S.Y.	S.Y.	S.Y.	S.Y.	S.Y.
MAINLINE I-275									
282+45.06 TO 287+00.00	784	207	1820			120			1700
287+00.00 TO 297+00.00	2002	451	3247		209		8		3030
297+00.00 TO 307+00.00	1873	506	2425		64	239	67		2055
307+00.00 TO 317+00.29	1950	650	2674			120			2554
317+00.29 TO 326+67.42	2442	774	3618	3	268	120			3227
326+67.42 TO 337+00.00	1798	949	3269			120			3149
337+00.00 TO 345+85.64	2383	1414	3786		169	120	4		3493
345+85.64 TO 357+00.00	2223	1735	3656			120	27		3509
357+00.00 TO 367+00.00	2213	1828	3966			1035			2931
367+00.00 TO 377+00.00	2094	1780	3956			239	2		3715
377+00.00 TO 387+00.00	2028	2050	4000			120			3880
387+00.00 TO 397+01.70	1956	2088	4007			239			3768
397+01.70 TO 407+00.00	1860	2582	3994			239			3755
407+00.00 TO 416+98.95	2095	2525	3996			120			3876
416+98.95 TO 427+00.00	1984	2264	4004			359			3645
427+00.00 TO 437+00.00	1802	2123	3956			120			3836
437+00.00 TO 447+00.00	1994	2240	4000			239			3761
447+00.00 TO 457+00.00	1981	2104	4000			120			3880
457+00.00 TO 467+00.00	1840	2250	4000			239			3761
467+00.00 TO 477+00.00	1940	1689	3800			239			3561
477+00.00 TO 487+00.00	1877	2250	3997			120			3877
487+00.00 TO 497+00.00	1936	2078	4000			120			3880
497+00.00 TO 507+00.00	1922	2129	4000			239			3761
507+00.00 TO 517+00.00	2074	1955	3966			120			3846
517+00.00 TO 517+50.50	99	110	202			120			82
MAINLINE I-275 SLIDE AREAS									
353+00.00 RT. TO 357+00.00 RT.	1076	3169	2741						2741
363+00.00 RT. TO 367+00.00 RT.	2417	4509	4109	3		915		653	2538
408+50.00 RT. TO 410+50.00 RT.	1329	2664	2778						2778
MAINLINE I-275 COLLECTOR-DISTRIBUTOR									
331+72.13 RT. TO 340+16.13 RT.	103	54	671						671
RAMP A									
307+33.53 RT. TO 323+45.17 RT.	229	159	1038						1038
RAMP C									
313+36.27 RT. TO 325+32.52 RT.	141	58	880						880
RAMP D									
313+71.54 RT. TO 332+98.88 RT.	1096	1302	3254						3254
RAMP G									
330+95.83 RT. TO 344+65.00 RT.	160	119	1366						1366
RAMP H									
323+54.85 RT. TO 342+08.08 RT.	209	329	2773						2773
US-50 J									
85+69.26 TO 95+00.00	362	52	1814						1814
TR-211									
454+40.00 TO 483+36.74	404	916	1473	1		24			1448
483+36.74 TO 546+68.00	358	864	1476		31				1445
DRIVE RT. TR-211									
102+20.00 TO 106+68.00	60	88	156						156
TOTALS CARRIED TO GENERAL SUMMARY	55094	55014							105434

CALCULATED AM CHECKED JCB

EARTHWORK & SEEDING SUBSUMMARY

CLE-275-5.35

239
857

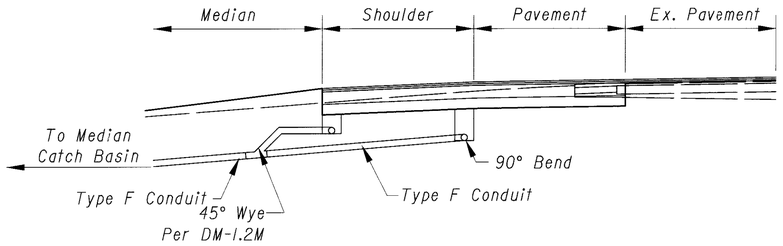

UNDERDRAIN OUTLET CONNECTION DETAIL, (TYP.)
I-275 MAINLINE, NORMAL CROWN AND SUPERELEVATED SECTION

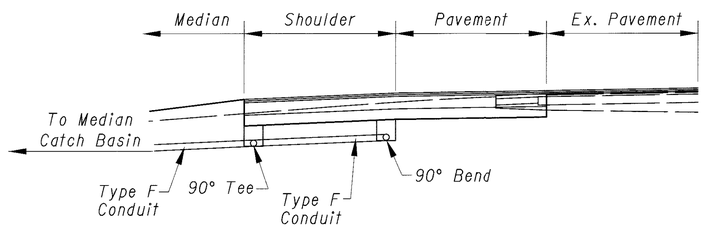

UNDERDRAIN OUTLET DETAIL IN TYPICAL ROCK SECTION
I-275 MAINLINE, NORMAL CROWN AND SUPERELEVATED SECTIONS

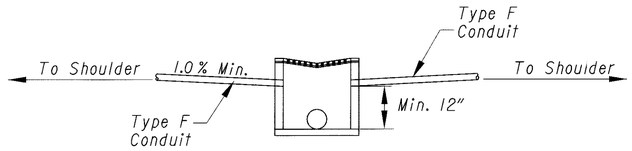

UNDERDRAIN OUTLET TO MEDIAN CB TYPE 4

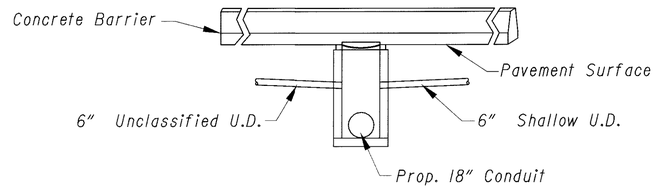

BARRIER MEDIAN INLET TYPE 3B
STATION 329+37.68 WITH 6" U.D. OUTLETS

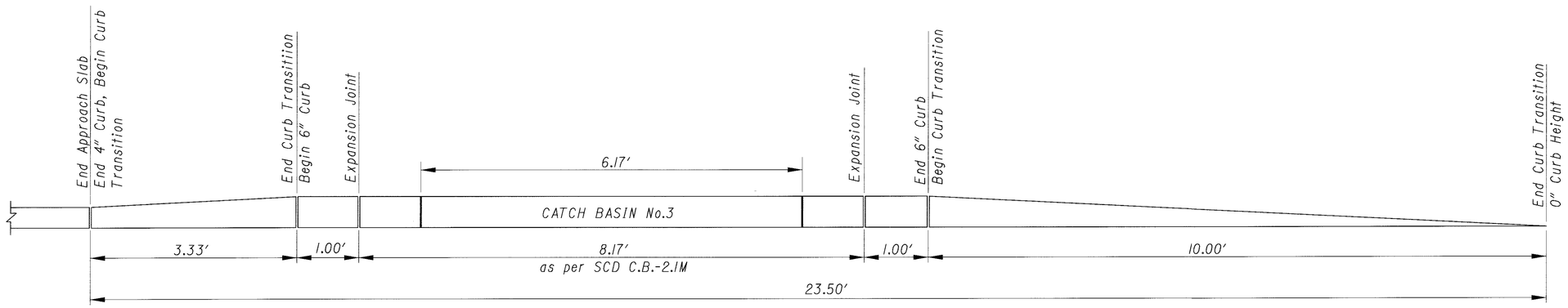

ELEVATION VIEW

CURB TABLE

Location in Plan	Begin Curb Sta. - Offset	End Curb Sta. - Offset
Bridge on I-275 N.B. over Ex. US-50	* 292+70.06, 77.91' Lt.	* 292+93.56, 78.00' Lt.
	* 292+31.57, 16.00' Lt.	* 292+55.07, 14.77' Lt.
Bridge on I-275 S.B. over Ex. US-50	* 292+11.45, 16.05' Rt.	* 292+34.95, 16.00' Rt.
	* 291+72.72, 78.02' Rt.	* 291+96.22, 78.00' Rt.
Bridge on I-275 N.B. over Little Miami River	* 303+82.45, 78.00' Lt.	* 304+05.95, 78.00' Lt.
	* 303+68.23, 4.82' Lt.	* 303+91.73, 4.57' Lt.
Bridge on I-275 S.B. over Little Miami River	* 303+64.18, 16.00' Rt.	* 303+87.68, 16.00' Rt.
	303+49.31, 10.17' Rt. Ramp A	303+72.84, 10.56' Rt. Ramp A

* Mainline Stationing

CURB TABLE

Location in Plan	Begin Curb Sta. - Offset	End Curb Sta. - Offset
Bridge on I-275 N.B. over Ex. US-50J	126+49.74, 11.37' Lt. Ramp E	126+73.24, 11.00' Lt. Ramp E
	* 326+21.89, 16.00' Lt.	* 326+45.39, 16.06' Lt.
Bridge on I-275 S.B. over Ex. US-50J	* 326+15.23, 14.72' Rt.	* 325+89.44, 10.09' Rt.
	291+72.72, 78.02' Rt. Ramp C	326+12.94, 8.26' Rt. Ramp C
Bridge on I-275 N.B. over Round Bottom Rd.	345+89.73, 11.25' Lt. Ramp H	346+13.23, 10.26' Lt. Ramp H
	* 345+45.46, 16.00' Lt.	* 345+68.96, 16.00' Lt.
Bridge on I-275 S.B. over Round Bottom Rd.	* 345+36.92, 16.00' Rt.	* 345+60.42, 15.97' Rt.
	* 344+77.60, 120.82' Rt.	* 345+01.10, 119.92' Rt.

* Mainline Stationing

UNDERDRAIN AND DRAINAGE DETAILS

CLE-275-5.35

240
857

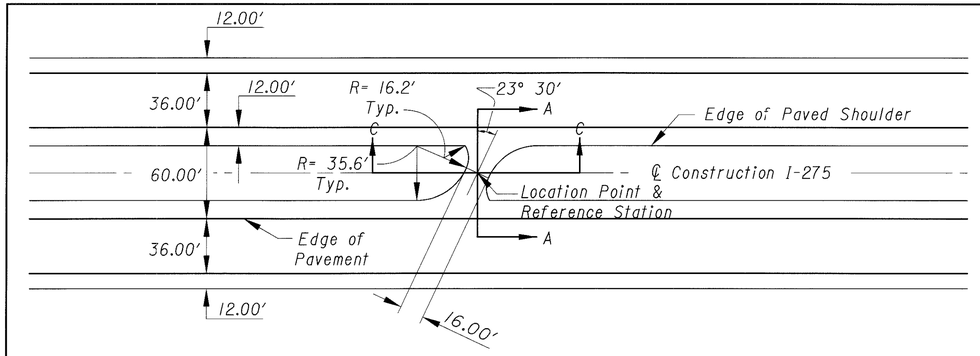

TYPICAL U-TURN - 60' MEDIAN OPENING

SCALE: 1" = 50'

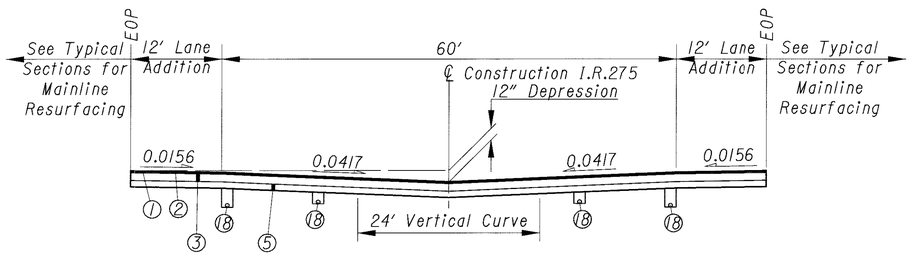

SECTION AA

For Pavement Legend See Sheet No. 6

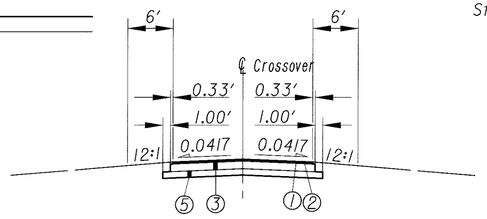

SECTION CC

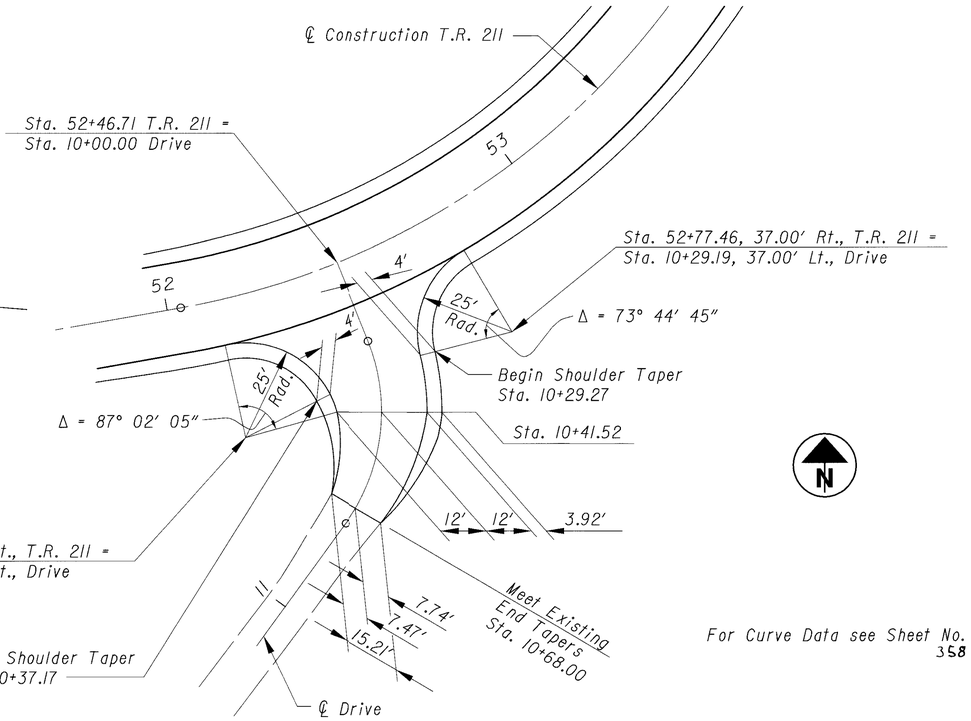

For Curve Data see Sheet No. 358

DRIVE PLAN AT 52+46.71 T.R. 211

SCALE: 1" = 20'

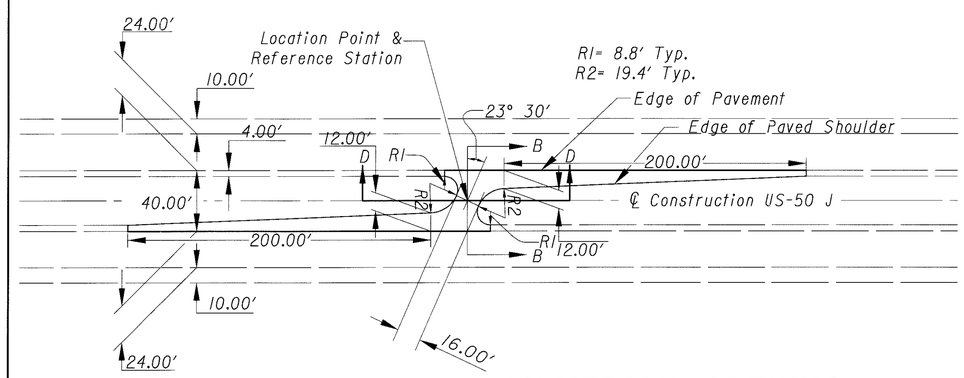

TYPICAL U-TURN - 40' MEDIAN OPENING

SCALE: 1" = 50'

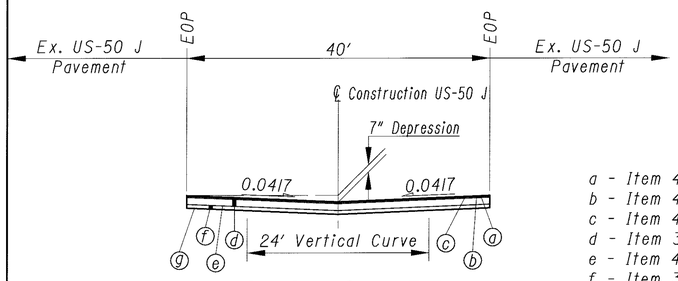

SECTION BB

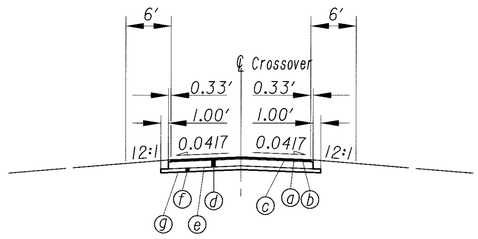

SECTION DD

a - Item 448 - 1.5" Asphalt Concrete, Surface Course, Type I, PG64-22
b - Item 448 - 1.75" Asphalt Concrete, Intermediate Course, Type 2, PG64-22
c - Item 407 - Tack Coat for Intermediate Course
d - Item 301 - 11" Bituminous Aggregate Base, PG64-22
e - Item 408 - Prime Coat
f - Item 304 - 6" Aggregate Base
g - Item 203 - Subgrade Compaction

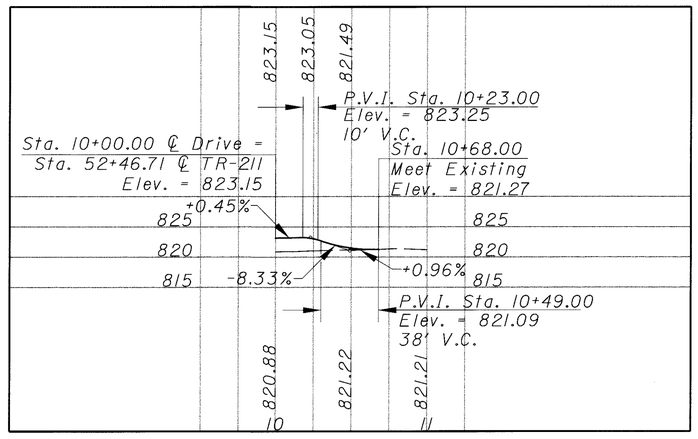

DRIVE PROFILE AT 52+46.71 T.R. 211

HORIZONTAL SCALE: 1" = 20'
VERTICAL SCALE: 1" = 5'

CALCULATED JGB CHECKED AM

ROADWAY AND DRIVE DETAILS

CL3-275-5.35

241
857

SUPERELEVATION TABLE

*P.I. STATION 414+01.91 | * COMPOUND SEE CURVE DATA

NORTHBOUND SIDE								SOUTHBOUND SIDE							
EOP 66' LT. ELEVATION	CROSS SLOPE	EOP 54' LT. ELEVATION	CROSS SLOPE	P.G.L. EOP 42' LT. ELEVATION	CROSS SLOPE	EOP 30' LT. ELEVATION	CENTERLINE STATION	EOP 30' RT. ELEVATION	CROSS SLOPE	P.G.L. EOP 42' RT. ELEVATION	CROSS SLOPE	EOP 54' RT. ELEVATION	CROSS SLOPE	EOP 66' RT. ELEVATION	REMARKS
675.90	-0.0156	676.09	0.0156	675.90	0.0156	675.71	397+00	675.97	0.0156	676.16	0.0156	676.35	-0.0156	676.16	N.C.
676.20	-0.0118	676.34	0.0156	676.15	0.0156	675.96	397+25	676.27	0.0118	676.41	0.0118	676.55	-0.0156	676.36	
676.49	-0.0080	676.59	0.0156	676.40	0.0156	676.21	397+50	676.57	0.0080	676.67	0.0080	676.77	-0.0156	676.58	
676.78	-0.0041	676.83	0.0156	676.64	0.0156	676.45	397+75	676.88	0.0041	676.93	0.0041	676.98	-0.0156	676.79	
677.07	-0.0003	677.08	0.0156	676.89	0.0156	676.70	398+00	677.18	0.0003	677.18	0.0003	677.18	-0.0156	677.00	
677.10	0.0000	677.10	0.0156	676.91	0.0156	676.72	398+02.09	677.20	0.0000	677.20	0.0000	677.20	-0.0156	677.01	
677.37	0.0035	677.33	0.0156	677.14	0.0156	676.95	398+25	677.48	-0.0035	677.44	-0.0035	677.40	-0.0156	677.21	
677.66	0.0073	677.57	0.0156	677.38	0.0156	677.19	398+50	677.78	-0.0073	677.69	-0.0073	677.60	-0.0156	677.41	
677.95	0.0111	677.82	0.0156	677.63	0.0156	677.44	398+75	678.08	-0.0111	677.95	-0.0111	677.82	-0.0156	677.63	
678.24	0.0150	678.06	0.0156	677.87	0.0156	677.68	399+00	678.38	-0.0150	678.20	-0.0150	678.02	-0.0156	677.83	
678.29	0.0156	678.11	0.0156	677.92	0.0156	677.73	399+04.19	678.44	-0.0156	678.25	-0.0156	678.06	-0.0156	677.88	R.C.
678.57	0.0188	678.35	0.0188	678.12	0.0188	677.89	399+25	678.69	-0.0188	678.46	-0.0188	678.23	-0.0188	678.01	
678.91	0.0226	678.64	0.0226	678.37	0.0226	678.10	399+50	678.99	-0.0226	678.72	-0.0226	678.45	-0.0226	678.18	
679.24	0.0264	678.93	0.0264	678.61	0.0264	678.29	399+75	679.29	-0.0264	678.97	-0.0264	678.65	-0.0264	678.34	
679.59	0.0302	679.22	0.0302	678.86	0.0302	678.50	400+00	679.59	-0.0302	679.23	-0.0302	678.87	-0.0302	678.50	
679.92	0.0341	679.51	0.0341	679.10	0.0341	678.69	400+25	679.89	-0.0341	679.48	-0.0341	679.07	-0.0341	678.66	
680.26	0.0379	679.80	0.0379	679.35	0.0379	678.90	400+50	680.19	-0.0379	679.74	-0.0379	679.29	-0.0379	678.83	
680.53	0.0409	680.04	0.0409	679.55	0.0379	679.06	400+69.87	680.42	-0.0409	679.93	-0.0409	679.44	-0.0409	678.95	P.C.
680.60	0.0417	680.10	0.0417	679.60	0.0417	679.10	400+75	680.48	-0.0417	679.98	-0.0417	679.48	-0.0417	678.98	
680.93	0.0455	680.39	0.0455	679.84	0.0455	679.29	401+00	680.75	-0.0455	680.20	-0.0455	679.65	-0.0455	679.11	
681.27	0.0493	680.68	0.0493	680.09	0.0493	679.50	401+25	681.02	-0.0493	680.43	-0.0493	679.84	-0.0493	679.25	
681.62	0.0532	680.98	0.0532	680.34	0.0532	679.70	401+50	681.30	-0.0532	680.66	-0.0532	680.02	-0.0532	679.38	
681.94	0.0570	681.25	0.0570	680.57	0.0570	679.89	401+75	681.57	-0.0570	680.89	-0.0570	680.21	-0.0570	679.52	
682.27	0.0608	681.54	0.0608	680.81	0.0608	680.08	402+00	681.85	-0.0608	681.12	-0.0608	680.39	-0.0608	679.66	F.S.
682.51	0.0608	681.78	0.0608	681.05	0.0608	680.32	402+25	682.07	-0.0608	681.34	-0.0608	680.61	-0.0608	679.88	
682.74	0.0608	682.01	0.0608	681.28	0.0608	680.55	402+50	682.30	-0.0608	681.57	-0.0608	680.84	-0.0608	680.11	
682.98	0.0608	682.25	0.0608	681.52	0.0608	680.79	402+75	682.53	-0.0608	681.80	-0.0608	681.07	-0.0608	680.34	
683.21	0.0608	682.48	0.0608	681.75	0.0608	681.02	403+00	682.76	-0.0608	682.03	-0.0608	681.30	-0.0608	680.57	
683.45	0.0608	682.72	0.0608	681.99	0.0608	681.26	403+25	682.99	-0.0608	682.26	-0.0608	681.53	-0.0608	680.80	
683.69	0.0608	682.96	0.0608	682.23	0.0608	681.50	403+50	683.22	-0.0608	682.49	-0.0608	681.76	-0.0608	681.03	
683.92	0.0608	683.19	0.0608	682.46	0.0608	681.73	403+75	683.44	-0.0608	682.71	-0.0608	681.98	-0.0608	681.25	
684.16	0.0608	683.43	0.0608	682.70	0.0608	681.97	404+00	683.67	-0.0608	682.94	-0.0608	682.21	-0.0608	681.48	
684.40	0.0608	683.67	0.0608	682.94	0.0608	682.21	404+25	683.90	-0.0608	683.17	-0.0608	682.44	-0.0608	681.71	
684.63	0.0608	683.90	0.0608	683.17	0.0608	682.44	404+50	684.13	-0.0608	683.40	-0.0608	682.67	-0.0608	681.94	
684.87	0.0608	684.14	0.0608	683.41	0.0608	682.68	404+75	684.36	-0.0608	683.63	-0.0608	682.90	-0.0608	682.17	
685.10	0.0608	684.37	0.0608	683.64	0.0608	682.91	405+00	684.59	-0.0608	683.86	-0.0608	683.13	-0.0608	682.40	
685.34	0.0608	684.61	0.0608	683.88	0.0608	683.15	405+25	684.81	-0.0608	684.08	-0.0608	683.35	-0.0608	682.62	
685.58	0.0608	684.85	0.0608	684.12	0.0608	683.39	405+50	685.04	-0.0608	684.31	-0.0608	683.58	-0.0608	682.85	
685.81	0.0608	685.08	0.0608	684.35	0.0608	683.62	405+75	685.27	-0.0608	684.54	-0.0608	683.81	-0.0608	683.08	
686.05	0.0608	685.32	0.0608	684.59	0.0608	683.86	406+00	685.50	-0.0608	684.77	-0.0608	684.04	-0.0608	683.31	
686.29	0.0608	685.56	0.0608	684.83	0.0608	684.10	406+25	685.73	-0.0608	685.00	-0.0608	684.27	-0.0608	683.54	
686.52	0.0608	685.79	0.0608	685.06	0.0608	684.33	406+50	685.96	-0.0608	685.23	-0.0608	684.50	-0.0608	683.77	
686.76	0.0608	686.03	0.0608	685.30	0.0608	684.57	406+75	686.18	-0.0608	685.45	-0.0608	684.72	-0.0608	683.99	
687.00	0.0608	686.27	0.0608	685.54	0.0608	684.81	407+00	686.41	-0.0608	685.68	-0.0608	684.95	-0.0608	684.22	
687.23	0.0608	686.50	0.0608	685.77	0.0608	685.04	407+25	686.64	-0.0608	685.91	-0.0608	685.18	-0.0608	684.45	
687.47	0.0608	686.74	0.0608	686.01	0.0608	685.28	407+50	686.87	-0.0608	686.14	-0.0608	685.41	-0.0608	684.68	
687.70	0.0608	686.97	0.0608	686.24	0.0608	685.51	407+75	687.10	-0.0608	686.37	-0.0608	685.64	-0.0608	684.91	
687.95	0.0608	687.22	0.0608	686.49	0.0608	685.76	408+00	687.36	-0.0608	686.63	-0.0608	685.90	-0.0608	685.17	
688.22	0.0608	687.49	0.0608	686.76	0.0608	686.03	408+25	687.61	-0.0608	686.88	-0.0608	686.15	-0.0608	685.42	
688.48	0.0608	687.75	0.0608	687.02	0.0608	686.29	408+50	687.87	-0.0608	687.14	-0.0608	686.41	-0.0608	685.68	
688.75	0.0608	688.02	0.0608	687.29	0.0608	686.56	408+75	688.13	-0.0608	687.40	-0.0608	686.67	-0.0608	685.94	
689.01	0.0608	688.28	0.0608	687.55	0.0608	686.82	409+00	688.39	-0.0608	687.66	-0.0608	686.93	-0.0608	686.20	
689.27	0.0608	688.54	0.0608	687.81	0.0608	687.08	409+25	688.65	-0.0608	687.92	-0.0608	687.19	-0.0608	686.46	
689.54	0.0608	688.81	0.0608	688.08	0.0608	687.35	409+50	688.91	-0.0608	688.18	-0.0608	687.45	-0.0608	686.72	
689.80	0.0608	689.07	0.0608	688.34	0.0608	687.61	409+75	689.17	-0.0608	688.44	-0.0608	687.71	-0.0608	686.98	

SUPERELEVATION TABLE

*P.I. STATION 414+01.91 | * COMPOUND SEE CURVE DATA

NORTHBOUND SIDE								SOUTHBOUND SIDE							
EOP 66' LT. ELEVATION	CROSS SLOPE	EOP 54' LT. ELEVATION	CROSS SLOPE	P.G.L. EOP 42' LT. ELEVATION	CROSS SLOPE	EOP 30' LT. ELEVATION	CENTERLINE STATION	EOP 30' RT. ELEVATION	CROSS SLOPE	P.G.L. EOP 42' RT. ELEVATION	CROSS SLOPE	EOP 54' RT. ELEVATION	CROSS SLOPE	EOP 66' RT. ELEVATION	REMARKS
CONTINUED															
690.07	0.0608	689.34	0.0608	688.61	0.0608	687.88	410+00	689.43	-0.0608	688.70	-0.0608	687.97	-0.0608	687.24	
690.33	0.0608	689.60	0.0608	688.87	0.0608	688.14	410+25	689.69	-0.0608	688.96	-0.0608	688.23	-0.0608	687.50	
690.60	0.0608	689.87	0.0608	689.14	0.0608	688.41	410+50	689.95	-0.0608	689.22	-0.0608	688.49	-0.0608	687.76	
690.86	0.0608	690.13	0.0608	689.40	0.0608	688.67	410+75	690.21	-0.0608	689.48	-0.0608	688.75	-0.0608	688.02	
691.13	0.0608	690.40	0.0608	689.67	0.0608	688.94	411+00	690.47	-0.0608	689.74	-0.0608	689.01	-0.0608	688.28	
691.39	0.0608	690.66	0.0608	689.93	0.0608	689.20	411+25	690.72	-0.0608	689.99	-0.0608	689.26	-0.0608	688.53	
691.66	0.0608	690.93	0.0608	690.20	0.0608	689.47	411+50	690.98	-0.0608	690.25	-0.0608	689.52	-0.0608	688.79	
691.92	0.0608	691.19	0.0608	690.46	0.0608	689.73	411+75	691.24	-0.0608	690.51	-0.0608	689.78	-0.0608	689.05	
692.19	0.0608	691.46	0.0608	690.73	0.0608	690.00	412+00	691.50	-0.0608	690.77	-0.0608	690.04	-0.0608	689.31	
692.45	0.0608	691.72	0.0608	690.99	0.0608	690.26	412+25	691.76	-0.0608	691.03	-0.0608	690.30	-0.0608	689.57	
692.72	0.0608	691.99	0.0608	691.26	0.0608	690.53	412+50	692.02	-0.0608	691.29	-0.0608	690.56	-0.0608	689.83	
692.98	0.0608	692.25	0.0608	691.52	0.0608	690.79	412+75	692.28	-0.0608	691.55	-0.0608	690.82	-0.0608	690.09	
693.24	0.0608	692.51	0.0608	691.78	0.0608	691.05	413+00	692.54	-0.0608	691.81	-0.0608	691.08	-0.0608	690.35	
693.51	0.0608	692.78	0.0608	692.05	0.0608	691.32	413+25	692.80	-0.0608	692.07	-0.0608	691.34	-0.0608	690.61	
693.77	0.0608	693.04	0.0608	692.31	0.0608	691.58	413+50	693.06	-0.0608	692.33	-0.0608	691.60	-0.0608	690.87	
694.04	0.0608	693.31	0.0608	692.58	0.0608	691.85	413+75	693.32	-0.0608	692.59	-0.0608	691.86	-0.0608	691.13	
694.30	0.0608	693.57	0.0608	692.84	0.0608	692.11	414+00	693.57	-0.0608	692.84	-0.0608	692.11	-0.0608	691.38	
694.57	0.0608	693.84	0.0608	693.11	0.0608	692.38	414+25	693.83	-0.0608	693.10	-0.0608	692.37	-0.0608	691.64	
694.83	0.0608	694.10	0.0608	693.37	0.0608	692.64	414+50	694.09	-0.0608	693.36	-0.0608	692.63	-0.0608	691.90	
695.10	0.0608	694.37	0.0608	693.64	0.0608	692.91	414+75	694.35	-0.0608	693.62	-0.0608	692.89	-0.0608	692.16	
695.36	0.0608	694.63	0.0608	693.90	0.0608	693.17	415+00	694.61	-0.0608	693.88	-0.0608	693.15	-0.0608	692.42	
695.63	0.0608	694.90	0.0608	694.17	0.0608	693.44	415+25	694.87	-0.0608	694.14	-0.0608	693.41	-0.0608	692.68	
695.89	0.0608	695.16	0.0608	694.43	0.0608	693.70	415+50	695.13	-0.0608	694.40	-0.0608	693.67	-0.0608	692.94	
696.16	0.0608	695.43	0.0608	694.70	0.0608	693.97	415+75	695.39	-0.0608	694.66	-0.0608	693.93	-0.0608	693.20	
696.41	0.0608	695.68	0.0608	694.95	0.0608	694.22	416+00	695.64	-0.0608	694.91	-0.0608	694.18	-0.0608	693.45	
696.65	0.0608	695.92	0.0608	695.19	0.0608	694.46	416+25	695.89	-0.0608	695.16	-0.0608	694.43	-0.0608	693.70	
696.88	0.0608	696.15	0.0608	695.42	0.0608	694.69	416+50	696.13	-0.0608	695.40	-0.0608	694.67	-0.0608	693.94	
697.12	0.0608	696.39	0.0608	695.66	0.0608	694.93	416+75	696.37	-0.0608	695.64	-0.0608	694.91	-0.0608	694.18	
697.35	0.0608	696.62	0.0608	695.89	0.0608	695.16	417+00	696.62	-0.0608	695.89	-0.0608	695.16	-0.0608	694.43	
697.59	0.0608	696.86	0.0608	696.13	0.0608	695.40	417+25	696.86	-0.0608	696.13	-0.0608	695.40	-0.0608	694.67	
697.83	0.0608	697.10	0.0608	696.37	0.0608	695.64	417+50	697.11	-0.0608	696.38	-0.0608	695.65	-0.0608	694.92	
698.06	0.0608	697.33	0.0608	696.60	0.0608	695.87	417+75	697.35	-0.0608	696.62	-0.0608	695.89	-0.0608	695.16	
698.30	0.0608	697.57	0.0608	696.84	0.0608	696.11	418+00	697.59	-0.0608	696.86	-0.0608	696.13	-0.0608	695.40	
698.53	0.0608	697.80	0.0608	697.07	0.0608	696.34	418+25	697.84	-0.0608	697.11	-0.0608	696.38	-0.0608	695.65	
698.77	0.0608	698.04	0.0608	697.31	0.0608	696.58	418+50	698.08	-0.0608	697.35	-0.0608	696.62	-0.0608	695.89	
699.00	0.0608	698.27	0.0608	697.54	0.0608	696.81	418+75	698.32	-0.0608	697.59	-0.0608	696.86	-0.0608	696.13	
699.24	0.0608	698.51	0.0608	697.78	0.0608	697.05	419+00	698.57	-0.0608	697.84	-0.0608	697.11	-0.0608	696.38	
699.48	0.0608	698.75	0.0608	698.02	0.0608	697.29	419+25	698.81	-0.0608	698.08	-0.0608	697.35	-0.0608	696.62	
699.71	0.0608	698.98	0.0608	698.25	0.0608	697.52	419+50	699.06	-0.0608	698.33	-0.0608	697.60	-0.0608	696.87	
699.95	0.0608	699.22	0.0608	698.49	0.0608	697.76	419+75	699.30	-0.0608	698.57	-0.0608	697.84	-0.0608	697.11	
700.19	0.0608	699.46	0.0608	698.73	0.0608	698.00	420+00	699.54	-0.0608	698.81	-0.0608	698.08	-0.0608	697.35	
700.44	0.0608	699.71	0.0608	698.98	0.0608	698.25	420+25	699.79	-0.0608	699.06	-0.0608	698.33	-0.0608	697.60	
700.70	0.0608	699.97	0.0608	699.24	0.0608	698.51	420+50	700.03	-0.0608	699.30	-0.0608	698.57	-0.0608	697.84	
700.98	0.0608	700.25	0.0608	699.52	0.0608	698.79	420+75	700.27	-0.0608	699.54	-0.0608	698.81	-0.0608	698.08	
701.27	0.0608	700.54	0.0608	699.81	0.0608	699.08	421+00	700.52	-0.0608	699.79	-0.0608	699.06	-0.0608	698.33	
701.57	0.0608	700.84	0.0608	700.11	0.0608	699.38	421+25	700.79	-0.0608	700.06	-0.0608	699.33	-0.0608	698.60	
701.88	0.0608	701.15	0.0608	700.42	0.0608	699.69	421+50	701.06	-0.0608	700.33	-0.0608	699.60	-0.0608	698.87	
702.20	0.0608	701.47	0.0608	700.74	0.0608	700.01	421+75	701.36	-0.0608	700.63	-0.0608	699.90	-0.0608	699.17	
702.53	0.0608	701.80	0.0608	701.07	0.0608	700.34	422+00	701.66	-0.0608	700.93	-0.0608	700.20	-0.0608	699.47	
702.88	0.0608	702.15	0.0608	701.42	0.0608	700.69	422+25	701.99	-0.0608	701.26	-0.0608	700.53	-0.0608	699.80	
703.23	0.0608	702.50	0.0608	701.77	0.0608	701.04	422+50	702.32	-0.0608	701.59	-0.0608	700.86	-0.0608	700.13	
703.60	0.0608	702.87	0.0608	702.14	0.0608	701.41	422+75	702.67	-0.0608	701.94	-0.0608	701.21	-0.0608	700.48	
703.98	0.0608	703.25	0.0608	702.52	0.0608	701.79	423+00	703.04	-0.0608	702.31	-0.0608	701.58	-0.0608	700.85	
704.37	0.0608	703.64	0.0608	702.91	0.0608	702.18	423+25	703.42	-0.0608	702.69	-0.0608	701.96	-0.0608	701.23	

CALCULATED JGB
CHECKED MM

SUPERELEVATION TABLE I.R. 275

CLE-275-5.35

SUPERELEVATION TABLE

*P.I. STATION 414+01.91 | * COMPOUND SEE CURVE DATA

NORTHBOUND SIDE								SOUTHBOUND SIDE							
EOP 66' LT. ELEVATION	CROSS SLOPE	EOP 54' LT. ELEVATION	CROSS SLOPE	P.G.L. EOP 42' LT. ELEVATION	CROSS SLOPE	EOP 30' LT. ELEVATION	CENTERLINE STATION	EOP 30' RT. ELEVATION	CROSS SLOPE	P.G.L. EOP 42' RT. ELEVATION	CROSS SLOPE	EOP 54' RT. ELEVATION	CROSS SLOPE	EOP 66' RT. ELEVATION	REMARKS
CONTINUED															
704.77	0.0608	704.04	0.0608	703.31	0.0608	702.58	423+50	703.81	-0.0608	703.08	-0.0608	702.35	-0.0608	701.62	
705.18	0.0608	704.45	0.0608	703.72	0.0608	702.99	423+75	704.22	-0.0608	703.49	-0.0608	702.76	-0.0608	702.03	
705.61	0.0608	704.88	0.0608	704.15	0.0608	703.42	424+00	704.65	-0.0608	703.92	-0.0608	703.19	-0.0608	702.46	
706.04	0.0608	705.31	0.0608	704.58	0.0608	703.85	424+25	705.09	-0.0608	704.36	-0.0608	703.63	-0.0608	702.90	
706.49	0.0608	705.76	0.0608	705.03	0.0608	704.30	424+50	705.54	-0.0608	704.81	-0.0608	704.08	-0.0608	703.35	
706.95	0.0608	706.22	0.0608	705.49	0.0608	704.76	424+75	706.01	-0.0608	705.28	-0.0608	704.55	-0.0608	703.82	
707.42	0.0608	706.69	0.0608	705.96	0.0608	705.23	425+00	706.49	-0.0608	705.76	-0.0608	705.03	-0.0608	704.30	
707.90	0.0608	707.17	0.0608	706.44	0.0608	705.71	425+25	706.99	-0.0608	706.26	-0.0608	705.53	-0.0608	704.80	F.S.
708.31	0.0570	707.62	0.0570	706.94	0.0570	706.26	425+50	707.45	-0.0570	706.77	-0.0570	706.09	-0.0570	705.40	
708.72	0.0532	708.08	0.0532	707.44	0.0532	706.80	425+75	707.94	-0.0532	707.30	-0.0532	706.66	-0.0532	706.02	
709.14	0.0493	708.55	0.0493	707.96	0.0493	707.37	426+00	708.43	-0.0493	707.84	-0.0493	707.25	-0.0493	706.66	
709.57	0.0455	709.03	0.0455	708.48	0.0455	707.93	426+25	708.94	-0.0455	708.39	-0.0455	707.84	-0.0455	707.30	
710.02	0.0417	709.52	0.0417	709.02	0.0417	708.52	426+50	709.46	-0.0417	708.96	-0.0417	708.46	-0.0417	707.96	
710.04	0.0416	709.54	0.0416	709.04	0.0416	708.54	426+50.94	709.49	-0.0416	708.99	-0.0416	708.49	-0.0416	707.99	P.T.
710.48	0.0379	710.02	0.0379	709.57	0.0379	709.12	426+75	710.00	-0.0379	709.55	-0.0379	709.10	-0.0379	708.64	
710.96	0.0341	710.55	0.0341	710.14	0.0341	709.73	427+00	710.56	-0.0341	710.15	-0.0341	709.74	-0.0341	709.33	
711.44	0.0302	711.07	0.0302	710.71	0.0302	710.35	427+25	711.11	-0.0302	710.75	-0.0302	710.39	-0.0302	710.02	
711.93	0.0264	711.62	0.0264	711.30	0.0264	710.98	427+50	711.67	-0.0264	711.35	-0.0264	711.03	-0.0264	710.72	
712.43	0.0226	712.16	0.0226	711.89	0.0226	711.62	427+75	712.23	-0.0226	711.96	-0.0226	711.69	-0.0226	711.42	
712.94	0.0188	712.72	0.0188	712.49	0.0188	712.26	428+00	712.79	-0.0188	712.56	-0.0188	712.33	-0.0188	712.11	
713.37	0.0156	713.19	0.0156	713.00	0.0156	712.81	428+20.81	713.25	-0.0156	713.06	-0.0156	712.87	-0.0156	712.69	R.C.
713.47	0.0150	713.29	0.0156	713.10	0.0156	712.91	428+25	713.34	-0.0150	713.16	-0.0150	712.98	-0.0156	712.79	
714.02	0.0111	713.89	0.0156	713.70	0.0156	713.51	428+50	713.90	-0.0111	713.77	-0.0111	713.64	-0.0156	713.45	
714.58	0.0073	714.49	0.0156	714.30	0.0156	714.11	428+75	714.46	-0.0073	714.37	-0.0073	714.28	-0.0156	714.09	
715.13	0.0035	715.09	0.0156	714.90	0.0156	714.71	429+00	715.01	-0.0035	714.97	-0.0035	714.93	-0.0156	714.74	
715.64	0.0000	715.64	0.0156	715.45	0.0156	715.26	429+22.91	715.52	0.0000	715.52	0.0000	715.52	-0.0156	715.33	
715.68	-0.0003	715.69	0.0156	715.50	0.0156	715.31	429+25	715.57	0.0003	715.57	0.0003	715.57	-0.0156	715.39	
716.25	-0.0041	716.30	0.0156	716.11	0.0156	715.92	429+50	716.13	0.0041	716.18	0.0041	716.23	-0.0156	716.04	
716.80	-0.0080	716.90	0.0156	716.71	0.0156	716.52	429+75	716.68	0.0080	716.78	0.0080	716.88	-0.0156	716.69	
717.36	-0.0118	717.50	0.0156	717.31	0.0156	717.12	430+00	717.24	0.0118	717.38	0.0118	717.52	-0.0156	717.33	
717.91	-0.0156	718.10	0.0156	717.91	0.0156	717.72	430+25	717.79	0.0156	717.98	0.0156	718.17	-0.0156	717.98	N.C.

SUPERELEVATION TABLE

P.I. STATION 473+48.57 | Dc = 0° 44' 40"

NORTHBOUND SIDE								SOUTHBOUND SIDE							
EOP 66' LT. ELEVATION	CROSS SLOPE	EOP 54' LT. ELEVATION	CROSS SLOPE	P.G.L. EOP 42' LT. ELEVATION	CROSS SLOPE	EOP 30' LT. ELEVATION	CENTERLINE STATION	EOP 30' RT. ELEVATION	CROSS SLOPE	P.G.L. EOP 42' RT. ELEVATION	CROSS SLOPE	EOP 54' RT. ELEVATION	CROSS SLOPE	EOP 66' RT. ELEVATION	REMARKS
784.82	-0.0156	785.01	0.0156	784.82	0.0156	784.64	458+75	784.59	0.0156	784.78	0.0156	784.97	-0.0156	784.78	N.C.
785.21	-0.0156	785.40	0.0126	785.25	0.0126	785.10	459+00	785.02	0.0156	785.21	0.0156	785.40	-0.0126	785.25	
785.60	-0.0156	785.79	0.0097	785.67	0.0097	785.55	459+25	785.44	0.0156	785.63	0.0156	785.82	-0.0097	785.70	
785.97	-0.0156	786.16	0.0067	786.08	0.0067	786.00	459+50	785.85	0.0156	786.04	0.0156	786.23	-0.0067	786.15	
786.34	-0.0156	786.52	0.0037	786.48	0.0037	786.44	459+75	786.25	0.0156	786.44	0.0156	786.63	-0.0037	786.58	
786.70	-0.0156	786.89	0.0007	786.88	0.0007	786.87	460+00	786.64	0.0156	786.83	0.0156	787.02	-0.0007	787.01	
786.78	-0.0156	786.97	0.0000	786.97	0.0000	786.97	460+06.09	786.74	0.0156	786.93	0.0156	787.12	0.0000	787.12	
787.05	-0.0156	787.23	-0.0023	787.26	-0.0023	787.29	460+25	787.03	0.0156	787.22	0.0156	787.41	0.0023	787.43	
787.39	-0.0156	787.58	-0.0052	787.64	-0.0052	787.70	460+50	787.41	0.0156	787.60	0.0156	787.79	0.0052	787.85	
787.71	-0.0156	787.90	-0.0082	788.00	-0.0082	788.10	460+75	787.78	0.0156	787.97	0.0156	788.16	0.0082	788.26	
788.04	-0.0156	788.23	-0.0112	788.36	-0.0112	788.49	461+00	788.14	0.0156	788.33	0.0156	788.52	0.0112	788.65	

SUPERELEVATION TABLE

P.I. STATION 473+48.57 | Dc = 0° 44' 40"

NORTHBOUND SIDE								SOUTHBOUND SIDE							
EOP 66' LT. ELEVATION	CROSS SLOPE	EOP 54' LT. ELEVATION	CROSS SLOPE	P.G.L. EOP 42' LT. ELEVATION	CROSS SLOPE	EOP 30' LT. ELEVATION	CENTERLINE STATION	EOP 30' RT. ELEVATION	CROSS SLOPE	P.G.L. EOP 42' RT. ELEVATION	CROSS SLOPE	EOP 54' RT. ELEVATION	CROSS SLOPE	EOP 66' RT. ELEVATION	REMARKS
788.35	-0.0156	788.54	-0.0142	788.71	-0.0142	788.88	461+25	788.49	0.0156	788.68	0.0156	788.87	0.0142	789.04	
788.51	-0.0156	788.69	-0.0156	788.88	-0.0156	789.07	461+37.18	788.66	0.0156	788.85	0.0156	789.04	0.0156	789.22	R.C.
788.64	-0.0171	788.84	-0.0171	789.05	-0.0171	789.26	461+50	788.81	0.0171	789.02	0.0171	789.23	0.0171	789.43	
788.84	-0.0193	789.07	-0.0193	789.30	-0.0193	789.53	461+68.36	789.04	0.0193	789.27	0.0193	789.50	0.0193	789.73	P.C.
788.90	-0.0201	789.14	-0.0201	789.38	-0.0201	789.62	461+75	789.12	0.0201	789.36	0.0201	789.60	0.0201	789.84	
789.16	-0.0231	789.43	-0.0231	789.71	-0.0231	789.99	462+00	789.41	0.0231	789.69	0.0231	789.97	0.0231	790.24	
789.39	-0.0261	789.71	-0.0261	790.02	-0.0261	790.33	462+25	789.69	0.0261	790.00	0.0261	790.31	0.0261	790.63	
789.63	-0.0290	789.98	-0.0290	790.33	-0.0290	790.68	462+50	789.97	0.0290	790.32	0.0290	790.67	0.0290	791.02	
789.85	-0.0320	790.24	-0.0320	790.62	-0.0320	791.00	462+75	790.24	0.0320	790.62	0.0320	791.00	0.0320	791.39	F.S.
790.14	-0.0320	790.53	-0.0320	790.91	-0.0320	791.29	463+00	790.53	0.0320	790.91	0.0320	791.29	0.0320	791.68	
790.42	-0.0320	790.81	-0.0320	791.19	-0.0320	791.57	463+25	790.82	0.0320	791.20	0.0320	791.58	0.0320	791.97	
790.69	-0.0320	791.08	-0.0320	791.46	-0.0320	791.84	463+50	791.09	0.0320	791.47	0.0320	791.85	0.0320	792.24	
790.95	-0.0320	791.34	-0.0320	791.72	-0.0320	792.10	463+75	791.36	0.0320	791.74	0.0320	792.12	0.0320	792.51	
791.21	-0.0320	791.60	-0.0320	791.98	-0.0320	792.36	464+00	791.62	0.0320	792.00	0.0320	792.38	0.0320	792.77	
791.46	-0.0320	791.85	-0.0320	792.23	-0.0320	792.61	464+25	791.88	0.0320	792.26	0.0320	792.64	0.0320	793.03	
791.71	-0.0320	792.10	-0.0320	792.48	-0.0320	792.86	464+50	792.13	0.0320	792.51	0.0320	792.89	0.0320	793.28	
791.96	-0.0320	792.35	-0.0320	792.73	-0.0320	793.11	464+75	792.38	0.0320	792.76	0.0320	793.14	0.0320	793.53	
792.21	-0.0320	792.60	-0.0320	792.98	-0.0320	793.36	465+00	792.63	0.0320	793.01	0.0320	793.39	0.0320	793.78	
792.46	-0.0320	792.85	-0.0320	793.23	-0.0320	793.61	465+25	792.88	0.0320	793.26	0.0320	793.64	0.0320	794.03	
792.71	-0.0320	793.10	-0.0320	793.48	-0.0320	793.86	465+50	793.13	0.0320	793.51	0.0320	793.89	0.0320	794.28	
792.96	-0.0320	793.35	-0.0320	793.73	-0.0320	794.11	465+75	793.38	0.0320	793.76	0.0320	794.14	0.0320	794.53	
793.20	-0.0320	793.59	-0.0320	793.97	-0.0320	794.35	466+00	793.62	0.0320	794.00	0.0320	794.38	0.0320	794.77	
793.45	-0.0320	793.84	-0.0320	794.22	-0.0320	794.60	466+25	793.87	0.0320	794.25	0.0320	794.63	0.0320	795.02	
793.70	-0.0320	794.09	-0.0320	794.47	-0.0320	794.85	466+50	794.12	0.0320	794.50	0.0320	794.88	0.0320	795.27	
793.95	-0.0320	794.34	-0.0320	794.72	-0.0320	795.10	466+75	794.37	0.0320	794.75	0.0320	795.13	0.0320	795.52	
794.20	-0.0320	794.59	-0.0320	794.97	-0.0320	795.35	467+00	794.62	0.0320	795.00	0.0320	795.38	0.0320	795.77	
794.45	-0.0320	794.84	-0.0320	795.22	-0.0320	795.60	467+25	794.87	0.0320	795.25	0.0320	795.63	0.0320	796.02	
794.70	-0.0320	795.09	-0.0320	795.47	-0.0320	795.85	467+50	795.12	0.0320	795.50	0.0320	795.88	0.0320	796.27	
794.95	-0.0320	795.34	-0.0320	795.72	-0.0320	796.10	467+75	795.37	0.0320	795.75	0.0320	796.13	0.0320	796.52	
795.20	-0.0320	795.59	-0.0320	795.97	-0.0320	796.35	468+00	795.62	0.0320	796.00	0.0320	796.38	0.0320	796.77	
795.45	-0.0320	795.84	-0.0320	796.22	-0.0320	796.60	468+25	795.87	0.0320	796.25	0.0320	796.63	0.0320	797.02	
795.70	-0.0320	796.09	-0.0320	796.47	-0.0320	796.85	468+50	796.12	0.0320	796.50	0.0320	796.88	0.0320	797.27	
795.95	-0.0320	796.34	-0.0320	796.72	-0.0320	797.10	468+75	796.37	0.0320	796.75	0.0320	797.13	0.0320	797.52	
796.20	-0.0320	796.59	-0.0320	796.97	-0.0320	797.35	469+00	796.62	0.0320	797.00	0.0320	797.38	0.0320	797.77	
796.45	-0.0320	796.84	-0.0320	797.22	-0.0320	797.60	469+25	796.87	0.0320	797.25	0.0320	797.63	0.0320	798.02	
796.70	-0.0320	797.09	-0.0320	797.47	-0.0320	797.85	469+50	797.12	0.0320	797.50	0.0320	797.88	0.0320	798.27	
796.95	-0.0320	797.34	-0.0320	797.72	-0.0320	798.10	469+75	797.37	0.0320	797.75	0.0320	798.13	0.0320	798.52	
797.20	-0.0320	797.59	-0.0320	797.97	-0.0320	798.35	470+00	797.62	0.0320	798.00	0.0320	798.38	0.0320	798.77	
797.45	-0.0320	797.84	-0.0320	798.22	-0.0320	798.60	470+25	797.87	0.0320	798.25	0.0320	798.63	0.0320	799.02	
797.70	-0.0320	798.09	-0.0320	798.47	-0.0320	798.85	470+50	798.12	0.0320	798.50	0.0320	798.88	0.0320	799.27	
797.95	-0.0320	798.34	-0.0320	798.72	-0.0320	799.10	470+75	798.37	0.0320	798.75	0.0320	799.13	0.0320	799.52	
798.20	-0.0320	798.59	-0.0320	798.97	-0.0320	799.35	471+00	798.62	0.0320	799.00	0.0320	799.38	0.0320	799.77	
798.45	-0.0320	798.84	-0.0320	799.22	-0.0320	799.60	471+25	798.87	0.0320	799.25	0.0320	799.63	0.0320	800.02	
798.70	-0.0320	799.09	-0.0320	799.47	-0.0320	799.85	471+50	799.12	0.0320	799.50	0.0320	799.88	0.0320	800.27	
798.95	-0.0320	799.34	-0.0320	799.72	-0.0320	800.10	471+75	799.37	0.0320	799.75	0.0320	800.13	0.0320	800.52	
799.20	-0.0320	799.59	-0.0320	799.97	-0.0320	800.35	472+00	799.62	0.0320	800.00	0.0320	800.38	0.0320	800.77	
799.45	-0.0320	799.84	-0.0320	800.22	-0.0320	800.60	472+25	799.87	0.0320	800.25	0.0320	800.63	0.0320	801.02	
799.70	-0.0320	800.09	-0.0320	800.47	-0.0320	800.85	472+50	800.12	0.0320	800.50	0.0320	800.88	0.0320	801.27	
799.95	-0.0320	800.34	-0.0320	800.72	-0.0320	801.10	472+75	800.37	0.0320	800.75	0.0320	801.13	0.0320	801.52	
800.20	-0.0320	800.59	-0.0320	800.97	-0.0320	801.35	473+00	800.62	0.0320	801.00	0.0320	801.38	0.0320	801.77	
800.45	-0.0320	800.84	-0.0320	801.22	-0.0320	801.60	473+25	800.87	0.0320	801.25	0.0320	801.63	0.0320	802.02	
800.70	-0.0320	801.09	-0.0320	801.47	-0.0320	801.85	473+50	801.12	0.0320	801.50	0.0320	801.88	0.0320	802.27	
800.95	-0.0320	801.34	-0.0320	801.72	-0.0320	802.10	473+75	801.37	0.0320	801.75	0.0320	802.13	0.0320	802.52	
801.20	-0.0320	801.59	-0.0320	801.97	-0.0320	802.35	474+00	801.62	0.0320	802.00	0.0320	802.38	0.0320	802.77	

CALCULATED TGB
CHECKED AM

SUPERELEVATION TABLE I.R. 275

CLE-275-5.35

243
857

SUPERELEVATION TABLE

P.I. STATION 473+48.57 | Dc = 0° 44′ 40″

NORTHBOUND SIDE								SOUTHBOUND SIDE							REMARKS
EOP 66' LT. ELEVATION	CROSS SLOPE	EOP 54' LT. ELEVATION	CROSS SLOPE	P.G.L. EOP 42' LT. ELEVATION	CROSS SLOPE	EOP 30' LT. ELEVATION	CENTERLINE STATION	EOP 30' RT. ELEVATION	CROSS SLOPE	P.G.L. EOP 42' RT. ELEVATION	CROSS SLOPE	EOP 54' RT. ELEVATION	CROSS SLOPE	EOP 66' RT. ELEVATION	
801.44	-0.0320	801.83	-0.0320	802.21	-0.0320	802.59	474+25	801.87	0.0320	802.25	0.0320	802.63	0.0320	803.02	
801.69	-0.0320	802.08	-0.0320	802.46	-0.0320	802.84	474+50	802.12	0.0320	802.50	0.0320	802.88	0.0320	803.27	
801.94	-0.0320	802.33	-0.0320	802.71	-0.0320	803.09	474+75	802.37	0.0320	802.75	0.0320	803.13	0.0320	803.52	
802.19	-0.0320	802.58	-0.0320	802.96	-0.0320	803.34	475+00	802.62	0.0320	803.00	0.0320	803.38	0.0320	803.77	
802.44	-0.0320	802.83	-0.0320	803.21	-0.0320	803.59	475+25	802.87	0.0320	803.25	0.0320	803.63	0.0320	804.02	
802.69	-0.0320	803.08	-0.0320	803.46	-0.0320	803.84	475+50	803.12	0.0320	803.50	0.0320	803.88	0.0320	804.27	
802.94	-0.0320	803.33	-0.0320	803.71	-0.0320	804.09	475+75	803.37	0.0320	803.75	0.0320	804.13	0.0320	804.52	
803.19	-0.0320	803.58	-0.0320	803.96	-0.0320	804.34	476+00	803.61	0.0320	803.99	0.0320	804.37	0.0320	804.76	
803.44	-0.0320	803.83	-0.0320	804.21	-0.0320	804.59	476+25	803.86	0.0320	804.24	0.0320	804.62	0.0320	805.01	
803.69	-0.0320	804.08	-0.0320	804.46	-0.0320	804.84	476+50	804.11	0.0320	804.49	0.0320	804.87	0.0320	805.26	
803.94	-0.0320	804.33	-0.0320	804.71	-0.0320	805.09	476+75	804.36	0.0320	804.74	0.0320	805.12	0.0320	805.51	
804.19	-0.0320	804.58	-0.0320	804.96	-0.0320	805.34	477+00	804.61	0.0320	804.99	0.0320	805.37	0.0320	805.76	
804.44	-0.0320	804.83	-0.0320	805.21	-0.0320	805.59	477+25	804.86	0.0320	805.24	0.0320	805.62	0.0320	806.01	
804.69	-0.0320	805.08	-0.0320	805.46	-0.0320	805.84	477+50	805.11	0.0320	805.49	0.0320	805.87	0.0320	806.26	
804.94	-0.0320	805.33	-0.0320	805.71	-0.0320	806.09	477+75	805.36	0.0320	805.74	0.0320	806.12	0.0320	806.51	
805.19	-0.0320	805.58	-0.0320	805.96	-0.0320	806.34	478+00	805.61	0.0320	805.99	0.0320	806.37	0.0320	806.76	
805.44	-0.0320	805.83	-0.0320	806.21	-0.0320	806.59	478+25	805.86	0.0320	806.24	0.0320	806.62	0.0320	807.01	
805.69	-0.0320	806.08	-0.0320	806.46	-0.0320	806.84	478+50	806.11	0.0320	806.49	0.0320	806.87	0.0320	807.26	
805.94	-0.0320	806.33	-0.0320	806.71	-0.0320	807.09	478+75	806.36	0.0320	806.74	0.0320	807.12	0.0320	807.51	
806.19	-0.0320	806.58	-0.0320	806.96	-0.0320	807.34	479+00	806.61	0.0320	806.99	0.0320	807.37	0.0320	807.76	
806.44	-0.0320	806.83	-0.0320	807.21	-0.0320	807.59	479+25	806.86	0.0320	807.24	0.0320	807.62	0.0320	808.01	
806.69	-0.0320	807.08	-0.0320	807.46	-0.0320	807.84	479+50	807.11	0.0320	807.49	0.0320	807.87	0.0320	808.26	
806.94	-0.0320	807.33	-0.0320	807.71	-0.0320	808.09	479+75	807.36	0.0320	807.74	0.0320	808.12	0.0320	808.51	
807.19	-0.0320	807.58	-0.0320	807.96	-0.0320	808.34	480+00	807.61	0.0320	807.99	0.0320	808.37	0.0320	808.76	
807.44	-0.0320	807.83	-0.0320	808.21	-0.0320	808.59	480+25	807.86	0.0320	808.24	0.0320	808.62	0.0320	809.01	
807.69	-0.0320	808.08	-0.0320	808.46	-0.0320	808.84	480+50	808.11	0.0320	808.49	0.0320	808.87	0.0320	809.26	
807.94	-0.0320	808.33	-0.0320	808.71	-0.0320	809.09	480+75	808.36	0.0320	808.74	0.0320	809.12	0.0320	809.51	
808.19	-0.0320	808.58	-0.0320	808.96	-0.0320	809.34	481+00	808.61	0.0320	808.99	0.0320	809.37	0.0320	809.76	
808.44	-0.0320	808.83	-0.0320	809.21	-0.0320	809.59	481+25	808.85	0.0320	809.23	0.0320	809.61	0.0320	810.00	
808.69	-0.0320	809.08	-0.0320	809.46	-0.0320	809.84	481+50	809.10	0.0320	809.48	0.0320	809.86	0.0320	810.25	
808.94	-0.0320	809.33	-0.0320	809.71	-0.0320	810.09	481+75	809.35	0.0320	809.73	0.0320	810.11	0.0320	810.50	
809.19	-0.0320	809.58	-0.0320	809.96	-0.0320	810.34	482+00	809.60	0.0320	809.98	0.0320	810.36	0.0320	810.75	
809.44	-0.0320	809.83	-0.0320	810.21	-0.0320	810.59	482+25	809.85	0.0320	810.23	0.0320	810.61	0.0320	811.00	
809.68	-0.0320	810.07	-0.0320	810.45	-0.0320	810.83	482+50	810.10	0.0320	810.48	0.0320	810.86	0.0320	811.25	
809.93	-0.0320	810.32	-0.0320	810.70	-0.0320	811.08	482+75	810.35	0.0320	810.73	0.0320	811.11	0.0320	811.50	
810.18	-0.0320	810.57	-0.0320	810.95	-0.0320	811.33	483+00	810.60	0.0320	810.98	0.0320	811.36	0.0320	811.75	
810.43	-0.0320	810.82	-0.0320	811.20	-0.0320	811.58	483+25	810.85	0.0320	811.23	0.0320	811.61	0.0320	812.00	
810.68	-0.0320	811.07	-0.0320	811.45	-0.0320	811.83	483+50	811.10	0.0320	811.48	0.0320	811.86	0.0320	812.25	
810.93	-0.0320	811.32	-0.0320	811.70	-0.0320	812.08	483+75	811.35	0.0320	811.73	0.0320	812.11	0.0320	812.50	
811.18	-0.0320	811.57	-0.0320	811.95	-0.0320	812.33	484+00	811.60	0.0320	811.98	0.0320	812.36	0.0320	812.75	F.S.
811.50	-0.0290	811.85	-0.0290	812.20	-0.0290	812.55	484+25	811.88	0.0290	812.23	0.0290	812.58	0.0290	812.93	
811.82	-0.0261	812.14	-0.0261	812.45	-0.0261	812.76	484+50	812.17	0.0261	812.48	0.0261	812.79	0.0261	813.11	
812.15	-0.0231	812.42	-0.0231	812.70	-0.0231	812.98	484+75	812.45	0.0231	812.73	0.0231	813.01	0.0231	813.28	
812.47	-0.0201	812.71	-0.0201	812.95	-0.0201	813.19	485+00	812.74	0.0201	812.98	0.0201	813.22	0.0201	813.46	
812.60	-0.0193	812.83	-0.0193	813.06	-0.0193	813.29	485+10.53	812.85	0.0193	813.08	0.0193	813.31	0.0193	813.54	P.T.
812.60	-0.0193	812.83	-0.0193	813.06	-0.0193	813.29	485+11.38	812.85	0.0193	813.08	0.0193	813.31	0.0193	813.54	
812.78	-0.0171	812.98	-0.0171	813.19	-0.0171	813.40	485+25	813.01	0.0171	813.22	0.0171	813.43	0.0171	813.63	
812.95	-0.0156	813.13	-0.0156	813.32	-0.0156	813.51	485+37.82	813.16	0.0156	813.35	0.0156	813.54	0.0156	813.72	R.C.
813.08	-0.0156	813.27	-0.0142	813.44	-0.0142	813.61	485+50	813.28	0.0156	813.47	0.0156	813.66	0.0142	813.83	
813.37	-0.0156	813.56	-0.0112	813.69	-0.0112	813.82	485+75	813.53	0.0156	813.72	0.0156	813.91	0.0112	814.04	
813.65	-0.0156	813.84	-0.0082	813.94	-0.0082	814.04	486+00	813.78	0.0156	813.97	0.0156	814.16	0.0082	814.26	
813.94	-0.0156	814.13	-0.0052	814.19	-0.0052	814.25	486+25	814.03	0.0156	814.22	0.0156	814.41	0.0052	814.47	
814.23	-0.0156	814.41	-0.0023	814.44	-0.0023	814.47	486+50	814.28	0.0156	814.47	0.0156	814.66	0.0023	814.68	
814.44	-0.0156	814.63	0.0000	814.63	0.0000	814.63	486+68.91	814.47	0.0156	814.66	0.0156	814.85	0.0000	814.85	

SUPERELEVATION TABLE

P.I. STATION 473+48.57 | Dc = 0° 44′ 40″

NORTHBOUND SIDE								SOUTHBOUND SIDE							REMARKS
EOP 66' LT. ELEVATION	CROSS SLOPE	EOP 54' LT. ELEVATION	CROSS SLOPE	P.G.L. EOP 42' LT. ELEVATION	CROSS SLOPE	EOP 30' LT. ELEVATION	CENTERLINE STATION	EOP 30' RT. ELEVATION	CROSS SLOPE	P.G.L. EOP 42' RT. ELEVATION	CROSS SLOPE	EOP 54' RT. ELEVATION	CROSS SLOPE	EOP 66' RT. ELEVATION	
814.51	-0.0156	814.70	0.0007	814.69	0.0007	814.68	486+75	814.53	0.0156	814.72	0.0156	814.91	-0.0007	814.90	
814.80	-0.0156	814.98	0.0037	814.94	0.0037	814.90	487+00	814.78	0.0156	814.97	0.0156	815.16	-0.0037	815.11	
815.08	-0.0156	815.27	0.0067	815.19	0.0067	815.11	487+25	815.03	0.0156	815.22	0.0156	815.41	-0.0067	815.33	
815.37	-0.0156	815.56	0.0097	815.44	0.0097	815.32	487+50	815.27	0.0156	815.46	0.0156	815.65	-0.0097	815.53	
815.65	-0.0156	815.84	0.0126	815.69	0.0126	815.54	487+75	815.52	0.0156	815.71	0.0156	815.90	-0.0126	815.75	
815.94	-0.0156	816.13	0.0156	815.94	0.0156	815.75	488+00	815.77	0.0156	815.96	0.0156	816.15	-0.0156	815.96	N.C.

CALCULATED JTG8 CHECKED MM

SUPERELEVATION TABLE I.R. 275

CLE-275-5.35

244 857

SUPERELEVATION TABLE

P.I. STATION 47+18.16 | Dc = 26° 00′ 00″

LEFT SIDE					CENTERLINE CONTROL		RIGHT SIDE					REMARKS
EDGE ELEVATION	TRANSITION RATE	ELEVATION CORRECTION	CROSS SLOPE	WIDTH	STATION	PROFILE GRADE	WIDTH	CROSS SLOPE	ELEVATION CORRECTION	TRANSITION RATE	EDGE ELEVATION	
824.85		-0.18	-0.0156	11.82	46+00	825.03	11.82	-0.0156	-0.18		824.85	N.C.
824.97	267:1	-0.09	-0.0078	11.94	46+25	825.06	11.94	-0.0156	-0.19		824.87	
825.22	267:1	0.00	0.0000	12.00	46+50	825.22	12.00	-0.0156	-0.19		825.03	
825.55	267:1	0.09	0.0078	12.00	46+75	825.46	12.00	-0.0156	-0.19		825.27	
825.90		0.19	0.0156	12.00	47+00	825.71	12.00	-0.0156	-0.19		825.52	R.C.
826.01		0.19	0.0156	12.00	47+11.74	825.82	12.00	-0.0156	-0.19		825.63	R.C.
826.06	267:1	0.14	0.0115	12.00	47+25	825.92	12.00	-0.0156	-0.19		825.73	
826.09	267:1	0.04	0.0037	12.00	47+50	826.05	12.00	-0.0156	-0.19		825.86	
826.06	267:1	-0.05	-0.0041	12.00	47+75	826.11	12.00	-0.0156	-0.19		825.92	
825.95	267:1	-0.14	-0.0119	12.00	48+00	826.09	12.00	-0.0156	-0.19		825.90	
825.86		-0.19	-0.0156	12.00	48+11.74	826.05	12.00	-0.0156	-0.19		825.86	N.C.
825.80		-0.19	-0.0156	12.00	48+25	825.99	12.00	-0.0156	-0.19		825.80	N.C.

SUPERELEVATION TABLE

P.I. STATION 52+95.27 | Dc = 28° 00′ 00″

LEFT SIDE					CENTERLINE CONTROL		RIGHT SIDE					REMARKS
EDGE ELEVATION	TRANSITION RATE	ELEVATION CORRECTION	CROSS SLOPE	WIDTH	STATION	PROFILE GRADE	WIDTH	CROSS SLOPE	ELEVATION CORRECTION	TRANSITION RATE	EDGE ELEVATION	
823.73		-0.19	-0.0156	12.00	51+50	823.92	12.00	-0.0156	-0.19		823.73	
823.56		-0.19	-0.0156	12.00	51+75	823.75	12.00	-0.0156	-0.19		823.56	
823.47		-0.19	-0.0156	12.00	51+87.39	823.66	12.00	-0.0156	-0.19		823.47	N.C.
823.38		-0.19	-0.0156	12.00	52+00	823.57	12.00	-0.0117	-0.14	267:1	823.43	
823.17		-0.19	-0.0156	12.00	52+25	823.36	12.00	-0.0039	-0.05	267:1	823.31	
822.93		-0.19	-0.0156	12.00	52+50	823.12	12.00	0.0039	0.05	267:1	823.17	
822.66		-0.19	-0.0156	12.00	52+75	822.85	12.00	0.0117	0.14	267:1	822.99	
822.52		-0.19	-0.0156	12.00	52+87.39	822.71	12.00	0.0156	0.19		822.90	R.C.
822.37		-0.19	-0.0156	12.00	53+00	822.56	12.00	0.0156	0.19		822.75	
822.07		-0.19	-0.0156	12.00	53+25	822.26	12.00	0.0156	0.19		822.45	
821.77		-0.19	-0.0156	12.00	53+50	821.96	12.00	0.0156	0.19		822.15	
821.56		-0.19	-0.0156	12.00	53+68	821.75	12.00	0.0156	0.19		821.94	R.C.
821.47		-0.19	-0.0156	12.00	53+75	821.66	12.00	0.0134	0.16	267:1	821.82	
821.24		-0.17	-0.0156	11.05	54+00	821.41	11.05	0.0056	0.06	267:1	821.47	
821.23		-0.16	-0.0156	10.06	54+25	821.39	10.06	-0.0022	-0.02	267:1	821.37	
821.48		-0.14	-0.0156	9.08	54+50	821.62	9.08	-0.0100	-0.09		821.53	
821.79		-0.13	-0.0156	8.36	54+68	821.92	8.36	-0.0156	-0.13		821.79	N.C.

CALCULATED JCB | CHECKED AM

SUPERELEVATION TABLE T.R. 211

CLE-275-5.35

245
857

PROJECT DESCRIPTION

Area to undergo Excavation, Filling and Grading _____ 47 Acres

Runoff Coefficient for Pre-Construction site _____ 0.63

Runoff Coefficient for Post-Construction site _____ 0.81

Soil Data _____ See Soil Profiles in the Soils Report

Immediate Receiveing Waters _____ East Fork of Little Miami River

Subsequent Receiving Waters _____ Ohio River

U.S.G.S. Quadrant

MADERIA, OHIO No. 39084-B3-TF-024

WITHAMSVILLE, OHIO-KY. No. 39084-A3-TF-024

LATITUDE: 39°09'55" LONGITUDE: 84°16'00"

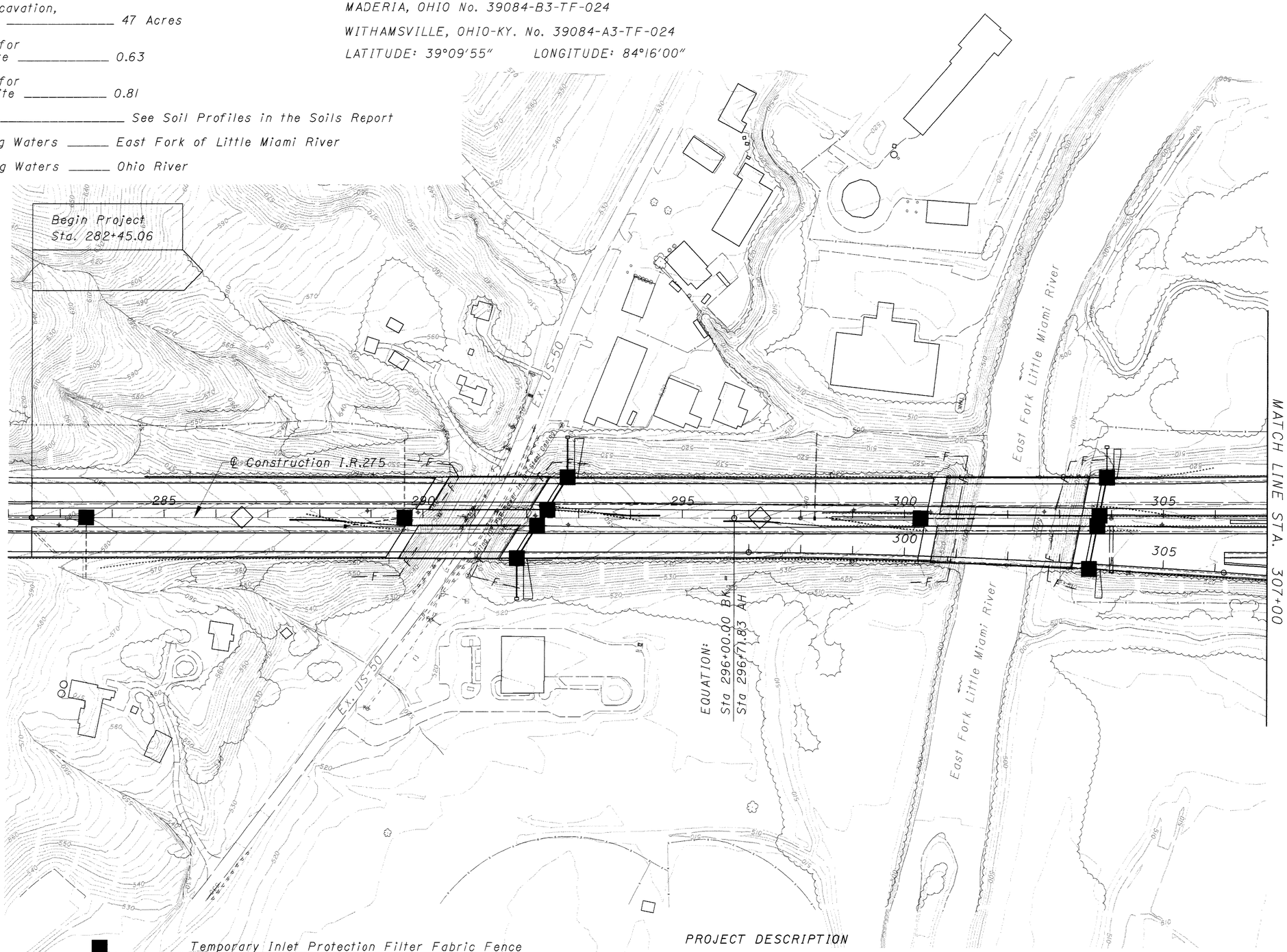

■ Temporary Inlet Protection Filter Fabric Fence (30 Linear Feet per Catch Basin or Inlet)

◇ Temporary Ditch Check Filter Fabric Fence (30 Linear Feet per Ditch Check)

——— F ——— Temporary Perimeter Filter Fabric Fence

PROJECT DESCRIPTION

THIS IMPROVEMENT IS ESPECIALLY DESIGNED TO ACCOMODATE GROWING TRAFFIC VOLUMES BY ADDING A 12' MEDIAN LANE AND A 12' MEDIAN SHOULDER TO BOTH NORTH AND SOUTH BOUND LANES, RESURFACING OF THE ENTIRE MAINLINE, AND RESURFACING OF RAMPS A,C,D,G, & H AT THE US50J INTERCHANGE. DRAINAGE FACILITIES IN THE MEDIAN WILL BE REVISED. ALL GUARDRAIL, FENCING, SIGNS AND SUPPORTS SHALL BE REPLACED. THE US-50J INTERCHANGE RAMPS SHALL HAVE ALL NEW LIGHTING INSTALLED. EXISTING MAINLINE BRIDGES TO BE WIDENED IN THE MEDIAN AND CONCRETE DECK TO BE REPLACED. THE BRIDGE ON TR211 WILL BE JACKED TO MEET VERTICAL CLEARANCES OVER I-275.

N

0 100 200
50
HORIZONTAL SCALE IN FEET

CALCULATED AM
CHECKED JGB

STORM WATER POLLUTION PREVENTION PLAN
STA 282+45.06 TO STA 307+00

CLE-275-5.35

246
857

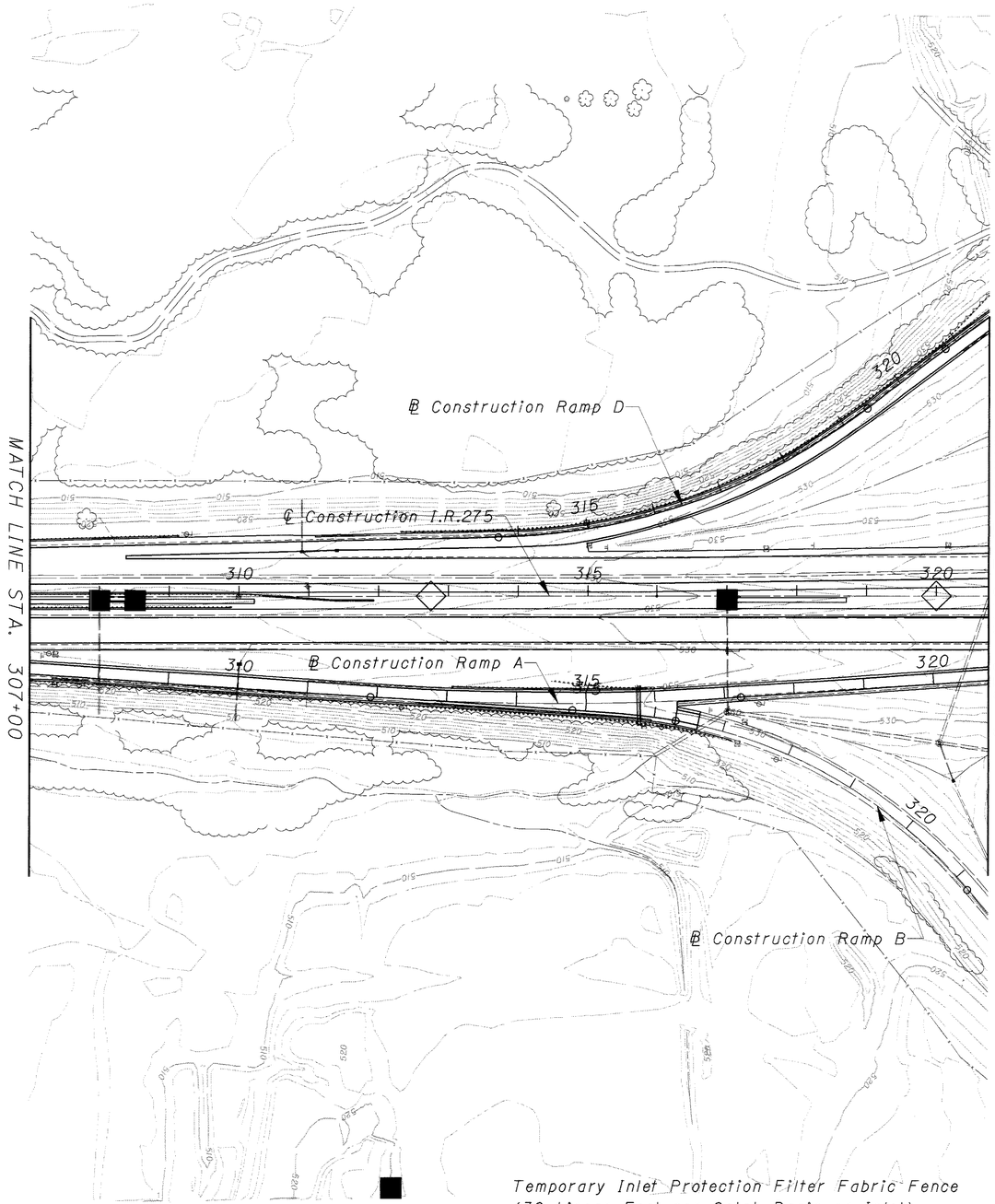
℄ Construction Ramp D
℄ Construction I.R.275
℄ Construction Ramp A
℄ Construction Ramp B
MATCH LINE STA. 307+00
MATCH LINE STA. 320+75
310
315
320
320
320

Temporary Inlet Protection Filter Fabric Fence
(30 Linear Feet per Catch Basin or Inlet)

Temporary Ditch Check Filter Fabric Fence
(30 Linear Feet per Ditch Check)

F Temporary Perimeter Filter Fabric Fence

MATCH LINE STA. 320+75

℄ Construction Ramp C

℄ Construction Ramp D

℄ Construction Ramp E

℄ Construction Ramp D2

℄ Construction US-50J

℄ Construction Ramp G

℄ Construction I.R.275

℄ Construction Ramp H

℄ Construction Ramp F

MATCH LINE STA. 336+00

N

0 50 100 200
HORIZONTAL
SCALE IN FEET

CALCULATED AM
CHECKED JGS

STORM WATER POLLUTION PREVENTION PLAN
STA 320+75 TO STA 336+00

CLE-275-5.35

248
857

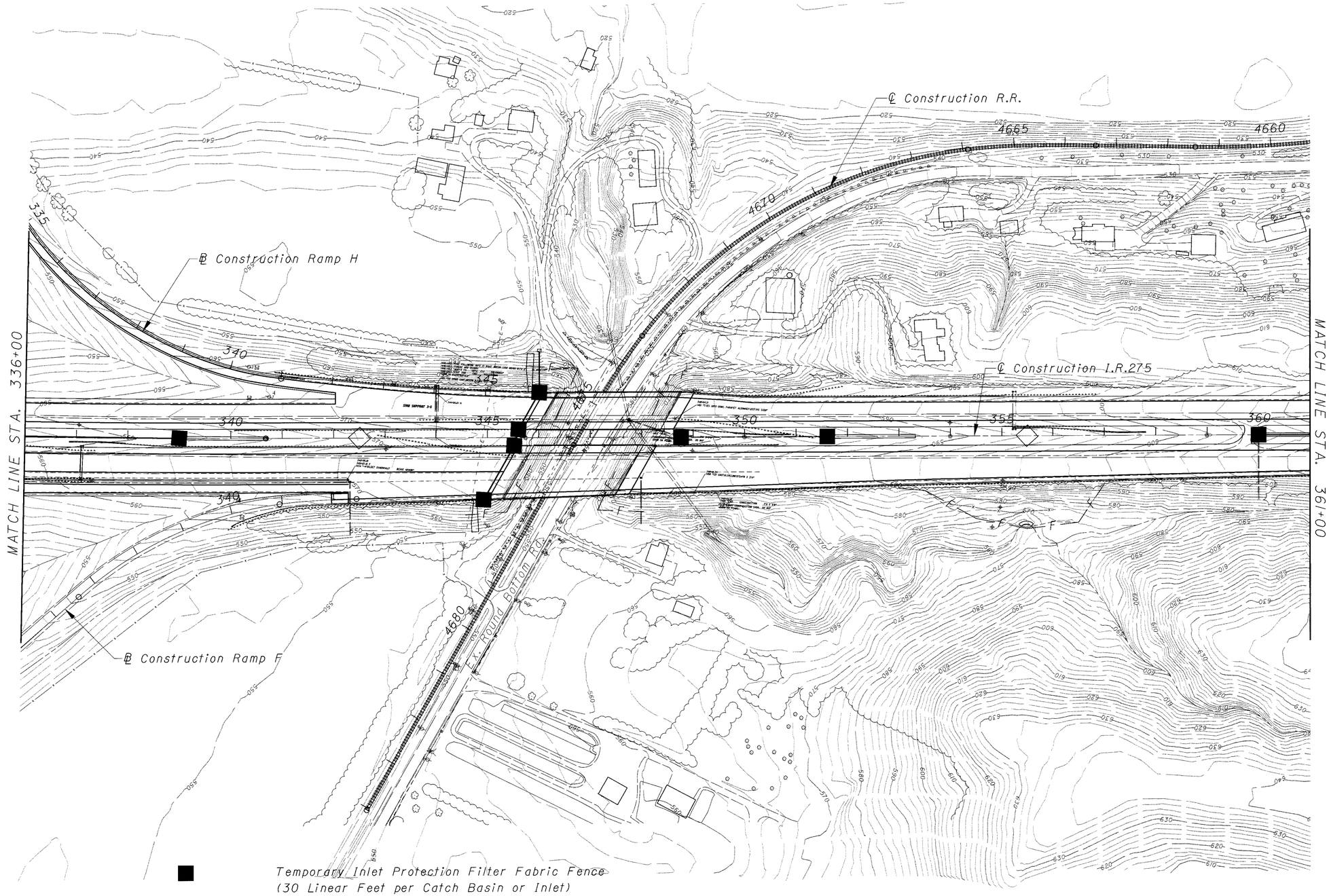

N

0 50 100 200
HORIZONTAL SCALE IN FEET

CALCULATED AM | CHECKED JGB

STORM WATER POLLUTION PREVENTION PLAN
STA 336+00 TO STA 361+00

CLE-275-5.35

249
857

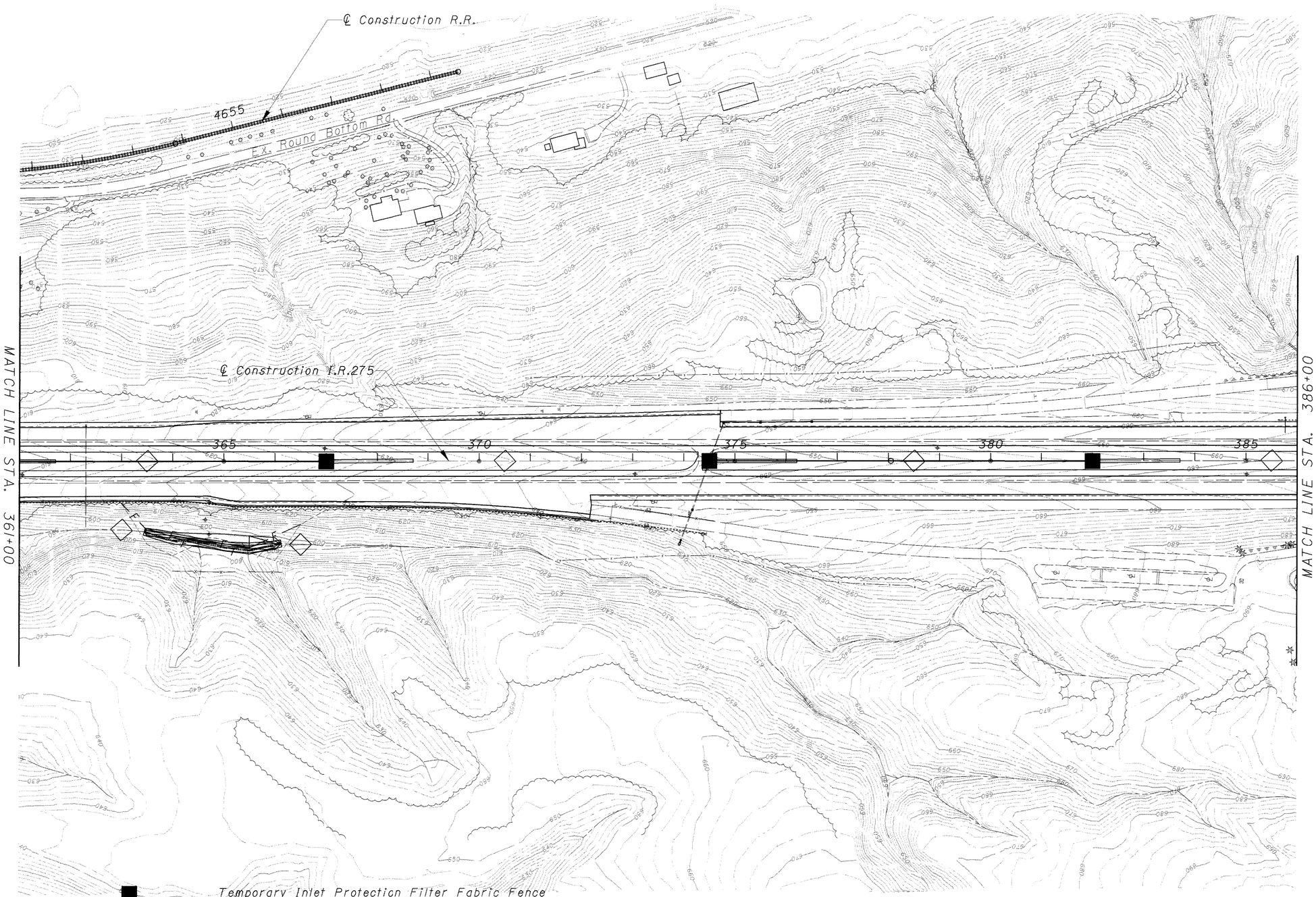

Temporary Inlet Protection Filter Fabric Fence
(30 Linear Feet per Catch Basin or Inlet)

Temporary Ditch Check Filter Fabric Fence
(30 Linear Feet per Ditch Check)

—— F —— Temporary Perimeter Filter Fabric Fence

N

0 50 100 200
HORIZONTAL SCALE IN FEET

CALCULATED AM
CHECKED JGB

STORM WATER POLLUTION PREVENTION PLAN
STA 361+00 TO STA 386+00

CLE-275-5.35

250
857

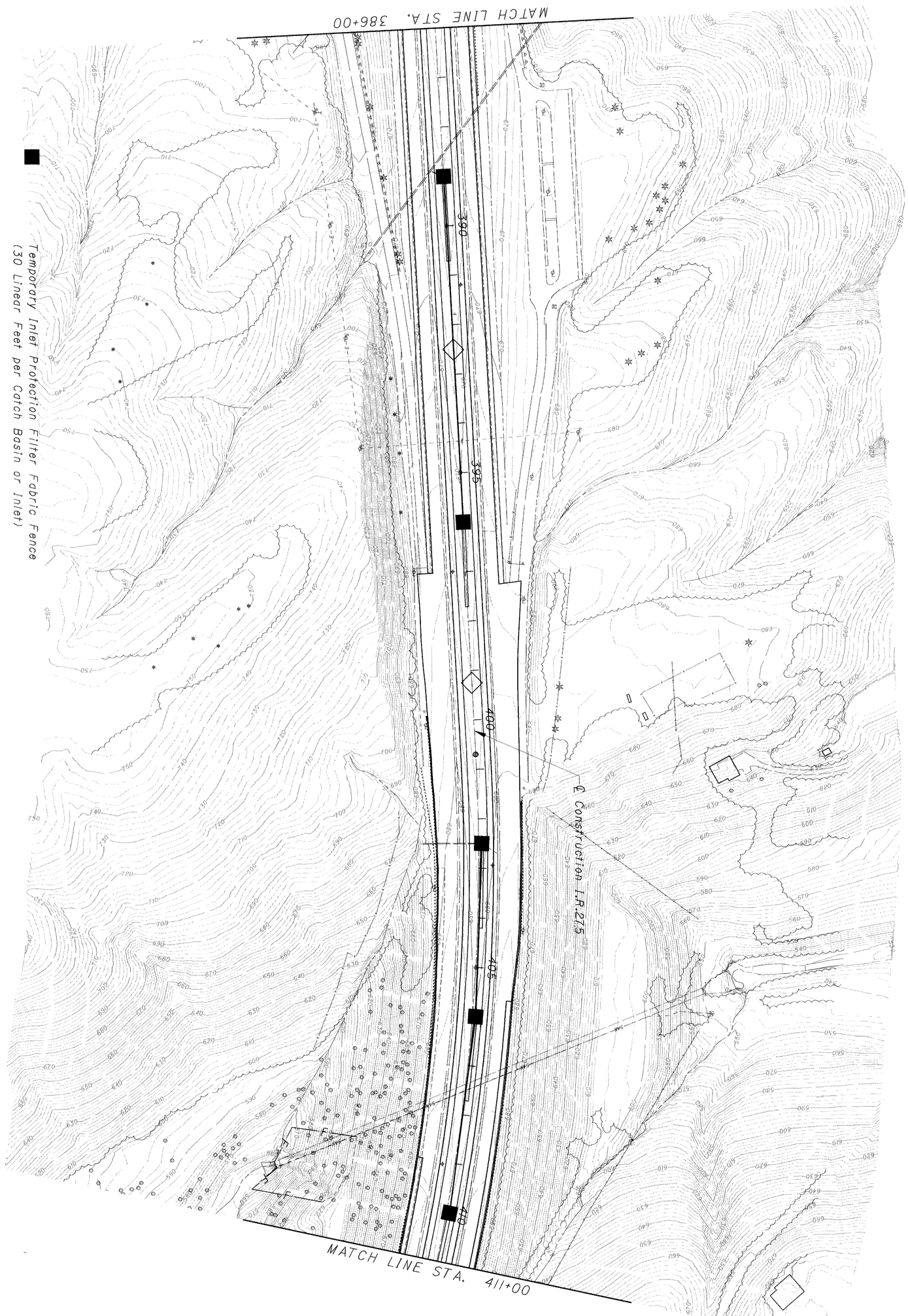

Temporary Inlet Protection Filter Fabric Fence
(30 Linear Feet per Catch Basin or Inlet)

Temporary Ditch Check Filter Fabric Fence
(30 Linear Feet per Ditch Check)

Temporary Perimeter Filter Fabric Fence

251 857	CLE-275-5.35	STORM WATER POLLUTION PREVENTION PLAN STA 386+00 TO STA 411+00	CALCULATED AM	0 100	N
			CHECKED JGB	50 200 HORIZONTAL SCALE IN FEET	

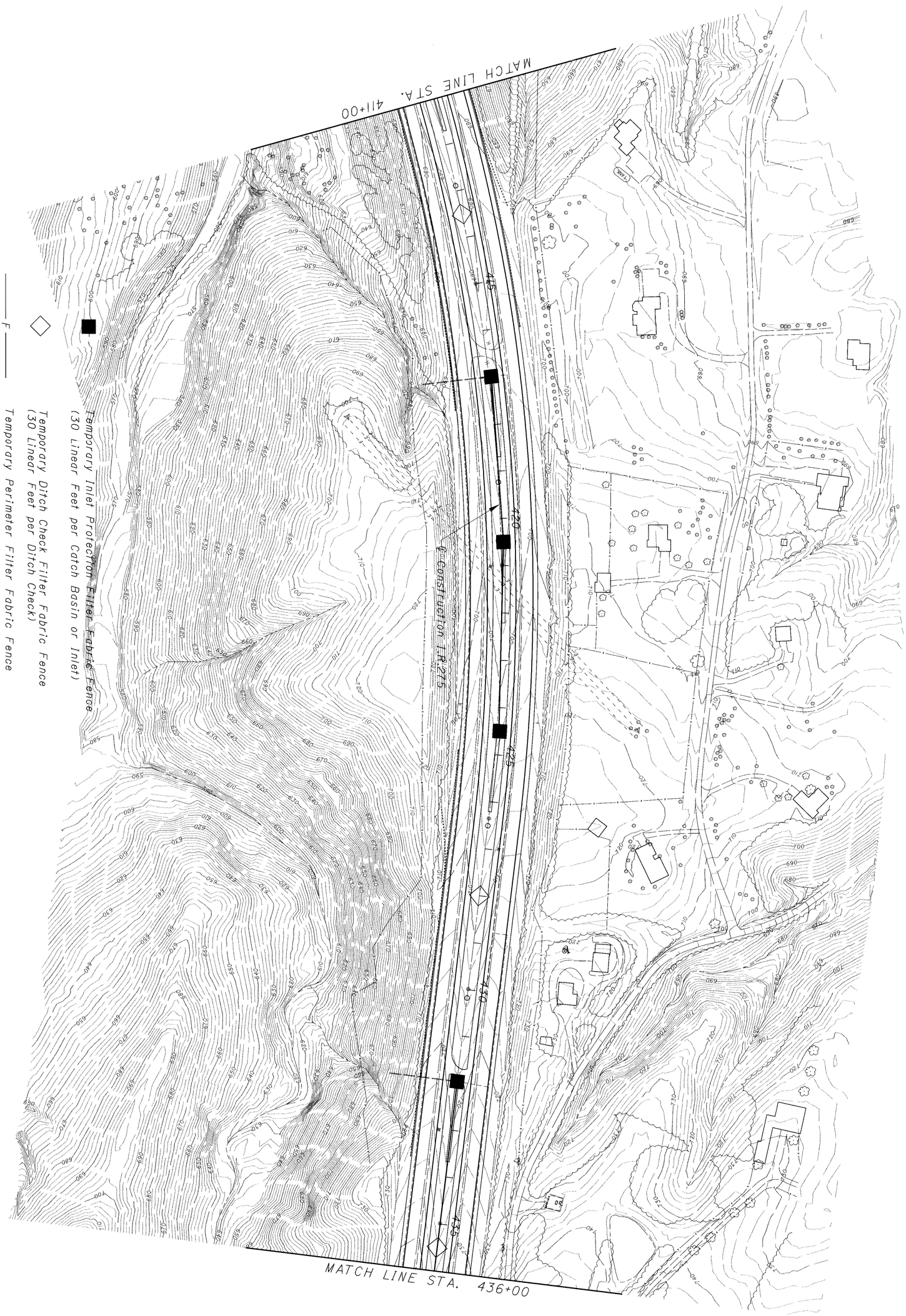

252 / 857	CLE-275-5.35	STORM WATER POLLUTION PREVENTION PLAN STA 411+00 TO STA 436+00	CALCULATED AM CHECKED JGB	0 100 50 200 HORIZONTAL SCALE IN FEET

MATCH LINE STA. 436+00

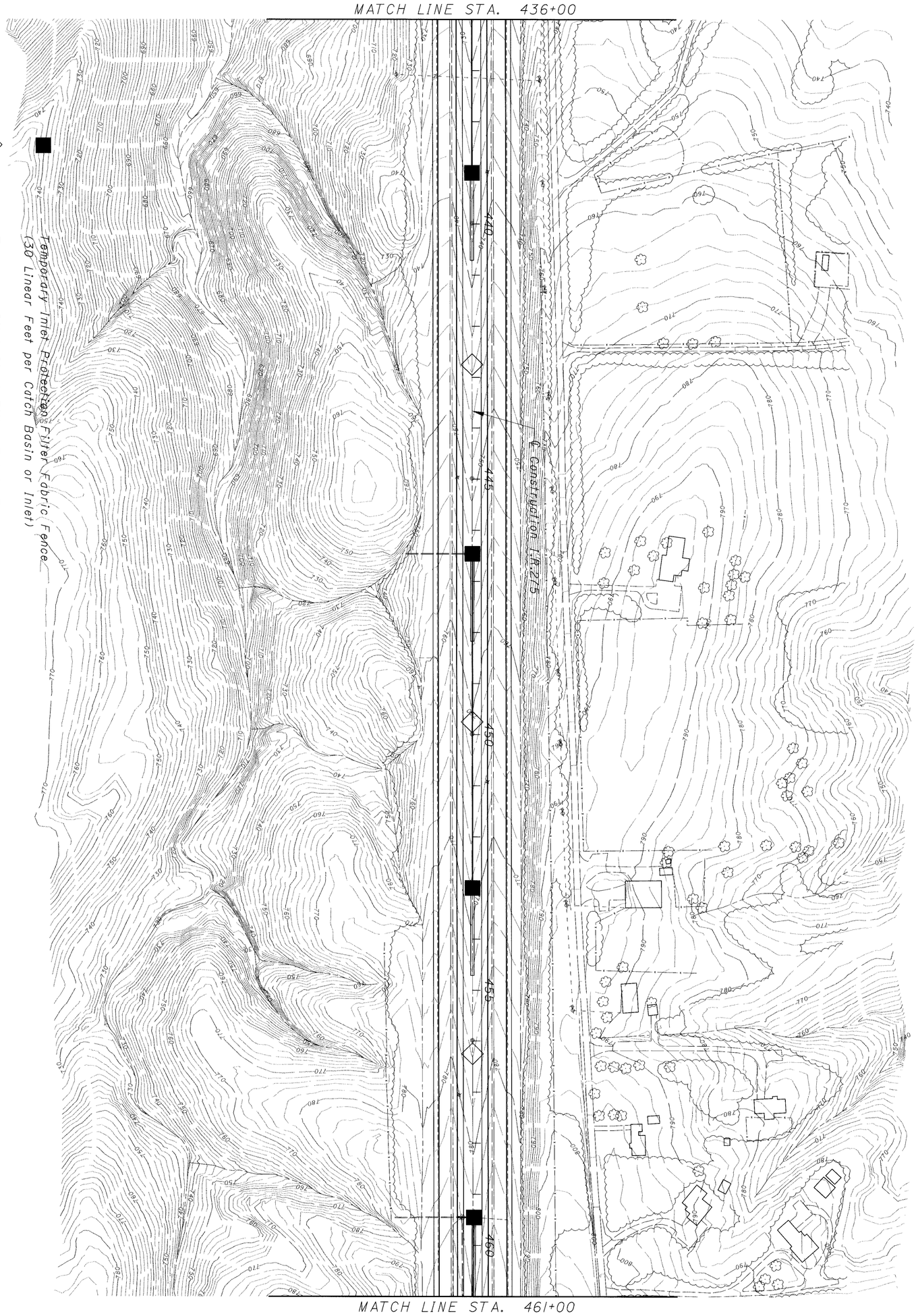

MATCH LINE STA. 461+00

253 857	CLE-275-5.35	STORM WATER POLLUTION PREVENTION PLAN STA 436+00 TO STA 461+00	CALCULATED AM / CHECKED JGB	0 100 50 200 HORIZONTAL SCALE IN FEET

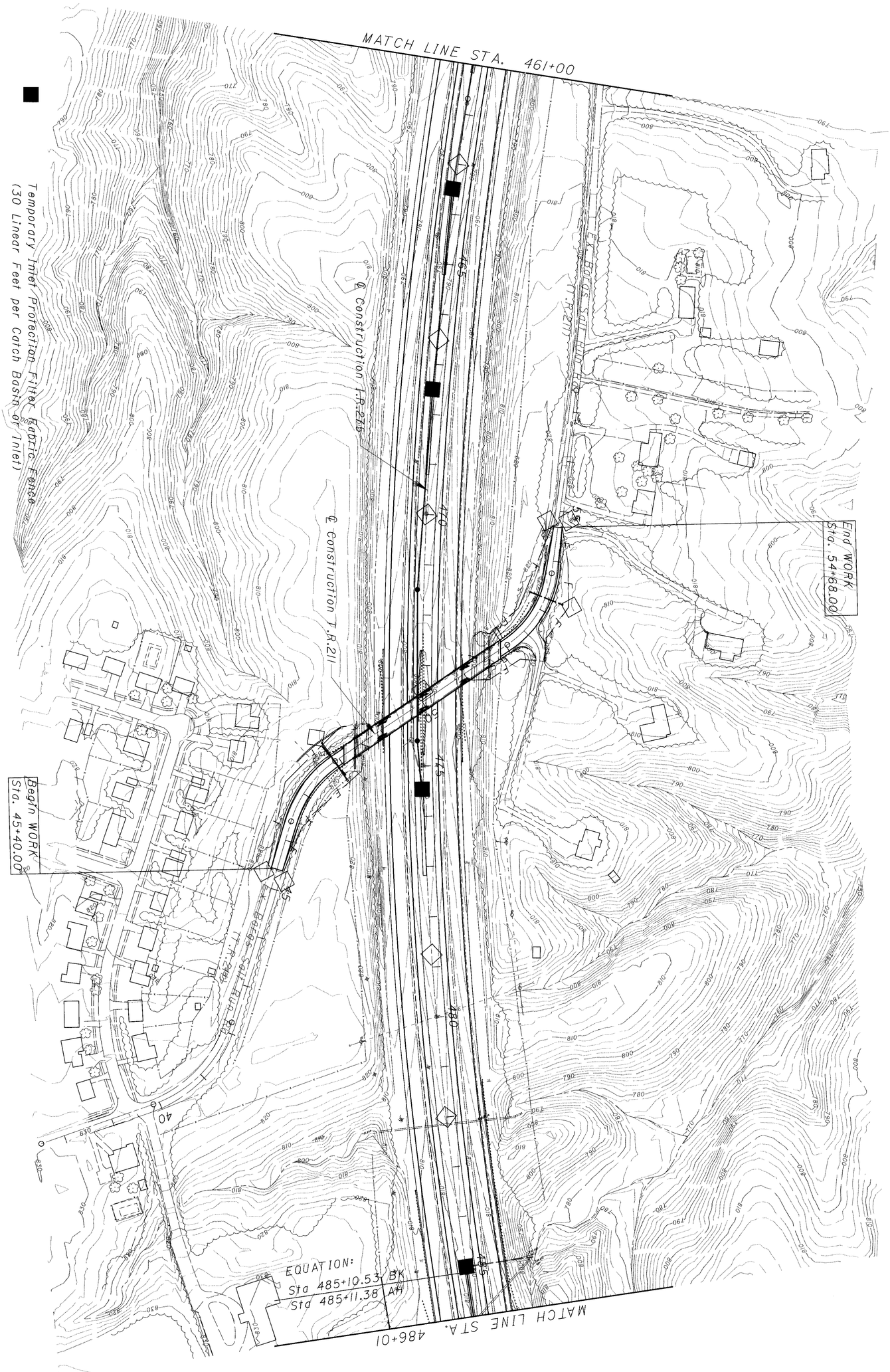

254 / 869	CLE-275-5.35	STORM WATER POLLUTION PREVENTION PLAN STA 461+00 TO STA 486+01	CALCULATED AM CHECKED JGB	0 100 50 200 HORIZONTAL SCALE IN FEET

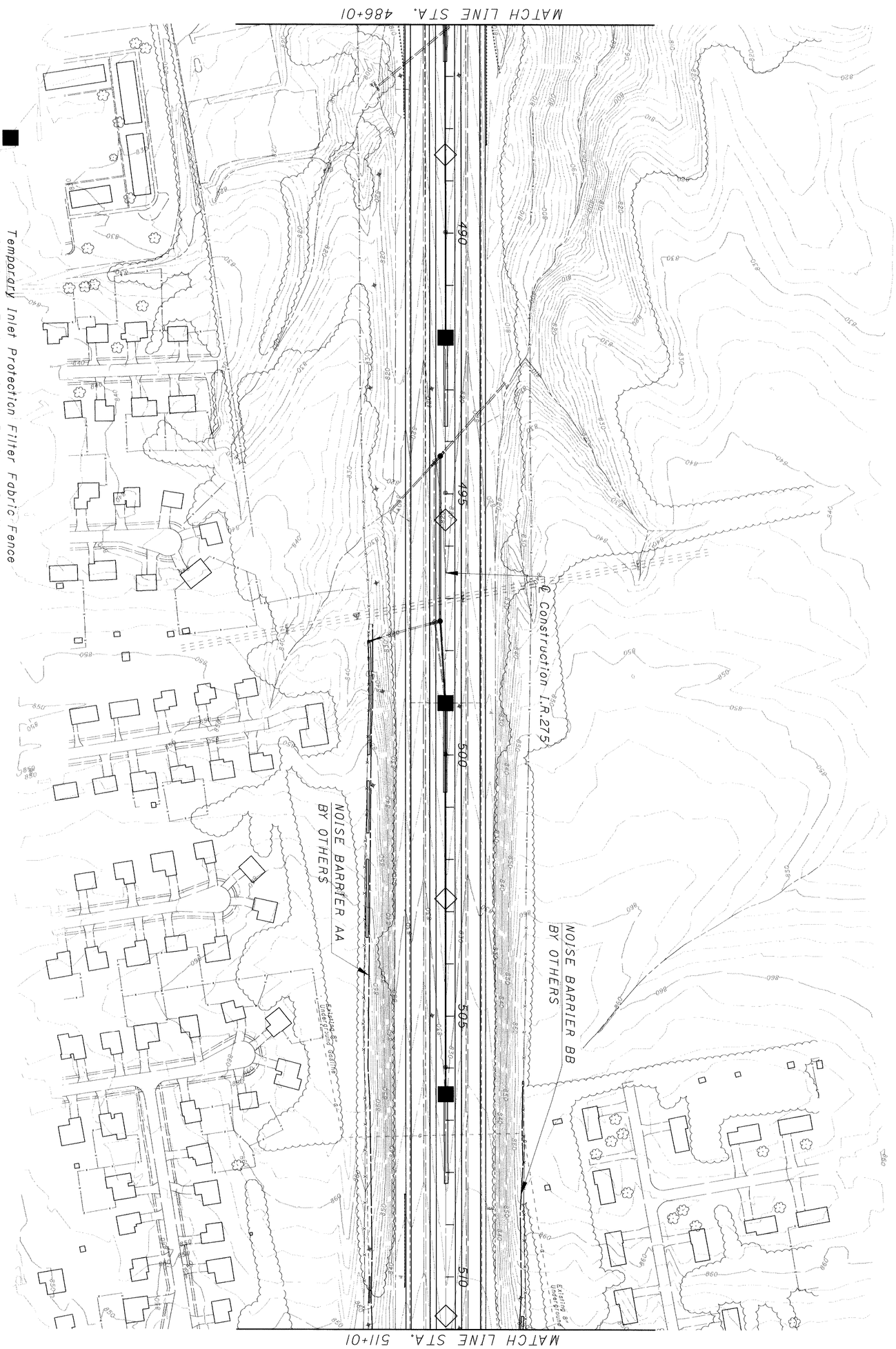

255/857	CLE-275-5.35	STORM WATER POLLUTION PREVENTION PLAN STA 486+01 TO STA 511+01	CALCULATED AM CHECKED JGB	0 50 100 200 HORIZONTAL SCALE IN FEET

End Project
Sta. 517+50.50
S.L.M. = 9.79

NOISE BARRIER BB
BY OTHERS

℄ Construction I.R.275

MATCH LINE STA. 511+01

NOISE BARRIER AA
BY OTHERS

520 525 530 535 515

Temporary Inlet Protection Filter Fabric Fence
(30 Linear Feet per Catch Basin or Inlet)

Temporary Ditch Check Filter Fabric Fence
(30 Linear Feet per Ditch Check)

F Temporary Perimeter Filter Fabric Fence

N

0 50 100 200
HORIZONTAL
SCALE IN FEET

CALCULATED AM
CHECKED JGB

STORM WATER POLLUTION PREVENTION PLAN
STA 511+01 TO STA 517+50.50

CLE-275-5.35

256
857

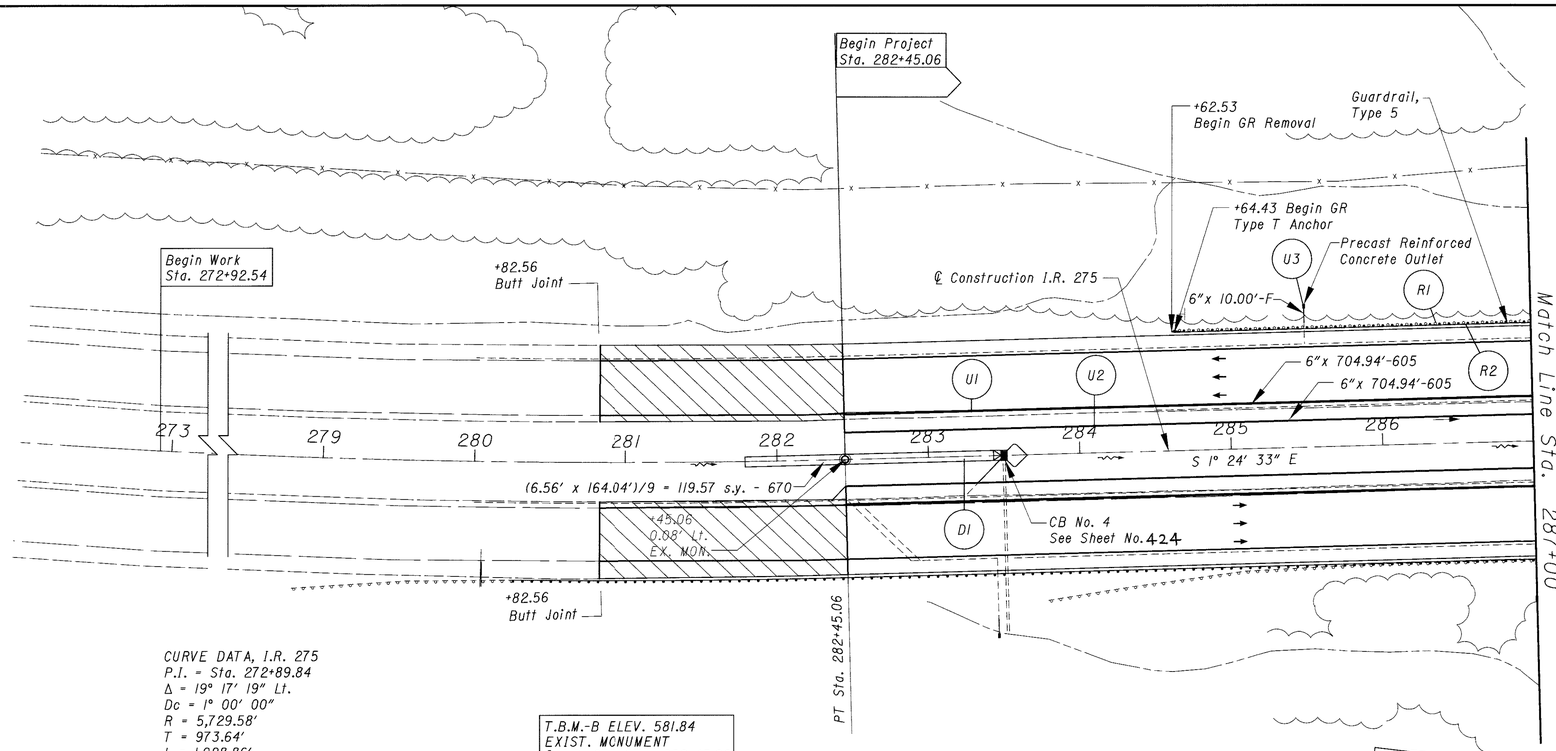

CURVE DATA, I.R. 275
P.I. = Sta. 272+89.84
Δ = 19° 17' 19" Lt.
Dc = 1° 00' 00"
R = 5,729.58'
T = 973.64'
L = 1,928.86'
E = 82.14'
e_{max} = normal crown

T.B.M.-B ELEV. 581.84
EXIST. MONUMENT
℄ I.R. 275 STA. 282+45.06

For Pavement quantities see sheet no. 221-238
For Drainage quantities see sheet no. 258
For Underdrain quantities see sheet no. 218
For Underdrain Detail see sheet no. 240

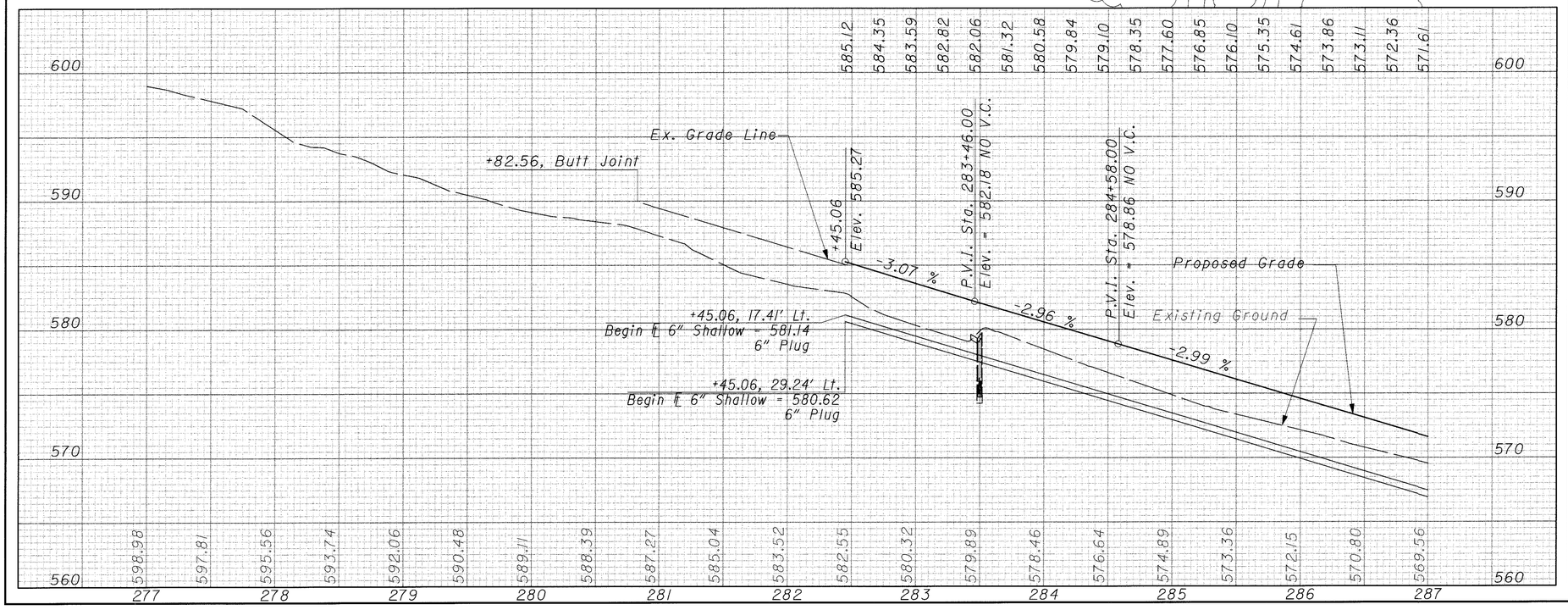

REF NO.	STATION FROM	STATION TO	SIDE	202 GUARDRAIL REMOVED	606 GUARDRAIL TYPE 5	606 ANCHOR ASSEMBLY TYPE T	606 BRIDGE TERMINAL ASSEMBLY TYPE 2
				LF	LF	EACH	EACH
R1	284 + 62.53	290 + 38.33	LT	575.81		1	1
R2	284 + 64.43	290 + 51.92	LT		575.00	1	1
TOTALS CARRIED TO SUB-SUMMARY				575.81	575.00		

N

0 25 50 100
HORIZONTAL SCALE IN FEET

CALCULATED EF
CHECKED AM

PLAN AND PROFILE NORTHBOUND I.R. 275
STA. 282+45.06 TO STA 287+00.00

CLE-275-5.35

257
857

REF NO.	STATION TO STATION	SIDE		604		670																
				CATCH BASIN ADJUSTED TO GRADE *		DITCH EROSION PROTECTION *																
	* NATIONAL HIGHWAY FUNDS			EACH		SQ. YD.																
D1	STA 283+50.00	CL		1		119.57																
	TOTALS CARRIED TO SUB-SUMMARY			1		119.57																

CALCULATED: AM
CHECKED: MT

ESTIMATED DRAINAGE QUANTITIES

CLE-275-5.35

258
857

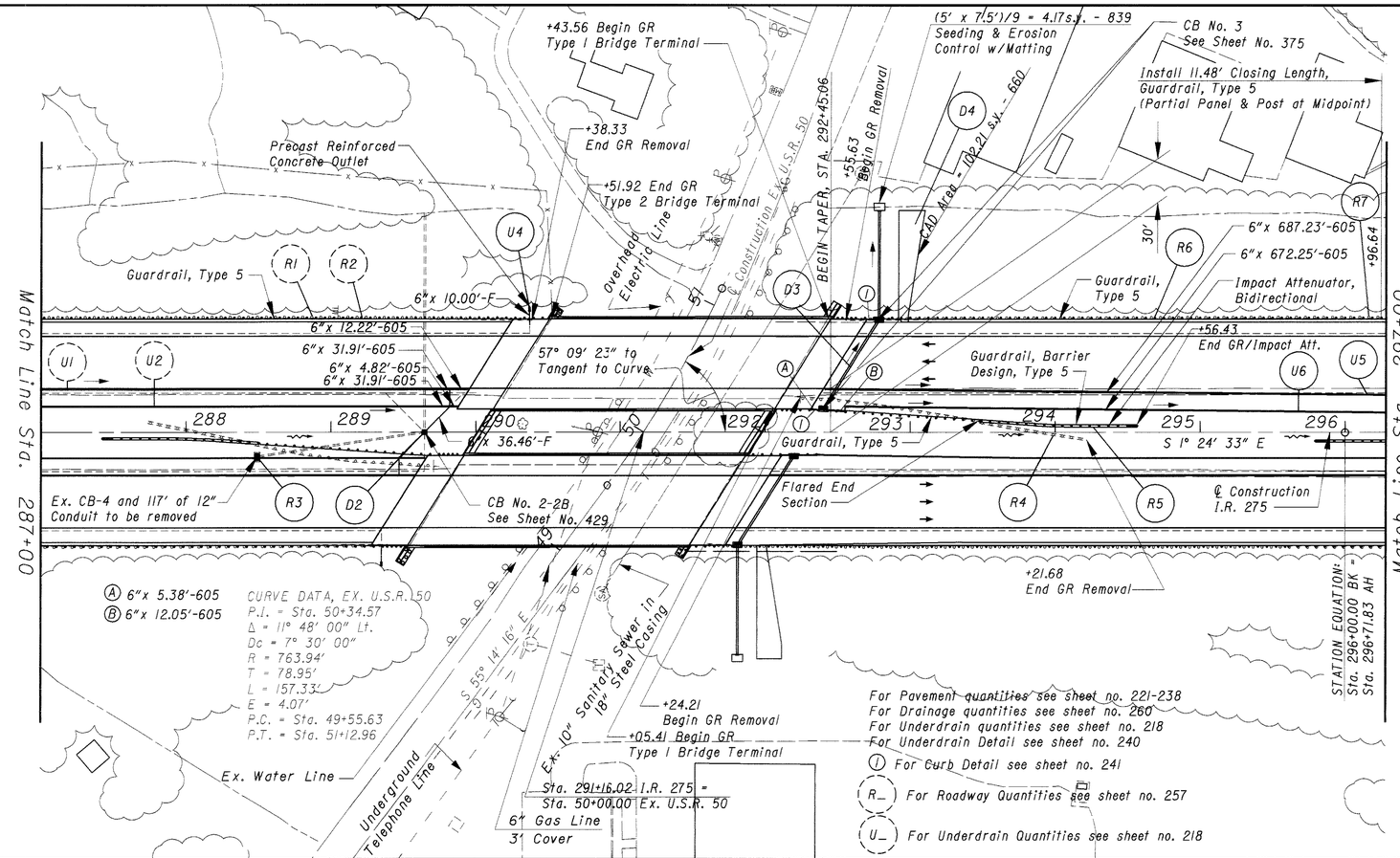

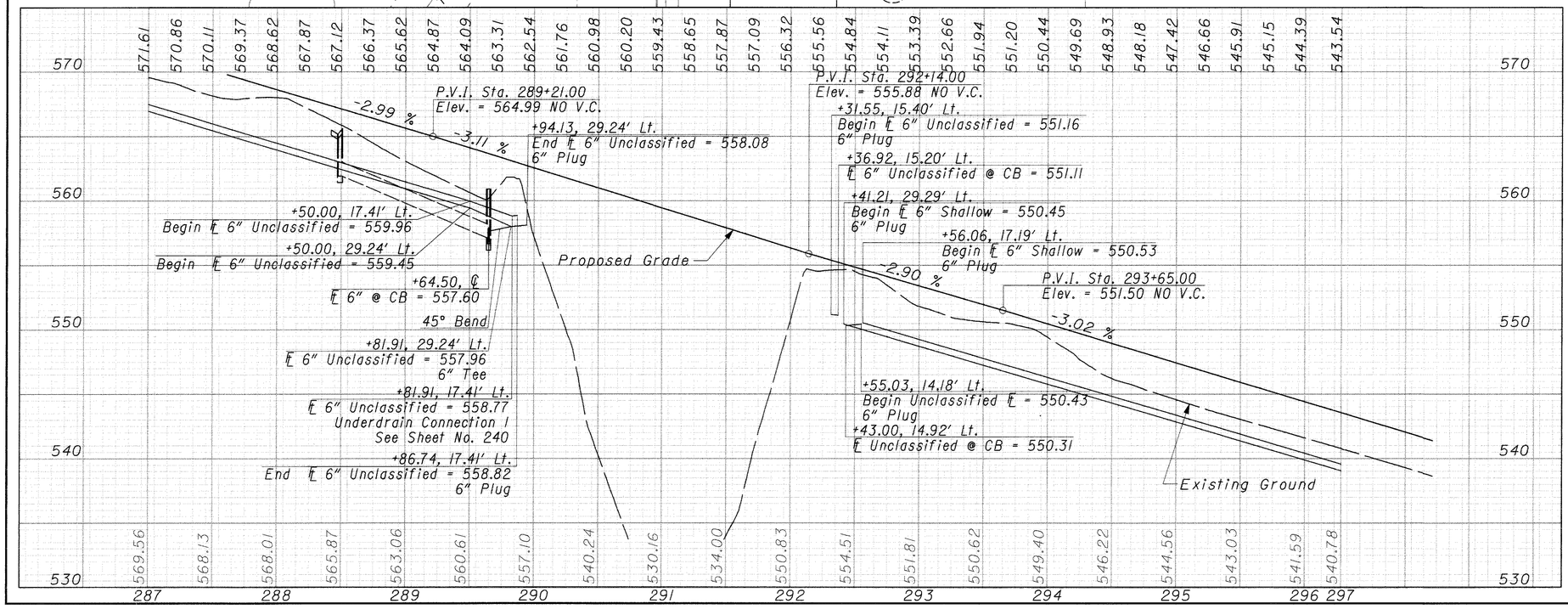

REF NO.	STATION FROM	STATION TO	SIDE	202 PIPE REMOVED 24" AND UNDER	202 GUARDRAIL REMOVED	202 GUARDRAIL REMOVED BARRIER DESIGN	202 CATCH BASIN REMOVED	606 GUARDRAIL TYPE 5	606 GUARDRAIL BARRIER DESIGN TYPE 5	606 FLARED END SECTION	606 BRIDGE TERMINAL ASSEMBLY. TYPE 1	606 BRIDGE TERMINAL ASSEMBLY. TYPE 2	606 IMPACT ATTENUATOR TYPE I-98 BI-DIRECT.
				LF	LF	LF	EACH	LF	LF	EACH	EACH	EACH	EACH
R3	288+49.00	289+64.50	LT	117.00			1						
R4	292+24.21	294+21.68	LT		125.13	74.89		143.75	75.00	1	1		1
R5	292+05.41	294+56.43	LT					767.73			1	1	
R6	292+43.56	300+83.12	LT		737.50							1	
R7	292+55.63	300+64.96	LT										1
TOTALS CARRIED TO SUB-SUMMARY				117.00	862.63	74.89	1	911.48	75.00	1	2	1	1

CALCULATED EF
CHECKED AM

0 25 50 100
HORIZONTAL SCALE IN FEET

PLAN AND PROFILE NORTHBOUND I.R. 275
STA. 287+00.00 TO STA. 297+00.00

CLE-275-5.35

259
857

REF NO.	STATION TO STATION	SIDE		602		603				604				660		839		INFO. ONLY			
				CONCRETE MASONRY		15" CONDUIT, TYPE B *	15" CONDUIT, TYPE C	15" CONDUIT, TYPE F		CATCH BASIN NO. 3 *	CATCH BASIN NO. 3	CATCH BASIN ADJUSTED TO GRADE *		REINFORCED SODDING *		SEEDING AND EROSION CONTROL W/MATTING		22.5° BEND *			
	* NATIONAL HIGHWAY FUNDS			CU. YD.		LIN. FT.	LIN. FT.	LIN. FT.		EACH	EACH	EACH		SQ. YD.		SQ. YD.		NO.			
D2	STA 289+64.50	CL										1									
D3	STA 292+39.99 TO STA 292+78.48	LT		0.29		72.62	20.18	54.88		1	1					4.17		2			
D4	STA 292+95.31	LT												102.21							
TOTALS CARRIED TO SUB-SUMMARY				0.29		72.62	20.18	54.88		1	1	1		102.21		4.17		2			

CALCULATED AM
CHECKED MT

ESTIMATED DRAINAGE QUANTITIES

CLE-275-5.35

260
857

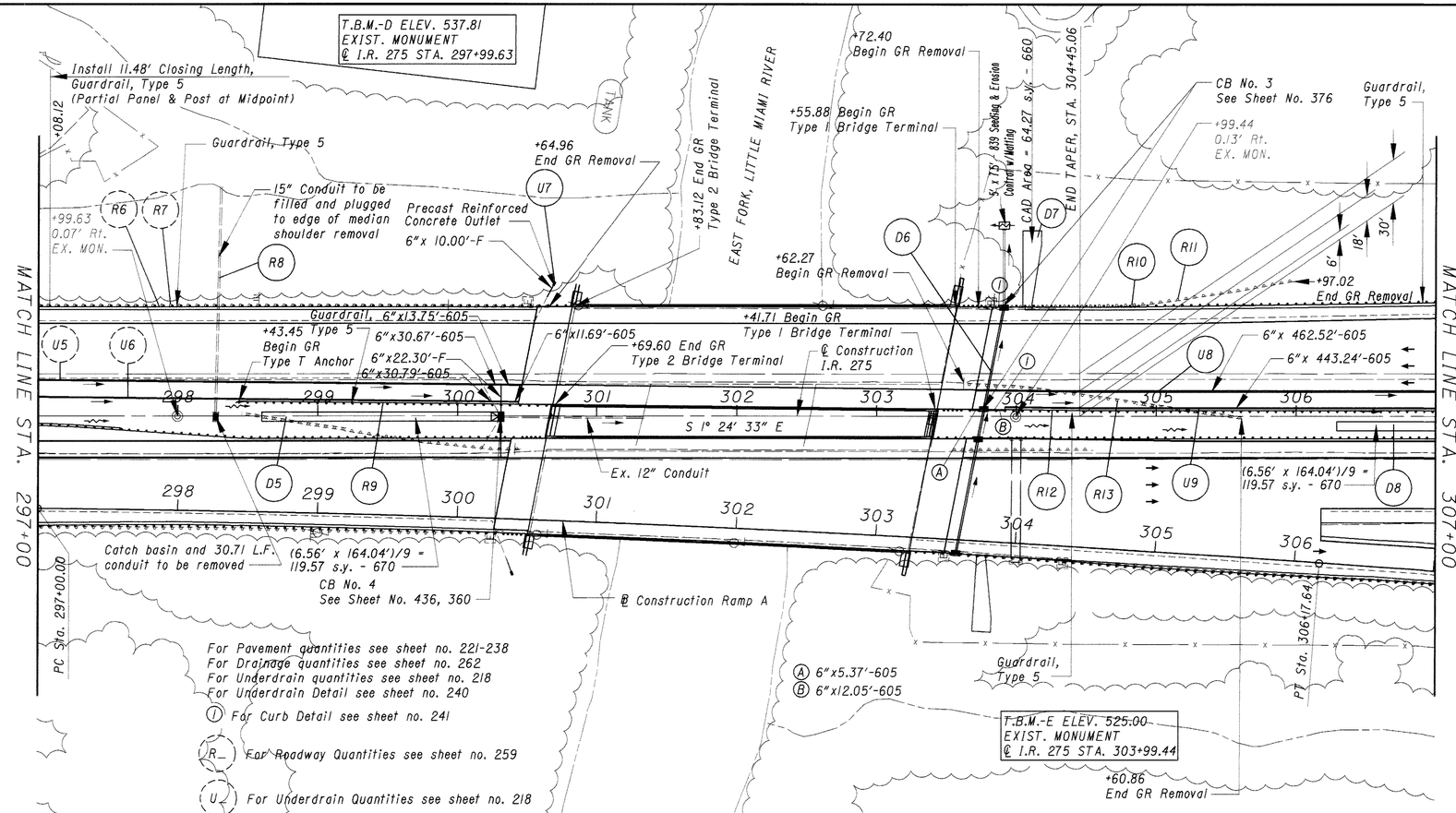

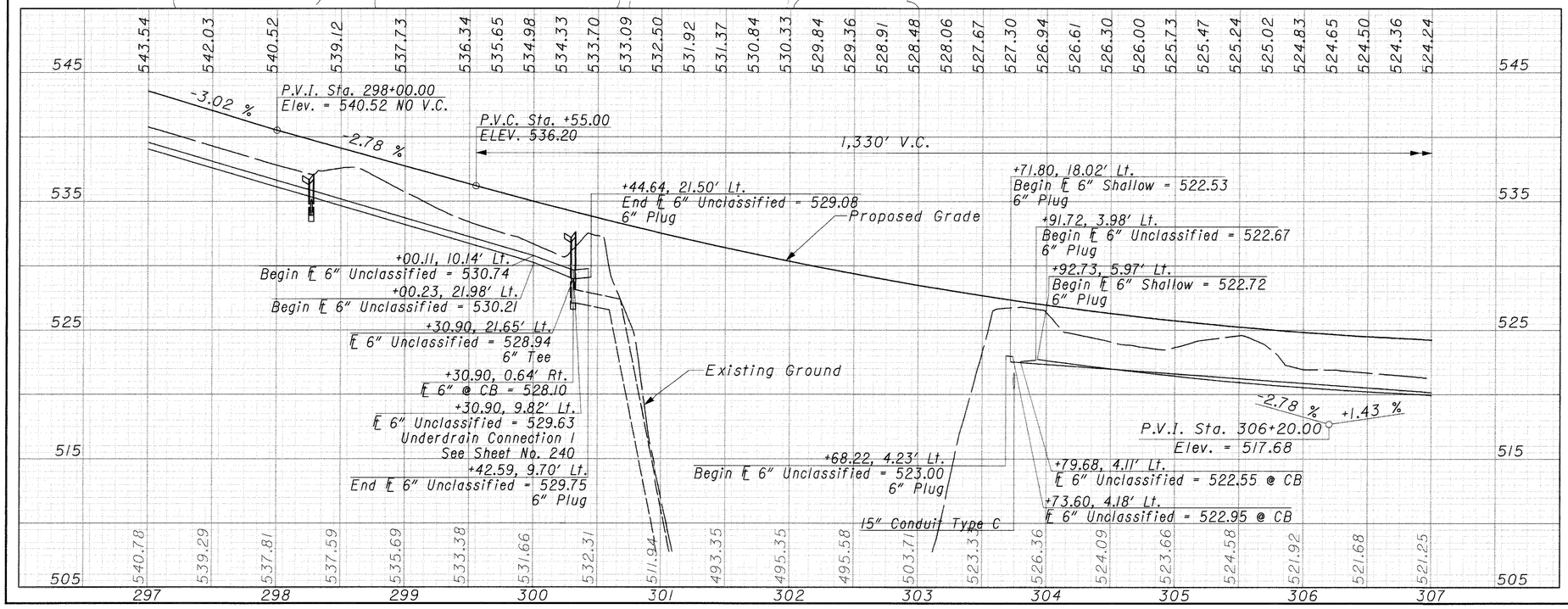

REF NO.	STATION FROM	STATION TO	SIDE	202 PIPE REMOVED 24" AND UNDER	202 GUARDRAIL REMOVED	202 GUARDRAIL REMOVED BARRIER DESIGN	202 CATCH BASIN REMOVED	202 FILL AND PLUG EX. CONDUIT	202 GUARDRAIL TYPE 5	606 GUARDRAIL BARRIER DESIGN TYPE 5	606 FLARED END SECTION	606 ANCHOR ASSY. TYPE E-98	606 ANCHOR ASSY. TYPE T	606 BRIDGE TERMINAL ASSEMBLY TYPE I	606 BRIDGE TERMINAL ASSEMBLY TYPE 2	606 IMPACT ATTEN. TYPE I-98 (BI-DIRECT.)
				LF	LF	LF	EACH	LF	LF	LF	EACH	EACH	EACH	EACH	EACH	EACH
R8	298+26.98	298+31.21	LT	30.71			1	133.41								
R9	298+43.45	300+69.60	LT						212.50				1		1	
R10	303+55.88	309+11.14	LT						506.25			1		1		
R11	303+72.40	305+97.02	LT		226.02									1		1
R12	303+41.71	311+92.78	LT		124.57	75.75			693.75	125.00	1					
R13	303+62.27	305+60.86	LT													
TOTALS CARRIED TO SUB-SUMMARY				30.71	350.59	75.75	1	133.41	1412.50	125.00	1	1	1	2	1	1

CALCULATED EF
CHECKED AM

0 25 50 100
HORIZONTAL SCALE IN FEET

PLAN AND PROFILE NORTHBOUND I.R. 275
STA. 297+00.00 TO STA. 307+00.00

CLE-275-5.35

261
857

REF NO.	STATION TO STATION	SIDE	602	603			604						660	670	839	INFO. ONLY	
	* NATIONAL HIGHWAY FUNDS		CONCRETE MASONRY CU. YD.	15" CONDUIT, TYPE B LIN. FT.	15" CONDUIT, TYPE F LIN. FT.	18" CONDUIT, TYPE C * LIN. FT.	CATCH BASIN NO. 3 * EACH	CATCH BASIN NO. 3 EACH	CATCH BASIN NO. 8 * EACH	CATCH BASIN RECONSTRUCTED TO GRADE * EACH			REINFORCED SODDING * SQ. YD.	DITCH EROSION PROTECTION * SQ. YD.	SEEDING AND EROSION CONTROL W/MATTING SQ. YD.	22.5° BEND * NO.	
D5	STA 300+30.90	CL								1				119.57			
D6	STA 303+76.55 TO STA 303+90.87	CL/LT	0.29	74.14	59.4		1	1							4.17	2	
D7	STA 304+07.33	LT											64.27				
D8	STA 308+00.00	CL				8.00			1					119.57			
TOTALS CARRIED TO SUB-SUMMARY			0.29	74.14	59.40	8.00	1	1	1	1			64.27	239.14	4.17	2	

CALCULATED AM
CHECKED MT

ESTIMATED DRAINAGE QUANTITIES

CLE-275-5.35

262
857

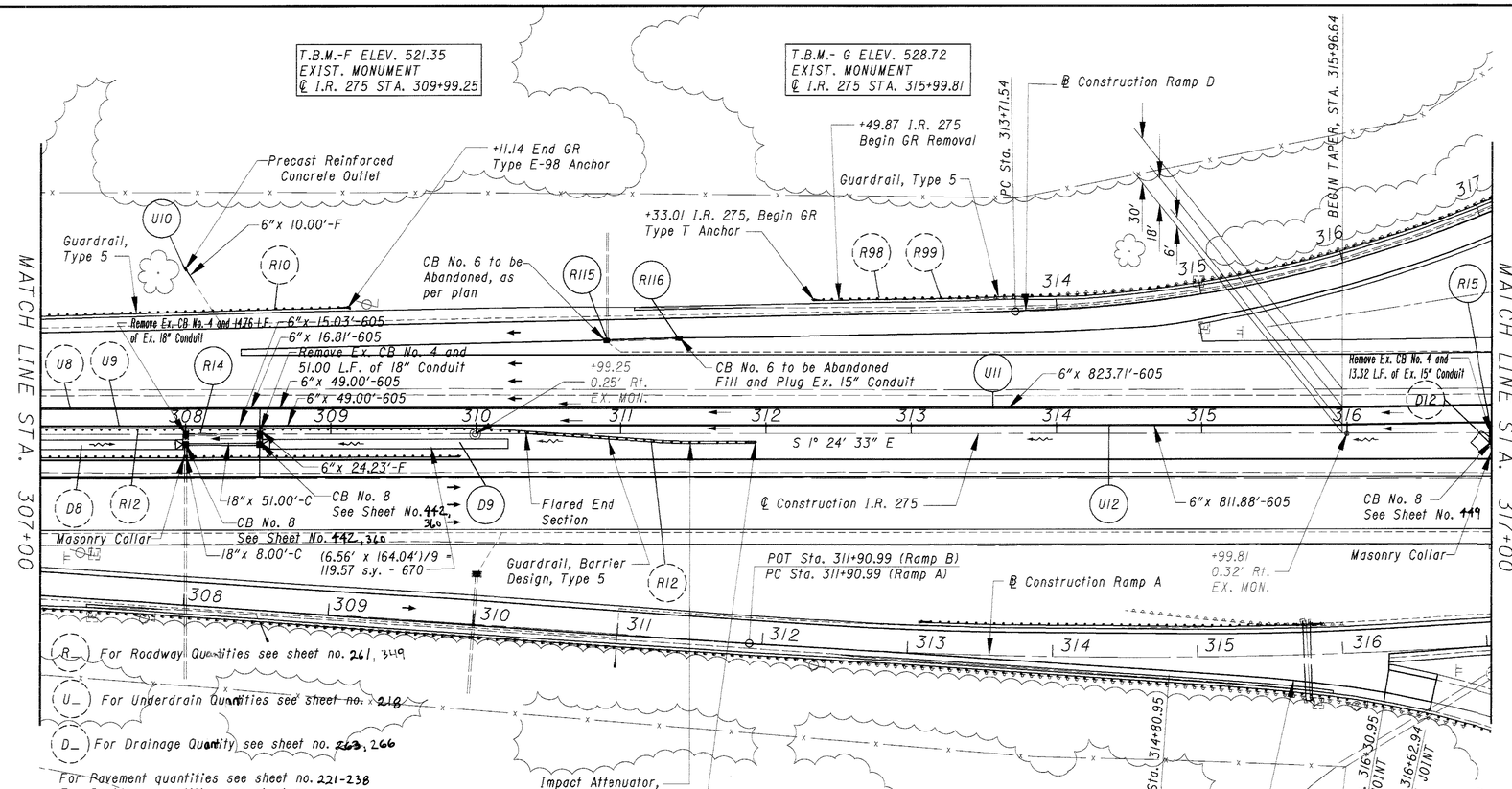

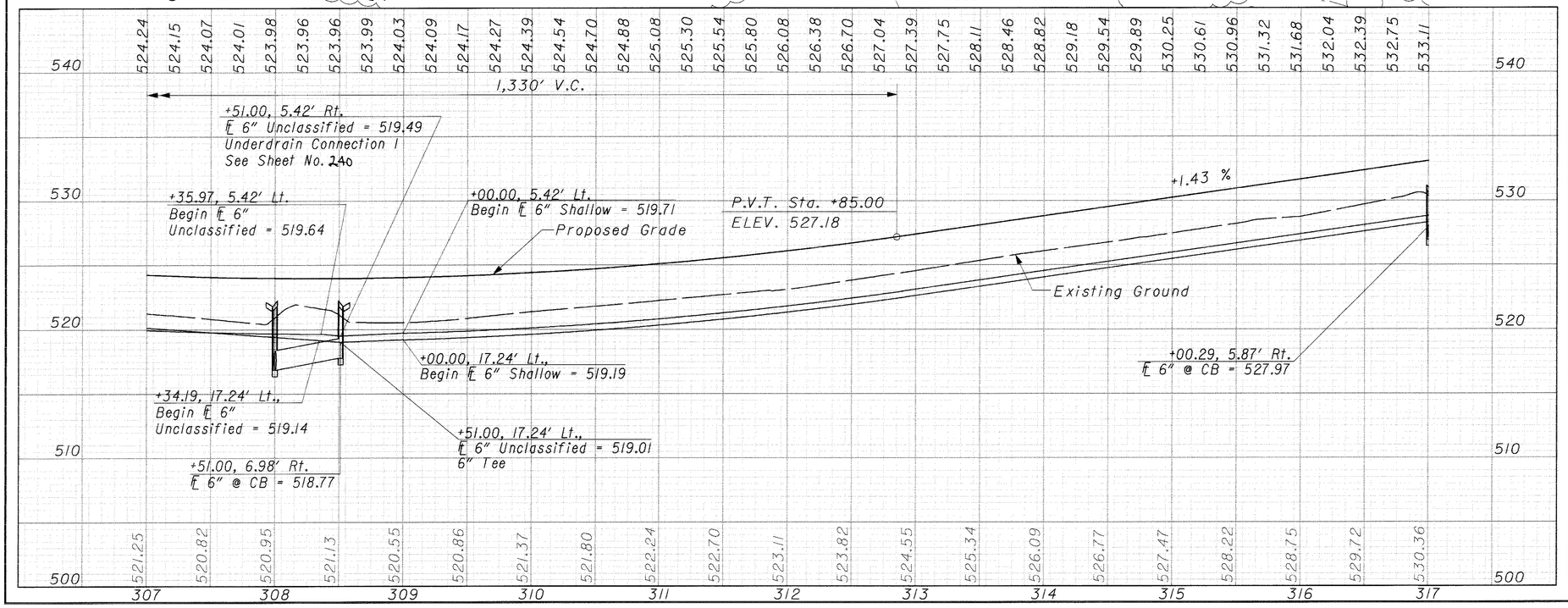

REF NO.	STATION FROM	STATION TO	SIDE	202 PIPE REMOVED 24" AND UNDER	202 CATCH BASIN REMOVED	202 CATCH BASIN ABANDONED	202 CATCH BASIN ABANDONED, AS PER PLAN
				LF	EACH	EACH	EACH
R14	308+00.00	308+51.00	LT	65.76	2		
R15	317+00.29	317+00.29	LT	13.32	1		
R115	310+90.00	310+90.00	LT			1	
R116	311+40.00	311+40.00	LT				1
TOTALS CARRIED TO SUB-SUMMARY				79.08	3	1	1

REF NO.	STATION TO STATION	SIDE		603		604		670													
				18" CONDUIT, TYPE C *		CATCH BASIN NO. 8 *		DITCH EROSION PROTECTION *													
	* NATIONAL HIGHWAY FUNDS			LIN. FT.		EACH		SQ. YD.													
D9	STA 308+51.00	CL		51.00		1		119.57													
D10	NOT USED																				
D11	NOT USED																				
TOTALS CARRIED TO SUB-SUMMARY				51.00		1		119.57													

CALCULATED AM
CHECKED MT

ESTIMATED DRAINAGE QUANTITIES

CLE-275-5.35

264
857

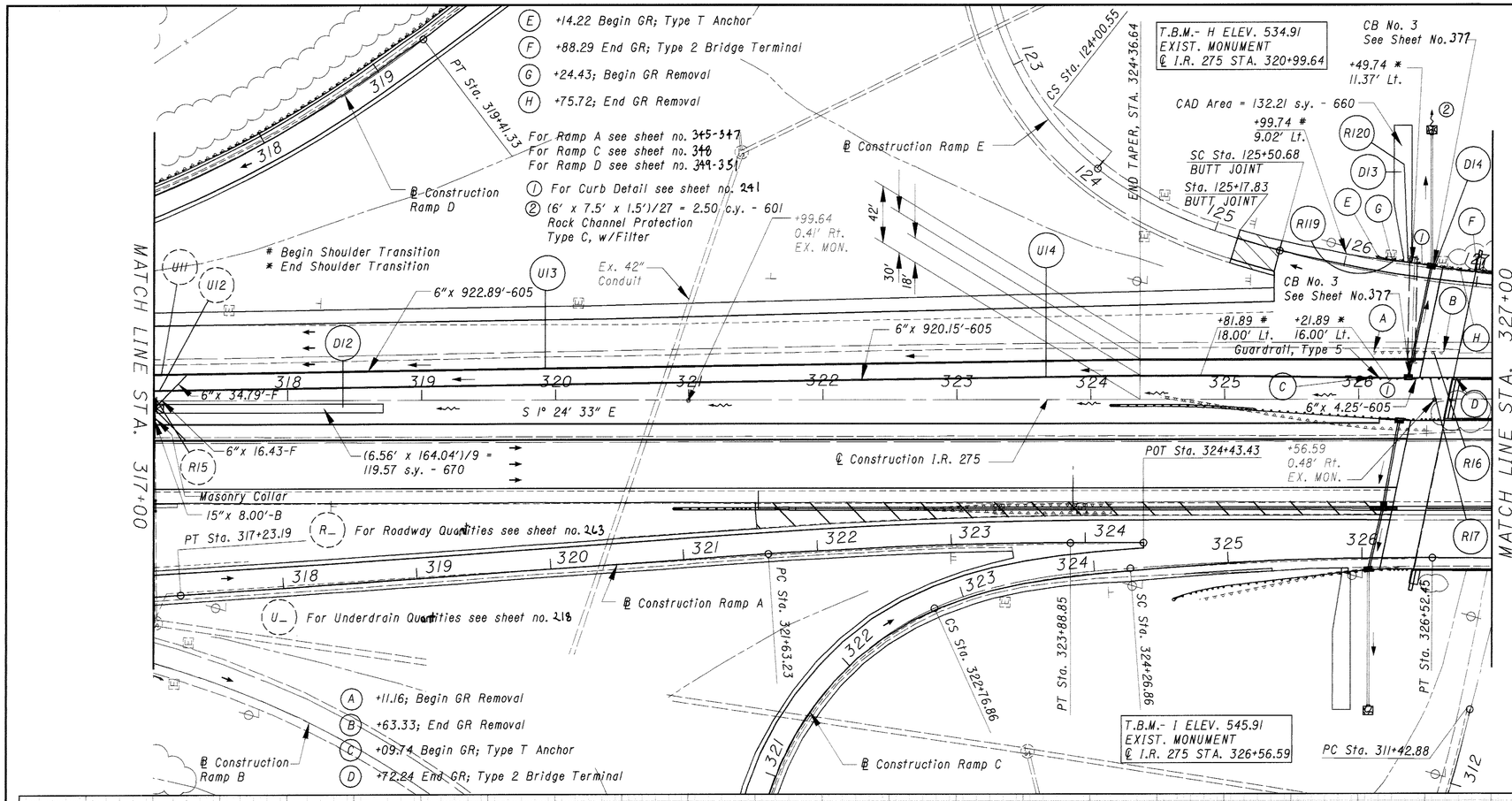

REF NO.	STATION FROM	STATION TO	SIDE	202 GUARDRAIL REMOVED	606 GUARDRAIL TYPE 5	606 ANCHOR ASSEMBLY TYPE T	606 BRIDGE TERMINAL ASSEMBLY TYPE 2
				LF	LF	EACH	EACH
R16	326+11.16	326+63.33	LT	52.19			
R17	326+09.74	326+72.24	LT		50.00	1	1
R119	326+14.22	326+88.29	LT		37.50	1	1
R120	326+24.43	326+75.72	LT	51.83			
TOTALS CARRIED TO SUB-SUMMARY				104.02	87.50	2	2

N

HORIZONTAL SCALE IN FEET
0 25 50 100

CALCULATED EF
CHECKED AM

PLAN AND PROFILE NORTHBOUND I.R. 275
STA. 317+00.00 TO STA. 327+00.00

CLE-275-5.35

REF NO.	STATION TO STATION	SIDE	601 ROCK CHANNEL PROTECTION TYPE C W/FILTER	602 CONCRETE MASONRY	603 15" CONDUIT, TYPE B *	603 15" CONDUIT, TYPE C *	603 15" CONDUIT, TYPE F	604 CATCH BASIN NO. 3 *	604 CATCH BASIN NO. 3	604 CATCH BASIN NO. 8 *	660 REINFORCED SODDING *	670 DITCH EROSION PROTECTION *
	* NATIONAL HIGHWAY FUNDS		CU. YD.	CU. YD.	LIN. FT.	LIN. FT.	LIN. FT.	EACH	EACH	EACH	SQ. YD.	SQ. YD.
D12	STA 317+00.29	CL				8.00				1		119.57
D13	STA 326+36.54	LT									132.21	
D14	STA 326+36.97 TO STA 326+54.22	LT	2.50	0.29	84.47		98.56	1	1			
TOTALS CARRIED TO SUB-SUMMARY			2.50	0.29	84.47	8.00	98.56	1.00	1.00	1.00	132.21	119.57

CALCULATED AM
CHECKED MT

ESTIMATED DRAINAGE QUANTITIES

CLE-275-5.35

266
857

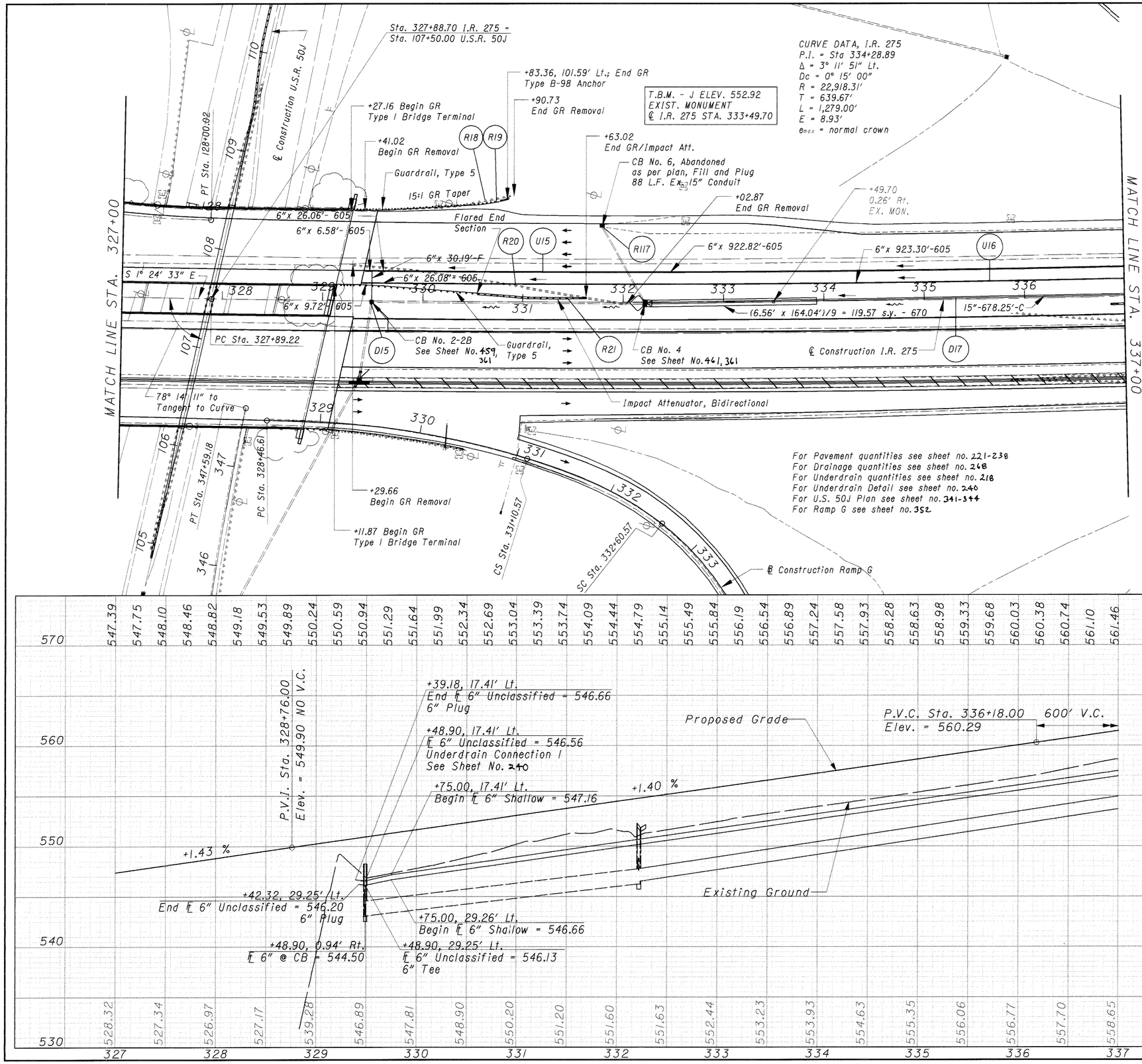

REF NO.	STATION FROM	STATION TO	SIDE	202 GUARDRAIL REMOVED	202 GUARDRAIL REMOVED BARRIER DESIGN	202 CATCH BASIN ABANDONED, AS PER PLAN	202 FILL AND PLUG EXISTING CONDUIT	606 GUARDRAIL TYPE 5	606 GUARDRAIL BARRIER DESIGN TYPE 5	606 FLARED END SECTION	606 ANCHOR ASSEMBLY TYPE B-98	606 BRIDGE TERMINAL ASSEMBLY TYPE I	606 IMPACT ATTENUATOR TYPE I-98 (BIDIRECTIONAL)
				LF	LF	EACH	LF	LF	LF	EACH	EACH	EACH	EACH
R18	329+41.02	330+90.73	LT	150.26				118.75			1	1	
R19	329+27.16	330+83.36	LT										1
R20	329+29.66	332+02.87	LT	174.84	100.68		88.00	143.75	75.00	1		1	
R21	329+11.87	331+63.02	LT			1							
R117	331+78.84	331+78.84	LT										
TOTALS CARRIED TO SUB-SUMMARY				325.10	100.68	1.00	88.00	262.50	75.00	1		2	1

CALCULATED EF
CHECKED AM

0 25 50 100
HORIZONTAL SCALE IN FEET

PLAN AND PROFILE NORTHBOUND I.R. 275
STA. 327+00.00 TO STA. 337+00.00

CLE-275-5.35

247
857

REF NO.	STATION TO STATION	SIDE		603		604			670													
				15" CONDUIT, TYPE C *		CATCH BASIN ADJUSTED TO GRADE	CATCH BASIN RECONSTRUCTED TO GRADE *		DITCH EROSION PROTECTION *													
	* NATIONAL HIGHWAY FUNDS			LIN. FT.		EACH	EACH		SQ. YD.													
D15	STA 329+48.90	CL					1															
D16	NOT USED																					
D17	STA 332+21.75 TO STA 339+00.00	CL		678.25		1			119.57													
TOTALS CARRIED TO SUB-SUMMARY				678.25		1	1		119.57													

CALCULATED AM
CHECKED MT

ESTIMATED DRAINAGE QUANTITIES

CLE-275-5.35

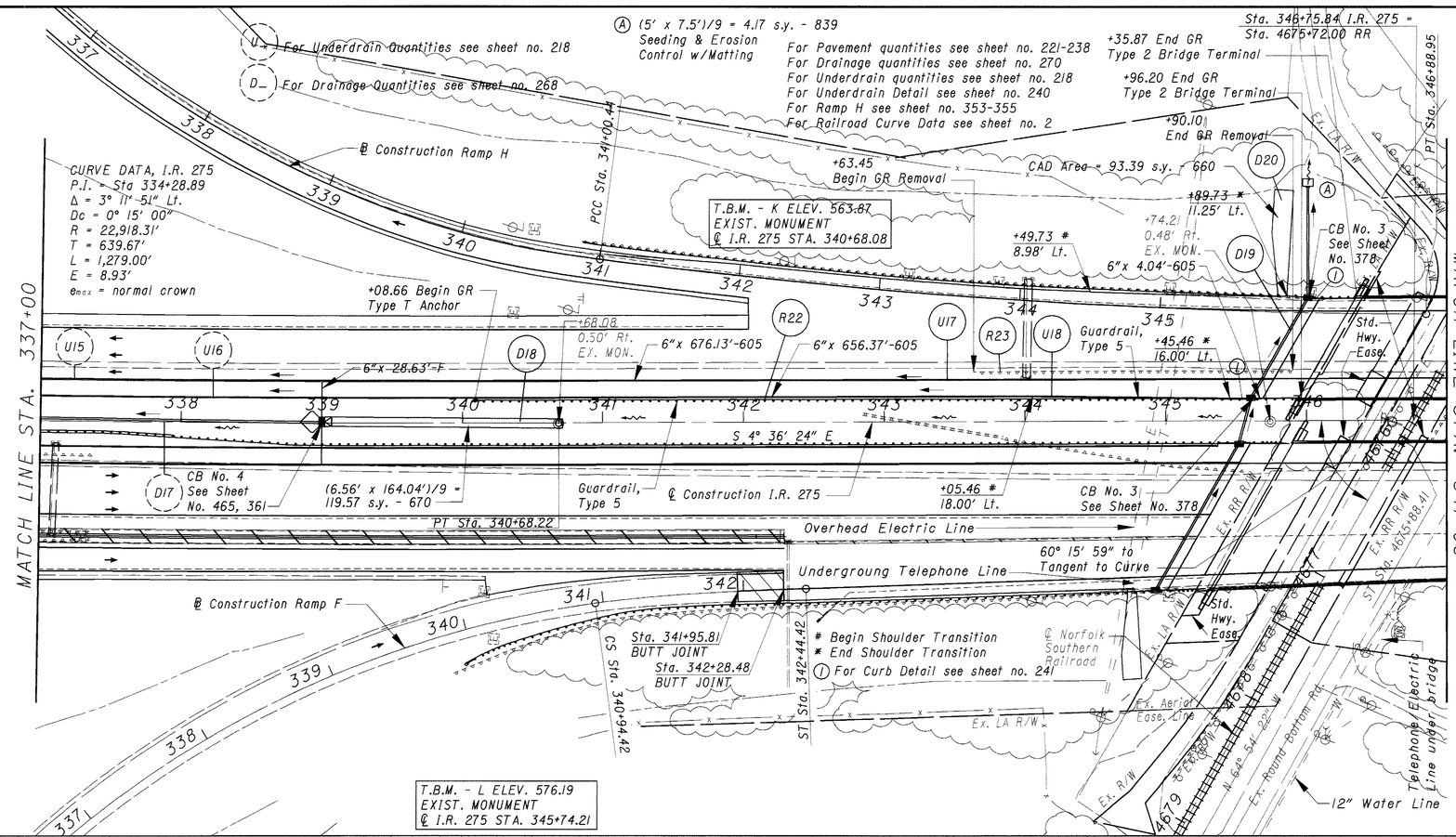

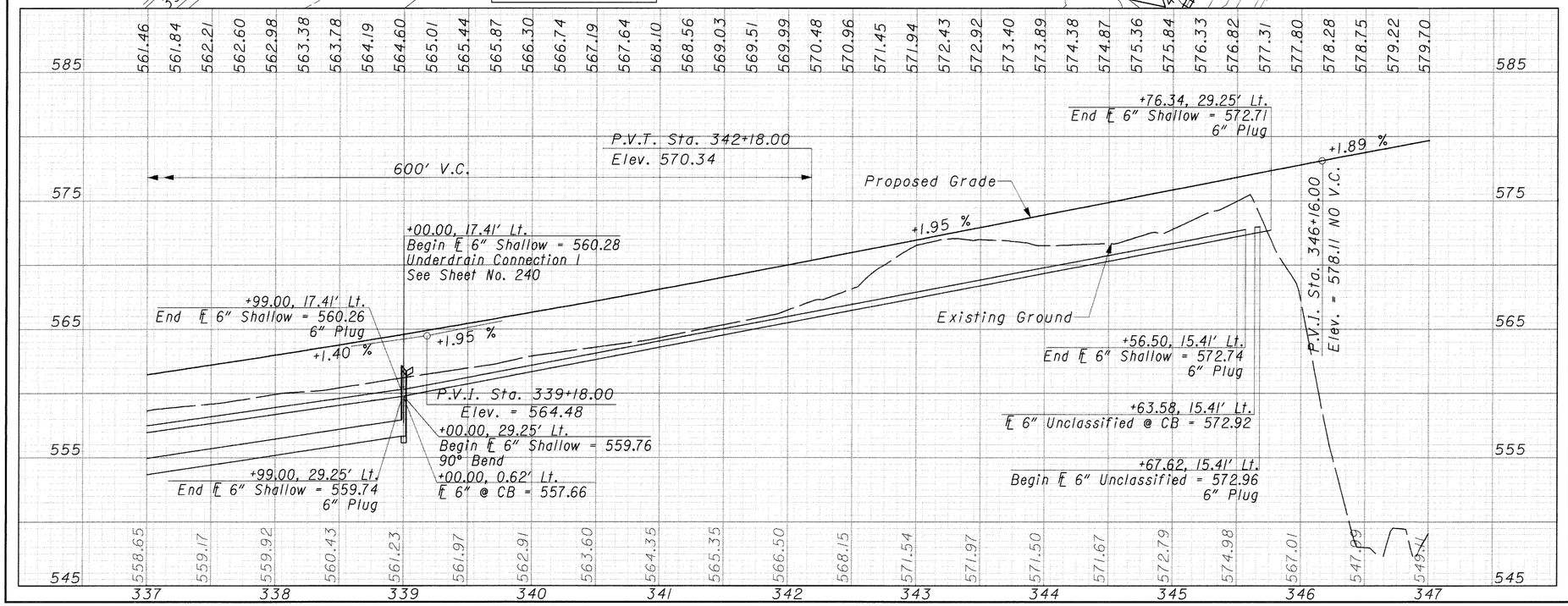

REF NO.	STATION FROM	STATION TO	SIDE				
R22	340+08.66	345+96.20	LT	202	GUARDRAIL REMOVED	LF	226.65
R23	343+63.45	345+90.10	LT	606	GUARDRAIL TYPE 5	LF	575.00
				606	ANCHOR ASSEMBLY TYPE T	EACH	1
				606	BRIDGE TERMINAL ASSEMBLY TYPE 2	EACH	1
			TOTALS CARRIED TO SUB-SUMMARY				1
							1
							575.00
							1

HORIZONTAL SCALE IN FEET
0 25 50 100

CALCULATED EF
CHECKED AM

PLAN AND PROFILE NORTHBOUND I.R. 275 STA. 337+00.00 TO STA. 347+00.00

CLE-275-5.35

269
857

REF NO.	STATION TO STATION	SIDE	602	603		604			660	670	839	INFO. ONLY
	* NATIONAL HIGHWAY FUNDS		CONCRETE MASONRY CU. YD.	15" CONDUIT, TYPE B * LIN. FT.	15" CONDUIT, TYPE F LIN. FT.	CATCH BASIN NO. 3 ** EACH	CATCH BASIN NO. 3 EACH	CATCH BASIN NO. 4 ** EACH	REINFORCED SODDING * SQ. YD.	DITCH EROSION PROTECTION * SQ. YD.	SEEDING AND EROSION CONTROL W/MATTING SQ. YD.	22.5° BEND * NO.
D18	STA 339+00.00	CL						1		119.57		
D19	STA 345+60.54 TO STA 346+01.05	LT	0.29	81.51	79.37	1	1				4.17	2
D20	STA 345+82.68	LT							93.39			
TOTALS CARRIED TO SUB-SUMMARY			0.29	81.51	79.37	1	1	1	93.39	119.57	4.17	2

CALCULATED AM CHECKED MT

ESTIMATED DRAINAGE QUANTITIES

CLE-275-5.35

270
857

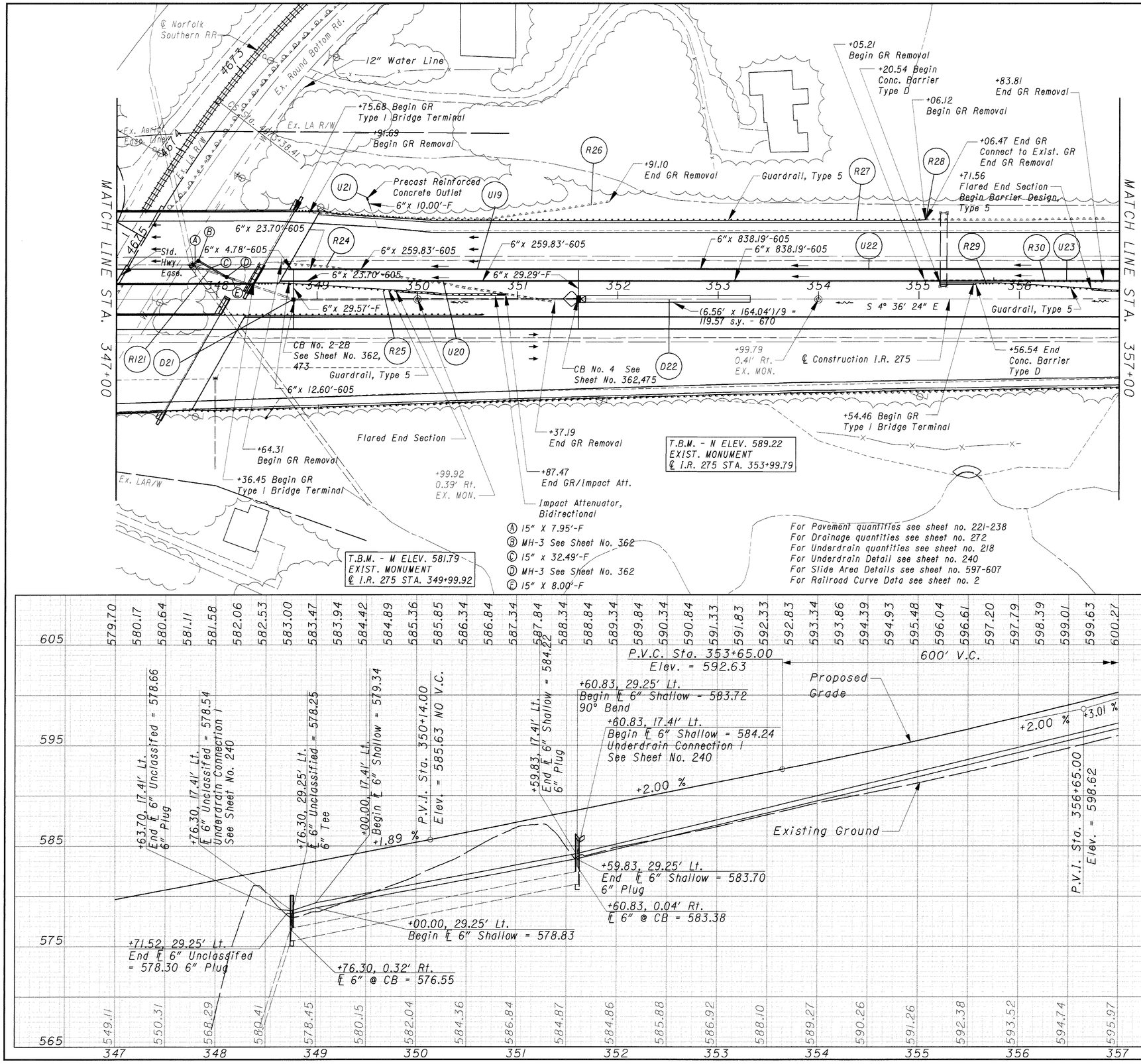

REF NO.	STATION FROM	STATION TO	SIDE	202 PIPE REMOVED 24" AND UNDER	202 GUARDRAIL REMOVED	202 GUARDRAIL REMOVED BARRIER DESIGN	606 GUARDRAIL TYPE 5	606 GUARDRAIL BARRIER DESIGN TYPE 5	606 FLARED END SECTION	606 BRIDGE TERMINAL ASSEMBLY TYPE I	606 IMPACT ATTEN. TYPE I-98 (BIDIRECT.)	622 CONCRETE BARRIER TYPE D
				LF	LF	LF	LF	LF	EACH	EACH	EACH	LF
R24	348+64.31	351+37.19	LT		174.77	100.67			1	1	1	
R25	348+36.45	350+87.47	LT				143.75	75.00				
R26	348+91.69	351+91.10	LT		300.81					1		36.00
R27	348+75.68	355+06.47	LT				631.25	75.00	1	1	1	36.00
R28	355+06.12	355+06.47	LT		0.35							
R29	355+20.54	357+80.55	LT				118.75	75.00	1	1	1	36.00
R30	355+05.21	356+83.81	LT		179.17							
R121	347+90.00	348+30.00	LT	44.72								
TOTALS CARRIED TO SUB-SUMMARY				44.72	655.10	100.67	893.75	150.00	2	2	2	72.00

HORIZONTAL SCALE IN FEET
0 25 50 100

CALCULATED EF
CHECKED AM

PLAN AND PROFILE NORTHBOUND I.R. 275
STA. 347+00.00 TO STA. 357+00.00

CLE-275-5.35

271
857

REF NO.	STATION TO STATION	SIDE		603		604		604		670												
				15" CONDUIT, TYPE F, 707.05 TYPE C		MANHOLE NO. 3		CATCH BASIN RECONSTRUCTED TO GRADE *		DITCH EROSION PROTECTION *												
	* NATIONAL HIGHWAY FUNDS			LF		EACH		EACH		SQ. YD.												
D21	STA 348+76.30	CL						1														
D22	STA 351+60.83	CL		48.44		2		1		119.57												
TOTALS CARRIED TO SUB-SUMMARY				48.44		2		2		119.57												

CALCULATED AM
CHECKED MT

ESTIMATED DRAINAGE QUANTITIES

CLE-275-5.35

272
857

R_ For Roadway Quantity see sheet no. 271

U_ For Underdrain Quantity see sheet no. 218

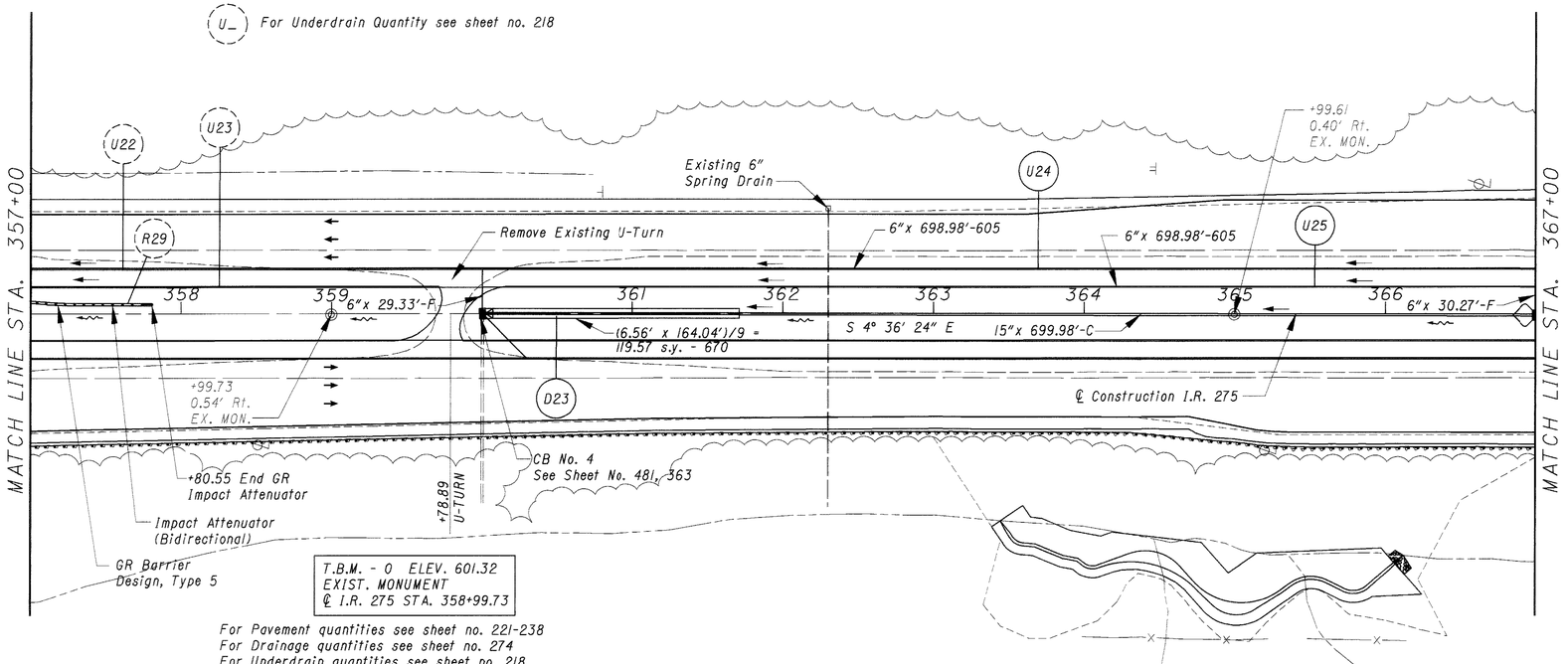

For Pavement quantities see sheet no. 221-238
For Drainage quantities see sheet no. 274
For Underdrain quantities see sheet no. 218
For Underdrain Detail see sheet no. 240
For Slide Area Details see sheet no. 597-607
For U-Turn Detail see sheet no. 241
For Relocated Stream Plan & Profile see sheet no. 378A

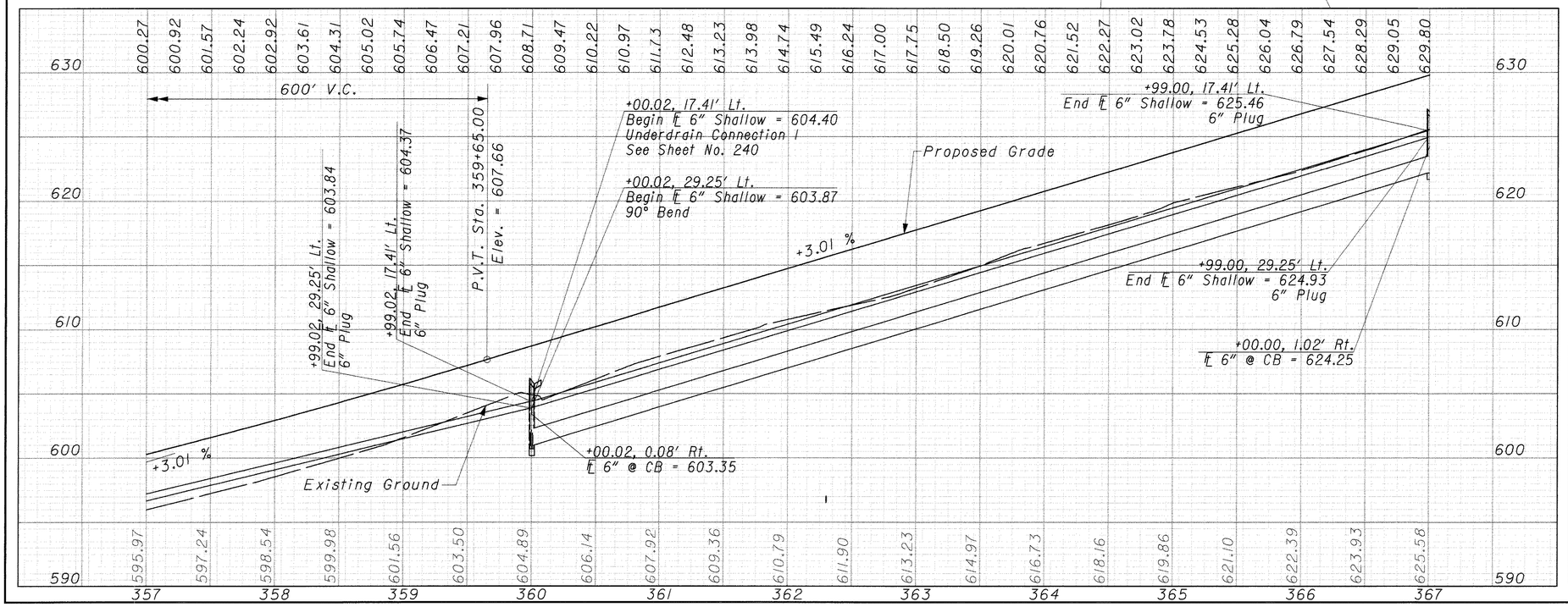

REF NO.	STATION FROM	STATION TO	SIDE

TOTALS CARRIED TO SUB-SUMMARY

NO ROADWAY QUANTITIES THIS SHEET

HORIZONTAL SCALE IN FEET
0 25 50 100

CALCULATED EF
CHECKED AM

PLAN AND PROFILE I.R. 275 NORTHBOUND
STA. 357+00.00 TO STA. 367+00.00

CLE-275-5.35

273
857

REF NO.	STATION TO STATION	SIDE		603		604		670														
				15" CONDUIT, TYPE C *		CATCH BASIN RECONSTRUCTED TO GRADE *		DITCH EROSION PROTECTION *														
	* NATIONAL HIGHWAY FUNDS			LIN. FT.		EACH		SQ. YD.														
D23	STA 360+00.02 TO STA 367+00.00	CL		699.98		1		119.57														
TOTALS CARRIED TO SUB-SUMMARY				699.98		1		119.57														

CALCULATED AM
CHECKED MT

ESTIMATED DRAINAGE QUANTITIES

CLE-275-5.35

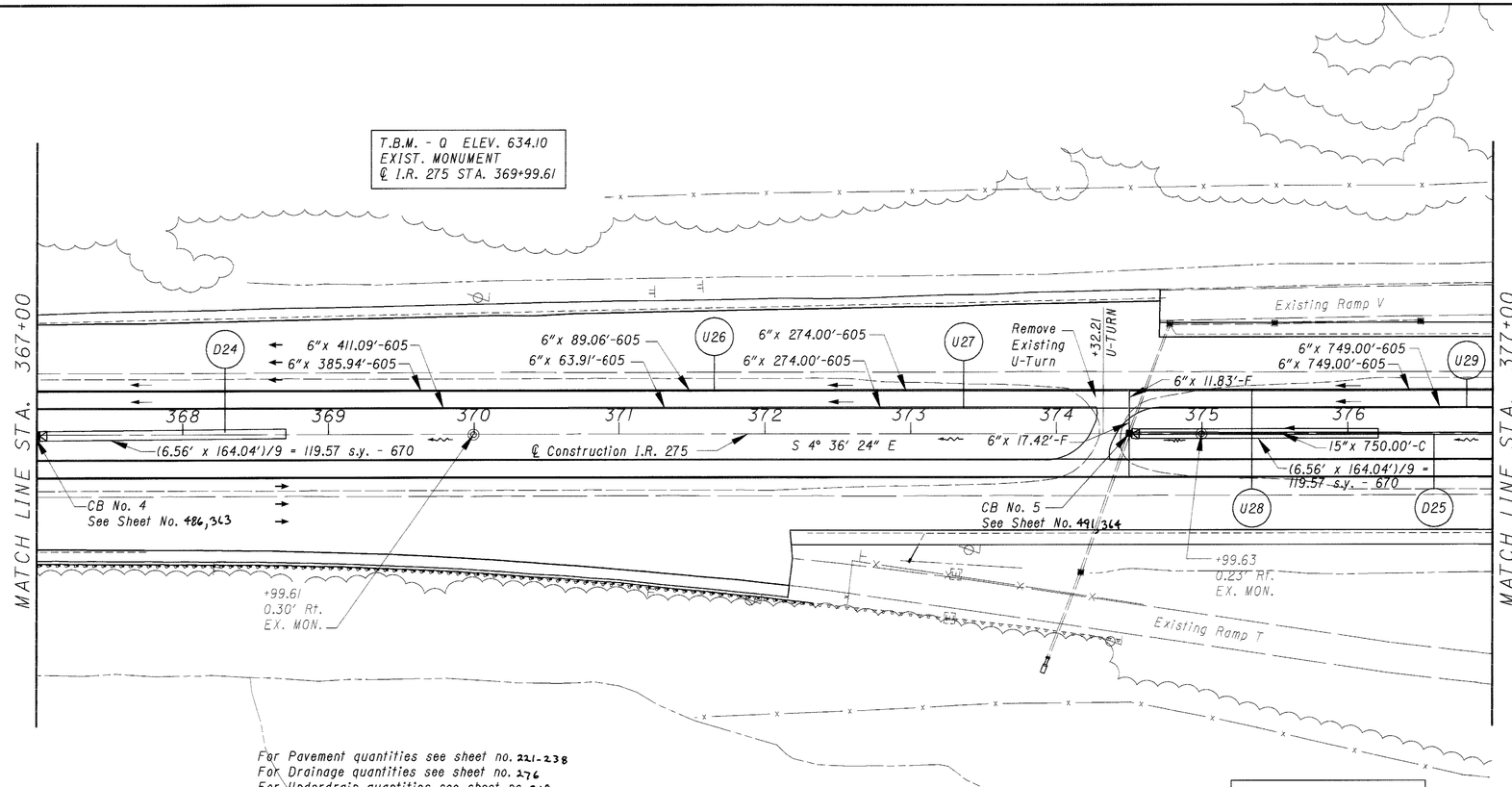

NO ROADWAY QUANTITIES THIS SHEET

REF NO.	STATION FROM	STATION TO	SIDE

TOTALS CARRIED TO SUB-SUMMARY

N

0 25 50 100
HORIZONTAL SCALE IN FEET

CALCULATED EF
CHECKED AM

PLAN AND PROFILE NORTHBOUND I.R. 275
STA. 367+00.00 TO STA. 377+00.00

CLE-275-5.35

275
857

REF NO.	STATION TO STATION	SIDE		603		604	604		670												
				15" CONDUIT, TYPE C *		CATCH BASIN NO. 4 **	CATCH BASIN RECONSTRUCTED TO GRADE *		DITCH EROSION PROTECTION *												
	* NATIONAL HIGHWAY FUNDS			LIN. FT.		EACH	EACH		SQ. YD.												
D24	STA 367+00.00	CL				1			119.57												
D25	STA 374+50.00 TO STA 382+00.00	CL		750.00			1		119.57												
TOTALS CARRIED TO SUB-SUMMARY				750.00		1	1		239.14												

CALCULATED AM
CHECKED MT

ESTIMATED DRAINAGE QUANTITIES

CLE-275-5.35

276
857

For Pavement quantities see sheet no. 221-238
For Drainage quantities see sheet no. 278
For Underdrain quantities see sheet no. 218
For Underdrain Detail see sheet no. 240

D_ For Drainage Quantity see sheet no. 276

U_ For Underdrain Quantity see sheet no. 218

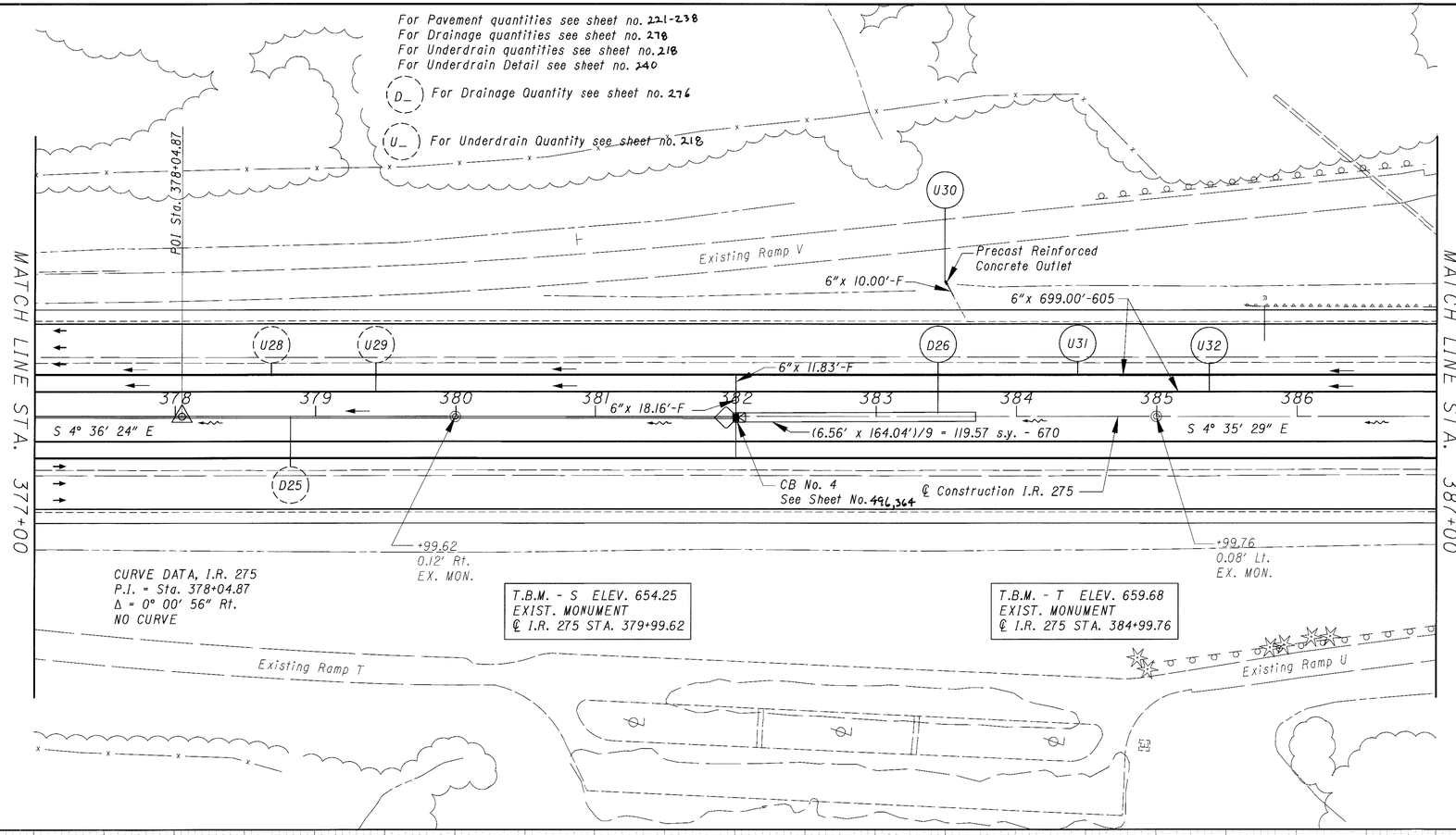

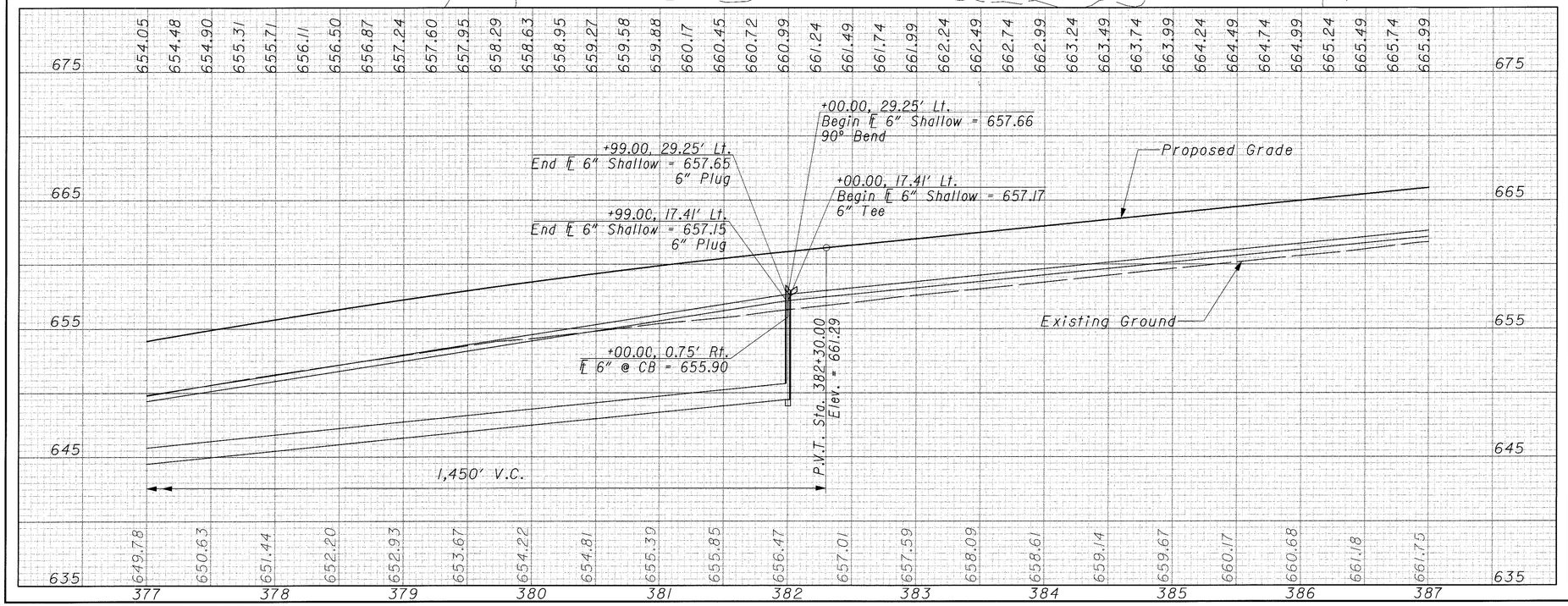

REF NO.	STATION FROM	STATION TO	SIDE

TOTALS CARRIED TO SUB-SUMMARY

NO ROADWAY QUANTITIES THIS SHEET

N

0 25 50 100
HORIZONTAL SCALE IN FEET

CALCULATED EF
CHECKED AM

PLAN AND PROFILE NORTHBOUND I.R. 275
STA. 377+00.00 TO STA. 387+00.00

CLE-275-5.35

277
85

REF NO.	STATION TO STATION	SIDE		604		670															
				CATCH BASIN NO. 4 *		DITCH EROSION PROTECTION *															
	* NATIONAL HIGHWAY FUNDS			EACH		SQ. YD.															
D26	STA 382+00.00	CL		1		119.57															
TOTALS CARRIED TO SUB-SUMMARY				1		119.57															

CALCULATED AM
CHECKED MT

ESTIMATED DRAINAGE QUANTITIES

CLE-275-5.35

278
850

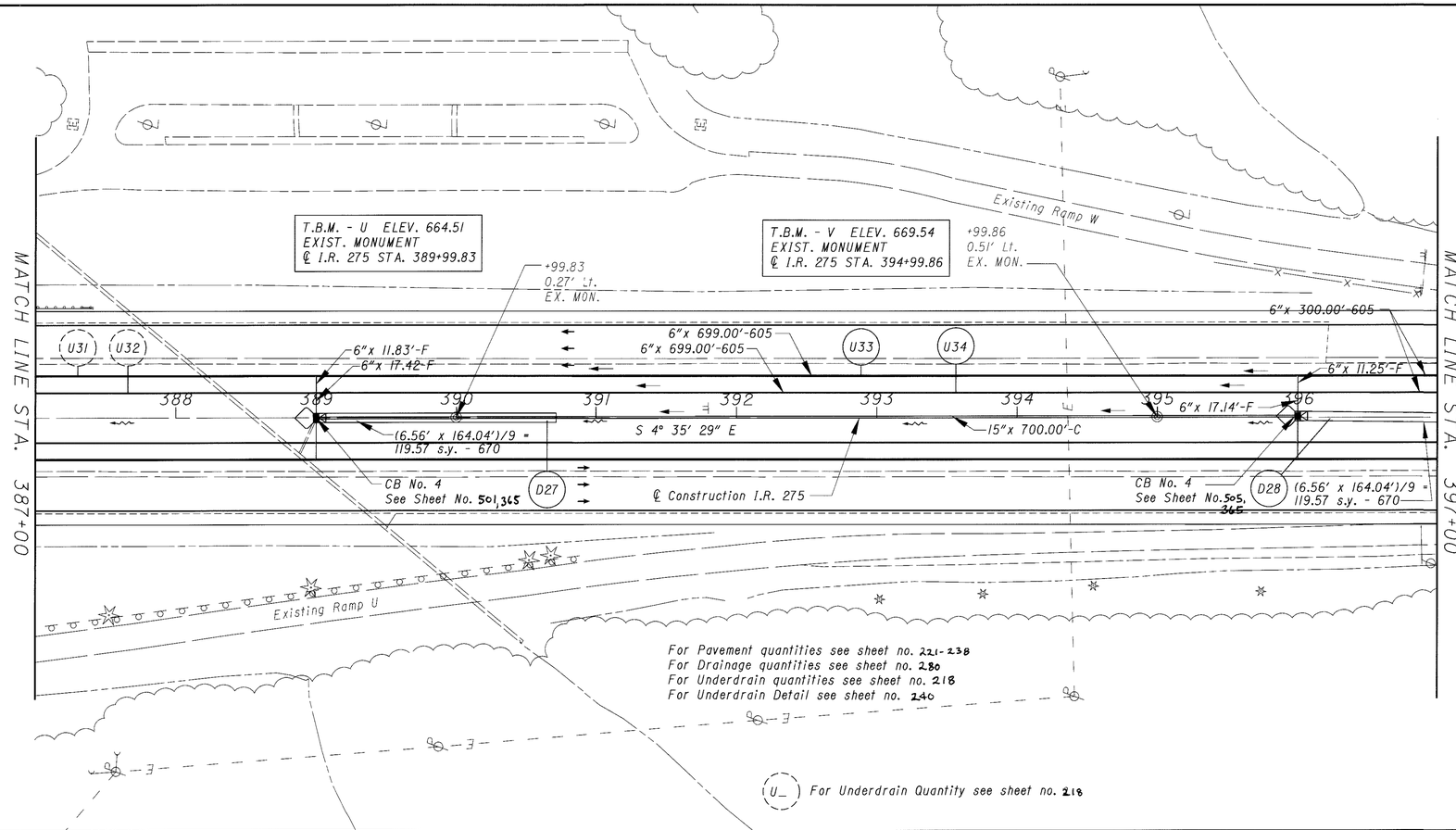

REF NO.	STATION FROM	STATION TO	SIDE

TOTALS CARRIED TO SUB-SUMMARY

NO ROADWAY QUANTITIES THIS SHEET

HORIZONTAL SCALE IN FEET
0 25 50 100

CALCULATED E.F.
CHECKED A.M.

PLAN AND PROFILE NORTHBOUND I.R. 275
STA. 387+00.00 TO STA. 397+00.00

CLE-275-5.35

279
857

REF NO.	STATION TO STATION	SIDE		603		604			670													
				15" CONDUIT, TYPE C **		CATCH BASIN NO. 4 **	CATCH BASIN RECONSTRUCTED TO GRADE *		DITCH EROSION PROTECTION *													
	* NATIONAL HIGHWAY FUNDS			LIN. FT.		EACH	EACH		SQ. YD.													
D27	STA 389+00.00 TO STA 396+00.00	CL		700.00			1		119.57													
D28	STA 396+00.00	CL				1			119.57													
TOTALS CARRIED TO SUB-SUMMARY				700.00		1	1		239.14													

CALCULATED AM
CHECKED MT

ESTIMATED DRAINAGE QUANTITIES

CLE-275-5.35

280
857

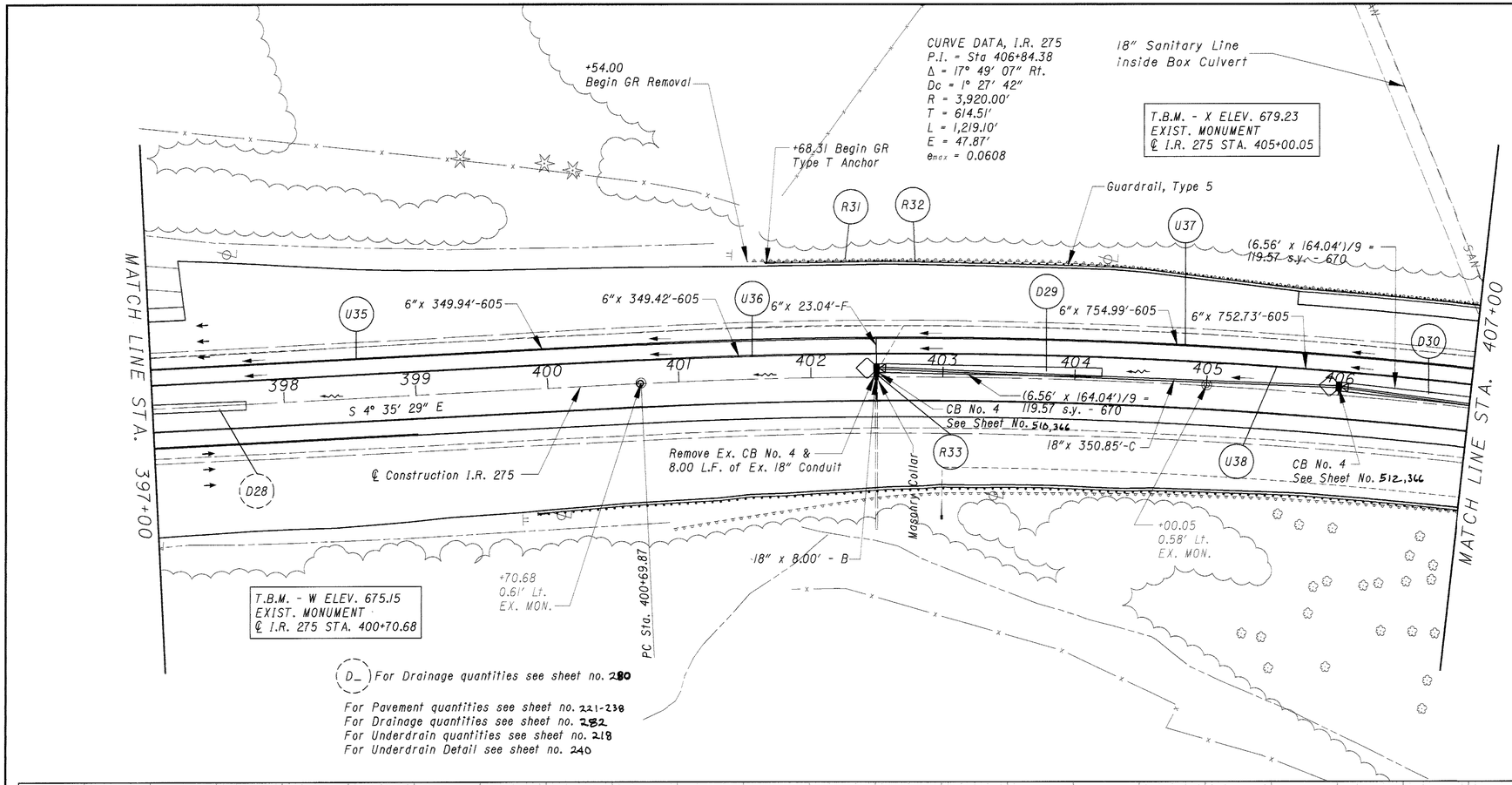

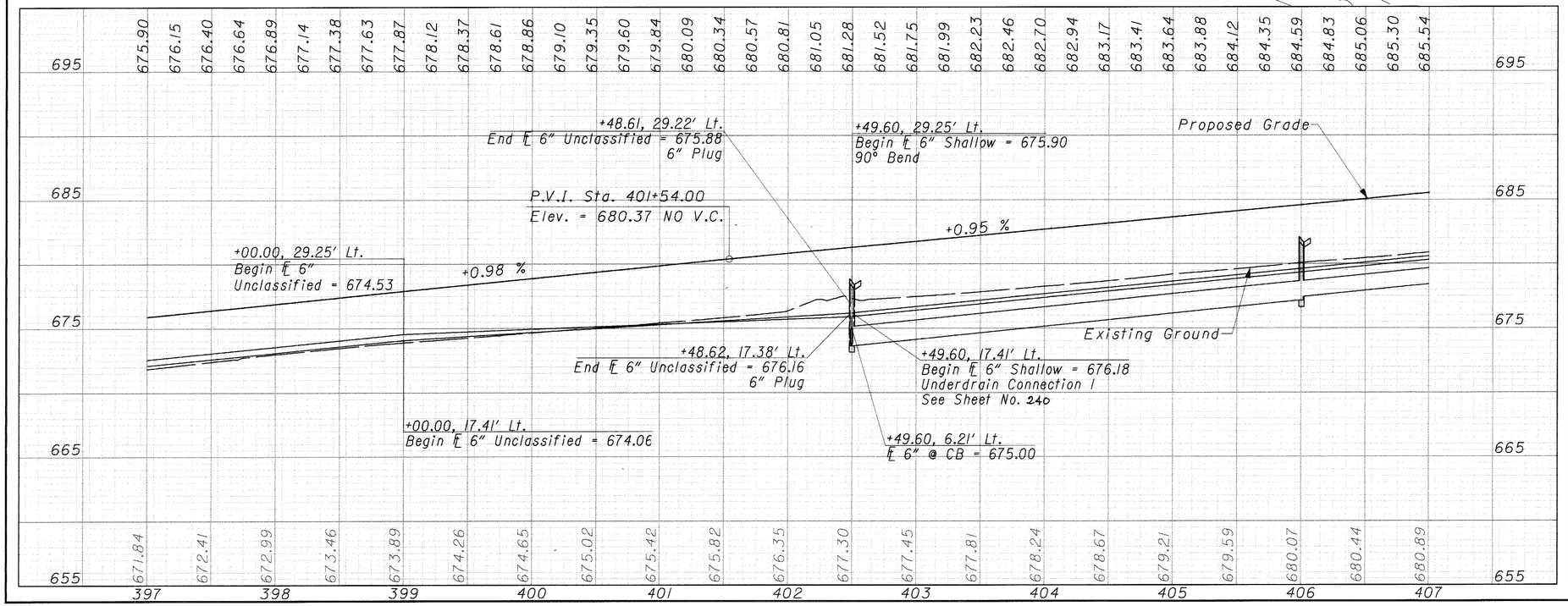

REF NO.	STATION FROM	STATION TO	SIDE	202 PIPE REMOVED, 24" AND UNDER	202 GUARDRAIL REMOVED	202 CATCH BASIN REMOVED	606 GUARDRAIL, TYPE 5	606 ANCHOR ASSEMBLY, TYPE B-98	606 ANCHOR ASSEMBLY, TYPE T
				LF	LF	EACH	LF	EACH	EACH
R31	401+54.00	413+53.09	LT					1	1
R32	401+68.31	416+01.18	LT				1400.00	1	
R33	402+49.60	402+49.60	LT	8.00		1			
TOTALS CARRIED TO SUB-SUMMARY				8.00	1225.84	1	1400.00	1	1

N

0 25 50 100
HORIZONTAL SCALE IN FEET

CALCULATED EF
CHECKED AM

PLAN AND PROFILE I.R. 275 NORTHBOUND
STA. 397+00.00 TO STA. 407+00.00

CLE-275-5.35

281
85

REF NO.	STATION TO STATION	SIDE		603			604		670													
				15" CONDUIT, TYPE C *	18" CONDUIT, TYPE C *		CATCH BASIN NO. 4 *		DITCH EROSION PROTECTION *													
	* NATIONAL HIGHWAY FUNDS			LIN. FT.	LIN. FT.		EACH		SQ. YD.													
D29	STA 402+49.61 TO STA 406+00.00	CL			358.85		1		119.57													
D30	STA 406+00.00 TO STA 410+00.00	CL		400.45			1		119.57													
TOTALS CARRIED TO SUB-SUMMARY				400.45	358.85		2		239.14													

CALCULATED AM
CHECKED MT

ESTIMATED DRAINAGE QUANTITIES

CLE-275-5.35

282
857

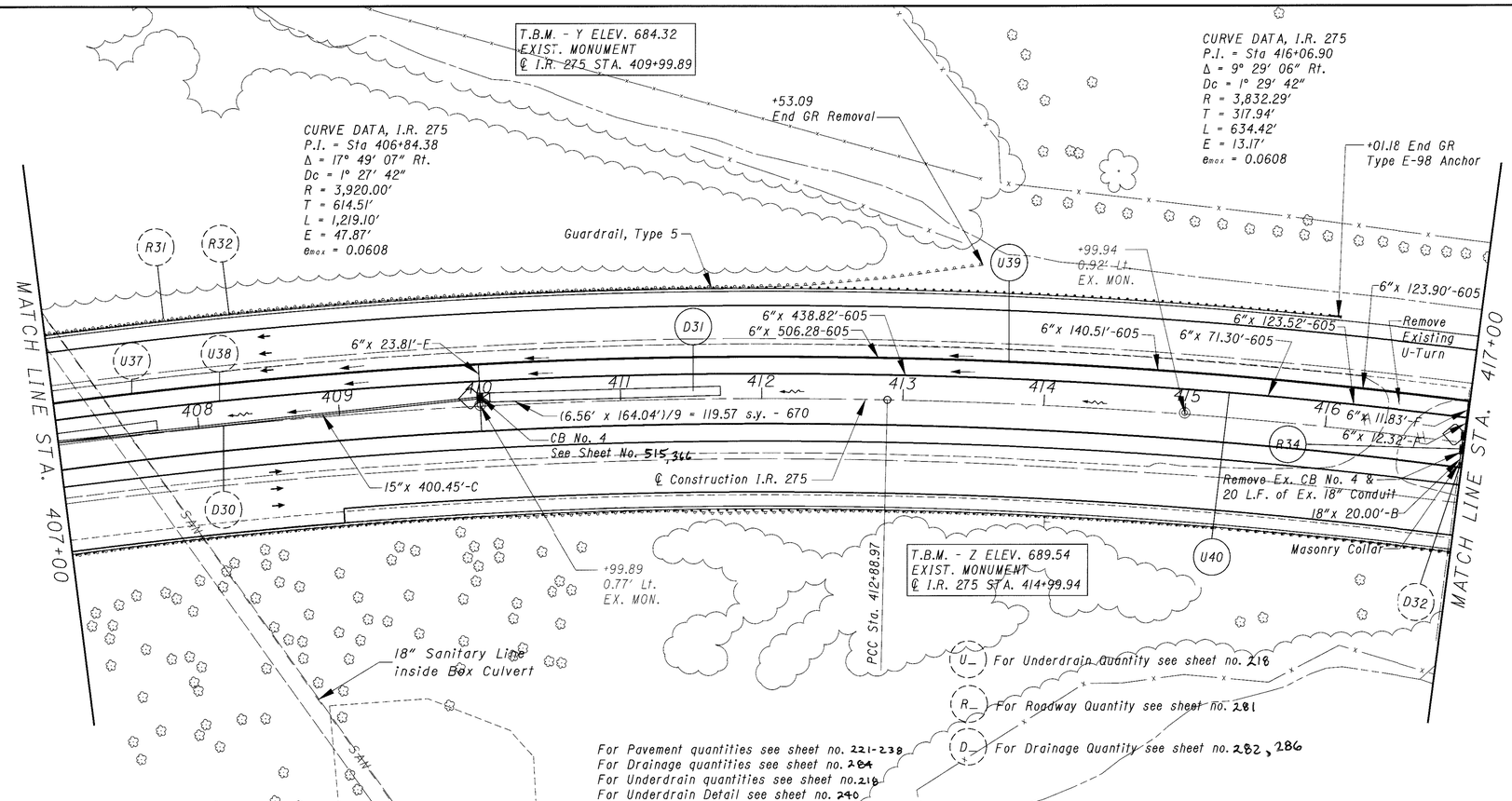

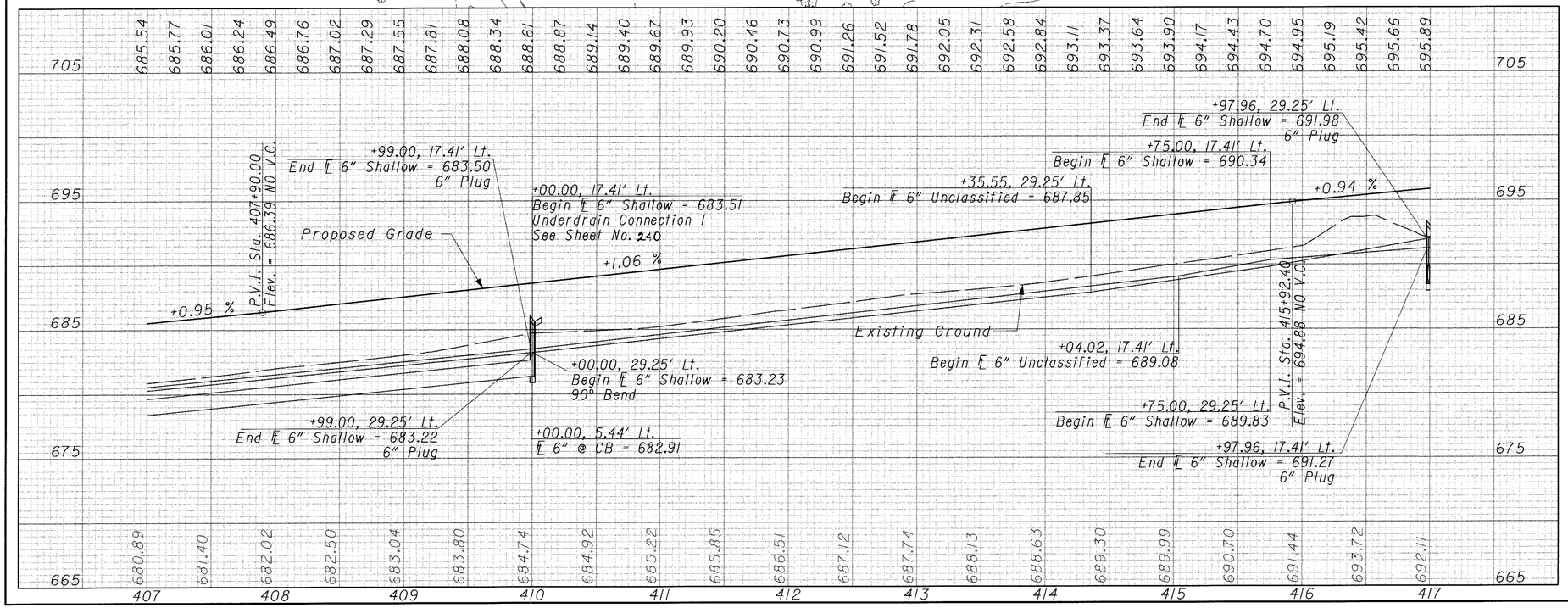

REF NO.	STATION FROM	STATION TO	SIDE			
R34	416+98.95		LT	202	PIPE REMOVED 24" AND UNDER	LF 20.00
				202	CATCH BASIN REMOVED	EACH 1
TOTALS CARRIED TO SUB-SUMMARY						20.00 / 1

HORIZONTAL SCALE IN FEET
0 25 50 100

CALCULATED EF
CHECKED AM

PLAN AND PROFILE NORTHBOUND I.R. 275
STA. 407+00.00 TO STA. 417+00.00

CLE-275-5.35

283
857

REF NO.	STATION TO STATION	SIDE		604		670															
				CATCH BASIN NO. 4 *		DITCH EROSION PROTECTION *															
	* NATIONAL HIGHWAY FUNDS			EACH		SQ. YD.															
D31	STA 410+00.00	CL		1		119.57															
TOTALS CARRIED TO SUB-SUMMARY				1		119.57															

CALCULATED AM CHECKED MT

ESTIMATED DRAINAGE QUANTITIES

CLE-275-5.35

CURVE DATA, I.R. 275
P.I. = Sta 416+06.90
Δ = 9° 29′ 06″ Rt.
Dc = 1° 29′ 42″
R = 3,832.29′
T = 317.94′
L = 634.42′
E = 13.17′
emax = 0.0608

MATCH LINE STA. 417+00

MATCH LINE STA. 427+00

U41 U42 U43 U44

D32 D33 D34 R34

6″x 755.57′-605

6″x 753.34′-605

6″x 11.34′-F

6″X 11.83′-F

6″x 746.97′-605

6″x 746.38′-605

S 33° 01′ 15″ W

CB No. 4
See Sheet No. 520, 347

CB No. 4
See Sheet No. 522, 347

CB No. 4
See Sheet No. 525, 347

418 419 420 421 422 423 424 425 426

(6.56′ x 164.04′)/9 = 119.57 s.y. - 670

(6.56′ x 164.04′)/9 = 119.57 s.y. - 670

(6.56′ x 164.04′)/9 = 119.57 s.y. - 670

15″x 400.32′-C

18″x 351.40′-C

℄ Construction I.R. 275

+98.80
1.15′ Lt.
EX. MON.

T.B.M. - A-A ELEV. 695.69
EXIST. MONUMENT
℄ I.R. 275 STA. 420+98.80

+35.50
0.24′ Lt.
EX. MON.

T.B.M. - B-B ELEV. 704.34
EXIST. MONUMENT
℄ I.R. 275 STA. 426+35.50

PCC Sta. 419+23.39

PT Sta. 426+50.94

CURVE DATA, I.R. 275
P.I. = Sta 422+88.15
Δ = 10° 18′ 30″ Rt.
Dc = 1° 25′ 01″
R = 4,043.83′
T = 364.76′
L = 727.55′
E = 16.42′
emax = 0.0608

(R_) For Roadway Quantity see sheet no. 283
For Pavement quantities see sheet no. 221-238
For Drainage quantities see sheet no. 284
For Underdrain quantities see sheet no. 218
For Underdrain Detail see sheet no. 240

715 705 695 685 675

695.89 696.13 696.37 696.60 696.84 697.07 697.31 697.54 697.78 698.02 698.25 698.49 698.73 698.98 699.24 699.52 699.81 700.11 700.42 700.74 701.07 701.42 701.77 702.14 702.52 702.91 703.31 703.72 704.15 704.58 705.03 705.49 705.96 706.44 706.94 707.44 707.96 708.48 709.02 709.57 710.14

800′ V.C.

+49.01, 29.25′ Lt.
End ℄ 6″ Shallow = 701.13
6″ Plug

+49.00, 17.41′ Lt.
End ℄ 6″ Shallow = 700.41
6″ Plug

+50.00, 29.25′ Lt.
Begin ℄ 6″ Shallow = 701.15
90° Bend

+50.00, 17.41′ Lt.
Begin ℄ 6″ Shallow = 700.43
6″ Tee

+50.00, 6.08′ Lt.
℄ 6″ @ CB = 700.30

P.V.C. Sta. 419+75.00
Elev. = 698.49

P.V.I. Sta. 423+75.00
Elev. = 702.26

Proposed Grade

Existing Ground

+98.95, 29.25′ Lt.
Begin ℄ 6″ Shallow = 692.00
90° Bend

+98.95, 17.41′ Lt.
Begin ℄ 6″ Shallow = 691.29
6″ Tee

+98.95, 5.10′ Lt.
℄ 6″ @ CB = 690.00

+0.94 %

+0.94 %

+2.41 %

692.11 692.10 692.46 692.96 693.57 694.07 694.46 695.02 695.82 696.41 697.09 698.18 699.27 700.00 700.75 701.52 702.31 703.07 703.80 704.70 705.94

417 418 419 420 421 422 423 424 425 426 427

NO ROADWAY QUANTITIES THIS SHEET

TOTALS CARRIED TO SUB-SUMMARY

REF NO.	STATION FROM	STATION TO	SIDE

CALCULATED EF
CHECKED AM

0 25 50 100
HORIZONTAL SCALE IN FEET

PLAN AND PROFILE NORTHBOUND I.R. 275
STA. 417+00.00 TO STA. 427+00.00

CLE-275-5.35

285
857

REF NO.	STATION TO STATION	SIDE		603			604		670												
				15" CONDUIT, TYPE C *	18" CONDUIT, TYPE C *		CATCH BASIN NO. 4 *		DITCH EROSION PROTECTION *												
	* NATIONAL HIGHWAY FUNDS			LIN. FT.	LIN. FT.		EACH		SQ. YD.												
D32	STA 416+98.95 TO STA 420+50.00	CL		351.40	20.00		1		119.57												
D33	STA 420+50.00 TO STA 424+50.00	CL		400.32			1		119.57												
D34	STA 424+50.00	CL					1		119.57												
TOTALS CARRIED TO SUB-SUMMARY				751.72	20.00		3		358.71												

CALCULATED AM
CHECKED MT

ESTIMATED DRAINAGE QUANTITIES

CLE-275-5.35

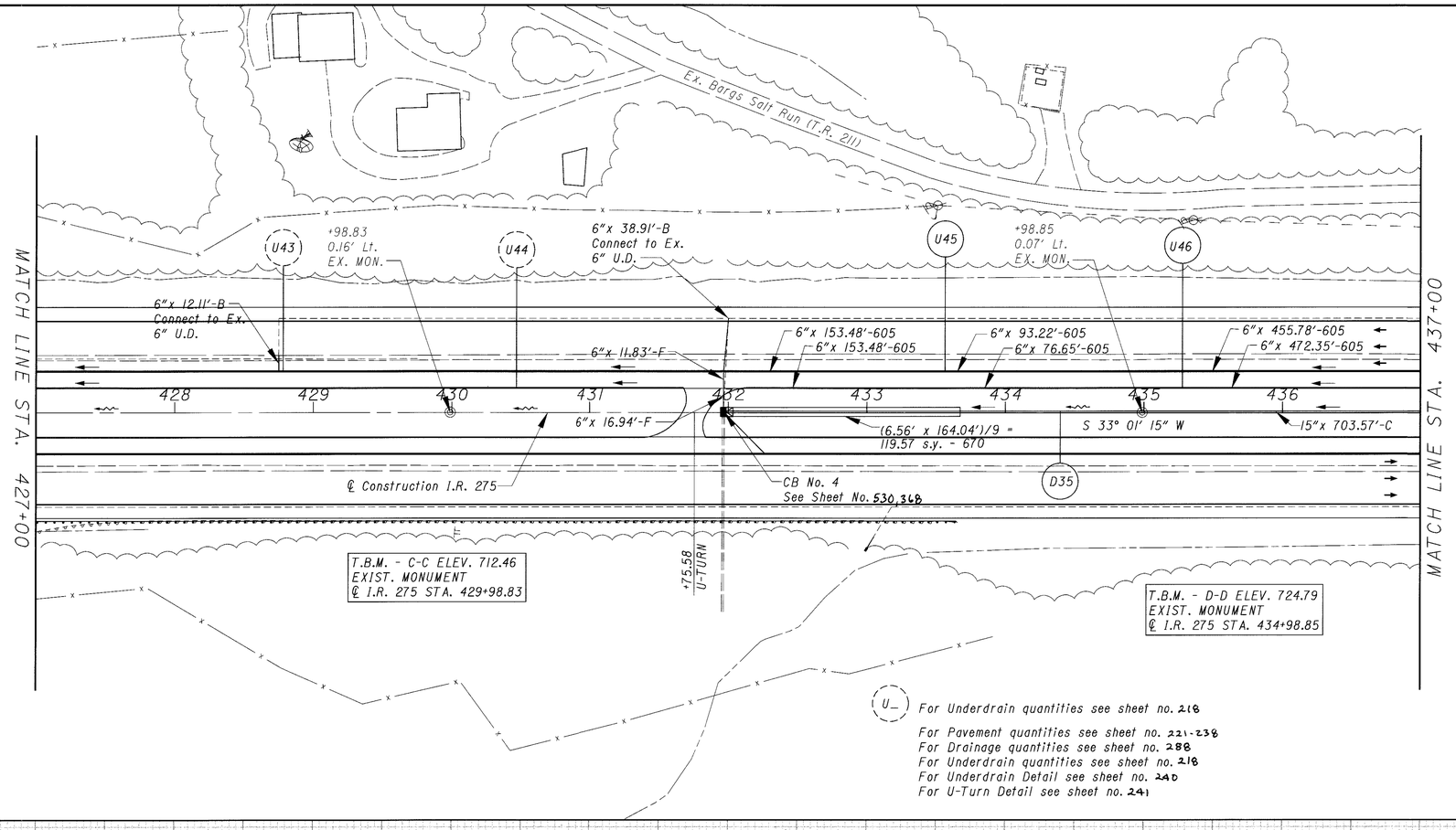

U_ For Underdrain quantities see sheet no. 218

For Pavement quantities see sheet no. 221-238
For Drainage quantities see sheet no. 288
For Underdrain quantities see sheet no. 218
For Underdrain Detail see sheet no. 240
For U-Turn Detail see sheet no. 241

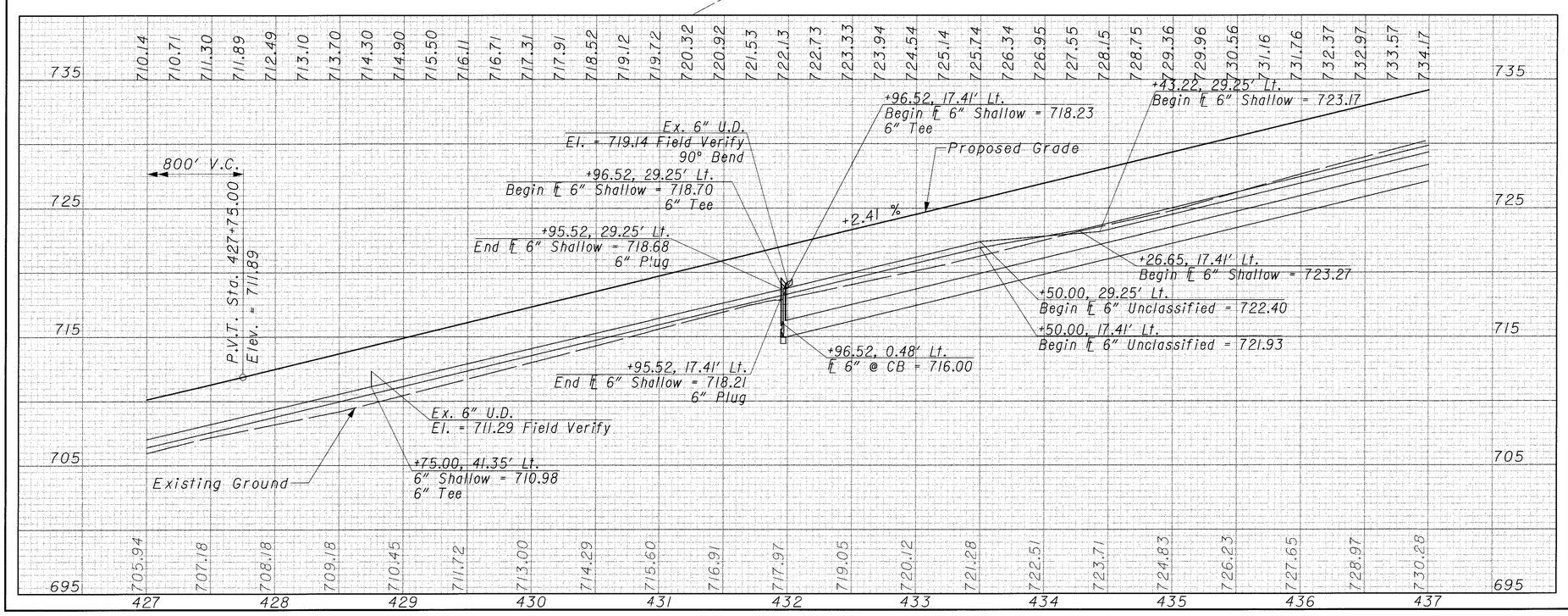

REF NO.	STATION FROM	STATION TO	SIDE

TOTALS CARRIED TO SUB-SUMMARY

NO ROADWAY QUANTITIES THIS SHEET

HORIZONTAL SCALE IN FEET
0 25 50 100

CALCULATED EF
CHECKED AM

PLAN AND PROFILE I.R. 275 NORTHBOUND
STA. 427+00.00 TO STA. 437+00.00

CLE-275-5.35

REF NO.	STATION TO STATION	SIDE		603		604		670														
				15" CONDUIT, TYPE C *		CATCH BASIN RECONSTRUCTED TO GRADE *		DITCH EROSION PROTECTION *														
	* NATIONAL HIGHWAY FUNDS			LIN. FT.		EACH		SQ. YD.														
D35	STA 431+96.43 TO STA 439+00.00	CL		703.57		1		119.57														
TOTALS CARRIED TO SUB-SUMMARY				703.57		1		119.57														

CALCULATED AM
CHECKED MT

ESTIMATED DRAINAGE QUANTITIES

CLE-275-5.35

288
857

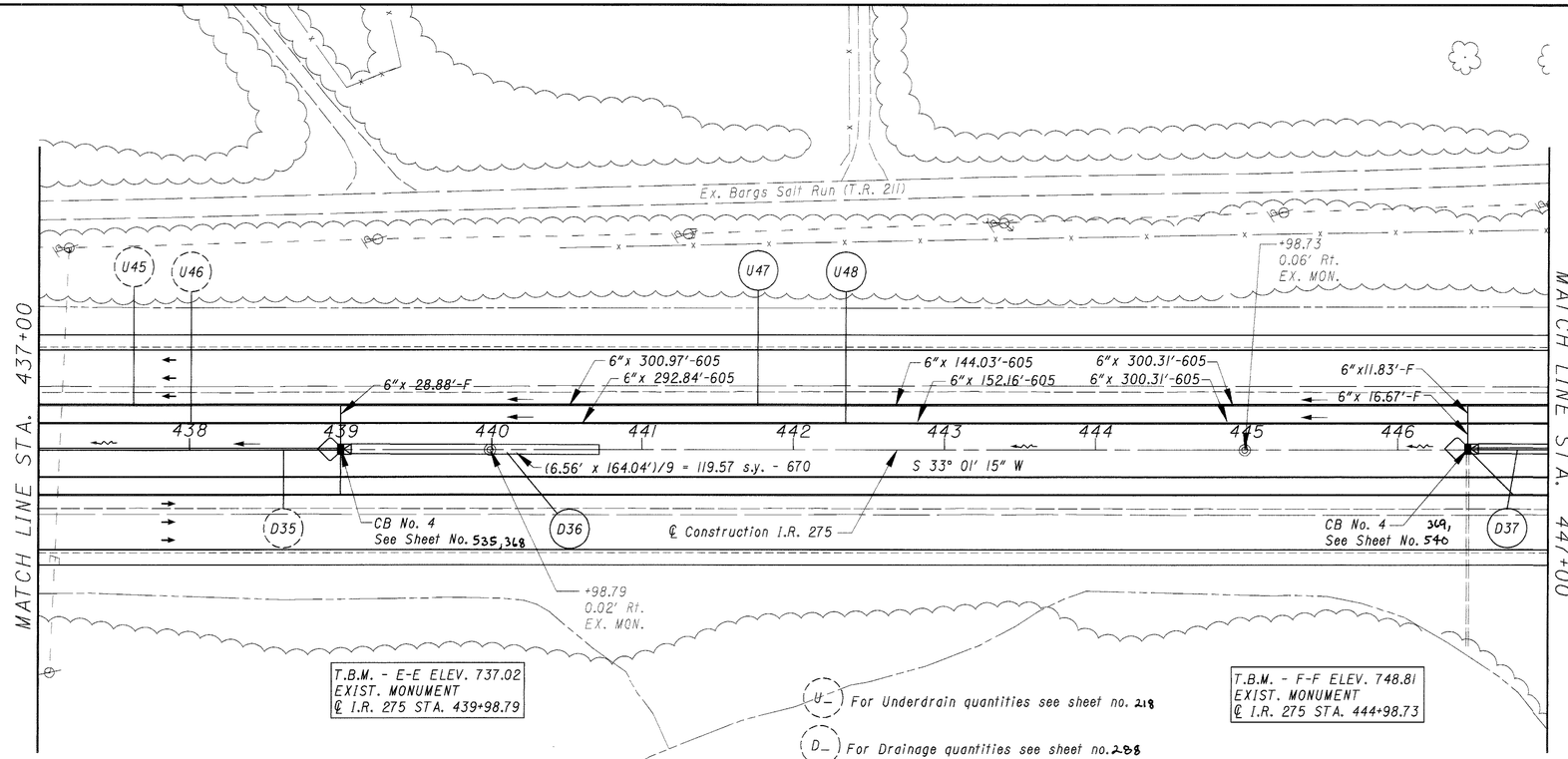

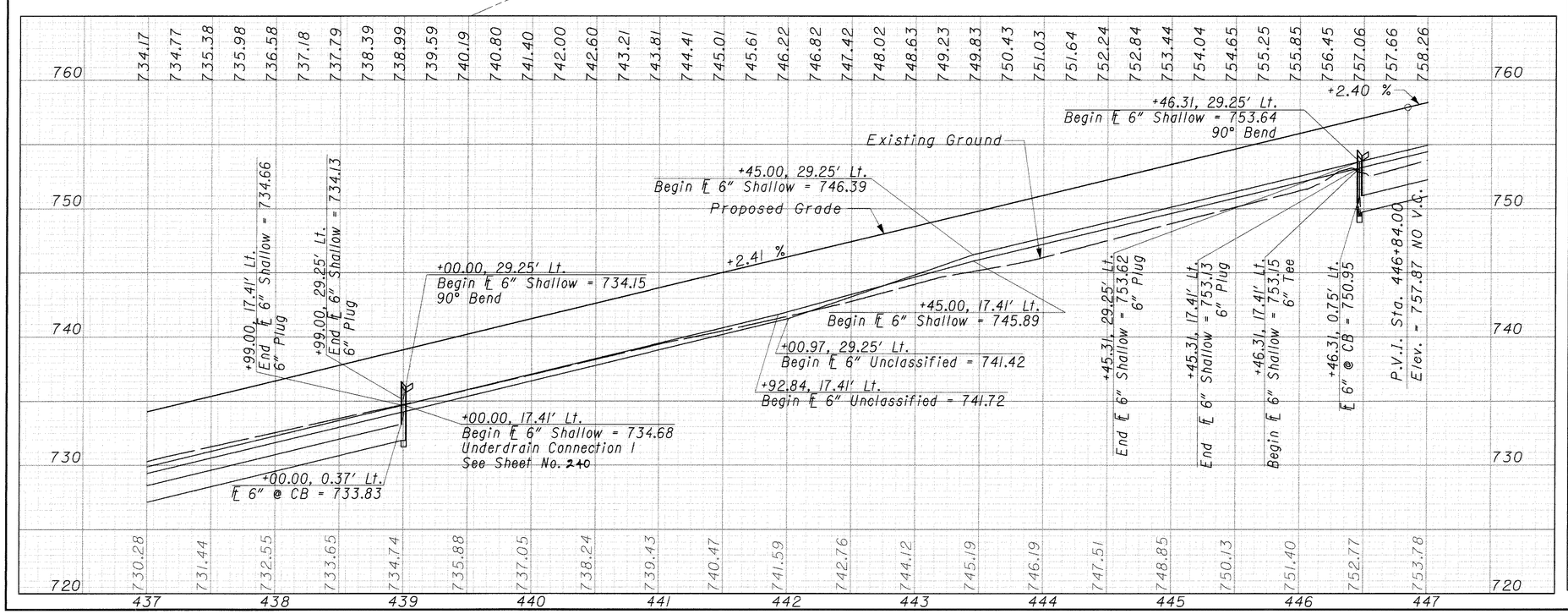

REF NO.	STATION FROM	STATION TO	SIDE

TOTALS CARRIED TO SUB-SUMMARY

NO ROADWAY QUANTITIES THIS SHEET

HORIZONTAL SCALE IN FEET
0 25 50 100

CALCULATED EF
CHECKED AM

PLAN AND PROFILE I.R. 275 NORTHBOUND
STA. 437+00.00 TO STA. 447+00.00

CLE-275-5.35

REF NO.	STATION TO STATION	SIDE		603		604			670												
				15" CONDUIT, TYPE C *		CATCH BASIN NO. 4 **	CATCH BASIN RECONSTRUCTED TO GRADE *		DITCH EROSION PROTECTION *												
	* NATIONAL HIGHWAY FUNDS			LIN. FT.		EACH	EACH		SQ. YD.												
D36	STA 439+00.00	CL				1			119.57												
D37	STA 446+46.31 TO STA 453+00.00	CL		653.69			1		119.57												
TOTALS CARRIED TO SUB-SUMMARY				653.69		1	1		239.14												

CALCULATED AM
CHECKED MT

ESTIMATED DRAINAGE QUANTITIES

CLE-275-5.35

290
857

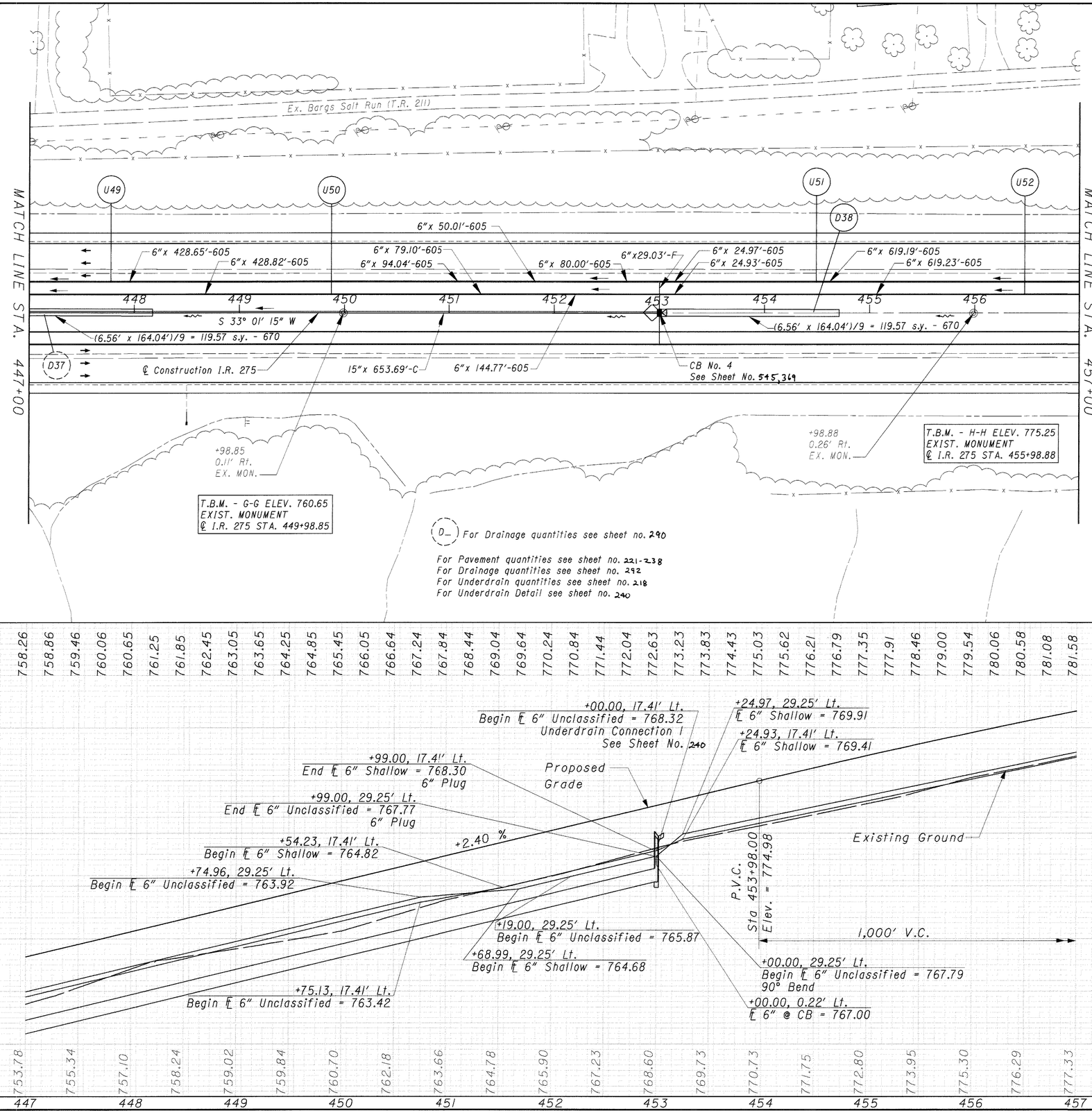

REF NO.	STATION FROM	STATION TO	SIDE	TOTALS CARRIED TO SUB-SUMMARY
				NO ROADWAY QUANTITIES THIS SHEET

HORIZONTAL SCALE IN FEET
0 25 50 100

CALCULATED EF
CHECKED AM

PLAN AND PROFILE I.R. 275 NORTHBOUND
STA. 447+00.00 TO STA. 457+00.00

CLE-275-5.35

REF NO.	STATION TO STATION	SIDE		604		670															
				CATCH BASIN NO. 4 *		DITCH EROSION PROTECTION *															
	* NATIONAL HIGHWAY FUNDS			EACH		SQ. YD.															
D38	STA 453+00.00	CL		1		119.57															
TOTALS CARRIED TO SUB-SUMMARY				1		119.57															

CALCULATED AM
CHECKED MT

ESTIMATED DRAINAGE QUANTITIES

CLE-275-5.35

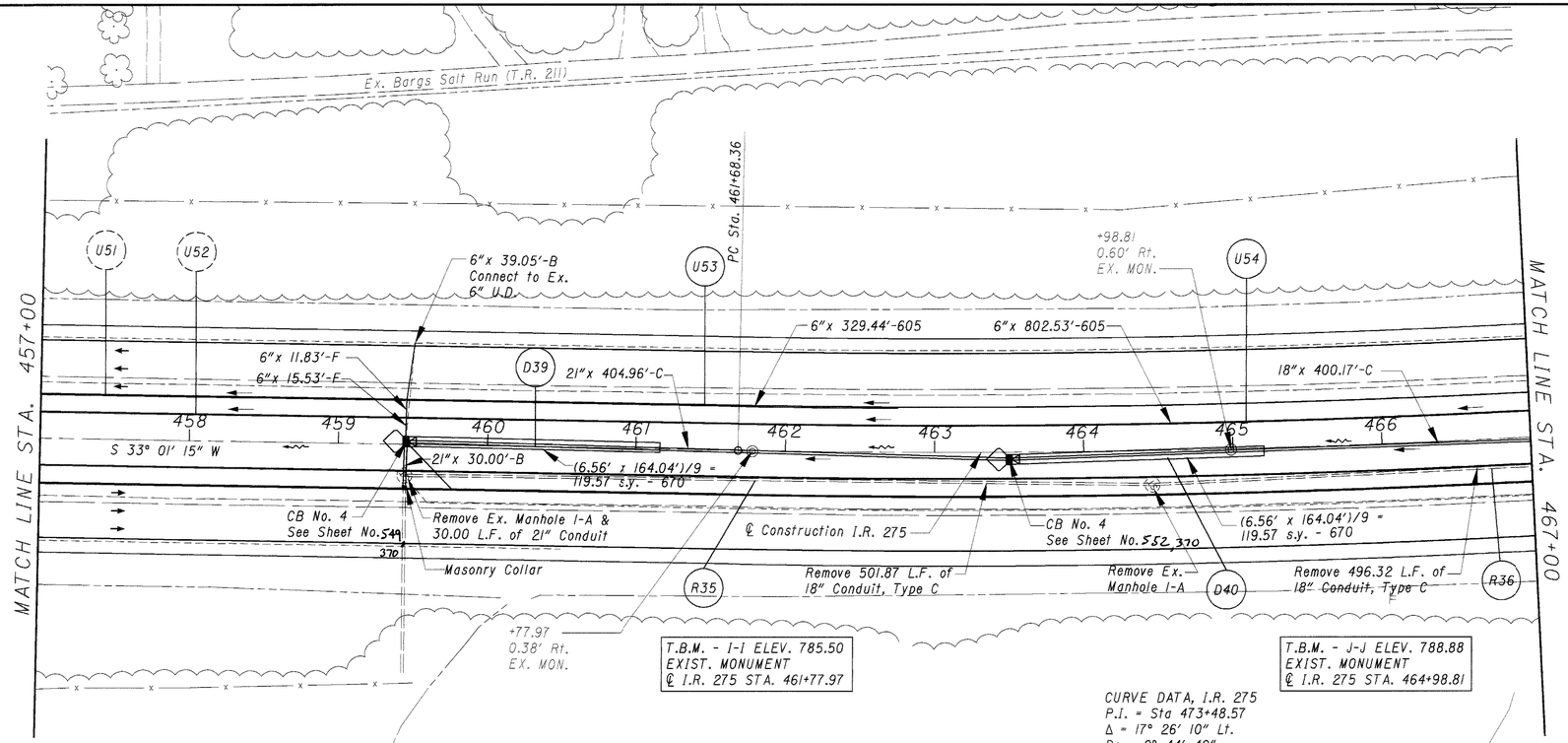

CURVE DATA, I.R. 275
P.I. = Sta 473+48.57
Δ = 17° 26' 10" Lt.
Dc = 0° 44' 40"
R = 7,696.45'
T = 1,180.20'
L = 2,342.16'
E = 89.96'
e_{max} = 0.0320

(U_) For Underdrain quantities see sheet no. 218-219

For Pavement quantities see sheet no. 221-238
For Drainage quantities see sheet no. 294
For Underdrain quantities see sheet no. 218-219
For Underdrain Detail see sheet no. 240

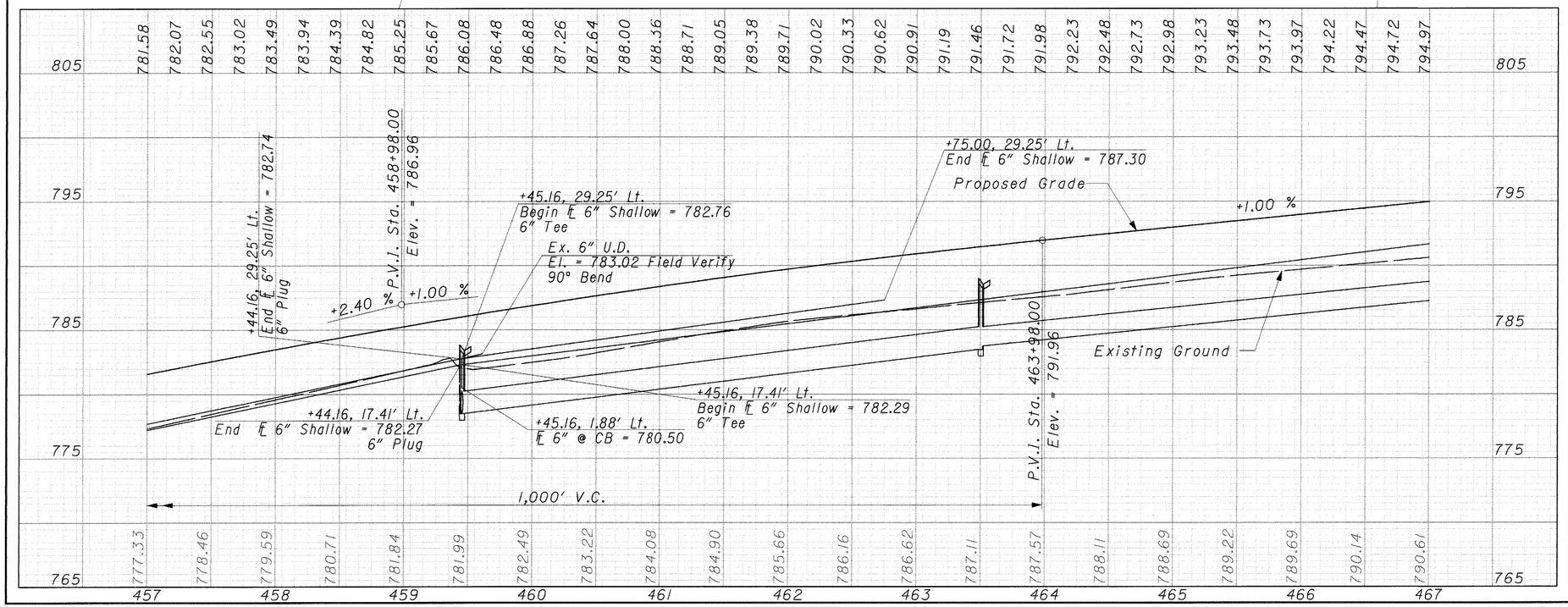

REF NO.	STATION FROM	STATION TO	SIDE	202 PIPE REMOVED 24" AND UNDER LF	202 MANHOLE REMOVED EACH
R35	459+44.66	464+45.76	RT	531.87	1
R36	464+45.76	469+40.69	RT	496.32	1
TOTALS CARRIED TO SUB-SUMMARY				1028.19	2

HORIZONTAL SCALE IN FEET
0 25 50 100

CALCULATED EF
CHECKED AM

PLAN AND PROFILE I.R. 275 NORTHBOUND
STA. 457+00.00 TO STA. 467+00.00

CLE-275-5.35

293
857

REF NO.	STATION TO STATION	SIDE		603				604			670										
				18" CONDUIT, TYPE C *	21" CONDUIT, TYPE B *	21" CONDUIT, TYPE C *		CATCH BASIN NO. 4 *	CATCH BASIN RECONSTRUCTED TO GRADE *		DITCH EROSION PROTECTION *										
	* NATIONAL HIGHWAY FUNDS			LIN. FT.	LIN. FT.	LIN. FT.		EACH	EACH		SQ. YD.										
D39	STA 459+45.16 TO STA 463+50.00	CL			30.00	404.96			1		119.57										
D40	STA 463+50.00 TO STA 467+50.00	CL		400.17				1			119.57										
TOTALS CARRIED TO SUB-SUMMARY				400.17	30.00	404.96		1	1		239.14										

CALCULATED AM
CHECKED MT

ESTIMATED DRAINAGE QUANTITIES

CLE-275-5.35

294
857

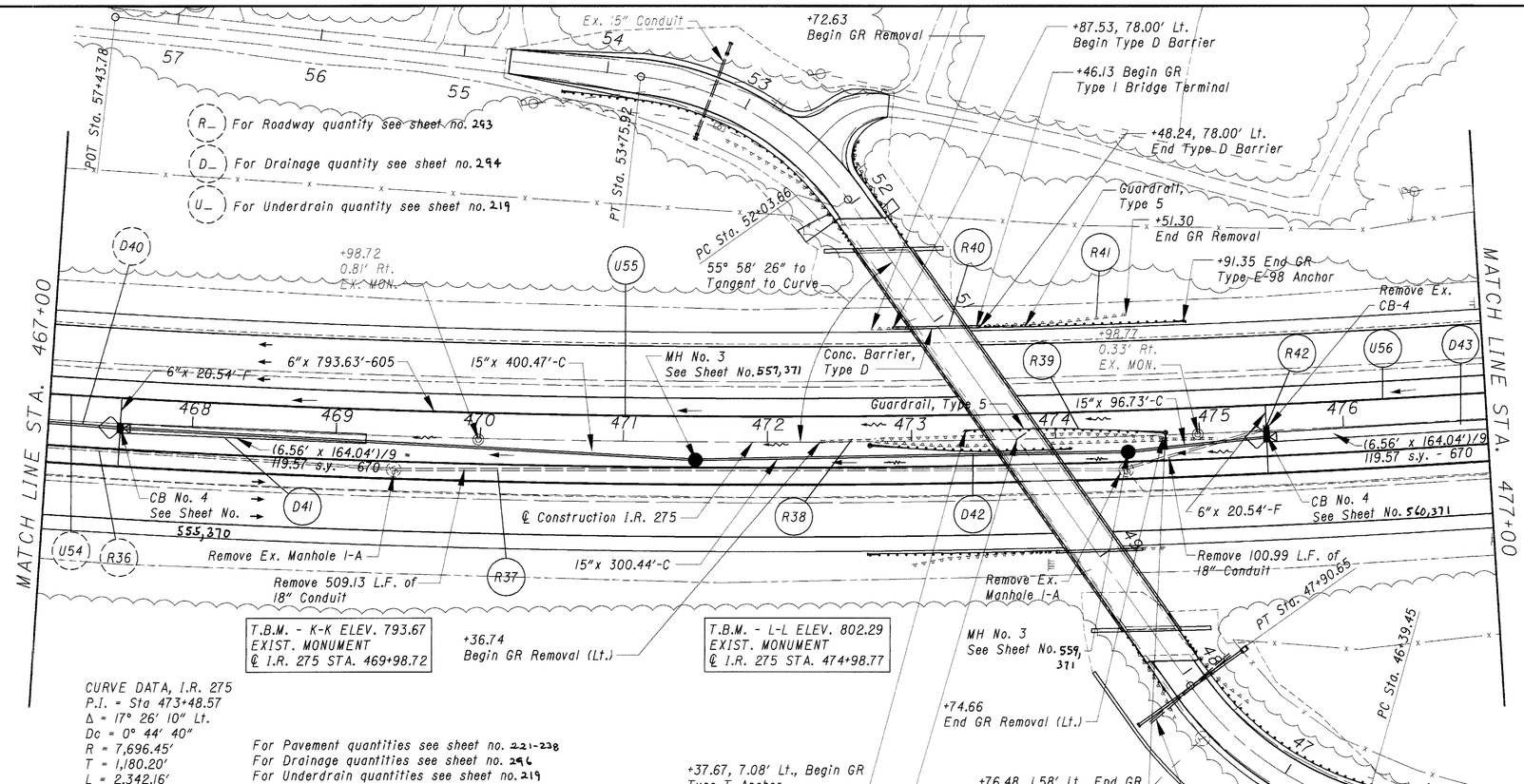

CURVE DATA, I.R. 275
P.I. = Sta 473+48.57
Δ = 17° 26' 10" Lt.
Dc = 0° 44' 40"
R = 7,696.45'
T = 1,180.20'
L = 2,342.16'
E = 89.96'
emax = 0.0320

For Pavement quantities see sheet no. 221-238
For Drainage quantities see sheet no. 296
For Underdrain quantities see sheet no. 219
For Underdrain Detail see sheet no. 240
For T.R. 211, BARGS SALT RUN see sheet no. 356, 357, 358
For Drive Detail see sheet no. 241

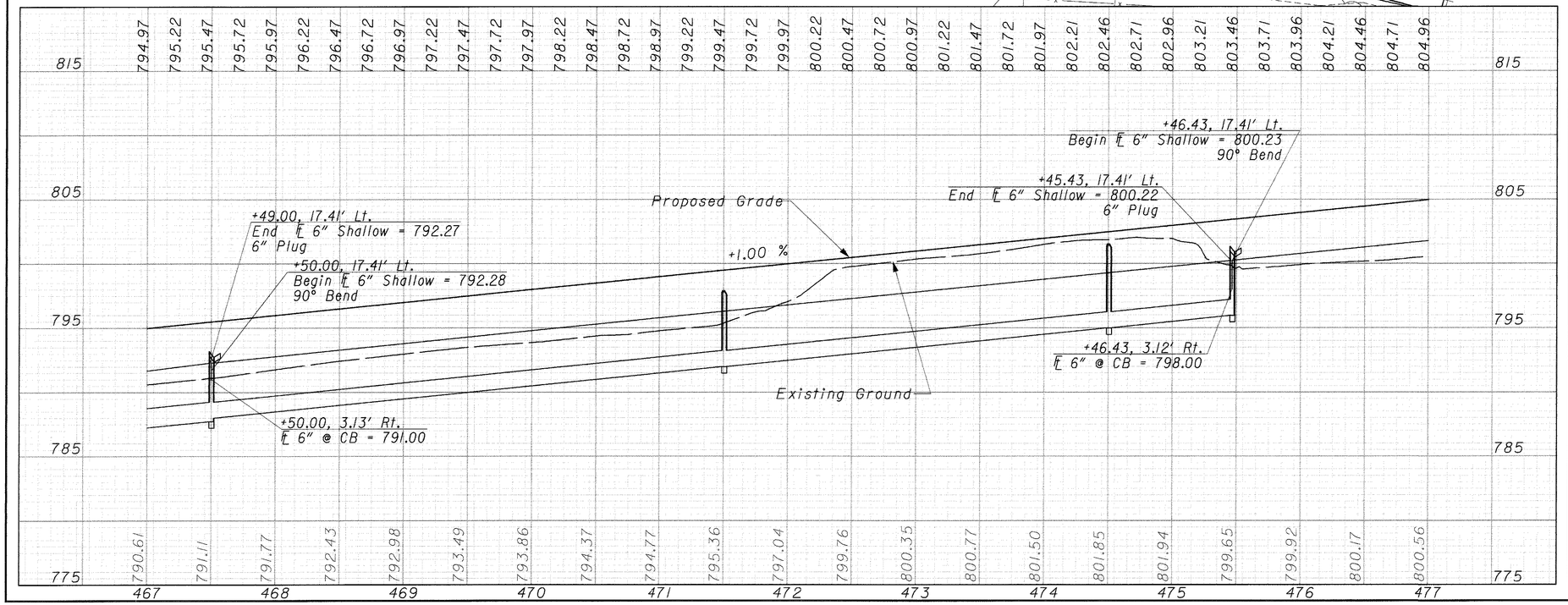

REF NO.	STATION FROM	STATION TO	SIDE	202 PIPE REMOVED 24" AND UNDER	202 GUARDRAIL REMOVED	202 GUARDRAIL REMOVED BARRIER DESIGN	202 MANHOLE REMOVED	202 CATCH BASIN REMOVED	606 GUARDRAIL TYPE 5	606 ANCHOR ASSEMBLY TYPE E-98	606 ANCHOR ASSEMBLY TYPE A	606 ANCHOR ASSEMBLY TYPE T	606 BRIDGE TERMINAL ASSEMBLY TYPE I	622 CONCRETE BARRIER TYPE D
				LF	LF	LF	EACH	EACH	LF	EACH	EACH	EACH	EACH	LF
R37	469+40.69	474+48.38	LT	509.13										
R38	472+36.74	474+74.66	LT											
R39	473+37.67	474+76.48	LT		200.51	37.72			100.00					
R40	472+87.53	474+91.35	LT						93.75	1	1	1	1	60.08
R41	472+72.63	474+51.30	LT		177.08									
R42	474+48.38	475+46.43	LT	100.99										
TOTALS CARRIED TO SUB-SUMMARY				610.12	377.59	37.72	1	1	193.75	1	1	1	1	60.08

CALCULATED EF
CHECKED AM

0 25 50 100
HORIZONTAL
SCALE IN FEET

PLAN AND PROFILE NORTHBOUND I.R. 275
STA. 467+00.00 TO STA. 477+00.00

CLE-275-5.35

REF NO.	STATION TO STATION	SIDE		603		604			670													
				15" CONDUIT, TYPE C *		CATCH BASIN NO. 4 *	MANHOLE NO. 3 *		DITCH EROSION PROTECTION *													
	* NATIONAL HIGHWAY FUNDS			LIN. FT.		EACH	EACH		SQ. YD.													
D41	STA 467+50.00 TO STA 471+50.00	CL		400.47		1			119.57													
D42	STA 471+50.00 TO STA 474+50.00	CL		300.44			1															
D43	STA 474+50.00 TO STA 475+46.43	CL		96.73		1	1		119.57													
TOTALS CARRIED TO SUB-SUMMARY				797.64		2	2		239.14													

CALCULATED AM CHECKED MT

ESTIMATED DRAINAGE QUANTITIES

CLE-275-5.35

296
859

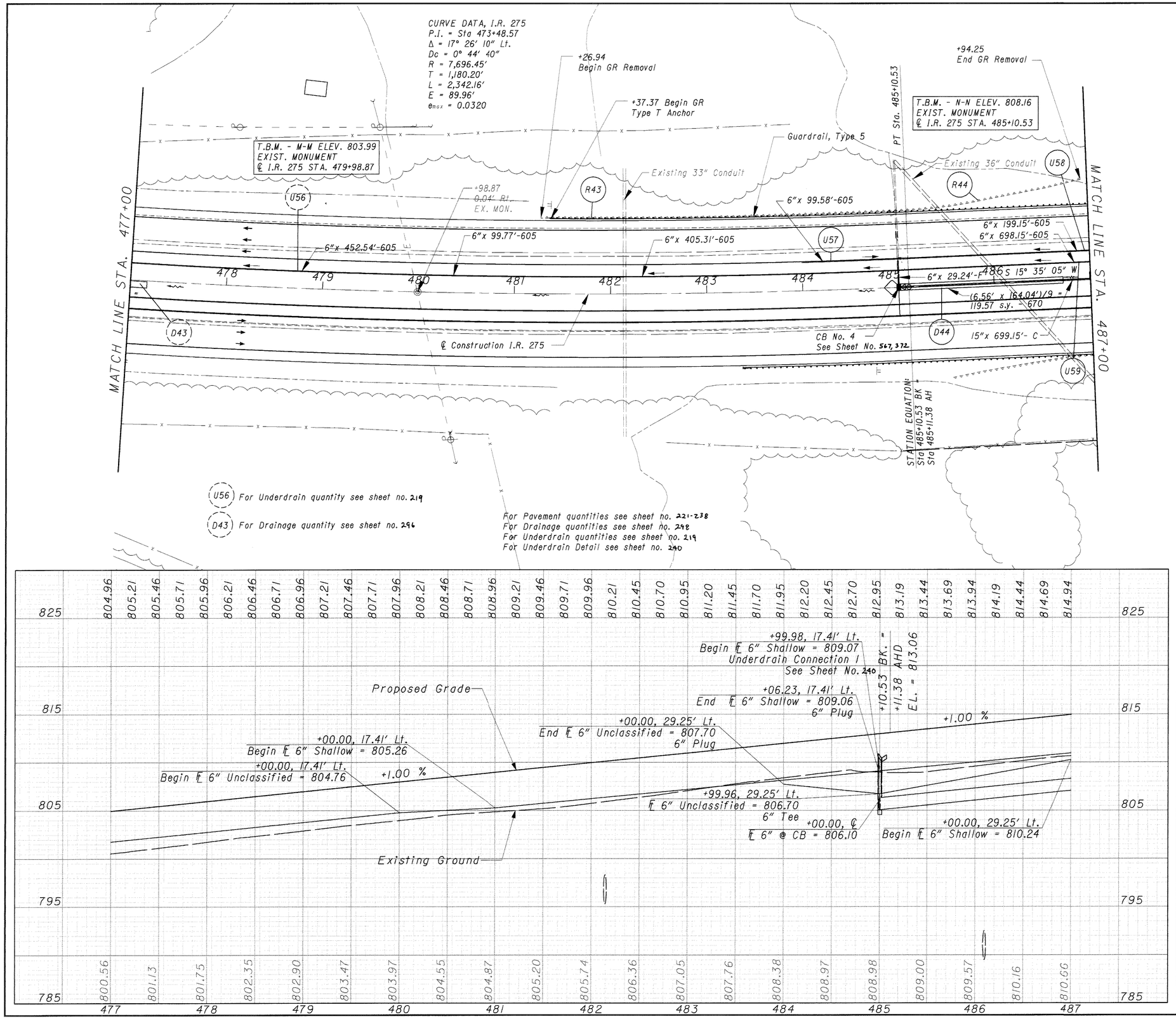

REF NO.	STATION FROM	STATION TO	SIDE	202 GUARDRAIL REMOVED LF	606 GUARDRAIL TYPE 5 LF	606 ANCHOR ASSEMBLY TYPE E-98 EACH	606 ANCHOR ASSEMBLY TYPE T EACH
R43	481+37.37	488+29.51	LT		625.00	1	1
R44	481+26.94	486+94.25	LT	564.45			
TOTALS CARRIED TO SUB-SUMMARY				564.45	625.00	1	1

HORIZONTAL SCALE IN FEET 0 25 50 100

CALCULATED EF
CHECKED AM

PLAN AND PROFILE NORTHBOUND I.R. 275
STA. 477+00.00 TO STA. 487+00.00

CLE-275-5.35

REF NO.	STATION TO STATION	SIDE		603		604		670													
				15" CONDUIT, TYPE C *		CATCH BASIN Reconstructed * To Grade		DITCH EROSION PROTECTION *													
	* NATIONAL HIGHWAY FUNDS			LIN. FT.		EACH		SQ. YD.													
D44	STA 485+00.00 TO STA 492+00.00	CL		699.15		1		119.57													
	TOTALS CARRIED TO SUB-SUMMARY			699.15		1		119.57													

CALCULATED AM
CHECKED MT

ESTIMATED DRAINAGE QUANTITIES

CLE-275-5.35

298
857

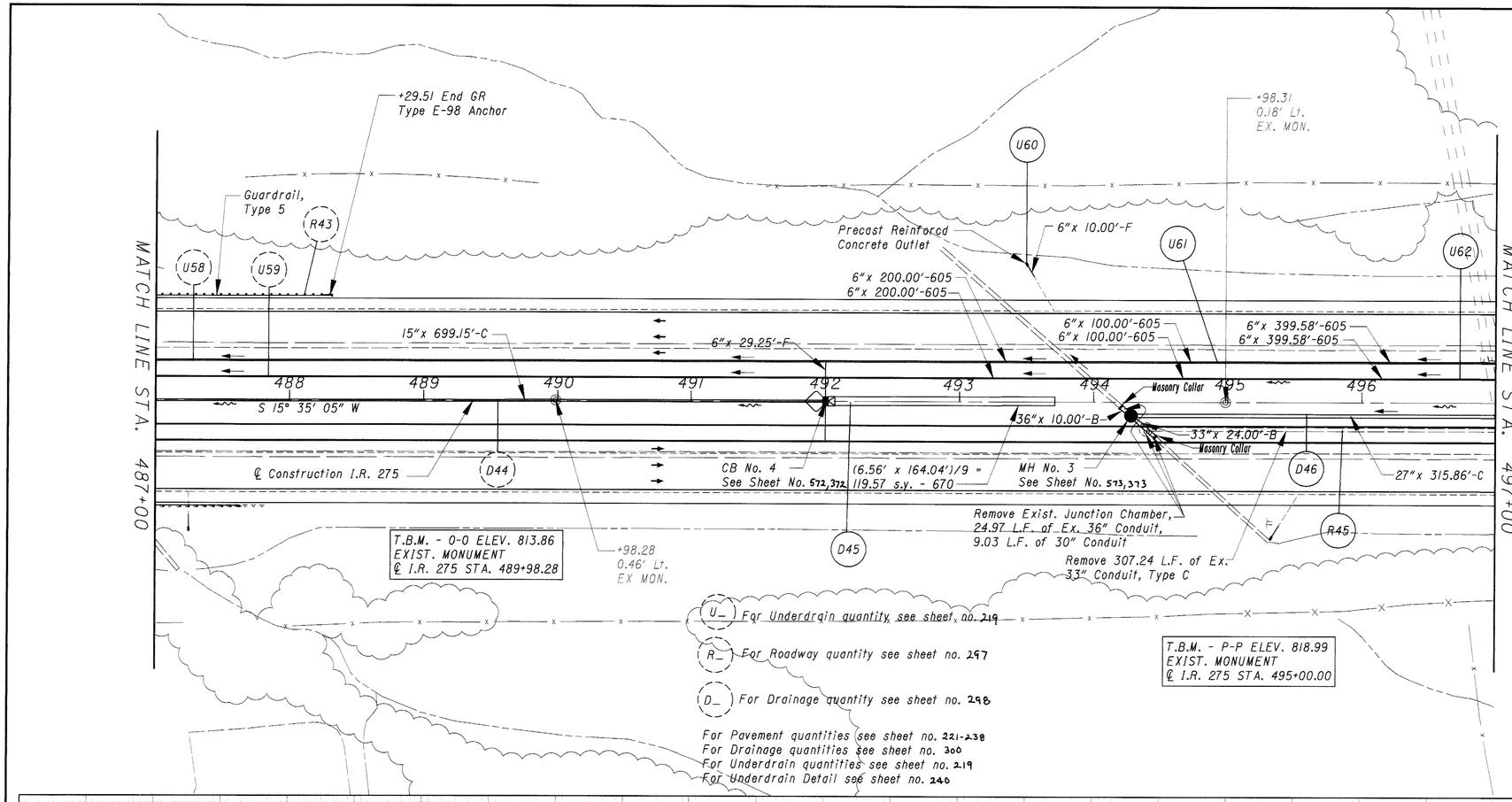

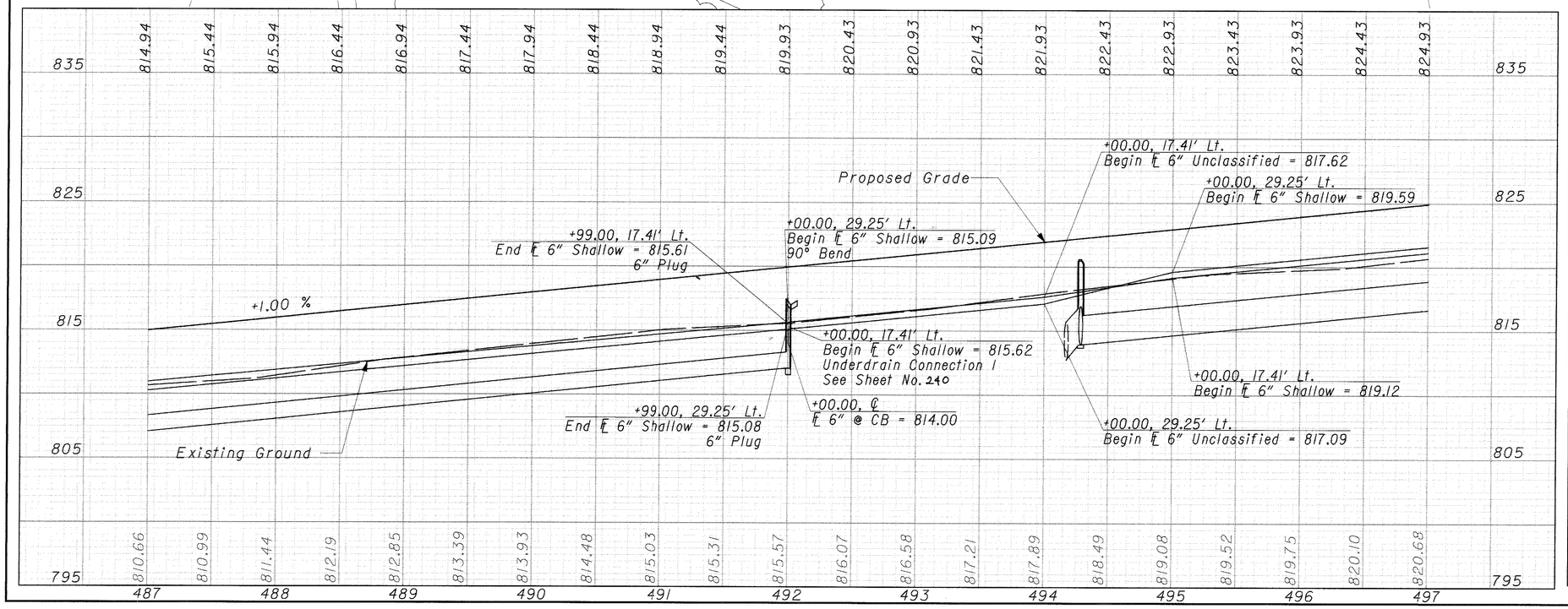

REF NO.	STATION FROM	STATION TO	SIDE			
R45	494+39.12	497+46.36	LT	202	STRUCTURE REMOVED	EACH 1
				202	PIPE REMOVED OVER 24"	LF 341.24
TOTALS CARRIED TO SUB-SUMMARY						1 341.24

HORIZONTAL SCALE IN FEET
0 25 50 100

CALCULATED EF CHECKED AM

PLAN AND PROFILE I.R. 275 NORTHBOUND STA. 487+00.00 TO STA. 497+00.00

CLE-275-5.35

299
85

REF NO.	STATION TO STATION	SIDE		603				604			670											
				27" CONDUIT, TYPE C *	33" CONDUIT, TYPE B *	36" CONDUIT, TYPE B *		CATCH BASIN NO. 4 *	MANHOLE NO. 3 *		DITCH EROSION PROTECTION *											
	* NATIONAL HIGHWAY FUNDS			LIN. FT.	LIN. FT.	LIN. FT.		EACH	EACH		SQ. YD.											
D45	STA 492+00.00	CL						1			119.57											
D46	STA 494+27.76 TO STA 497+43.63	RT		315.86	24.00	10.00			1													
TOTALS CARRIED TO SUB-SUMMARY				315.86	24.00	10.00		1	1		119.57											

CALCULATED AM
CHECKED MT

ESTIMATED DRAINAGE QUANTITIES

CLE-275-5.35

300
857

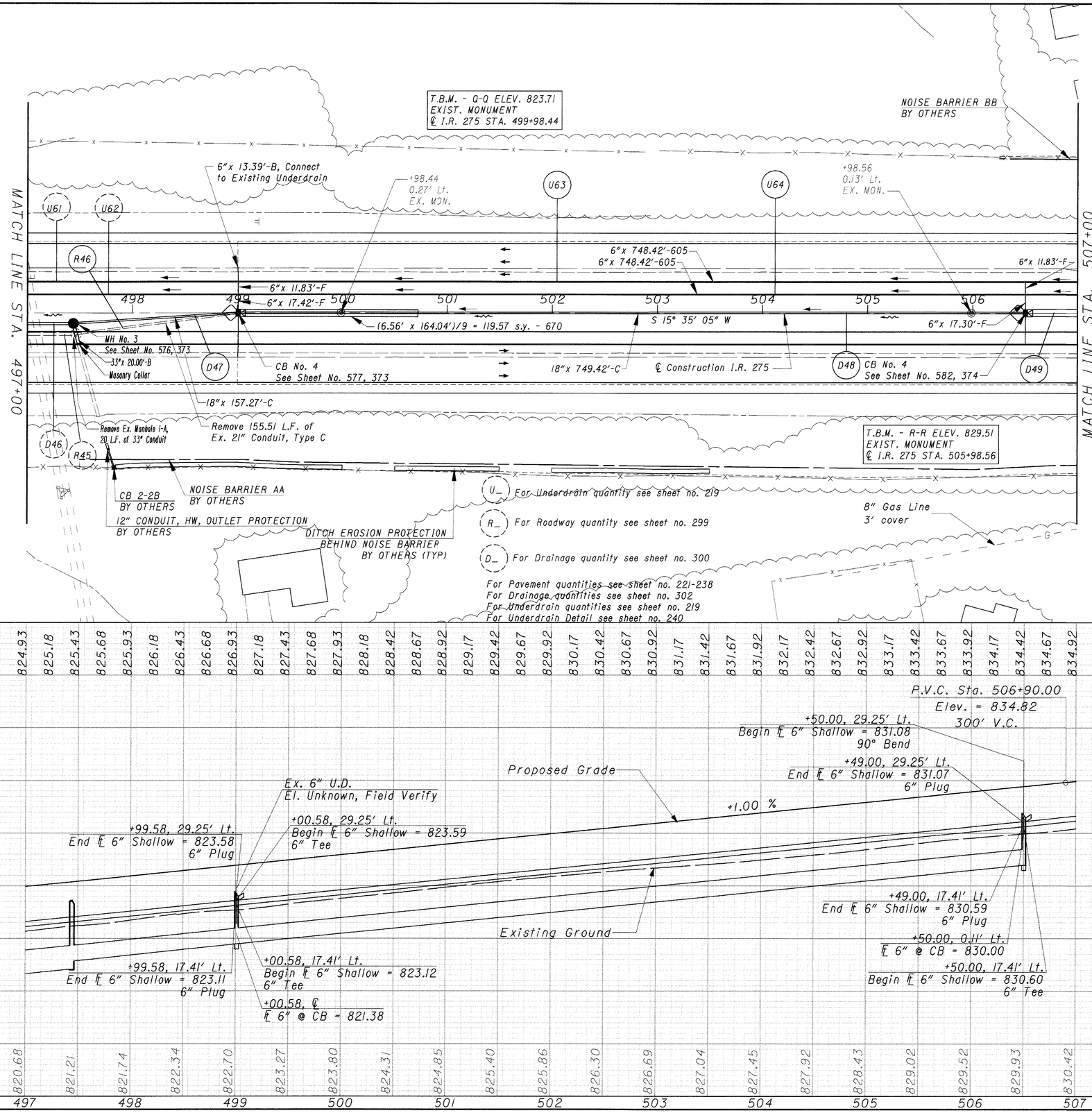

REF NO.	STATION FROM	STATION TO	SIDE			
R46	497+46.36	499+00.58	LT	202 PIPE REMOVED 24" AND UNDER	LF	155.51
				202 PIPE REMOVED OVER 24"	LF	20.00
				202 MANHOLE REMOVED	EACH	1
				TOTALS CARRIED TO SUB-SUMMARY		155.51 / 20.00 / 1

HORIZONTAL SCALE IN FEET
0 25 50 100

CALCULATED EF
CHECKED AM

PLAN AND PROFILE NORTHBOUND I.R. 275
STA. 497+00.00 TO STA. 507+00.00

CLE-275-5.35

301
857

REF NO.	STATION TO STATION	SIDE		603			604				670											
				18" CONDUIT, TYPE C *	33" CONDUIT, TYPE B *		CATCH BASIN NO. 4 *	CATCH BASIN RECONSTRUCTED TO GRADE *	MANHOLE NO. 3 *		DITCH EROSION PROTECTION *											
	* NATIONAL HIGHWAY FUNDS			LIN. FT.	LIN. FT.		EACH	EACH	EACH		SQ. YD.											
D47	STA 497+43.63 TO STA 499+00.58	RT/CL		157.27	20.00				1													
D48	STA 499+00.58TO STA 506+50.00	CL		749.42				1			119.57											
D49	STA 506+50.00	CL					1				119.57											
TOTALS CARRIED TO SUB-SUMMARY				906.69	20.00		1	1	1		239.14											

CALCULATED AM CHECKED MT

ESTIMATED DRAINAGE QUANTITIES

CLE-275-5.35

302
857

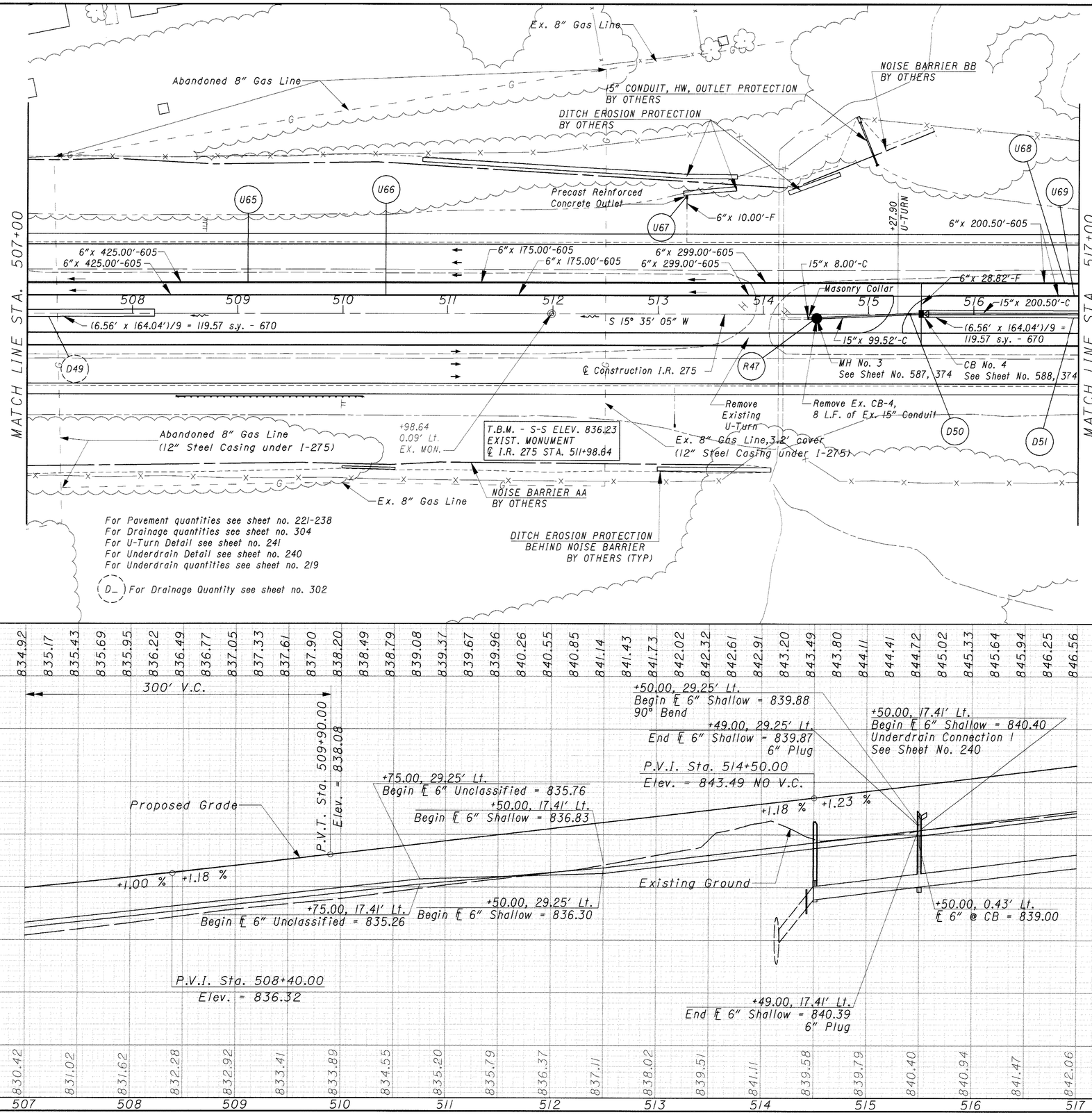

For Pavement quantities see sheet no. 221-238
For Drainage quantities see sheet no. 304
For U-Turn Detail see sheet no. 241
For Underdrain Detail see sheet no. 240
For Underdrain quantities see sheet no. 219

(D_) For Drainage Quantity see sheet no. 302

REF NO.	STATION FROM	STATION TO	SIDE			
R47	514+50.58	517+00.00	LT	202	PIPE REMOVED 24" AND UNDER	LF 8.00
				202	CATCH BASIN REMOVED	EACH 1
TOTALS CARRIED TO SUB-SUMMARY						8.00 / 1

HORIZONTAL SCALE IN FEET
0 25 50 100

CALCULATED EF
CHECKED AM

PLAN AND PROFILE NORTHBOUND I.R. 275
STA. 507+00.00 TO STA. 517+00.00

CLE-275-5.35

303
857

REF NO.	STATION TO STATION	SIDE		603		604			670													
				15" CONDUIT, TYPE C *		CATCH BASIN NO. 4 **	MANHOLE NO. 3 **		DITCH EROSION PROTECTION *													
	* NATIONAL HIGHWAY FUNDS			LIN. FT.		EACH	EACH		SQ. YD.													
D50	STA 514+50.58 TO STA 515+50.00	CL		107.52			1															
D51	STA 515+50.00 TO STA 517+50.50	CL		200.50		1			119.57													
TOTALS CARRIED TO SUB-SUMMARY				308.02		1	1		119.57													

CALCULATED AM
CHECKED MT

ESTIMATED DRAINAGE QUANTITIES

CLE-275-5.35

CURVE DATA, I.R. 275
P.I. = Sta. 532+30.07
Δ = 13° 44′ 35″ Rt.
Dc = 0° 28′ 00″
R = 12,277.67′
T = 1,479.57′
L = 2,944.94′
E = 88.83′
emax = normal crown

End Project Sta. 517+50.50

End Work Sta. 534+73.00

MATCH LINE STA. 517+00

U69

U68

+13.00 Butt Joint

+49.10 0.04′ Lt. EX. MON.

D52

518 519 520 521 522 523 524 535 536

CB No. 4 See Sheet No. 589,314

(6.56′ x 164.04′)/9 = 119.57 s.y. - 670

℄ Construction I.R. 275

T.B.M. - T-T ELEV. 842.84
EXIST. MONUMENT
℄ I.R. 275 STA. 517+49.10

S 15° 35′ 05″ W

D51

+13.00 Butt Joint

(D_) For Drainage quantity see sheet no. 304

(U_) For Underdrain quantity see sheet no. 219

PC Sta. 517+50.50

For Drainage quantities see sheet no. 306
For Pavement quantities see sheet no. 221-238
For Underdrain Detail see sheet no. 240
For Underdrain quantities see sheet no. 219

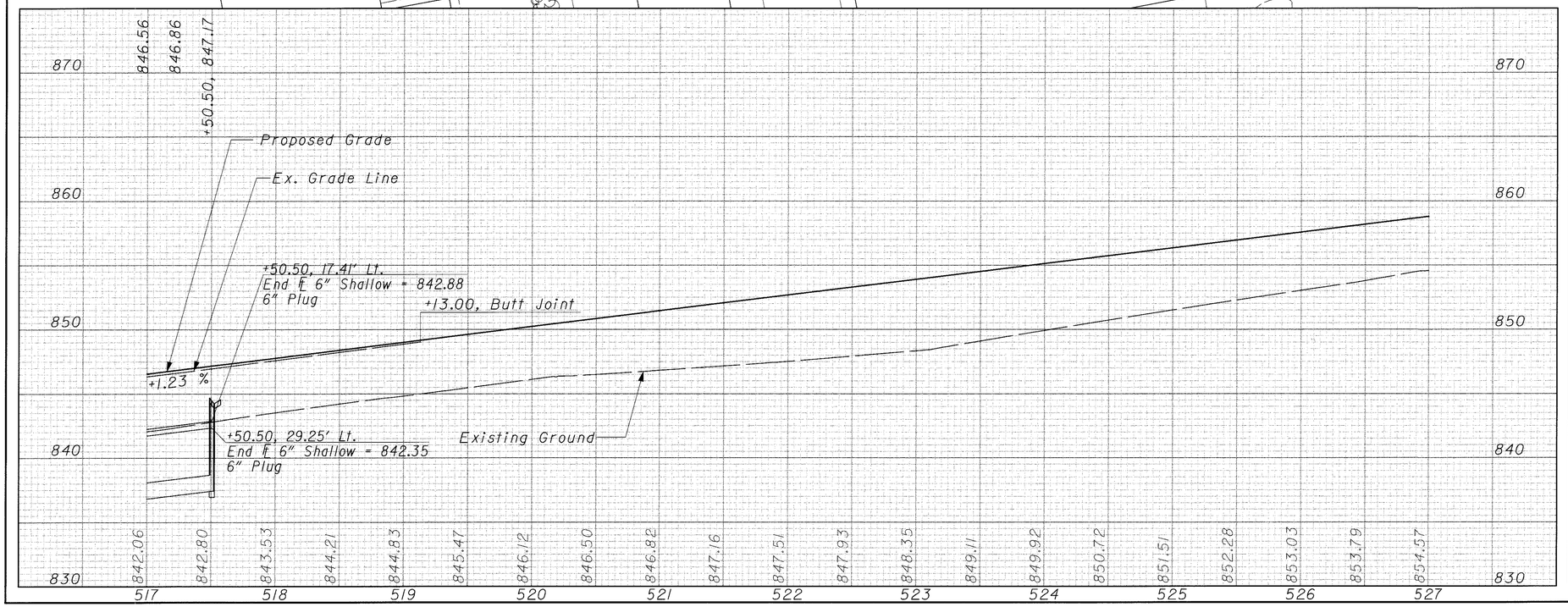

REF NO.	STATION FROM	STATION TO	SIDE	NO ROADWAY QUANTITIES THIS SHEET

TOTALS CARRIED TO SUB-SUMMARY

HORIZONTAL SCALE IN FEET
0

CALCULATED EF
CHECKED AM

PLAN AND PROFILE NORTHBOUND I.R. 275
STA. 517+00.00 TO STA. 517+50.50

CLE-275-5.35

305
857

REF NO.	STATION TO STATION	SIDE		604		670															
				CATCH BASIN NO. 4 *		DITCH EROSION PROTECTION *															
	* NATIONAL HIGHWAY FUNDS			EACH		SQ. YD.															
D52	STA 517+50.50	CL		1		119.57															
	TOTALS CARRIED TO SUB-SUMMARY			1		119.57															

CALCULATED AM
CHECKED MT

ESTIMATED DRAINAGE QUANTITIES

CLE-275-5.35

306
857

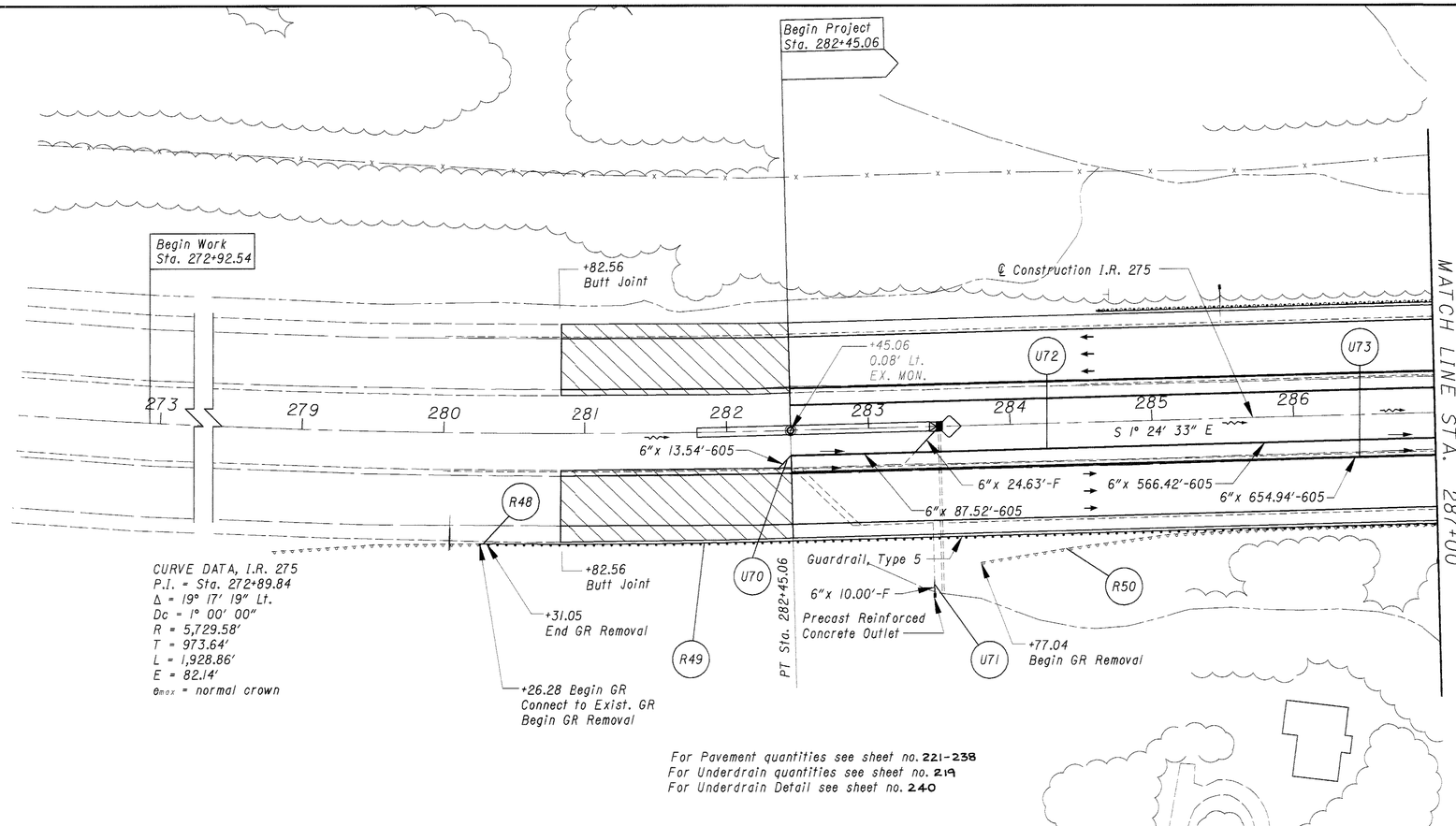

REF NO.	STATION FROM	STATION TO	SIDE	202 GUARDRAIL REMOVED	606 GUARDRAIL TYPE 5	606 BRIDGE TERMINAL ASSEMBLY TYPE I
				LF	LF	EACH
R48	280+26.28	280+31.05	RT	4.77	0	0
R49	280+26.28	289+54.61	RT		931.25	1
R50	283+77.04	289+39.13	RT	563.09		
TOTALS CARRIED TO SUB-SUMMARY				567.86	931.25	1

N

0 25 50 100 HORIZONTAL SCALE IN FEET

CALCULATED EF
CHECKED AM

PLAN AND PROFILE SOUTHBOUND I.R.275
STA. 282+45.06 TO STA. 287+00.00

CLE-275-5.35

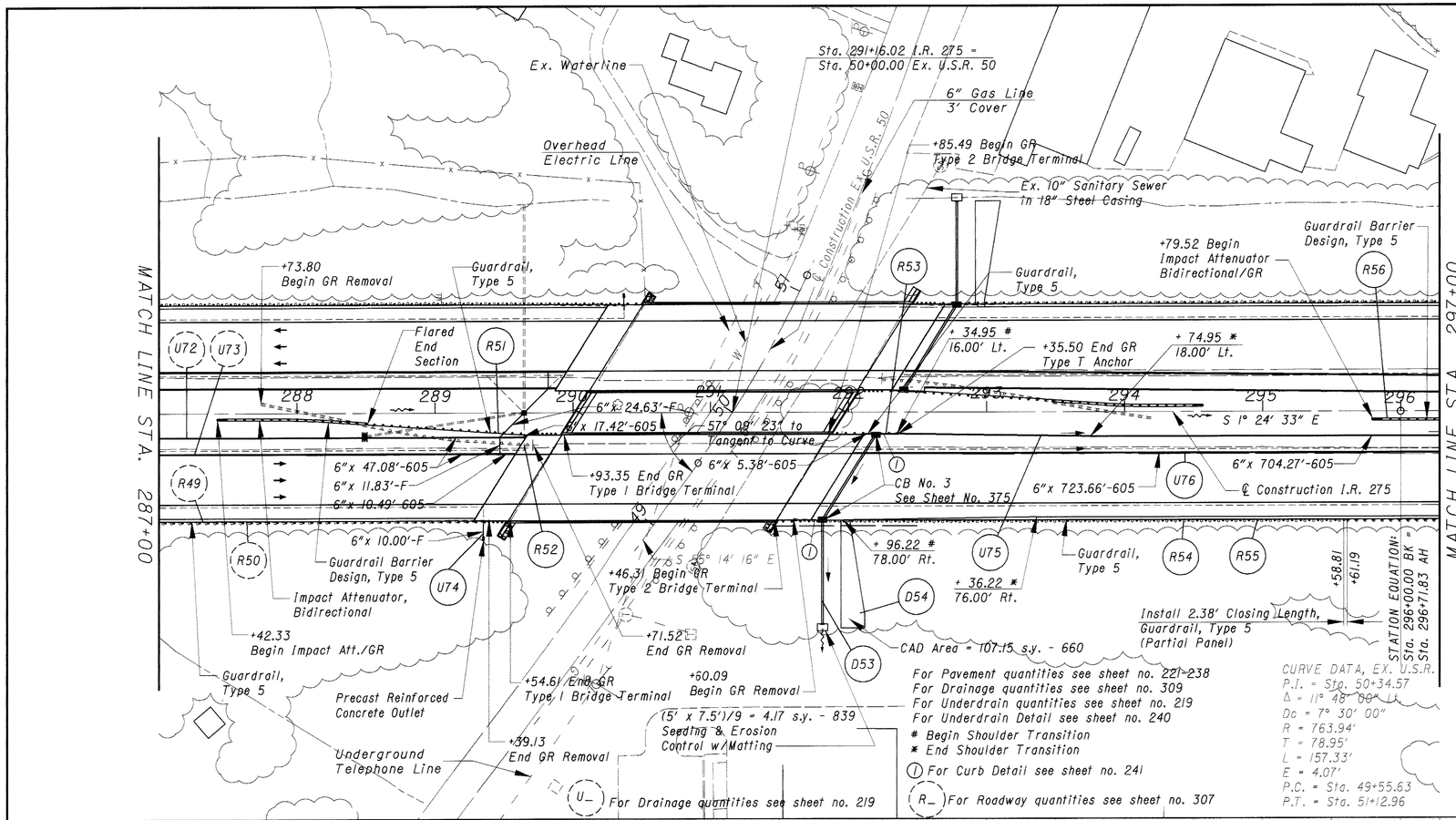

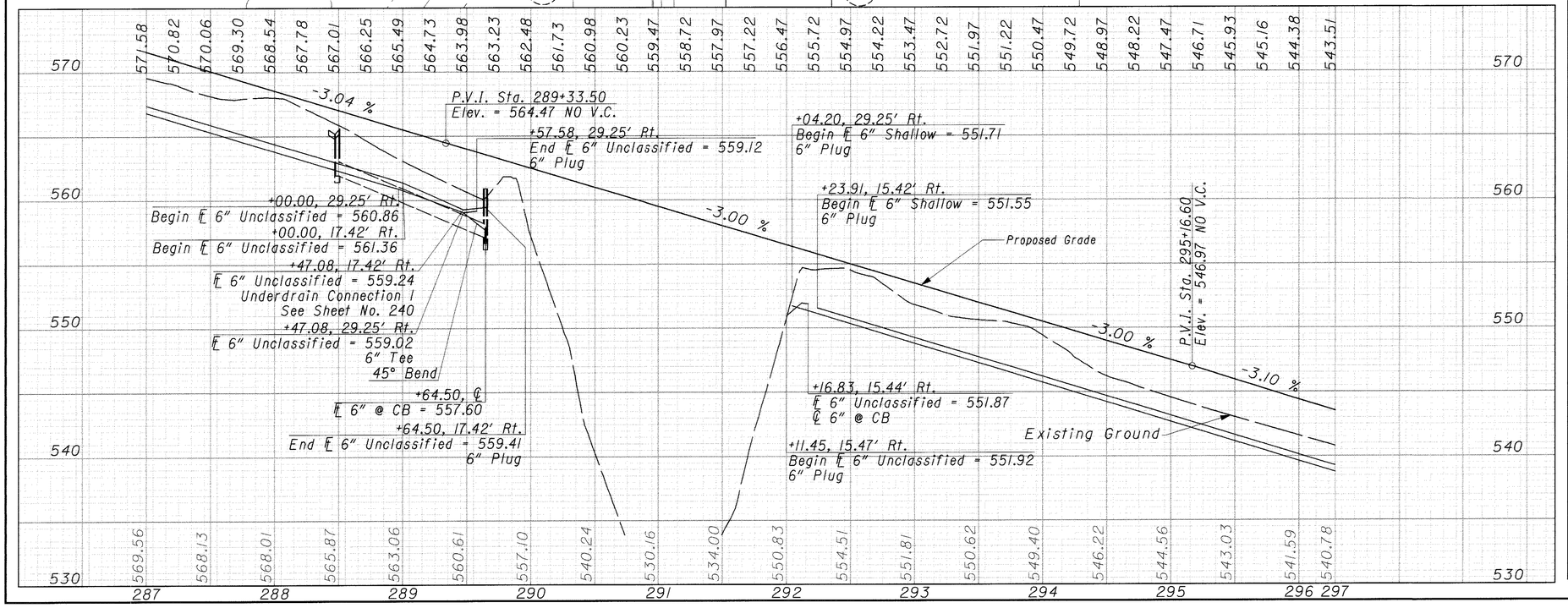

REF NO.	STATION FROM	STATION TO	SIDE	202 GUARDRAIL REMOVED	202 GUARDRAIL REMOVED BARRIER DESIGN	606 GUARDRAIL TYPE 5	606 GUARDRAIL BARRIER DESIGN TYPE 5
				LF	LF	LF	LF
R51	287+42.33	289+93.35	RT				
R52	287+73.80	289+71.52	RT				75.00
R53	291+85.49	292+35.50	RT	125.30	74.92	143.75	
R54	291+60.09	300+32.86	RT			37.50	
R55	291+46.31	300+51.67	RT	801.00			
R56	295+79.52	300+64.93	RT			833.63	75.00
TOTALS CARRIED TO SUB-SUMMARY				926.30	74.92	1321.13	150.00

REF NO.	STATION FROM	STATION TO	SIDE	606 FLARED END SECTION	606 ANCHOR ASSEMBLY TYPE T	606 BRIDGE TERMINAL ASSEMBLY TYPE 1	606 BRIDGE TERMINAL ASSEMBLY TYPE 2	606 IMPACT ATTEN. TYPE I-98 (BIDIRECT.)
				EACH	EACH	EACH	EACH	EACH
R51	287+42.33	289+93.35	RT	1		1		
R52	287+73.80	289+71.52	RT		1		1	
R53	291+85.49	292+35.50	RT	1		1		1
R54	291+60.09	300+32.86	RT					
R55	291+46.31	300+51.67	RT			1	1	
R56	295+79.52	300+64.93	RT	1	1			1
TOTALS CARRIED TO SUB-SUMMARY				1	1	3	2	2

HORIZONTAL SCALE IN FEET
0 25 50 100

CALCULATED EF
CHECKED AM

PLAN AND PROFILE SOUTHBOUND I.R. 275 STA. 287+00.00 TO STA. 297+00.00

CLE-275-5.35

308
857

REF NO.	STATION TO STATION	SIDE		602		603				604			660		839						
				CONCRETE MASONRY		15" CONDUIT, TYPE B *	15" CONDUIT, TYPE C	15" CONDUIT, TYPE F		CATCH BASIN NO. 3 **	CATCH BASIN NO. 3		REINFORCED SODDING *		SEEDING AND EROSION CONTROL W/MATTING						
	* NATIONAL HIGHWAY FUNDS			CU. YD.		LIN. FT.	LIN. FT.	LIN. FT.		EACH	EACH		SQ. YD.		SQ. YD.						
D53	STA 291+81.14 TO STA 292+19.87	RT		0.29		72.62	19.72	62.01		1	1				4.17						
D54	STA 291+97.30	RT											107.15								
TOTALS CARRIED TO SUB-SUMMARY				0.29		72.62	19.72	62.01		1	1		107.15		4.17						

CALCULATED AM CHECKED MT

ESTIMATED DRAINAGE QUANTITIES

CLE-275-5.35

309
857

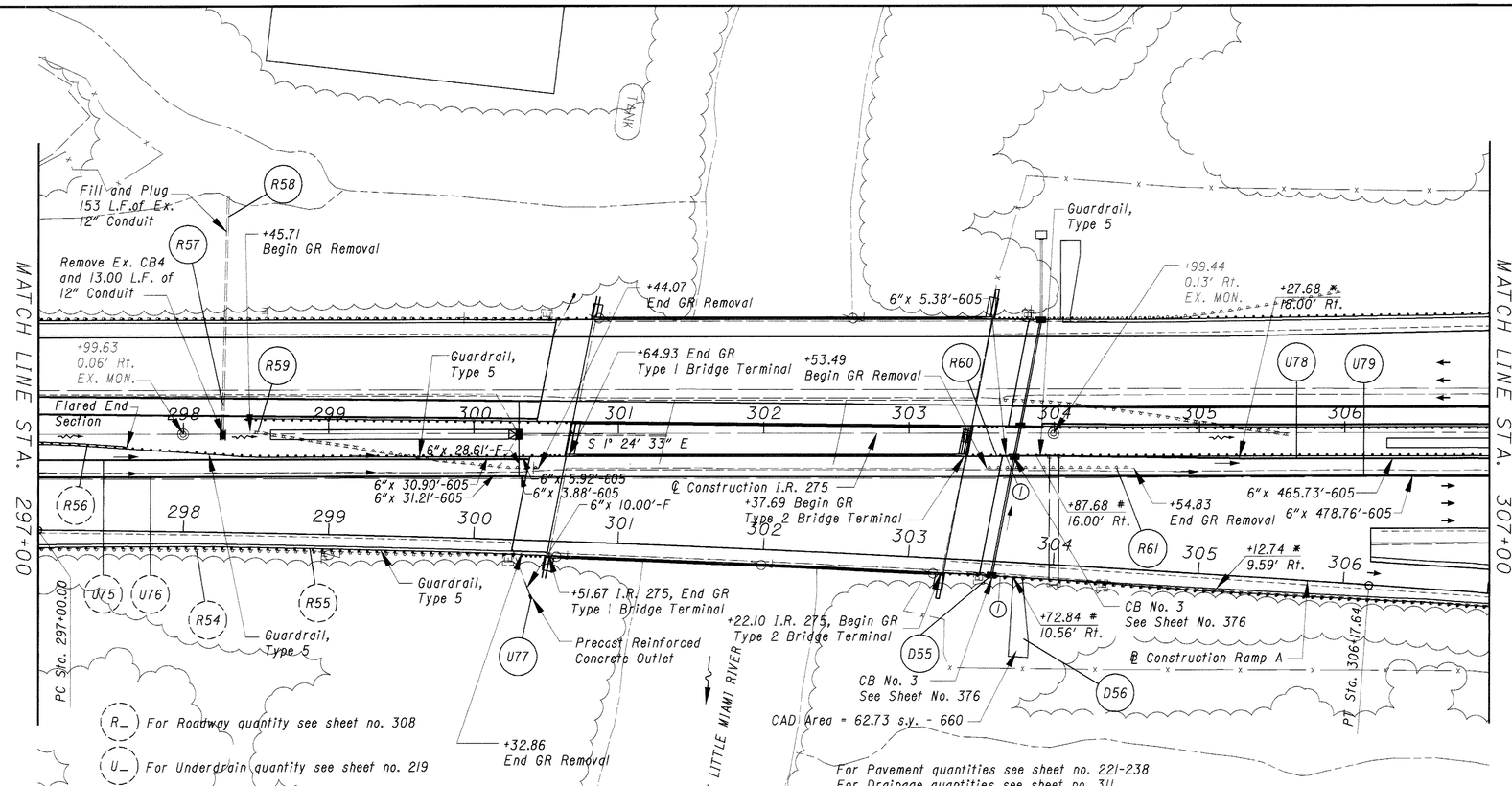

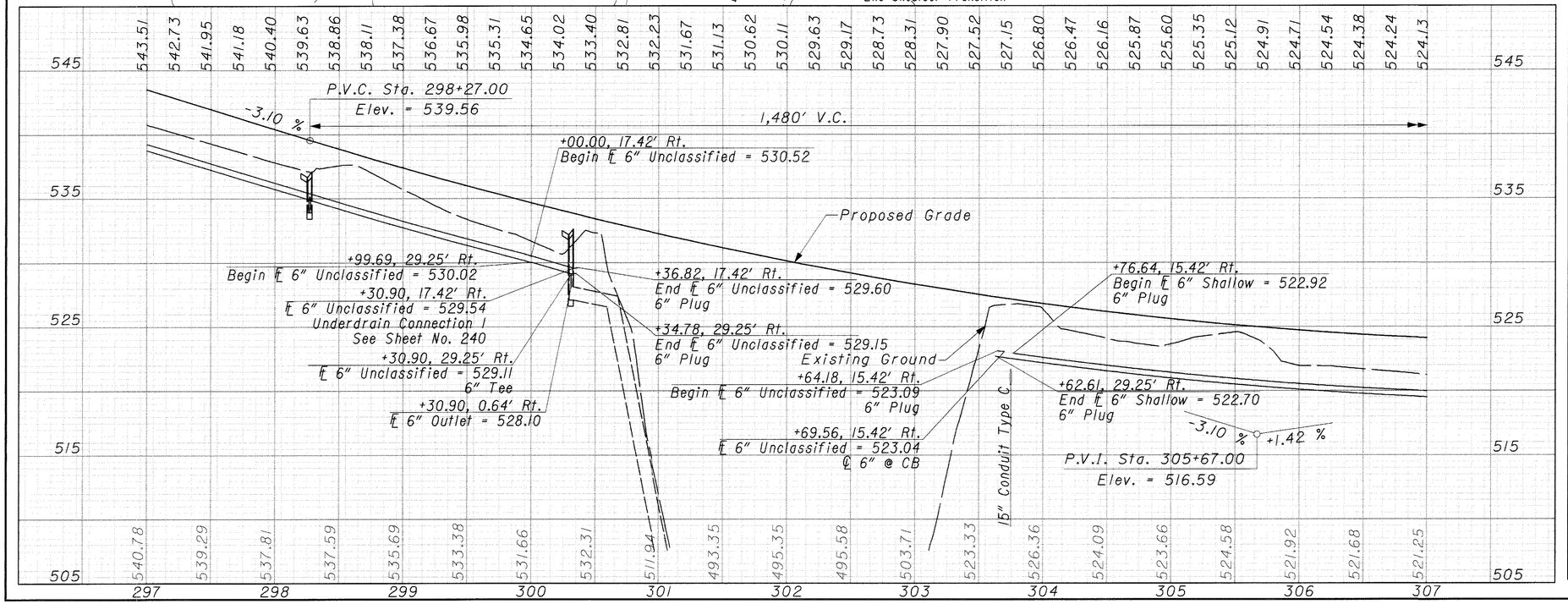

REF NO.	STATION FROM	STATION TO	SIDE	202 PIPE REMOVED 24" AND UNDER LF	202 GUARDRAIL REMOVED LF	202 CATCH BASIN REMOVED EACH	202 GUARDRAIL REMOVED BARRIER DESIGN LF	606 BRIDGE TERMINAL ASSEMBLY TYPE 2 EACH	606 ANCHOR ASSEMBLY TYPE T EACH	606 GUARDRAIL TYPE 5 LF	202 FILL AND PLUG EX. CULVERT LF
R57	298+26.98	298+27.39	RT	13.00							153.00
R58	298+27.39	298+29.96	RT			1					
R59	298+45.71	300+44.07	RT		125.41		75.08	1			
R60	303+37.69	309+87.69	RT		101.34				1	637.50	
R61	303+53.49	304+54.83	RT								
TOTALS CARRIED TO SUB-SUMMARY				13.00	226.75	1	75.08	1	1	637.50	153.00

CALCULATED E.F.
CHECKED A.M.

HORIZONTAL SCALE IN FEET
0 25 50 100

PLAN AND PROFILE SOUTHBOUND I.R. 275
STA. 297+00.00 TO STA. 307+00.00

CLE-275-5.35

REF NO.	STATION TO STATION	SIDE		603			604			660												
				15" CONDUIT, TYPE B	15" CONDUIT, TYPE C		CATCH BASIN NO. 3 *	CATCH BASIN NO. 3		REINFORCED SODDING												
	* NATIONAL HIGHWAY FUNDS			LIN. FT.	LIN. FT.		EACH	EACH		SQ. YD.												
D55	STA 303+56.75 TO STA 303+76.65	RT		83.09	21.61		1	1														
D56	STA 303+74.30	RT								62.73												
TOTALS CARRIED TO SUB-SUMMARY				83.09	21.61		1	1		62.73												

CALCULATED AM
CHECKED MT

ESTIMATED DRAINAGE QUANTITIES

CLE-275-5.35

For Pavement quantities see sheet no. 221-238
For Drainage quantities see sheet no. 313
For Ramp A see sheet no. 345-347
For Ramp D see sheet no. 349-351
For Underdrain Detail see sheet no. 240
For Underdrain quantities see sheet no. 219

R_ For Roadway quantity see sheet no. 310

U_ For Underdrain quantity see sheet no. 219

MATCH LINE STA. 307+00

MATCH LINE STA. 317+00

+99.24
0.25' Rt.
EX. MON.

PC Sta. 313+71.54

℄ Construction Ramp D

+99.80
0.31' Rt.
EX. MON.

U78 U79 U80 U81 U82 U83

R60

6"x 22.27'-F

6"x 49.00'-605
6"x 8.64'-605
6"x 9.63'-605

+87.69 End GR
Type T Anchor

6"x 810.89'-605
6"x 822.73'-605

℄ Construction I.R. 275

S 1° 24' 33" E

Guardrail,
Type 5

POT Sta. 311+90.99 (Ramp B)
PC Sta. 311+90.99 (Ramp A)

+89.83 I.R. 275
Begin Curb Removal

6"x 10.00'-F
Precast Reinforced
Concrete Outlet

6"x 10.00'-F
Precast Reinforced
Concrete Outlet

℄ Construction Ramp A

℄ Construction Ramp B

TS Sta. 314+80.95

Sc Sta. 316+30.95
BUTT JOINT

Sta. 316+62.94
BUTT JOINT

308 309 310 311 312 313 314 315 316 317

524.13 524.03 523.95 523.89 523.85 523.82 523.82 523.84 523.87 523.93 524.00 524.09 524.21 524.34 524.49 524.66 524.84 525.05 525.28 525.52 525.79 526.07 526.38 526.70 527.04 527.39 527.75 528.11 528.46 528.82 529.18 529.53 529.89 530.24 530.60 530.96 531.31 531.67 532.03 532.38 532.74

1,480' V.C.

P.V.T. Sta. 313+07.00
Elev. = 527.14

+42.36, 17.42' Rt.
Begin ℄ 6"
Unclassified = 519.69

+51.00, 17.42' Rt.
℄ 6"Unclassified = 519.60
Underdrain Connection 1
See Sheet No. 240

+00.00, 17.42' Rt.
Begin ℄ 6" Shallow = 519.75

Proposed Grade

+00.29, 5.87' Rt.
℄ 6" @ CB = 527.97

Existing Ground

+00.00, 29.25' Rt.
Begin ℄ 6" Shallow = 519.27

+41.37, 29.25' Rt.
Begin ℄ 6"
Unclassified = 519.18

+51.00, 6.98' Rt.
℄ 6" @ CB = 518.77

+51.00, 29.25' Rt.
℄ 6"Unclassified = 519.08
6" Tee

540 530 520 510 500

521.25 520.82 520.95 521.13 520.55 520.86 521.37 521.80 522.24 522.70 523.11 523.82 524.55 525.34 526.09 526.77 527.47 528.22 528.75 529.72 530.36

307 308 309 310 311 312 313 314 315 316 317

REF NO.	STATION FROM	STATION TO	SIDE

TOTALS CARRIED TO SUB-SUMMARY

NO ROADWAY QUANTITIES THIS SHEET

HORIZONTAL SCALE IN FEET
0 25 50 100

CALCULATED EF
CHECKED AM

PLAN AND PROFILE
STA. 307+00.00 TO STA. 317+00.00
FILE SOUTHBOUND I.R. 275

CLE-275-5.35

312
857

REF NO.	STATION TO STATION	SIDE		603																	
	* NATIONAL HIGHWAY FUNDS			15" CONDUIT, TYPE B *																	
				LIN. FT.																	
D57	STA 317+00.93	RT		8.00																	
TOTALS CARRIED TO SUB-SUMMARY				8.00																	

CALCULATED AM
CHECKED MT

ESTIMATED DRAINAGE QUANTITIES

CLE-275-5.35

313
857

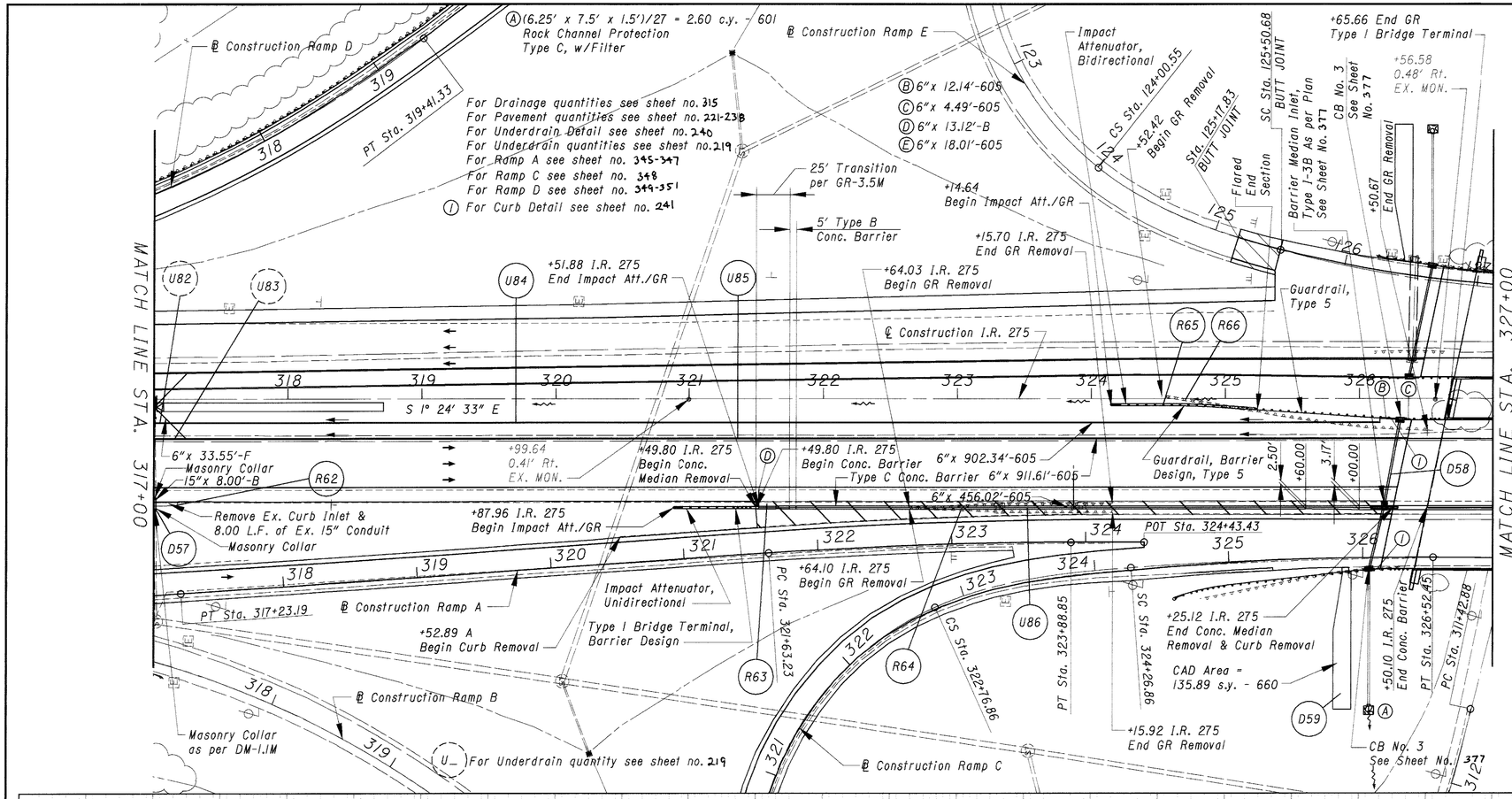

REF NO.	STATION FROM	STATION TO	SIDE	202 PIPE REMOVED 24" AND UNDER LF	202 GUARDRAIL REMOVED LF	202 GUARDRAIL REMOVED BARRIER DESIGN LF	202 INLET REMOVED EACH	606 GUARDRAIL BARRIER DESIGN TYPE 5 LF	606 GUARDRAIL BARRIER DESIGN TYPE 5 LF	606 BRIDGE TERMINAL ASSEMBLY TYPE I EACH	606 BRIDGE TERMINAL ASSEMBLY TYPE I EACH	606 IMPACT. ATTEN. TYPE I-98 (UNIDIREC.) EACH	606 IMPACT. ATTEN. TYPE I-98 (BIDIREC.) EACH	622 CONCRETE BARRIER TYPE B LF	622 CONCRETE BARRIER TYPE B REINFORC. LF	622 CONCRETE BARRIER TYPE C LF
R62	317+08.26	317+08.26	RT	8.00			1									
R63	320+87.96	326+50.10	RT								1	1				
R64	322+64.03	324+15.92	RT		303.62			143.75	75.00	1			1	5.00	25.00	450.63
R65	324+14.64	326+65.66	RT								1	1				
R66	324+52.42	326+50.67	RT		124.90	75.12	1									
TOTALS CARRIED TO SUB-SUMMARY				8.00	428.52	75.12	1	143.75	75.00	1	1	1	1	5.00	25.00	450.63

CALCULATED EF
CHECKED AM

0 25 50 100
HORIZONTAL SCALE IN FEET

PLAN AND PROFILE SOUTHBOUND I.R. 275
STA. 317+00.00 TO STA. 327+00.00

CLE-275-5.35

REF NO.	STATION TO STATION	SIDE	601	602	603			604			660
			ROCK CHANNEL PROTECTION TYPE C W/FILTER	CONCRETE MASONRY	15" CONDUIT, TYPE B *	15" CONDUIT, TYPE B	15" CONDUIT, TYPE F	CATCH BASIN NO. 3 *	CATCH BASIN NO. 3	BARRIER MEDIAN INLET I-3B, AS PER PLAN	REINFORCED SODDING
	* NATIONAL HIGHWAY FUNDS		CU. YD.	CU. YD.	LIN. FT.	LIN. FT.	LIN. FT.	EACH	EACH	EACH	SQ. YD.
D58	STA 326+07.31 TO STA 326+30.31	RT	2.60	0.29	64.95	48.51	101.99	1	1	1	
D59	STA 325+89.79	RT									135.89
TOTALS CARRIED TO SUB-SUMMARY			2.60	0.29	64.95	48.51	101.99	1	1	1	135.89

CALCULATED AM
CHECKED MT

ESTIMATED DRAINAGE QUANTITIES

CLE-275-5.35

315
857

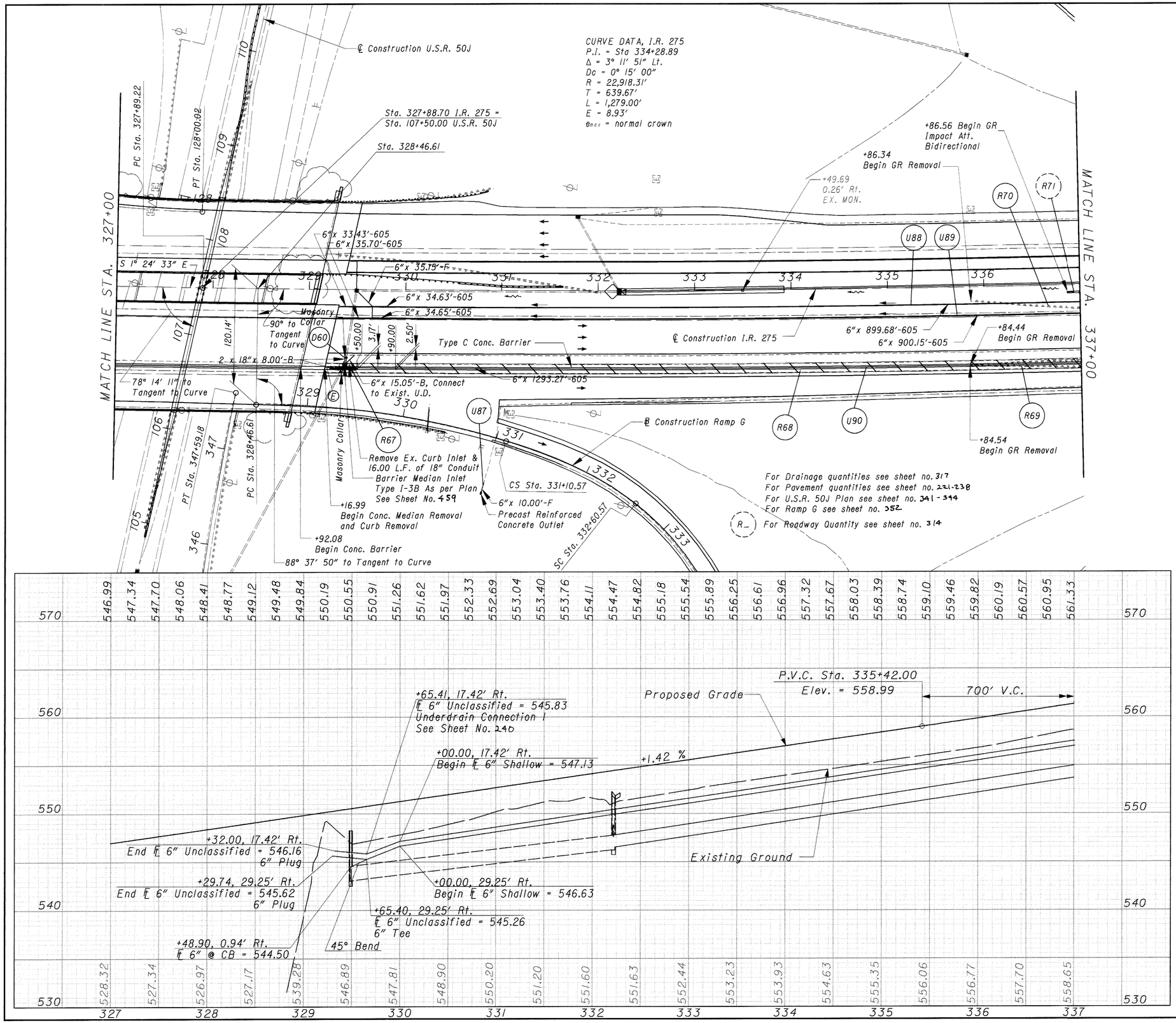

REF NO.	STATION FROM	STATION TO	SIDE	202 PIPE REMOVED 24″ AND UNDER	202 GUARDRAIL REMOVED	202 INLET REMOVED	622 CONCRETE BARRIER TYPE C
				LF	LF	EACH	LF
R67	329+37.57	329+37.57	RT	16.00		1	
R68	328+92.08	342+28.96	RT				1320.64
R69	335+84.44	337+36.07	RT		304.11		
R70	335+86.34	337+37.36	RT		151.58		
TOTALS CARRIED TO SUB-SUMMARY				16.00	455.69	1	1320.64

HORIZONTAL SCALE IN FEET
0 25 50 100

CALCULATED EF
CHECKED AM

PLAN AND PROFILE SOUTHBOUND I.R. 275
STA. 327+00.00 TO STA. 337+00.00

CLE-275-5.35

316
857

REF NO.	STATION TO STATION	SIDE		603		604															
				18" CONDUIT, TYPE B *		BARRIER MEDIAN INLET I-3B, AS PER PLAN															
	* NATIONAL HIGHWAY FUNDS			LIN. FT.		EACH															
D60	STA 329+37.57	RT		16.00		1															
TOTALS CARRIED TO SUB-SUMMARY				16.00		1															

CALCULATED AM
CHECKED MT

ESTIMATED DRAINAGE QUANTITIES

CLE-275-5.35

317
859

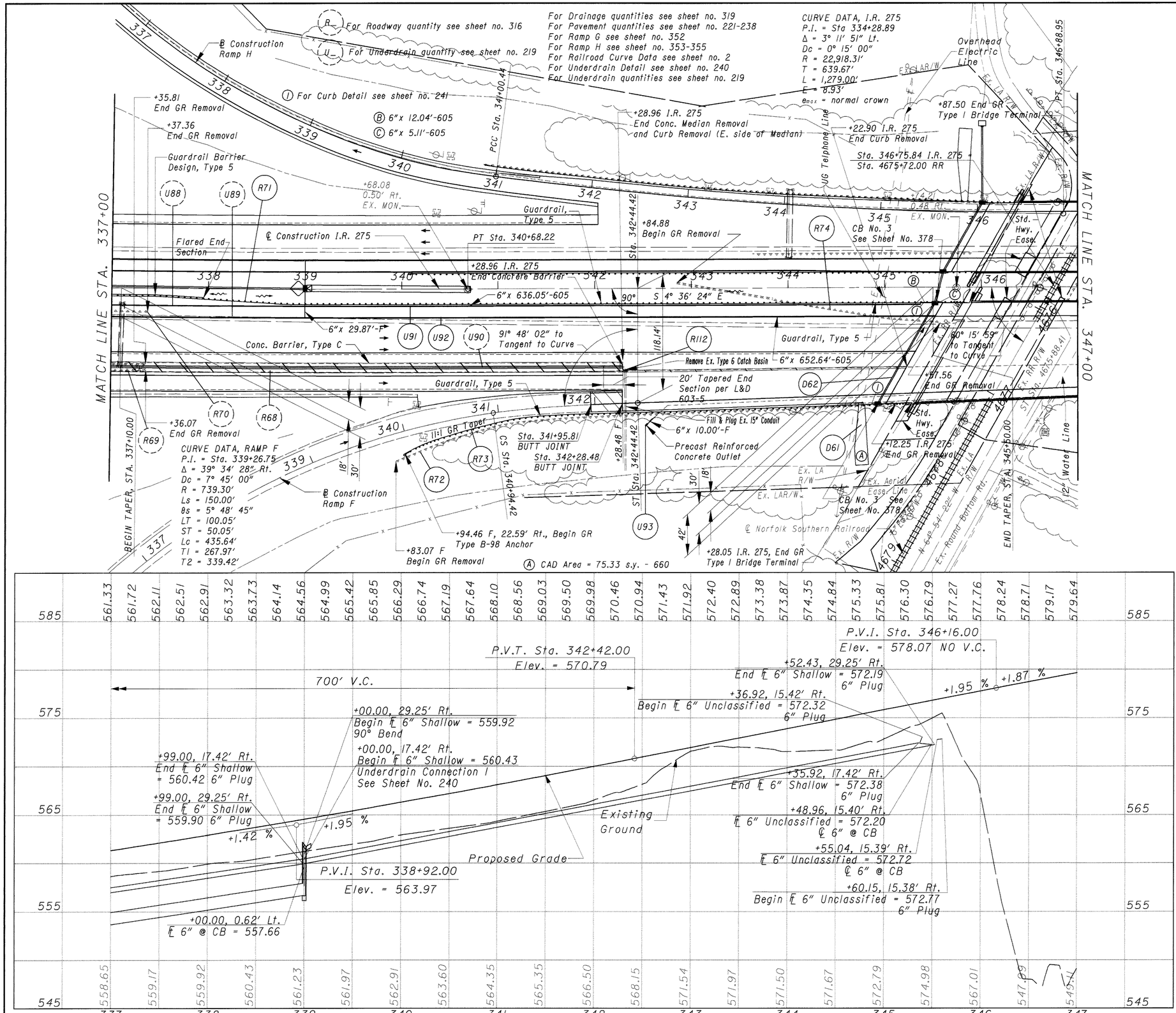

REF NO.	STATION FROM	STATION TO	SIDE	202 GUARDRAIL REMOVED	202 GUARDRAIL REMOVED BARRIER DESIGN	202 CATCH BASIN REMOVED	202 FILL AND PLUG EX. CONDUIT	202 GUARDRAIL TYPE 5	606 GUARDRAIL BARRIER DESIGN TYPE 5	606 FLARED END SECTION	606 ANCHOR ASSEMBLY TYPE B-98	606 BRIDGE TERMINAL ASSEMBLY TYPE I	606 IMPACT ATTEN. TYPE I-98 (BI)DIRECT.)
				LF	LF	EACH	LF	LF	LF	EACH	EACH	EACH	EACH
R71	336+86.56	345+87.50	RT										
R72	339+83.07 *	345+12.25	RT	525.64					75.00	1			
R73	339+94.46 *	345+28.05	RT					793.75					
R74	342+84.88	345+57.56	RT		174.31						1	1	1
R112	342+31.70	342+31.70	RT		100.92	1	104.00	493.75			1	1	
							104.00						
TOTALS CARRIED TO SUB-SUMMARY				699.95	100.92	1	104.00	1287.50	75.00	1	1	2	1

* RAMP F

CALCULATED EF
CHECKED AM

0 25 50 100
HORIZONTAL SCALE IN FEET

PLAN AND PROFILE SOUTHBOUND I.R. 275
STA. 337+00.00 TO STA. 347+00.00

CLE-275-5.35

318
857

REF NO.	STATION TO STATION	SIDE		603			604			660												
	* NATIONAL HIGHWAY FUNDS			15" CONDUIT, TYPE B	15" CONDUIT, TYPE C *		CATCH BASIN NO. 3 *	CATCH BASIN NO. 3		REINFORCED SODDING												
				LIN. FT.	LIN. FT.		LIN. FT.	EACH		SQ. YD.												
D61	STA 344+75.20	RT								75.33												
D62	STA 344+92.68 TO STA 345+60.54	LT/RT		119.69	33.33		1	1														
TOTALS CARRIED TO SUB-SUMMARY				119.69	33.33		1	1		75.33												

CALCULATED AM
CHECKED MT

ESTIMATED DRAINAGE QUANTITIES

CLE-275-5.35

319
859

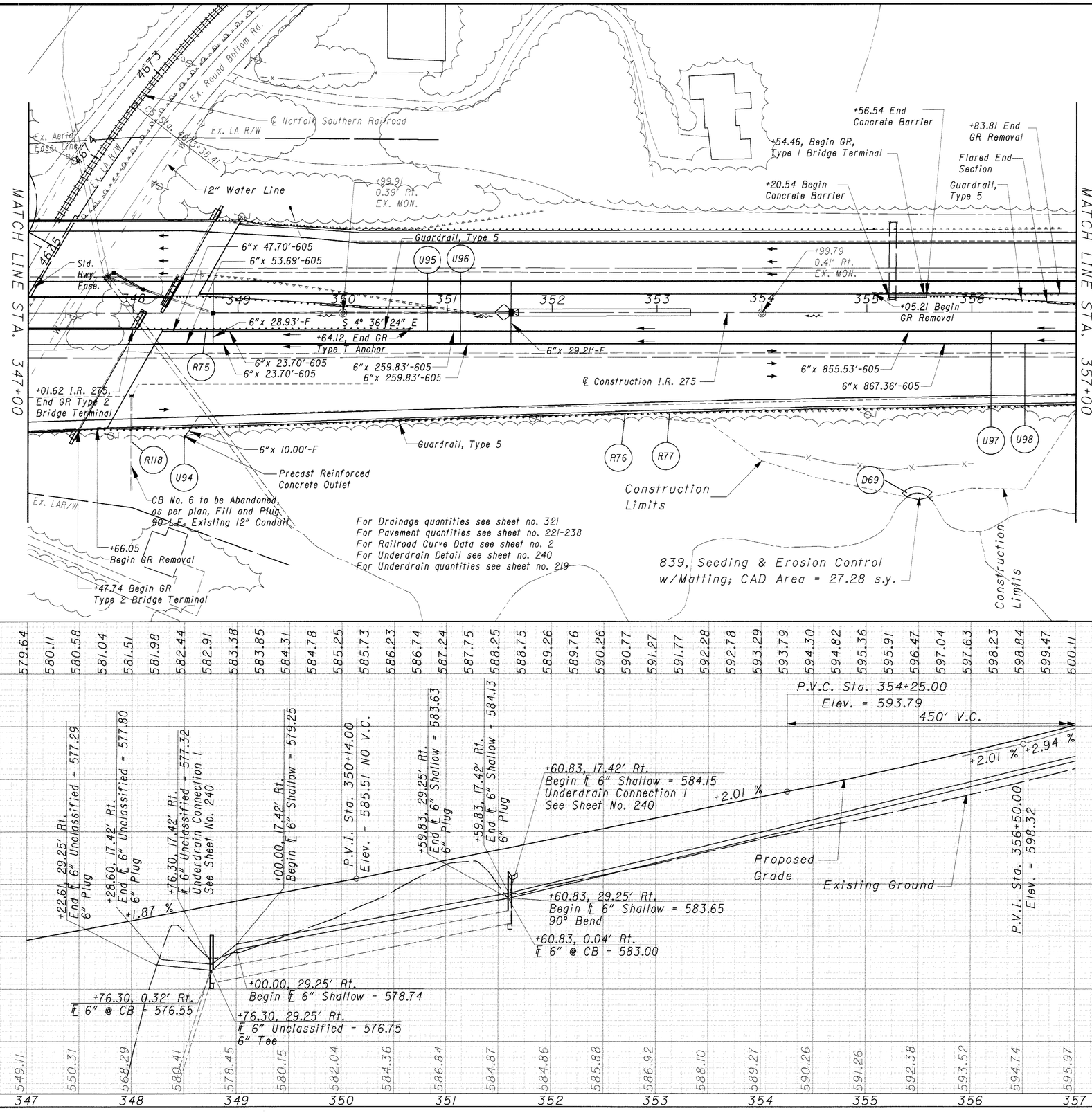

REF NO.	STATION FROM	STATION TO	SIDE	202 GUARDRAIL REMOVED	202 CATCH BASIN ABANDONED, AS PER PLAN	202 FILL AND PLUG EXIST. CONDUIT	606 GUARDRAIL TYPE 5	606 ANCHOR ASSEMBLY TYPE T	606 BRIDGE TERMINAL ASSEMBLY TYPE 2
				LF	EACH	LF	LF	EACH	EACH
R75	348+01.62	350+64.12	RT				250.00	1	1
R76	347+47.74	372+33.19	RT				2487.50		
R77	347+66.05	372+33.19	RT	2469.12					
R118	348+00.00	348+00.00	RT		1	90.00			
TOTALS CARRIED TO SUB-SUMMARY				2469.12	1	90.00	2737.50	1	2

HORIZONTAL SCALE IN FEET
0 25 50 100

CALCULATED EF
CHECKED AM

PLAN AND PROFILE SOUTHBOUND I.R. 275
STA. 347+00.00 TO STA. 357+00.00

CLE-275-5.35

320
857

REF NO.	STATION TO STATION	SIDE		839																		
				SEEDING AND EROSION CONTROL W/MATTING																		
	* NATIONAL HIGHWAY FUNDS			SQ. YD.																		
D69	STA 355+35.99 TO STA 355+59.63	RT		27.28																		
TOTALS CARRIED TO SUB-SUMMARY				27.28																		

CALCULATED AM
CHECKED MT

ESTIMATED DRAINAGE QUANTITIES

CLE-275-5.35

321
857

Stream Protection Placement
Station/Offsets
℄ Relocated Stream
A - Sta. +00.00, 18.00 Lt.
B - Sta. +92.06, 18.00 Lt.
C - Sta. +32.47, 22.05 Lt.
D - Sta. +58.44, 22.00 Lt.
E - Sta. +19.99, 30.00 Lt.
F - Sta. +05.00, 13.34 Lt.
G - Sta. +10.91, 6.16 Lt.
H - Sta. +11.16, 9.84 Rt.
I - Sta. +05.00, 27.53 Rt.
J - Sta. +80.16, 7.00 Rt.
K - Sta. +00.00, 7.00 Rt.

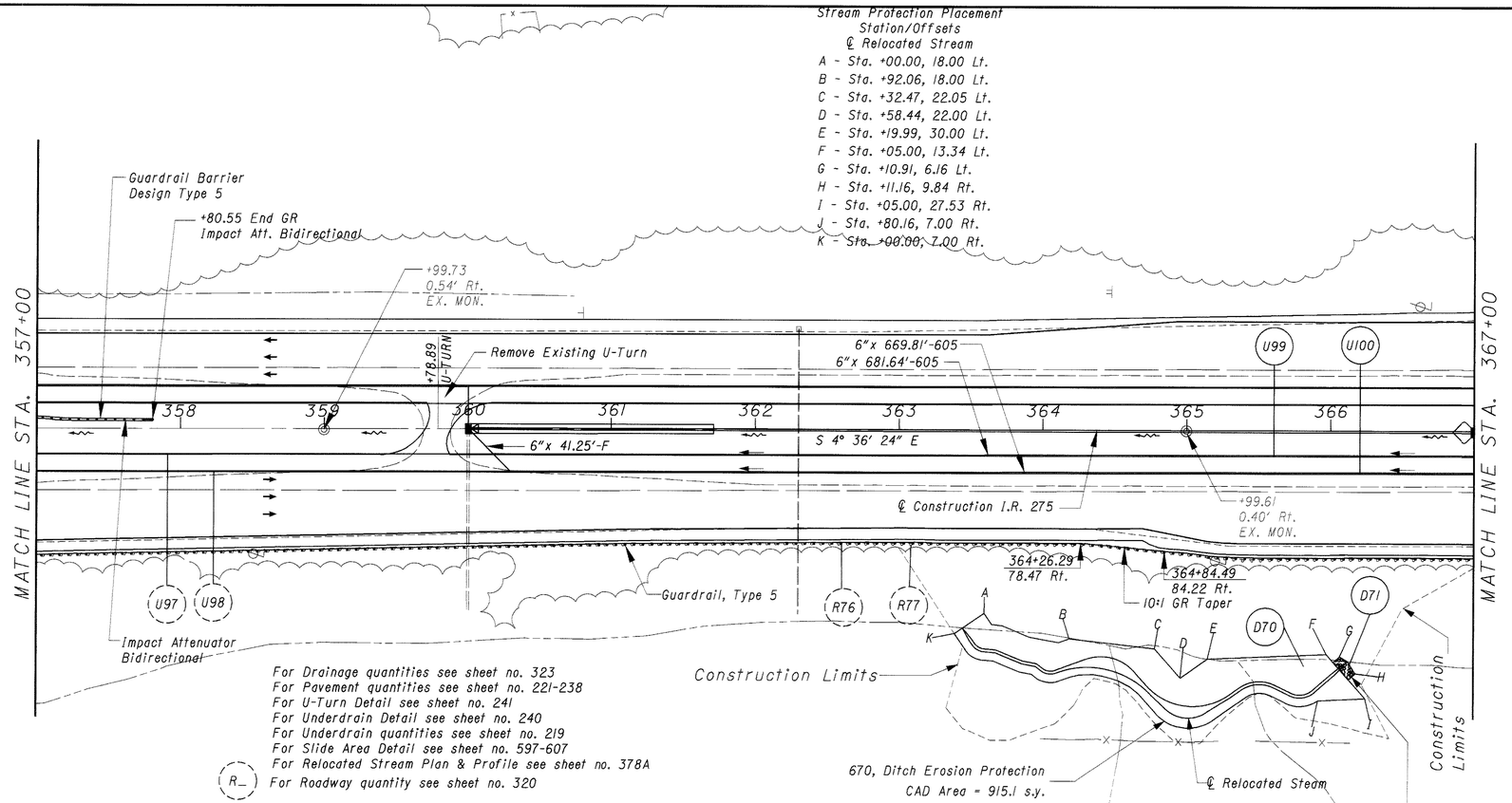

For Drainage quantities see sheet no. 323
For Pavement quantities see sheet no. 221-238
For U-Turn Detail see sheet no. 241
For Underdrain Detail see sheet no. 240
For Underdrain quantities see sheet no. 219
For Slide Area Detail see sheet no. 597-607
For Relocated Stream Plan & Profile see sheet no. 378A
(R_) For Roadway quantity see sheet no. 320
(U_) For Underdrain quantity see sheet no. 219

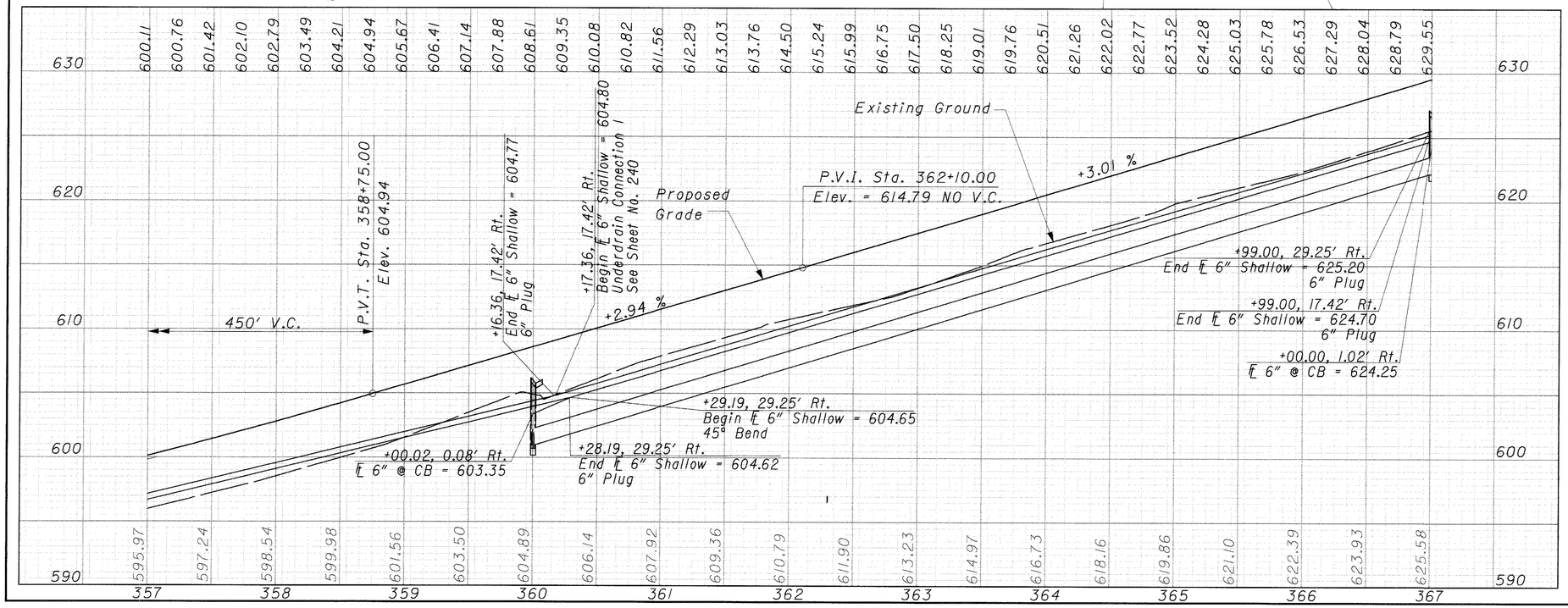

NO ROADWAY QUANTITIES THIS SHEET

REF NO.	STATION FROM	STATION TO	SIDE

TOTALS CARRIED TO SUB-SUMMARY

CALCULATED EF
CHECKED AM

HORIZONTAL SCALE IN FEET
0 25 50 100

PLAN AND PROFILE SOUTHBOUND I.R. 275
STA. 357+00.00 TO STA. 367+00.00

CLE-275-5.35

322
857

REF NO.	STATION TO STATION	SIDE	601 ROCK CHANNEL PROTECTION, TYPE C WITH FILTER	670 DITCH EROSION PROTECTION
	* NATIONAL HIGHWAY FUNDS		CU. YD.	SQ. YD.
D70	STA 363+44.51 TO STA 366+06.25	RT		915.10
D71	STA 366+06.25 TO STA 366+12.15	RT	6.18	
TOTALS CARRIED TO SUB-SUMMARY			6.18	915.10

CALCULATED AM
CHECKED MT

ESTIMATED DRAINAGE QUANTITIES

CLE-275-5.35

323
857

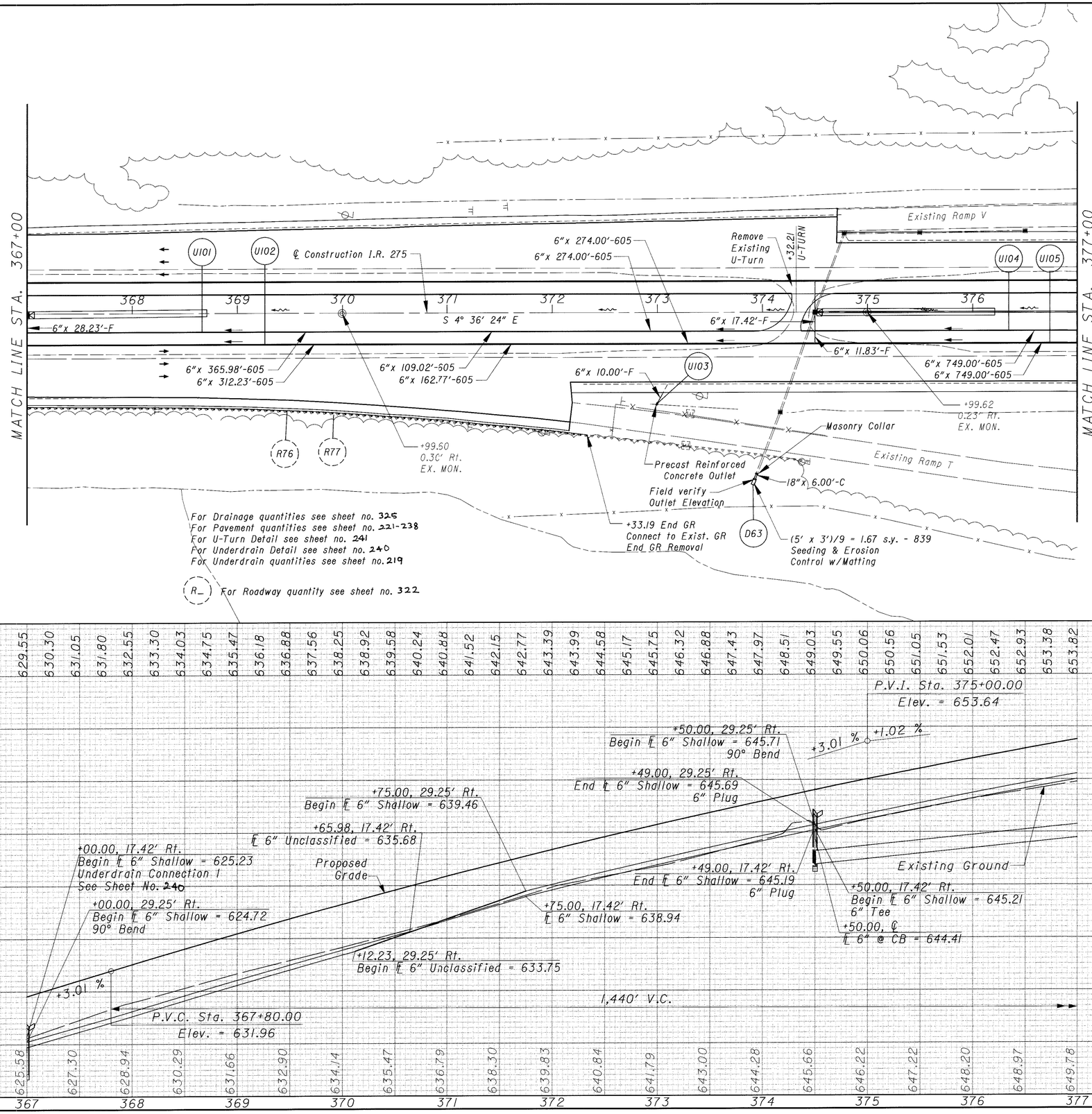

REF NO.	STATION FROM	STATION TO	SIDE

TOTALS CARRIED TO SUB-SUMMARY

NO ROADWAY QUANTITIES THIS SHEET

HORIZONTAL SCALE IN FEET
0 25 50 100

CALCULATED EF
CHECKED AM

PLAN AND PROFILE SOUTHBOUND I.R. 275
STA. 367+00.00 TO STA. 377+00.00

CLE-275-5.35

REF NO.	STATION TO STATION	SIDE		602		603		839													
				CONCRETE MASONRY		18" CONDUIT, TYPE C		SEEDING AND EROSION CONTROL W/MATTING													
	* NATIONAL HIGHWAY FUNDS			CU. YD.		LIN. FT.		SQ. YD.													
D63	STA 373+92.50	RT		0.35		6.00		1.67													
TOTALS CARRIED TO SUB-SUMMARY				0.35		6.00		1.67													

CALCULATED AM
CHECKED MT

ESTIMATED DRAINAGE QUANTITIES

CLE-275-5.35

325
859

U_ For Underdrain quantities see sheet no. 219

For Pavement quantities see sheet no. 221-238
For Underdrain Detail see sheet no. 240
For Underdrain quantities see sheet no. 219,220

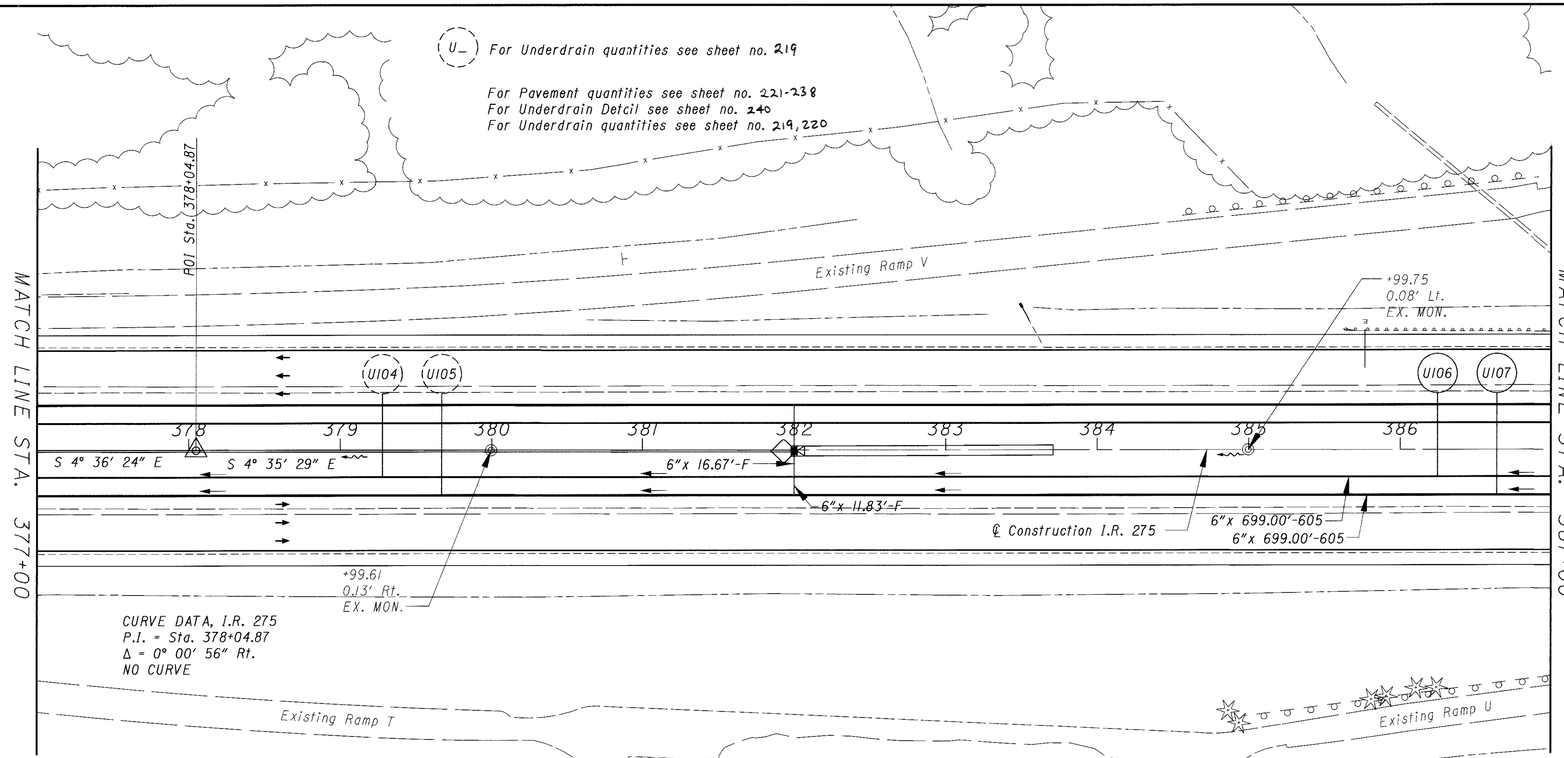

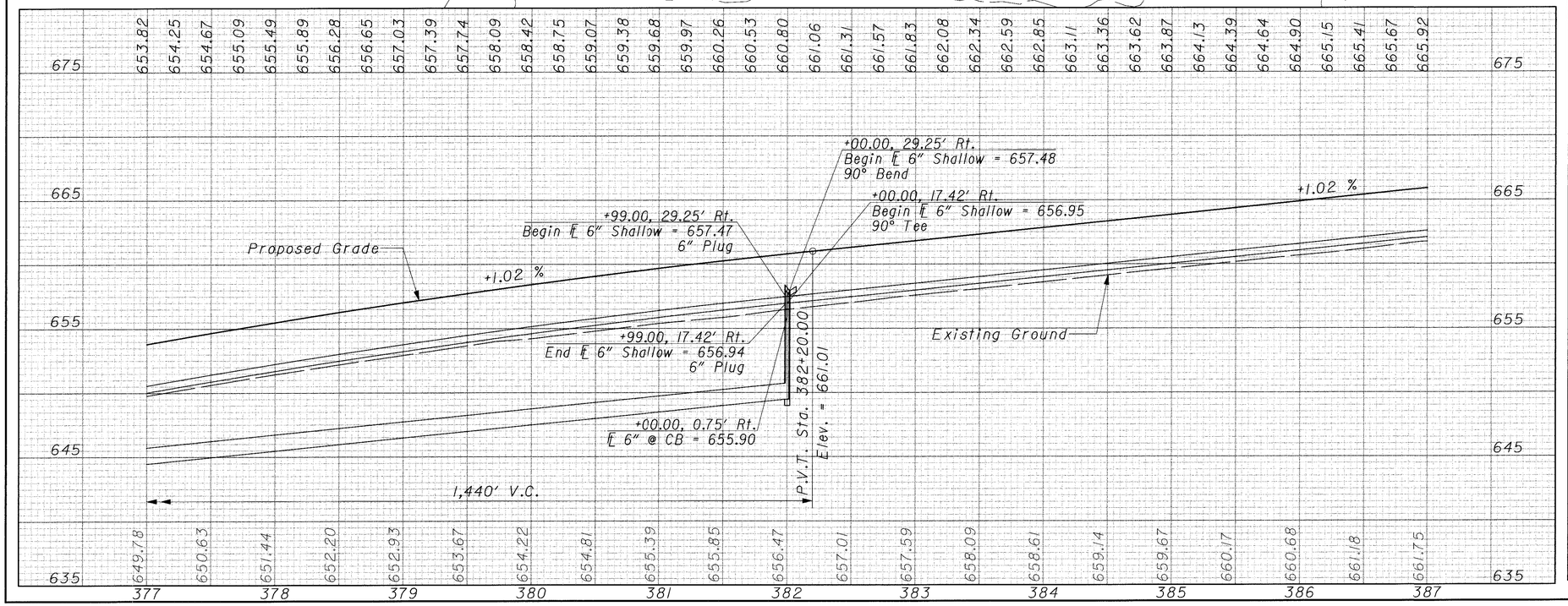

REF NO.	STATION FROM	STATION TO	SIDE

TOTALS CARRIED TO SUB-SUMMARY

NO ROADWAY QUANTITIES THIS SHEET

HORIZONTAL SCALE IN FEET
0 25 50 100

CALCULATED EF
CHECKED AM

SOUTHBOUND I.R. 275
PLAN AND PROFILE
STA. 377+00.00 TO STA. 387+00.00

CLE-275-5.35

326
857

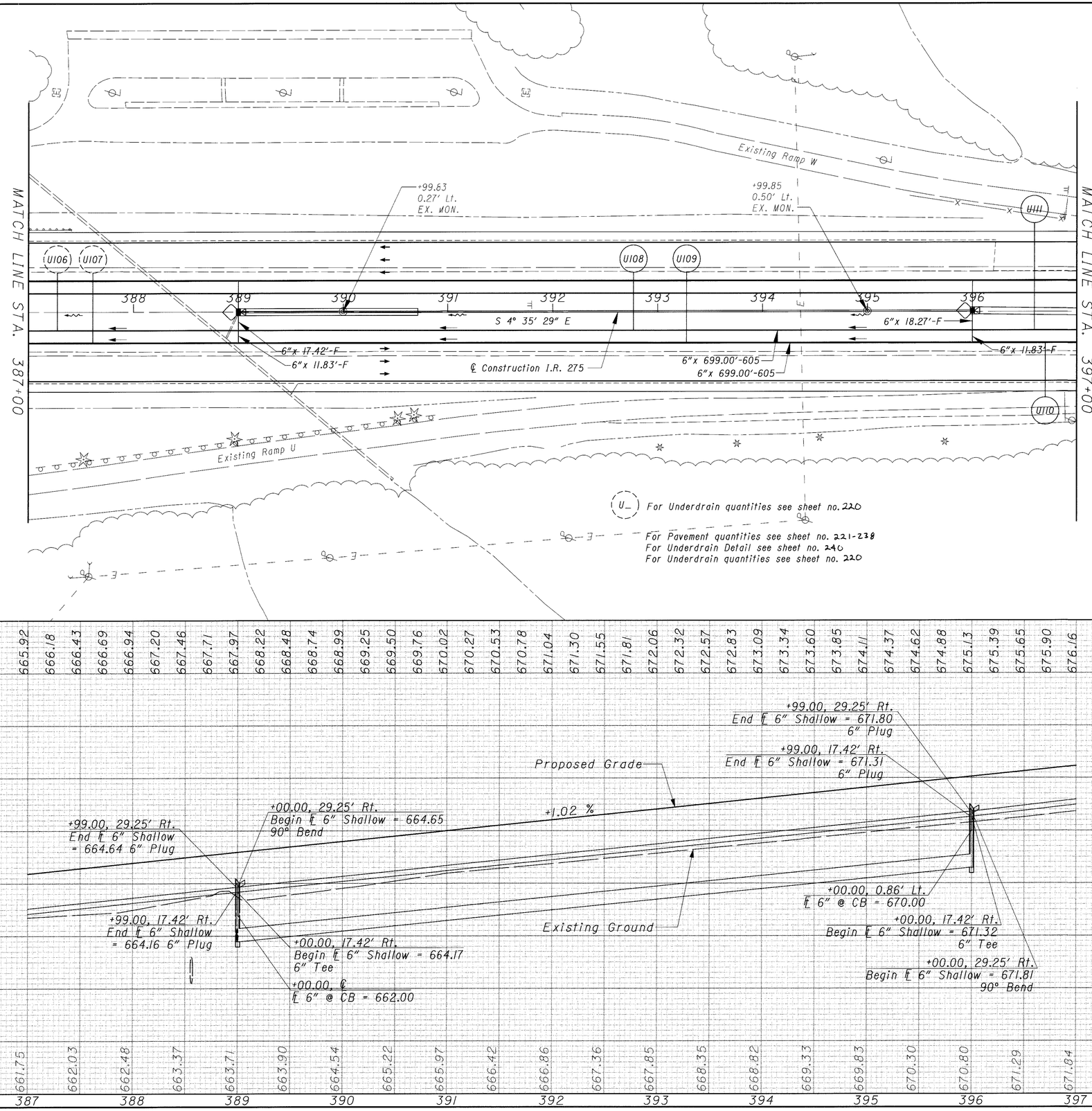

NO ROADWAY QUANTITIES THIS SHEET

REF NO.	STATION FROM	STATION TO	SIDE

TOTALS CARRIED TO SUB-SUMMARY

N

0 25 50 100 HORIZONTAL SCALE IN FEET

CALCULATED EF
CHECKED AM

PLAN AND PROFILE SOUTHBOUND I.R. 275
STA. 387+00.00 TO STA. 397+00.00

CLE-275-5.35

327
857

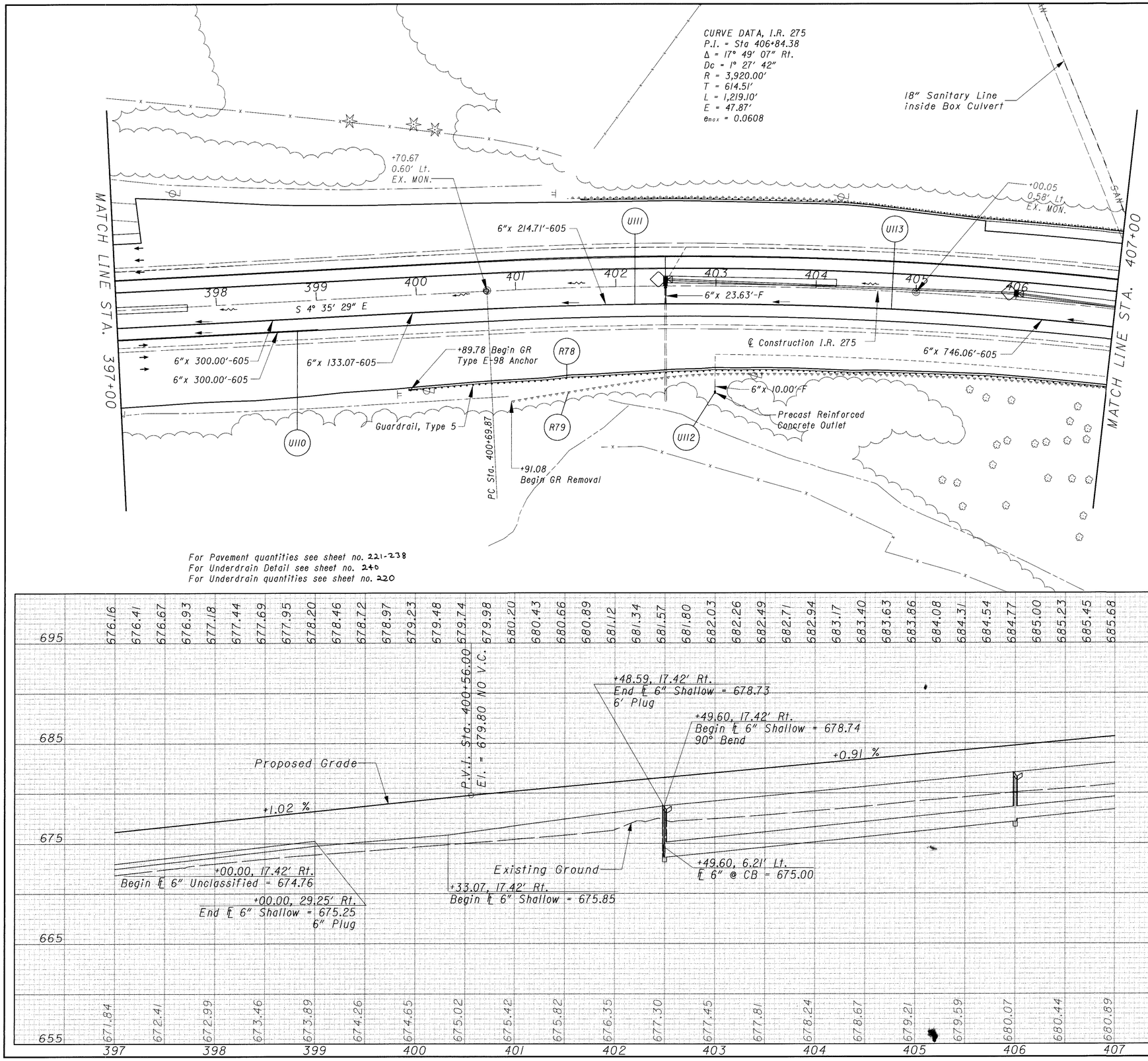

REF NO.	STATION FROM	STATION TO	SIDE	202 GUARDRAIL REMOVED LF	606 GUARDRAIL TYPE 5 LF	606 ANCHOR ASSEMBLY TYPE E-98 EACH	606 ANCHOR ASSEMBLY TYPE T EACH
R78	399+89.78	417+61.63	RT		1675.00	1	1
R79	400+91.08	417+50.07	RT	1625.79			
TOTALS CARRIED TO SUB-SUMMARY				1625.79	1675.00	1	1

CALCULATED EF
CHECKED AM

0 25 50 100
HORIZONTAL SCALE IN FEET

PLAN AND PROFILE
CLE-275-5.35
STA. 397+00.00 TO STA. 407+00.00

328
85

CURVE DATA, I.R. 275
P.I. = Sta 406+84.38
Δ = 17° 49' 07" Rt.
Dc = 1° 27' 42"
R = 3,920.00'
T = 614.51'
L = 1,219.10'
E = 47.87'
emax = 0.0608

CURVE DATA, I.R. 275
P.I. = Sta 416+06.90
Δ = 9° 29' 06" Rt.
Dc = 1° 29' 42"
R = 3,832.29'
T = 317.94'
L = 634.42'
E = 13.17'
emax = 0.0608

+99.88
0.77' Lt.
EX. MON.

+99.93
0.91' Lt.
EX. MON.

MATCH LINE STA. 407+00

MATCH LINE STA. 417+00

Remove Existing U-Turn

408 409 410 411 412 413 414 415 416

6"x 22.85'-F

6"x 465.03'-605

℄ Construction I.R. 275

6"x 108.06'-605

6"x 144.19'-605

U113

U114

Guardrail, Type 5

R78

R79

PCC Sta. 412+88.97

18" Sanitary Line inside Box Culvert

S.M.H.

S.M.H.

For Pavement quantities see sheet no. 221-238
For Underdrain Detail see sheet no. 240
For Underdrain quantities see sheet no. 220
R_ For Roadway quantity see sheet no. 328

685.68 685.91 686.14 686.37 686.63 686.88 687.14 687.40 687.66 687.92 688.18 688.44 688.70 688.96 689.22 689.48 689.74 689.99 690.25 690.51 690.77 691.03 691.29 691.55 691.81 692.07 692.33 692.59 692.84 693.10 693.36 693.62 693.88 694.14 694.40 694.66 694.91 695.16 695.40 695.64 695.89

705 695 685 675 665

P.V.I. Sta. 407+76.00
Elev. = 686.38 NO V.C.

+0.91 %

+99.00, 17.42' Rt.
End ℄ 6" Shallow = 685.87
6" Plug

+00.00, 17.42' Rt.
Begin ℄ 6" Shallow = 685.88
90° Bend

+1.04 %

Existing Ground

+00.00, 5.44' Lt.
℄ 6' @ CB = 682.91

+67.13, 17.42' Rt.
Begin ℄ 6" Unclassified = 690.14

+75.69, 17.42' Rt.
Begin ℄ 6" Shallow = 691.77

+98.95, 5.10' Lt.
℄ 6" @ CB = 690.00

P.V.I. Sta. 415+93.00
Elev. = 694.84 NO V.C.

Proposed Grade

+0.98 %

407 408 409 410 411 412 413 414 415 416 417

REF NO.	STATION FROM	STATION TO	SIDE

TOTALS CARRIED TO SUB-SUMMARY

NO ROADWAY QUANTITIES THIS SHEET

HORIZONTAL SCALE IN FEET
0 25 50 100

CALCULATED EF
CHECKED AM

PLAN AND PROFILE SOUTHBOUND I.R. 275
STA. 407+00.00 TO STA. 417+00.00

CLE-275-5.35

329
85

CURVE DATA, I.R. 275
P.I. = Sta 416+06.90
Δ = 9° 29′ 06″ Rt.
Dc = 1° 29′ 42″
R = 3,832.29′
T = 317.94′
L = 634.42′
E = 13.17′
emax = 0.0608

+98.79
1.14′ Lt.
EX. MON.

+35.50
0.23′ Lt.
EX. MON.

S 33° 01′ 15″ W

MATCH LINE STA. 417+00

MATCH LINE STA. 427+00

6″x 31.88′-F

418 419 420 421 422 423 424 425 426

6″x 35.33′-F

6″x 124.27′-605

℄ Construction I.R. 275

R79 R78

+61.63 End GR
Type T Anchor

+50.07
End GR Removal

Guardrail, Type 5

U115

6″x 10.00′-F

Precast Reinforced
Concrete Outlet

PCC Sta. 419+23.39

U116

6″x 499.13′-605

6″x 498.55′-605

U117 U118

R81

R80

PT Sta. 426+50.94

CURVE DATA, I.R. 275
P.I. = Sta 422+88.15
Δ = 10° 18′ 30″ Rt.
Dc = 1° 25′ 01″
R = 4,043.83′
T = 364.76′
L = 727.55′
E = 16.42′
emax = 0.0608

+98.03 Begin GR
Type E-98 Anchor

Guardrail, Type 5

+22.50
Begin GR Removal

For Pavement quantities see sheet no. 221-238
For Underdrain Detail see sheet no. 240
For Underdrain quantities see sheet no. 226
(R_) For Roadway quantity see sheet no. 329

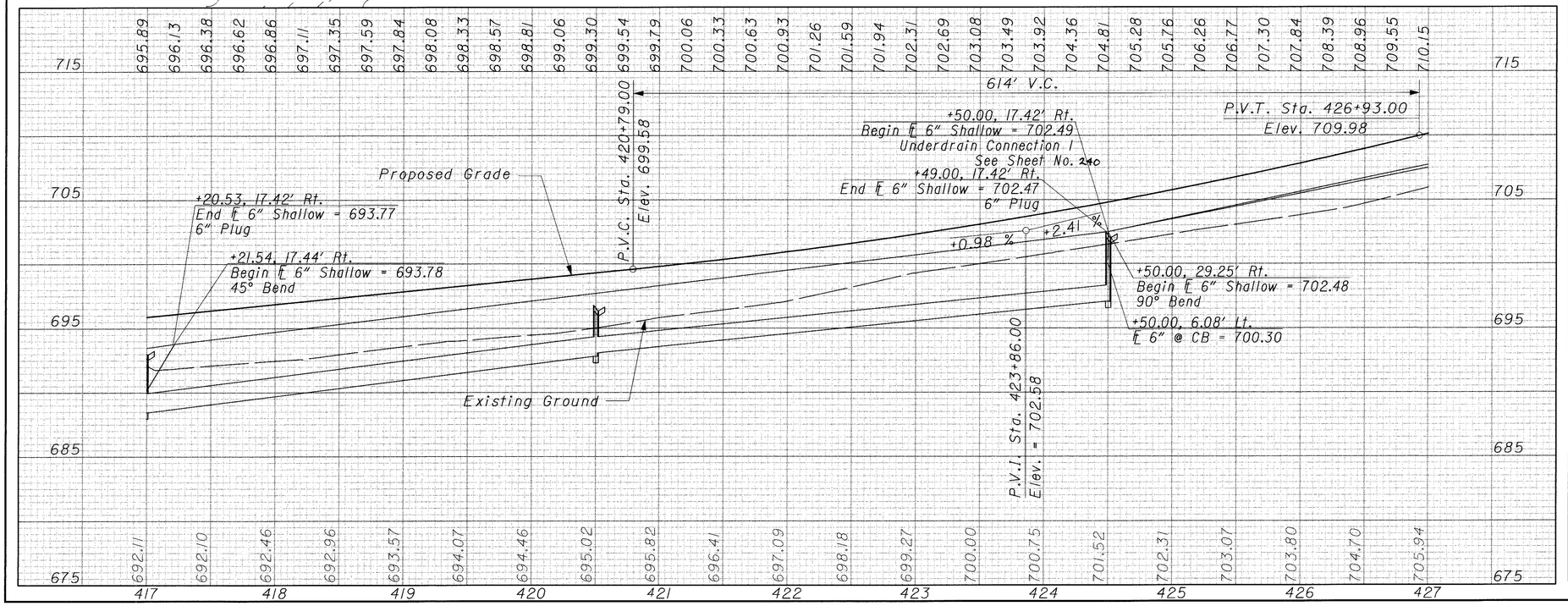

REF NO.	STATION FROM	STATION TO	SIDE	202 GUARDRAIL REMOVED LF	606 GUARDRAIL TYPE 5 LF	606 ANCHOR ASSEMBLY TYPE E-98 EACH	606 ANCHOR ASSEMBLY TYPE T EACH
R80	424+98.03	433+63.48	RT		800.00	1	1
R81	426+22.50	433+47.83	RT	727.00			
TOTALS CARRIED TO SUB-SUMMARY				727.00	800.00	1	1

HORIZONTAL SCALE IN FEET
0 25 50 100

CALCULATED EF
CHECKED AM

PLAN AND PROFILE SOUTHBOUND I.R. 275
STA. 417+00.00 TO STA. 427+00.00

CLE-275-5.35

330
857

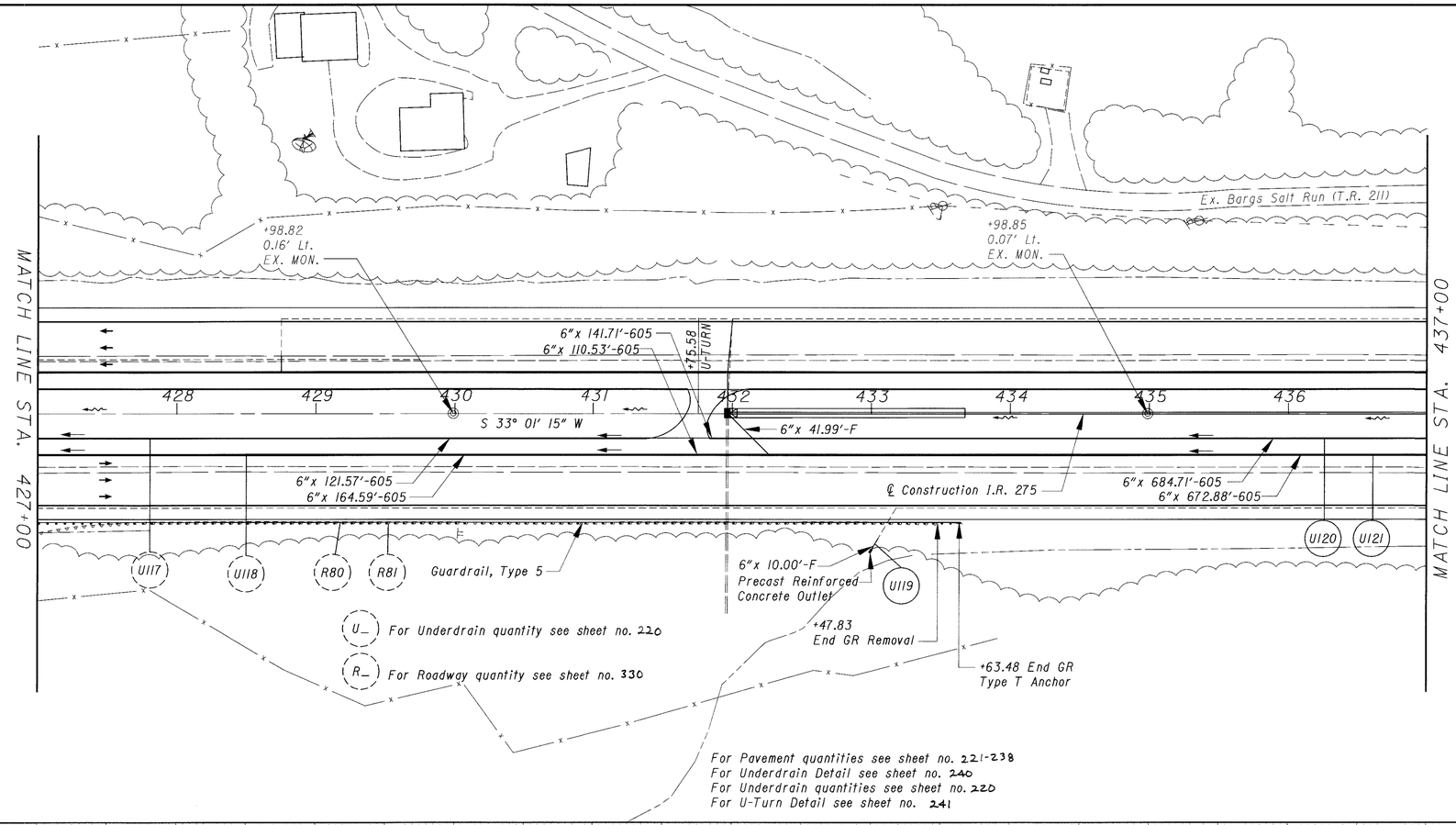

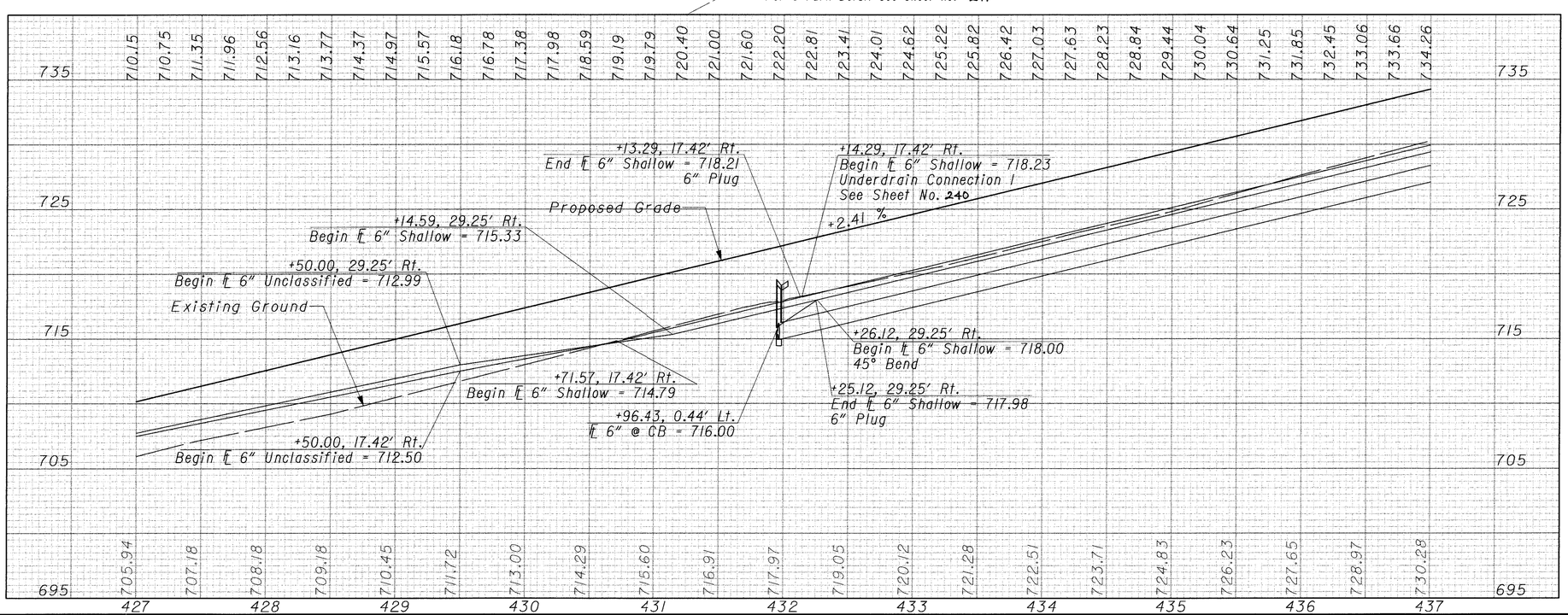

REF NO.	STATION FROM	STATION TO	SIDE

TOTALS CARRIED TO SUB-SUMMARY

NO ROADWAY QUANTITIES THIS SHEET

CALCULATED EF
CHECKED AM

0 25 50 100
HORIZONTAL SCALE IN FEET

PLAN AND PROFILE I.R. 275 SOUTHBOUND
STA. 427+00.00 TO STA. 437+00.00

CLE-275-5.35

331
85

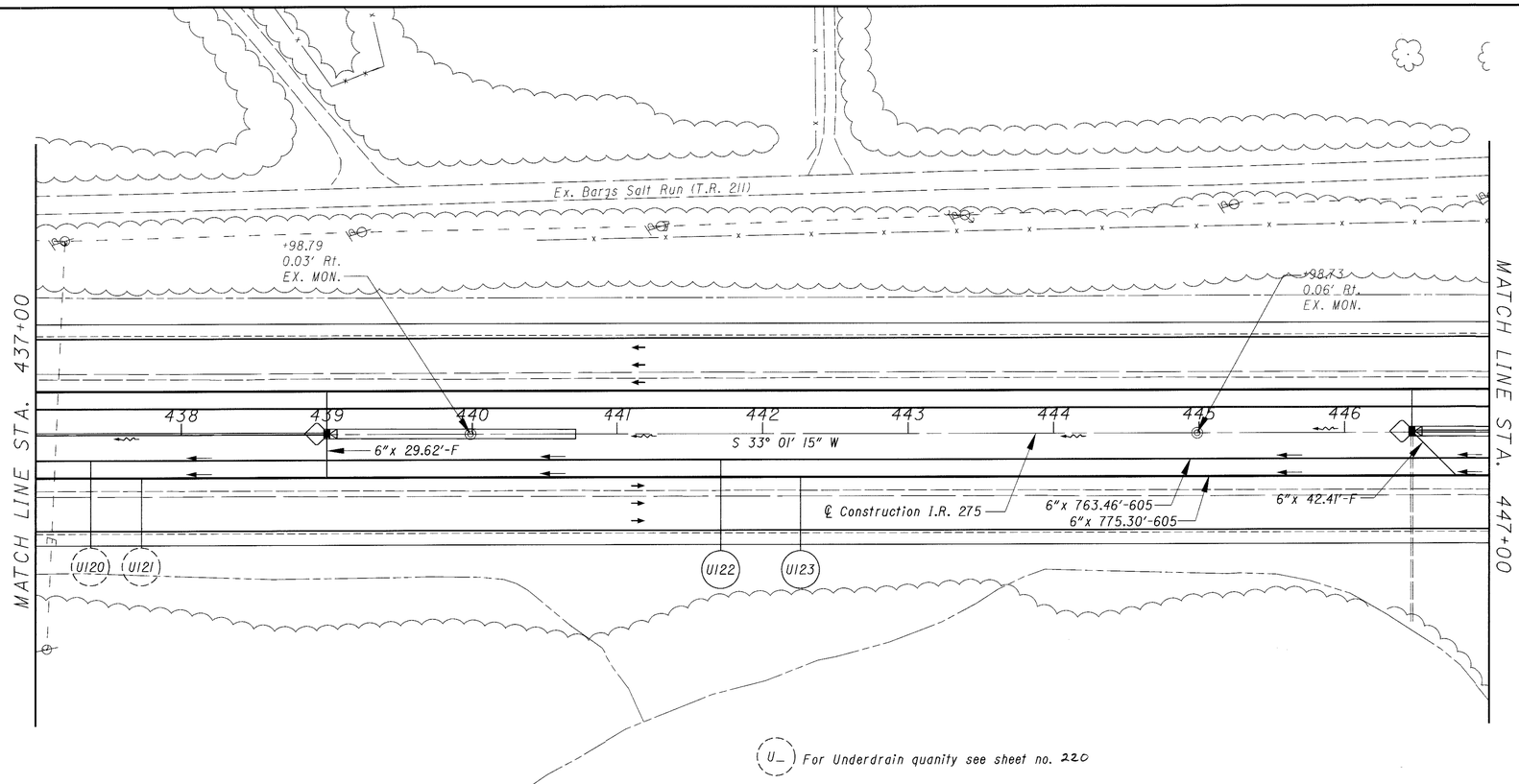

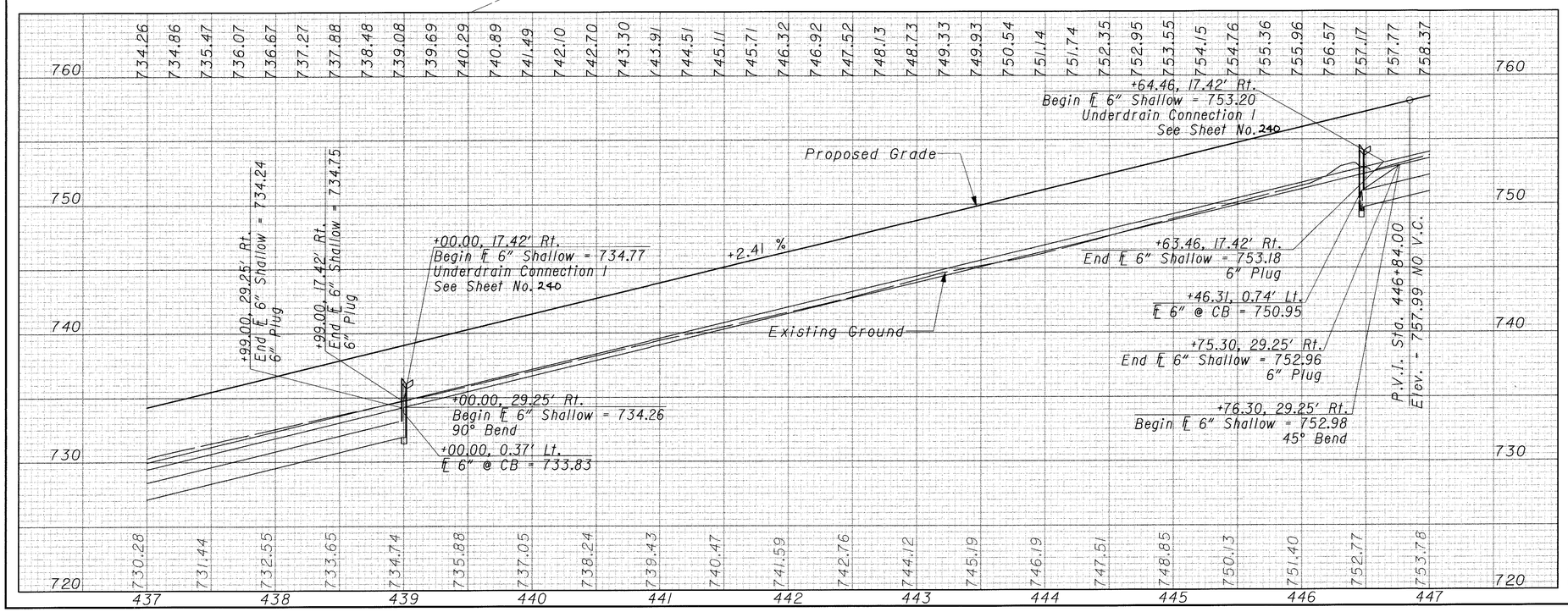

REF NO.	STATION FROM	STATION TO	SIDE

TOTALS CARRIED TO SUB-SUMMARY

NO ROADWAY QUANTITIES THIS SHEET

HORIZONTAL SCALE IN FEET
0 25 50

CALCULATED EF
CHECKED AM

PLAN AND PROFILE SOUTHBOUND I.R. 275
STA. 437+00.00 TO STA. 447+00.00

CLE-275-5.35

332
857

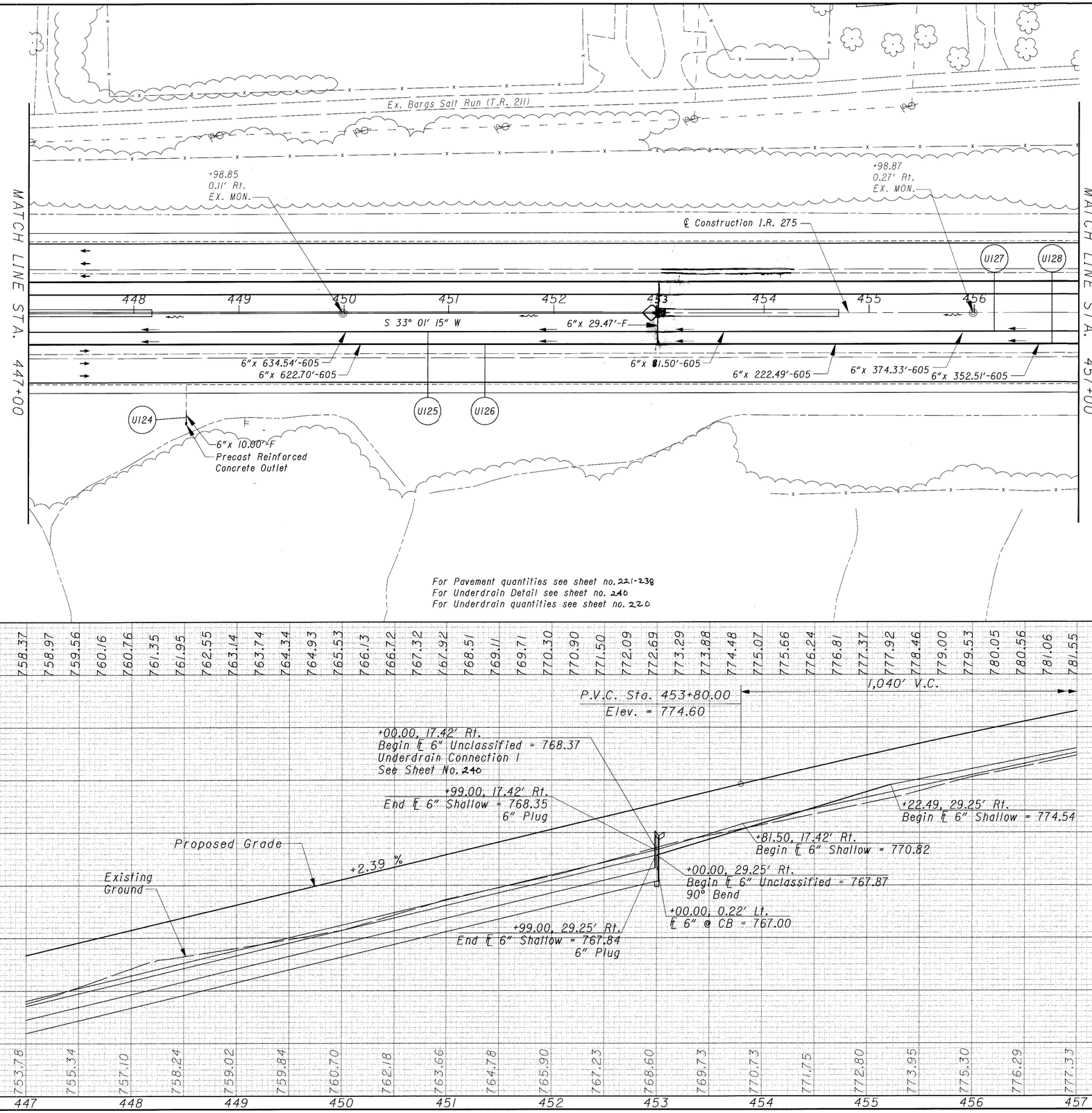

REF NO.	STATION FROM	STATION TO	SIDE
TOTALS CARRIED TO SUB-SUMMARY			

NO ROADWAY QUANTITIES THIS SHEET

HORIZONTAL SCALE IN FEET
0 25 50 100

CALCULATED EF
CHECKED AM

PLAN AND PROFILE SOUTHBOUND I.R. 275
STA. 447+00.00 TO STA. 457+00.00

CLE-275-5.35

333
857

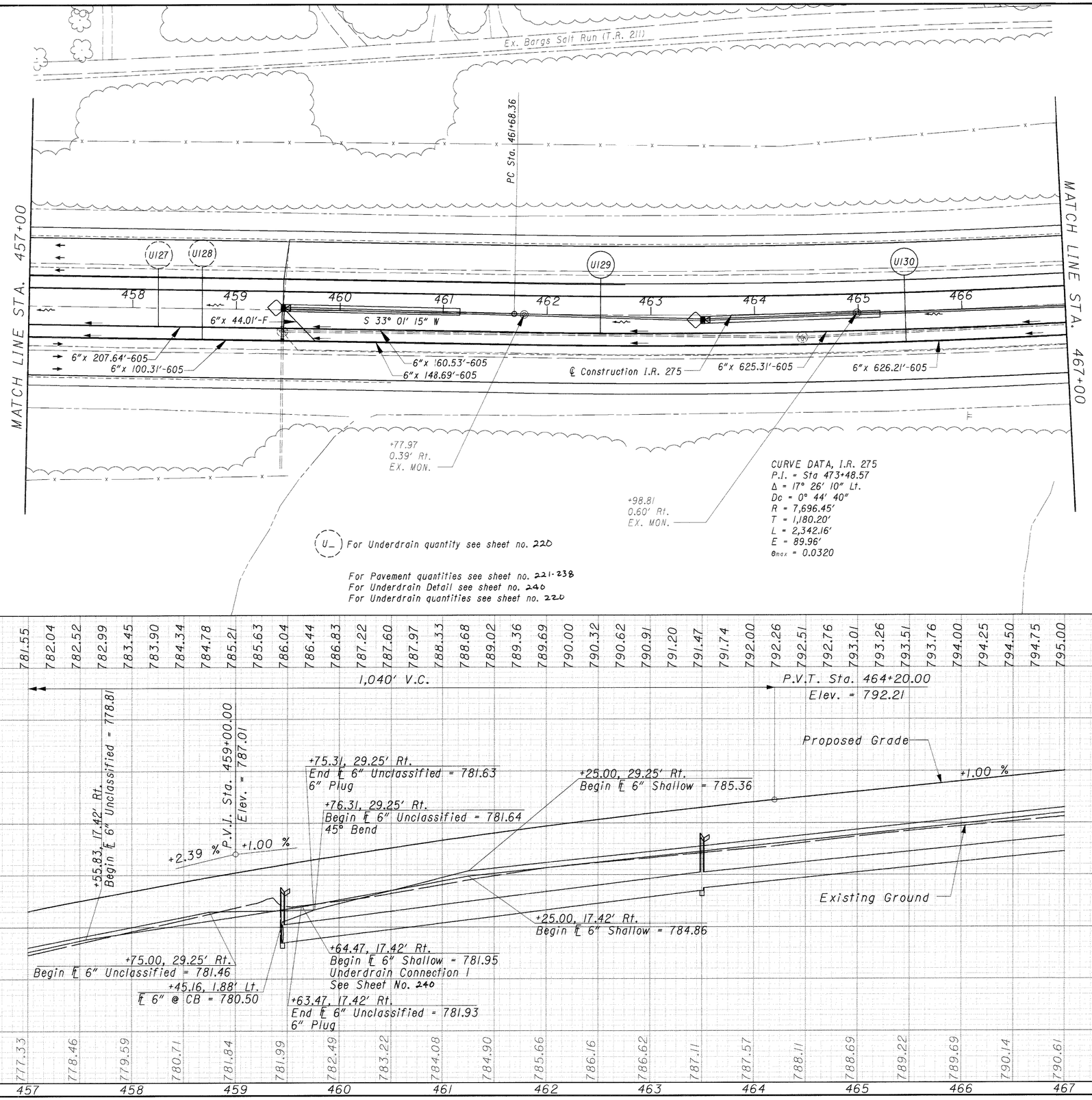

REF NO.	STATION FROM	STATION TO	SIDE

TOTALS CARRIED TO SUB-SUMMARY

NO ROADWAY QUANTITIES THIS SHEET

HORIZONTAL SCALE IN FEET
0 25 50 100

CALCULATED EF
CHECKED AM

PLAN AND PROFILE SOUTHBOUND I.R. 275
STA. 457+00.00 TO STA. 467+00.00

CLE-275-5.35

334
857

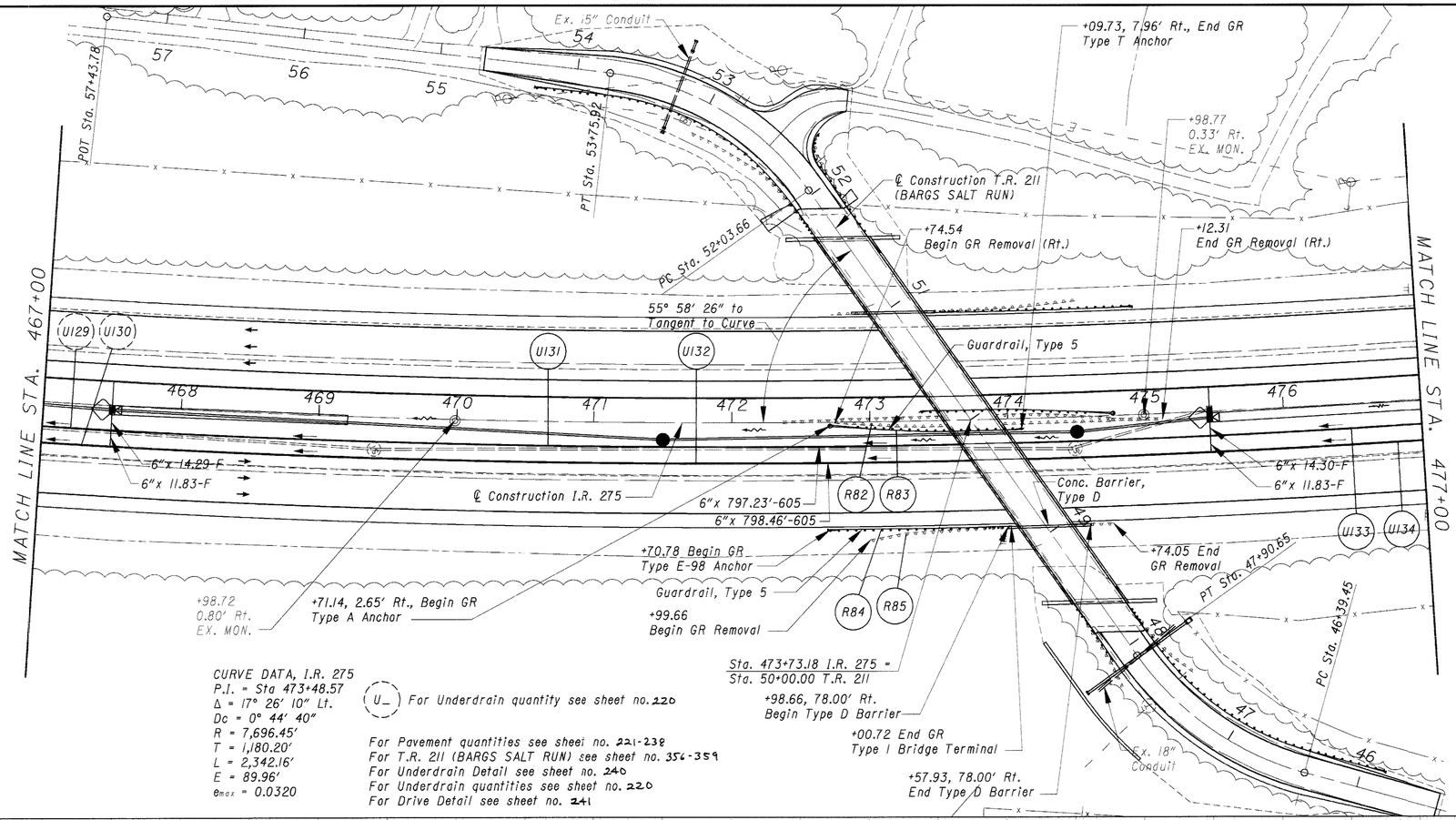

CURVE DATA, I.R. 275
P.I. = Sta 473+48.57
Δ = 17° 26' 10" Lt.
Dc = 0° 44' 40"
R = 7,696.45'
T = 1,180.20'
L = 2,342.16'
E = 89.96'
emax = 0.0320

(U_) For Underdrain quantity see sheet no. 220

For Pavement quantities see sheet no. 221-238
For T.R. 211 (BARGS SALT RUN) see sheet no. 356-359
For Underdrain Detail see sheet no. 240
For Underdrain quantities see sheet no. 220
For Drive Detail see sheet no. 241

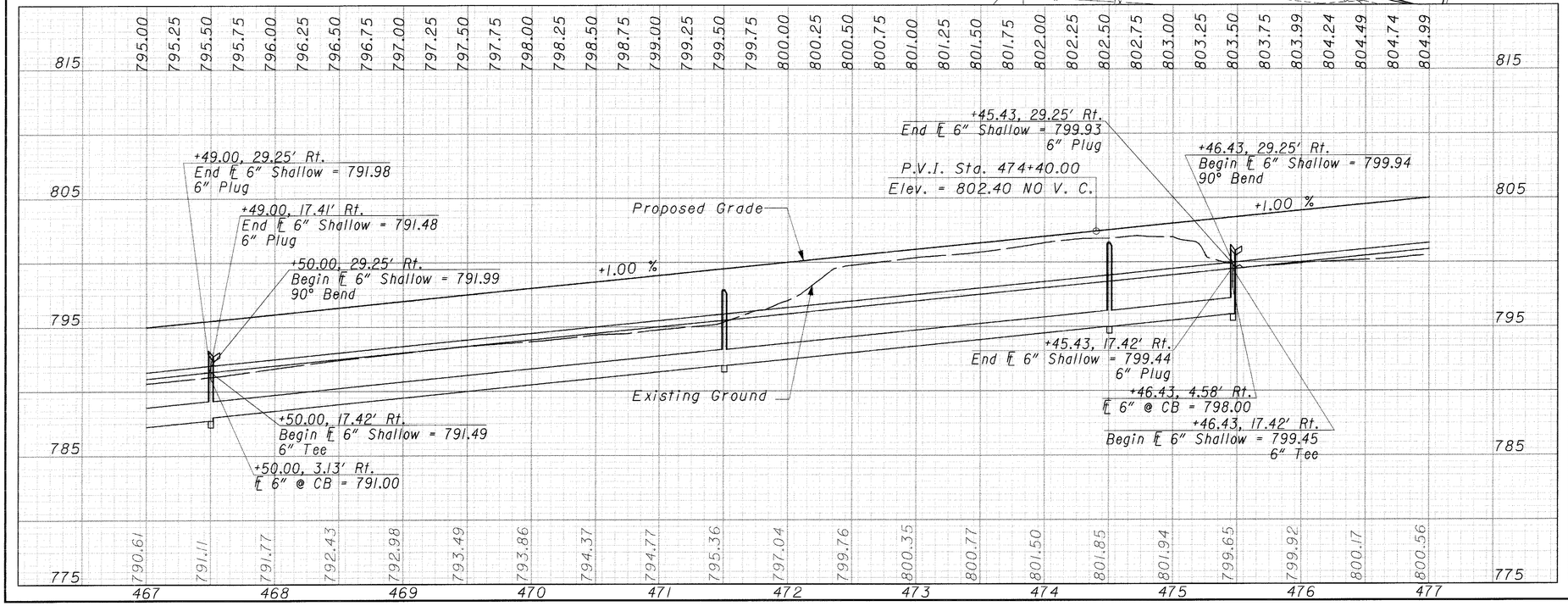

REF NO.	STATION FROM	STATION TO	SIDE	606 BRIDGE TERMINAL ASSEMBLY TYPE I EACH	606 ANCHOR ASSEMBLY TYPE T EACH	606 ANCHOR ASSEMBLY TYPE A EACH	606 ANCHOR ASSEMBLY TYPE E-98 EACH	622 CONCRETE BARRIER TYPE D LF	606 GUARDRAIL TYPE 5 LF	606 ANCHOR ASSEMBLY TYPE E-98 EACH	202 GUARDRAIL REMOVED BARRIER DESIGN LF	202 GUARDRAIL REMOVED LF
R82	472+74.54	475+12.31	RT		1			59.89	100.00	1	37.73	200.27
R83	472+71.14	474+09.73	RT			1						
R84	472+70.78	474+57.93	RT	1					81.25	1		176.64
R85	472+99.66	474+74.05	RT				1					
TOTALS CARRIED TO SUB-SUMMARY				1	1	1	1	59.89	181.25	1	37.73	376.91

CALCULATED EF
CHECKED AM

0 25 50 100
HORIZONTAL SCALE IN FEET

PLAN AND PROFILE I.R. 275 SOUTHBOUND STA. 467+00.00 TO STA. 477+00.00

CLE-275-5.35

335
857

CURVE DATA, I.R. 275
P.I. = Sta 473+48.57
Δ = 17° 26' 10" Lt.
Dc = 0° 44' 40"
R = 7,696.45'
T = 1,180.20'
L = 2,342.16'
E = 89.96'
θ_{max} = 0.0320

MATCH LINE STA. 477+00

MATCH LINE STA. 487+00

PT Sta. 485+10.53

+98.87
0.035' Rt.
EX. MON.

478 479 480 481 482 483 484 485 486

6"x 454.60'-605
6"x 455.29'-605
℄ Construction I.R. 275
6"x 500.13'-605
6"x 500.90'-605
6"x 29.25'-F
S 15° 35' 05" W
6"x 698.17'-605
6"x 698.19'-605

UI33 UI34 UI35 UI36

R86 R87

Guardrail, Type 5

STATION EQUATION:
Sta 485+10.53 BK
Sta 485+11.38 AH

+38.39 Begin GR
Type E-98 Anchor

+54.01
Begin GR Removal

U_ For Underdrain quantity see sheet no. 220

For Pavement quantities see sheet no. 221-238
For Underdrain Detail see sheet no. 240
For Underdrain quantities see sheet no. 220

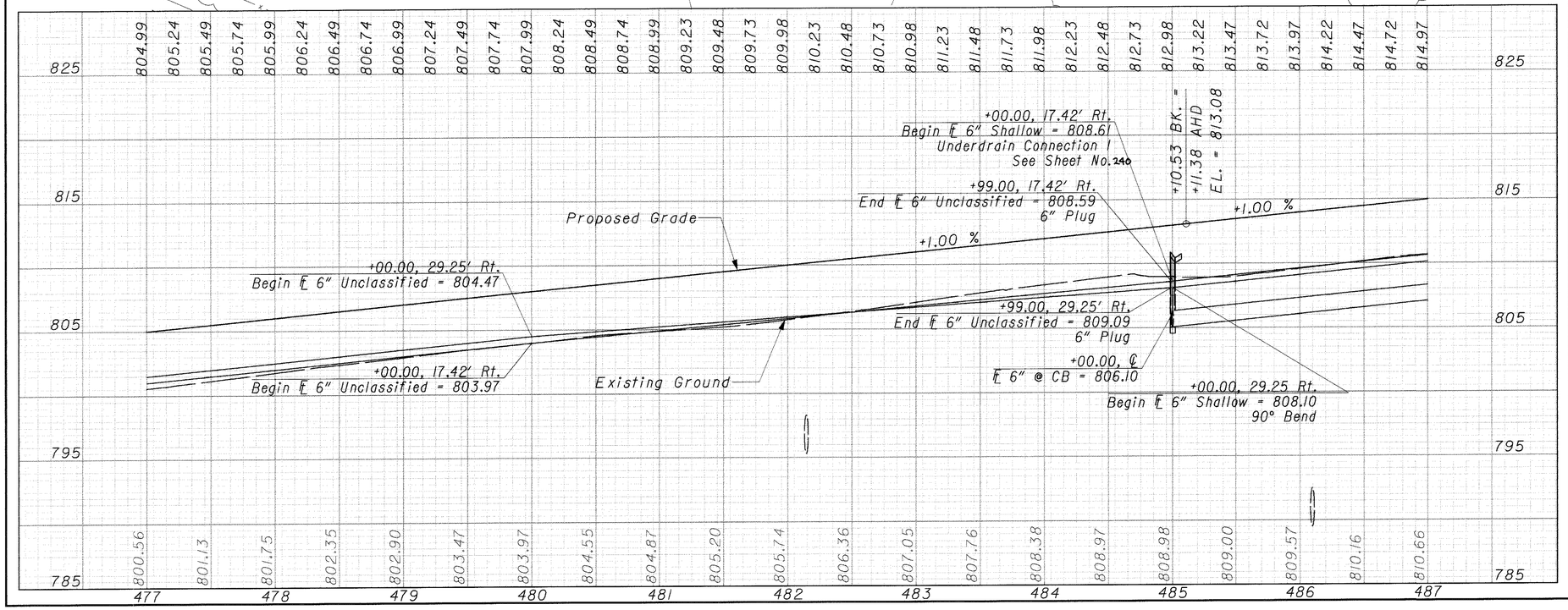

REF NO.	STATION FROM	STATION TO	SIDE					
R86	483+38.39	487+62.50	RT	202	GUARDRAIL REMOVED	LF	228.57	
R87	485+54.01	487+81.45	RT	606	GUARDRAIL TYPE 5	LF	362.50	
				606	ANCHOR ASSEMBLY TYPE E-98	EACH	1	1
				606	ANCHOR ASSEMBLY TYPE T	EACH	1	1
			TOTALS CARRIED TO SUB-SUMMARY				228.57	362.50

CALCULATED EF
CHECKED AM

0 25 50 100
HORIZONTAL SCALE IN FEET

PLAN AND PROFILE I.R. 275 SOUTHBOUND STA. 477+00.00 TO STA. 487+00.00

CLE-275-5.35

336
857

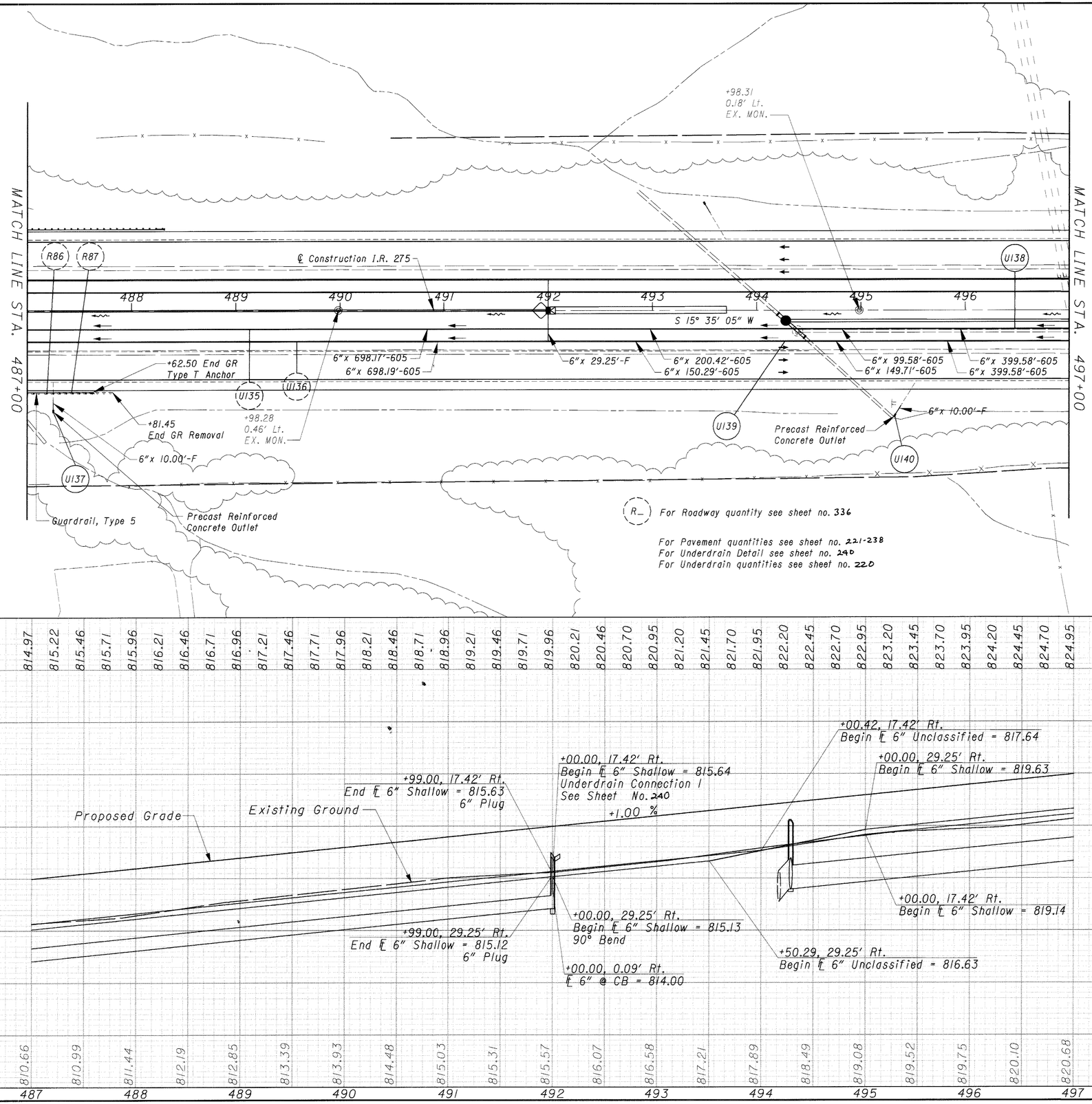

NO ROADWAY QUANTITIES THIS SHEET

TOTALS CARRIED TO SUB-SUMMARY

REF NO.	STATION FROM	STATION TO	SIDE

HORIZONTAL SCALE IN FEET
0 25 50 100

CALCULATED EF
CHECKED AM

PLAN AND PROFILE SOUTHBOUND I.R. 275
STA. 487+00.00 TO STA. 497+00.00

CLE-275-5.35

U_ For Underdrain quantity see sheet no. 220

For Pavement quantities see sheet no. 221-238
For Underdrain Detail see sheet no. 240
For Underdrain quantities see sheet no. 220

NOISE BARRIER BB
BY OTHERS

MATCH LINE STA. 497+00

MATCH LINE STA. 507+00

+98.44
0.27' Lt.
EX. MON.

+98.56
0.13 Lt.
EX. MON.

U138

U139

U141

U142

498 499 500 501 502 503 504 505 506

S 15° 35' 05" W

6"x 11.83'-F

6"x 17.42'-F

℄ Construction I.R. 275

6"x 748.42'-605

6"x 748.42'-605

6"x 17.53'-F

6"x 11.83'-F

6"x 12.67'-B
Connect to Ex. U.D.

CB 2-2B
BY OTHERS

NOISE BARRIER AA
BY OTHERS

12" CONDUIT, HW, OUTLET PROTECTION
BY OTHERS

DITCH EROSION PROTECTION
BEHIND NOISE BARRIER
BY OTHERS (TYP)

8" Gas Line
3' cover

G

845
835
825
815
805

824.95 825.20 825.45 825.70 825.95 826.19 826.44 826.69 826.94 827.19 827.44 827.69 827.94 828.19 828.44 828.69 828.94 829.19 829.44 829.69 829.94 830.19 830.44 830.69 830.94 831.19 831.43 831.68 831.93 832.18 832.43 832.68 832.93 833.18 833.43 833.68 833.93 834.19 834.45 834.71 834.97

P.V.C. Sta. 505+50.00
Elev. = 833.43

600' V.C.

Proposed Grade

+1.00 %

Existing Ground

+99.58, 17.42' Rt.
End ℄ 6" Shallow = 823.11
6" Plug

+99.58, 29.25' Rt.
End ℄ 6" Shallow = 823.61
6" Plug

+00.58, 29.25' Rt.
Begin ℄ 6" Shallow = 823.62
6" Tee

+00.58, 17.42' Rt.
Begin ℄ 6" Shallow = 823.13
6" Tee

+00.22, 41.91' Rt.
℄ Ex. 6" = 822.07 Field Verify
Connect to Prop. 6" U.D.

+00.58, ℄
℄ 6" @ CB = 820.46

+50.00, 29.25' Rt.
Begin ℄ 6" Shallow = 831.12
90° Bend

+49.00, 29.25' Rt.
End ℄ 6" Shallow = 831.11
6" Plug

+49.00, 17.42' Rt.
End ℄ 6" Shallow = 830.62
6" Plug

+50.00, 0.11' Lt.
℄ 6" @ CB = 830.00

+50.00, 17.42' Rt.
Begin ℄ 6" Shallow = 830.63
6" Tee

820.68 821.21 821.74 822.34 822.70 823.27 823.80 824.31 824.85 825.40 825.86 826.30 826.69 827.04 827.45 827.92 828.43 829.02 829.52 829.93 830.42

497 498 499 500 501 502 503 504 505 506 507

REF NO.	STATION FROM	STATION TO	SIDE

TOTALS CARRIED TO SUB-SUMMARY

NO ROADWAY QUANTITIES THIS SHEET

N

0 25 50 100
HORIZONTAL SCALE IN FEET

CALCULATED EF
CHECKED AM

PLAN AND PROFILE SOUTHBOUND I.R. 275
STA. 497+00.00 TO STA. 507+00.00

CLE-275-5.35

338
857

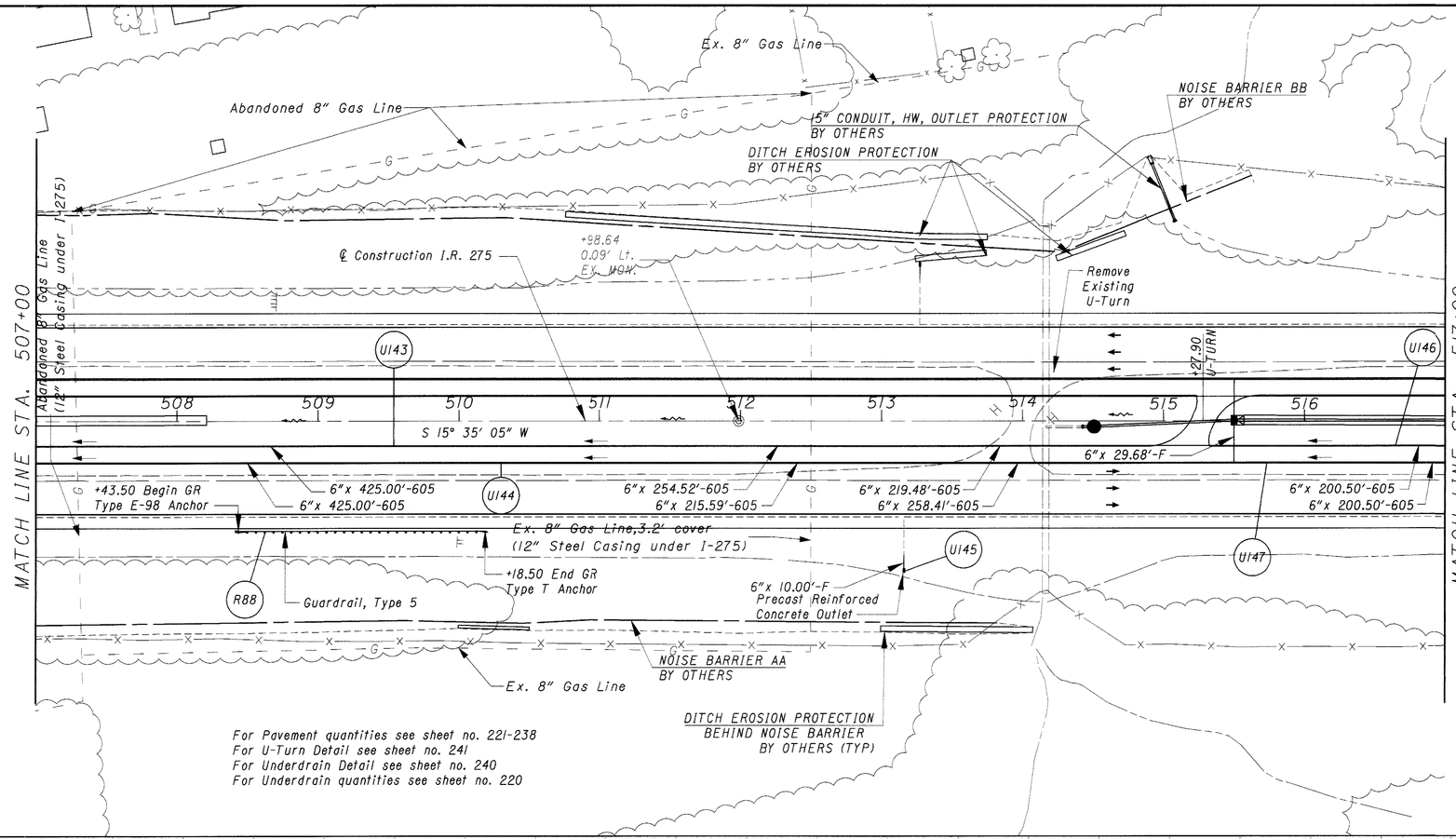

For Pavement quantities see sheet no. 221-238
For U-Turn Detail see sheet no. 241
For Underdrain Detail see sheet no. 240
For Underdrain quantities see sheet no. 220

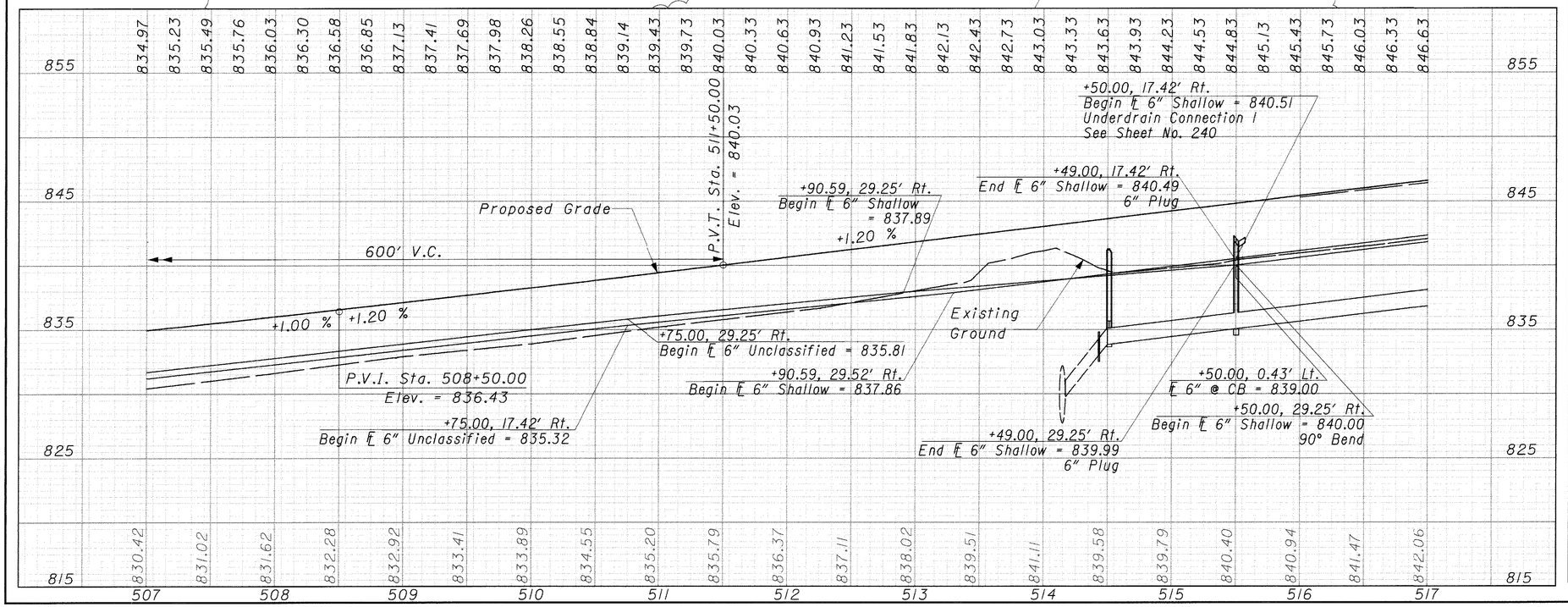

REF NO.	STATION FROM	STATION TO	SIDE				
				606 GUARDRAIL TYPE 5	606 ANCHOR ASSEMBLY TYPE E-98	606 ANCHOR ASSEMBLY TYPE T	
				LF	EACH	EACH	
R88	508+43.50	510+18.50	RT	112.50	1	1	
TOTALS CARRIED TO SUB-SUMMARY				112.50	1	1	

HORIZONTAL SCALE IN FEET
0 25 50 100

CALCULATED EF
CHECKED AM

PLAN AND PROFILE I.R. 275 SOUTHBOUND
STA. 507+00.00 TO STA. 517+00.00

CLE-275-5.35

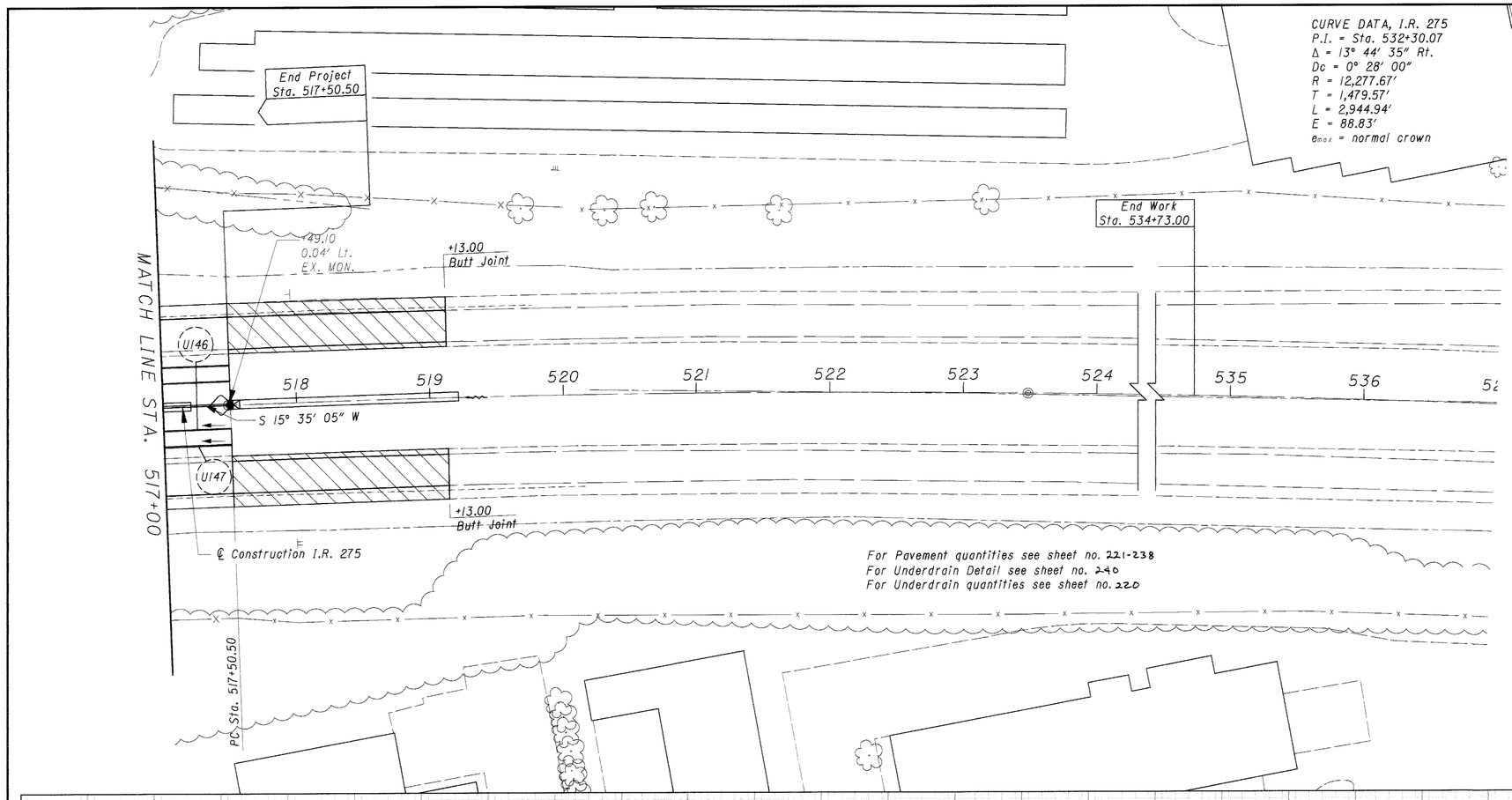

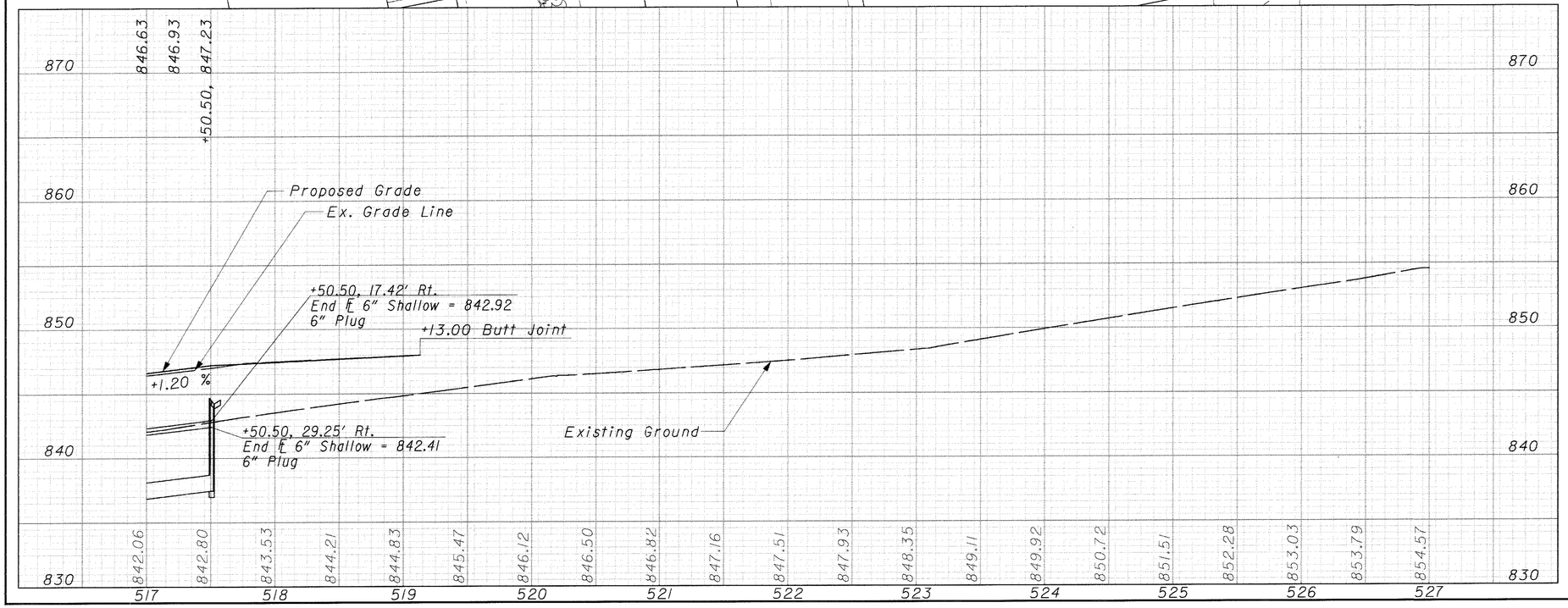

REF NO.	STATION FROM	STATION TO	SIDE

TOTALS CARRIED TO SUB-SUMMARY

NO ROADWAY QUANTITIES THIS SHEET

HORIZONTAL SCALE IN FEET
0 25 50 100

CALCULATED EF
CHECKED AM

PLAN AND PROFILE I.R. 275 SOUTHBOUND
STA. 517+00.00 TO STA. 517+50.50

CLE-275-5.35

340
857

U-TURN PAVEMENT DETAIL

STATION	OFFSET	SIDE	ELEVATION
86+10.00	14.16	RT	529.47
86+20.00	13.72	RT	529.49
86+30.00	13.29	RT	529.53
86+40.00	12.86	RT	529.63
86+50.00	21.43	RT	530.42
86+60.00	11.99	RT	529.78
86+70.00	11.56	RT	529.81
86+80.00	11.13	RT	529.75
86+90.00	10.70	RT	529.69
87+00.00	10.26	RT	529.64
87+10.00	9.83	RT	529.24
87+20.00	9.40	RT	529.41
87+30.00	8.97	RT	529.60
87+40.00	8.53	RT	529.77
87+50.00	8.10	RT	529.84
87+60.00	7.67	RT	529.91
87+70.00	7.25	RT	530.03
87+80.00	7.28	RT	530.09
87+87.96	7.29	RT	530.14
88+00.74	7.33	RT	530.18
88+10.00	8.65	LT	531.42
88+20.00	8.71	LT	531.44
88+30.00	9.11	LT	531.46
88+40.00	9.52	LT	531.49
88+50.00	9.92	LT	531.51
88+60.00	10.32	LT	531.54
88+70.00	10.73	LT	531.56
88+80.00	11.13	LT	531.58
88+90.00	11.54	LT	531.61
89+00.00	11.94	LT	531.64
89+10.00	12.35	LT	531.68
89+20.00	12.75	LT	531.71
89+30.00	13.16	LT	531.72
89+40.00	13.56	LT	531.70
89+50.00	13.97	LT	531.69
89+60.00	14.37	LT	531.67
89+70.00	14.78	LT	531.65
89+80.00	15.18	LT	531.65
89+90.00	15.59	LT	531.64
90+00.00	15.99	LT	531.64
90+10.00	16.40	LT	531.65

(A) +36.38, 5.65 Rt., Begin Impact Attenuator Type I-98 (Bidirectional)

(B) +06.29, 12.34 Rt., End Type T Anchor Assembly

(C) +72.30, 13.79 Lt., Begin Type T Anchor Assembly

(D) +54.61, 6.17 Lt., End Impact Attenuator Type I-98 (Bidirectional)

For U-Turn Details See Sheet No. 241

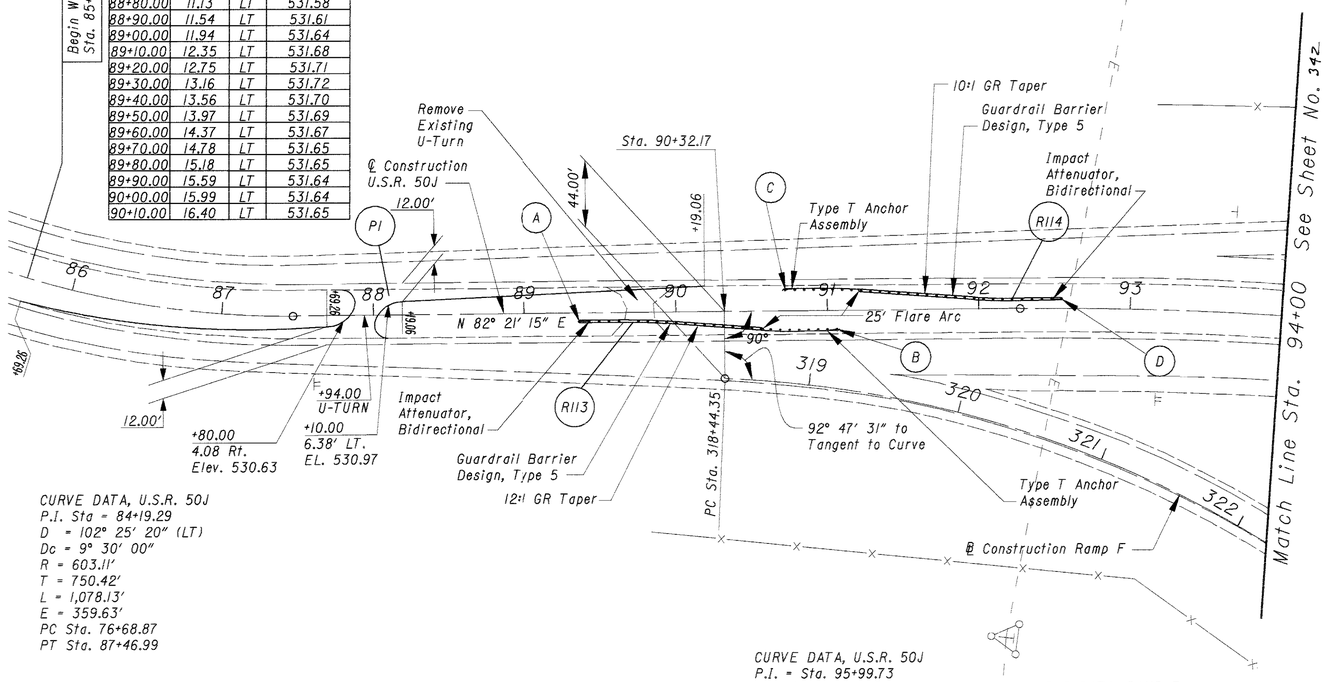

CURVE DATA, U.S.R. 50J
P.I. Sta = 84+19.29
D = 102° 25' 20" (LT)
Dc = 9° 30' 00"
R = 603.11'
T = 750.42'
L = 1,078.13'
E = 359.63'
PC Sta. 76+68.87
PT Sta. 87+46.99

CURVE DATA, U.S.R. 50J
P.I. = Sta. 95+99.73
Δ = 18° 00' 00" Rt.
Dc = 2° 30' 00"
R = 2,291.83'
Ls = 400.00'
θs = 5° 00' 00"
LT = 266.77'
ST = 133.43'
Lc = 520.00'
TI = 372.40'
T2 = 553.99'
PC Sta. 92+27.33
CS Sta. 97+47.33
ST Sta. 101+47.33

CURVE DATA, RAMP F
P.I. = Sta. 321+79.77
Δ = 48° 52' 19" Rt.
Dc = 7° 45' 42"
R = 738.19'
T = 335.41'
L = 629.65'
E = 72.63'

PAVEMENT QUANTITY U.S.R. 50J	CADD AREA A	203 SUBGRADE COMPACTION A/9	301 11" BIT. AGGREGATE BASE, PG64-22 (11/12)*A/27	304 6" AGGREGATE BASE (6/12)*A/27	407 TACK COAT FOR INTERMED. COURSE 0.05*A/9	408 BITUMINOUS PRIME COAT 0.4*A/9	448 1½" ASPHALT CONCRETE SURFACE COURSE, TYPE I (1½/12)*A/27	448 2¾" ASPHALT CONCRETE INTERMED. COURSE, TYPE 2 (2¾/12)*A/27
	SQ. FT.	SQ. YD.	CU. YD.	CU. YD.	GAL.	GAL.	CU. YD.	CU. YD.
87+94 U-TURN	2428.16				13.49		11.24	13.12
87+94 U-TURN	2588.55		87.88			115.05		
87+94 U-TURN	3064.11	340.46		56.74				
GRAND TOTALS		340.46	87.88	56.74	13.49	115.05	11.24	13.12
GRAND TOTALS CARRIED TO GENERAL SUMMARY		340	88	57	13	115	11	13

REF NO.	STATION FROM	STATION TO	SIDE	606 ANCHOR ASSEMBLY, TYPE 5 EACH	606 IMPACT ATTENUATOR, TYPE I-98 (BIDIRECTIONAL) EACH	606 FLARED END SECTION EACH	606 GUARDRAIL BARRIER DESIGN, TYPE 5 LF	606 GUARDRAIL, TYPE 5 LF
R113	89+36.38	91+06.29	RT	1	1	1	87.50	37.50
R114	90+72.30	92+54.61	RT	1	1	1	100.00	37.50
TOTALS CARRIED TO SUB-SUMMARY				2	2	2	187.50	75.00

HORIZONTAL SCALE IN FEET
0 25 50 100

CALCULATED EF CHECKED AM

PLAN U.S. 50J
STA. 87+47.01 TO STA. 94+00.00

CLE-275-5.35

341
857

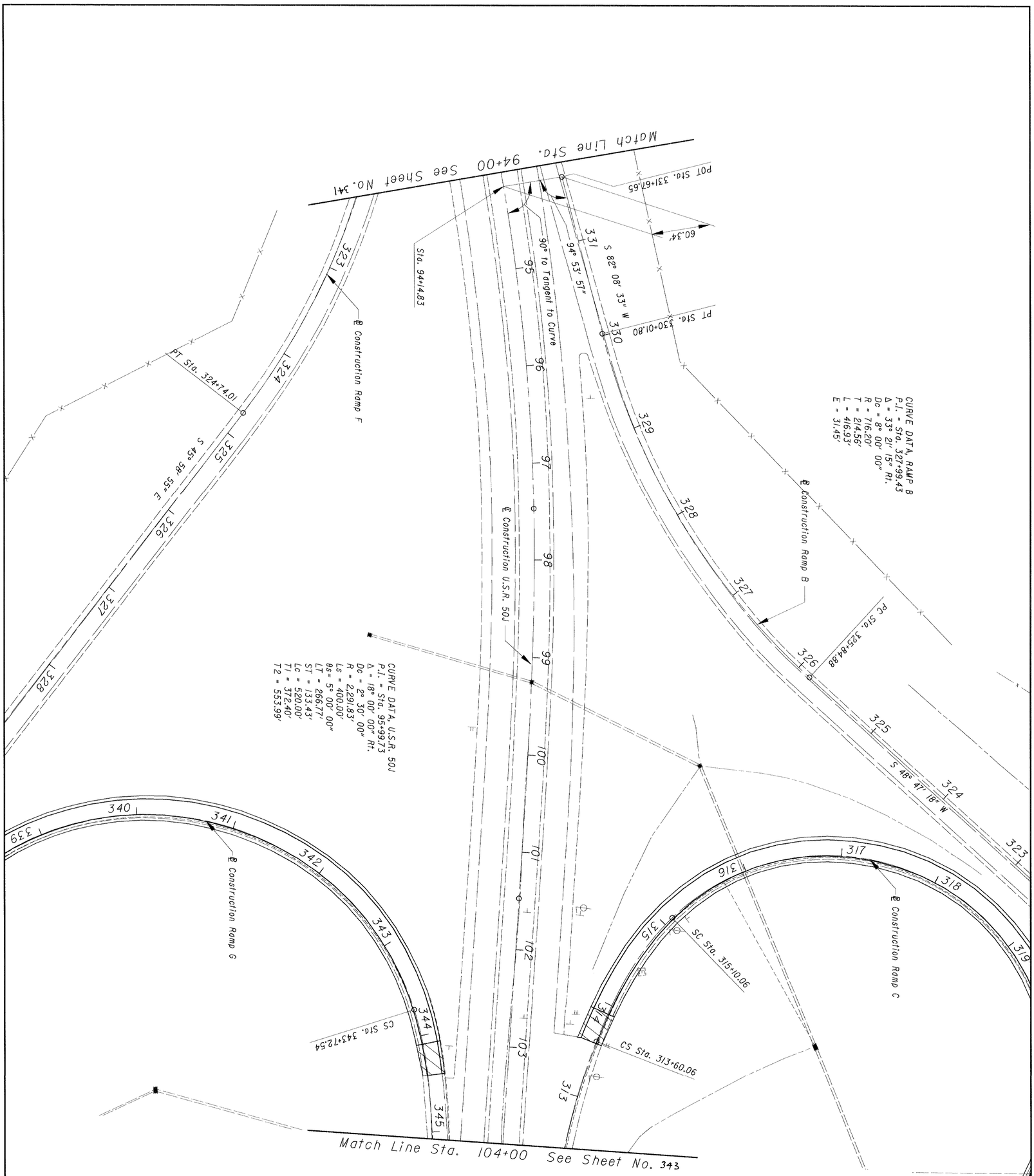

REF NO.	STATION FROM	STATION TO	SIDE												

~~For Quantities see sheet no.~~
For Mainline Plan & Profile see sheet no. 245,247,314,316
For Ramp A see sheet no. 345-347
For Ramp C see sheet no. 348
For Ramp D see sheet no. 349-351
For Ramps D2 and E see sheet no. 350,351
For Ramp G see sheet no. 352

REF NO.	STATION FROM	STATION TO	SIDE	202 GUARDRAIL REMOVED LF	606 GUARDRAIL BARRIER DESIGN TYPE 5 LF	606 BRIDGE TERM. ASSY. TYPE I BARR. DESIGN EACH	606 IMPACT ATTENUATOR TYPE I-98 (BIDIRECTIONAL) EACH	622 CONCRETE BARRIER TYPE A LF	622 CONCRETE BARRIER TYPE A REINFORCED LF
R89	104+93.97	109+69.39	RT	475.69				317.35	50.00
R90	104+93.95	109+69.30	RT	475.58			2		
R91	104+85.94	110+64.18	RT		150.00	2	2		
TOTALS CARRIED TO SUB-SUMMARY				951.27	150.00	2	2	317.35	50.00

HORIZONTAL SCALE IN FEET
0 25 50 100

CALCULATED EF
CHECKED AM

PLAN U.S. 50J
STA. 104+00.00 TO STA. 114+00.00

CLE-275-5.35

343
857

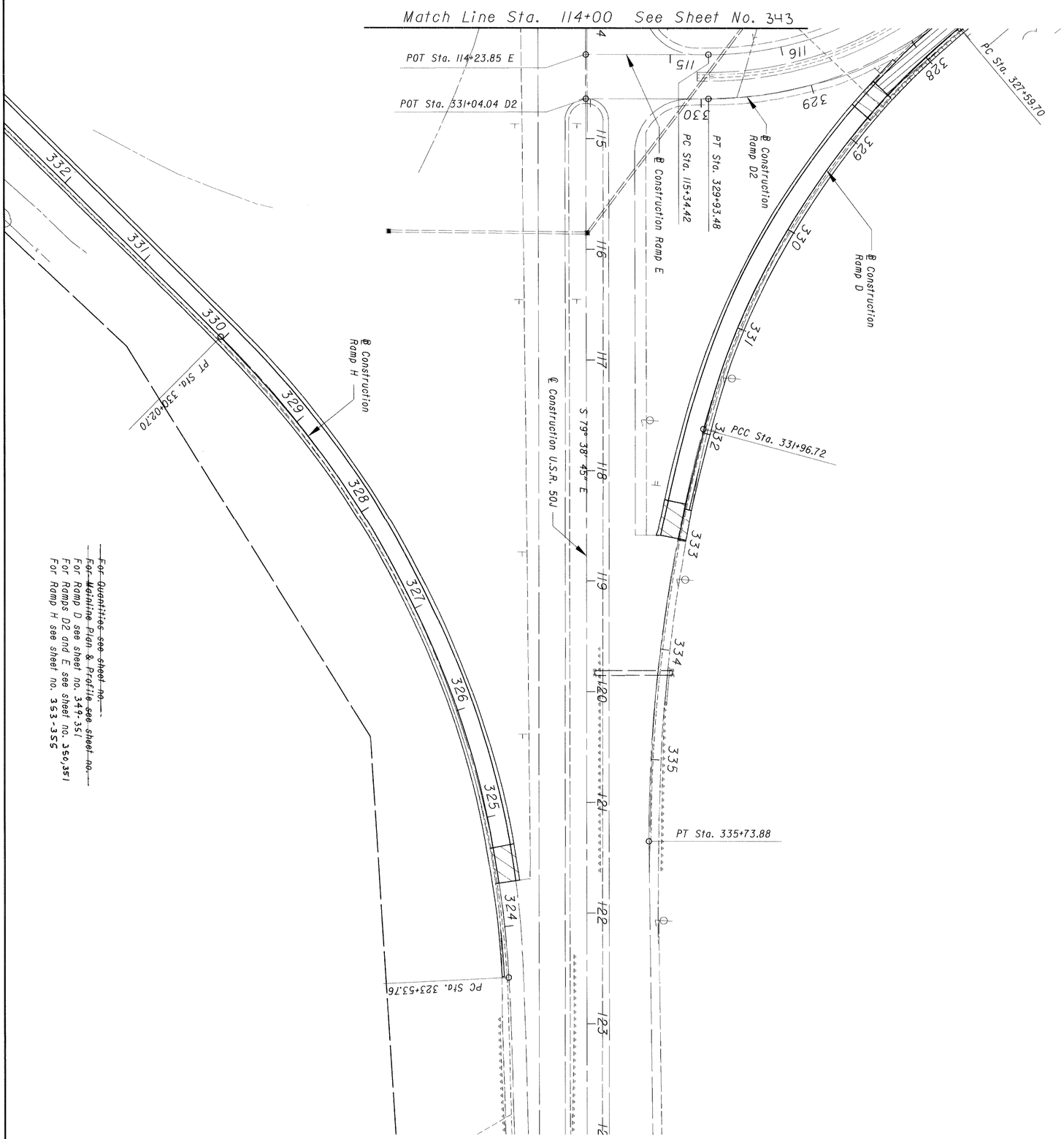

REF NO.	STATION FROM	STATION TO	SIDE											
							NO ROADWAY QUANTITIES THIS SHEET							
TOTALS CARRIED TO SUB-SUMMARY														

344
857

CLE-275-5.35

PLAN U.S. 50J
STA. 114+00.00 TO STA. 124+00.00

CALCULATED EF
CHECKED AM

0 25 50 100
HORIZONTAL SCALE IN FEET

N

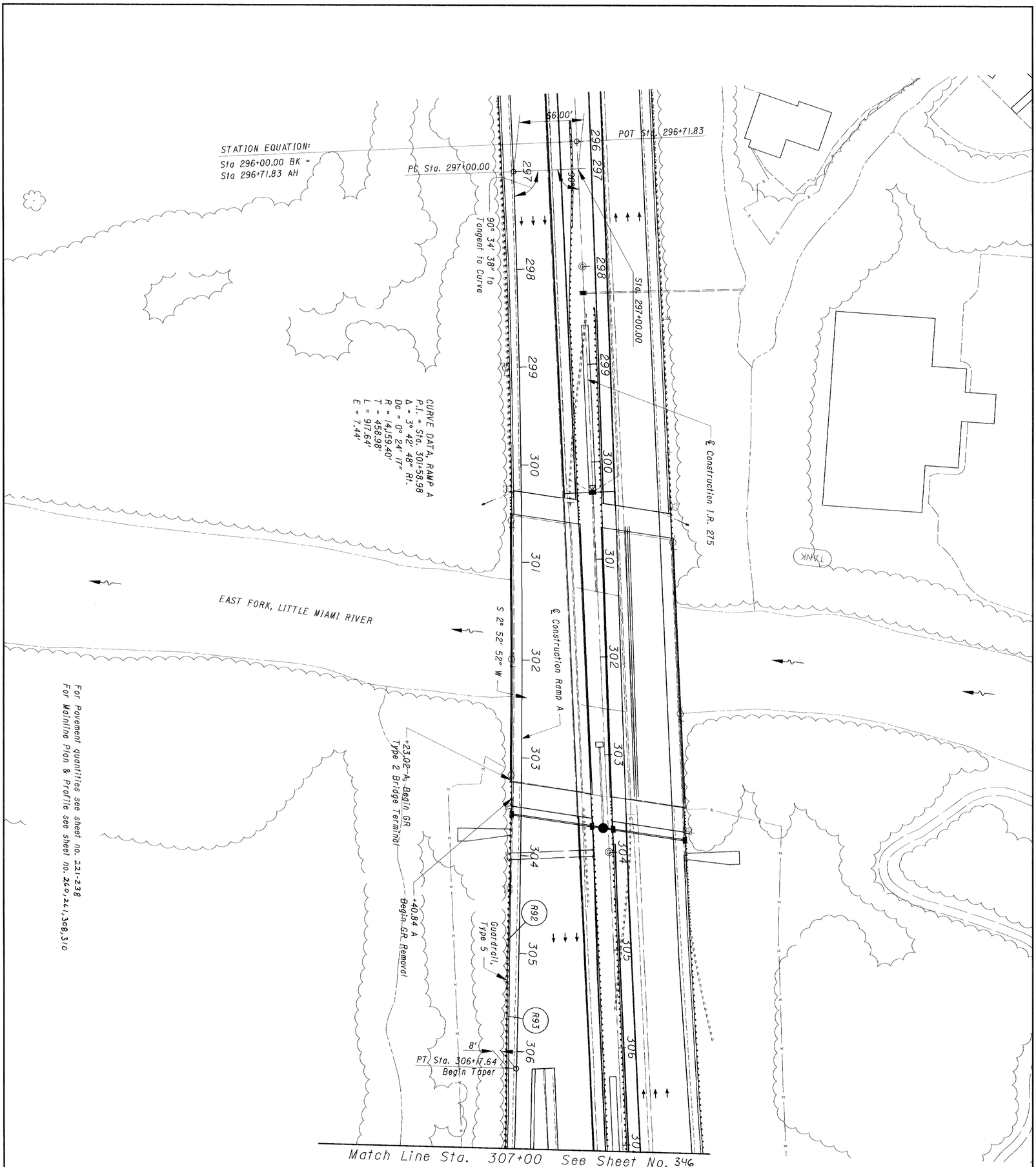

REF NO.	STATION * RAMP B FROM	STATION * RAMP B TO	SIDE	202 GUARDRAIL REMOVED	606 GUARDRAIL TYPE 5	606 ANCHOR ASSEMBLY TYPE T	606 BRIDGE TERMINAL ASSEMBLY TYPE 2								
				LF	LF	EACH	EACH								
R92	303+40.84	316+92.33 *	RT	1349.43											
R93	303+23.02	317+14.53 *	RT		1375.00	1	1								
TOTALS CARRIED TO SUB-SUMMARY				1349.43	1375.00	1	1								

857 345

CLE-275-5.35

PLAN RAMP A
STA. 297+00.00 TO STA. 307+00.00

CALCULATED EF
CHECKED AM

0 50
25 100
HORIZONTAL SCALE IN FEET

N

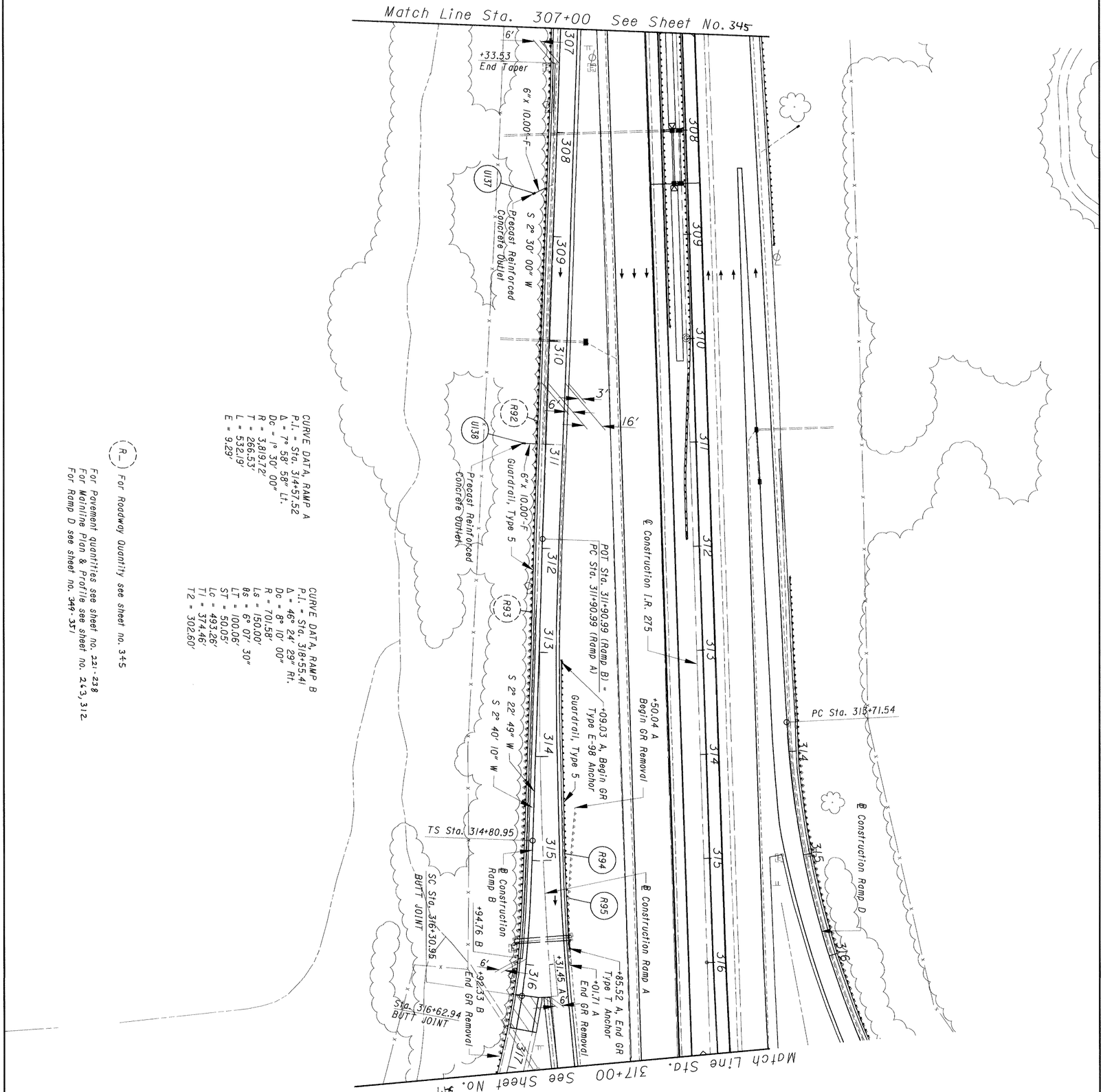

CURVE DATA, RAMP A
P.I. = Sta. 314+57.52
Δ = 7° 58' 58" Lt.
Dc = 1° 30' 00"
R = 3,819.72'
T = 266.53'
L = 532.19'
E = 9.29'

CURVE DATA, RAMP B
P.I. = Sta. 318+55.41
Δ = 46° 24' 29" Rt.
Dc = 8° 10' 00"
R = 701.58'
Ls = 150.00'
θs = 6° 07' 30"
LT = 100.06'
ST = 50.05'
Lc = 493.26'
T1 = 374.46'
T2 = 302.60'

(R_) For Roadway Quantity see sheet no. 345

For Pavement quantities see sheet no. 221-228
For Mainline Plan & Profile see sheet no. 243, 312
For Ramp D see sheet no. 344-351

REF NO.	STATION FROM	STATION TO	SIDE	202 GUARDRAIL REMOVED	606 GUARDRAIL TYPE 5	606 ANCHOR ASSEMBLY TYPE E-98	606 ANCHOR ASSEMBLY TYPE T
				LF	LF	EACH	EACH
R94	313+09.03	315+85.52	RT	0.00	212.50	1	1
R95	314+50.04	316+01.71	RT	151.40			
TOTALS CARRIED TO SUB-SUMMARY				151.40	212.50	1	1

346
857

CLE-275-5.35

PLAN RAMP A
STA 307+00.00 TO STA. 317+00.00

CALCULATED EF
CHECKED AM

0 50
25 100
HORIZONTAL SCALE IN FEET

N

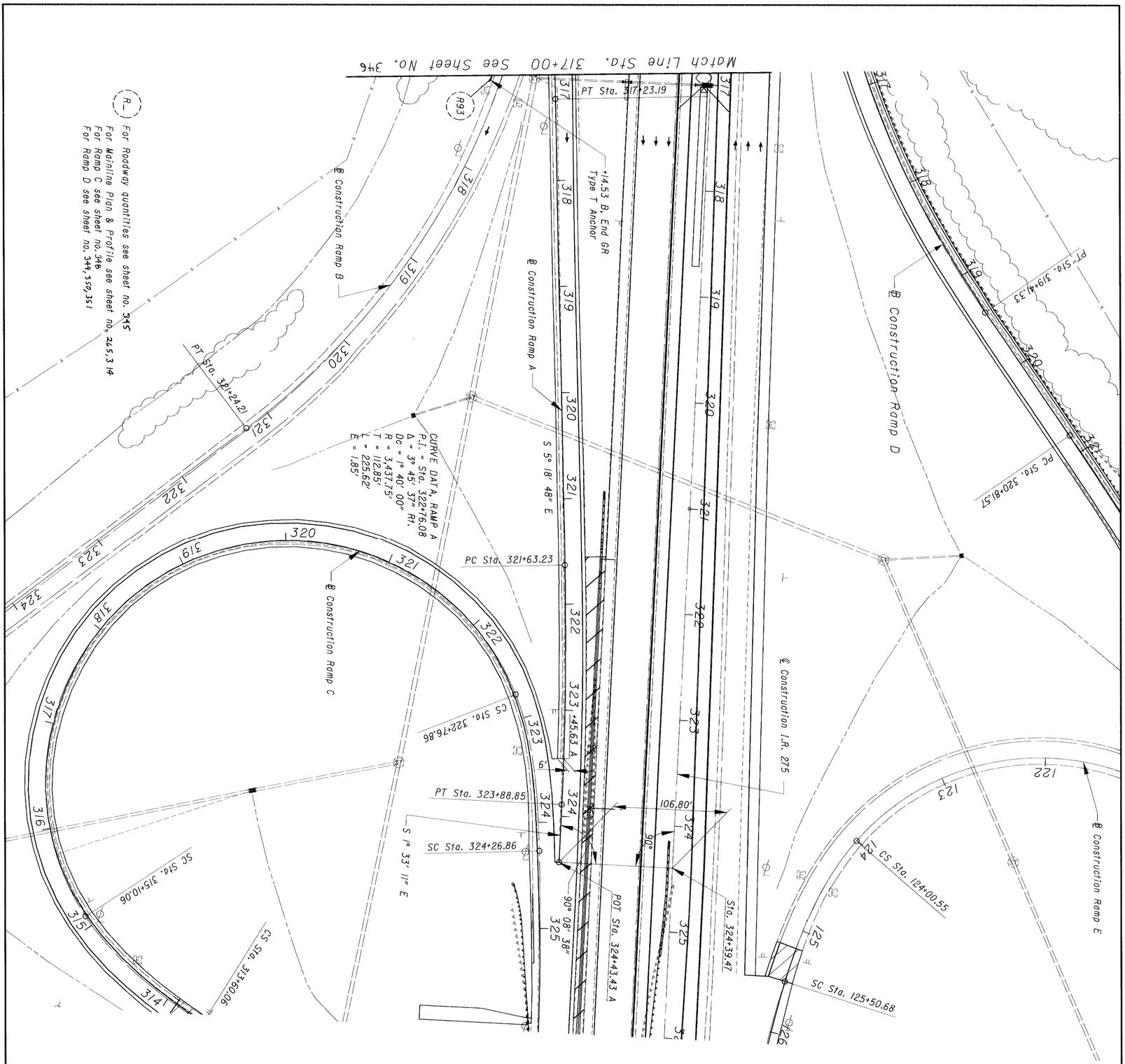

REF NO.	STATION FROM	STATION TO	SIDE											

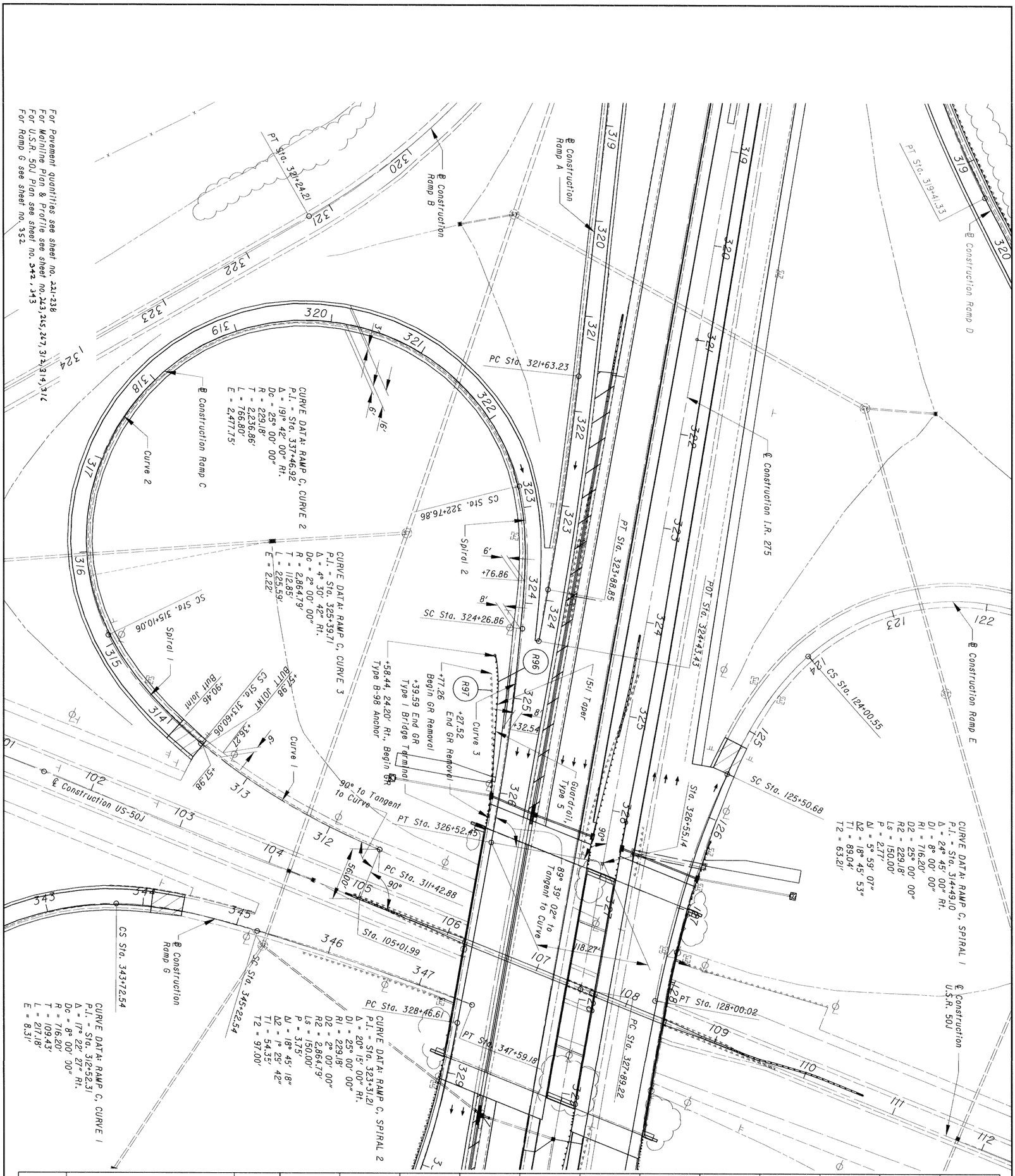

REF NO.	STATION FROM	STATION TO	SIDE	202 GUARDRAIL REMOVED	606 GUARDRAIL TYPE 5	606 ANCHOR ASSEMBLY TYPE B-98	606 BRIDGE TERMINAL ASSEMBLY TYPE I
				LF	LF	EACH	EACH
R96	324+58.44	326+39.59	RT		143.75	1	
R97	324+77.26	326+27.52	RT	150.86			1
TOTALS CARRIED TO SUB-SUMMARY				150.86	143.75	1	1

348
857

CLE-275-5.35

PLAN RAMP C
STA. 311+42.883 TO STA. 326+49.697

CALCULATED EF
CHECKED AM

0 25 50 100
HORIZONTAL SCALE IN FEET

N

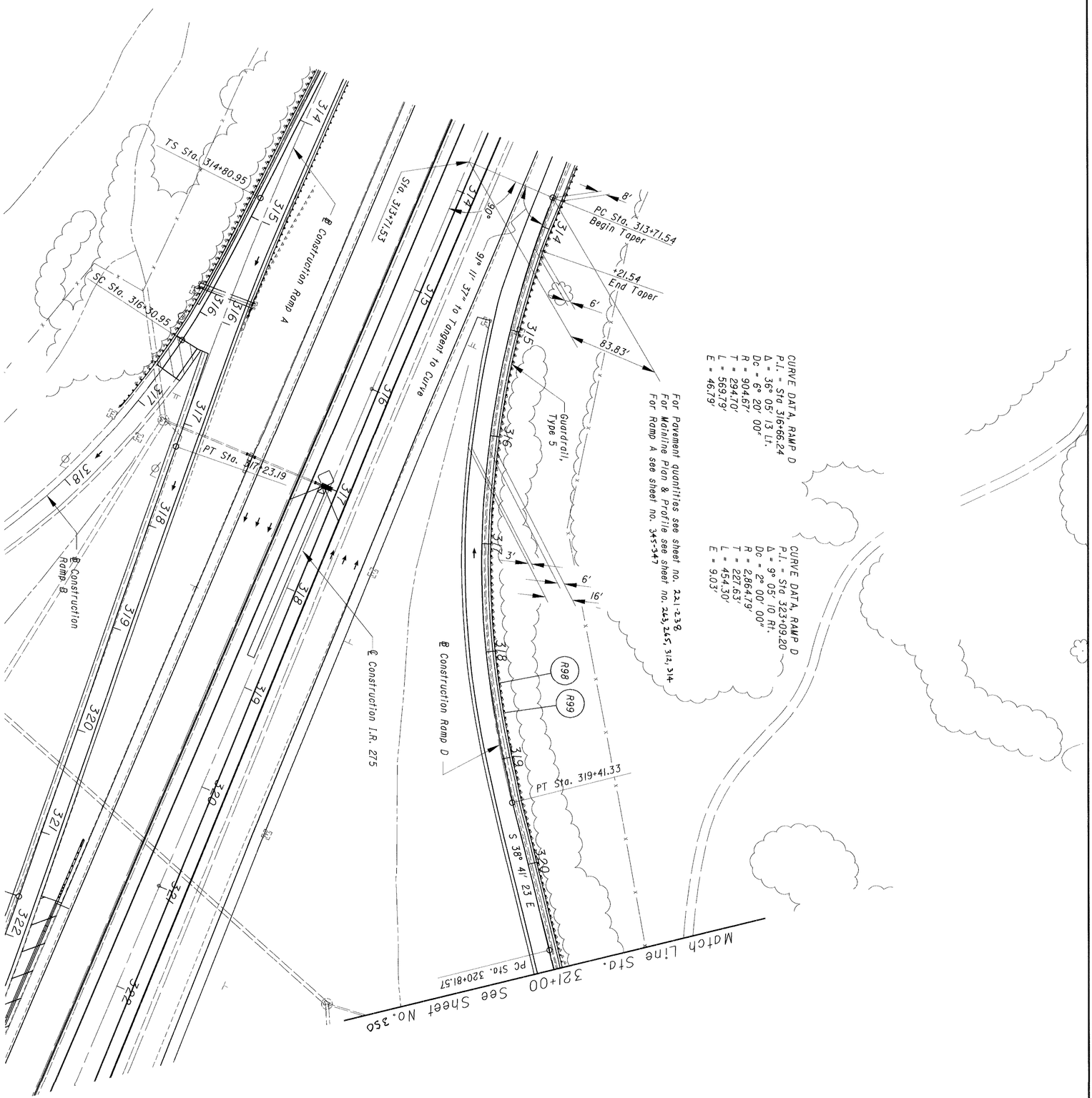

REF NO.	STATION		SIDE	202	606	606	606								
				GUARDRAIL REMOVED	GUARDRAIL TYPE 5	ANCHOR ASSEMBLY TYPE E-98	ANCHOR ASSEMBLY TYPE T								
	FROM	TO		LF	LF	EACH	EACH								
R98	312+33.01	323+00.23	RT		1000.00	1	1								
R99	312+49.87	321+92.97	RT	939.68											
TOTALS CARRIED TO SUB-SUMMARY				939.68	1000.00	1	1								

349
857

CLE-275-5.35

PLAN RAMP D
STA. 313+71.54 TO STA. 321+00.00

CALCULATED EF
CHECKED AM

0 25 50 100
HORIZONTAL SCALE IN FEET

N

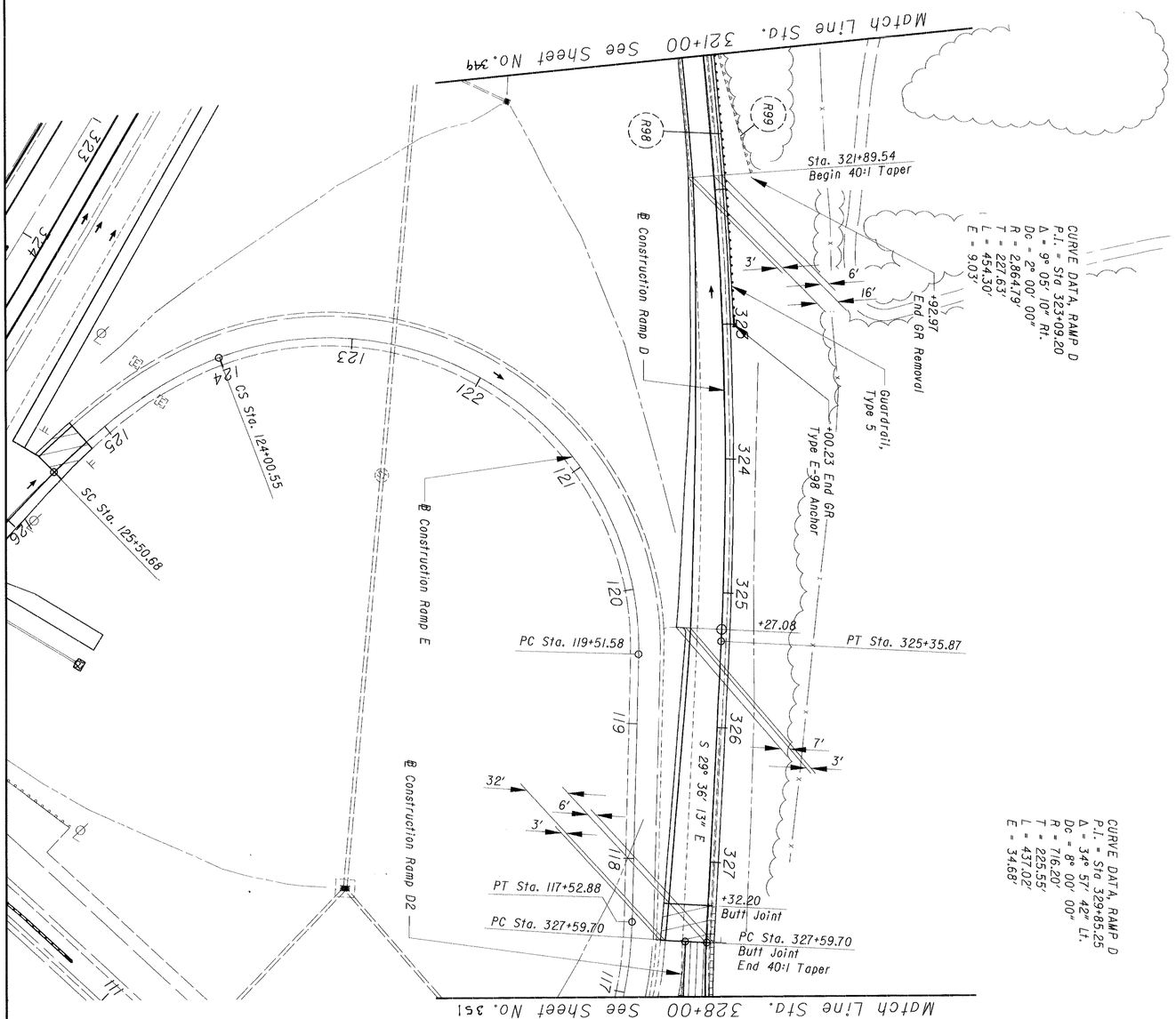

For Pavement quantities see sheet no. 221-238

(R_) For Roadway quantity see sheet no. 349

REF NO.	STATION FROM	STATION TO	SIDE											

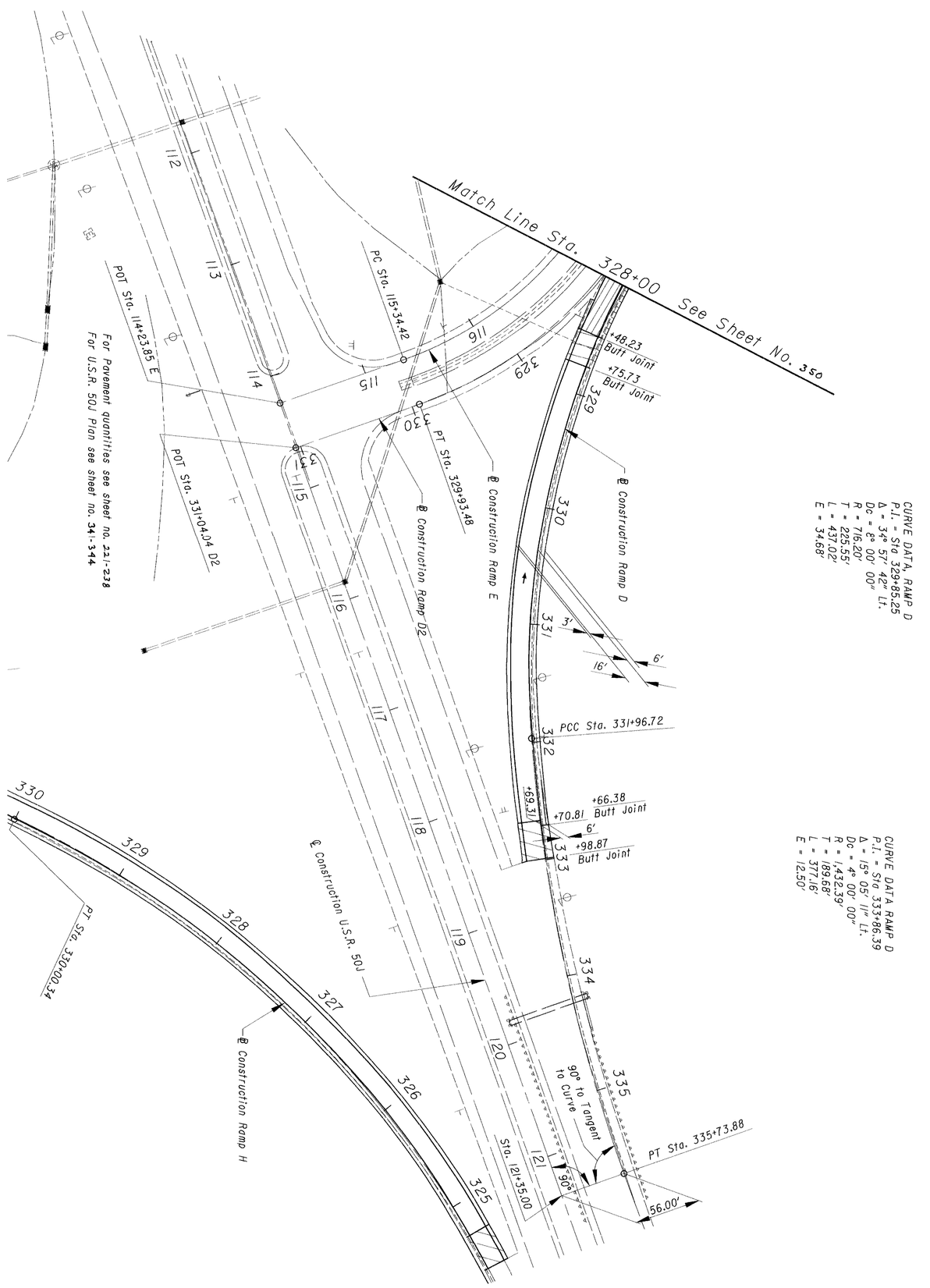

REF NO.	STATION FROM	STATION TO	SIDE											

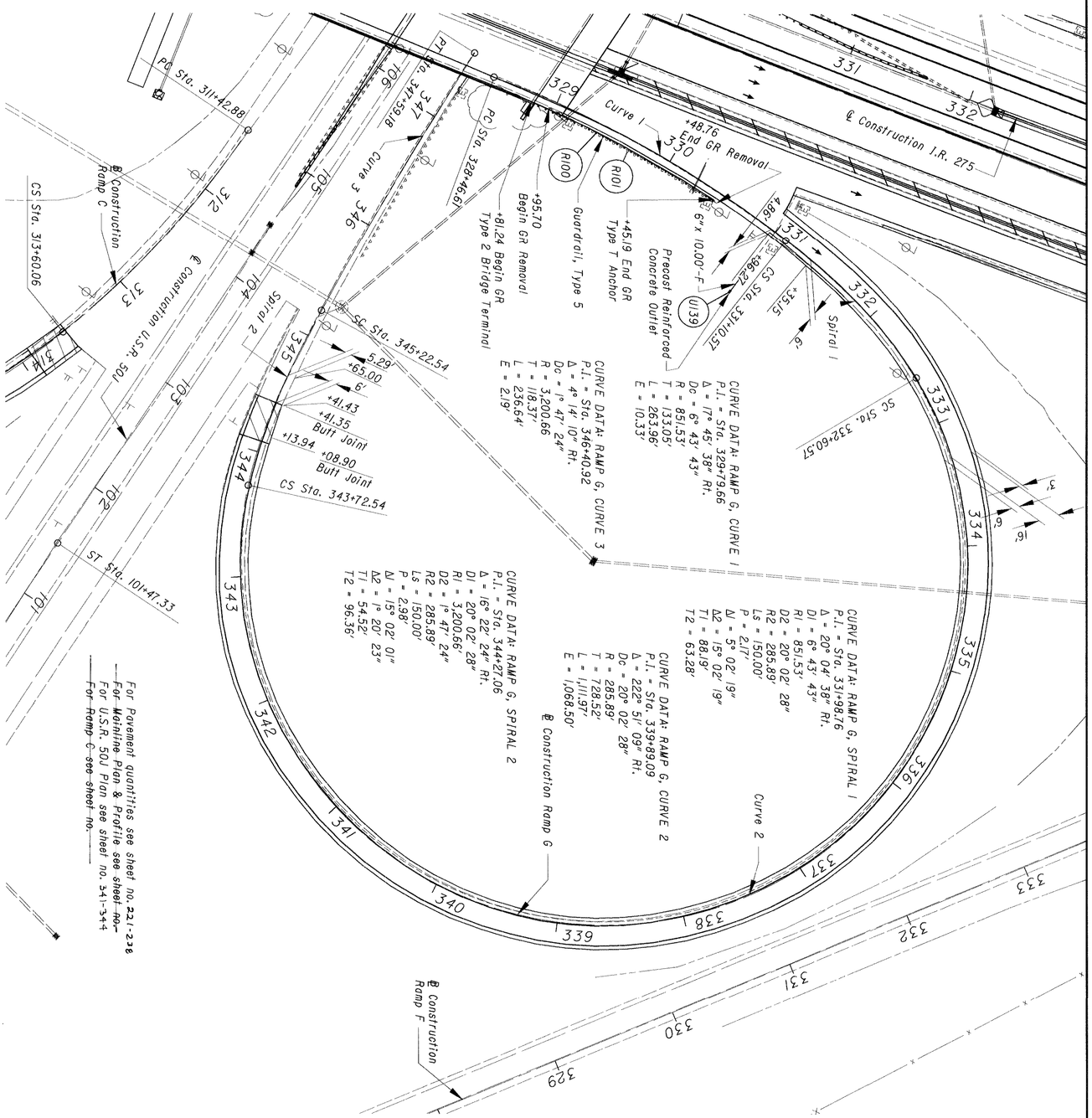

REF NO.	STATION FROM	STATION TO	SIDE	202 GUARDRAIL REMOVED	606 GUARDRAIL TYPE 5	606 ANCHOR ASSEMBLY TYPE T	606 BRIDGE TERMINAL ASSEMBLY TYPE 2								
				LF	LF	EACH	EACH								
R100	328+81.24	330+45.19	RT		150.00	1	1								
R101	328+95.70	330+48.76	RT	151.67											
TOTALS CARRIED TO SUB-SUMMARY				151.67	150.00	1	1								

352 857	CLE-275-5.35	PLAN RAMP G STA. 328+49.11 TO STA. 345+17.62	CALCULATED EF CHECKED AM	0 50 25 100 HORIZONTAL SCALE IN FEET	N

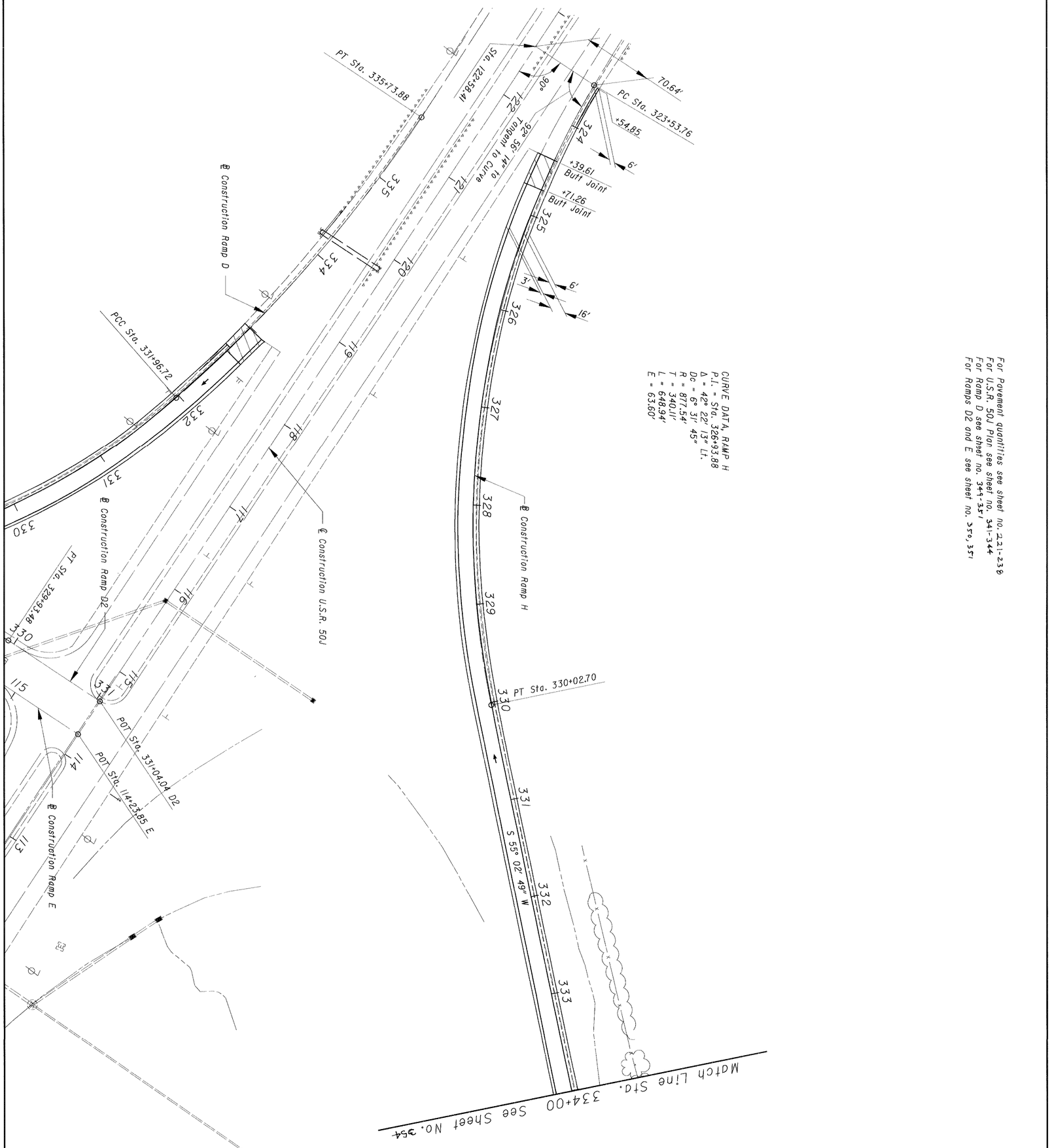

REF NO.	STATION FROM	STATION TO	SIDE												

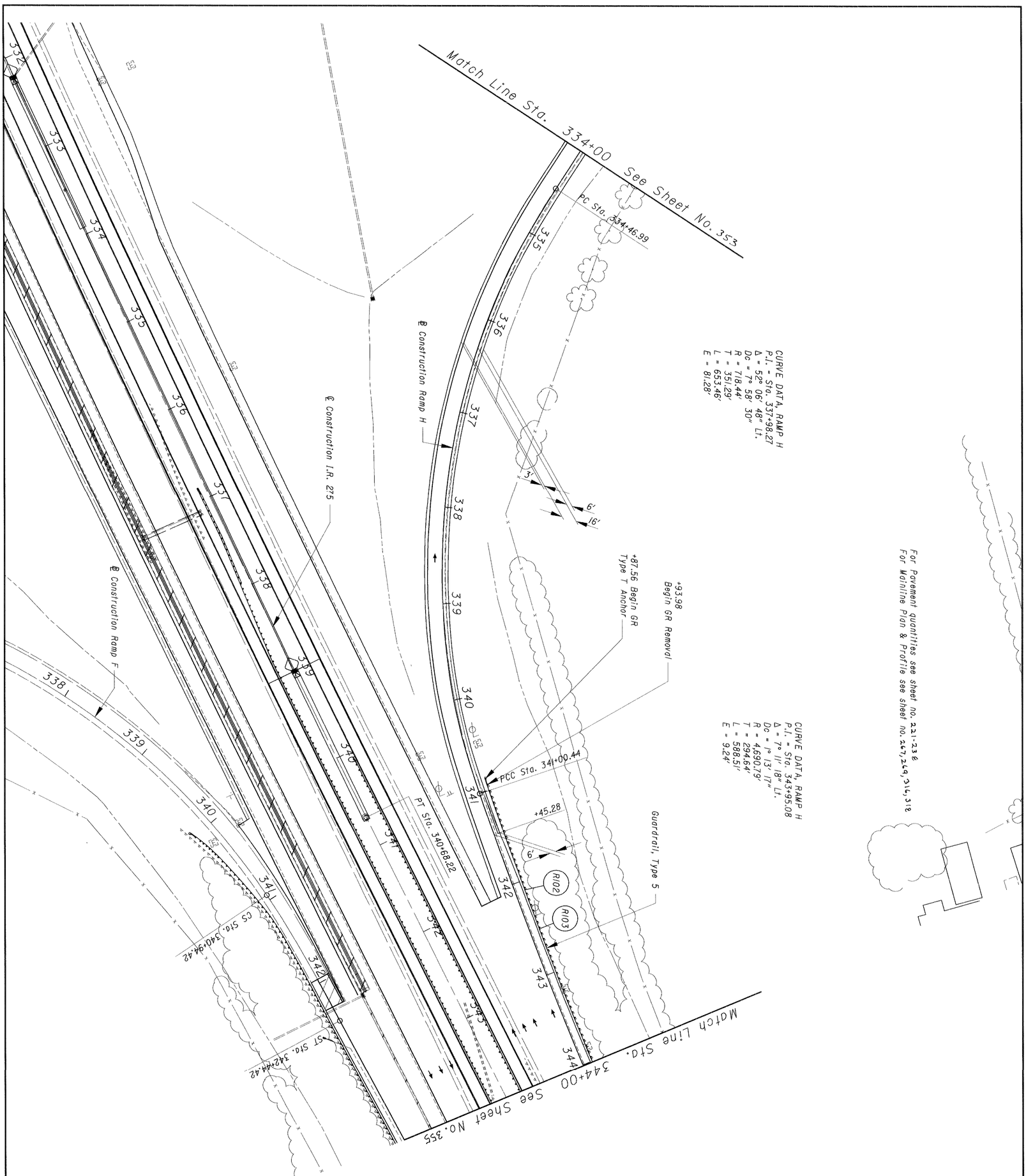

REF NO.	STATION FROM	STATION TO	SIDE	202 GUARDRAIL REMOVED	606 GUARDRAIL TYPE 5	606 ANCHOR ASSEMBLY TYPE T	606 BRIDGE TERMINAL ASSEMBLY TYPE 2
				LF	LF	EACH	EACH
R102	340+87.56	346+39.71	LT		537.50	1	1
R103	340+93.98	346+21.59	LT	526.36			
TOTALS CARRIED TO SUB-SUMMARY				526.36	537.50	1	1

354/857

CLE-275-5.35

PLAN RAMP H
STA. 334+00.00 TO STA. 344+00.00

CALCULATED EF
CHECKED AM

0 25 50 100
HORIZONTAL SCALE IN FEET

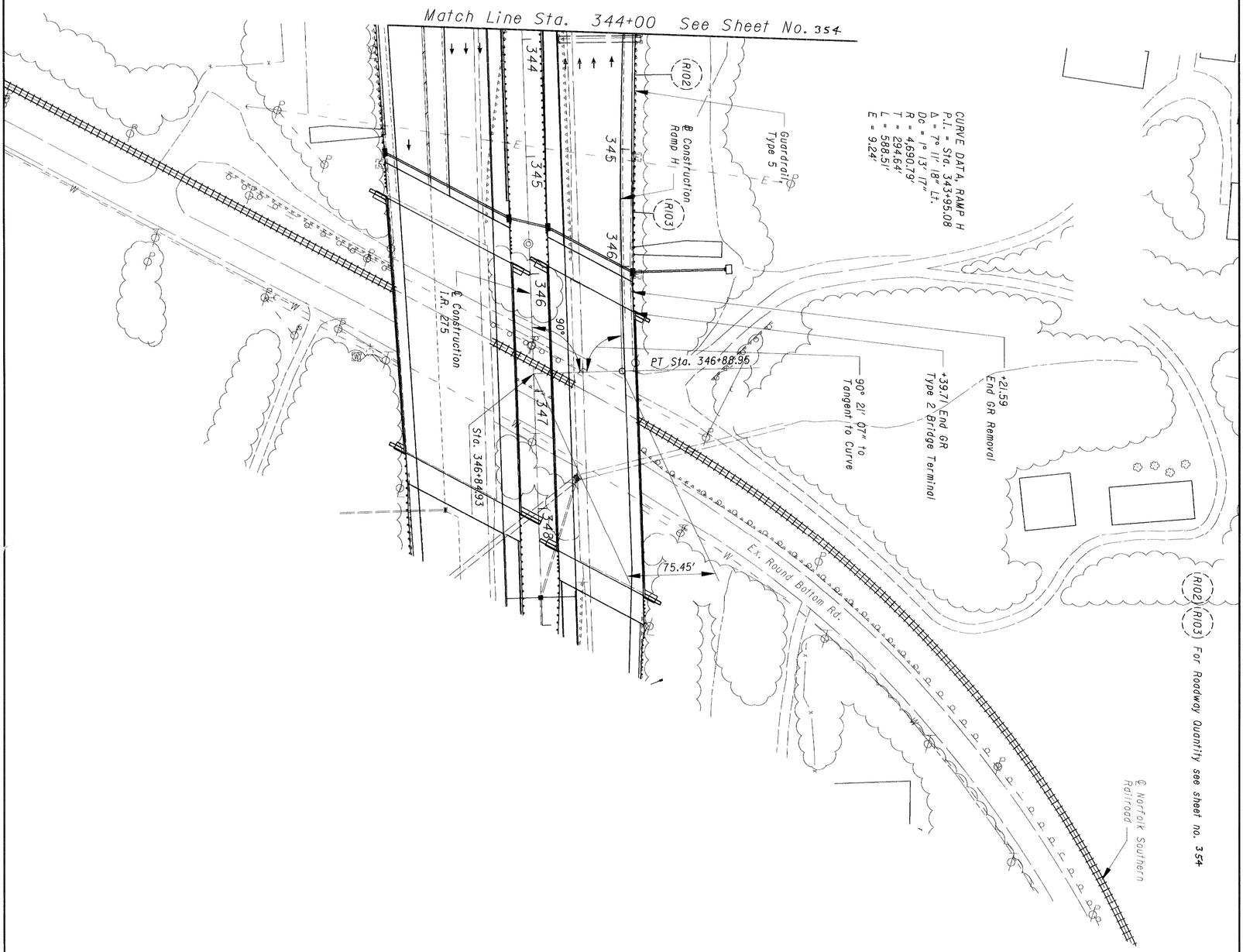

REF NO.	STATION FROM	STATION TO	SIDE											

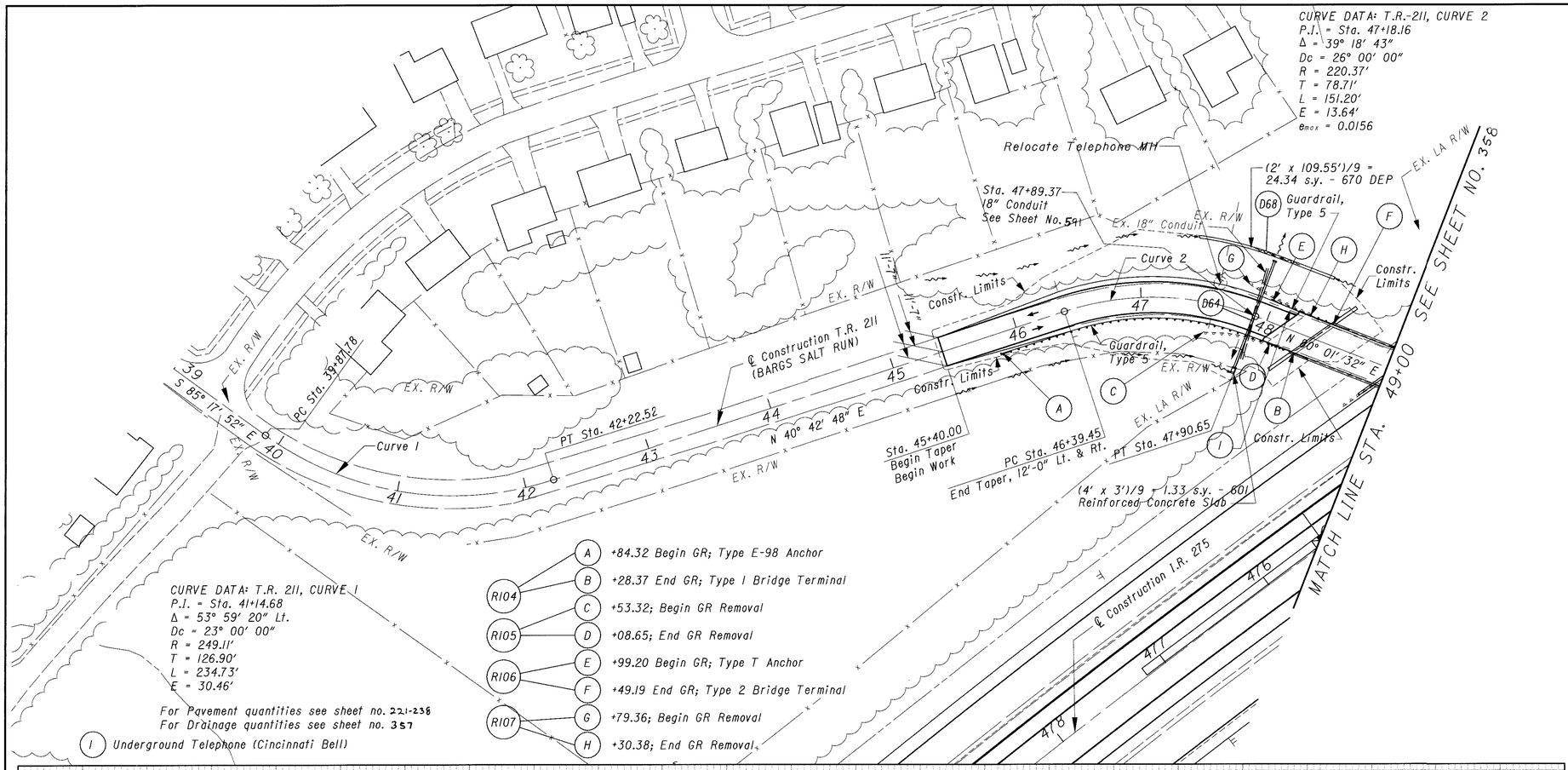

REF NO.	STATION FROM	STATION TO	SIDE	202 GUARDRAIL REMOVED LF	606 GUARDRAIL TYPE 5 LF	606 ANCHOR ASSEMBLY TYPE E-98 EACH	606 ANCHOR ASSEMBLY TYPE T EACH	606 BRIDGE TERMINAL TYPE 1 EACH	606 BRIDGE TERMINAL TYPE 2 EACH
RI04	45+84.32	48+28.37	RT		181.25	1			
RI05	47+53.32	48+08.65	RT	52.54					
RI06	47+99.20	48+49.19	LT		37.50		1		
RI07	47+79.36	48+30.38	LT	52.53					
TOTALS CARRIED TO SUB-SUMMARY				105.07	218.75	1	1	1	1

HORIZONTAL SCALE IN FEET
0 25 50 100

CALCULATED EF
CHECKED AM

PLAN AND PROFILE T.R. 211 (BARGS SALT RUN) STA. 39+87.78 TO STA. 49+00.00

CLE-275-5.35

356
857

REF NO.	STATION TO STATION	SIDE		601		602		603		670												
				REINFORCED CONCRETE SLAB		CONCRETE MASONRY		18" CONDUIT, TYPE A 706.01 OR 706.08		DITCH EROSION PROTECTION												
	* NATIONAL HIGHWAY FUNDS			SQ. YD.		CU. YD.		LIN. FT.		SQ. YD.												
D64	STA 47+89.37	LT/RT		1.33		0.83		88.89														
D68	STA 47+39.00 TO STA 48+37.00	LT								24.34												
TOTALS CARRIED TO SUB-SUMMARY				1.33		0.83		88.89		24.34												

CALCULATED AM
CHECKED MT

ESTIMATED DRAINAGE QUANTITIES

CLE-275-5.35

357
857

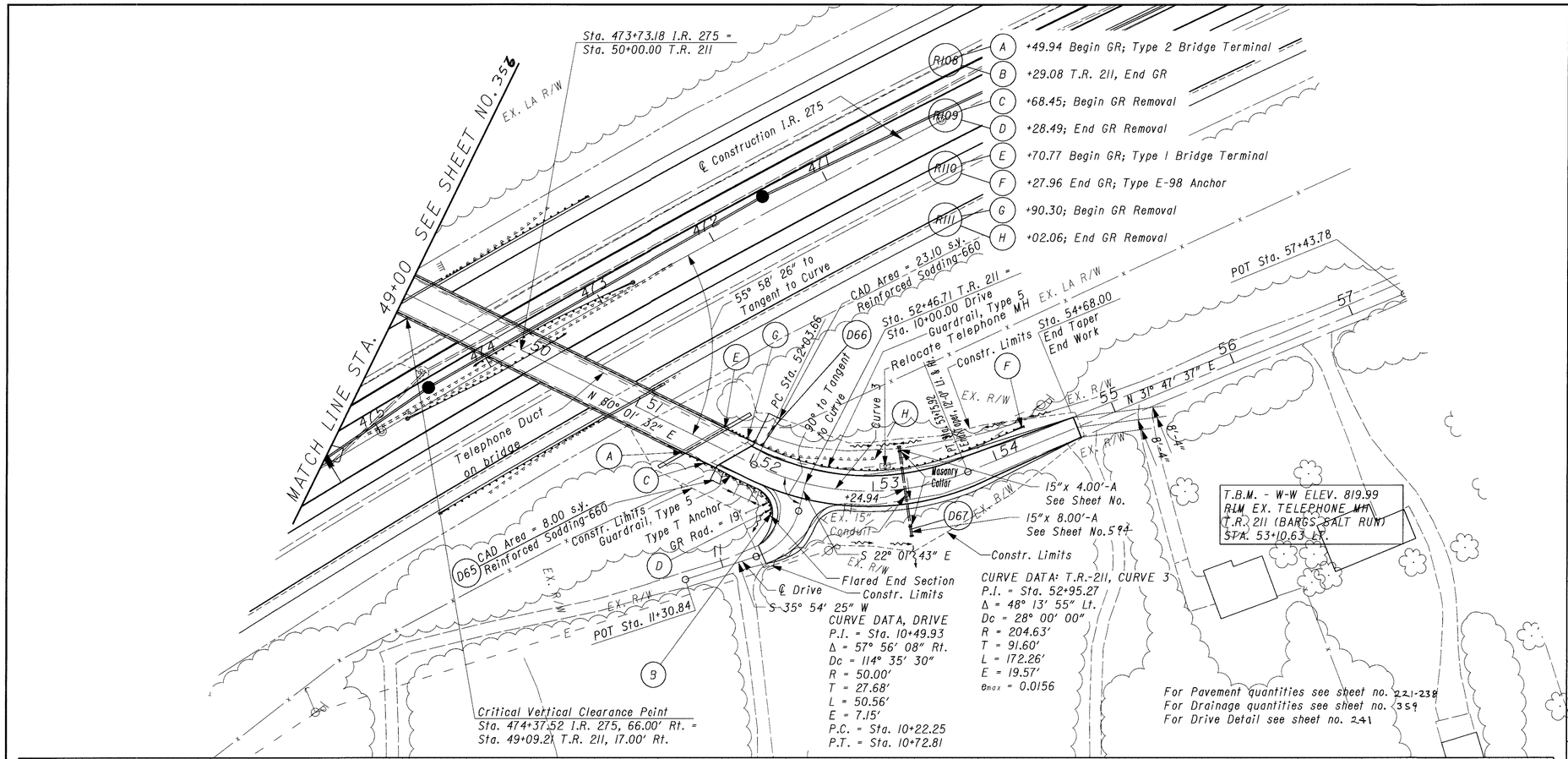

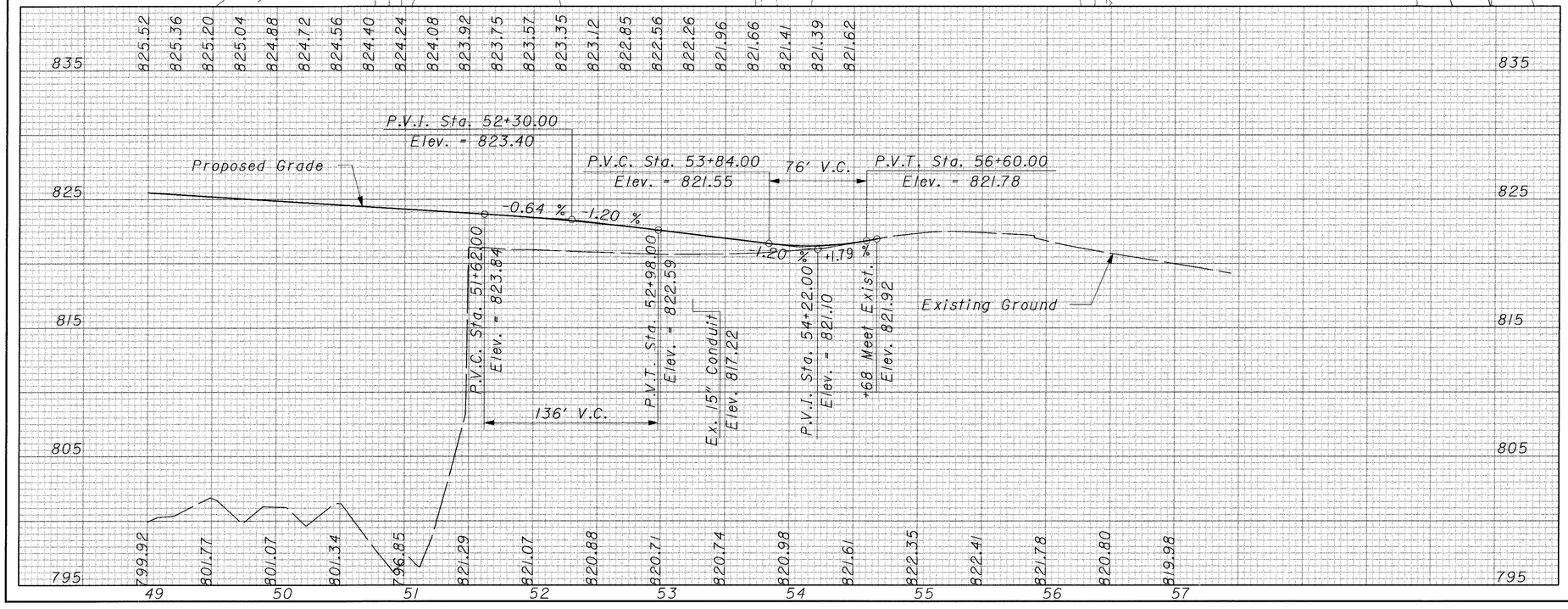

REF NO.	STATION FROM	STATION TO	SIDE	202 GUARDRAIL REMOVED LF	606 GUARDRAIL TYPE 5 LF	606 FLARED END SECTION EACH	606 ANCHOR ASSEMBLY TYPE E-98 EACH	606 ANCHOR ASSEMBLY TYPE T EACH	606 BRIDGE TERMINAL ASSEMBLY TYPE 1 EACH	606 BRIDGE TERMINAL ASSEMBLY TYPE 2 EACH
R108	51+49.94	52+29.08	RT		75.00	1		1		1
R109	51+68.45	52+28.49	RT	65.14					1	
R110	51+70.77	54+27.96	LT		193.75	1	1			
R111	51+90.30	53+02.06	LT	102.40						
TOTALS CARRIED TO SUB-SUMMARY				167.54	268.75	1	1	1	1	1

CALCULATED EF
CHECKED AM

0 25 50 100 HORIZONTAL SCALE IN FEET

PLAN AND PROFILE T.R. 211 (BARGS SALT RUN) STA. 49+00.00 TO STA. 57+44.00

CLE-275-5.35

358
857

REF NO.	STATION TO STATION	SIDE		602		603		660													
				CONCRETE MASONRY		15" CONDUIT, TYPE A 706.01 OR 706.08		REINFORCED SODDING													
	* NATIONAL HIGHWAY FUNDS			CU. YD.		LIN. FT.		SQ. YD.													
D65	STA 51+81.61	RT						8.00													
D66	STA 51+99.74	LT						23.10													
D67	STA 53+24.94	LT/RT		0.58		12.00															
TOTALS CARRIED TO SUB-SUMMARY				0.58		12.00		31.10													

CALCULATED AM
CHECKED MT

ESTIMATED DRAINAGE QUANTITIES

CLE-275-5.35

359
857

CALCULATED EF
CHECKED AM

STORM SEWER PROFILE

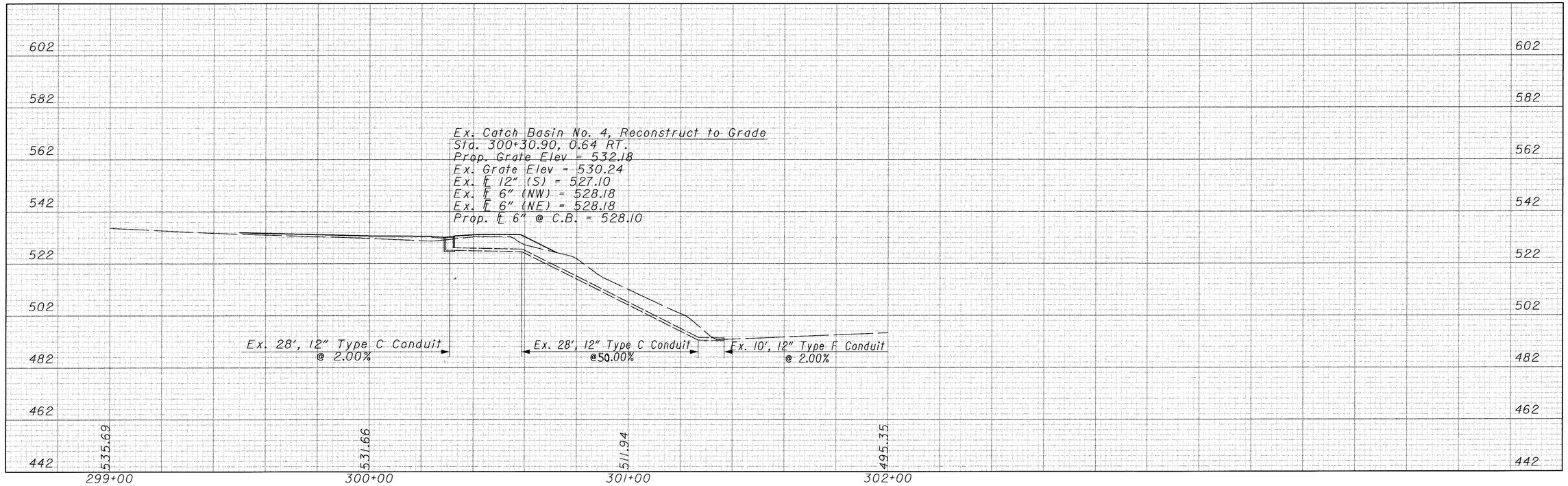

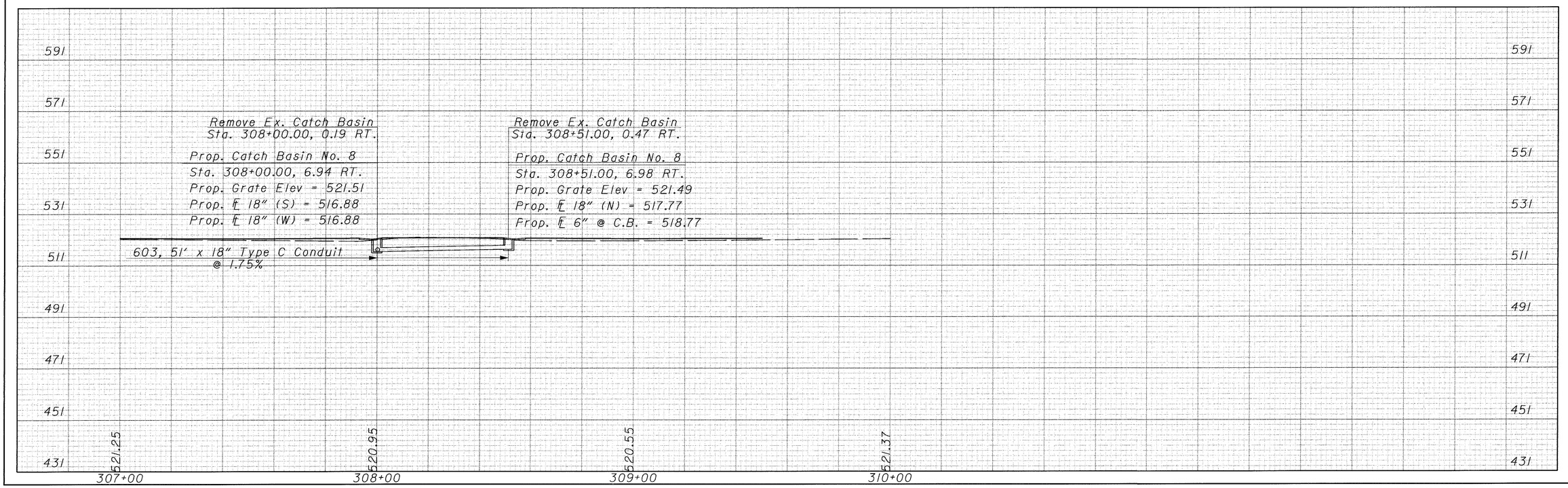

CLE-275-5.35

360
857

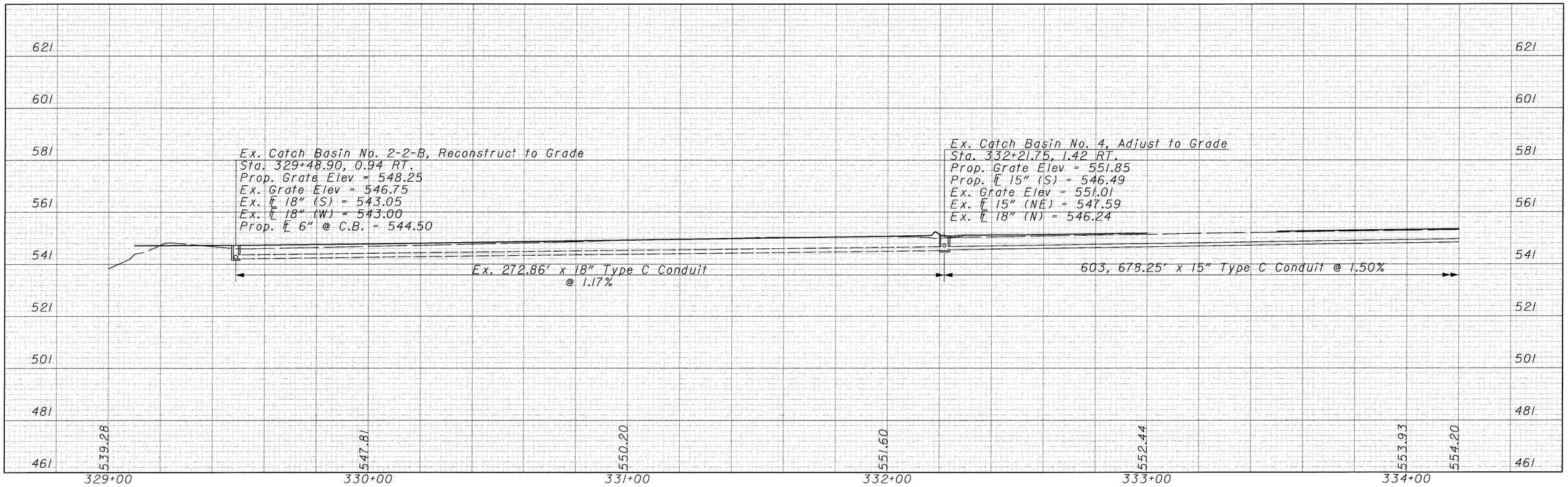

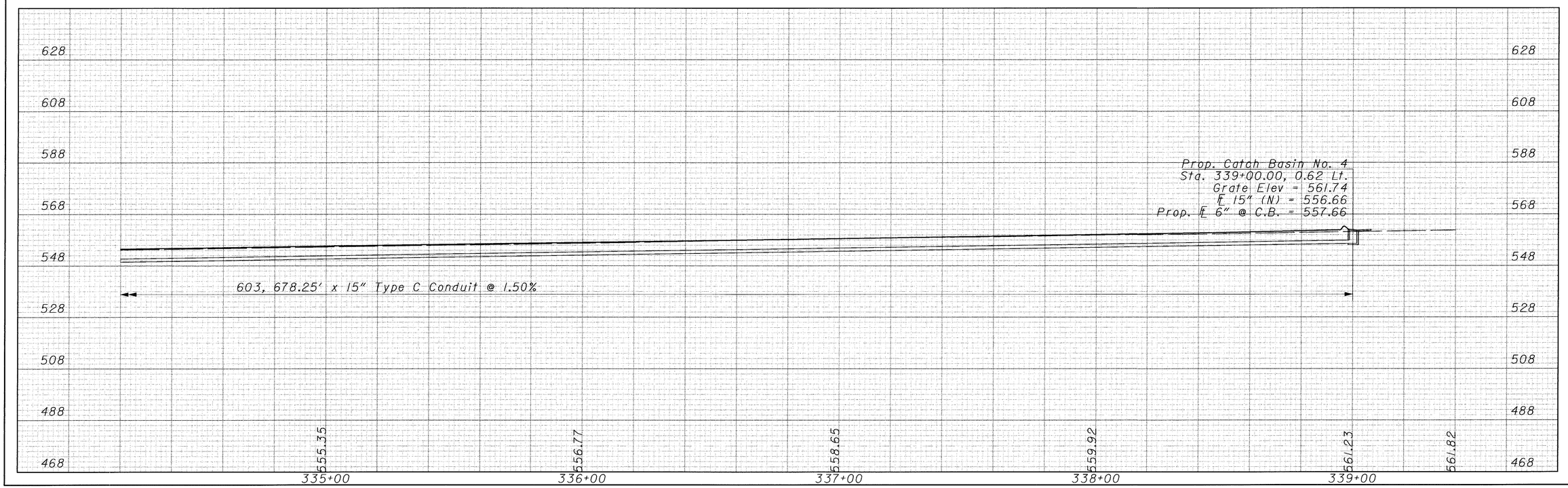

CALCULATED EF
CHECKED AM

STORM SEWER PROFILE

CLE-275-5.35

361
85

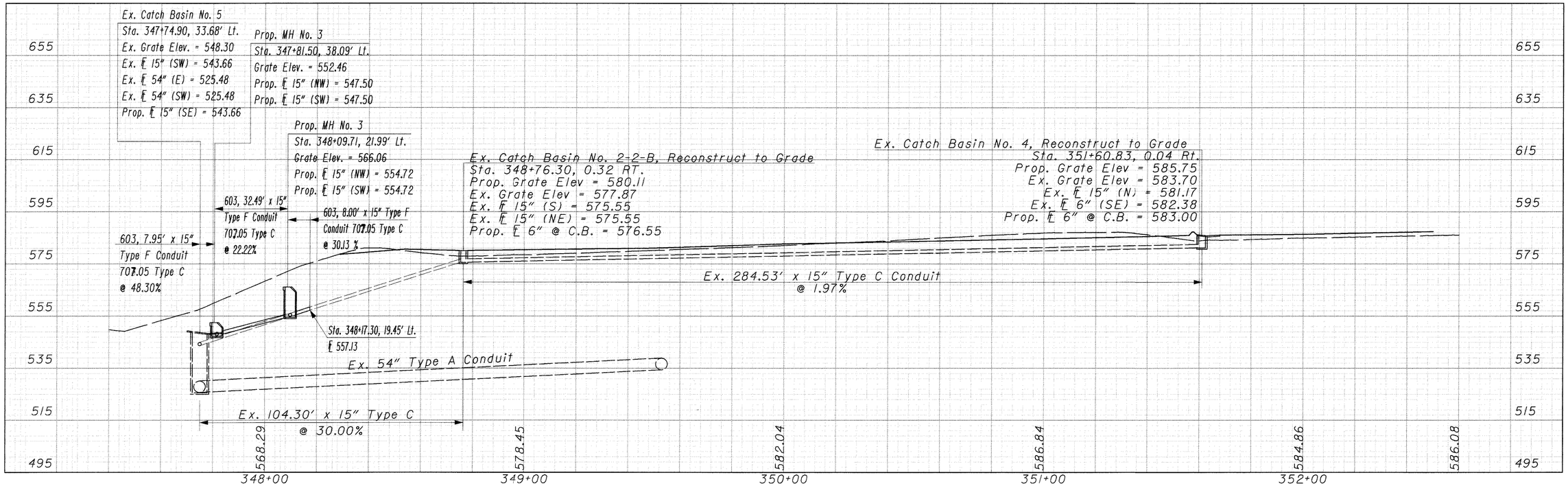

GRID NOT USED

CALCULATED EF CHECKED AM

STORM SEWER PROFILE

CLE-275-5.35

362
857

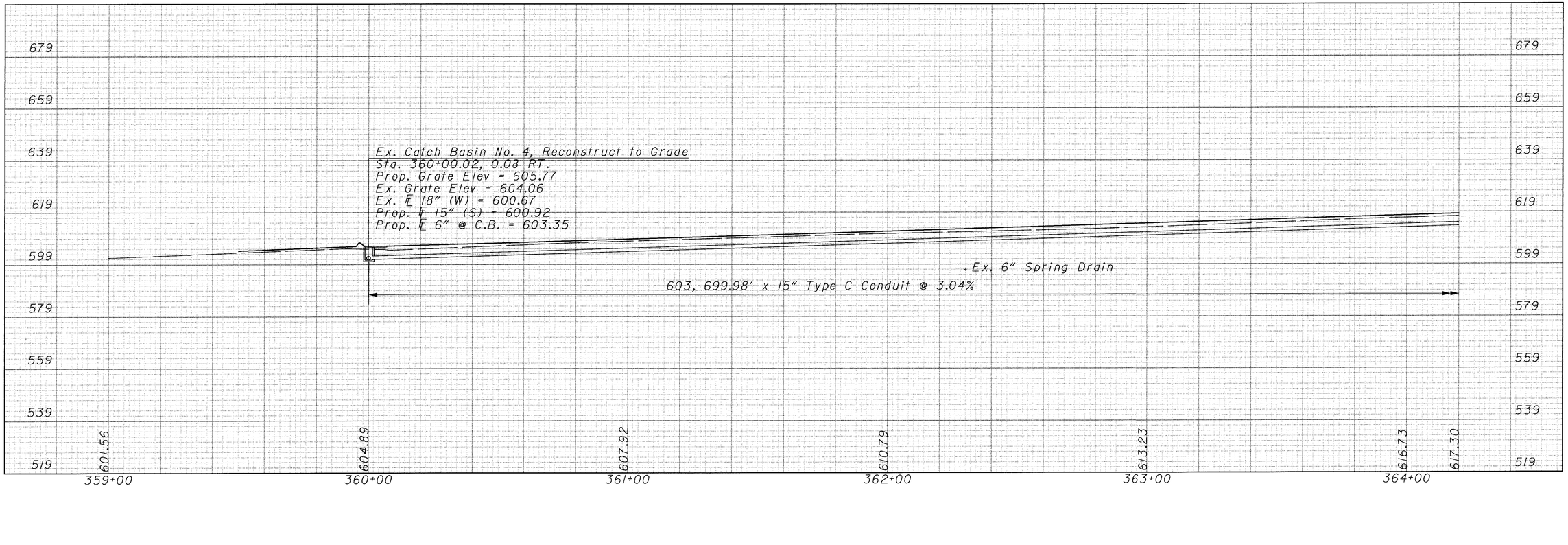

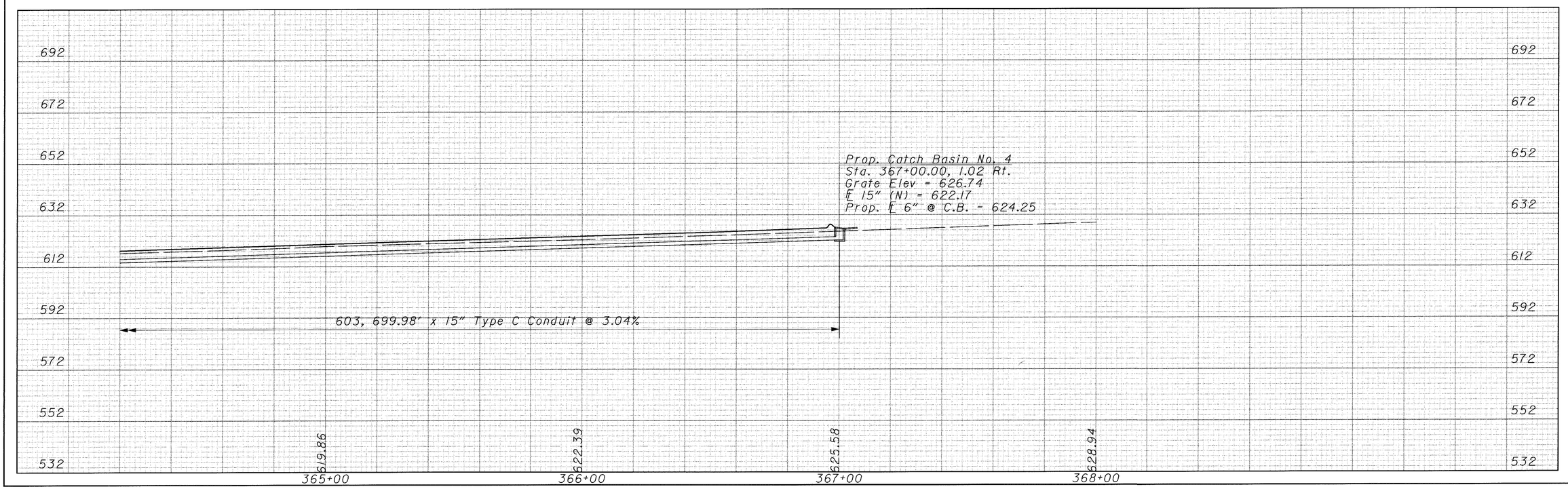

CALCULATED EF
CHECKED AM

STORM SEWER PROFILE

CLE-275-5.35

363
85

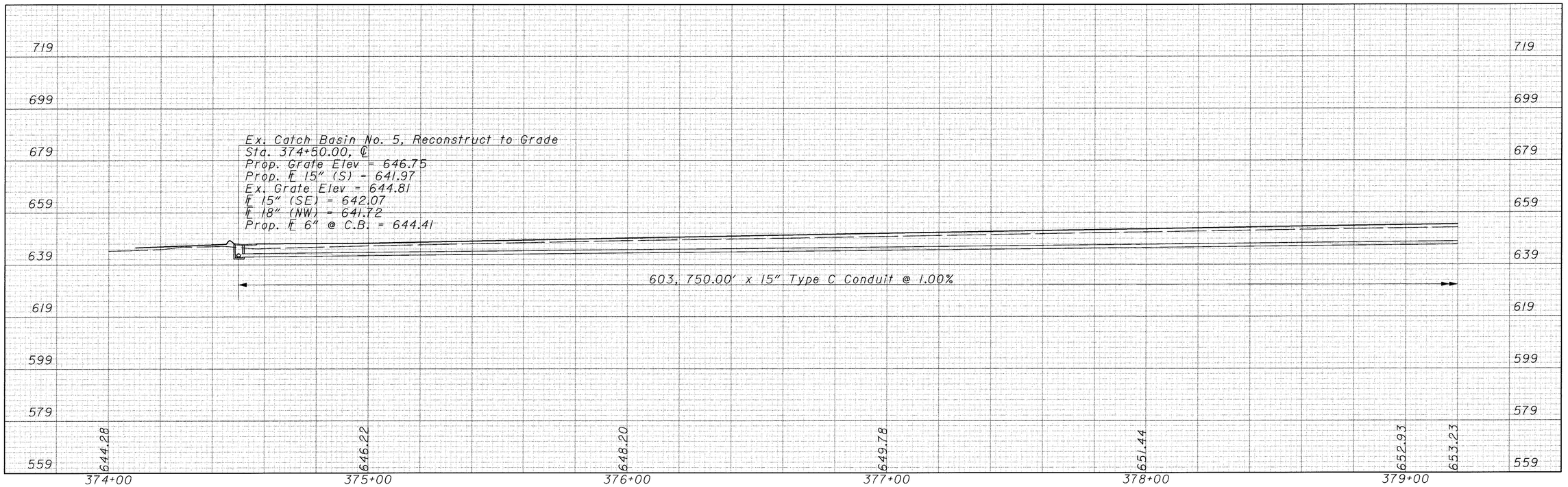

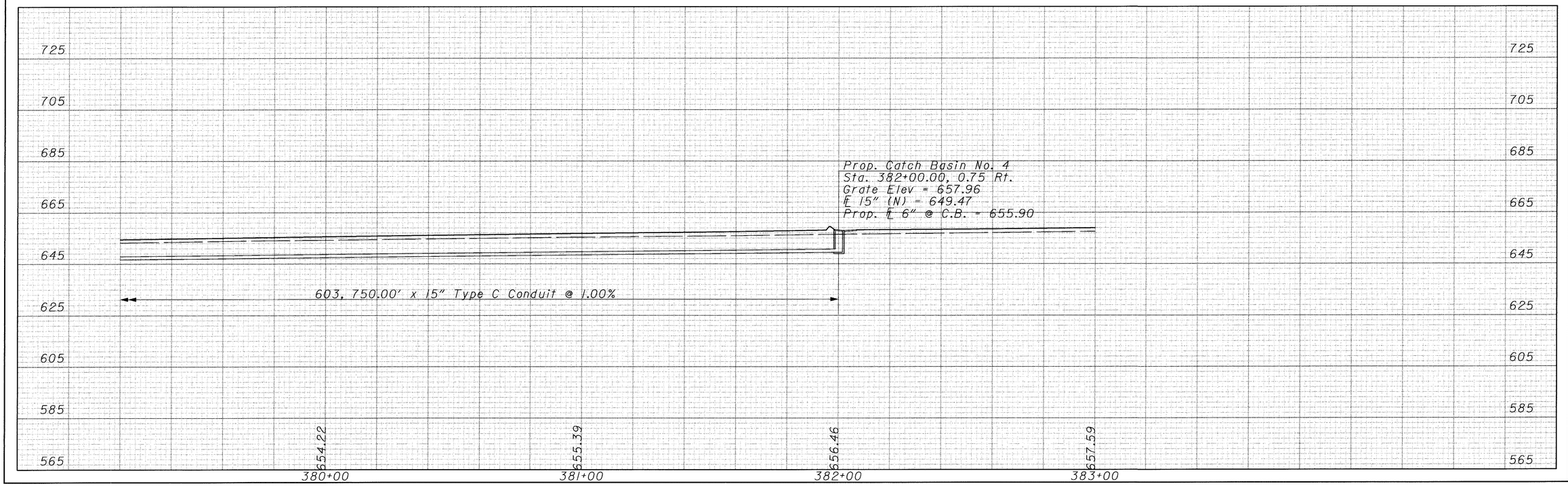

CALCULATED EF
CHECKED AM

STORM SEWER PROFILE

CLE-275-5.35

364
857

CALCULATED EF
CHECKED AM

STORM SEWER PROFILE

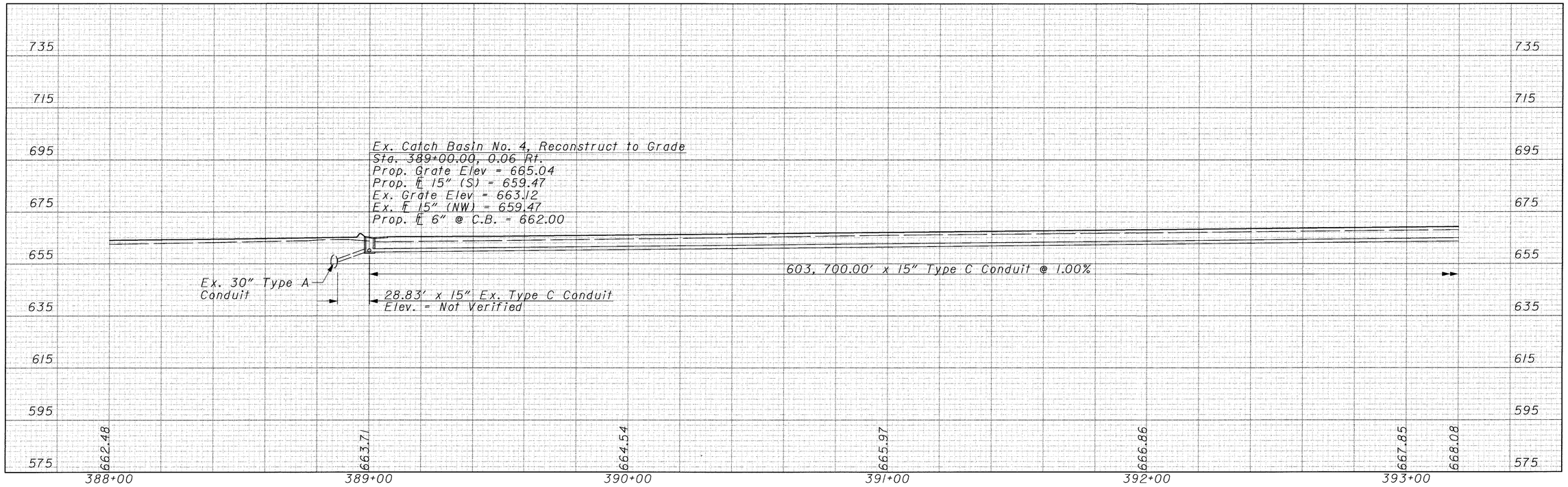

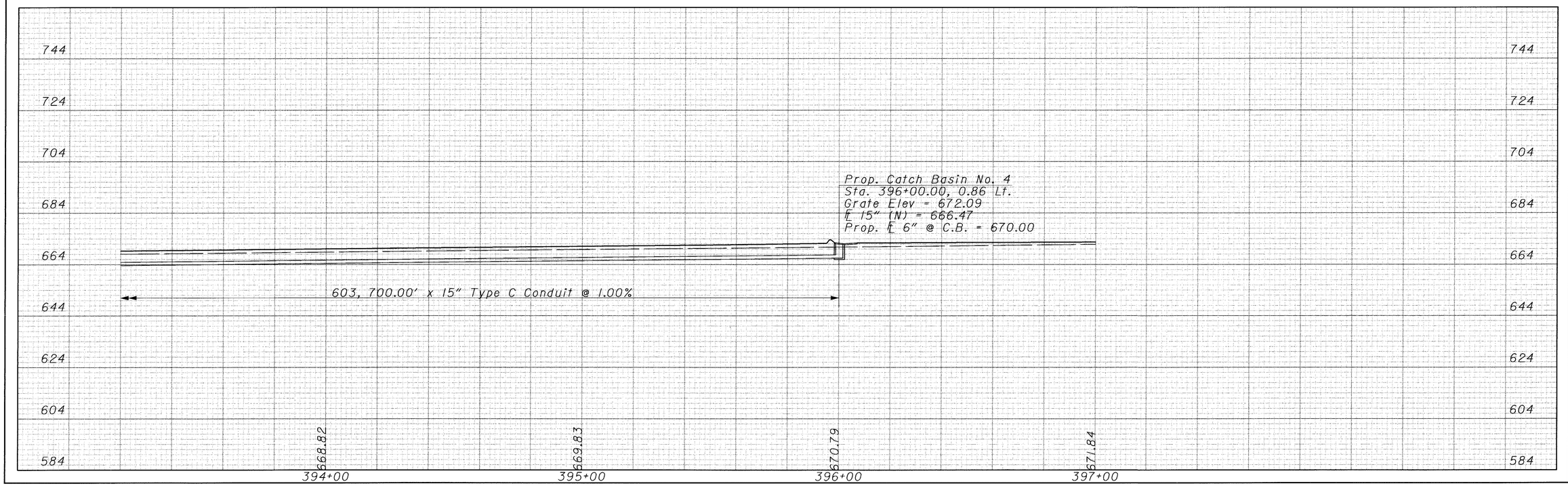

CLE-275-5.35

345
857

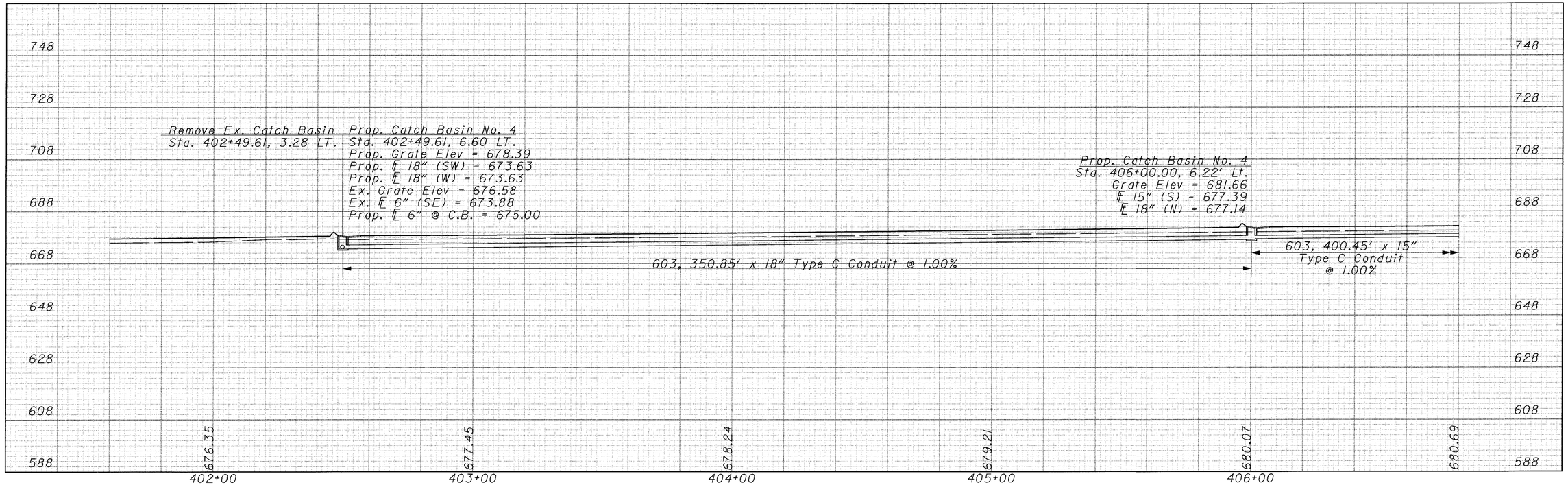

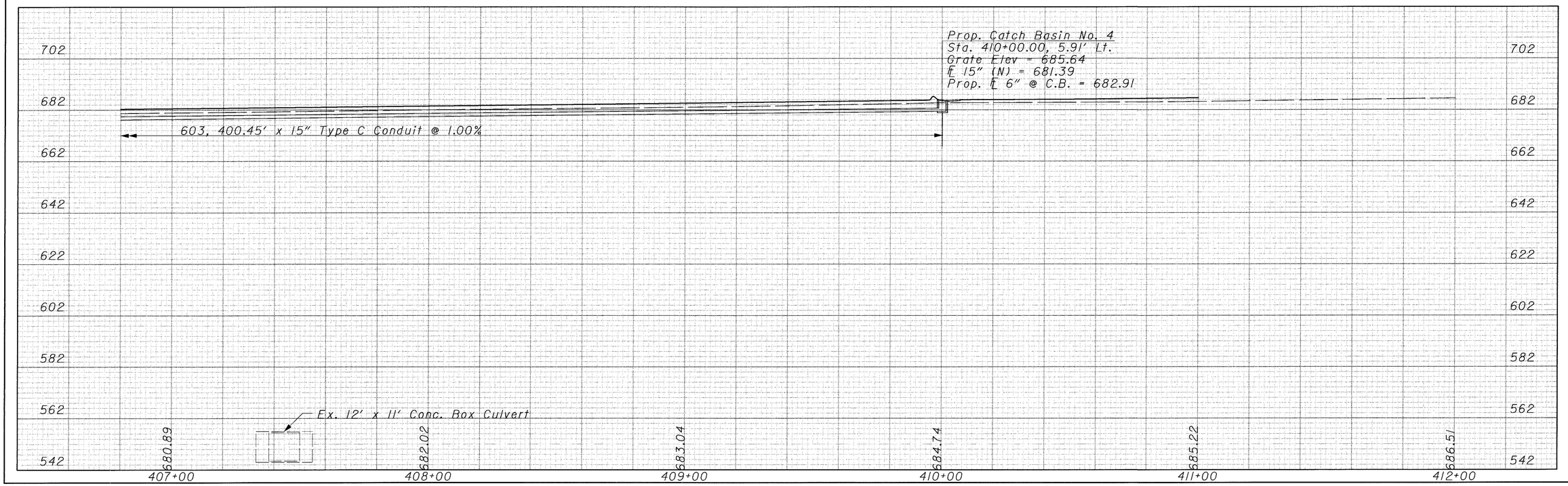

CALCULATED EF
CHECKED AM

STORM SEWER PROFILE

CLE-275-5.35

366
859

CALCULATED EF
CHECKED AM

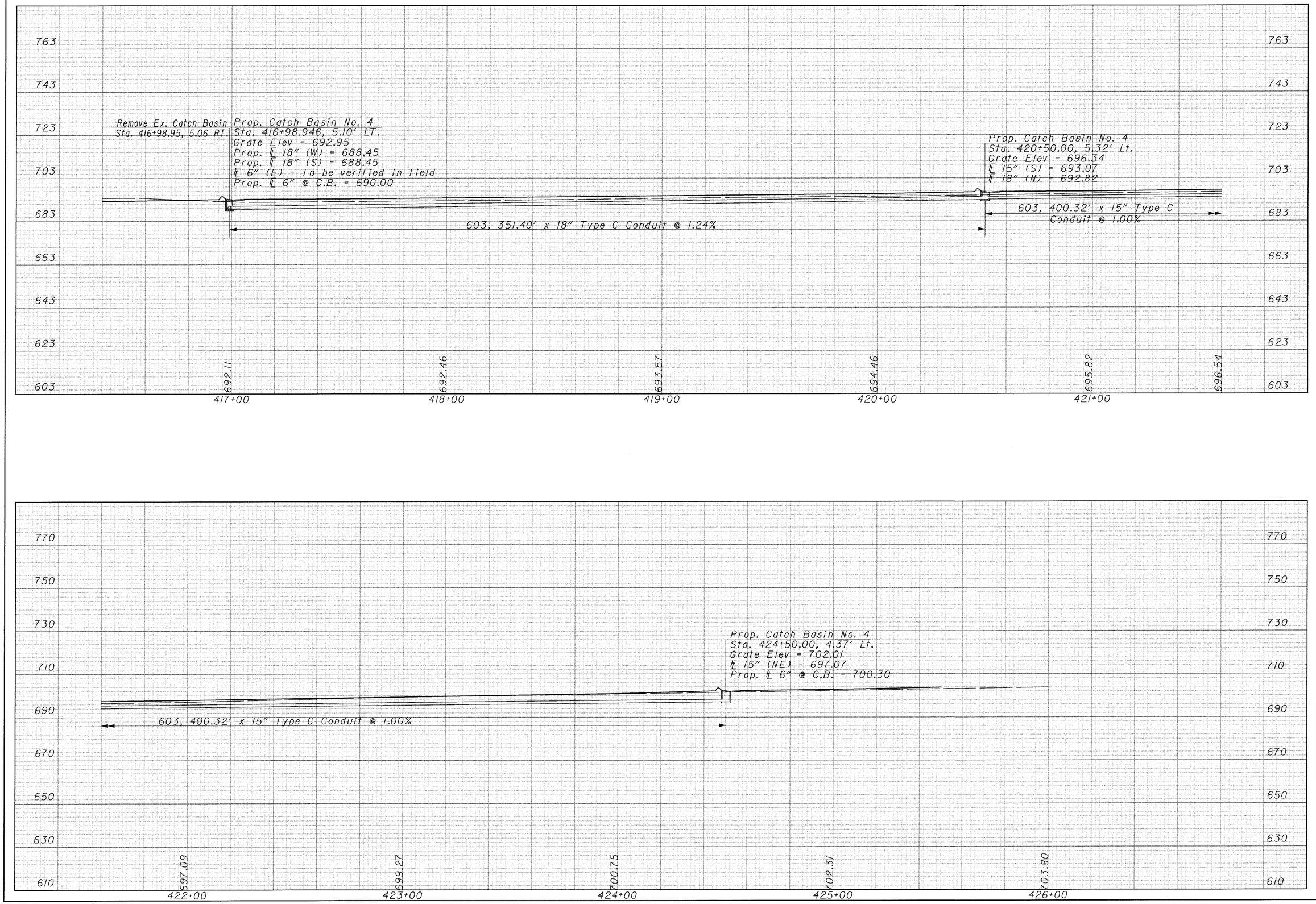

STORM SEWER PROFILE

CLE-275-5.35

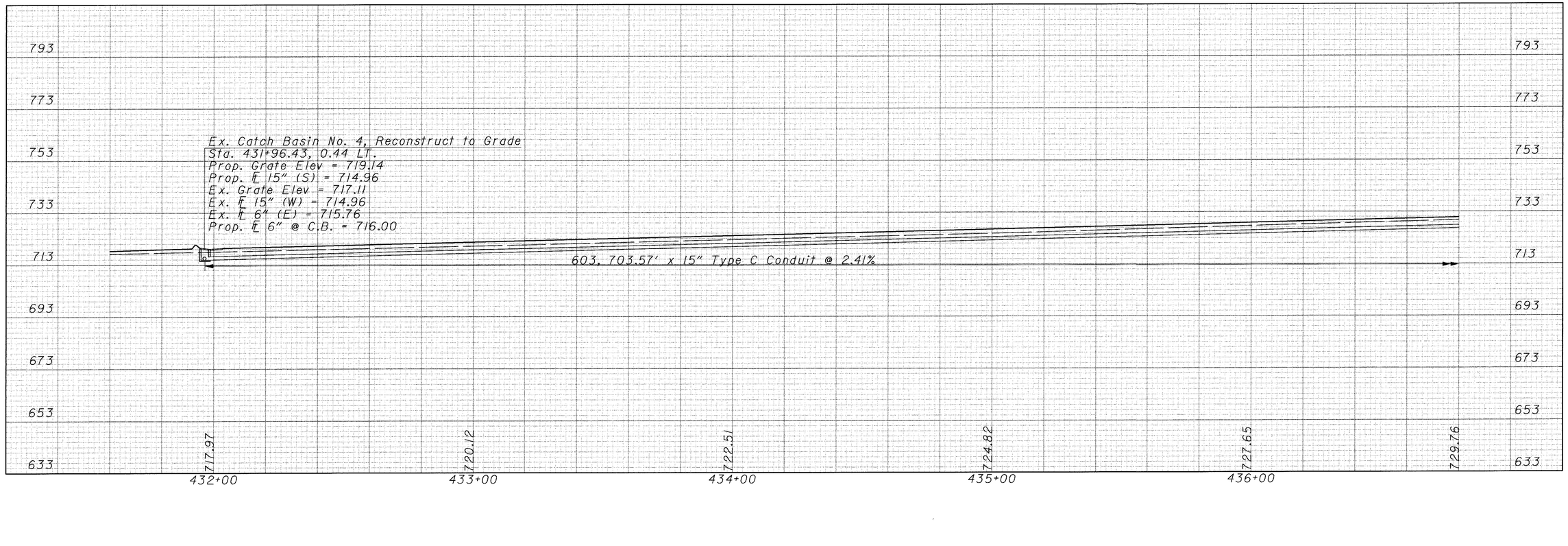

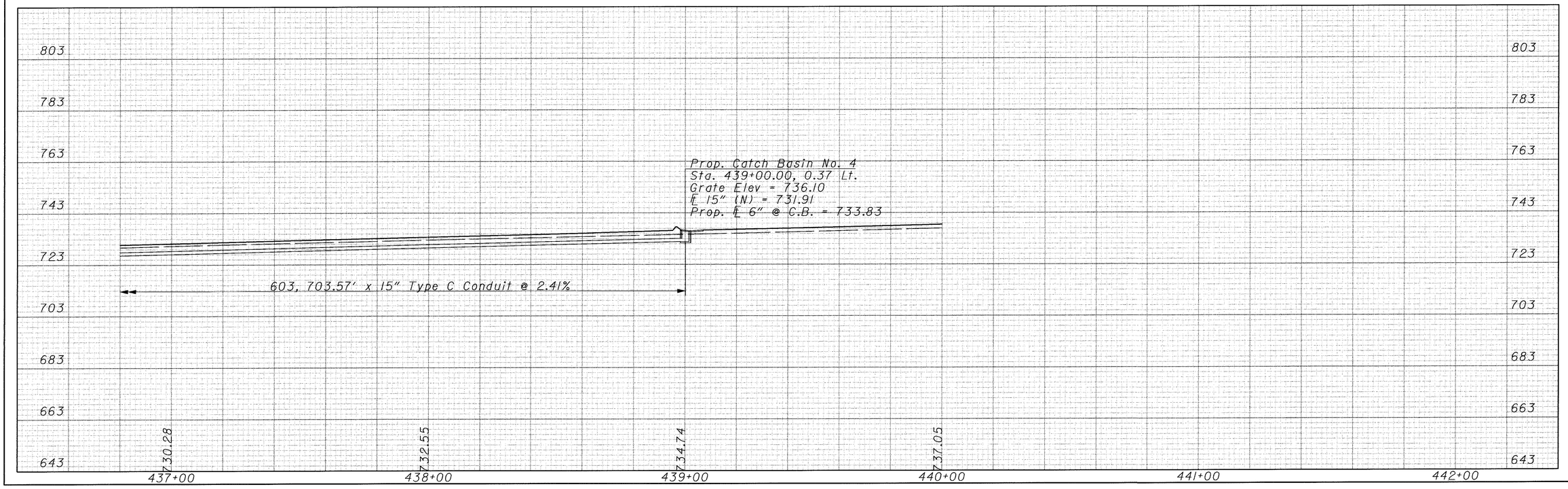

CALCULATED EF
CHECKED AM

STORM SEWER PROFILE

CLE-275-5.35

368
857

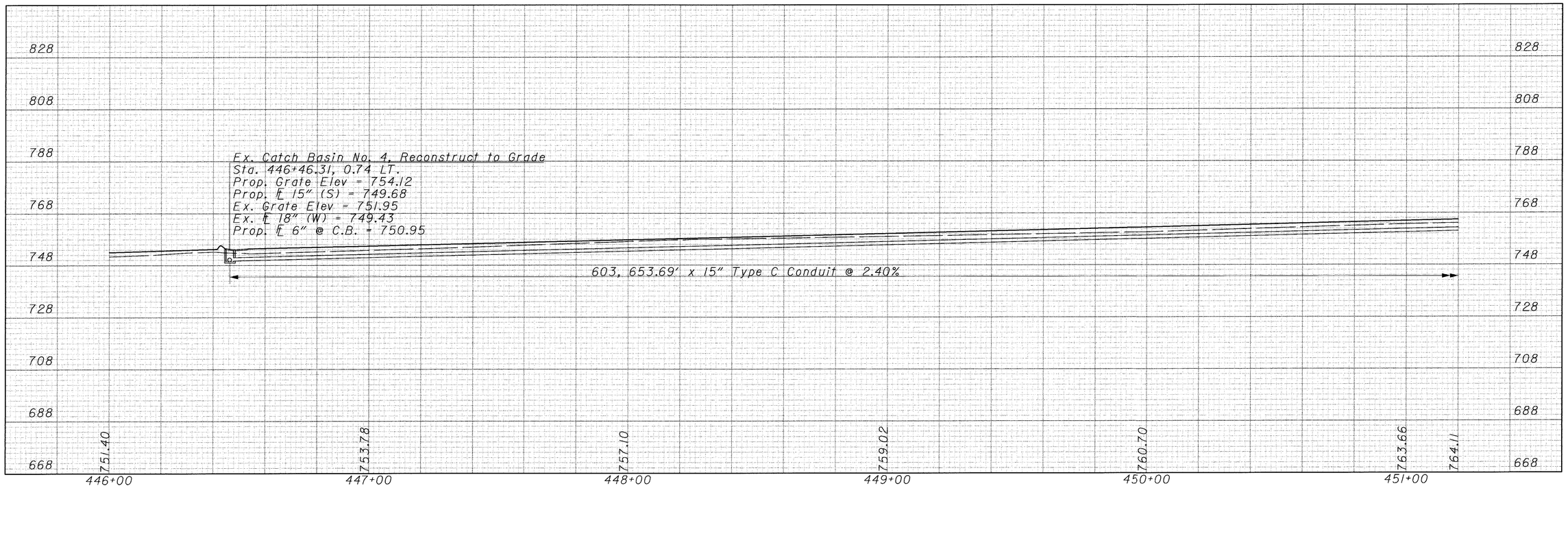

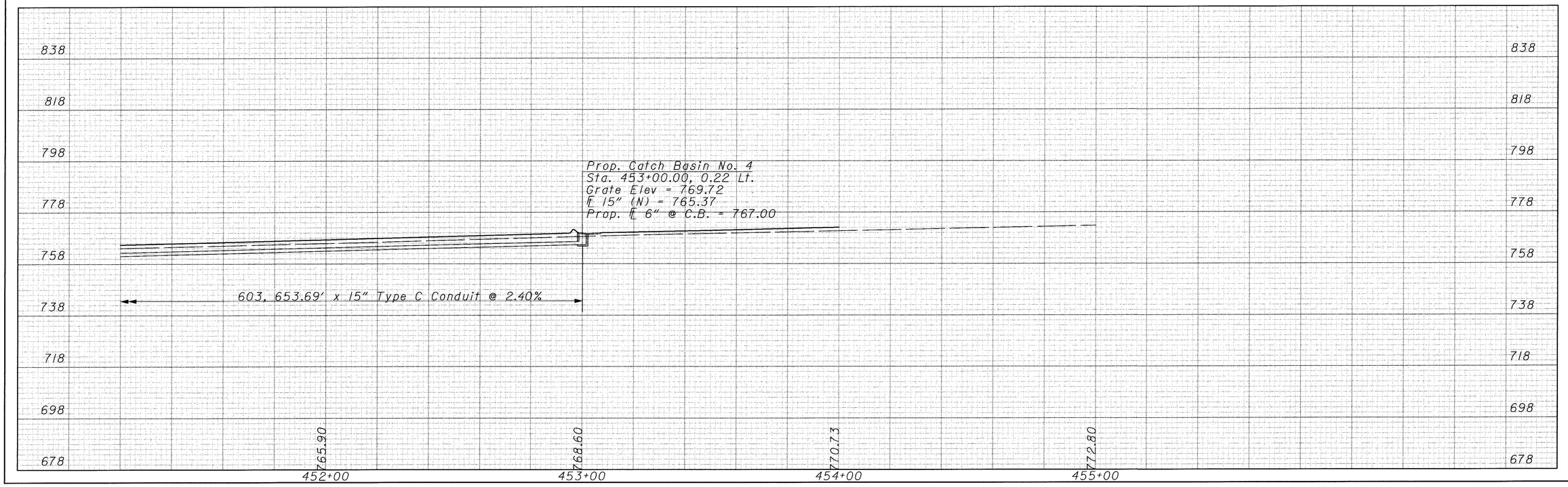

CALCULATED EF
CHECKED AM

STORM SEWER PROFILE

CLE-275-5.35

369
859

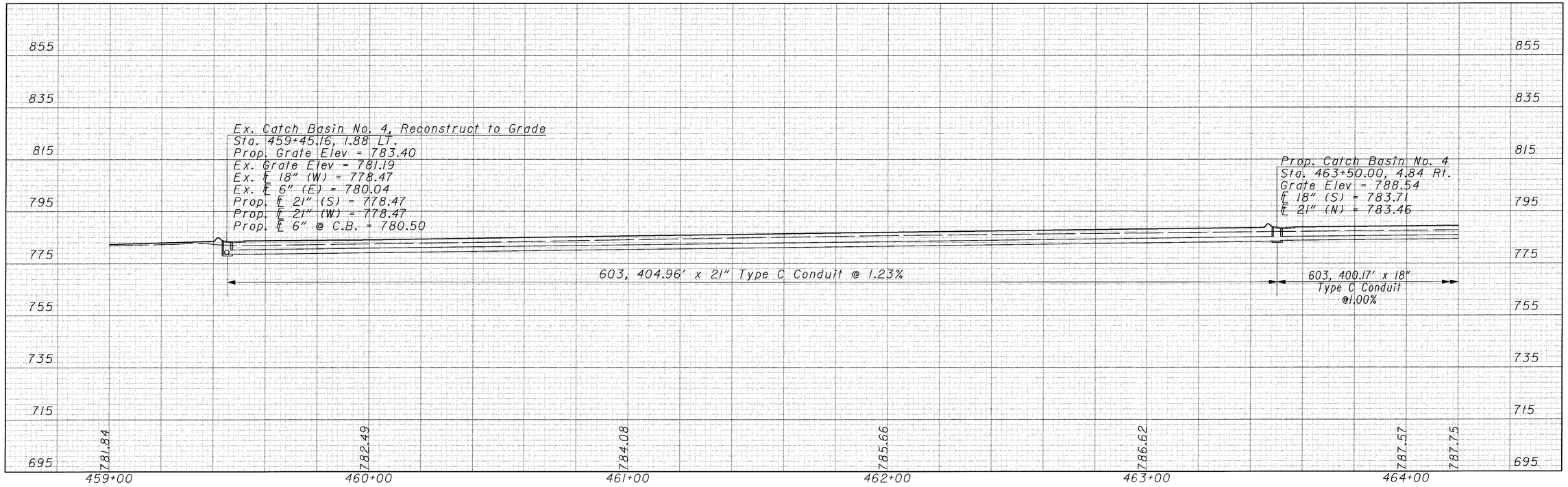

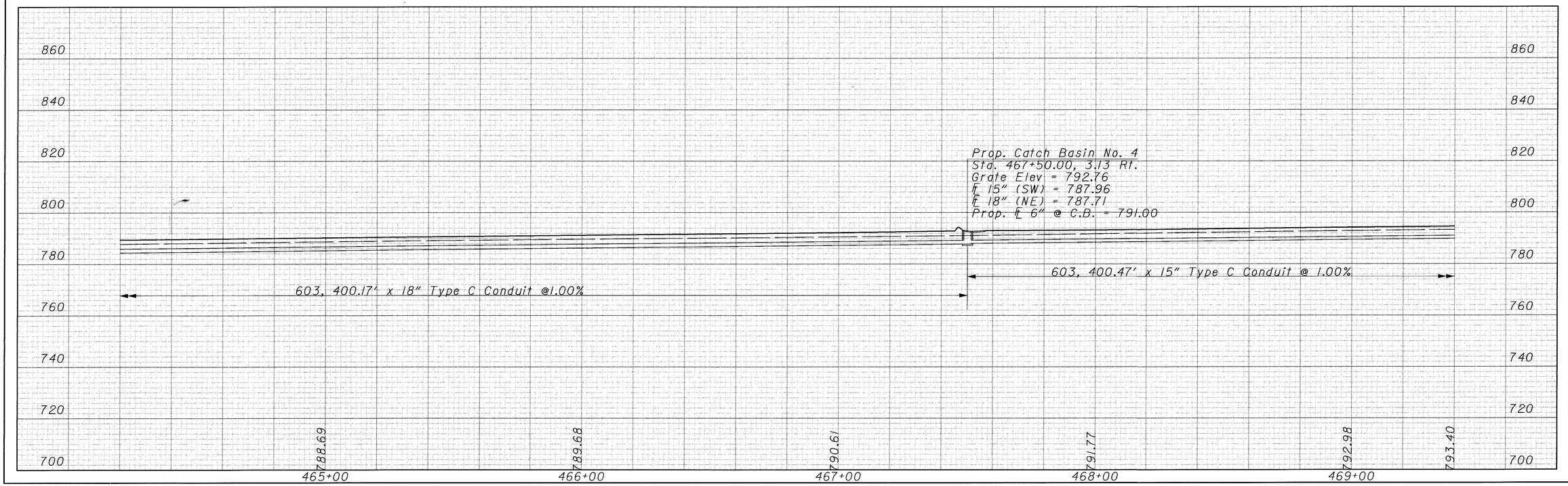

CALCULATED EF
CHECKED AM

STORM SEWER PROFILE

CLE-275-5.35

370
857

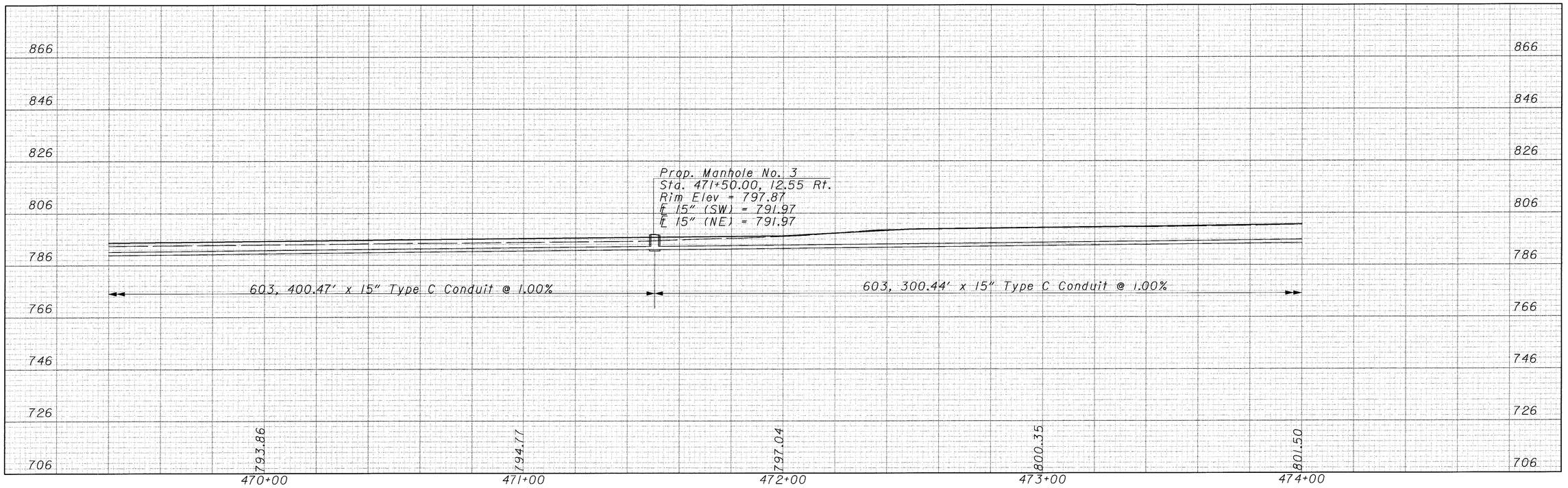

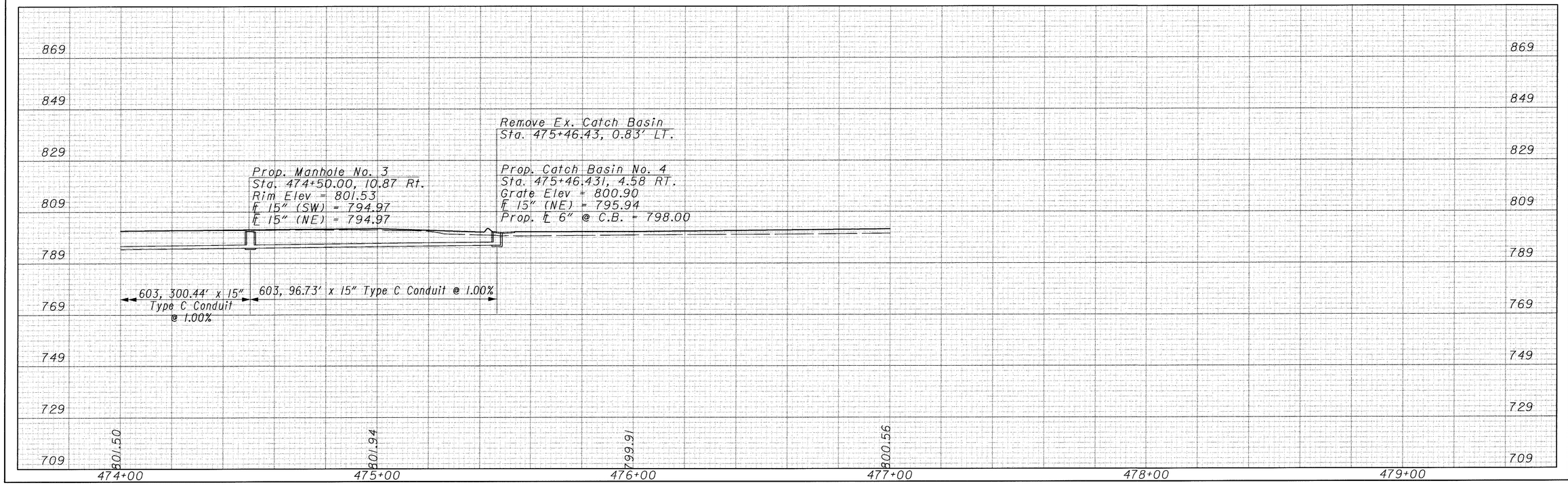

CALCULATED EF
CHECKED AM

STORM SEWER PROFILE

CLE-275-5.35

371
857

CALCULATED EF
CHECKED AM

STORM SEWER PROFILE

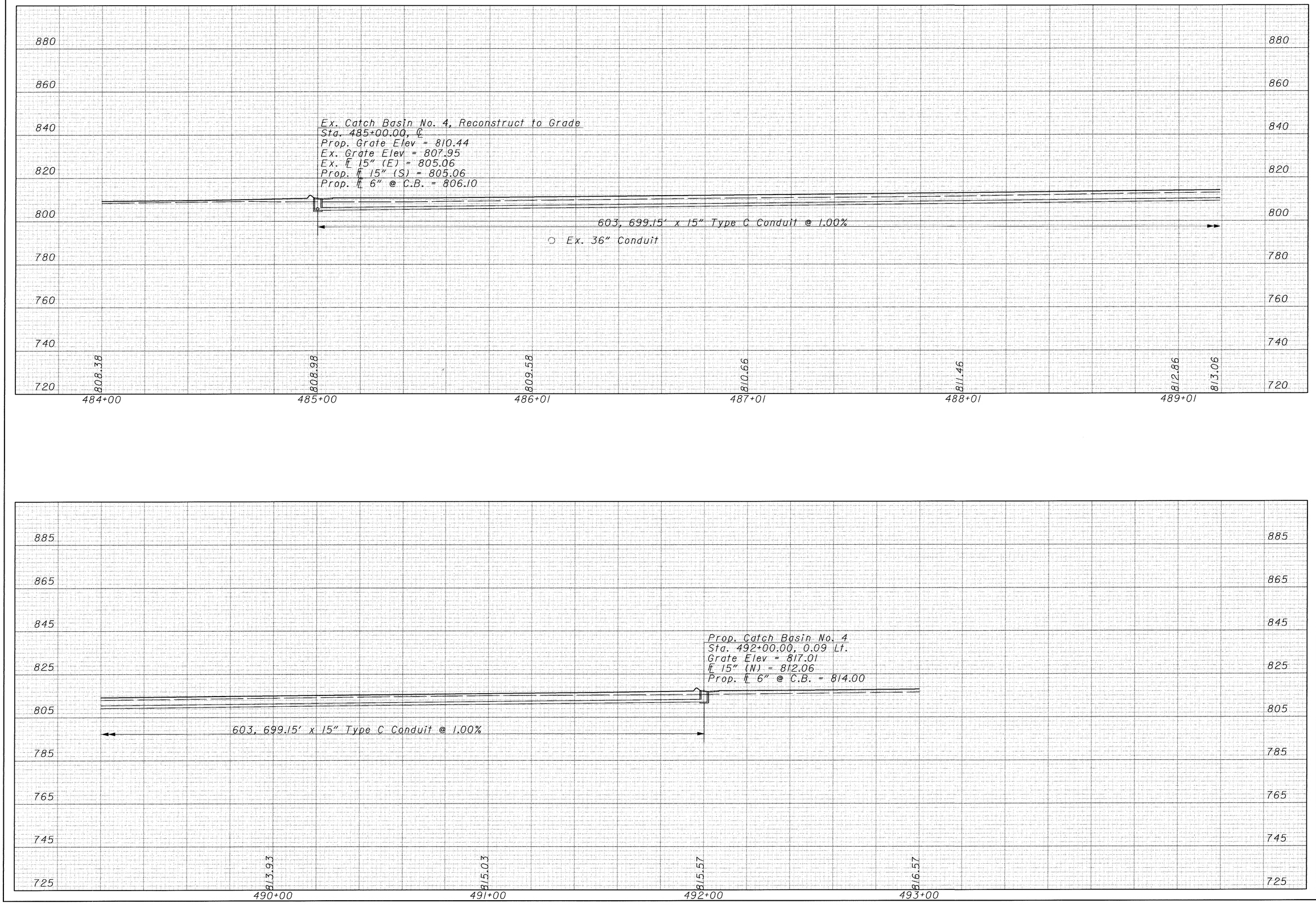

CLE-275-5.35

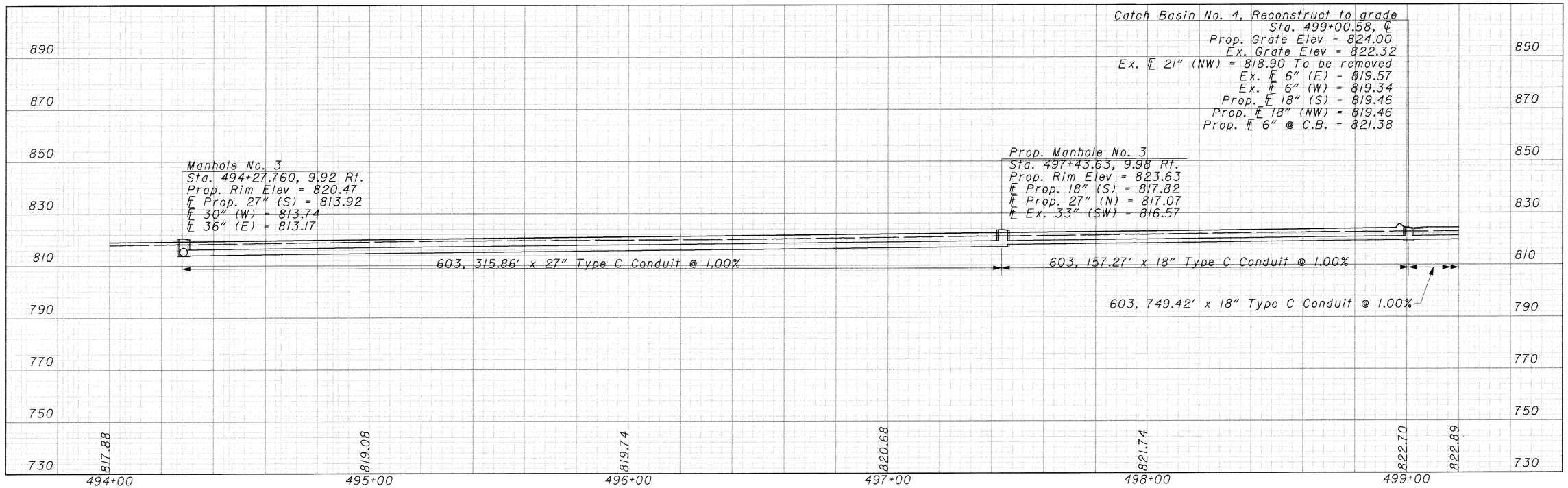

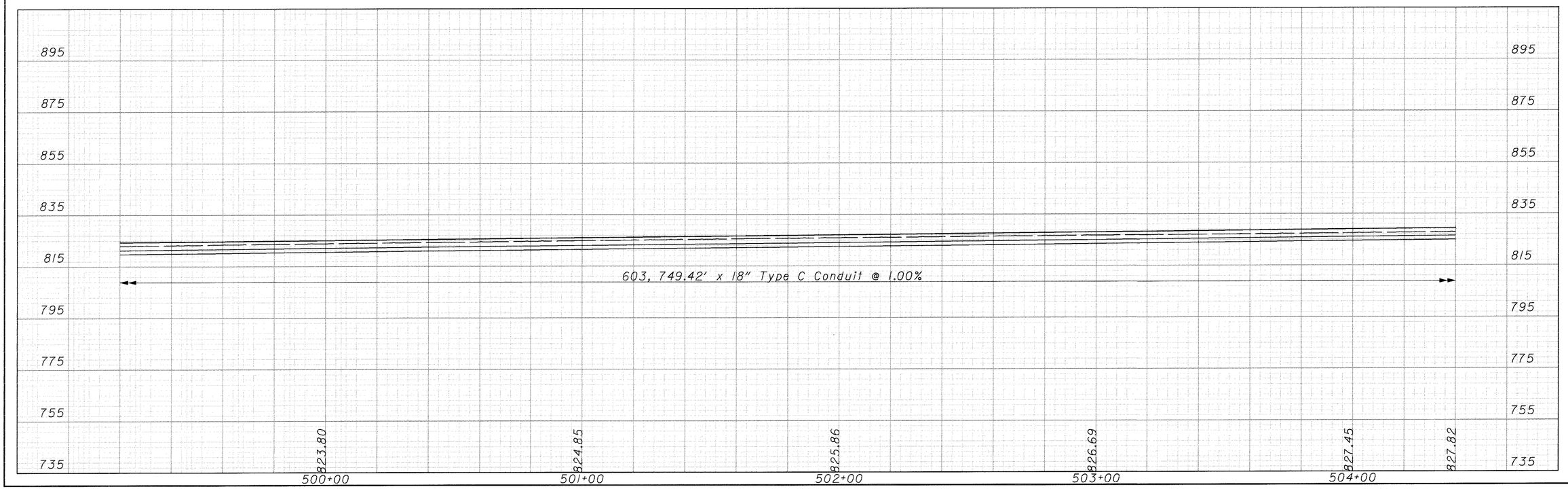

CALCULATED EF
CHECKED AM

STORM SEWER PROFILE

CLE-275-5.35

373
857

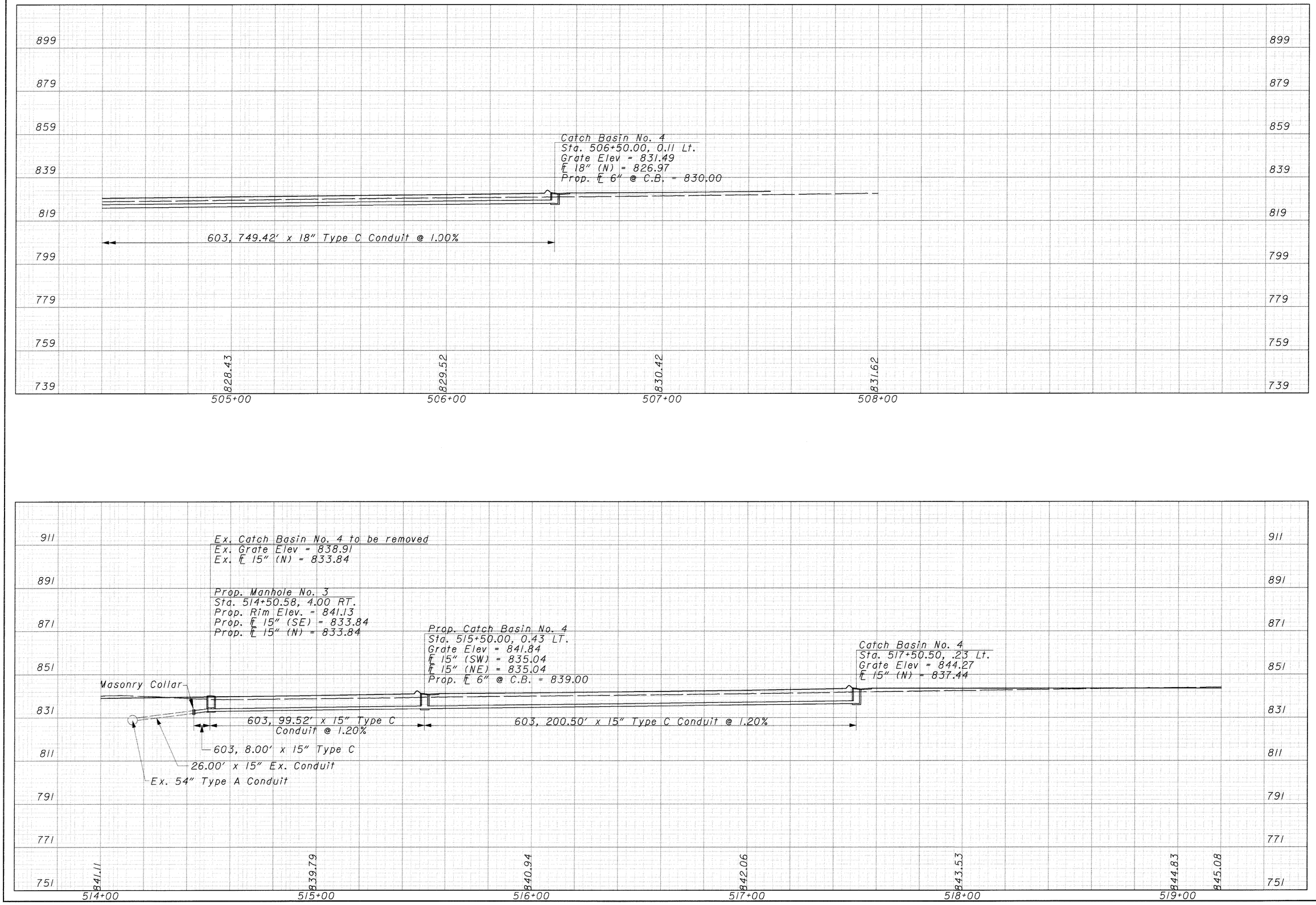

CALCULATED EF
CHECKED AM

STORM SEWER PROFILE

CLE-275-5.35

374
857

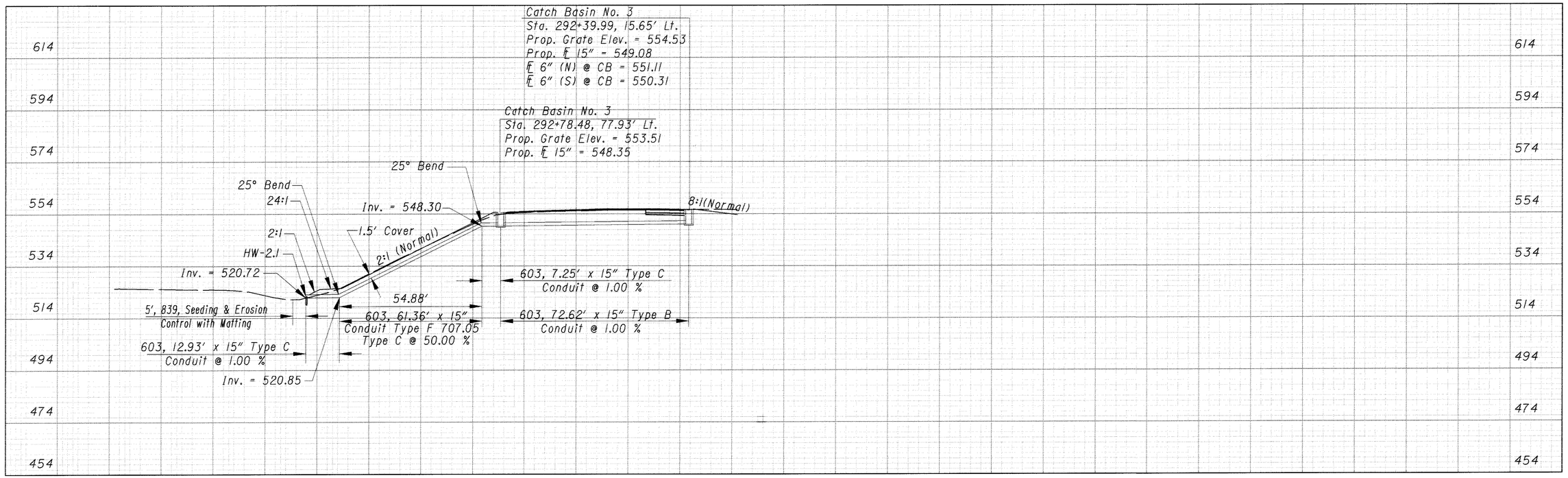

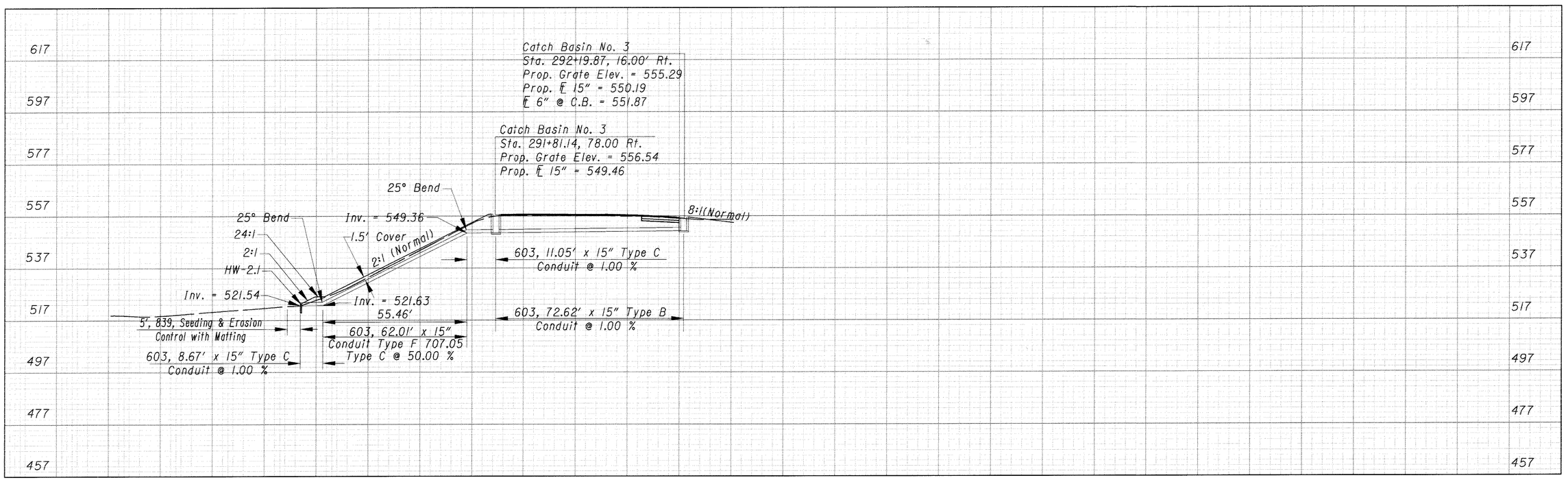

CALCULATED EF
CHECKED AM

STORM SEWER PROFILE

CLE-275-5.35

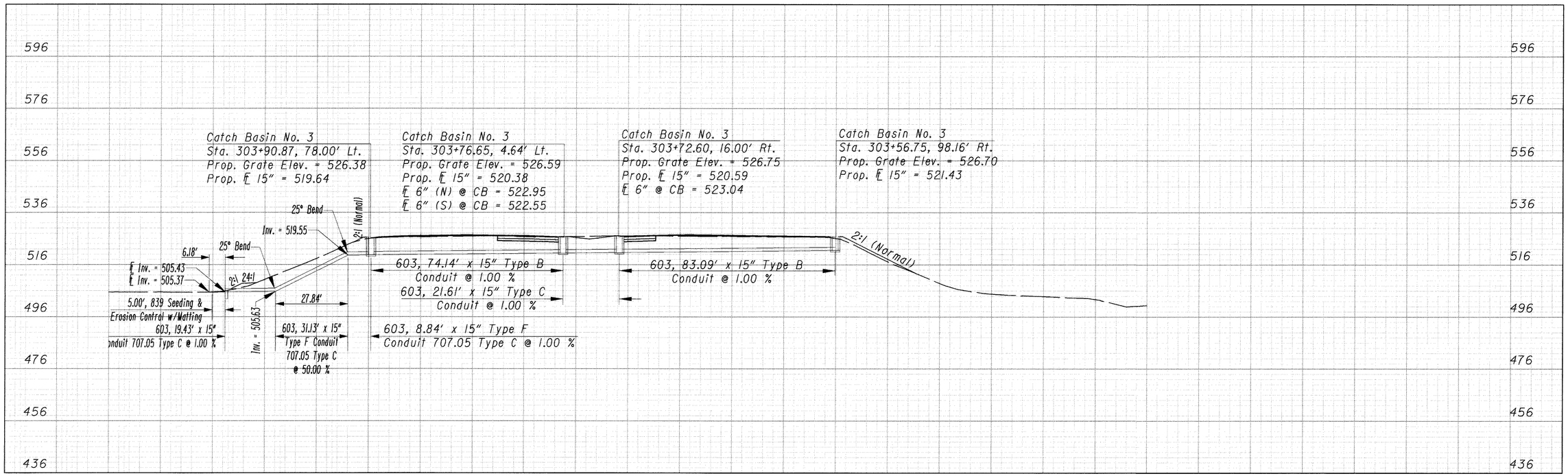

NOT USED

CALCULATED EF
CHECKED AM

STORM SEWER PROFILE

CLE-275-5.35

376
857

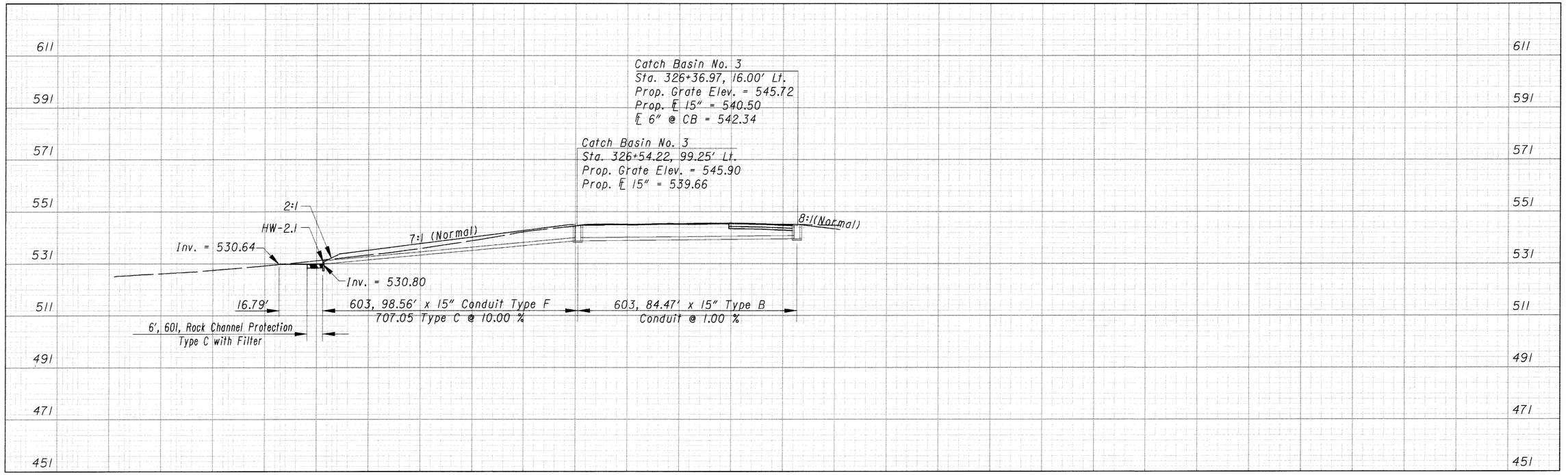

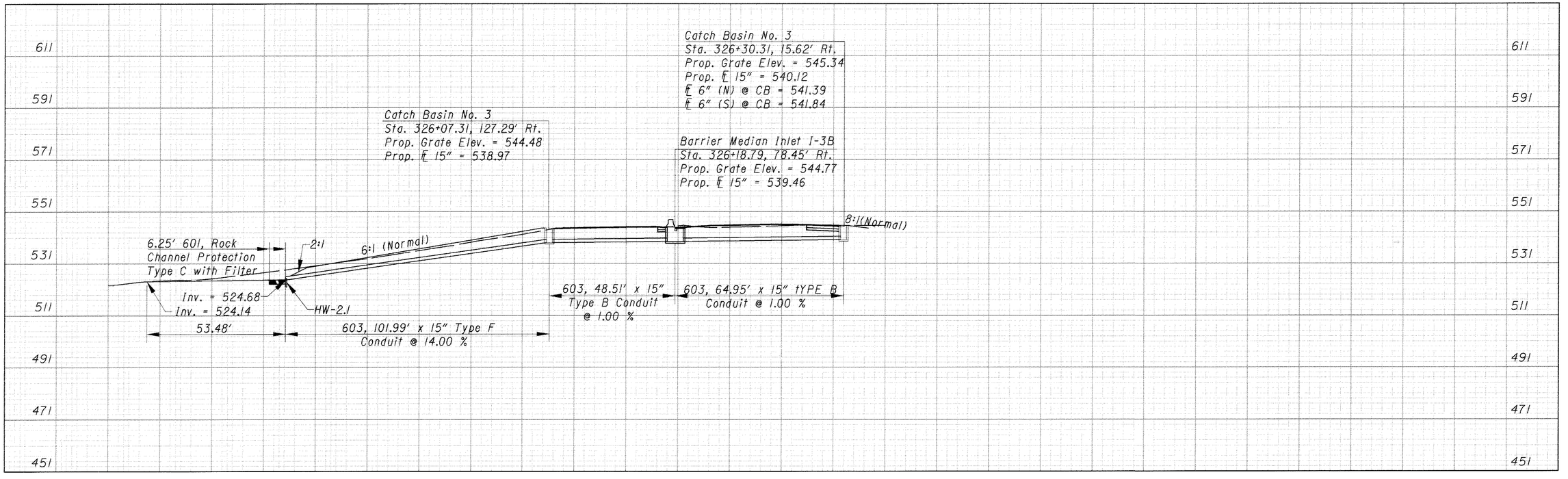

CALCULATED EF
CHECKED AM

STORM SEWER PROFILE

CLE-275-5.35

377
859

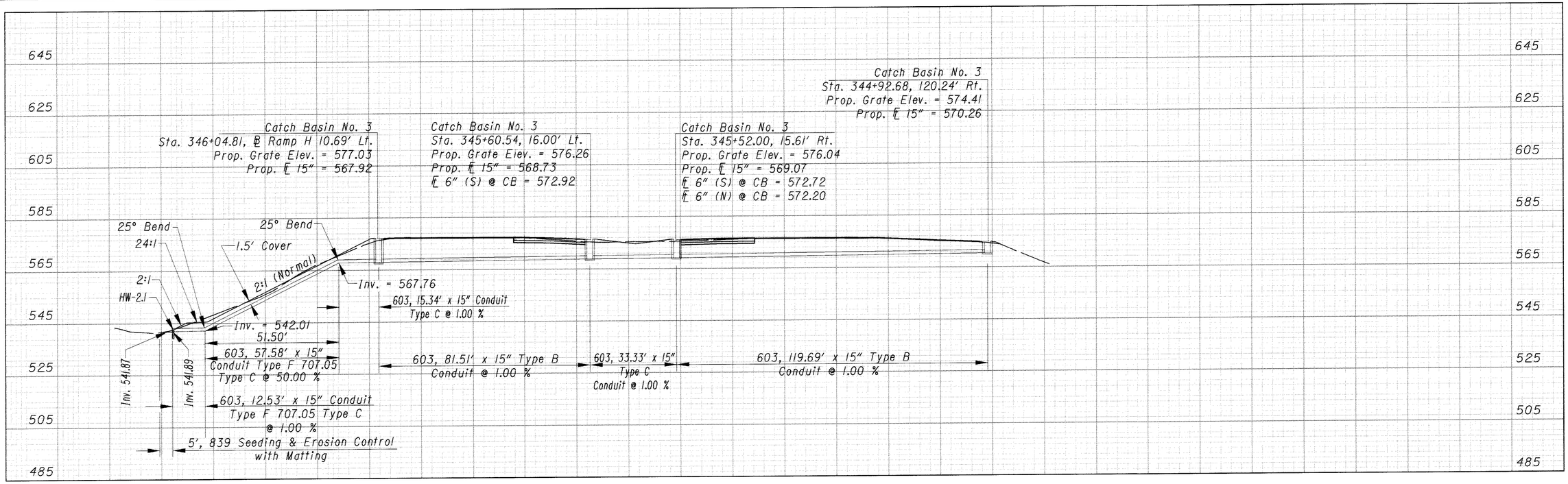

GRID NOT USED

CALCULATED EF
CHECKED AM

STORM SEWER PROFILE

CLE-275-5.35

378
857

℄ RELOCATED STREAM

CURVE DATA	BEARING
POT Sta. 10+00.00	S 51° 14′ 31″ W
P.I. Sta = 10+18.11	
D = 50° 23′ 25″ (LT)	
Dc = 572° 57′ 28″	
R = 10.00′	
T = 4.70′	
L = 8.79′	
E = 1.05′	
PC Sta. 10+13.41	
PT Sta. 10+22.20	S 0° 51′ 06″ W
POT Sta. 10+30.48	S 18° 11′ 23″ W
POT Sta. 10+40.48	S 17° 39′ 41″ W
POT Sta. 10+50.48	S 6° 15′ 00″ W
POT Sta. 10+60.38	S 32° 33′ 40″ W
P.I. Sta = 10+70.87	
D = 57° 07′ 36″ (LT)	
Dc = 572° 57′ 28″	
R = 10.00′	
T = 5.44′	
L = 9.97′	
E = 1.39′	
PC Sta. 10+65.43	
PT Sta. 10+75.40	S 24° 33′ 56″ E
P.I. Sta = 11+18.32	
D = 68° 16′ 39″ (RT)	
Dc = 190° 59′ 09″	
R = 30.00′	
T = 20.34′	
L = 35.75′	
E = 6.25′	
PC Sta. 10+97.98	
PT Sta. 11+33.73	S 43° 42′ 43″ W
P.I. Sta = 11+86.03	
D = 83° 11′ 26″ (LT)	
Dc = 249° 06′ 44″	
R = 23.00′	
T = 20.42′	
L = 33.39′	
E = 7.75′	
PC Sta. 11+65.61	
PT Sta. 11+99.00	S 39° 28′ 42″ E
P.I. Sta = 12+40.69	
D = 60° 41′ 52″ (RT)	
Dc = 249° 06′ 44″	
R = 23.00′	
T = 13.47′	
L = 24.37′	
E = 3.65′	
PC Sta. 12+27.22	
PT Sta. 12+51.59	S 21° 13′ 10″ W
P.I. Sta = 12+74.19	
D= 67° 04′ 08″ (LT)	
Dc = 381° 58′ 19″	
R = 15.00′	
T = 9.94′	
L = 17.56′	
E = 3.00′	
PC Sta. 12+64.25	
PT Sta. 12+81.80	S 45° 50′ 58″ E
POT Sta. 13+12.85	

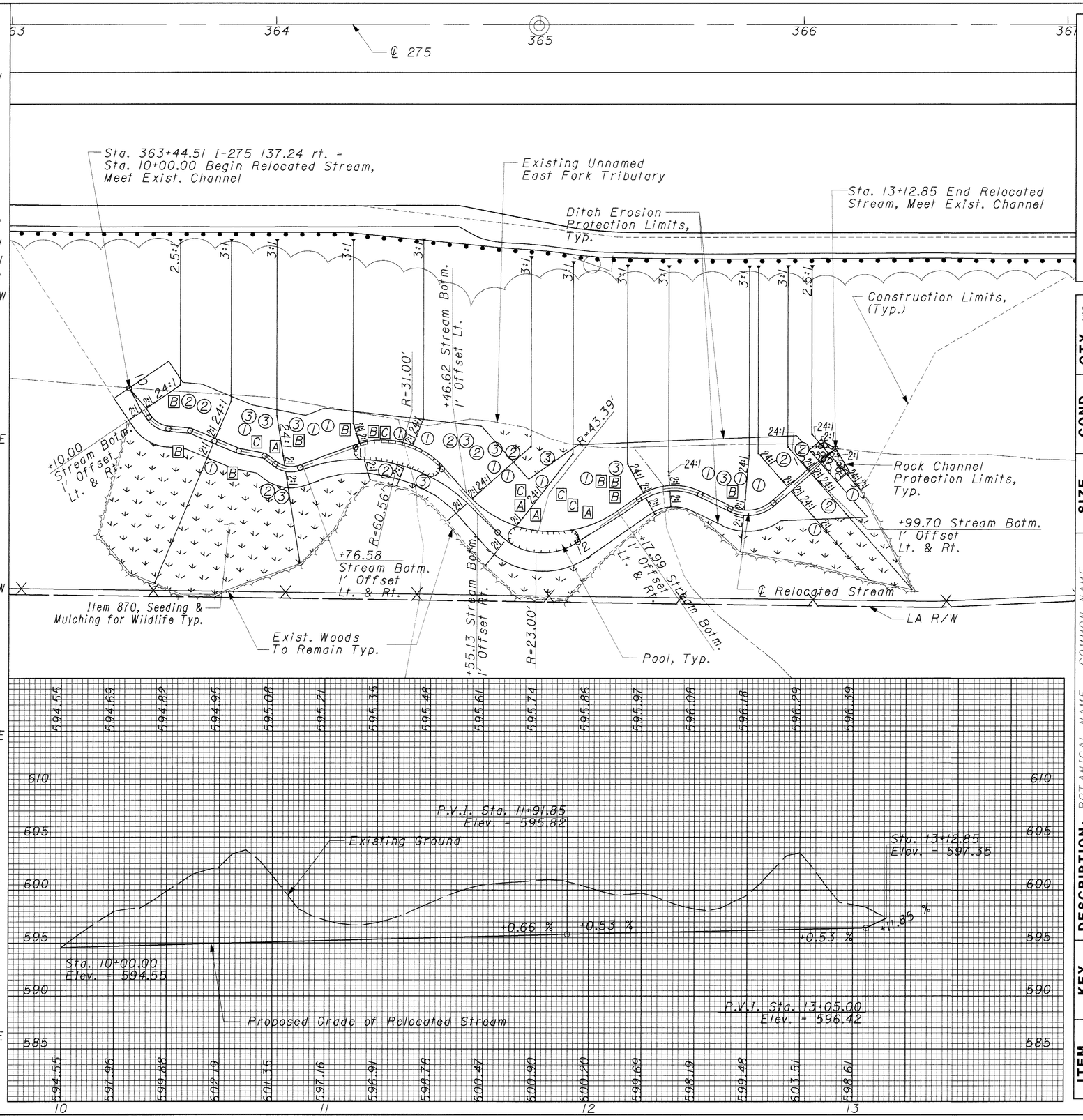

NOTES:

1. Trees & shrubs to be obtained from a local nursery.
2. For cross sections, see sheets 600-601
3. For channel protection quantities, see sheet 322.

ITEM	KEY	DESCRIPTION: BOTANICAL NAME - COMMON NAME	COND.	SIZE	QTY. ***
661	①	FRAXINUS PENNSYLVANICA - GREEN ASH	B&B	2"CALIPER	15
661	②	ACER RUBRUM - RED MAPLE	B&B	2"CALIPER	10
661	③	PRUNUS SEROTINA - BLACK CHERRY	B&B	2"CALIPER	10
661	A	CORNUS AMOMUM - SILKY DOGWOOD	B&B OR CONT. GR.	3' HEIGHT	5
661	B	VIBURNUM DENTATUM - ARROW WOOD	CONT. GR.	3' HEIGHT	10
661	C	SAMBUCUS CANADENSIS - ELDERBERRY	B&B OR CONT. GR.	3' HEIGHT	5
870		SEEDING AND MULCHING FOR WILDLIFE			653 SQ. YD.
		*** TOTALS CARRIED TO GENERAL SUMMARY			

N

HORIZONTAL SCALE IN FEET
0 10 20 40

CALCULATED MHT
CHECKED AM

RELOCATED STREAM PLAN & PROFILE

CLE-275-5.35

378A
857

TRAFFIC CONTROL GENERAL NOTES

ITEM 202 - RAISED PAVEMENT MARKERS REMOVED FOR STORAGE, AS PER PLAN

AN ESTIMATED QUANTITY OF ITEM 202 RAISED PAVEMENT MARKERS REMOVED FOR STORAGE, AS PER PLAN HAS BEEN PROVIDED. THE CONTRACTOR SHALL REMOVE ALL RAISED PAVEMENT MARKERS WITHIN THE LIMITS OF WORK AND DELIVER THEM TO THE OHIO DEPARTMENT OF TRANSPORTATION, DISTRICT EIGHT, LEBANON, OHIO, IN A RELATIVELY CLEAN CONDITION (NO MUD OR DEBRIS MIXED IN). THE DEPRESSIONS LEFT BY THEIR REMOVAL SHALL BE TACKED WITH ITEM 407 MATERIAL AND THEN ITEM 448 MATERIAL SHALL BE PLACED AND COMPACTED. THE COST FOR THIS ITEM SHALL INCLUDE ALL OF THE MATERIALS, EQUIPMENT AND LABOR DESCRIBED ABOVE. EXISTING RAISED PAVEMENT MARKERS SHALL NOT BE REMOVED UNLESS THEY WILL BE REPLACED IN THE SAME CONSTRUCTION SEASON.

MILE MARKER LOCATION

THE LOCATION OF MILE MARKERS ON THE PLANS ARE APPROXIMATE AND A MORE PRECISE LOCATION WILL BE PROVIDED BY THE DEPARTMENT. THE CONTRACTOR SHALL NOTIFY THE ENGINEER AT LEAST 30 DAYS IN ADVANCE OF THE PLANNED DATE OF MARKER INSTALLATION. THE ENGINEER WILL CONTACT THE OFFICE OF TECHINCAL SERVICES WHICH WILL LOCATE THE LONGITUDINAL POSITION OF MILE MARKERS BY MEANS OF A PAINT MARK ON THE PAVEMENT EDGE. ALTERNATE MARKS WILL NOT BE PROVIDED ON DIVIDED HIGHWAYS AND THE CONTRACTOR SHALL SET MARKERS FOR THE OPPOSITE ROADWAY ACROSS FROM THE PROVIDED MARK. DELINEATORS WHOSE NORMAL POSITION FALLS WITHIN 50 FEET OF A MILE MARKER SHALL BE OMITTED.

LOGO SIGNS

THE LOGO SIGNS THAT INDICATE FOOD, GAS AND LODGING LOCATED AT THE INTERCHANGES, ARE INSTALLED AND MAINTAINED BY:

OHIO LOGO'S, INC.
4384 TULLER ROAD
DUBLIN, OHIO 43017
(800) 860-5646 OR (614) 717-0833

THEREFORE, IF IN THE PLANS, THERE ARE ANY LOGO SIGNS THAT ARE MARKED FOR REMOVAL AND RE-ERECTION, THE REQUIRED WORK FOR REMOVING AND RE-ERECTING THOSE SIGNS SHALL BE PERFORMED BY OHIO LOGO'S, INC.

OHIO LOGO'S, INC. SHALL BE NOTIFIED 60 DAYS PRIOR TO THE LOGO SIGN REMOVAL WORK BEGINS. COORDINATION OF THE REMOVAL, RE-ERECTION, AND POSSIBLE RELOCATION OF THE LOGO SIGN, SHALL BE MANAGED BY THE ENGINEER.

PAVEMENT MARKING ON CONCRETE SURFACES

ITEM 645, PREFORMED PAVEMENT MARKING MATERIAL, SHALL BE USED ON ALL BRIDGE DECKS AND APPROACH SLABS.

ITEM 630 - PREPARATION AND SHIPMENT OF STORED SIGNS, EXTRUSHEET

EXTRUSHEET SIGNS REMOVED UNDER OTHER ITEMS OF WORK SHALL BE PROCESSED AND SHIPPED TO THE ODOT CENTRAL OFFICE SIGN SHOP, 1606 WEST BROAD STREET, COLUMBUS OHIO.

THE LOADING, SECURING, TRANSPORTING, AND UNLOADING OF EXTRUSHEET SIGNS SHALL BE BY SUITABLE MEANS TO AVOID DAMAGE TO THE SIGN PANELS. LARGE SIGNS MAY BE CAREFULLY DISASSEMBLED INTO SMALLER ASSEMBLIES TO FACILITATE TRANSPORTATION.

DELIVERIES SHALL BE MADE BETWEEN 8:00 A.M. AND 2:00 P.M. LATE ARRIVALS MUST UNLOAD THE FOLLOWING DAY. NO DELIVERIES WILL BE ACCEPTED ON SATURDAY, SUNDAY AND HOLIDAYS. THE SIGN SHOP ADMINISTRATOR SHALL BE NOTIFIED AT (614) 275-2850 AT LEAST THREE DAYS PRIOR TO THE DELIVERY OF THE SIGNS. DELIVERY ARRANGEMENTS OTHER THAN THOSE DESCRIBED ABOVE MUST BE APPROVED IN ADVANCE BY THE SIGN SHOP ADMINISTRATOR.

THE SIGNS SHALL BE TRANSPORTED BY THE CONTRACTOR TO THE SIGN SHOP WHERE THEY WILL BE UNLOADED AND STORED. PERSONNEL AND FORK LIFT OF 1000 POUNDS MAXIMUM CAPACITY WILL BE PROVIDED BY THE STATE FOR UNLOADING.

PAYMENT WILL BE AT CONTRACT PRICE PER EACH SIGN, INCLUDING ALL LABOR, EQUIPMENT, BANDING MATERIAL, PALLETS, TRANSPORTATION, AND MISCELLANEOUS MATERIAL NECESSARY TO PERFORM THE WORK.

ITEM 630 PREPARATION AND SHIPMENT OF STORED SIGNS, EXTRUSHEET — 33 EACH

CALCULATED JAG CHECKED AM

TRAFFIC CONTROL GENERAL NOTES & LIGHTING

CLE-2.75-5.35

379
857

LIGHTING QUANTITIES FOR OVERHEAD SIGNS 101S AND 102S

REF NO.	STATION	SIDE	CODE	SIZE (INCHES)	625	631									
					GROUND ROD	SIGN SERVICE	SIGN WIRED	DISCONNECT SWITCH WITH ENCLOSURE 30 AMP	SWITCH ENCLOSURE MOUNTING BRACKET ASSEMBLY	BALLAST CMRI-100-480 INTEGRAL	BALLAST CMRI-175-480 INTEGRAL	BALLAST CMRI-250-480 INTEGRAL	MERCURY VAPOR LUMINAIRE TC-31.20 100W LAMP	MERCURY VAPOR LUMINAIRE TC-31.20 175W LAMP	MERCURY VAPOR LUMINAIRE TC-31.20 250W LAMP
					EACH	EACH	EACH	EACH	EACH	EACH	EACH	EACH	EACH	EACH	EACH
101S	355+28 I.R. 275	LT			1	1	2	1	1	2	2		2	2	
102S	113+92 U.S.R. 50-J	RT			1	1	1	1	1			2			2
TOTALS CARRIED TO OVERHEAD SIGN SUB-SUMMARY					2	2	3	2	2	2	2	2	2	2	2

SHEET NUMBER							FUNDING		ITEM	ITEM EXT.	GRAND TOTAL	UNIT	DESCRIPTION	SEE SHEET NO.
379	382	383	384	388	389	390	INTERSTATE MAINTENANCE	NATIONAL HIGHWAY						
													TRAFFIC CONTROL	
					1630		1630		202	54101	1630	EACH	RAISED PAVEMENT MARKER REMOVED FOR STORAGE, AS PER PLAN	379
						250	250		620	10300	250	EACH	DELINEATOR, TYPE C, POST MOUNTED	
						15	15		620	11000	15	EACH	DELINEATOR, TYPE C, BRACKET MOUNTED	
						87	87		620	15300	87	EACH	DELINEATOR, TYPE D, POST MOUNTED	
					1630		1123	507	621	00100	1630	EACH	RAISED PAVEMENT MARKER	
		9						9	625	32000	9	EACH	GROUND ROD	
	401.0						401.0		630	02100	401.0	LIN FT	GROUND MOUNTED SUPPORT, NO. 2 POST	
	603.7						603.7		630	03100	603.7	LIN FT	GROUND MOUNTED SUPPORT, NO. 3 POST	
	64.0						64.0		630	04100	64.0	LIN FT	GROUND MOUNTED SUPPORT, NO. 4 POST	
	35.7						35.7		630	06100	35.7	LIN FT	GROUND MOUNTED SUPPORT, NO. 6 POST	
	98.1						98.1		630	06400	98.1	LIN FT	GROUND MOUNTED SUPPORT, S4X7.7 BEAM	
	314.0						314.0		630	06500	314.0	LIN FT	GROUND MOUNTED SUPPORT, W6X9 BEAM	
	43.4						43.4		630	07000	43.4	LIN FT	GROUND MOUNTED SUPPORT, W8X18 BEAM	
	128.0						128.0		630	07600	128.0	LIN FT	GROUND MOUNTED SUPPORT, W10X12 BEAM	
	20						20		630	09000	20	EACH	BREAKAWAY BEAM CONNECTION	
		2						2	630	20800	2	EACH	OVERHEAD SIGN SUPPORT, TYPE TC-12.30, DESIGN 8	
		4						4	630	21000	4	EACH	OVERHEAD SIGN SUPPORT, TYPE TC-12.30, DESIGN 10	
		2						2	630	35500	2	EACH	OVERHEAD SIGN SUPPORT, TYPE TC-7.65, DESIGN 6	
		2						2	630	45500	2	EACH	OVERHEAD SIGN SUPPORT, TYPE TC-7.65, DESIGN 8	
		1						1	630	77200	1	EACH	OVERPASS STRUCTURE MOUNTED SIGN SUPPORT, TYPE TC-18.26, DESIGN 2	
	709.3						709.3		630	80102	709.3	SQ FT	SIGN, FLAT SHEET, TYPE G	
	473.0	1257.5					473.0	1257.5	630	80204	1730.5	SQ FT	SIGN, EXTRUSHEET, TYPE G	
		22.0						22.0	630	80400	22.0	SQ FT	SIGN, PERMANENT OVERLAY	
	30						30		630	84500	30	EACH	GROUND MOUNTED BEAM SUPPORT FOUNDATION	
		14						14	630	84510	14	EACH	RIGID OVERHEAD SIGN SUPPORT FOUNDATION	
	80						80		630	85000	80	EACH	REMOVAL OF GROUND MOUNTED SIGN AND STORAGE	
	10						10		630	85500	10	EACH	REMOVAL OF GROUND MOUNTED MAJOR SIGN AND STORAGE	
	96						96		630	86002	96	EACH	REMOVAL OF GROUND MOUNTED POST SUPPORT AND DISPOSAL	
	14						14		630	86102	14	EACH	REMOVAL OF GROUND MOUNTED BEAM SUPPORT AND DISPOSAL	
		16						16	630	87000	16	EACH	REMOVAL OF OVERHEAD MOUNTED SIGN AND STORAGE	
		10						10	630	87100	10	EACH	REMOVAL OF OVERHEAD MOUNTED SIGN AND REERECTION	
		3						3	630	89706	3	EACH	REMOVAL OF OVERHEAD SIGN SUPPORT AND DISPOSAL, TYPE TC-12.30	
		6						6	630	89802	6	EACH	REMOVAL OF OVERHEAD SIGN SUPPORT AND DISPOSAL, TYPE TC-7.65	
		1						1	630	89808	1	EACH	REMOVAL OF OVERHEAD SIGN SUPPORT AND DISPOSAL, TYPE TC-18.26	
33								33	630	91010	33	EACH	PREPARATION AND SHIPMENT OF STORED SIGNS, EXTRUSHEET	
		9						9	631	84000	9	EACH	SIGN SERVICE	
		15						15	631	84300	15	EACH	SIGN WIRED	
		9						9	631	85302	9	EACH	DISCONNECT SWITCH WITH ENCLOSURE, 30 AMP	
		9						9	631	85500	9	EACH	SWITCH ENCLOSURE MOUNTING BRACKET ASSEMBLY	
		2						2	631	87102	2	EACH	BALLAST, TYPE CMRI-100-480, INTEGRAL	
		12						12	631	87202	12	EACH	BALLAST, TYPE CMRI-175-480, INTEGRAL	
		4						4	631	87302	4	EACH	BALLAST, TYPE CMRI-250-480, INTEGRAL	
		2						2	631	88100	2	EACH	MERCURY VAPOR LUMINAIRE, TYPE TC-31.20 WITH 100 WATT LAMP	
			12					12	631	88200	12	EACH	MERCURY VAPOR LUMINAIRE, TYPE TC-31.20 WITH 175 WATT LAMP	
			4					4	631	88300	4	EACH	MERCURY VAPOR LUMINAIRE, TYPE TC-31.20 WITH 250 WATT LAMP	
			10					10	631	94100	10	EACH	REMOVAL OF LUMINAIRE AND REERECTION	
			26					26	631	94200	26	EACH	REMOVAL OF LUMINAIRE AND DISPOSAL	
			9					9	631	94304	9	EACH	REMOVAL OF DISCONNECT SWITCH AND DISPOSAL	
			10					10	631	94402	10	EACH	REMOVAL OF BALLAST AND REERECTION	
			26					26	631	94404	26	EACH	REMOVAL OF BALLAST AND DISPOSAL	

CALCULATED JAG CHECKED AM

CONTROL GENERAL SUMMARY

TRAFFIC

CLE-275-5.35

SHEET NUMBER							FUNDING		ITEM	ITEM EXT.	GRAND TOTAL	UNIT	DESCRIPTION	SEE SHEET NO.
379	382	383	384	388	389	390	INTERSTATE MAINTENANCE	NATIONAL HIGHWAY						
			18					18	631	94408	18	EACH	REMOVAL OF SIGN WIRING AND DISPOSAL	
			9					9	631	94412	9	EACH	REMOVAL OF SIGN SERVICE AND DISPOSAL	
				0.35			0.35		642	00090	0.35	MILE	EDGE LINE	
				0.18			0.18		642	00290	0.18	MILE	CENTER LINE	
				21.13			13.67	7.46	644	00100	21.13	MILE	EDGE LINE	
				16.90			16.90		644	00200	16.90	MILE	LANE LINE	
				3085			3085		644	00400	3085	LIN FT	CHANNELIZING LINE	
				1206			1206		644	00700	1206	LIN FT	TRANSVERSE LINE	
				1.03			0.81	0.22	645	00110	1.03	MILE	EDGE LINE, TYPE A3	
				1.01			1.01		645	00210	1.01	MILE	LANE LINE, TYPE A3	
				499			499		645	00410	499	LIN FT	CHANNELIZING LINE, TYPE A3	
				41			41		645	00710	41	LIN FT	TRANSVERSE LINE, TYPE A3	

CALCULATED JAG
CHECKED AM

TRAFFIC CONTROL GENERAL SUMMARY

CLE-275-5.35

381
857

GROUND MOUNTED SIGN SUB-SUMMARY

CALCULATED JAG | CHECKED AM

630

SHEET NO.	GROUND MOUNTED SUPPORT, NO. 2 POST	GROUND MOUNTED SUPPORT, NO. 3 POST	GROUND MOUNTED SUPPORT, NO. 4 POST	GROUND MOUNTED SUPPORT, NO. 4 POST, TYPE S	GROUND MOUNTED SUPPORT, NO. 6 POST	GROUND MOUNTED SUPPORT, S4 x 7.7 BEAM	GROUND MOUNTED SUPPORT, W6 x 9 BEAM	GROUND MOUNTED SUPPORT, W8 x 18 BEAM	GROUND MOUNTED SUPPORT, W10 x 12 BEAM		BREAKAWAY BEAM CONNECTION					SIGN, FLAT SHEET, TYPE G	SIGN, EXTRUSHEET, TYPE G		GROUND MOUNTED BEAM SUPPORT FOUNDATION		REMOVAL OF GROUND MOUNTED SIGN AND STORAGE	REMOVAL OF GROUND MOUNTED MAJOR SIGN AND STORAGE		REMOVAL OF GROUND MOUNTED POST SUPPORT AND DISPOSAL	REMOVAL OF GROUND MOUNTED BEAM SUPPORT AND DISPOSAL
	LIN FT	LIN FT	LIN FT	LIN FT	LIN FT	LIN FT	LIN FT	LIN FT	LIN FT		EACH					SQ FT	SQ FT		EACH		EACH	EACH		EACH	EACH
391	21.8						44.0				2					38.00			2		4			5	
392	21.8	30.6			17.9	34.3	114.9				2					38.50	117.50		8		9			12	2
393	45.2															12.00					4			4	
394	10.9			14.9	17.8											35.50					4			3	
396	60.8	154.2		16.0					40.0		2					126.25	60.00		2		9	1		12	
397	12.2	48.7														35.75					4			7	
398	26.9	28.2	17.4													40.50					8			7	
399	23.3	30.6					41.8				2					66.00			2		5	1		4	2
400																									
401	76.9	62.9						43.4								58.00	98.00		2		4	1		8	
402																						2		2	2
403		64.2					35.3		38.0		4					32.00	90.00		4			2		2	2
404		30.6		15.7			41.7				2					76.50			2		9	1		7	2
405		33.6														17.50					1			2	
406	13.7	14.0							50.0							12.90	67.50		2		2	1		2	2
407																									
408		30.4														16.00					1			2	
409	26.9					31.6					2					27.65			2		3			4	
410	12.8	32.0														21.25					2			3	
411																									
412						32.2					2					20.00			2		2			3	
413							36.3				2						40.00		2			1			2
414	47.8	43.7														35.00					9			7	
TOTALS	401.0	603.7	17.4	46.6	35.7	98.1	314.0	43.4	128.0		20					709.30	473.00		30		80	10		96	14
TOTALS CARRIED TO GENERAL SUMMARY	401.0	603.7	64.0		35.7	98.1	314.0	43.4	128.0		20					709.3	473.0		30		80	10		96	14

NOTE: FUNDING FOR ALL GROUND MOUNTED SIGNING IS TO BE "INTERSTATE MAINTENANCE."

GROUND

CLE-275-5.35

382
857

SHEET NO.	625	630															631							
	GROUND ROD	OVERHEAD SIGN SUPPORT, TYPE TC-12.30, DESIGN 8 28'-0" ARM	OVERHEAD SIGN SUPPORT, TYPE TC-12.30, DESIGN 10 28'-0" ARM	OVERHEAD SIGN SUPPORT, TYPE TC-12.30, DESIGN 10 30'-0" ARM	OVERHEAD SIGN SUPPORT, TYPE TC-7.65, DESIGN 6 61'-0" SPAN	OVERHEAD SIGN SUPPORT, TYPE TC-7.65, DESIGN 6 72'-0" SPAN	OVERHEAD SIGN SUPPORT, TYPE TC-7.65, DESIGN 8 94'-0" SPAN	OVERHEAD SIGN SUPPORT, TYPE TC-7.65, DESIGN 8 99'-0" SPAN	OVERPASS STRUCTURE MOUNTED SIGN SUPPORT, TYPE TC-18.26, DESIGN 2	SIGN, EXTRUSHEET, TYPE 6	SIGN, PERMANENT OVERLAY	RIGID OVERHEAD SIGN SUPPORT FOUNDATION	REMOVAL OF OVERHEAD MOUNTED SIGN AND STORAGE	REMOVAL OF OVERHEAD MOUNTED SIGN AND REERECTION	REMOVAL OF OVERHEAD SIGN SUPPORT AND DISPOSAL, TYPE TC-12.30	REMOVAL OF OVERHEAD SIGN SUPPORT AND DISPOSAL, TYPE TC-7.65	REMOVAL OF OVERHEAD SIGN SUPPORT AND DISPOSAL, TYPE TC-18.26	SIGN SERVICE	SIGN WIRED	DISCONNECT SWITCH WITH ENCLOSURE, 30 AMP	SWITCH ENCLOSURE MOUNTING BRACKET ASSEMBLY	BALLAST, TYPE CMRI-100-480, INTEGRAL	BALLAST, TYPE CMRI-175-480, INTEGRAL	BALLAST, TYPE CMRI-250-480, INTEGRAL	MERCURY VAPOR LUMINAIRE, TYPE TC-31.20 WITH 100 WATT LAMP
	EACH	EACH	EACH	EACH	EACH	EACH	EACH	EACH	EACH	SQ FT	SQ FT	EACH	EACH	EACH	EACH	EACH	EACH	EACH	EACH	EACH	EACH	EACH	EACH	EACH
416	1			2							22.00	2	3	4	2	1		1	1	1	1			
417	1							1		214.00		2	4	2		2		1	2	1	1		2	
418	1						1			136.00		2	3	2		1		1	2	1	1	2		
419			2							332.00		2												
420	1	1							1	211.00		1	1				1	1	1	1	1	2		
421	1					1				143.50		2	2	1		1		1	3	1	1	3		
422	1				1					85.00		2	1	1		1		1	2	1	1	1		
423	1	1								136.00		1	2		1			1	1	1	1	2		
379	2																	2	3	2	2	2	2	2
TOTALS	9	2	2	2	1	1	1	1	1	1257.50	22.00	14	16	10	3	6	1	9	15	9	9	2	12	4
TOTALS CARRIED TO GENERAL SUMMARY	9	2	4		2		2		1	1257.5	22.0	14	16	10	3	6	1	9	15	9	9	2	12	4

NOTE: FUNDING FOR ALL OVERHEAD MOUNTED SIGNING IS TO BE "NATIONAL HIGHWAY FUNDS"

CALCULATED JAG
CHECKED AM

OVERHEAD MOUNTED SIGN SUB-SUMMARY

CLE-275-5.35

383
857

SHEET NO.	631 MERCURY VAPOR LUMINAIRE, TYPE TC-3L20 WITH 175 WATT LAMP EACH	MERCURY VAPOR LUMINAIRE, TYPE TC-3L20 WITH 250 WATT LAMP EACH	REMOVAL OF LUMINAIRE AND REERECTION EACH	REMOVAL OF LUMINAIRE AND DISPOSAL EACH	REMOVAL OF DISCONNECT SWITCH AND DISPOSAL EACH	REMOVAL OF BALLAST AND REERECTION EACH	REMOVAL OF BALLAST AND DISPOSAL EACH	REMOVAL OF SIGN WIRING AND DISPOSAL EACH	REMOVAL OF SIGN SERVICE AND DISPOSAL EACH
416			2	6	2	2	6	4	2
417		2	2	6	2	2	6	4	2
418	2		2	4	1	2	4	3	1
419									
420	2			2	1		2	1	1
421	3		2	4	1	2	4	3	1
422	1		2	2	1	2	2	2	1
423	2			2	1		2	1	1
379	2	2							
TOTALS	12	4	10	26	9	10	26	18	9
TOTALS CARRIED TO GENERAL SUMMARY	12	4	10	26	9	10	26	18	9

NOTE: FUNDING FOR ALL OVERHEAD MOUNTED SIGNING IS TO BE "NATIONAL HIGHWAY FUNDS"

CALCULATED JAG CHECKED AM

OVERHEAD MOUNTED SIGN SUB-SUMMARY

CLE-275-5.35

SHEET NOS.	STATION TO STATION	SIDE	642			644							645						
			EDGE LINE (WHITE)	CENTER LINE, SOLID DOUBLE		EDGE LINE (WHITE)	EDGE LINE (YELLOW)	EDGE LINE (YELLOW) NATL. HWY. FUNDS	LANE LINE	CHANNELIZING LINE	TRANSVERSE LINE (WHITE)		EDGE LINE, TYPE A3 (WHITE)	EDGE LINE, TYPE A3 (YELLOW)	EDGE LINE, TYPE A3 (YELLOW) NATL. HWY. FUNDS	LANE LINE, TYPE A3	CHANNELIZING LINE, TYPE A3	TRANSVERSE LINE, TYPE A3 (WHITE)	
			LIN FT	LIN FT		LIN FT	LIN FT	LIN FT	LIN FT	LIN FT	LIN FT		LIN FT	LIN FT	LIN FT	LIN FT	LIN FT	LIN FT	
	I.R. 275 SB LANES																		
391	280+83 TO 289+36	RT				853													
391	289+36 TO 291+80	RT											244						
391	291+80 TO 297+00	RT				520													
392-393	306+18 TO 326+28	RT				2010													
393	326+28 TO 329+20	RT											292						
393-394	329+20 TO 345+32	RT				1612													
394	345+32 TO 348+00	RT											268						
394	348+00 TO 352+89	RT				489													
395, 397-404	362+29 TO 519+13	RT				15684													
391	280+83 TO 289+43	RT							860										
391	289+43 TO 291+88	RT														245			
391-392	291+88 TO 300+31	RT							843										
392	300+31 TO 303+57	RT														326			
392-393	303+57 TO 326+31	RT							2274										
393	326+31 TO 329+23	RT														292			
393-394	329+23 TO 345+39	RT							1616										
394	345+39 TO 348+07	RT														268			
394-395, 397-404	348+07 TO 519+13	RT							17106										
391	280+83 TO 289+51	RT							868										
391	289+51 TO 291+95	RT														244			
391-392	291+95 TO 300+33	RT							838										
392	300+33 TO 303+59	RT														326			
392-393	303+59 TO 326+33	RT							2274										
393	326+33 TO 329+25	RT														292			
393-394	329+25 TO 345+45	RT							1620										
394	345+45 TO 348+14	RT														269			
394-395, 397-403	348+14 TO 504+73	RT							15659										
391	280+83 TO 289+58	RT					875												
391	289+58 TO 292+03	RT												245					
391-392	292+03 TO 300+36	RT					833												
392	300+36 TO 303+61	RT												325					
392-393	303+61 TO 326+36	RT					2275												
393	326+36 TO 329+28	RT												292					
393-394	329+28 TO 337+10	RT					782												
394	337+10 TO 345+52	RT						842											
394	345+52 TO 348+21	RT													269				
394-395, 397-404	348+21 TO 517+51	RT						16930											
404	517+51 TO 519+13	RT					162												
392	301+52 TO 302+40	RT														88			
392	302+40 TO 303+53	RT/RT															113		
392	303+53 TO 306+18	RT/RT								265									
392	302+40 TO 303+54	RT																41	
392	303+54 TO 306+18	RT									439								
392	302+40 TO 303+54	RT															114		
392	303+54 TO 306+18	RT								264									
394	342+29 TO 345+21	RT								292									
394	345+21 TO 347+93	RT															272		
394	347+93 TO 352+89	RT								496									
394	352+89 TO 355+06	RT							217										
SUBTOTALS CARRIED TO SHEET NO. 388			0	0		2168	4927	17772	44175	1317	439		804	862	269	2350	499	41	

NOTE: FUNDING IS INTERSTATE MAINTENANCE UNLESS INDICATED "NATL. HWY. FUNDS"

CALCULATED JAG
CHECKED AM

PAVEMENT MARKING SUB-SUMMARY

CLE-275-5.35

SHEET NOS.	STATION TO STATION	SIDE	642			644							645						
			EDGE LINE (WHITE)	CENTER LINE, SOLID DOUBLE		EDGE LINE (WHITE)	EDGE LINE (YELLOW)	EDGE LINE (YELLOW) MATL. HWY. FUNDS	LANE LINE	CHANNELIZING LINE	TRANSVERSE LINE (WHITE)		EDGE LINE, TYPE A3 (WHITE)	EDGE LINE, TYPE A3 (YELLOW)	EDGE LINE, TYPE A3 (YELLOW) MATL. HWY. FUNDS	LANE LINE, TYPE A3	CHANNELIZING LINE, TYPE A3	TRANSVERSE LINE, TYPE A3 (WHITE)	
			LIN FT	LIN FT		LIN FT	LIN FT	LIN FT	LIN FT	LIN FT	LIN FT		LIN FT	LIN FT	LIN FT	LIN FT	LIN FT	LIN FT	
	I.R. 275 NB LANES																		
391	280+83 TO 289+96	LT					913												
391	289+96 TO 292+40	LT												244					
391	292+40 TO 292+45	LT					5												
391-392	292+45 TO 300+46	LT						801											
392	300+46 TO 303+71	LT													325				
392-393	303+71 TO 326+48	LT						2277											
393	326+48 TO 329+41	LT													293				
393-394	329+41 TO 345+77	LT						1636											
394	345+77 TO 348+70	LT													293				
394-395, 397-404	348+70 TO 517+51	LT						16881											
404	517+51 TO 519+13	LT					162												
391	280+83 TO 290+03	LT							920										
391	290+03 TO 292+48	LT														245			
391-392	292+48 TO 300+48	LT							800										
392	300+48 TO 303+73	LT														325			
392-393	303+73 TO 326+51	LT							2278										
393	326+51 TO 329+43	LT														292			
393-394	329+43 TO 345+84	LT							1641										
394	345+84 TO 348+77	LT														293			
394-395, 397-404	348+77 TO 508+88	LT							16011										
391	280+83 TO 290+11	LT							928										
391	290+11 TO 292+55	LT														244			
391-392	292+55 TO 300+50	LT							795										
392	300+50 TO 303+76	LT														326			
392-393	303+76 TO 326+53	LT							2277										
393	326+53 TO 329+46	LT														293			
393-394	329+46 TO 345+91	LT							1645										
394	345+91 TO 348+84	LT														293			
394-395, 397-404	348+84 TO 519+13	LT							17029										
391	280+83 TO 290+18	LT				935													
391	290+18 TO 292+63	LT											245						
391-392	292+63 TO 300+54	LT				791													
392	300+54 TO 303+80	LT											326						
392	303+80 TO 313+72	LT				992													
392-393	308+27 TO 325+37	LT				1710													
393	327+87 TO 329+51	LT											164						
393-394	329+51 TO 342+03	LT				1252													
394	346+85 TO 348+96	LT											211						
394-395, 397-404	348+96 TO 519+13	LT				17017													
392	306+59 TO 308+27	LT							168										
392	308+27 TO 311+25	LT								298									
392	311+25 TO 313+72	LT					247												
393	325+37 TO 326+40	LT								103									
393	325+37 TO 326+40	LT									128								
393	325+37 TO 326+40	LT/LT								103									
393	326+40 TO 326+57	LT							17										
393	326+57 TO 329+49	LT														292			
393	329+49 TO 329+95	LT							46										
394	342+03 TO 344+66	LT								263									
394	342+03 TO 344+66	LT									291								
394	342+03 TO 344+66	LT/LT								263									
SUBTOTALS CARRIED TO SHEET NO. 388			0	0		22697	1327	21595	44555	1030	419		946	244	911	2603	0	0	

NOTE: FUNDING IS INTERSTATE MAINTENANCE UNLESS INDICATED "NATL. HWY. FUNDS"

CALCULATED JAG
CHECKED AM

PAVEMENT MARKING SUB-SUMMARY

CLE-275-5.35

| SHEET NOS. | STATION TO STATION | SIDE | 642 | | | 644 | | | | | | | 645 | | | | | | |

| SHEET NOS. | STATION TO STATION | SIDE | 642 | | | 644 | | | | | | | 645 | | | | | | |

SHEET NO.	STATION TO STATION	SIDE	SPACING (FT.)	202	620					
				Raised Pav't. Marker Removed for Storage, As per Plan	Raised Pavement Marker 1 Way (White)	Raised Pavement Marker 1 Way (Yellow)	Raised Pavement Marker 1 Way (Yellow) NATL. HWY. FUNDS	Raised Pavement Marker 2 Way (White-Red)	Raised Pavement Marker 2 Way (Yellow-Red)	Raised Pavement Marker 2 Way (Yellow-Yellow)
				EACH	EACH	EACH	EACH	EACH	EACH	EACH
	IR 275 (NORTHBOUND)									
391-395, 397-404	281+21 - 518+19	LT	120	198	198					
391-395, 397-404	281+22 - 508+63	LT	120	190	190					
391	281+37 - 291+78	LT	80	14		14				
391-395, 397-404	292+58 - 517+21	LT	80	281			281			
404	518+01 - 518+81	LT	80	2		2				
392	306+84 - 308+04	LT	120	2	2					
393	325+61 - 326+41	LT	40	3				3		
393	327+29 - 329+70	LT	120	3	3					
394	342+27 - 344+67	LT	40	7				7		
394	345+15 - 346+35	LT	120	2	2					
	IR 275 (SOUTHBOUND)									
391-393	281+38 - 336+48	RT	80	69		69				
394-395, 397-404	337+28 - 517+39	RT	80	226			226			
404	518+19 - 519+00	RT	80	2		2				
391-395, 397-403	281+23 - 504+08	RT	120	186	186					
391-395, 397-404	281+24 - 518+52	RT	120	198	198					
392	301+77	RT	(120)	1	1					
392	302+39 - 305+99	RT	40	10				10		
394	353+54 - 354+74	RT	120	2	2					
	COLLECTOR-DISTRIBUTOR									
393-394	325+15 - 341+90	RT	80	22					22	
393	324+64 - 329+44	RT	120	5	5					
394	342+49 - 352+89	RT	40	27				27		
394	342+28	RT/RT	(40)	1				1		
394	342+93	RT/RT	(120)	1	1					
	RAMP A									
407	302+78 A - 305+98 A	LT	40	9				9		
407-408, 393	306+78 A - 324+39 A	LT	80	23					23	
	315+91 A - 316+32 A	RT	21	3				3		
	RAMP B									
407	316+10 B - 316+30 B	LT	20	2				2		
	RAMP C									
409	314+22 C - 323+20 C	LT	80	13					13	
409	323+59 C - 324+38 C	LT	40	3				3		
	RAMP D									
392	308+27 IR 275 - 311+07 IR 275	LT	40	8				8		
392	311+47 IR 275 - 313+07 IR 275	LT	80	3					3	
392, 410	313+87 D - 327+40 D	RT	80	18					18	
410	328+39 D - 332+31 D	RT	80	6					6	
410, 406	333+10 D - 334+29 D	RT	40	4				4		
	RAMP E									
411	125+76 E - 126+16 E	RT	40	2				2		
SUBTOTAL				1546	788	87	507	79	85	0

SHEET NO.	STATION TO STATION	SIDE	SPACING (FT.)	202	620					
				Raised Pav't. Marker Removed for Storage, As per Plan	Raised Pavement Marker 1 Way (White)	Raised Pavement Marker 1 Way (Yellow)	Raised Pavement Marker 1 Way (Yellow) NATL. HWY. FUNDS	Raised Pavement Marker 2 Way (White-Red)	Raised Pavement Marker 2 Way (Yellow-Red)	Raised Pavement Marker 2 Way (Yellow-Yellow)
				EACH	EACH	EACH	EACH	EACH	EACH	EACH
	RAMP G									
412	330+37 G - 330+77 G	LT	40	2				2		
412	331+55 G - 343+68 G	LT	80	17					17	
	RAMP H									
413	324+96 H - 341+53 H	RT	80	22					22	
413, 394	342+33 H - 344+32 H	RT	40	6				6		
	USR 50J									
406	118+68 - 120+28	LT	40	5				5		
	TR 211									
414	45+40 - 46+20	CL	40	3						3
414	46+40 - 47+60	CL	20	7						7
414	47+80 - 52+20	CL	40	12						12
414	52+40 - 53+60	CL	20	7						7
414	53+80 - 54+60	CL	40	3						3
SUBTOTAL				1546	788	87	507	79	85	0
SUBTOTAL				84	0	0	0	13	39	32
TOTAL				1630	788	87	507	92	124	32
TOTALS CARRIED TO GENERAL SUMMARY				1630	1630					

NOTE: FUNDING IS INTERSTATE MAINTENANCE UNLESS INDICATED "NATL. HWY. FUNDS"

CALCULATED JAG
CHECKED AM

RAISED PAVEMENT MARKERS

CLE-275-5.35

389
857

SHEET NO.	STATION TO STATION	SIDE	SPACING (FT.)	620 Delineator, Type C Post Mounted (White) EACH	620 Delineator, Type C Bracket Mounted (White) EACH	620 Delineator, Type D Post Mounted (Yellow) EACH	
	IR 275 (NORTHBOUND)						
391-392	* 282+45.06 - 299+16.89	LT/LT	400	5			
392	299+16.89 - 303+16.89	LT/LT	400		1		
392	303+16.89 - 313+16.89	LT/LT	200	5			
392-393	* 315+16.89 - 323+16.89	LT/LT	400	3			
393	329+16.89	LT/LT	--		1		
393	329+16.89 - 331+16.89	LT/LT	200	1			
393-394	331+16.89 - 339+16.89	LT/LT	400	2			
394	347+17.02	LT/LT	--		1		
394	347+17.02 - 351+16.89	LT/LT	200	2			
394-395	351+16.89 - 367+16.89	LT/LT	400	4			
395, 397-404	* 375+16.89 - 515+17.74	LT/LT	400	36			
	IR 275 (SOUTHBOUND)						
391	* 282+45.06 - 286+45.06	RT/RT	400	2			
391	286+45.06 - 290+45.06	RT/RT	400		1		
391	290+45.06 - 293+45.06	RT/RT	300	1			
392-393	* 307+16.89 - 319+16.89	RT/RT	400	4			
393-394	319+16.89 - 339+16.89	RT/RT	400		5		
394-395	* 343+16.89 - 363+16.89	RT/RT	200	11			
395	363+16.89 - 367+16.89	RT/RT	400	1			
395, 397-404	* 375+16.89 - 515+17.74	RT/RT	400	36			
	COLLECTOR-DISTRIBUTOR						
393	328+03.37 IR 275	RT	--		1		
393-394	* 331+16.89 IR 275 - 339+16.89 IR 275	RT	200	5			
	RAMP A						
407-408	* 297+00.00 A - 322+98.63 A	RT	200	14			
407	* 311+90.99 A - 315+93.29 A	LT	200			3	
	RAMP C						
409	* 312+78.94 C - 313+60.06 C	RT	80	2			
409	313+60.06 C - 322+96.75 C	RT	50	18			
409	322+96.75 C - 323+99.76 C	RT	100	1			
409	323+99.76 C - 326+00.65 C	RT	200	1			
409	* 313+60.06 C - 323+24.43 C	LT	50			22	
	RAMP D						
392, 410	313+16.89 IR 275 - 319+52.78 D	LT	90	7			
410	319+52.78 D - 325+51.59 D	LT	200	3			
410	325+51.59 D - 327+11.59 D	LT	160	1			
410	327+11.59 D - 331+96.82 D	LT	80	6			
410	331+96.82 D - 333+58.00 D	LT	160	1			
410	* 315+13.79 D - 319+53.94 D	RT	90			6	
410	319+53.94 D - 323+56.19 D	RT	200			2	
410	* 328+85.87 D - 331+96.72 D	RT	80			5	
	RAMP E						
411	* 125+25.73 E - 127+28.49 E	LT	200	1	1		
411	125+25.73 E	RT	--			1	
	* Delineator counted at beginning station						
SUBTOTAL				173	11	39	

SHEET NO.	STATION TO STATION	SIDE	SPACING (FT.)	620 Delineator, Type C Post Mounted (White) EACH	620 Delineator, Type C Bracket Mounted (White) EACH	620 Delineator, Type D Post Mounted (Yellow) EACH	
	RAMP G						
412	* 328+93.34 G - 330+75.03 G	RT	90	3			
412	330+75.03 G - 343+63.34 G	RT	50	25			
412	343+63.34 G - 344+65.98 G	RT	100	1			
412	* 331+25.58 G - 343+84.11 G	LT	50			28	
	RAMP H						
406, 413	* 122+97.79 USR 50J - 329+50.74 H	LT	90	8			
413	329+50.74 H - 333+51.31 H	LT	200	2			
413	333+51.31 H - 335+12.13 H	LT	160	1			
413	335+12.13 H - 341+59.18 H	LT	80	8			
413	341+59.18 H - 343+19.55 H	LT	160	1			
413, 394	343+19.55 H - 345+20.52 H	LT	200	1			
413	* 324+80.81 H - 330+98.48 H	RT	90			8	
413	330+98.48 H - 332+98.48 H	RT	200			1	
413	332+98.48 H - 334+58.15 H	RT	160			1	
413	334+58.15 H - 341+59.18 H	RT	80			9	
	TR 211						
414	* 45+77.94 - 46+81.50	RT	100	2			
414	46+81.50 - 47+90.90	RT	50	2			
414	47+90.90 - 48+90.88	RT	100		1		
414	48+90.88 - 50+90.88	RT	200		1		
414	50+90.88 - 51+90.87	RT	100	1			
414	* 52+84.39 - 53+76.35	RT	50	3			
414	* 45+72.28 - 46+69.83	LT	100	2			
414	46+69.83 - 48+09.92	LT	50	3			
414	48+09.92 - 49+09.91	LT	100		1		
414	49+09.91 - 51+09.91	LT	200		1		
414	51+09.91 - 52+10.51	LT	100	1			
414	52+10.51 - 53+75.92	LT	50	3			
	AT HEAD OF E-98 ANCHORS						
	IR 275 (NORTHBOUND)						
398	416+07.93	LT/LT	--	1			
401	474+98.32	LT/LT	--	1			
403	488+36.40	LT/LT	--	1			
	IR 275 (SORTHBOUND)						
398	399+82.91	RT/RT	--	1			
399	424+91.00	RT/RT	--	1			
401	472+63.96	RT/RT	--	1			
402	483+31.57	RT/RT	--	1			
404	508+36.60	RT/RT	--	1			
	RAMP A						
407	313+02.09 A	LT	--			1	
	RAMP D						
410	323+07.11 D	LT	--	1			
	TR 211						
414	54+34.86	LT	--	1			
SUBTOTAL				173	11	39	
SUBTOTAL				77	4	48	
TOTALS CARRIED TO GENERAL SUMMARY				250	15	87	

NOTE: FUNDING FOR ALL DELINEATORS IS TO BE INTERSTATE MAINTENANCE.

CALCULATED JAG
CHECKED AW

DELINEATORS - FLEXIBLE MOUNTED

CLE-275-5.35

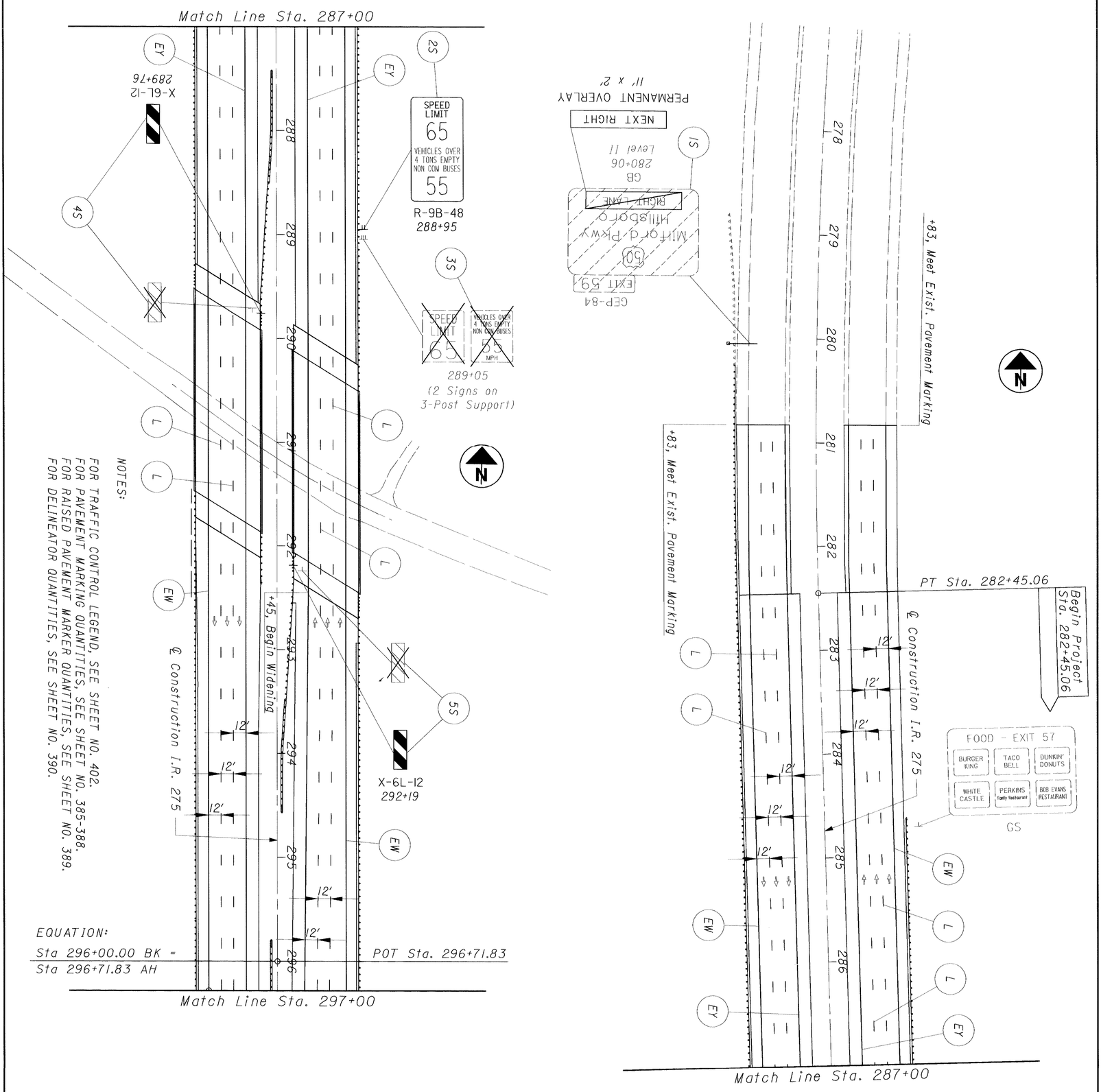

REF NO.	STATION	SIDE	CODE	SIZE (INCHES)	630											
					GROUND MOUNTED SUPPORT, NO. 2 POST	GROUND MOUNTED SUPPORT, W6 x 9 BEAM	BREAK-AWAY BEAM CONNEC-TION	SIGN, FLAT SHEET, TYPE G		GROUND MOUNTED BEAM SUPPORT FOUNDA-TION	REMOVAL OF GROUND MOUNTED SIGN AND STORAGE	REMOVAL OF GROUND MOUNTED POST SUPPT. & DISPOSAL				
					LIN FT	LIN FT	EACH	SQ FT		EACH	EACH	EACH				
1S	SEE SH. NO. 416															
2S	288+95	LT	R-9B-48	48 x 96		22.6/21.4	2	32.00		2						
3S	289+05	LT									2	3				
4S	289+76	RT	X-6L-12	12 x 36	10.9			3.00			1	1				
5S	292+19	LT	X-6L-12	12 x 36	10.9			3.00			1	1				
TOTALS CARRIED TO GROUND MOUNTED SIGN SUB-SUMMARY					21.8	44.0	2	38.00		2	4	5				

391
857

CLE-275-5.35

TRAFFIC CONTROL PLAN
I.R. 275 - STA. 280+05.57 TO STA. 297+00

CALCULATED JAG
CHECKED AM

0 50
25 100
HORIZONTAL SCALE IN FEET

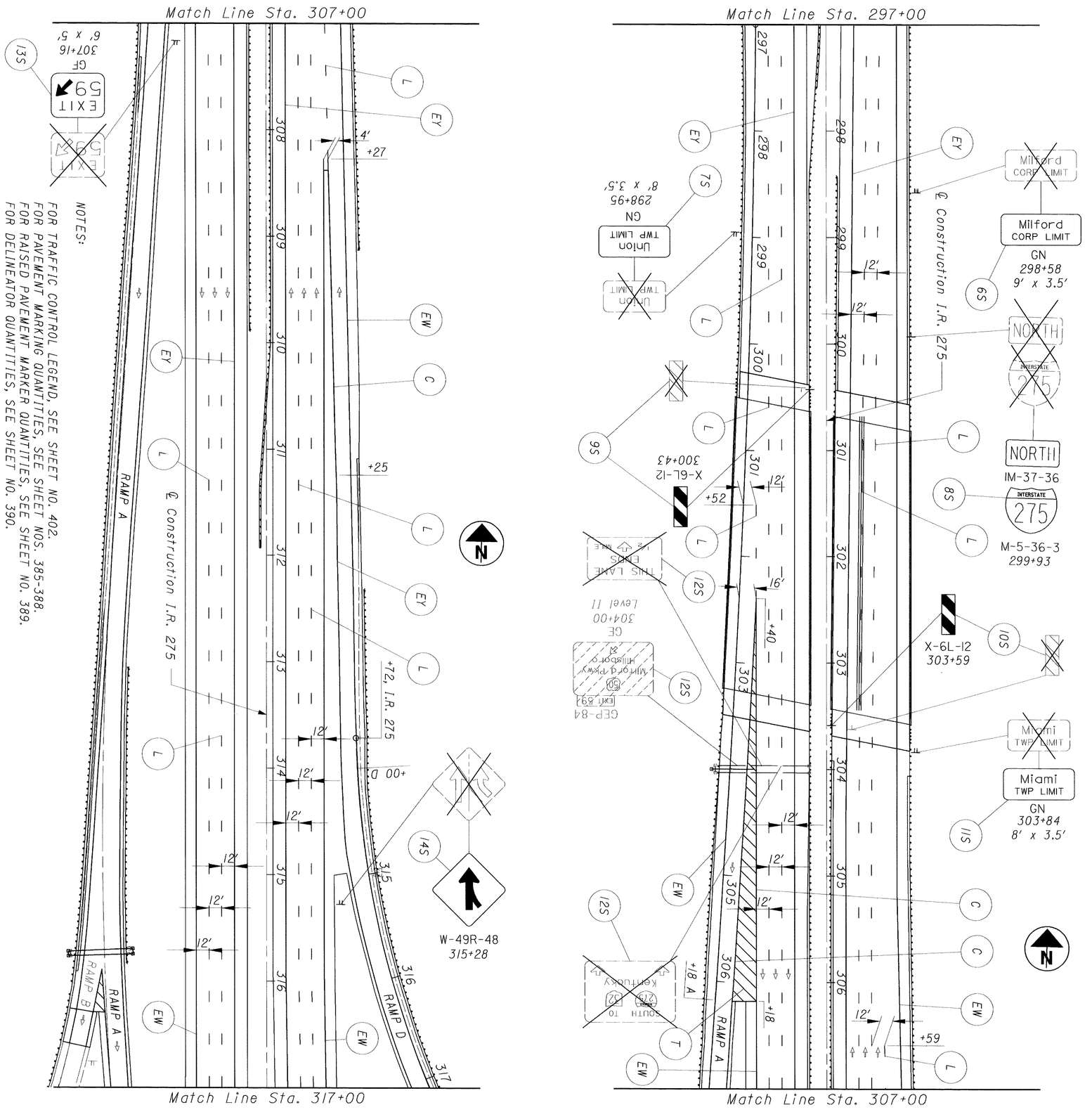

NOTES:

FOR TRAFFIC CONTROL LEGEND, SEE SHEET NO. 402.
FOR PAVEMENT MARKING QUANTITIES, SEE SHEET NOS. 385-388.
FOR RAISED PAVEMENT MARKER QUANTITIES, SEE SHEET NO. 389.
FOR DELINEATOR QUANTITIES, SEE SHEET NO. 390.

REF NO.	STATION	SIDE	CODE	SIZE (INCHES)	630											
					GROUND MOUNTED SUPPORT, NO. 2 POST	GROUND MOUNTED SUPPORT, NO. 3 POST	GROUND MOUNTED SUPPORT, NO. 6 POST	GROUND MOUNTED SUPPORT, S4 x 7.7 BEAM	GROUND MOUNTED SUPPORT, W6 x 9 BEAM	BREAK-AWAY BEAM CONNEC-TION	SIGN, FLAT SHEET, TYPE G	SIGN, EXTRU-SHEET, TYPE G	GROUND MOUNTED BEAM SUPPORT FOUNDA-TION	REMOVAL OF GROUND MOUNTED SIGN AND STORAGE	REMOVAL OF GROUND MOUNTED POST SUPPT. & DISPOSAL	REMOVAL OF GROUND MOUNTED BEAM SUPPT. & DISPOSAL
					LIN FT	LIN FT	LIN FT	LIN FT	LIN FT	EACH	SQ FT	SQ FT	EACH	EACH	EACH	EACH
6S	298+58	LT	GN	108 x 42					21.0/18.5			31.50	2	1	3	
7S	298+95	RT	GN	96 x 42					18.3/20.6			28.00	2	1	2	
8S	299+93	LT	IM-37-36	36 x 18			17.9				4.50			1	1	
			M-5-36-3	48 x 36							12.00			1		
9S	300+43	RT	X-6L-12	12 x 36	10.9						3.00			1	1	
10S	303+59	LT	X-6L-12	12 x 36	10.9						3.00			1	1	
11S	303+84	LT	GN	96 x 42					19.4/17.1			28.00	2	1	2	
12S	SEE SH. NO. 416															
13S	307+16	RT	GF	72 x 60				17.1/17.2		2		30.00	2	1		2
14S	315+28	LT	W-49R-48	48 x 48		15.3/15.3					16.00			1	2	
TOTALS CARRIED TO GROUND MOUNTED SIGN SUB-SUMMARY					21.8	30.6	17.9	34.3	114.9	2	38.50	117.50	8	9	12	2

392
857

CLE-275-5.35

TRAFFIC CONTROL PLAN
I.R. 275 - STA. 297+00 TO STA. 317+00

CALCULATED JAG
CHECKED AM

0 50
25 100
HORIZONTAL SCALE IN FEET

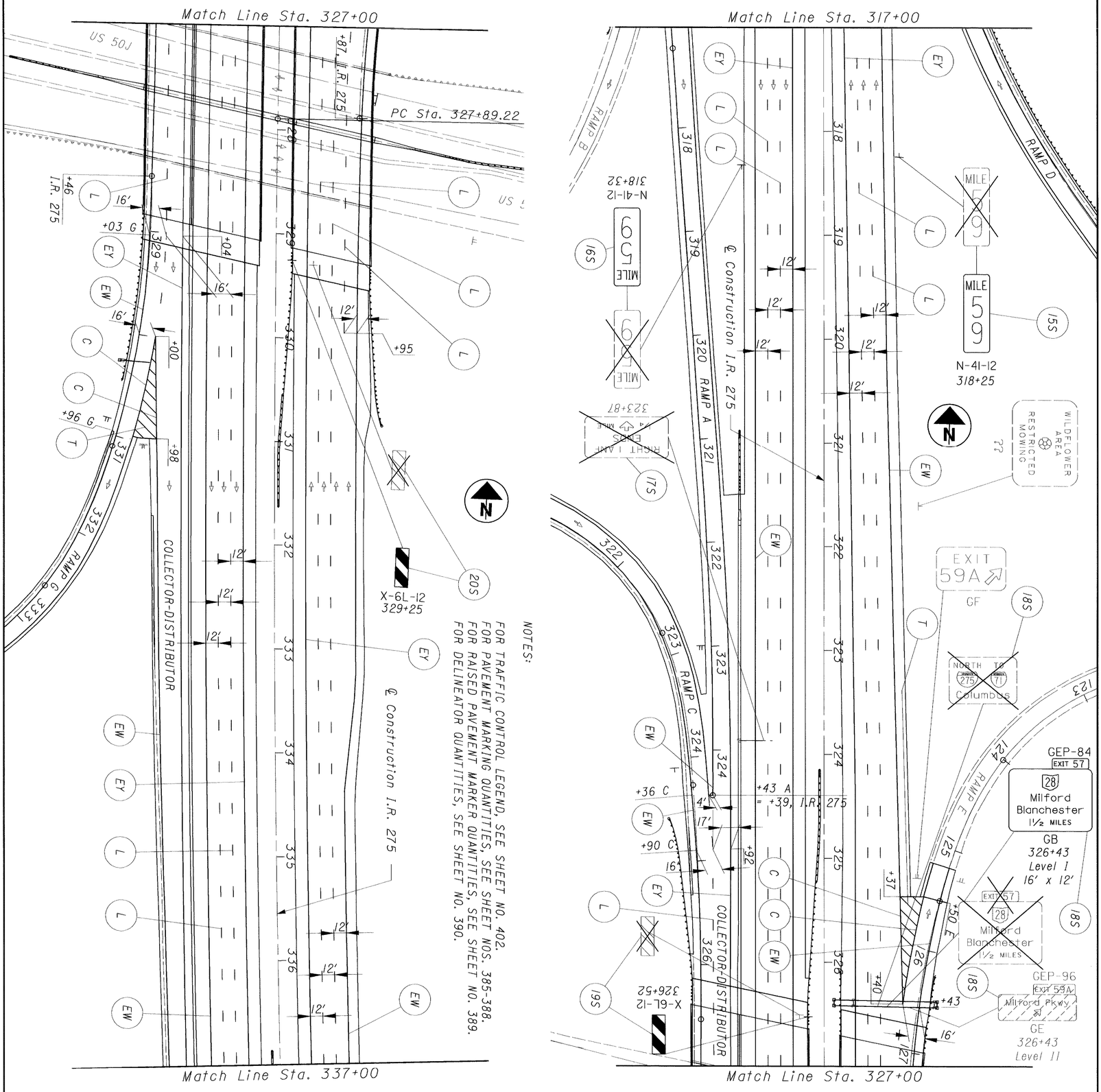

NOTES:

FOR TRAFFIC CONTROL LEGEND, SEE SHEET NO. 402.
FOR PAVEMENT MARKING QUANTITIES, SEE SHEET NOS. 385-388.
FOR RAISED PAVEMENT MARKER QUANTITIES, SEE SHEET NO. 389.
FOR DELINEATOR QUANTITIES, SEE SHEET NO. 390.

REF NO.	STATION	SIDE	CODE	SIZE (INCHES)	630										
					GROUND MOUNTED SUPPORT, NO. 2 POST	SIGN, FLAT SHEET, TYPE G	REMOVAL OF GROUND MOUNTED SIGN AND STORAGE	REMOVAL OF GROUND MOUNTED POST SUPPT. & DISPOSAL							
					LIN FT	SQ FT	EACH	EACH							
15S	318+25	LT	N-41-12	12 x 36	11.7	3.00	1	1							
16S	318+32	RT	N-41-12	12 x 36	11.7	3.00	1	1							
17S	SEE SH. NO. 416														
18S	SEE SH. NO. 417														
19S	326+52	RT	X-6L-12	12 x 36	10.9	3.00	1	1							
20S	329+25	LT	X-6L-12	12 x 36	10.9	3.00	1	1							
TOTALS CARRIED TO GROUND MOUNTED SIGN SUB-SUMMARY					45.2	12.00	4	4							

393
857

CLE-275-5.35

TRAFFIC CONTROL PLAN
I.R. 275 - STA. 317+00 TO STA. 337+00

CALCULATED JAG
CHECKED AM

0 50
25 100
HORIZONTAL SCALE IN FEET

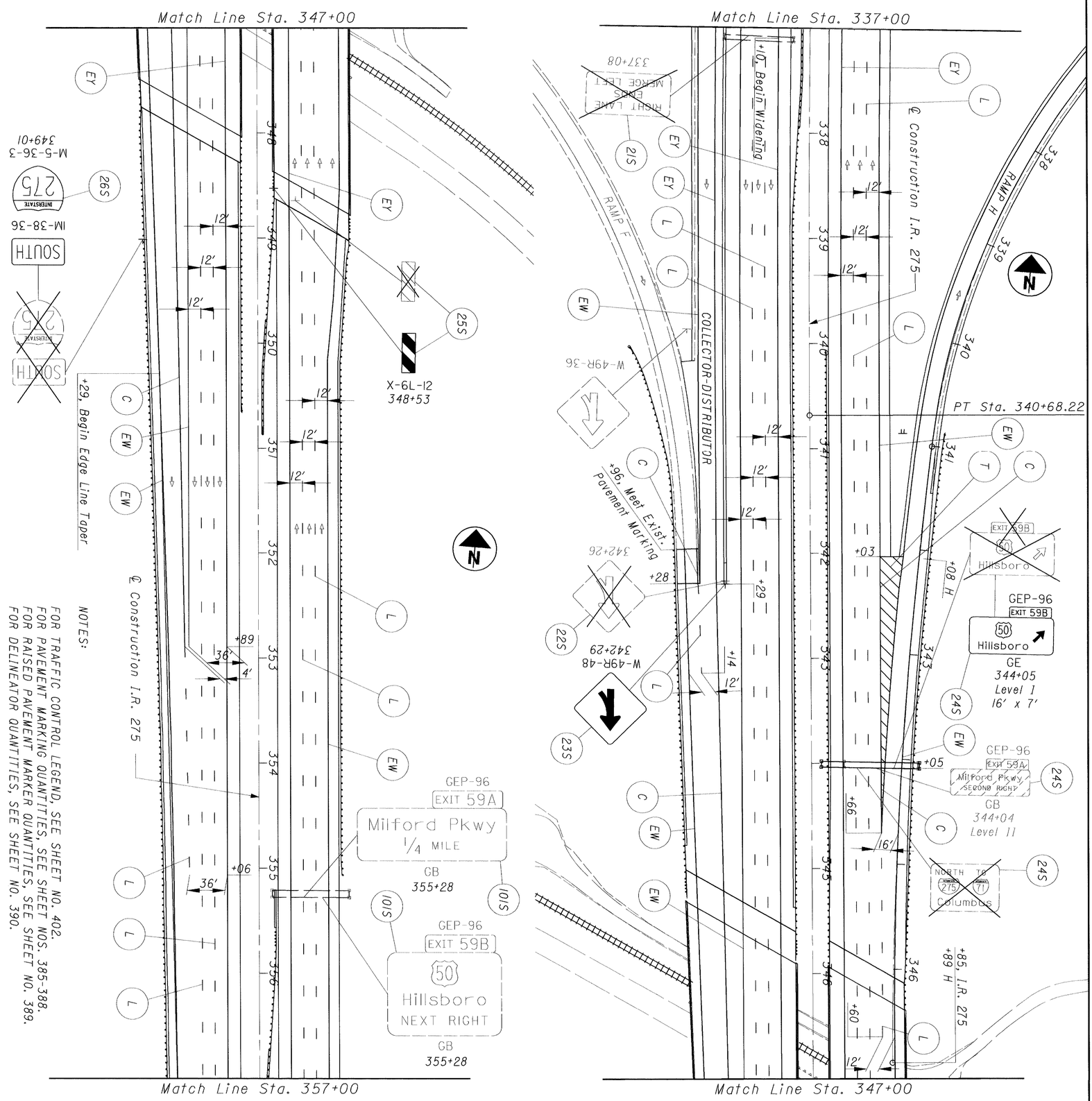

REF NO.	STATION	SIDE	CODE	SIZE (INCHES)	630											
					GROUND MOUNTED SUPPORT, NO. 2 POST	GROUND MOUNTED SUPPORT, NO. 4 POST (TYPE S)	GROUND MOUNTED SUPPORT, NO. 6 POST	SIGN, FLAT SHEET, TYPE G	REMOVAL OF GROUND MOUNTED SIGN AND STORAGE	REMOVAL OF GROUND MOUNTED POST SUPPT. & DISPOSAL						
					LIN FT	LIN FT	LIN FT	SQ FT	EACH	EACH						
21S	SEE SH. NO. 417															
22S	342+26	RT							1	1						
23S	342+29	RT	W-49R-48	48 x 48		14.9		16.00								
24S	SEE SH. NO. 418															
25S	348+53	LT	X-6L-12	12 x 36	10.9			3.00	1	1						
26S	349+01	RT	IM-38-36	36 x 18			17.8	4.50	1	1						
			M-5-36-3	48 x 36				12.00	1							
10IS	SEE SH. NO. 379															
TOTALS CARRIED TO GROUND MOUNTED SIGN SUB-SUMMARY					10.9	14.9	17.8	35.50	4	3						

CLE-275-5.35

TRAFFIC CONTROL PLAN
I.R. 275 - STA. 337+00 TO STA. 357+00

CALCULATED JAG
CHECKED AM

0 50
25 100
HORIZONTAL SCALE IN FEET

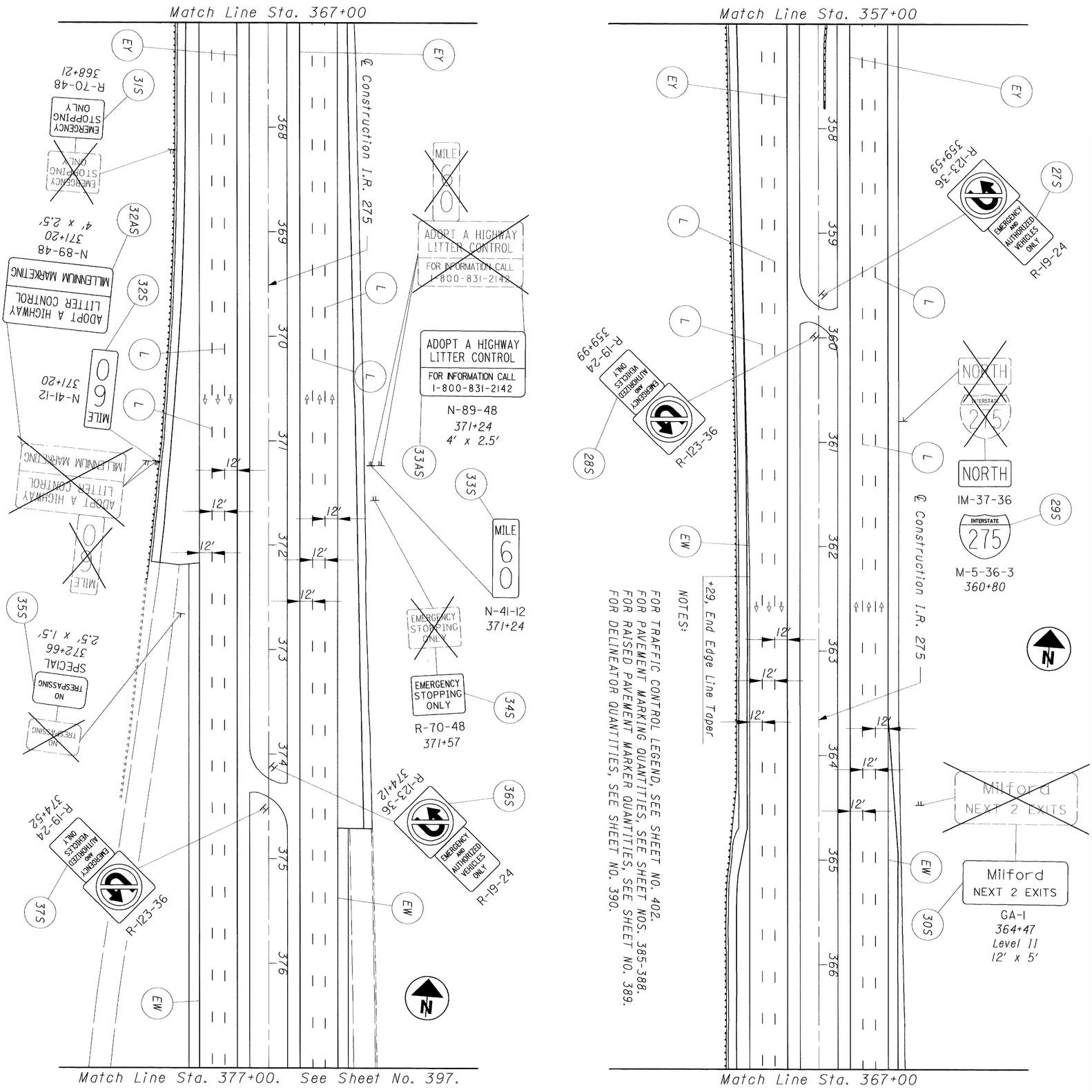

NOTES:

FOR TRAFFIC CONTROL LEGEND, SEE SHEET NO. 402.
FOR PAVEMENT MARKING QUANTITIES, SEE SHEET NOS. 385-388.
FOR RAISED PAVEMENT MARKER QUANTITIES, SEE SHEET NO. 389.
FOR DELINEATOR QUANTITIES, SEE SHEET NO. 390.

REF NO.	STATION	SIDE	CODE	SIZE (INCHES)	630											
				FOR QUANTITIES SEE NEXT SHEET.												
TOTALS CARRIED TO GROUND MOUNTED SIGN SUB-SUMMARY																

395
857

CLE-275-5.35

TRAFFIC CONTROL PLAN
I.R. 275 - STA. 357+00 TO STA. 377+00

CALCULATED JAG
CHECKED AM

0 50
25 100
HORIZONTAL SCALE IN FEET

REF NO.	STATION	SIDE	CODE	SIZE (INCHES)	630											
					GROUND MOUNTED SUPPORT, NO. 2 POST	GROUND MOUNTED SUPPORT, NO. 3 POST	GROUND MOUNTED SUPPORT, NO. 4 POST (TYPE S)	GROUND MOUNTED SUPPORT, W10 x 12 BEAM	BREAK-AWAY BEAM CONNEC-TION	SIGN, FLAT SHEET, TYPE G	SIGN, EXTRU-SHEET, TYPE G	GROUND MOUNTED BEAM SUPPORT FOUNDA-TION	REMOVAL OF GROUND MOUNTED SIGN AND STORAGE	REMOVAL OF GROUND MOUNTED MAJOR SIGN AND STORAGE	REMOVAL OF GROUND MOUNTED POST SUPPT. & DISPOSAL	
					LIN FT	LIN FT	LIN FT	LIN FT	EACH	SQ FT	SQ FT	EACH	EACH	EACH	EACH	
27S	359+59	LT	R-123-36	36 x 36		15.3				9.00						
			R-19-24	24 x 30						5.00						
28S	359+99	RT	R-19-24	24 x 30		15.3				5.00						
			R-123-36	36 x 36						9.00						
29S	360+80	LT	IM-37-36	36 x 18			16.0			4.50			1		1	
			M-5-36-3	48 x 36						12.00			1			
30S	364+47	LT	GA-1	144 x 60				20.4/19.6	2		60.00	2		1	2	
31S	368+21	RT	R-70-48	48 x 36		15.6/16.8				12.00			1		2	
32S	371+20	RT	N-41-12	12 x 36	11.4					3.00						
32AS	371+20	RT	N-89-48	48 x 30		14.6/15.8				10.00			2		2	
33S	371+24	LT	N-41-12	12 x 36	11.1					3.00						
33AS	371+24	LT	N-89-48	48 x 30	13.4/13.9					10.00			2		2	
34S	371+57	LT	R-70-48	48 x 36		15.5/15.0				12.00			1		2	
35S	372+66	RT	SPECIAL	30 x 18	11.0					3.75			1		1	
36S	374+12	LT	R-123-36	36 x 36		15.3				9.00						
			R-19-24	24 x 30						5.00						
37S	374+52	RT	R-19-24	24 x 30		15.0				5.00						
			R-123-36	36 x 36						9.00						
TOTALS CARRIED TO GROUND MOUNTED SIGN SUB-SUMMARY					60.8	154.2	16.0	40.0	2	126.25	60.00	2	9	1	12	

CALCULATED JAC
CHECKED AM

GROUND MOUNTED SIGN QUANTITIES
I.R. 275 - STA. 357+00 TO STA. 377+00

CLE-275-5.35

396
857

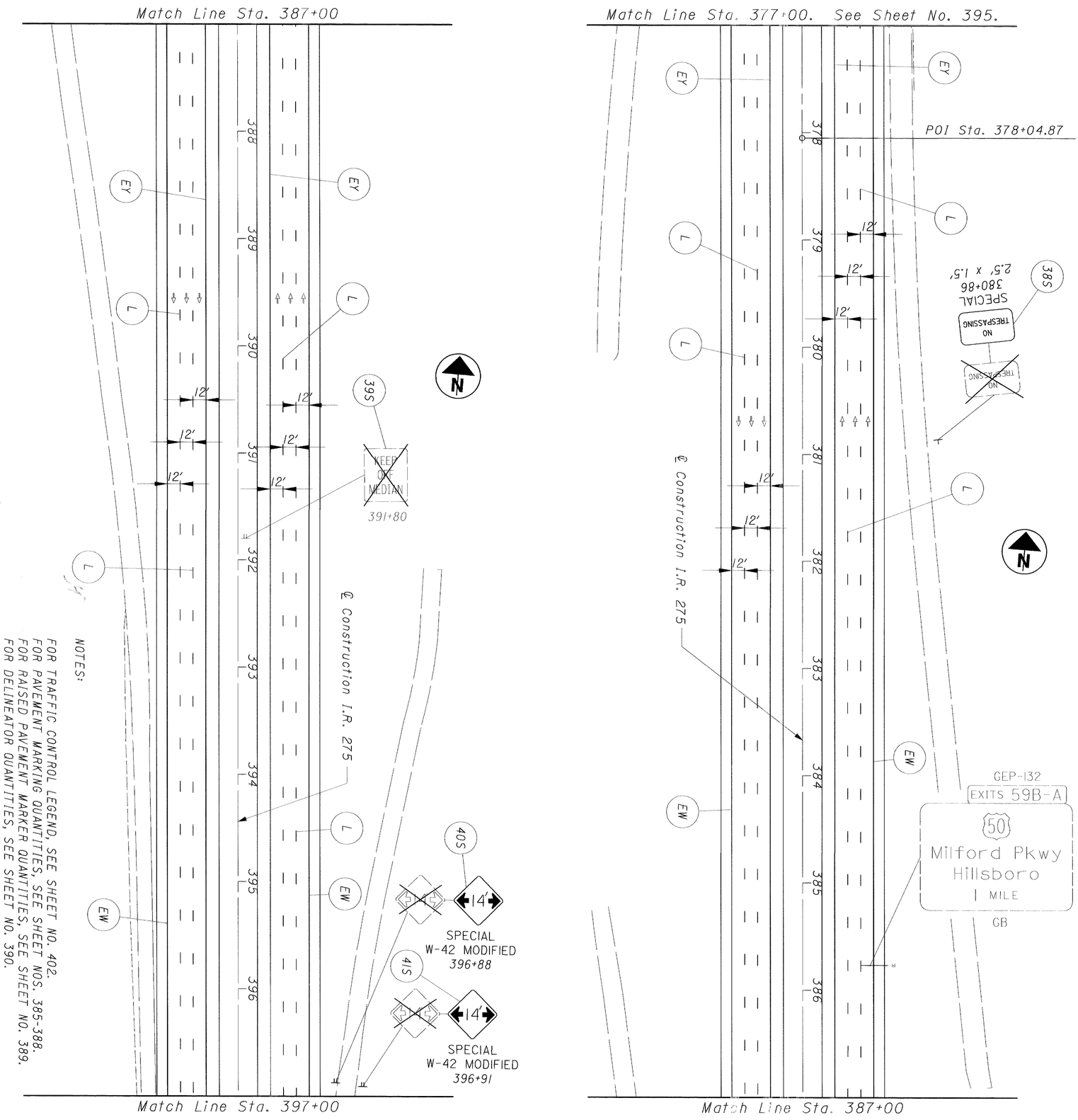

NOTES:

FOR TRAFFIC CONTROL LEGEND, SEE SHEET NO. 402.
FOR PAVEMENT MARKING QUANTITIES, SEE SHEET NOS. 385-388.
FOR RAISED PAVEMENT MARKER QUANTITIES, SEE SHEET NO. 389.
FOR DELINEATOR QUANTITIES, SEE SHEET NO. 390.

REF NO.	STATION	SIDE	CODE	SIZE (INCHES)	630 GROUND MOUNTED SUPPORT, NO. 2 POST	GROUND MOUNTED SUPPORT, NO. 3 POST	SIGN, FLAT SHEET, TYPE G	REMOVAL OF GROUND MOUNTED SIGN AND STORAGE	REMOVAL OF GROUND MOUNTED POST SUPPT. & DISPOSAL
					LIN FT	LIN FT	SQ FT	EACH	EACH
38S	380+86	LT	SPECIAL	30 x 18	12.2		3.75	1	1
39S	391+80	LT						1	2
40S	396+88	LT	W-42 MODIFIED	48 x 48		12.3/12.1	16.00	1	2
41S	396+91	LT	W-42 MODIFIED	48 x 48		12.2/12.1	16.00	1	2
TOTALS CARRIED TO GROUND MOUNTED SIGN SUB-SUMMARY					12.2	48.7	35.75	4	7

397
857

CLE-275-5.35

TRAFFIC CONTROL PLAN
I.R. 275 - STA. 377+00 TO STA. 397+00

CALCULATED JAG
CHECKED AM

0 50
25 100
HORIZONTAL SCALE IN FEET

NOTES:
FOR TRAFFIC CONTROL LEGEND, SEE SHEET NO. 402.
FOR PAVEMENT MARKING QUANTITIES, SEE SHEET NOS. 385-388.
FOR RAISED PAVEMENT MARKER QUANTITIES, SEE SHEET NO. 389.
FOR DELINEATOR QUANTITIES, SEE SHEET NO. 390.

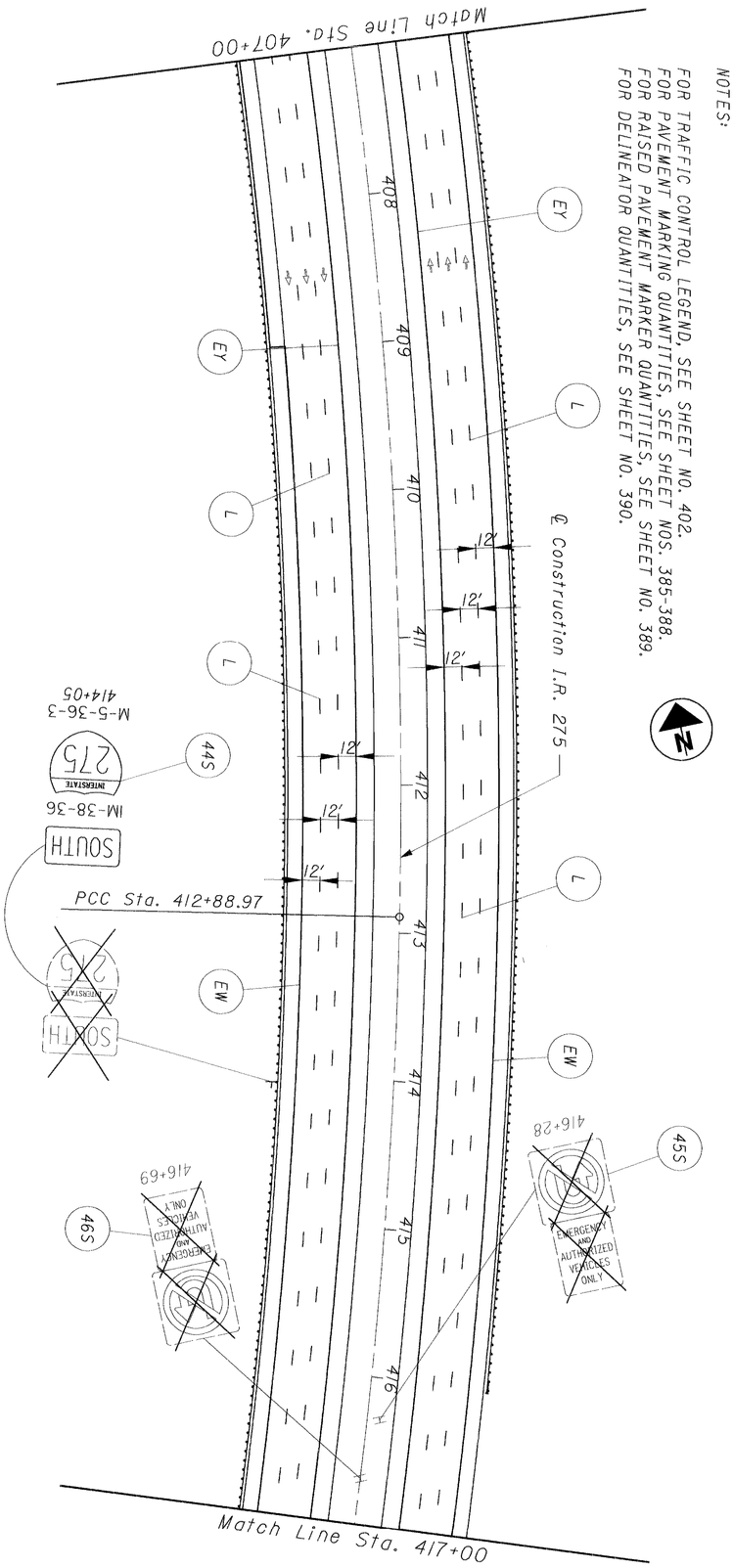

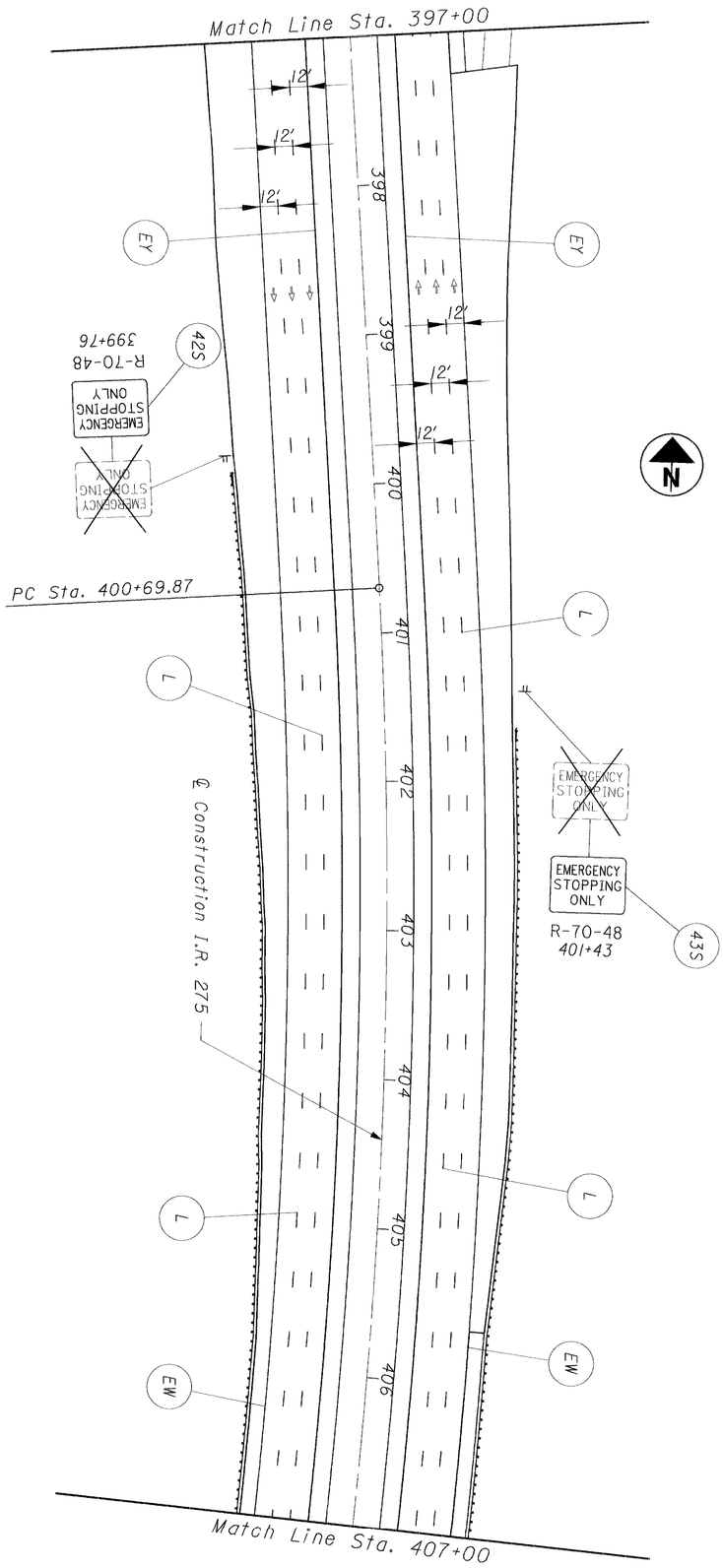

REF NO.	STATION	SIDE	CODE	SIZE (INCHES)	630 GROUND MOUNTED SUPPORT, NO. 2 POST	630 GROUND MOUNTED SUPPORT, NO. 3 POST	630 GROUND MOUNTED SUPPORT, NO. 4 POST	630 SIGN, FLAT SHEET, TYPE G	630 REMOVAL OF GROUND MOUNTED SIGN AND STORAGE	630 REMOVAL OF GROUND MOUNTED POST SUPPT. & DISPOSAL
					LIN FT	LIN FT	LIN FT	SQ FT	EACH	EACH
42S	399+76	RT	R-70-48	48 x 36		13.9/14.3		12.00	1	2
43S	401+43	LT	R-70-48	48 x 36	13.4/13.5			12.00	1	2
44S	414+05	RT	IM-38-36	36 x 18			17.4	4.50	1	1
			M-5-36-3	48 x 36				12.00	1	
45S	416+28	LT							2	1
46S	416+69	RT							2	1
TOTALS CARRIED TO GROUND MOUNTED SIGN SUB-SUMMARY					26.9	28.2	17.4	40.50	8	7

398 857

CLE-275-5.35

TRAFFIC CONTROL PLAN
I.R. 275 - STA. 397+00 TO STA. 417+00

CALCULATED JAG
CHECKED AM

0 50
25 100
HORIZONTAL SCALE IN FEET

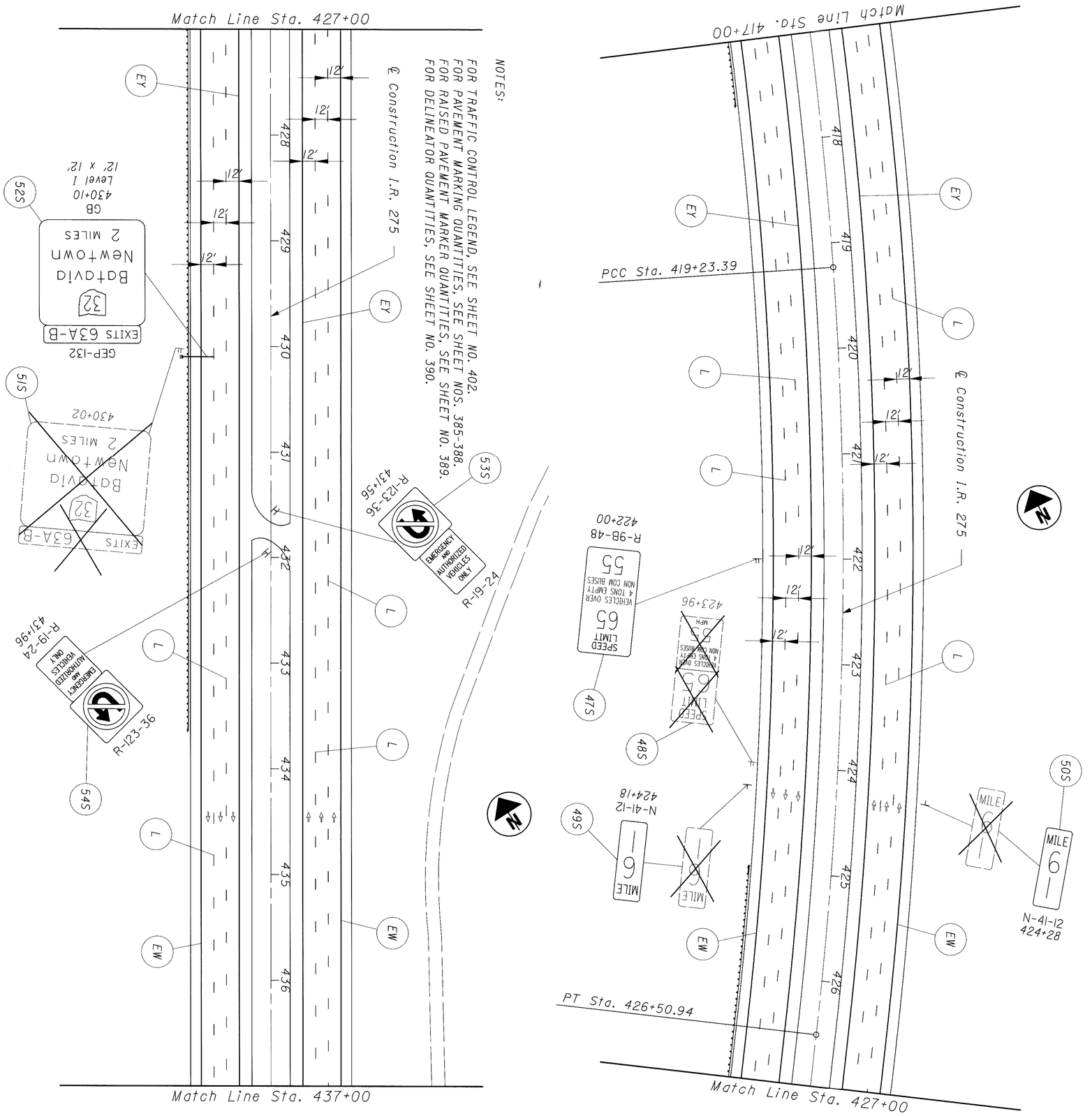

REF NO.	STATION	SIDE	CODE	SIZE (INCHES)	630										
					GROUND MOUNTED SUPPORT, NO. 2 POST	GROUND MOUNTED SUPPORT, NO. 3 POST	GROUND MOUNTED SUPPORT, W6 x 9 BEAM	BREAK-AWAY BEAM CONNEC-TION	SIGN, FLAT SHEET, TYPE G		GROUND MOUNTED BEAM SUPPORT FOUNDA-TION	REMOVAL OF GROUND MOUNTED SIGN AND STORAGE	REMOVAL OF GROUND MOUNTED MAJOR SIGN AND STORAGE	REMOVAL OF GROUND MOUNTED POST SUPPT. & DISPOSAL	REMOVAL OF GROUND MOUNTED BEAM SUPPT. & DISPOSAL	
					LIN FT	LIN FT	LIN FT	EACH	SQ FT		EACH	EACH	EACH	EACH	EACH	
47S	422+00	RT	R-9B-48	48 x 96			20.6/21.2	2	32.00		2					
48S	423+96	RT										2		2		
49S	424+18	RT	N-41-12	12 x 36	12.2				3.00			1		1		
50S	424+28	LT	N-41-12	12 x 36	11.1				3.00			1		1		
51S	430+02	RT										1	1		2	
52S	SEE SH. NO. 419															
53S	431+56	LT	R-123-36	36 x 36		15.3			9.00							
			R-19-24	24 x 30					5.00							
54S	431+96	RT	R-19-24	24 x 30		15.3			5.00							
			R-123-36	36 x 36					9.00							
TOTALS CARRIED TO GROUND MOUNTED SIGN SUB-SUMMARY					23.3	30.6	41.8	2	66.00		2	5	1	4	2	

399 857	CLE-275-5.35	TRAFFIC CONTROL PLAN I.R. 275 - STA. 417+00 TO STA. 437+00	CALCULATED JAG CHECKED AM	0 50 25 100 HORIZONTAL SCALE IN FEET	

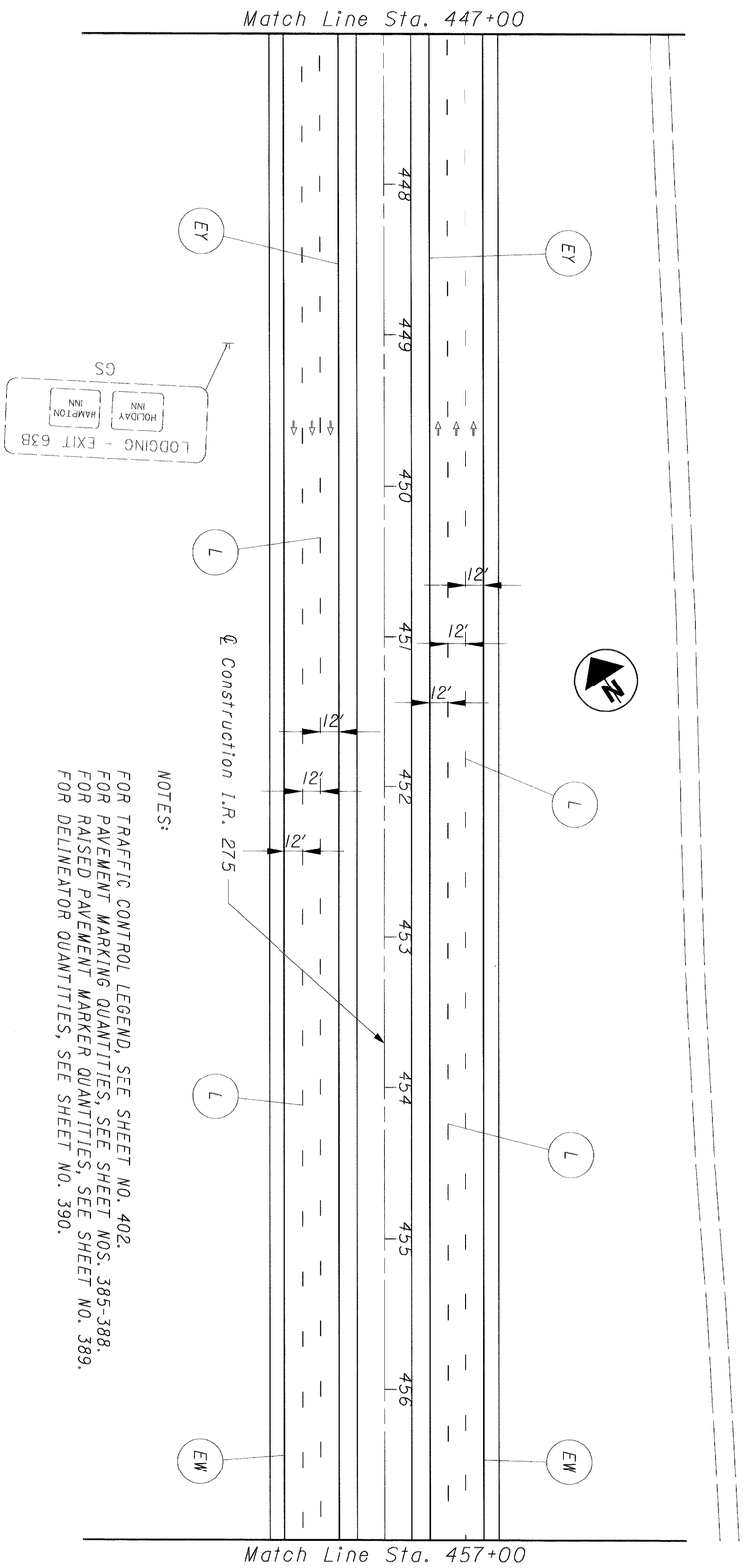

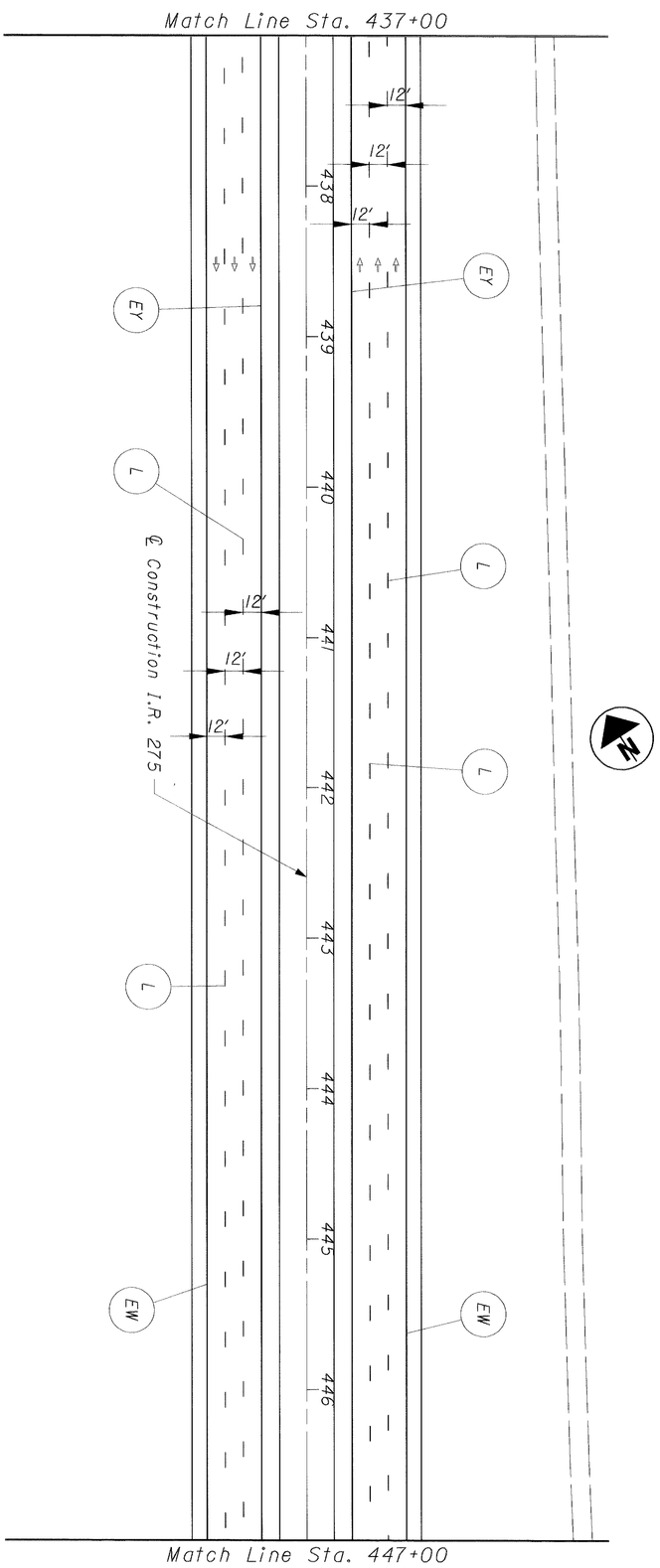

NOTES:

FOR TRAFFIC CONTROL LEGEND, SEE SHEET NO. 402.
FOR PAVEMENT MARKING QUANTITIES, SEE SHEET NOS. 385-388.
FOR RAISED PAVEMENT MARKER QUANTITIES, SEE SHEET NO. 389.
FOR DELINEATOR QUANTITIES, SEE SHEET NO. 390.

REF NO.	STATION	SIDE	CODE	SIZE (INCHES)											
TOTALS CARRIED TO GROUND MOUNTED SIGN SUB-SUMMARY															

400/857

CLE-275-5.35

TRAFFIC CONTROL PLAN
I.R. 275 - STA. 437+00 TO STA. 457+00

CALCULATED JAG
CHECKED AM

0 50
25 100
HORIZONTAL SCALE IN FEET

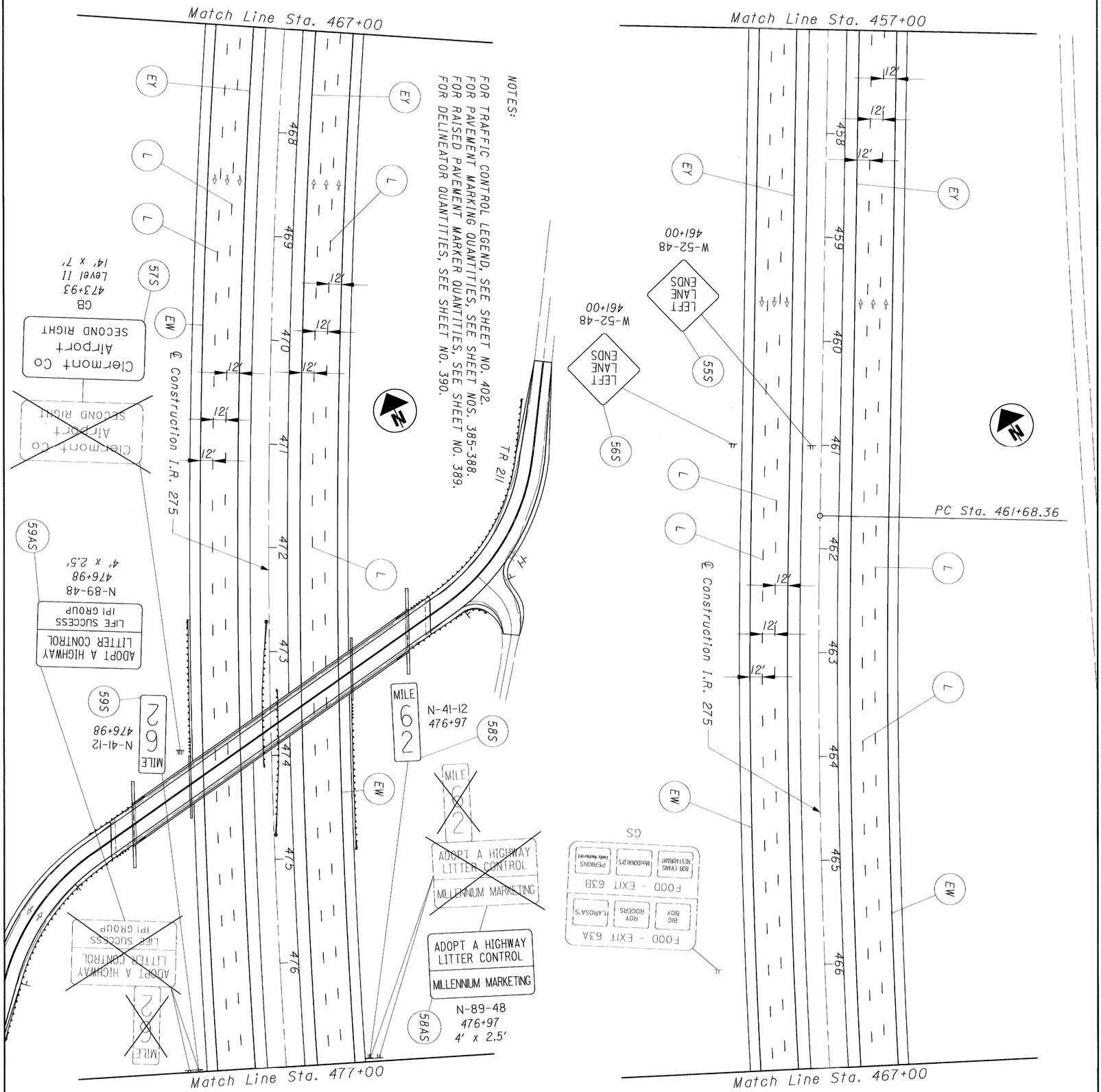

REF NO.	STATION	SIDE	CODE	SIZE	630											
					GROUND MOUNTED SUPPORT, NO. 2 POST	GROUND MOUNTED SUPPORT, NO. 3 POST	GROUND MOUNTED SUPPORT, W8 x 18 BEAM	SIGN, FLAT SHEET, TYPE G	SIGN, EXTRU-SHEET, TYPE G	GROUND MOUNTED BEAM SUPPORT FOUNDA-TION	REMOVAL OF GROUND MOUNTED SIGN AND STORAGE	REMOVAL OF GROUND MOUNTED MAJOR SIGN AND STORAGE	REMOVAL OF GROUND MOUNTED POST SUPPT. & DISPOSAL			
					LIN FT	LIN FT	LIN FT	SQ FT	SQ FT	EACH	EACH	EACH	EACH			
55S	461+00	RT	W-52-48	48 x 48		15.9/15.6		16.00								
56S	461+00	RT	W-52-48	48 x 48		15.5/15.9		16.00								
57S	473+93	RT	GB	168 x 84			21.8/21.6		98.00	2		1	4			
58S	476+97	LT	N-41-12	12 x 36	11.1			3.00								
58AS	476+97	LT	N-89-48	48 x 30	13.2/13.6			10.00			2		2			
59S	476+98	RT	N-41-12	12 x 36	10.9			3.00								
59AS	476+98	RT	N-89-48	48 x 30	13.6/14.5			10.00			2		2			
TOTALS CARRIED TO GROUND MOUNTED SIGN SUB-SUMMARY					76.9	62.9	43.4	58.00	98.00	2	4	1	8			

401
857

CLE-275-5.35

TRAFFIC CONTROL PLAN
I.R. 275 - STA. 457+00 TO STA. 477+00

CALCULATED JAG
CHECKED AM

0 50
25 100
HORIZONTAL SCALE IN FEET

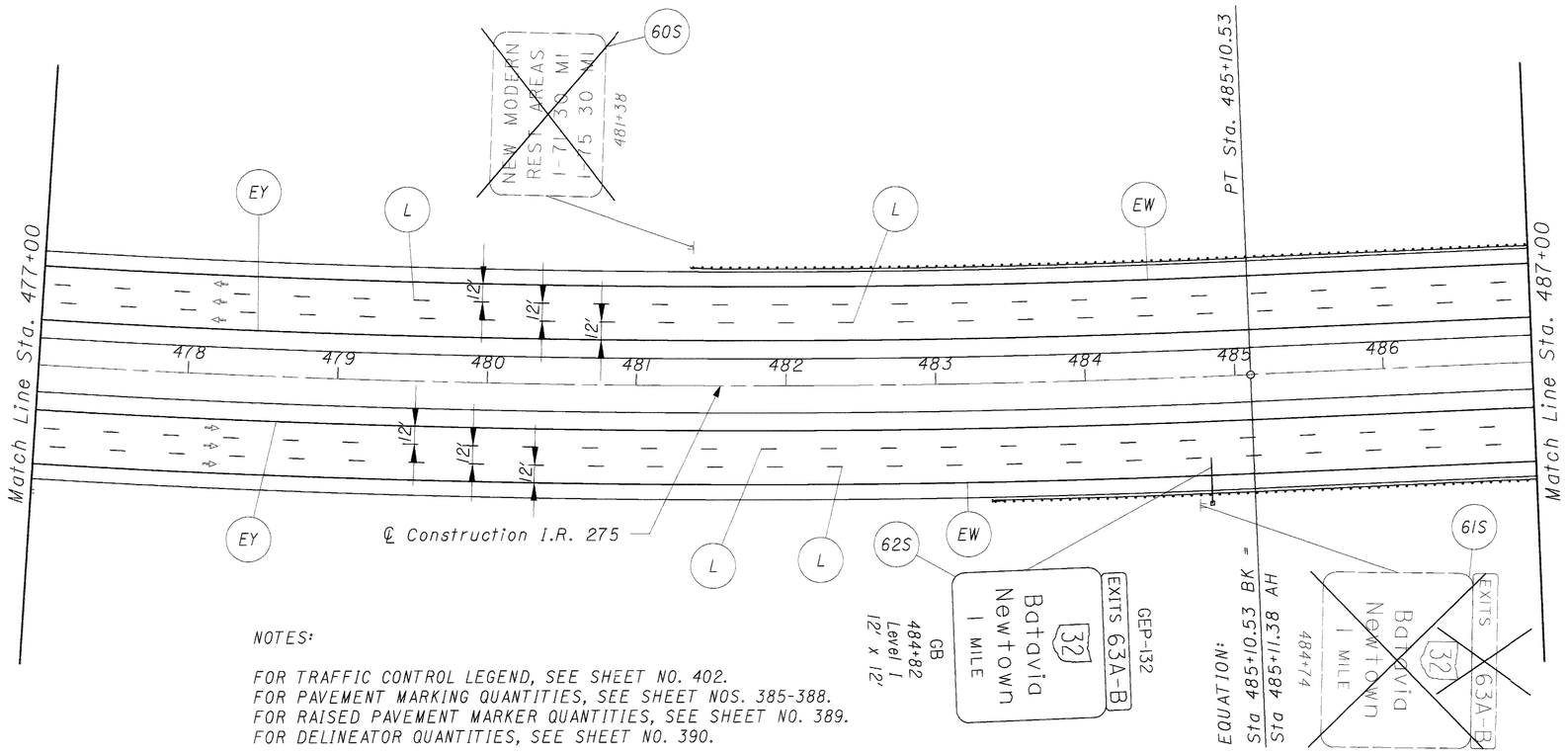

NOTES:

FOR TRAFFIC CONTROL LEGEND, SEE SHEET NO. 402.
FOR PAVEMENT MARKING QUANTITIES, SEE SHEET NOS. 385-388.
FOR RAISED PAVEMENT MARKER QUANTITIES, SEE SHEET NO. 389.
FOR DELINEATOR QUANTITIES, SEE SHEET NO. 390.

TRAFFIC CONTROL LEGEND

EXISTING SIGN TO REMAIN

EXISTING SIGN TO BE REMOVED

EXISTING SIGN TO BE REMOVED AND REERECTED

PROPOSED SIGN OR OVERLAY

PORTION OF EXISTING SIGN TO BE COVERED BY OVERLAY

	PROPOSED	EXISTING
OVERHEAD CANTILEVER SIGN SUPPORT		
OVERHEAD CENTER MOUNT SIGN SUPPORT		
OVERHEAD TRUSS SIGN SUPPORT		
ONE POST SIGN, GROUND MOUNTED		
TWO POST SIGN, GROUND MOUNTED		
THREE POST SIGN, GROUND MOUNTED		
FOUR POST SIGN, GROUND MOUNTED		
SINGLE POST SIGN, BACK TO BACK, GROUND MOUNTED		

PAVEMENT MARKING

L	LANE LINE	C	CHANNELIZING LINE
EW	EDGE LINE (WHITE)	T	TRANSVERSE LINE
EY	EDGE LINE (YELLOW)	CL	CENTER LINE

630

REF NO.	STATION	SIDE	CODE	SIZE (INCHES)	REMOVAL OF GROUND MOUNTED MAJOR SIGN AND STORAGE	REMOVAL OF GROUND MOUNTED POST BEAM SUPPT. & DISPOSAL	REMOVAL OF GROUND MOUNTED POST SUPPT. & DISPOSAL
					EACH	EACH	EACH
60S	481+38	LT			1		2
61S	484+74	RT			1	2	
62S	SEE SH. NO. 419						2
TOTALS CARRIED TO GROUND MOUNTED SIGN SUB-SUMMARY					2	2	2

CALCULATED JAG
CHECKED AM

0 25 50 100
HORIZONTAL SCALE IN FEET

TRAFFIC CONTROL PLAN
I.R. 275 - STA. 477+00 TO STA. 487+00

CLE-275-5.35

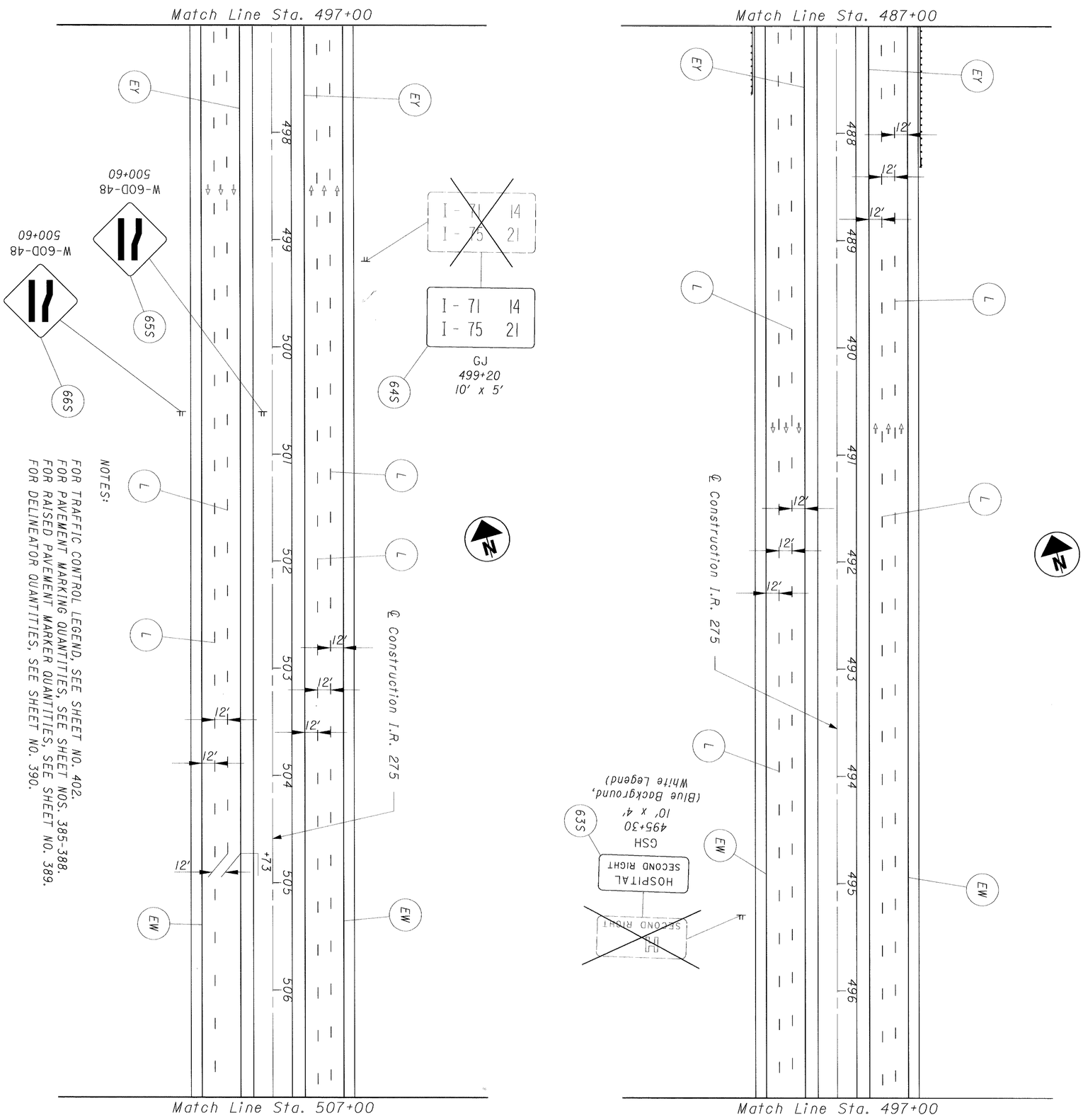

NOTES:

FOR TRAFFIC CONTROL LEGEND, SEE SHEET NO. 402.
FOR PAVEMENT MARKING QUANTITIES, SEE SHEET NOS. 385-388.
FOR RAISED PAVEMENT MARKER QUANTITIES, SEE SHEET NO. 389.
FOR DELINEATOR QUANTITIES, SEE SHEET NO. 390.

REF NO.	STATION	SIDE	CODE	SIZE (INCHES)	630											
					GROUND MOUNTED SUPPORT, NO. 3 POST	GROUND MOUNTED SUPPORT, W6 x 9 BEAM	GROUND MOUNTED SUPPORT, W10 x 12 BEAM	BREAK-AWAY BEAM CONNEC-TION	SIGN, FLAT SHEET, TYPE G	SIGN, EXTRU-SHEET, TYPE G	GROUND MOUNTED BEAM SUPPORT FOUNDA-TION	REMOVAL OF GROUND MOUNTED MAJOR SIGN AND STORAGE	REMOVAL OF GROUND MOUNTED POST SUPPT. & DISPOSAL	REMOVAL OF GROUND MOUNTED BEAM SUPPT. & DISPOSAL		
					LIN FT	LIN FT	LIN FT	EACH	SQ FT	SQ FT	EACH	EACH	EACH	EACH		
63S	495+30	RT	GSH	120 x 48		17.6/17.7		2		40.00	2	1		2		
64S	499+20	LT	GJ	120 x 60			16.8/21.2	2		50.00	2	1	2			
65S	500+60	RT	W-60D-48	48 x 48	15.9/15.6				16.00							
66S	500+60	RT	W-60D-48	48 x 48	16.0/16.7				16.00							
TOTALS CARRIED TO GROUND MOUNTED SIGN SUB-SUMMARY					64.2	35.3	38.0	4	32.00	90.00	4	2	2	2		

403
857

CLE-275-5.35

TRAFFIC CONTROL PLAN
I.R. 275 - STA. 487+00 TO STA. 507+00

CALCULATED JAG
CHECKED AM

0 50
25 100
HORIZONTAL SCALE IN FEET

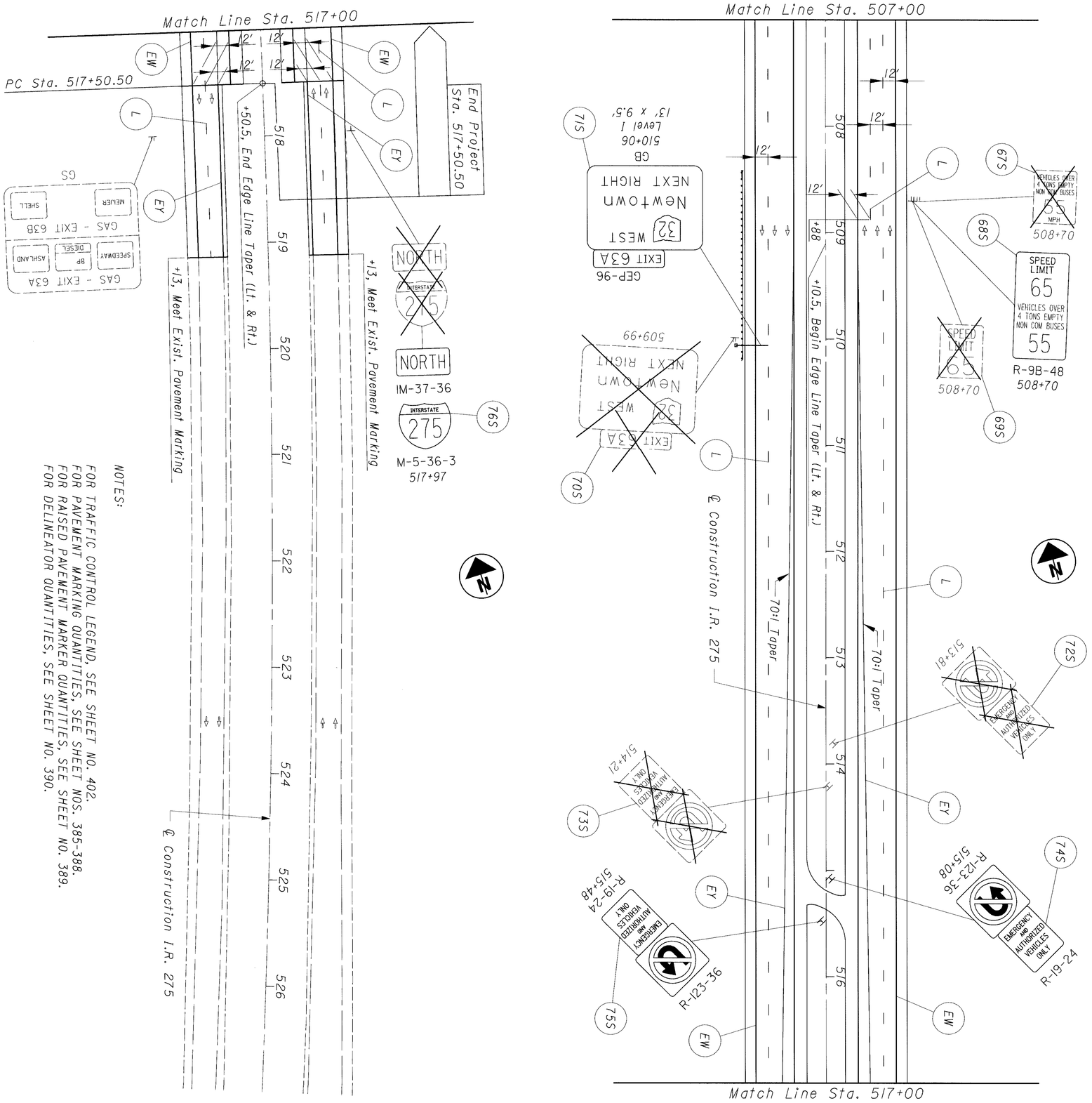

NOTES:

FOR TRAFFIC CONTROL LEGEND, SEE SHEET NO. 402.
FOR PAVEMENT MARKING QUANTITIES, SEE SHEET NOS. 385-388.
FOR RAISED PAVEMENT MARKER QUANTITIES, SEE SHEET NO. 389.
FOR DELINEATOR QUANTITIES, SEE SHEET NO. 390.

REF NO.	STATION	SIDE	CODE	SIZE (INCHES)	630 GROUND MOUNTED SUPPORT, NO. 3 POST LIN FT	GROUND MOUNTED SUPPORT, NO. 4 POST (TYPE S) LIN FT	GROUND MOUNTED SUPPORT, W6 x 9 BEAM LIN FT	BREAK-AWAY BEAM CONNECTION EACH	SIGN, FLAT SHEET, TYPE G SQ FT		GROUND MOUNTED BEAM SUPPORT FOUNDATION EACH	REMOVAL OF GROUND MOUNTED SIGN AND STORAGE EACH	REMOVAL OF GROUND MOUNTED MAJOR SIGN AND STORAGE EACH	REMOVAL OF GROUND MOUNTED POST SUPPT. & DISPOSAL EACH	REMOVAL OF GROUND MOUNTED BEAM SUPPT. & DISPOSAL EACH	
67S	508+70	LT										1		2		
68S	508+70	LT	R-9B-48	48 x 96			21.1/20.6	2	32.00		2					
69S	508+70	LT										1		2		
70S	509+99	RT										1	1		2	
71S	SEE SH. NO. 420															
72S	513+81	LT										2		1		
73S	514+21	LT										2		1		
74S	515+08	LT	R-123-36	36 x 36	15.3				9.00							
			R-19-24	24 x 30					5.00							
75S	515+48	RT	R-19-24	24 x 30	15.3				5.00							
			R-123-36	36 x 36					9.00							
76S	517+97	LT	IM-37-36	36 x 18		15.7			4.50			1		1		
			M-5-36-3	48 x 36					12.00			1				
TOTALS CARRIED TO GROUND MOUNTED SIGN SUB-SUMMARY					30.6	15.7	41.7	2	76.50		2	9	1	7	2	

404
857

CLE-275-5.35

TRAFFIC CONTROL PLAN
I.R. 275 - STA. 507+00 TO STA. 527+00

CALCULATED JAG
CHECKED AM

0 50
25 100
HORIZONTAL SCALE IN FEET

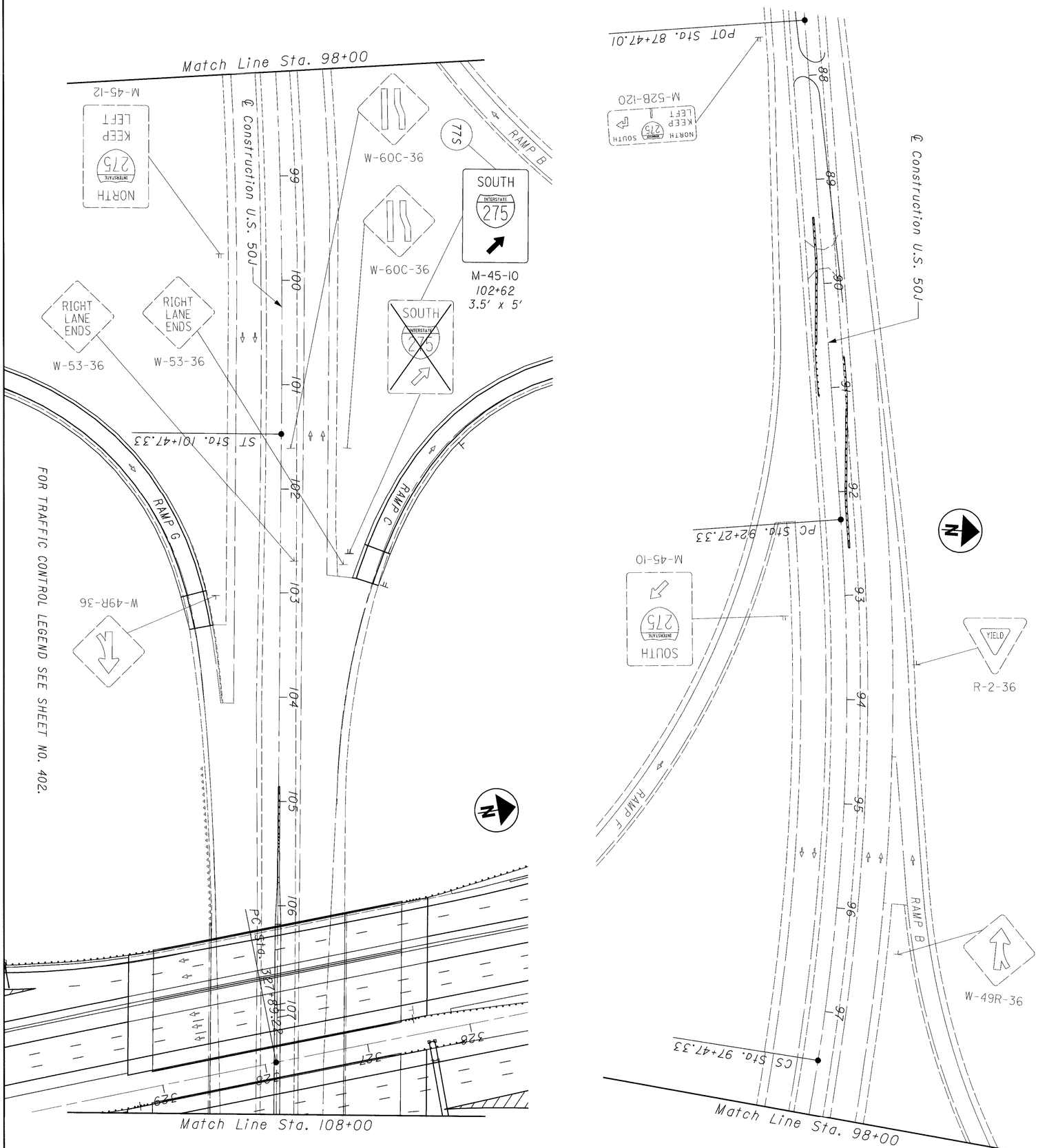

REF NO.	STATION	SIDE	CODE	SIZE (INCHES)	630											
					GROUND MOUNTED SUPPORT, NO. 3 POST	SIGN, FLAT SHEET, TYPE G	REMOVAL OF GROUND MOUNTED SIGN AND STORAGE	REMOVAL OF GROUND MOUNTED POST SUPPT. & DISPOSAL								
					LIN FT	SQ FT	EACH	EACH								
77S	102+62	LT	M-45-10	42 x 60	16.9/16.7	17.50	1	2								
TOTALS CARRIED TO GROUND MOUNTED SIGN SUB-SUMMARY					33.6	17.50	1	2								

405
857

CLE-275-5.35

TRAFFIC CONTROL PLAN
U.S.R. 50J

CALCULATED JAG
CHECKED AM

0 25 50 100
HORIZONTAL SCALE IN FEET

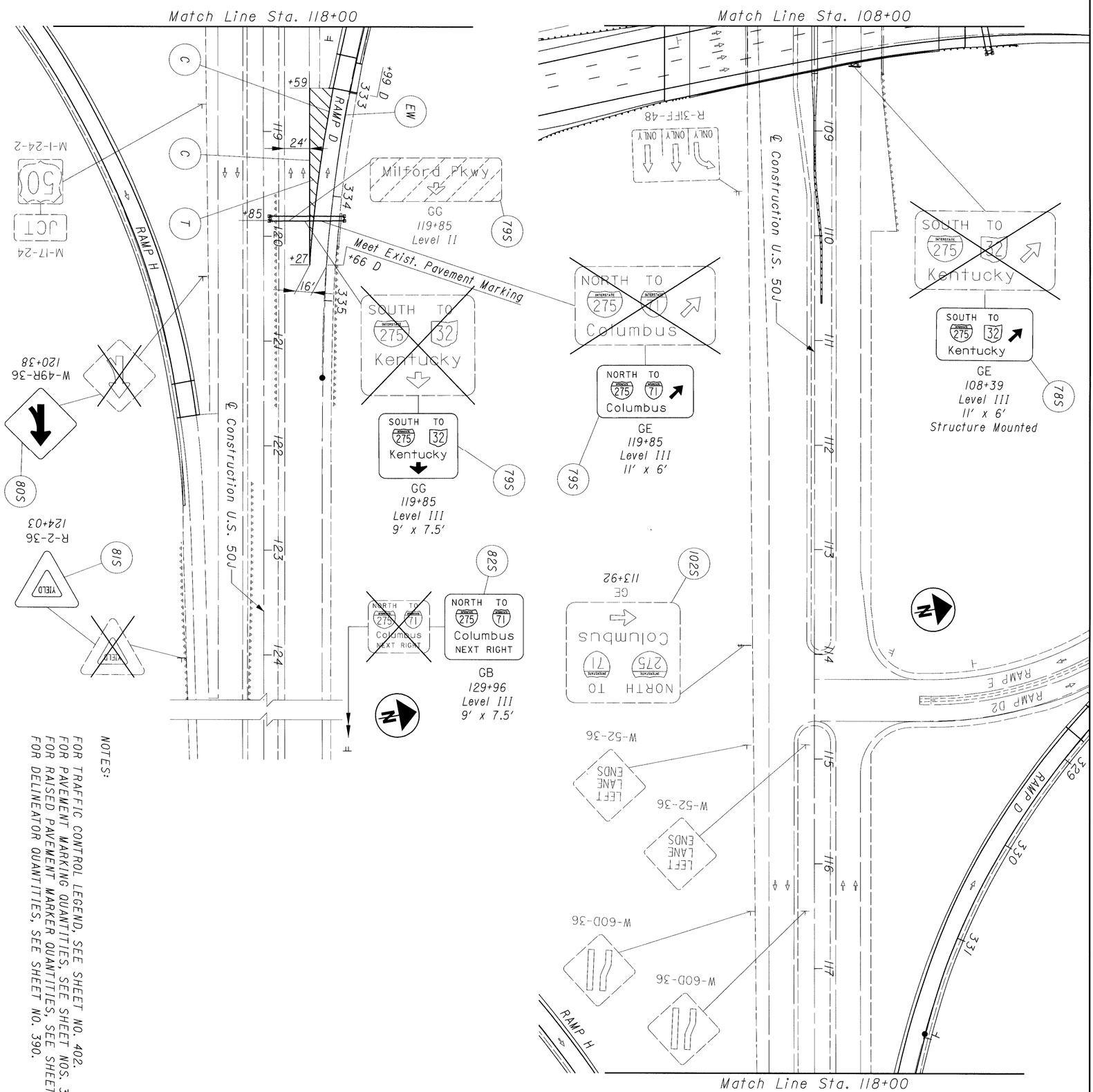

NOTES:

FOR TRAFFIC CONTROL LEGEND, SEE SHEET NO. 402.
FOR PAVEMENT MARKING QUANTITIES, SEE SHEET NOS. 385-388.
FOR RAISED PAVEMENT MARKER QUANTITIES, SEE SHEET NO. 389.
FOR DELINEATOR QUANTITIES, SEE SHEET NO. 390.

REF NO.	STATION	SIDE	CODE	SIZE (INCHES)	630											
					GROUND MOUNTED SUPPORT, NO. 2 POST	GROUND MOUNTED SUPPORT, NO. 3 POST	GROUND MOUNTED SUPPORT, W10 x 12 BEAM	SIGN, FLAT SHEET, TYPE G	SIGN, EXTRU-SHEET, TYPE G	GROUND MOUNTED BEAM SUPPORT FOUNDA-TION	REMOVAL OF GROUND MOUNTED SIGN AND STORAGE	REMOVAL OF GROUND MOUNTED MAJOR SIGN AND STORAGE	REMOVAL OF GROUND MOUNTED POST SUPPT. & DISPOSAL	REMOVAL OF GROUND MOUNTED BEAM SUPPT. & DISPOSAL		
					LIN FT	LIN FT	LIN FT	SQ FT	SQ FT	EACH	EACH	EACH	EACH	EACH		
78S	SEE SH. NO. 420															
79S	SEE SH. NO. 421															
80S	120+38	RT	W-49R-36	36 x 36		14.0		9.00			1		1			
81S	124+03	RT	R-2-36	36 x 36 x 36	13.7			3.90			1		1			
82S	129+96	LT	GB	108 x 90			26.3/23.7		67.50	2		1		2		
102S	SEE SH. NO. 379															
TOTALS CARRIED TO GROUND MOUNTED SIGN SUB-SUMMARY					13.7	14.0	50.0	12.90	67.50	2	2	1	2	2		

406
857

CLE-275-5.35

TRAFFIC CONTROL PLAN
U.S.R. 50J

CALCULATED JAG
CHECKED AM

0 50
25 100
HORIZONTAL SCALE IN FEET

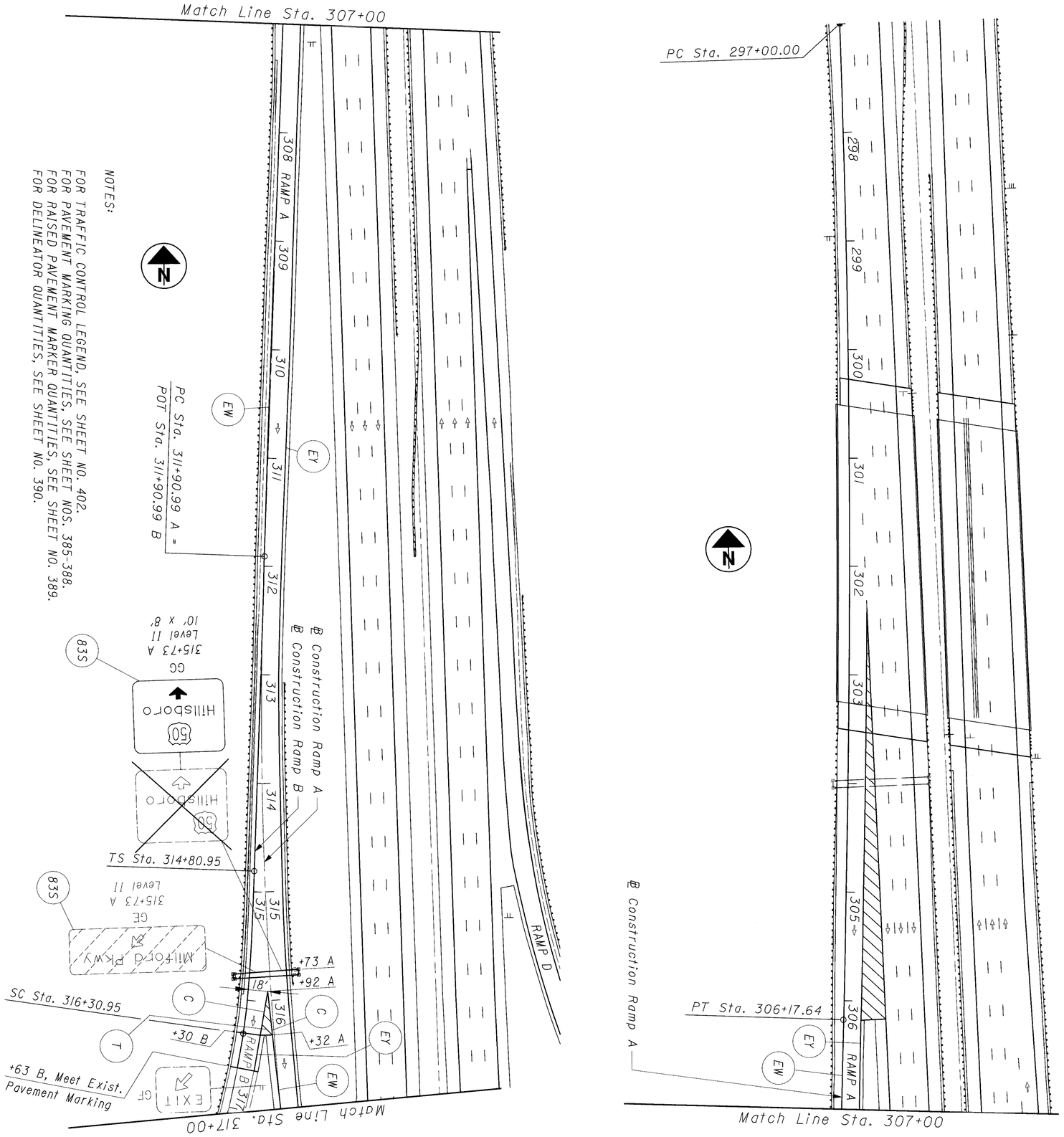

REF NO.	STATION	SIDE	CODE	SIZE (INCHES)	630
83S	SEE SH. NO. 422				
TOTALS CARRIED TO GROUND MOUNTED SIGN SUB-SUMMARY					

TRAFFIC CONTROL PLAN
RAMP A

CALCULATED JAG
CHECKED AM

0 25 50 100
HORIZONTAL SCALE IN FEET

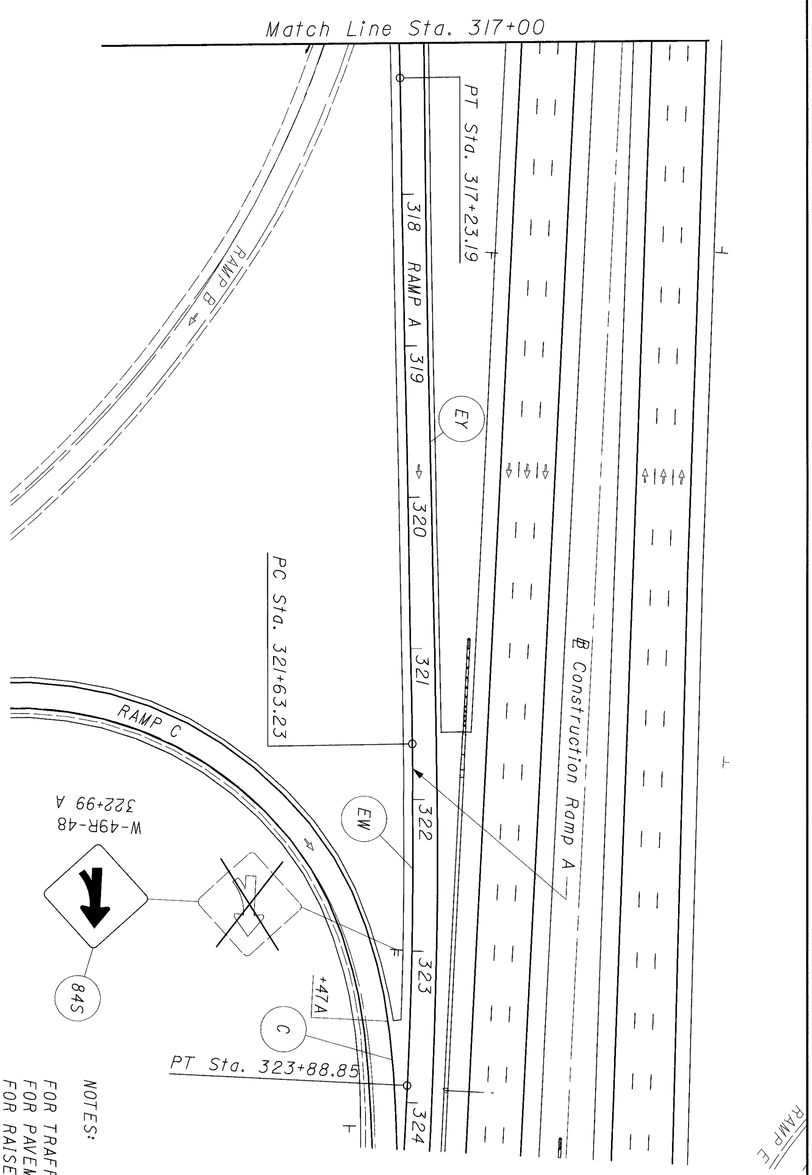

NOTES:

FOR TRAFFIC CONTROL LEGEND, SEE SHEET NO. 402.
FOR PAVEMENT MARKING QUANTITIES, SEE SHEET NOS. 385-388.
FOR RAISED PAVEMENT MARKER QUANTITIES, SEE SHEET NO. 389.
FOR DELINEATOR QUANTITIES, SEE SHEET NO. 390.

REF NO.	STATION	SIDE	CODE	SIZE (INCHES)	630											
					GROUND MOUNTED SUPPORT, NO. 3 POST	SIGN, FLAT SHEET, TYPE G	REMOVAL OF GROUND MOUNTED SIGN AND STORAGE	REMOVAL OF GROUND MOUNTED POST SUPPT. & DISPOSAL								
					LIN FT	SQ FT	EACH	EACH								
84S	322+99	RT	W-49R-48	48 x 48	15.2/15.2	16.00	1	2								
TOTALS CARRIED TO GROUND MOUNTED SIGN SUB-SUMMARY					30.4	16.00	1	2								

408
857

CLE-275-5.35

TRAFFIC CONTROL PLAN
RAMP A

CALCULATED JAG
CHECKED AM

0 25 50 100
HORIZONTAL SCALE IN FEET

N

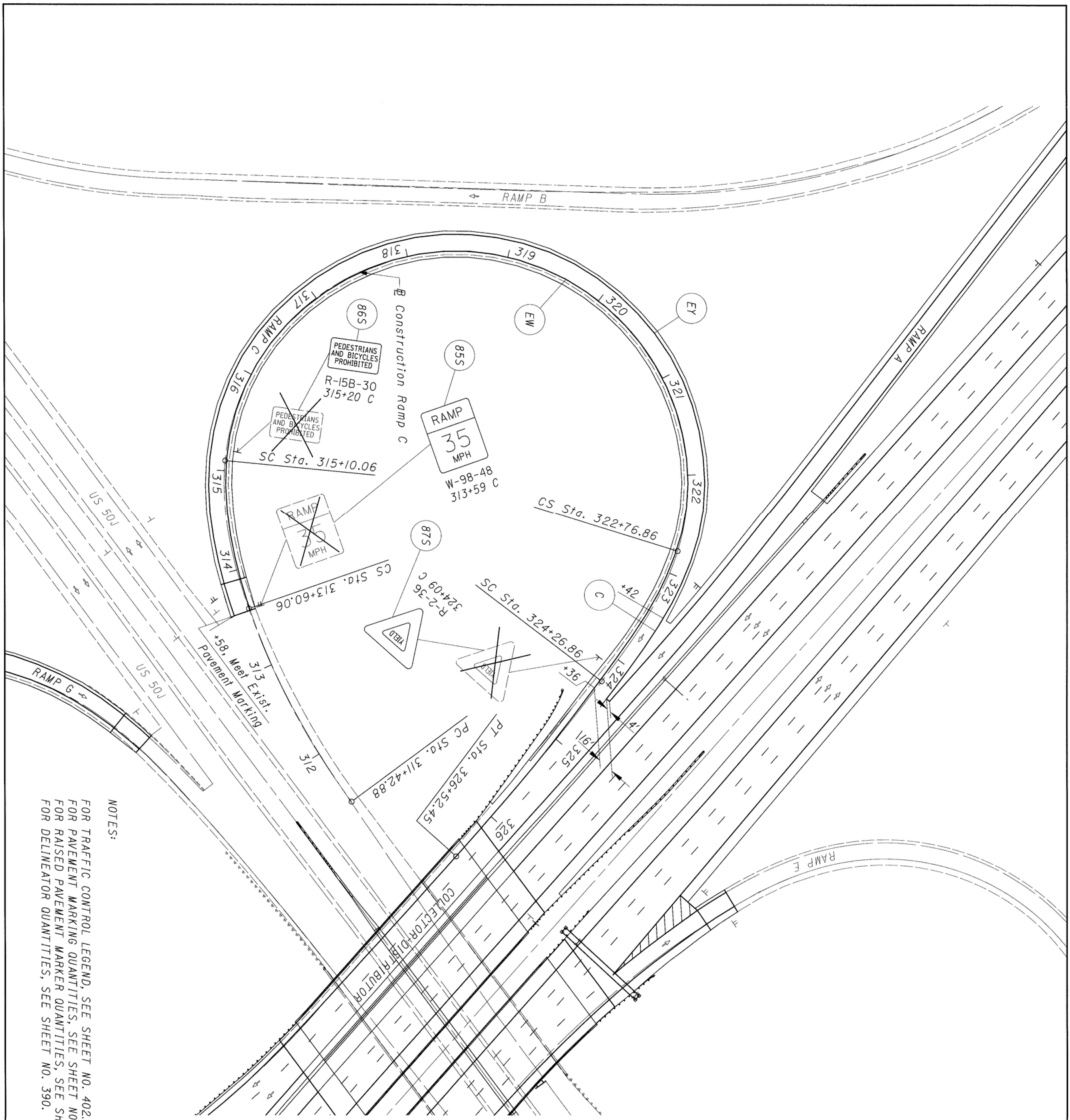

NOTES:

FOR TRAFFIC CONTROL LEGEND, SEE SHEET NO. 402.
FOR PAVEMENT MARKING QUANTITIES, SEE SHEET NOS. 385-388.
FOR RAISED PAVEMENT MARKER QUANTITIES, SEE SHEET NO. 389.
FOR DELINEATOR QUANTITIES, SEE SHEET NO. 390.

REF NO.	STATION	SIDE	CODE	SIZE (INCHES)	630 GROUND MOUNTED SUPPORT, NO. 2 POST	GROUND MOUNTED SUPPORT, S4 x 7.7 BEAM	BREAK-AWAY BEAM CONNEC-TION	SIGN, FLAT SHEET, TYPE G		GROUND MOUNTED BEAM SUPPORT FOUNDA-TION	REMOVAL OF GROUND MOUNTED SIGN AND STORAGE	REMOVAL OF GROUND MOUNTED POST SUPPT. & DISPOSAL				
					LIN FT	LIN FT	EACH	SQ FT		EACH	EACH	EACH				
85S	313+59	RT	W-98-48	48 x 60		15.7/15.9	2	20.00		2	1	2				
86S	315+20	RT	R-15B-30	30 x 18	12.6			3.75			1	1				
87S	324+09	RT	R-2-36	36 x 36 x 36	14.3			3.90			1	1				
TOTALS CARRIED TO GROUND MOUNTED SIGN SUB-SUMMARY					26.9	31.6	2	27.65		2	3	4				

409
857

CLE-275-5.35

TRAFFIC CONTROL PLAN
RAMP C

CALCULATED JAG
CHECKED AM

0 50
25 100
HORIZONTAL SCALE IN FEET

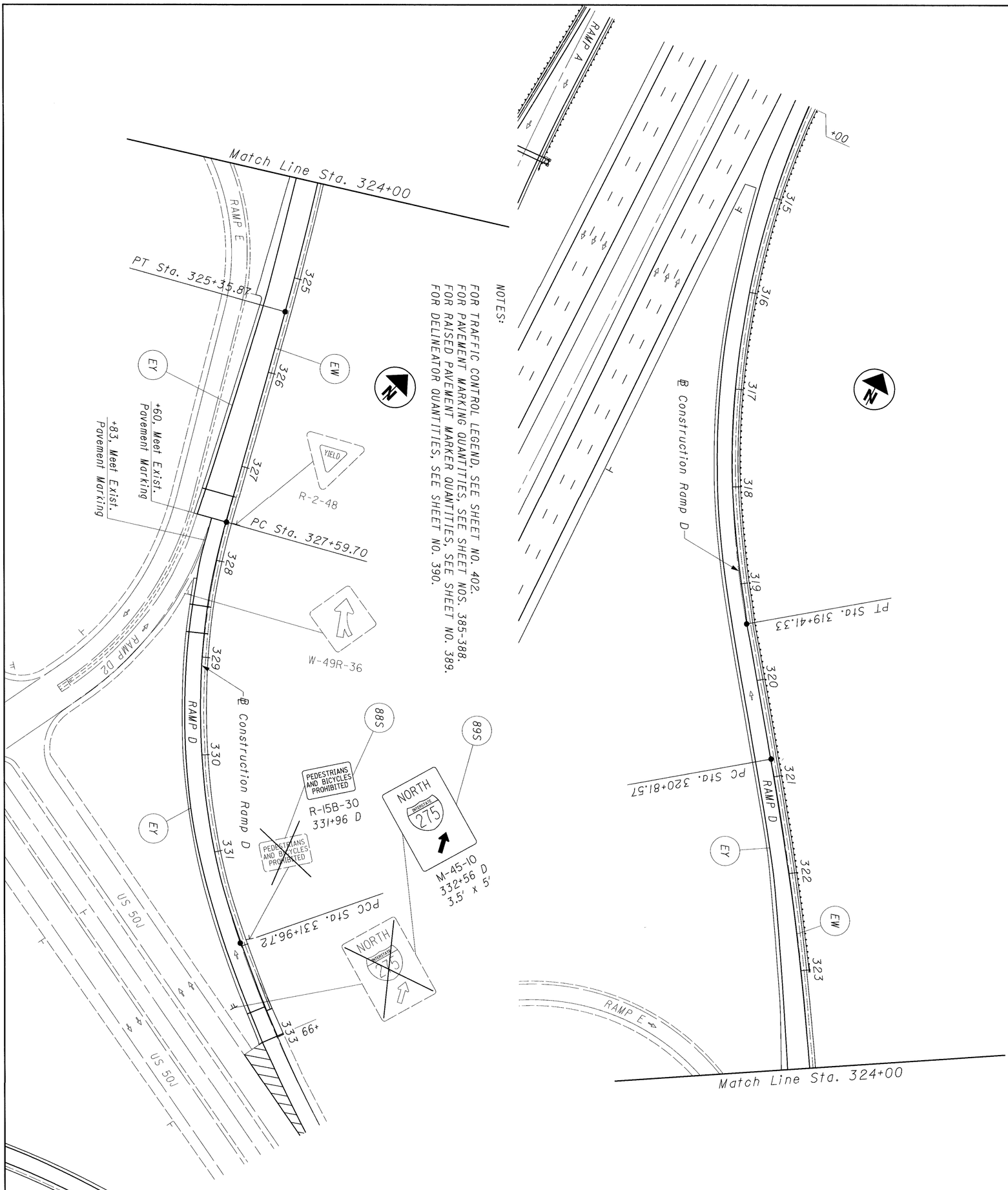

NOTES:

FOR TRAFFIC CONTROL LEGEND, SEE SHEET NO. 402.
FOR PAVEMENT MARKING QUANTITIES, SEE SHEET NOS. 385-388.
FOR RAISED PAVEMENT MARKER QUANTITIES, SEE SHEET NO. 389.
FOR DELINEATOR QUANTITIES, SEE SHEET NO. 390.

REF NO.	STATION	SIDE	CODE	SIZE (INCHES)	630 GROUND MOUNTED SUPPORT, NO. 2 POST (LIN FT)	630 GROUND MOUNTED SUPPORT, NO. 3 POST (LIN FT)	630 SIGN, FLAT SHEET, TYPE G (SQ FT)	630 REMOVAL OF GROUND MOUNTED SIGN AND STORAGE (EACH)	630 REMOVAL OF GROUND MOUNTED POST SUPPT. & DISPOSAL (EACH)
88S	331+96	LT	R-15B-30	30 x 18	12.8		3.75	1	1
89S	332+56	RT	M-45-10	42 x 60		16.0/16.0	17.50	1	2
TOTALS CARRIED TO GROUND MOUNTED SIGN SUB-SUMMARY					12.8	32.0	21.25	2	3

410
857

CLE-275-5.35

TRAFFIC CONTROL PLAN
RAMP D

CALCULATED JAG
CHECKED AM

0 25 50 100
HORIZONTAL SCALE IN FEET

NOTES:

FOR TRAFFIC CONTROL LEGEND, SEE SHEET NO. 402.
FOR PAVEMENT MARKING QUANTITIES, SEE SHEET NOS. 385-388.
FOR RAISED PAVEMENT MARKER QUANTITIES, SEE SHEET NO. 389.
FOR DELINEATOR QUANTITIES, SEE SHEET NO. 390.

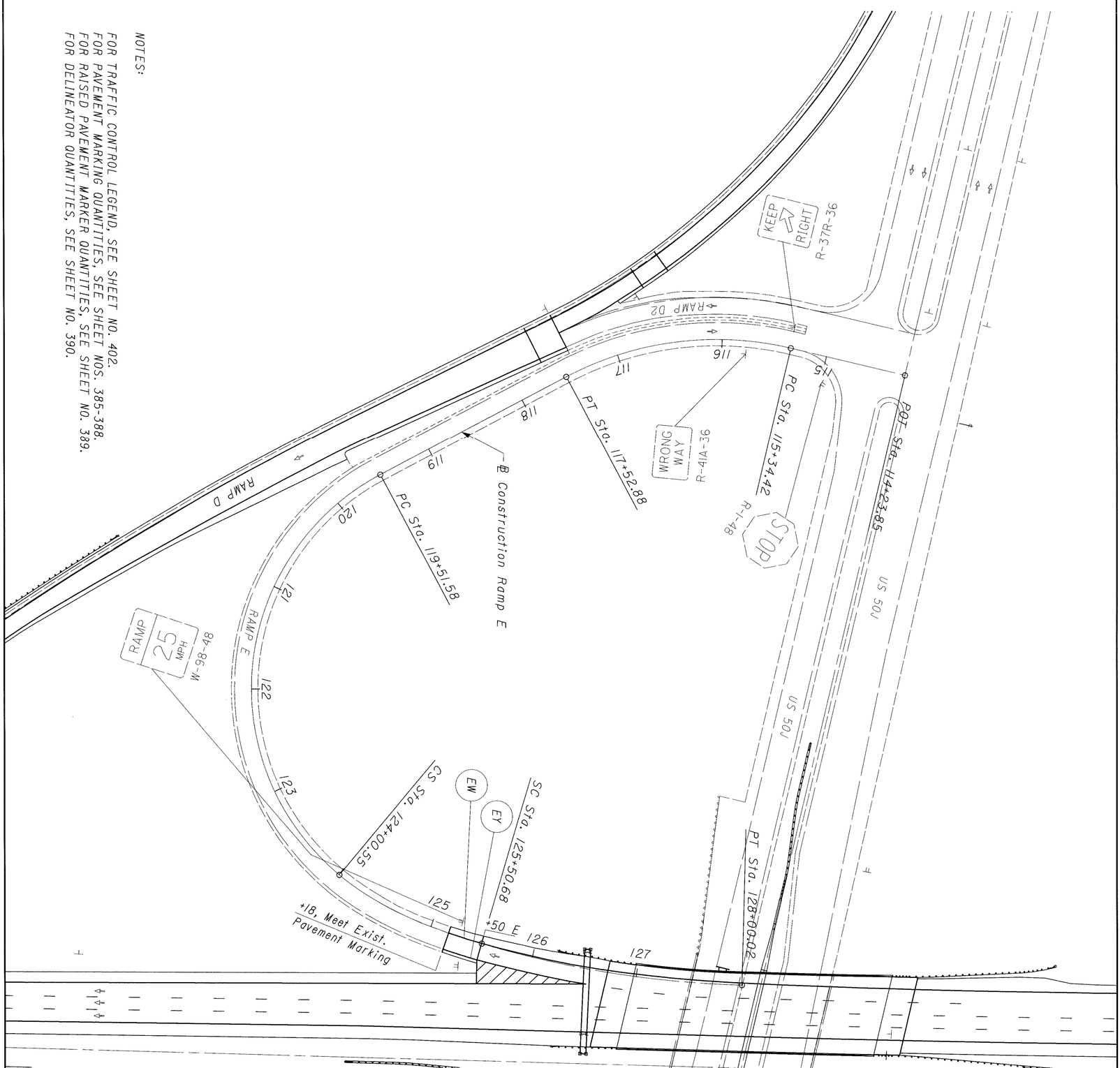

REF NO.	STATION	SIDE	CODE	SIZE (INCHES)												
TOTALS CARRIED TO GROUND MOUNTED SIGN SUB-SUMMARY																

411
857

CLE-275-5.35

TRAFFIC CONTROL PLAN
RAMP E

CALCULATED JAG
CHECKED AM

0 50
25 100
HORIZONTAL SCALE IN FEET

N

NOTES:

FOR TRAFFIC CONTROL LEGEND, SEE SHEET NO. 402.
FOR PAVEMENT MARKING QUANTITIES, SEE SHEET NOS. 385-388.
FOR RAISED PAVEMENT MARKER QUANTITIES, SEE SHEET NO. 389.
FOR DELINEATOR QUANTITIES, SEE SHEET NO. 390.

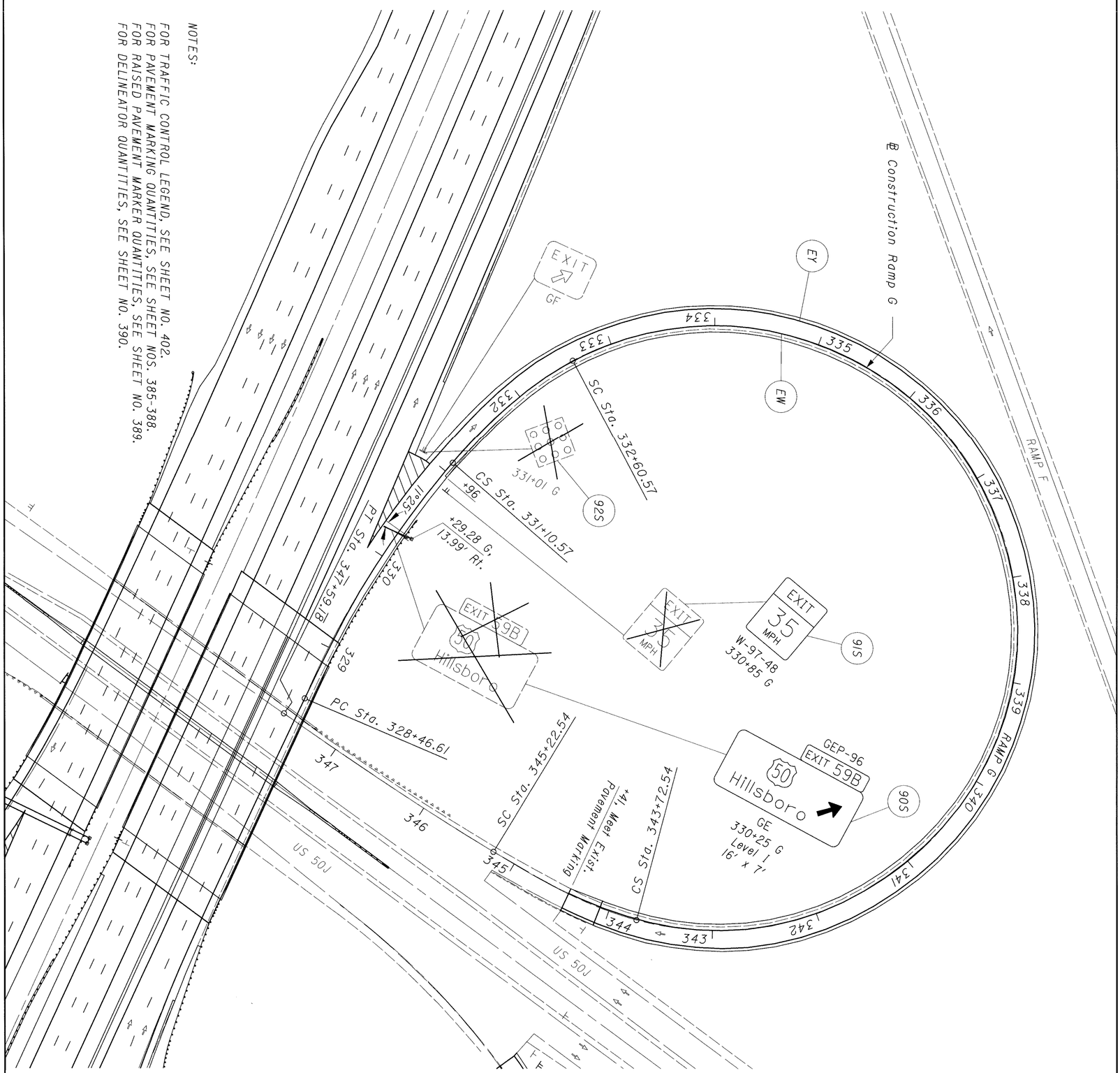

REF NO.	STATION	SIDE	CODE	SIZE (INCHES)	630 GROUND MOUNTED SUPPORT, S4 x 7.7 BEAM (LIN FT)	630 BREAK-AWAY BEAM CONNECTION (EACH)	630 SIGN, FLAT SHEET, TYPE G (SQ FT)	630 GROUND MOUNTED BEAM SUPPORT FOUNDATION (EACH)	630 REMOVAL OF GROUND MOUNTED SIGN AND STORAGE (EACH)	630 REMOVAL OF GROUND MOUNTED POST SUPPT. & DISPOSAL (EACH)
90S	SEE SH. NO. 423									
91S	330+85	RT	W-97-48	48 x 60	16.0/16.2	2	20.00	2	1	2
92S	331+01	LT							1	1
TOTALS CARRIED TO GROUND MOUNTED SIGN SUB-SUMMARY					32.2	2	20.00	2	2	3

412
857

CLE-275-5.35

TRAFFIC CONTROL PLAN
RAMP G

CALCULATED JAG
CHECKED AM

0 50
25 100
HORIZONTAL SCALE IN FEET

N

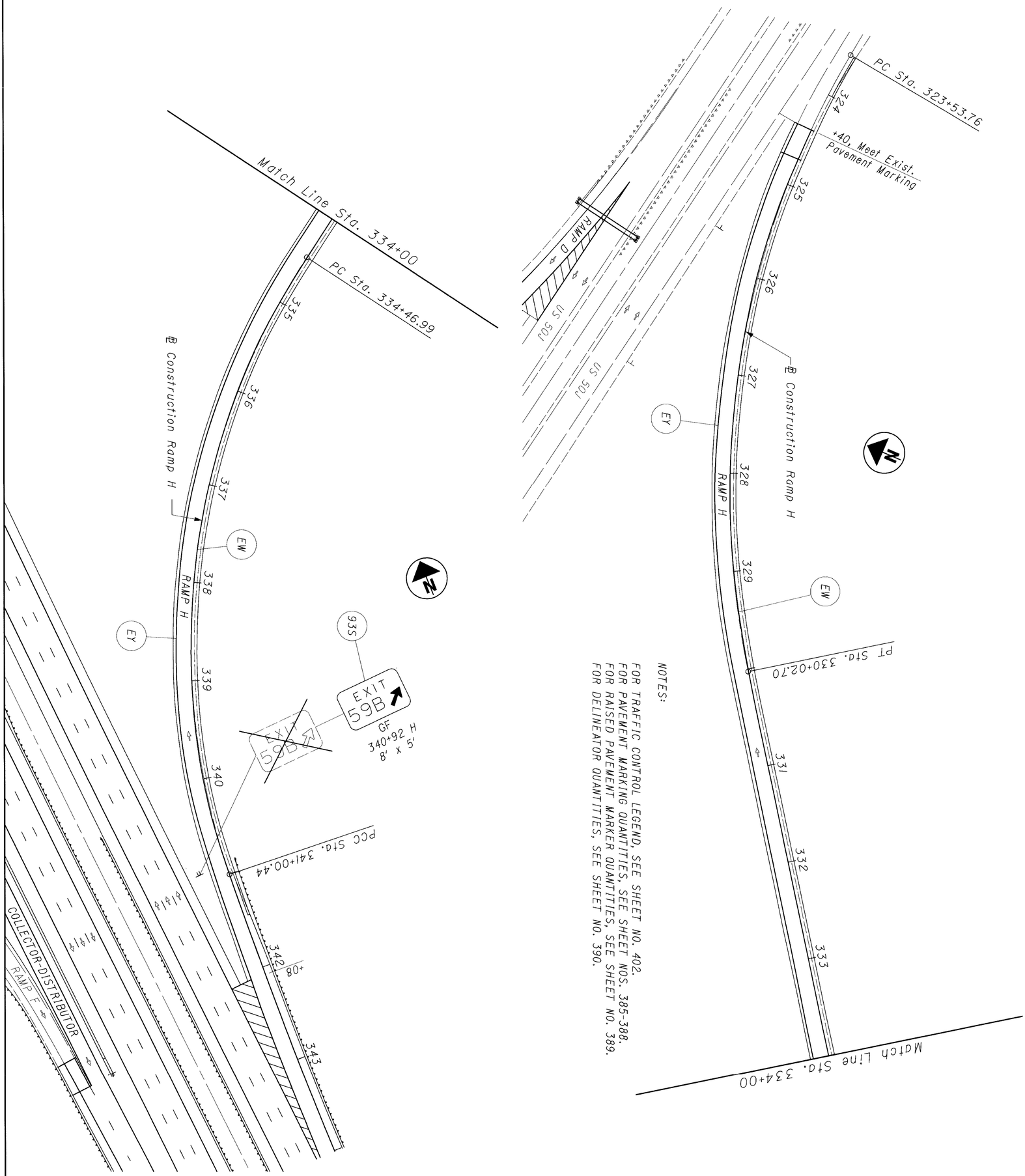

REF NO.	STATION	SIDE	CODE	SIZE (INCHES)	630 GROUND MOUNTED SUPPORT, W6 x 9 BEAM (LIN FT)	630 BREAK-AWAY BEAM CONNECTION (EACH)	630 SIGN, EXTRUSHEET, TYPE G (SQ FT)	630 GROUND MOUNTED BEAM SUPPORT FOUNDATION (EACH)	630 REMOVAL OF GROUND MOUNTED MAJOR SIGN AND STORAGE (EACH)	630 REMOVAL OF GROUND MOUNTED BEAM SUPPT. & DISPOSAL (EACH)						
93S	340+92	RT	GF	96 x 60	18.1/18.2	2	40.00	2	1	2						
TOTALS CARRIED TO GROUND MOUNTED SIGN SUB-SUMMARY					36.3	2	40.00	2	1	2						

413
857

CLE-275-5.35

TRAFFIC CONTROL PLAN
RAMP H

CALCULATED JAG
CHECKED AM

0 50
25 100
HORIZONTAL SCALE IN FEET

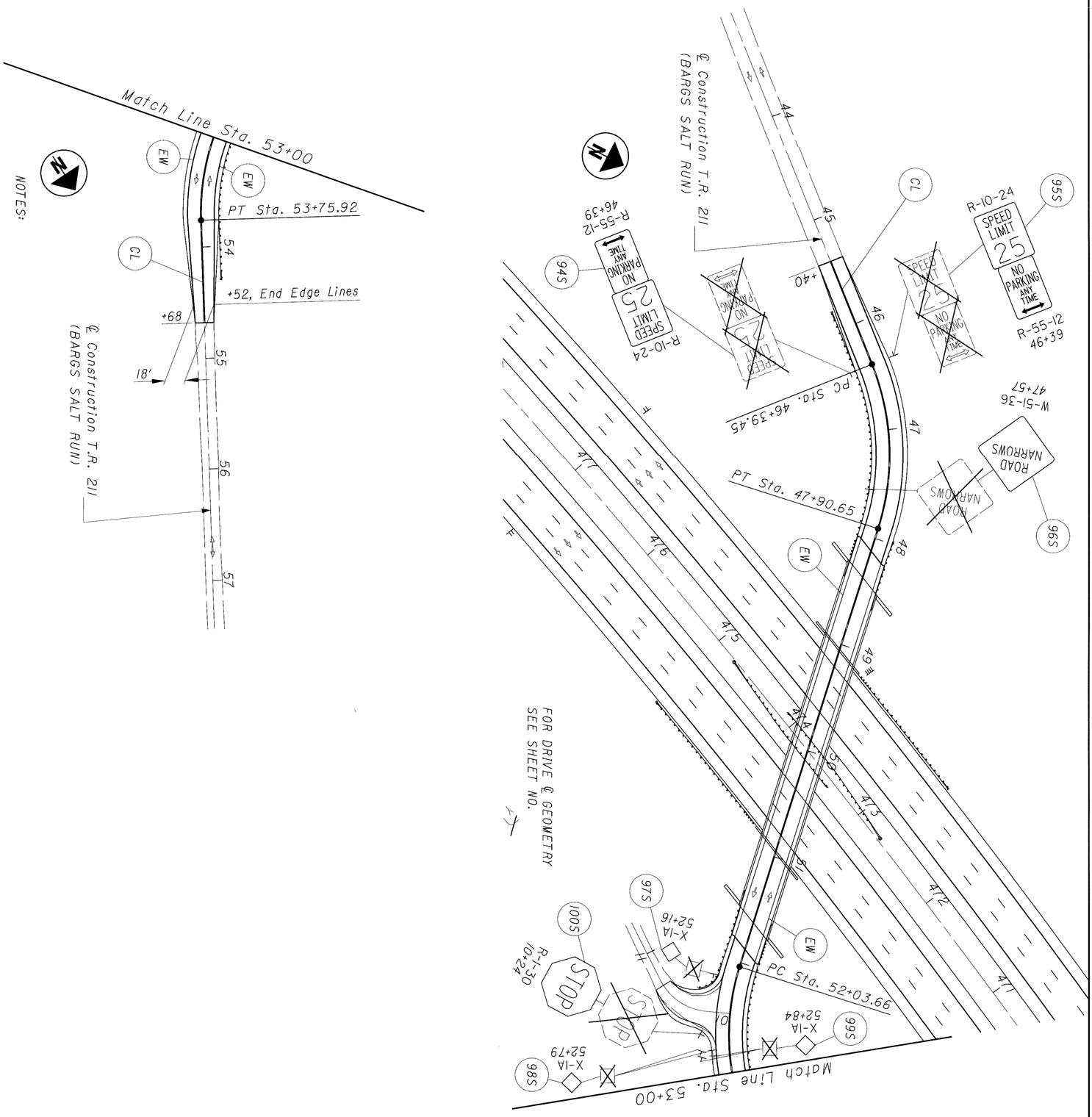

NOTES:

FOR TRAFFIC CONTROL LEGEND, SEE SHEET NO. 402.
FOR PAVEMENT MARKING QUANTITIES, SEE SHEET NOS. 385-388.
FOR RAISED PAVEMENT MARKER QUANTITIES, SEE SHEET NO. 389.
FOR DELINEATOR QUANTITIES, SEE SHEET NO. 390.

REF NO.	STATION	SIDE	CODE	SIZE (INCHES)	630												
					GROUND MOUNTED SUPPORT, NO. 2 POST	GROUND MOUNTED SUPPORT, NO. 3 POST	SIGN, FLAT SHEET, TYPE G	REMOVAL OF GROUND MOUNTED SIGN AND STORAGE	REMOVAL OF GROUND MOUNTED POST SUPPT. & DISPOSAL								
					LIN FT	LIN FT	SQ FT	EACH	EACH								
94S	46+39	RT	R-10-24	24 x 30		14.2	5.00	1	1								
			R-55-12	12 x 18			1.50	1									
95S	46+39	LT	R-10-24	24 x 30		14.1	5.00	1	1								
			R-55-12	12 x 18			1.50	1									
96S	47+57	RT	W-5I-36	36 x 36		15.4	9.00	1	1								
97S	52+16	RT	X-IA	18 x 18	10.6		2.25	1	1								
98S	52+79	RT	X-IA	18 x 18	12.0		2.25	1	1								
99S	52+84	RT	X-IA	18 x 18	12.0		2.25	1	1								
100S	10+24 DRIVE	LT	R-1-30	30 x 30	13.2		6.25	1	1								
TOTALS CARRIED TO GROUND MOUNTED SIGN SUB-SUMMARY					47.8	43.7	35.00	9	7								

CLE-275-5.35

TRAFFIC CONTROL PLAN
T.R. 211

CALCULATED JAG
CHECKED AM

0 50
25 100
HORIZONTAL SCALE IN FEET

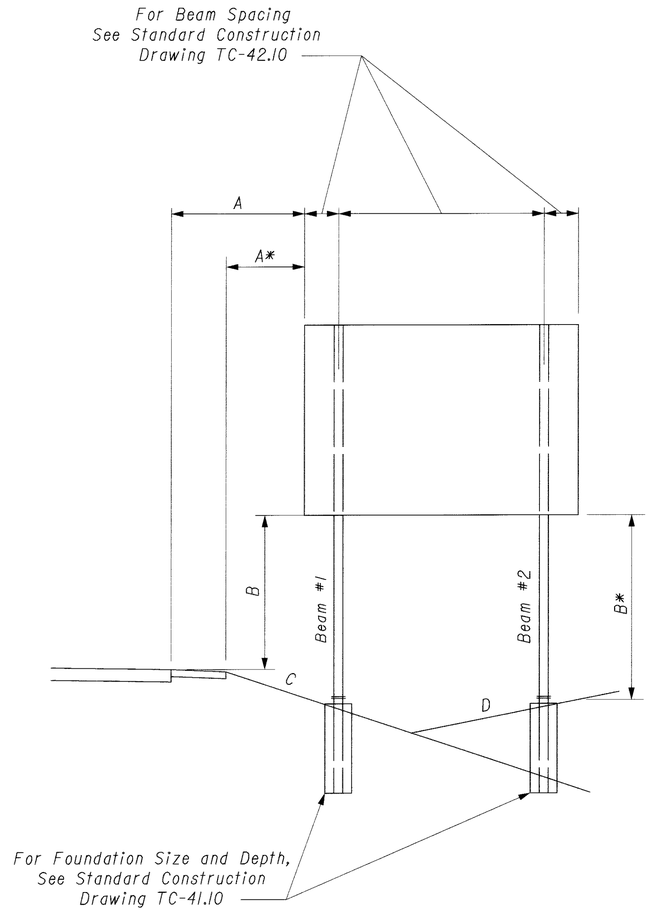

STATION	SIDE	REF NO	SIGN AREA (SQ FT)	BEAM TYPE	OFFSET (FT)		CLEAR. (FT)		FORE-SLOPE	BACK-SLOPE	BEAM #1 LENGTH (FT)	BEAM #2 LENGTH (FT)	
					A	A*	B	B*	C	D			
I.R. 275													
288+95	LT	2S	32.0	W6 x 9	16.00	6.00	6.00	-	2:1	-	21.4	22.6	
298+58	LT	6S	31.5	W6 x 9	16.00	6.00	7.00	-	2:1	-	18.5	21.0	
298+95	RT	7S	28.0	W6 x 9	13.84	6.00	7.00	-	2:1	-	18.3	20.6	
303+84	LT	11S	28.0	W6 x 9	16.00	4.00	7.00	-	2:1	-	17.1	19.4	
307+16	RT	13S	30.0	S4 x 7.7	16.00	6.00	7.00	-	6:1	8.8:1 ex	17.1	17.2	
364+47	LT	30S	60.0	W10 x 12	30.00	24.62	5.00	-	10.5:1 ex	-	19.6	20.4	
422+00	RT	47S	32.0	W6 x 9	16.00	6.00	6.00	-	3.9:1	-	20.6	21.2	
473+93	RT	57S	98.0	W8 x 18	16.00	6.00	7.00	-	2.5:1 ex	3.8:1 ex	21.8	21.6	
495+30	RT	63S	40.0	W6 x 9	30.00	20.00	5.00	-	6:1	50:1 ex	17.6	17.7	
499+20	LT	64S	50.0	W10 x 12	30.00	20.00	8.91	5.00	-	1.3:1 ex	21.2	16.8	
508+70	LT	68S	32.0	W6 x 9	16.00	6.00	6.00	-	3.2:1	-	20.6	-	
									6.4:1 ex		-	21.1	
U.S.R. 50-J													
129+96	LT	82S	67.5	W10 x 12	16.00	8.00	7.00	-	2:1 ex	-	23.7	26.3	
RAMP C													
313+59	RT	85S	20.0	S4 x 7.7	12.00	6.00	6.00	-	13.6:1 ex	-	15.7	15.9	
RAMP G													
330+85	RT	91S	20.0	S4 x 7.7	12.00	7.14	6.00	-	10.7:1 ex	-	16.0	16.2	
RAMP H													
340+92 H =	RT												
340+86 I.R. 275	LT	93S **	40.0	W6 x 9	16.00	6.00	7.00	-	-	19.5:1 ex	18.2	-	
										280:1 ex	-	18.1	

** Quantities assigned to Ramp H; designed relative to I.R. 275

CALCULATED JAG CHECKED AM

GROUND MOUNTED SIGNING DETAILS

CLE-275-5.35

415
857

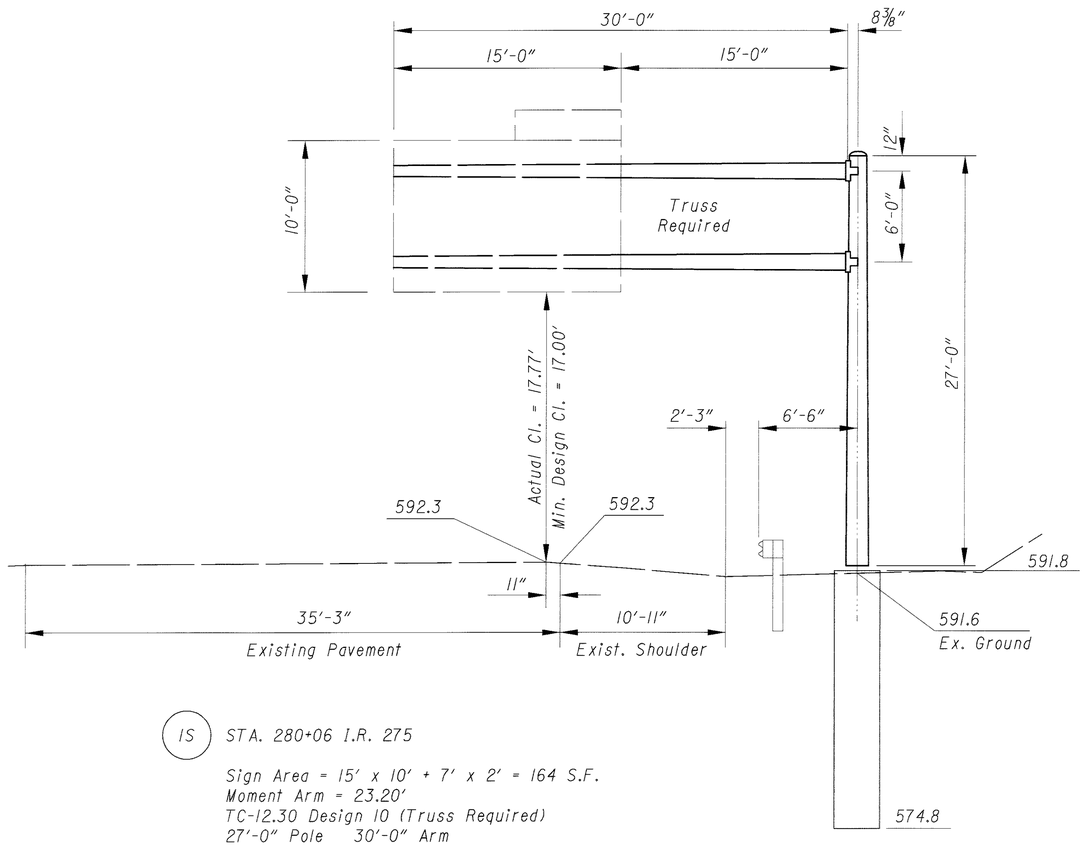

1S STA. 280+06 I.R. 275

Sign Area = 15' x 10' + 7' x 2' = 164 S.F.
Moment Arm = 23.20'
TC-12.30 Design 10 (Truss Required)
27'-0" Pole 30'-0" Arm

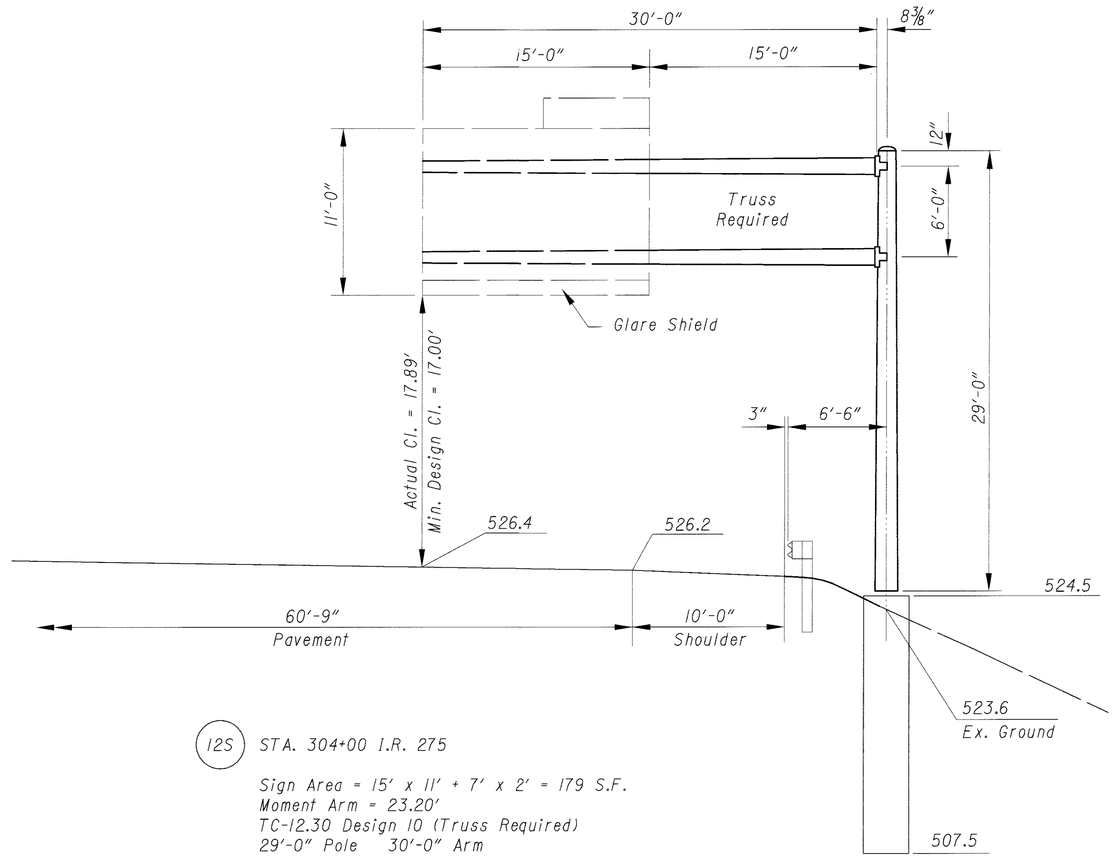

12S STA. 304+00 I.R. 275

Sign Area = 15' x 11' + 7' x 2' = 179 S.F.
Moment Arm = 23.20'
TC-12.30 Design 10 (Truss Required)
29'-0" Pole 30'-0" Arm

17S STA. 327+87 I.R. 275

REMOVE EXISTING CANTILEVER SIGN SUPPORT
AND OVERHEAD MOUNTED SIGN.

REF NO.	STATION	SIDE	CODE	SIZE (INCHES)	625	630							631										
					GROUND ROD	OVERHEAD SIGN SUPPORT TC-12.30 DESIGN 10 30'-0" ARM	SIGN, PERMANENT OVERLAY	RIGID OVERHEAD SIGN SUPPORT FOUNDATION	REMOVAL OF OVHD MOUNTED SIGN AND STORAGE	REMOVAL OF OVHD MOUNTED SIGN AND REERECTION	REMOVAL OF OVHD SIGN SUPPORT AND DISPOSAL TC-12.30	REMOVAL OF OVHD SIGN SUPPORT AND DISPOSAL TC-7.65	SIGN SERVICE	SIGN WIRED	DISCONNECT SWITCH WITH ENCLOSURE 30 AMP	SWITCH ENCLOSURE MOUNTING BRACKET ASSEMBLY	REMOVAL OF LUMINAIRE AND REERECTION	REMOVAL OF LUMINAIRE AND DISPOSAL	REMOVAL OF DISCONNECT SWITCH AND DISPOSAL	REMOVAL OF BALLAST AND REERECTION	REMOVAL OF BALLAST AND DISPOSAL	REMOVAL OF SIGN WIRING AND DISPOSAL	REMOVAL OF SIGN SERVICE AND DISPOSAL
					EACH	EACH	SQ FT	EACH	EACH	EACH	EACH	EACH	EACH	EACH	EACH	EACH	EACH	EACH	EACH	EACH	EACH	EACH	EACH
1S	280+06 I.R. 275	RT	(OVERLAY)	132 x 24		1	22.00	1		2	1												
12S	304+00 I.R. 275	RT	--	--	1	1		1	2	2		1	1	1	1	1	2	4	1	2	4	3	1
17S	327+87 I.R. 275	RT	--	--					1		1							2	1		2	1	1
TOTALS CARRIED TO OVERHEAD SIGN SUB-SUMMARY					1	2	22.00	2	3	4	2	1	1	1	1	1	2	6	2	2	6	4	2

CALCULATED JAG
CHECKED AM

OVERHEAD SIGNING DETAILS

CLE-275-5.35

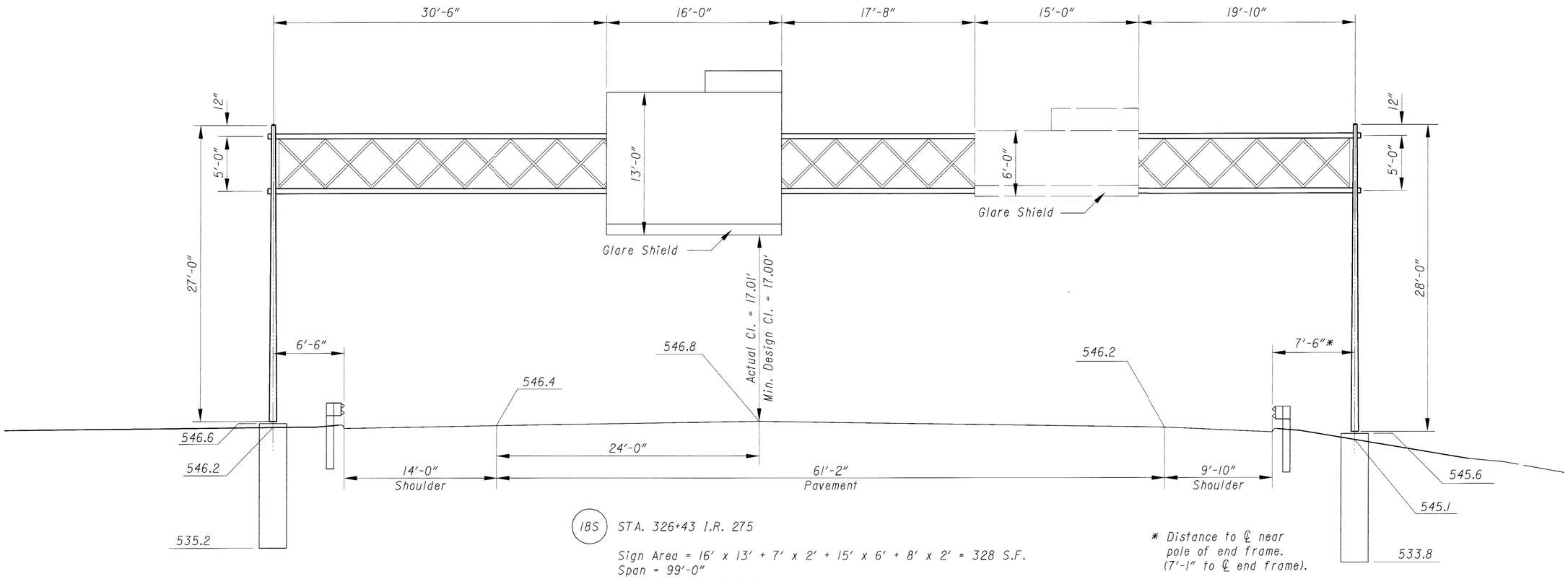

(18S) STA. 326+43 I.R. 275

Sign Area = 16' x 13' + 7' x 2' + 15' x 6' + 8' x 2' = 328 S.F.
Span = 99'-0"
TC-7.65 Design 8; 5 Ft. Box
27'-0" & 28'-0" Poles

* Distance to ℄ near pole of end frame. (7'-1" to ℄ end frame).

(21S) STA. 337+08 I.R. 275

REMOVE EXISTING TRUSS OVERHEAD SIGN SUPPORT AND OVERHEAD MOUNTED SIGN

REF NO.	STATION	SIDE	CODE	SIZE (INCHES)	625	630						631												
					GROUND ROD	OVERHEAD SIGN SUPPORT TC-7.65 DESIGN 8 99'-0" SPAN	SIGN, EXTRU-SHEET, TYPE G	RIGID OVERHEAD SIGN SUPPORT FOUNDA-TION	REMOVAL OF OVHD MOUNTED SIGN AND STORAGE	REMOVAL OF OVHD MOUNTED SIGN AND REEREC-TION	REMOVAL OF OVHD SIGN SUPPORT AND DISPOSAL TC-7.65	SIGN SERVICE	SIGN WIRED	DISCONNECT SWITCH WITH ENCLOSURE 30 AMP	SWITCH ENCLOSURE MOUNTING BRACKET ASSEMBLY	BALLAST CMRI-250-480 INTEGRAL	MERCURY VAPOR LUMINAIRE TC-31.20 250W LAMP	REMOVAL OF LUMINAIRE AND REERECTION	REMOVAL OF LUMINAIRE AND DISPOSAL	REMOVAL OF DISCONNECT SWITCH AND DISPOSAL	REMOVAL OF BALLAST AND REERECTION	REMOVAL OF BALLAST AND DISPOSAL	REMOVAL OF SIGN WIRING AND DISPOSAL	REMOVAL OF SIGN SERVICE AND DISPOSAL
					EACH	EACH	SQ FT	EACH	EACH	EACH	EACH	EACH	EACH	EACH	EACH	EACH	EACH	EACH	EACH	EACH	EACH	EACH	EACH	EACH
18S	326+43 I.R. 275	LT	GB	192 x 150	1	1	200.00	2	3	2	1	1	2	1	1	2	2	2	4	1	2	4	3	1
			GEP-84	84 x 24			14.00																	
21S	337+08 I.R. 275	RT	--	--					1		1								2	1		2	1	1
TOTALS CARRIED TO OVERHEAD SIGN SUB-SUMMARY					1	1	214.00	2	4	2	2	1	2	1	1	2	2	2	6	2	2	6	4	2

CALCULATED JAG CHECKED AM

OVERHEAD SIGNING DETAILS

CLE-275-5.35

417
857

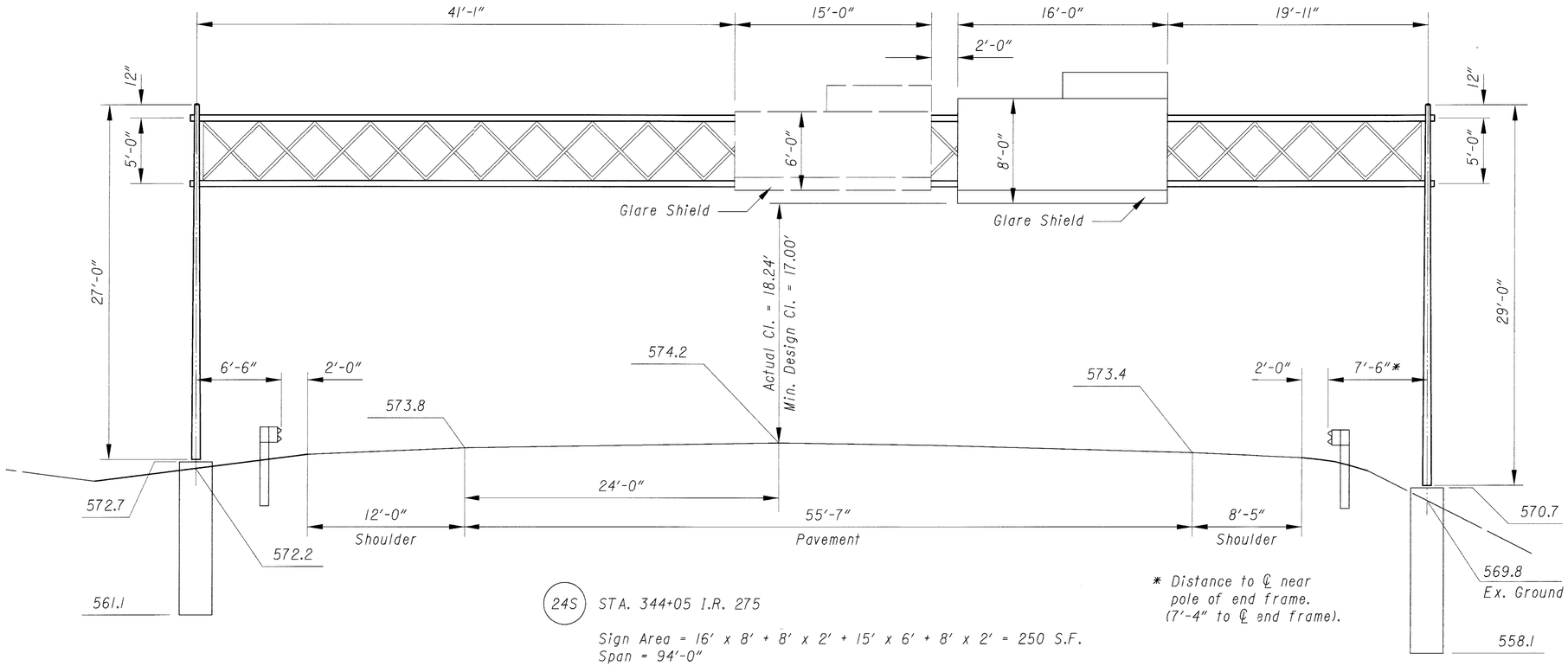

REF NO.	STATION	SIDE	CODE	SIZE (INCHES)	625	630						631												
					GROUND ROD	OVERHEAD SIGN SUPPORT TC-7.65 DESIGN 8 94'-0" SPAN	SIGN, EXTRU-SHEET, TYPE G	RIGID OVERHEAD SIGN SUPPORT FOUNDA-TION	REMOVAL OF OVHD MOUNTED SIGN AND STORAGE	REMOVAL OF OVHD MOUNTED SIGN AND REEREC-TION	REMOVAL OF OVHD SIGN SUPPORT AND DISPOSAL TC-7.65	SIGN SERVICE	SIGN WIRED	DISCONNECT SWITCH WITH ENCLOSURE 30 AMP	SWITCH ENCLOSURE MOUNTING BRACKET ASSEMBLY	BALLAST CMRI-175-480 INTEGRAL	MERCURY VAPOR LUMINAIRE TC-31.20 175W LAMP	REMOVAL OF LUMINAIRE AND REERECTION	REMOVAL OF LUMINAIRE AND DISPOSAL	REMOVAL OF DISCONNECT SWITCH AND DISPOSAL	REMOVAL OF BALLAST AND REERECTION	REMOVAL OF BALLAST AND DISPOSAL	REMOVAL OF SIGN WIRING AND DISPOSAL	REMOVAL OF SIGN SERVICE AND DISPOSAL
					EACH	EACH	SQ FT	EACH	EACH	EACH	EACH	EACH	EACH	EACH	EACH	EACH	EACH	EACH	EACH	EACH	EACH	EACH	EACH	EACH
24S	344+05 I.R. 275	LT	GE	192 x 90	1	1	120.00	2	3	2	1	1	2	1	1	2	2	2	4	1	2	4	3	1
			GEP	96 x 24			16.00																	
TOTALS CARRIED TO OVERHEAD SIGN SUB-SUMMARY					1	1	136.00	2	3	2	1	1	2	1	1	2	2	2	4	1	2	4	3	1

CALCULATED JAG
CHECKED AM

OVERHEAD SIGNING DETAILS

CLE-275-5.35

418
857

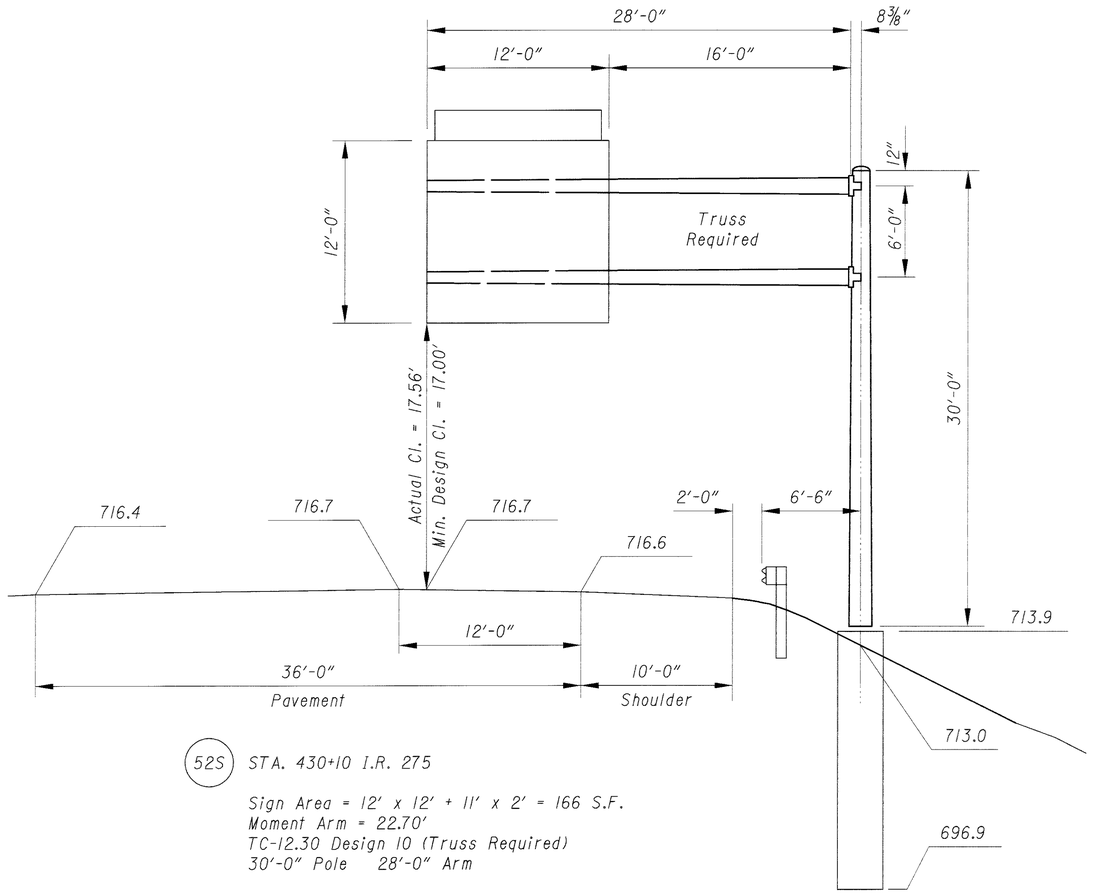

(52S) STA. 430+10 I.R. 275

Sign Area = 12' x 12' + 11' x 2' = 166 S.F.
Moment Arm = 22.70'
TC-12.30 Design 10 (Truss Required)
30'-0" Pole 28'-0" Arm

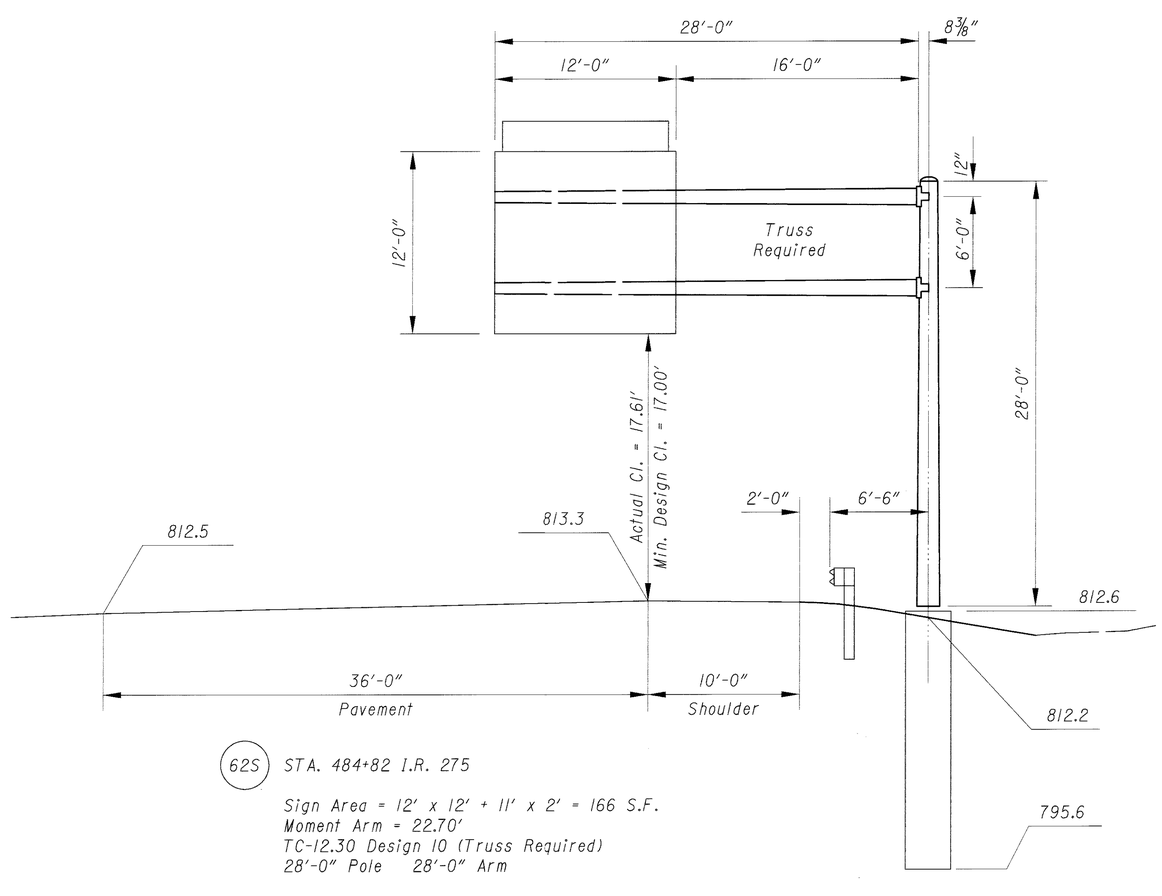

(62S) STA. 484+82 I.R. 275

Sign Area = 12' x 12' + 11' x 2' = 166 S.F.
Moment Arm = 22.70'
TC-12.30 Design 10 (Truss Required)
28'-0" Pole 28'-0" Arm

REF NO.	STATION	SIDE	CODE	SIZE (INCHES)	630											
					OVERHEAD SIGN SUPPORT TC-12.30 DESIGN 10 28'-0" ARM	SIGN, EXTRU-SHEET, TYPE G	RIGID OVERHEAD SIGN SUPPORT FOUNDA-TION									
					EACH	SQ FT	EACH									
52S	430+10 I.R. 275	RT	GB	144 x 144	1	144.00	1									
			GEP-132	132 x 24		22.00										
62S	484+82 I.R. 275	RT	GB	144 x 144	1	144.00	1									
			GEP-132	132 x 24		22.00										
TOTALS CARRIED TO OVERHEAD SIGN SUB-SUMMARY					2	332.00	2									

CALCULATED JAG CHECKED AM

OVERHEAD SIGNING DETAILS

CLE-275-5.35

419
857

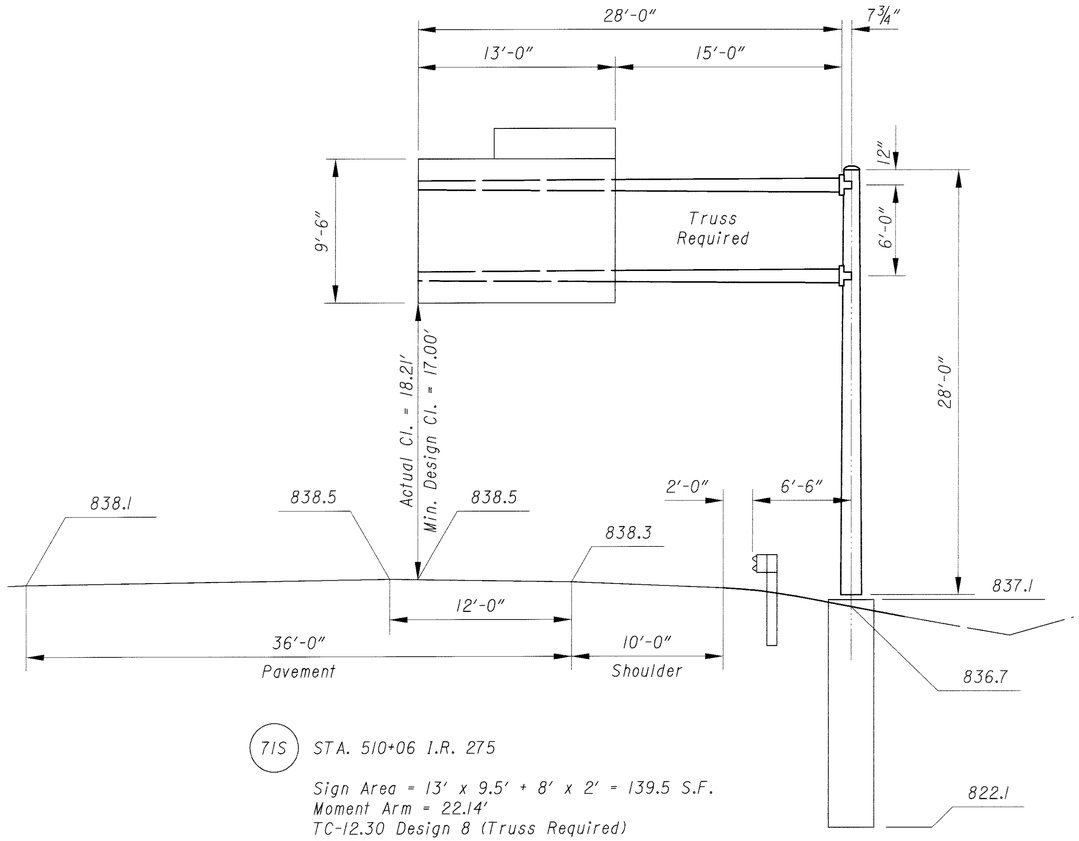

(71S) STA. 510+06 I.R. 275

Sign Area = 13' x 9.5' + 8' x 2' = 139.5 S.F.
Moment Arm = 22.14'
TC-12.30 Design 8 (Truss Required)
28'-0" Pole 28'-0" Arm

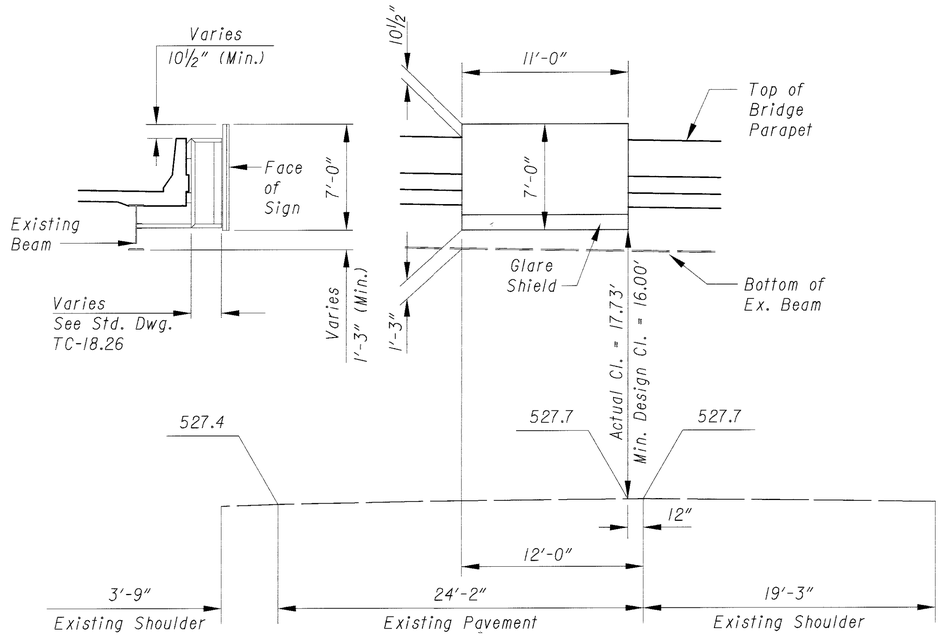

(78S) STA. 108+39 U.S.R. 50J

Sign Area = 11' x 7' = 77 S.F.
TC-18.26, Skewed Structure Mounted
Sign Support, Design 2

REF NO.	STATION	SIDE	CODE	SIZE (INCHES)	625	630						631										
					GROUND ROD	OVERHEAD SIGN SUPPORT TC-12.30 DESIGN 8 28'-0" ARM	OVERPASS STRUCTURE MOUNTED SIGN SUPPORT TC-18.26 DESIGN 2	SIGN, EXTRU-SHEET, TYPE G	RIGID OVERHEAD SIGN SUPPORT FOUNDA-TION	REMOVAL OF OVHD MOUNTED SIGN AND STORAGE	REMOVAL OF OVHD SIGN SUPPORT AND DISPOSAL TC-18.26	SIGN SERVICE	SIGN WIRED	DISCONNECT SWITCH WITH ENCLOSURE 30 AMP	SWITCH ENCLOSURE MOUNTING BRACKET ASSEMBLY	BALLAST CMRI-175-480 INTEGRAL	MERCURY VAPOR LUMINAIRE TC-31.20 175W LAMP	REMOVAL OF LUMINAIRE AND DISPOSAL	REMOVAL OF DISCONNECT SWITCH AND DISPOSAL	REMOVAL OF BALLAST AND DISPOSAL	REMOVAL OF SIGN WIRING AND DISPOSAL	REMOVAL OF SIGN SERVICE AND DISPOSAL
					EACH	EACH	EACH	SQ FT	EACH	EACH	EACH	EACH	EACH	EACH	EACH	EACH	EACH	EACH	EACH	EACH	EACH	EACH	EACH
71S	510+06 I.R. 275	RT	GB	156 x 114		1		123.50	1													
			GEP-96	96 x 24				16.00														
78S	108+39 U.S.R. 50J	LT	GE	132 x 78	1		1	71.50		1	1	1	1	1	1	2	2	2	1	2	1	1
TOTALS CARRIED TO OVERHEAD SIGN SUB-SUMMARY					1	1	1	211.00	1	1	1	1	1	1	1	2	2	2	1	2	1	1

CALCULATED JAG
CHECKED AM

OVERHEAD SIGNING DETAILS

CLE-275-5.35

420
857

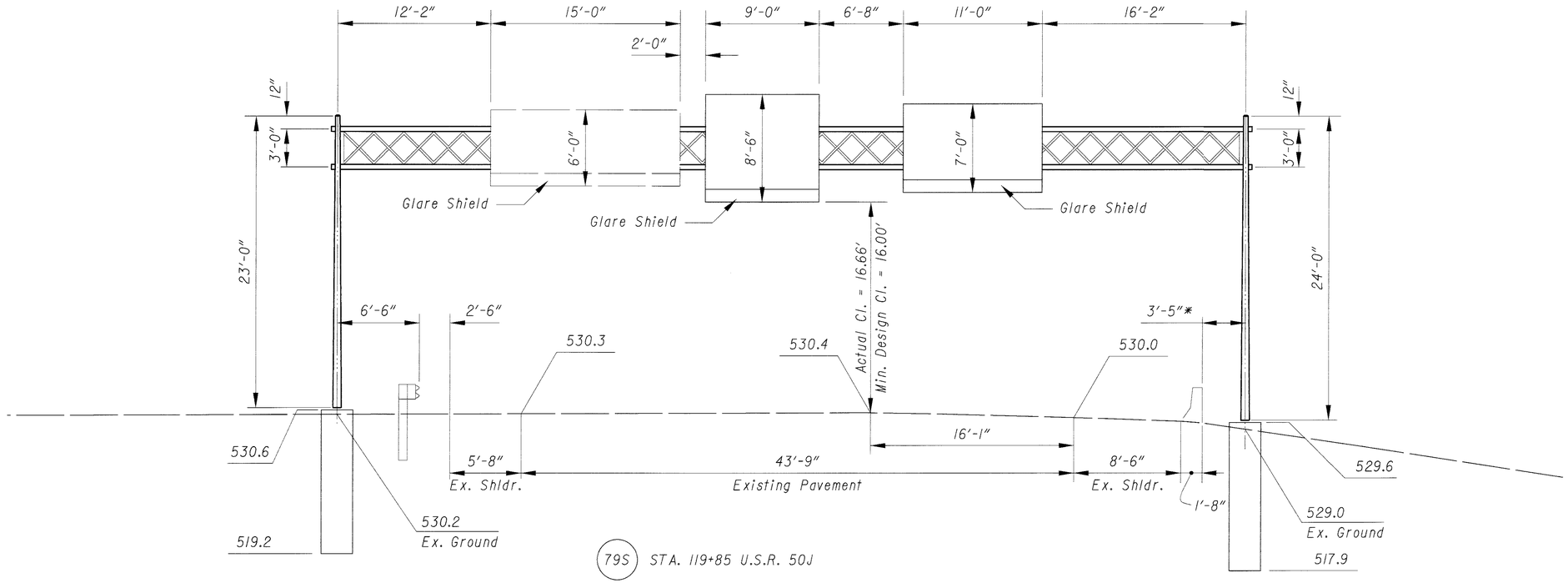

79S STA. 119+85 U.S.R. 50J

Sign Area = 15' x 6' + 9' x 8.5' + 11' x 7' = 243.5 S.F.
Span = 72'-0"
TC-7.65 Design 6; 3 Ft. Box
23'-0" & 24'-0" Poles

* Distance to ℄ near pole of end frame. (3'-3" to ℄ end frame).

REF NO.	STATION	SIDE	CODE	SIZE (INCHES)	625	630						631												
					GROUND ROD	OVERHEAD SIGN SUPPORT TC-7.65 DESIGN 6 72'-0" SPAN	SIGN, EXTRU-SHEET, TYPE G	RIGID OVERHEAD SIGN SUPPORT FOUNDA-TION	REMOVAL OF OVHD MOUNTED SIGN AND STORAGE	REMOVAL OF OVHD MOUNTED SIGN AND REERECTION	REMOVAL OF OVHD SIGN SUPPORT AND DISPOSAL TC-7.65	SIGN SERVICE	SIGN WIRED	DISCONNECT SWITCH WITH ENCLOSURE 30 AMP	SWITCH ENCLOSURE MOUNTING BRACKET ASSEMBLY	BALLAST CMRI-175-480 INTEGRAL	MERCURY VAPOR LUMINAIRE TC-31.20 175W LAMP	REMOVAL OF LUMINAIRE AND REERECTION	REMOVAL OF LUMINAIRE AND DISPOSAL	REMOVAL OF DISCONNECT SWITCH AND DISPOSAL	REMOVAL OF BALLAST AND REERECTION	REMOVAL OF BALLAST AND DISPOSAL	REMOVAL OF SIGN WIRING AND DISPOSAL	REMOVAL OF SIGN SERVICE AND DISPOSAL
					EACH	EACH	SQ FT	EACH	EACH	EACH	EACH	EACH	EACH	EACH	EACH	EACH	EACH	EACH	EACH	EACH	EACH	EACH	EACH	EACH
79S	119+85 U.S.R. 50J	LT	GE	132 x 78	1	1	71.50	2	2	1	1	1	3	1	1	3	3	2	4	1	2	4	3	1
			GG	108 x 96			72.00																	
TOTALS CARRIED TO OVERHEAD SIGN SUB-SUMMARY					1	1	143.50	2	2	1	1	1	3	1	1	3	3	2	4	1	2	4	3	1

CALCULATED JAG CHECKED AM

OVERHEAD SIGNING DETAILS

CLE-275-5.35

421
857

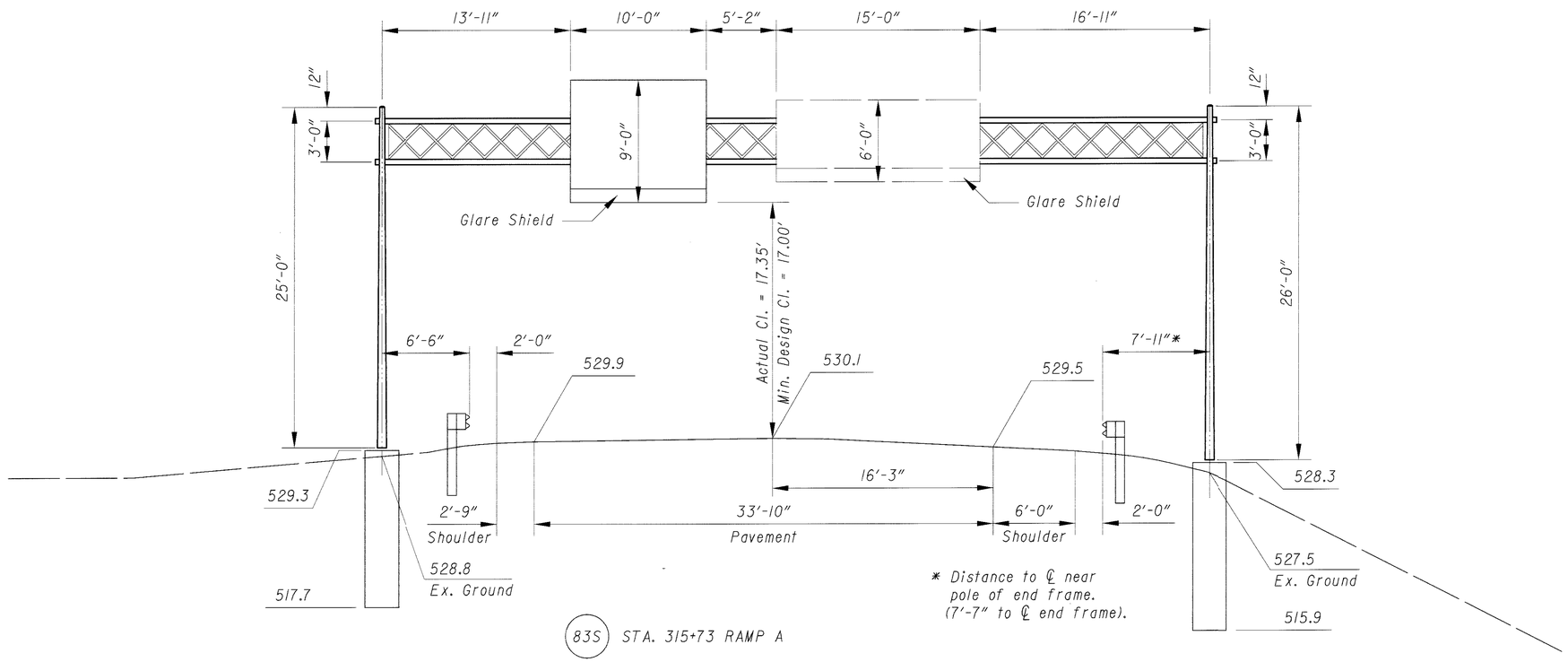

83S STA. 315+73 RAMP A

Sign Area = 10' x 9' + 15' x 6' = 180 S.F.
Span = 61'-0"
TC-7.65 Design 6; 3 Ft. Box
25'-0" & 26'-0" Poles

REF NO.	STATION	SIDE	CODE	SIZE (INCHES)	625	630						631												
					GROUND ROD	OVERHEAD SIGN SUPPORT TC-7.65 DESIGN 6 61'-0" SPAN	SIGN, EXTRU-SHEET, TYPE G	RIGID OVERHEAD SIGN SUPPORT FOUNDA-TION	REMOVAL OF OVHD MOUNTED SIGN AND STORAGE	REMOVAL OF OVHD MOUNTED SIGN AND REEREC-TION	REMOVAL OF OVHD SIGN SUPPORT AND DISPOSAL TC-7.65	SIGN SERVICE	SIGN WIRED	DISCONNECT SWITCH WITH ENCLOSURE 30 AMP	SWITCH ENCLOSURE MOUNTING BRACKET ASSEMBLY	BALLAST CMRI-175-480 INTEGRAL	MERCURY VAPOR LUMINAIRE TC-31.20 175W LAMP	REMOVAL OF LUMINAIRE AND REERECTION	REMOVAL OF LUMINAIRE AND DISPOSAL	REMOVAL OF DISCONNECT SWITCH AND DISPOSAL	REMOVAL OF BALLAST AND REERECTION	REMOVAL OF BALLAST AND DISPOSAL	REMOVAL OF SIGN WIRING AND DISPOSAL	REMOVAL OF SIGN SERVICE AND DISPOSAL
					EACH	EACH	SQ FT	EACH	EACH	EACH	EACH	EACH	EACH	EACH	EACH	EACH	EACH	EACH	EACH	EACH	EACH	EACH	EACH	EACH
83S	315+73 RAMP A	LT/RT	GG	120 x 102	1	1	85.00	2	1	1	1	1	2	1	1	1	1	2	2	1	2	2	2	1
TOTALS CARRIED TO OVERHEAD SIGN SUB-SUMMARY					1	1	85.00	2	1	1	1	1	2	1	1	1	1	2	2	1	2	2	2	1

CALCULATED JAG
CHECKED AM

OVERHEAD SIGNING DETAILS

CLE-275-5.35

422
857

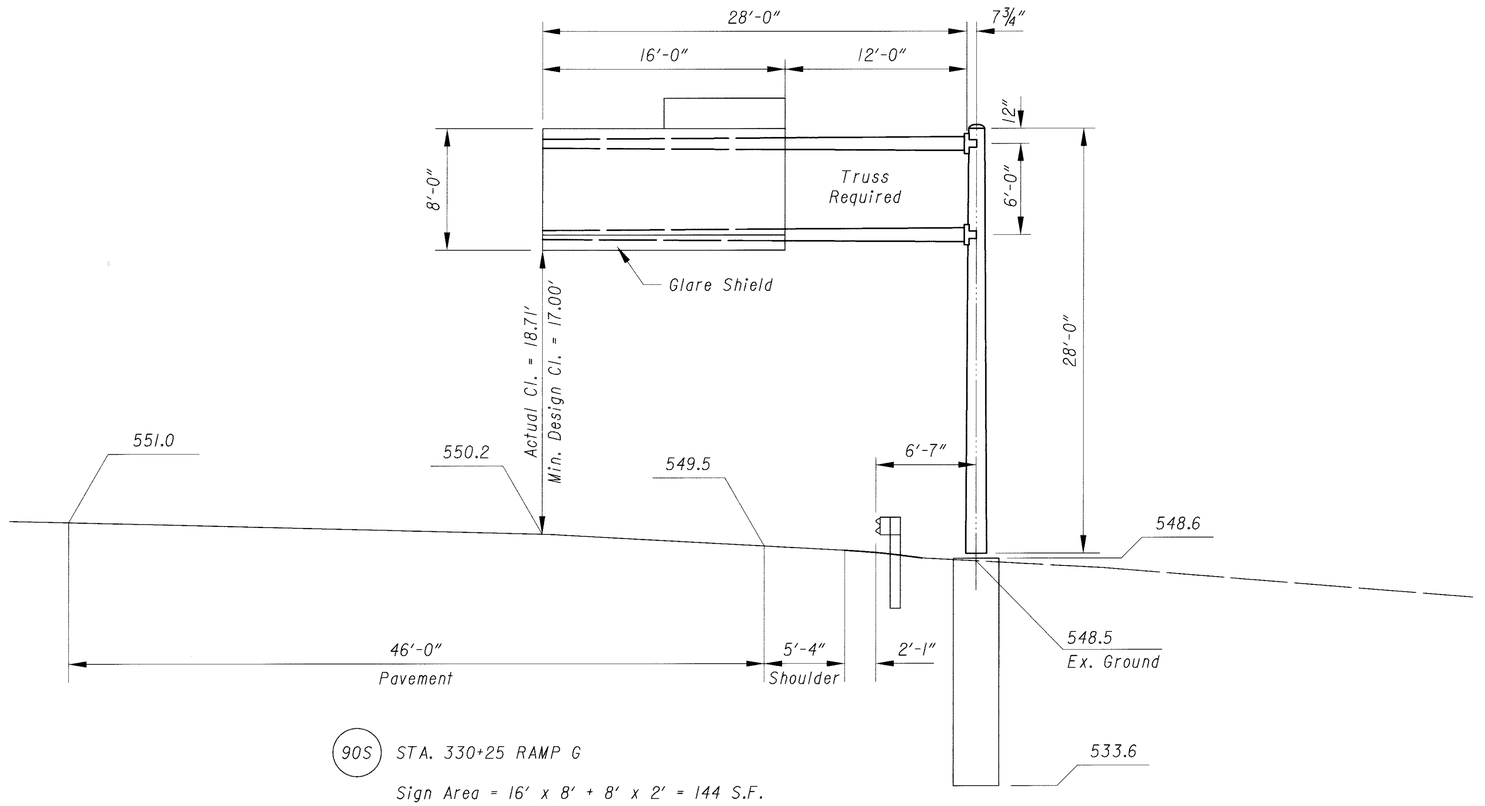

90S STA. 330+25 RAMP G

Sign Area = 16' x 8' + 8' x 2' = 144 S.F.
Moment Arm = 20.64'
TC-12.30 Design 8 (Truss Required)
28'-0" Pole 28'-0" Arm

REF NO.	STATION	SIDE	CODE	SIZE (INCHES)	625	630					631										
					GROUND ROD	OVERHEAD SIGN SUPPORT TC-12.30 DESIGN 8 28'-0" ARM	SIGN, EXTRU-SHEET, TYPE G	RIGID OVERHEAD SIGN SUPPORT FOUNDA-TION	REMOVAL OF OVHD MOUNTED SIGN AND STORAGE	REMOVAL OF OVHD SIGN SUPPORT AND DISPOSAL TC-12.30	SIGN SERVICE	SIGN WIRED	DISCONNECT SWITCH WITH ENCLOSURE 30 AMP	SWITCH ENCLOSURE MOUNTING BRACKET ASSEMBLY	BALLAST CMRI-175-480 INTEGRAL	MERCURY VAPOR LUMINAIRE TC-31.20 175W LAMP	REMOVAL OF LUMINAIRE AND DISPOSAL	REMOVAL OF DISCONNECT SWITCH AND DISPOSAL	REMOVAL OF BALLAST AND DISPOSAL	REMOVAL OF SIGN WIRING AND DISPOSAL	REMOVAL OF SIGN SERVICE AND DISPOSAL
					EACH	EACH	SQ FT	EACH	EACH	EACH	EACH	EACH	EACH	EACH	EACH	EACH	EACH	EACH	EACH	EACH	EACH
90S	330+25 RAMP G	RT	GE	192 x 90	1	1	120.00	1	2	1	1	1	1	1	2	2	2	1	2	1	1
			GEP-96	96 x 24			16.00														
TOTALS CARRIED TO OVERHEAD SIGN SUB-SUMMARY					1	1	136.00	1	2	1	1	1	1	1	2	2	2	1	2	1	1

CALCULATED JAG
CHECKED AM

OVERHEAD SIGNING DETAILS

CLE-275-5.35

SEEDING END WIDTH	SEEDING SQ. YDS.
36	200
36	220
36	0

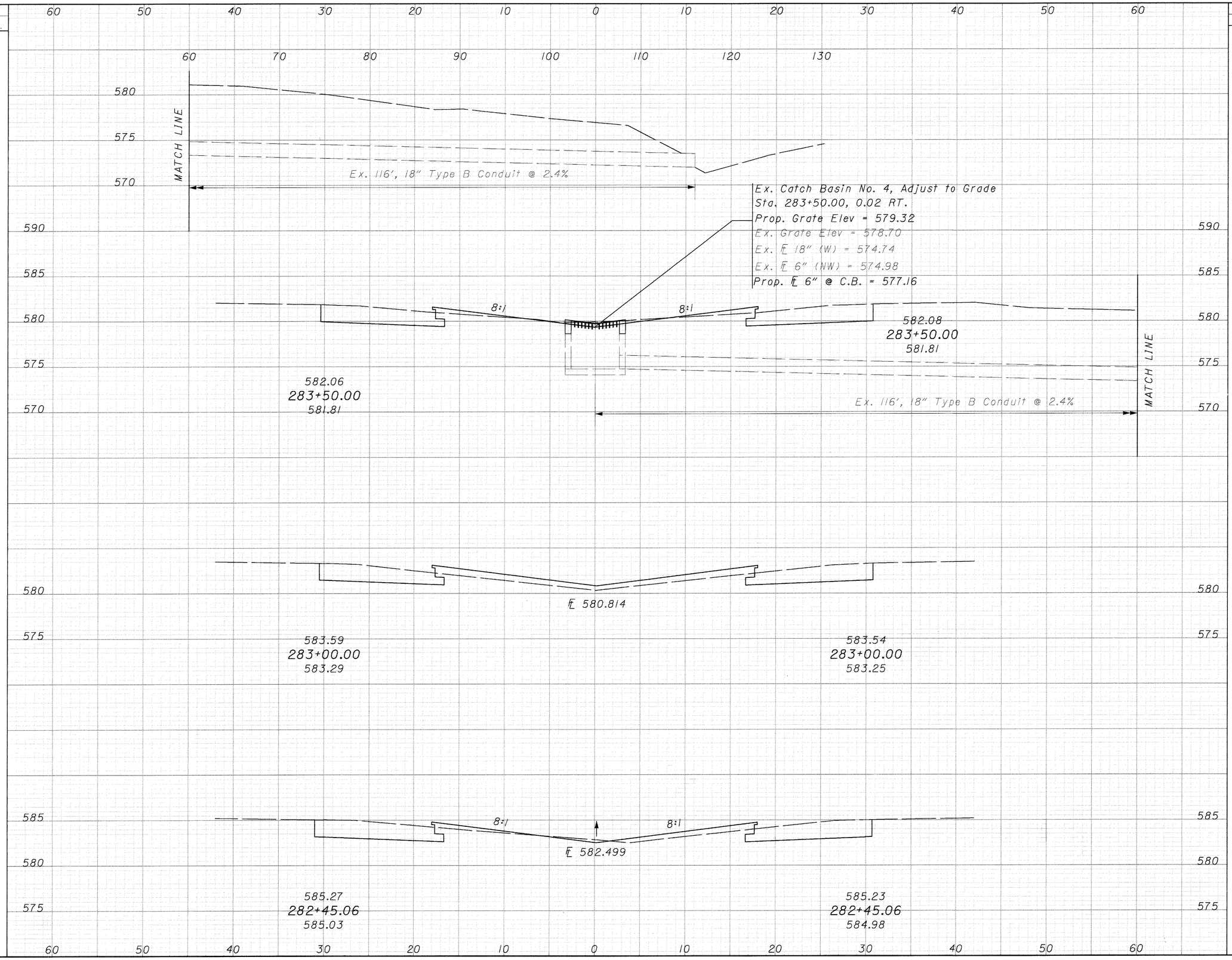

END AREA CUT	END AREA FILL	VOLUME CUT	VOLUME FILL
50	6	87	27
44	23	95	36
49	12	0	0

CALCULATED AM

CHECKED JDB

I.R.275 CROSS SECTIONS STA 282+45.06 TO STA 283+50.00

CLE-275-5.35

424
857

SEEDING END WIDTH	SEEDING SQ. YDS.	END AREA CUT	END AREA FILL	VOLUME CUT	VOLUME FILL
36		44	18		
	200			83	26
36		46	10		
	200			91	14
36		52	5		
	200			94	10

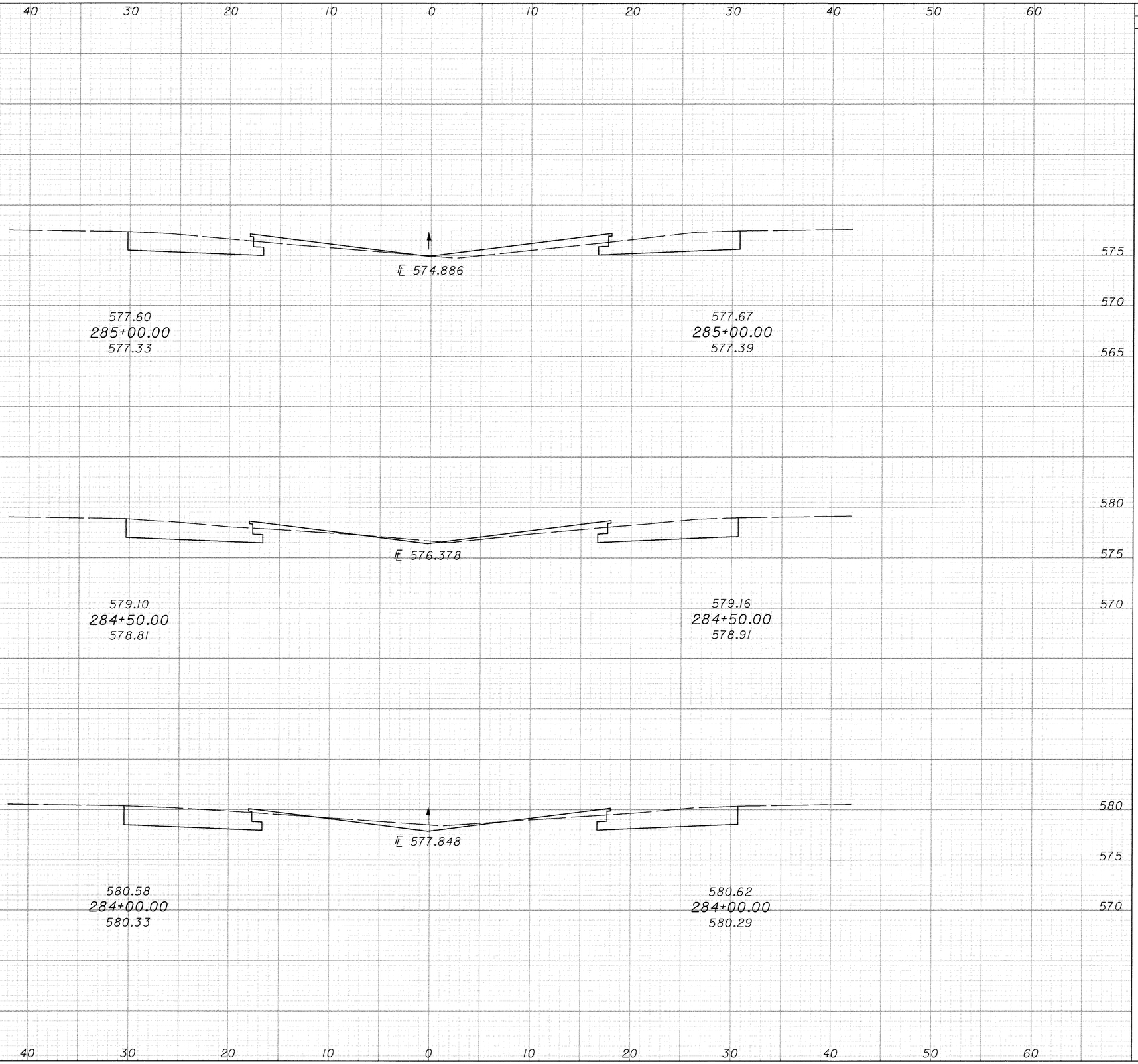

CALCULATED AM

CHECKED JDB

I.R.275 CROSS SECTIONS
STA 284+00.00 TO STA 285+00.00

CLE-275-5.35

425
857

SEEDING			END AREA		VOLUME	
END WIDTH	SQ. YDS.		CUT	FILL	CUT	FILL
36	200	573.11 286+50.00 572.84	47	8	84	18
36	200	574.61 286+00.00 574.37	44	11	81	28
36	200	576.10 285+50.00 575.90	43	19	81	34

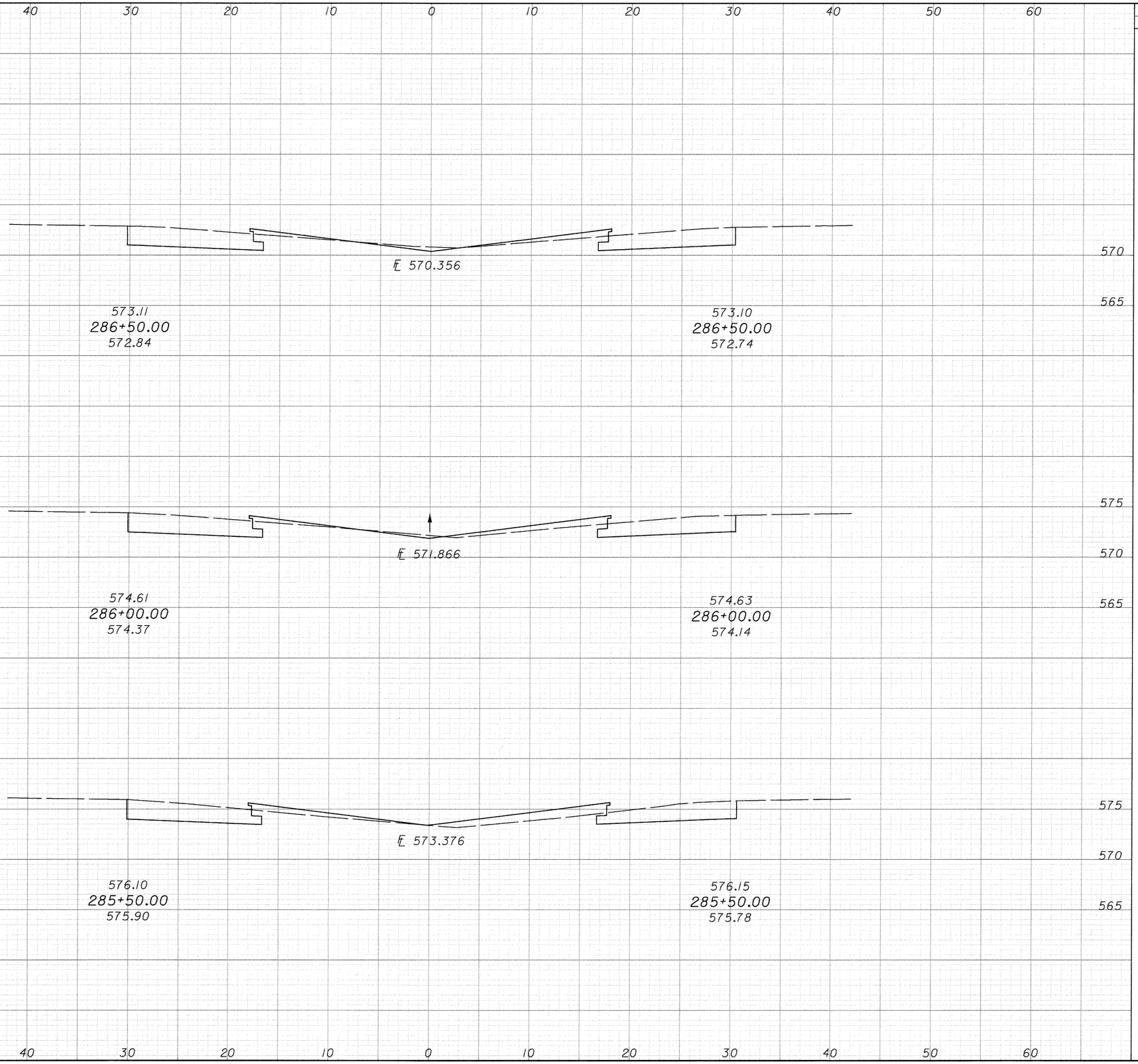

CALCULATED AM

CHECKED JOB

I.R.275 CROSS SECTIONS
STA 285+50.00 TO STA 286+50.00

CLE-275-5.35

426
857

SEEDING		END AREA		VOLUME			
END WIDTH	SQ. YDS.	CUT	FILL	CUT	FILL	CALCULATED AM	CHECKED JGB
36	200	67	6	110	10		
36	200	52	5	93	11		
36	200	48	7	88	14		

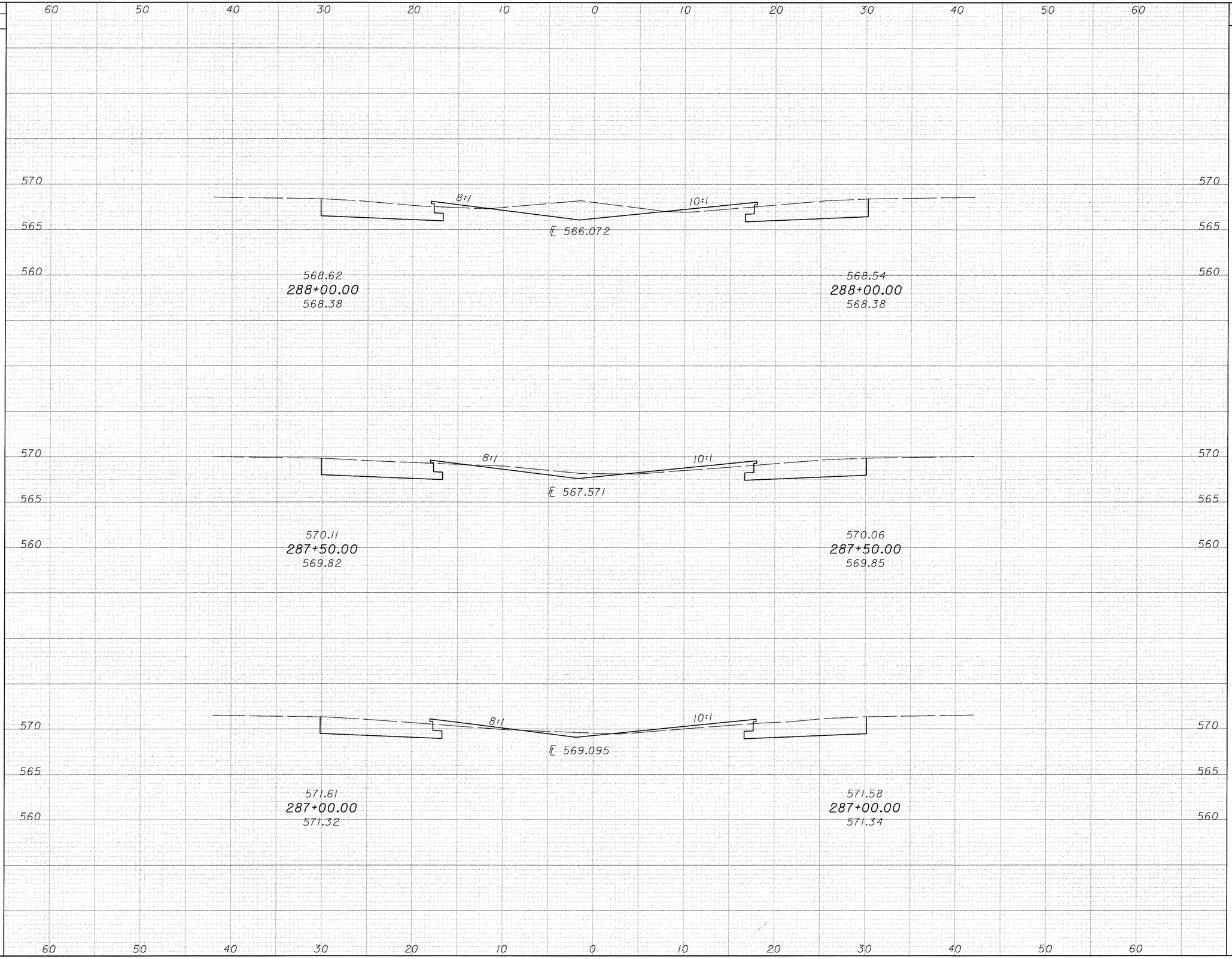

I.R.275 CROSS SECTIONS STA 287+00.00 TO 288+00.00

CLE-275-5.35

427
857

SEEDING		END AREA		VOLUME			
END WIDTH	SQ. YDS.	CUT	FILL	CUT	FILL	CALCULATED AM	CHECKED JOB
36	115	46	24	50	18		
36	200	48	10	101	16		
36	200	61	7	119	12		

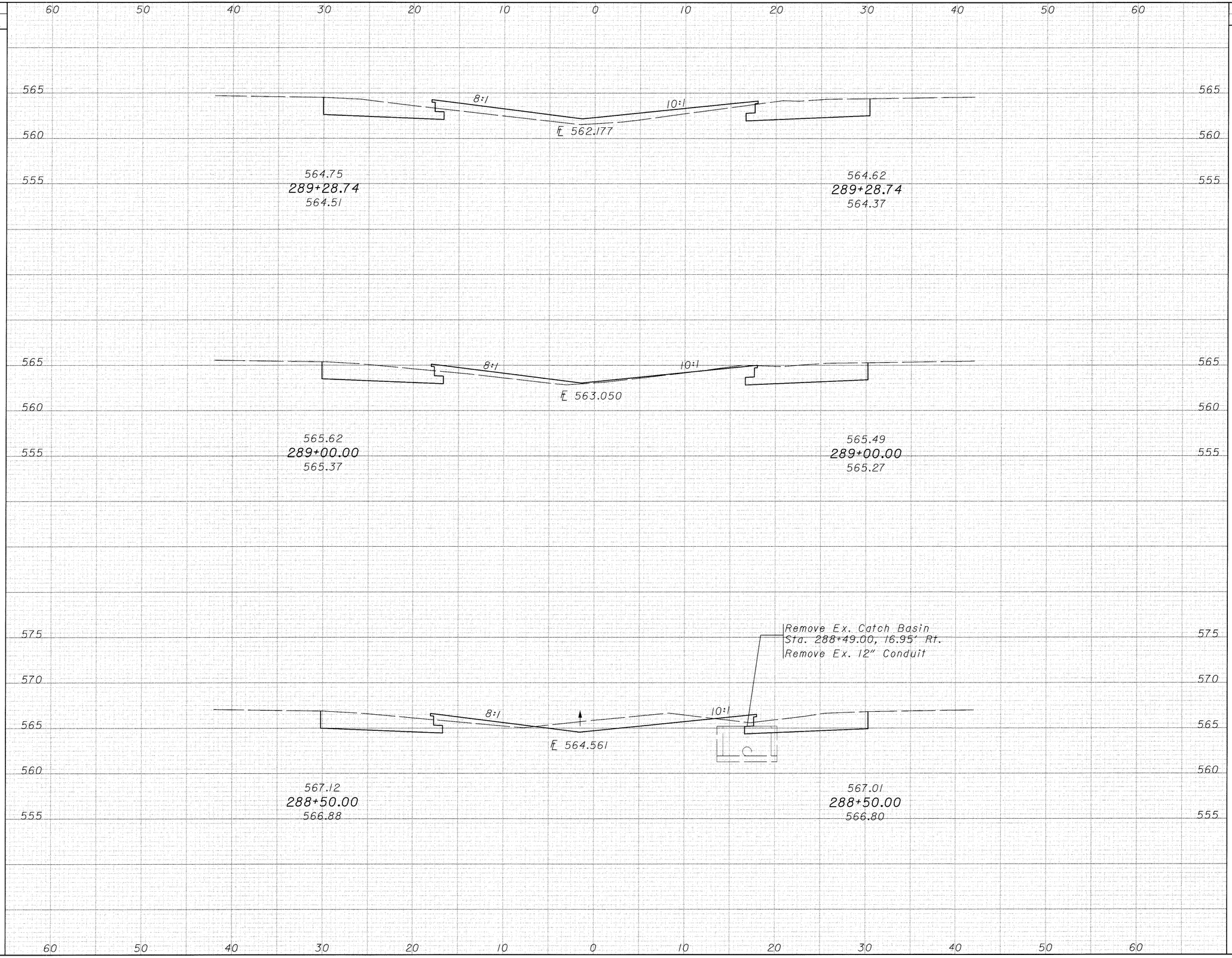

I.R.275 CROSS SECTIONS
STA 288+50.00 TO 289+28.74

CLE-275-5.35

428
857

SEEDING	
END WIDTH	SQ. YDS.
36	143

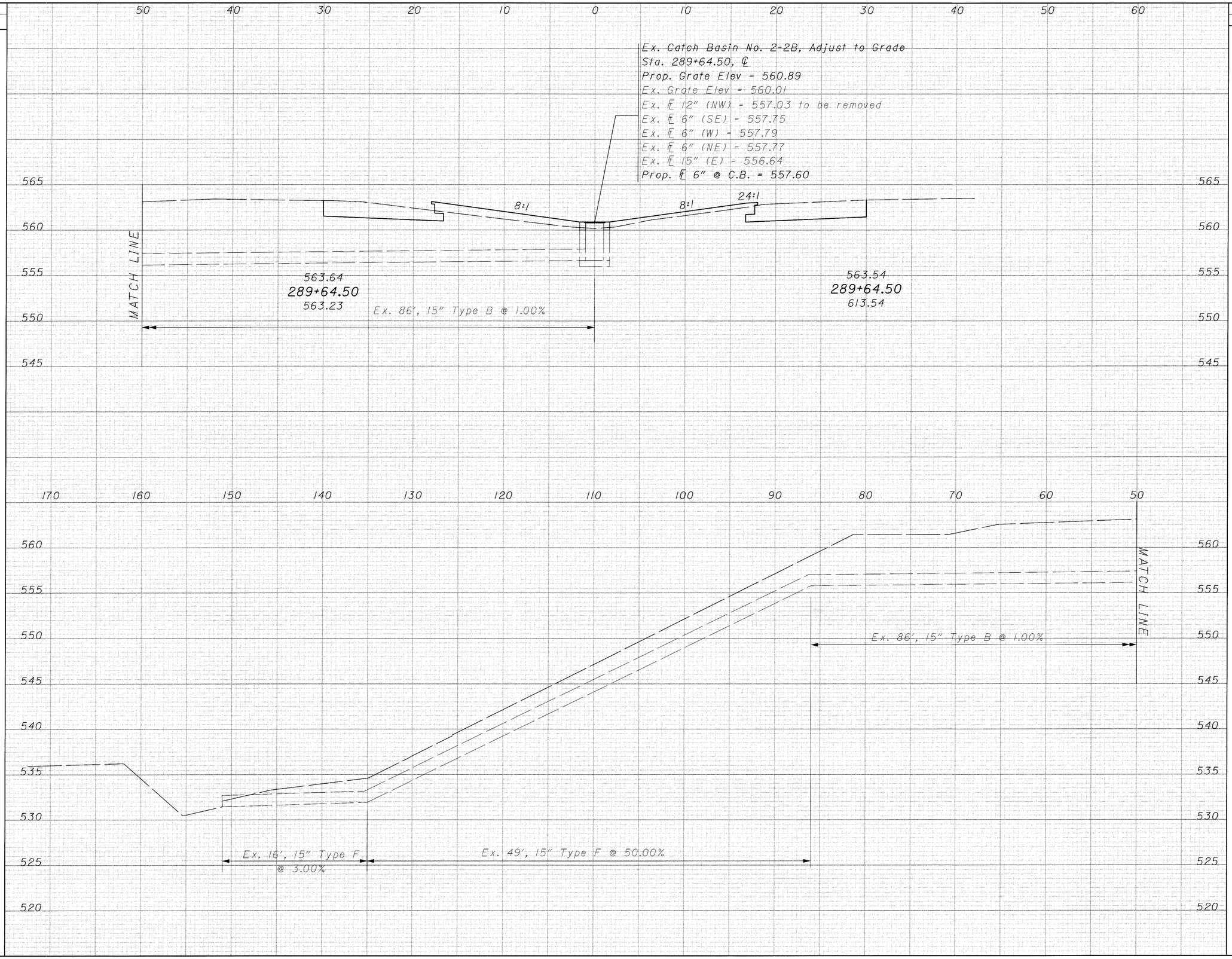

END AREA		VOLUME	
CUT	FILL	CUT	FILL
44	23	60	31

CALCULATED AM

CHECKED JOB

I.R.275 CROSS SECTIONS STA 289+64.50

CLE-275-5.35

429
857

SEEDING	
END WIDTH	SQ. YDS.
74	204
73	75

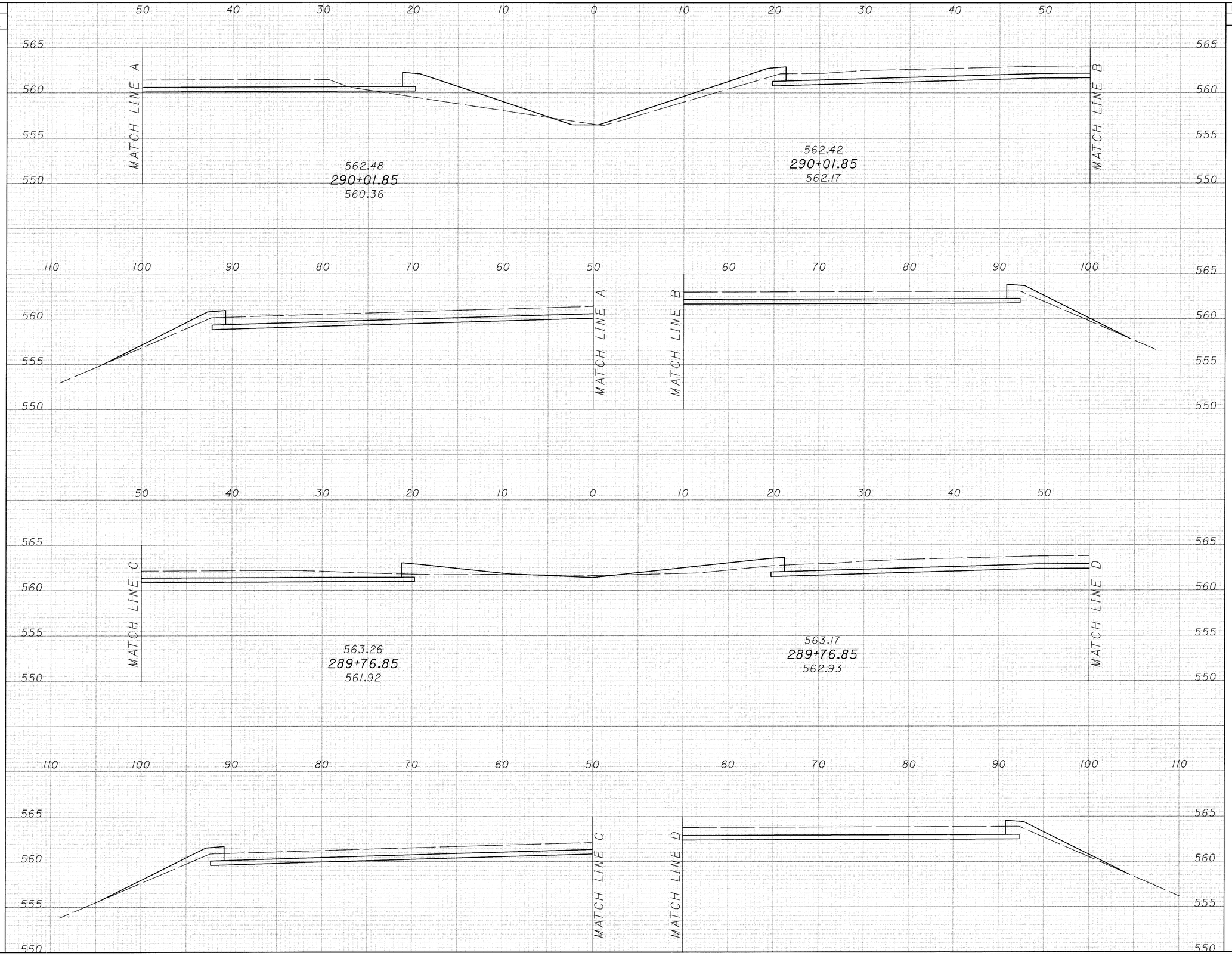

END AREA		VOLUME	
CUT	FILL	CUT	FILL
178	50		
		169	38
186	31		
		53	12

CALCULATED AM

CHECKED JOB

I.R.275 CROSS SECTIONS

STA 289+76.85 TO STA 290+01.85

CLE-275-5.35

430
857

SEEDING	
END WIDTH	SQ. YDS.
73	204
74	0

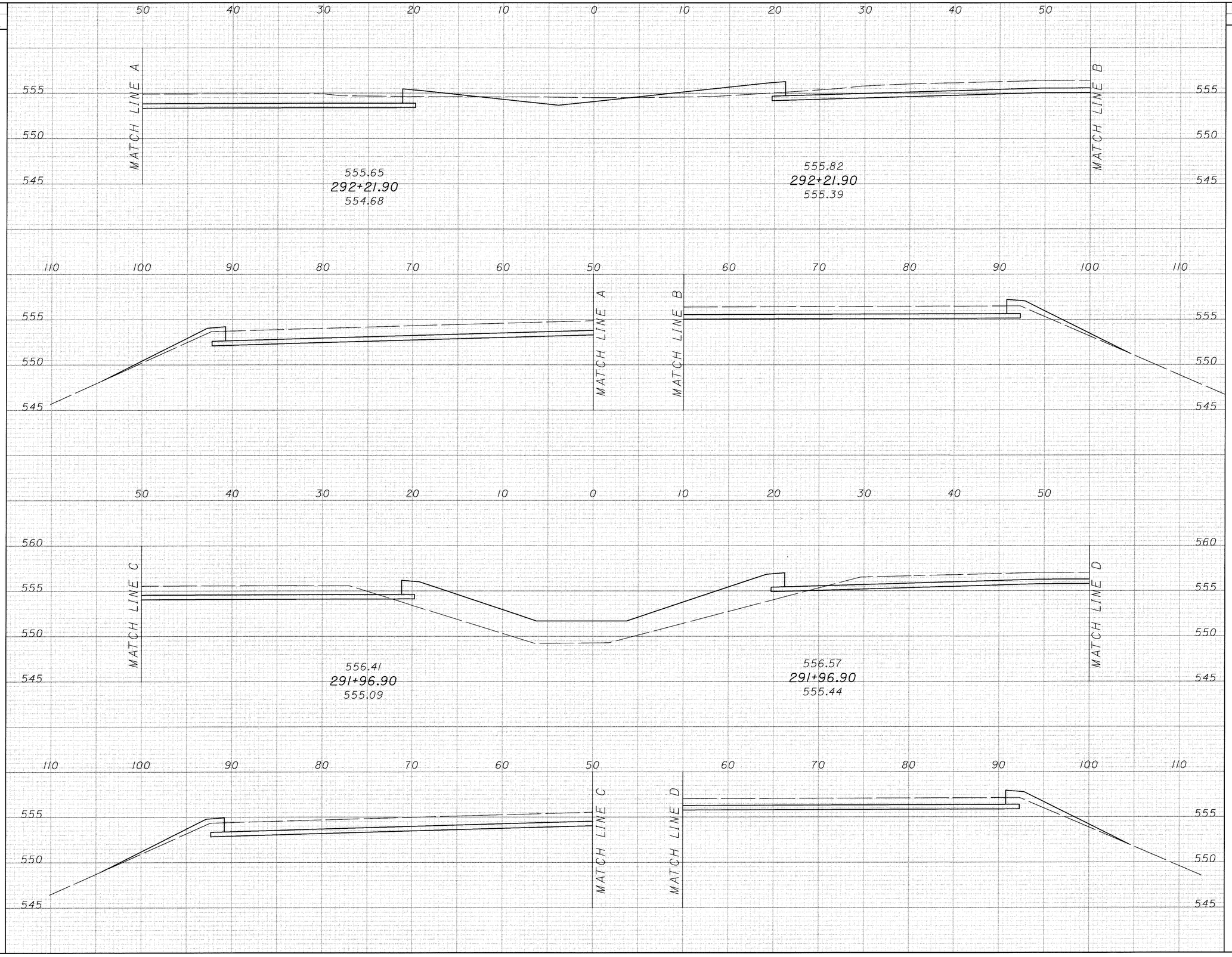

END AREA		VOLUME	
CUT	FILL	CUT	FILL
209	26		
		181	67
183	118		
0	0		

CALCULATED AM

CHECKED JOB

I.R.275 CROSS SECTIONS

STA 291+96.90 TO STA 292+21.90

CLE-275-5.35

431
857

SEEDING		END AREA		VOLUME	
END WIDTH	SQ. YDS.	CUT	FILL	CUT	FILL
35	194	61	10	119	11
35	194	67	2	121	5
35	469	64	3	395	42

CALCULATED AM

CHECKED JGB

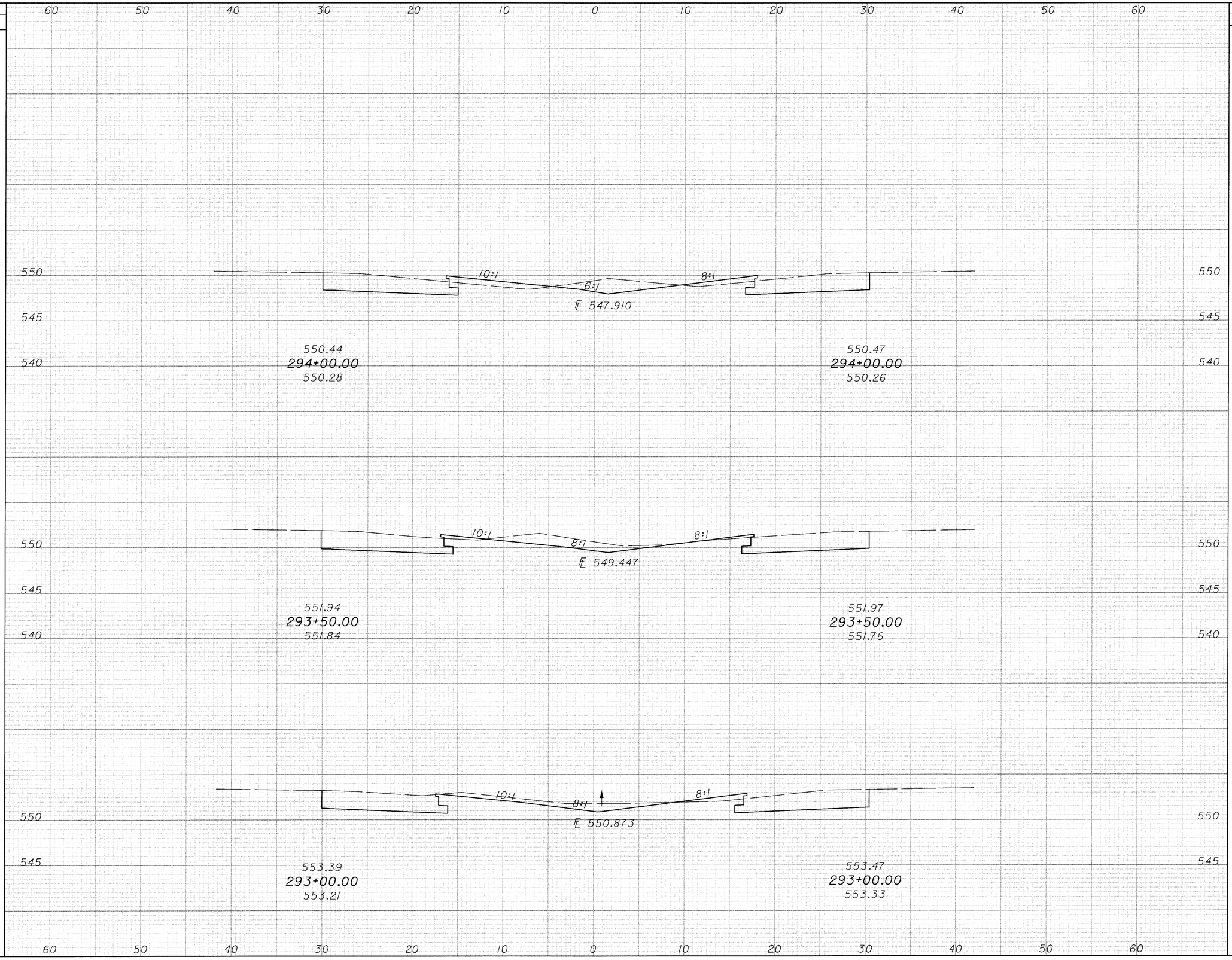

I.R.275 CROSS SECTIONS
STA 293+00.00 TO STA 294+00.00

CLE-275-5.35

SEEDING		END AREA		VOLUME		
END WIDTH	SQ. YDS.	CUT	FILL	CUT	FILL	
						60 50 40 30 20 10 0 10 20 30 40 50 60
33	186	51	23	94	42	545.91 295+50.00 545.82 — 8:1, 8:1, 10:1, ℄ 543.513 — 545.93 295+50.00 545.68
34	189	51	22	93	39	547.42 295+00.00 547.34 — 10:1, 8:1, 8:1, 10:1, ℄ 545.001 — 547.47 295+00.00 547.21
34	192	49	20	102	28	548.93 294+50.00 548.78 — 10:1, 8:1, ℄ 546.550 — 548.97 294+50.00 548.75
						60 50 40 30 20 10 0 10 20 30 40 50 60

CALCULATED AM

CHECKED JOB

I.R.275 CROSS SECTIONS STA 294+50.00 TO STA 295+50.00

CLE-275-5.35

433/857

SEEDING		END AREA		VOLUME	
END WIDTH	SQ. YDS.	CUT	FILL	CUT	FILL
31	175	52	18	94	35
32	178	49	20	89	42
32	282	47	25	142	69

CALCULATED AM

CHECKED JOB

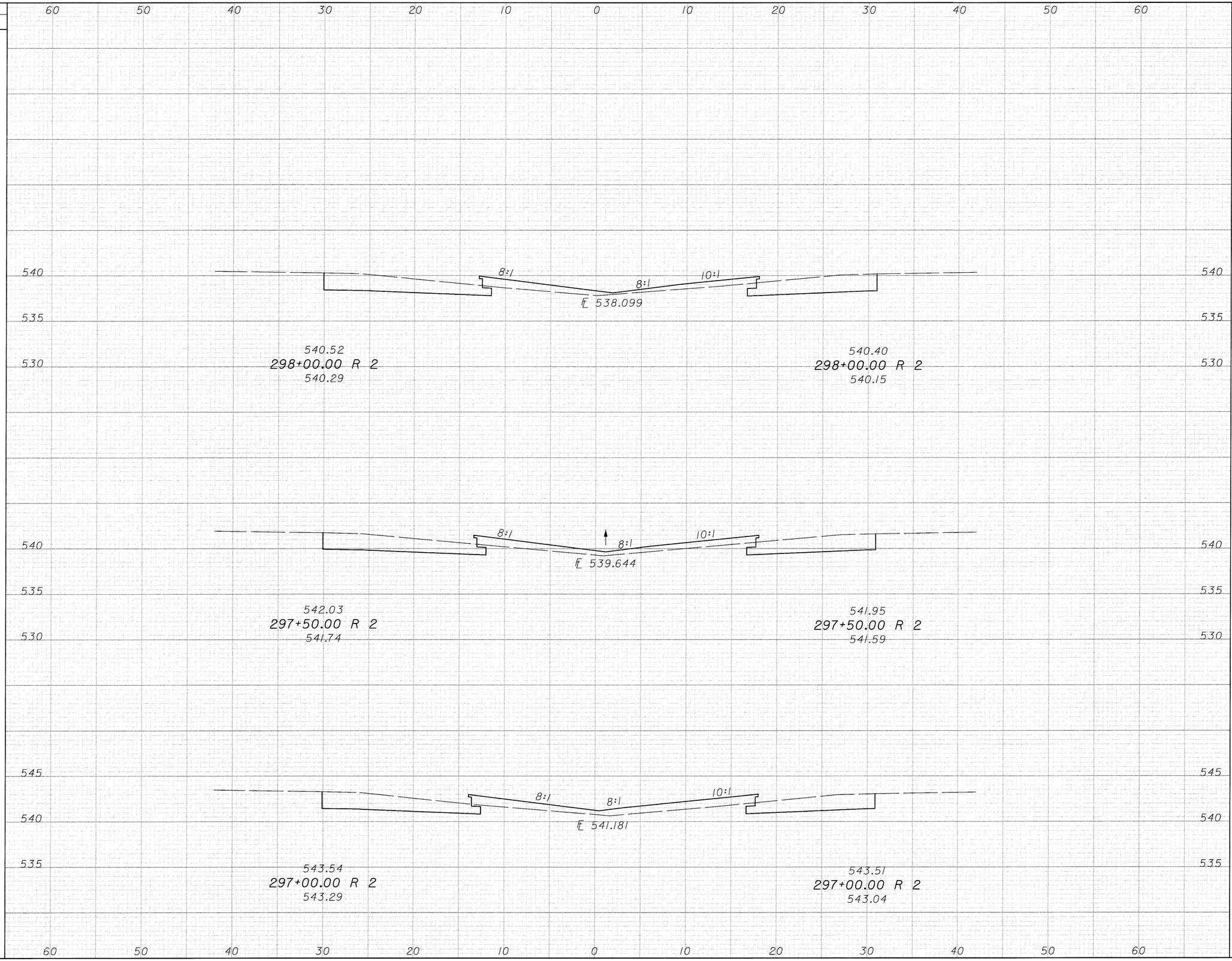

I.R.275 CROSS SECTIONS
STA 297+00.00 TO STA 298+00.00

CLE-275-5.35

434
857

SEEDING		END AREA		VOLUME	
END WIDTH	SQ. YDS.	CUT	FILL	CUT	FILL
30	169	52	10	98	20
31	79	54	12	46	11
31	93	53	14	52	16

CALCULATED AM

CHECKED JOB

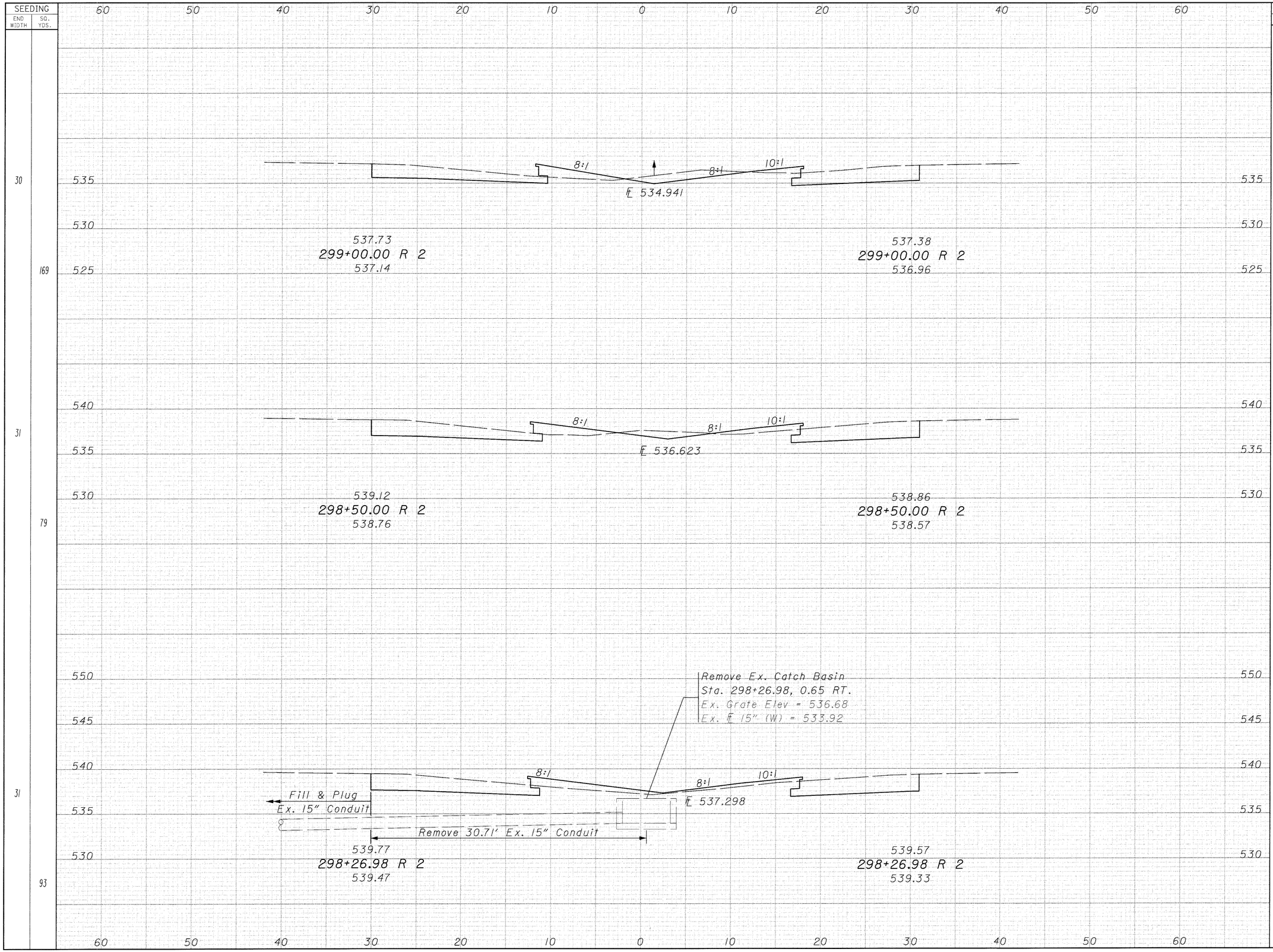

I.R.275 CROSS SECTIONS
STA 298+26.98 TO STA 299+00.00

CLE-275-5.35

435
857

SEEDING	
END WIDTH	SQ. YDS.
29	100
29	161
29	164

60 50 40 30 20 10 0 10 20 30 40 50 60

550 545 540 535 530 525

Ex. Catch Basin No. 4, Reconstruct to Grade
Sta. 300+30.90, 0.64 RT.
Prop. Grate Elev = 532.18
Ex. Grate Elev = 530.24
Ex. ℄ 12" (S) = 527.10
Ex. ℄ 6" (NW) = 528.18
Ex. ℄ 6" (NE) = 528.18
Prop. ℄ 6" @ C.B. = 528.10

8:1 8:1 24:1

534.18
300+30.90 R 2
533.78

533.87
300+30.90 R 2
533.63

8:1 8:1 10:1

℄ 532.533

534.98
300+00.00 R 2
534.48

534.65
300+00.00 R 2
534.40

8:1 8:1 10:1

℄ 533.847

536.34
299+50.00 R 2
535.70

535.98
299+50.00 R 2
535.62

END AREA		VOLUME	
CUT	FILL	CUT	FILL
52	32		
		57	35
48	29		
		85	44
44	18		
		89	26

CALCULATED AM | CHECKED JCB

I.R.275 CROSS SECTIONS
STA 299+50.00 TO STA 300+30.90

CLE-275-5.35

436
857

SEEDING END WIDTH	SEEDING SQ. YDS.
60	165
59	52

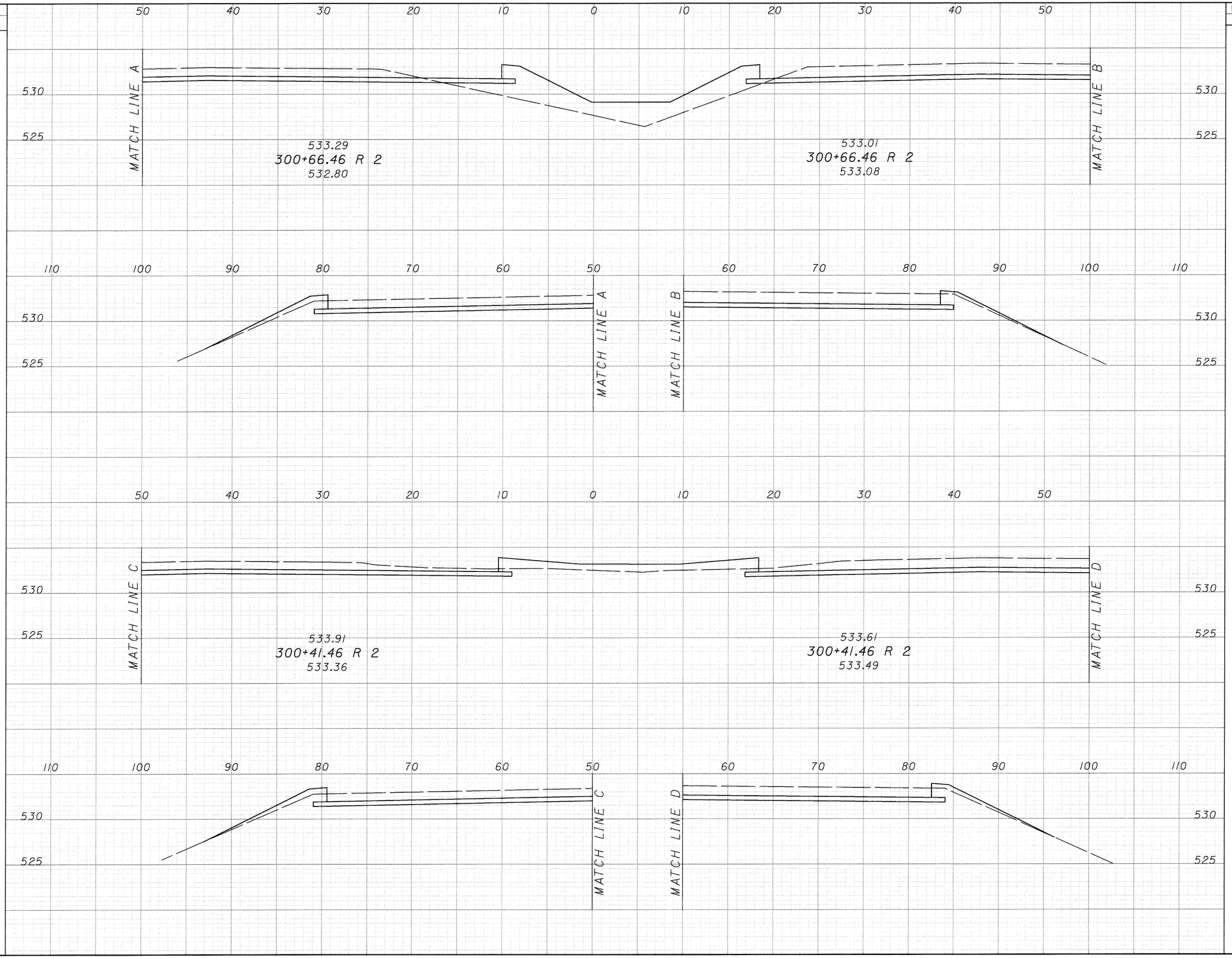

END AREA CUT	END AREA FILL	VOLUME CUT	VOLUME FILL
191	80	174	53
185	35	46	13

CALCULATED AM

CHECKED JOB

I.R.275 CROSS SECTIONS
STA 300+41.46 TO STA 300+66.46

CLE-275-5.35

437
857

SEEDING		END AREA		VOLUME	
END WIDTH	SQ. YDS.	CUT	FILL	CUT	FILL
55	156	236	13	210	53
57	0	218	102	0	0

CALCULATED AM

CHECKED JGB

I.R.275 CROSS SECTIONS
STA 303+42.29 TO STA 303+67.29

CLE-275-5.35

438
857

SEEDING		END AREA		VOLUME		CALCULATED AM	CHECKED JDB
END WIDTH	SQ. YDS.	CUT	FILL	CUT	FILL		
24	131	56	13	110	23		
23	128	63	12	146	11		
23	142	95	0	201	8		

60 50 40 30 20 10 0 10 20 30 40 50 60

525
520
515

10:1 6:1 6:1
℄ 523.283

525.73
305+00.00 R 2
525.29

525.60
305+00.00 R 2
525.43

10:1 6:1 6:1
℄ 523.892

526.30
304+50.00 R 2
525.96

526.16
304+50.00 R 2
525.92

10:1 6:1 6:1
℄ 524.543

526.94
304+00.00 R 2
526.74

526.80
304+00.00 R 2
526.44

I.R.275 CROSS SECTIONS
STA 304+00.00 TO STA 305+00.00

CLE-275-5.35

439
857

SEEDING		END AREA		VOLUME	
END WIDTH	SQ. YDS.	CUT	FILL	CUT	FILL
24	133	50	17	93	35
24	133	50	21	94	26
24	133	51	7	99	19

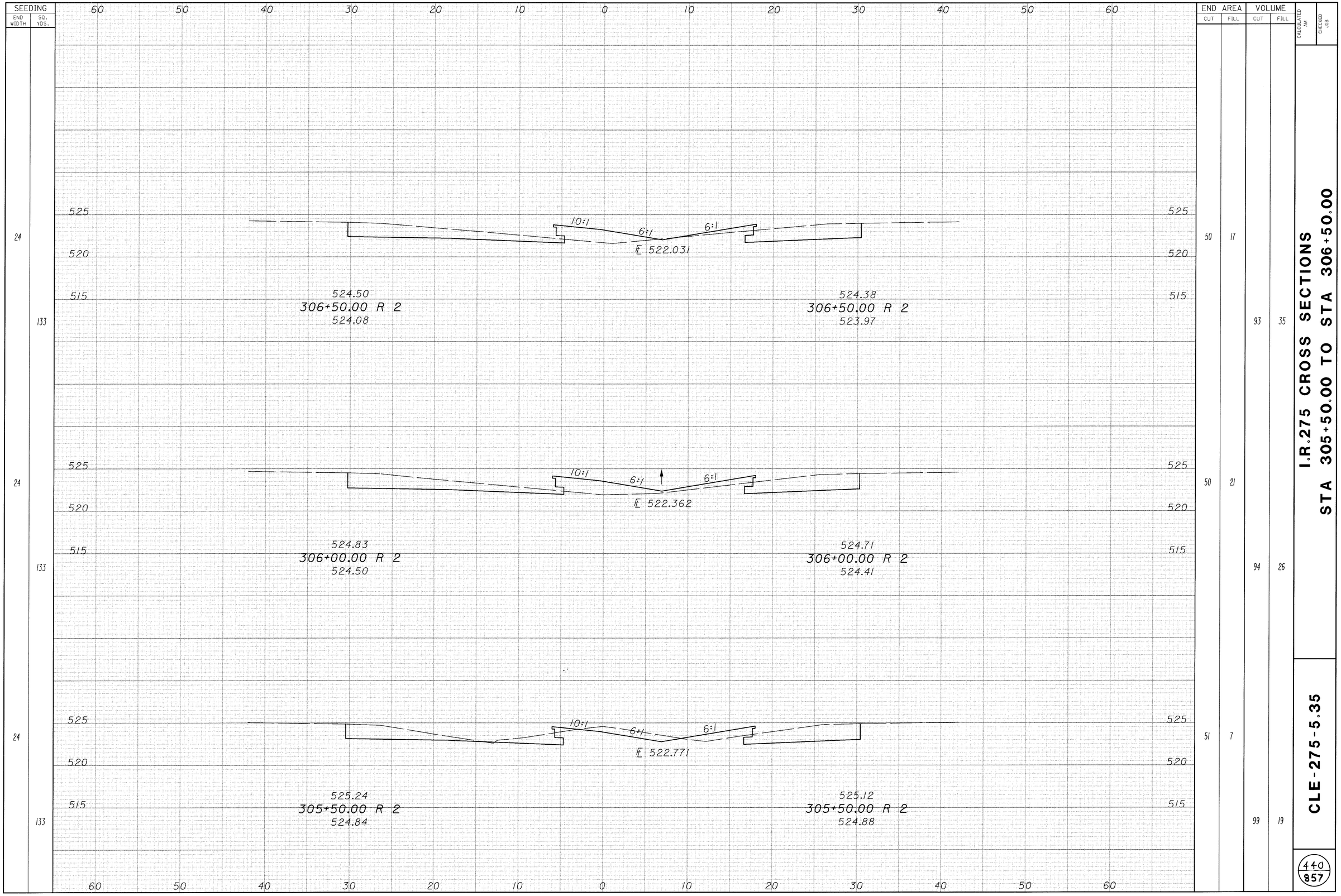

CALCULATED AM

CHECKED JGB

I.R.275 CROSS SECTIONS
STA 305+50.00 TO STA 306+50.00

CLE-275-5.35

440
857

SEEDING		END AREA		VOLUME	
END WIDTH	SQ. YDS.	CUT	FILL	CUT	FILL
24	133	46	24	86	43
24	133	47	22	90	36

CALCULATED AM

CHECKED JOB

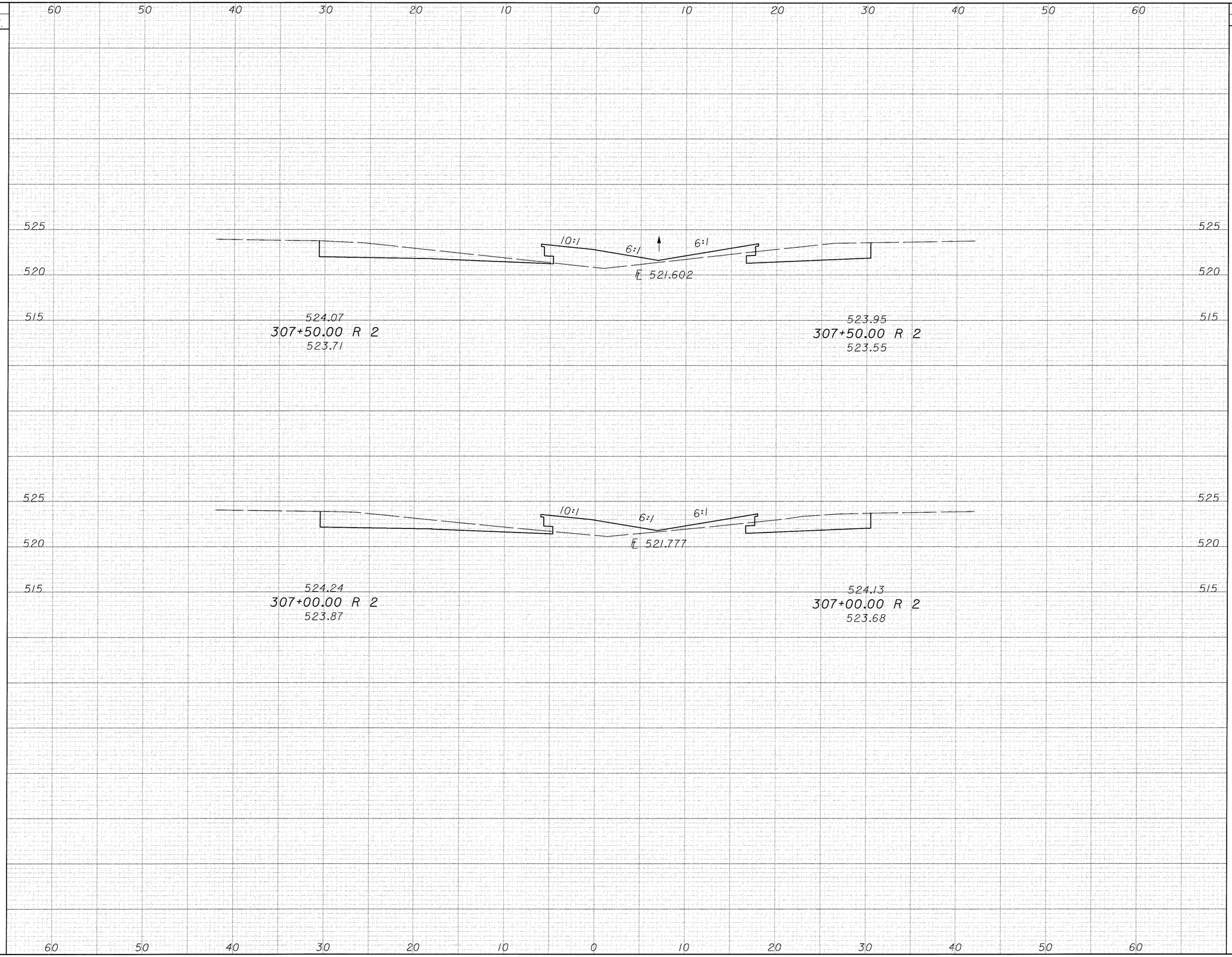

I.R.275 CROSS SECTIONS
STA 307+00.00 TO STA 307+50.00

CLE-275-5.35

441
857

SEEDING	
END WIDTH	SQ. YDS.
24	136
24	133

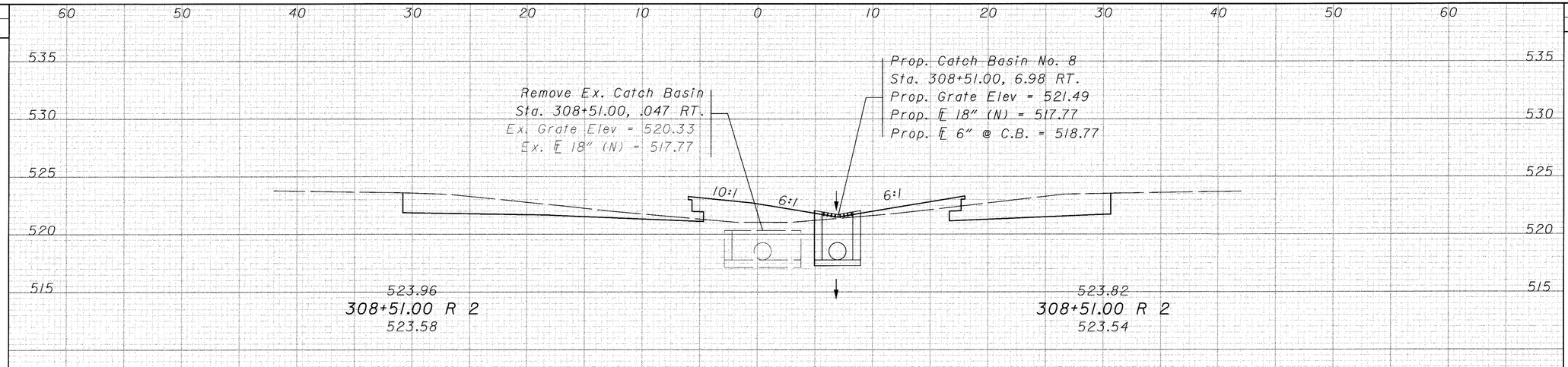

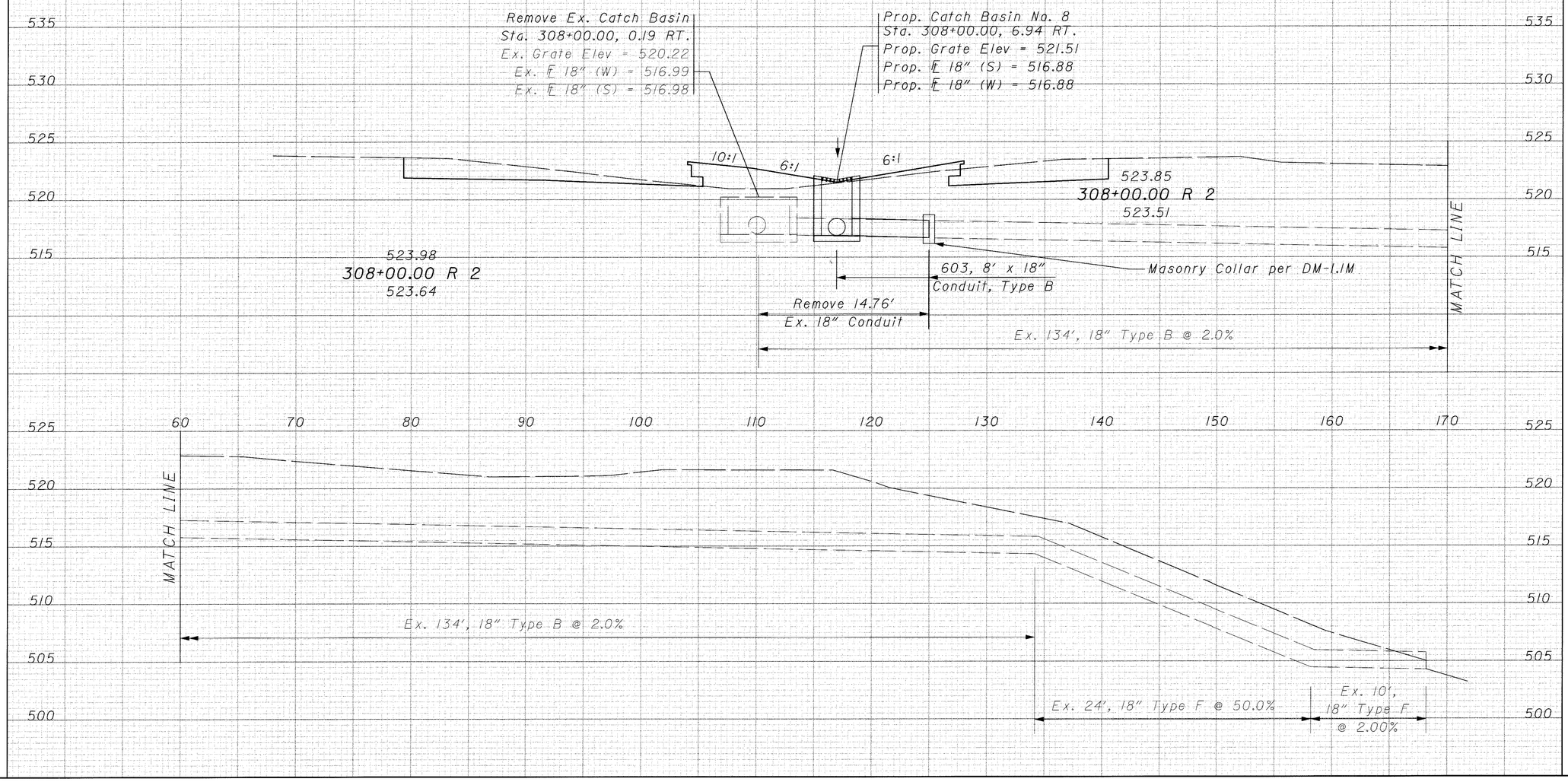

END AREA		VOLUME	
CUT	FILL	CUT	FILL
47	22	90	41
48	21	87	42

CALCULATED AM

CHECKED JDB

I.R.275 CROSS SECTIONS
STA 308+00.00 TO STA 308+51.00

CLE-275-5.35

442
857

SEEDING END WIDTH	SEEDING SQ. YDS.	END AREA CUT	END AREA FILL	VOLUME CUT	VOLUME FILL
24	133	49	20	89	40
24	133	47	23	86	44
24	131	46	25	84	43

60 50 40 30 20 10 0 10 20 30 40 50 60

525 520 515

10:1 6:1 6:1

℄ 521.902

524.39
310+00.00 R 2
524.09

524.21
310+00.00 R 2
523.84

525 520 515

10:1 6:1 6:1

℄ 521.679

524.17
309+50.00 R 2
523.89

524.00
309+50.00 R 2
523.70

525 520 515

10:1 6:1 6:1

℄ 521.543

524.03
309+00.00 R 2
523.70

523.87
309+00.00 R 2
523.57

60 50 40 30 20 10 0 10 20 30 40 50 60

CALCULATED AM

CHECKED JOB

I.R.275 CROSS SECTIONS
STA 309+00.00 TO STA 310+00.00

CLE-275-5.35

443
857

SEEDING END WIDTH	SEEDING SQ. YDS.	END AREA CUT	END AREA FILL	VOLUME CUT	VOLUME FILL
24	133	52	21	95	39
24	133	51	21	94	39
24	133	50	21	92	38

60 50 40 30 20 10 0 10 20 30 40 50 60

525 520 515

10:1 6:1

℄ 523.324

525.54
311+50.00 R 2
525.25

525.28
311+50.00 R 2
525.01

10:1 6:1 6:1

℄ 522.781

525.08
311+00.00 R 2
524.76

524.84
311+00.00 R 2
524.55

10:1 6:1 6:1

℄ 522.300

524.70
310+50.00 R 2
524.35

524.49
310+50.00 R 2
524.19

CALCULATED AM

CHECKED JGB

I.R.275 CROSS SECTIONS
STA 310+50.00 TO STA 311+50.00

CLE-275-5.35

444
857

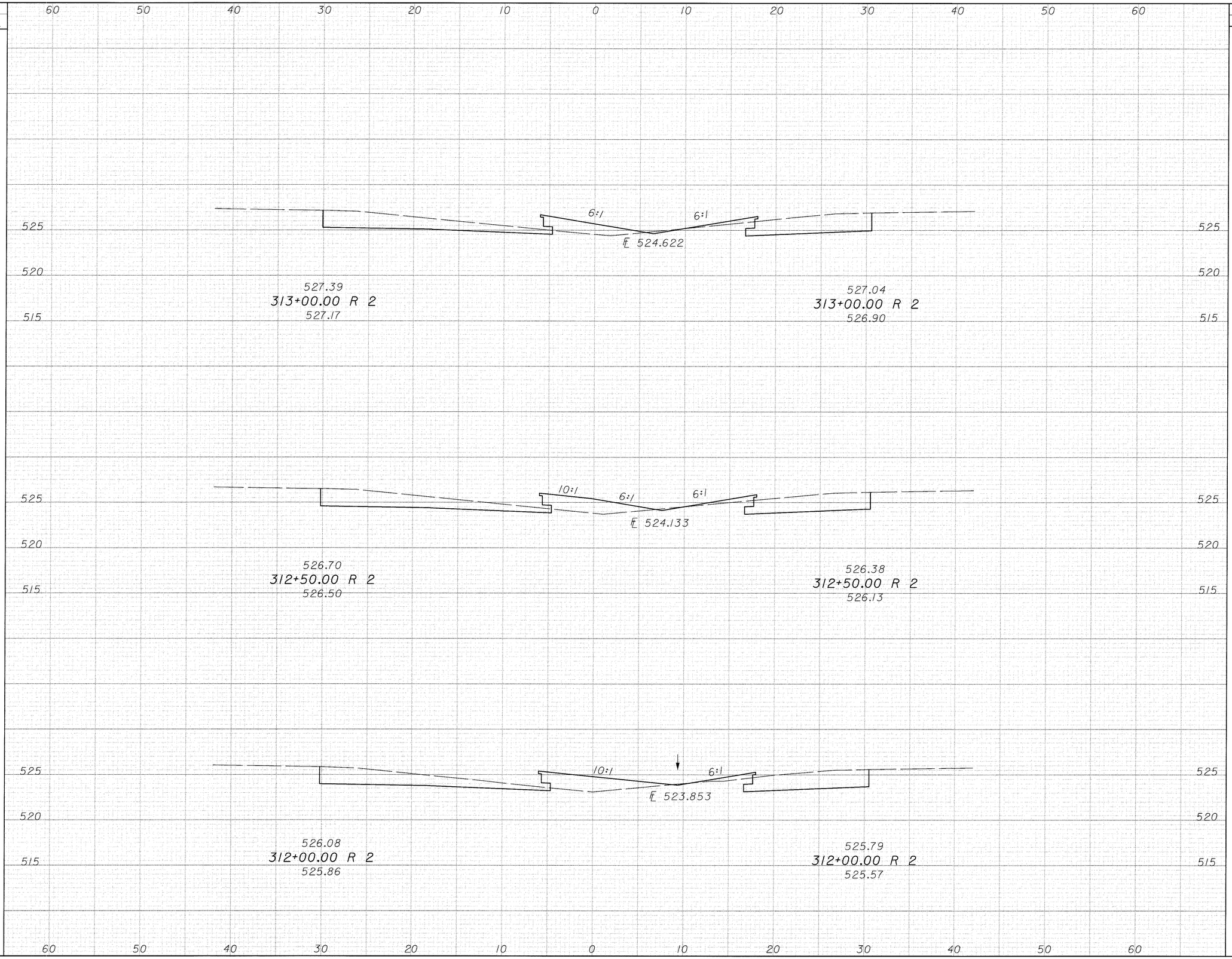

SEEDING END WIDTH	SEEDING SQ. YDS.	END AREA CUT	END AREA FILL	VOLUME CUT	VOLUME FILL
24		56	14		
	133			103	29
24		55	17		
	133			100	33
24		53	19		
	133			97	37

CALCULATED AM
CHECKED JGB

I.R.275 CROSS SECTIONS
STA 312+00.00 TO STA 313+00.00

CLE-275-5.35

SEEDING			END AREA		VOLUME	
END WIDTH	SQ. YDS.		CUT	FILL	CUT	FILL
24	133	529.54 314+50.00 R 2 529.34	59	12	108	21
24	133	528.82 314+00.00 R 2 528.62	58	11	106	21
24	133	528.11 313+50.00 R 2 527.82	57	12	105	24
		529.18 314+50.00 R 2 529.06				
		528.46 314+00.00 R 2 528.33				
		527.75 313+50.00 R 2 527.64				

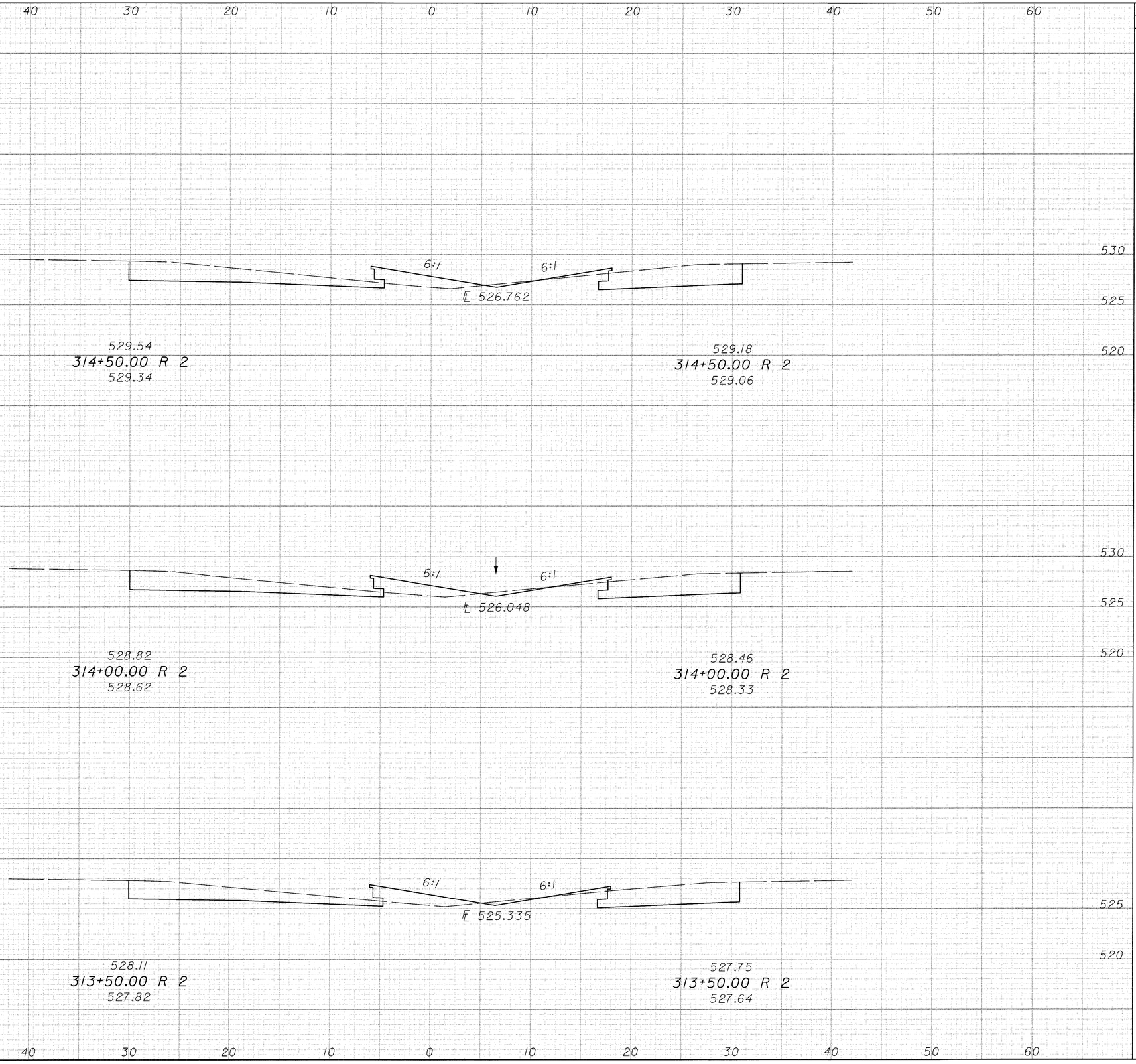

CALCULATED AM

CHECKED JGB

CROSS SECTIONS

STA 313+50.00 TO STA 314+50.00

CLE-275-5.35

446
857

SEEDING		END AREA		VOLUME	
END WIDTH	SQ. YDS.	CUT	FILL	CUT	FILL
24	133	53	15	102	26
24	137	57	13	108	25
24	129	56	13	103	22

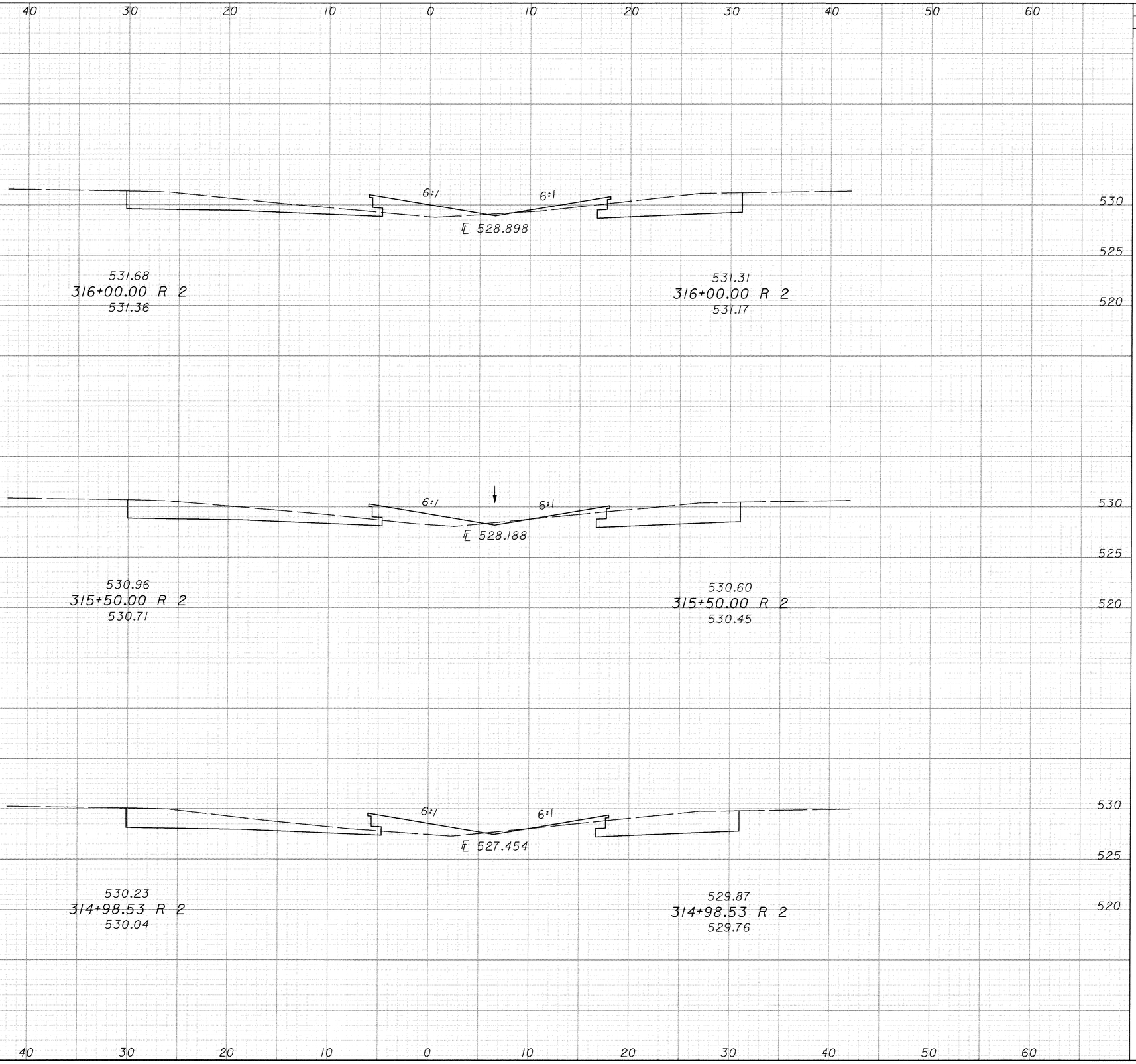

CALCULATED AM

CHECKED JGB

I.R.275 CROSS SECTIONS
STA 314+98.53 TO STA 316+00.00

CLE-275-5.35

447
857

SEEDING	
END WIDTH	SQ. YDS.
25	
71	
25	
66	

60 50 40 30 20 10 0 10 20 30 40 50 60

530
525
520

6:1 6:1
℄ 529.557
532.39
316+50.00 R 2
532.15
532.03
316+50.00 R 2
531.89

6:1 6:1
℄ 529.220
532.03
316+24.42 R 2
531.72
531.66
316+24.42 R 2
531.52

END AREA		VOLUME	
CUT	FILL	CUT	FILL
61	10		
56	10		
57	12		
50	12		

CALCULATED AM
CHECKED JCB

I.R.275 CROSS SECTIONS
STA 316+24.42 TO STA 316+50.00

CLE-275-5.35

448
857

SEEDING	
END WIDTH	SQ. YDS.
27	146
26	142

END AREA		VOLUME	
CUT	FILL	CUT	FILL
55	18		
		102	29
56	13		
		109	21

CALCULATED AM

CHECKED JOB

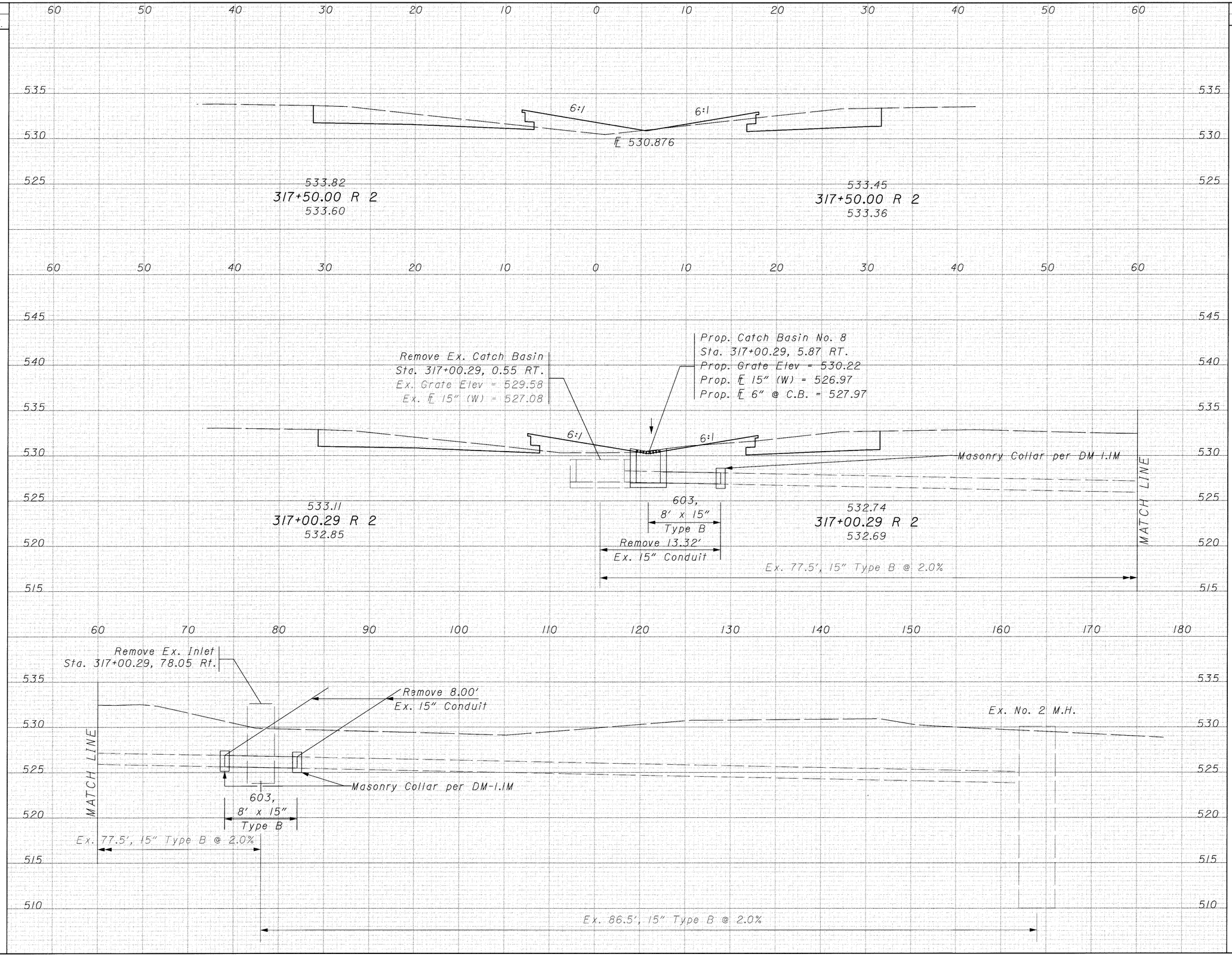

I.R.275 CROSS SECTIONS
STA 317+00.29 TO STA 317+50.00

CLE-275-5.35

449
857

SEEDING		END AREA		VOLUME		
END WIDTH	SQ. YDS.	CUT	FILL	CUT	FILL	
29	158	47	27	90	47	
28	153	50	24	97	40	
27	150	55	19	102	34	

CALCULATED AM

CHECKED JDB

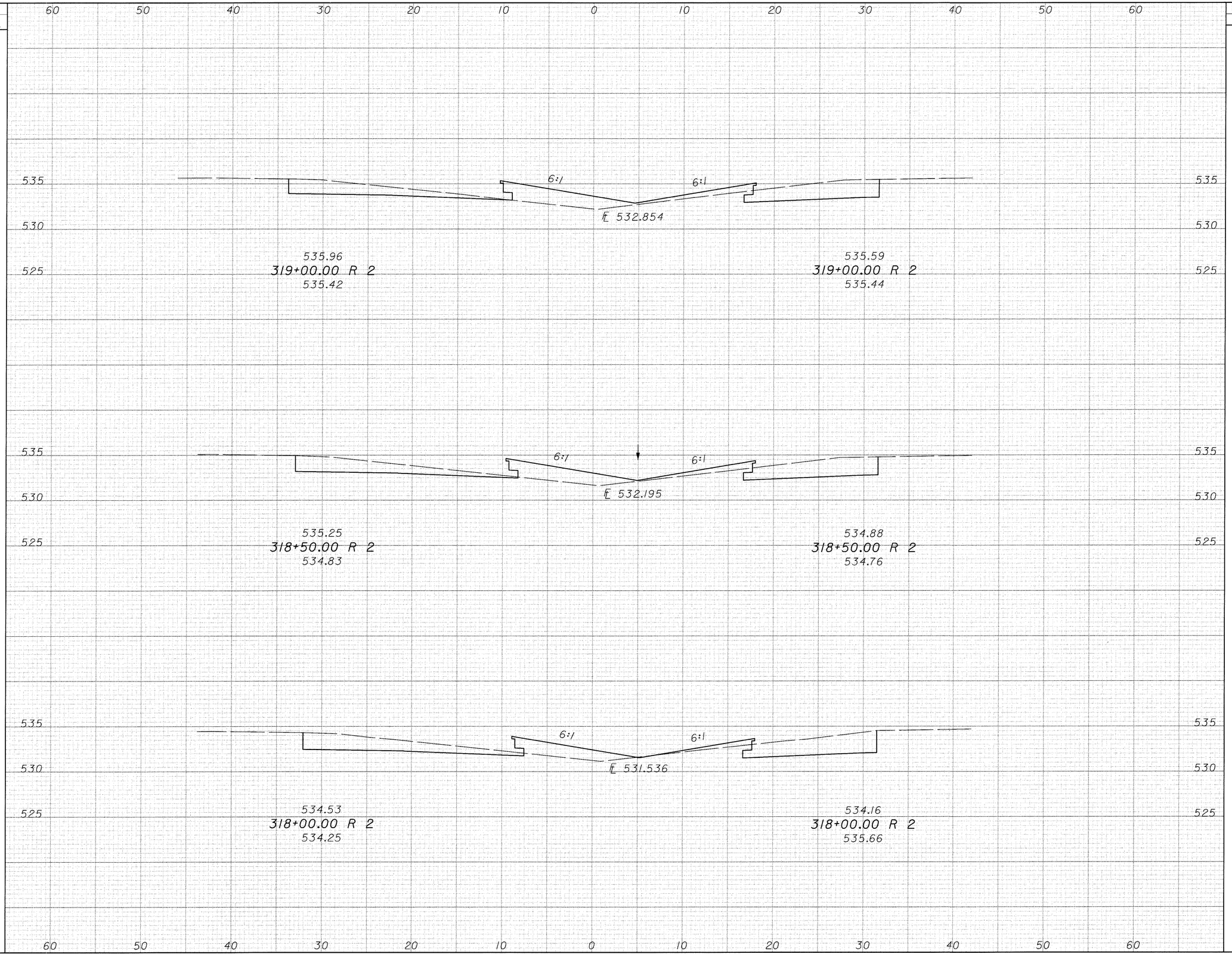

I.R.275 CROSS SECTIONS
STA 318+00.00 TO STA 319+00.00

CLE-275-5.35

450
857

SEEDING	
END WIDTH	SQ. YDS.
31	169
30	164
29	161

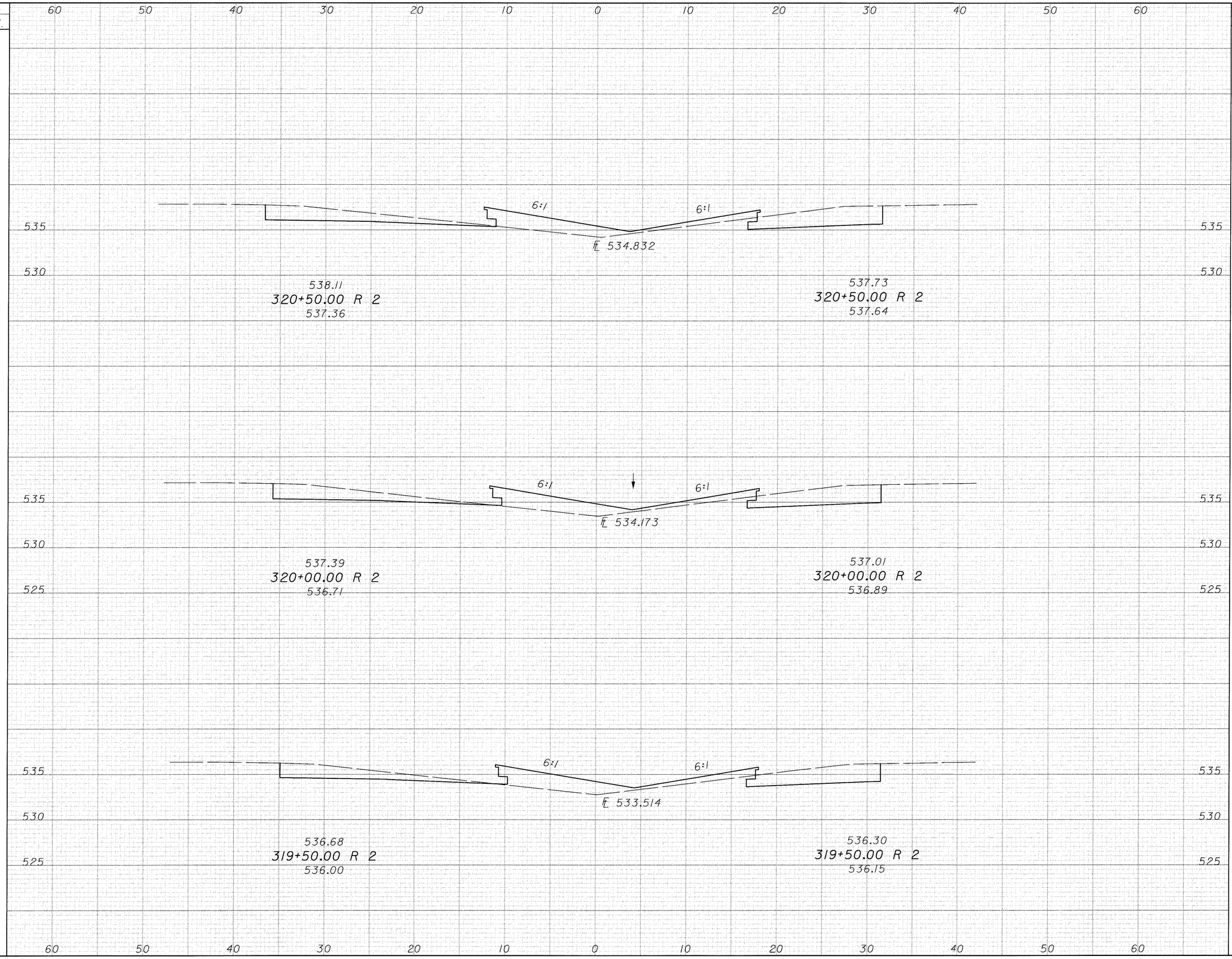

END AREA		VOLUME	
CUT	FILL	CUT	FILL
49	28		
47	29		
44	29		
		89	53
		84	54
		84	52

CALCULATED AM

CHECKED JGB

I.R.275 CROSS SECTIONS

STA 319+50.00 TO STA 320+50.00

CLE-275-5.35

451
857

SEEDING		END AREA		VOLUME		
END WIDTH	SQ. YDS.	CUT	FILL	CUT	FILL	
33	181	55	25	97	49	
32	178	50	28	93	51	
32	175	50	27	92	51	

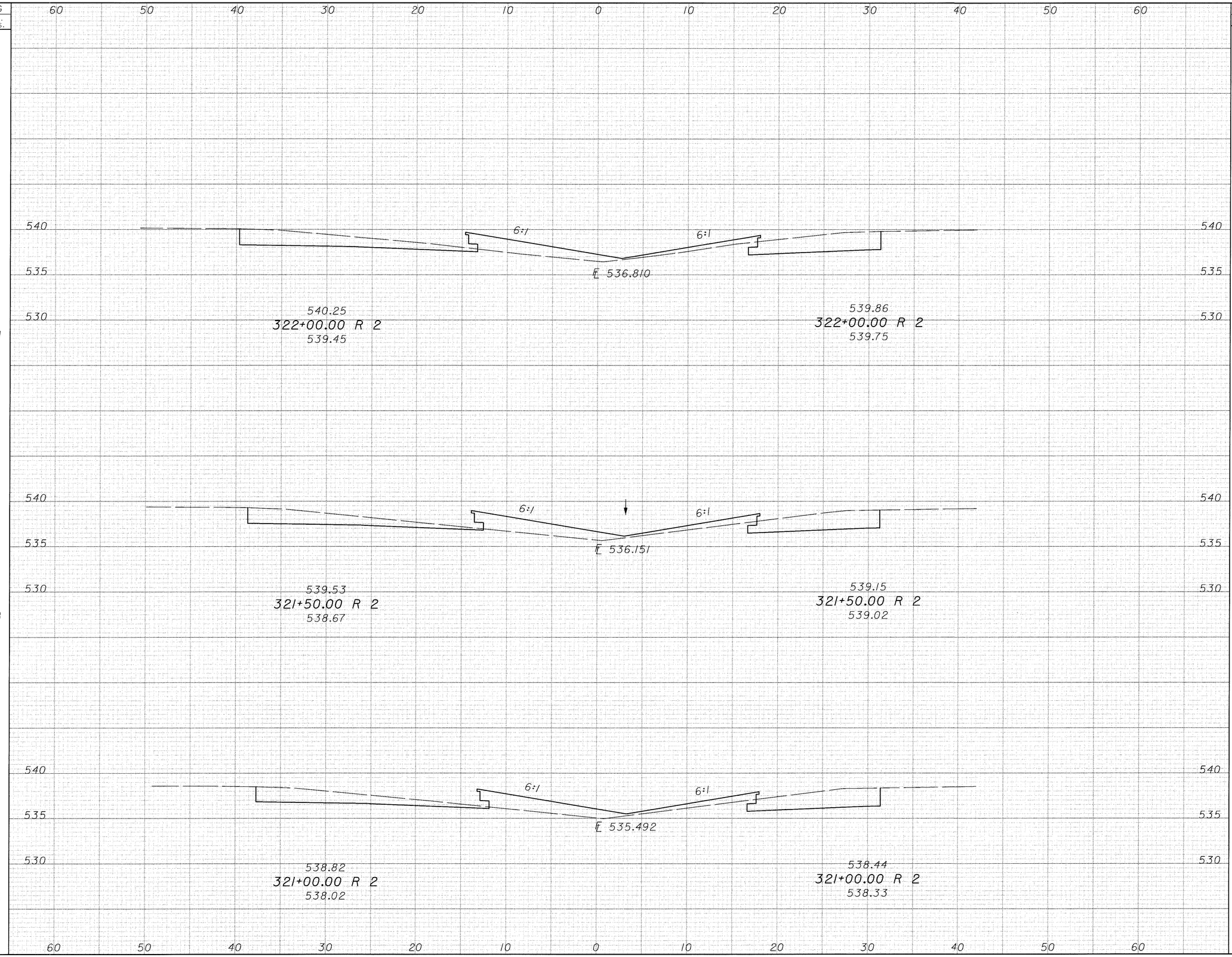

CALCULATED AM

CHECKED JGB

I.R.275 CROSS SECTIONS

STA 321+00.00 TO STA 322+00.00

CLE-275-5.35

452
857

SEEDING	
END WIDTH	SQ. YDS.
35	118
34	189
34	186

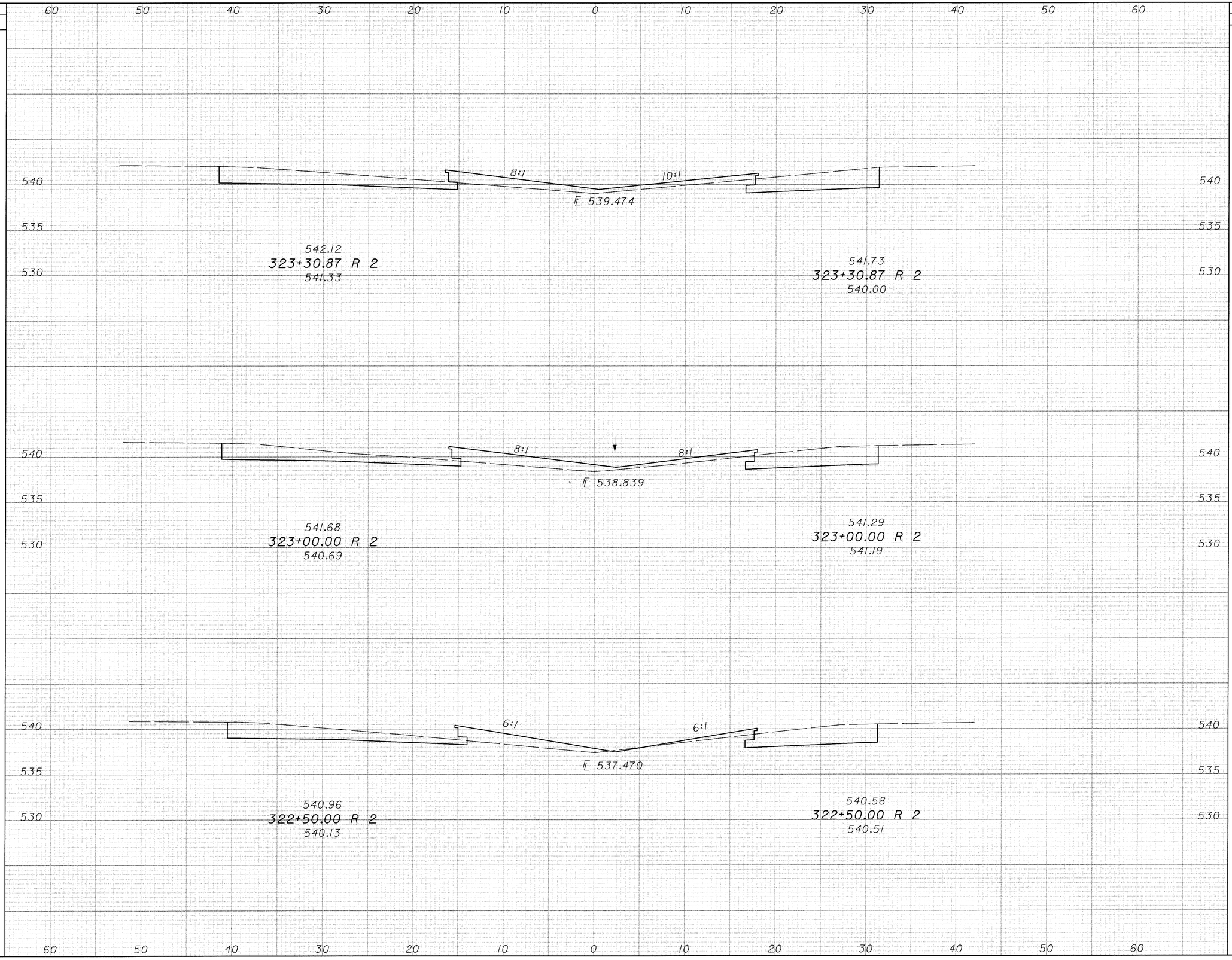

END AREA		VOLUME	
CUT	FILL	CUT	FILL
60	23		
		66	28
55	26		
		104	42
57	19		
		104	41

CALCULATED AM

CHECKED JGB

I.R.275 CROSS SECTIONS
STA 322+50.00 TO STA 323+30.87

CLE-275-5.35

453
857

SEEDING	
END WIDTH	SQ. YDS.
36	200
36	200
36	273

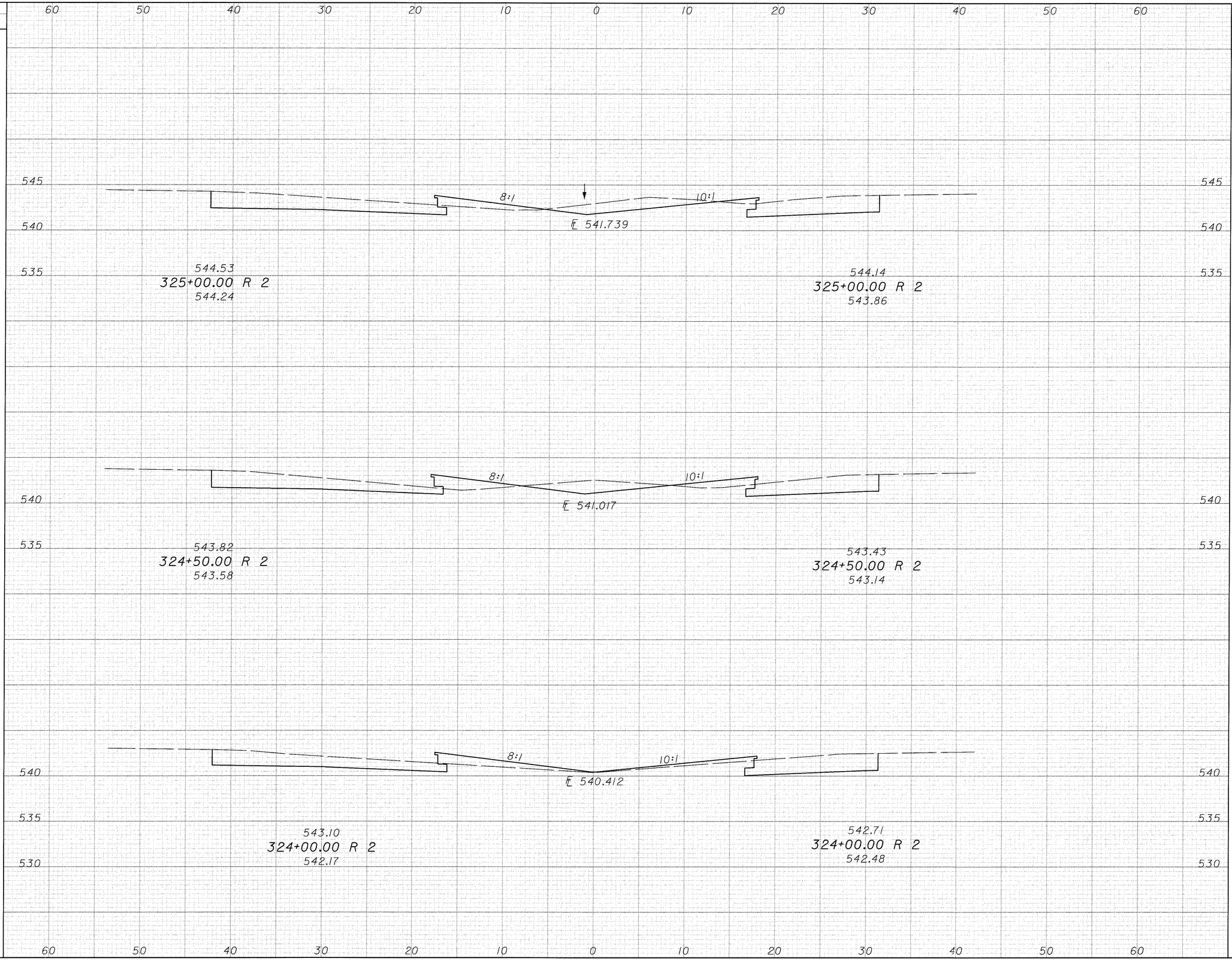

END AREA		VOLUME	
CUT	FILL	CUT	FILL
76	9		
		133	21
68	14		
		117	27
58	15		
		151	49

CALCULATED: AM
CHECKED: JGB

I.R.275 CROSS SECTIONS
STA 324+00.00 TO STA 325+00.00

CLE-275-5.35

454
857

SEEDING		END AREA		VOLUME			
END WIDTH	SQ. YDS.	CUT	FILL	CUT	FILL	CALCULATED AM	CHECKED JGB
67		292	16				
	240			299	13		
35		88	1				
	194			143	10		
35		66	10				
	197			131	18		

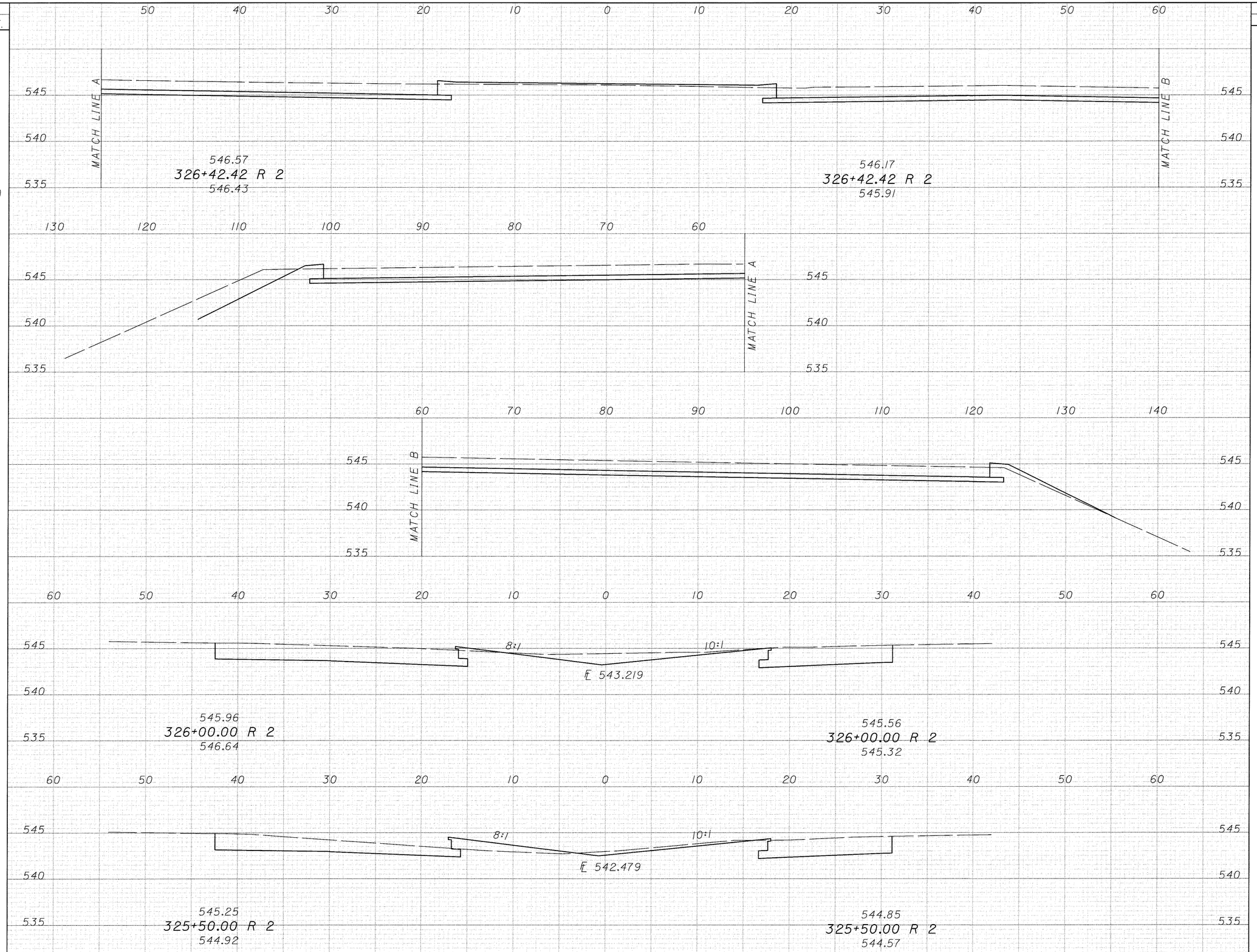

I.R.275 CROSS SECTIONS
STA 325+50.00 TO STA 326+42.42

CLE-275-5.35

455
857

SEEDING	
END WIDTH	SQ. YDS.
67	186

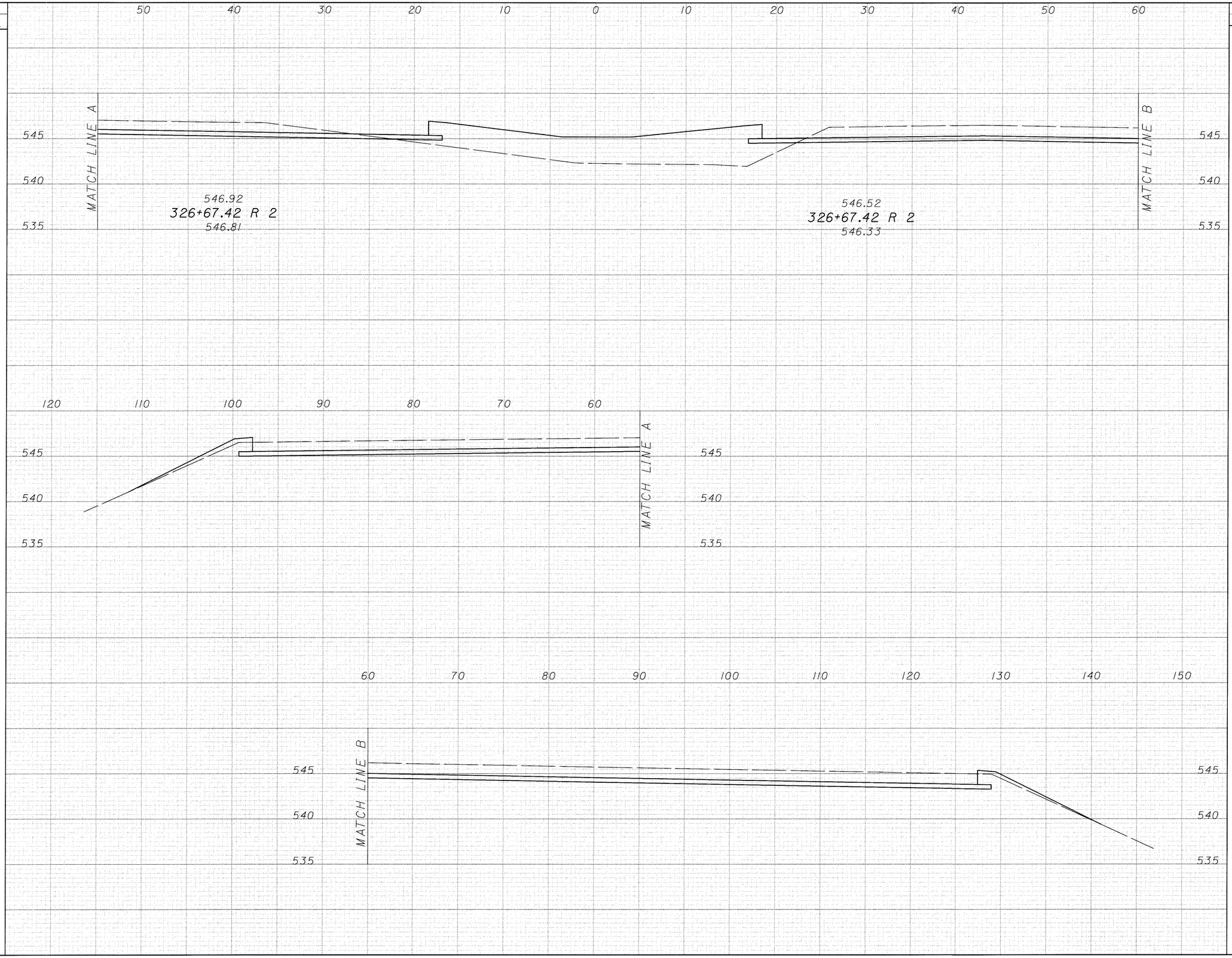

END AREA		VOLUME	
CUT	FILL	CUT	FILL
279	125		
		264	65

CALCULATED AM

CHECKED JGB

I.R.275 CROSS SECTIONS
STA 326+67.42

CLE-275-5.35

456
857

SEEDING	
END WIDTH	SQ. YDS.
67	0

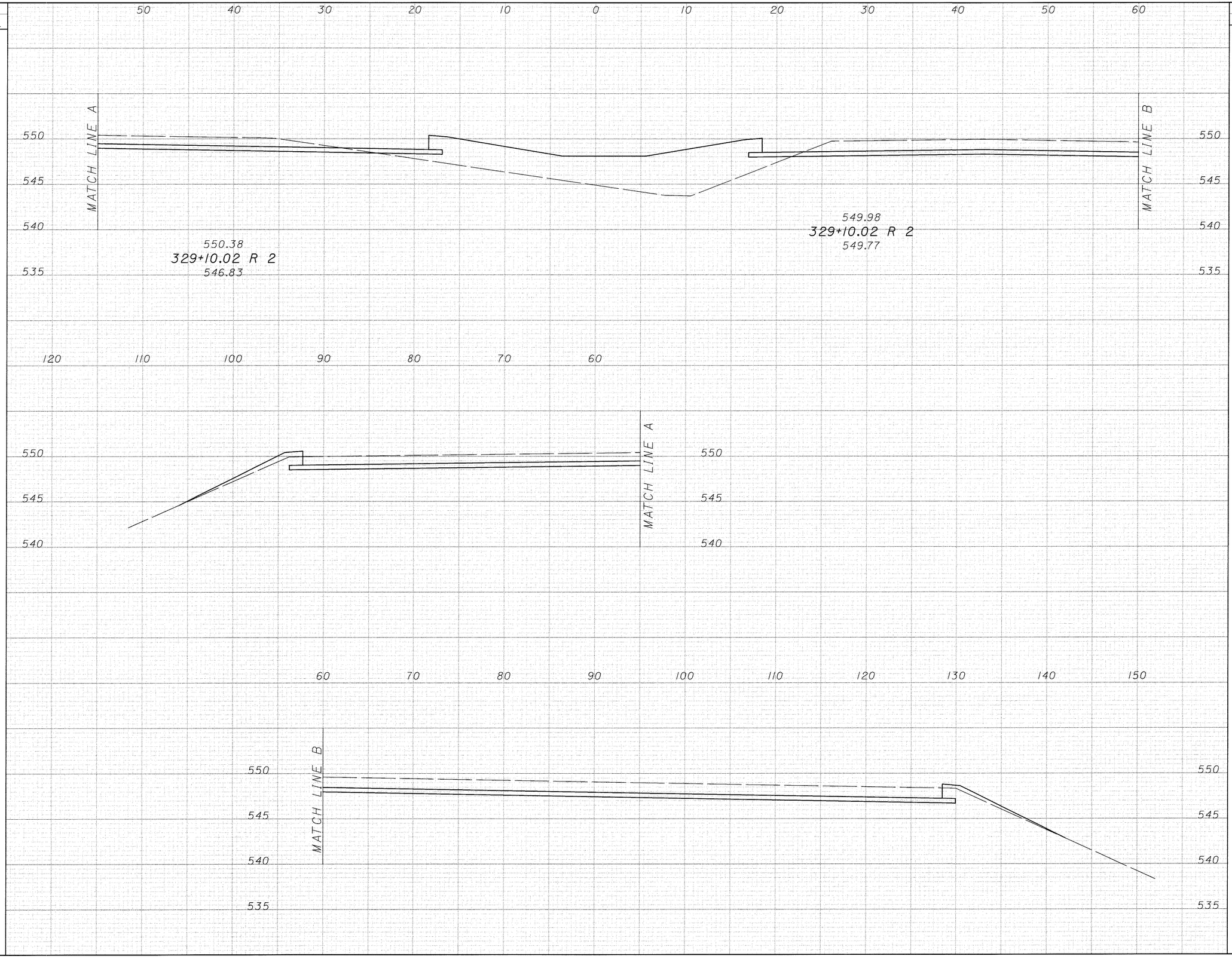

END AREA		VOLUME	
CUT	FILL	CUT	FILL
263	141		
		0	0

CALCULATED AM

CHECKED JDB

I.R.275 CROSS SECTIONS
STA 329+10.02

CLE-275-5.35

457
857

SEEDING	
END WIDTH	SQ. YDS.
67	186

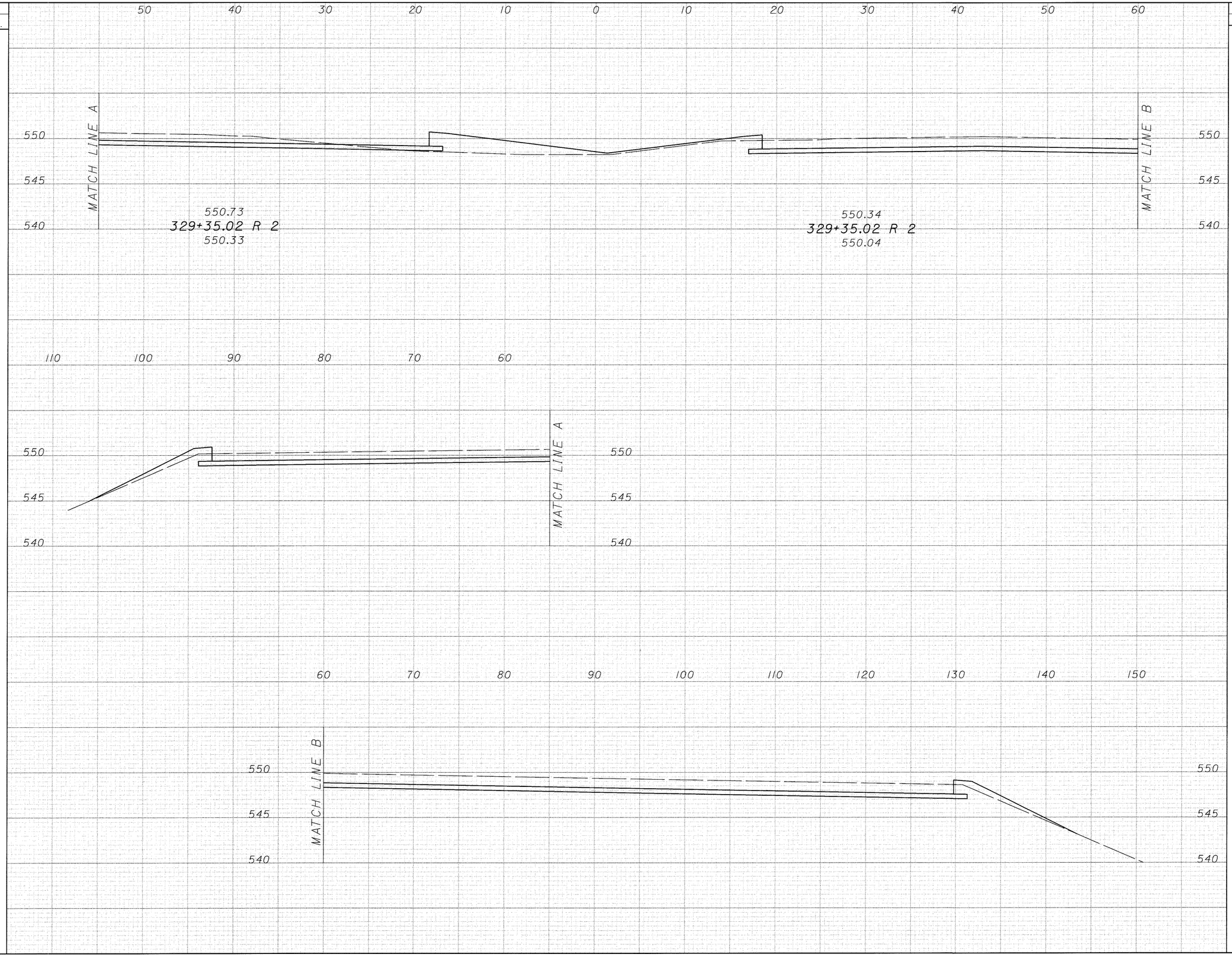

END AREA		VOLUME	
CUT	FILL	CUT	FILL
256	41		
		240	84

CALCULATED AM

CHECKED JOB

I.R.275 CROSS SECTIONS
STA 329+35.02

CLE-275-5.35

458
857

SEEDING END WIDTH	SEEDING SQ. YDS.
36	
	200
36	
	204
36	
	79

END AREA CUT	END AREA FILL	VOLUME CUT	VOLUME FILL
55	37		
		98	72
51	41		
		90	86
44	50		
		77	23

CALCULATED AM

CHECKED JOB

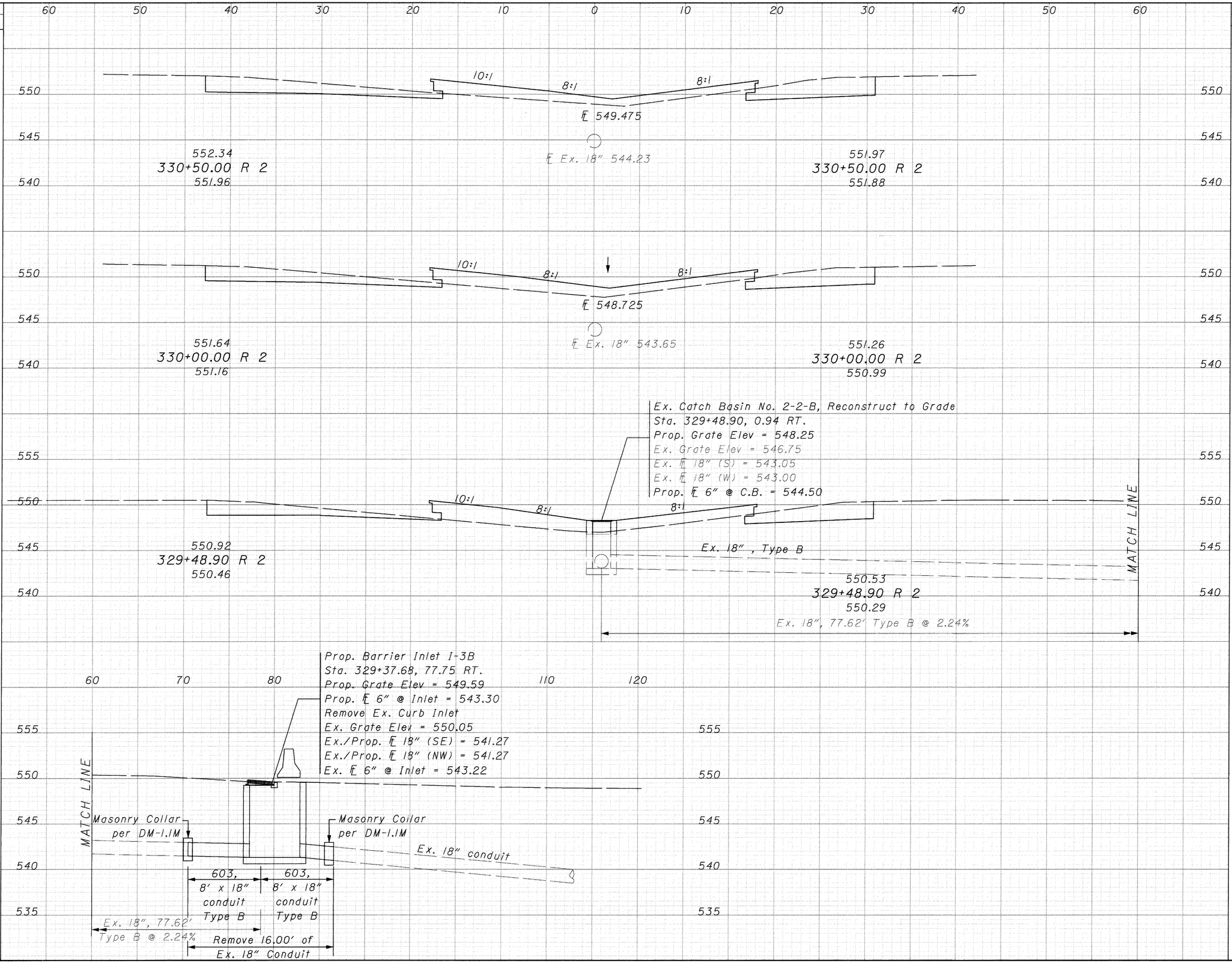

I.R.275 CROSS SECTIONS
STA 329+48.90 TO STA 330+50.00

CLE-275-5.35

459
857

SEEDING			END AREA		VOLUME	
END WIDTH	SQ. YDS.		CUT	FILL	CUT	FILL
36	200	555 550 545 554.44 332+00.00 R 2 554.10 ℄ 551.688 10:1 8:1 ℄ Ex. 18" 545.99 554.11 332+00.00 R 2 553.87	49	32	88	53
36	225	555 550 545 553.74 331+50.00 R 2 553.42 ℄ 550.983 10:1 8:1 ℄ Ex. 18" 545.40 553.40 331+50.00 R 2 553.18	46	25	103	56
36	175	550 545 552.95 330+93.71 R 2 552.60 ℄ 550.130 10:1 8:1 8:1 ℄ Ex. 18" 544.74 552.60 330+93.71 R 2 552.42	53	29	87	53

60 50 40 30 20 10 0 10 20 30 40 50 60

CALCULATED AM | CHECKED JOB

I.R.275 CROSS SECTIONS
STA 330+93.71 TO STA 332+00.00

CLE-275-5.35

460
857

SEEDING	
END WIDTH	SQ. YDS.
36	
	200
36	
	113
36	
	87

60 50 40 30 20 10 0 10 20 30 40 50 60

555
550
545
565
560

8:1 8:1
℄ 552.843
℄ 15" 547.66
555.84
333+00.00 R 2
555.48
555.54
333+00.00 R 2
555.22

10:1 8:1 8:1
℄ 552.189
℄ 15" 546.91
555.14
332+50.00 R 2
554.73
554.82
332+50.00 R 2
554.55

Ex. Catch Basin No. 4, Adjust to Grade
Sta. 332+21.75, 1.42 RT.
Prop. Grate Elev = 551.85
Prop. ℄ 15" (S) = 546.49
Ex. Grate Elev = 551.01
Ex. ℄ 15" (NE) = 547.59
Ex. ℄ 18" (N) = 546.24

10:1 8:1 8:1
Ex. 15", Type B
554.74
332+21.75 R 2
554.37
554.42
332+21.75 R 2
554.18

END AREA		VOLUME	
CUT	FILL	CUT	FILL
50	34		
		95	64
53	35		
55	38		
53	37		
41	28		

CALCULATED AM
CHECKED JOB

I.R.275 CROSS SECTIONS
STA 332+21.75 TO STA 333+00.00

CLE-275-5.35

461
857

SEEDING		END AREA		VOLUME	
END WIDTH	SQ. YDS.	CUT	FILL	CUT	FILL
36	200	55	28	101	53
36	200	54	29	101	55
36	200	55	30	97	59

60 50 40 30 20 10 0 10 20 30 40 50 60

555
550
545

℄ 554.961
℄ 15" 549.91
557.93
334+50.00 R 2
557.62
557.67
334+50.00 R 2
557.43

℄ 554.255
℄ 15" 549.16
557.24
334+00.00 R 2
556.93
556.96
334+00.00 R 2
556.71

℄ 553.549
℄ 15" 548.41
556.54
333+50.00 R 2
556.21
556.25
333+50.00 R 2
555.87

CALCULATED AM
CHECKED JOB

I.R.275 CROSS SECTIONS
STA 333+50.00 TO STA 334+50.00

CLE-275-5.35

462
857

SEEDING		END AREA		VOLUME	
END WIDTH	SQ. YDS.	CUT	FILL	CUT	FILL
36	200	57	23	106	44
36	200	57	25	103	49
36	200	54	28	101	52

CALCULATED AM

CHECKED JOB

I.R.275 CROSS SECTIONS
STA 335+00.00 TO STA 336+00.00

CLE-275-5.35

463
857

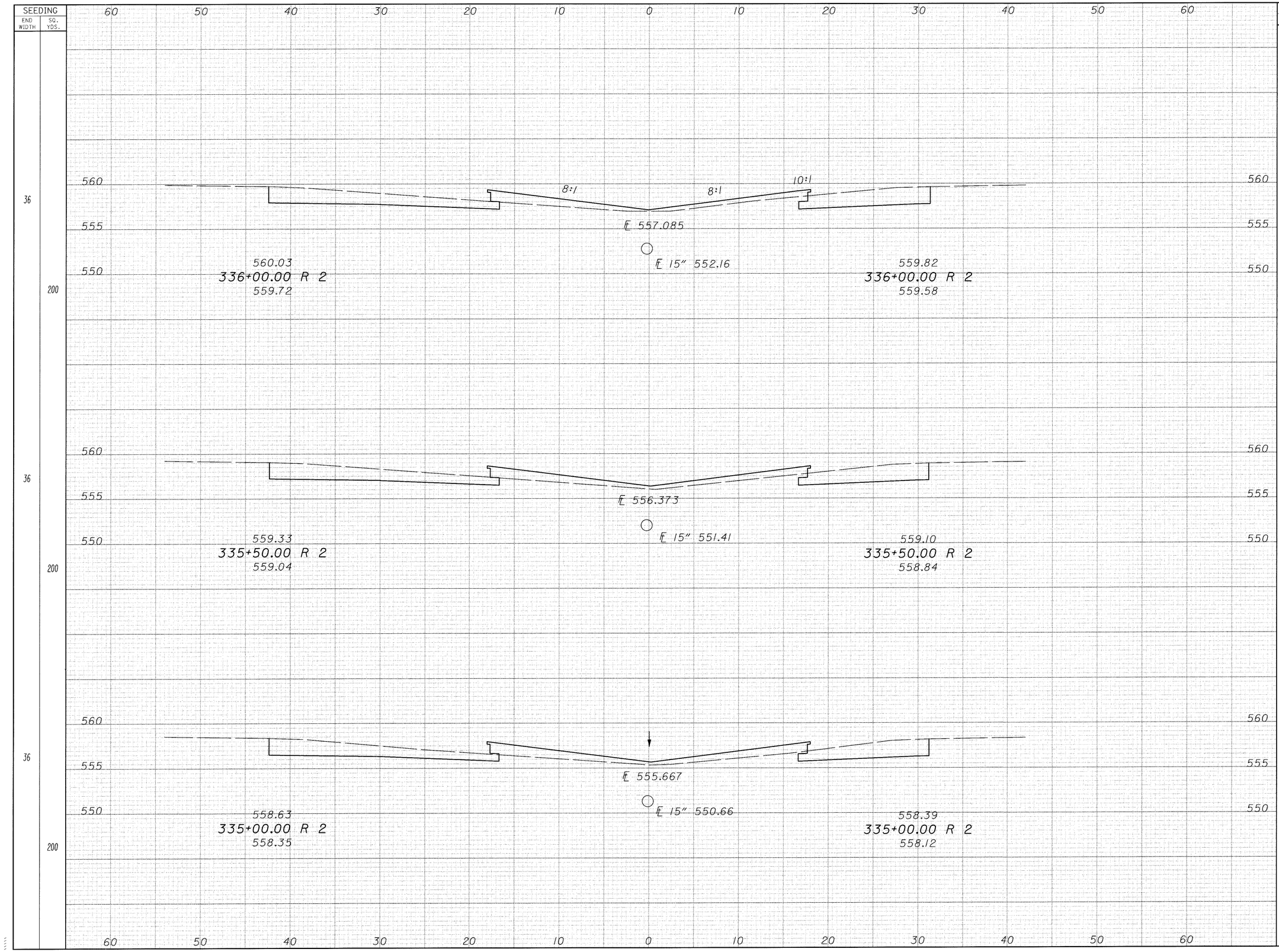

SEEDING		END AREA		VOLUME	
END WIDTH	SQ. YDS.	CUT	FILL	CUT	FILL
36	200	57	24	105	44
36	200	56	23	107	40
36	200	60	20	108	40

60 50 40 30 20 10 0 10 20 30 40 50 60

560
555
550

8:1 8:1 10:1

℄ 559.482

℄ 15" 554.41

562.21
337+50.00 R 2
561.88

562.11
337+50.00 R 2
561.73

8:1 8:1 10:1

℄ 558.751

℄ 15" 553.66

561.46
337+00.00 R 2
561.09

561.33
337+00.00 R 2
560.99

8:1 8:1 10:1

℄ 557.957

℄ 15" 552.91

560.74
336+50.00 R 2
560.46

560.57
336+50.00 R 2
560.26

CALCULATED AM

CHECKED JOB

I.R.275 CROSS SECTIONS
STA 336+50.00 TO STA 337+50.00

CLE-275-5.35

464
857

SEEDING END WIDTH	SEEDING SQ. YDS.	END AREA CUT	END AREA FILL	VOLUME CUT	VOLUME FILL
36	200	57	37	108	63
36	200	60	31	106	56
36	200	55	29	104	49

CALCULATED AM

CHECKED JOB

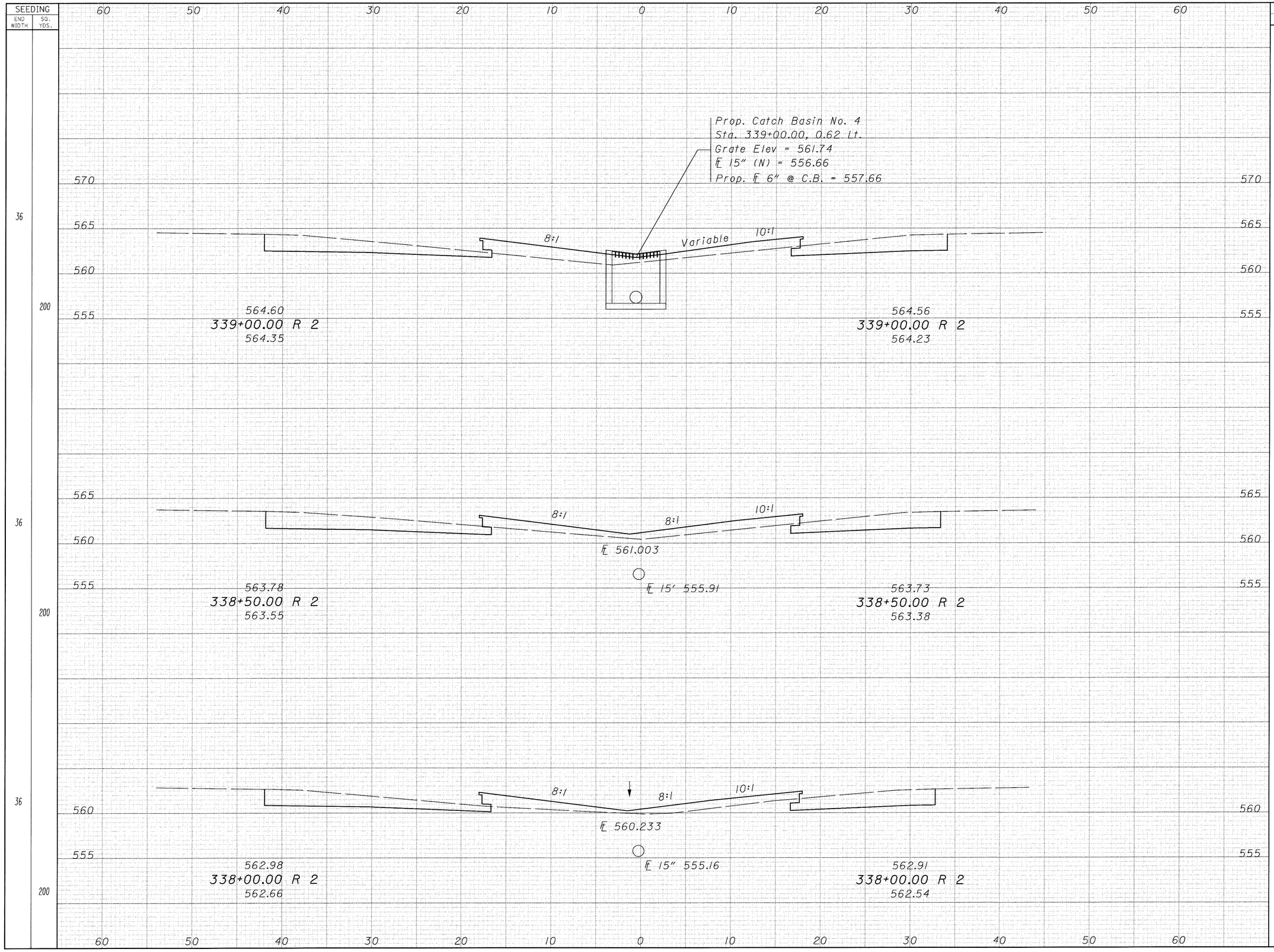

CROSS SECTIONS
STA 338+00.00 TO STA 339+00.00

CLE-275-5.35

465
857

SEEDING END WIDTH	SEEDING SQ. YDS.	END AREA CUT	END AREA FILL	VOLUME CUT	VOLUME FILL
36	200	57	42	103	74
36	200	54	38	99	72
36	200	53	40	102	71

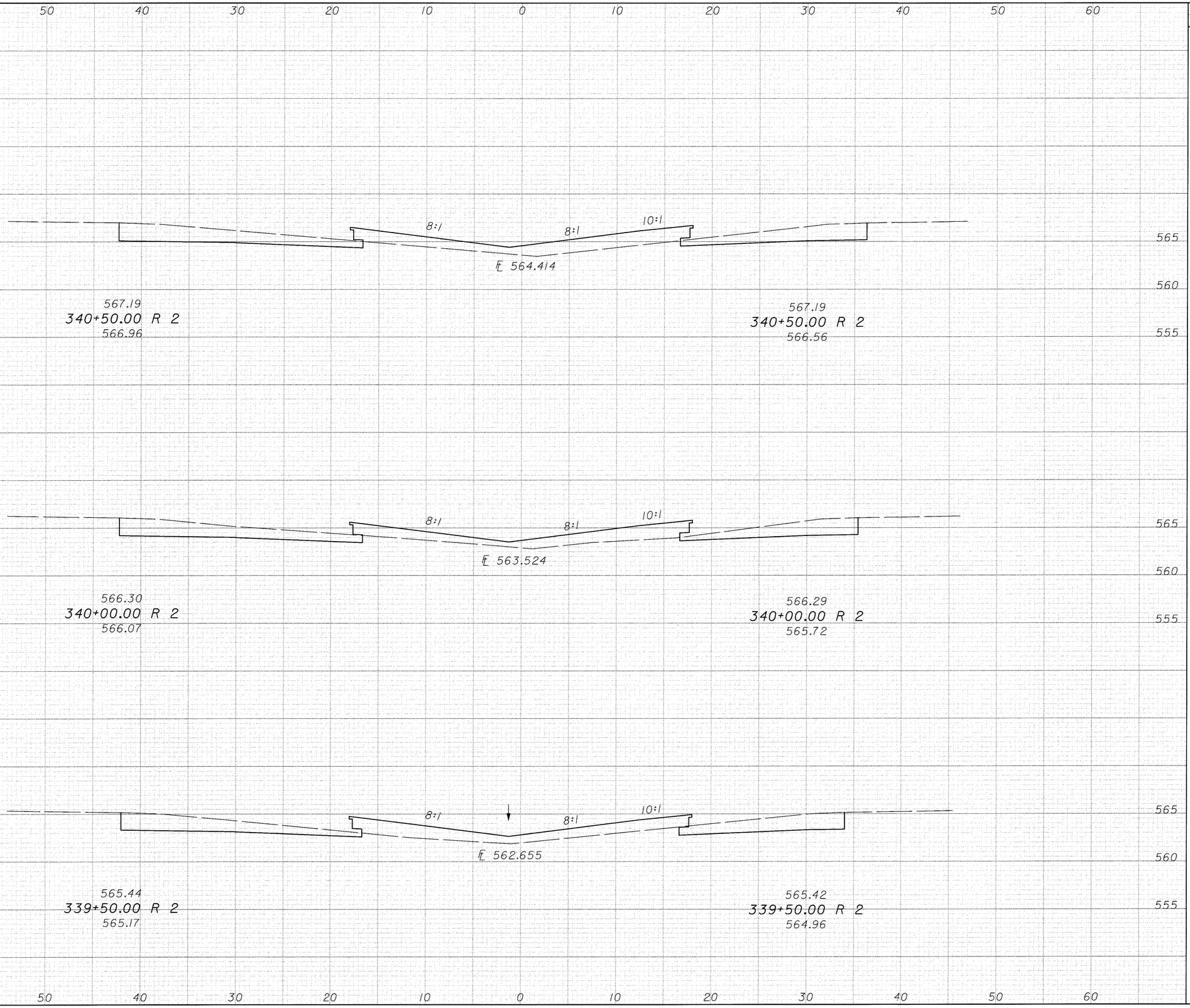

CALCULATED AM

CHECKED JCB

I.R.275 CROSS SECTIONS
STA 339+50.00 TO STA 340+50.00

CLE-275-5.35

466
857

SEEDING END WIDTH	SEEDING SQ. YDS.	END AREA CUT	END AREA FILL	VOLUME CUT	VOLUME FILL
36	143	60	44	79	59
36	200	60	45	107	86
36	200	56	48	105	83

60 50 40 30 20 10 0 10 20 30 40 50 60

570 565 560

8:1 8:1 10:1

℄ 566.935

569.71
341+85.70 R 2
569.55

569.70
341+85.70 R 2
568.95

570 565 560

8:1 8:1 10:1

℄ 566.257

569.03
341+50.00 R 2
568.88

569.03
341+50.00 R 2
568.34

570 565 560

8:1 8:1 10:1

℄ 565.325

568.10
341+00.00 R 2
567.90

568.10
341+00.00 R 2
567.41

60 50 40 30 20 10 0 10 20 30 40 50 60

CALCULATED AM

CHECKED JOB

I.R.275 CROSS SECTIONS
STA 341+00.00 TO STA 341+85.70

CLE-275-5.35

467
$57

SEEDING END WIDTH	SEEDING SQ. YDS.	END AREA CUT	END AREA FILL	VOLUME CUT	VOLUME FILL
36		82	16		
	200			133	44
36		62	31		
	87			51	26
36		64	34		
	170			98	62

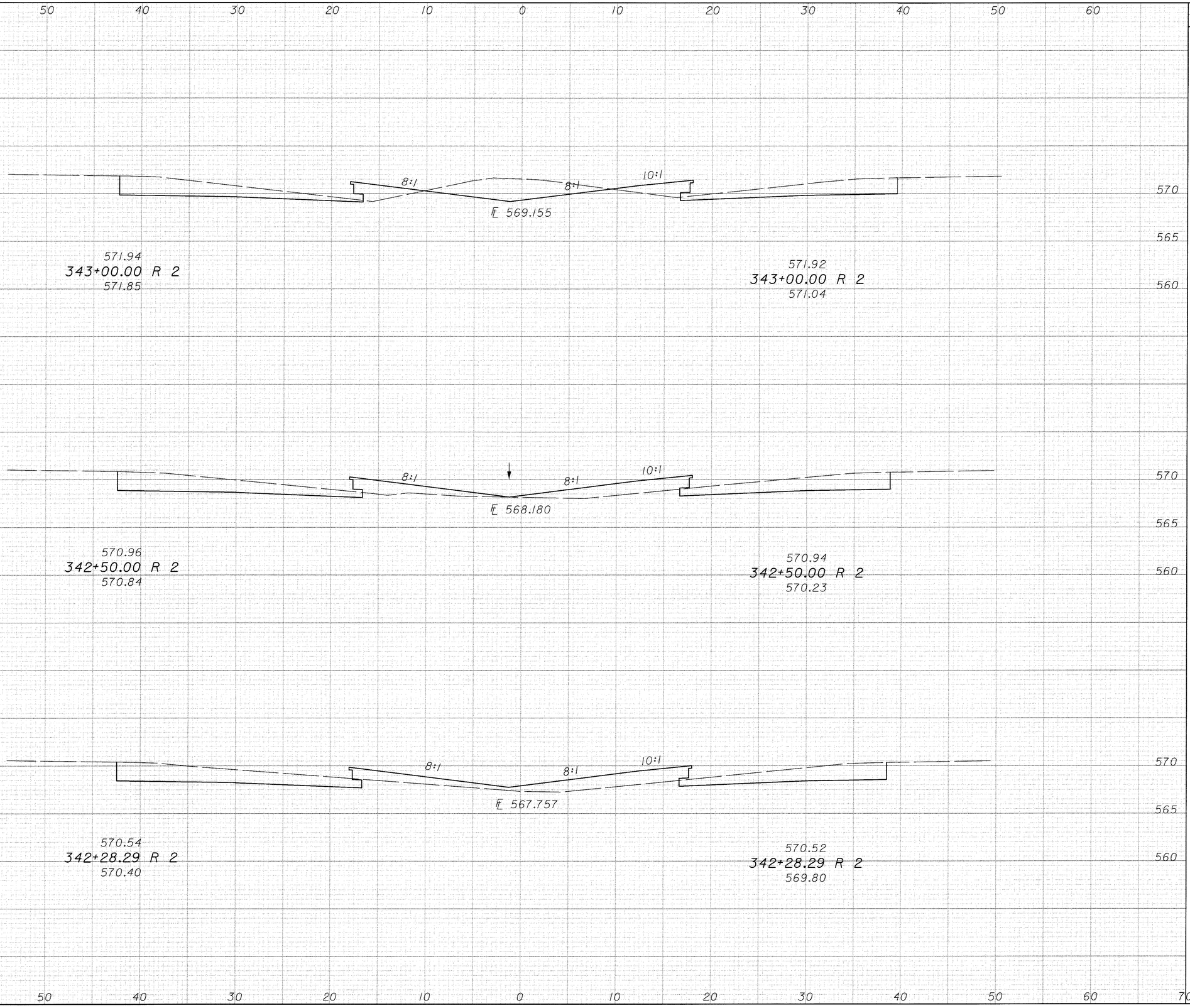

CALCULATED AM

CHECKED JGB

I.R.275 CROSS SECTIONS
STA 342+28.29 TO STA 343+00.00

CLE-275-5.35

468
857

SEEDING	
END WIDTH	SQ. YDS.
36	200
36	200
36	200

60 50 40 30 20 10 0 10 20 30 40 50 60

575
570
565
560

8:1 8:1 10:1

℄ 572..107

574.87
344+50.00 R 2
574.64

574.84
344+50.00 R 2
573.90

℄ 571.105

573.89
344+00.00 R 2
573.77

573.87
344+00.00 R 2
572.71

℄ 570.130

572.92
343+50.00 R 2
572.82

572.89
343+50.00 R 2
571.79

END AREA		VOLUME	
CUT	FILL	CUT	FILL
61	35	120	50
69	19	142	29
84	12	154	26

CALCULATED AM

CHECKED JGB

I.R.275 CROSS SECTIONS
STA 343+50.00 TO STA 344+50.00

CLE-275-5.35

469
857

SEEDING	
END WIDTH	SQ. YDS.
72	
	417
35	
	197

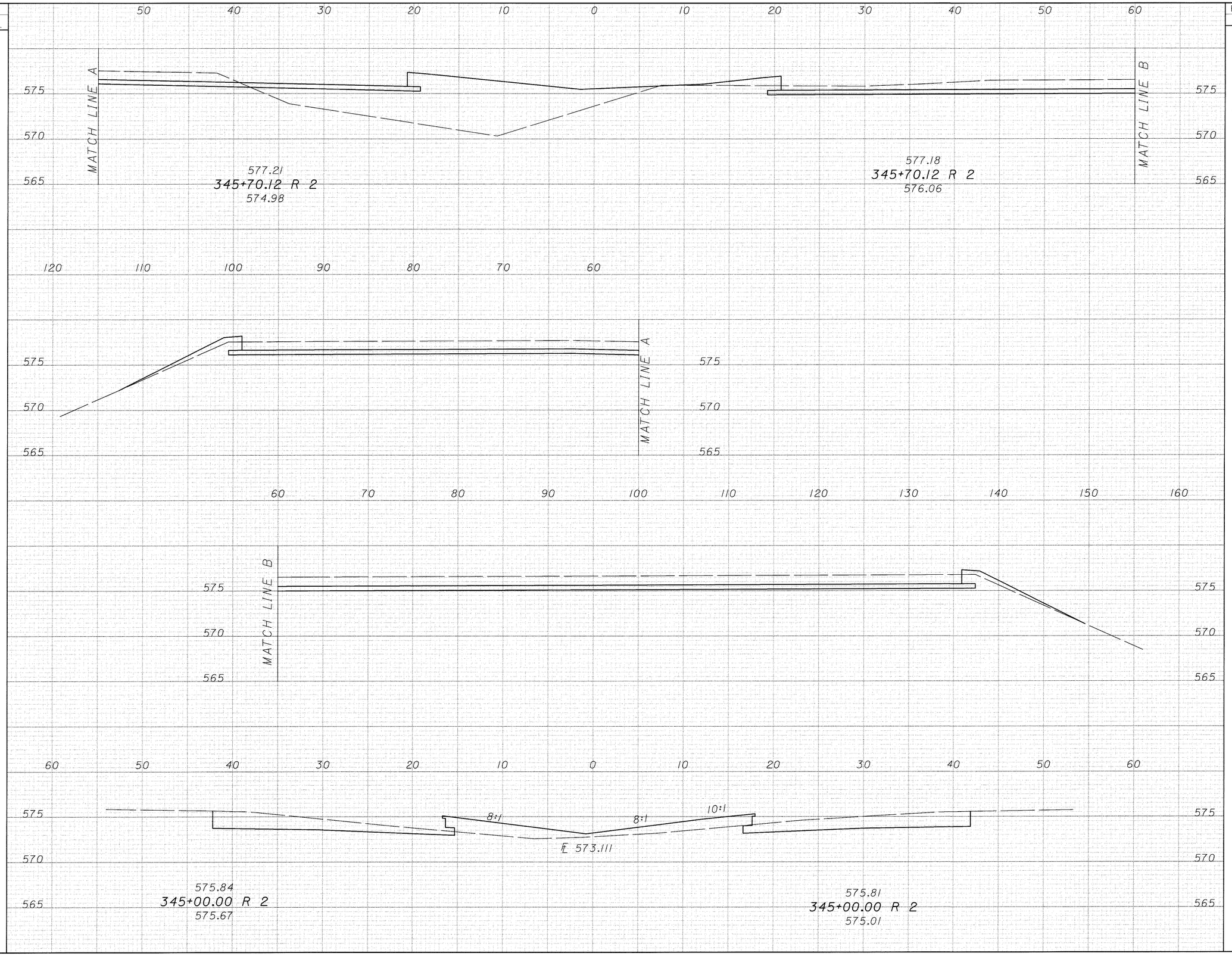

END AREA		VOLUME	
CUT	FILL	CUT	FILL
253	159		
		413	252
65	35		
		117	65

CALCULATED AM

CHECKED JOB

I.R.275 CROSS SECTIONS

STA 345+00.00 TO STA 345+70.12

CLE-275-5.35

470
857

SEEDING	
END WIDTH	SQ. YDS.
128	172

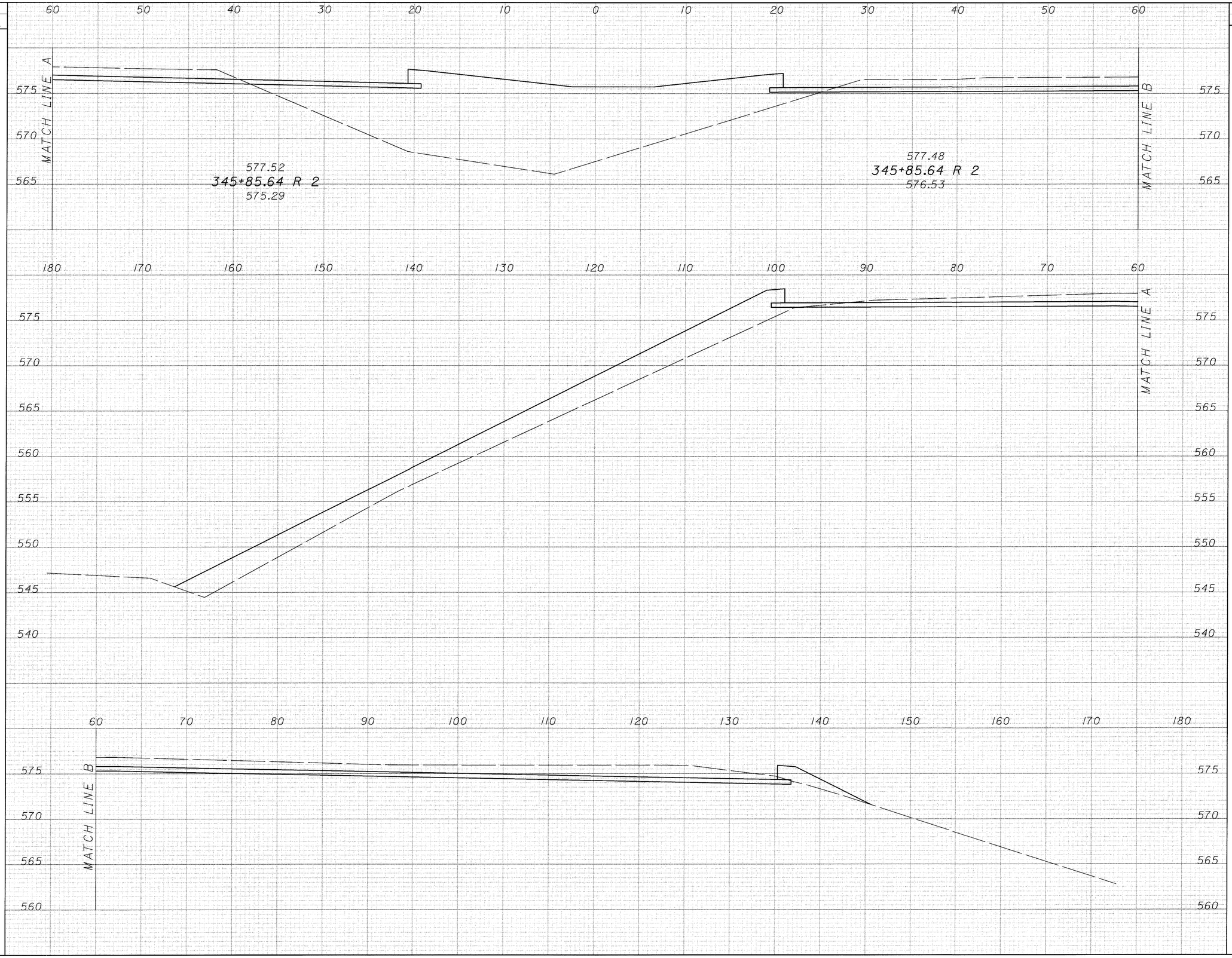

END AREA		VOLUME	
CUT	FILL	CUT	FILL
223	547		
		137	203

CALCULATED AM

CHECKED JGB

I.R.275 CROSS SECTIONS
STA 345+85.64

CLE-275-5.35

471
857

SEEDING	
END WIDTH	SQ. YDS.
98	0

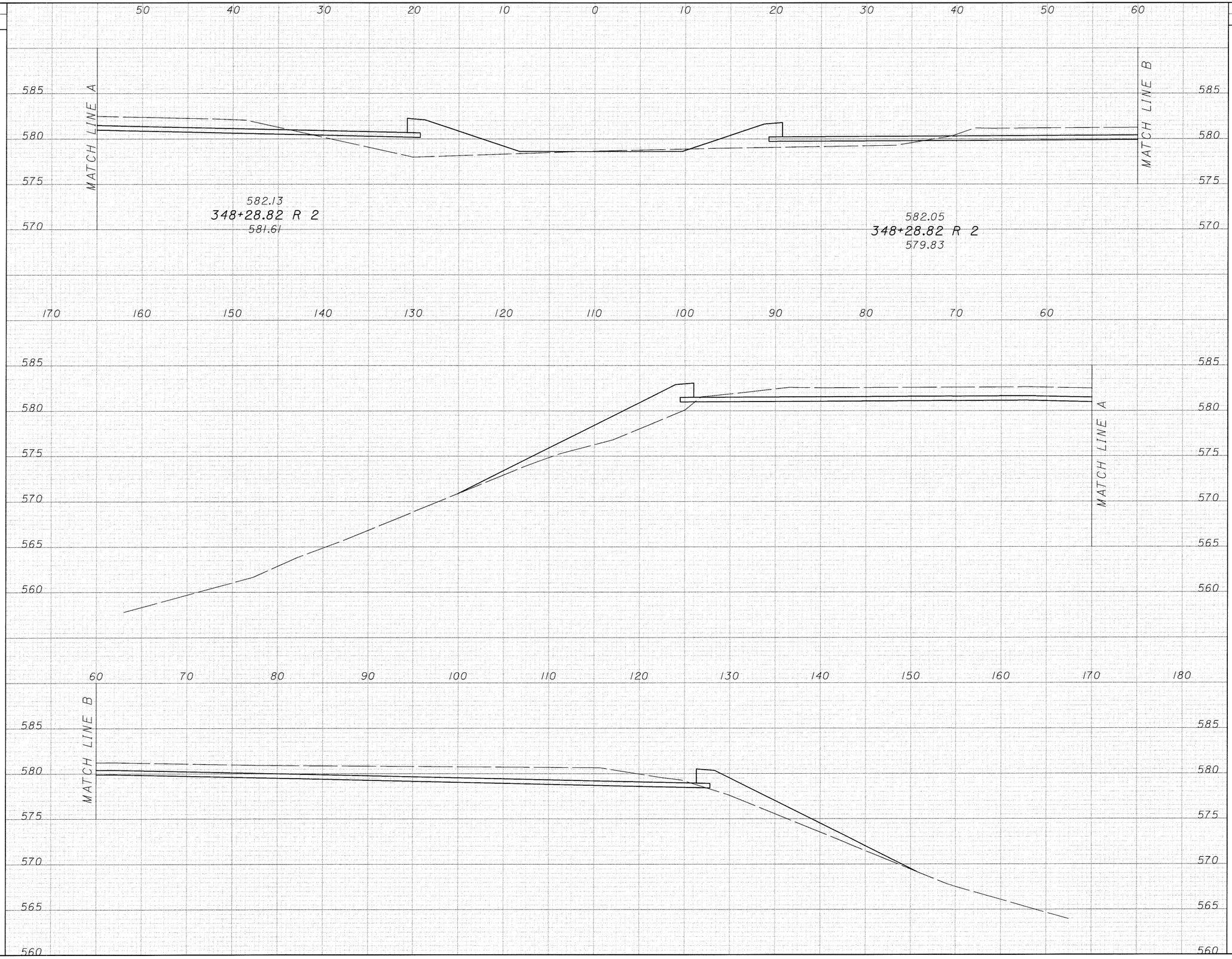

END AREA		VOLUME	
CUT	FILL	CUT	FILL
219	134	0	0

CALCULATED AM

CHECKED JDB

I.R.275 CROSS SECTIONS
STA 348+28.82

CLE-275-5.35

472
857

SEEDING	
END WIDTH	SQ. YDS.
36	130
68	231

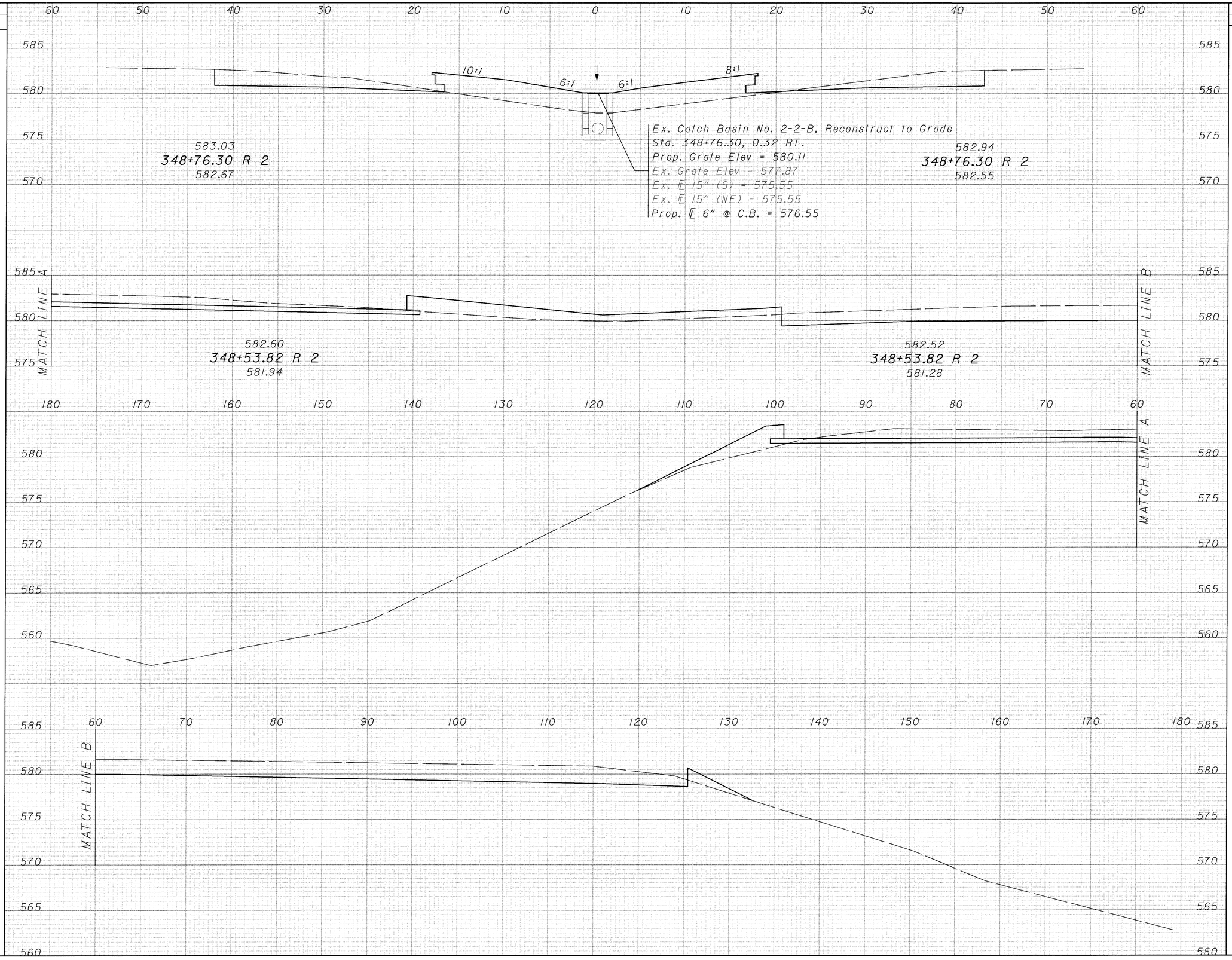

END AREA		VOLUME	
CUT	FILL	CUT	FILL
50	78		
		129	60
261	65		
		222	92

CALCULATED AM

CHECKED JGB

I.R.275 CROSS SECTIONS
STA 348+53.82 TO STA 348+76.30

CLE-275-5.35

473
857

SEEDING END WIDTH	SEEDING SQ. YDS.	END AREA CUT	END AREA FILL	VOLUME CUT	VOLUME FILL
36		73	19		
	200			131	51
36		69	36		
	200			121	84
36		62	55		
	295			153	182

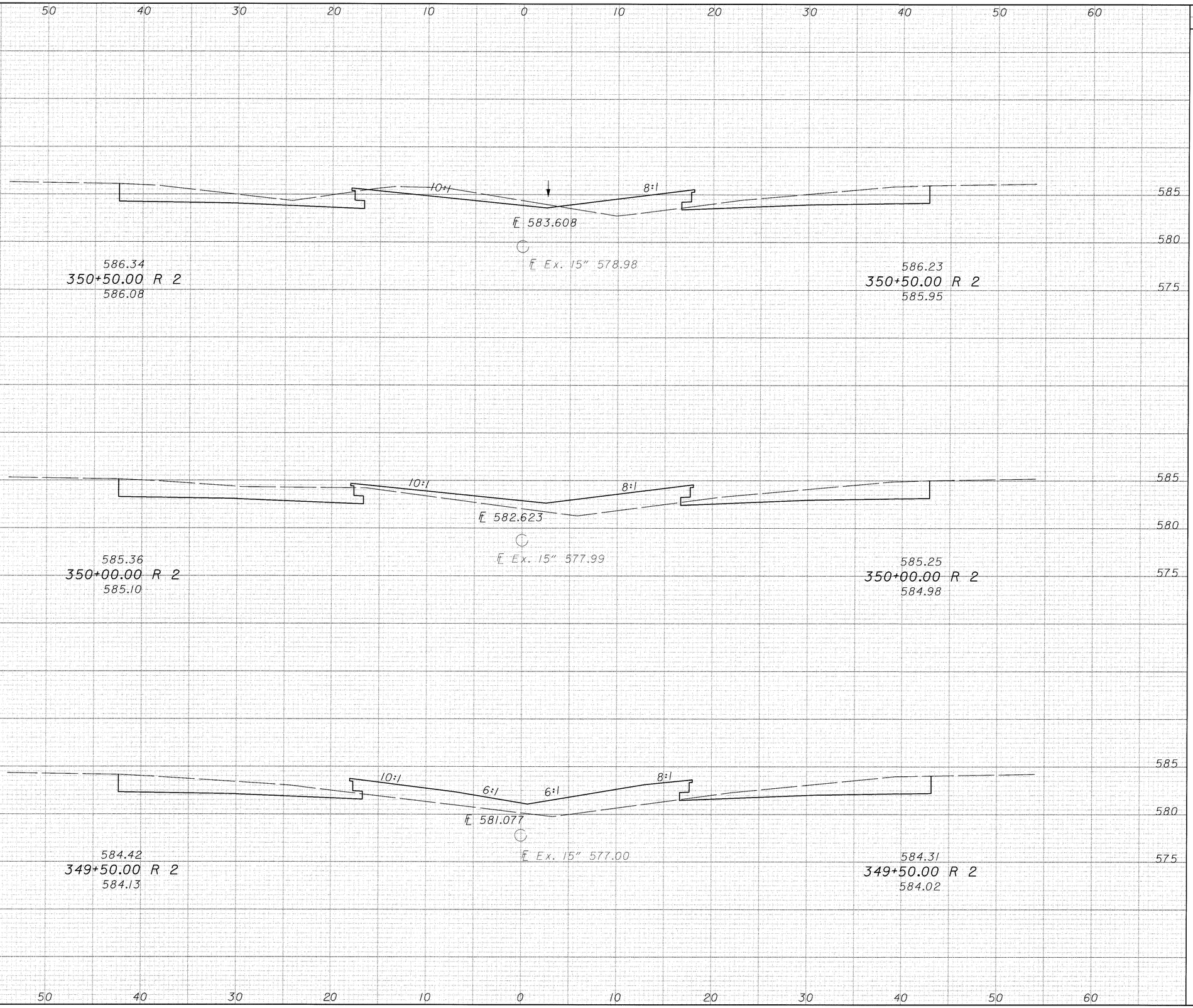

CALCULATED AM

CHECKED JGB

CROSS SECTIONS

STA 349+50.00 TO STA 350+50.00

CLE-275-5.35

474
857

SEEDING	
END WIDTH	SQ. YDS.
36	157
36	243
36	200

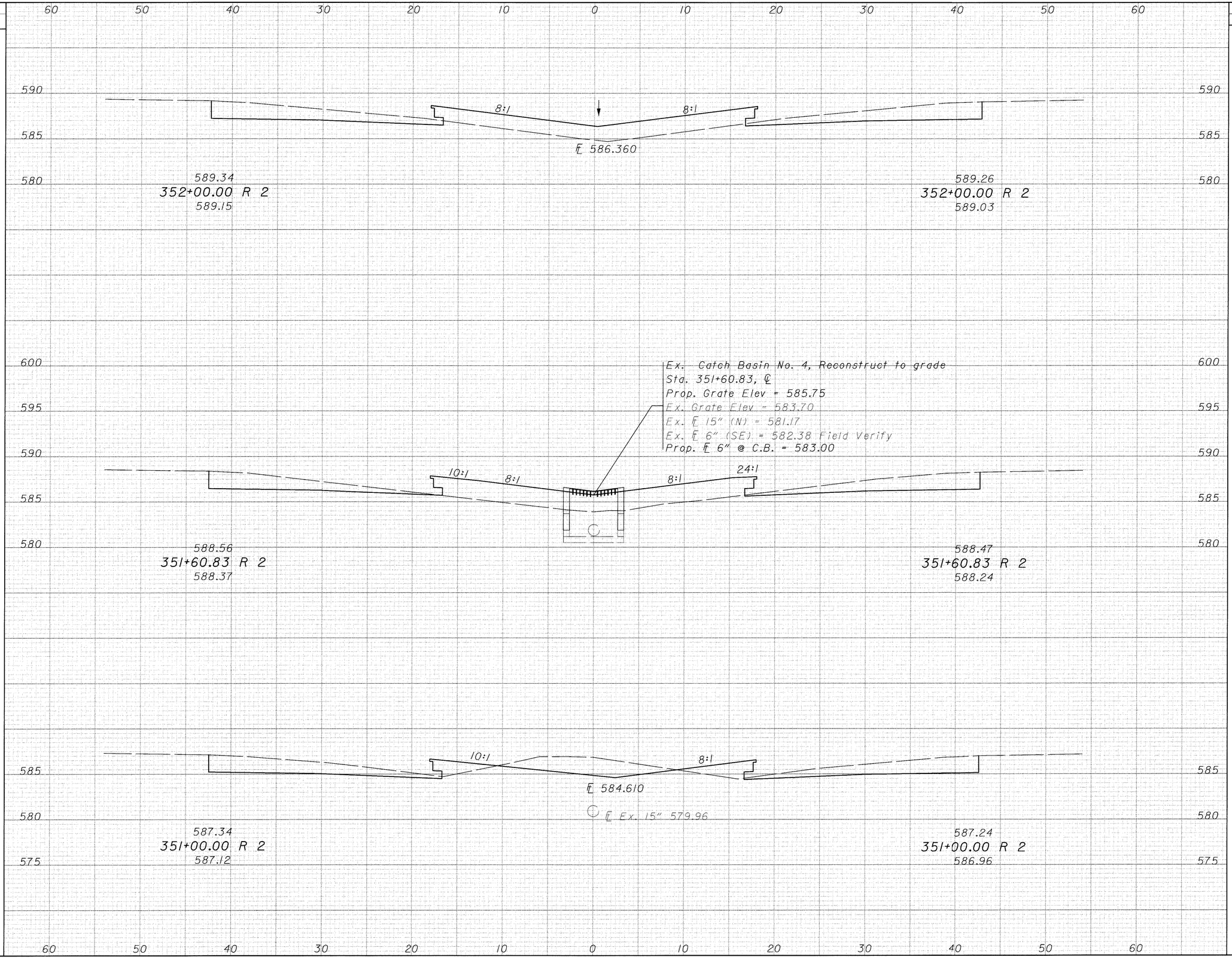

END AREA		VOLUME	
CUT	FILL	CUT	FILL
62	58		
		85	94
55	71		
		157	98
84	16		
		145	32

CALCULATED AM

CHECKED JOB

I.R.275 CROSS SECTIONS
STA 351+00.00 TO STA 352+00.00

CLE-275-5.35

475
857

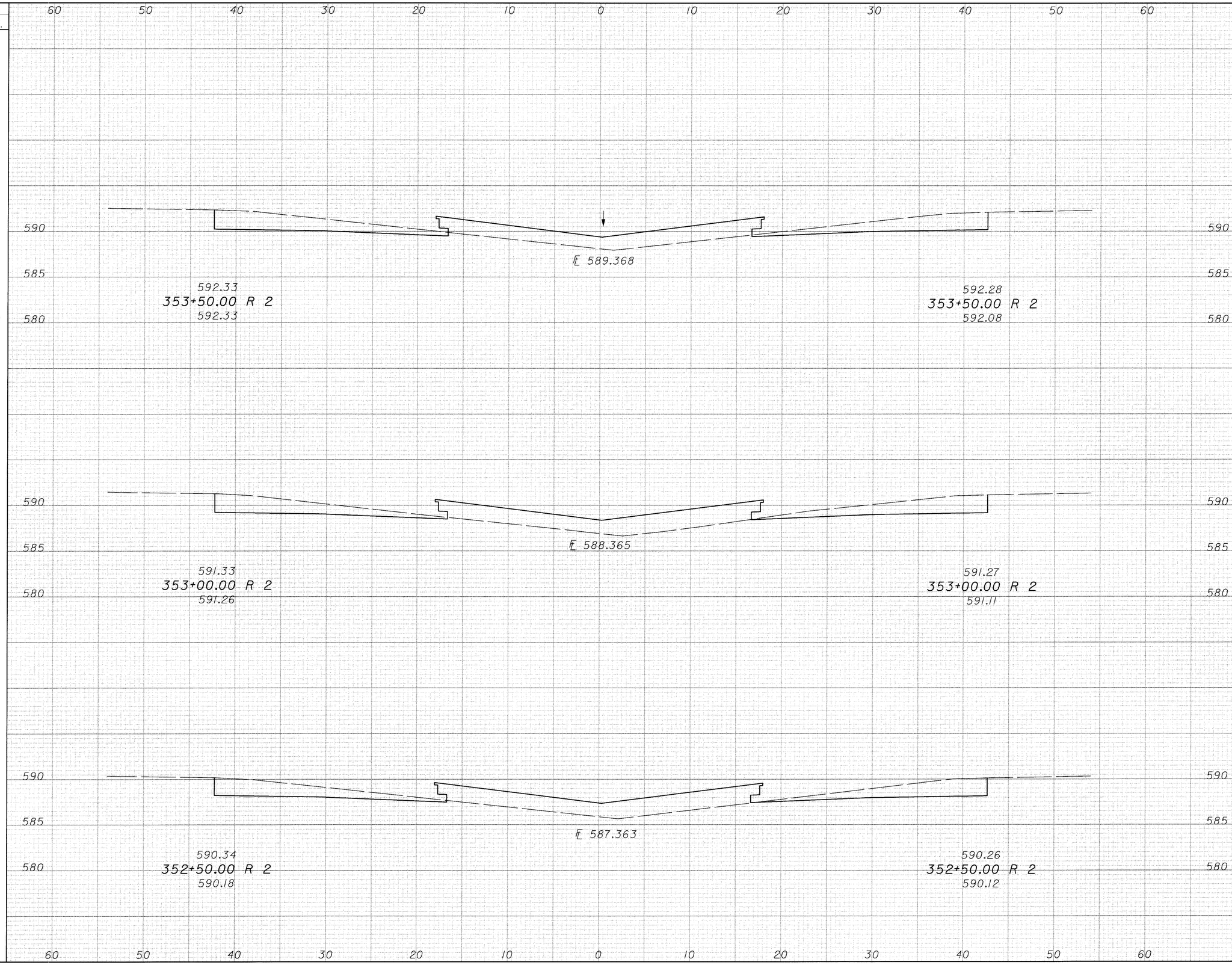

SEEDING END WIDTH	SEEDING SQ. YDS.	END AREA CUT	END AREA FILL	VOLUME CUT	VOLUME FILL
36		62	55		
	200			111	109
36		58	63		
	200			105	117
36		55	63		
	200			108	112

CALCULATED AM
CHECKED JGB

I.R.275 CROSS SECTIONS
STA 352+50.00 TO STA 353+50.00

CLE-275-5.35

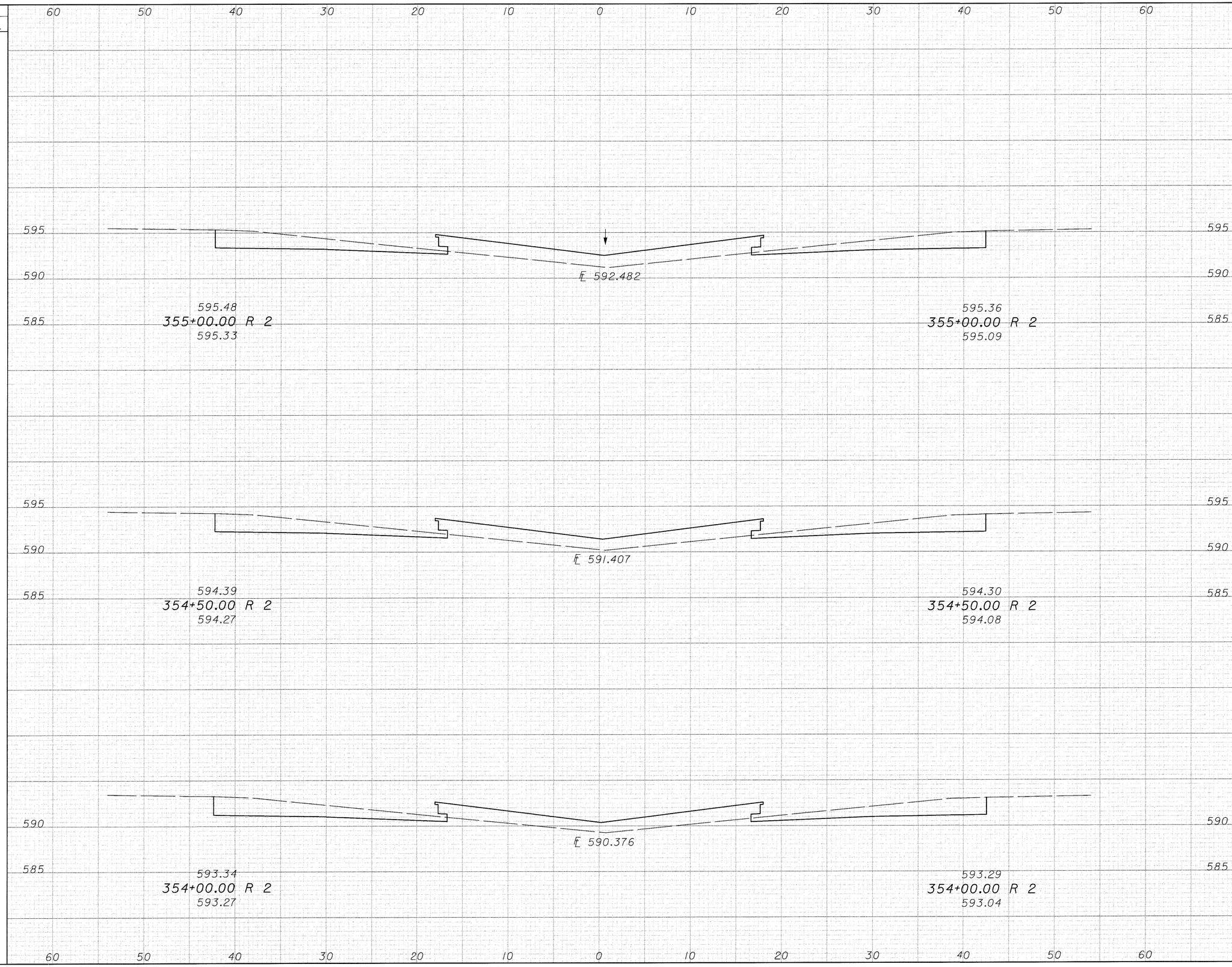

SEEDING END WIDTH	SEEDING SQ. YDS.	END AREA CUT	END AREA FILL	VOLUME CUT	VOLUME FILL
36		57	53		
	200			109	95
36		61	50		
	200			115	90
36		63	47		
	200			116	94

CALCULATED AM
CHECKED JGB

I.R.275 CROSS SECTIONS
STA 354+00.00 TO STA 355+00.00

CLE-275-5.35

SEEDING END WIDTH	SEEDING SQ. YDS.	END AREA CUT	END AREA FILL	VOLUME CUT	VOLUME FILL
36	200	54	59	102	108
36	200	56	58	105	106
36	200	57	57	106	102

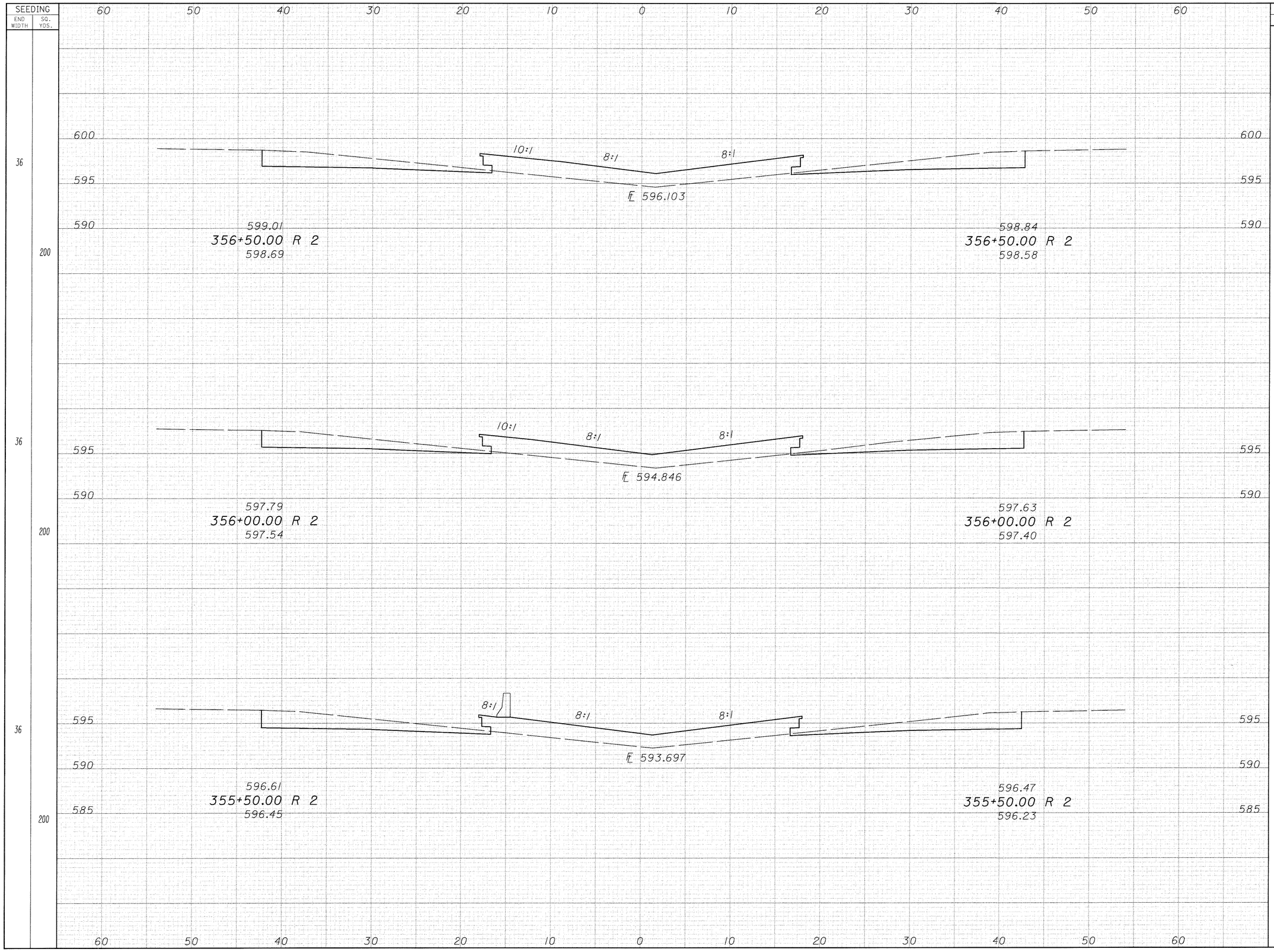

CALCULATED AM

CHECKED JOB

I.R.275 CROSS SECTIONS

STA 355+50.00 TO STA 356+50.00

CLE-275-5.35

478
857

SEEDING END WIDTH	SEEDING SQ. YDS.	END AREA CUT	END AREA FILL	VOLUME CUT	VOLUME FILL
36	200	60	58	108	109
36	200	57	60	106	110
36	200	57	59	103	109

CALCULATED AM

CHECKED JGB

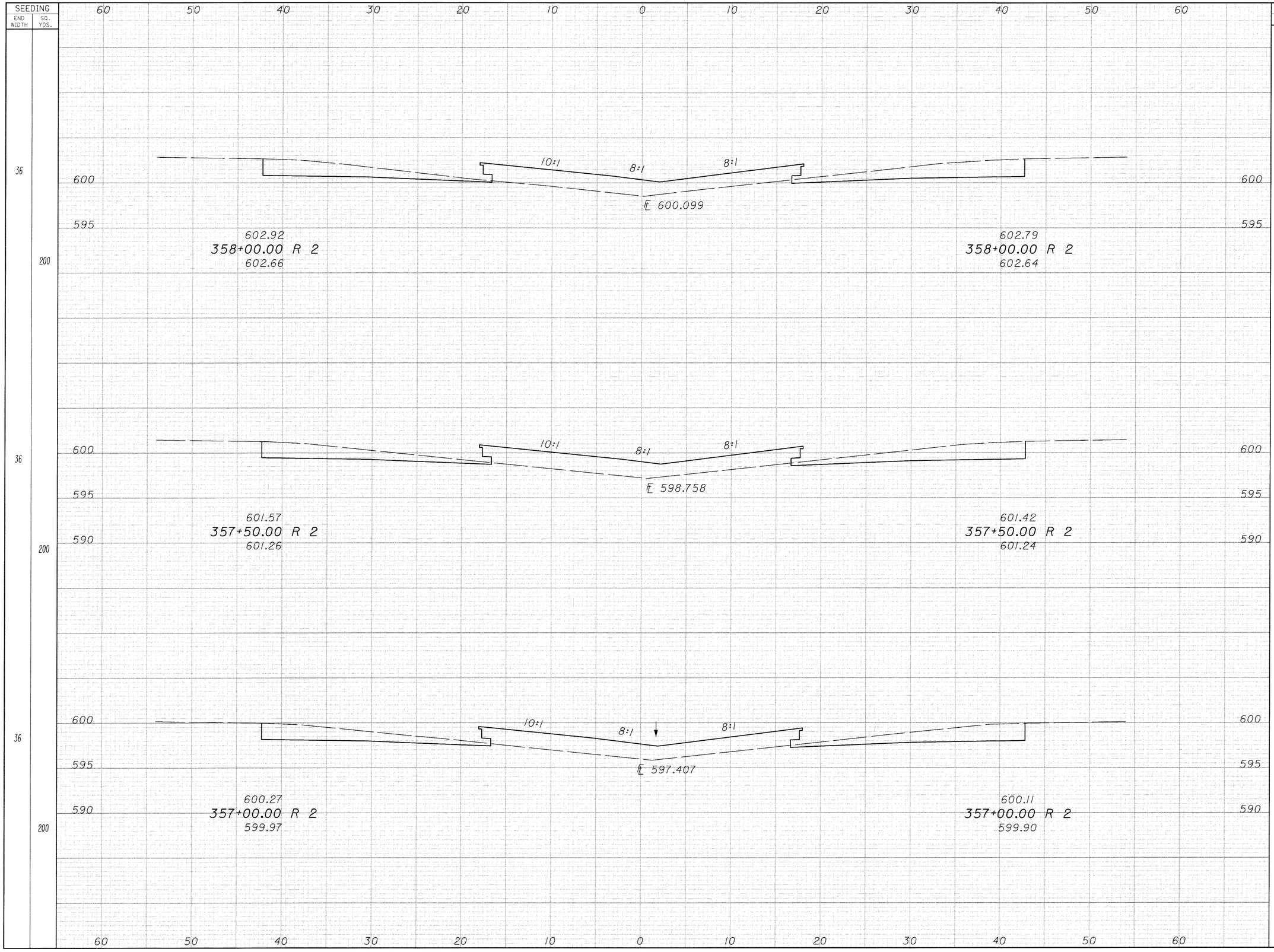

I.R.275 CROSS SECTIONS

STA 357+00.00 TO STA 358+00.00

CLE-275-5.35

479
857

SEEDING		60	50	40	30	20	10	0	10	20	30	40	50	60	END AREA		VOLUME	
END WIDTH	SQ. YDS.														CUT	FILL	CUT	FILL
35		605												605	67	37		
								℄ 604.309										
		600												600				
				607.21								607.14						
				359+50.00 R 2								359+50.00 R 2						
	197	595		607.01								606.88		595			123	81
36		605					8:1		8:1					605	66	50		
								℄ 602.767										
		600												600				
				605.74								605.67						
		595		359+00.00 R 2								359+00.00 R 2		595			121	96
	200			605.51								605.42						
36		605					10:1	8:1		8:1				605	65	54		
								℄ 601.378										
		600												600				
				604.31								604.21						
		595		358+50.00 R 2								358+50.00 R 2		595			116	104
	200			604.07								604.03						
		60	50	40	30	20	10	0	10	20	30	40	50	60				

CALCULATED AM

CHECKED JCB

I.R.275 CROSS SECTIONS

STA 358+50.00 TO STA 359+50.00

CLE-275-5.35

480
857

SEEDING	
END WIDTH	SQ. YDS.
36	186
31	183

END AREA		VOLUME	
CUT	FILL	CUT	FILL
63	46		
		109	82
55	43		
		113	74

CALCULATED AM

CHECKED JGB

610.22
360+50.00 R 2
610.02

610.08
360+50.00 R 2
609.81

℄ 607.214

℄ 15" 602.44

8:1

8:1

Ex. Catch Basin No. 4, Reconstruct to Grade
Sta. 360+00.02, 0.08 RT.
Prop. Grate Elev = 605.77
Ex. Grate Elev = 604.06
Ex. ℄ 18" (W) = 600.67
Prop. ℄ 15" (S) = 600.92
Prop. ℄ 6" @ C.B. = 603.35

5.8:1

8:1

24:1

608.71
360+00.02 R 2
608.51

608.61
360+00.02 R 2
608.35

MATCH LINE

88', Ex. 18" Type B Conduit @ 3.0%

MATCH LINE

88', Ex. 18" Type B Conduit @ 3.0%

40', Ex. 18" Type F Conduit

I.R.275 CROSS SECTIONS
STA 360+00.02 TO STA 360+50.00

CLE-275-5.35

481
857

SEEDING END WIDTH	SEEDING SQ. YDS.	END AREA CUT	END AREA FILL	VOLUME CUT	VOLUME FILL
36	200	59	43	113	77
36	200	63	40	118	73
36	200	64	39	118	79

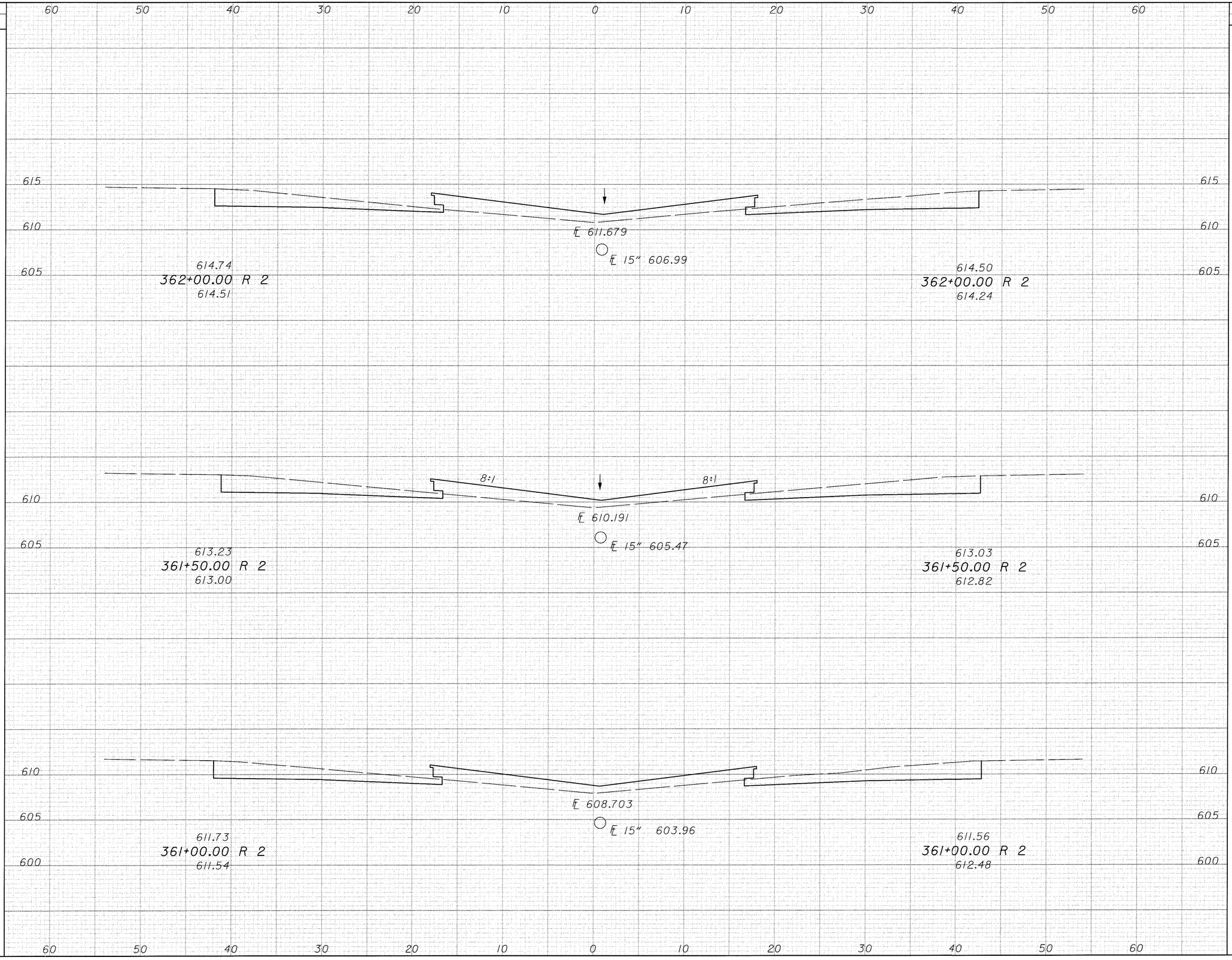

CALCULATED AM

CHECKED JSB

I.R.275 CROSS SECTIONS

STA 361+00.00 TO STA 362+00.00

CLE-275-5.35

482
857

SEEDING		END AREA		VOLUME	
END WIDTH	SQ. YDS.	CUT	FILL	CUT	FILL
36	200	59	49	104	101
36	200	53	60	96	108
36	200	51	57	102	93

CALCULATED AM

CHECKED JGB

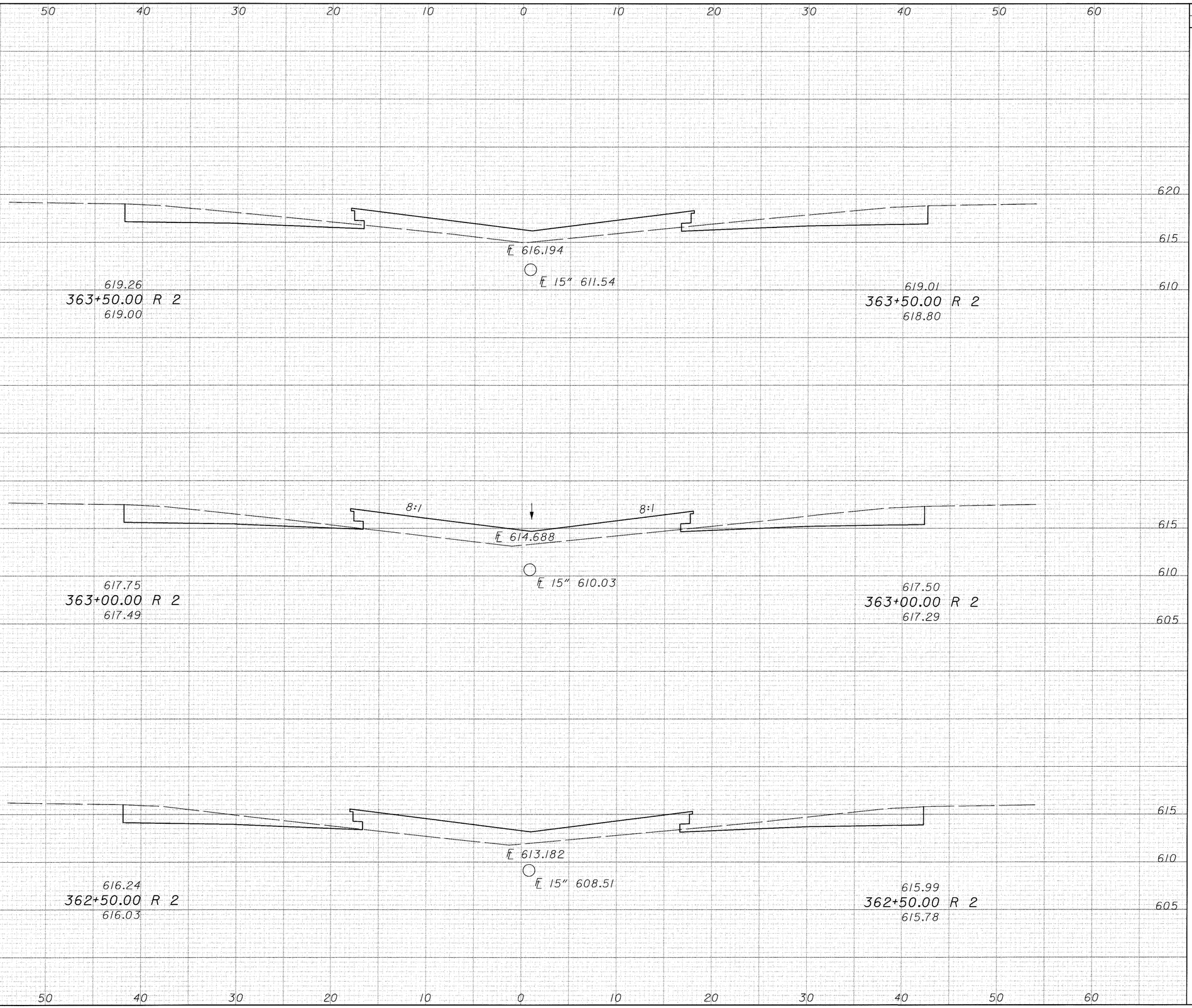

I.R.275 CROSS SECTIONS
STA 362+50.00 TO STA 363+50.00

CLE-275-5.35

403
857

SEEDING		END AREA		VOLUME			
END WIDTH	SQ. YDS.	CUT	FILL	CUT	FILL	CALCULATED AM	CHECKED JGB
36	200	61	42	113	83		
36	200	61	48	109	90		
36	200	57	49	107	91		

60 50 40 30 20 10 0 10 20 30 40 50 60

620
615
610

623.78
365+00.00 R 2
623.60

℄ 620.712
℄ 15" 616.10

623.52
365+00.00 R 2
623.35

8:1 8:1

622.27
364+50.00 R 2
622.11

℄ 619.206
℄ 15" 614.58

622.02
364+50.00 R 2
621.85

620.76
364+00.00 R 2
620.55

℄ 617.700
℄ 15" 613.06

620.51
364+00.00 R 2
620.35

I.R.275 CROSS SECTIONS
STA 364+00.00 TO STA 365+00.00

CLE-275-5.35

484
857

SEEDING		END AREA		VOLUME	
END WIDTH	SQ. YDS.	CUT	FILL	CUT	FILL
36	200	59	53	106	101
36	200	56	56	110	97
36	200	63	49	115	84

60 50 40 30 20 10 0 10 20 30 40 50 60

625
620

℄ 625.230
℄ 620.65
628.29
366+50.00 R 2
628.04
628.04
366+50.00 R 2
627.91

625
620
615

8:1 8:1
℄ 623.724
℄ 15" 619.13
626.79
366+00.00 R 2
626.51
626.53
366+00.00 R 2
626.42

625
620
615

℄ 622.218
℄ 15" 617.62
625.28
365+50.00 R 2
625.06
625.03
365+50.00 R 2
624.94

60 50 40 30 20 10 0 10 20 30 40 50 60

CALCULATED AM

CHECKED JGB

I.R.275 CROSS SECTIONS
STA 365+50.00 TO STA 366+50.00

CLE-275-5.35

485
857

SEEDING END WIDTH	SEEDING SQ. YDS.	END AREA CUT	END AREA FILL	VOLUME CUT	VOLUME FILL
36	200	51	41	106	78
36	200	63	43	110	86
36	200	56	50	106	95

CALCULATED AM

CHECKED JOB

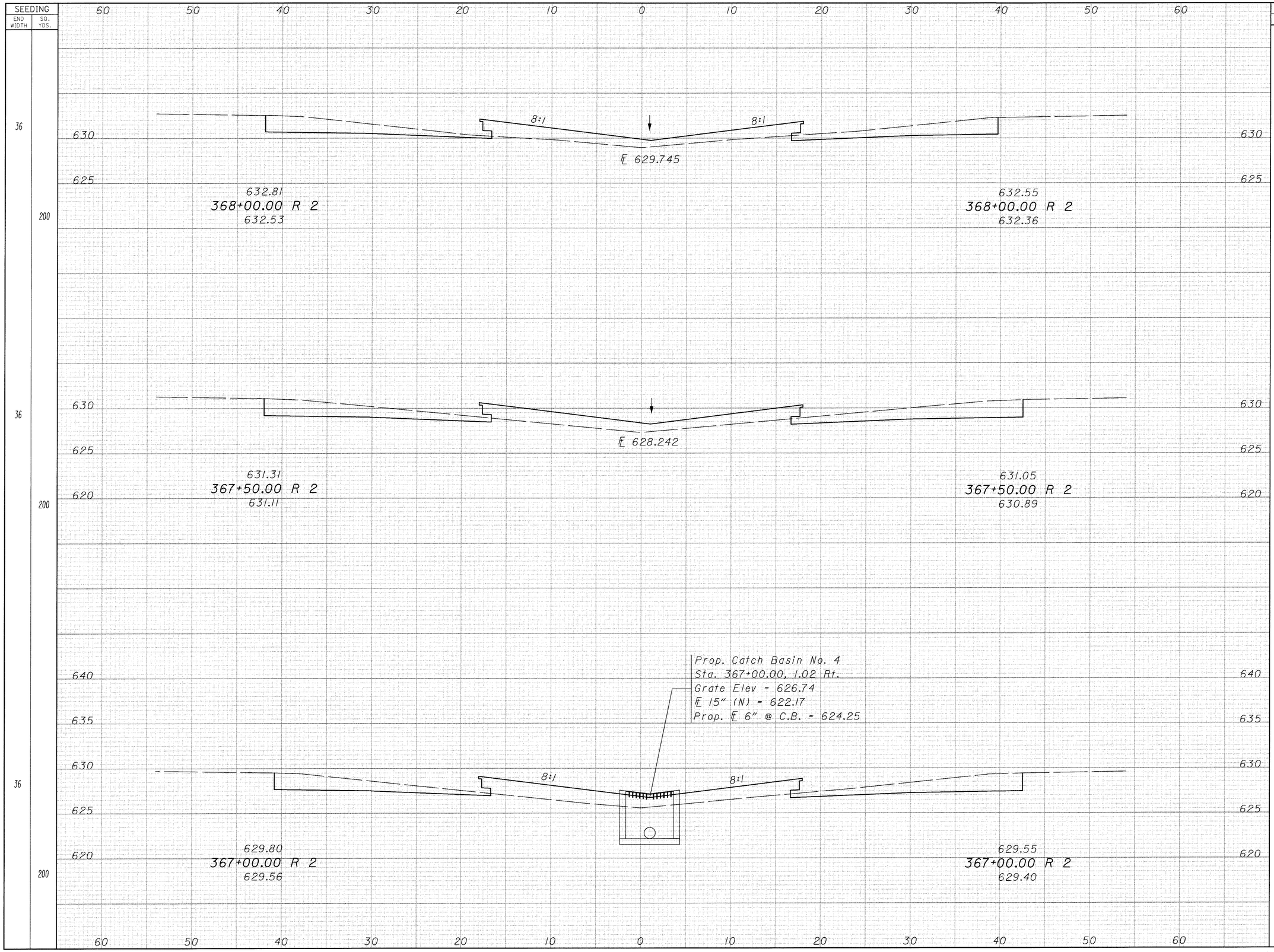

I.R.275 CROSS SECTIONS
STA 367+00.00 TO 368+00.00

CLE-275-5.35

486
857

SEEDING END WIDTH	SEEDING SQ. YDS.	END AREA CUT	END AREA FILL	VOLUME CUT	VOLUME FILL
36	200	59	51	107	94
36	200	57	50	106	88
36	200	58	45	101	80

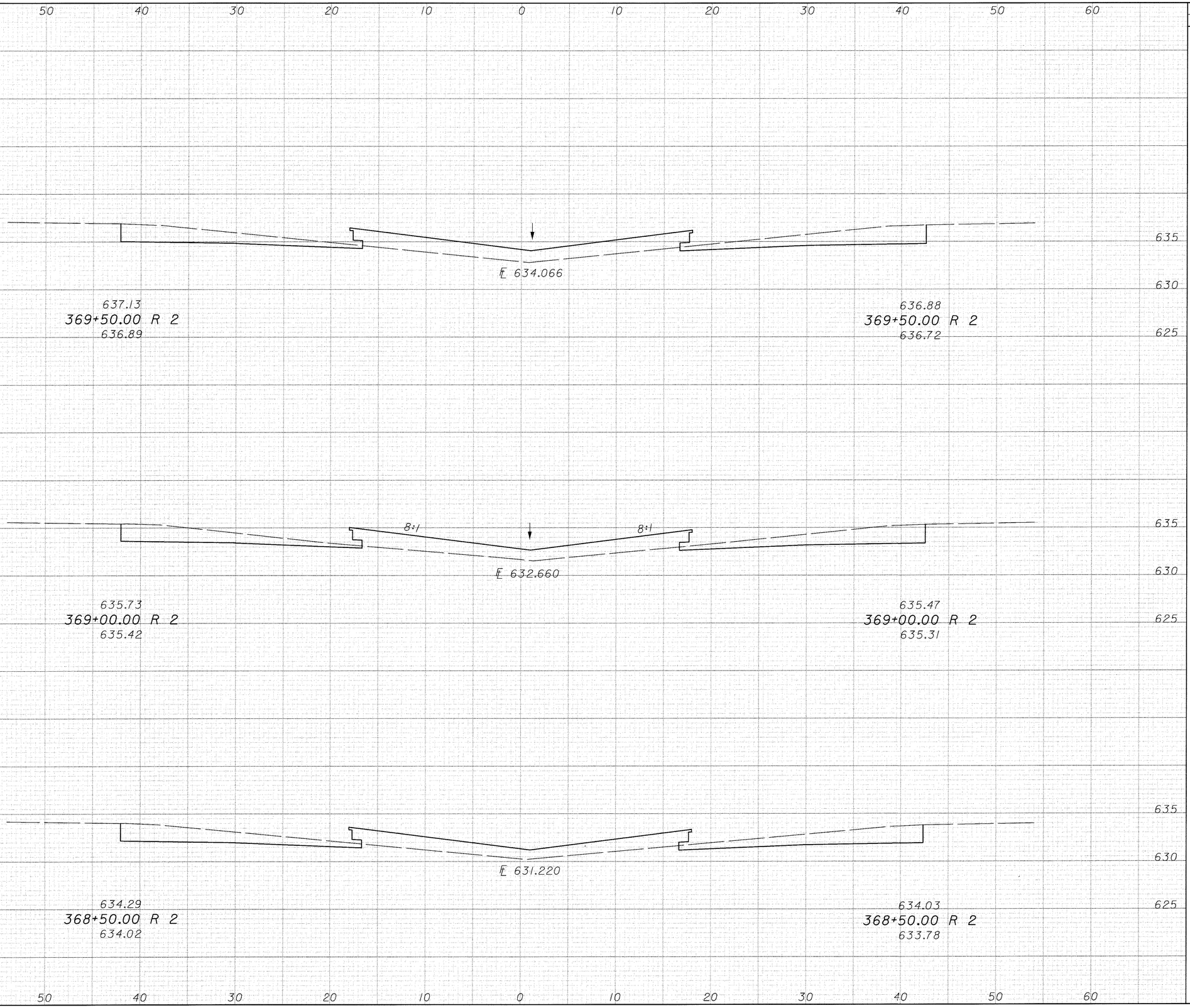

CALCULATED AM

CHECKED JDB

I.R.275 CROSS SECTIONS

STA 368+50.00 TO STA 369+50.00

CLE-275-5.35

487
857

SEEDING		END AREA		VOLUME	
END WIDTH	SQ. YDS.	CUT	FILL	CUT	FILL
36	200	55	53	102	99
36	200	55	54	106	97
36	200	60	51	110	94

CALCULATED AM

CHECKED JGB

I.R.275 CROSS SECTIONS
STA 370+00.00 TO STA 371+00.00

CLE-275-5.35

488
857

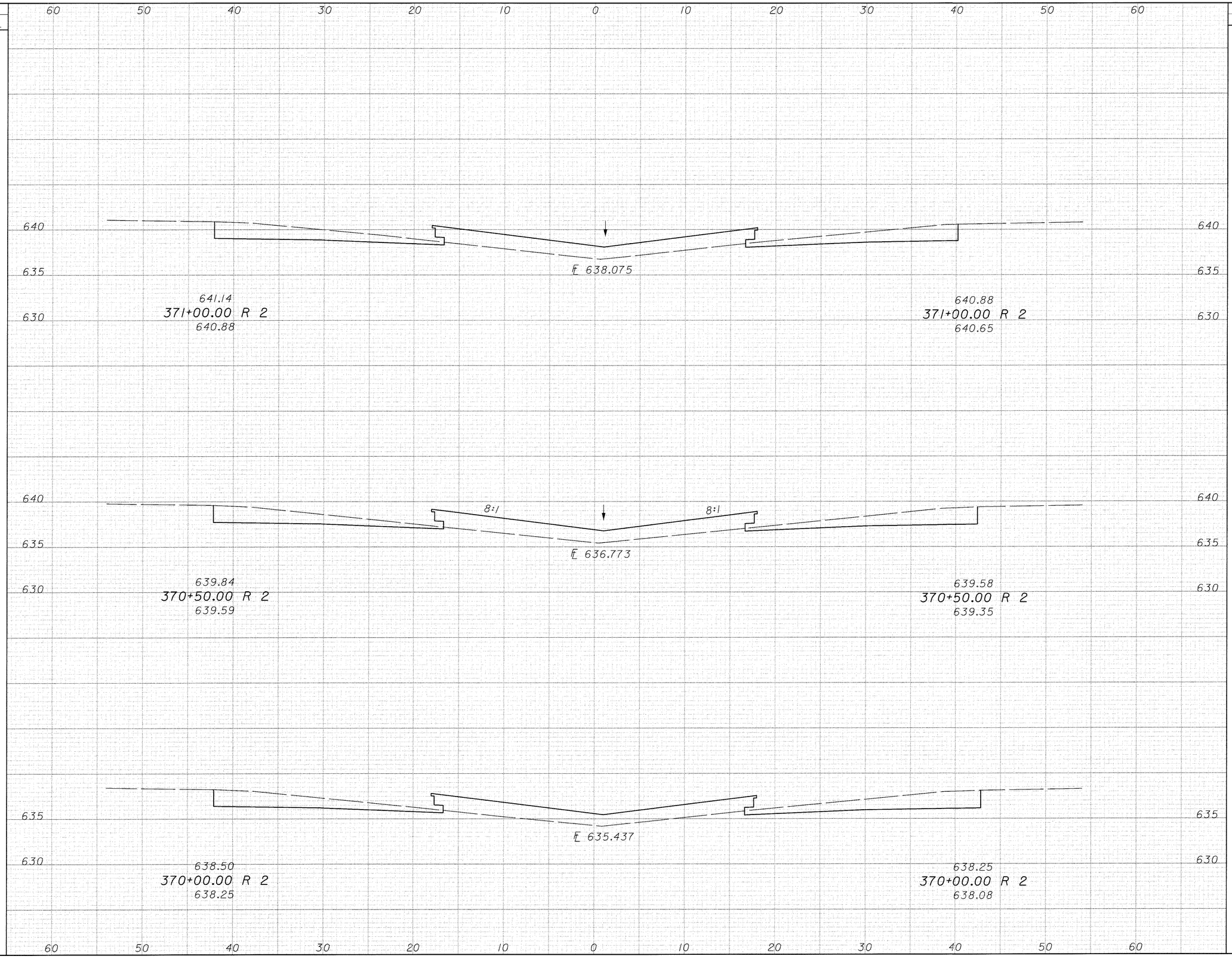

SEEDING END WIDTH	SEEDING SQ. YDS.	END AREA CUT	END AREA FILL	VOLUME CUT	VOLUME FILL
36	119	62	43	67	46
36	200	59	41	109	82
36	200	59	48	106	94

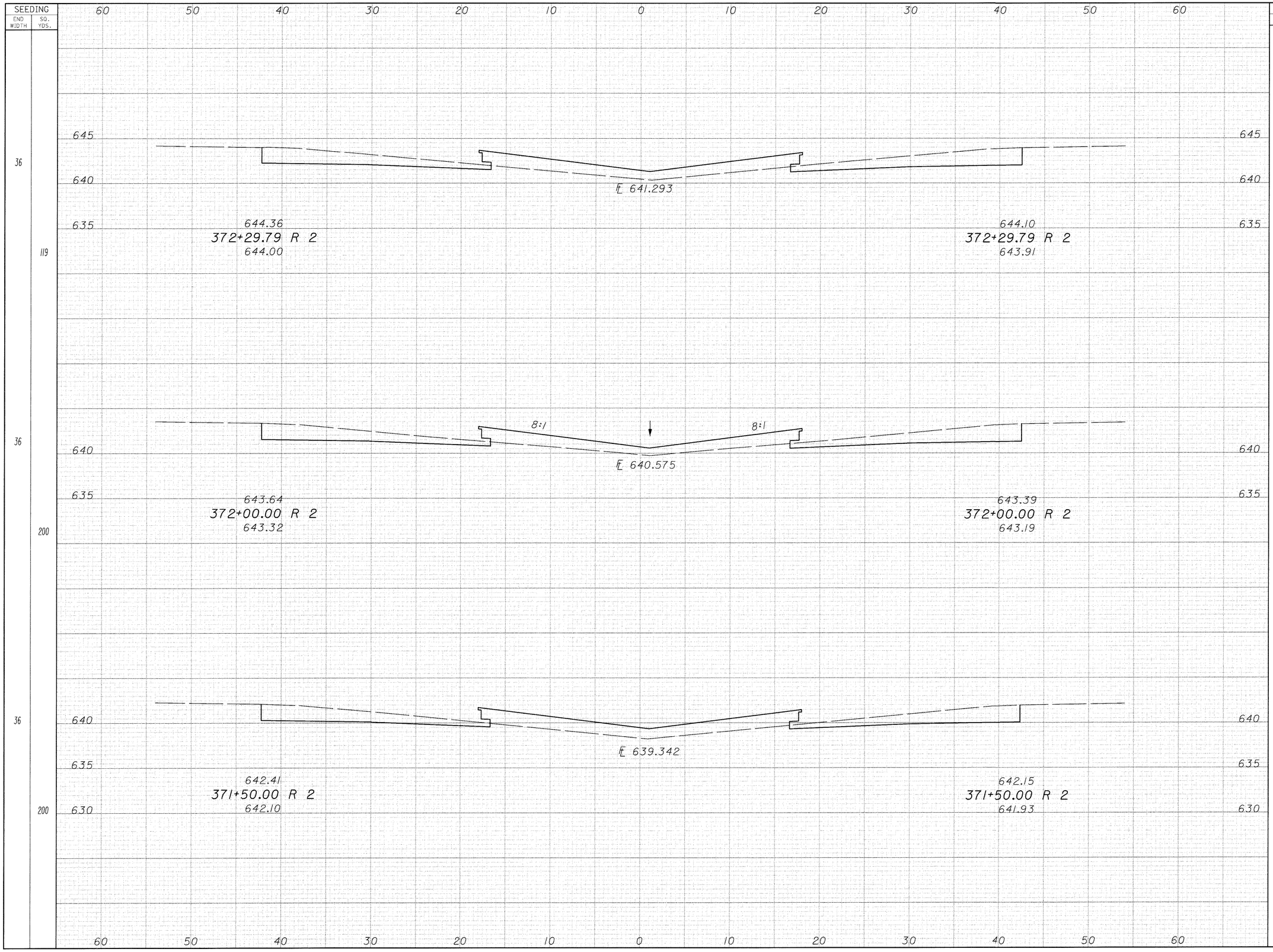

CALCULATED AM

CHECKED JGB

I.R.275 CROSS SECTIONS STA 371+50.00 TO STA 372+29.79

CLE-275-5.35

489
857

SEEDING END WIDTH	SEEDING SQ. YDS.	STATION	END AREA CUT	END AREA FILL	VOLUME CUT	VOLUME FILL
36	200	373+50.00 R 2	57	50	105	95
36	200	373+00.00 R 2	56	53	106	93
36	81	372+50.00 R 2	59	47	45	34

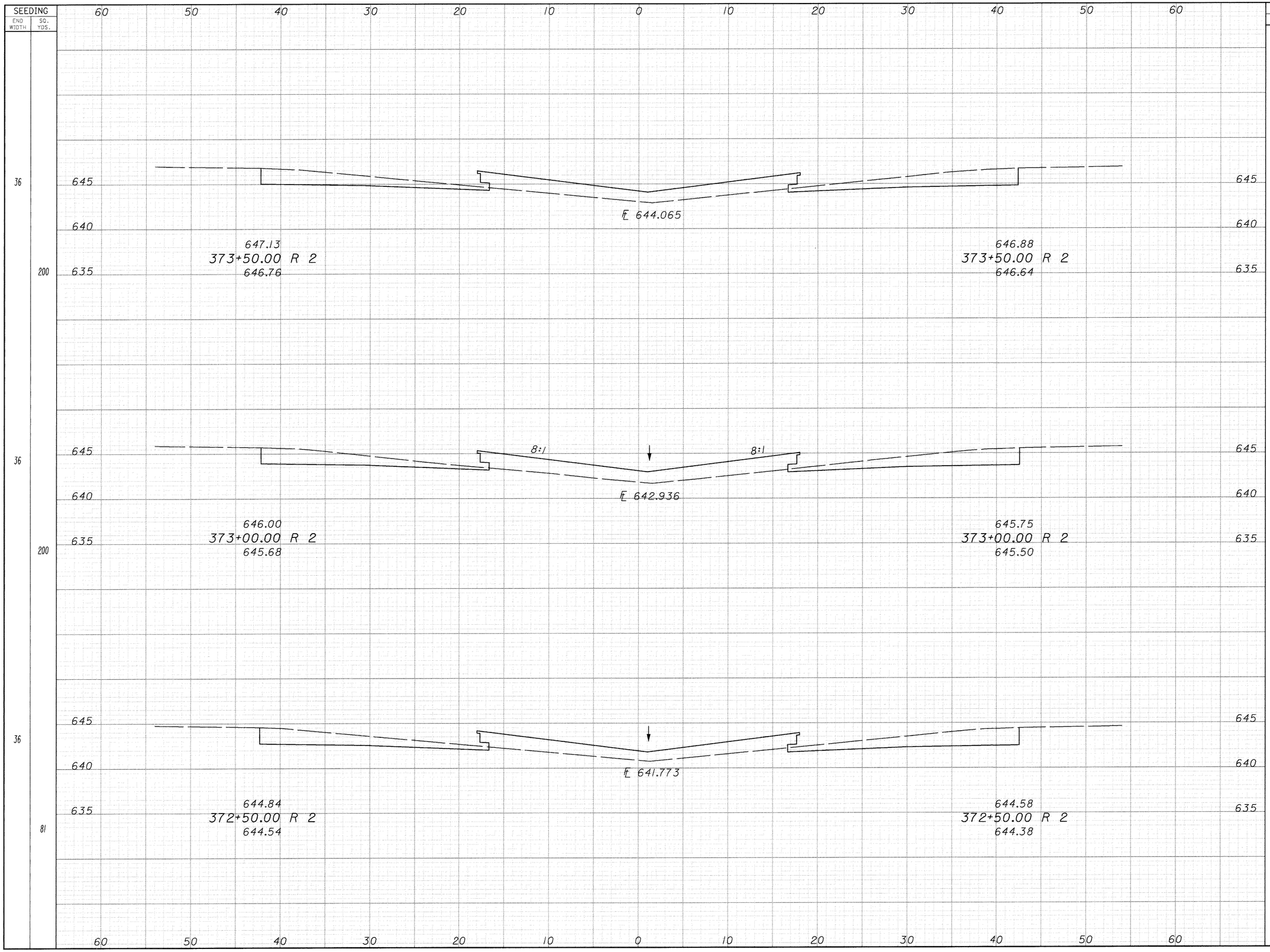

CALCULATED AM

CHECKED JOB

I.R.275 CROSS SECTIONS STA 372+50.00 TO STA 373+50.00

CLE-275-5.35

490
957

SEEDING END WIDTH	SEEDING SQ. YDS.	END AREA CUT	END AREA FILL	VOLUME CUT	VOLUME FILL
36	181	58	47	99	78
29	178	49	37	99	75
35	197	58	44	106	87

CALCULATED AM

CHECKED JOB

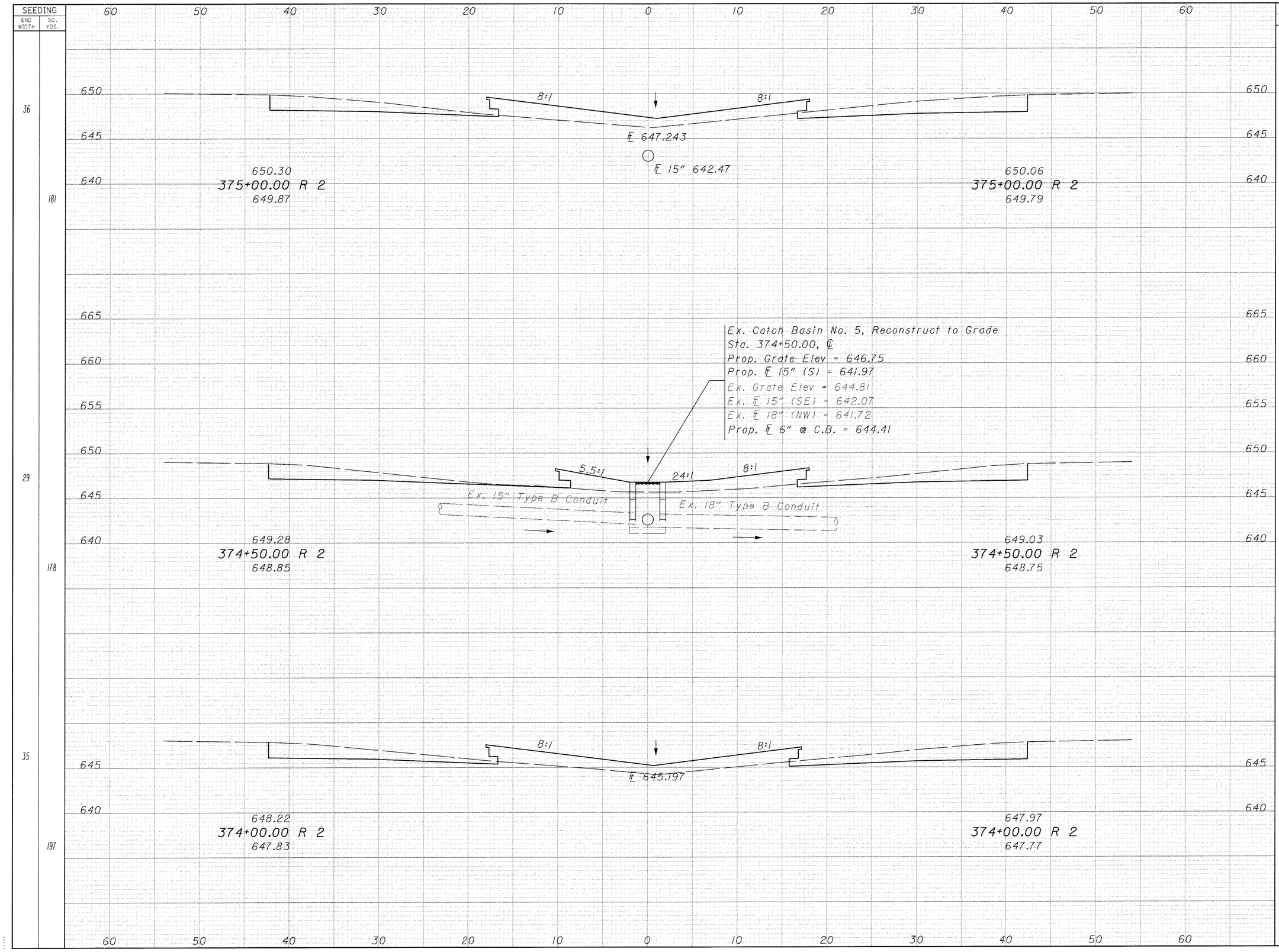

I.R.275 CROSS SECTIONS
STA 374+00.00 TO STA 375+00.00

CLE-275-5.35

491
857

SEEDING	
END WIDTH	SQ. YDS.
36	200
36	200
36	200

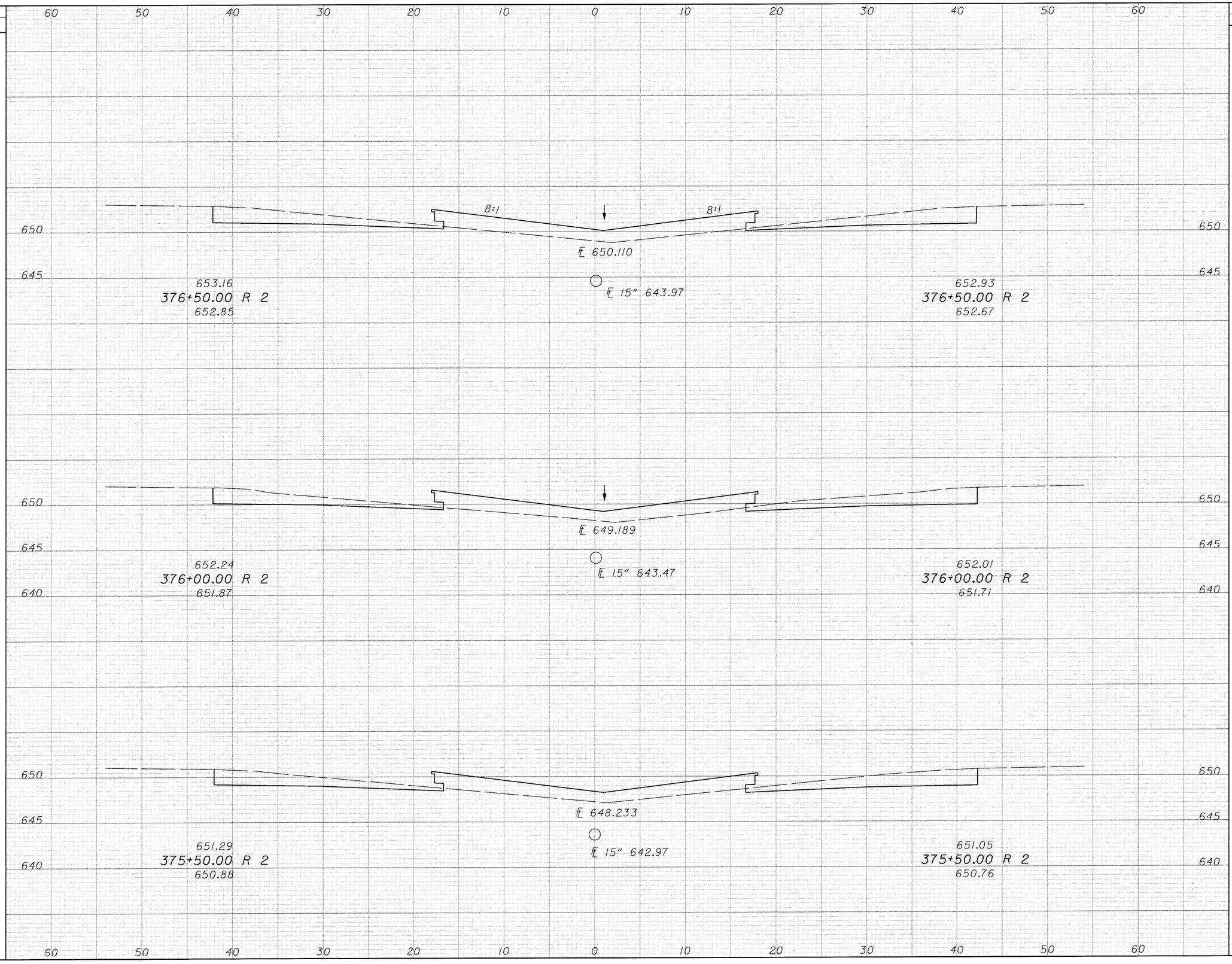

END AREA		VOLUME	
CUT	FILL	CUT	FILL
53	54	98	97
53	51	100	93
55	49	105	89

CALCULATED AM

CHECKED JGB

I.R.275 CROSS SECTIONS
STA 375+50.00 TO STA 376+50.00

CLE-275-5.35

492
857

SEEDING		END AREA		VOLUME	
END WIDTH	SQ. YDS.	CUT	FILL	CUT	FILL
36	200	58	53	106	99
36	200	56	54	104	101
36	200	56	55	101	101

CALCULATED AM

CHECKED JOB

I.R.275 CROSS SECTIONS

STA 377+00.00 TO STA 378+00.00

CLE-275-5.35

493
857

SEEDING END WIDTH	SEEDING SQ. YDS.	END AREA CUT	END AREA FILL	VOLUME CUT	VOLUME FILL
36	200	57	53	104	100
36	200	55	55	104	100
36	200	57	53	106	98

60 50 40 30 20 10 0 10 20 30 40 50 60

655 650 645

℄ 654.909

657.95
379+50.00 R 2
657.73

℄ 15" 646.97

657.74
379+50.00 R 2
657.54

8:1 8:1

℄ 654.196

657.24
379+00.00 R 2
657.02

℄ 15" 646.47

657.03
379+00.00 R 2
656.78

℄ 653.448

656.50
378+50.00 R 2
656.31

℄ 15" 645.97

656.28
378+50.00 R 2
656.04

60 50 40 30 20 10 0 10 20 30 40 50 60

CALCULATED AM

CHECKED JOB

I.R.275 CROSS SECTIONS

STA 378+50.00 TO STA 379+50.00

CLE-275-5.35

494
857

SEEDING	
END WIDTH	SQ. YDS.
36	200
36	200
36	200

60 50 40 30 20 10 0 10 20 30 40 50 60

660 / 655 / 650

8:1 8:1

℄ 656.841

659.88
381+00.00 R 2
659.62

℄ 15" 648.47

659.68
381+00.00 R 2
659.43

℄ 656.231

659.27
380+50.00 R 2
658.93

℄ 15" 647.97

659.07
380+50.00 R 2
658.87

℄ 655.587

658.63
380+00.00 R 2
658.37

℄ 15" 647.47

658.42
380+00.00 R 2
658.21

END AREA		VOLUME	
CUT	FILL	CUT	FILL
51	60		
53	58		
55	54		
		96	109
		100	104
		104	99

CALCULATED AM

CHECKED JGB

I.R.275 CROSS SECTIONS
STA 380+00.00 TO STA 381+00.00

CLE-275-5.35

495
S57

SEEDING	
END WIDTH	SQ. YDS.
36	200
36	200
36	200

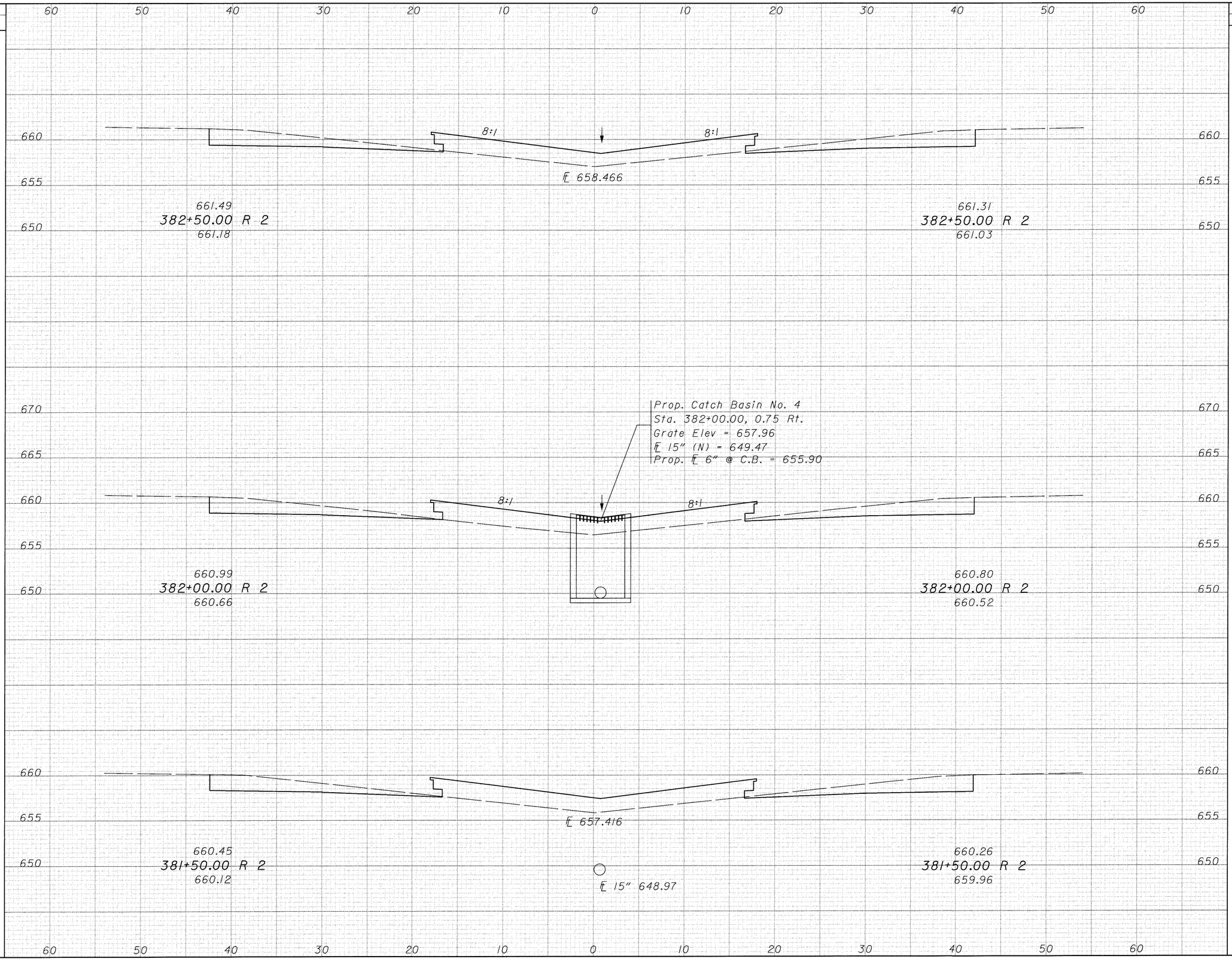

END AREA		VOLUME	
CUT	FILL	CUT	FILL
52	57		
52	59	96	107
51	60	95	110
		94	111

CALCULATED AM

CHECKED JOB

I.R.275 CROSS SECTIONS STA 381+50.00 TO STA 382+50.00

CLE-275-5.35

496
857

SEEDING END WIDTH	SEEDING SQ. YDS.	END AREA CUT	END AREA FILL	VOLUME CUT	VOLUME FILL
36	200	54	56	99	105
36	200	53	57	97	105
36	200	52	56	96	105

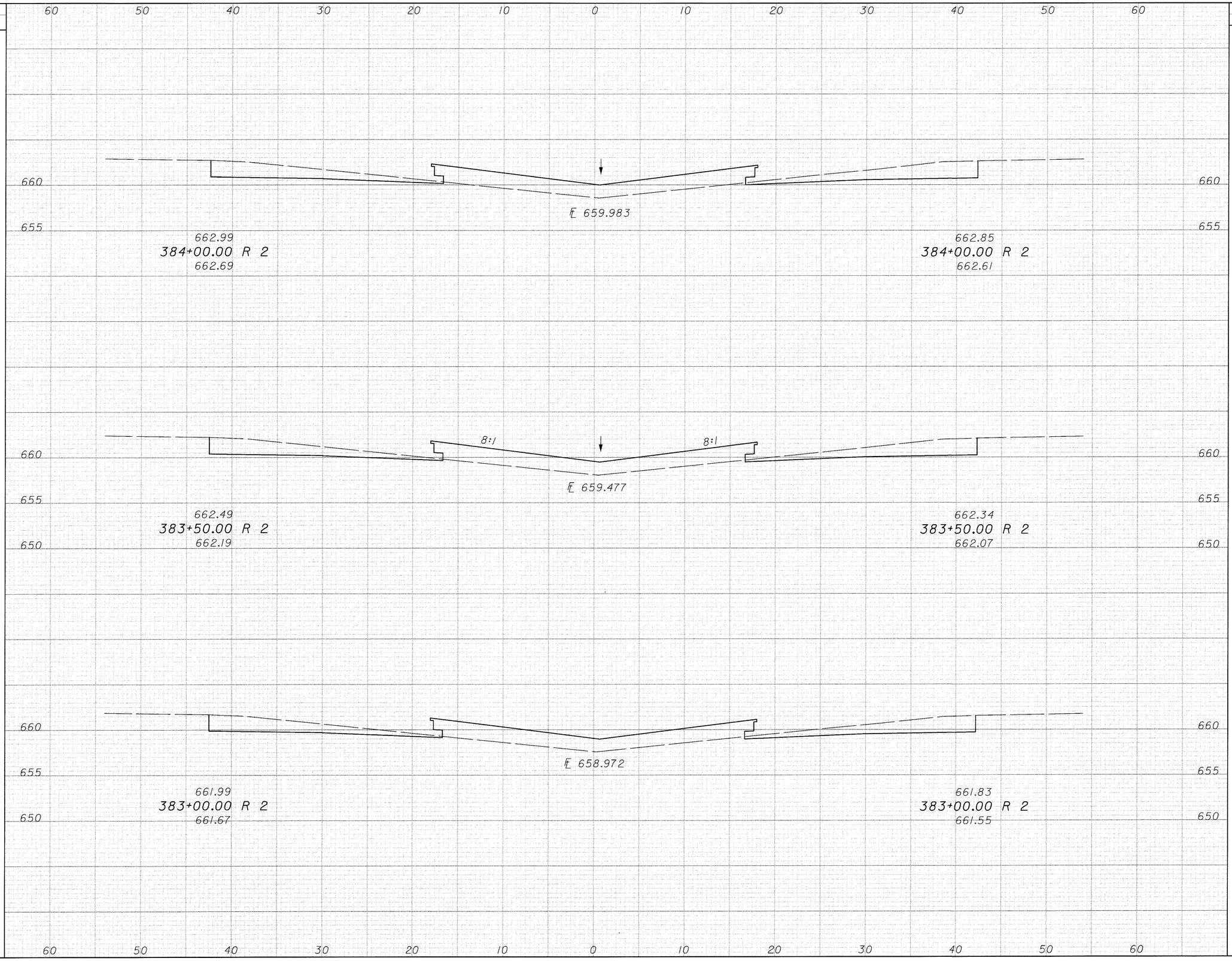

CALCULATED AM

CHECKED JGB

I.R.275 CROSS SECTIONS

STA 383+00.00 TO STA 384+00.00

CLE-275-5.35

497
857

SEEDING		END AREA		VOLUME	
END WIDTH	SQ. YDS.	CUT	FILL	CUT	FILL
36	200	55	54	105	98
36	200	58	52	106	99
36	200	56	55	102	103

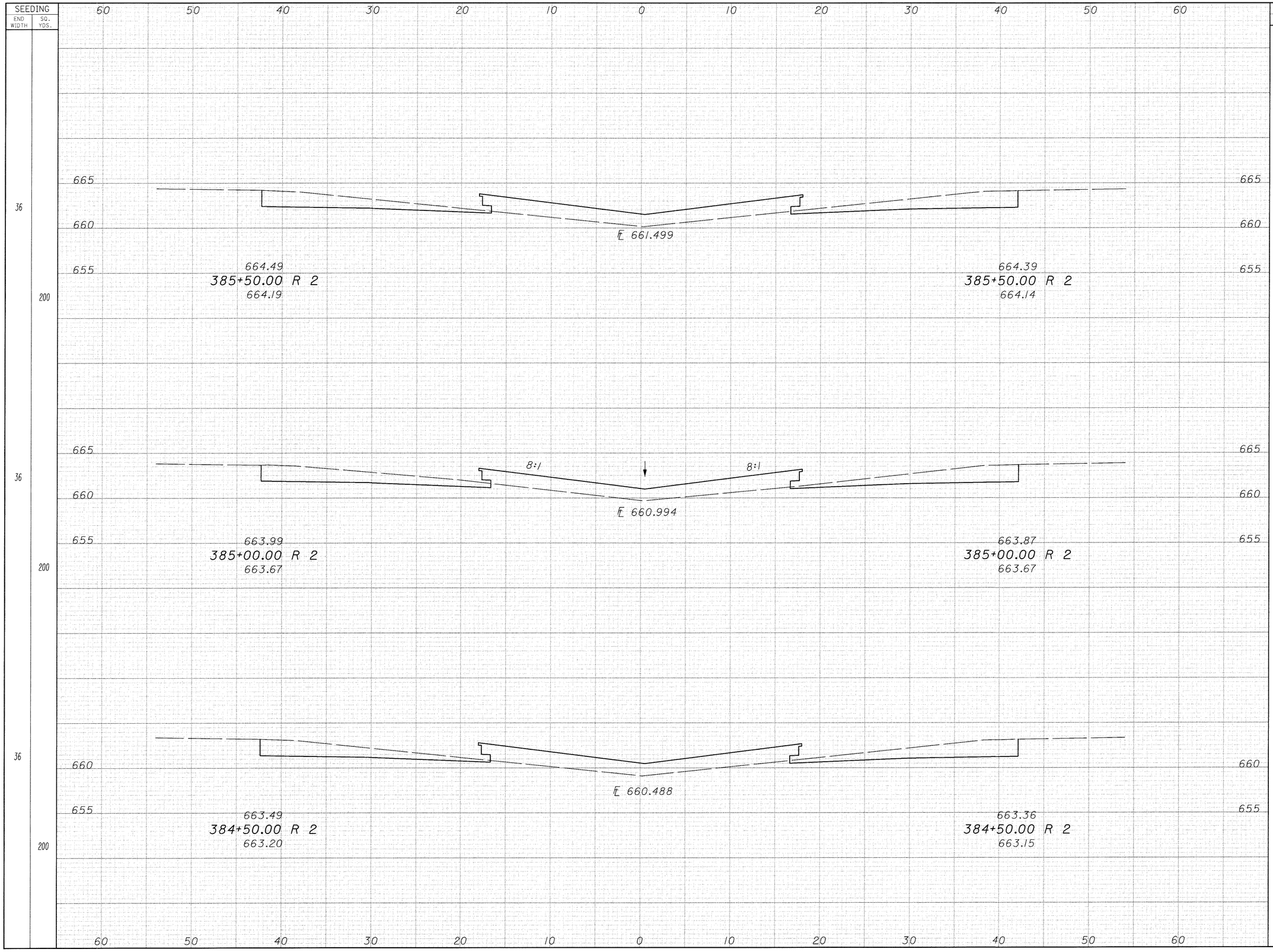

CALCULATED AM

CHECKED JCB

I.R.275 CROSS SECTIONS

STA 384+50.00 TO STA 385+50.00

CLE-275-5.35

498
857

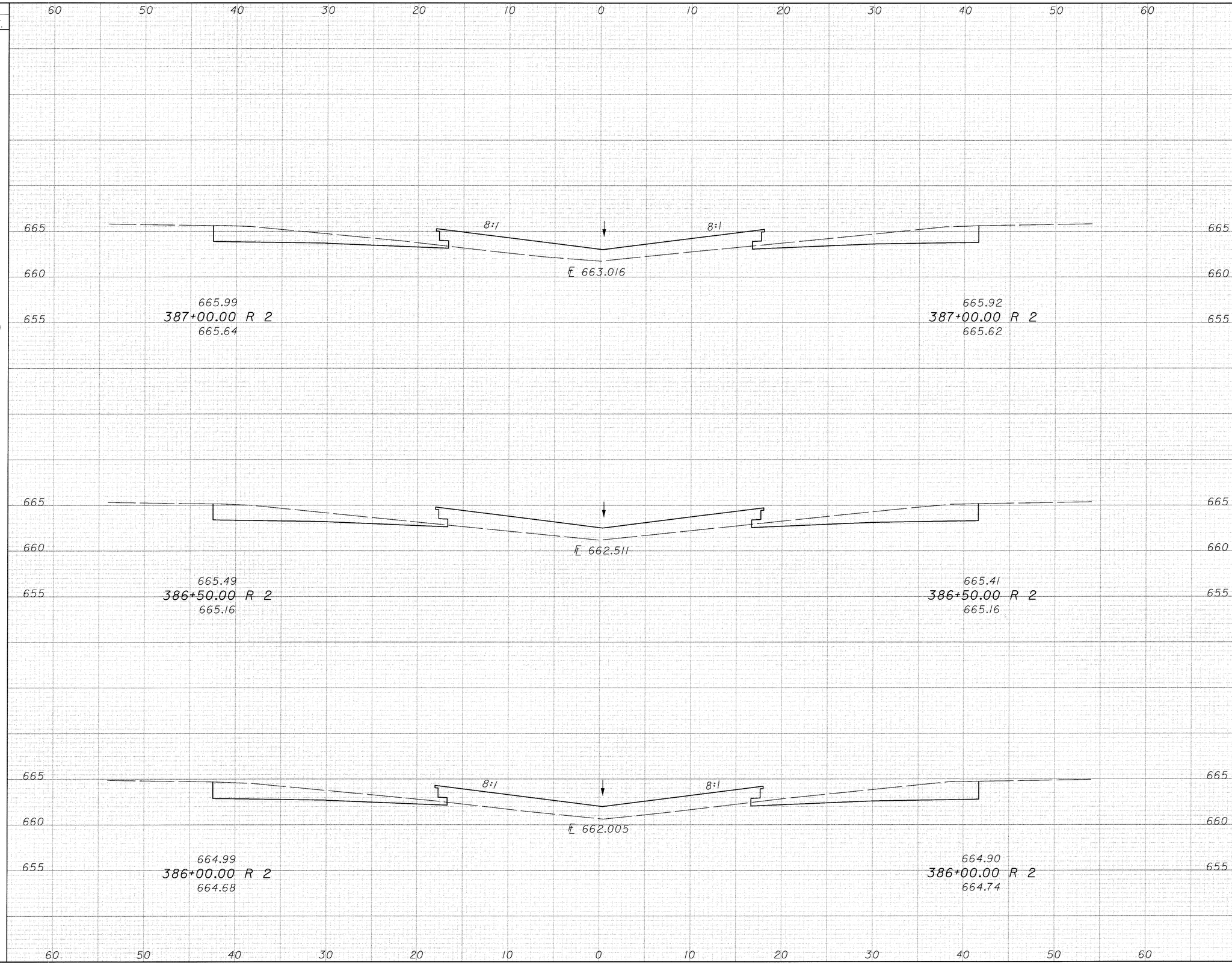

SEEDING END WIDTH	SEEDING SQ. YDS.	END AREA CUT	END AREA FILL	VOLUME CUT	VOLUME FILL
36		55	53		
	200			102	98
36		55	53		
	200			106	99
36		59	54		
	200			106	100

CALCULATED AM
CHECKED JGB

I.R.275 CROSS SECTIONS
STA 386+00.00 TO STA 387+00.00

CLE-275-5.35

SEEDING END WIDTH	SEEDING SQ. YDS.	388+50.00 R 2	388+00.00 R 2	387+50.00 R 2	END AREA CUT	END AREA FILL	VOLUME CUT	VOLUME FILL
36		667.48	667.46		55	49		
	200	667.14	667.06				95	103
36		666.99	666.94		48	62		
	200	666.62	666.57				91	111
36				666.49	50	58		
	200			666.16			97	103

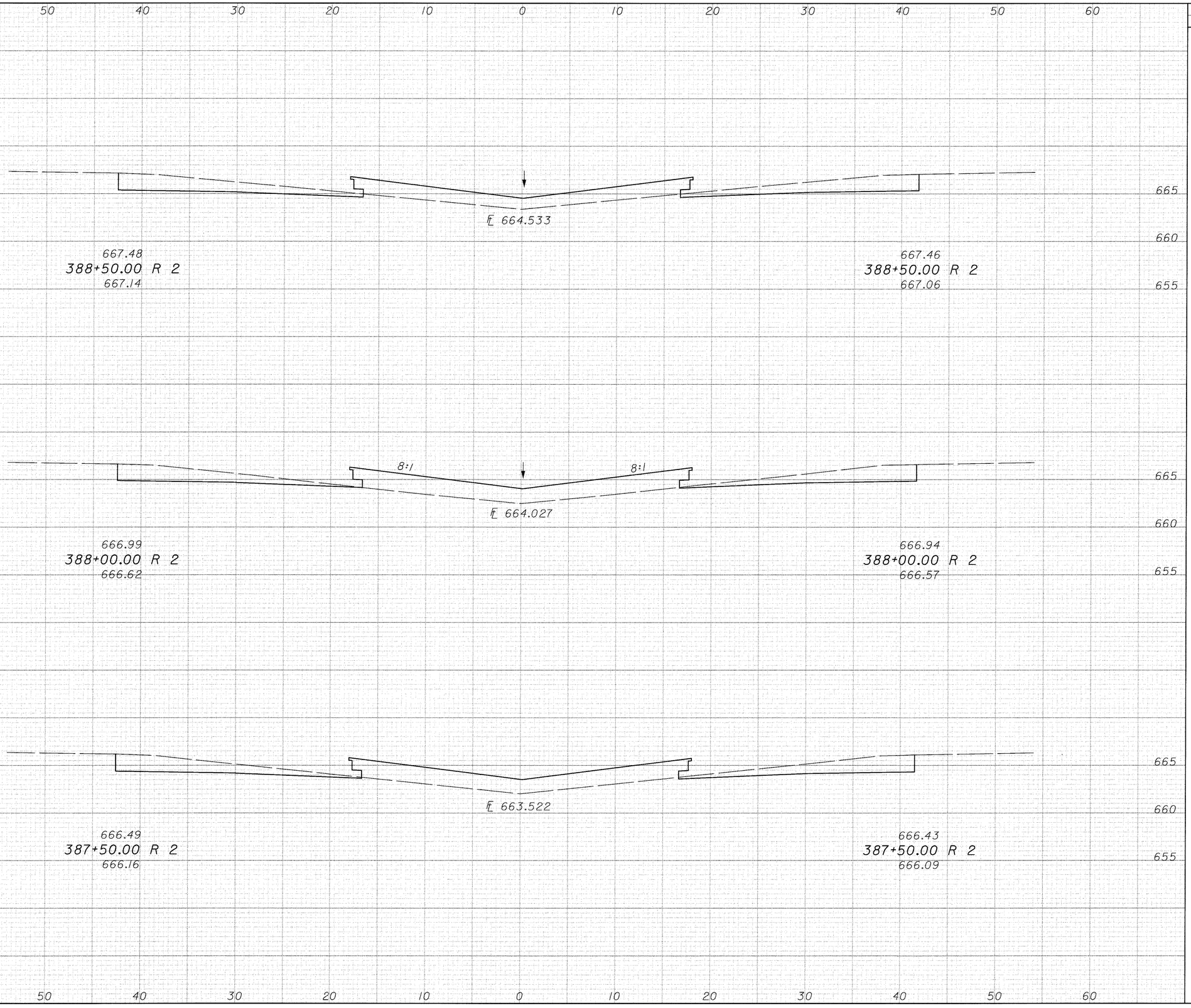

CALCULATED AM

CHECKED JGB

I.R.275 CROSS SECTIONS

STA 387+50.00 TO STA 388+50.00

CLE-275-5.35

500
857

SEEDING END WIDTH	SEEDING SQ. YDS.
36	200
36	200
36	200

60 50 40 30 20 10 0 10 20 30 40 50 60

670
665
660

8:1 8:1

℄ 666.050

℄ 15" 660.47

668.98
390+00.00 R 2
668.69

668.99
390+00.00 R 2
668.62

665

℄ 665.544

℄ 15" 659.97

668.48
389+50.00 R 2
668.15

668.48
389+50.00 R 2
668.13

680
675
670
665
660

Ex. Catch Basin No. 4, Reconstruct to Grade
Sta. 389+00.00, 0.06 Rt.
Prop. Grate Elev = 665.04
Prop. ℄ 15" (S) = 659.47
Ex. Grate Elev = 663.12
Ex. ℄ 15" (NW) = 659.47
Prop. ℄ 6" @ C.B. = 662.00

8:1 8:1

667.98
389+00.00 R 2
667.66

667.97
389+00.00 R 2
667.57

60 50 40 30 20 10 0 10 20 30 40 50 60

END AREA CUT	END AREA FILL	VOLUME CUT	VOLUME FILL
60	54		
		100	108
48	63		
		87	117
46	63		
		94	104

CALCULATED AM

CHECKED JOB

I.R.275 CROSS SECTIONS
STA 389+00.00 TO STA 390+00.00

CLE-275-5.35

501
857

SEEDING		END AREA		VOLUME		CALCULATED AM	CHECKED JGB
END WIDTH	SQ. YDS.	CUT	FILL	CUT	FILL		
36	200	51	55	95	100		
36	200	52	53	93	102		
36	200	48	57	100	103		

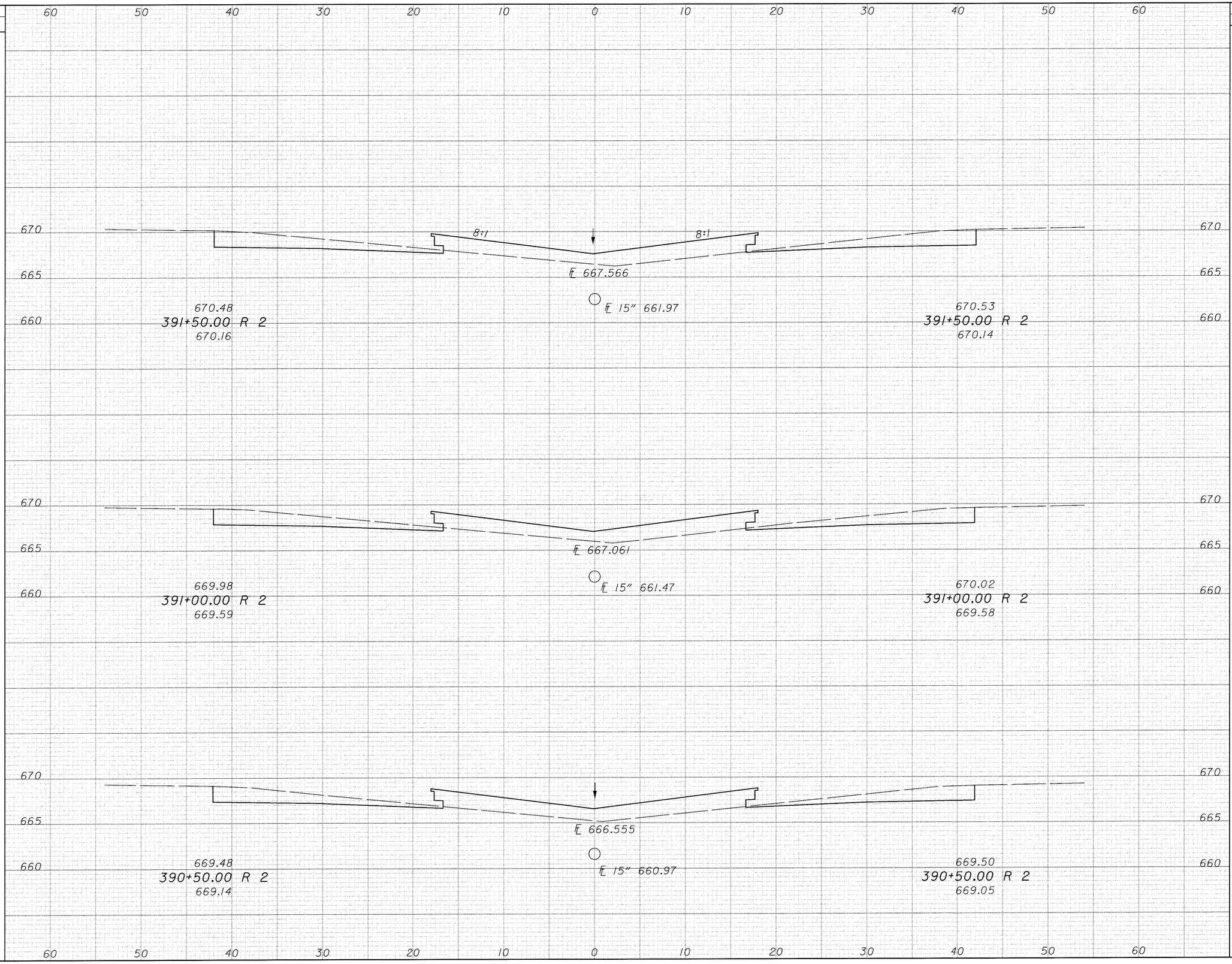

I.R.275 CROSS SECTIONS
STA 390+50.00 TO STA 391+50.00

CLE-275-5.35

502
957

SEEDING	
END WIDTH	SQ. YDS.
36	200
36	200
36	200

60 50 40 30 20 10 0 10 20 30 40 50 60

670
665
660

8:1 8:1

℄ 669.077

℄ 15" 663.47

671.97
393+00.00 R 2
671.73

672.06
393+00.00 R 2
671.77

℄ 668.575

℄ 15" 662.97

671.47
392+50.00 R 2
671.26

671.55
392+50.00 R 2
671.21

℄ 668.072

℄ 15" 662.47

670.98
392+00.00 R 2
670.72

671.04
392+00.00 R 2
670.67

END AREA		VOLUME	
CUT	FILL	CUT	FILL
51	59		
52	57	95	107
51	57	95	106
		94	104

CALCULATED AM

CHECKED JDB

I.R.275 CROSS SECTIONS
STA 392+00.00 TO STA 393+00.00

CLE-275-5.35

503
857

SEEDING		END AREA		VOLUME	
END WIDTH	SQ. YDS.	CUT	FILL	CUT	FILL
36	200	55	56	102	105
36	200	55	57	100	106
36	200	53	58	96	108

60 50 40 30 20 10 0 10 20 30 40 50 60

675
670
665

8:1 8:1

℄ 670.583

673.44
394+50.00 R 2
673.26

℄ 15" 664.97

673.60
394+50.00 R 2
673.29

℄ 670.081

672.95
394+00.00 R 2
672.73

℄ 15" 664.47

673.09
394+00.00 R 2
672.79

℄ 669.579

672.46
393+50.00 R 2
672.27

℄ 15" 663.97

672.57
393+50.00 R 2
672.26

660

60 50 40 30 20 10 0 10 20 30 40 50 60

CALCULATED AM

CHECKED JDB

I.R.275 CROSS SECTIONS
STA 393+50.00 TO STA 394+50.00

CLE-275-5.35

504
857

SEEDING END WIDTH	SEEDING SQ. YDS.	END AREA CUT	END AREA FILL	VOLUME CUT	VOLUME FILL
36	200	53	55	105	102
36	200	60	55	108	101
36	200	57	54	104	102

CALCULATED AM

CHECKED JGB

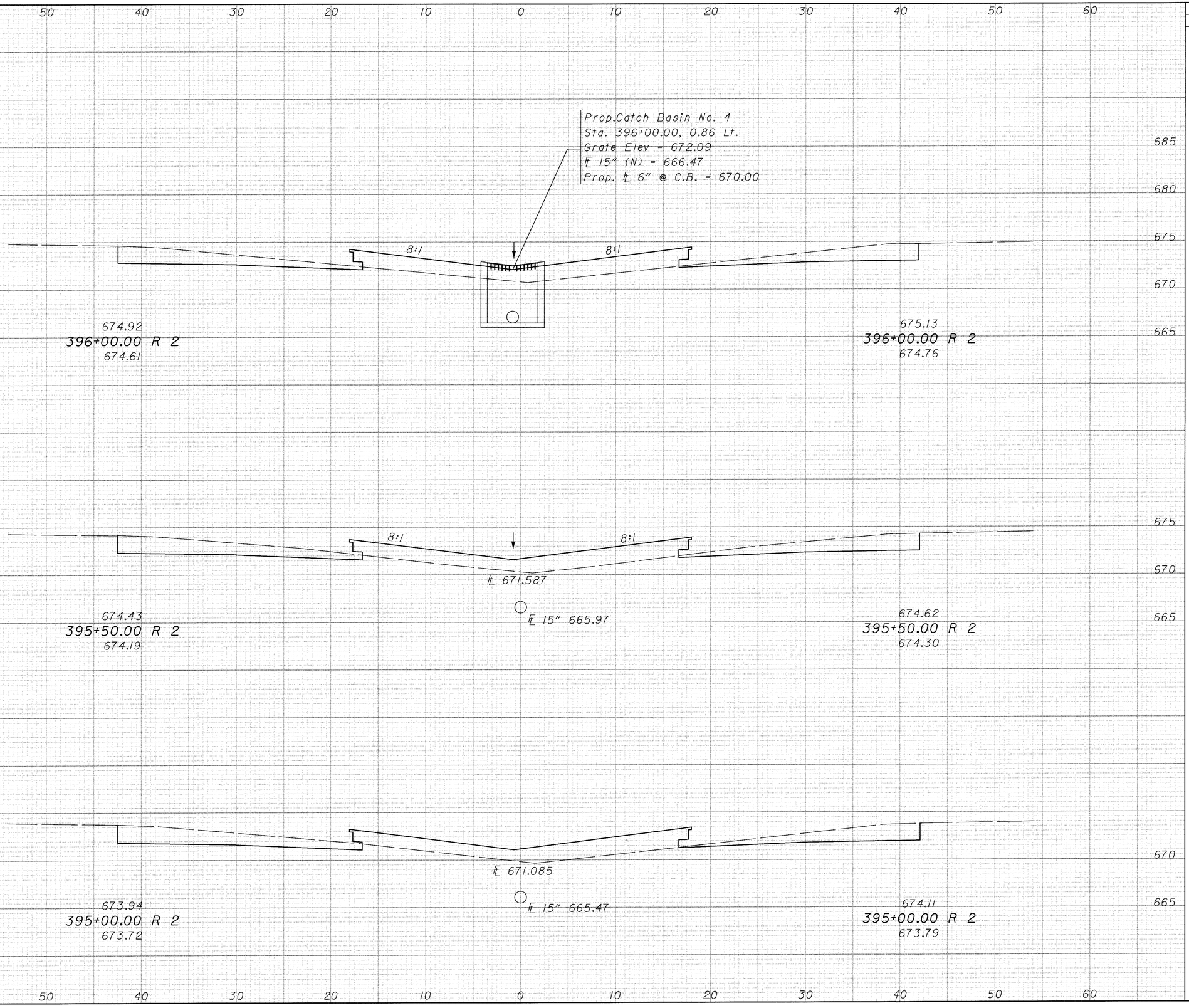

I.R.275 CROSS SECTIONS
STA 395+00.00 TO STA 396+00.00

CLE-275-5.35

505
857

SEEDING END WIDTH	SEEDING SQ. YDS.
36	106
36	207
36	200

60 50 40 30 20 10 0 10 20 30 40 50 60

675 670 665

8:1 6:1

℄ 673.058

676.18
397+28.11 R 2
675.87

676.45
397+28.11 R 2
676.06

℄ 672.772

675.92
397+01.70 R 2
675.62

676.17
397+01.70 R 2
675.78

℄ 672.591

675.41
396+50.00 R 2
675.12

675.65
396+50.00 R 2
675.25

END AREA CUT	END AREA FILL	VOLUME CUT	VOLUME FILL
51	46	49	45
49	47	102	96
58	53	103	100

CALCULATED AM

CHECKED JOB

I.R.275 CROSS SECTIONS STA 396+50.00 TO 397+28.11

CLE-275-5.35

506
857

SEEDING END WIDTH	SEEDING SQ. YDS.	END AREA CUT	END AREA FILL	VOLUME CUT	VOLUME FILL
36	200	47	54	88	97
36	200	48	51	96	90
36	288	56	46	142	122

60 50 40 30 20 10 0 10 20 30 40 50 60

675 670 665

8:1 6:1

℄ 674.914

677.87
399+00.00 R 2
677.56

678.20
399+00.00 R 2
677.83

℄ 674.374

677.38
398+50.00 R 2
677.08

677.69
398+50.00 R 2
677.35

℄ 673.834

676.89
398+00.00 R 2
676.62

677.18
398+00.00 R 2
676.82

CALCULATED AM

CHECKED JGB

I.R.275 CROSS SECTIONS
STA 398+00.00 TO STA 399+00.00

CLE-275-5.35

507
857

SEEDING		END AREA		VOLUME	
END WIDTH	SQ. YDS.	CUT	FILL	CUT	FILL
36	200	50	69	89	122
36	200	46	63	81	114
36	200	42	60	82	106

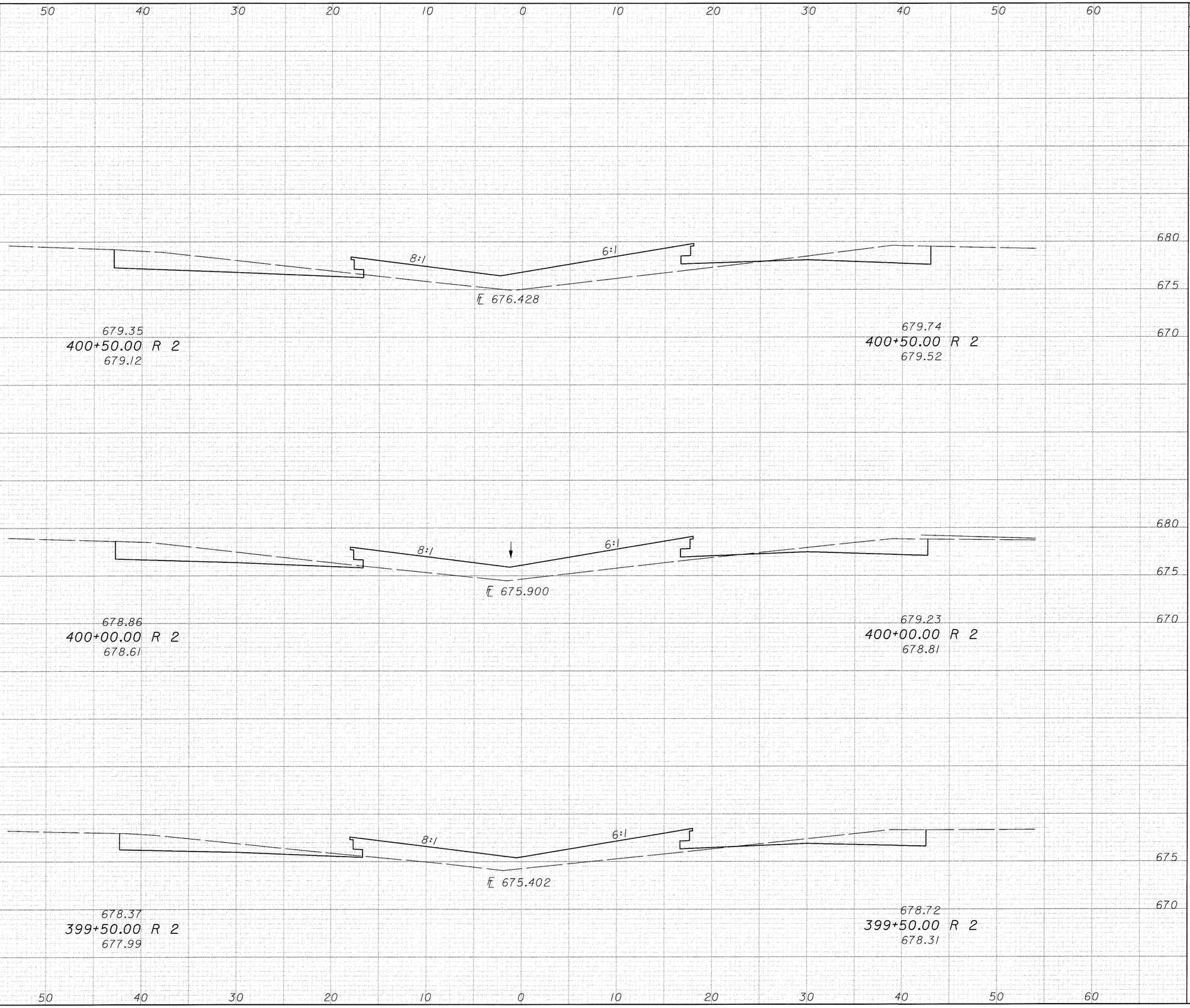

CALCULATED AM

CHECKED JGB

I.R.275 CROSS SECTIONS

STA 399+50.00 TO STA 400+50.00

CLE-275-5.35

508

857

SEEDING	
END WIDTH	SQ. YDS.
36	200
36	200
36	200

60 50 40 30 20 10 0 10 20 30 40 50 60

680
675
670

8:1 6:1

℄ 677.873

680.81
402+00.00 R 2
680.73

681.12
402+00.00 R 2
680.94

℄ 677.359

680.34
401+50.00 R 2
680.27

680.66
401+50.00 R 2
680.47

℄ 676.907

679.84
401+00.00 R 2
679.70

680.20
401+00.00 R 2
680.03

END AREA		VOLUME	
CUT	FILL	CUT	FILL
56	78		
57	74		
54	69	105	141
		103	132
		96	128

CALCULATED AM

CHECKED JGB

I.R.275 CROSS SECTIONS
STA 401+00.00 TO STA 402+00.00

CLE-275-5.35

509
857

SEEDING	
END WIDTH	SQ. YDS.
36	202
36	198

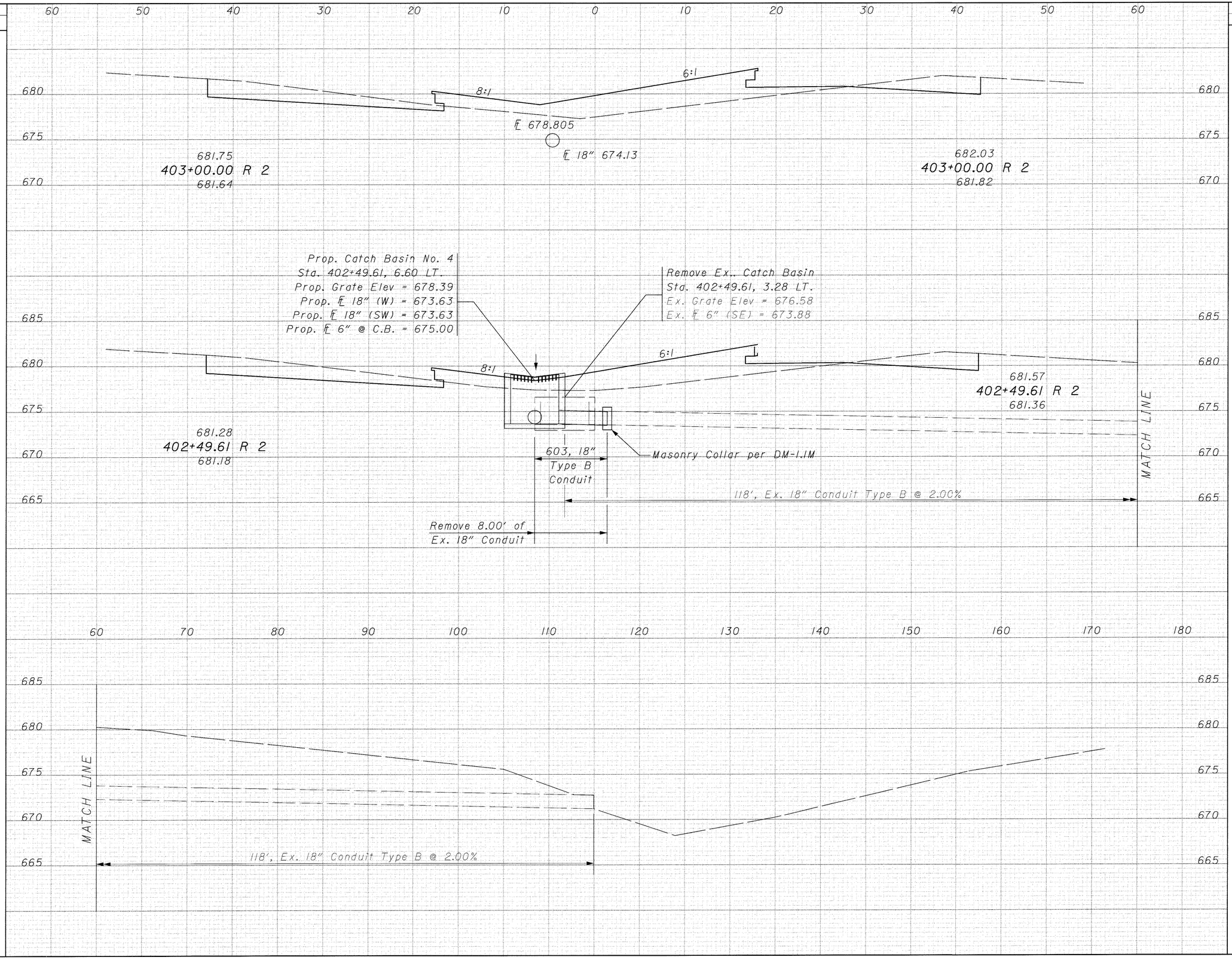

END AREA		VOLUME	
CUT	FILL	CUT	FILL
53	81		
		101	147
55	77		
		102	142

CALCULATED AM

CHECKED JDB

I.R.275 CROSS SECTIONS
STA 402+49.61 TO STA 403+00.00

CLE-275-5.35

510
857

SEEDING	
END WIDTH	SQ. YDS.
36	200
36	200
36	200

60 50 40 30 20 10 0 10 20 30 40 50 60

685
680
675

683.17
404+50.00 R 2
682.88

8:1 6:1

℄ 680.202

℄ 18" 675.63

683.40
404+50.00 R 2
683.15

680
675

682.70
404+00.00 R 2
682.44

8:1 6:1

℄ 679.736

℄ 18" 675.13

682.94
404+00.00 R 2
682.63

680
675

682.23
403+50.00 R 2
682.04

8:1 6:1

℄ 679.270

℄ 18" 674.63

682.49
403+50.00 R 2
682.20

680
675
670

60 50 40 30 20 10 0 10 20 30 40 50 60

END AREA		VOLUME	
CUT	FILL	CUT	FILL
51	81		
		91	151
47	82		
		94	149
55	79		
		100	148

CALCULATED AM

CHECKED JOB

I.R.275 CROSS SECTIONS
STA 403+50.00 TO STA 404+50.00

CLE-275-5.35

511
857

SEEDING END WIDTH	SEEDING SQ. YDS.	END AREA CUT	END AREA FILL	VOLUME CUT	VOLUME FILL
36	200	47	80	85	153
36	200	45	85	87	152
36	200	49	79	93	148

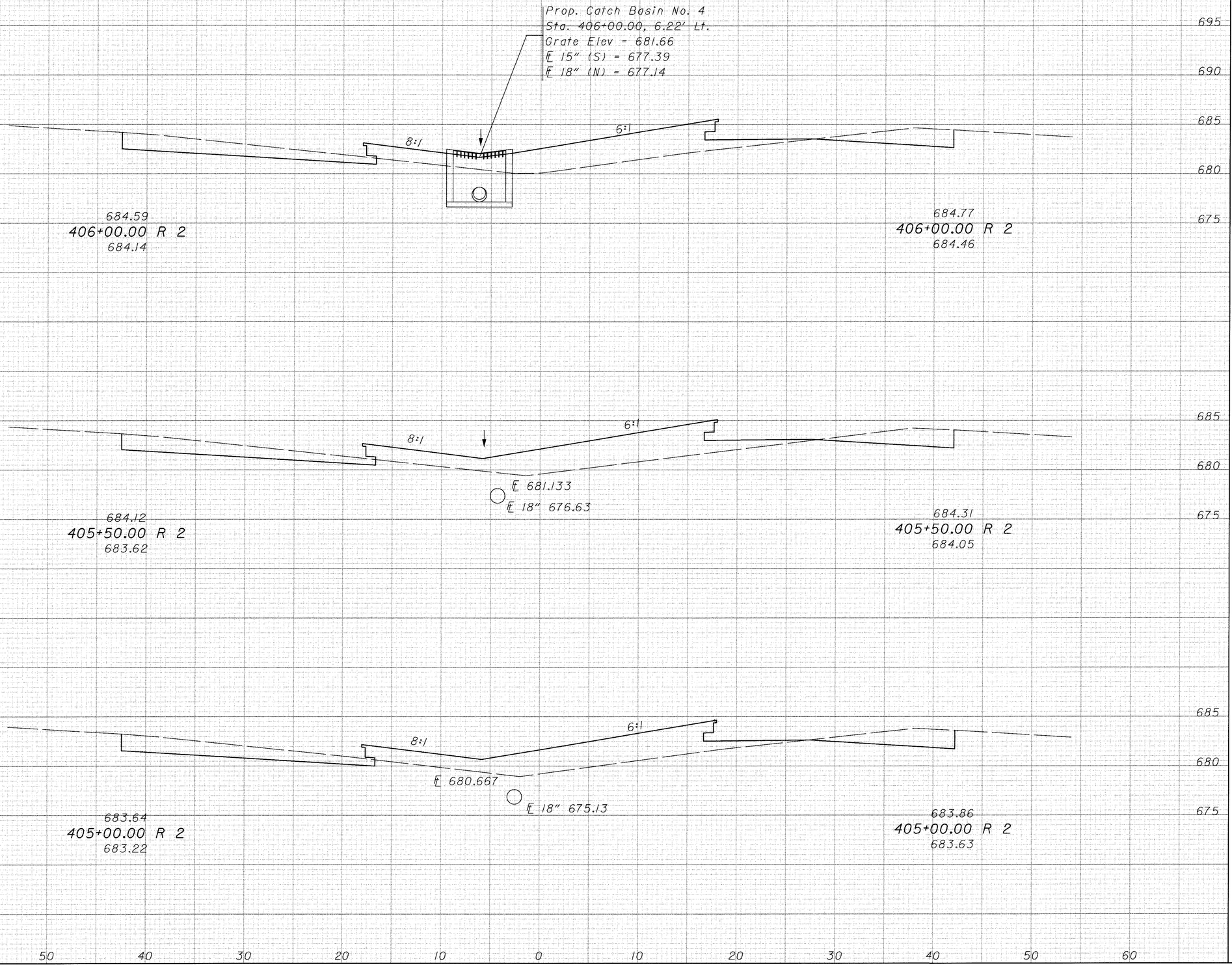

CALCULATED AM

CHECKED JGB

I.R.275 CROSS SECTIONS
STA 405+00.00 TO STA 406+00.00

CLE-275-5.35

512
857

SEEDING END WIDTH	SEEDING SQ. YDS.	END AREA CUT	END AREA FILL	VOLUME CUT	VOLUME FILL
36	200	50	79	90	144
36	200	47	77	88	146
36	200	48	81	88	149

CALCULATED AM

CHECKED JSB

I.R.275 CROSS SECTIONS
STA 407+50.00 TO STA 406+50.00

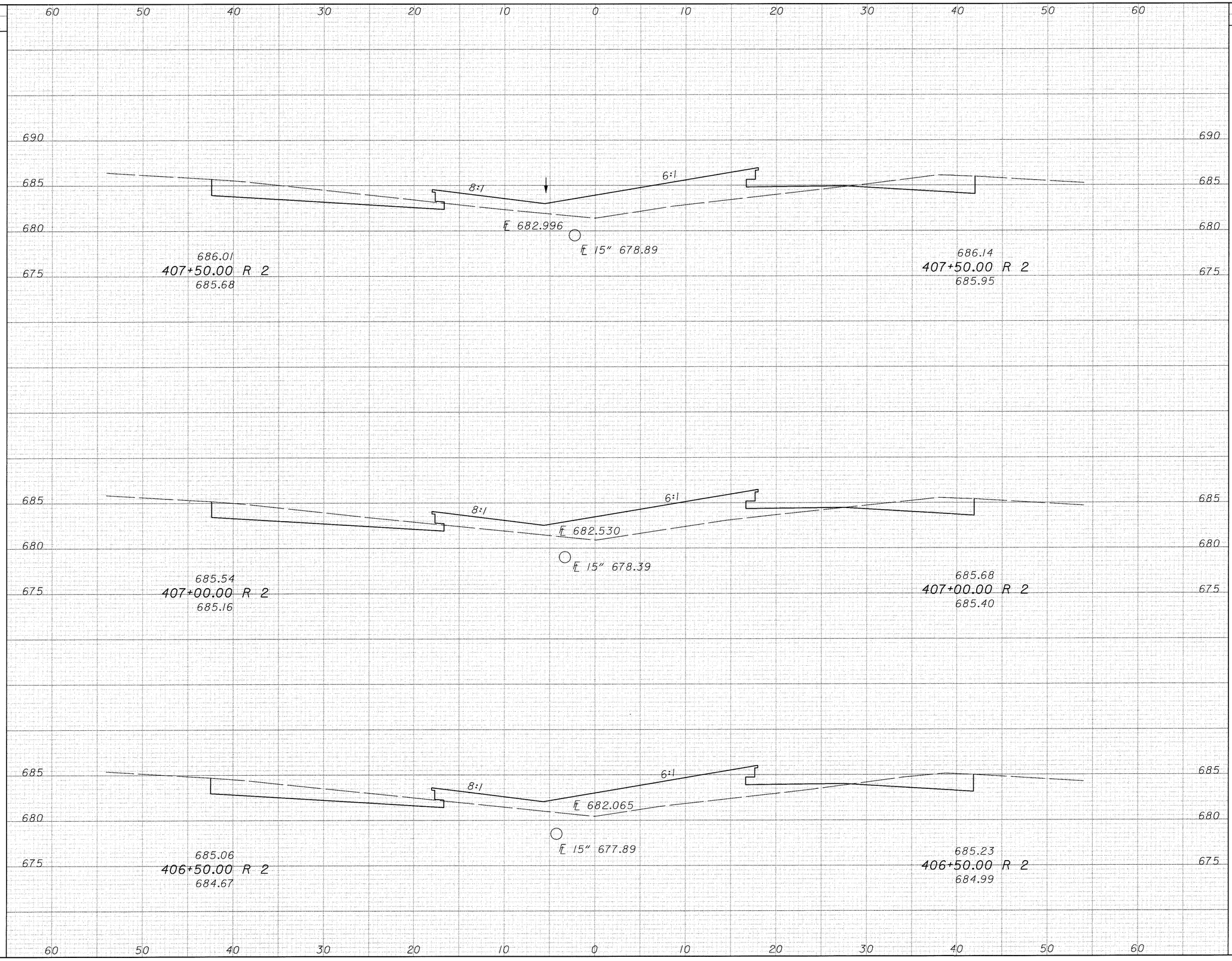

CLE-275-5.35

513
857

SEEDING END WIDTH	SEEDING SQ. YDS.	STATION	END AREA CUT	END AREA FILL	VOLUME CUT	VOLUME FILL
36	200	409+00.00 R 2	52	80	95	148
36	200	408+50.00 R 2	51	80	94	146
36	200	408+00.00 R 2	51	78	94	145

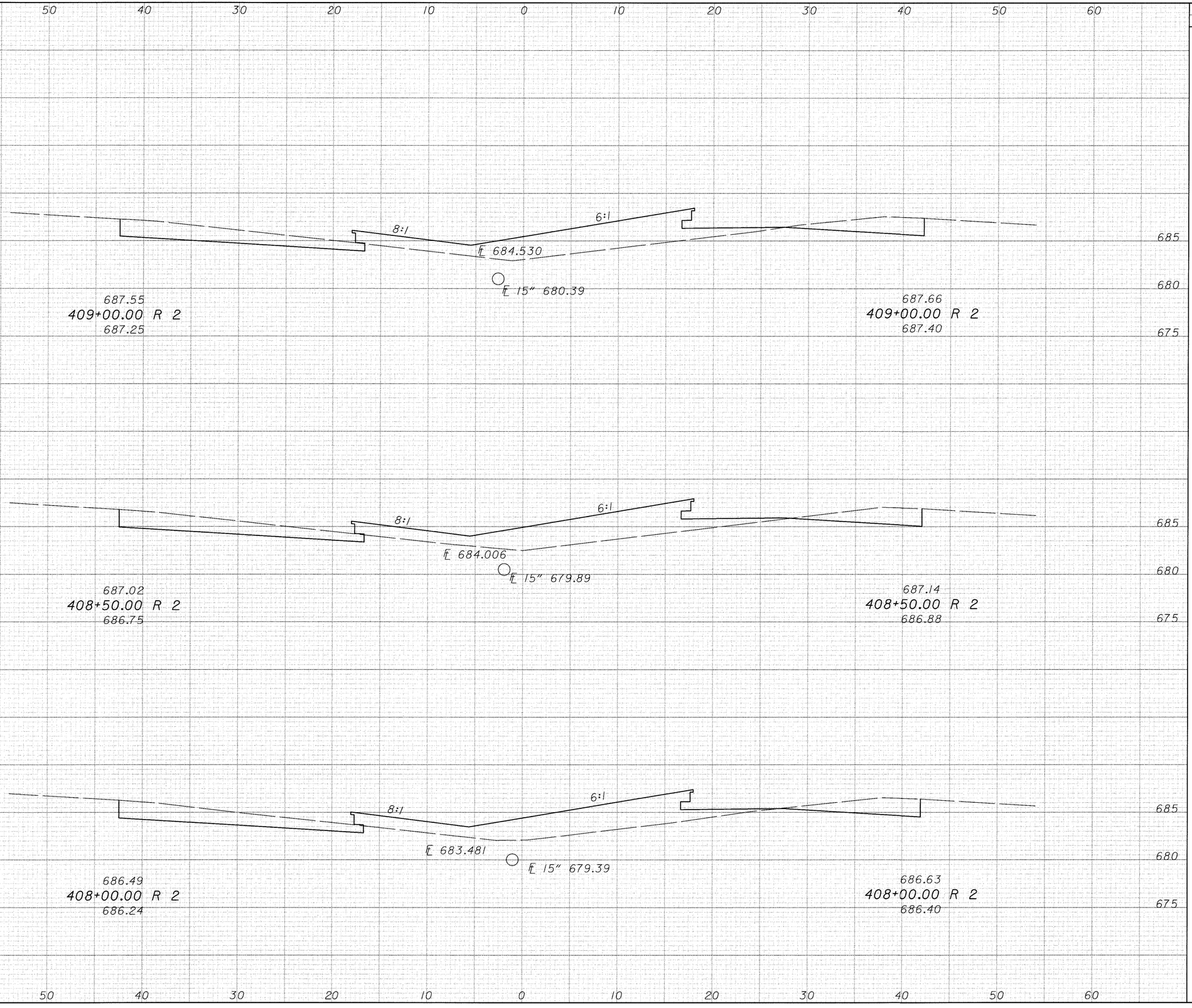

CALCULATED AM

CHECKED JRB

I.R.275 CROSS SECTIONS
STA 408+00.00 TO STA 409+00.00

CLE-275-5.35

514
857

SEEDING		END AREA		VOLUME	
END WIDTH	SQ. YDS.	CUT	FILL	CUT	FILL
36	200	52	76	101	130
36	200	57	64	99	132
36	200	50	79	94	147

CALCULATED AM

CHECKED JOB

I.R.275 CROSS SECTIONS
STA 409+50.00 TO STA 410+50.00

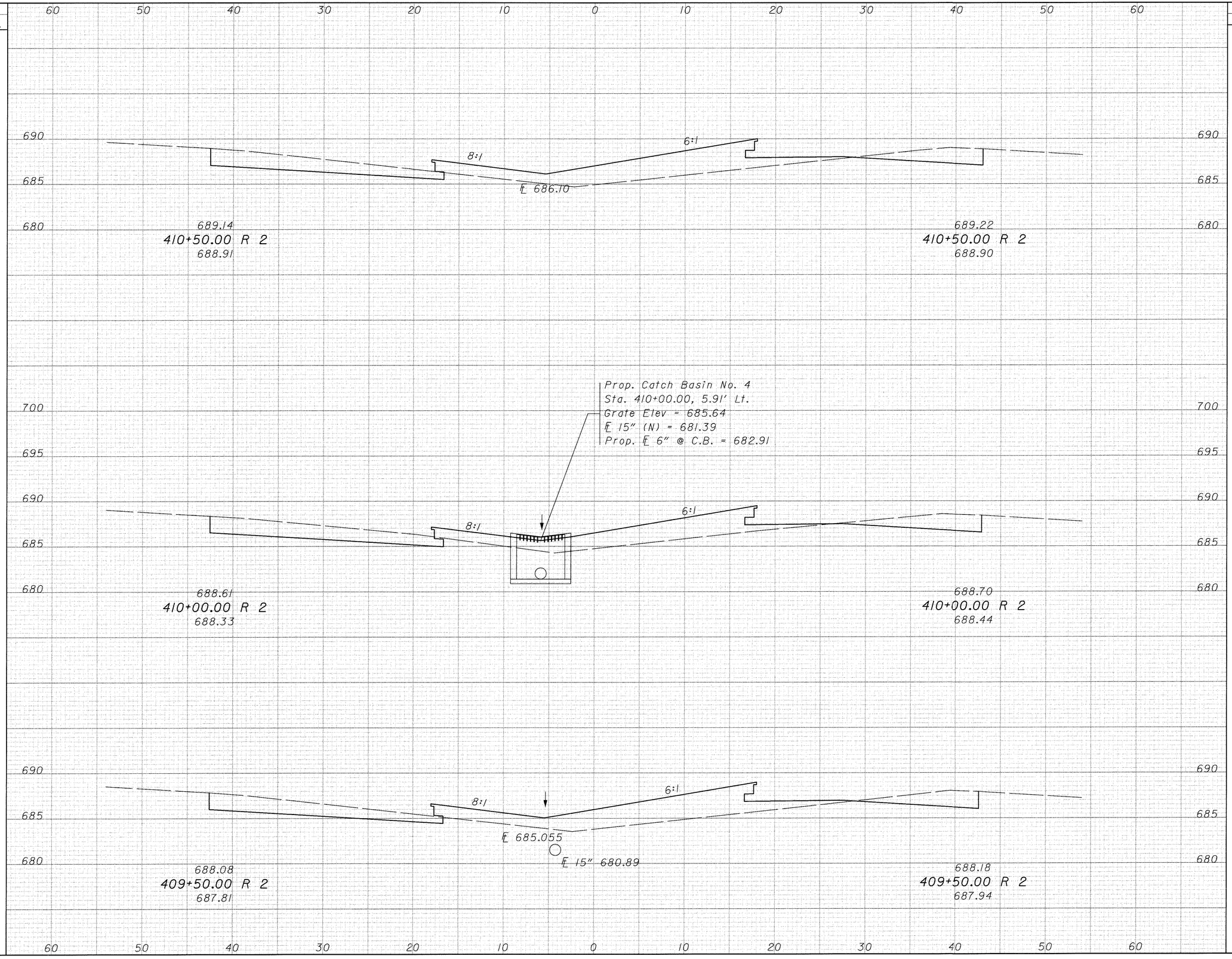

CLE-275-5.35

515
857

I.R.275 CROSS SECTIONS
STA 411+00.00 TO STA 412+00.00

CALCULATED AM | CHECKED JOB

CLE-275-5.35

516
857

SEEDING END WIDTH	SEEDING SQ. YDS.	END AREA CUT	END AREA FILL	VOLUME CUT	VOLUME FILL
36	200	58	73	105	137
36	200	55	75	104	137
36	200	57	73	101	138

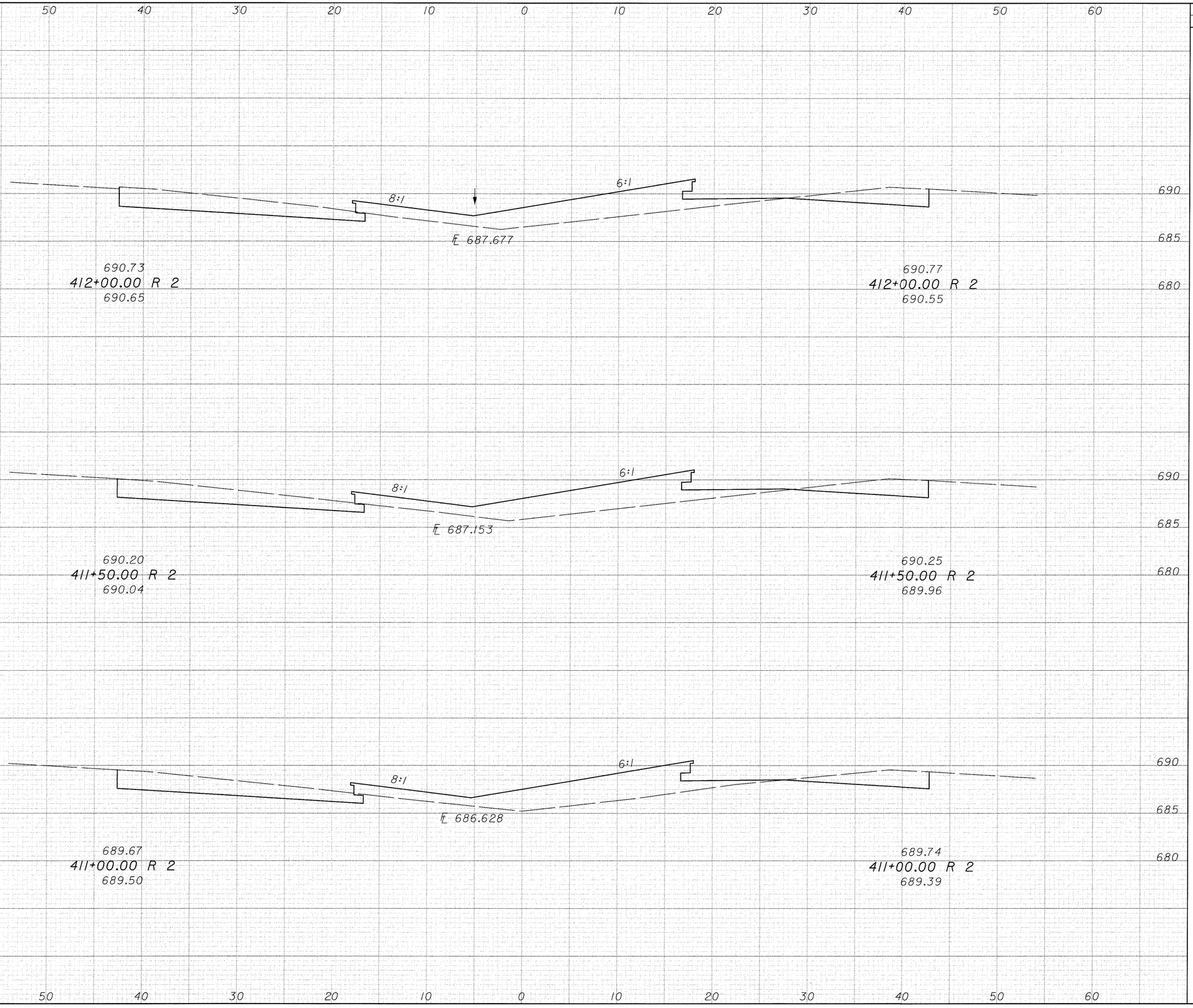

SEEDING END WIDTH	SEEDING SQ. YDS.	END AREA CUT	END AREA FILL	VOLUME CUT	VOLUME FILL
36	200	57	72	107	132
36	200	59	71	106	132
36	200	56	72	106	134

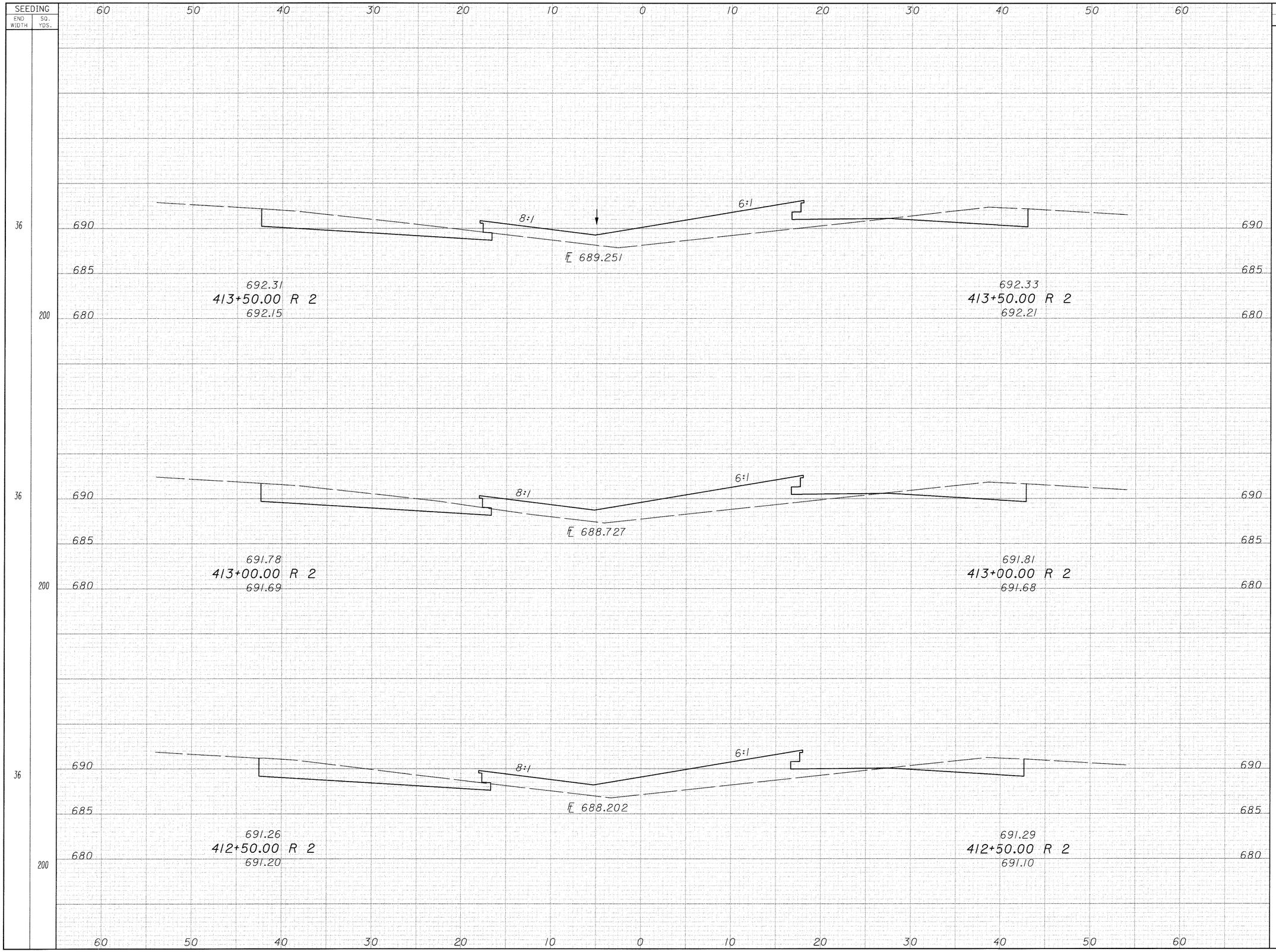

CALCULATED AM

CHECKED JGB

I.R.275 CROSS SECTIONS

STA 412+50.00 TO STA 413+50.00

CLE-275-5.35

517

857

SEEDING END WIDTH	SEEDING SQ. YDS.	END AREA CUT	END AREA FILL	VOLUME CUT	VOLUME FILL
36	200	54	68	103	126
36	200	57	68	105	131
36	200	56	73	105	134

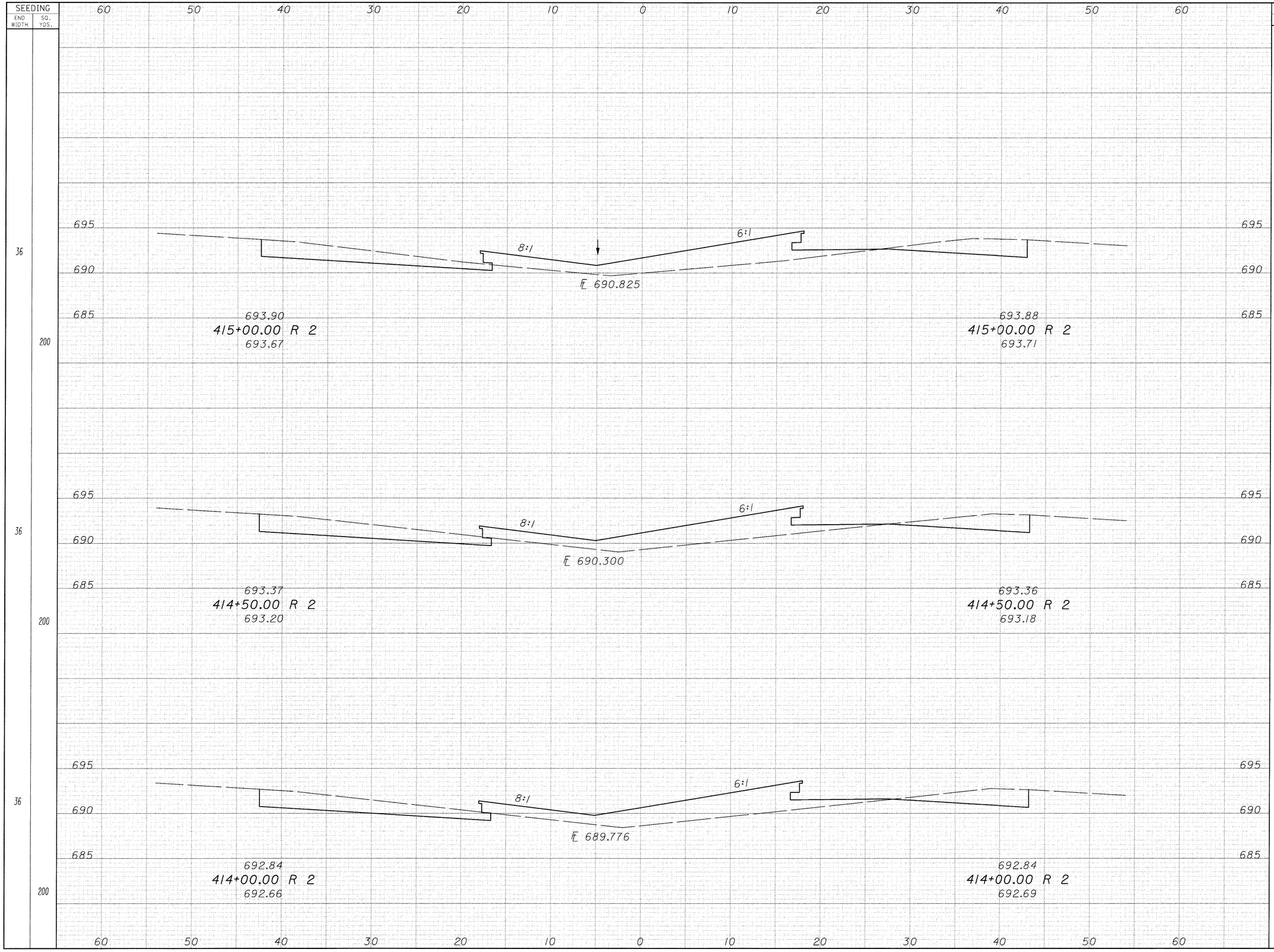

CALCULATED AM

CHECKED JGB

I.R.275 CROSS SECTIONS

STA 414+00.00 TO STA 415+00.00

CLE-275-5.35

518
857

SEEDING END WIDTH	SEEDING SQ. YDS.	END AREA CUT	END AREA FILL	VOLUME CUT	VOLUME FILL
36	200	88	14	136	54
36	200	59	44		
36	200	58	53	108	90
36	200			104	112

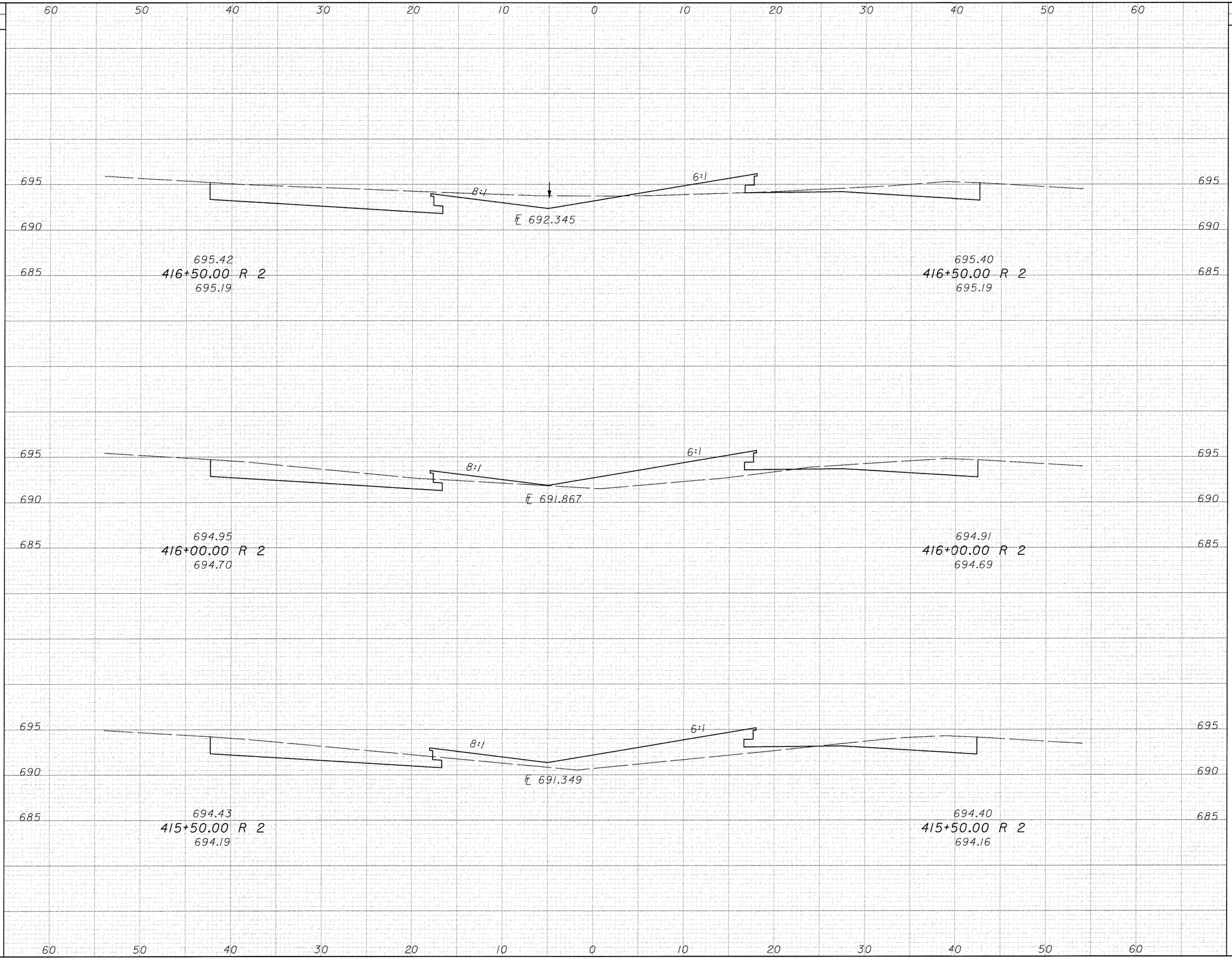

CALCULATED AM

CHECKED JGB

I.R.275 CROSS SECTIONS
STA 415+50.00 TO 416+50.00

CLE-275-5.35

519
857

SEEDING	
END WIDTH	SQ. YDS.
36	204
36	196

END AREA		VOLUME	
CUT	FILL	CUT	FILL
60	82		
		117	144
64	70		
		138	76

CALCULATED AM

CHECKED JSB

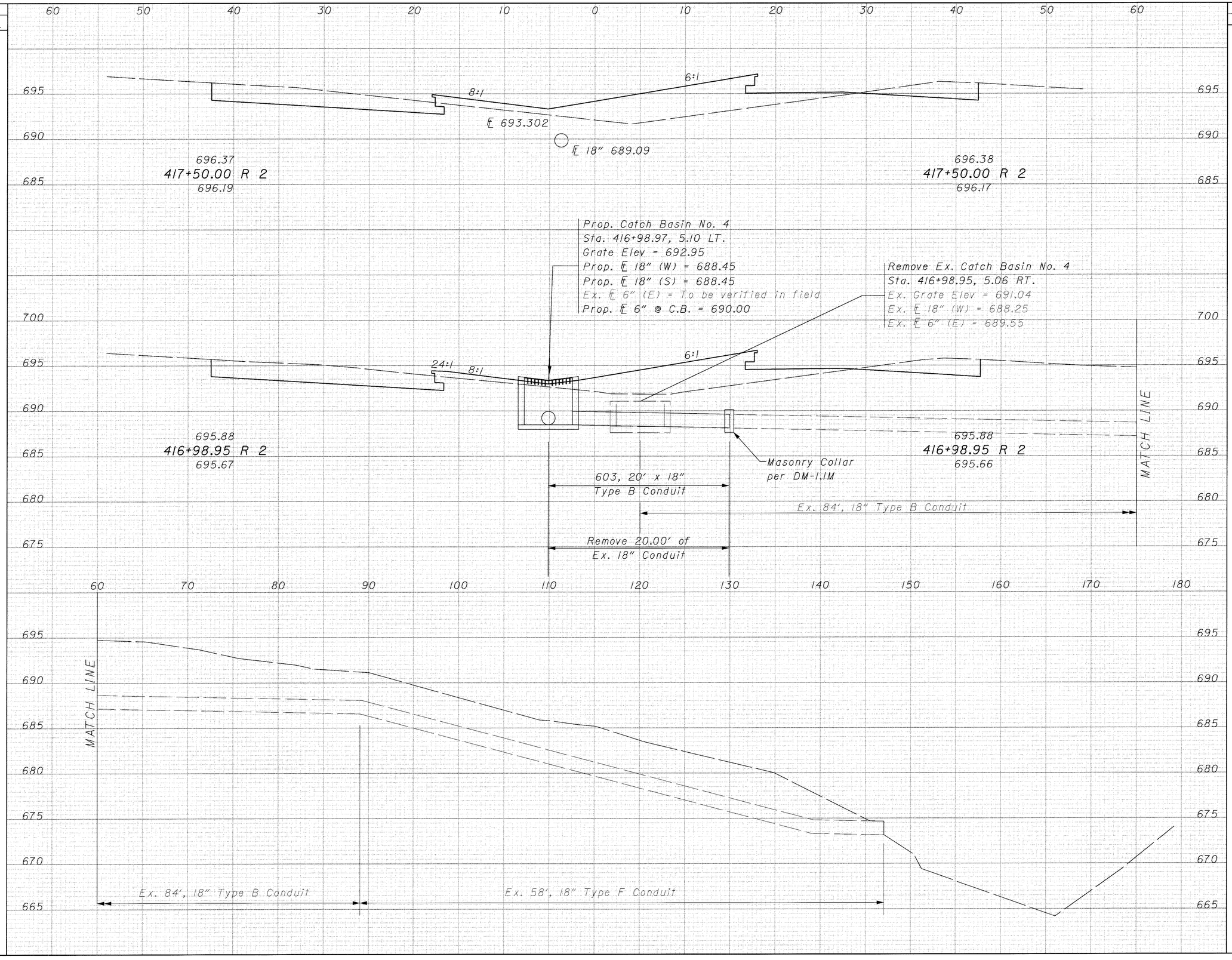

I.R.275 CROSS SECTIONS STA 416+98.95 TO STA 417+50.00

CLE-275-5.35

520
857

SEEDING END WIDTH	SEEDING SQ. YDS.	END AREA CUT	END AREA FILL	VOLUME CUT	VOLUME FILL
36	200	51	76	99	144
36	200	56	79	106	144
36	200	58	77	109	147

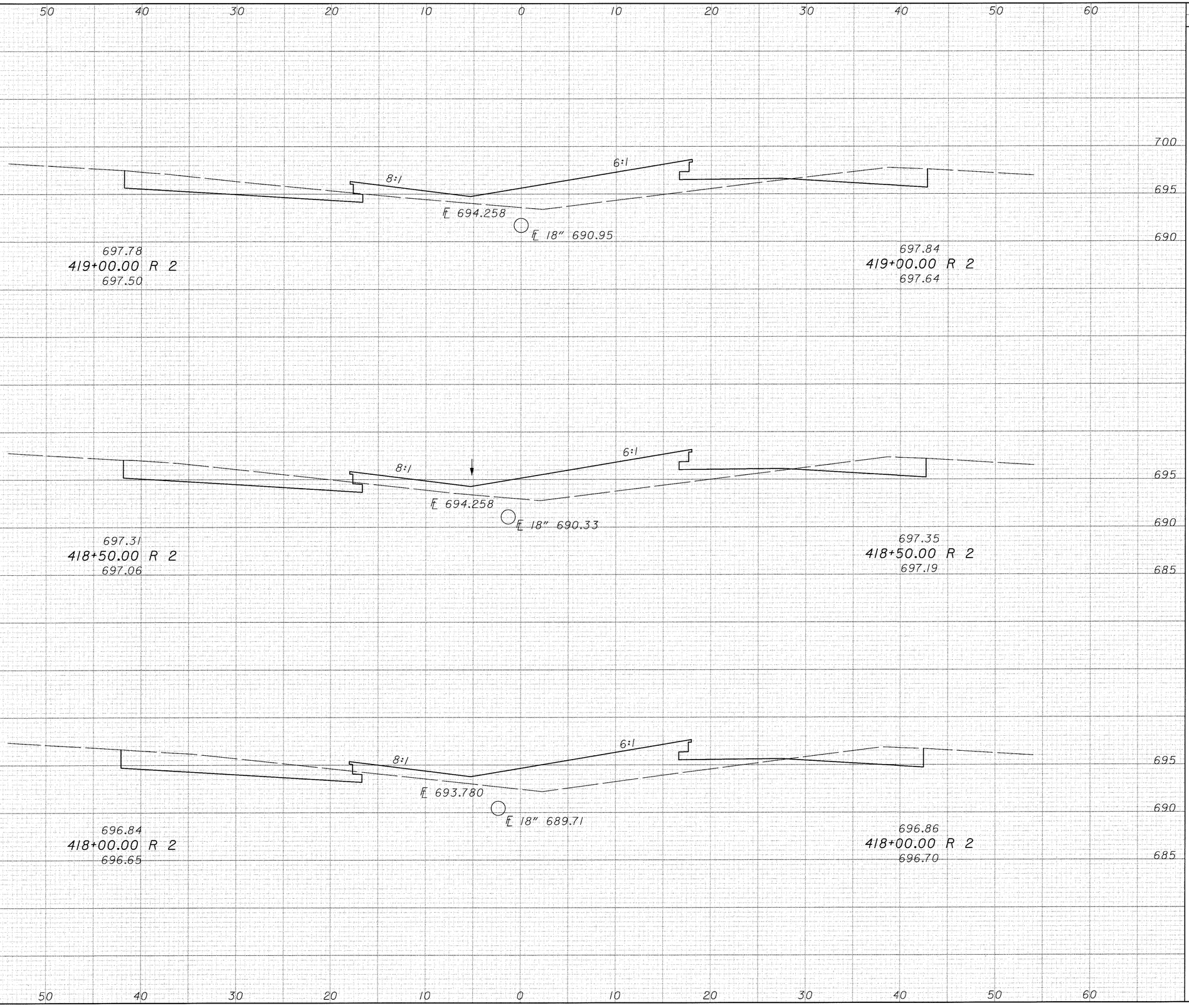

CALCULATED AM

CHECKED JOB

I.R.275 CROSS SECTIONS

STA 418+00.00 TO STA 419+00.00

CLE-275-5.35

521
957

SEEDING	
END WIDTH	SQ. YDS.
36	200
36	200
36	200

60 50 40 30 20 10 0 10 20 30 40 50 60

715 710 705 700 695 690

Prop. Catch Basin No. 4
Sta. 420+50.00, 5.32' Lt.
Grate Elev = 696.34
℄ 15" (S) = 693.07
℄ 18" (N) = 692.82

24:1 8:1 6:1

699.24
420+50.00 R 2
699.01

699.30
420+50.00 R 2
699.09

8:1 6:1

℄ 695.696

℄ 18" 692.20

698.73
420+00.00 R 2
698.48

698.81
420+00.00 R 2
698.64

6:1 8:1

℄ 695.215

℄ 18" 691.58

698.25
419+50.00 R 2
697.98

698.33
419+50.00 R 2
698.12

END AREA		VOLUME	
CUT	FILL	CUT	FILL
51	76		
		93	140
49	75		
		94	137
53	73		
		96	138

CALCULATED AM

CHECKED JDB

I.R.275 CROSS SECTIONS
STA 419+50.00 TO STA 420+50.00

CLE-275-5.35

522
857

SEEDING END WIDTH	SEEDING SQ. YDS.	END AREA CUT	END AREA FILL	VOLUME CUT	VOLUME FILL
36	200	53	60	98	112
36	200	53	61	95	117
36	200	50	65	94	131

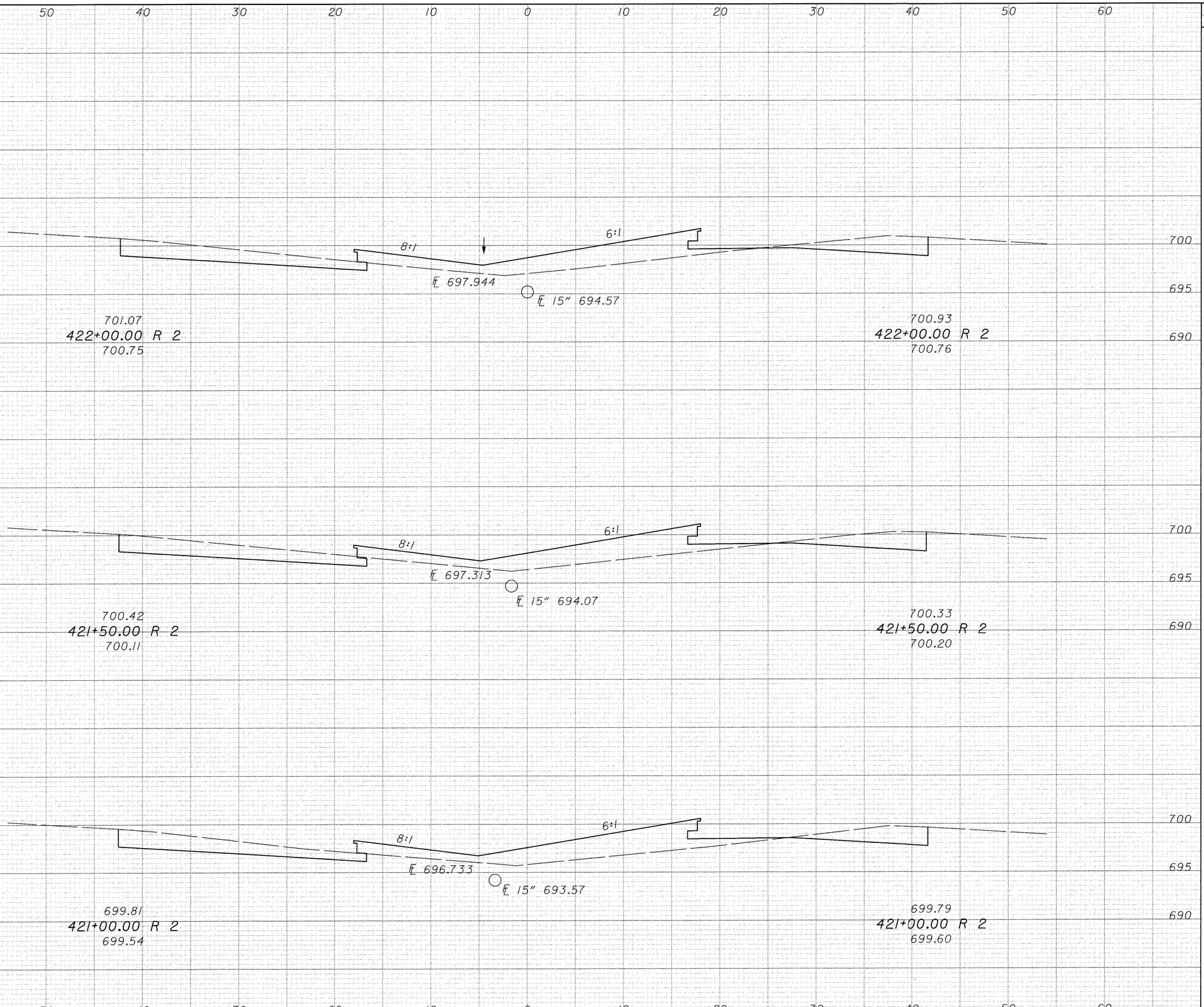

CALCULATED AM

CHECKED JSB

I.R.275 CROSS SECTIONS

STA 421+00.00 TO STA 422+00.00

CLE-275-5.35

523
857

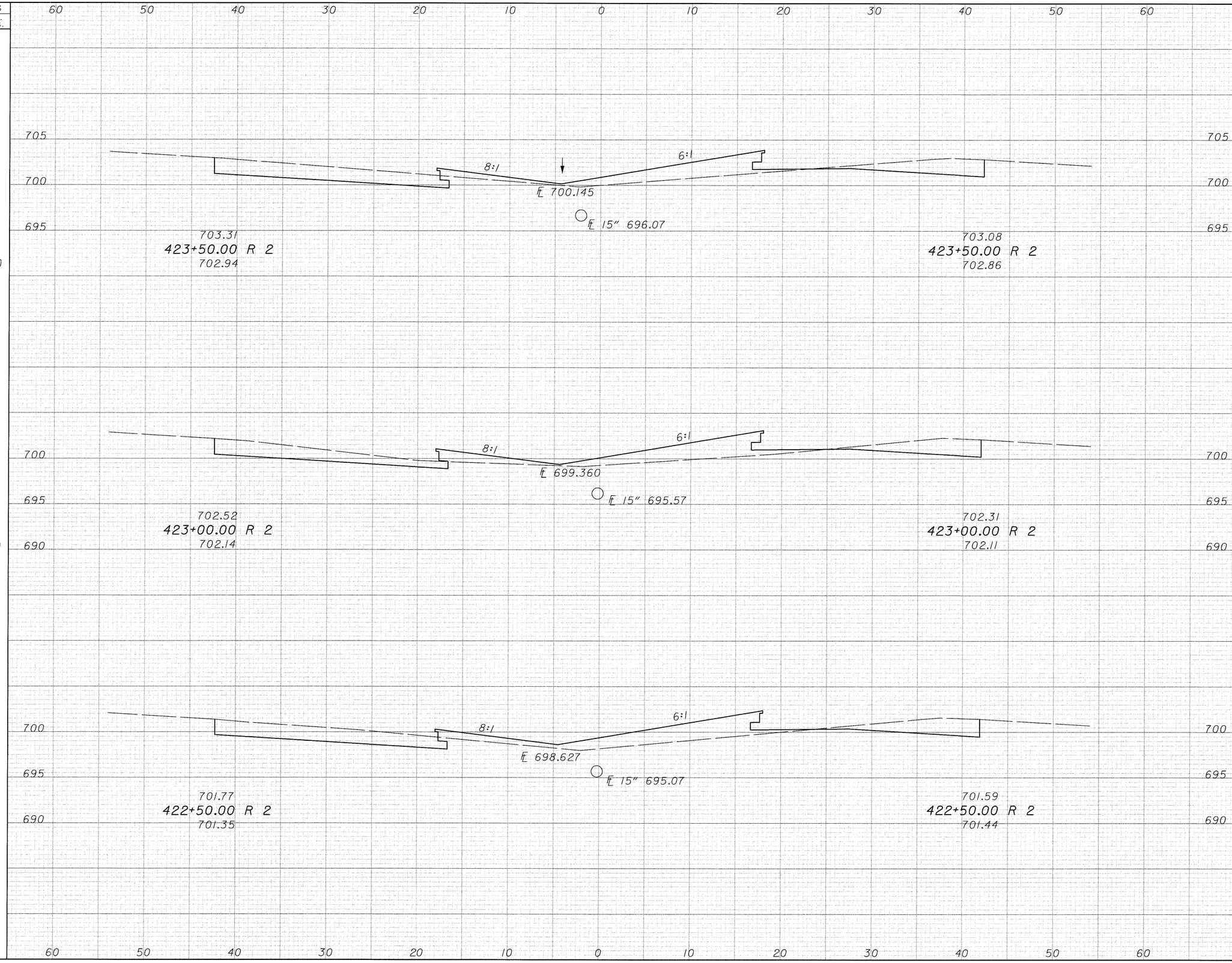

SEEDING END WIDTH	SEEDING SQ. YDS.	END AREA CUT	END AREA FILL	VOLUME CUT	VOLUME FILL
36		58	38		
	200			100	76
36		50	44		
	200			100	83
36		58	46		
	200			103	98

CALCULATED AM
CHECKED JGB

I.R.275 CROSS SECTIONS
STA 422+50.00 TO STA 423+50.00

CLE-275-5.35

SEEDING END WIDTH	SEEDING SQ. YDS.	END AREA CUT	END AREA FILL	VOLUME CUT	VOLUME FILL
36	200	54	51	103	91
36	200	57	47	102	85
36	200	53	45	103	77

60 50 40 30 20 10 0 10 20 30 40 50 60

705 700 695 720 715 710

705.96
425+00.00 R 2
705.70

705.76
425+00.00 R 2
705.50

8:1 6:1
℄ 702.807

Prop. Catch Basin No. 4
Sta. 424+50.00, 4.37' Lt.
Grate Elev = 702.01
℄ 15" (NE) = 697.07
Prop. ℄ 6" @ C.B. = 700.30

24:1 8:1 6:1

705.03
424+50.00 R 2
704.82

704.81
424+50.00 R 2
704.53

8:1 6:1
℄ 700.981
℄ 15" 696.57

704.15
424+00.00 R 2
703.84

703.92
424+00.00 R 2
703.71

CALCULATED AM
CHECKED JOB

I.R.275 CROSS SECTIONS
STA 424+00.00 TO STA 425+00.00

CLE-275-5.35

525
857

SEEDING END WIDTH	SEEDING SQ. YDS.	END AREA CUT	END AREA FILL	VOLUME CUT	VOLUME FILL
36	200	48	59	90	106
36	200	49	56	96	96
36	200	55	48	101	92

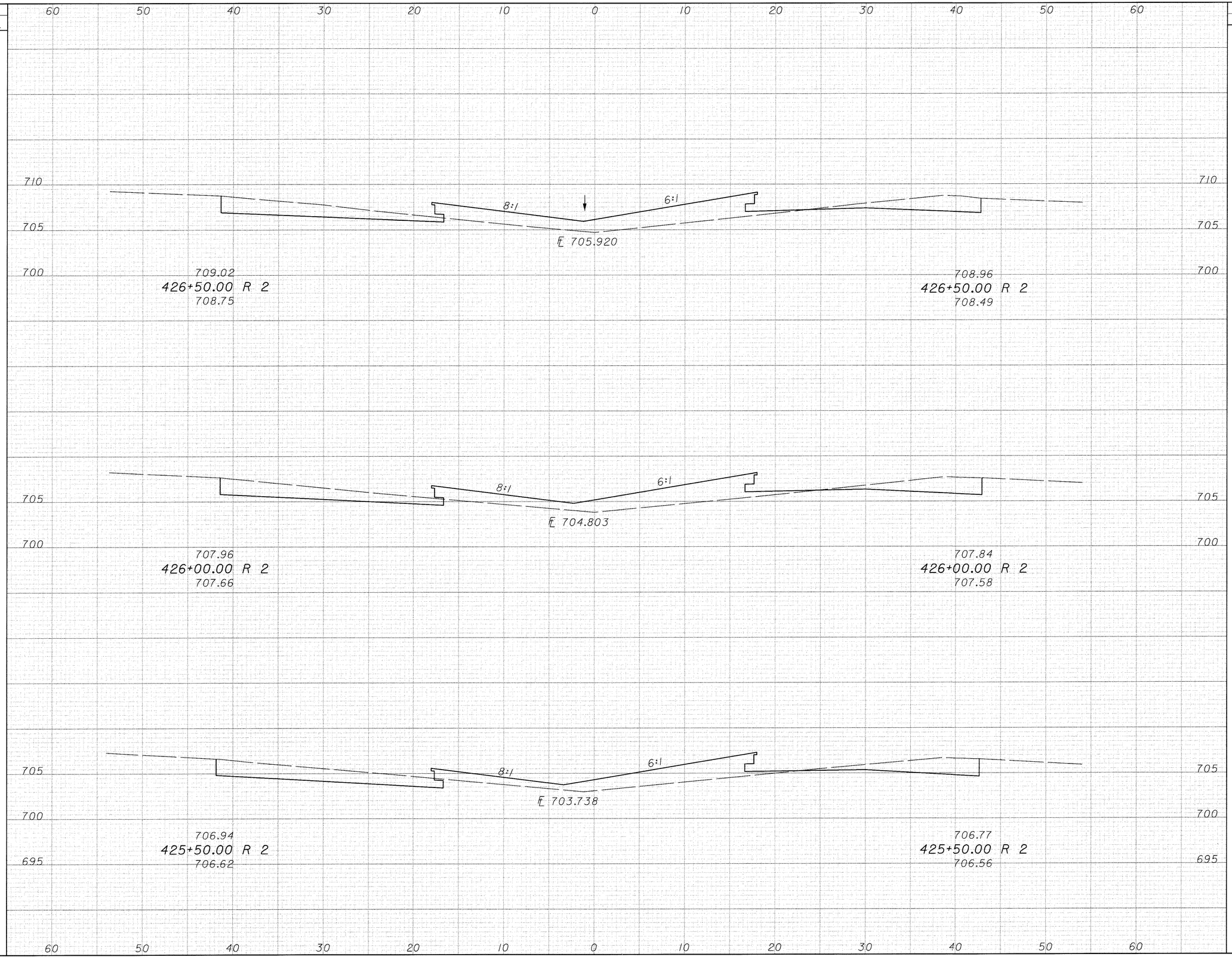

CALCULATED AM

CHECKED JSB

I.R.275 CROSS SECTIONS STA 425+50 TO STA 426+50

CLE-275-5.35

526
857

SEEDING END WIDTH	SEEDING SQ. YDS.	END AREA CUT	END AREA FILL	VOLUME CUT	VOLUME FILL
36	200	39	59	74	105
36	200	41	54	79	101
36	200	44	55	85	106

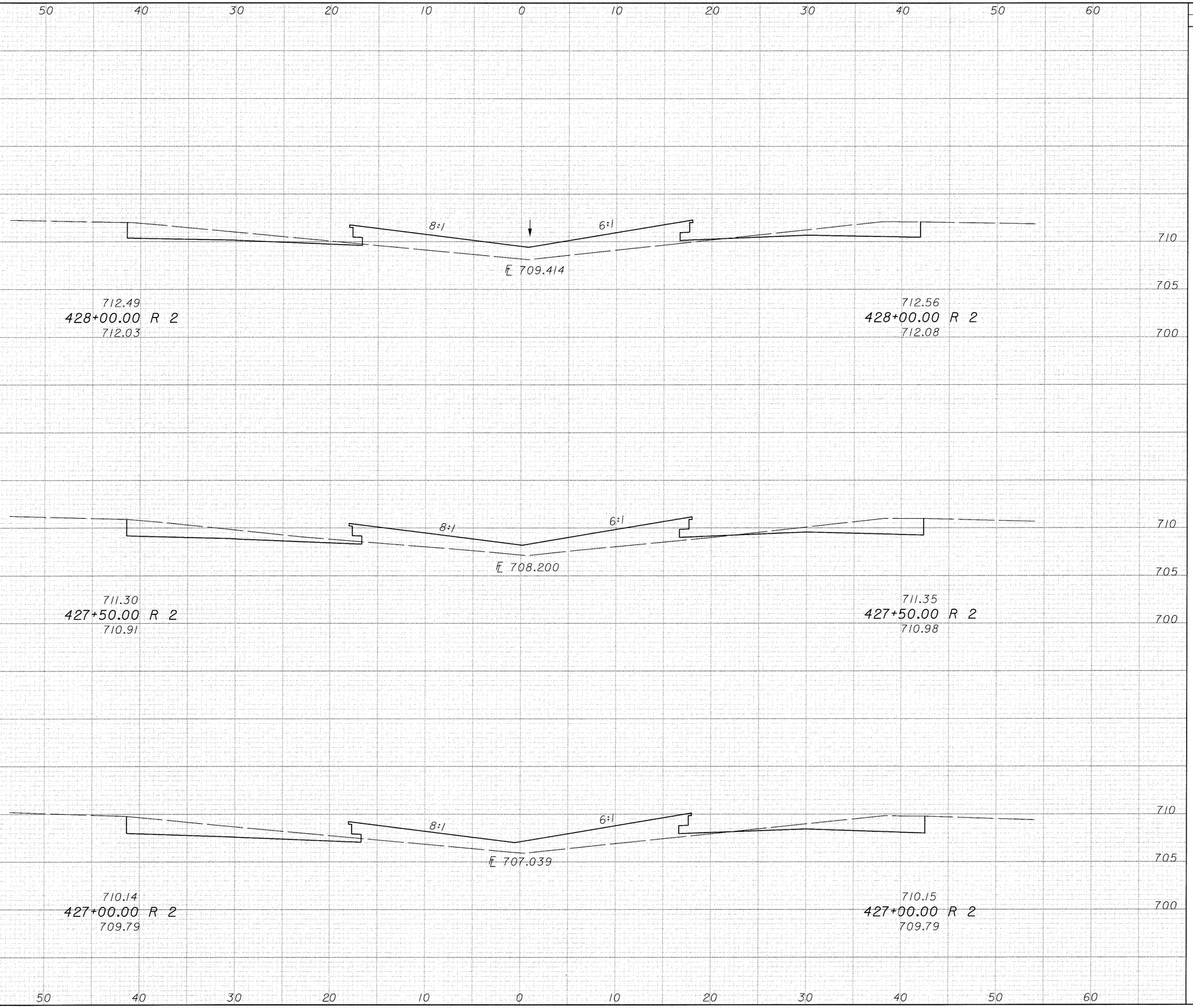

CALCULATED AM

CHECKED JDB

I.R.275 CROSS SECTIONS
STA 427+00.00 TO STA 428+00.00

CLE-275-5.35

527
857

SEEDING END WIDTH	SEEDING SQ. YDS.	60	50	40	30	20	10	0	10	20	30	40	50	60	END AREA CUT	END AREA FILL	VOLUME CUT	VOLUME FILL
36	200	715					8:1		6:1					715	41	60	71	112
		710						℄ 712.937						710				
		705		716.11 429+50.00 R 2 715.60								716.18 429+50.00 R 2 715.80		705				
36	200	715					8:1		6:1					715	36	61	63	120
		710						℄ 711.771						710				
		705		714.90 429+00.00 R 2 714.36								714.97 429+00.00 R 2 714.57		705				
36	200	710					8:1		6:1					710	32	69	66	119
		705						℄ 710.605						705				
				713.70 428+50.00 R 2 713.17								713.77 428+50.00 R 2 713.33						

CALCULATED AM

CHECKED JSB

I.R.275 CROSS SECTIONS
STA 428+50.00 TO STA 429+50.00

CLE-275-5.35

528
857

SEEDING END WIDTH	SEEDING SQ. YDS.	END AREA CUT	END AREA FILL	VOLUME CUT	VOLUME FILL
33	192	57	49	94	99
36	200	45	58	90	108
36	200	52	59	85	106
36	200	40	55	75	106

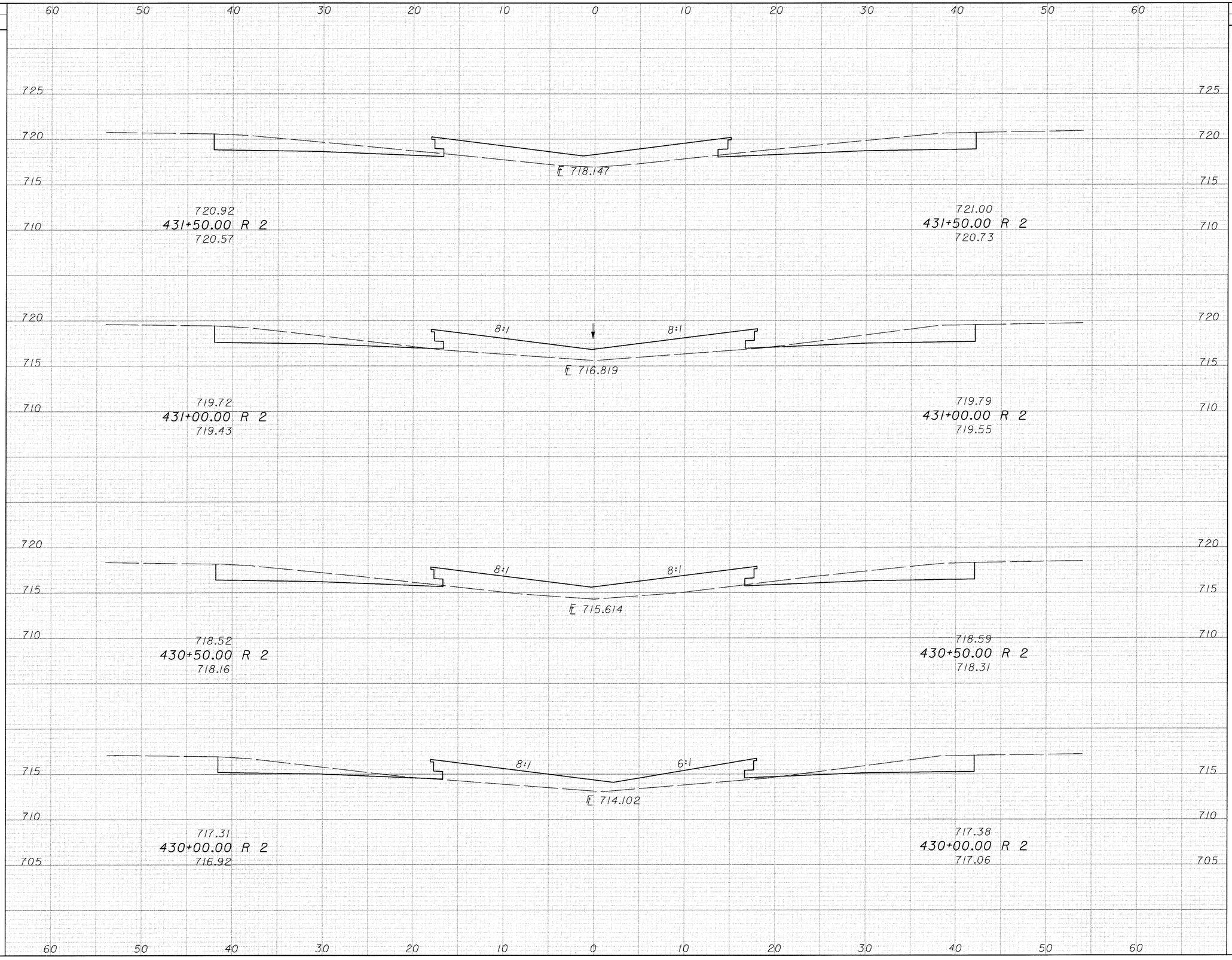

CALCULATED AM

CHECKED JDB

I.R.275 CROSS SECTIONS

STA 430+00.00 TO STA 431+50.00

CLE-275-5.35

529
857

SEEDING	
END WIDTH	SQ. YDS.
31	165

END AREA		VOLUME	
CUT	FILL	CUT	FILL
49	53		
		91	88

CALCULATED AM

CHECKED JOB

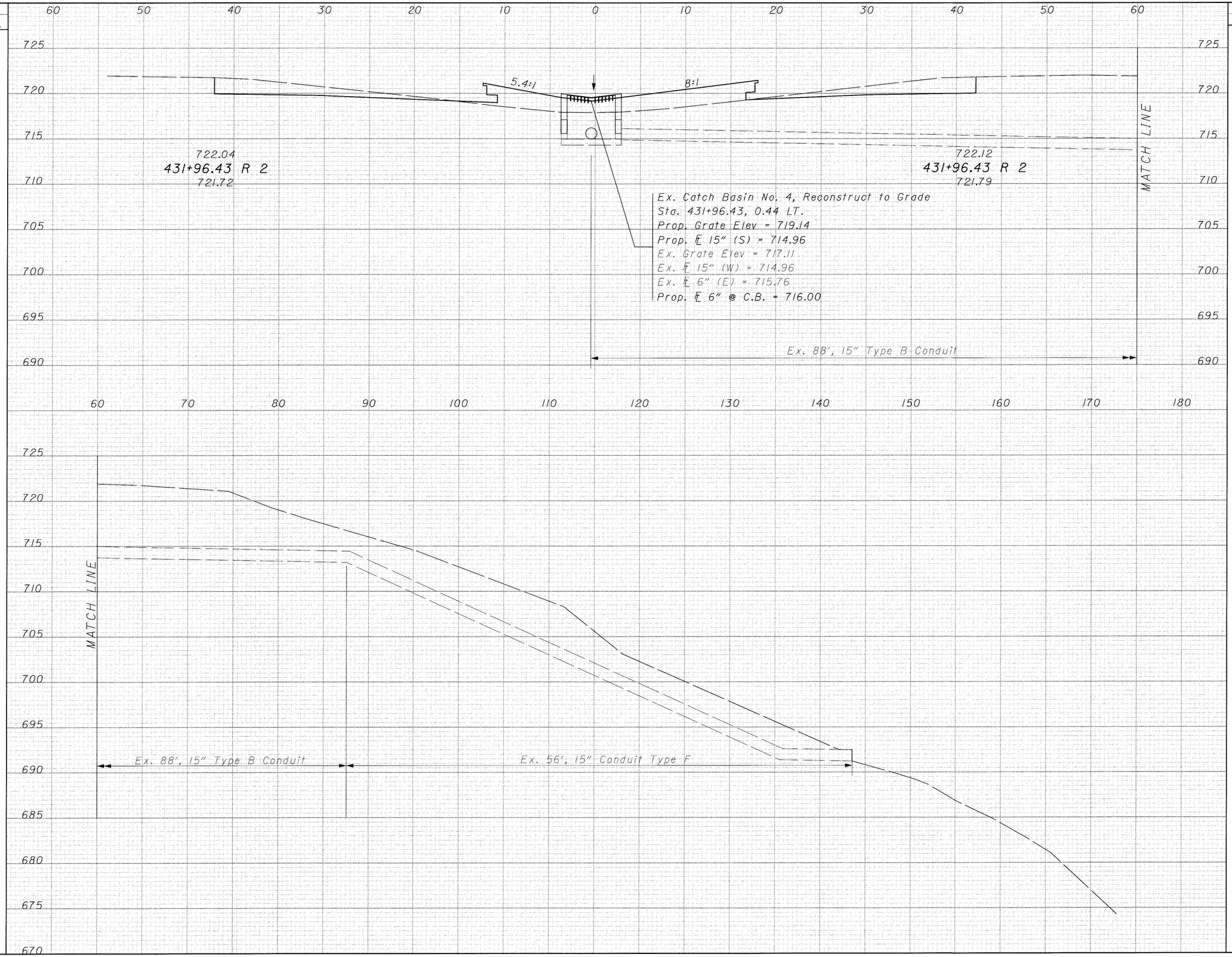

I.R.275 CROSS SECTIONS
STA 431+96.43

CLE-275-5.35

530
857

SEEDING END WIDTH	SEEDING SQ. YDS.	END AREA CUT	END AREA FILL	VOLUME CUT	VOLUME FILL
36	200	53	62	95	114
36	200	50	61	95	107
36	199	53	55	101	107

CALCULATED AM

CHECKED JJB

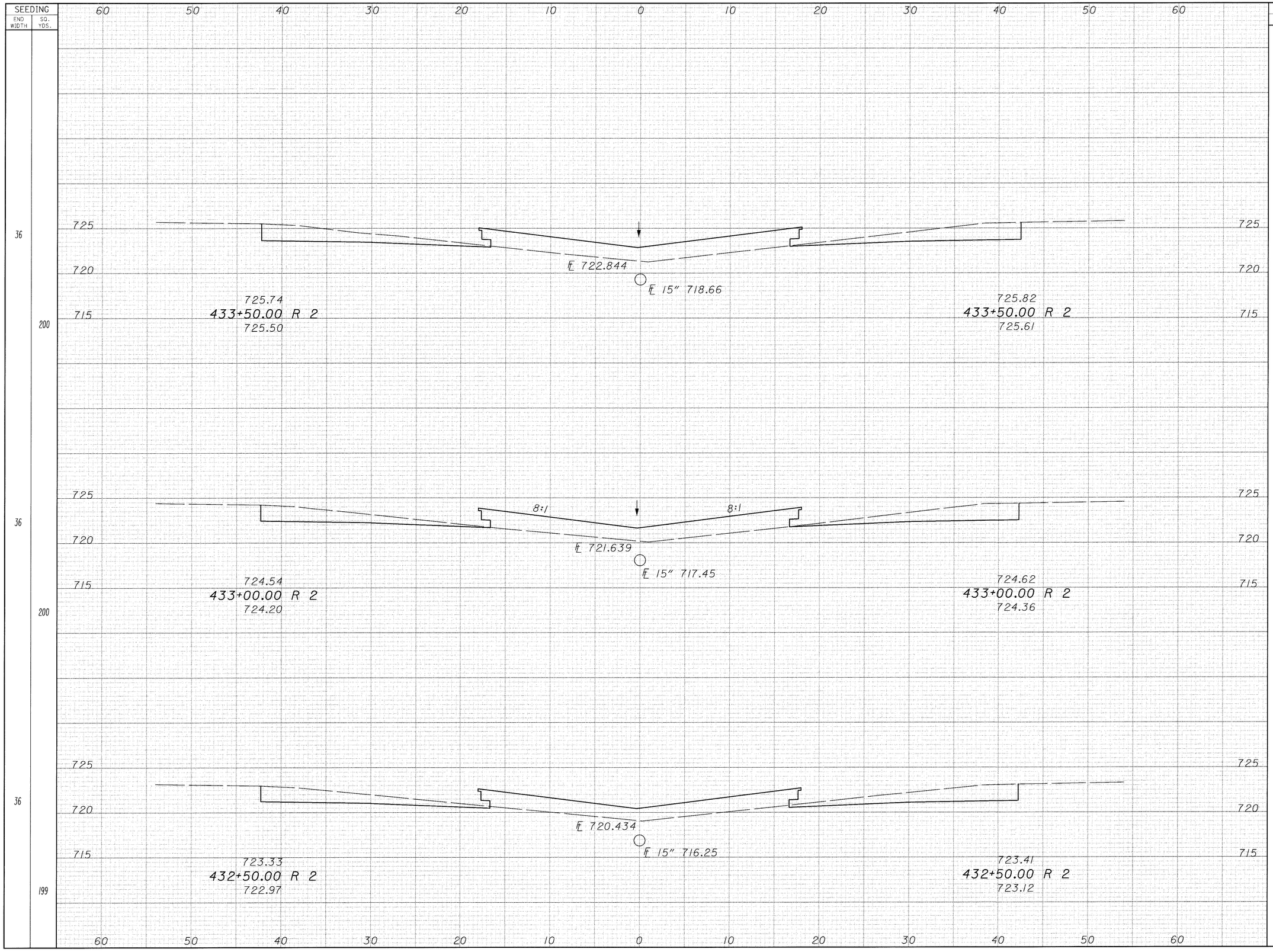

I.R.275 CROSS SECTIONS
STA 432+50.00 TO STA 433+50.00

CLE-275-5.35

531
857

SEEDING END WIDTH	SEEDING SQ. YDS.	END AREA CUT	END AREA FILL	VOLUME CUT	VOLUME FILL
36	200	51	62	99	112
36	200	56	59	105	109
36	200	57	59	102	112

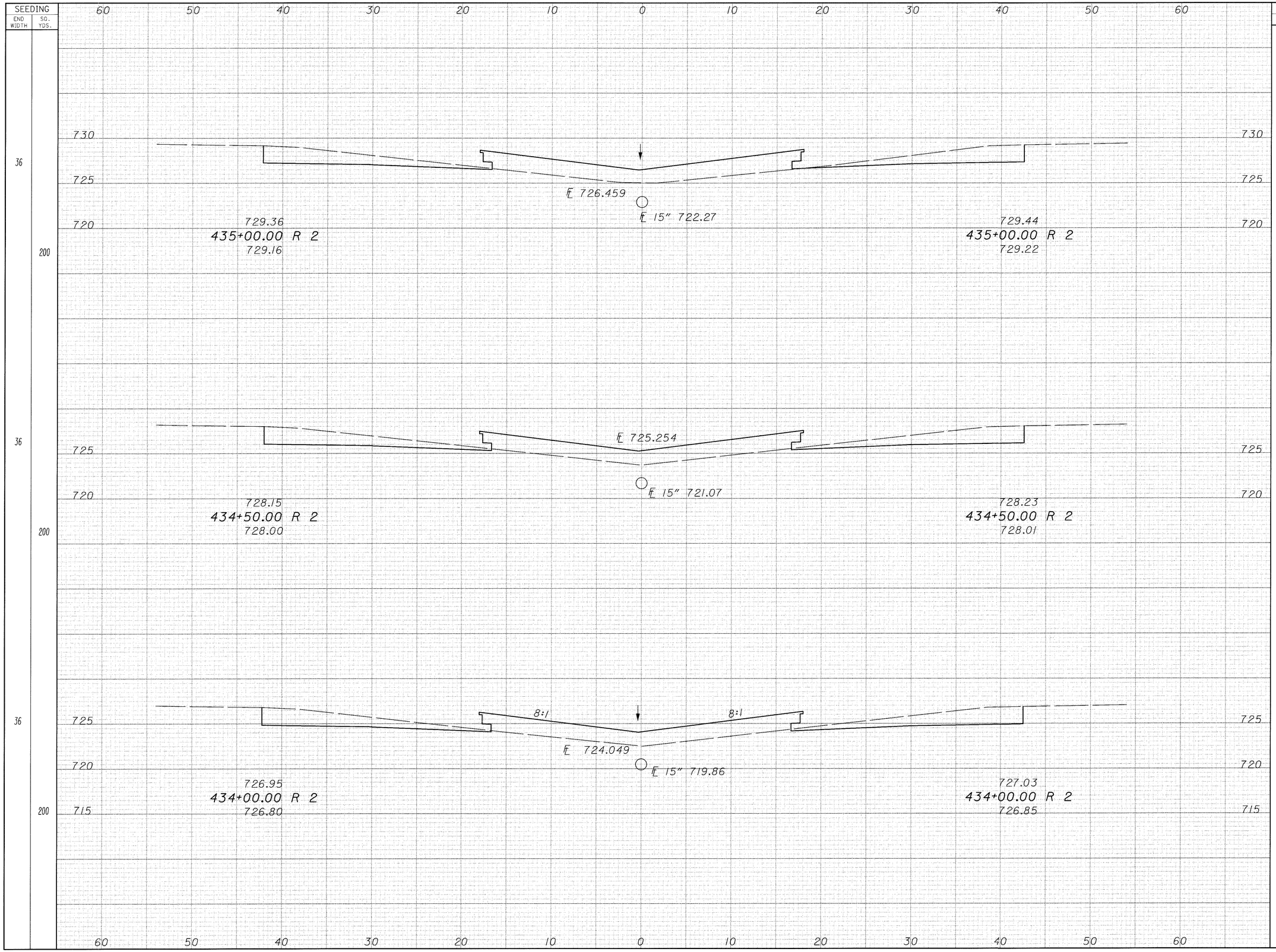

CALCULATED AM

CHECKED JOB

I.R.275 CROSS SECTIONS

STA 434+00.00 TO STA 435+00.00

CLE-275-5.35

532
857

SEEDING END WIDTH	SEEDING SQ. YDS.	END AREA CUT	END AREA FILL	VOLUME CUT	VOLUME FILL
36		59	50		
	200			106	95
36		55	53		
	200	56	57	103	102
	200			99	110

60 50 40 30 20 10 0 10 20 30 40 50 60

735
730
725
720

℄ 730.074

℄ 15" 725.88

732.97
436+50.00 R 2
732.77

733.06
436+50.00 R 2
732.84

℄ 728.869

℄ 15" 724.68

731.76
436+00.00 R 2
731.57

731.85
436+00.00 R 2
731.63

8:1 8:1

℄ 727.664

℄ 15" 723.48

730.56
435+50.00 R 2
730.38

730.64
435+50.00 R 2
730.40

CALCULATED AM

CHECKED JDB

I.R.275 CROSS SECTIONS
435+50.00 TO STA 436+50.00

CLE-275-5.35

533
857

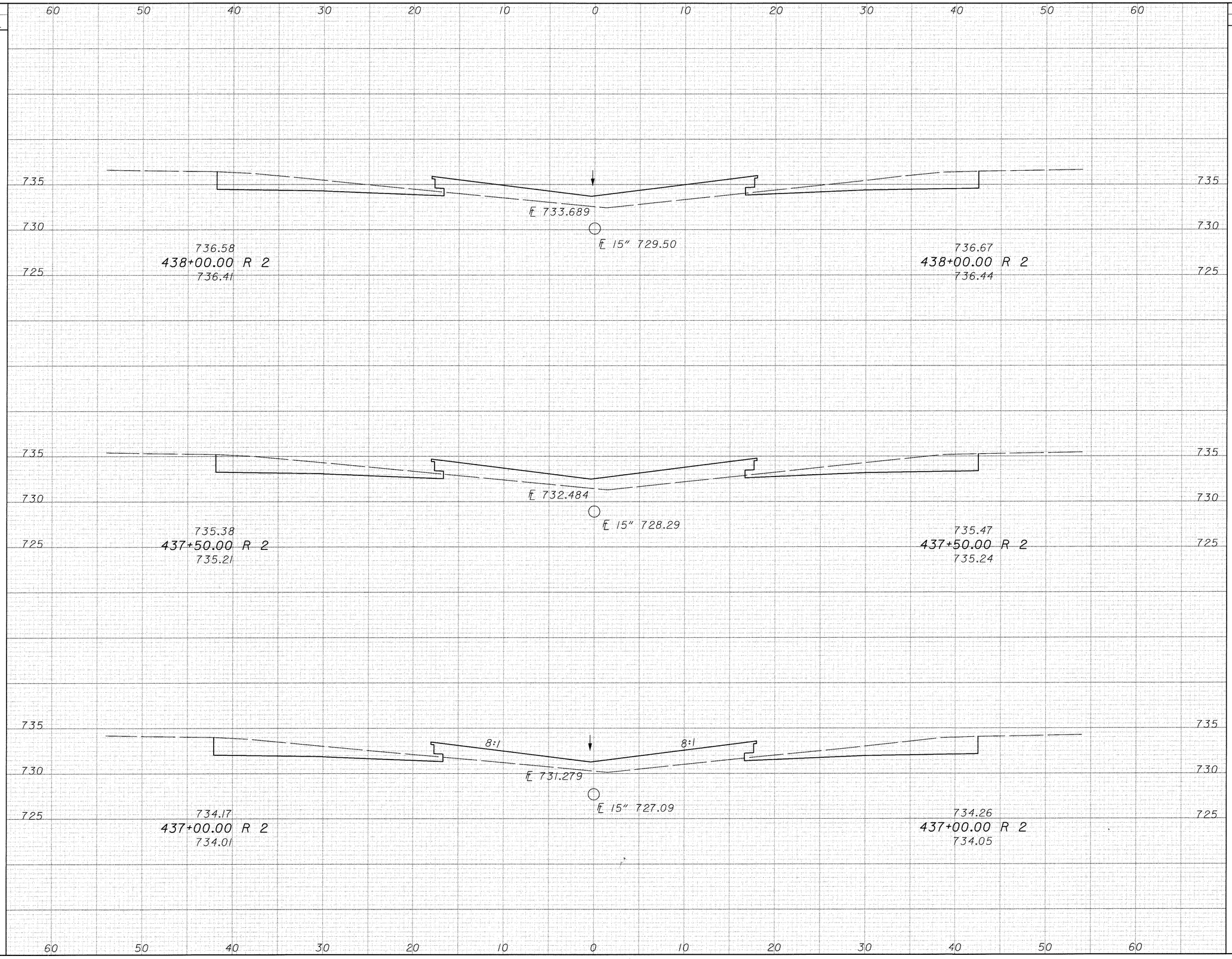

END AREA CUT	END AREA FILL	VOLUME CUT	VOLUME FILL
58	52		
		109	94
60	49		
		110	90
59	48		
		109	91

CALCULATED AM

CHECKED JGB

I.R.275 CROSS SECTIONS
STA 437+00.00 TO STA 438+00.00

CLE-275-5.35

534
857

SEEDING END WIDTH	SEEDING SQ. YDS.	END AREA CUT	END AREA FILL	VOLUME CUT	VOLUME FILL
36	200	54	60	99	110
36	200	53	59	101	105
36	200	56	54	106	98

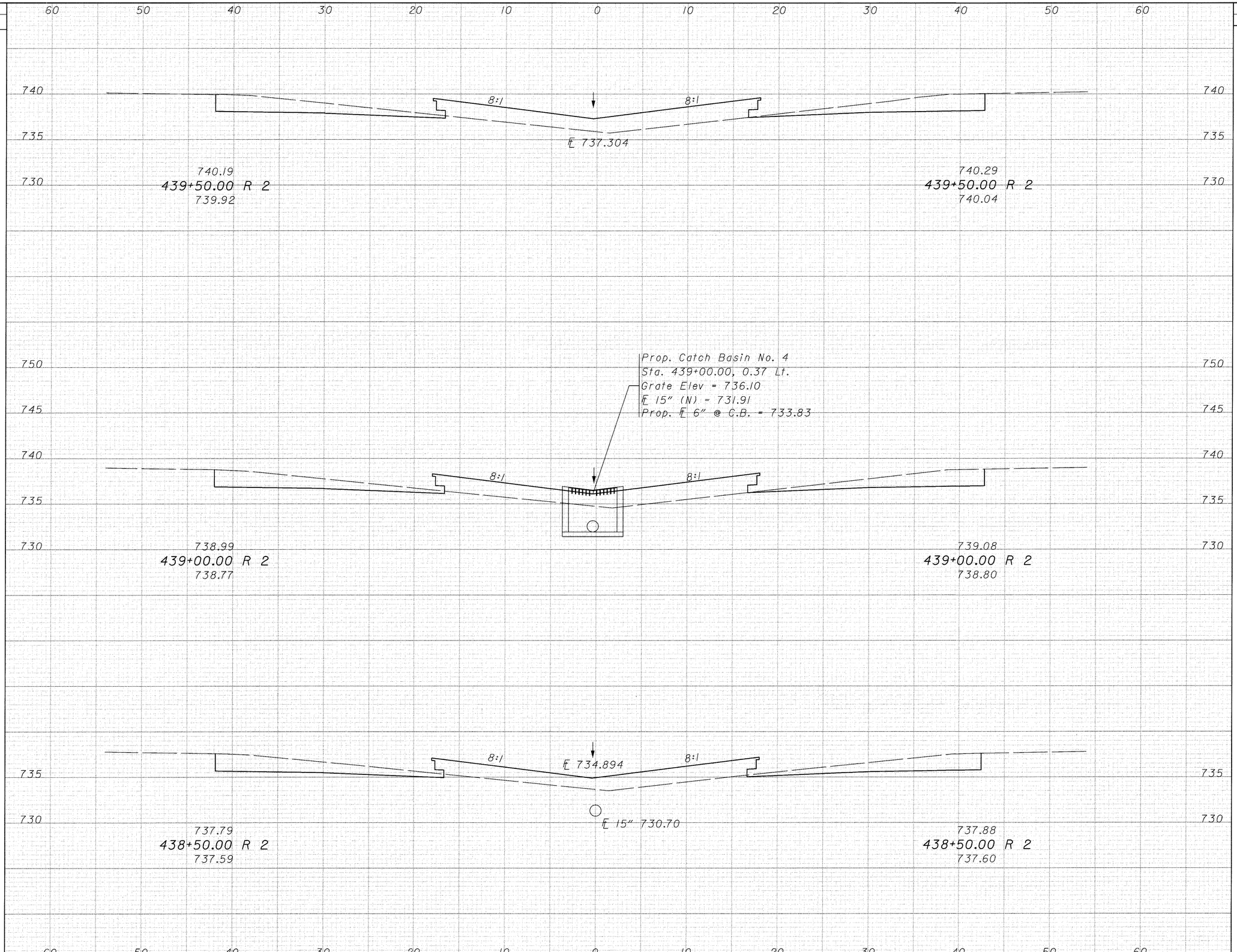

CALCULATED AM

CHECKED JGB

I.R.275 CROSS SECTIONS
STA 438+50.00 TO STA 439+50.00

CLE-275-5.35

535
857

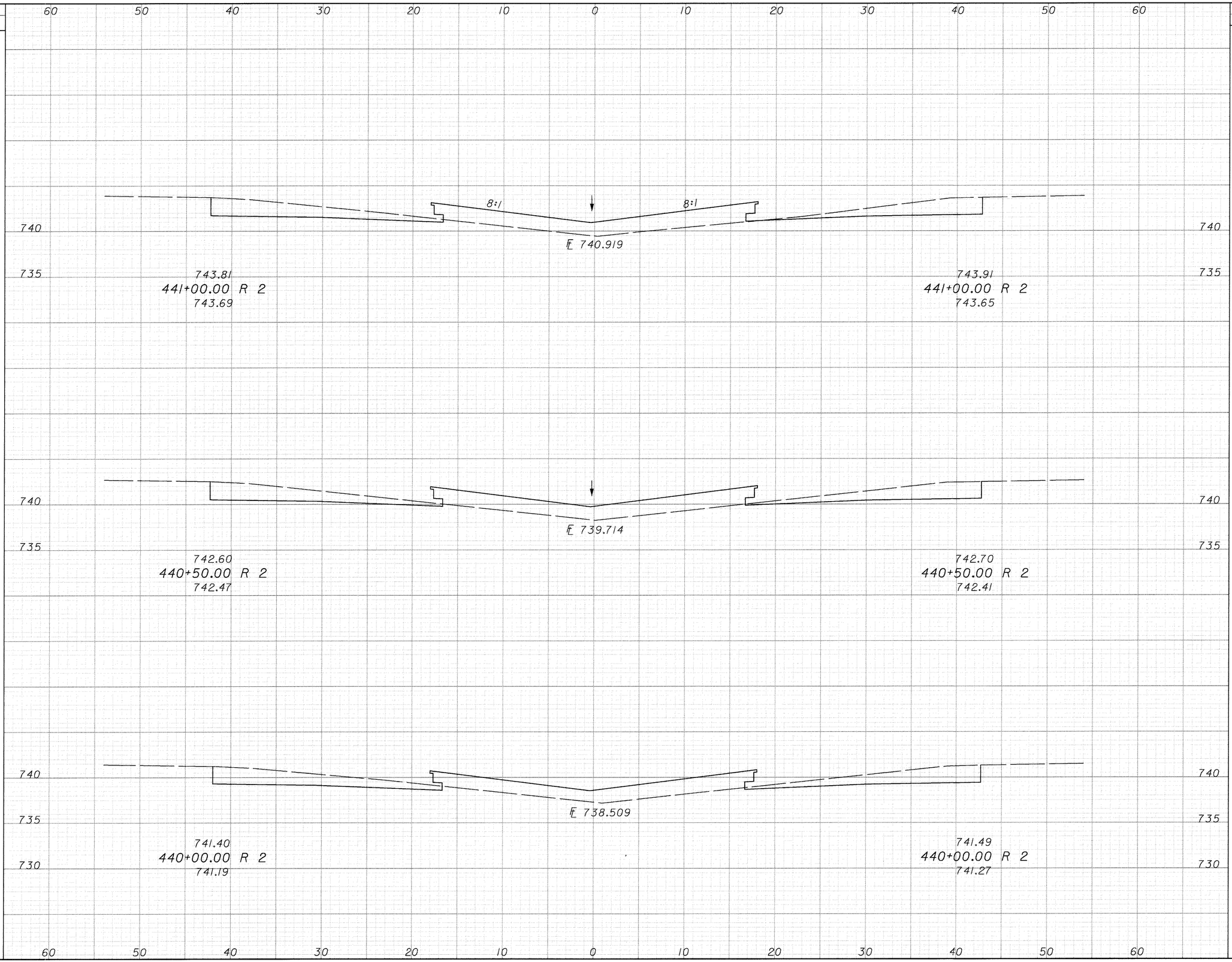

SEEDING END WIDTH	SEEDING SQ. YDS.	END AREA CUT	END AREA FILL	VOLUME CUT	VOLUME FILL
36		53	59		
	200			101	108
36		56	58		
	200			106	103
36		59	53		
	200			105	105

CALCULATED AM

CHECKED JGB

I.R.275 CROSS SECTIONS
STA 440+00.00 TO STA 441+00.00

CLE-275-5.35

536
857

SEEDING END WIDTH	SEEDING SQ. YDS.	END AREA CUT	END AREA FILL	VOLUME CUT	VOLUME FILL
36	200	53	65	99	120
36	200	54	65	102	117
36	200	56	61	101	111

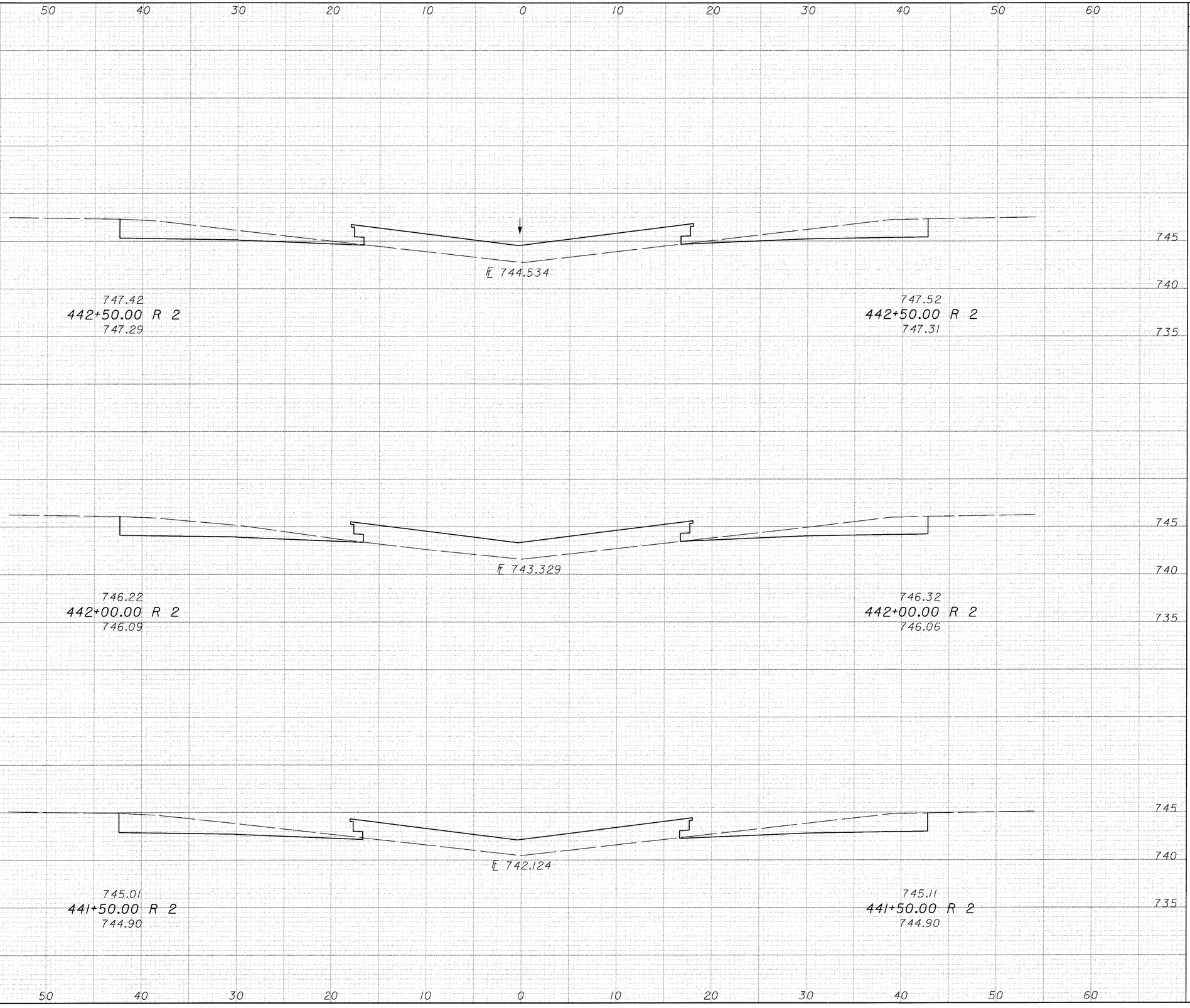

CALCULATED AM

CHECKED JGB

I.R.275 CROSS SECTIONS

STA 441+50.00 TO STA 442+50.00

CLE-275-5.35

537
857

SEEDING		END AREA		VOLUME	
END WIDTH	SQ. YDS.	CUT	FILL	CUT	FILL
36	200	51	70	94	126
36	200	51	66	96	119
36	200	53	63	98	119

CALCULATED AM

CHECKED JOB

I.R.275 CROSS SECTIONS

STA 443+00.00 TO STA 444+00.00

CLE-275-5.35

538
857

60 50 40 30 20 10 0 10 20 30 40 50 60

750
745
740

8:1 8:1

℄ 748.149

751.03
444+00.00 R 2
750.85

751.14
444+00.00 R 2
750.81

℄ 746.944

749.83
443+50.00 R 2
749.68

749.93
443+50.00 R 2
749.57

℄ 745.739

748.63
443+00.00 R 2
748.44

748.73
443+00.00 R 2
748.47

SEEDING END WIDTH	SEEDING SQ. YDS.	END AREA CUT	END AREA FILL	VOLUME CUT	VOLUME FILL
36	200	53	63	96	118
36	200	51	64	95	121
36	200	52	67	95	127

CALCULATED AM

CHECKED JDB

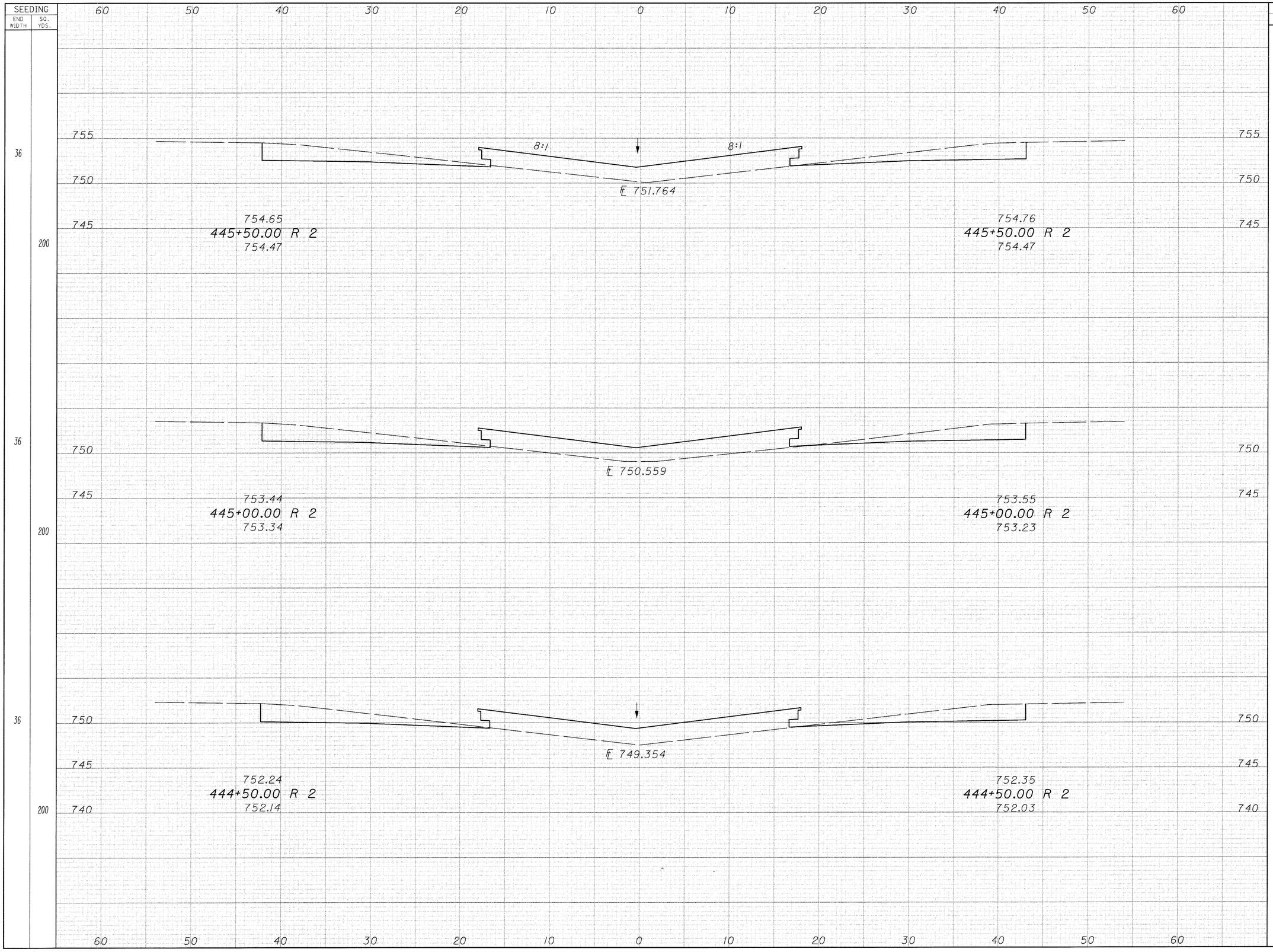

I.R.275 CROSS SECTIONS
STA 444+50.00 TO STA 445+50.00

CLE-275-5.35

539
857

SEEDING	
END WIDTH	SQ. YDS.
36	185
36	200

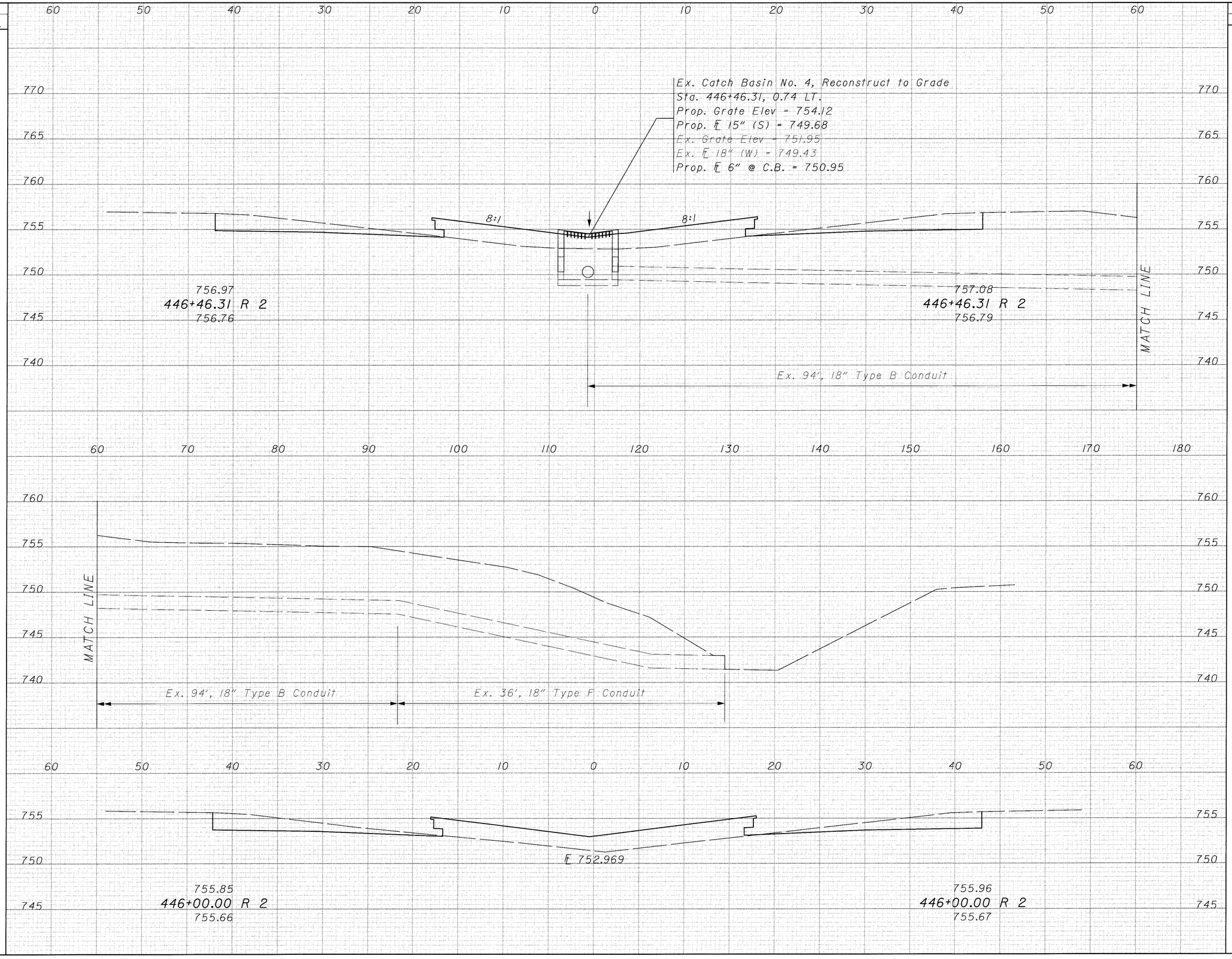

END AREA		VOLUME	
CUT	FILL	CUT	FILL
51	63		
		85	109
48	64		
		94	118

CALCULATED AM

CHECKED JDB

I.R.275 CROSS SECTIONS

STA 446+00.00 TO STA 446+46.31

CLE-275-5.35

540
857

SEEDING END WIDTH	SEEDING SQ. YDS.	END AREA CUT	END AREA FILL	VOLUME CUT	VOLUME FILL
36	200	62	41	107	88
36	200	54	54	98	106
36	215	52	60	102	122

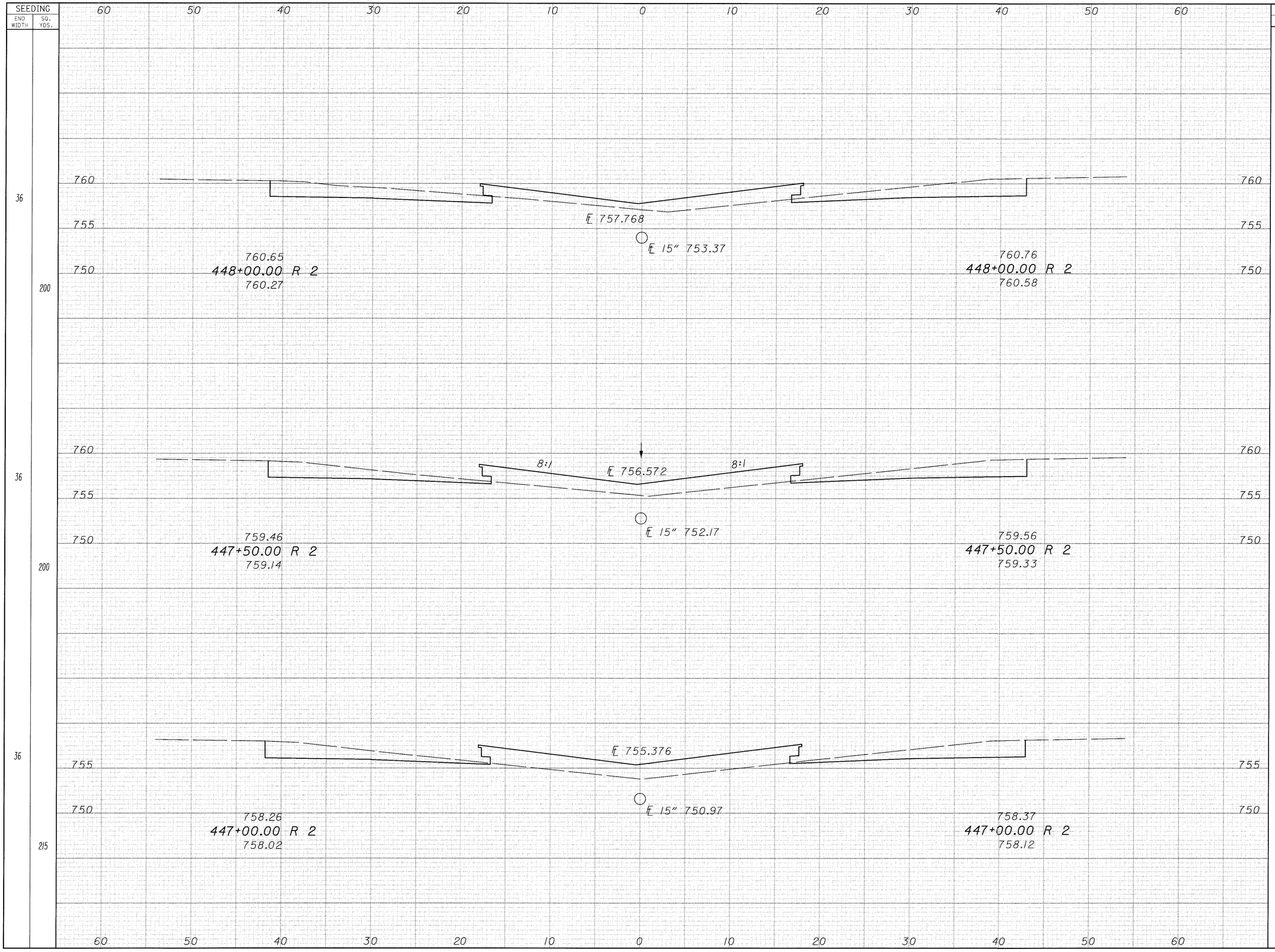

CALCULATED AM

CHECKED JOB

I.R.275 CROSS SECTIONS
STA 447+00.00 TO STA 448+00.00

CLE-275-5.35

541
857

SEEDING END WIDTH	SEEDING SQ. YDS.	END AREA CUT	END AREA FILL	VOLUME CUT	VOLUME FILL
36	200	56	57	100	102
36	200	52	53	106	89
36	200	63	43	116	78

CALCULATED AM

CHECKED JOB

60 50 40 30 20 10 0 10 20 30 40 50 60

765 760 755

℄ 761.355

764.25
449+50.00 R 2
764.04

℄ 15" 756.97

764.34
449+50.00 R 2
764.08

765 760 755

8:1 8:1

℄ 760.159

763.05
449+00.00 R 2
762.78

℄ 15" 755.77

763.14
449+00.00 R 2
762.90

760 755

℄ 758.963

761.85
448+50.00 R 2
761.60

℄ 15" 754.57

761.95
448+50.00 R 2
761.77

750

60 50 40 30 20 10 0 10 20 30 40 50 60

I.R.275 CROSS SECTIONS
STA 448+50.00 TO STA 449+50.00

CLE-275-5.35

542
857

SEEDING END WIDTH	SEEDING SQ. YDS.	END AREA CUT	END AREA FILL	VOLUME CUT	VOLUME FILL
36	200	55	54	99	106
36	200	52	61	94	117
36	200	50	65	98	113

60 50 40 30 20 10 0 10 20 30 40 50 60

765 760 755

℄ 764.942

℄ 15" 760.57

767.84
451+00.00 R 2
767.63

767.92
451+00.00 R 2
767.68

℄ 763.746

℄ 15" 759.37

766.64
450+50.00 R 2
766.43

766.72
450+50.00 R 2
766.46

8:1 8:1

℄ 762.551

℄ 15" 758.17

765.45
450+00.00 R 2
765.23

765.53
450+00.00 R 2
765.28

CALCULATED AM

CHECKED JDB

I.R.275 CROSS SECTIONS
STA 450+00.00 TO STA 451+00.00

CLE-275-5.35

543
857

SEEDING			END AREA		VOLUME			
END WIDTH	SQ. YDS.		CUT	FILL	CUT	FILL	CALCULATED AM	CHECKED JGB
36	200	771.44 452+50.00 R 2 771.09	51	61	94	115		
36	200	770.24 452+00.00 R 2 769.99	51	63	96	112		
36	200	769.04 451+50.00 R 2 768.80	53	58	100	104		

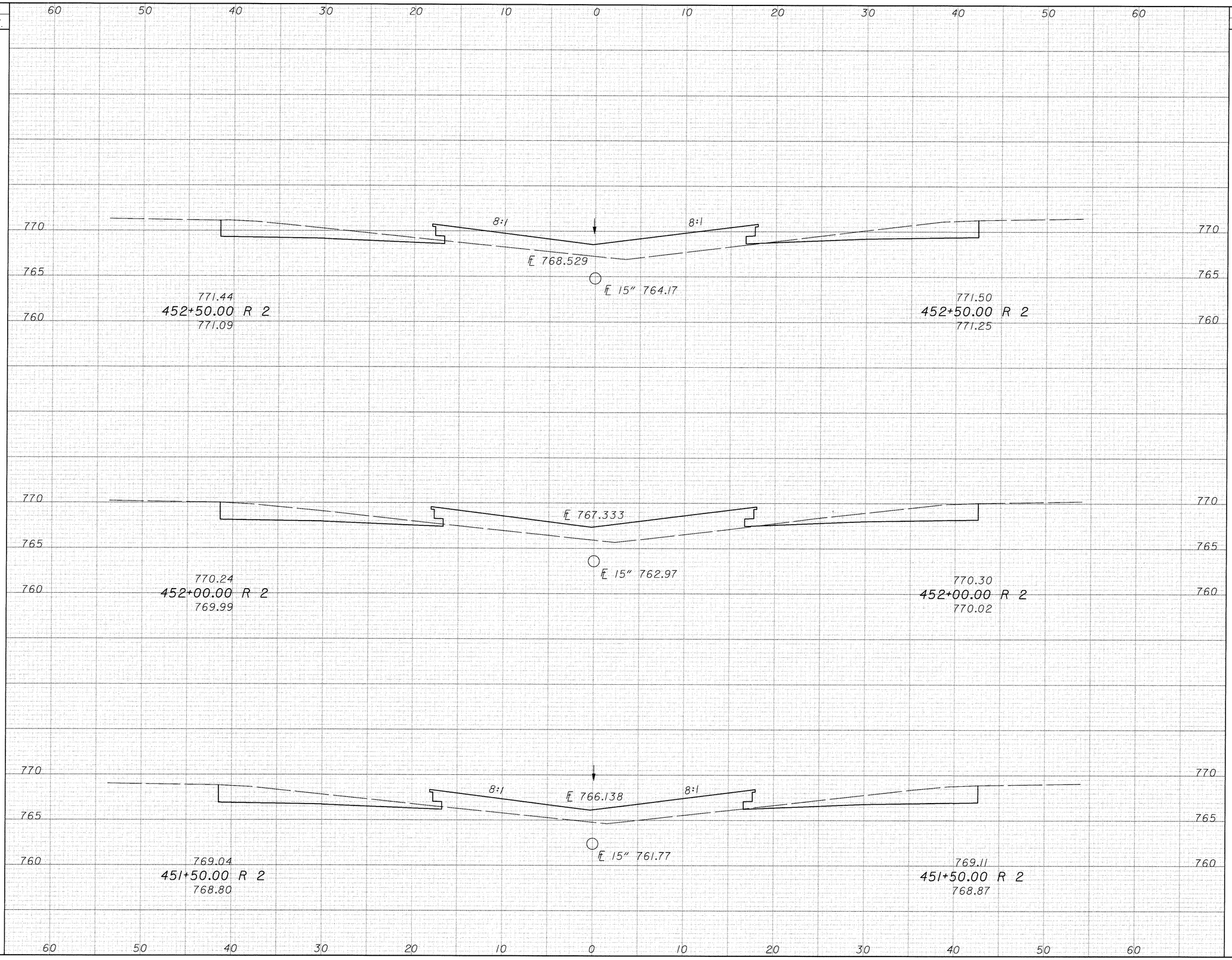

I.R.275 CROSS SECTIONS
STA 451+50.00 TO STA 452+50.00

CLE-275-5.35

544
857

SEEDING END WIDTH	SEEDING SQ. YDS.	END AREA CUT	END AREA FILL	VOLUME CUT	VOLUME FILL
36	200	50	60	94	110
36	200	51	59	95	109
36	200	52	59	95	111

60 50 40 30 20 10 0 10 20 30 40 50 60

775 770 765

8:1 8:1

℄ 772.115

775.03
454+00.00 R 2
774.77

775.07
454+00.00 R 2
774.74

775 770 765

℄ 770.921

773.83
453+50.00 R 2
773.61

773.88
453+50.00 R 2
773.58

785 780 775 770 765

Prop. Catch Basin No. 4
Sta. 453+00.00, 0.22 Lt.
Grate Elev = 769.72
℄ 15" (N) = 765.37
Prop. ℄ 6" @ C.B. = 767.00

8:1 8:1

772.63
453+00.00 R 2
772.38

772.69
453+00.00 R 2
772.45

60 50 40 30 20 10 0 10 20 30 40 50 60

CALCULATED AM

CHECKED JDB

I.R.275 CROSS SECTIONS
STA 453+00.00 TO STA 454+00.00

CLE-275-5.35

545
857

SEEDING	
END WIDTH	SQ. YDS.
36	200
36	200
36	200
36	200

60 50 40 30 20 10 0 10 20 30 40 50 60

780
775
770
765

778.46
455+50.00 R 2
778.28

℄ 775.526

778.46
455+50.00 R 2
778.25

8:1 8:1

℄ 774.423

777.35
455+00.00 R 2
777.14

777.37
455+00.00 R 2
777.12

℄ 773.286

776.21
454+50.00 R 2
775.94

776.24
454+50.00 R 2
775.91

END AREA		VOLUME	
CUT	FILL	CUT	FILL
53	61		
50	62		
51	62	95	114
		94	115
		94	113

CALCULATED AM

CHECKED JOB

I.R.275 CROSS SECTIONS
STA 454+50.00 TO STA 455+50.00

CLE-275-5.35

546
857

SEEDING		END AREA		VOLUME		CALCULATED AM	CHECKED JDB
END WIDTH	SQ. YDS.	CUT	FILL	CUT	FILL		
36		53	55				
	200			102	100		
36		57	53				
	200			104	97		
36		55	52				
	200			100	105		

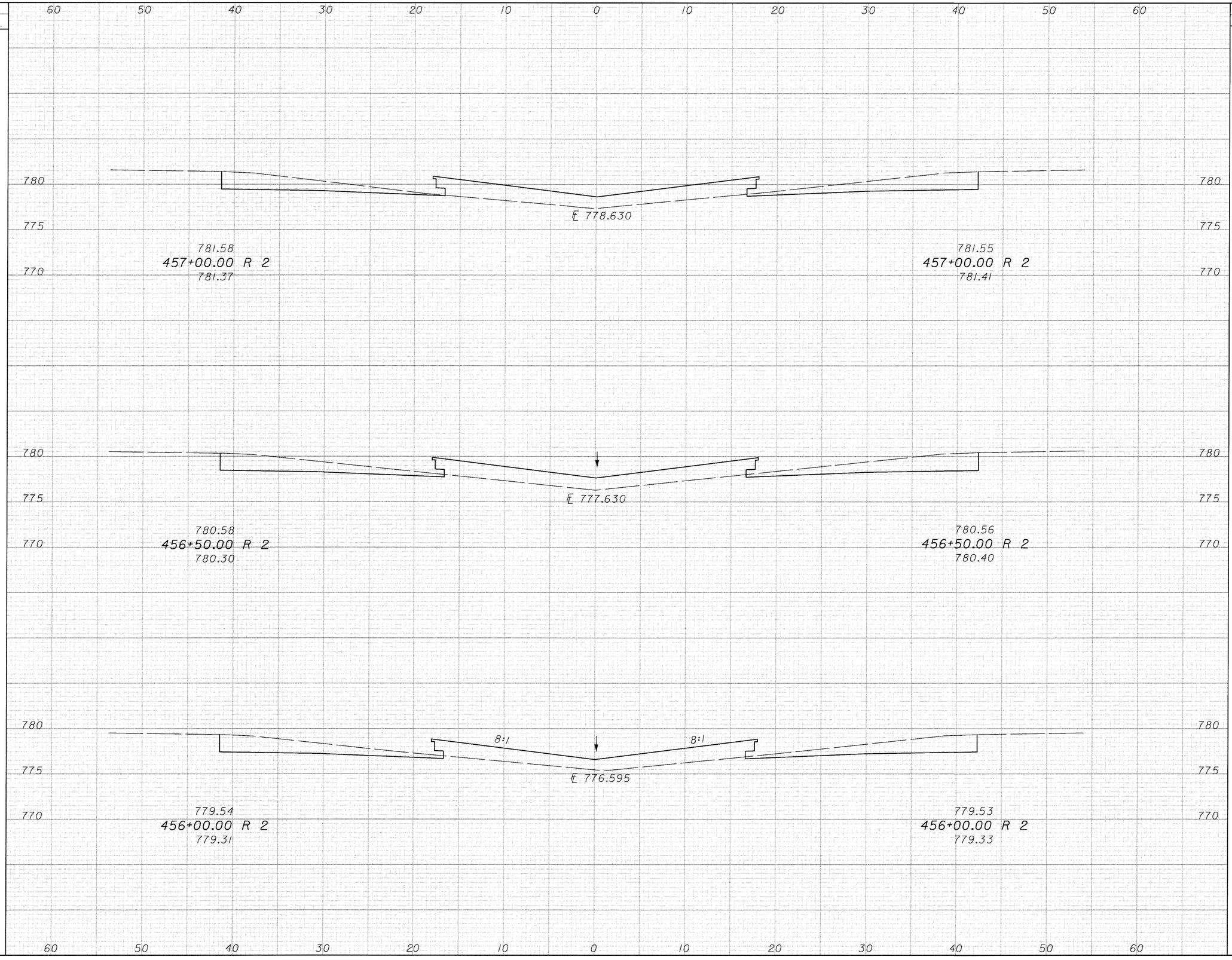

I.R.275 CROSS SECTIONS
STA 456+00.00 TO STA 457+00.00

CLE-275-5.35

547
857

SEEDING END WIDTH	SEEDING SQ. YDS.	END AREA CUT	END AREA FILL	VOLUME CUT	VOLUME FILL
36	200	59	41	110	80
36	200	60	45	111	86
36	200	60	48	105	95

60 50 40 30 20 10 0 10 20 30 40 50 60

785
780
775

℄ 781.427

784.39
458+50.00 R 2
784.17

784.34
458+50.00 R 2
784.09

785
780
775

℄ 780.529

783.49
458+00.00 R 2
783.28

783.45
458+00.00 R 2
783.24

785
780
775

8:1 8:1

℄ 779.597

782.55
457+50.00 R 2
782.35

782.52
457+50.00 R 2
782.35

60 50 40 30 20 10 0 10 20 30 40 50 60

CALCULATED AM

CHECKED JGB

I.R.275 CROSS SECTIONS
STA 457+50.00 TO STA 458+50.00

CLE-275-5.35

548
857

SEEDING	
END WIDTH	SQ. YDS.
36	181
36	200

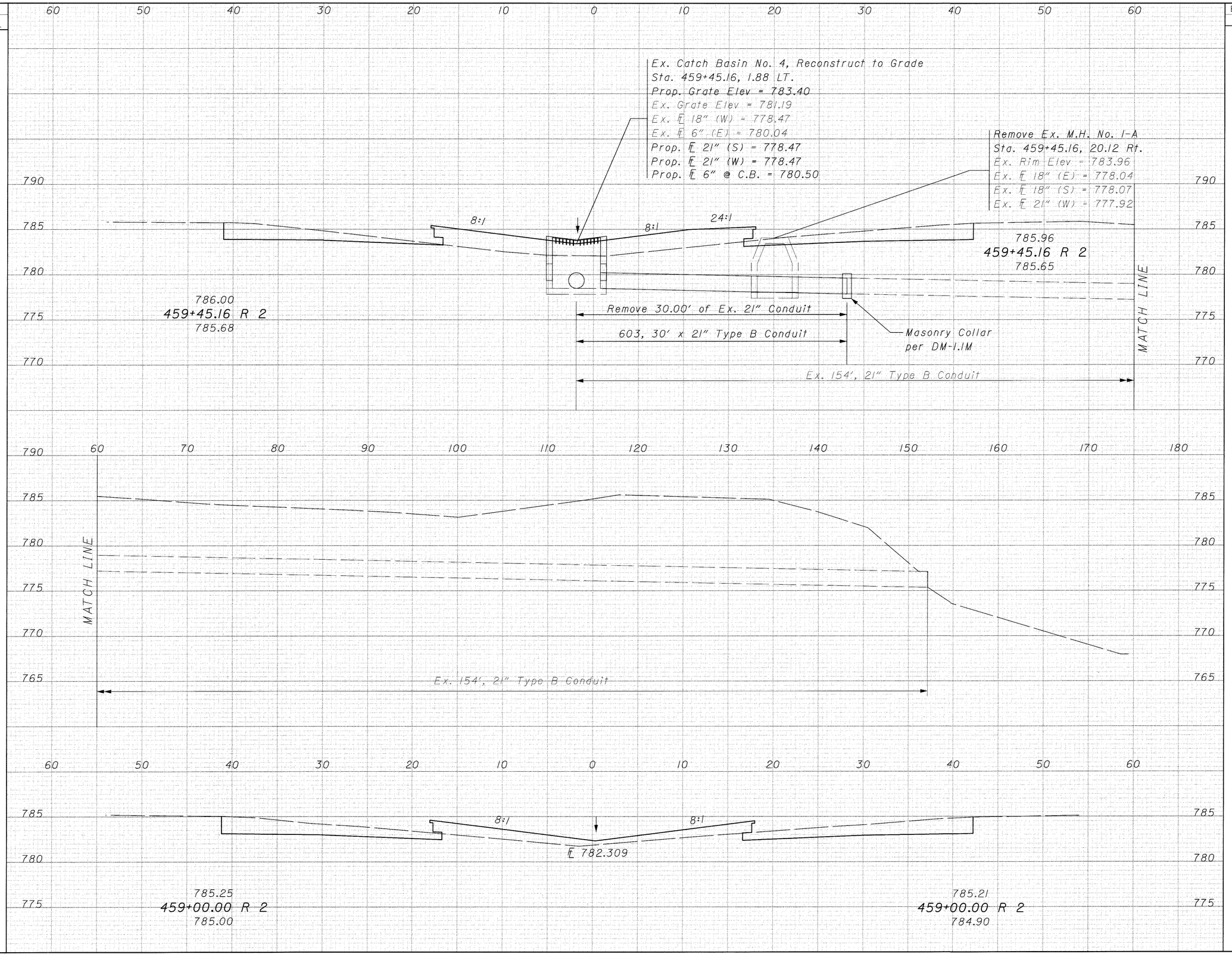

END AREA		VOLUME	
CUT	FILL	CUT	FILL
54	62		
		97	79
62	33		
		112	69

CALCULATED AM

CHECKED JRB

I.R.275 CROSS SECTIONS
STA 459+00.00 TO STA 459+45.16

CLE-275-5.35

549
857

SEEDING END WIDTH	SEEDING SQ. YDS.	END AREA CUT	END AREA FILL	VOLUME CUT	VOLUME FILL
36	200	45	64	81	122
36	200	42	68	81	124
36	219	46	66	102	130

CALCULATED AM

CHECKED JOB

60 50 40 30 20 10 0 10 20 30 40 50 60

790
785
780
775

8:1 ℄ 785.566 8:1

788.36
461+00.00 R 2
787.96

℄ 21" 780.38

788.33
461+00.00 R 2
788.09

℄ 784.803

787.64
460+50.00 R 2
787.24

℄ 21" 779.76

787.60
460+50.00 R 2
787.32

8:1 ℄ 784.006 8:1

786.88
460+00.00 R 2
786.59

℄ 21" 779.15

786.83
460+00.00 R 2
786.56

60 50 40 30 20 10 0 10 20 30 40 50 60

I.R.275 CROSS SECTIONS
STA 460+00.00 TO STA 461+00.00

CLE-275-5.35

550
857

SEEDING END WIDTH	SEEDING SQ. YDS.	END AREA CUT	END AREA FILL	VOLUME CUT	VOLUME FILL
36	200	44	67	86	119
36	200	49	61	89	115
36	200	47	63	85	118

CALCULATED AM

CHECKED JAB

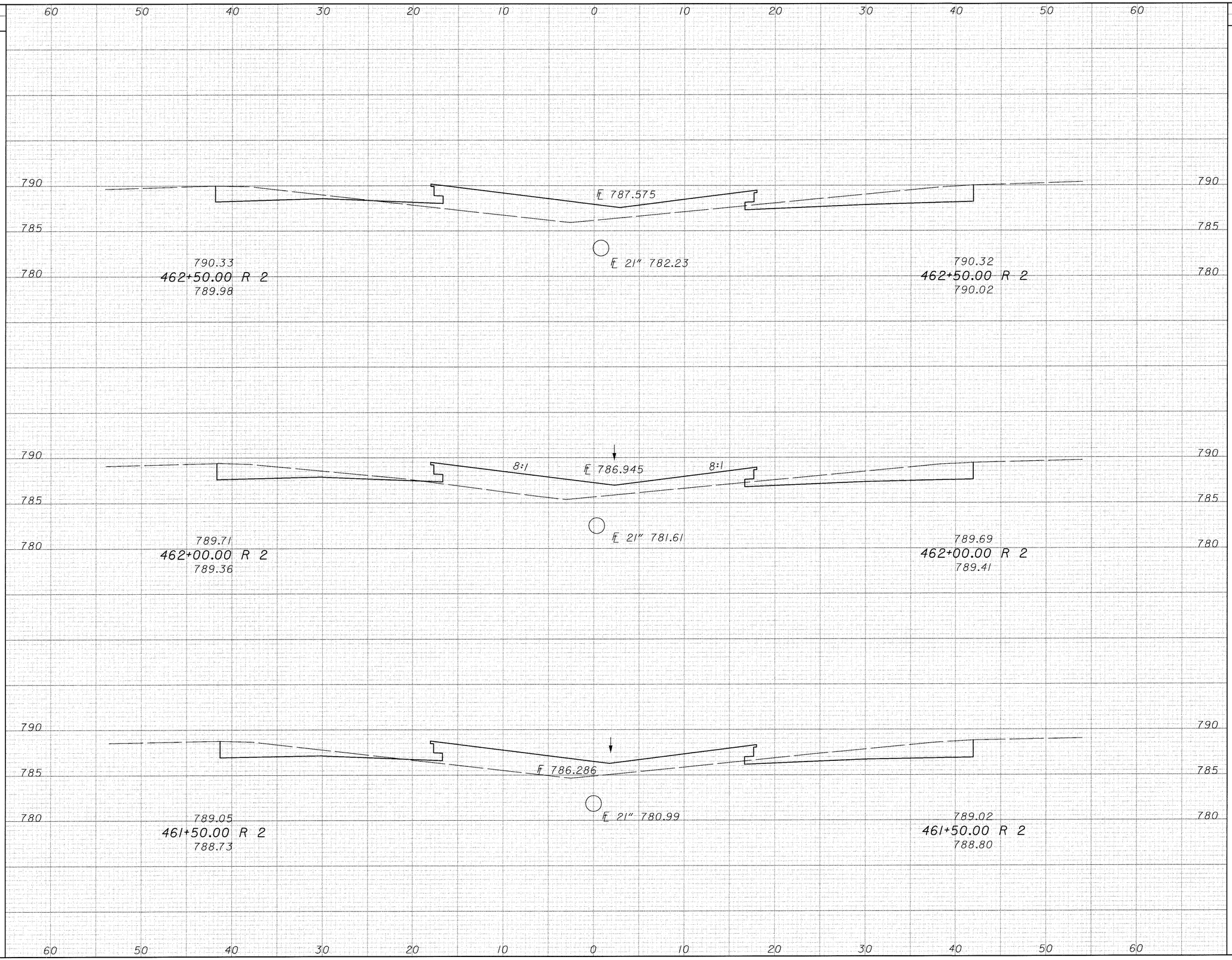

I.R.275 CROSS SECTIONS STA 461+50.00 TO STA 462+50.00

CLE-275-5.35

551
857

SEEDING END WIDTH	SEEDING SQ. YDS.	END AREA CUT	END AREA FILL	VOLUME CUT	VOLUME FILL
36	200	47	72	88	129
36	200	48	67	86	126
36	200	45	69	82	126

60 50 40 30 20 10 0 10 20 30 40 50 60

790 785 780 795 800

℄ 789.262

℄ 18" 784.21

791.98
464+00.00 R 2
791.66

792.00
464+00.00 R 2
791.73

Prop. Catch Basin No. 4
Sta. 463+50.00, 4.84 Rt.
Grate Elev = 788.54
℄ 18" (S) = 783.71
℄ 21" (N) = 783.46

8:1 6:1

791.46
463+50.00 R 2
791.23

791.47
463+50.00 R 2
791.22

8:1 8:1

℄ 788.183

℄ 21" 782.84

790.91
463+00.00 R 2
790.64

790.91
463+00.00 R 2
790.64

CALCULATED AM

CHECKED JSB

I.R.275 CROSS SECTIONS

STA 463+00.00 TO STA 464+00.00

CLE-275-5.35

552
857

SEEDING END WIDTH	SEEDING SQ. YDS.
36	200
36	200
36	200

60 50 40 30 20 10 0 10 20 30 40 50 60

795 790 785

℄ 790.762

℄ 18" 785.71

793.48
465+50.00 R 2
793.16

793.51
465+50.00 R 2
793.10

795 790 785

℄ 790.263

℄ 18" 785.21

792.98
465+00.00 R 2
792.73

793.01
465+00.00 R 2
792.61

795 790 785 780

8:1 8:1

℄ 789.763

℄ 18" 784.71

792.48
464+50.00 R 2
792.27

792.51
464+50.00 R 2
792.10

60 50 40 30 20 10 0 10 20 30 40 50 60

END AREA CUT	END AREA FILL	VOLUME CUT	VOLUME FILL
47	63		
46	66		
43	71		
		86	119
		82	127
		83	132

CALCULATED AM

CHECKED JGB

I.R.275 CROSS SECTIONS
STA 464+50.00 TO STA 465+50.00

CLE-275-5.35

553
857

SEEDING	
END WIDTH	SQ. YDS.
36	200
36	200
36	200

60 50 40 30 20 10 0 10 20 30 40 50 60

795
790
785

8:1 ℄ 792.261 8:1
℄ 18" 787.21
794.97
467+00.00 R 2
794.55
795.00
467+00.00 R 2
794.79

℄ 791.761
℄ 18" 786.71
794.47
466+50.00 R 2
794.11
794.50
466+50.00 R 2
794.31

8:1 ℄ 791.262 8:1
℄ 18" 786.21
793.97
466+00.00 R 2
793.60
794.00
466+00.00 R 2
793.77

END AREA		VOLUME	
CUT	FILL	CUT	FILL
48	65		
51	64		
49	63		
		92	119
		93	118
		89	117

CALCULATED AM

CHECKED JOB

I.R.275 CROSS SECTIONS
STA 466+00.00 TO STA 467+00.00

CLE-275-5.35

554
857

SEEDING	
END WIDTH	SQ. YDS.
36	200
36	200
36	200

60 50 40 30 20 10 0 10 20 30 40 50 60

795
790
785
810
805
800

8:1 ℄ 793.759 8:1

℄ 15" 788.96

796.47
468+50.00 R 2
796.14

796.50
468+50.00 R 2
796.28

8:1 ℄ 793.260 8:1

℄ 15" 788.46

795.97
468+00.00 R 2
795.60

796.00
468+00.00 R 2
795.79

Prop. Catch Basin No. 4
Sta. 467+50.00, 3.13 Rt.
Grate Elev = 792.76
℄ 15" (SW) = 787.96
℄ 18" (NE) = 787.71
Prop. ℄ 6" @ C.B. = 791.00

8:1 8:1

795.47
467+50.00 R 2
795.01

795.50
467+50.00 R 2
795.31

END AREA		VOLUME	
CUT	FILL	CUT	FILL
50	61	93	113
50	61	90	118
47	66	88	121

CALCULATED AM
CHECKED JOB

I.R.275 CROSS SECTIONS
467+50.00 TO STA 468+50.00

CLE-275-5.35

555
857

SEEDING END WIDTH	SEEDING SQ. YDS.	END AREA CUT	END AREA FILL	VOLUME CUT	VOLUME FILL
36	200	49	59	91	107
36	200	49	57	93	107
36	200	51	59	94	111

CALCULATED AM

CHECKED JOB

I.R.275 CROSS SECTIONS
STA 469+00.00 TO STA 470+00.00

CLE-275-5.35

556
357

60 50 40 30 20 10 0 10 20 30 40 50 60

800 / 795 / 790 / 785

8:1 ℄ 795.257 8:1

℄ 15" 790.46

797.97
470+00.00 R 2
797.67

798.00
470+00.00 R 2
797.70

8:1 ℄ 794.758 8:1

℄ 15" 789.96

797.47
469+50.00 R 2
797.11

797.50
469+50.00 R 2
797.11

8:1 ℄ 794.259 8:1

℄ 15" 789.46

796.97
469+00.00 R 2
796.69

797.00
469+00.00 R 2
796.75

SEEDING END WIDTH	SEEDING SQ. YDS.	END AREA CUT	END AREA FILL	VOLUME CUT	VOLUME FILL
36	200	50	58	95	107
36	200	53	58	97	107
36	200	52	58	94	108

CALCULATED AM

CHECKED JDB

60 50 40 30 20 10 0 10 20 30 40 50 60

810 805 800 795 790

Prop. Manhole No. 3
Sta. 471+50.00, 12.55 Rt.
Rim Elev = 797.87
℄ 15" (NE) = 791.97
℄ 15" (SW) = 791.97

8:1 8:1

799.47
471+50.00 R 2
799.11

799.50
471+50.00 R 2
799.29

℄ 796.257

℄ 15" 791.46

798.97
471+00.00 R 2
798.64

799.00
471+00.00 R 2
798.79

℄ 795.757

℄ 15" 790.96

798.47
470+50.00 R 2
798.19

798.50
470+50.00 R 2
798.33

I.R.275 CROSS SECTIONS
STA 470+50.00 TO STA 471+50.00

CLE-275-5.35

557
857

SEEDING		END AREA		VOLUME	
END WIDTH	SQ. YDS.	CUT	FILL	CUT	FILL
36	200	55	14	100	31
36	200	53	20	104	56
36	200	59	41	101	92

CALCULATED AM

CHECKED JDB

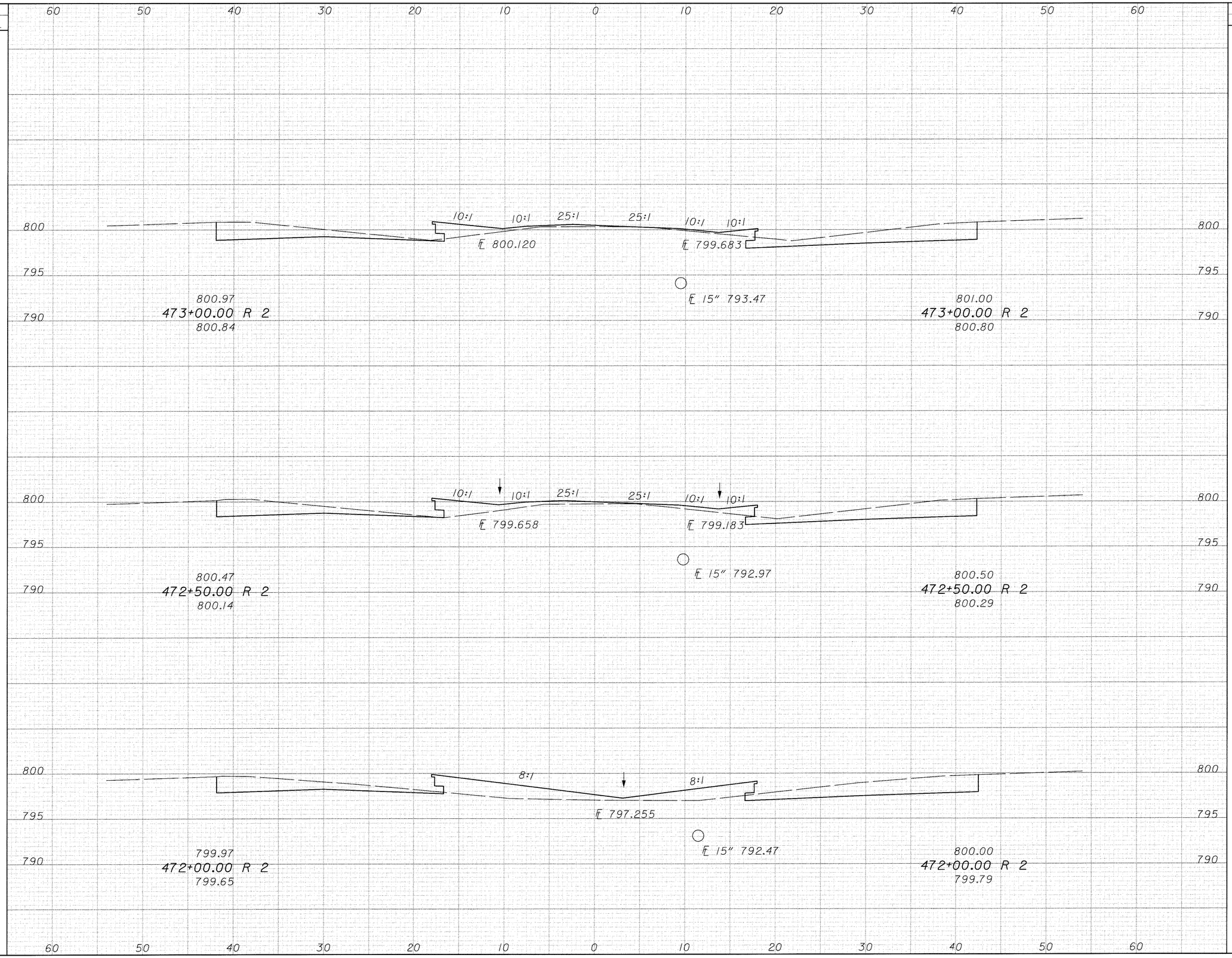

I.R.275 CROSS SECTIONS STA 472+00.00 TO STA 473+00.00

CLE-275-5.35

558
857

SEEDING END WIDTH	SEEDING SQ. YDS.	END AREA CUT	END AREA FILL	VOLUME CUT	VOLUME FILL
36		58	9		
	200			109	15
36		60	7		
	200			109	16
36		58	10		
	200			105	22

CALCULATED AM

CHECKED JOB

Prop. Manhole No. 3
Sta. 474+50.00, 10.87 Rt.
Rim Elev = 801.53
℄ 15" (NE) = 794.97
℄ 15" (SW) = 794.97

℄ 801.192

802.46
474+50.00 R 2
802.38

802.50
474+50.00 R 2
802.22

℄ 801.105

℄ 800.758

801.97
474+00.00 R 2
801.93

℄ 15" 794.47

802.00
474+00.00 R 2
801.78

℄ 800.526

℄ 800.187

801.47
473+50.00 R 2
801.39

℄ 15" 793.97

801.50
473+50.00 R 2
801.28

I.R.275 CROSS SECTIONS
STA 473+50.00 TO STA 474+50.00

CLE-275-5.35

559
857

SEEDING	
END WIDTH	SQ. YDS.
36	186
36	200

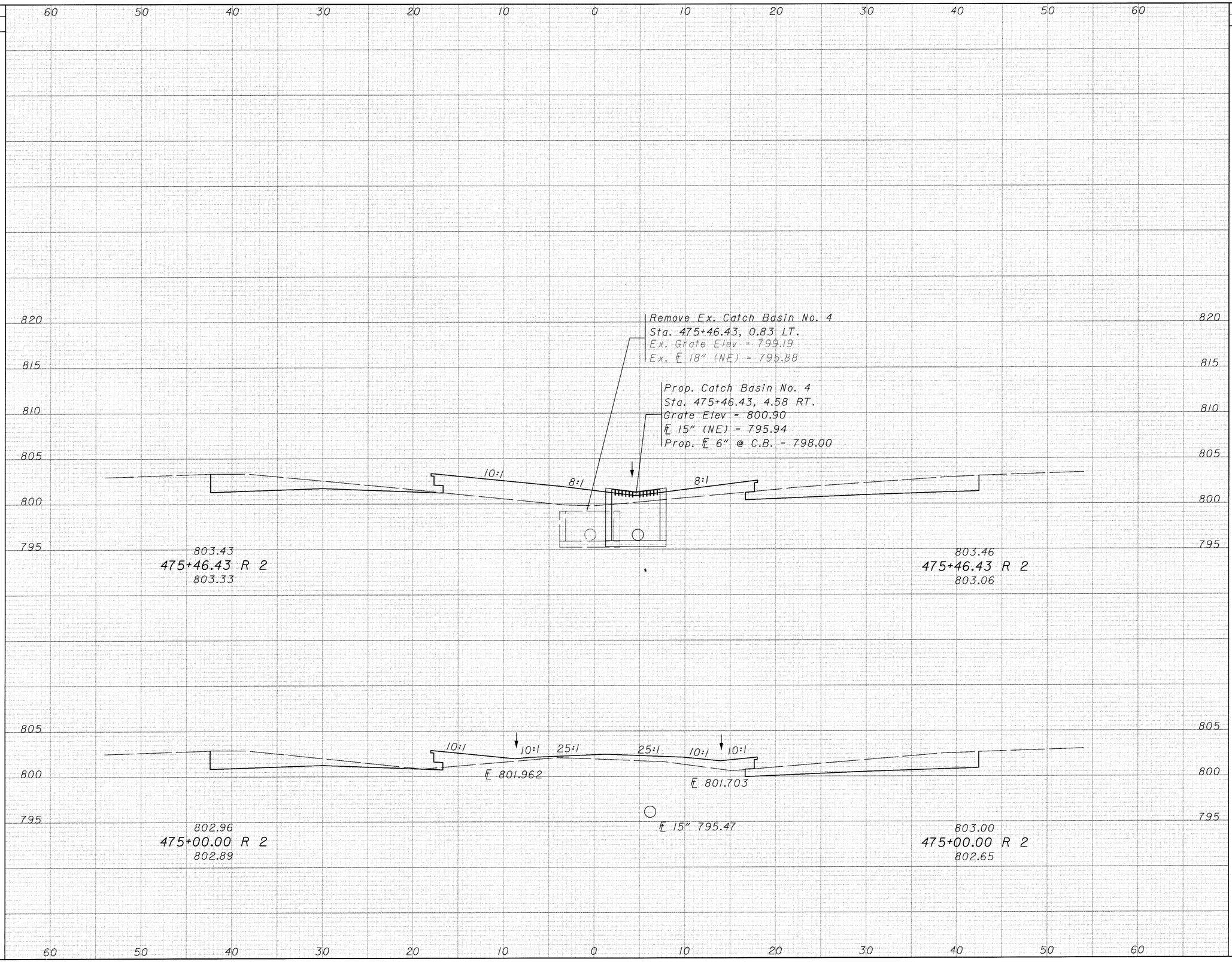

END AREA		VOLUME	
CUT	FILL	CUT	FILL
59	52		
		100	66
57	25		
		106	31

CALCULATED AM

CHECKED JSB

I.R.275 CROSS SECTIONS
STA 475+00.00 TO STA 475+46.43

CLE-275-5.35

560
857

SEEDING			END AREA		VOLUME	
END WIDTH	SQ. YDS.		CUT	FILL	CUT	FILL
36	200	477+00.00 R 2	42	70	81	128
36	200	476+50.00 R 2	45	68	85	120
36	214	476+00.00 R 2	47	62	105	113

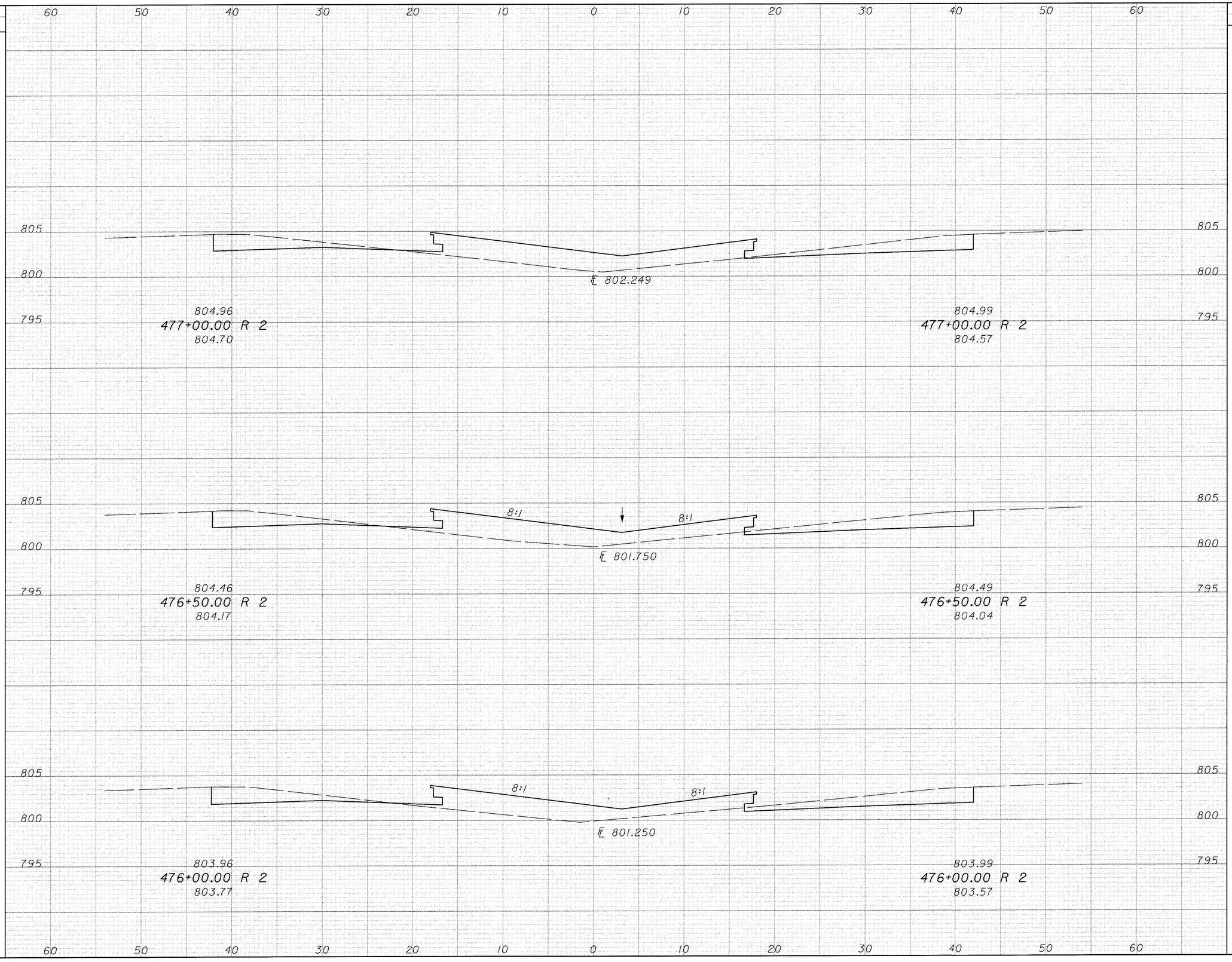

CALCULATED AM

CHECKED JSB

I.R.275 CROSS SECTIONS

STA 476+00.00 TO STA 477+00.00

CLE-275-5.35

561
857

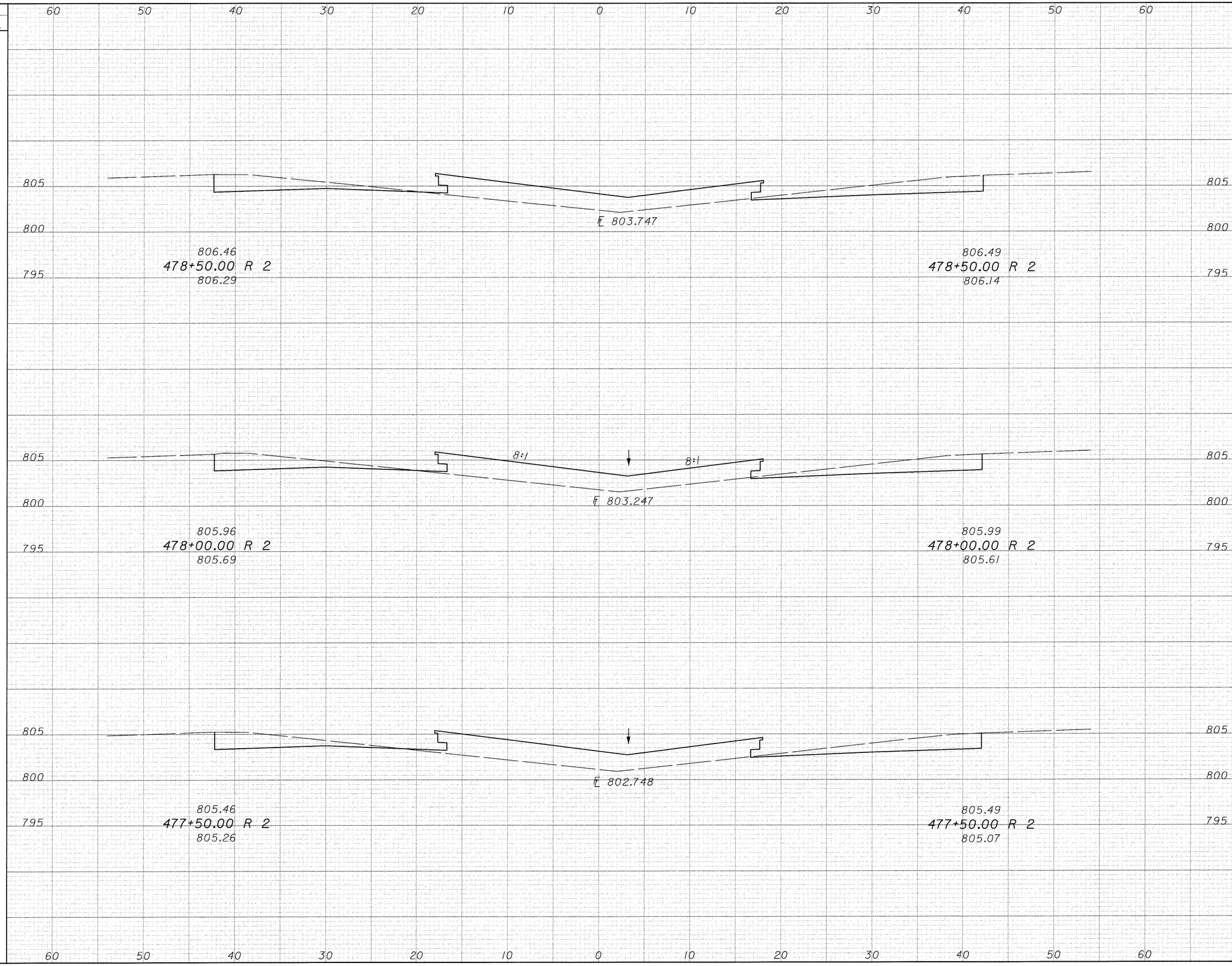

SEEDING END WIDTH	SEEDING SQ. YDS.	END AREA CUT	END AREA FILL	VOLUME CUT	VOLUME FILL
36		48	64		
	200			87	121
36		46	67		
	200			82	127
36		43	70		
	200			79	130

CALCULATED AM
CHECKED JGB

I.R.275 CROSS SECTIONS
STA 477+50.00 TO STA 478+50.00

CLE-275-5.35

562
857

SEEDING	
END WIDTH	SQ. YDS.
36	200
36	200
36	200

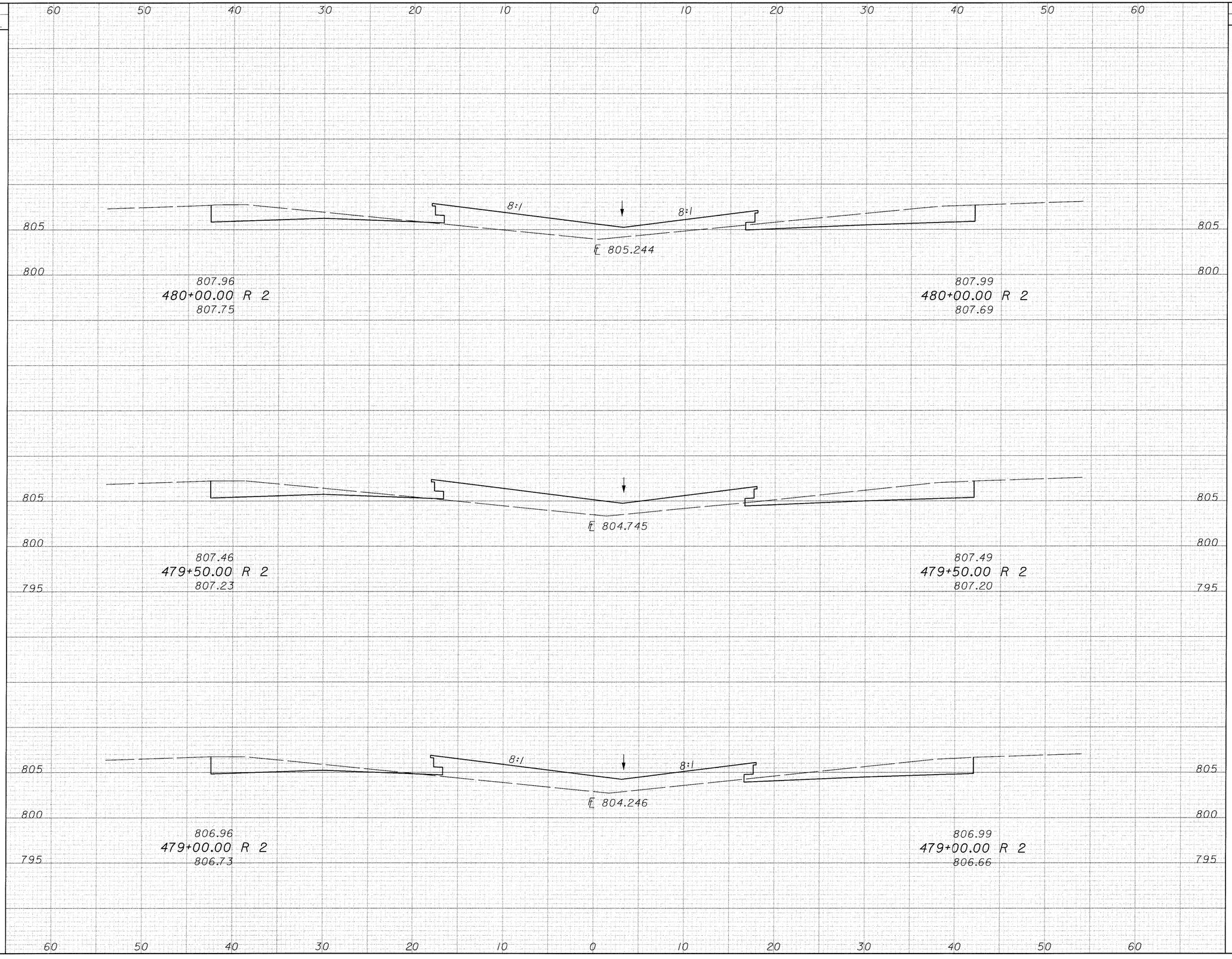

END AREA		VOLUME	
CUT	FILL	CUT	FILL
53	56		
51	58		
		96	106
49	61		
		93	110
		90	116

CALCULATED AM

CHECKED JOB

I.R.275 CROSS SECTIONS

STA 479+00.00 TO STA 480+00.00

CLE-275-5.35

563
857

SEEDING END WIDTH	SEEDING SQ. YDS.	END AREA CUT	END AREA FILL	VOLUME CUT	VOLUME FILL
36	200	51	63	98	111
36	200	55	57	100	105
36	200	53	56	98	104

60 50 40 30 20 10 0 10 20 30 40 50 60

810 805 800

℄ 806.742

809.46
481+50.00 R 2
809.27

809.48
481+50.00 R 2
809.38

8:1 8:1

℄ 806.243

808.96
481+00.00 R 2
808.72

808.99
481+00.00 R 2
808.86

℄ 805.744

808.46
480+50.00 R 2
808.23

808.49
480+50.00 R 2
808.30

CALCULATED AM

CHECKED JDB

I.R.275 CROSS SECTIONS
STA 480+50.00 TO STA 481+50.00

CLE-275-5.35

564
857

SEEDING END WIDTH	SEEDING SQ. YDS.	END AREA CUT	END AREA FILL	VOLUME CUT	VOLUME FILL
36	200	55	57	99	106
36	200	52	57	99	109
36	200	55	61	98	115

60 50 40 30 20 10 0 10 20 30 40 50 60

810
805
800

℄ 808.240

810.95
483+00.00 R 2
810.65

810.98
483+00.00 R 2
810.94

℄ 807.741

810.45
482+50.00 R 2
810.14

810.48
482+50.00 R 2
810.39

8:1 8:1

℄ 807.241

809.96
482+00.00 R 2
809.74

809.98
482+00.00 R 2
809.95

CALCULATED AM

CHECKED JDB

I.R.275 CROSS SECTIONS
STA 482+00.00 TO STA 483+00.00

CLE-275-5.35

545
857

SEEDING		END AREA		VOLUME	
END WIDTH	SQ. YDS.	CUT	FILL	CUT	FILL
36	200	58	45	105	90
36	200	55	52	101	99
36	200	54	55	101	104

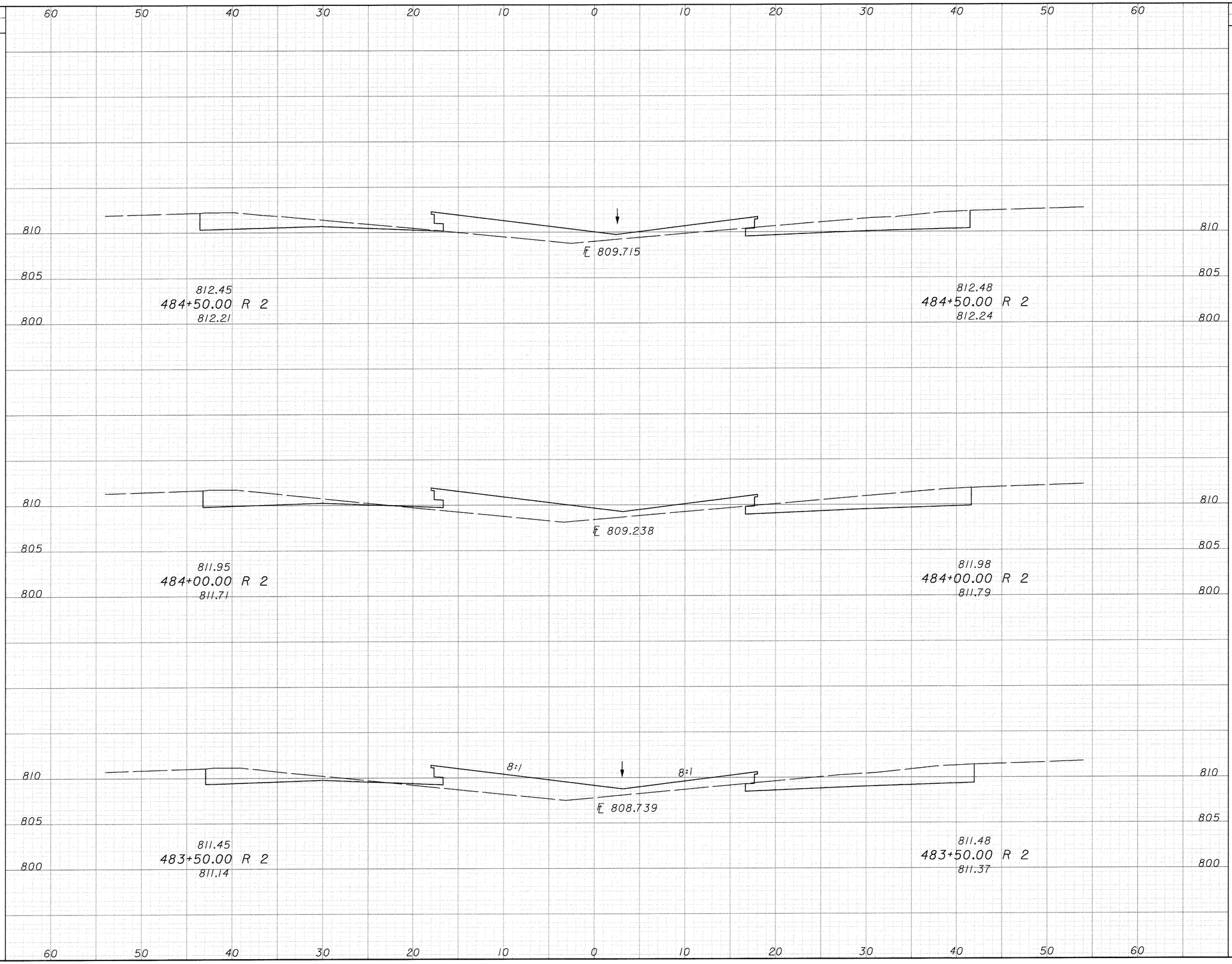

CALCULATED AM

CHECKED JGB

I.R.275 CROSS SECTIONS
STA 483+50.00 TO STA 484+50.00

CLE-275-5.35

546
857

SEEDING END WIDTH	SEEDING SQ. YDS.
36	197
36	200

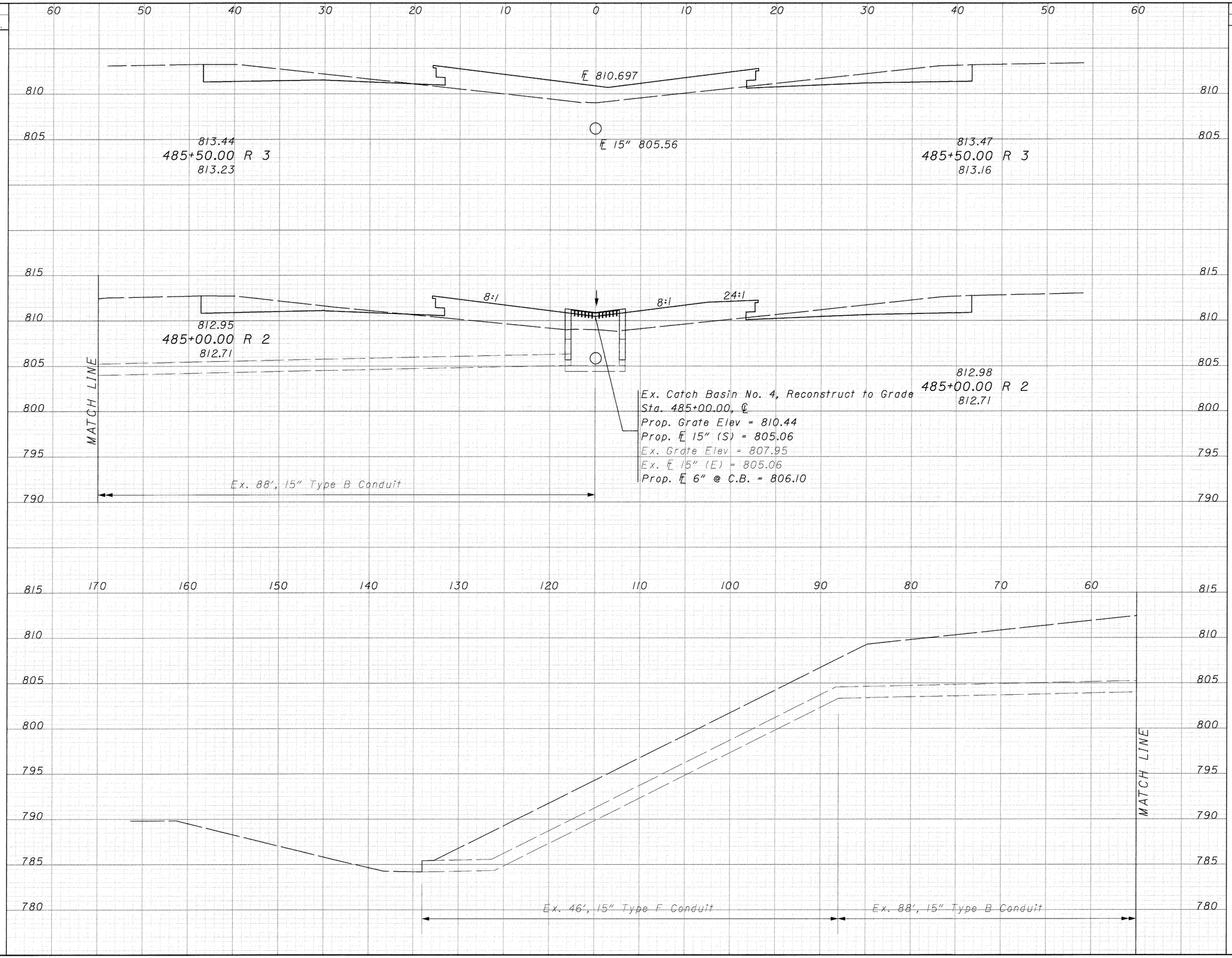

END AREA CUT	END AREA FILL	VOLUME CUT	VOLUME FILL
48	67		
		86	124
47	69		
		97	106

CALCULATED AM

CHECKED JDB

I.R.275 CROSS SECTIONS

STA 485+00.00 TO STA 485+50.00

CLE-275-5.35

567
857

SEEDING		END AREA		VOLUME		CALCULATED	CHECKED
END WIDTH	SQ. YDS.	CUT	FILL	CUT	FILL	AM	JAB
36	200	47	64				
36	200	49	65				
36	200	48	68				
				89	119		
				90	123		
				89	125		

60 50 40 30 20 10 0 10 20 30 40 50 60

815 / 810 / 805

℄ 812.087

℄ 15" 807.06

814.94
487+00.00 R 3
814.75

814.97
487+00.00 R 3
814.49

℄ 811.624

℄ 15" 806.56

814.44
486+50.00 R 3
814.27

814.47
486+50.00 R 3
814.04

8:1 8:1

℄ 811.160

℄ 15" 806.06

813.94
486+00.00 R 3
813.82

813.97
486+00.00 R 3
813.53

I.R.275 CROSS SECTIONS
STA 486+00.00 TO STA 487+00.00

CLE-275-5.35

568
857

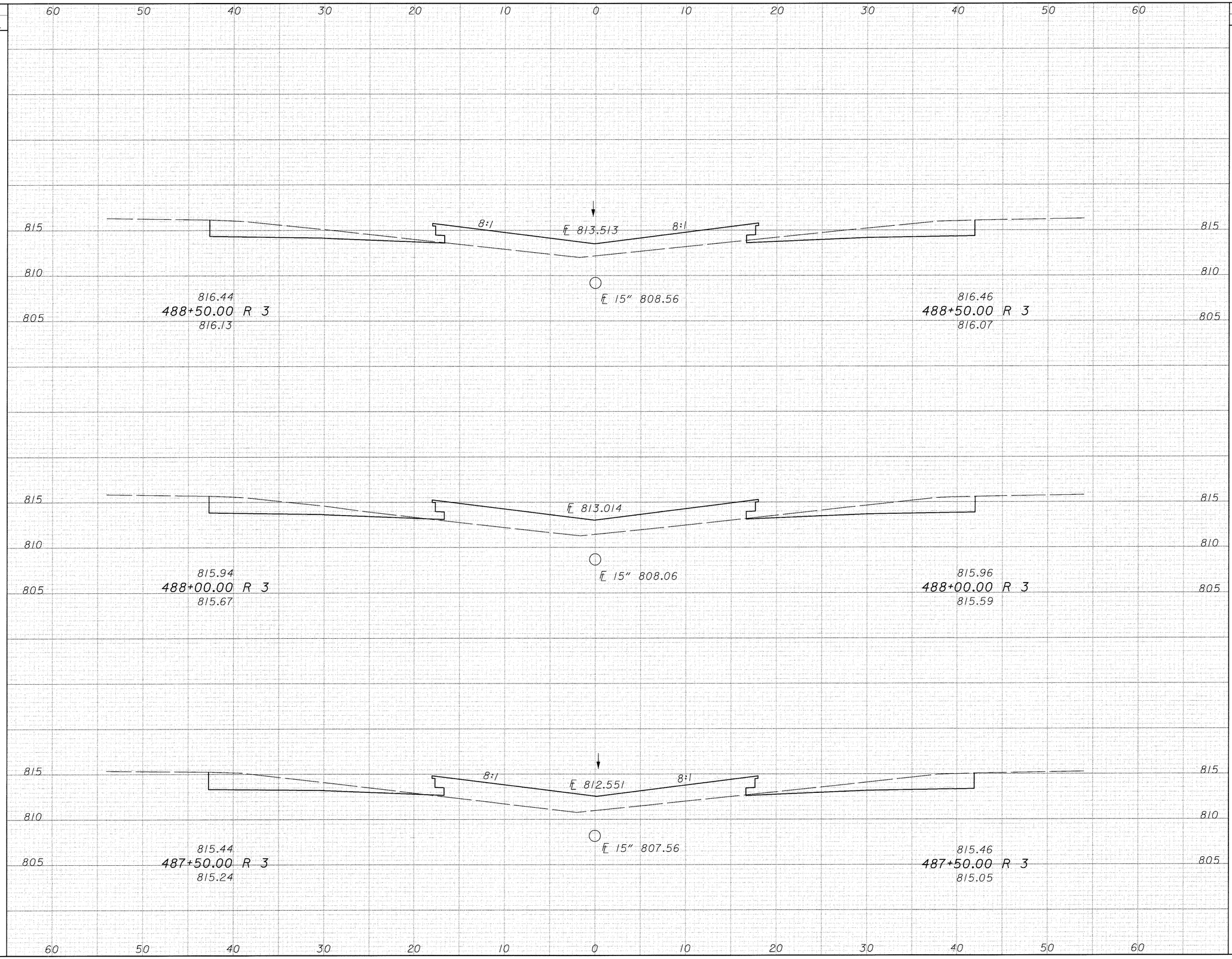

SEEDING END WIDTH	SEEDING SQ. YDS.	END AREA CUT	END AREA FILL	VOLUME CUT	VOLUME FILL
36		51	58		
	200			92	115
36		48	66		
	200			88	122
36		47	66		
	200			87	120

CALCULATED AM
CHECKED JGB

I.R.275 CROSS SECTIONS
STA 487+50.00 TO STA 488+50.00

CLE-275-5.35

SEEDING END WIDTH	SEEDING SQ. YDS.	END AREA CUT	END AREA FILL	VOLUME CUT	VOLUME FILL
36	200	57	50	102	94
36	200	53	52	96	98
36	200	51	54	94	104

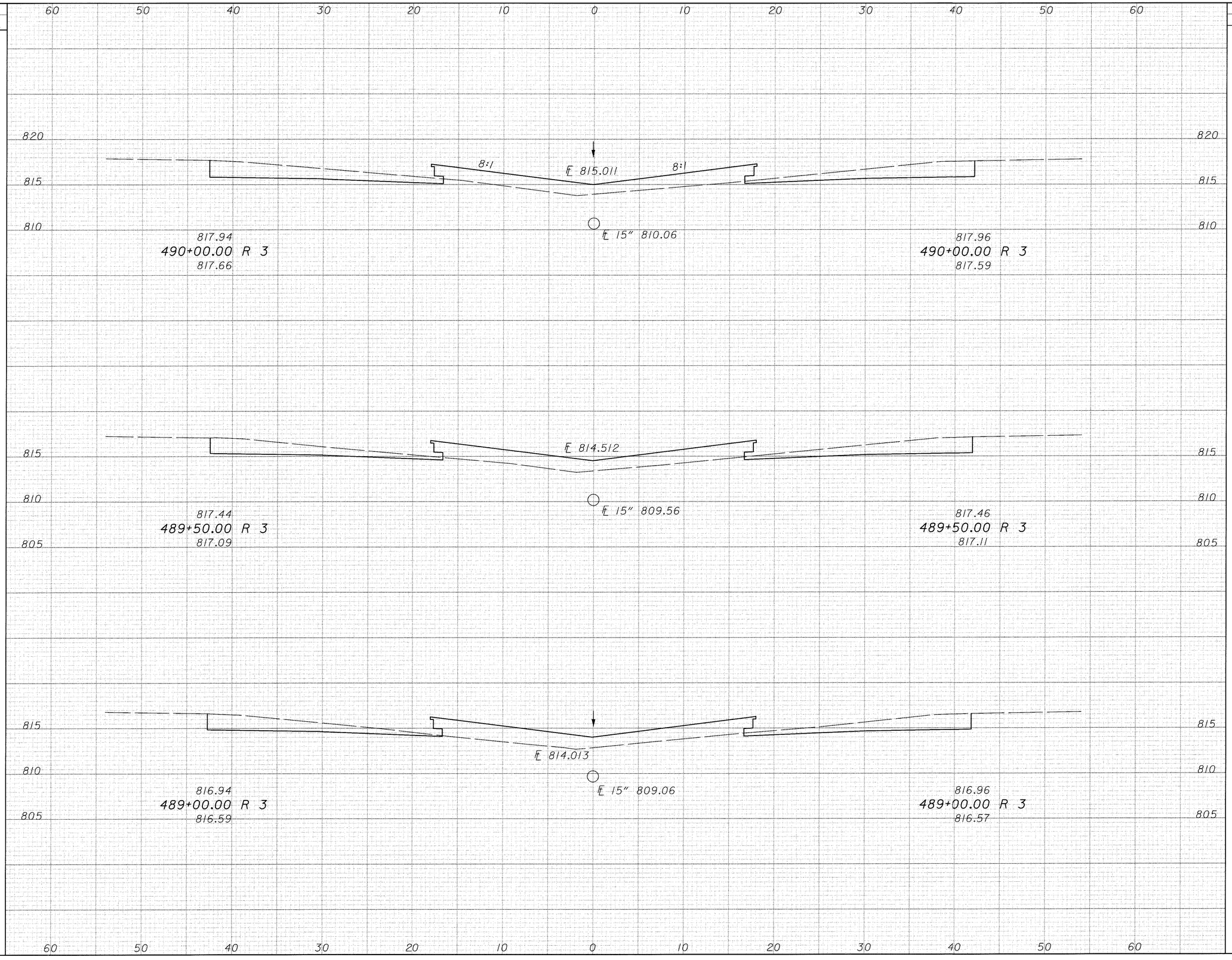

CALCULATED AM

CHECKED JDB

I.R.275 CROSS SECTIONS
STA 489+00.00 TO STA 490+00.00

CLE-275-5.35

570
857

SEEDING END WIDTH	SEEDING SQ. YDS.	END AREA CUT	END AREA FILL	VOLUME CUT	VOLUME FILL
36	200	53	55	101	97
36	200	56	50	104	92
36	200	56	49	105	92

60 50 40 30 20 10 0 10 20 30 40 50 60

820 815 810

8:1 ℄ 816.509 8:1

℄ 15" 811.56

819.44
491+50.00 R 3
819.16

819.46
491+50.00 R 3
819.14

820 815 810

℄ 816.010

℄ 15" 811.06

818.94
491+00.00 R 3
818.65

818.96
491+00.00 R 3
818.65

820 815 810

℄ 815.510

℄ 15" 810.56

818.44
490+50.00 R 3
818.16

818.46
490+50.00 R 3
818.07

60 50 40 30 20 10 0 10 20 30 40 50 60

CALCULATED AM

CHECKED JOB

I.R.275 CROSS SECTIONS
STA 490+50.00 TO STA 491+50.00

CLE-275-5.35

571
857

SEEDING	
END WIDTH	SQ. YDS.
36	200
36	200
36	200

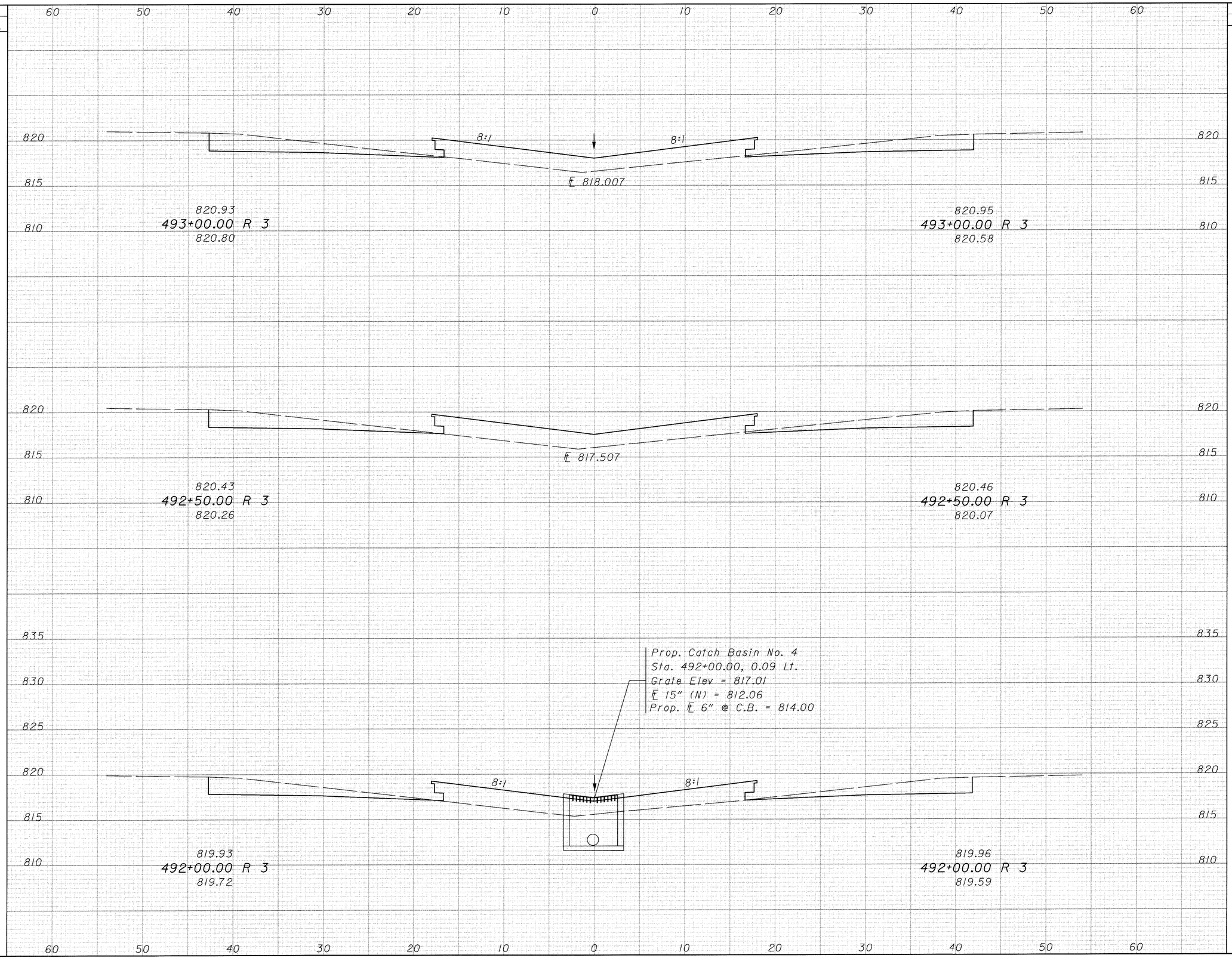

END AREA		VOLUME	
CUT	FILL	CUT	FILL
51	60		
		94	113
50	62		
		91	117
48	64		
		94	110

CALCULATED AM

CHECKED JDB

I.R.275 CROSS SECTIONS
STA 492+00.00 TO STA 493+00.00

CLE-275-5.35

572
857

SEEDING END WIDTH	SEEDING SQ. YDS.
36	111
36	200
36	200

60 50 40 30 20 10 0 10 20 30 40 50 60

Prop. Manhole No. 3
Sta. 494+27.76, 9.92 Rt.
Rim Elev = 820.47
℄ Prop. 27" (S) = 813.92
℄ 30" (W) = 813.74
℄ 36" (E) = 813.17

Remove Existing Junction Chamber
Rim Elev = 820.39

8:1 8:1

Ex. 36" Conduit ℄ 819.282

Ex. 30" Conduit

822.21
494+27.76 R 3
822.03

822.23
494+27.76 R 3
821.81

Masonry Collar per DM-1.1M

Masonry Collar per DM-1.1M

603, 10' x 36" Conduit, Type B

603, 24.00' x 30" Conduit, Type B

Remove 24.97' of Ex. 36" Conduit

Remove 9.03' of Ex. 30" Conduit

8:1 8:1

℄ 819.005

821.93
494+00.00 R 3
821.73

821.95
494+00.00 R 3
821.52

℄ 818.506

821.43
493+50.00 R 3
821.25

821.45
493+50.00 R 3
821.07

835 830 825 820 815 810

60 50 40 30 20 10 0 10 20 30 40 50 60

END AREA CUT	END AREA FILL	VOLUME CUT	VOLUME FILL
55	50		
		56	52
54	51		
		99	100
53	57		
		96	108

CALCULATED AM

CHECKED JDB

I.R.275 CROSS SECTIONS STA 493+50.00 TO STA 494+27.76

CLE-275-5.35

573
857

SEEDING END WIDTH	SEEDING SQ. YDS.	END AREA CUT	END AREA FILL	VOLUME CUT	VOLUME FILL
36	200	55	51	103	93
36	200	56	49	105	92
36	89	57	50	46	41

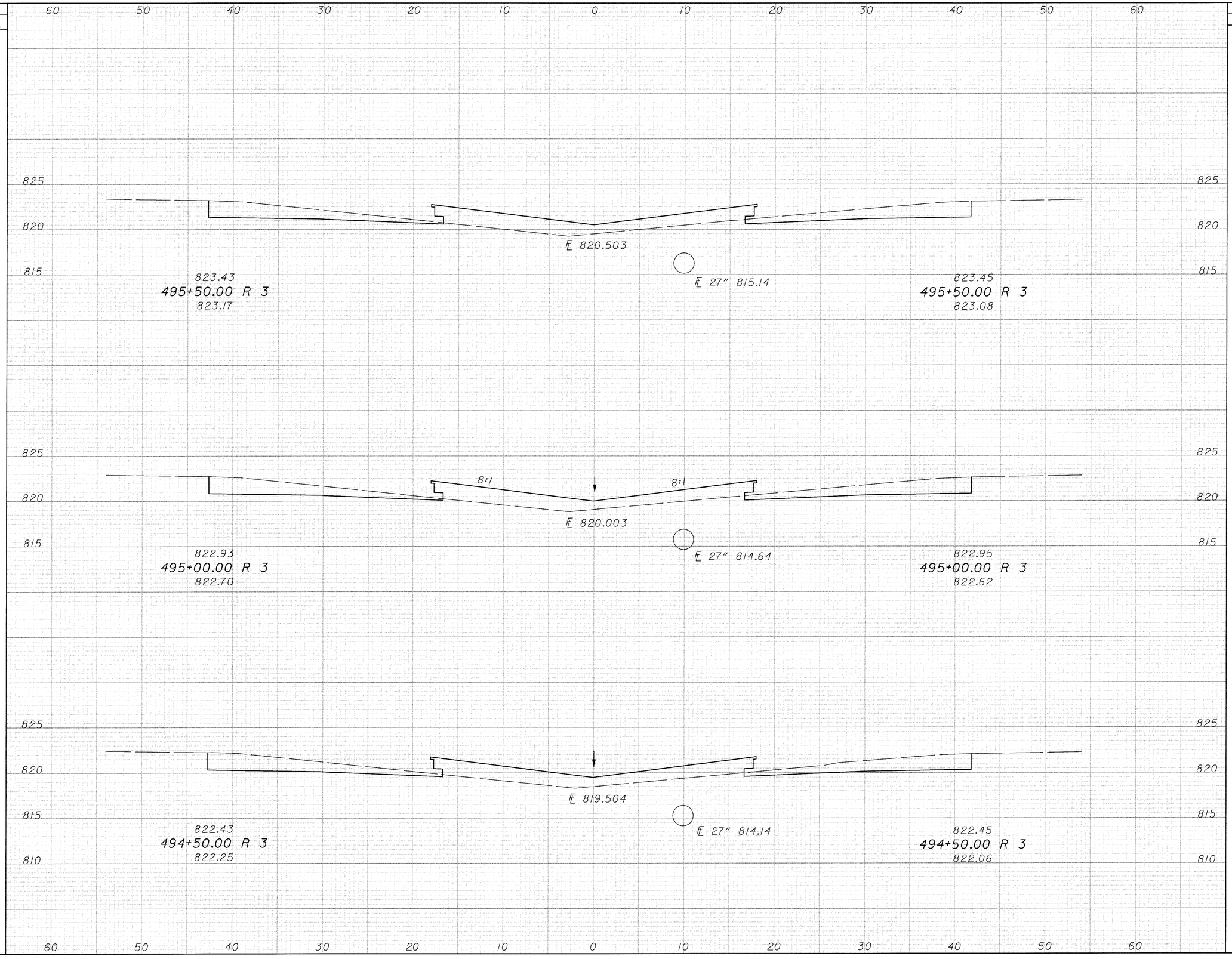

CALCULATED AM

CHECKED JDB

I.R.275 CROSS SECTIONS
STA 494+50.00 TO STA 495+50.00

CLE-275-5.35

574
857

SEEDING END WIDTH	SEEDING SQ. YDS.	END AREA CUT	END AREA FILL	VOLUME CUT	VOLUME FILL
36	200	53	57	94	108
36	200	49	60	92	109
36	200	50	58	97	101

60 50 40 30 20 10 0 10 20 30 40 50 60

825 820 815

8:1 8:1

℄ 822.000

824.93
497+00.00 R 3
824.70

℄ 27" 816.63

824.95
497+00.00 R 3
824.60

℄ 821.501

824.43
496+50.00 R 3
824.17

℄ 27" 816.14

824.45
496+50.00 R 3
824.09

8:1 8:1

℄ 821.002

823.93
496+00.00 R 3
823.65

℄ 27" 815.64

823.95
496+00.00 R 3
823.58

CALCULATED AM

CHECKED JSB

I.R.275 CROSS SECTIONS
STA 496+00.00 TO STA 497+00.00

CLE-275-5.35

575
857

SEEDING END WIDTH	SEEDING SQ. YDS.	END AREA CUT	END AREA FILL	VOLUME CUT	VOLUME FILL
36	200	55	54	100	101
36	25	53	55	12	13
36	175	51	56	84	91

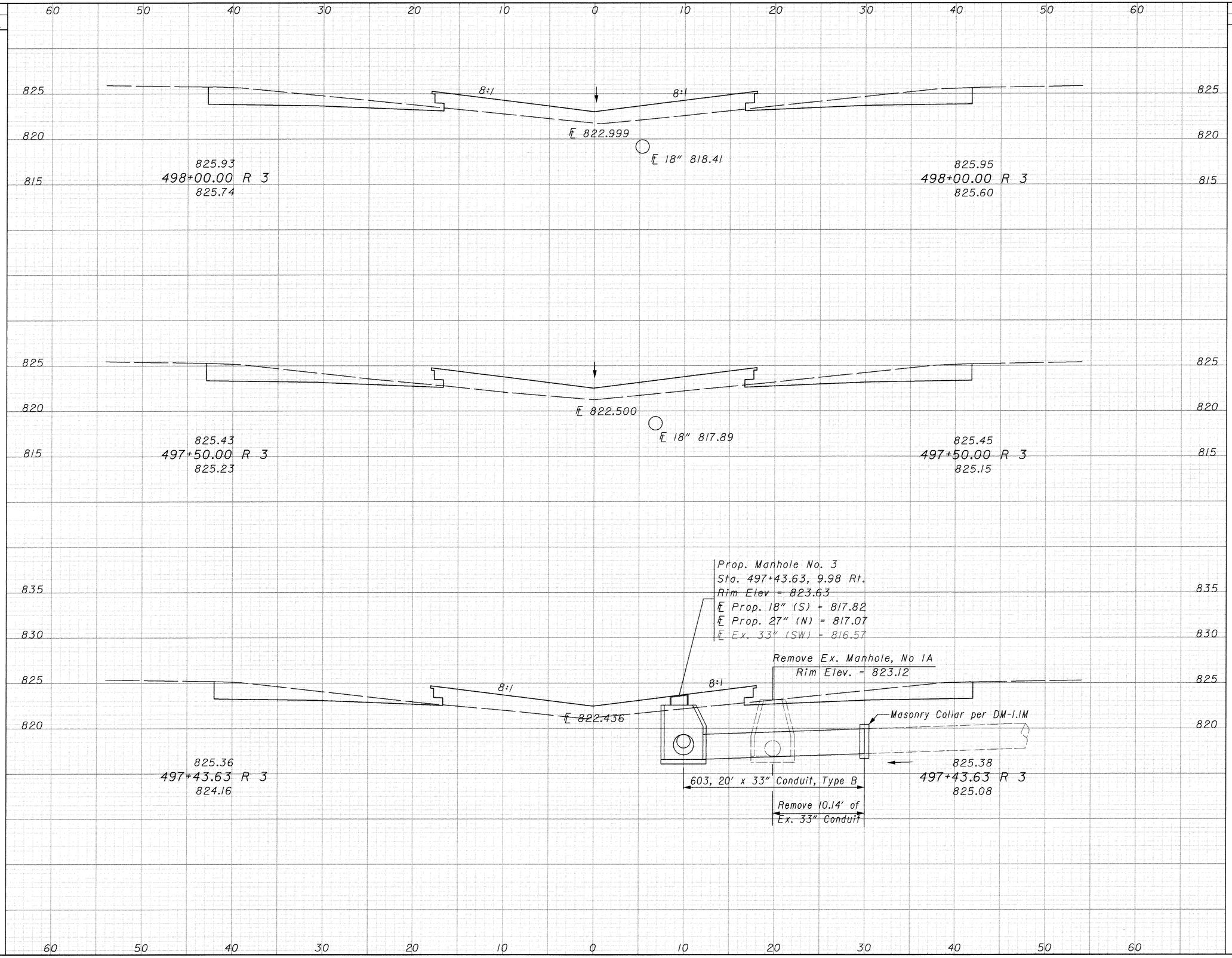

CALCULATED AM

CHECKED JGB

I.R.275 CROSS SECTIONS STA 497+43.63 TO STA 498+00.00

CLE-275-5.35

576
857

SEEDING	
END WIDTH	SQ. YDS.
36	198
36	202
36	200

60 50 40 30 20 10 0 10 20 30 40 50 60

825
820
815
845
840
835
830

℄ 824.497

℄ 18" 819.96

827.43
499+50.00 R 3
827.16

827.44
499+50.00 R 3
827.18

Ex. Catch Basin No. 4, Reconstruct to Grade
Sta. 499+00.58, ℄
Prop. Grate Elev = 824.00
Prop. ℄ 18" (S) = 819.46
Prop. ℄ 18" (NW) = 819.46
Ex. Grate Elev = 822.32
Ex. ℄ 21" (NW) = 818.90
Ex. ℄ 6" (E) = 819.57
Ex. ℄ 6" (W) = 819.34
Prop. ℄ 6" @ C.B. = 821.38

8:1

8:1

826.93
499+00.58 R 3
826.66

826.95
499+00.58 R 3
826.63

℄ 823.498

℄ 18" 818.93

826.43
498+50.00 R 3
826.16

826.44
498+50.00 R 3
826.02

END AREA		VOLUME	
CUT	FILL	CUT	FILL
53	56		
		98	103
54	57		
		96	107
49	57		
		96	103

CALCULATED AM

CHECKED JOB

I.R.275 CROSS SECTIONS
STA 498+50.00 TO STA 499+50.00

CLE-275-5.35

577
857

SEEDING		END AREA		VOLUME	
END WIDTH	SQ. YDS.	CUT	FILL	CUT	FILL
36	200	53	56	96	105
36	200	51	57	96	104
36	200	53	55	98	103

CALCULATED AM

CHECKED JDB

60 50 40 30 20 10 0 10 20 30 40 50 60

825
820

828.92
501+00.00 R 3
828.69

℄ 825.994
℄ 18" 821.46

828.94
501+00.00 R 3
828.58

825
820

828.42
500+50.00 R 3
828.13

℄ 825.495
℄ 18" 820.96

828.44
500+50.00 R 3
828.13

830
825
820

8:1
8:1

827.93
500+00.00 R 3
827.65

℄ 824.996
℄ 18" 820.46

827.94
500+00.00 R 3
827.65

60 50 40 30 20 10 0 10 20 30 40 50 60

I.R.275 CROSS SECTIONS
STA 500+00.00 TO STA 501+00.00

CLE-275-5.35

578
857

SEEDING		END AREA		VOLUME	
END WIDTH	SQ. YDS.	CUT	FILL	CUT	FILL
36	200	51	55	96	102
36	200	53	55	96	102
36	200	51	55	96	103

CALCULATED AM

CHECKED JDB

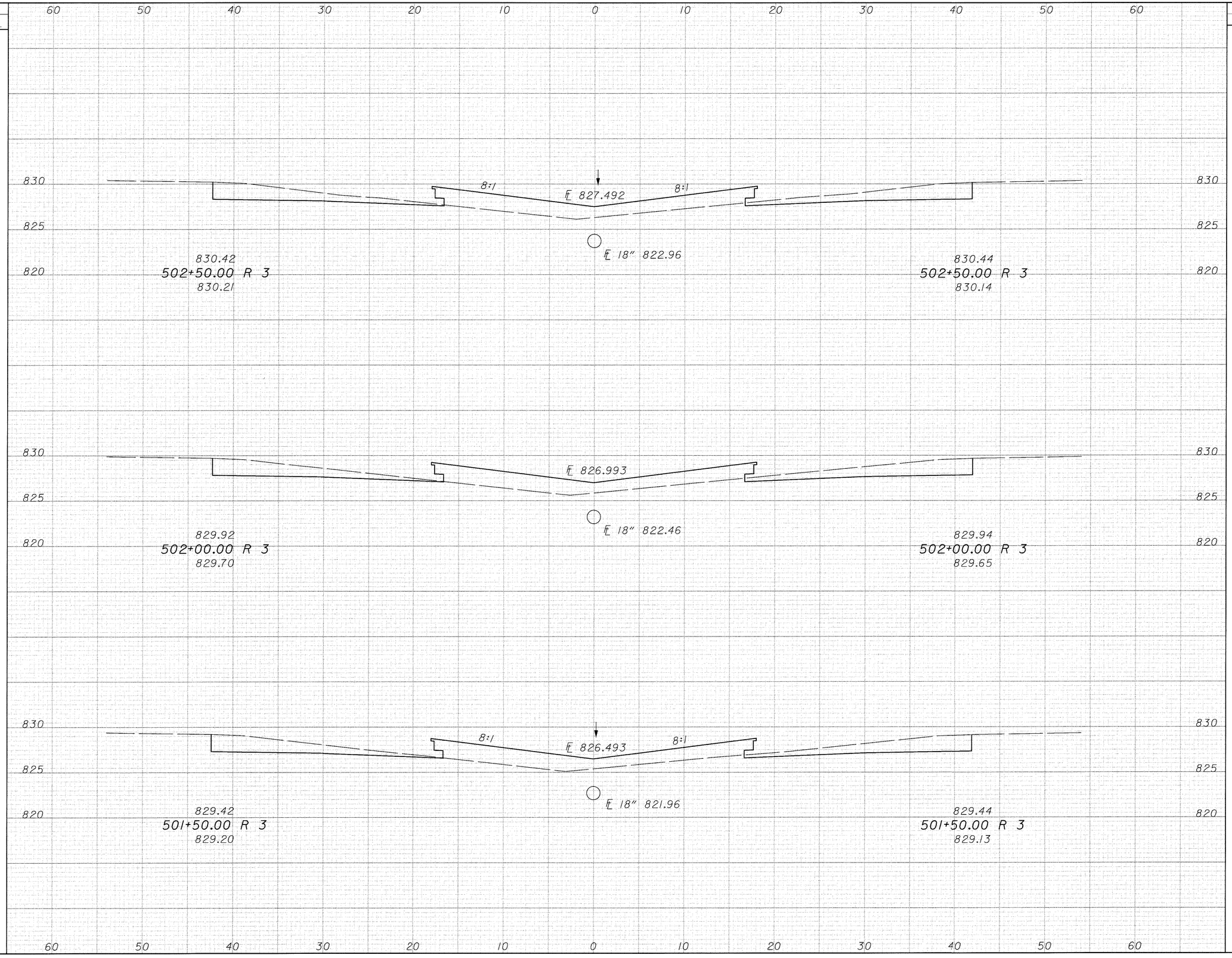

I.R.275 CROSS SECTIONS

STA 501+50.00 TO STA 502+50.00

CLE-275-5.35

579
857

SEEDING		END AREA		VOLUME	
END WIDTH	SQ. YDS.	CUT	FILL	CUT	FILL
36	200	52	60	96	110
36	200	52	59	99	106
36	200	55	56	98	103

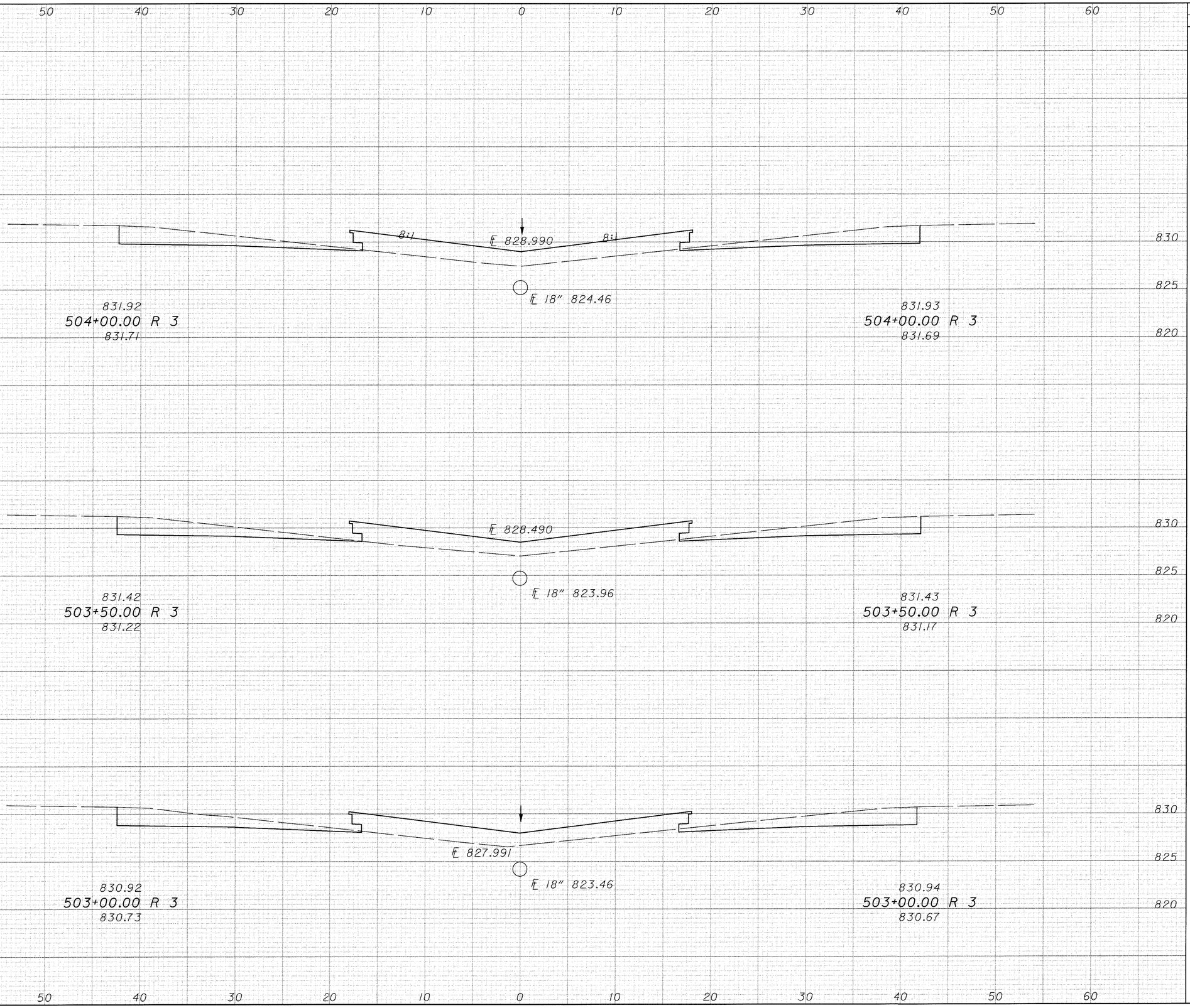

CALCULATED AM

CHECKED JDB

I.R.275 CROSS SECTIONS
STA 503+00.00 TO STA 504+00.00

CLE-275-5.35

580
857

SEEDING		END AREA		VOLUME	
END WIDTH	SQ. YDS.	CUT	FILL	CUT	FILL
36	200	50	60	93	113
36	200	50	62	93	115
36	200	50	62	94	113

CALCULATED AM

CHECKED JDB

I.R.275 CROSS SECTIONS
STA 504+50.00 TO STA 505+50.00

CLE-275-5.35

581
857

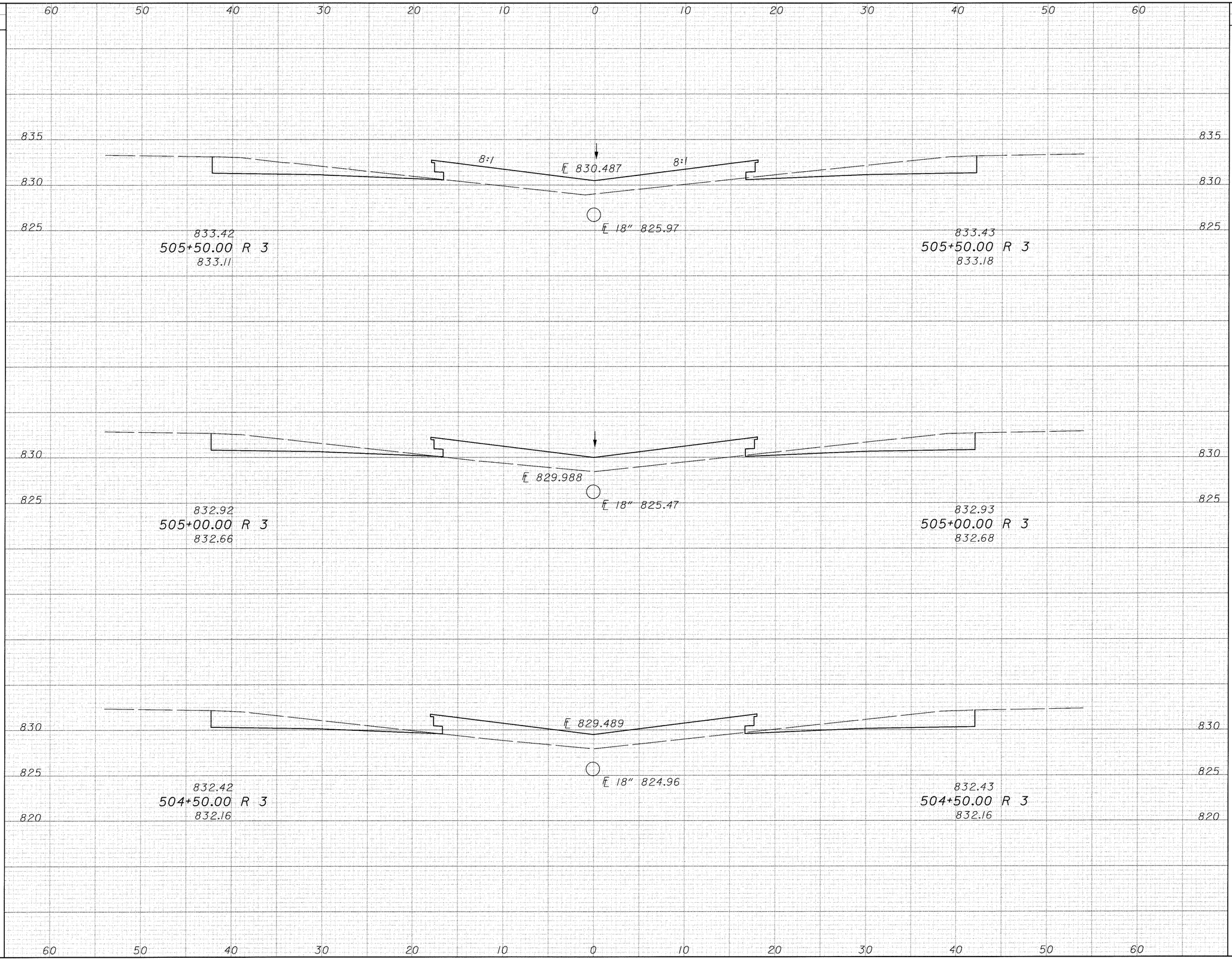

SEEDING END WIDTH	SEEDING SQ. YDS.	END AREA CUT	END AREA FILL	VOLUME CUT	VOLUME FILL
36	200	52	61	97	112
36	200	53	60	95	110
36	200	50	59	93	110

CALCULATED AM

CHECKED JAB

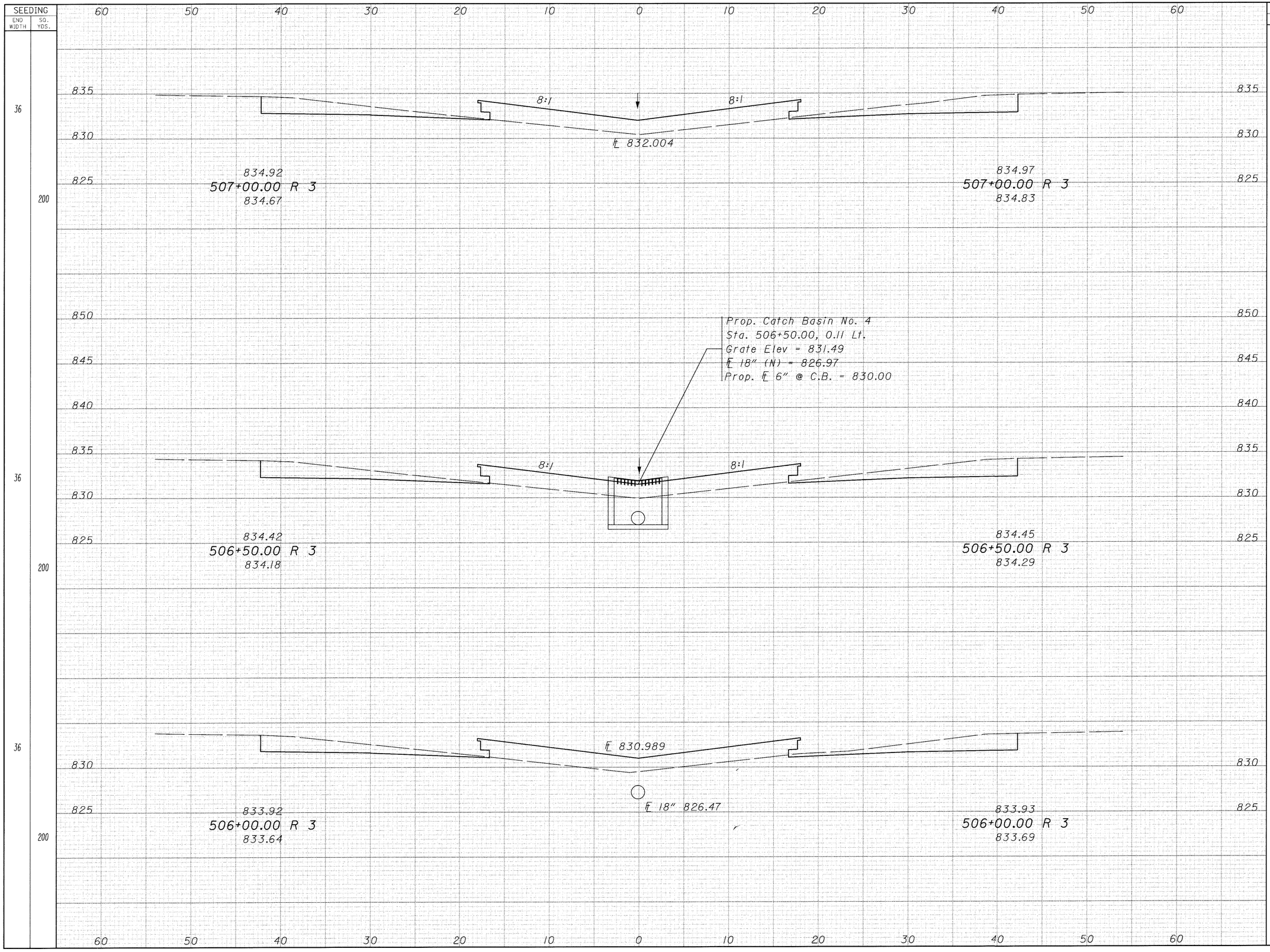

I.R.275 CROSS SECTIONS
STA 506+00.00 TO STA 507+00.00

CLE-275-5.35

582
857

SEEDING END WIDTH	SEEDING SQ. YDS.	END AREA CUT	END AREA FILL	VOLUME CUT	VOLUME FILL
36	200	53	58	97	109
36	200	52	60	98	112
36	200	54	61	98	113

60 50 40 30 20 10 0 10 20 30 40 50 60

835 830 825

℄ 833.596

836.49
508+50.00 R 3
836.24

836.58
508+50.00 R 3
836.37

8:1 8:1

℄ 833.054

835.95
508+00.00 R 3
835.65

836.03
508+00.00 R 3
835.81

8:1 8:1

℄ 832.523

835.43
507+50.00 R 3
835.16

835.49
507+50.00 R 3
835.35

CALCULATED AM

CHECKED JDB

I.R.275 CROSS SECTIONS
STA 507+50.00 TO STA 508+50.00

CLE-275-5.35

583
857

SEEDING	
END WIDTH	SQ. YDS.
36	200
36	200
36	200

60 50 40 30 20 10 0 10 20 30 40 50 60

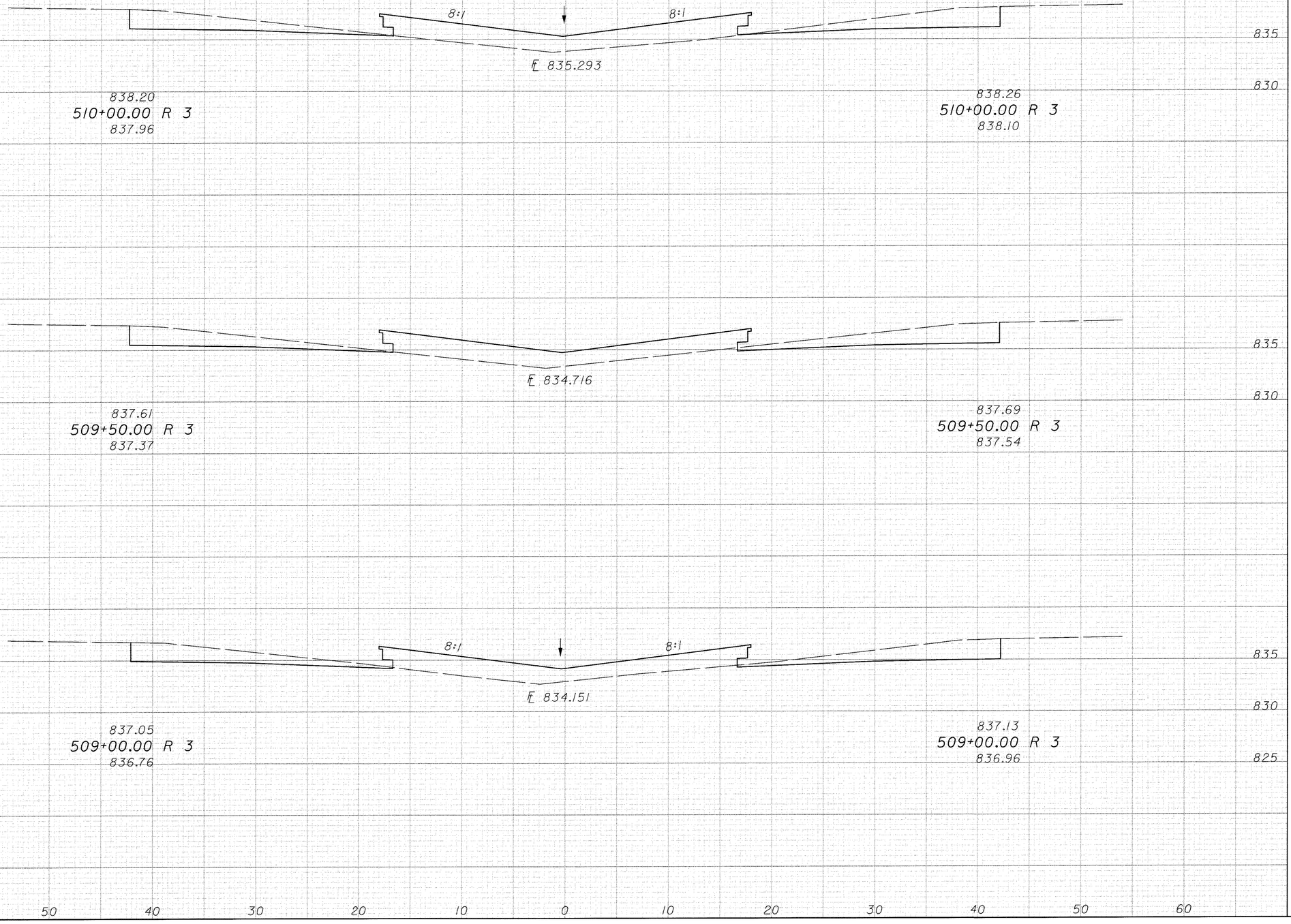

END AREA		VOLUME	
CUT	FILL	CUT	FILL
51	63		
55	58	98	112
54	58	101	107
		99	107

CALCULATED AM

CHECKED JSB

I.R.275 CROSS SECTIONS

STA 509+00.00 TO STA 510+00.00

CLE-275-5.35

584
857

SEEDING END WIDTH	SEEDING SQ. YDS.	END AREA CUT	END AREA FILL	VOLUME CUT	VOLUME FILL
36	200	54	55	98	104
36	200	52	57	99	106
36	200	55	57	98	111

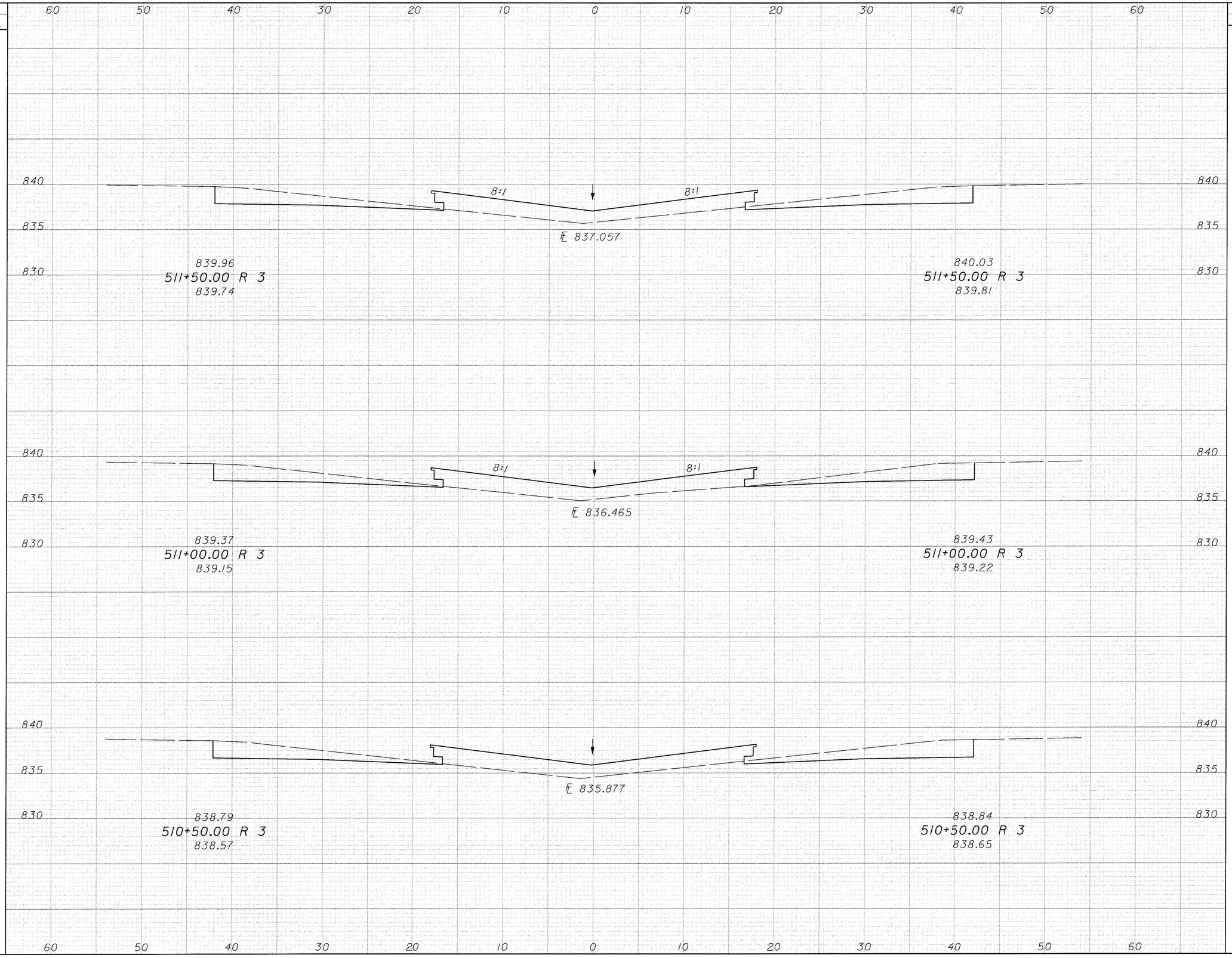

CALCULATED AM

CHECKED JOB

I.R.275 CROSS SECTIONS STA 510+50.00 TO STA 511+50.00

CLE-275-5.35

585
857

SEEDING END WIDTH	SEEDING SQ. YDS.	END AREA CUT	END AREA FILL	VOLUME CUT	VOLUME FILL
36	200	64	43	112	87
36	200	57	51	103	98
36	200	54	55	100	102

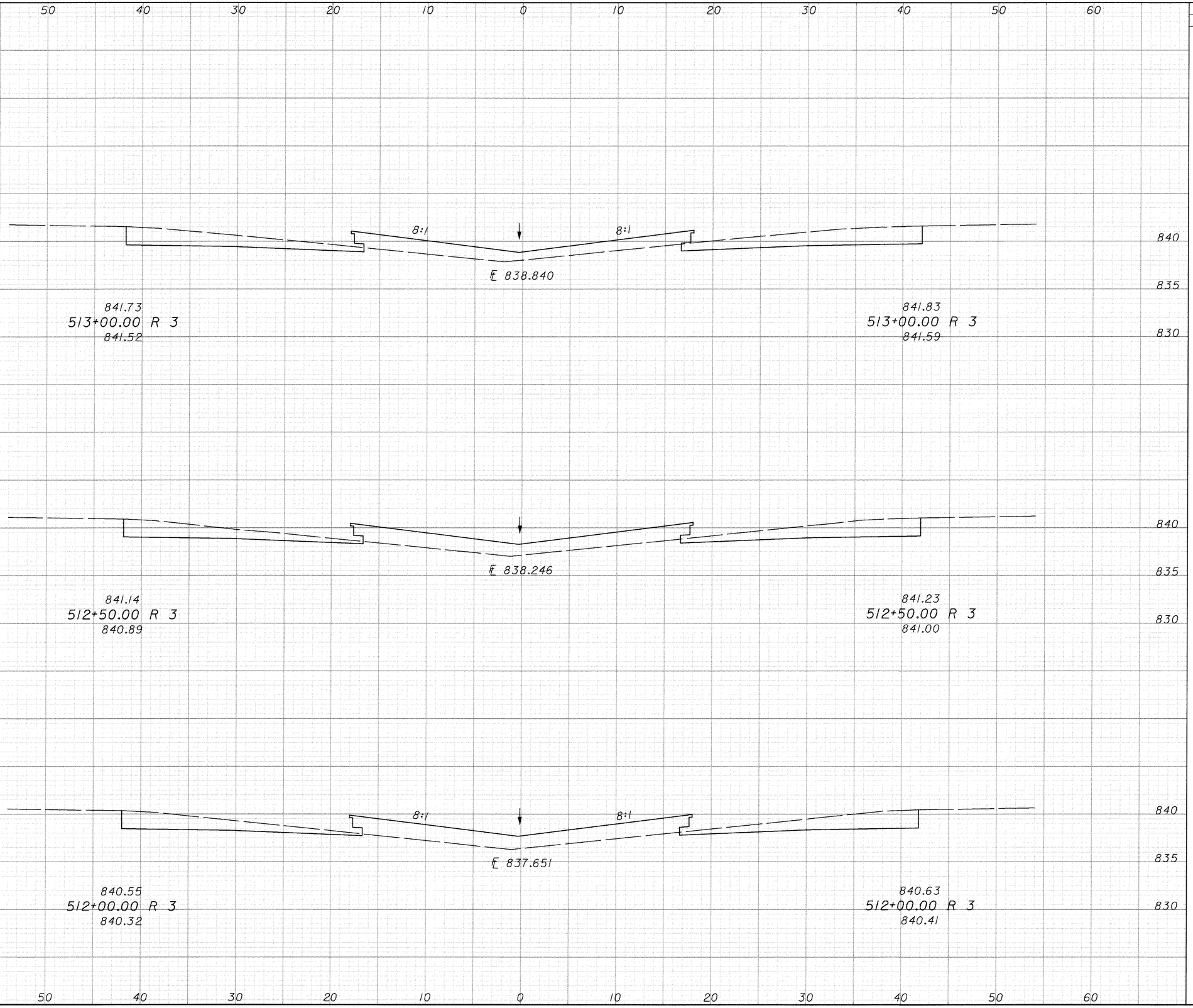

CALCULATED AM

CHECKED JOB

I.R.275 CROSS SECTIONS
STA 512+00.00 TO STA 513+00.00

CLE-275-5.35

586
857

SEEDING END WIDTH	SEEDING SQ. YDS.
36	202
36	200
36	200

60 50 40 30 20 10 0 10 20 30 40 50 60

855 850 845 840 835

Prop. Manhole No. 3
Sta. 514+50.58, 4.00 RT.
Rim Elev = 841.13
Prop. ℄ 15" (SE) = 833.84
Prop. ℄ 15" (N) = 833.84

Remove Ex. Catch Basin No. 4
Sta. 514+50.58, 4.00 RT.
Ex. Grate Elev = 838.91
Ex. ℄ 15" (N) = 833.84

8:1 8:1

℄ 840.629

843.50
514+50.58 R 3
843.27

843.63
514+50.58 R 3
843.35

845 840 835

8:1 8:1

℄ 840.028

842.91
514+00.00 R 3
842.58

843.03
514+00.00 R 3
842.62

845 840 835 830

℄ 839.434

842.32
513+50.00 R 3
842.04

842.43
513+50.00 R 3
842.08

60 50 40 30 20 10 0 10 20 30 40 50 60

END AREA CUT	END AREA FILL	VOLUME CUT	VOLUME FILL
57	57	129	60
81	7	131	31
60	27	115	65

CALCULATED AM

CHECKED JRB

I.R.275 CROSS SECTIONS
STA 513+50.00 TO STA 514+50.58

CLE-275-5.35

587
857

SEEDING END WIDTH	SEEDING SQ. YDS.	END AREA CUT	END AREA FILL	VOLUME CUT	VOLUME FILL
36	189	55	57	99	101
32	183	52	52	100	102
34	192	56	58	103	105

CALCULATED AM

CHECKED JSB

60 50 40 30 20 10 0 10 20 30 40 50 60

845.33
516+00.00 R 3
845.05

℄ 842.441

℄ 15" 835.64

845.43
516+00.00 R 3
845.27

Prop. Catch Basin No. 4
Sta. 515+50.00, 0.43 LT.
Grate Elev = 841.84
℄ 15" (SW) = 835.04
℄ 15" (NE) = 835.04
Prop. ℄ 6" @ C.B. = 839.00

844.72
515+50.00 R 3
844.44

844.83
515+50.00 R 3
844.54

℄ 841.315

844.11
515+00.00 R 3
843.85

℄ 15" 834.44

844.23
515+00.00 R 3
843.92

I.R.275 CROSS SECTIONS
STA 515+00.00 TO STA 516+00.00

CLE-275-5.35

588
857

SEEDING END WIDTH	SEEDING SQ. YDS.	END AREA CUT	END AREA FILL	VOLUME CUT	VOLUME FILL
36	202	53	58	99	110
36	200	53	60	97	113
36	200	52	62	99	110

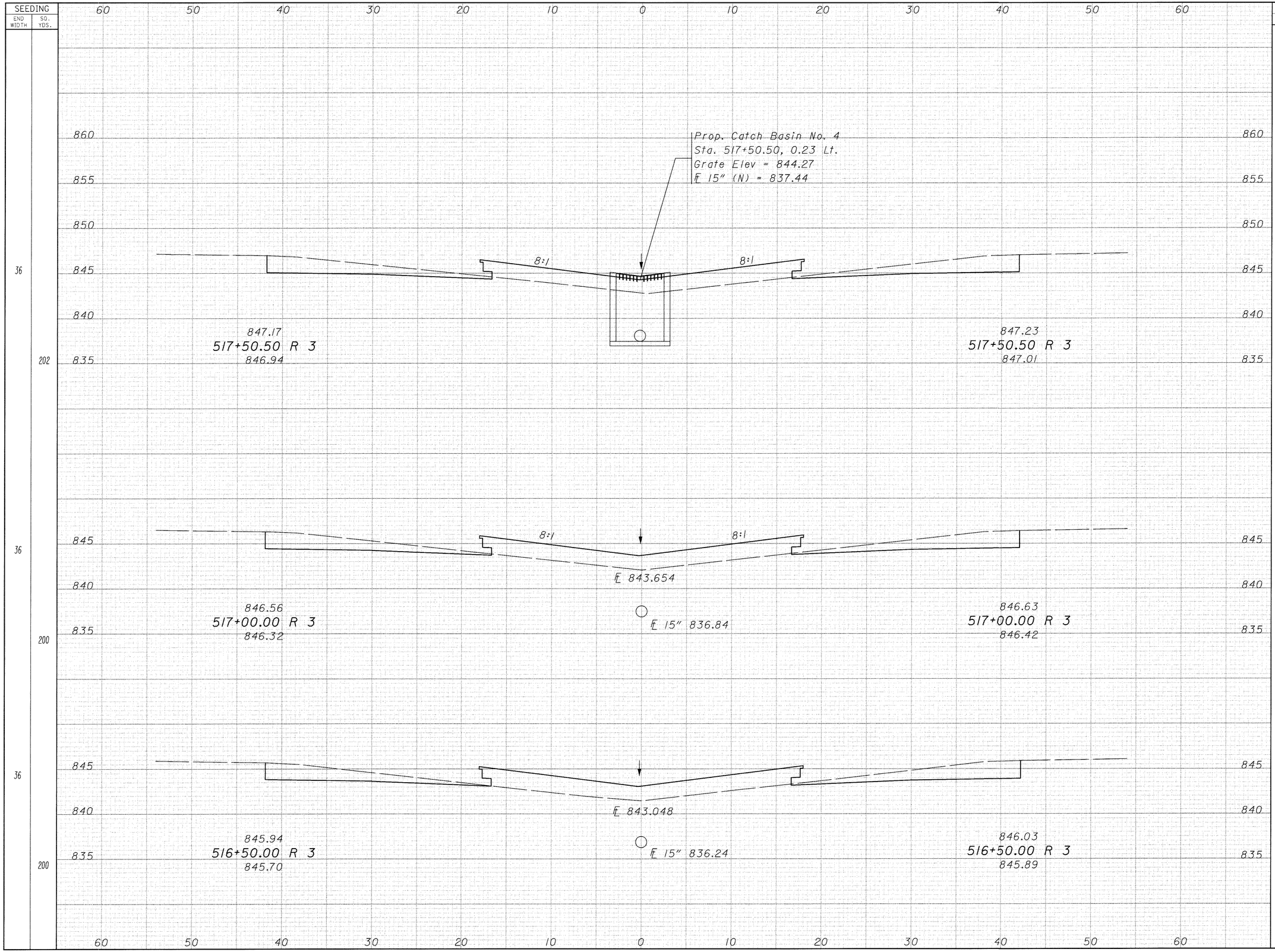

CALCULATED AM

CHECKED JGB

I.R.275 CROSS SECTIONS
516+50.00 TO STA 517+50.50

CLE-275-5.35

589
857

SEEDING	
END WIDTH	SQ. YDS.
23	57
9	30
0	0

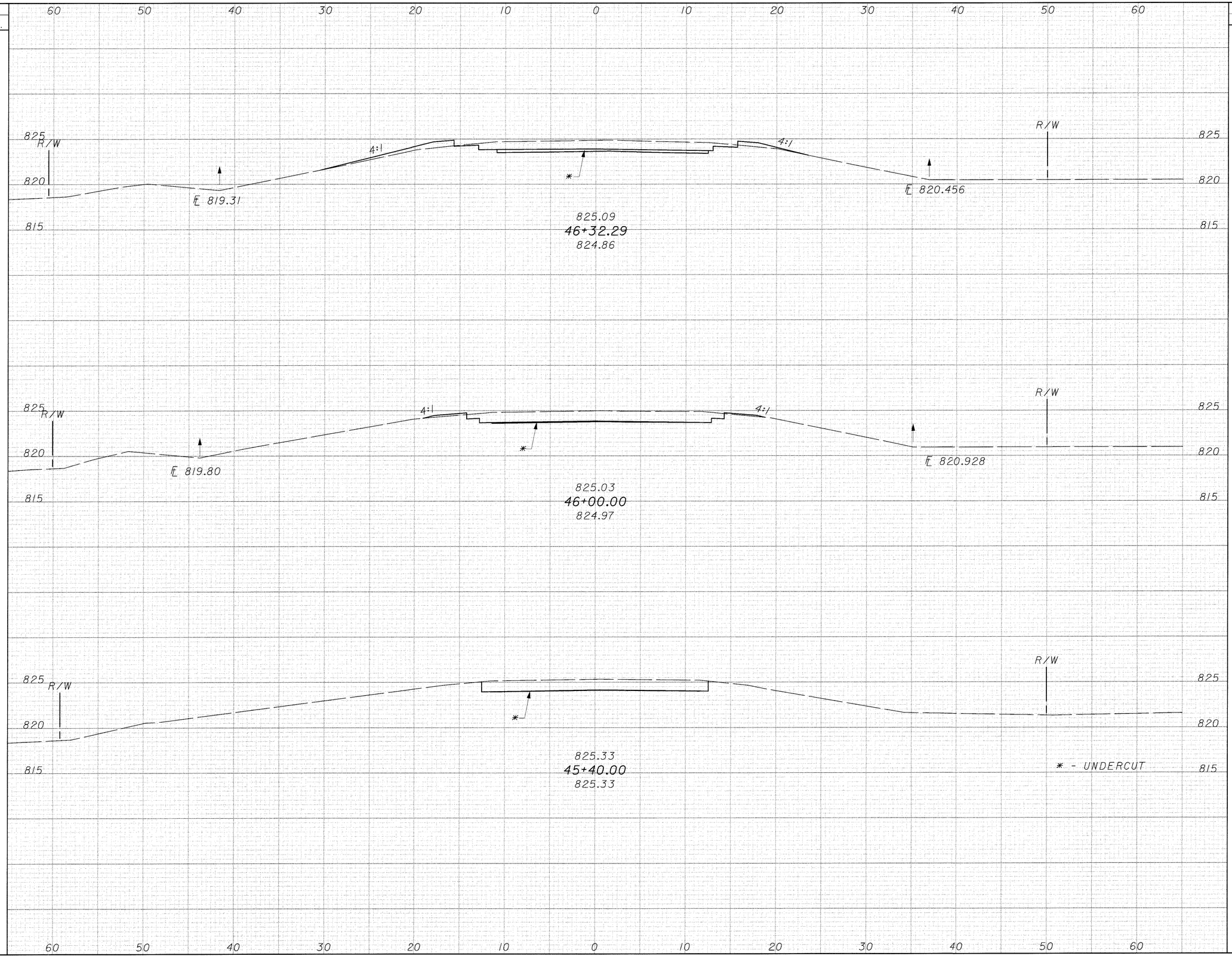

END AREA	
CUT	FILL
*7	
31	13
*1	
32	3
*0	
30	0

VOLUME	
CUT	FILL
*5	
38	10
*1	
69	3
*0	
0	0

CALCULATED AM

CHECKED JOB

TR 211 CROSS SECTIONS
STA 45+40.00 TO STA 46+32.29

CLE-275-5.35

590
857

SEEDING END WIDTH	SEEDING SQ. YDS.
81	337
73	408
74	365

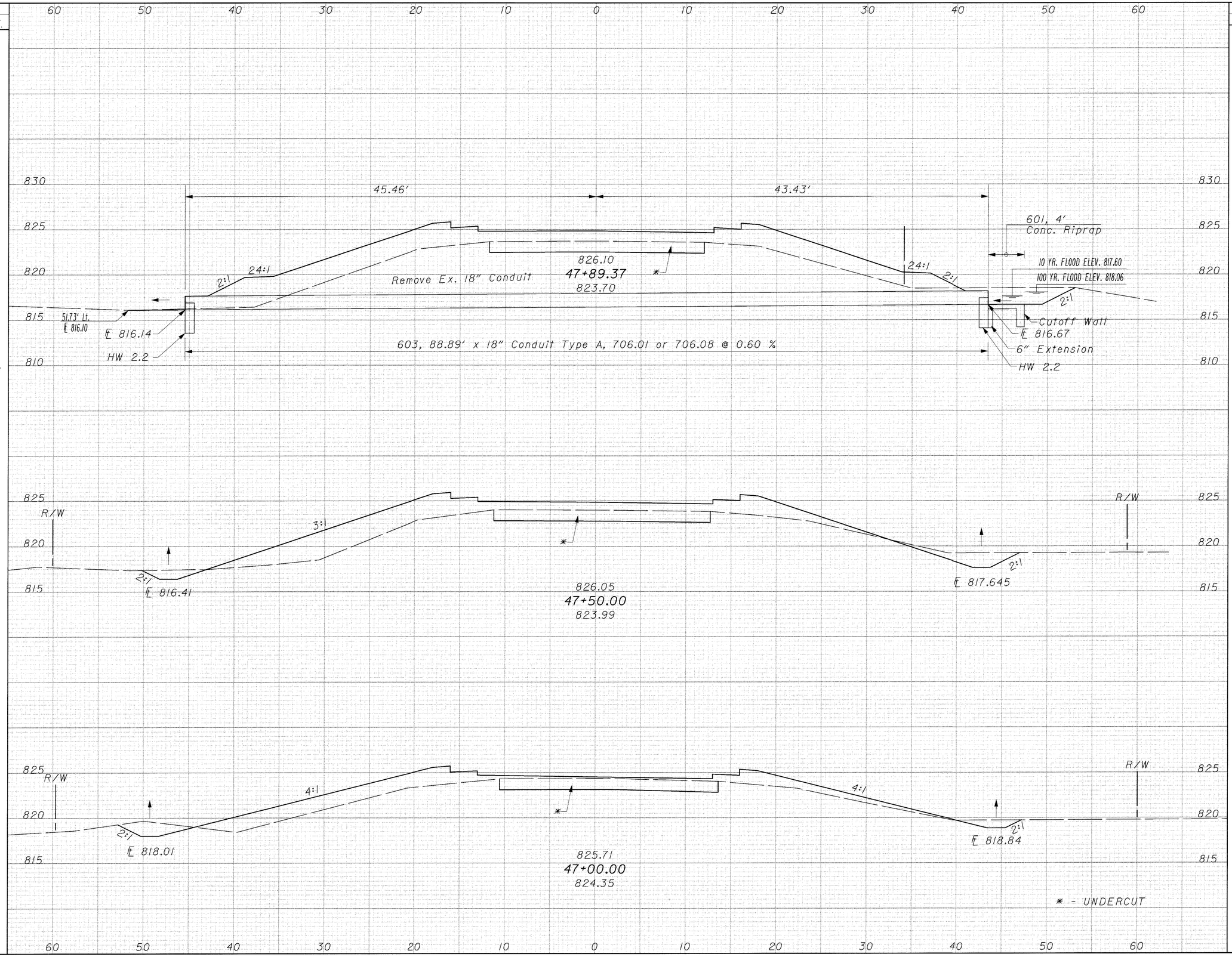

END AREA CUT	END AREA FILL	VOLUME CUT	VOLUME FILL
x29			
44	184		
		x42	
		65	234
x29			
45	137		
		x54	
		80	222
x29			
41	103		
		x45	
		90	145

CALCULATED AM

CHECKED JGB

TR 211 CROSS SECTIONS
STA 47+00.00 TO STA 47+89.37

CLE-275-5.35

591
857

SEEDING	
END WIDTH	SQ. YDS.
56	0
42	196
54	80

60 50 40 30 20 10 0 10 20 30 40 50 60

825 820 815 810

SKEWED SECTION

2:1 (Normal)

2:1 (Normal)

823.84
51+62.39
821.24

SKEWED SECTION

2:1 (Normal)

2:1 (Normal)

825.92
48+36.74
823.09

R/W

3:1

826.09
48+00.00
823.60

* - UNDERCUT

END AREA		VOLUME	
CUT	FILL	CUT	FILL
*41			
41	41		
		*0	
		0	0
*41			
41	196		
		*48	
		48	236
*29			
29	151		
		*11	
		14	66

CALCULATED AM

CHECKED JGB

TR 211 CROSS SECTIONS
STA 48+00.00 TO STA 51+62.39

CLE-275-5.35

592
857

SEEDING END WIDTH	SEEDING SQ. YDS.	END AREA CUT	END AREA FILL	VOLUME CUT	VOLUME FILL
55	136	*29			
		34	121		
				*24	
				30	93
54		*28			
		38	102		
				*72	
	396			85	289
		*28			
49		28	123		
	267			*59	
				59	139

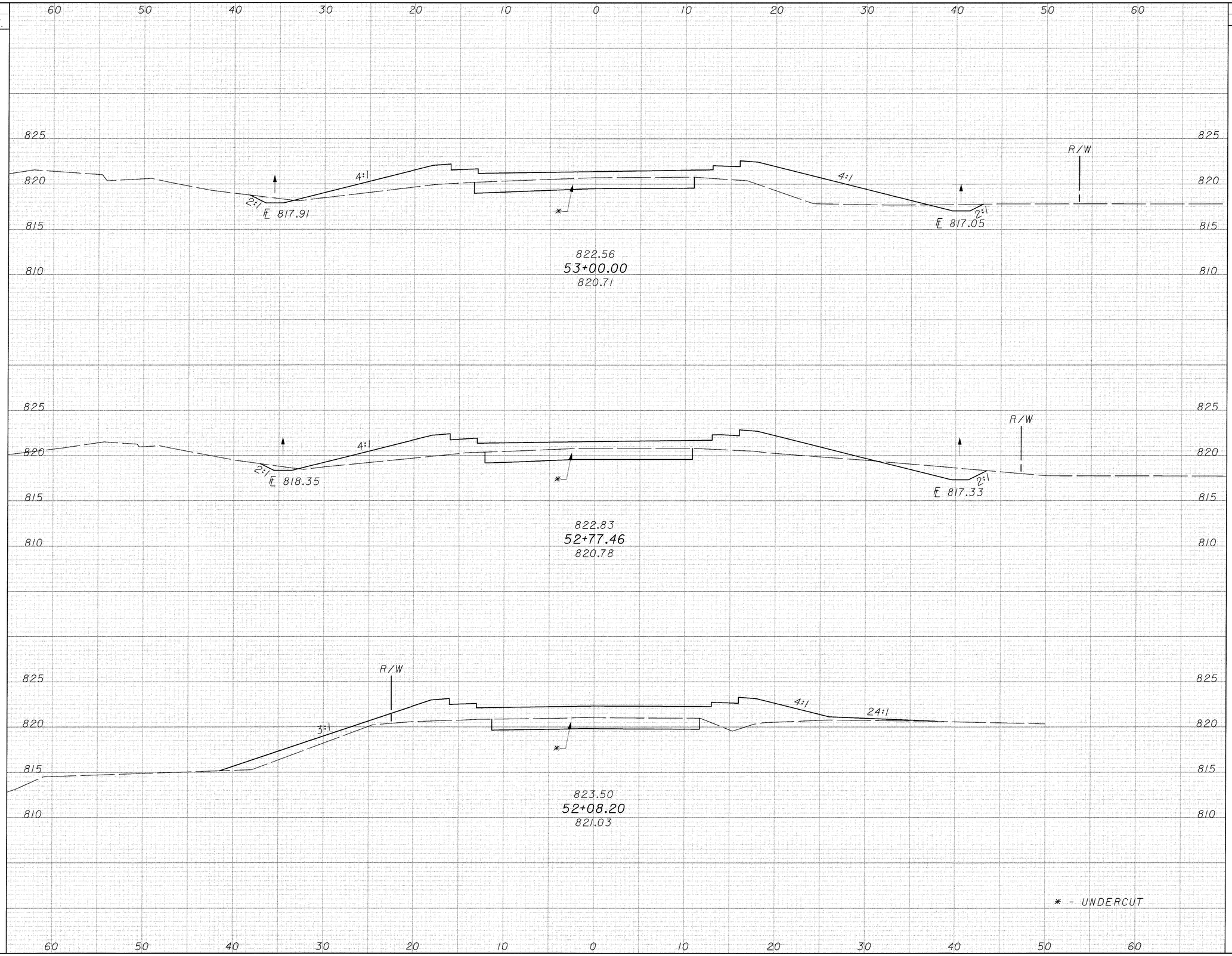

CALCULATED AM

CHECKED JOB

TR 211 CROSS SECTIONS STA 52+08.20 TO STA 53+00.00

CLE-275-5.35

593
857

SEEDING END WIDTH	SEEDING SQ. YDS.	END AREA CUT	END AREA FILL	VOLUME CUT	VOLUME FILL
		*0			
4		22	1		
				*11	
	144			65	40
		*9			
34		30	31		
				*20	
	139			38	60
39		29	64		
				*39	
	231			49	134
63		36	114		
				*27	
163		32	109		

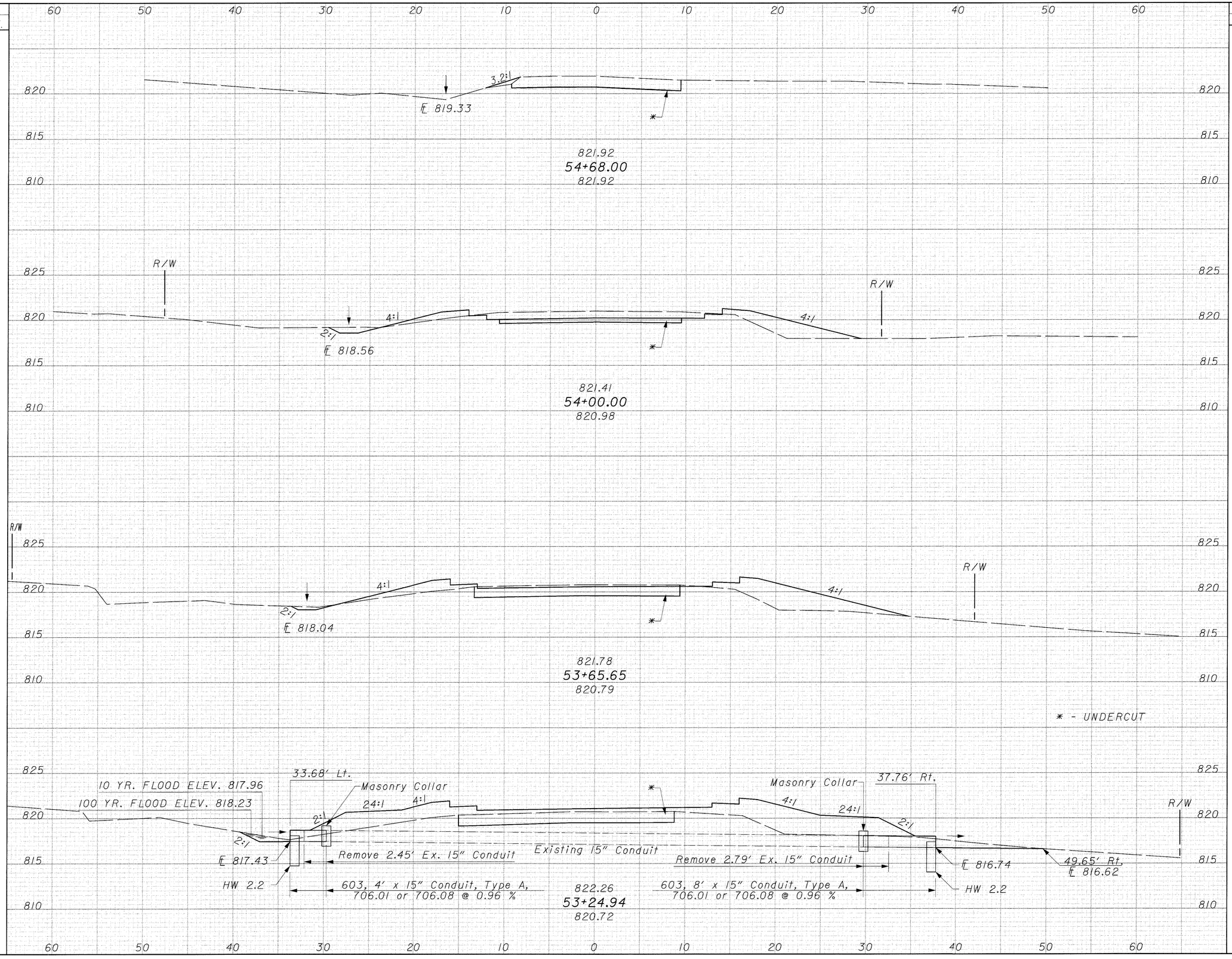

CALCULATED AM

CHECKED JOB

TR 211 CROSS SECTIONS
STA 53+24.94 TO STA 54+68.00

CLE-275-5.35

594
857

SEEDING		END AREA		VOLUME		
END WIDTH	SQ. YDS.	CUT	FILL	CUT	FILL	
33	15	*18				821.96 10+40.00 821.12
		38	41	*3		
				6	7	
34	59	*26				822.22 10+35.92 821.10
		39	57	*19		
				23	65	
33	0	*39				823.22 10+20.00 821.00
		39	162	*0		
				0	0	

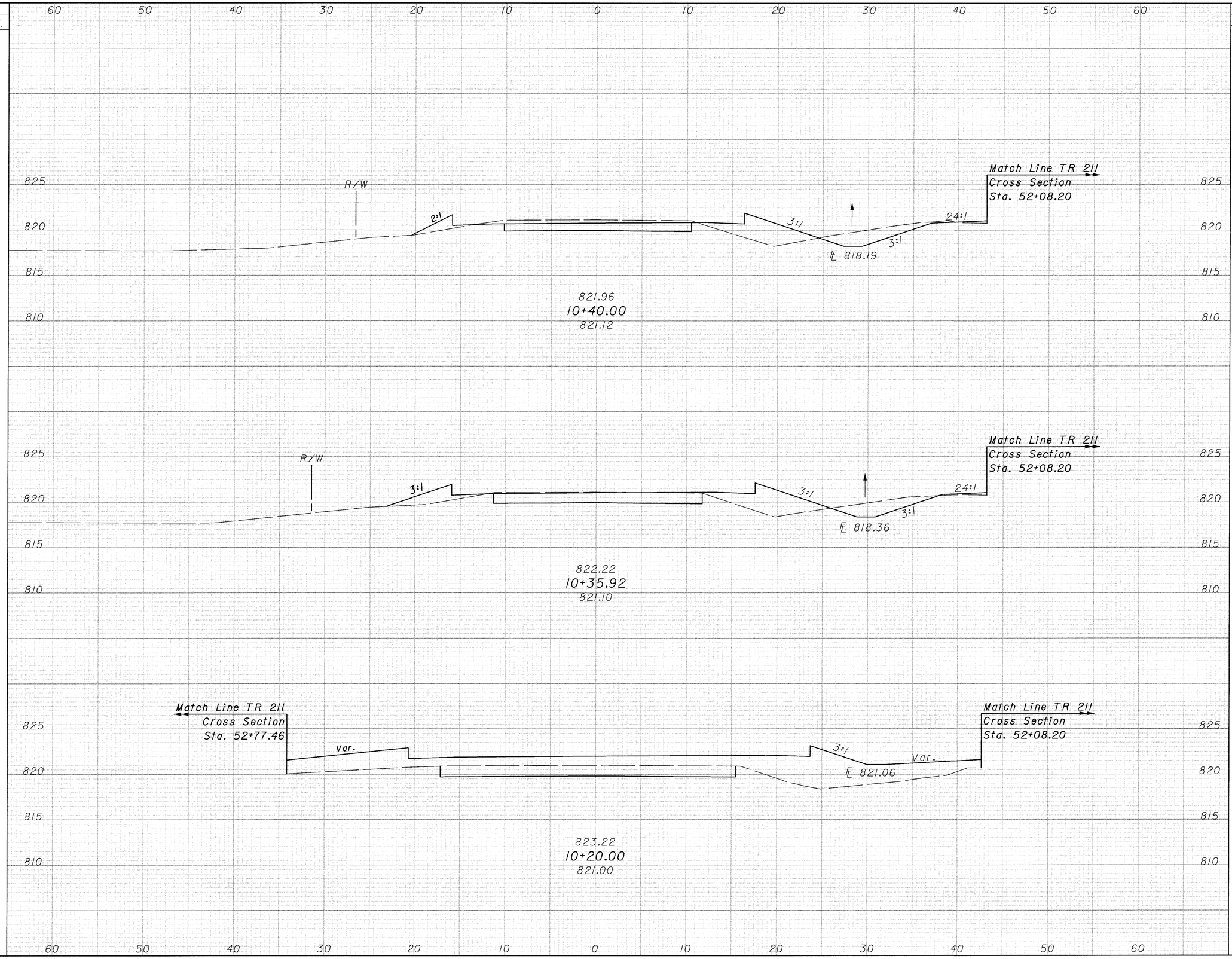

CALCULATED AM

CHECKED JOB

DRIVE CROSS SECTIONS TR-211
STA 10+20.00 TO STA 10+40.00

CLE-275-5.35

595
857

SEEDING END WIDTH	SEEDING SQ. YDS.	END AREA CUT	END AREA FILL	VOLUME CUT	VOLUME FILL
4	30	17	1	*1	
34	26	34	12	*2	
33	26	35	23	*4	
		34		*3	
				9	5
				9	8
				13	3
		*0			
		*9			

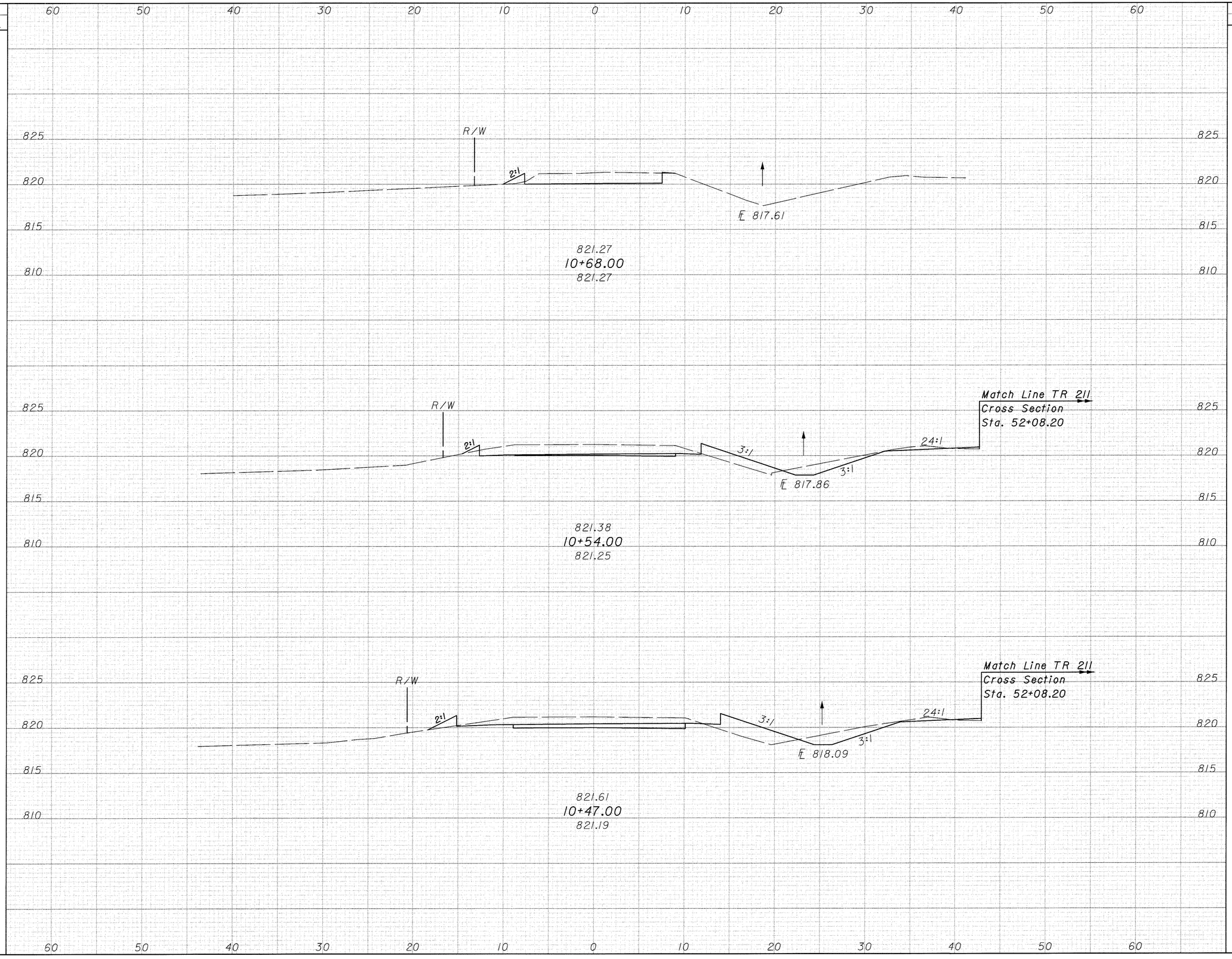

CALCULATED AM

CHECKED JGB

DRIVE CROSS SECTIONS TR-211
STA 10+47.00 TO STA 10+68.00

CLE-275-5.35

596
857

SEEDING END WIDTH	SEEDING SQ. YDS.	END AREA CUT	END AREA FILL	VOLUME CUT	VOLUME FILL
70	342	87	251	146	381
53	183	71	161	85	172
13	58	21	25	19	25
8	0	0	2	0	0

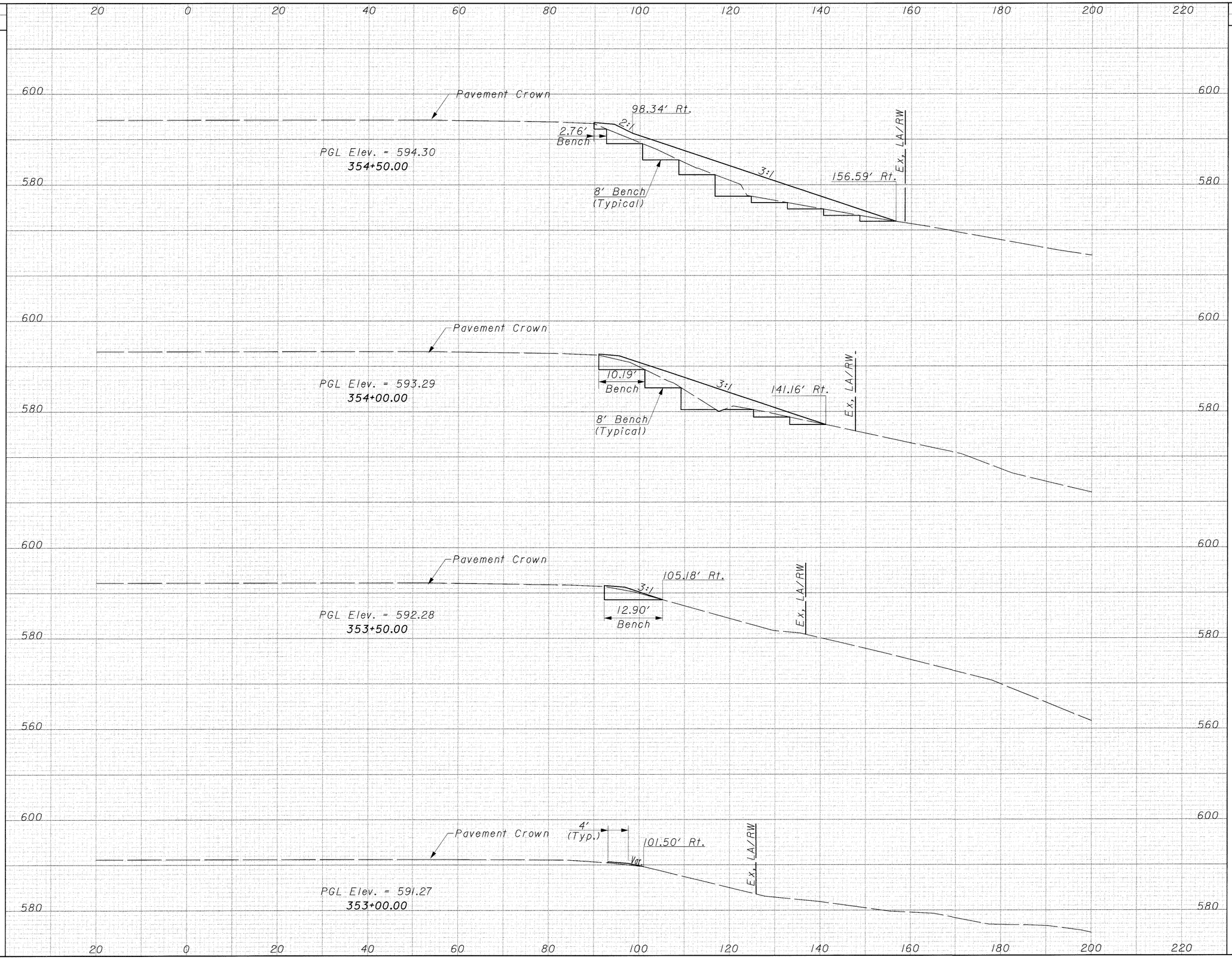

CALCULATED AM

CHECKED JOB

SLIDE AREA CROSS SECTIONS
STA 353+00.00 TO STA 354+50.00

CLE-275-5.35

597
857

SEEDING		END AREA		VOLUME	
END WIDTH	SQ. YDS.	CUT	FILL	CUT	FILL
84	500	105	396	183	539
96	497	93	186	176	464
83	425	97	315	170	524

CALCULATED AM

CHECKED JOB

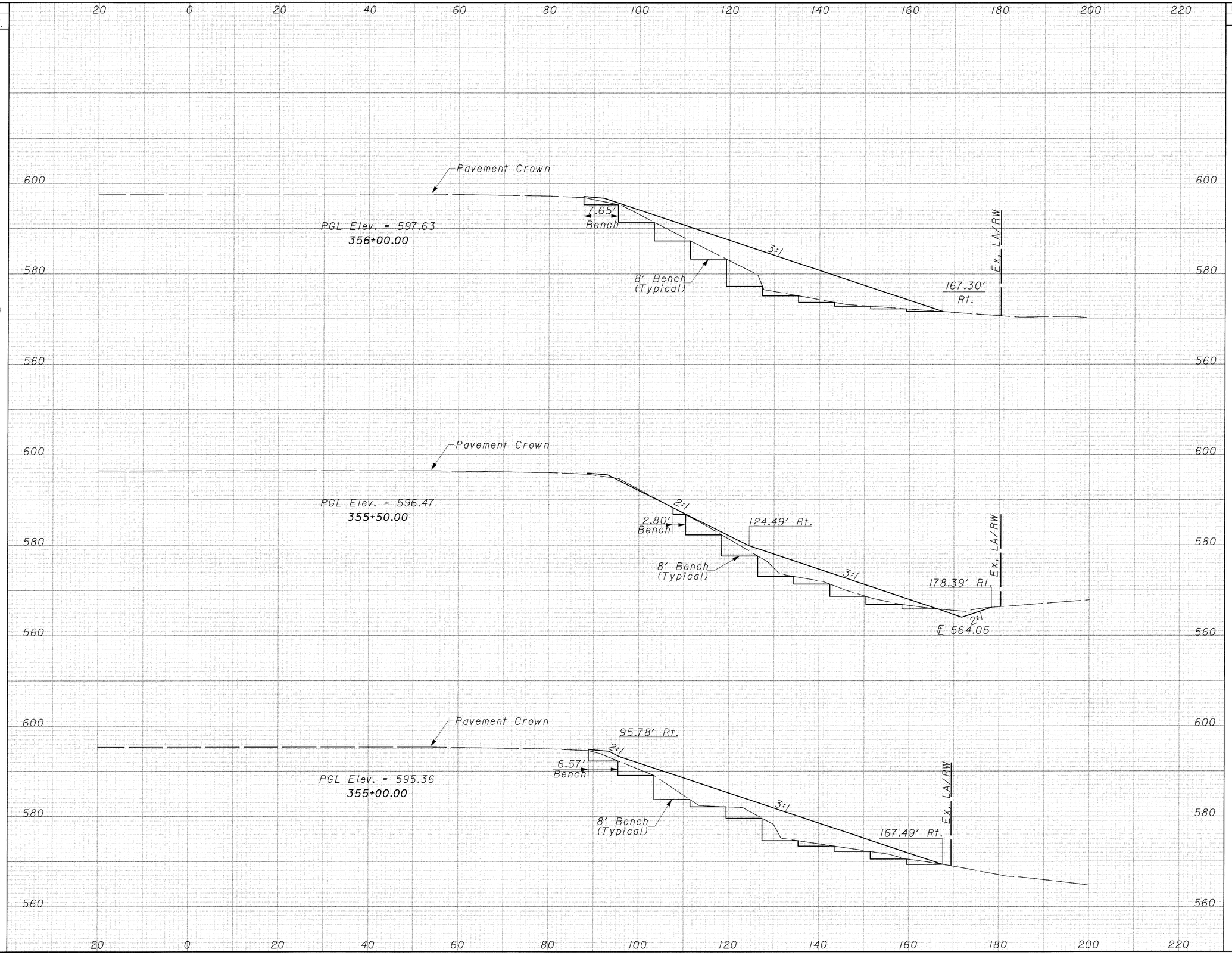

SLIDE AREA CROSS SECTIONS
STA 355+00.00 TO STA 356+00.00

CLE-275-5.35

598
857

SEEDING		END AREA		VOLUME	
END WIDTH	SQ. YDS.	CUT	FILL	CUT	FILL
9	264	0	3	100	350
86	472	108	375	197	714
				240	

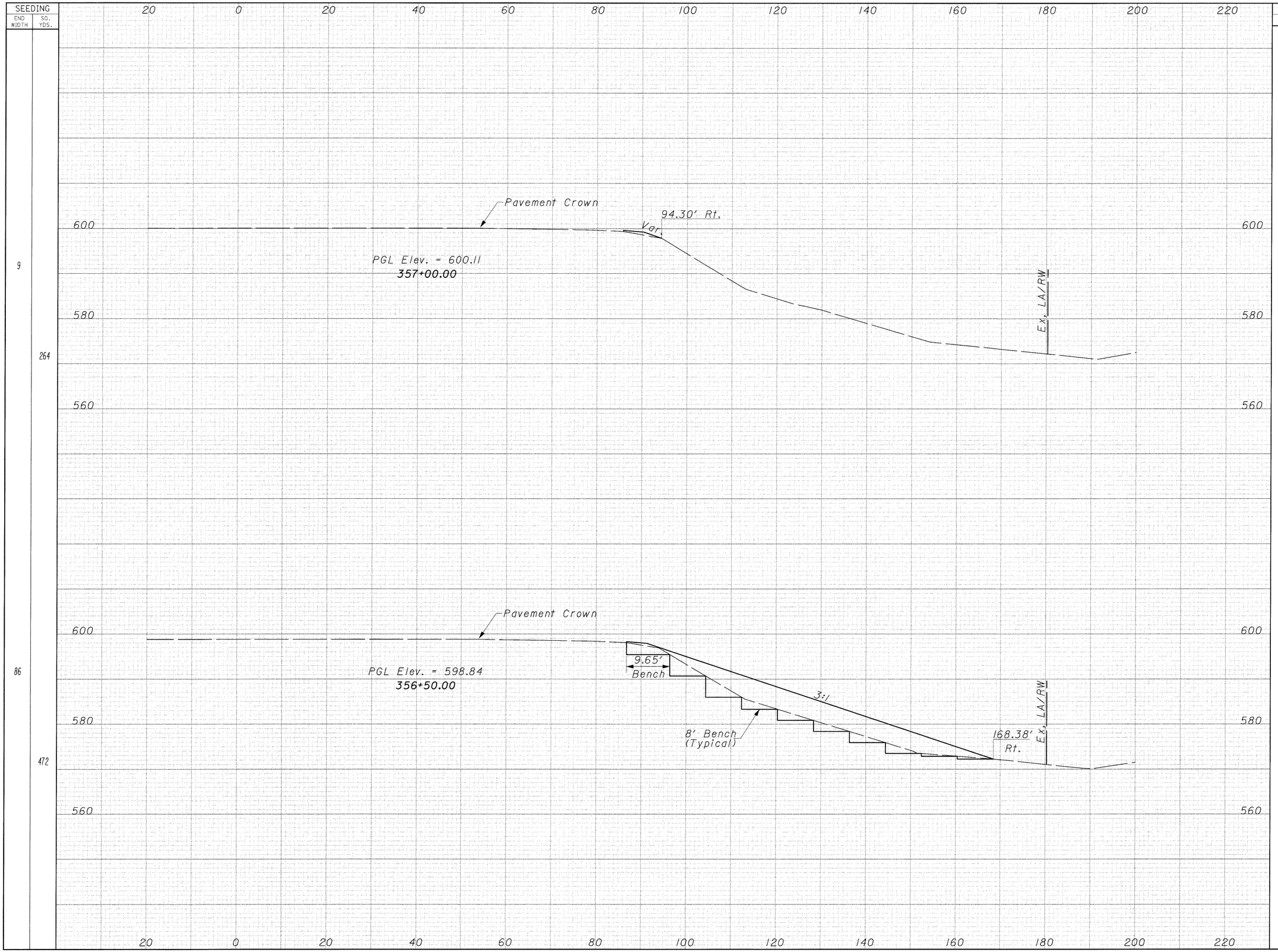

CALCULATED AM

CHECKED JOB

SLIDE AREA CROSS SECTIONS
STA 356+50.00 TO STA 357+00.00

CLE-275-5.35

599
857

SLIDE AREA CROSS SECTIONS
STA 363+00.00 TO STA 364+50.00

CLE-275-5.35

600/857

CALCULATED AM | CHECKED JGB

SEEDING END WIDTH	SEEDING SQ. YDS.	END AREA CUT	END AREA FILL	VOLUME CUT	VOLUME FILL
103	681	133	402	473	740
142	614	378	397	442	599
79	236	99	250	92	233
6	0	0	2	0	0

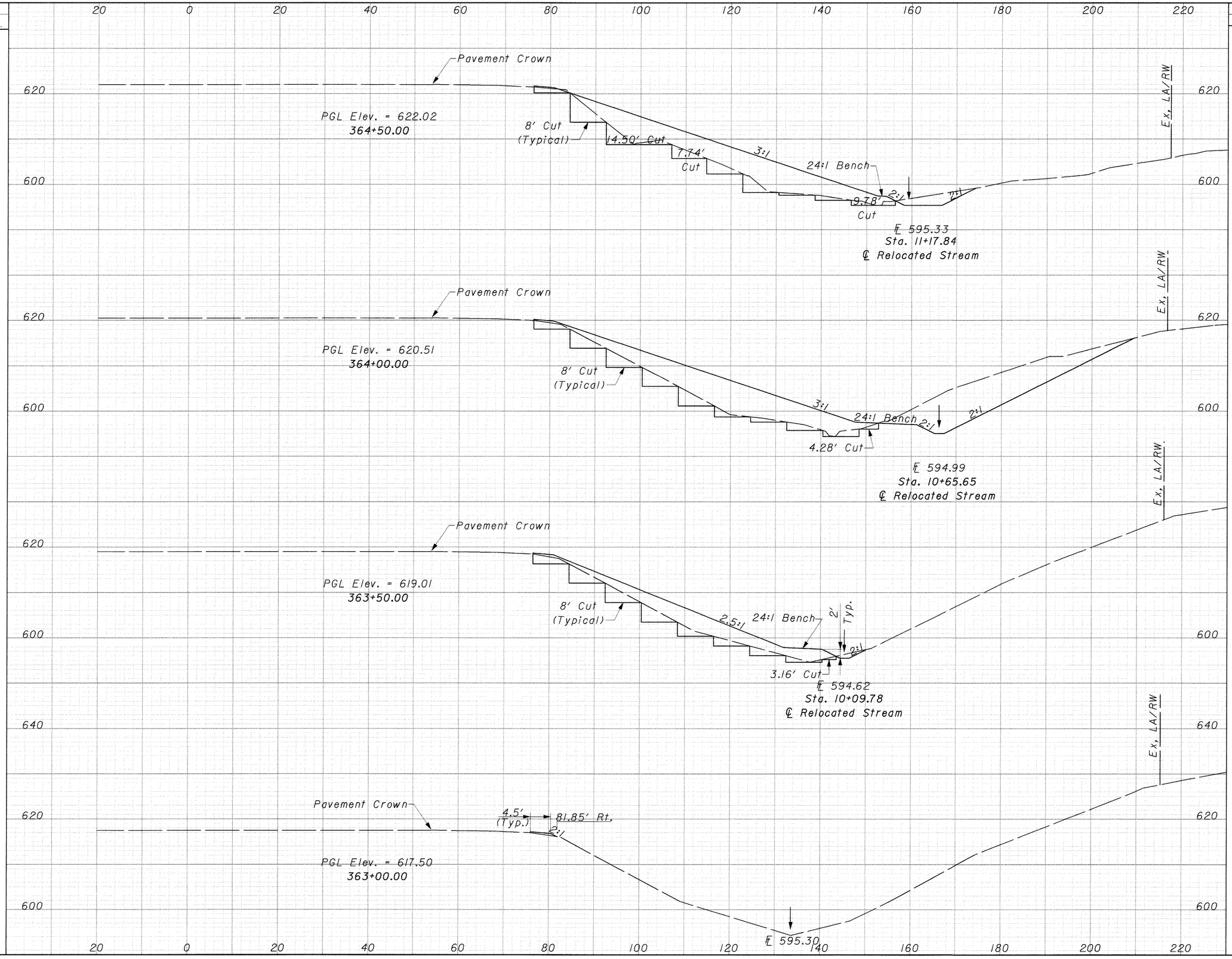

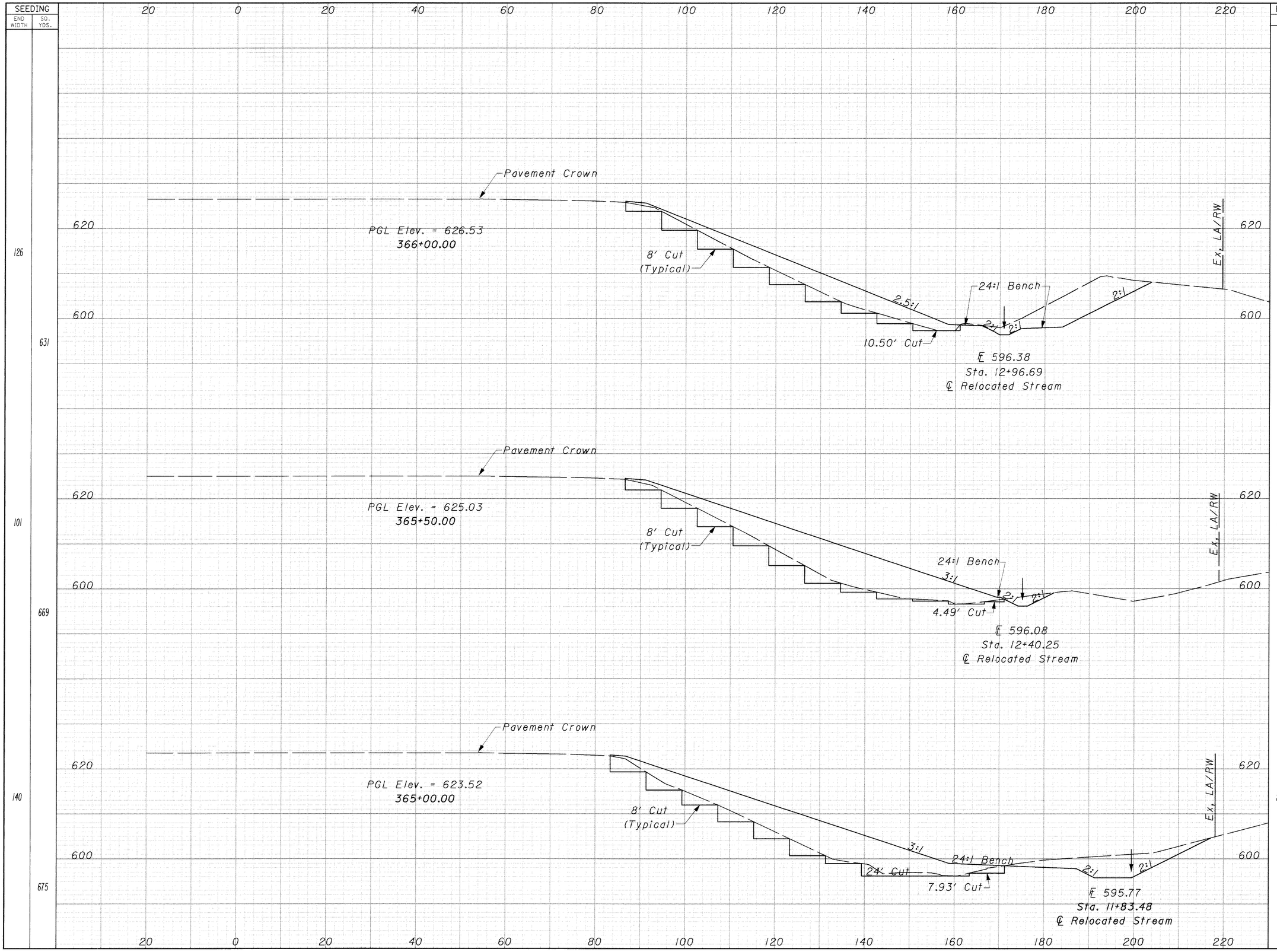

SEEDING END WIDTH	SEEDING SQ. YDS.	END AREA CUT	END AREA FILL	VOLUME CUT	VOLUME FILL
126		267	311		
	631			362	757
101		124	507		
	669			334	926
140		237	493		
	675			343	829

CALCULATED AM
CHECKED JGB

SLIDE AREA CROSS SECTIONS
STA 365+00.00 TO STA 366+00.00

CLE-275-5.35

SEEDING		END AREA		VOLUME		CALCULATED AM	CHECKED JOB
END WIDTH	SQ. YDS.	CUT	FILL	CUT	FILL		
9	139	0	4	62	70		
41	464	67	72	309	355		

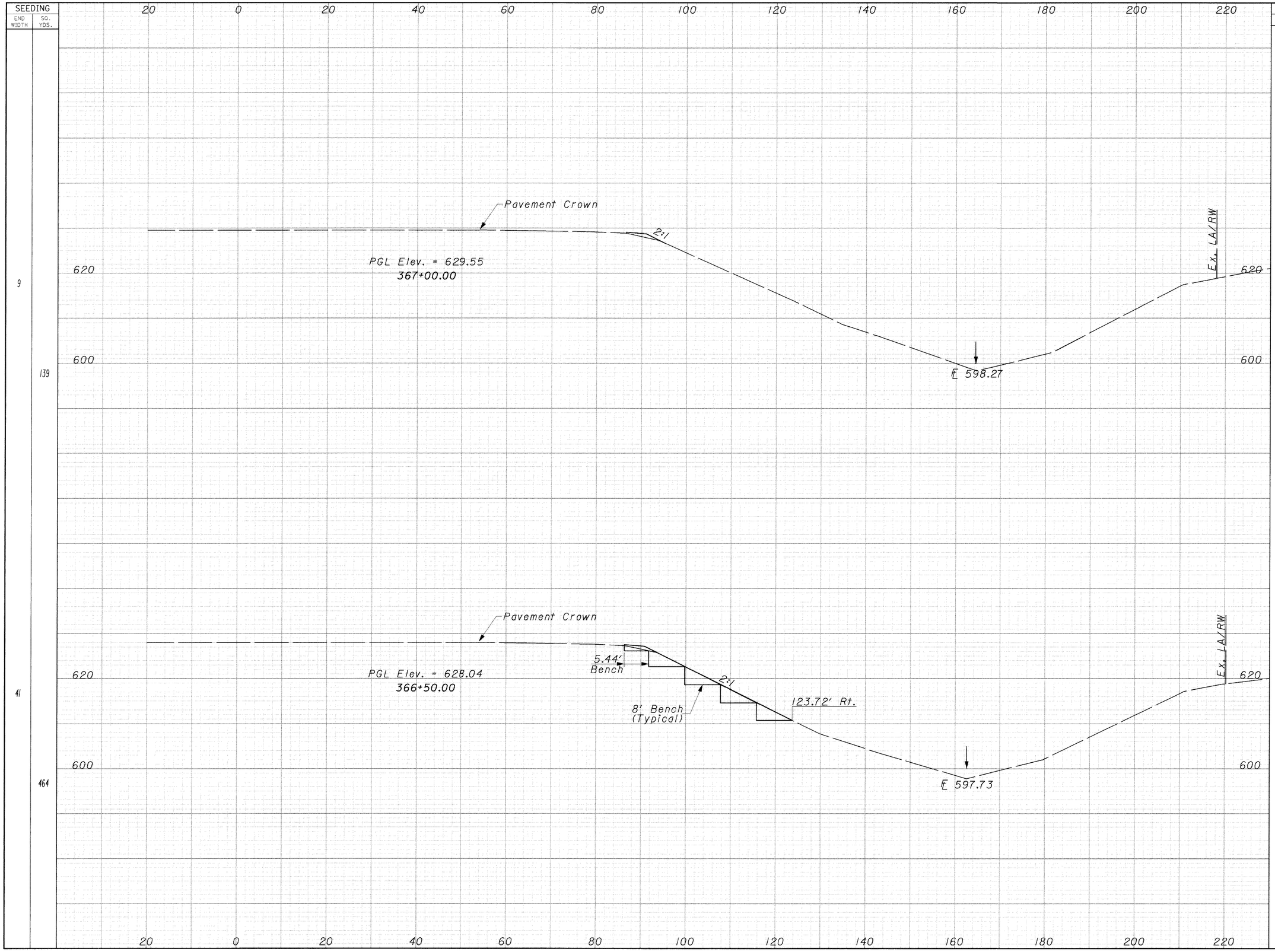

SLIDE AREA CROSS SECTIONS
STA 366+50.00 TO STA 367+00.00

CLE-275-5.35

602
857

SEEDING	
END WIDTH	SQ. YDS.
7	0

END AREA		VOLUME	
CUT	FILL	CUT	FILL
0	4	0	0

CALCULATED AM

CHECKED JOB

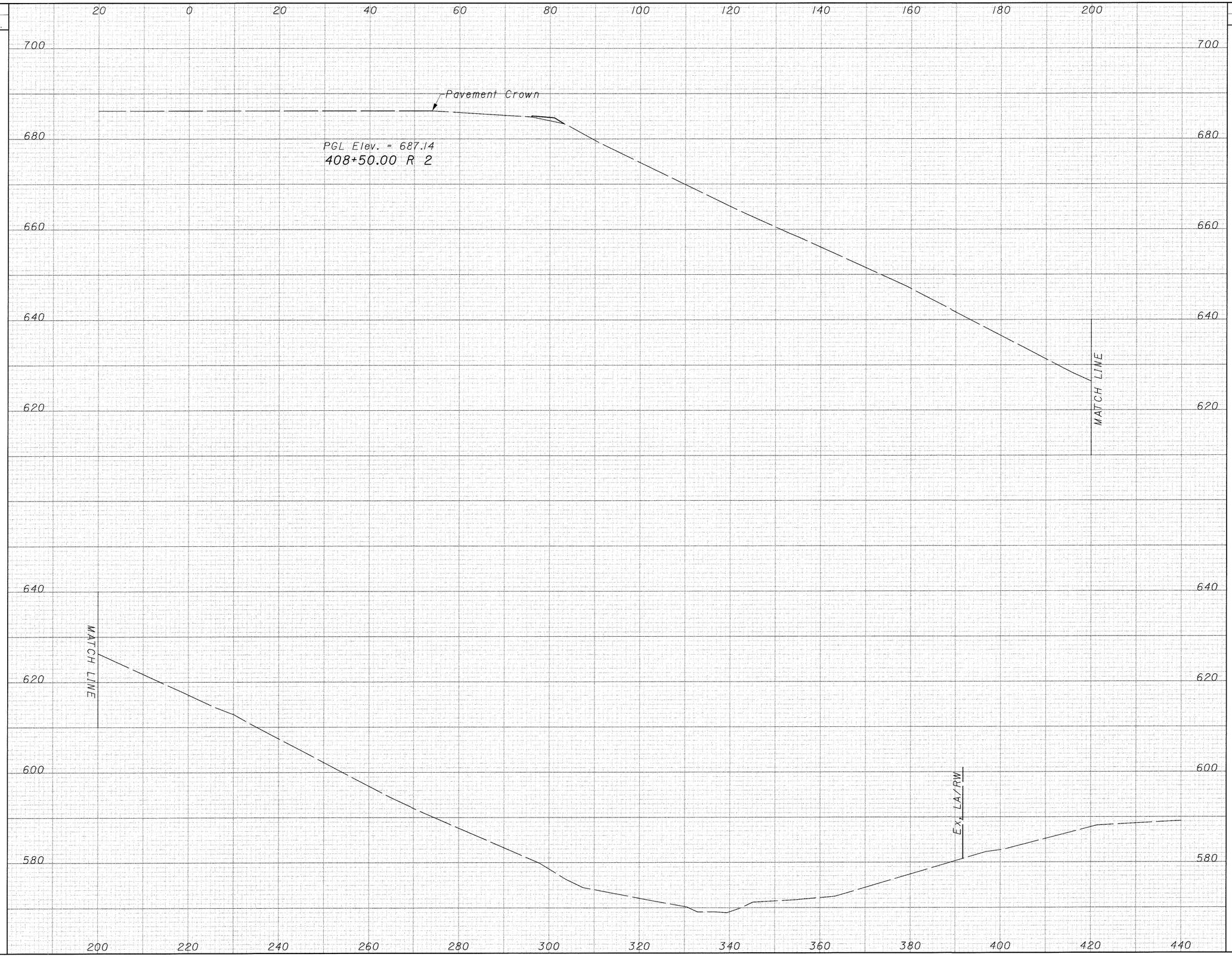

SLIDE AREA CROSS SECTIONS
STA 408+50.00

CLE-275-5.35

603
857

SEEDING	
END WIDTH	SQ. YDS.
159	461

END AREA		VOLUME	
CUT	FILL	CUT	FILL
239	597	221	556

CALCULATED AM

CHECKED JCB

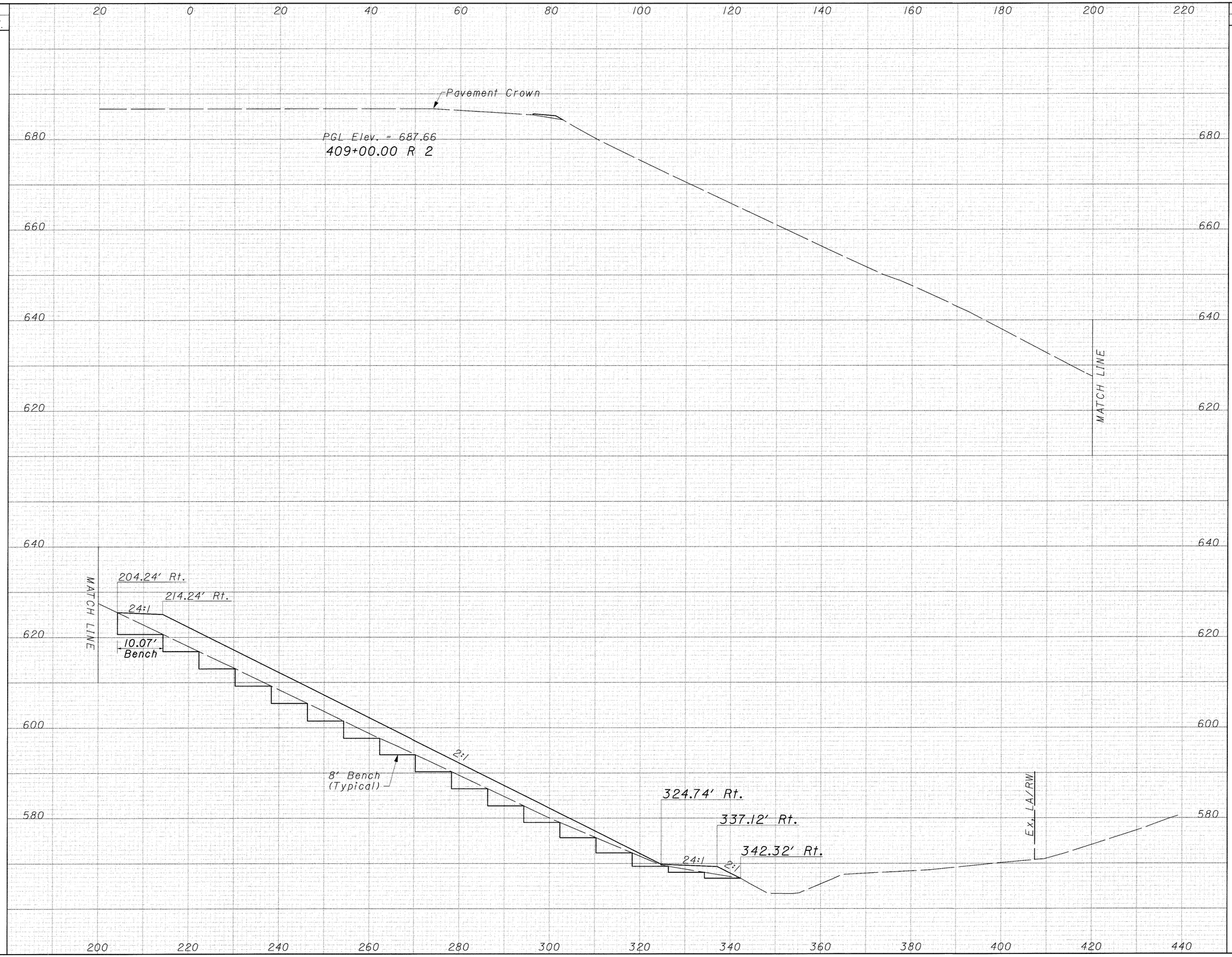

SLIDE AREA CROSS SECTIONS STA 409+00.00

CLE-275-5.35

604
857

SEEDING	
END WIDTH	SQ. YDS.
174	925

END AREA		VOLUME	
CUT	FILL	CUT	FILL
281	607	481	1115

CALCULATED AM

CHECKED JDB

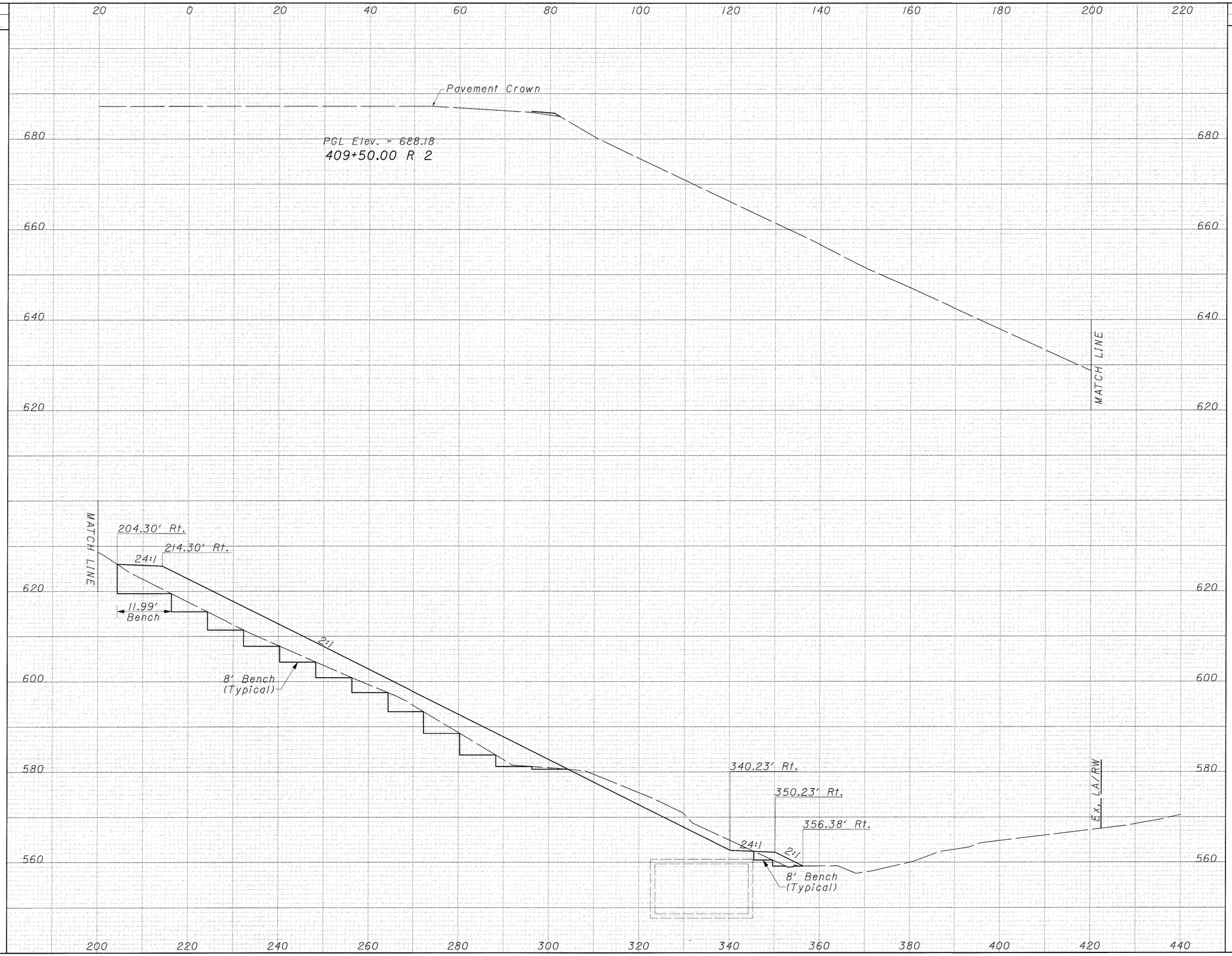

SLIDE AREA CROSS SECTIONS STA 409+50.00

CLE-275-5.35

605
857

SEEDING	
END WIDTH	SQ. YDS.
160	928

END AREA		VOLUME	
CUT	FILL	CUT	FILL
198	231	444	776

CALCULATED AM

CHECKED JOB

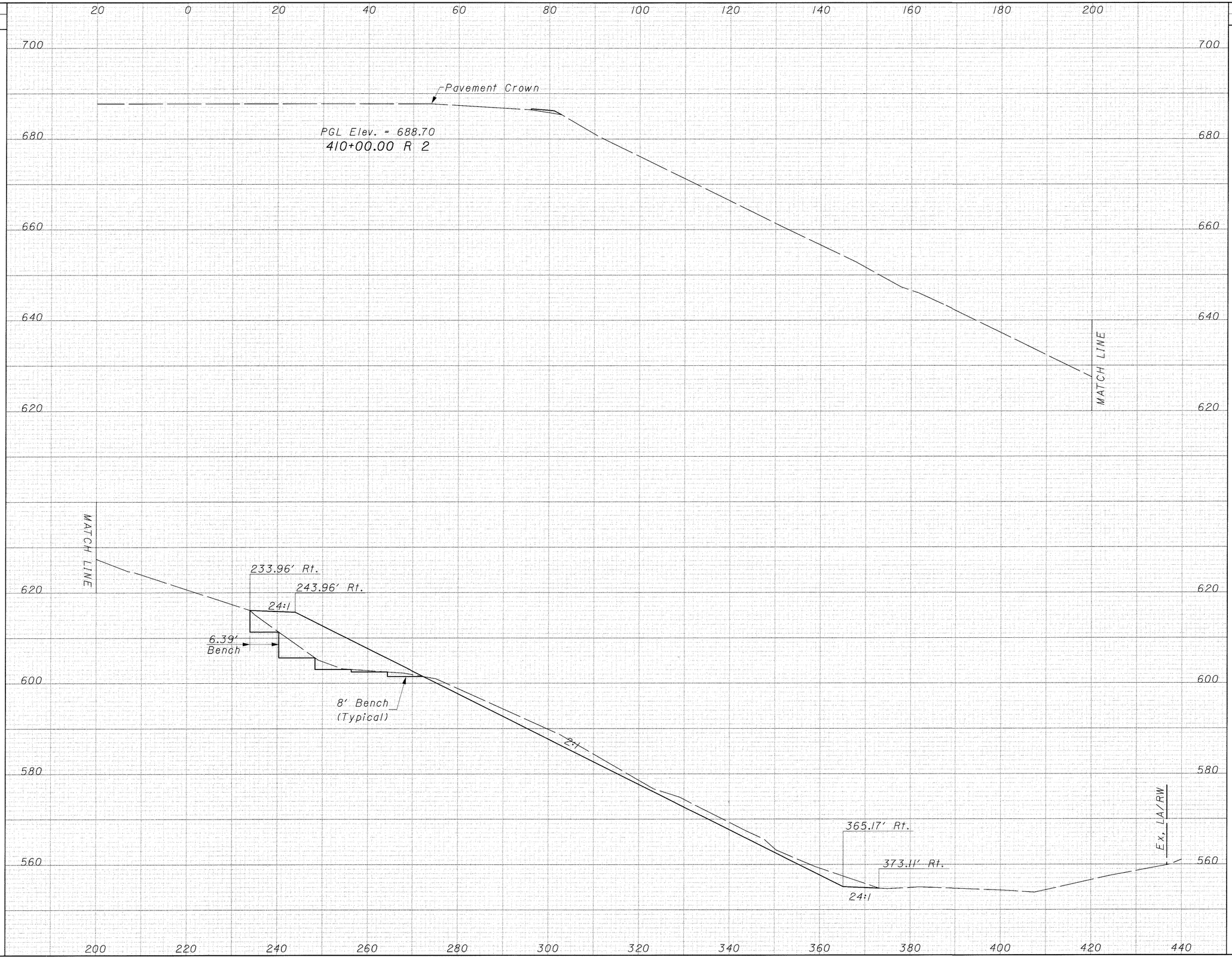

SLIDE AREA CROSS SECTIONS STA 410+00.00

CLE-275-5.35

606
857

SEEDING	
END WIDTH	SQ. YDS.
7	464

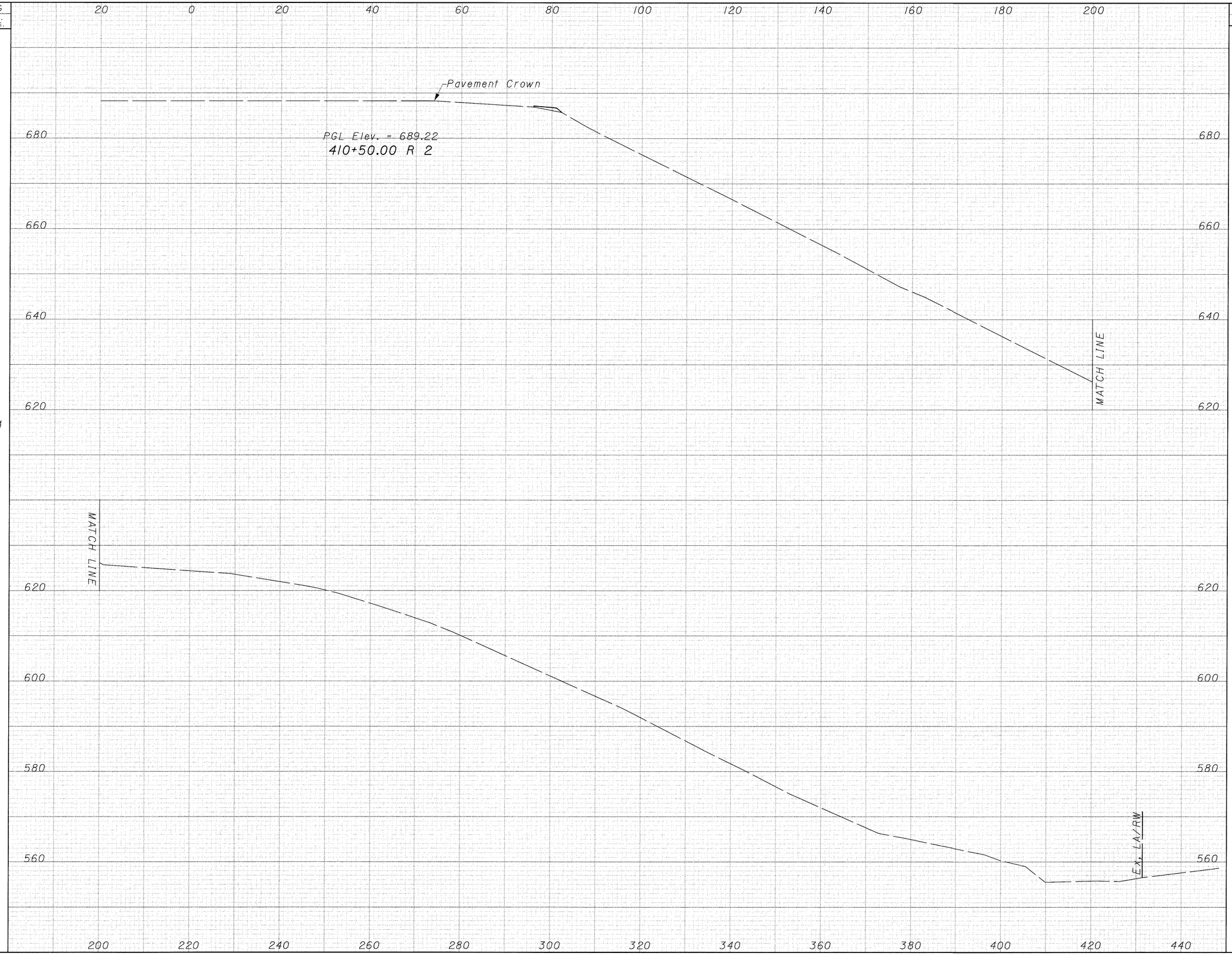

END AREA		VOLUME	
CUT	FILL	CUT	FILL
0	3		
		183	217

CALCULATED AM

CHECKED JOB

SLIDE AREA CROSS SECTIONS
STA 410+50.00

CLE-275-5.35

607
857

SEEDING			END AREA		VOLUME	
END WIDTH	SQ. YDS.		CUT	FILL	CUT	FILL
0		50 40 30 20 10 0 10 20 30 40 50 60				
		530				
		525				
		520				
	44	88+00.00 530.12	44	0	57	0
		530				
16		6:1 Variable ℄ 529.38				
		525				
		520				
	75	87+50.00 529.96	18	0	28	0
		530				
11		6:1 Variable ℄ 529.25				
		525				
		520				
	53	87+00.00 529.58	12	0	19	0
		530				
8		Variable ℄ 529.12				
		525				
		520				
	30	86+50.00 529.21	8	0	10	0
0		Begin Work Sta. 85+69.26	0	0		
		50 40 30 20 10 0 10 20 30 40 50 60				

CALCULATED AM

CHECKED JGB

CROSS SECTIONS US-50 J
STA 86+50.00 TO STA 88+00.00

CLE-275-5.35

608
867

SEEDING END WIDTH	SEEDING SQ. YDS.
29	79
28	150
26	100
10	28

END AREA CUT	END AREA FILL	VOLUME CUT	VOLUME FILL
37	0		
		24	0
15	1		
		27	5
14	4		
		24	6
12	2		
		52	2

CALCULATED AM

CHECKED JGB

CROSS SECTIONS US-50 J
STA 88+50.00 TO STA 89+75.00

CLE-275-5.35

609
857

SEEDING END WIDTH	SEEDING SQ. YDS.	STATION	END AREA CUT	END AREA FILL	VOLUME CUT	VOLUME FILL
32	178	91+50.00	8	2	13	6
32	181	91+00.00	6	4	12	5
33	175	90+50.00	7	1	22	1
30	82	90+00.00	17	0	25	0

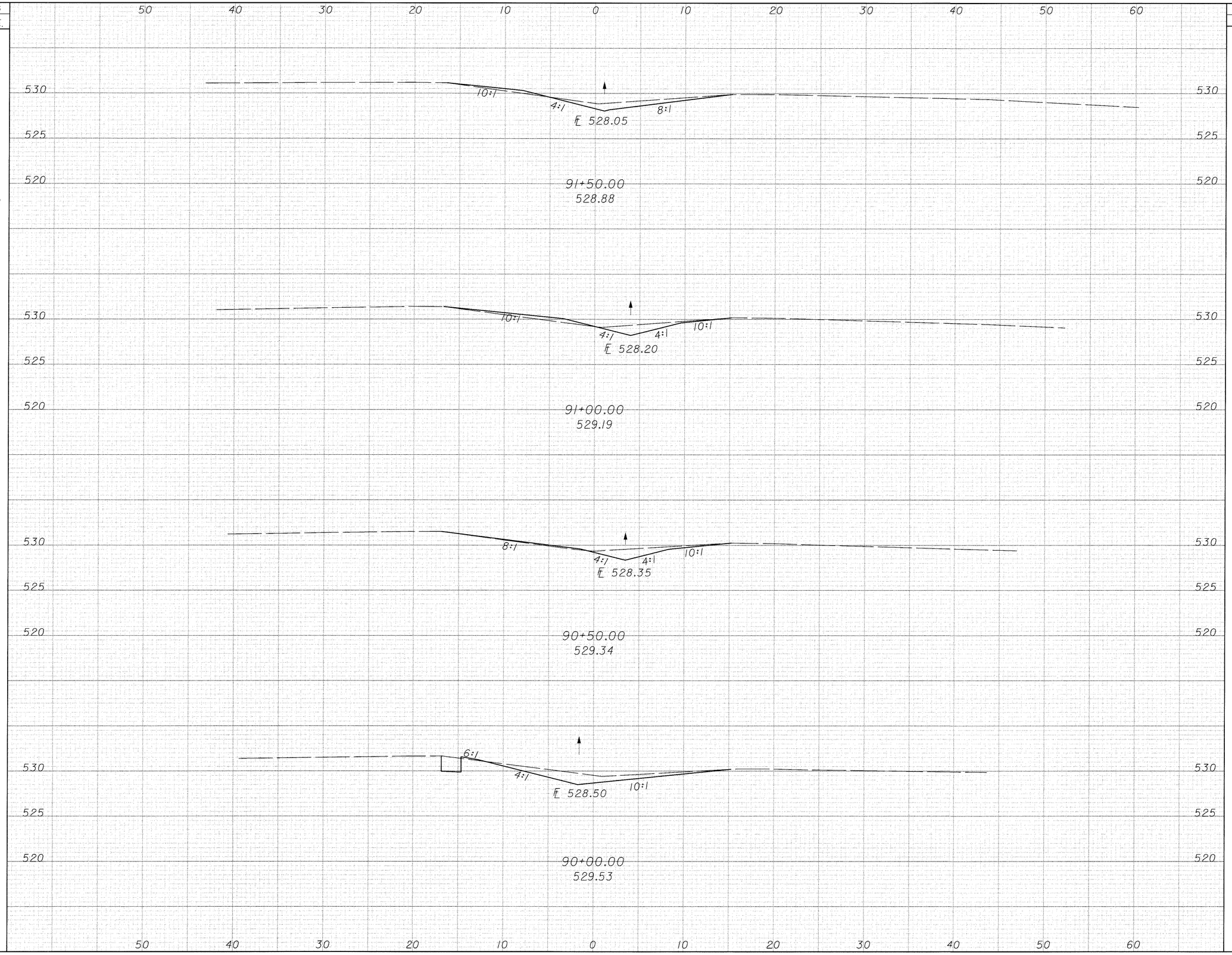

CALCULATED AM

CHECKED JGB

CROSS SECTIONS US-50 J
STA 90+00.00 TO STA 91+50.00

CLE-275-5.35

610
857

SEEDING END WIDTH	SEEDING SQ. YDS.	END AREA CUT	END AREA FILL	VOLUME CUT	VOLUME FILL
22	150	3	2	9	8
32	178	7	7	14	11
32	178	8	5	15	6

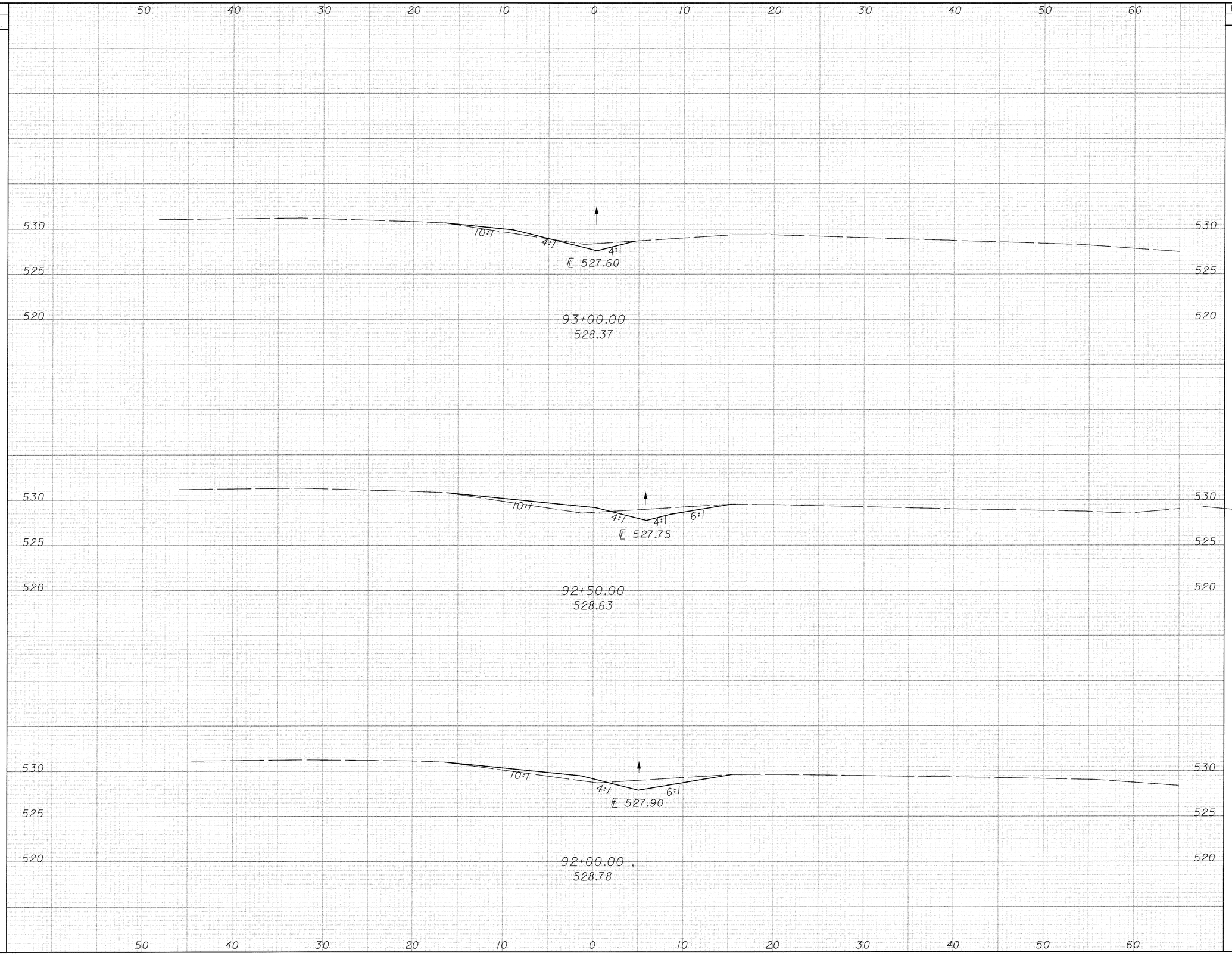

CALCULATED AM

CHECKED JOB

CROSS SECTIONS US-50 J

STA 92+00.00 TO STA 93+00.00

CLE-275-5.35

611
857

SEEDING	
END WIDTH	SQ. YDS.
0	14
5	36
8	83

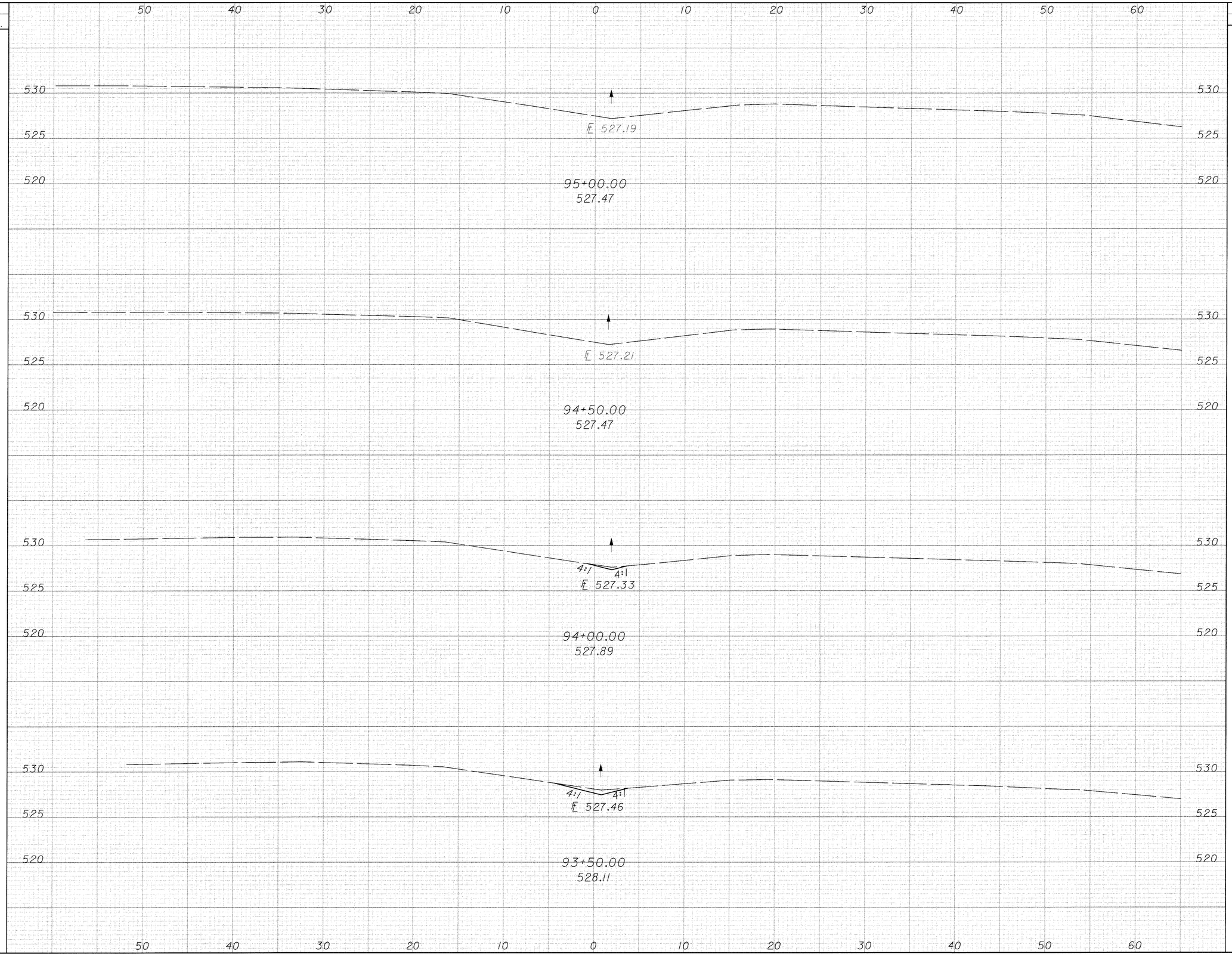

END AREA		VOLUME	
CUT	FILL	CUT	FILL
0	0		
		1	0
1	0		
		3	0
2	0		
		5	2

CALCULATED AM

CHECKED JDB

CROSS SECTIONS US-50 J
STA 93+50.00 TO STA 95+00.00

CLE-275-5.35

612
857

LIGHTING GENERAL NOTES

1. CONFLICTS WITH UTILITIES

THE CONTRACTOR IS RESPONSIBLE FOR MAKING HIS OWN DETERMINATION AS TO TYPE AND LOCATION OF UNDERGROUND UTILITILES AS MAY BE NECESSARY TO AVOID DAMAGE THERETO. THE CONTRACTOR SHALL VERIFY LOCATION OF UNDERGROUND PIPE LINES, CONDUITS, AND OTHER STRUCTURES BY CONTACTING OWNERS OF UNDERGROUND UTILITIES AND BY PROSPECTING IN ADVANCE OF EXCAVATION OPERATIONS.

THE CONTRACTOR SHALL MAINTAIN PROPER CLEARANCE FROM ALL OVERHEAD AND UNDERGROUND UTILITIES AND SHALL CONTACT EACH UTILITY FOR SPECIFIC REQUIREMENTS. THE CONTRACTOR SHALL NOT CHANGE THE LOCATION OF A LIGHTING UNIT WITHOUT THE CONSENT OF THE ENGINEER.

2. POWER SERVICE, AS PER PLAN.

THE POWER SUPPLYING AGENCY FOR THIS PROJECT IS:

POWER COMPANY: CINERGY CORPORATION
ADDRESS: 92 S. 4TH ST. BATAVIA, OHIO 45103
PHONE #: (513)287-5638
CONTACT NAME: MR. MIKE TISSANDIER

THE POWER SHALL BE AT THE LOCATION AND OF THE SIZE INDICATED ON THE PLANS.

ELECTRICAL ENERGY FOR EXISTING POWER SERVICES SHALL CONTINUE TO BE CHARGED TO THE MAINTAINING AGENCY. THE CONTRACTOR SHALL PAY ANY CHARGES MADE BY THE POWER COMPANY FOR THE COMPANY'S WORK IN THE ESTABLISHMENT OF THE NEW POWER SERVICE AND FOR THE ELECTRICAL ENERGY USED BY THE NEW POWER SERVICES ESTABLISHED BY THIS PROJECT FROM THE DATE OF ESTABLISHMENT UNTIL THE ACCEPTANCE OF THE LIGHTING. AFTER ACCEPTANCE OF THE LIGHTING, THE POWER SERVICE ELECTRICAL ENERGY ACCOUNT SHALL BE TRANSFERRED TO THE MAINTAINING AGENCY NOTED IN THE PLANS.

THIS SHALL INCLUDE NEW POWER SERVICE ESTABLISHED BY THIS PROJECT AS WELL AS REASSIGNMENT OF EXISTING SERVICE DUE TO WORK PERFORMED BY THIS PROJECT.

PAYMENT WILL BE MADE AT THE UNIT BID PRICE FOR EACH ITEM 625, 'POWER SERVICE, AS PER PLAN'.

3. HIGH MAST AND LOW MAST LUMINAIRES

THE HIGH MAST AND LOW MAST LUMINAIRES SHALL HAVE A SYMMETRICAL PHOTOMETRIC DISTRIBUTION AND SHALL HAVE A 480 VOLT BALLAST TO OPERATE A 400 WATT HIGH PRESSURE SODIUM LAMP. THESE LUMINAIRES SHALL BE MANUFACTURED BY GENERAL ELCTRIC (GE6312.IES), HOLOPHANE (36383.IES), OR COOPER (HMX4SDW.IES).

4. CONVENTIONAL LUMINAIRES

THE CONVENTIONAL LUMINAIRES SHALL HAVE AN IES TYPE II PHOTOMETRIC DISTRIBUTION AND SHALL HAVE A 480 VOLT BALLAST TO OPERATE A 200 WATT HIGH PRESSURE SODIUM LAMP. THESE LUMINAIRES SHALL BE MANUFACTURED BY GENERAL ELCTRIC (GE1014.IES), AMERICAN ELECTRIC (AE38491.IES), OR COOPER (OVD2S2F.IES).

5. LAMPS

SUPPLEMENTING 713.14 OF THE SPECIFICATIONS, HIGH PRESSURE SODIUM (HPS) LAMPS SHALL BE OF THE WATTAGE INDICATED IN THE PLANS AND SHALL BE GENERAL ELECTRIC 'LUCALOX', PHILLIPS 'CERMALUX', OSRAM SYLVANIA 'LUMALUX' OR EQUAL AS APPROVED BY THE ENGINEER.

6. GROUND MOUNTED PULL BOXES

GROUND MOUNTED PULL BOXES SHALL BE CONCRETE AND OF THE STANDARD SPECIFICATION 713.08

7. PADLOCK AND KEYS

THE ENCLOSURE SHALL BE FURNISHED WITH A LOCK. THE LOCK SHALL BE EITHER BRASS OR BRONZE EQUAL TO MASTER NO. 4 BKA OR WILSON BOHANNON 660A AND SHALL BE KEYED IN ACCORDANCE WITH THE SPECIFICATIONS.

8. HIGH MAST TOWER FOUNDATIONS

THE TOP OF THE HIGH MAST TOWER FOUNDATIONS SHALL BE SIX TO TWELVE INCHES ABOVE FINISHED GRADE MEASURED ON THE UP-SLOPE SIDE.

DESIGN AGENCY
HNTB 55 Erieview Plaza, Suite 500 Cleveland, Ohio 44114-1816
ARCHITECTS ENGINEERS PLANNERS

DESIGNED	DRAWN	REVIEWED	DATE
JGS/SMS	TGM		06/06/01
CHECKED	REVISED	STRUCTURE FILE NUMBER	
LEL		1305697	

LIGHTING PLAN - IR 275
LIGHTING GENERAL NOTES
CLE-275-05.35

CLE-275-05.35

j:\31147\dwgs\LN001.dgn 06-JUN-2001 SSympson

SHEET NUMBER											FUNDING*		ITEM	ITEM EXT.	GRAND TOTAL	UNIT	DESCRIPTION	SEE SHEET NO.
7/17	8/17	9/17	10/17	11/17	12/17	13/17	14/17	15/17	16/17	17/17								
7	7	18	9			1		2	3				202	75300	47	EACH	PULL BOX REMOVED	
4	5	25	6	3	6	2		7	6	6			202	75400	70	EACH	LIGHT POLE REMOVED	
3	5	25	6	3	6	4	4	7	6	6			202	75500	75	EACH	LIGHT POLE FOUNDATION REMOVED	
				8	12								625	00500	20	EACH	CONNECTOR KIT TYPE II	
					2								625	10500	2	EACH	LIGHT POLE, MISC.: CONVENTIONAL, DESIGN AT15B40	
					4								625	10500	4	EACH	LIGHT POLE, MISC.: CONVENTIONAL, DESIGN AT15B50	
				1									625	10500	1	EACH	LIGHT POLE, MISC.: LOW MAST, DESIGN AT2BB60, AS PER PLAN	11
				3									625	10500	3	EACH	LIGHT POLE, MISC.: LOW MAST, DESIGN AT0B60	
							1						625	13200	1	EACH	LIGHT TOWER, BBBB100	
			2		1								625	13204	3	EACH	LIGHT TOWER, BBBB110	
		1			1								625	13208	2	EACH	LIGHT TOWER, BBBB120	
					1	1							625	13400	2	EACH	LIGHT TOWER, BBBBBB100	
2	1	2	1			2							625	13404	8	EACH	LIGHT TOWER, BBBBBB110	
	2	4											625	13406	6	EACH	LIGHT TOWER, BBBBBB120	
	1												625	13500	1	EACH	LIGHT TOWER, MISC.: LIGHT TOWER BBBBBBB100	
		1											625	13500	1	EACH	LIGHT TOWER, MISC.: LIGHT TOWER BBBBBBB120	
					2								625	14100	2	EACH	LIGHT POLE FOUNDATION, 24" X 8' DEEP	
				4	4								625	14200	8	EACH	LIGHT POLE FOUNDATION, 24" X 10' DEEP	
2	4	8	3		3	3	1						625	15400	24	EACH	LIGHT TOWER FOUNDATION, 42" X 25' DEEP	
	591												625	22990	591	LIN FT	NO. 6 AWG 600 VOLT DISTRIBUTION CABLE	
1383	1578	531	1391	663	957	195							625	23000	6899	LIN FT	NO. 4 AWG 600 VOLT DISTRIBUTION CABLE	
		246	1280										625	23100	1526	LIN FT	NO. 2 AWG 600 VOLT DISTRIBUTION CABLE	
				400	740								625	23400	1140	LIN FT	NO. 10 AWG POLE AND BRACKET CABLE	
	824	517				420							625	24400	1761	LIN FT	DUCT CABLE, MISC.: DUCT CABLE WITH THREE NO. 6 AWG 600V CABLES	
855	1881	2578	1641	716	1807	1214	222						625	24400	10914	LIN FT	DUCT CABLE, MISC.: DUCT CABLE WITH THREE NO. 4 AWG 600V CABLES	
		400	372										625	24400	772	LIN FT	DUCT CABLE, MISC.: DUCT CABLE WITH THREE NO. 2 AWG 600V CABLES	
	66	80	30	211		95							625	25400	482	LIN FT	CONDUIT, 2", 713.04	
67	85		293										625	25500	445	LIN FT	CONDUIT, 3", 713.04	
	66		33		67	90							625	25900	256	LIN FT	CONDUIT JACKED OR DRILLED, 2"	
99	361		35		141		57						625	25900	693	LIN FT	CONDUIT JACKED OR DRILLED, 3"	
		80	245										625	25920	325	LIN FT	CONDUIT, MISC.: GRS 2" ON STRUCTURE	
275													625	25920	275	LIN FT	CONDUIT, MISC.: GRS 3" ON STRUCTURE	
					6								625	26251	6	EACH	LUMINAIRE, CONVENTIONAL, STYLE B, TYPE II-M-SC, 200 WATT HPS, 480 VOLT, AS PER PLAN	1
12	25	47	14		14	18	4						625	26261	134	EACH	LUMINAIRE, HIGH MAST, SYMMETRIC, 400W HPS, 480 VOLT, AS PER PLAN	1
				5									625	26271	5	EACH	LUMINAIRE, LOW MAST, SYMMETRIC, 400W HPS, 480 VOLT, AS PER PLAN	1
					4								625	28001	4	EACH	GLARE SHIELD, AS PER PLAN	12
872	2726	3400	2226	877	1697	1259	212						625	29002	13269	LIN FT	TRENCH 24" DEEP	
4	12	11	10	2	5	4	2						625	30700	50	EACH	PULL BOX, 713.08, 18"	
2	5	8	4	4	9	3	1						625	32000	36	EACH	GROUND ROD	
	1		1										625	34001	2	EACH	POWER SERVICE, AS PER PLAN	1

*ALL LIGHTING ITEMS ARE FUNDED BY "INTERSTATE MAINTENANCE FUNDS".

DESIGN AGENCY
HNTB 55 Erieview Plaza, Suite 500 Cleveland, Ohio 44114-1816
ARCHITECTS ENGINEERS PLANNERS

DATE 06/06/01
REVIEWED
STRUCTURE FILE NUMBER 1305697
DRAWN TGM
REVISED
DESIGNED JGS/SMS
CHECKED LEL

LIGHTING PLAN - IR 275
GENERAL SUMMARY OF LIGHTING QUANTITIES
CLE-275-05.35

CLE-275-05.35

2/17

614
857

SSympson
14-JUN-2001
j:\3147\dwgs\LG001.dgn

LIGHTING QUANTITIES SUB-SUMMARY

625

LINE NUMBER	STATION	STATION	SIDE	LIGHT POLE, MISC.: CONVENTIONAL, DESIGN AT15B40	LIGHT POLE, MISC.: CONVENTIONAL, DESIGN AT15B50	LIGHT POLE, MISC.: LOW MAST, DESIGN AT0B60	LIGHT POLE, MISC.: LOW MAST, DESIGN AT2BB60, AS PER PLAN	LIGHT POLE FOUNDATION, 24" DIA. X 8' DEEP	LIGHT POLE FOUNDATION, 24" DIA. X 10' DEEP	LIGHT TOWER, BBBB100	LIGHT TOWER, BBBB110	LIGHT TOWER, BBBB120	LIGHT TOWER, BBBBBB100	LIGHT TOWER, BBBBBB110	LIGHT TOWER, BBBBBB120	LIGHT TOWER, MISC.: BBBBBBBB100	LIGHT TOWER, MISC.: BBBBBBBB120	LIGHT TOWER FOUNDATION, 42" DIA. X 25' DEEP	NO. 2 AWG 600V DISTRIBUTION CABLE	NO. 4 AWG 600V DISTRIBUTION CABLE	NO. 6 AWG 600V DISTRIBUTION CABLE	NO. 10 AWG POLE & BRACKET CABLE	DUCT CABLE, MISC.: DUCT CABLE WITH THREE NO. 2 AWG 600V CABLES	DUCT CABLE, MISC.: DUCT CABLE WITH THREE NO. 4 AWG 600V CABLES	DUCT CABLE, MISC.: DUCT CABLE WITH THREE NO. 6 AWG 600V CABLES	CONDUIT MISC.: GRS 2" ON STRUCTURE	CONDUIT, 2", 713.04	CONDUIT JACKED OR DRILLED, 2"	CONDUIT MISC.: GRS 3" ON STRUCTURE	LINE NUMBER
				EACH	EACH	EACH	EACH	EACH	EACH	EACH	EACH	EACH	EACH	EACH	EACH	EACH	EACH	EACH	LIN FT	LIN FT	LIN FT	LIN FT	LIN FT	LIN FT	LIN FT	LIN FT	LIN FT	LIN FT	LIN FT	
1	SHEET 7 OF 17																													1
2	POLE 298+66	BOX 300+45												1					1					190						2
3	BOX 300+45	BOX 303+86																	1056										275	3
4	BOX 303+86	POLE 304+00												1					1					25						4
5	BOX 303+86	BOX 303+83																	327											5
6	BOX 303+83	SIGN B3-4																						28						6
7	BOX 303+86	BOX 306+81																						305						7
8	BOX 306+81	POLE 309+75																						307						8
9	TOTALS SHEET 7 OF 17													2					2					855					275	9
10	SHEET 8 OF 17																													10
11	POLE 309+75	BOX 309+74														1			1	255											11
12	BOX 309+74	BOX 311+73																						209						12
13	BOX 311+73	BOX 313+72																						209						13
14	BOX 313+72	POLE 315+40																						175						14
15	POLE 315+40	BOX 315+65												1					1	267											15
16	LCC B 315+69	BOX 315+65																		225	135										16
17	BOX 315+65	BOX 315+75																		264											17
18	BOX 315+65	SIGN B2-1																							25						18
19	BOX 315+75	BOX 315+70																		567											19
20	BOX 315+70	BOX 317+50																						205						20
21	BOX 317+50	POLE 319+27																						205						21
22	POLE 319+27	BOX 321+29													1				1					201						22
23	POLE 319+27	BOX 321+51																						235						23
24	BOX 321+51	BOX 323+78																						236						24
25	BOX 321+29	BOX 123+10																						206						25
26	BOX 315+65	BOX 318+84R																							322						26
27	BOX 318+84R	BOX 321+84L																			126								32		27
28	BOX 321+84L	POLE 321+15																							260						28
29	POLE 321+15	BOX 321+68													1				1		330							66	34		29
30	BOX 321+68	BOX 323+96																							217						30
31	TOTALS SHEET 8 OF 17													1	2	1			4	1578	591			1881	824			66	66		31
32	SHEET 9 OF 17																													32
33	BOX 123+10	BOX 123+18																		141									37		33
34	BOX 123+18	POLE 125+92																						260						34
35	POLE 125+92	BOX 111+08													1				1					270						35
36	BOX 111+08	POLE 115+60																1	1					270						36
37	POLE 125+92	BOX 126+58																						77						37
38	BOX 126+58	SIGN B1-4																						25						38
39	BOX 126+58	SIGN B1-5																		390							80	40			39
40	POLE 330+09	BOX 332+77									1								1					241						40
41	BOX 332+77	POLE 335+10																						241						41
42	POLE 335+10	BOX 334+66													1				1					233						42
43	BOX 334+66	POLE 332+10																						233						43
44	BOX 323+96	POLE 313+25																							221						44
45	POLE 313+25	BOX 316+61													1				1						296						45
46	POLE 330+09	BOX 111+93																						214						46
47	POLE 329+90	SIGN A2-4												1					1					56						47
48	POLE 329+90	BOX 332+30																						229						48
49	BOX 332+30	POLE 335+60																						229						49
50	POLE 335+60	BOX 335+52												1					1	246								40	32		50
51	BOX 335+52	BOX 334+68																					195								51
52	BOX 334+68	POLE 336+60													1				1				205								52
53	TOTALS SHEET 9 OF 17										1			2	4			1	8	246	531		400	2578	517	80	80	69		53
54																														54
55	TOTAL THIS SUB-SUMMARY										1			5	6	1		1	14	246	3492	591	400	5314	1341	80	146	135	275	55

SSympson
06-JUN-2001
J:\3II47\dwgs\LS001.dgn

DESIGN AGENCY
HNTB 8II Erieview Plaza, Suite 500 Cleveland, Ohio 44II4-I836 (2I6) 363-4500
ARCHITECTS ENGINEERS PLANNERS

DESIGNED JGS/SMS | DRAWN TGM | REVIEWED 06/06/01 | DATE
CHECKED LEL | REVISED | STRUCTURE FILE NUMBER 1305697

LIGHTING PLAN - IR 275
LIGHTING QUANTITIES SUB-SUMMARY
CLE-275-05.35

CLE-275-05.35

3 / 17

615
857

LIGHTING QUANTITIES SUB-SUMMARY

LINE NUMBER	STATION	STATION	SIDE	625																		
				CONDUIT, 3", 713.04	CONDUIT JACKED OR DRILLED, 3"	TRENCH, 24" DEEP	LUMINAIRE, CONVENTIONAL, STYLE B, TYPE 11-M-SC, 200 WATT HPS, 480 VOLT, AS PER PLAN	LUMINAIRE, HIGH MAST, SYMMETRIC, 400W HPS, 480 VOLT, AS PER PLAN	LUMINAIRE, LOW MAST, SYMMETRIC, 400W HPS, 480 VOLT, AS PER PLAN	GLARE SHIELD, AS PER PLAN	PULL BOX, 713.08, 18"	GROUND ROD	POWER SERVICE, AS PER PLAN	CONNECTOR KIT TYPE II, (FUSED)								LINE NUMBER
				LIN FT	LIN FT	LIN FT	EACH	EACH	EACH	EACH	EACH	EACH	EACH	EACH								
1	SHEET 7 OF 17																					1
2	POLE 298+66	BOX 300+45				180		6				1										2
3	BOX 300+45	BOX 303+86		67		67					1											3
4	BOX 303+86	POLE 304+00				15		6			1	1										4
5	BOX 303+86	BOX 303+83			99																	5
6	BOX 303+83	SIGN B3-4				18					1											6
7	BOX 303+86	BOX 306+81				295																7
8	BOX 306+81	POLE 309+75				297					1											8
9	TOTALS SHEET 7 OF 17			67	99	872		12			4	2										9
10	SHEET 8 OF 17																					10
11	POLE 309+75	BOX 309+74			75			7				1										11
12	BOX 309+74	BOX 311+73				199					1											12
13	BOX 311+73	BOX 313+72				199					1											13
14	BOX 313+72	POLE 315+40				165					1											14
15	POLE 315+40	BOX 315+65		20	59	20		6				1										15
16	LCC B 315+69	BOX 315+65		35		35						1	1									16
17	BOX 315+65	BOX 315+75			78						1											17
18	BOX 315+65	SIGN B2-1				15																18
19	BOX 315+75	BOX 315+70		30	149	30					1											19
20	BOX 315+70	BOX 317+50				195					1											20
21	BOX 317+50	POLE 319+27				195					1											21
22	POLE 319+27	BOX 321+29				191		6				1										22
23	POLE 319+27	BOX 321+51				225																23
24	BOX 321+51	BOX 323+78				226					1											24
25	BOX 321+29	BOX 123+10				196					1											25
26	BOX 315+65	BOX 318+84R				312																26
27	BOX 318+84R	BOX 321+84L									1											27
28	BOX 321+84L	POLE 321+15				250					1											28
29	POLE 321+15	BOX 321+68				66		6				1										29
30	BOX 321+68	BOX 323+96				207					1											30
31	TOTALS SHEET 8 OF 17			85	361	2726		25			12	5	1									31
32	SHEET 9 OF 17																					32
33	BOX 123+10	BOX 123+18									1											33
34	BOX 123+18	POLE 125+92				250					1											34
35	POLE 125+92	BOX 111+08				260		6				1										35
36	BOX 111+08	POLE 115+60				260		7			1	1										36
37	POLE 125+92	BOX 126+58				67																37
38	BOX 126+58	SIGN B1-4				10					1											38
39	BOX 126+58	SIGN B1-5				40																39
40	POLE 330+09	BOX 332+77				231		4				1										40
41	BOX 332+77	POLE 335+10				231					1											41
42	POLE 335+10	BOX 334+66				223		6				1										42
43	BOX 334+66	POLE 332+10				223					1											43
44	BOX 323+96	POLE 313+25				211					1											44
45	POLE 313+25	BOX 316+61				286		6				1										45
46	POLE 330+09	BOX 111+93				204					1											46
47	POLE 329+90	SIGN A2-4				46		6				1										47
48	POLE 329+90	BOX 332+30				219																48
49	BOX 332+30	POLE 335+60				219					1											49
50	POLE 335+60	BOX 335+52				40		6				1										50
51	BOX 335+52	BOX 334+68				185					1											51
52	BOX 334+68	POLE 336+60				195		6			1	1										52
53	TOTALS SHEET 9 OF 17					3400		47			11	8										53
54																						54
55	TOTAL THIS SUB-SUMMARY			152	460	6998		84			28	15	1									55

LIGHTING REMOVAL QUANTITIES SUB-SUMMARY

202							
LIGHT POLE REMOVED	LIGHT POLE FOUNDATION REMOVED	PULL BOX REMOVED					LINE NUMBER
EACH	EACH	EACH					
4	3	7					9
5	5	7					31
25	25	18					53
34	33	32					55

DESIGN AGENCY
HNTB 55 Erieview Plaza, Suite 500 Cleveland, Ohio 44114
ARCHITECTS ENGINEERS PLANNERS

DESIGNED	DRAWN	REVIEWED	DATE
JGS/SMS	TGM		06/06/01
CHECKED	REVISED	STRUCTURE FILE NUMBER	
LEL		1305697	

LIGHTING PLAN - IR 275
LIGHTING QUANTITIES SUB-SUMMARY
CLE-275-05.35

CLE-275-05.35

4 / 17

616
857

SSympson
06-JUN-2001
J:\3147\dwgs\LS002.dgn

LIGHTING QUANTITIES SUB-SUMMARY

625

LINE NUMBER	STATION	STATION	SIDE	LIGHT POLE, MISC.: CONVENTIONAL, DESIGN AT15B40	LIGHT POLE, MISC.: CONVENTIONAL, DESIGN AT15B50	LIGHT POLE, MISC.: LOW MAST, DESIGN AT0B60	LIGHT POLE, MISC.: LOW MAST, DESIGN AT2BB60, AS PER PLAN	LIGHT POLE FOUNDATION, 24" DIA. X 8' DEEP	LIGHT POLE FOUNDATION, 24" DIA. X 10' DEEP	LIGHT TOWER, BBBB100	LIGHT TOWER, BBBB110	LIGHT TOWER, BBBB120	LIGHT TOWER, BBBBBB100	LIGHT TOWER, BBBBBB110	LIGHT TOWER, BBBBBB120	LIGHT TOWER, MISC.: BBBBBBBB100	LIGHT TOWER, MISC.: BBBBBBBB120	LIGHT TOWER FOUNDATION, 42" DIA. X 25' DEEP	NO. 2 AWG 600V DISTRIBUTION CABLE	NO. 4 AWG 600V DISTRIBUTION CABLE	NO. 6 AWG 600V DISTRIBUTION CABLE	NO. 10 AWG POLE & BRACKET CABLE	DUCT CABLE, MISC.: DUCT CABLE WITH THREE NO. 2 AWG 600V CABLES	DUCT CABLE, MISC.: DUCT CABLE WITH THREE NO. 4 AWG 600V CABLES	DUCT CABLE, MISC.: DUCT CABLE WITH THREE NO. 6 AWG 600V CABLES	CONDUIT MISC.: GRS 2" ON STRUCTURE	CONDUIT, 2", 713.04	CONDUIT JACKED OR DRILLED, 2"	CONDUIT MISC.: GRS 3" ON STRUCTURE	LINE NUMBER
				EACH	EACH	EACH	EACH	EACH	EACH	EACH	EACH	EACH	EACH	EACH	EACH	EACH	EACH	EACH	LIN FT	LIN FT	LIN FT	LIN FT	LIN FT	LIN FT	LIN FT	LIN FT	LIN FT	LIN FT	LIN FT	
1	SHEET 10 of 17																												1
2	BOX 337+28	POLE 336+60																					134						2
3	BOX 337+28	BOX 337+33																	129									33	3
4	BOX 337+33	BOX 339+64																					238						4
5	BOX 339+64	LCC A 339+39																	440	176									5
6	BOX 339+80	BOX 339+64																	198	132									6
7	BOX 339+80	BOX 339+71 R																	342	228									7
8	BOX 339+71 R	BOX 339+71 L																	300										8
9	BOX 339+71 R	POLE 340+30																						74					9
10	POLE 340+30	BOX 343+31												1				1						313					10
11	BOX 343+31	SIGN A1-2																						78					11
12	BOX 343+31	POLE 345+44																						225					12
13	POLE 345+44	BOX 345+81								1								1						48					13
14	BOX 345+81	BOX 348+57																		855							245	30	14
15	BOX 348+57	POLE 350+48																						202					15
16	POLE 350+48	BOX 352+15								1								1						176					16
17	BOX 339+71 L	BOX 337+36																						278					17
18	BOX 337+36	POLE 335+10																						247					18
19	TOTALS SHEET 10 OF 17									2				1				3	1280	1391			372	1641			245	30	33	19
20	SHEET 11 OF 17																												20
21	BOX 352+15	POLE 354+24																						221					21
22	POLE 354+24	BOX 355+21				1		1														140		107					22
23	BOX 355+21	SIGN A1-6																						20					23
24	BOX 355+21	POLE 356+64																						153					24
25	POLE 356+64	POLE 358+70			1			1														130		215					25
26	POLE 358+70	POLE 360+80			2			1												663		130					211		26
27	TOTALS SHEET 11 OF 17				3	1		3												663		400		716			211		27
28	SHEET 12 OF 17																												28
29	POLE 324+00	BOX 323+78								1								1		273									29
30	SIGN A3-4	BOX 113+86																						20					30
31	BOX 113+86	BOX 111+93																						214					31
32	POLE 332+10	BOX 329+71									1							1						257					32
33	BOX 329+71	POLE 327+46																						257					33
34	POLE 327+46	BOX 325+25										1						1						253					34
35	BOX 325+25	POLE 324+80																		231								67	35
36	POLE 324+80	POLE 122+90R		1				1														110		165					36
37	POLE 122+90R	POLE 124+30R		1	1			1	1													240		155					37
38	BOX 325+25	BOX 335+19																		453									38
39	SIGN A3-9	BOX 335+19																						105					39
40	BOX 335+19	POLE 121+36L																						66					40
41	POLE 121+36L	POLE 122+90L			1			1														130		165					41
42	POLE 122+90L	POLE 124+30L			2			2														260		150					42
43	TOTALS SHEET 12 OF 17			2	4			2	4		1	1	1					3		957		740		1807				67	43
44	SHEET 13 OF 17																												44
45	POLE 325+40	BOX 316+61										1						1							420		95	35		45
46	POLE 95+56	BOX 93+01 R											1					1						260						46
47	POLE 95+56	BOX 325+02																						219						47
48	BOX 325+02	POLE 327+10																						219						48
49	POLE 327+10	BOX 338+80											1					1						257						49
50	BOX 338+80	BOX 338+37																		195								55		50
51	BOX 338+37	POLE 335+60																						259						51
52	TOTALS SHEET 13 OF 17											1	2					3		195				1214	420		95	90		52
53	SHEET 14 OF 17																													53
54	BOX 93+01 R	BOX 93+01 L																		201										54
55	BOX 93+01 L	POLE 90+90							1									1						222						55
56	TOTALS SHEET 14 OF 17								1									1		201				222						56
57	TOTALS SHEET 15 OF 17																													57
58	TOTALS SHEET 16 OF 17																													58
59	TOTALS SHEET 17 OF 17																													59
60																														60
61																														61
62	TOTAL THIS SUB-SUMMARY			2	4	3	1	2	7	1	3	1	2	3				10	1280	3407		1140	372	5600	420	245	336	190		62

SSympson
06-JUN-2001
J:\31147\dwgs\LS003.dgn

DESIGN AGENCY
HNTB 56 Garvey Road, Suite 500 Bensalem, PA
ARCHITECTS ENGINEERS PLANNERS

DESIGNED JGS/SMS | DRAWN TGM | DATE REVIEWED 06/06/01 | STRUCTURE FILE NUMBER 1305697
CHECKED LEL | REVISED

LIGHTING PLAN - IR 275
LIGHTING QUANTITIES SUB-SUMMARY
CLE-275-05.35

CLE-275-05.35

LIGHTING QUANTITIES SUB-SUMMARY

LINE NUMBER	STATION	STATION	SIDE	625 CONDUIT, 3", 713.04 (LIN FT)	CONDUIT JACKED OR DRILLED, 3" (LIN FT)	TRENCH, 24" DEEP (LIN FT)	LUMINAIRE, CONVENTIONAL, STYLE B, TYPE 11-M-SC, 200 WATT HPS, 480 VOLT, AS PER PLAN (EACH)	LUMINAIRE, HIGH MAST, SYMMETRIC, 400W HPS, 480 VOLT, AS PER PLAN (EACH)	LUMINAIRE, LOW MAST, SYMMETRIC, 400W HPS, 480 VOLT, AS PER PLAN (EACH)	GLARE SHIELD, AS PER PLAN (EACH)	PULL BOX, 713.08, 18" (EACH)	GROUND ROD (EACH)	POWER SERVICE, AS PER PLAN (EACH)	CONNECTOR KIT TYPE II, (FUSED) (EACH)								LINE NUMBER
1	SHEET 10 of	17																				1
2	BOX 337+28	POLE 336+60				124					1											2
3	BOX 337+28	BOX 337+33																				3
4	BOX 337+33	BOX 339+64				228					1											4
5	BOX 339+64	LCC A 339+39		78		78					1	1	1									5
6	BOX 339+80	BOX 339+64		21	35	21					1											6
7	BOX 339+80	BOX 339+71 R		104		104																7
8	BOX 339+71 R	BOX 339+71 L		90		90					1											8
9	BOX 339+71 R	POLE 340+30				64																9
10	POLE 340+30	BOX 343+31				303		6				1										10
11	BOX 343+31	SIGN A1-2				68					1											11
12	BOX 343+31	POLE 345+44				215																12
13	POLE 345+44	BOX 345+81				38		4				1										13
14	BOX 345+81	BOX 348+57				30					1											14
15	BOX 348+57	POLE 350+48				192					1											15
16	POLE 350+48	BOX 352+15				166		4				1										16
17	BOX 339+71 L	BOX 337+36				268					1											17
18	BOX 337+36	POLE 335+10				237					1											18
19	TOTALS SHEET 10 OF 17			293	35	2226		14			10	4	1									19
20	SHEET 11 OF	17																				20
21	BOX 352+15	POLE 354+24				211					1											21
22	POLE 354+24	BOX 355+21				97			2			1		2								22
23	BOX 355+21	SIGN A1-6				10					1											23
24	BOX 355+21	POLE 356+64				143																24
25	POLE 356+64	POLE 358+70				205			1			1		2								25
26	POLE 358+70	POLE 360+80				211			2			2		4								26
27	TOTALS SHEET 11 OF 17					877			5		2	4		8								27
28	SHEET 12 OF	17																				28
29	POLE 324+00	BOX 323+78						4		4	1	1										29
30	SIGN A3-4	BOX 113+86				10																30
31	BOX 113+86	BOX 111+93				204					1											31
32	POLE 332+10	BOX 329+71				247		4				1										32
33	BOX 329+71	POLE 327+46				247					1											33
34	POLE 327+46	BOX 325+25				243		6				1										34
35	BOX 325+25	POLE 324+80									1											35
36	POLE 324+80	POLE 122+90R				155	1					1		2								36
37	POLE 122+90R	POLE 124+30R				145	2					2		4								37
38	BOX 325+25	BOX 335+19			141																	38
39	SIGN A3-9	BOX 335+19				95																39
40	BOX 335+19	POLE 121+36L				56					1											40
41	POLE 121+36L	POLE 122+90L				155	1					1		2								41
42	POLE 122+90L	POLE 124+30L				140	2					2		4								42
43	TOTALS SHEET 12 OF 17				141	1697	6	14		4	5	9		12								43
44	SHEET 13 OF	17																				44
45	POLE 325+40	BOX 316+61				95		6			1	1										45
46	POLE 95+56	BOX 93+01 R				250		6				1										46
47	POLE 95+56	BOX 325+02				209																47
48	BOX 325+02	POLE 327+10				209					1											48
49	POLE 327+10	BOX 338+80				247		6				1										49
50	BOX 338+80	BOX 338+37									1											50
51	BOX 338+37	POLE 335+60				249					1											51
52	TOTALS SHEET 13 OF 17					1259		18			4	3										52
53	SHEET 14 OF	17																				53
54	BOX 93+01 R	BOX 93+01 R2			57						1											54
55	BOX 93+01 R2	POLE 90+90				212		4			1	1										55
56	TOTALS SHEET 14 OF 17				57	212		4			2	1										56
57	TOTALS SHEET 15 OF 17																					57
58	TOTALS SHEET 16 OF 17																					58
59	TOTALS SHEET 17 OF 17																					59
60																						60
61																						61
62	TOTAL THIS SUB-SUMMARY			293	233	6271	6	50	5	4	23	21	1	20								62

LIGHTING REMOVAL QUANTITIES SUB-SUMMARY

202 LIGHT POLE REMOVED (EACH)	LIGHT POLE FOUNDATION REMOVED (EACH)	PULL BOX REMOVED (EACH)					LINE NUMBER
							1
							2
							3
							4
							5
							6
							7
							8
							9
							10
							11
							12
							13
							14
							15
							16
							17
							18
6	6	9					19
							20
							21
							22
							23
							24
							25
							26
3	3						27
							28
							29
							30
							31
							32
							33
							34
							35
							36
							37
							38
							39
							40
							41
							42
6	6						43
							44
							45
							46
							47
							48
							49
							50
							51
2	4	1					52
							53
							54
							55
	4						56
7	7	2					57
6	6	3					58
6	6						59
							60
							61
36	42	15					62

HNTB 55 Erieview Plaza, Suite 800 Cleveland, Ohio 44114-1848
ARCHITECTS ENGINEERS PLANNERS

DESIGN AGENCY

REVIEWED DATE 06/06/01

STRUCTURE FILE NUMBER 1305697

DRAWN TGM

REVISED

DESIGNED JGS/SMS

CHECKED LEL

LIGHTING PLAN - IR 275
LIGHTING QUANTITIES SUB-SUMMARY
CLE-275-05.35

CLE-275-05.35

6 / 17

618 857

SSympson

06-JUN-2001

J:\3147\dwgs\LS004.dgn

LIGHT TOWER SCHEDULE

POLE I.D.	ROADWAY ELEVATION WITHIN 300'	POLE ELEVATION	POLE HEIGHT	NUMBER OF LUMINAIRES
A1-1	573'	563'	110'	6
A1-3	583'	575'	110'	4
A1-4	592'	584'	110'	4
A2-1	565'	545'	120'	6
A2-2	550'	538'	110'	6
A2-3	554'	546'	110'	6
A2-5	535'	525'	110'	6
A2-6	527'	518'	110'	6
A2-7	520'	520'	100'	4
A3-1	562'	546'	120'	6
A3-2	556'	538'	120'	4
A3-3	548'	534'	120'	4
A3-5	533'	530'	100'	6
B1-1	540'	525'	120'	6
B1-2	536'	528'	110'	4
B1-3	550'	540'	120'	6
B1-6	530'	524'	120'	7
B2-2	540'	529'	120'	6
B2-3	546'	523'	120'	6
B2-4	529'	523'	100'	6
B3-1	536'	527'	110'	6
B3-2	527'	526'	100'	7
B3-3	533'	526'	110'	6
B3-5	545'	536'	110'	6

LIGHT POLE SCHEDULE

POLE I.D.	ROADWAY ELEVATION	POLE ELEVATION	POLE HEIGHT	NUMBER OF LUMINAIRES
A1-5	601'	590'	60'	2
A1-7	608'	595'	60'	1
A1-8	614'	601'	60'	1
A1-9	620'	608'	60'	1
A3-6	530'	530'	40'	1
A3-7	530'	530'	40'	1
A3-8	530'	533'	50'	1
A3-10	530'	529'	50'	1
A3-11	530'	529'	50'	1
A3-12	530'	529'	50'	1

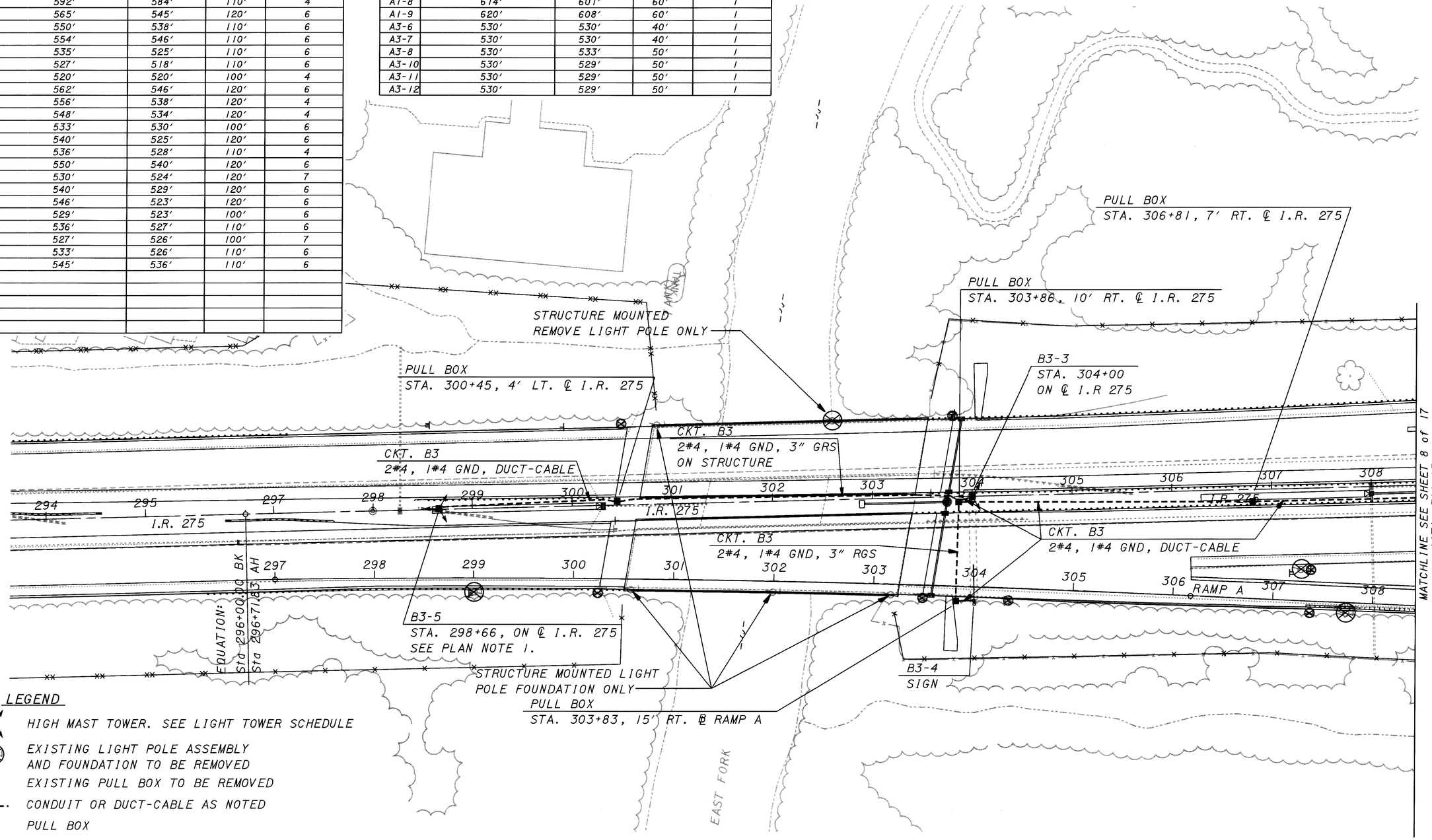

MATCHLINE SEE SHEET 8 of 17 (STA. 308+63)

LEGEND

- HIGH MAST TOWER. SEE LIGHT TOWER SCHEDULE
- EXISTING LIGHT POLE ASSEMBLY AND FOUNDATION TO BE REMOVED
- EXISTING PULL BOX TO BE REMOVED
- CONDUIT OR DUCT-CABLE AS NOTED
- PULL BOX
- LOW MAST LIGHTING UNIT. SEE LIGHT POLE SCHEDULE
- CONVENTIONAL LIGHT STANDARD, SEE LIGHT POLE SCHEDULE FOR MOUNTING HEIGHT WITH 15' BRACKET ARM AND 200 W HPS COBRA HEAD LUMINAIRE
- B3-4 POLE DESIGNATION, "B" IS THE CONTROL CENTER, "3" IS THE CIRCUIT NUMBER AND "4" IS THE I.D.

PLAN NOTES

1. PROVIDE EMPTY 2" CONDUIT ELL FOR FUTURE EXPANSION TO THE NORTH.

N

50' 0 50' 100'

SCALE IN FEET

LIGHTING PLAN - IR 275
STA. 293+70 TO STA. 308+36
CLE-275-05.35

CLE-275-05.35

7 / 17

619
857

DESIGN AGENCY
HNTB 55 Erieview Plaza, Suite 900 Cleveland, Ohio 44114-1836
ARCHITECTS ENGINEERS PLANNERS

REVIEWED	DATE	STRUCTURE FILE NUMBER
	06/06/01	1305697

DRAWN	REVISED
TGM	

DESIGNED	CHECKED
JGS/SMS	LEL

SSympson
06-JUN-2001
J:\3l147\dwgs\LP001.dgn

LEGEND

- HIGH MAST TOWER. SEE LIGHT TOWER SCHEDULE
- EXISTING LIGHT POLE ASSEMBLY AND FOUNDATION TO BE REMOVED
- EXISTING PULL BOX TO BE REMOVED
- CONDUIT OR DUCT-CABLE AS NOTED
- PULL BOX
- LOW MAST LIGHTING UNIT. SEE LIGHT POLE SCHEDULE
- CONVENTIONAL LIGHT STANDARD, SEE LIGHT POLE SCHEDULE FOR MOUNTING HEIGHT WITH 15' BRACKET ARM AND 200 W HPS COBRA HEAD LUMINAIRE
- B3-4 POLE DESIGNATION, "B" IS THE CONTROL CENTER, "3" IS THE CIRCUIT NUMBER AND "4" IS THE I.D.

PLAN NOTES

1. POWER SERVICE SHALL BE 100 AMPERE, 240/480 VOLT, SINGLE PHASE, THREE WIRE SECONDARY WITH GROUNDED NEUTRAL.

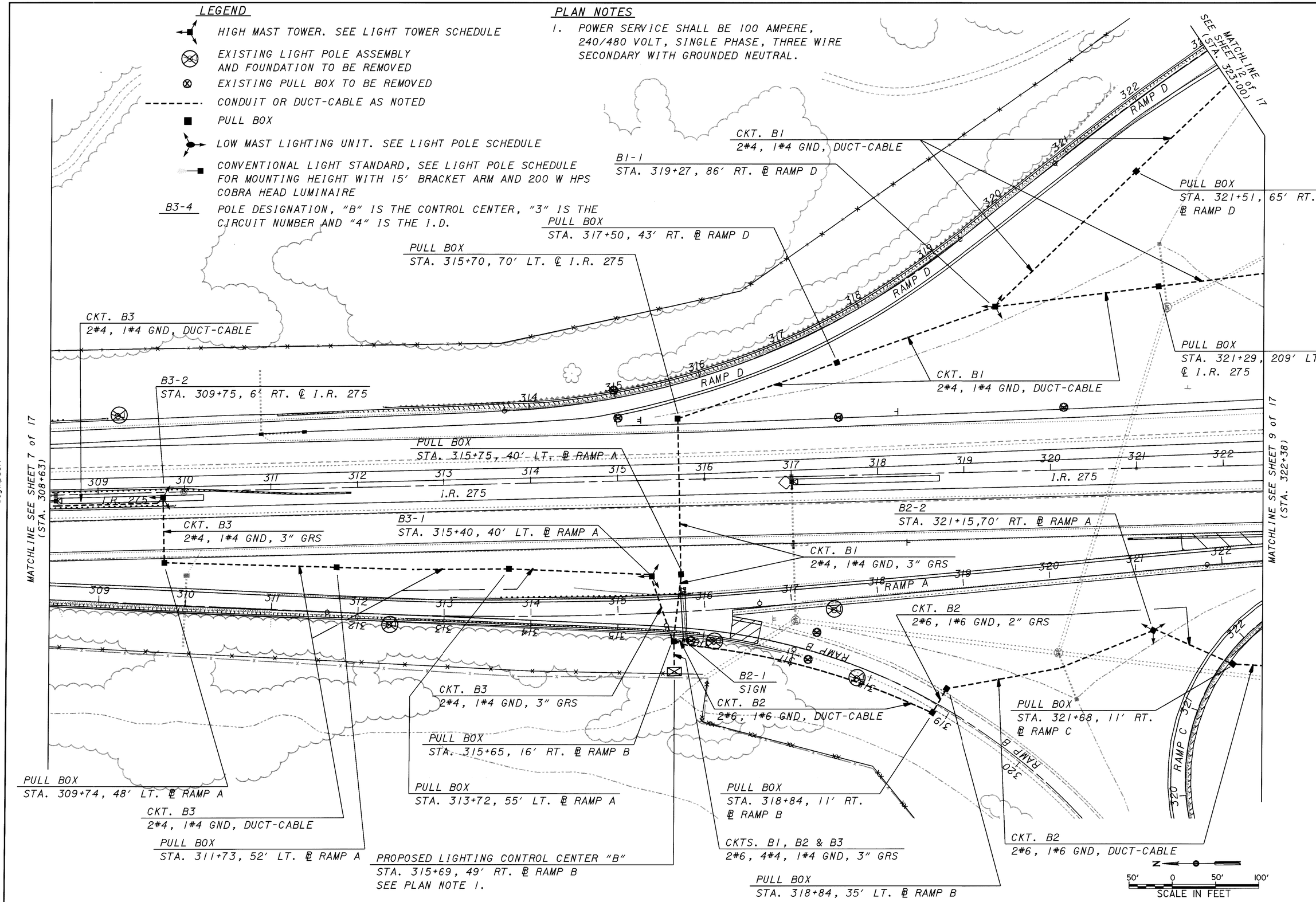

DESIGN AGENCY
HNTB
55 Erieview Plaza, Suite 500
Cleveland, Ohio 44114-1816
ARCHITECTS ENGINEERS PLANNERS

DESIGNED	DRAWN	REVIEWED	DATE
JGS/SMS	TGM		06/06/01
CHECKED	REVISED	STRUCTURE FILE NUMBER	
LEL		1305697	

LIGHTING PLAN - IR 275
STA. 308+63 TO STA. 322+38
CLE-275-05.35

CLE-275-05.35

8/17

620/857

SSympson
06-JUN-2001
j:\31147\dwgs\LP002.dgn

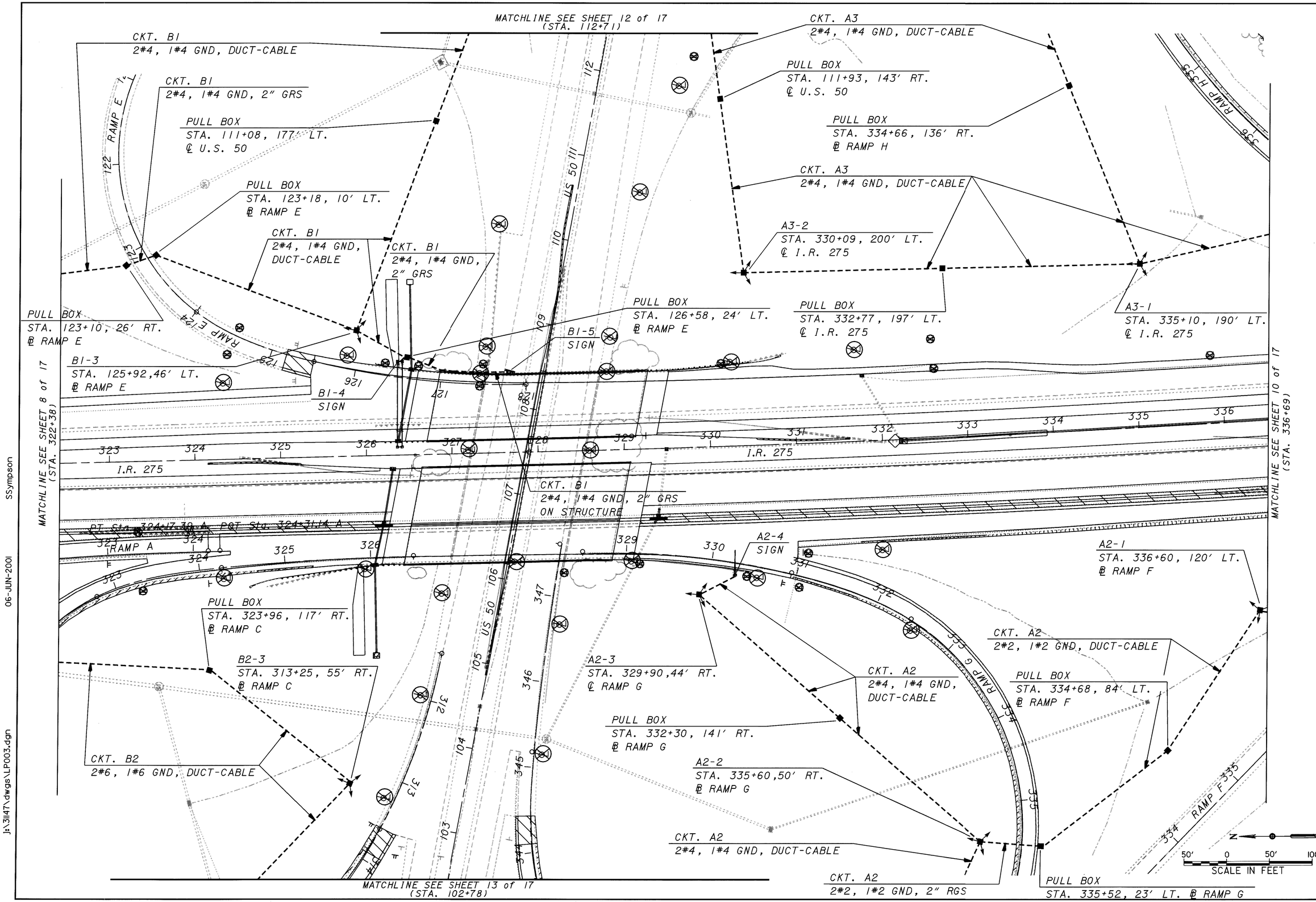

DESIGN AGENCY
HNTB
55 Erieview Plaza, Suite 500
Cleveland, Ohio 44114-1816
ARCHITECTS ENGINEERS PLANNERS

DESIGNED	DRAWN	REVIEWED	DATE
JGS/SMS	TGM		06/06/01
CHECKED	REVISED	STRUCTURE FILE NUMBER	
LEL		1305697	

LIGHTING PLAN - IR 275
STA. 322+38 TO STA. 336+69
CLE-275-05.35

CLE-275-05.35

9/17

621/857

SSympson
06-JUN-2001
j:\31147\dwgs\LP003.dgn

PLAN NOTES

1. POWER SERVICE SHALL BE 100 AMPERE, 240/480 VOLT, SINGLE PHASE, THREE WIRE SECONDARY WITH GROUNDED NEUTRAL.

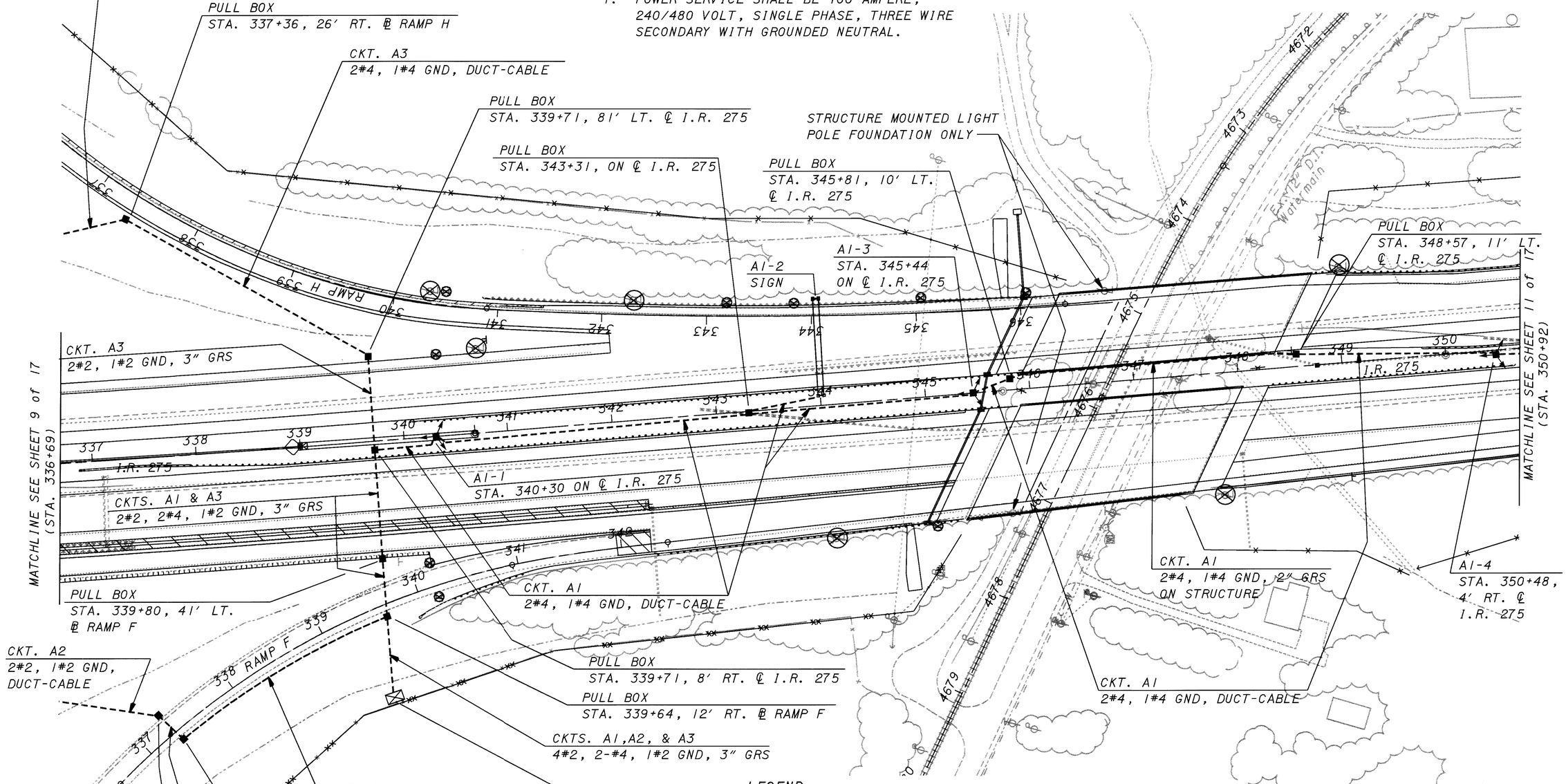

LEGEND

- HIGH MAST TOWER. SEE LIGHT TOWER SCHEDULE
- EXISTING LIGHT POLE ASSEMBLY AND FOUNDATION TO BE REMOVED
- EXISTING PULL BOX TO BE REMOVED
- CONDUIT OR DUCT-CABLE AS NOTED
- PULL BOX
- LOW MAST LIGHTING UNIT. SEE LIGHT POLE SCHEDULE
- CONVENTIONAL LIGHT STANDARD, SEE LIGHT POLE SCHEDULE FOR MOUNTING HEIGHT WITH 15' BRACKET ARM AND 200 W HPS COBRA HEAD LUMINAIRE
- B3-4 POLE DESIGNATION, "B" IS THE CONTROL CENTER, "3" IS THE CIRCUIT NUMBER AND "4" IS THE I.D.

N

50' 0 50' 100'
SCALE IN FEET

DESIGN AGENCY
HNTB
55 Erieview Plaza, Suite 500
Cleveland, Ohio 44114-1816
ARCHITECTS ENGINEERS PLANNERS

DESIGNED	DRAWN	REVIEWED	DATE
JGS/SMS	TGM		06/06/01
CHECKED	REVISED	STRUCTURE FILE NUMBER	
LEL		1305697	

LIGHTING PLAN - IR 275
STA. 336+69 TO STA. 350+92
CLE-275-05.35

CLE-275-05.35

10/17

622/857

SSympson
06-JUN-2001
j:\31147\dwgs\LP004.dgn

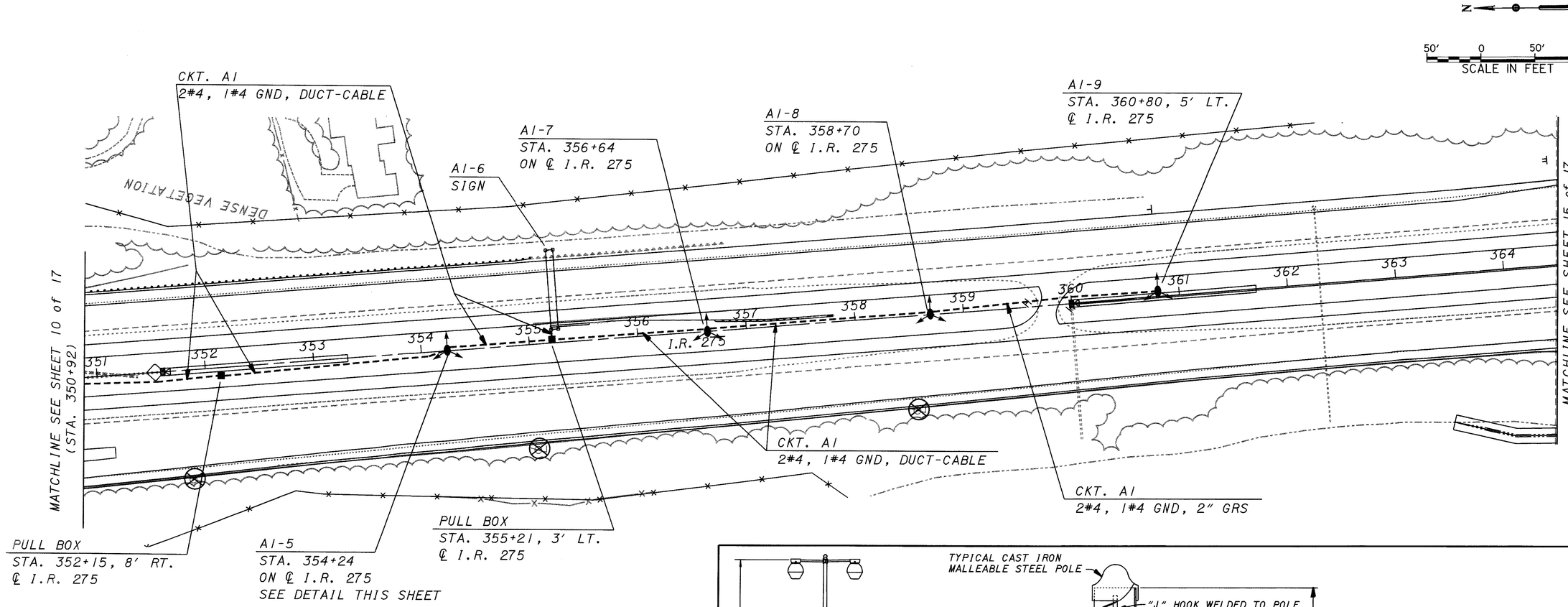

LEGEND

- HIGH MAST TOWER. SEE LIGHT TOWER SCHEDULE
- EXISTING LIGHT POLE ASSEMBLY AND FOUNDATION TO BE REMOVED
- EXISTING PULL BOX TO BE REMOVED
- CONDUIT OR DUCT-CABLE AS NOTED
- PULL BOX
- LOW MAST LIGHTING UNIT. SEE LIGHT POLE SCHEDULE
- CONVENTIONAL LIGHT STANDARD, SEE LIGHT POLE SCHEDULE FOR MOUNTING HEIGHT WITH 15' BRACKET ARM AND 200 W HPS COBRA HEAD LUMINAIRE
- B3-4 POLE DESIGNATION, "B" IS THE CONTROL CENTER, "3" IS THE CIRCUIT NUMBER AND "4" IS THE I.D.

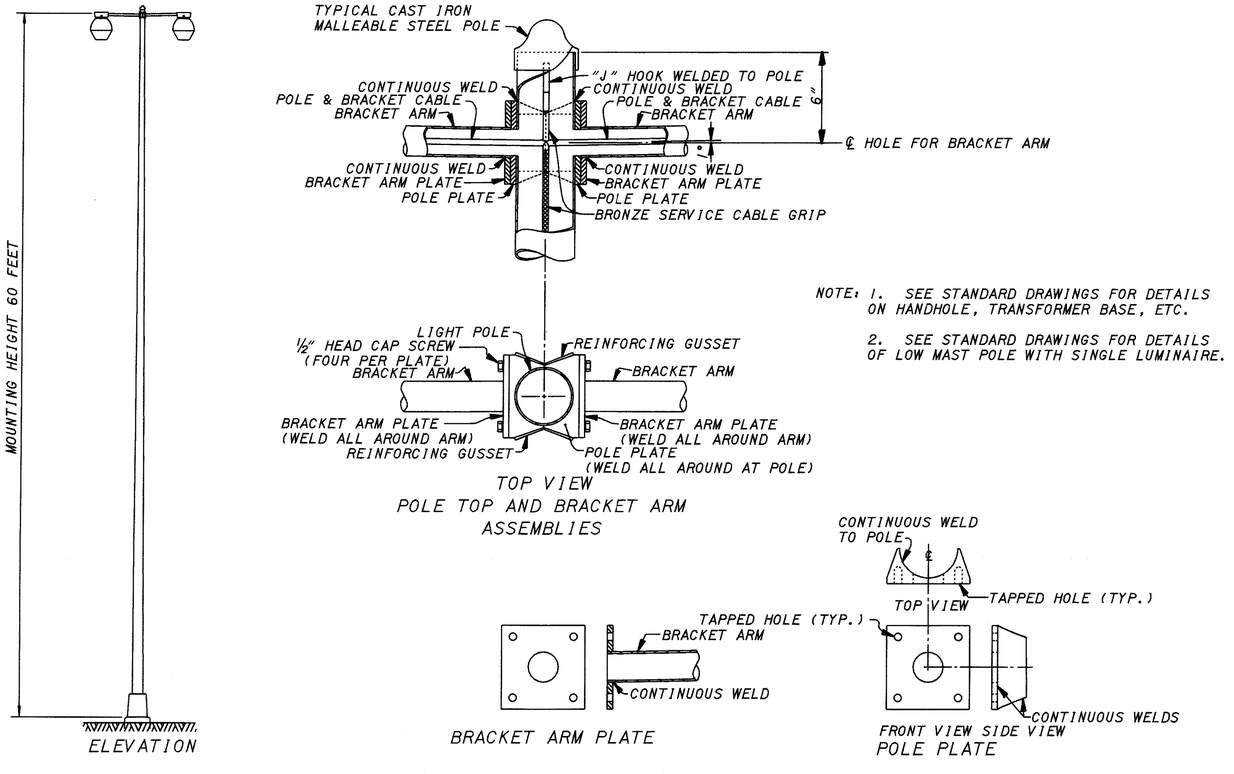

NOTE: 1. SEE STANDARD DRAWINGS FOR DETAILS ON HANDHOLE, TRANSFORMER BASE, ETC.

2. SEE STANDARD DRAWINGS FOR DETAILS OF LOW MAST POLE WITH SINGLE LUMINAIRE.

LOW MAST LIGHT POLE DESIGN AT2BB60 DETAILS

DESIGN AGENCY
HNTB 8 Brookes Place Suite 800 Cleveland, Ohio 44115-1093
ARCHITECTS ENGINEERS PLANNERS

DESIGNED	DRAWN	REVIEWED	DATE
JGS/SMS	TGM		06/06/01
CHECKED	REVISED	STRUCTURE FILE NUMBER	
LEL		1305697	

LIGHTING PLAN - IR 275
STA. 350+92 TO STA. 364+68
CLE-275-05.35

CLE-275-05.35

11/17

623
857

14-JUN-2001 SSympson

J:\3147\dwgs\LP005.dgn

EXISTING LIGHT STANDARD ICH8 TO REMAIN IN PLACE. DISCONNECT AND REMOVE THE EXISTING CABLES FEEDING THE LIGHTS TO THE EAST THAT ARE TO BE REMOVED. CLOSE CIRCUIT SUCH THAT THIS LIGHT IS THE END OF CIRCUIT #ICH.

EXISTING CIRCUIT CABLES (U.I.P.)

EXISTING CIRCUIT CABLES TO BE ABANDONED.

A3-10
STA. 121+36, 74' LT.
℄ U.S. 50

PULL BOX
STA. 335+19, 19' LT.
℄ RAMP D

CKT. A3
2#4, 1#4 GND, DUCT-CABLE

A3-12
STA. 124+30, 74' LT.
℄ U.S. 50
SEE PLAN NOTE 2.

A3-8
STA. 124+30, 77' RT.
℄ U.S. 50
SEE PLAN NOTE 2.

CKT. A3
2#4, 1#4 GND, DUCT-CABLE

A3-11
STA. 122+90, 74' LT.
℄ U.S. 50

A3-7
STA. 122+90, 77' RT.
℄ U.S. 50

CKT. A3
2#4, 1#4 GND, DUCT-CABLE

MATCHLINE SEE THIS SHEET (STA. 122+11)

MATCHLINE SEE THIS SHEET (STA. 122+11)

A3-9
SIGN

CKT. A3
2#4, 1#4 GND, DUCT-CABLE

A3-6
STA. 324+80, 17' LT.
℄ RAMP H

CKT. A3
2#4, 1#4 GND, 2" PVC

PULL BOX
STA. 325+25, 32' RT. ℄ RAMP H

CKT. A3
2#4, 1#4 GND, 3" GRS

CKT. A3
2#4, 1#4 GND, DUCT-CABLE

A3-5
STA. 327+46, 92' RT.
℄ RAMP H

B1-6
STA. 115+60, 60' LT.
℄ RAMP E

PULL BOX
STA. 329+71, 70' RT.
℄ RAMP H

CKT. A3
2#4, 1#4 GND, DUCT-CABLE

B1-2
STA. 324+00, 40' LT.
℄ RAMP D
SEE PLAN NOTE 1.

A3-3
STA. 332+10, 85' RT.
℄ RAMP H

A3-4
SIGN

CKT. A3
2#4, 1#4 GND, DUCT-CABLE

CKT. B1
2#4, 1#4 GND, DUCT-CABLE

CKT. B1
2#4, 1#4 GND, 2" GRS

PULL BOX
STA. 113+86, 78' RT.
℄ U.S. 50

PULL BOX
STA. 323+78, 32' RT.
℄ RAMP D

MATCHLINE SEE SHEET 8 of 17 (STA. 323+00)

MATCHLINE SEE SHEET 9 of 17 (STA. 112+71)

LEGEND

- HIGH MAST TOWER. SEE LIGHT TOWER SCHEDULE
- EXISTING LIGHT POLE ASSEMBLY AND FOUNDATION TO BE REMOVED
- EXISTING PULL BOX TO BE REMOVED
- CONDUIT OR DUCT-CABLE AS NOTED
- PULL BOX
- LOW MAST LIGHTING UNIT. SEE LIGHT POLE SCHEDULE
- CONVENTIONAL LIGHT STANDARD, SEE LIGHT POLE SCHEDULE FOR MOUNTING HEIGHT WITH 15' BRACKET ARM AND 200 W HPS COBRA HEAD LUMINAIRE
- B3-4 POLE DESIGNATION, "B" IS THE CONTROL CENTER, "3" IS THE CIRCUIT NUMBER AND "4" IS THE I.D.

PLAN NOTES

1. LUMINAIRES ON THIS TOWER SHALL BE EQUIPPED WITH 120 DEGREE SHIELDS. INSTALL SHIELDS ON THE ROW SIDE OF THE LUMINAIRES.
2. PROVIDE EMPTY 2" CONDUIT ELL FOR FUTURE EXPANSION TO THE EAST.

N
50' 0 50' 100'
SCALE IN FEET

DESIGN AGENCY
HNTB 85 Erieview Plaza, Suite 500 Cleveland, Ohio 44114-1836
ARCHITECTS ENGINEERS PLANNERS

REVISED DATE 06/06/01
STRUCTURE FILE NUMBER 1305697
DRAWN TGM
REVISED
DESIGNED JGS/SMS
CHECKED LEL

LIGHTING PLAN - IR 275
STA. 112+71 TO STA. 125+00
CLE-275-05.35

CLE-275-05.35

12/17

624
857

J:\3II47\dwgs\LP006.dgn
06-JUN-2001
SSympson

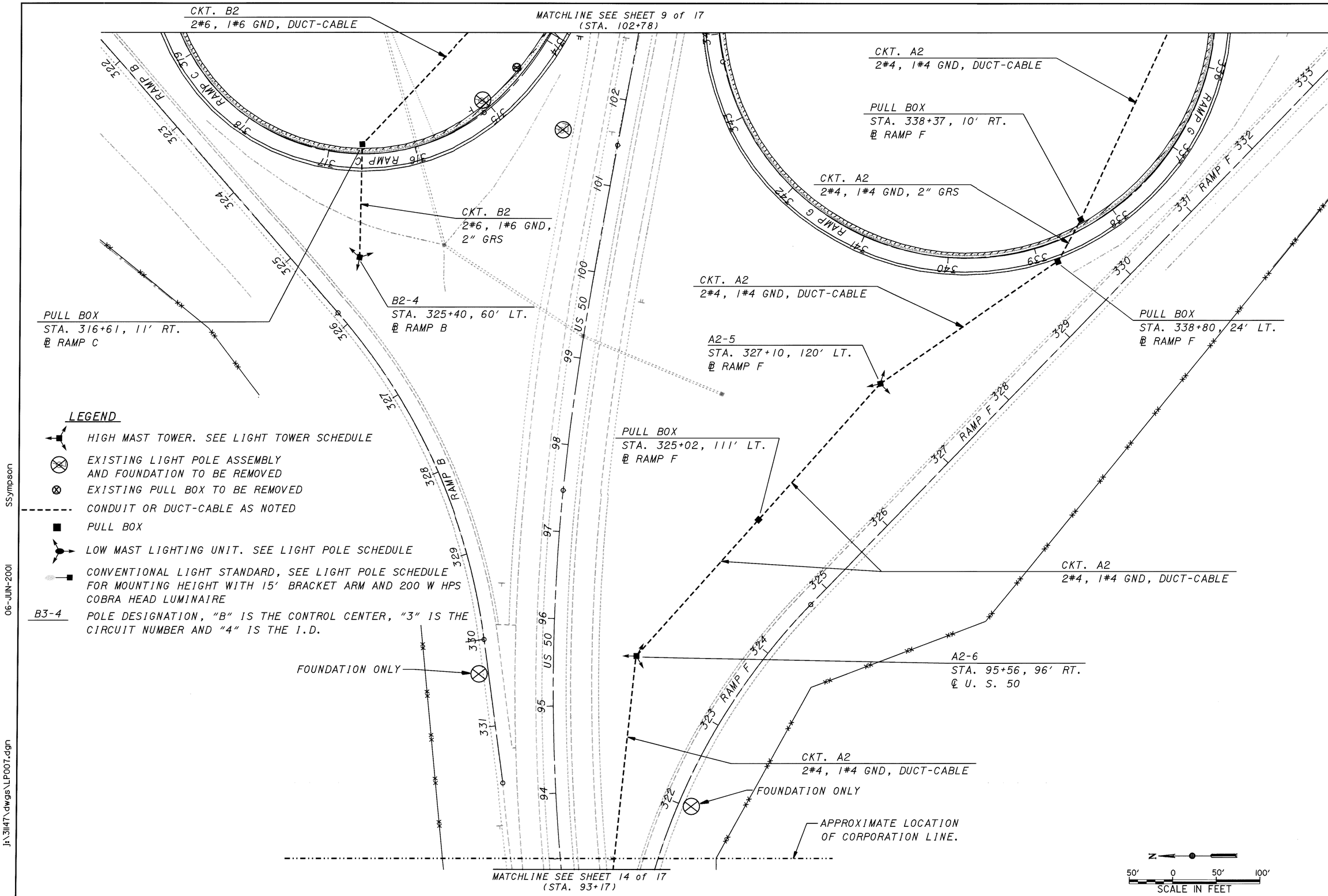

DESIGN AGENCY
HNTB 55 Erieview Plaza, Suite 500 Cleveland, Ohio 44114-1816
ARCHITECTS ENGINEERS PLANNERS

DESIGNED	DRAWN	REVIEWED	DATE
JGS/SMS	TGM		06/06/01
CHECKED	REVISED	STRUCTURE FILE NUMBER	
LEL		1305697	

LIGHTING PLAN - IR 275
STA. 93+17 TO STA. 102+78
CLE-275-05.35

CLE-275-05.35

13/17

625/857

SSympson 06-JUN-2001 J:\31147\dwgs\LP007.dgn

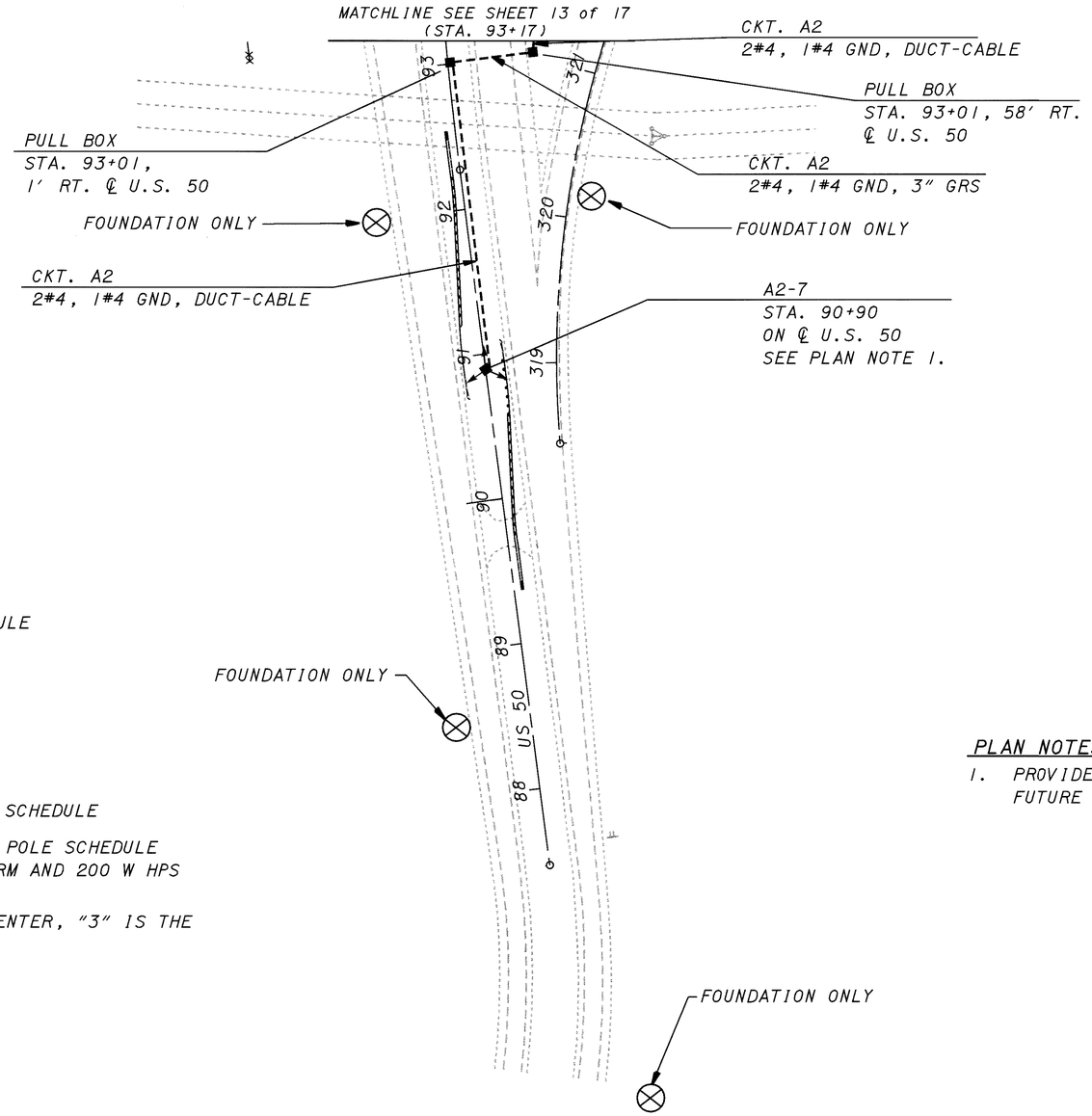

LEGEND

- HIGH MAST TOWER. SEE LIGHT TOWER SCHEDULE
- EXISTING LIGHT POLE ASSEMBLY AND FOUNDATION TO BE REMOVED
- EXISTING PULL BOX TO BE REMOVED
- CONDUIT OR DUCT-CABLE AS NOTED
- PULL BOX
- LOW MAST LIGHTING UNIT. SEE LIGHT POLE SCHEDULE
- CONVENTIONAL LIGHT STANDARD, SEE LIGHT POLE SCHEDULE FOR MOUNTING HEIGHT WITH 15' BRACKET ARM AND 200 W HPS COBRA HEAD LUMINAIRE
- B3-4 POLE DESIGNATION, "B" IS THE CONTROL CENTER, "3" IS THE CIRCUIT NUMBER AND "4" IS THE I.D.

PLAN NOTES

1. PROVIDE EMPTY 2" CONDUIT ELL FOR FUTURE EXPANSION TO THE WEST.

N

50' 0 50' 100'
SCALE IN FEET

SSympson
06-JUN-2001
J:\3ll47\dwgs\LP008.dgn

DESIGN AGENCY
HNTB 55 Erieview Plaza, Suite 800 Cleveland, Ohio 44114
ARCHITECTS ENGINEERS PLANNERS

DESIGNED	DRAWN	REVIEWED	DATE
JGS/SMS	TGM		06/06/01
CHECKED	REVISED	STRUCTURE FILE NUMBER	
LEL		1305697	

LIGHTING PLAN - IR 275
STA. 84+41 TO STA. 93+17
CLE-275-05.35

CLE-275-05.35

14/17

626
857

LEGEND

- HIGH MAST TOWER. SEE LIGHT TOWER SCHEDULE
- EXISTING LIGHT POLE ASSEMBLY AND FOUNDATION TO BE REMOVED
- EXISTING PULL BOX TO BE REMOVED
- CONDUIT OR DUCT-CABLE AS NOTED
- PULL BOX
- LOW MAST LIGHTING UNIT. SEE LIGHT POLE SCHEDULE
- CONVENTIONAL LIGHT STANDARD, SEE LIGHT POLE SCHEDULE FOR MOUNTING HEIGHT WITH 15' BRACKET ARM AND 200 W HPS COBRA HEAD LUMINAIRE
- B3-4 POLE DESIGNATION, "B" IS THE CONTROL CENTER, "3" IS THE CIRCUIT NUMBER AND "4" IS THE I.D.

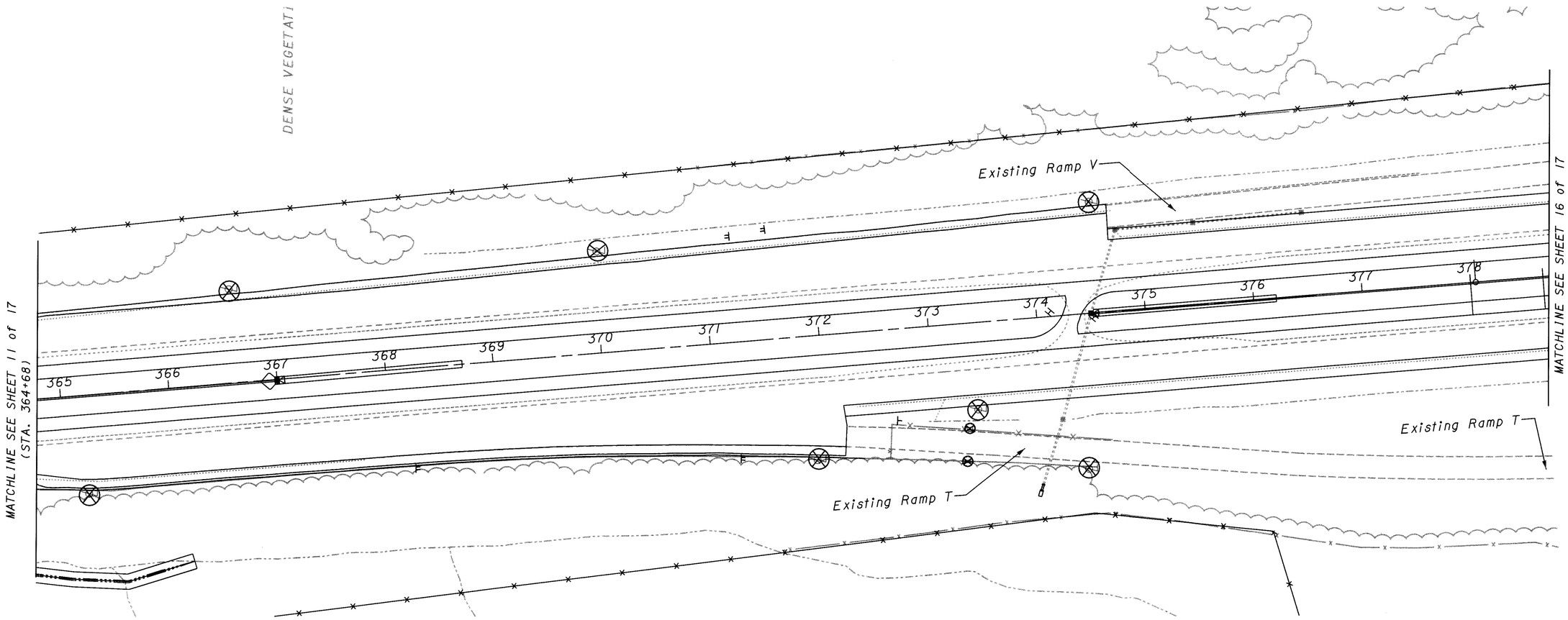

DESIGN AGENCY
HNTB 55 Erieview Plaza, Suite 500 Cleveland, Ohio 44114-1848
ARCHITECTS ENGINEERS PLANNERS

DESIGNED	DRAWN	REVIEWED	DATE
JGS/SMS	TGM		06/06/01
CHECKED	REVISED	STRUCTURE FILE NUMBER	
LEL		1305697	

LIGHTING PLAN - IR 275
STA. 364+68 TO STA. 378+63
CLE-275-05.35

CLE-275-05.35

15/17

627/857

J:\3147\dwgs\LP009.dgn 06-JUN-2001 SSympson

LEGEND

- HIGH MAST TOWER. SEE LIGHT TOWER SCHEDULE
- EXISTING LIGHT POLE ASSEMBLY AND FOUNDATION TO BE REMOVED
- EXISTING PULL BOX TO BE REMOVED
- CONDUIT OR DUCT-CABLE AS NOTED
- PULL BOX
- LOW MAST LIGHTING UNIT. SEE LIGHT POLE SCHEDULE
- CONVENTIONAL LIGHT STANDARD, SEE LIGHT POLE SCHEDULE FOR MOUNTING HEIGHT WITH 15' BRACKET ARM AND 200 W HPS COBRA HEAD LUMINAIRE
- B3-4 POLE DESIGNATION, "B" IS THE CONTROL CENTER, "3" IS THE CIRCUIT NUMBER AND "4" IS THE I.D.

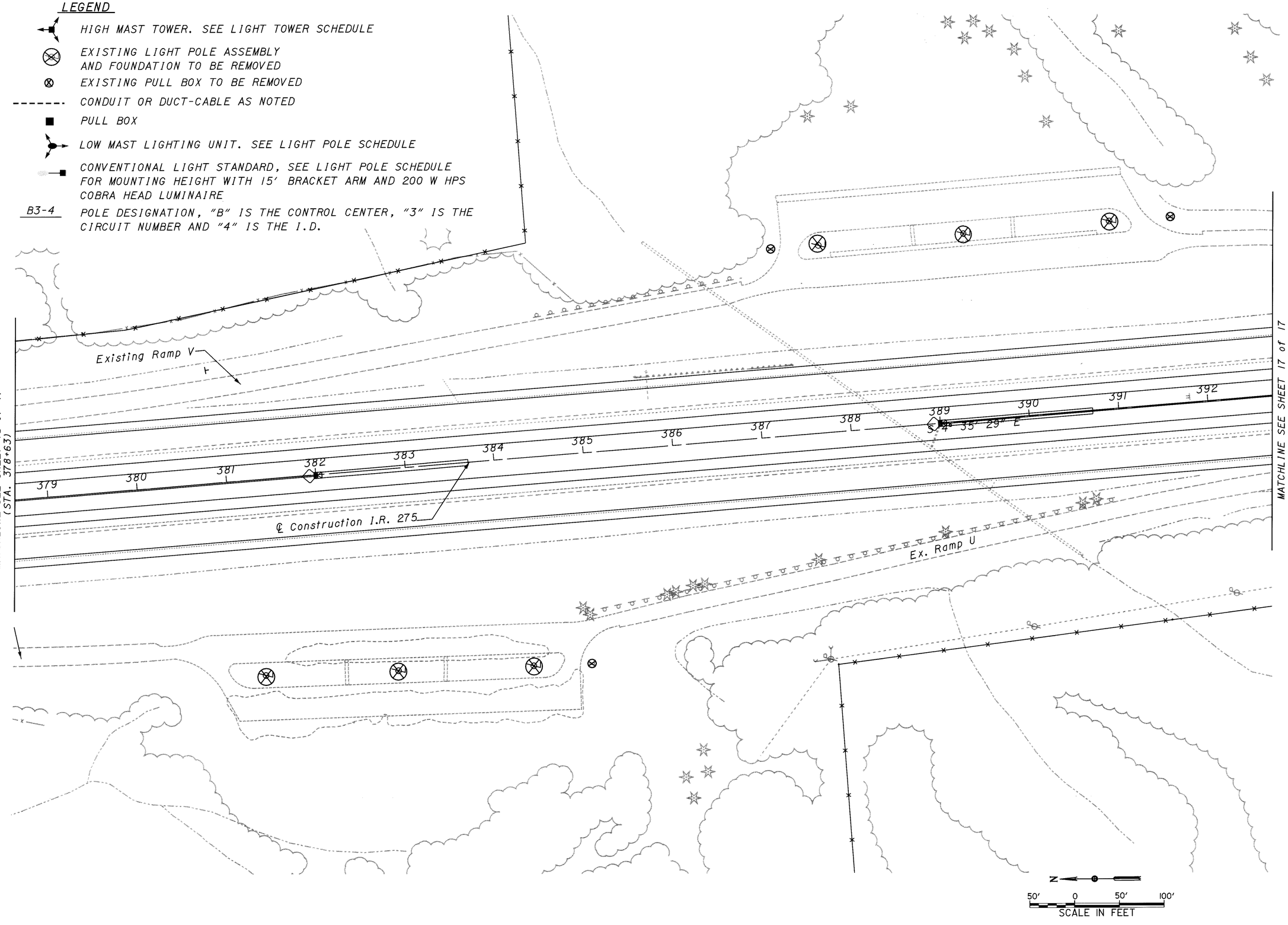

DESIGN AGENCY
HNTB 55 Erieview Plaza, Suite 500 Cleveland, Ohio 44114-1848
ARCHITECTS ENGINEERS PLANNERS

DESIGNED	DRAWN	REVIEWED	DATE
JGS/SMS	TGM		06/06/01
CHECKED	REVISED	STRUCTURE FILE NUMBER	
LEL		1305697	

LIGHTING PLAN - IR 275
STA. 378+63 TO STA. 392+58
CLE-275-05.35

CLE-275-05.35

16 / 17

628 / 857

SSympson
06-JUN-2001
J:\3II47\dwgs\LP010.dgn

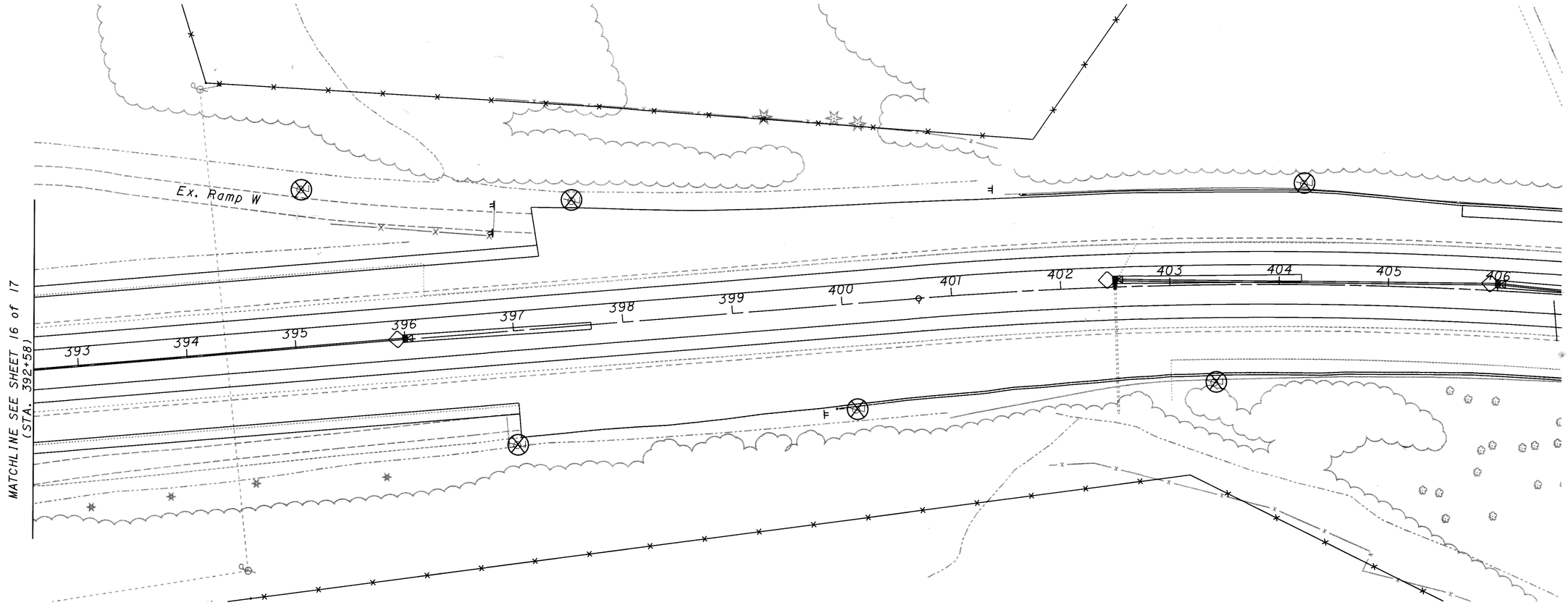

LEGEND

- *HIGH MAST TOWER. SEE LIGHT TOWER SCHEDULE*
- *EXISTING LIGHT POLE ASSEMBLY AND FOUNDATION TO BE REMOVED*
- *EXISTING PULL BOX TO BE REMOVED*
- *CONDUIT OR DUCT-CABLE AS NOTED*
- *PULL BOX*
- *LOW MAST LIGHTING UNIT. SEE LIGHT POLE SCHEDULE*
- *CONVENTIONAL LIGHT STANDARD, SEE LIGHT POLE SCHEDULE FOR MOUNTING HEIGHT WITH 15' BRACKET ARM AND 200 W HPS COBRA HEAD LUMINAIRE*
- B3-4 *POLE DESIGNATION, "B" IS THE CONTROL CENTER, "3" IS THE CIRCUIT NUMBER AND "4" IS THE I.D.*

N

50' 0 50' 100'

SCALE IN FEET

DESIGN AGENCY

HNTB 55 Erieview Plaza, Suite 900 Cleveland, Ohio 44114

ARCHITECTS ENGINEERS PLANNERS

DESIGNED	DRAWN	REVIEWED	DATE
JOS/SMS	T6M		06/06/01
CHECKED	REVISED	STRUCTURE FILE NUMBER	
LEL		1305697	

LIGHTING PLAN - IR 275
STA. 392+58 TO STA. 406+50
CLE-275-05.35

CLE-275-05.35

17 / 17

629
857

SSympson
06-JUN-2001
J:\3II47\dwgs\LP0II.dgn

EXIST. 6" GAS LINE TO REMAIN
EXIST. UG TELEPHONE LINE TO REMAIN
EXISTING SEWER TO REMAIN
REINFORCED SODDING
℄ Brg. Rear Abut
℄ Pier
℄ Pier 2
℄ Brg. Fwd. Abut.
32°00'00" Typ.
EXIST. WATERLINE TO REMAIN
GR POST STA. 290+45.67
TEMPORARY SHEETING
LEFT BRIDGE
NORTHBOUND
CONSTRUCTION JOINT
GR POST STA. 292+49.81
TEMPORARY SHEETING
GR POST STA. 292+11.66
℄ EXIST. NB LANES
End approach slab Sta. 290+01.85
Point of min. vertical clearance
289+00
290+00
291+00
292+00
293+00
S-1
S-2
S-4
℄ Construction I-275
S 1°24'33" E
Begin approach slab Sta. 291+96.55
GR POST STA. 289+99.60
RIGHT BRIDGE
CONSTRUCTION JOINT
TEMPORARY SHEETING
GR POST STA. 291+91.74
℄ EXIST. SB LANES
SOUTHBOUND
Stage I const. Stage II const.
Crushed aggregate slope protection, Typ.
U.S. 50
EXIST. OVERHEAD POWER LINE TO REMAIN
GR POST STA. 289+60.86
GR POST STA. 291+52.56
REINFORCED SODDING

PLAN

Notes:
Earthwork limits shown are approximate.
Actual slopes shall conform to plan cross sections.

● Boring location

⊕ Point of min. vertical clearance

TRAFFIC DATA
NORTHBOUND & SOUTHBOUND

	Current (2002)	Design (2022)
ADT	35520	41730
ADTT	3197	3756

Bridge Limits = 194.70±

Top of slope Varies from W. end (R.B.) El. 557.3± to E. end (L.B.) El. 554.4±

Top of slope Varies from W. end (R.B.) El. 551.6± to E. end (L.B.) El. 548.7±

Crushed aggregate slope protection, Typ.

-2.99 NB
-3.04 SB
-3.11 NB
-3.00 SB
-2.90 NB

Elev. 548.35 (L.B.)
Elev. 550.54 (R.B.)
Elev. 542.65 (L.B.)
Elev. 544.84 (R.B.)
Exp.
2:1 Normal
14'-6" Min.Vert.Clr.
22'-0 1/16" Actual Vert.Clr.
12"ϕ Cast-in-place concrete piles, estimated pay length = 50 feet
12"ϕ Cast-in-place conc. piles, estimated pay length = 40 feet
Elev. 524.05 (L.B.)
Elev. 521.59 (R.B.)
Elev. 521.05 (L.B.)
Elev. 519.09 (R.B.)
℄ U.S. 50
HP10x42, Est. pay length = 65 ft.
Rear Abutment
Pier 1
Pier 2
Forward Abutment

Sta.	N.B.	S.B.
289+00	565.4	565.3
	565.62	565.49
289+21 (NB) PVI	564.73	
289+33.50 (SB) PVI	564.87	
	564.09	563.98
	563.31	563.23
290+00	562.54	562.48
290+01.85 Sta.	561.76	561.73
	560.98	560.98
	560.20	560.23
291+00	559.43	559.48
	558.65	558.72
	557.87	557.97
	557.09	557.22
291+96.55 Sta.	556.32	556.47
292+00		
292+14 (NB) PVI	555.56	555.72
293+00	554.84	554.97

Approx. top of bedrock, Boring S-1, El. 463.4
Approx. top of bedrock, Boring S-2, El. 461.5
Approx. top of bedrock, Boring S-3, El. 460.3
Approx. top of bedrock, Boring S-4, El. 461.0

T.B.M. "C" -℄ MONUMENT- PIN & CAP
STA. 289+80.95± ELEV. 562.045

SECTION ALONG EDGE OF PAVEMENT (PROPOSED)
(Left bridge shown, right bridge similar)

EXISTING STRUCTURE

Type: Continuous steel rolled beams with reinforced concrete deck and substructure.
Spans: 70'-3"±, 70'-3"±, 49'-3"± (c/c bearing)
Roadway width: 53'-0"± Toe/Toe parapets
Design loading: CF=2000 (57)
Skew angle: 32°± L.F.
Wearing surface: Micro Silica Concrete Overlay
Approach slabs: AS-1-67 (25'-0")
Date Built: 1971
Structure file number: 1305530 (L.B.)
1305549 (R.B.)

PROPOSED STRUCTURE (REHABILITATION)

Proposed work: Widen and replace existing concrete deck with composite concrete deck, widen substructure, convert existing abutments to semi-integral abutments with straight wingwalls.

Spans: 70'-1 1/2"±, 70'-3"±, 48"-11 1/2"± (c/c bearing)
Roadway width: 62'-0" Toe/Toe parapets
Live loading: HS20 (Case 1) & the alternate military
Skew angle: 32°± L.F.
Wearing surface: 1" Monolithic Concrete
Approach slabs: AS-1-81 (25'-0")
Alignment: Tangent
Crown: 3/16"/ft.
Latitude: N 39° 10' 10"
Longitude: W 84° 16' 05"

DESIGN AGENCY
BALKE ENGINEERS
1848 Summit Road
Cincinnati, Ohio 45237

DATE 6-01
REVIEWED CBS
STRUCTURE FILE NUMBER 1305530 (L.B.) 1305549 (R.B.)
DRAWN ALH
REVISED —
DESIGNED FKL
CHECKED MPS

CLERMONT COUNTY
STA 290+01.85
STA 291+96.90

SITE PLAN
BRIDGE NO. CLE-275-0549
OVER US 50

CLE-275-5.35

1 / 36

630
857

File name: 0549p1.dgn

GENERAL NOTES

REFERENCE SHALL BE MADE TO STANDARD DRAWING(S):

AS-1-81	REVISED 04-20-01
BR-1	REVISED 01-06-99
BS-1-93	DATED 12-19-94
GSD-1-96	DATED 2-12-97
PCB-91	REVISED 07-06-99
SICD-1-96	REVISED 04-20-01

AND TO SUPPLEMENTAL SPECIFICATION(S):

814	DATED 6-2-98
815	DATED 2-22-00
816	DATED 4-21-97
842	DATED 1-6-99
846	DATED 9-9-97
863	DATED 10-12-99
899	DATED 10-21-98
905	DATED 4-1-98
907	DATED 10-21-98
910	DATED 7-11-00
954	DATED 9-9-97

DESIGN SPECIFICATIONS: THIS STRUCTURE CONFORMS TO "STANDARD SPECIFICATIONS FOR HIGHWAY BRIDGES" ADOPTED BY THE AMERICAN ASSOCIATION OF STATE HIGHWAY AND TRANSPORTATION OFFICIALS, 1996, INCLUDING THE 1997 THRU 1999 INTERIM SPECIFICATIONS AND THE ODOT BRIDGE DESIGN MANUAL.

DESIGN LOADING: HS20 , CASE (1) AND THE ALTERNATE MILITARY LOADING.
FUTURE WEARING SURFACE (FWS) OF 60 LBS/FT 2 .

DESIGN DATA:

CONCRETE CLASS S - COMPRESSIVE STRENGTH 4500 PSI (SUPERSTRUCTURE)
CONCRETE CLASS C - COMPRESSIVE STRENGTH 4000 PSI (SUBSTRUCTURE)

REINFORCING STEEL - ASTM A615, A616 OR A617
GRADE 60 MINIMUM YIELD STRENGTH 60,000 PSI
SPIRAL REINFORCEMENT MAY BE PLAIN BARS, ASTM A82 OR A615

STRUCTURAL STEEL ASTM A709, GRADE 50-YIELD STRENGTH 50 KSI

DECK PROTECTION METHOD:

EPOXY COATED REINFORCING STEEL
2½" CONCRETE COVER

MONOLITHIC WEARING SURFACE IS ASSUMED, FOR DESIGN PURPOSES, TO BE 1 INCH THICK.

PROPOSED WORK:

1. REPLACE THE EXISTING CONCRETE DECK WITH A NEW COMPOSITE CONCRETE DECK WITH BARRIER RAILINGS.
2. WIDEN THE SUPERSTRUCTURE ON THE MEDIAN SIDE BY ADDING ONE LINE OF BEAMS.
3. CONVERT THE EXISTING ABUTMENTS TO SEMI-INTEGRAL. REPLACE U-WINGWALLS WITH STRAIGHT WINGWALLS. REMOVE THE EXISTING ABUTMENT DOWN TO THE TOP OF THE EXISTING BEAM SEAT, WINGWALLS TO BOTTOM OF FOOTING.
4. WIDEN THE SUBSTRUCTURE TO ACCOMMODATE THE NEW SUPER-STRUCTURE MEMBERS.
5. REPLACE ALL BEARINGS WITH NEW ELASTOMERIC BEARINGS.
6. ADJUST BEARING SEAT ELEVATIONS BY CONSTRUCTING REINFORCED CONCRETE PEDESTALS.
7. SEAL NEW WINGWALLS, RAILING, ABUTMENTS, BACKWALLS, AND PIERS WITH EPOXY-URETHANE, COLOR SHALL BE BUFF.
8. PROVIDE NEW APPROACH SLABS.
9. PAINT EXISTING STRUCTURAL STEEL WITH SYSEM OZEU, COLOR SHALL BE BLUE, FEDERAL COLOR 15526. PATCH EXISTING
10. PAINT NEW STRUCTURAL STEEL WITH SYSTEM IZEU, COLOR SHALL BE BLUE, FEDERAL COLOR 15526.
11. PATCH EXISTING SUBSTRUCTURE CONCRETE AS SHOWN.

PORTIONS OF STRUCTURE REMOVED, OVER 20' SPAN, AS PER PLAN:
THIS WORK SHALL CONSIST OF THE REMOVAL OF CONCRETE DECKS INCLUDING SIDEWALKS, PARAPETS, RAILINGS, DECK JOINTS AND OTHER APPURTENANCES FROM STEEL SUPPORTING SYSTEMS (BEAMS, GIRDERS, CROSS FRAMES, ETC.). CARE SHALL BE TAKEN DURING DECK REMOVALS TO PROTECT PORTIONS OF SUCH SYSTEMS THAT ARE TO BE SALVAGED AND INCORPORATED INTO THE PROPOSED STRUCTURE. IN THIS RESPECT, THE USE OF EXPLOSIVES, HEADACHE BALLS AND/OR HOE RAM TYPE OF EQUIPMENT IS PROHIBITED.

PROTECTION OF TRAFFIC: PRIOR TO DEMOLITION OF ANY PORTIONS OF THE EXISTING SUPERSTRUCTURE, THE CONTRACTOR SHALL SUBMIT PLANS FOR THE PROTECTION OF TRAFFIC (VEHICULAR, PEDESTRIAN, BOAT, ETC.) ADJACENT TO AND/OR UNDER THE STRUCTURE TO THE DIRECTOR FOR APPROVAL. THESE PLANS SHALL INCLUDE PROVISIONS FOR ANY DEVICES AND STRUCTURES THAT MAY BE NECESSARY TO ENSURE SUCH PROTECTION.
TEMPORARY VERTICAL CLEARANCES SPECIFIED ON THE PLANS OR IN THE PROPOSAL SHALL BE MAINTAINED AT ALL TIMES EXCEPT AS OTHERWISE APPROVED BY THE DIRECTOR.

PROTECTION OF STEEL SUPPORT SYSTEMS: BEFORE DECK SLAB CUTTING IS PERMITTED, THE OUTLINE OF PRIMARY STEEL MEMBERS IN CONTACT WITH THE BOTTOM OF THE DECK SHALL BE DRAWN ON THE SURFACE OF DECK. SMALL DIAMETER PILOT HOLES SHALL BE DRILLED 2 INCHES OUTSIDE THESE LINES TO CONFIRM THE LOCATION OF FLANGE EDGES. DECK CUTS OVER OR WITHIN 2 INCHES OF FLANGE EDGES SHALL NOT EXTEND LOWER THAN THE BOTTOM LAYER OF DECK SLAB REINFORCING STEEL. CUTS MADE OUTSIDE 2 INCHES OF FLANGE EDGES MAY EXTEND THE FULL DEPTH OF THE DECK. DURING CUTTING OF THE DECK SLAB, CARE SHALL BE TAKEN NOT TO DAMAGE STEEL MEMBERS THAT ARE TO BE INCORPORATED INTO THE PROPOSED STRUCTURE.

REMOVAL METHODS: CONCRETE MAY BE REMOVED BY CUTTING AND BY MEANS OF HAND OPERATED PNEUMATIC HAMMERS EMPLOYING POINTED OR BLUNTED CHISEL TYPE TOOLS. FOR REMOVALS OVER BRIDGE MEMBERS (PRESTRESSED BOX BEAM, I-BEAM, STEEL BEAM STEEL GIRDER, ETC), A HAMMER HEAVIER THAN 35 POUNDS BUT NOT TO EXCEED 90 POUNDS MAY BE USED AT THE APPROVAL OF THE ENGINEER. REMOVAL METHODS OVER BRIDGE MEMBERS SHALL ENSURE ADEQUATE DEPTH CONTROL AND PREVENT NICKING OR GOUGING THE PRIMARY STEEL MEMBERS.

DECK REMOVALS: DUE TO THE POSSIBLE PRESENCE OF WELDED ATTACHMENTS TO EXISTING STRUCTURAL STEEL (FINISHING MACHINE, SCUPPER AND FORM SUPPORTS, ETC.), CARE SHALL BE TAKEN DURING DECK REMOVAL TO AVOID DAMAGING STRINGERS WHICH ARE TO REMAIN. STRINGERS DAMAGED BY THE CONTRACTOR'S REMOVAL OPERATIONS SHALL, AT NO COST TO THE PROJECT, BE REPLACED OR REPAIRED. PROPOSED REPAIRS, DEVELOPED BY A OHIO REGISTERED PROFESSIONAL ENGINEER, SHALL BE SUBMITTED IN WRITING FOR REVIEW AND APPROVAL BY THE DIRECTOR.

EXTRANEOUS MEMBERS: EXISTING EXTRANEOUS MEMBERS (I.E., FINISHING MACHINE AND FORM SUPPORTS, ETC., AND THE SUPPORT FOR SCUPPERS AND BULB ANGLES WHICH ARE TO BE REMOVED) ATTACHED BY WELDED CONNECTION TO THE DESIGNATED TENSION PORTIONS OF THE TOP FLANGES OF EXISTING STEEL MEMBERS SHALL BE REMOVED AND THE FLANGE SURFACES GROUND SMOOTH. GRINDING SHALL BE CAREFULLY DONE AND PARALLEL TO THE FLANGES.

LOADING LIMITATIONS: NO PART OF THE STRUCTURE SHALL BE SUBJECTED TO UNIT STRESSES THAT EXCEED 136.5% OF ALLOWABLE UNIT STRESSES AS DEFINED IN THE AASHTO STANDARD SPECIFICATIONS FOR HIGHWAY BRIDGES DUE EITHER TO DEMOLITION, ERECTION OR CONSTRUCTION METHODS, OR TO THE USE OR MOVEMENT OF DEMOLITION OR ERECTION EQUIPMENT ON OR ACROSS THE STRUCTURE. STRUCTURAL ANALYSIS COMPUTATIONS, BY A OHIO REGISTERED PROFESSIONAL ENGINEER, SHOWING THE ALLOWABLE STRESSES AND THE MAXIMUM STRESSES PRODUCED BY THE CONTRACTOR'S METHODS OR EQUIPMENT SHALL BE SUBMITTED TO THE DIRECTOR FOR REVIEW AND APPROVAL AT LEAST TWO WEEKS PRIOR TO THE START OF THE WORK.

PAYMENT: THIS WORK WILL BE PAID FOR AT THE CONTRACT LUMP SUM PRICE BID, WHICH PRICE AND PAYMENT SHALL BE FULL COMPENSATION FOR ALL LABOR, EQUIPMENT, MATERIALS AND INCIDENTALS NECESSARY TO COMPLETE THE WORK IN CONFORMANCE WITH THESE REQUIREMENTS, WITH PERTINENT PROVISIONS OF 202, AND TO THE SATISFACTION OF THE ENGINEER.

CUT LINE CONSTRUCTION JOINT PREPARATION: SAW CUT BOUNDARIES OF PROPOSED CONCRETE REMOVALS 1 INCH DEEP. REMOVE CONCRETE TO A ROUGH SURFACE. THE EXISTING REINFORCING STEEL, IF REQUIRED IN THE PLANS, SHALL BE LEFT IN PLACE. INSTALL DOWEL BARS IF SPECIFIED. PRIOR TO CONCRETE PLACEMENT ABRASIVELY CLEAN JOINT SURFACES AND EXISTING EXPOSED REINFORCEMENT TO REMOVE LOOSE AND DISINTEGRATED CONCRETE AND LOOSE RUST. THE JOINT SURFACE AND EXPOSED REINFORCEMENT SHALL BE THOROUGHLY CLEANED OF ALL DIRT, DUST, RUST OR OTHER FOREIGN MATERIAL BY THE USE OF WATER, AIR UNDER PRESSURE, OR OTHER METHODS THAT PRODUCE SATISFACTORY RESULTS. EXISTING REINFORCING STEEL DOES NOT HAVE TO HAVE A BRIGHT STEEL FINISH BUT ALL PACK AND LOOSE RUST SHALL BE REMOVED. EXISTING CONCRETE SURFACES WHICH NEW CONCRETE WILL BE PLACED AGAINST SHALL BE WET, BUT WITHOUT FREE WATER, AT THE TIME OF CONCRETE PLACEMENT.

SUBSTRUCTURE CONCRETE REMOVAL SHALL BE BY MEANS OF APPROVED PNEUMATIC HAMMERS EMPLOYING POINTED AND BLUNT CHISEL TOOLS. HYDRAULIC HOE-RAM TYPE HAMMERS WILL NOT BE PERMITTED. THE WEIGHT OF THE HAMMER SHALL NOT BE MORE THAN 35 POUNDS FOR REMOVAL WITHIN 18 INCHES OF PORTIONS TO BE PRESERVED. OUTSIDE THE 18 INCH LIMIT, HAMMERS NOT EXCEEDING 90 POUNDS, MAY BE USED UPON THE APPROVAL OF THE ENGINEER. PNEUMATIC HAMMERS SHALL NOT BE PLACED IN DIRECT CONTACT WITH REINFORCING STEEL THAT IS TO BE RETAINED IN THE REBUILT STRUCTURE.

EXISTING STRUCTURE VERIFICATION: DETAILS AND DIMENSIONS SHOWN ON THESE PLANS PERTAINING TO THE EXISTING STRUCTURE HAVE BEEN OBTAINED FROM PLANS OF THE EXISTING STRUCTURE AND FROM FIELD OBSERVATIONS AND MEASUREMENTS. CONSEQUENTLY, THEY ARE INDICATIVE OF THE EXISTING STRUCTURE AND THE PROPOSED WORK BUT THEY SHALL BE CONSIDERED TENTATIVE AND APPROXIMATE. THE CONTRACTOR IS REFERRED TO CMS SECTIONS 102.05, 105.02 AND 513.02/863.07.

CONTRACT BID PRICES SHALL BE BASED UPON A RECOGNITION OF THE UNCERTAINTIES DESCRIBED ABOVE AND UPON A PREBID EXAMINATION OF THE EXISTING STRUCTURE BY THE CONTRACTOR. HOWEVER, ALL PROJECT WORK SHALL BE BASED UPON ACTUAL DETAILS AND DIMENSIONS WHICH HAVE BEEN VERIFIED BY THE CONTRACTOR IN THE FIELD.

ITEM 509 REINFORCING STEEL, REPLACEMENT OF EXISTING REINFORCING STEEL, AS PER PLAN: ANY EXISTING REINFORCING BARS DEEMED BY THE ENGINEER TO BE UNUSABLE BECAUSE OF CORROSION SHALL BE REPLACED WITH NEW REINFORCING STEEL. ANY EXISTING REINFORCING STEEL BARS WHICH ARE TO BE INCORPORATED INTO THE NEW WORK AND ARE MADE UNUSABLE BY CONCRETE REMOVAL OPERATIONS SHALL BE REPLACED WITH NEW EPOXY COATED REINFORCING STEEL OF THE SAME SIZE AT THE CONTRACTOR'S COST. ALL WORK SHALL BE TO THE SATISFACTION OF THE ENGINEER. THE NUMBER OF POUNDS OF REINFORCING STEEL PAID FOR AT CONTRACT PRICES SHALL BE THE ACTUAL POUNDS OF REPLACEMENT REINFORCING STEEL SPECIFIED BY THE ENGINEER DUE TO CORROSION AND SHALL INCLUDE PLACEMENT, DOWELING, BENDING, SUPPORTING, TIE WIRES AND TYING OF THAT SPECIFIED REINFORCING STEEL.

ITEM 503, UNCLASSIFIED EXCAVATION, AS PER PLAN: UNCLASSIFIED EXCAVATION SHALL BE IN ACCORDANCE WITH 503 EXCEPT THAT THE BACKFILL MATERIAL BEHIND THE ABUTMENTS SHALL BE 203 MATERIAL PLACED IN 6 INCH LIFTS.

PILES TO BEDROCK:
PILES AT THE PIERS SHALL BE DRIVEN TO REFUSAL ON BEDROCK. REFUSAL SHALL BE CONSIDERED AS OBTAINED BY PENETRATING SOFT BEDROCK FOR SEVERAL INCHES WITH A MINIMUM RESISTANCE OF 20 BLOWS PER INCH OR REFUSAL SHALL BE CONSIDERED AS OBTAINED AFTER THE PILE HAS CONTACTED HARD BEDROCK AND THE PILE HAS THEN RECEIVED AT LEAST 20 BLOWS. THE CONTRACTOR IS RESPONSIBLE FOR SELECTING THE HAMMER SIZE TO ACHIEVE THE REQUIRED DEPTH TO BEDROCK AND REFUSAL.

THE ULTIMATE BEARING VALUE IS 85 TONS PER PILE FOR THE 12" DIAMETER CIP ABUTMENT PILES.
THE ULTIMATE BEARING VALUE IS 85 TONS PER PILE FOR THE HP10x42 PIER PILES.

ABUTMENT PILES:
26 PILES 50 FEET LONG, ESTIMATED LENGTH
26 PILES 40 FEET LONG, ESTIMATED LENGTH
26 PILES OF ORDER LENGTH 50 FEET LONG
26 PILES OF ORDER LENGTH 40 FEET LONG
28 SPLICES

PIER PILES:
16 PILES 65 FEET LONG, ESTIMATED LENGTH
16 PILES OF ORDER LENGTH 60 FEET LONG
16 PILES OF ORDER LENGTH 5 FEET LONG
16 SPLICES

DESIGN AGENCY
BALKE ENGINEERS
1848 Summit Road
Cincinnati, Ohio 45237

DESIGNED	DRAWN	REVIEWED	DATE
FKL	WJH	CRS	6/01
CHECKED	REVISED	STRUCTURE FILE NUMBER	
MRS	—	1305530 (LB) 1305549 (RB)	

GENERAL NOTES
BRIDGE NO. CLE-275-0549
OVER US 50

CLE-275-5.35

Filename: 0549NOTE.dgn

GENERAL NOTES

INSPECTION OF EXISTING STRUCTURAL STEEL: THE ENGINEER WILL VISUALLY INSPECT ALL EXISTING BUTT-WELDED SPLICES AND/OR TOP FLANGE COVER PLATE FILLET WELDS TO ENSURE THE WELDS, PLATES AND BEAMS OR GIRDERS ARE FREE OF DEFECTS AND CRACKS. IF THE DECK SLAB HAUNCH FORMS IMMEDIATELY ADJACENT TO SUCH WELDS INTERFERE WITH THE ENGINEER'S INSPECTION THEY SHALL BE REMOVED OR NOT BE ERECTED UNTIL AFTER THE INSPECTION. THE INSPECTION SHALL NOT TAKE PLACE UNTIL AFTER THE TOP FLANGES ARE CLEANED AS SPECIFIED IN SS 842.08, BUT IT SHALL BE DONE BEFORE THE DECK SLAB REINFORCEMENT IS INSTALLED. THE COST ASSOCIATED WITH THIS INSPECTION SHALL BE INCLUDED WITH ITEM SS 842, SUPERSTRUCTURE CONCRETE FOR PAYMENT. ANY CRACKS FOUND SHOULD BE REPORTED TO THE OFFICE OF STRUCTURAL ENGINEERING, BRIDGE CONSTRUCTION SPECIALIST, ALONG WITH SPECIFIC INFORMATION ON LOCATION OF THE CRACKS, LENGTH, AND DEPTH SO AN EVALUATION AND REPAIR OR REPLACEMENT RECOMMENDATION CAN BE MADE.

USE OF NON-ASBESTOS CONTAINING MATERIALS:
THE CONTRACTOR SHALL AT NO TIME INCORPORATE ANY MATERIALS WHICH ARE COMPOSED OF OR CONTAIN ANY AMOUNTS OF ASBESTOS. THE SUBSTITUTION OF MATERIALS WHICH CONTAIN ANY AMOUNTS OF ASBESTOS WILL IN NO CIRCUMSTANCRES BE ACCEPTABLE. UPON COMPLETION OF THE PROJECT, THE CONTRACTOR SHALL SUBMIT A WRITTEN STATEMENT OF CERTIFICATION ASSERTING THAT NO ASBESTOS CONTAINING MATERIALS WERE USED IN ANY PORTION OF THE CONSTRUCTION.

ITEM 863 STRUCTURAL STEEL MEMBERS MISCELLANEOUS FABRICATION, AS PER PLAN, (OTHER DESCRIPTION). ALL SECTIONS OF SS 863 APPLY EXCEPT AS REVISED HEREIN. THE ENGINEER IS RESPONSIBLE FOR ENSURING ANY SHOP OR FIELD FABRICATED STEEL SUPPLIED UNDER THIS BID ITEM IS ACCEPTABLE. THE REQUIREMENTS FOR SUBMITTAL OF SHOP DRAWINGS TO THE OFFICE OF STRUCTURAL ENGINEERING IS WAIVED. AT THE ENGINEER'S OPTION, THE CONTRACTOR SHALL EITHER SUPPLY THE ENGINEER WITH SHOP DRAWINGS, REQUIRED IN SECTION 863.08, PRIOR TO ANY INCORPORATION OF SHOP FABRICATED STEEL AT THE PROJECT, OR SUPPLY THE ENGINEER WITH "AS FABRICATED" DRAWINGS, MEETING 863.08, AFTER COMPLETION OF FIELD FABRICATION. THE ENGINEER SHALL ASSURE THE SUBMITTED DRAWINGS MATCH THE FINAL AS BUILT STEEL INCORPORATED INTO THE WORK. IF THE ENGINEER IS SATISFIED WITH THE DRAWINGS AND THE DELIVERED MATERIALS, THE CONTRACTOR SHALL SUPPLY A COPY SET, STAMPED AND DATED AS PER 863.08, TO THE OFFICE OF STRUCTURAL ENGINEERING FOR RECORD PURPOSES. SUBMITTAL REQUIREMENTS UNDER 863.09, MATERIALS, SHALL BE MADE TO THE ENGINEER. THE CONTRACTOR SHALL FURNISH A COPY OF THE WRITTEN LETTER OF ACCEPTANCE, 863.09, TO THE OFFICE OF STRUCTURAL ENGINEERING WRITTEN LETTER OF ACCEPTANCE.

THE ENGINEER, AT OR BEFORE THE PRE-CONSTRUCTION MEETING, MAY CHOOSE TO REQUEST ASSISTANCE, AS REQUIRED, FROM THE OFFICE OF STRUCTURAL ENGINEERING.

STEEL MEMBERS INCLUDED IN THIS ITEM INCLUDE INTERMEDIATE CROSSFRAMES AND COVER PLATE RETROFIT

ITEM 516, JACKING AND TEMPORARY SUPPORT OF SUPERSTRUCTURE, AS PER PLAN: THIS ITEM SHALL CONSIST OF FURNISHING ALL NECESSARY LABOR, MATERIALS, AND EQUIPMENT TO RAISE OR RE-POSITION ANY EXISTING STRUCTURES TO THE DIMENSIONS AND REQUIREMENTS DEFINED IN THE PROJECT PLANS. THE CONTRACTOR SHALL BE RESPONSIBLE FOR THE DESIGN, INSTALLATION AND OPERATION OF AN ADEQUATE JACKING SYSTEM, INCLUDING ANY TEMPORARY OR PERMANENT SUPPORTS NECESSARY TO PERFORM THE WORK DESCRIBED IN THE PROJECT PLANS. THREE (3) SETS OF JACKING PLANS, WHICH INCLUDE THE INFORMATION DESCRIBED IN THIS NOTE, SHALL BE SUBMITTED TO THE DIRECTOR FOR APPROVAL AT LEAST THIRTY (30) DAYS BEFORE ACTUAL WORK IS TO BEGIN. THE PLANS SHALL BE PREPARED AND STAMPED BY A OHIO REGISTERED PROFESSIONAL ENGINEER. JACKING SUBMITTALS SHALL INCLUDE AT LEAST THE FOLLOWING:

1. THE SIGNATURE AND NUMBER, OR PROFESSIONAL SEAL, OF THE OHIO REGISTERED PROFESSIONAL ENGINEER WHO PREPARED THE SUBMITTAL.

2. CALCULATIONS AND ANALYSES OF THE STRUCTURE TO DETERMINE AND DEFINE THE ACTUAL LOADING APPLIED AT THE CONTRACTOR'S SELECTED JACKING POINTS.

3. A DRAWING SHOWING THE PHYSICAL AND DIMENSIONAL POSITION OF THE JACKS WITH RESPECT TO THE STRUCTURE INCLUDING CLEARANCES AND CENTER OF LIFT.

4. A SCHEMATIC LAYOUT OF JACKS, CHECK VALVES, PUMPS WITH 3 WAY RETRACTOR VALVE, PRESSURE GAGES, FLOW CONTROL VALVES, ETC. IN ACCORDANCE WITH MANUFACTURER'S RECOMMENDATIONS. ALL JACKS FOR EACH ABUTMENT OR PIER SHALL BE CONNECTED TOGETHER. ALL JACKS AT EACH ABUTMENT OR PIER SHALL BE THE SAME SIZE.

5. ANALYSIS AND CALCULATIONS OF THE STRESSES INDUCED OR CREATED IN THE STRUCTURE AND ANY TEMPORARY OR PERMANENT SUPPORTS. DESIGN CALCULATIONS FOR ANY TEMPORARY OR PERMANENT SUPPORTS.

6. PHYSICAL DIMENSIONS, MATERIALS, AND FABRICATION DETAILS OF ANY TEMPORARY OR PERMANENT SUPPORTS. HORIZONTAL AND VERTICAL MOVEMENT RESTRAINT SHALL BE PROVIDED.

7. A STEP BY STEP PROCEDURE DETAILING ALL STEPS IN THE JACKING OPERATION.

8. METHOD OF ATTACHMENT TO STRUCTURAL MEMBERS. WELDING TO TENSION AREAS WILL NOT BE PERMITTED.

THE ENTIRE SYSTEM INCLUDING JACKS SHALL HAVE 20% MORE CAPACITY THAN REQUIRED BASED ON CALCULATED LOADS.

FOR LIFTS GREATER THAN 1 INCH, JACKS SHALL HAVE LOCKING NUTS TO POSITIVELY LOCK AND SUPPORT THE STRUCTURE DURING THE LIFT.

JACKS SHALL HAVE A SWIVEL LOAD CAP, A DOMED PISTON HEAD OR SOME OTHER DEVICE TO PROTECT AGAINST THE EFFECTS OF SIDE LOAD ON THE JACK.

JACKS ALONE SHALL NOT BE USED TO SUPPORT LOADS EXCEPT DURING THE ACTUAL JACKING OPERATION. TEMPORARY SUPPORTS, BLOCKING OR OTHER METHODS APPROVED BY THE DIRECTOR SHALL BE USED.

SINGLE ACTING RAMS WITH NO OVER-TRAVEL PROTECTION SYSTEM SHALL NOT BE USED.

SPARE EQUIPMENT SHALL BE AVAILABLE ON SITE FOR THE REQUIRED STRUCTURE RAISING TO PROCEED IN THE EVENT OF BREAKDOWN. A LIST OF SPARE EQUIPMENT SHALL BE PROVIDED TO THE ENGINEER.

AT A MINIMUM, A JACKING OPERATION SHALL LIFT ALL BEAMS AT ANY ONE ABUTMENT OR PIER SIMULTANEOUSLY. THE ONLY EXCEPTION IS THE SITUATION WHERE THE WORK INVOLVES REPLACING OR REHABILITATING INDIVIDUAL BEARINGS; NO PERMANENT SHIMMING IS REQUIRED AND THE HEIGHT OF THE LIFT SHALL NOT EXCEED ¼ INCH.

MAXIMUM DIFFERENTIAL JACKING HEIGHT BETWEEN ANY ADJACENT ABUTMENTS OR PIERS SHALL BE 1 INCH OR LESS. THIS HEIGHT MAY BE MODIFIED IF CALCULATIONS, BY THE CONTRACTOR'S OHIO REGISTERED PROFESSIONAL ENGINEER, SHOW THE SUPERSTRUCTURE COMPONENTS WILL NOT BE TEMPORARILY STRESSED BEYOND ALLOWABLE STRESSES FOR THOSE COMPONENTS AND THAT NO PERMANENT STRESSES WILL BE INDUCED IN THE COMPONENTS AFTER THEY OBTAIN THEIR FINAL POSITION.

IF, DURING THE JACKING OPERATIONS, CRACKING OF THE CONCRETE SUPERSTRUCTURE, SEPARATION OF THE CONCRETE DECK FROM THE STEEL STRINGERS, OR OTHER DAMAGE TO THE STRUCTURE IS VISUALLY OBSERVED, THE JACKING OPERATION SHALL IMMEDIATELY CEASE AND APPROVED SUPPORTS SHALL BE INSTALLED. THE CONTRACTOR SHALL THEN ANALYZE THE DAMAGE AND SUBMIT A METHOD OF CORRECTION TO THE ENGINEER FOR APPROVAL. ANY BEAMS THAT SEPARATE FROM THE DECK SHALL BE EPOXY INJECTED FOR THE DISTANCE OF THE SEPARATION IN ACCORDANCE WITH ODOT'S PROPOSAL NOTE "CONCRETE REPAIR BY EPOXY INJECTION". COST OF THIS EPOXY INJECTION OR OTHER REQUIRED REPAIRS SHALL BE BORNE BY THE CONTRACTOR.

THE CONTRACTOR SHALL DEMONSTRATE TO THE ENGINEER THAT THE BRIDGE BEARINGS ARE FULLY SEATED AT ALL CONTACT AREAS. IF FULL SEATING IS NOT ATTAINED, SUITABLE MEANS OF REPAIR, SUBJECT TO THE ENGINEER'S APPROVAL, WILL BE REQUIRED AT THE CONTRACTOR'S EXPENSE.

PAYMENT SHALL BE MADE AT THE LUMP SUM PRICE BID FOR ITEM 516, JACKING AND TEMPORARY SUPPORT OF SUPERSTRUCTURE, AS PER PLAN. THIS SHALL INCLUDE ALL NECESSARY TOOLS, LABOR, EQUIPMENT AND MATERIALS NECESSARY TO COMPLETE THIS ITEM OF WORK.

A CLOSURE POUR SHALL BE PROVIDED BETWEEN THE TWO DECK CONSTRUCTION STAGES. THE EXISTING CROSSFRAMES MUST BE CUT TO ISOLATE THE TWO STAGES. THE FALSEWORK FOR THE STAGE 2 DECK CANNOT BE CONNECTED TO THE STAGE 1 FALSEWORK.

ALL SURFACES TO BE PATCHED AND THE EXPOSED REINFORCING STEEL WITHIN SHALL BE THOROUGHLY CLEANED BY ABRASIVE BLASTING PRIOR TO THE CLEANING SPECIFIED BY 519.04. CLEANING SHALL PRECEDE APPLICATION OF THE PATCHING MATERIAL OR ERECTION OF THE FORMS BY NOT MORE THAN 24 HOURS.

ITEM 842, CLASS C CONCRETE, ABUTMENT INCLUDING FOOTING, AS PER PLAN: IN ADDITION TO THE REQUIREMENTS OF ITEM 842, A REFERENCE DISK SHALL BE CAST IN THE ABUTMENT CONCRETE. THE DISK WILL BE CENTERED ON THE TOP HORIZONTAL SURFACE OF THE FORWARD ABUTMENT RIGHT WINGWALL. THE DISK WILL BE PROVIDED BY THE DISTRICT EIGHT SURVEY MANAGER. THE CONTRACTOR WILL MARK THE DISK WITH THE NAVD88 PROJECT ELEVATION UNDER THE SUPERVISION OF A PROFESSIONAL SURVEYOR REGISTERED IN THE STATE OF OHIO.

DESIGN AGENCY
BALKE ENGINEERS
1848 Summit Road
Cincinnati, Ohio 45237

DESIGNED	DRAWN	REVIEWED	DATE
FAL	W/H	CRS	6/01
CHECKED	REVISED	STRUCTURE FILE NUMBER	
MPS	—	1305530 (LB) 1305549 (RB)	

GENERAL NOTES
BRIDGE NO. CLE-275-0549
OVER US 50

CLE-275-5.35

632
857

F:\Admin\DRAWINGS.dgn

ESTIMATED QUANTITIES — CLE - 275 - 0549 (LEFT)

CALCULATED BY: FKL DATED 1-01
CHECKED BY: MJH DATED 6/01

FUNDING ①	FUNDING ②	ITEM	EXTENSION	TOTAL	UNIT	DESCRIPTION	LEFT BRIDGE SUPERSTRUCTURE ①	SUPERSTRUCTURE ②	ABUTMENT ①	ABUTMENT ②	PIER ①	PIER ②	GENERAL ①	GENERAL ②	SEE SHEET NO.
LUMP		202	11200	LUMP	-	PORTIONS OF STRUCTURE REMOVED							LUMP		
	LUMP	503	11100	LUMP	-	COFFERDAMS, CRIBS AND SHEETING								LUMP	
	LUMP	503	21301	LUMP	-	UNCLASSIFIED EXCAVATION, AS PER PLAN				LUMP		LUMP			1
	LUMP	505	11100	LUMP	-	PILE DRIVING EQUIPMENT MOBILIZATION								LUMP	
	520	507	00100	520	LIN. FT.	STEEL PILES HP10X42, FURNISHED						520			
	520	507	00150	520	LIN. FT.	STEEL PILES HP10X42, DRIVEN						520			
	1170	507	00500	1170	LIN. FT.	12" CAST-IN-PLACE REINFORCED CONCRETE PILES, DRIVEN				1170					
	1170	507	00550	1170	LIN. FT.	12" CAST-IN-PLACE REINFORCED CONCRETE PILES, FURNISHED				1170					
	22	507	50500	22	EACH	STEEL PILE SPLICES				14		8			
923	136	SPECIAL	51267510	1059	SQ. YD.	SEALING OF CONCRETE SURFACES (EPOXY-URETHANE)*	528		32	58	363	78			12,13,14-18,24,25
LUMP		516	47001	LUMP	-	JACKING AND TEMPORARY SUPPORT OF SUPERSTRUCTURE, AS PER PLAN	LUMP								
	30	516	13600	30	SQ. FT.	1" PREFORMED EXPANSION JOINT FILLER								30	
	61	516	13900	61	SQ. FT.	2" PREFORMED EXPANSION JOINT FILLER				61					
14	2	516	44100	16	EACH	ELASTOMERIC BEARING WITH INTERNAL LAMINATES AND LOAD PLATE (12 "X19"X2.698" NEOPRENE)					14	2			
14	2	516	44100	16	EACH	ELASTOMERIC BEARING WITH INTERNAL LAMINATES AND LOAD PLATE (9½"X16"X2.958" NEOPRENE)			14	2					
	LUMP	518	21230	LUMP	-	POROUS BACKFILL WITH FILTER FABRIC				LUMP					
120	90	518	40001	210	LIN. FT.	6" PERFORATED CORRUGATED PLASTIC PIPE, AS PER PLAN			120	90					2
80		518	40010	80	LIN. FT.	6" NON-PERFORATED CORRUGATED PLASTIC PIPE, INCLUDING SPECIALS			80						
6		519	11100	6	SQ. FT.	PATCHING CONCRETE STRUCTURE			6						
	245	601	20000	245	SQ. YD.	CRUSHED AGGREGATE SLOPE PROTECTION								245	
14,000		815	00050	14,000	SQ. FT.	SURFACE PREPARATION OF EXISTING STEEL, SYSTEM OZEU	14,000								
14,000		815	00056	14,000	SQ. FT.	FIELD PAINTING OF EXISTING STEEL, PRIME COAT, SYSTEM OZEU	14,000								
14,000		815	00060	14,000	SQ. FT.	FIELD PAINTING OF EXISTING STEEL, INTERMEDIATE COAT, SYSTEM OZEU	14,000								
14,000		815	00066	14,000	SQ. FT.	FIELD PAINTING OF EXISTING STEEL, FINISH COAT, SYSTEM OZEU	14,000								
	2,600	816	00620	2,600	SQ. FT.	FIELD PAINTING OF NEW STEEL, INTERMEDIATE AND FINISH COAT, SYSTEM IZEU		2600							
400	58	842	31508	458	CU. YD.	CLASS S CONCRETE, SUPERSTRUCTURE	400	58							
	44	842	41000	44	CU. YD.	CLASS C CONCRETE, PIER ABOVE FOOTINGS						44			
	135	842	43501	135	CU. YD.	CLASS C CONCRETE, ABUTMENT INCLUDING FOOTING, AS PER PLAN				135					3
	18	842	46500	18	CU. YD	CLASS C CONCRETE, FOOTING						18			
88		846	73000	88	SQ. YD	TREATING CONCRETE BRIDGE DECKS WITH HMWM RESIN	88								
	6,300	863	10201	6,300	POUND	STRUCTURAL STEEL MEMBERS, MISCELLANEOUS LEVEL FABRICATION AS PER PLAN		6,300							
	34,000	863	10260	34,000	POUND	STRUCTURAL STEEL MEMBERS, LEVEL THREE (3) FABRICATION, A709, GRADE 50		34,000							
3,381	489	863	20000	3870	EACH	WELDED STUD SHEAR CONNECTORS	3381	489							

ESTIMATED QUANTITIES — CLE - 275 - 0549 (RIGHT)

CALCULATED BY: FKL DATED 1-01
CHECKED BY: MJH DATED 6/01

FUNDING ①	FUNDING ②	ITEM	EXTENSION	TOTAL	UNIT	DESCRIPTION	RIGHT BRIDGE SUPERSTRUCTURE ①	SUPERSTRUCTURE ②	ABUTMENT ①	ABUTMENT ②	PIER ①	PIER ②	GENERAL ①	GENERAL ②	SEE SHEET NO.
LUMP		202	11200	LUMP	-	PORTIONS OF STRUCTURE REMOVED							LUMP		
	LUMP	503	11100	LUMP	-	COFFERDAMS, CRIBS AND SHEETING								LUMP	
	LUMP	503	21301	LUMP	-	UNCLASSIFIED EXCAVATION, AS PER PLAN				LUMP		LUMP			1
	LUMP	505	11100	LUMP	-	PILE DRIVING EQUIPMENT MOBILIZATION								LUMP	
	520	507	00100	520	LIN. FT.	STEEL PILES HP10X42, FURNISHED						520			
	520	507	00150	520	LIN. FT.	STEEL PILES HP10X42, DRIVEN						520			
	1170	507	00500	1170	LIN. FT.	12" CAST-IN-PLACE REINFORCED CONCRETE PILES, DRIVEN				1170					
	1170	507	00550	1170	LIN. FT.	12" CAST-IN-PLACE REINFORCED CONCRETE PILES, FURNISHED				1170					
	22	507	50500	22	EACH	STEEL PILE SPLICES				14		8			
912	132	SPECIAL	51267510	1044	SQ. YD.	SEALING OF CONCRETE SURFACES (EPOXY-URETHANE)*	528		32	61	352	71			12,13,14-18,24,25
LUMP		516	47001	LUMP	-	JACKING AND TEMPORARY SUPPORT OF SUPERSTRUCTURE, AS PER PLAN	LUMP								
	29	516	13600	29	SQ. FT.	1" PREFORMED EXPANSION JOINT FILLER								29	
	61	516	13900	61	SQ. FT.	2" PREFORMED EXPANSION JOINT FILLER				61					
14	2	516	44100	16	EACH	ELASTOMERIC BEARING WITH INTERNAL LAMINATES AND LOAD PLATE (12 "X19"X2.698" NEOPRENE)					14	2			
14	2	516	44100	16	EACH	ELASTOMERIC BEARING WITH INTERNAL LAMINATES AND LOAD PLATE (9½"X16"X2.958" NEOPRENE)			14	2					
	LUMP	518	21230	LUMP	-	POROUS BACKFILL WITH FILTER FABRIC				LUMP					
120	90	518	40001	210	LIN. FT.	6" PERFORATED CORRUGATED PLASTIC PIPE, AS PER PLAN			120	90					2
40		518	40010	40	LIN. FT.	6" NON-PERFORATED CORRUGATED PLASTIC PIPE, INCLUDING SPECIALS			40						
4		519	11100	4	SQ. FT.	PATCHING CONCRETE STRUCTURE			4						
	245	601	20000	245	SQ. YD.	CRUSHED AGGREGATE SLOPE PROTECTION								245	
14,000		815	00050	14,000	SQ. FT.	SURFACE PREPARATION OF EXISTING STEEL, SYSTEM OZEU	14,000								
14,000		815	00056	14,000	SQ. FT.	FIELD PAINTING OF EXISTING STEEL, PRIME COAT, SYSTEM OZEU	14,000								
14,000		815	00060	14,000	SQ. FT.	FIELD PAINTING OF EXISTING STEEL, INTERMEDIATE COAT, SYSTEM OZEU	14,000								
14,000		815	00066	14,000	SQ. FT.	FIELD PAINTING OF EXISTING STEEL, FINISH COAT, SYSTEM OZEU	14,000								
	2,600	816	00620	2,600	SQ. FT.	FIELD PAINTING OF NEW STEEL, INTERMEDIATE AND FINISH COAT, SYSTEM IZEU		2600							
400	58	842	31508	458	CU. YD.	CLASS S CONCRETE, SUPERSTRUCTURE	400	58							
	45	842	41000	45	CU. YD.	CLASS C CONCRETE, PIER ABOVE FOOTINGS						45			
	130	842	43501	130	CU. YD.	CLASS C CONCRETE, ABUTMENT INCLUDING FOOTING, AS PER PLAN				130					3
	18	842	46500	18	CU. YD	CLASS C CONCRETE, FOOTING						18			
88		846	73000	88	SQ. YD	TREATING CONCRETE BRIDGE DECKS WITH HMWM RESIN	88								
	6,300	863	10201	6,300	POUND	STRUCTURAL STEEL MEMBERS, MISCELLANEOUS LEVEL FABRICATION AS PER PLAN		6,300							
	34,000	863	10260	34,000	POUND	STRUCTURAL STEEL MEMBERS, LEVEL THREE (3) FABRICATION, A709, GRADE 50		34,000							
3381	489	863	20000	3,870	EACH	WELDED STUD SHEAR CONNECTORS	3381	489							

① INTERSTATE MAINTENANCE ② NATIONAL HIGHWAY * SEE PROPOSAL NOTE

DESIGN AGENCY
BALKE ENGINEERS
1848 Summit Road
Cincinnati, Ohio 45237

DESIGNED FKL
DRAWN ALH
REVIEWED CRS
DATE 6/01
CHECKED MRS
REVISED —

STRUCTURE FILE NUMBER 1/2002-20 (L.B.)
1/2002-49 (R.B.)

ESTIMATED QUANTITIES
BRIDGE NO. CLE-275-0549
OVER US 50

CLE-275-5.35

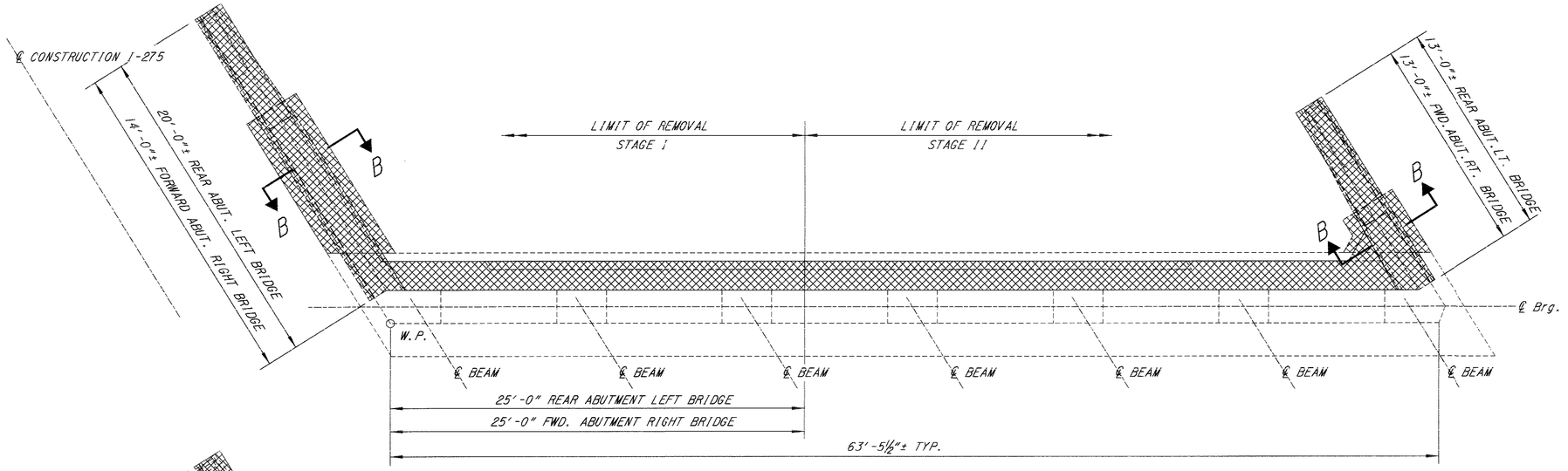

PLAN

(REAR ABUTMENT LEFT BRIDGE SHOWN)
(FORWARD ABUTMENT RIGHT BRIDGE SIMILAR)

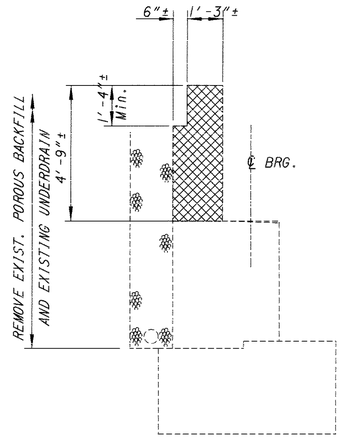

SECTION A-A

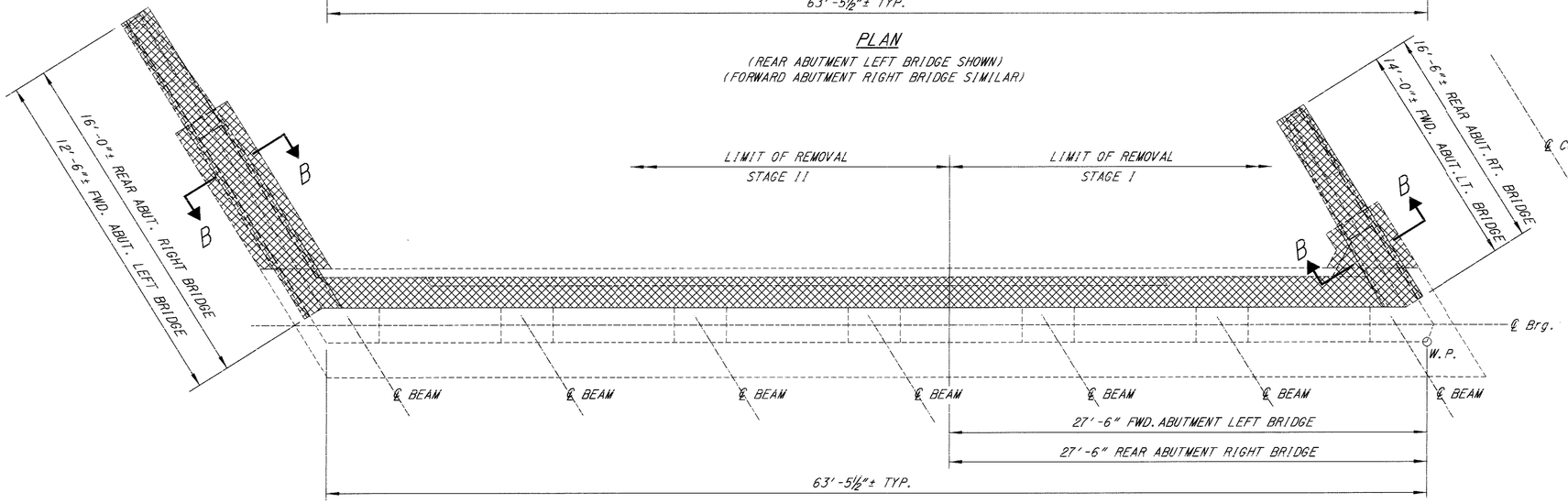

PLAN

(FORWARD ABUTMENT LEFT BRIDGE SHOWN)
(REAR ABUTMENT RIGHT BRIDGE SIMILAR)

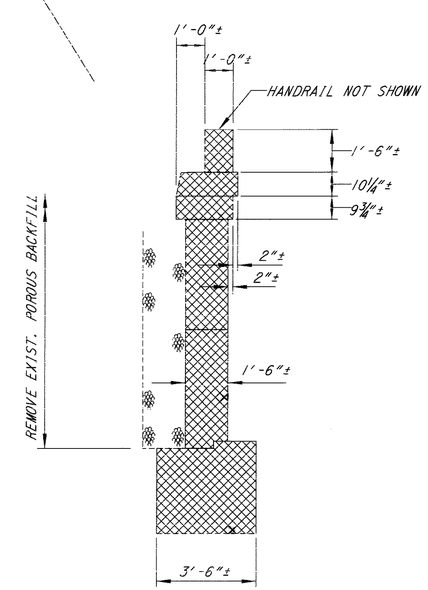

SECTION B-B

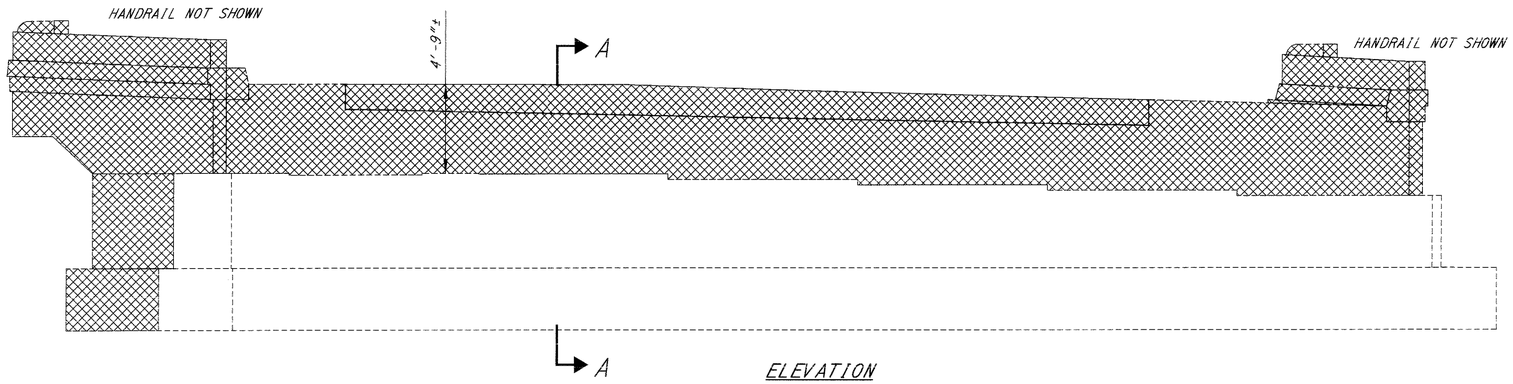

ELEVATION

TYPICAL

NOTES:

1. LIMITS OF CONCRETE AND REINFORCING TO BE REMOVED.
2. W.P. = WORK POINT

DESIGN AGENCY
BALKE ENGINEERS
1848 Summit Road
Cincinnati, Ohio 45237

DESIGNED	DRAWN	REVIEWED	DATE
MRS	WJH	CRS	6/01
CHECKED	REVISED	STRUCTURE FILE NUMBER	
FKL	—	1305530 (L.B.) 1305549 (R.B.)	

ABUTMENT CONCRETE REMOVAL DETAILS
BRIDGE NO. CLE-275-0549
OVER US 50

CLE-275-5.35

Filename: 0549REM1.dgn

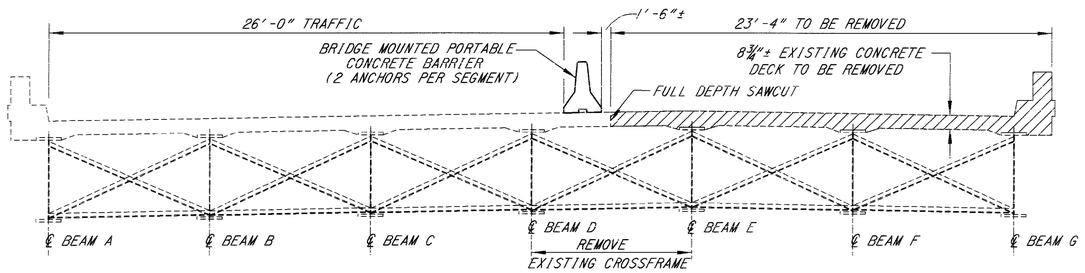

REMOVAL: STAGE I

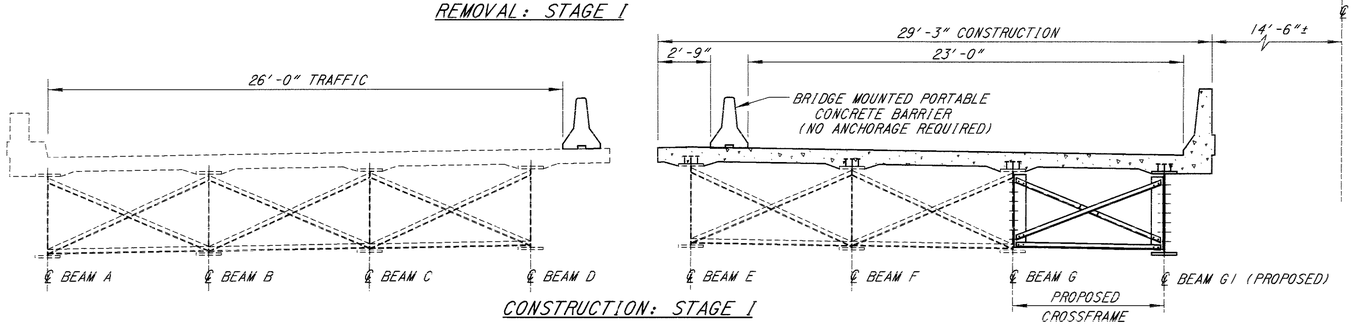

CONSTRUCTION: STAGE I

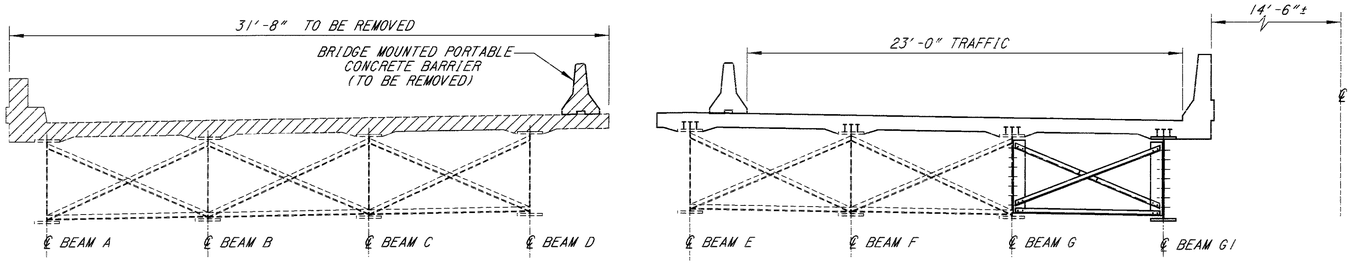

REMOVAL: STAGE II

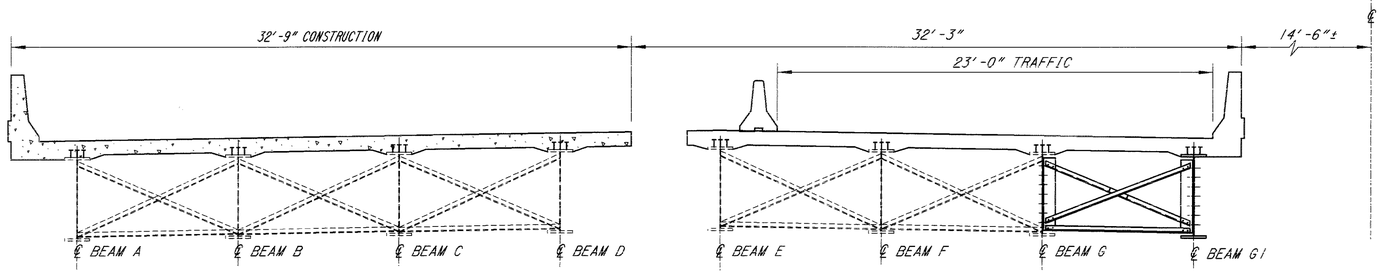

CONSTRUCTION: STAGE II

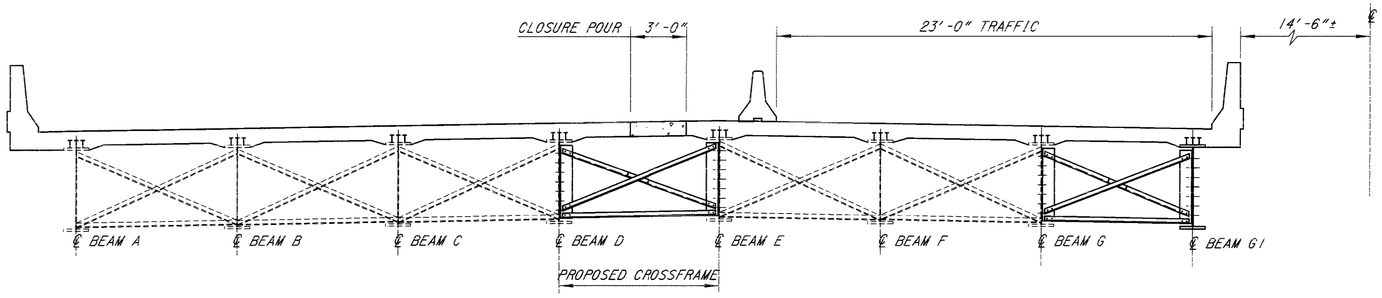

CONSTRUCTION: STAGE II CLOSURE POUR

℄ CONSTRUCTION I-275

REMOVAL: STAGE I
1. INSTALL BRIDGE MOUNTED PORTABLE CONCRETE BARRIER.
2. CLOSE THE WEST SIDE TO TRAFFIC. MAINTAIN TRAFFIC ON THE EAST SIDE.
3. REMOVE EXISTING CROSS FRAMES BETWEEN BEAMS D AND E.
4. REMOVE THE EXISTING CONCRETE PARAPET AND DECK.

CONSTRUCTION: STAGE I
1. ERECT NEW BEAM G1.
2. INSTALL SHEAR STUDS ON ALL BEAMS.
3. INSTALL CROSSFRAME BETWEEN EXISTING BEAM G AND NEW BEAM G1.
4. PLACE CONCRETE DECK AND PARAPET.
5. SET BRIDGE MOUNTED PORTABLE BARRIER ONTO THE NEWLY COMPLETED DECK.
6. MOVE TRAFFIC TO NEW DECK.

REMOVAL: STAGE II
1. CLOSE EAST SIDE TO TRAFFIC.
2. REMOVE BRIDGE MOUNTED PORTABLE BARRIER.
3. REMOVE THE REMAINING PORTION OF THE CONCRETE PARAPET AND DECK.

CONSTRUCTION: STAGE II
1. INSTALL SHEAR STUDS ON ALL BEAMS.
2. PLACE CONCRETE DECK AND PARAPET TO LIMITS SHOWN.

CONSTRUCTION: STAGE II CLOSURE POUR
1. INSTALL PROPOSED CROSSFRAMES BETWEEN BEAM D AND BEAM E.
2. POUR CONCRETE DECK CLOSURE POUR
3. SEAL CONSTRUCTION JOINTS IN CONCRETE DECK.
4. REMOVE BRIDGE MOUNTED PORTABLE CONCRETE BARRIER.
5. OPEN COMPLETED BRIDGE TO TRAFFIC.

NOTES:
1. FOR MAINTENANCE OF TRAFFIC DETAILS, SEE ROADWAY SHEETS.
2. FOR BRIDGE MOUNTED PORTABLE CONCRETE BARRIER DETAILS, SEE STANDARD DRAWING PCB-91.

DESIGN AGENCY
BALKE ENGINEERS
1848 Summit Road
Cincinnati, Ohio 45237

DESIGNED	DRAWN	REVIEWED	DATE
FKL	WJH, ALH	CRS	6-01
CHECKED	REVISED	STRUCTURE FILE NUMBER	
MKS	—	3205301 (LOS) 3205549 (RB)	

SEQUENCE OF CONSTRUCTION: LEFT BRIDGE
BRIDGE NO. CLE-275-0549
OVER US 50

CLE-275-5.35

File: 0549SEQ2L.dgn

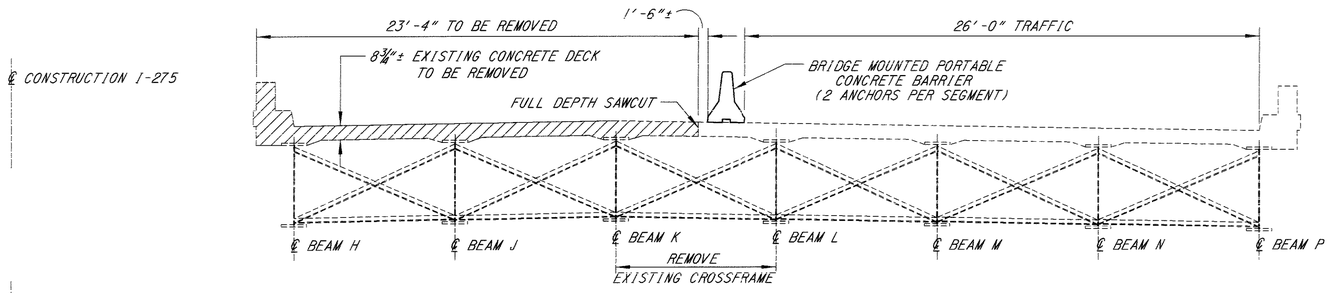

REMOVAL: STAGE I

REMOVAL: STAGE I
1. INSTALL BRIDGE MOUNTED PORTABLE CONCRETE BARRIER.
2. CLOSE THE EAST SIDE TO TRAFFIC. MAINTAIN TRAFFIC ON THE WEST SIDE.
3. REMOVE EXISTING CROSS FRAMES BETWEEN BEAMS K AND L.
4. REMOVE THE EXISTING CONCRETE PARAPET AND DECK.

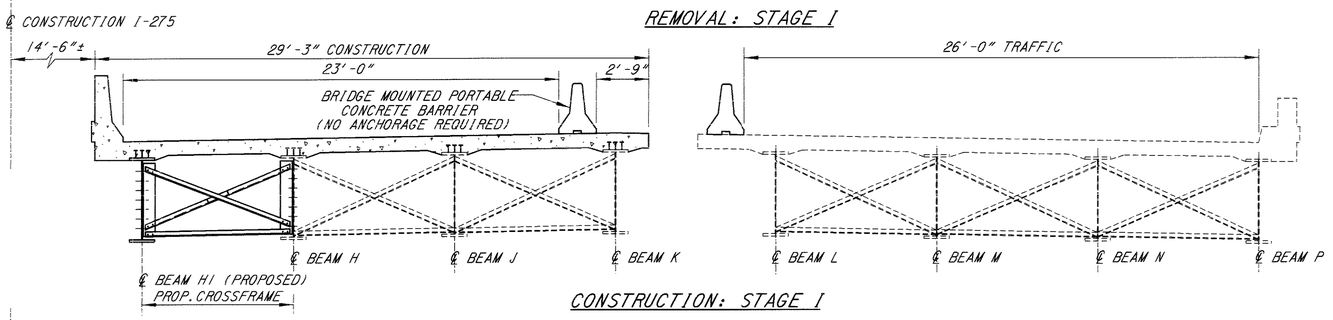

CONSTRUCTION: STAGE I

CONSTRUCTION: STAGE I
1. ERECT NEW BEAM H1.
2. INSTALL SHEAR STUDS ON ALL BEAMS.
3. INSTALL CROSSFRAME BETWEEN EXISTING BEAM H AND NEW BEAM H1.
4. PLACE CONCRETE DECK AND PARAPET.
5. INSTALL BRIDGE MOUNTED PORTABLE BARRIER ONTO THE NEWLY COMPLETED DECK.
6. MOVE TRAFFIC TO NEW DECK.

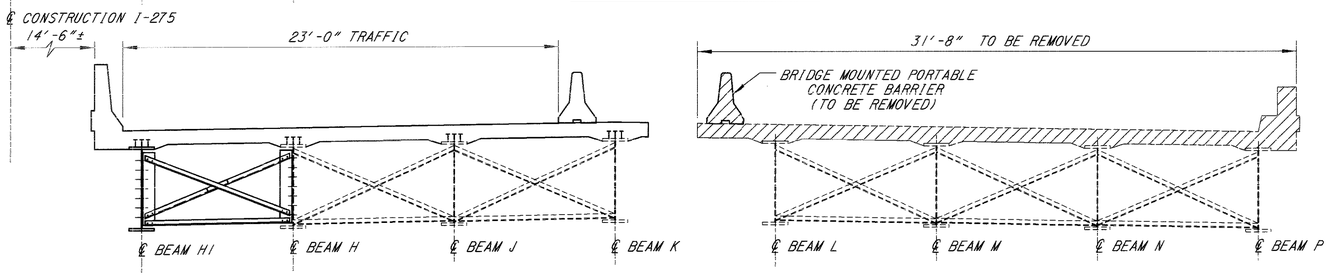

REMOVAL: STAGE II

REMOVAL: STAGE II
1. CLOSE WEST SIDE TO TRAFFIC.
2. REMOVE BRIDGE MOUNTED PORTABLE BARRIER.
3. REMOVE THE REMAINING PORTION OF THE CONCRETE PARAPET AND DECK.

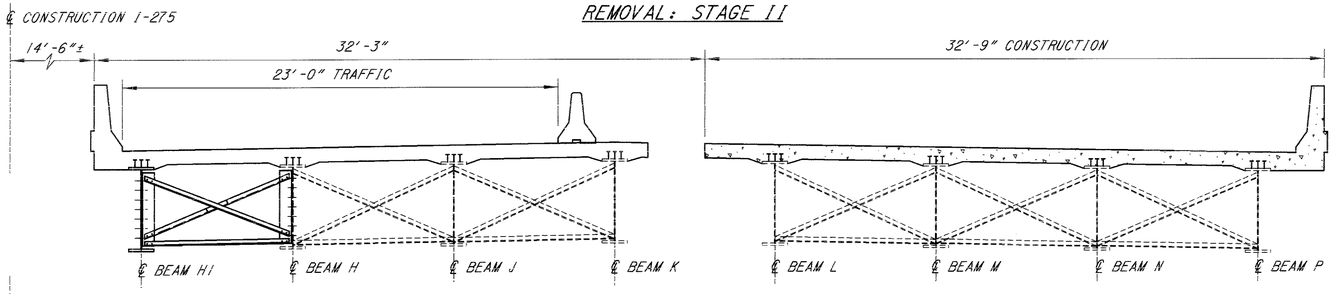

CONSTRUCTION: STAGE II

CONSTRUCTION: STAGE II
1. INSTALL SHEAR STUDS ON ALL BEAMS.
2. PLACE CONCRETE DECK AND PARAPET TO LIMITS SHOWN.

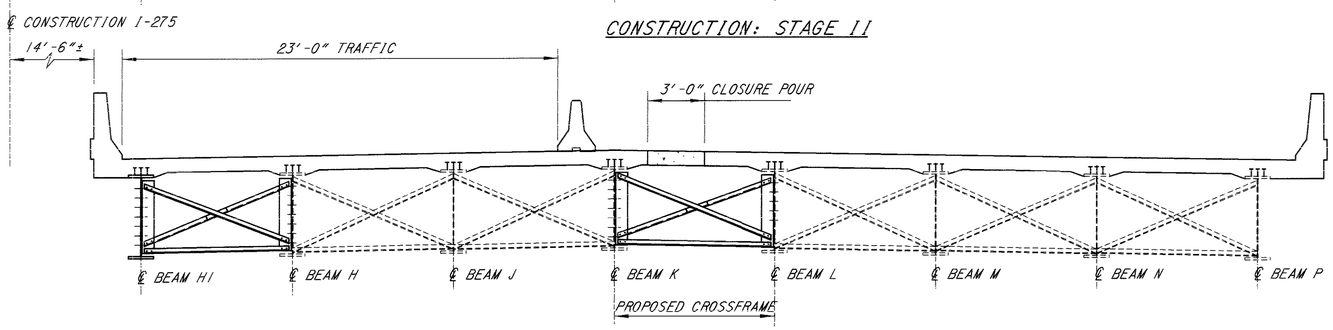

CONSTRUCTION: STAGE II CLOSURE POUR

CONSTRUCTION: STAGE II CLOSURE POUR
1. INSTALL PROPOSED CROSSFRAMES BETWEEN BEAM K AND BEAM L.
2. POUR CONCRETE DECK CLOSURE POUR
3. SEAL CONSTRUCTION JOINTS IN CONCRETE DECK.
4. REMOVE BRIDGE MOUNTED PORTABLE CONCRETE BARRIER.
5. OPEN COMPLETED BRIDGE TO TRAFFIC.

NOTES:
1. FOR MAINTENANCE OF TRAFFIC DETAILS, SEE ROADWAY SHEETS.
2. FOR BRIDGE MOUNTED PORTABLE CONCRETE BARRIER DETAILS, SEE STANDARD DRAWING PCB-91.

DESIGN AGENCY
BALKE ENGINEERS
1848 Summit Road
Cincinnati, Ohio 45237

DESIGNED	DRAWN	REVIEWED	DATE
FKL	WJH, ALH	CRS	6/01
CHECKED	REVISED	STRUCTURE FILE NUMBER	
MRS	—	1305530 (LB) 1305549 (RB)	

SEQUENCE OF CONSTRUCTION: RIGHT BRIDGE
BRIDGE NO. CLE-275-0549
OVER US 50

CLE-275-5.35

Filename: 0549SP3X.dgn

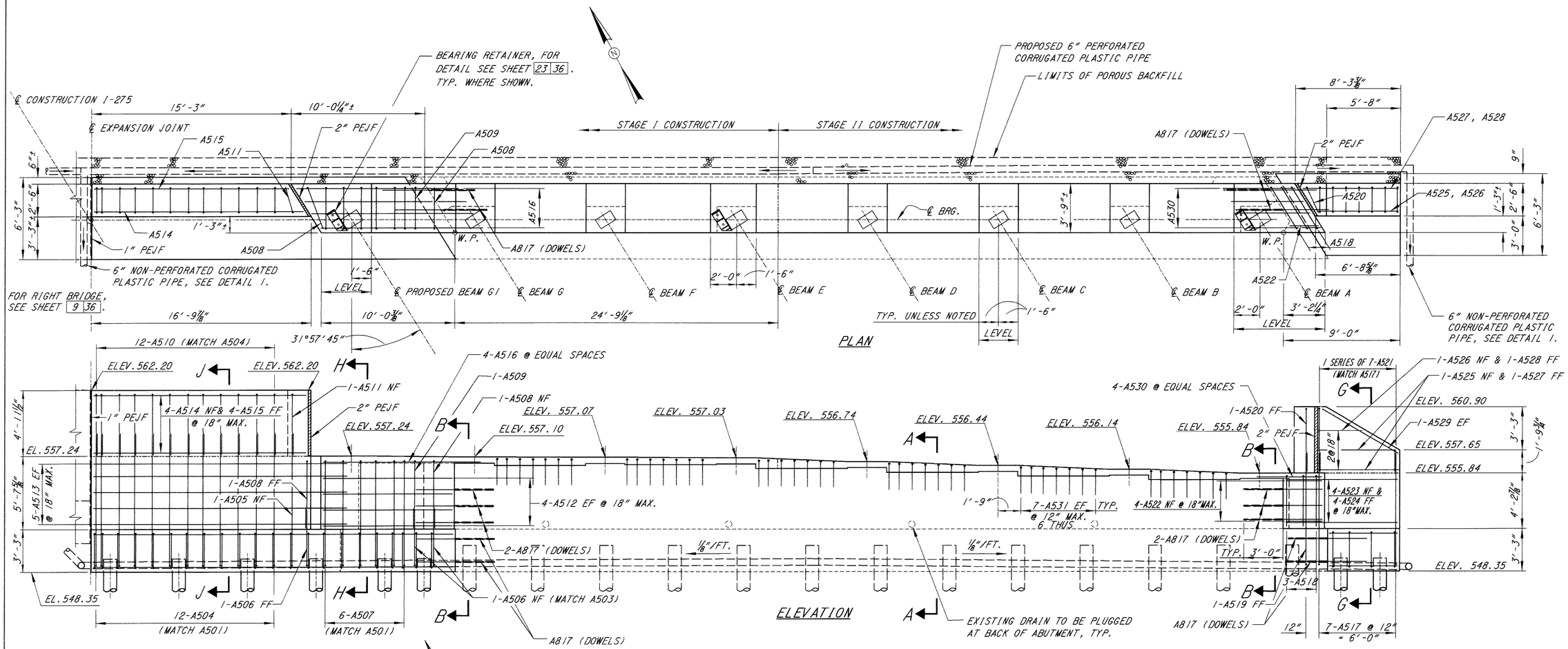

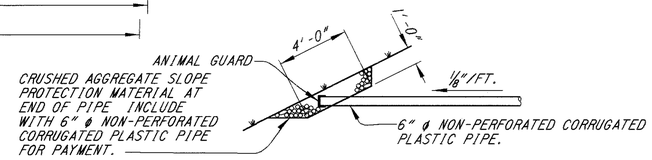

DETAIL 1

NOTES:

1. FOR ADDITIONAL INFORMATION, SEE STD. SICD-1-96.
2. FOR SECTIONS A-A, B-B, G-G, H-H & J-J, SEE SHEET 12 36.
3. EF = EACH FACE
   NF = NEAR FACE
   FF = FAR FACE
   PEJF = PREFORMED EXPANSION JOINT FILLER
   W.P. = WORK POINT
4. ⬡ DENOTES 12" CAST IN PLACE PILE BATTERED 1:4 IN DIRECTION OF ARROW.
   (4) DENOTES PILE NUMBER.
5. POROUS BACKFILL WITH FILTER FABRIC, 2 FEET THICK SHALL EXTEND UP TO THE PLANE OF THE SUBGRADE, TO 1 FOOT BELOW THE EMBANKMENT AND LATERALLY TO THE ENDS OF THE WINGWALLS.
6. REINFORCING STEEL IN THE VICINTY OF THE BEARING RETAINER SHALL BE ACCURATELY PLACED TO AVOID INTERFERENCE WITH THE DRILLING OF BEARING RETAINER ANCHOR HOLES OR THE PRESETTING OF THE BEARING RETAINER ANCHORS.

DESIGN AGENCY
BALKE ENGINEERS
1848 Summit Road
Cincinnati, Ohio 45237

DESIGNED	DRAWN	REVIEWED	DATE
FKL	ALH/WJH	CRS	6/01
CHECKED	REVISED	STRUCTURE FILE NUMBER	
MRS	—	1305530 (L.B.) 1305549 (R.B.)	

LEFT BRIDGE REAR ABUTMENT DETAILS
BRIDGE NO. CLE-275-0549
OVER US 50

CLE-275-5.35

8/36

637/857

Filename: 0549bra1.dgn

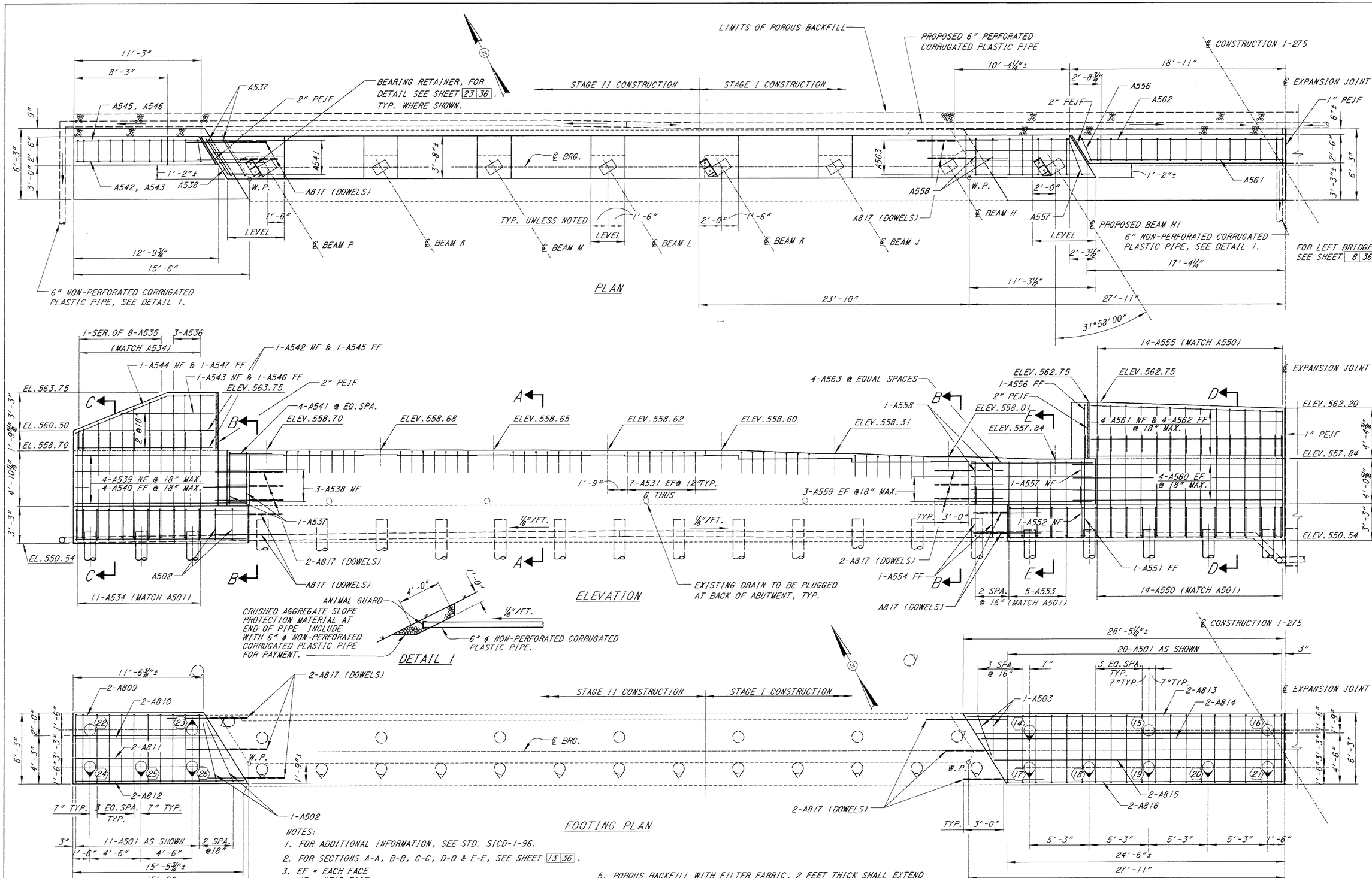

NOTES:

1. FOR ADDITIONAL INFORMATION, SEE STD. SICD-1-96.
2. FOR SECTIONS A-A, B-B, C-C, D-D & E-E, SEE SHEET 13 36.
3. EF = EACH FACE
   NF = NEAR FACE
   FF = FAR FACE
   PEJF = PREFORMED EXPANSION JOINT FILLER
   W.P. = WORK POINT
4. ◯ DENOTES 12" CAST IN PLACE PILE BATTERED 1:4 IN DIRECTION OF ARROW.
   (25) DENOTES PILE NUMBER.
5. POROUS BACKFILL WITH FILTER FABRIC, 2 FEET THICK SHALL EXTEND UP TO THE PLANE OF THE SUBGRADE, TO 1 FOOT BELOW THE EMBANKMENT AND LATERALLY TO THE ENDS OF THE WINGWALLS.
6. REINFORCING STEEL IN THE VICINTY OF THE BEARING RETAINER SHALL BE ACCURATELY PLACED TO AVOID INTERFERENCE WITH THE DRILLING OF BEARING RETAINER ANCHOR HOLES OR THE PRESETTING OF THE BEARING RETAINER ANCHORS.

DESIGN AGENCY
BALKE ENGINEERS
1848 Summit Road
Cincinnati, Ohio 45237

DESIGNED	DRAWN	REVIEWED	DATE
FKL	WJH	CRS	6/01
CHECKED	REVISED	STRUCTURE FILE NUMBER	
MRS	—	1305530 (L.B.) 1305549 (R.B.)	

RIGHT BRIDGE REAR ABUTMENT DETAILS
BRIDGE NO. CLE-275-0549
OVER US 50

CLE-275-5.35

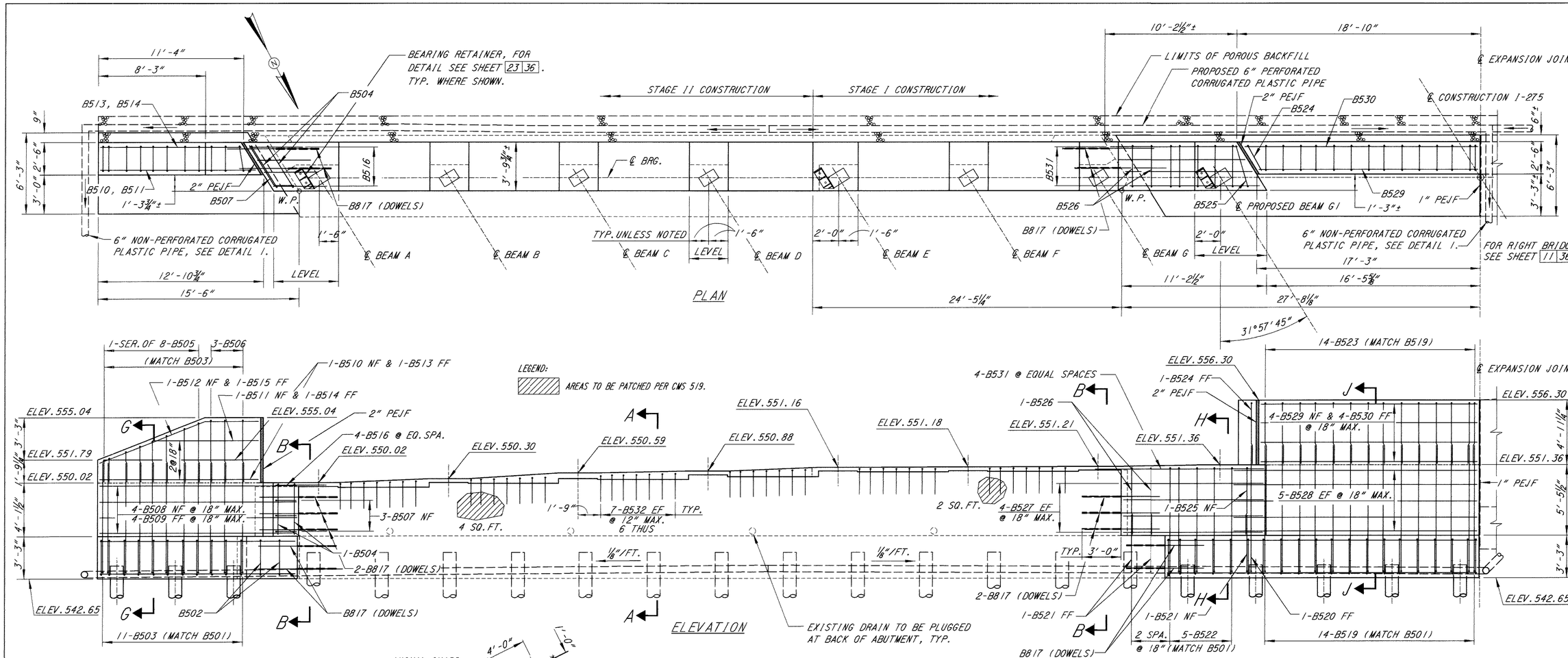

PLAN

ELEVATION

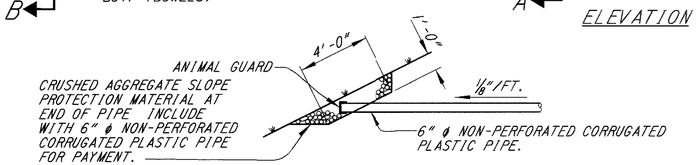

DETAIL 1

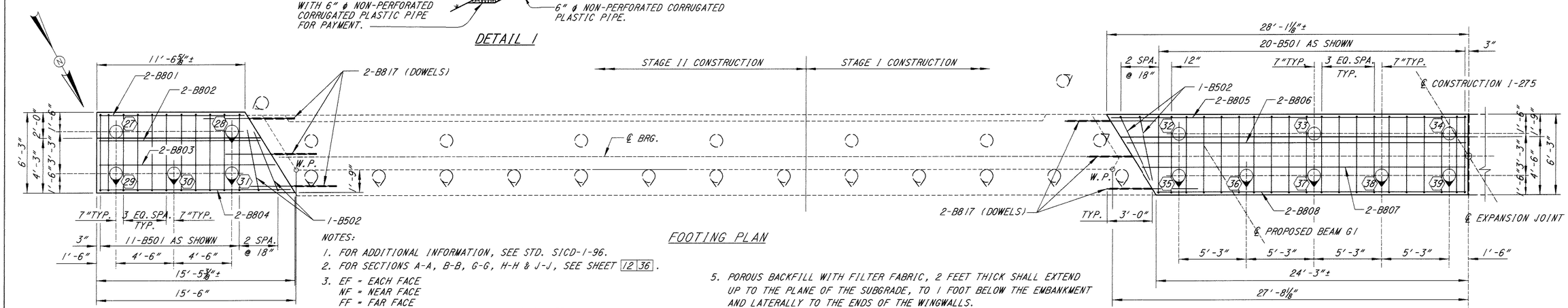

FOOTING PLAN

NOTES:

1. FOR ADDITIONAL INFORMATION, SEE STD. SICD-1-96.
2. FOR SECTIONS A-A, B-B, G-G, H-H & J-J, SEE SHEET 12 36.
3. EF = EACH FACE
   NF = NEAR FACE
   FF = FAR FACE
   PEJF = PREFORMED EXPANSION JOINT FILLER
   W.P. = WORK POINT
4. ◯ DENOTES 12" CAST IN PLACE PILE BATTERED 1:4 IN DIRECTION OF ARROW.
   (31) DENOTES PILE NUMBER.
5. POROUS BACKFILL WITH FILTER FABRIC, 2 FEET THICK SHALL EXTEND UP TO THE PLANE OF THE SUBGRADE, TO 1 FOOT BELOW THE EMBANKMENT AND LATERALLY TO THE ENDS OF THE WINGWALLS.
6. REINFORCING STEEL IN THE VICINTY OF THE BEARING RETAINER SHALL BE ACCURATELY PLACED TO AVOID INTERFERENCE WITH THE DRILLING OF BEARING RETAINER ANCHOR HOLES OR THE PRESETTING OF THE BEARING RETAINER ANCHORS.

DESIGN AGENCY
BALKE ENGINEERS
1848 Summit Road
Cincinnati, Ohio 45237

DESIGNED	DRAWN	REVIEWED	DATE
FKL	WJH	CRS	6/01
CHECKED	REVISED	STRUCTURE FILE NUMBER	
MRS	—	1305530 (L.B.) 1305549 (R.B.)	

LEFT BRIDGE FORWARD ABUTMENT DETAILS
BRIDGE NO. CLE-275-0549
OVER US 50

CLE-275-5.35

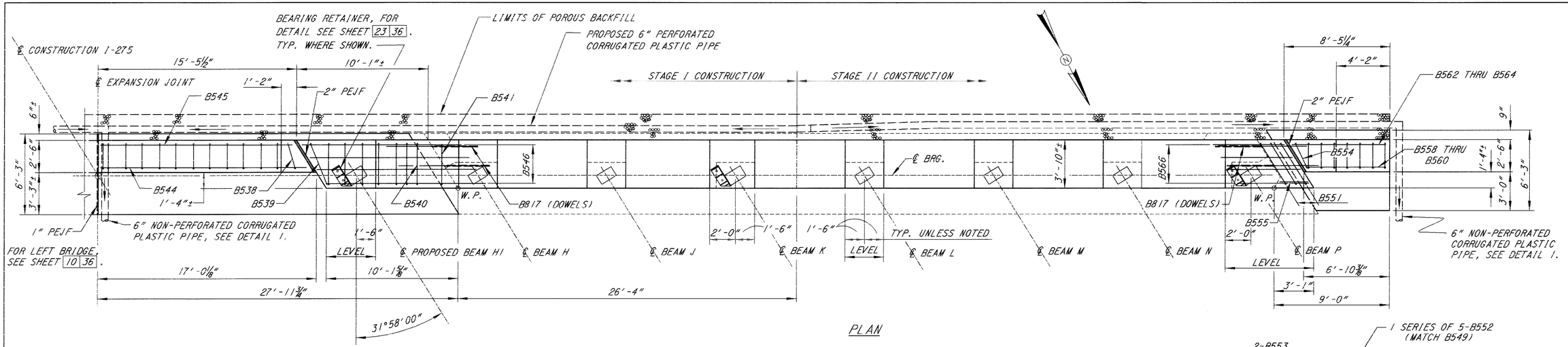

PLAN

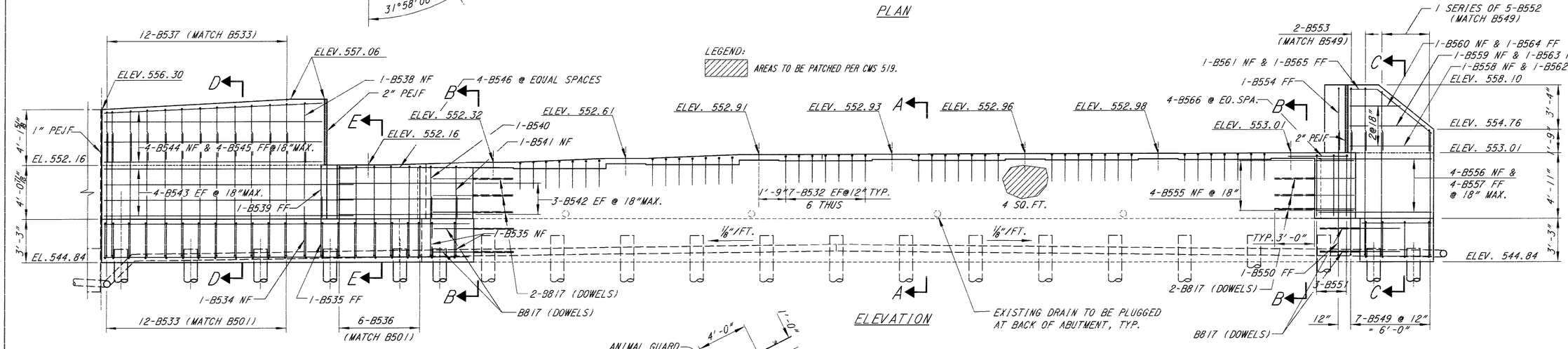

ELEVATION

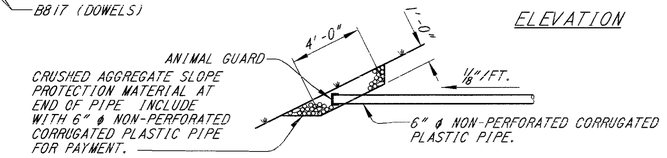

DETAIL 1

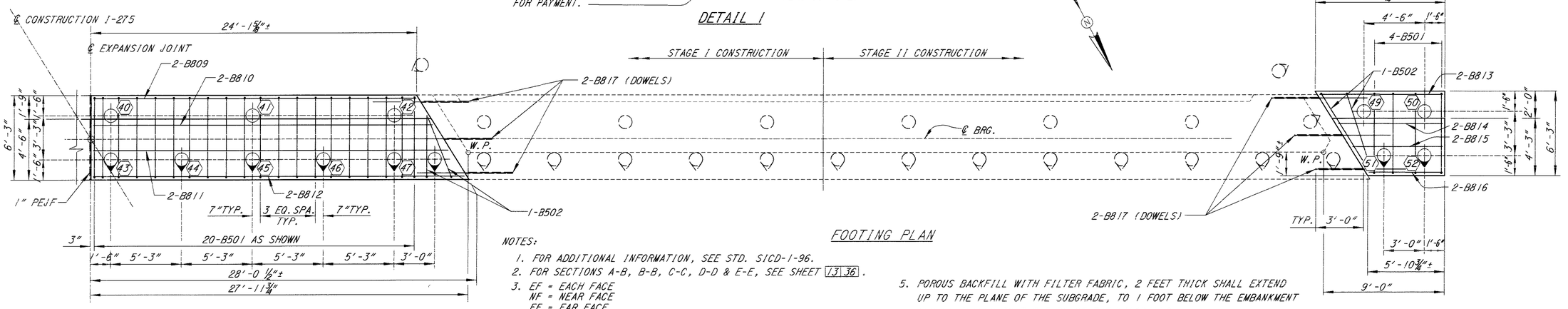

FOOTING PLAN

NOTES:

1. FOR ADDITIONAL INFORMATION, SEE STD. SICD-1-96.
2. FOR SECTIONS A-B, B-B, C-C, D-D & E-E, SEE SHEET 13 36.
3. EF = EACH FACE
   NF = NEAR FACE
   FF = FAR FACE
   PEJF = PREFORMED EXPANSION JOINT FILLER
   W.P. = WORK POINT
4. ○ DENOTES 12" CAST IN PLACE PILE BATTERED 1:4 IN THE DIRECTION OF ARROW
   (46) DENOTES PILE NUMBER
5. POROUS BACKFILL WITH FILTER FABRIC, 2 FEET THICK SHALL EXTEND UP TO THE PLANE OF THE SUBGRADE, TO 1 FOOT BELOW THE EMBANKMENT AND LATERALLY TO THE ENDS OF THE WINGWALLS.
6. REINFORCING STEEL IN THE VICINTY OF THE BEARING RETAINER SHALL BE ACCURATELY PLACED TO AVOID INTERFERENCE WITH THE DRILLING OF BEARING RETAINER ANCHOR HOLES OR THE PRESETTING OF THE BEARING RETAINER ANCHORS.

DESIGN AGENCY
BALKE ENGINEERS
1848 Summit Road
Cincinnati, Ohio 45237

DESIGNED	DRAWN	REVIEWED	DATE
FKL	WJHALH	CRS	6-01
CHECKED	REVISED	STRUCTURE FILE NUMBER	
MPS	—	1305301, B.J 1305549 R.B.J	

RIGHT BRIDGE FORWARD ABUTMENT DETAILS
BRIDGE NO. CLE-275-0549
OVER US 50

CLE-275-5.35

11 / 36

640
857

File name: c5481a1.dgn

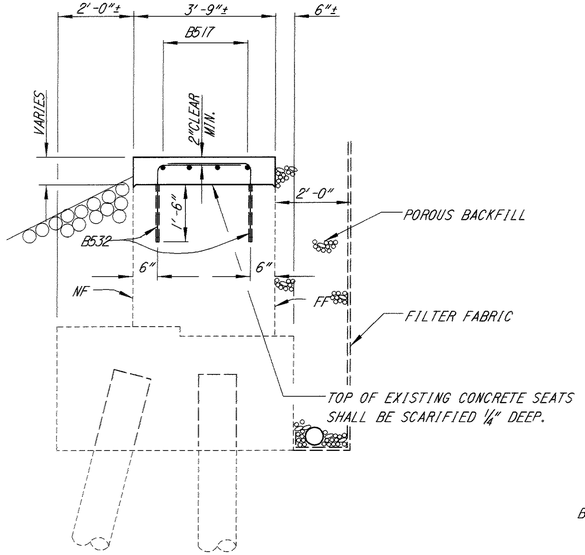

SECTION A-A

FORWARD ABUTMENT SHOWN
REAR ABUTMENT SIMILAR

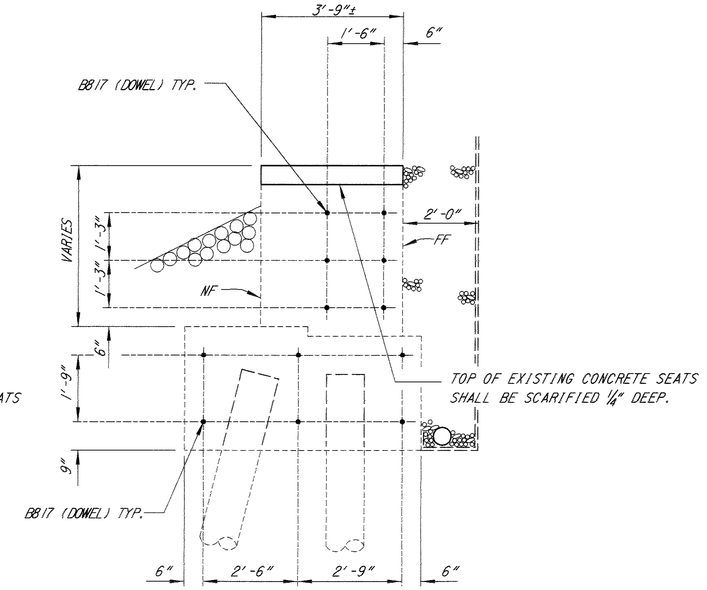

SECTION B-B

FORWARD ABUTMENT SHOWN
REAR ABUTMENT SIMILAR

NOTES:

1. EF = EACH FACE
   NF = NEAR FACE
   FF = FAR FACE
2. POROUS BACKFILL WITH FILTER FABRIC, 2 FEET THICK, SHALL EXTEND UP TO THE PLANE OF THE SUBGRADE, TO 1 FOOT BELOW THE EMBANKMENT AND LATERALLY TO THE ENDS OF THE WINGWALLS.

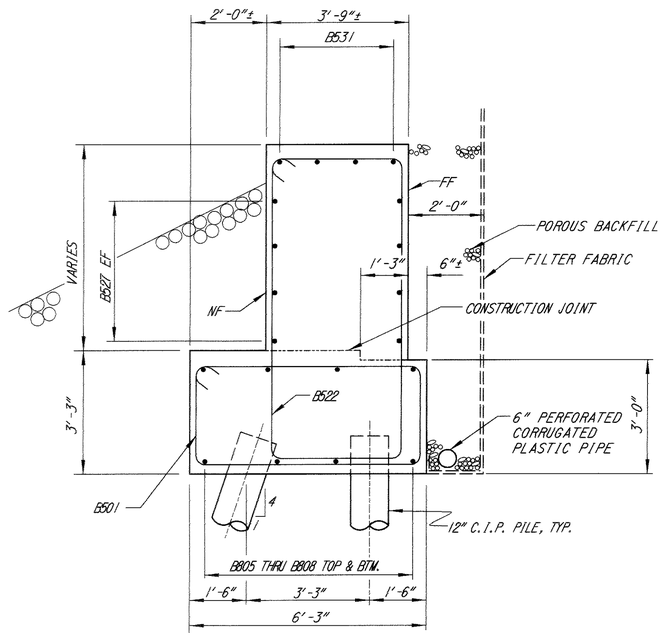

SECTION H-H

FORWARD ABUTMENT SHOWN
REAR ABUTMENT SIMILAR

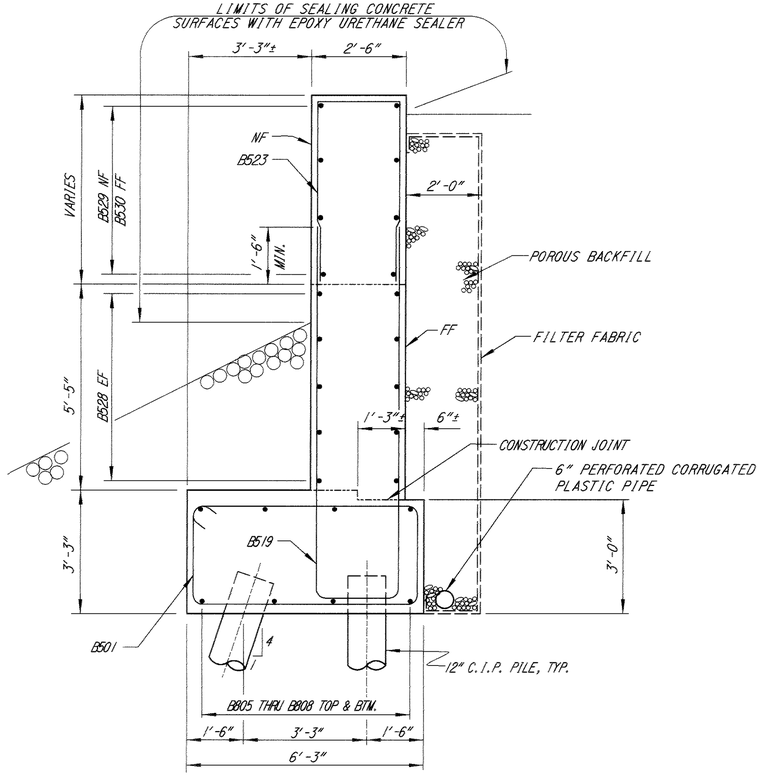

SECTION J-J

FORWARD ABUTMENT SHOWN
REAR ABUTMENT SIMILAR

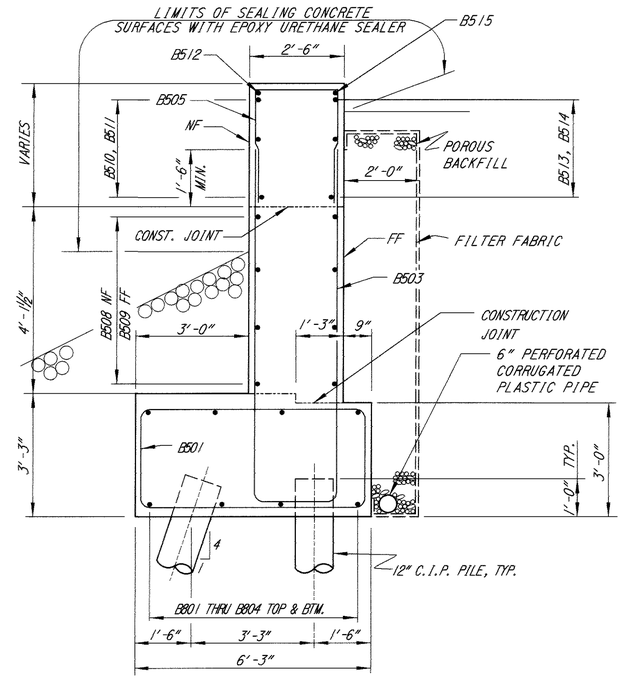

SECTION G-G

FORWARD ABUTMENT SHOWN
REAR ABUTMENT SIMILAR

DESIGN AGENCY
BALKE ENGINEERS
1848 Summit Road
Cincinnati, Ohio 45237

DESIGNED	DRAWN	REVIEWED	DATE
FKL	ALH/MJH	CRS	6/01
CHECKED	REVISED	STRUCTURE FILE NUMBER	
MRS	—	1305530 (L.B.) 1305549 (R.B.)	

LEFT BRIDGE ABUTMENT DETAILS
BRIDGE NO. CLE-275-0549
OVER US 50

CLE-275-5.35

Filename: 0549LBRAIa.dgn

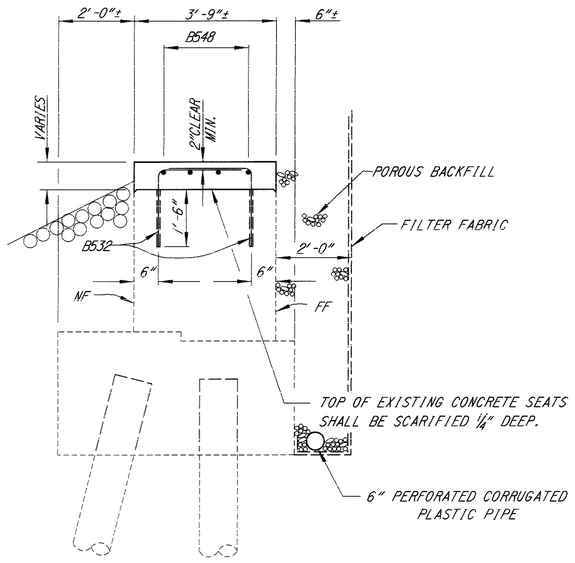

SECTION A-A

FORWARD ABUTMENT SHOWN
REAR ABUTMENT SIMILAR

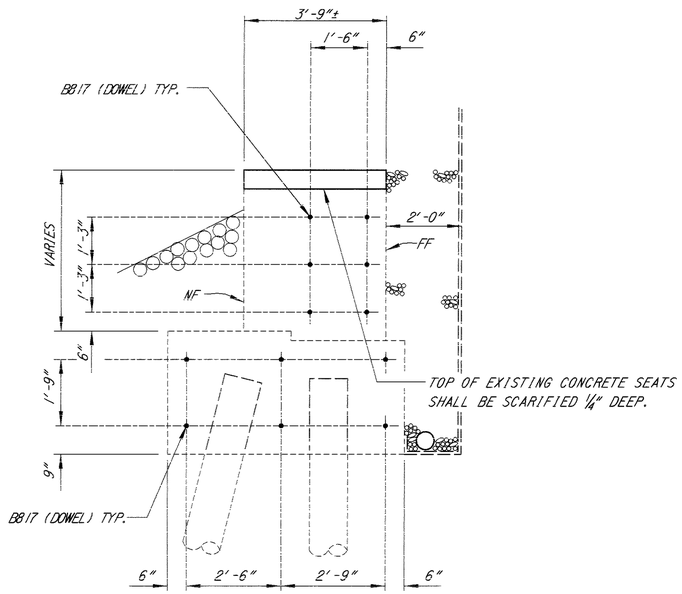

SECTION B-B

FORWARD ABUTMENT SHOWN
REAR ABUTMENT SIMILAR

NOTES:

1. EF = EACH FACE
   NF = NEAR FACE
   FF = FAR FACE
2. POROUS BACKFILL WITH FILTER FABRIC, 2 FEET THICK, SHALL EXTEND UP TO THE PLANE OF THE SUBGRADE, TO 1 FOOT BELOW THE EMBANKMENT AND LATERALLY TO THE ENDS OF THE WINGWALLS.

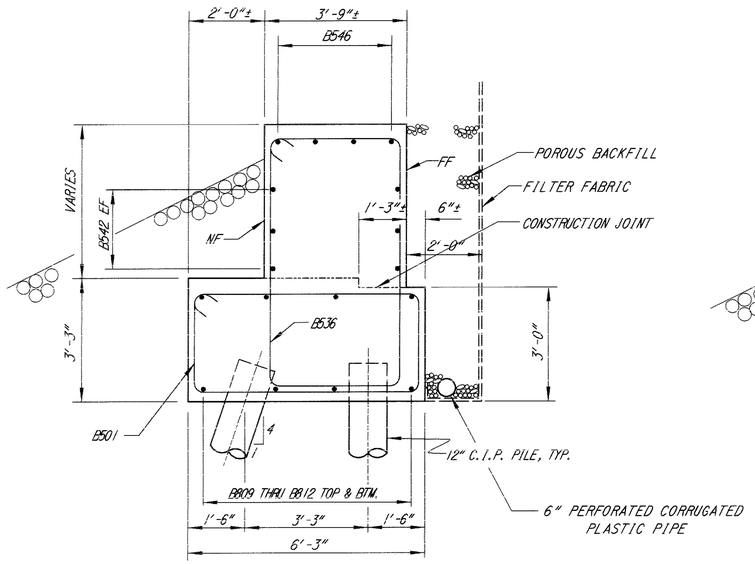

SECTION E-E

FORWARD ABUTMENT SHOWN
REAR ABUTMENT SIMILAR

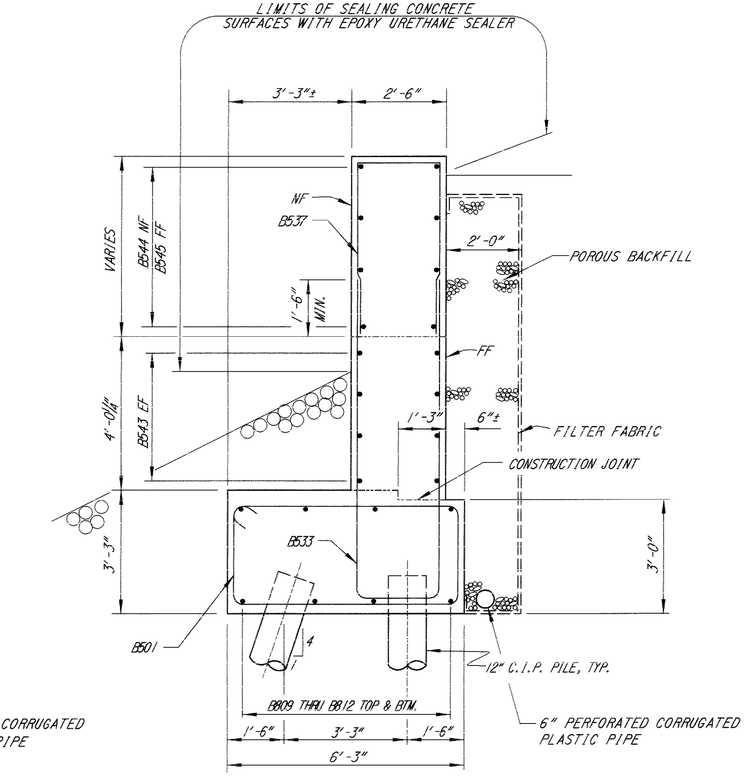

SECTION D-D

FORWARD ABUTMENT SHOWN
REAR ABUTMENT SIMILAR

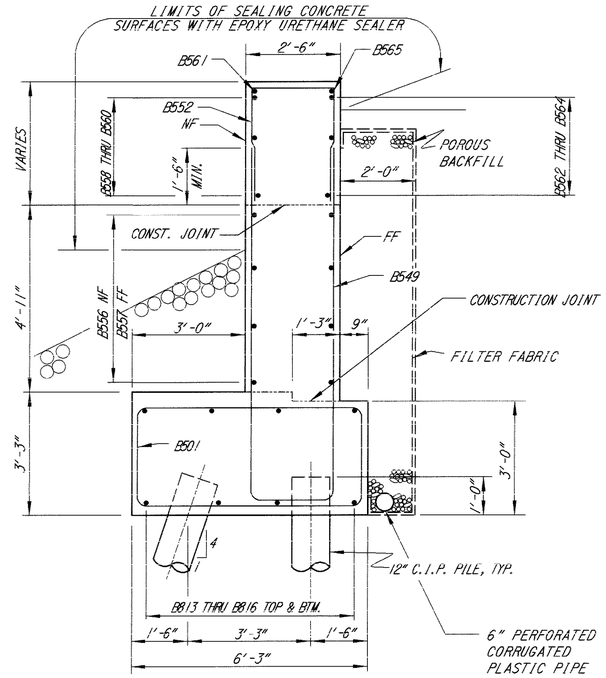

SECTION C-C

FORWARD ABUTMENT SHOWN
REAR ABUTMENT SIMILAR

DESIGN AGENCY
BALKE ENGINEERS
1848 Summit Road
Cincinnati, Ohio 45237

DESIGNED	MPS	REVIEWED	CRS	DATE	6/01
DRAWN	ALH/WLH	REVISED	—	STRUCTURE FILE NUMBER	1305530 (R.B.) / 1305549 (R.B.)
CHECKED	FKL				

RIGHT BRIDGE ABUTMENT DETAILS

BRIDGE NO. CLE-275-0549
OVER US 50

CLE-275-5.35

13 / 36

642 / 857

F:\Division - Cad\RBRM10.dgn

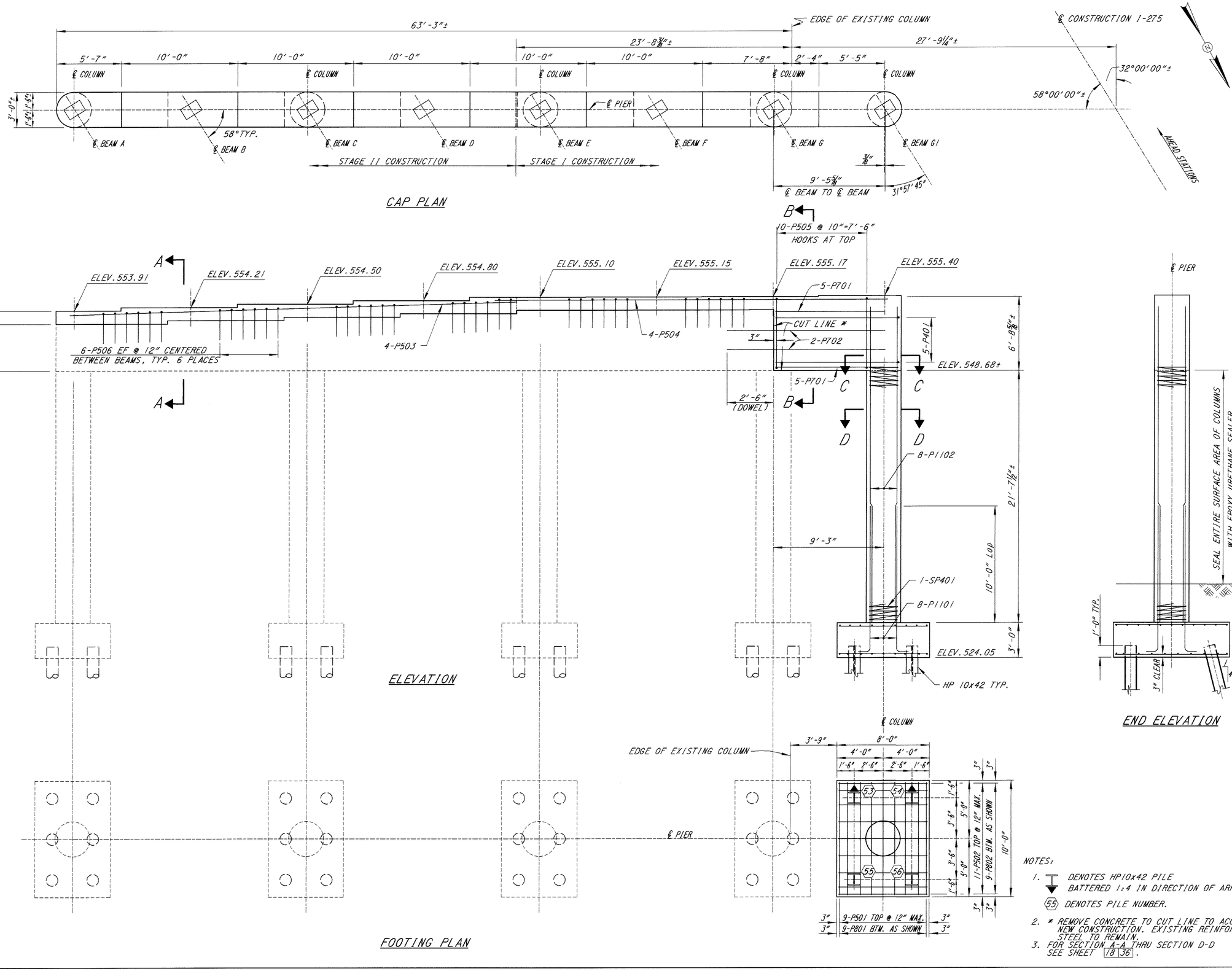

NOTES:

1. DENOTES HP10x42 PILE BATTERED 1:4 IN DIRECTION OF ARROW.
   (55) DENOTES PILE NUMBER.
2. * REMOVE CONCRETE TO CUT LINE TO ACCOMMODATE NEW CONSTRUCTION. EXISTING REINFORCING STEEL TO REMAIN.
3. FOR SECTION A-A THRU SECTION D-D SEE SHEET 18/36.

DESIGN AGENCY
BALKE ENGINEERS
1848 Summit Road
Cincinnati, Ohio 45237

DESIGNED	DRAWN	REVIEWED	DATE
FKL	ALH	CRS	6/01
CHECKED	REVISED	STRUCTURE FILE NUMBER	
MRS	—	1305530 (L.B.) 1305549 (R.B.)	

LEFT BRIDGE PIER I DETAILS
BRIDGE NO. CLE-275-0549
OVER US 50

CLE-275-5.35

14/36

643/857

Filename: 0549LB01.dgn

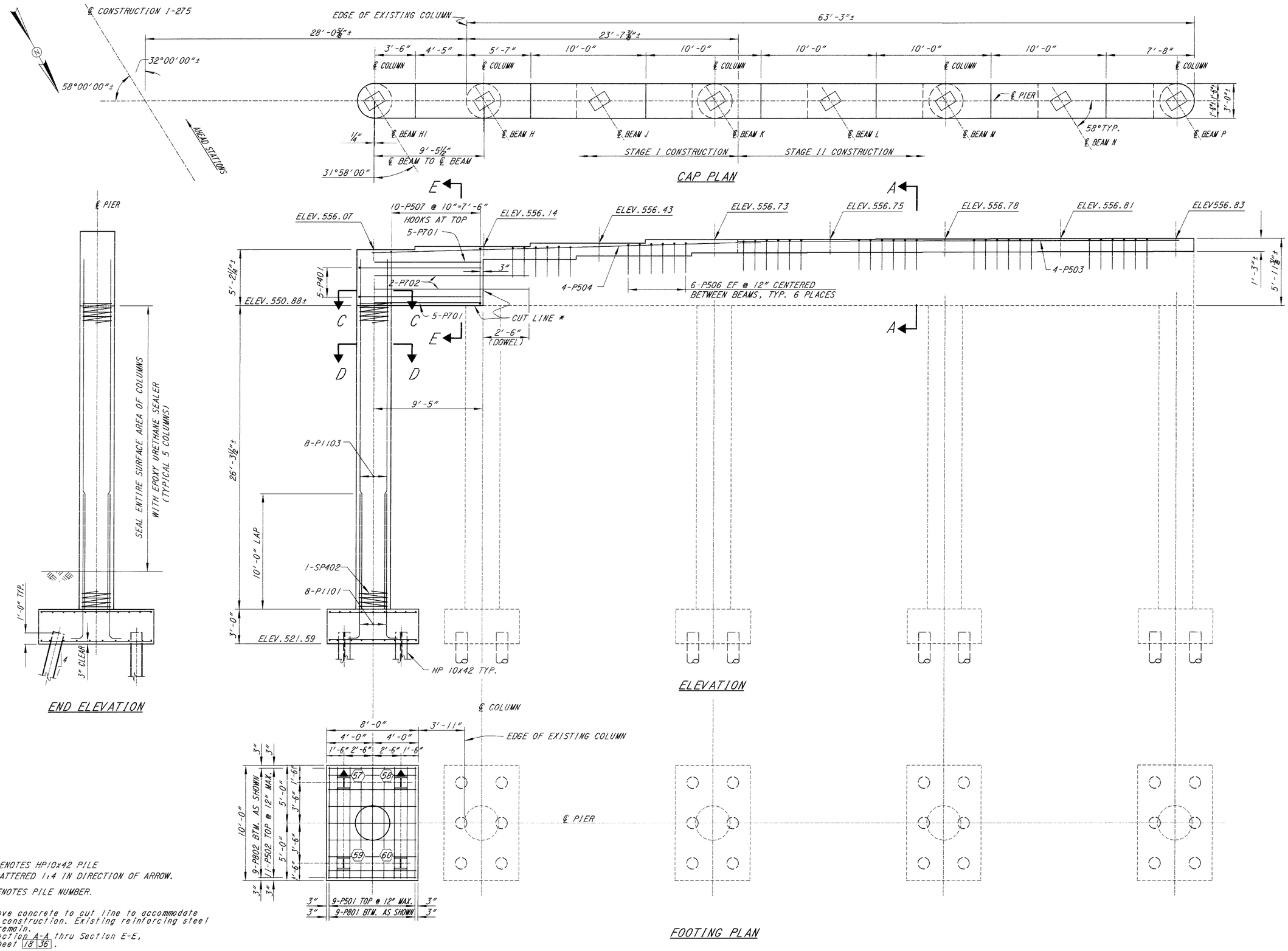

NOTES:

1. DENOTES HP10x42 PILE BATTERED 1:4 IN DIRECTION OF ARROW.
   (59) DENOTES PILE NUMBER.
2. * Remove concrete to cut line to accommodate new construction. Existing reinforcing steel to remain.
3. For Section A-A thru Section E-E, see sheet 18/36.

DESIGN AGENCY
BALKE ENGINEERS
1848 Summit Road
Cincinnati, Ohio 45237

DESIGNED	DRAWN	REVIEWED	DATE
FKL	ALH	CRS	6/01
CHECKED	REVISED	STRUCTURE FILE NUMBER	
MRS	—	1305530 (L.B.) 1305549 (R.B.)	

RIGHT BRIDGE PIER I DETAILS
BRIDGE NO. CLE-275-0549
OVER US 50

CLE-275-5.35

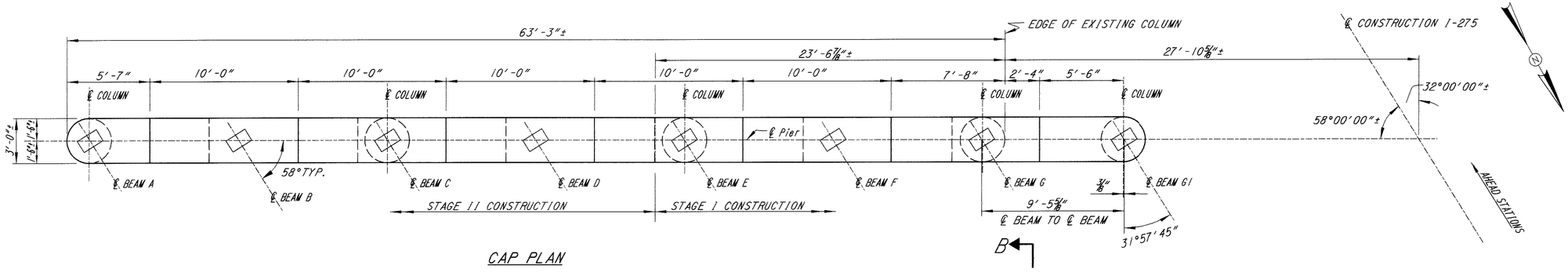

CAP PLAN

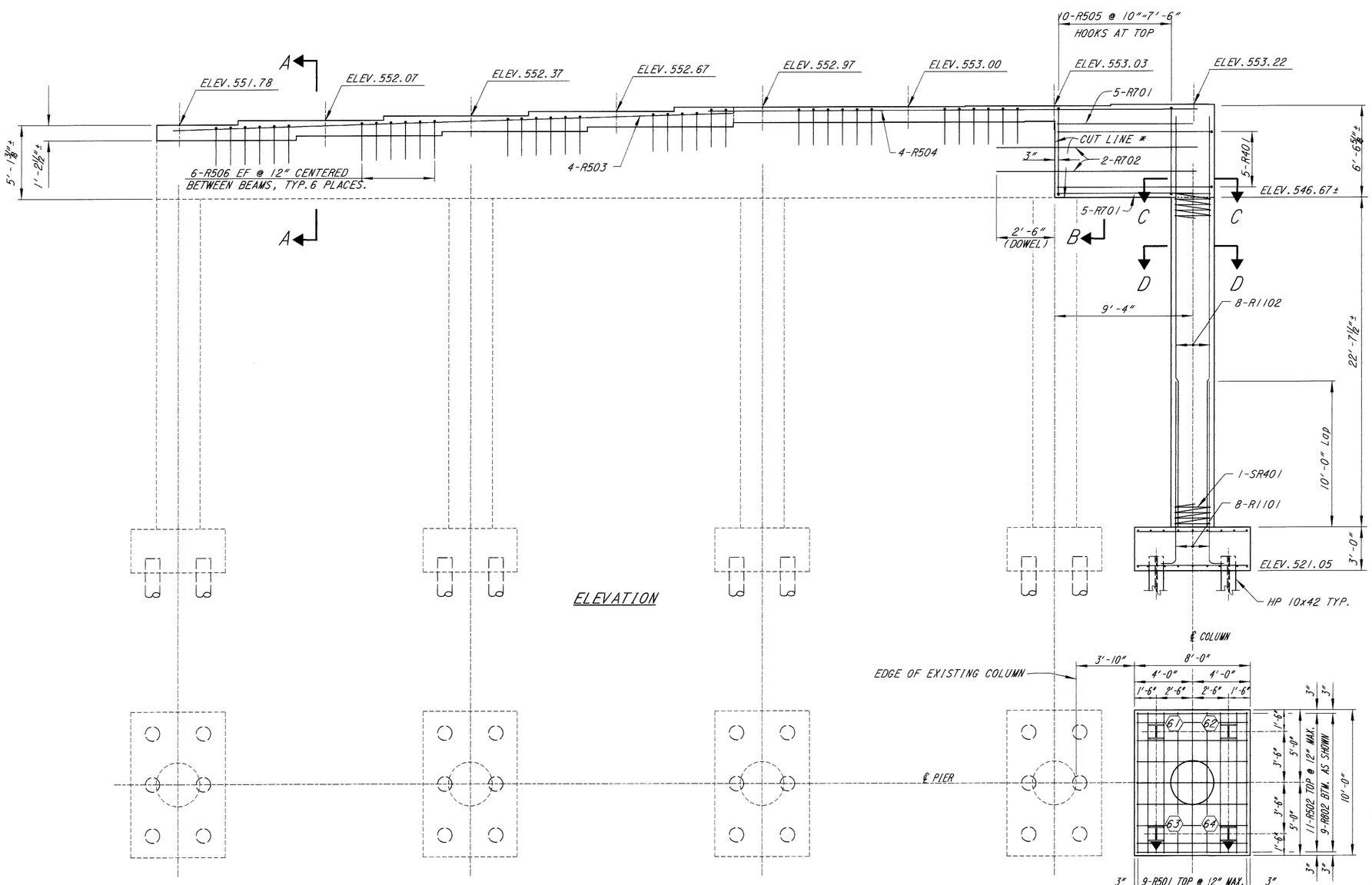

ELEVATION

FOOTING PLAN

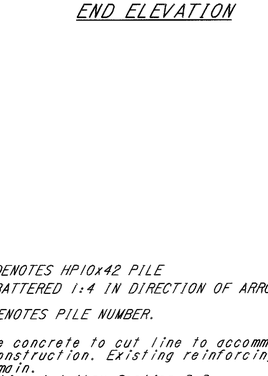

END ELEVATION

NOTES:

1. ▼ DENOTES HP10x42 PILE BATTERED 1:4 IN DIRECTION OF ARROW.
   (61) DENOTES PILE NUMBER.
2. * Remove concrete to cut line to accommodate new construction. Existing reinforcing steel to remain.
3. For Section A-A thru Section D-D, see sheet 18 36.

DESIGN AGENCY
BALKE ENGINEERS
1848 Summit Road
Cincinnati, Ohio 45237

DESIGNED	DRAWN	REVIEWED	DATE
FXL	ALH	CRS	6/01
CHECKED	REVISED	STRUCTURE FILE NUMBER	
MRS	—	3205.30 (L.B.) / 3205.49 (R.B.)	

LEFT BRIDGE PIER 2 DETAILS

BRIDGE NO. CLE-275-0549
OVER US 50

CLE-275-5.35

16 / 36

645 / 857

F:\Inroms\12548.dgn

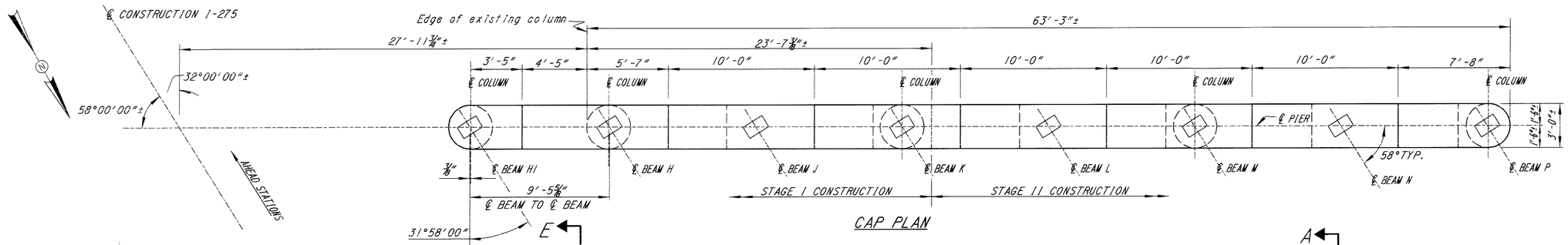

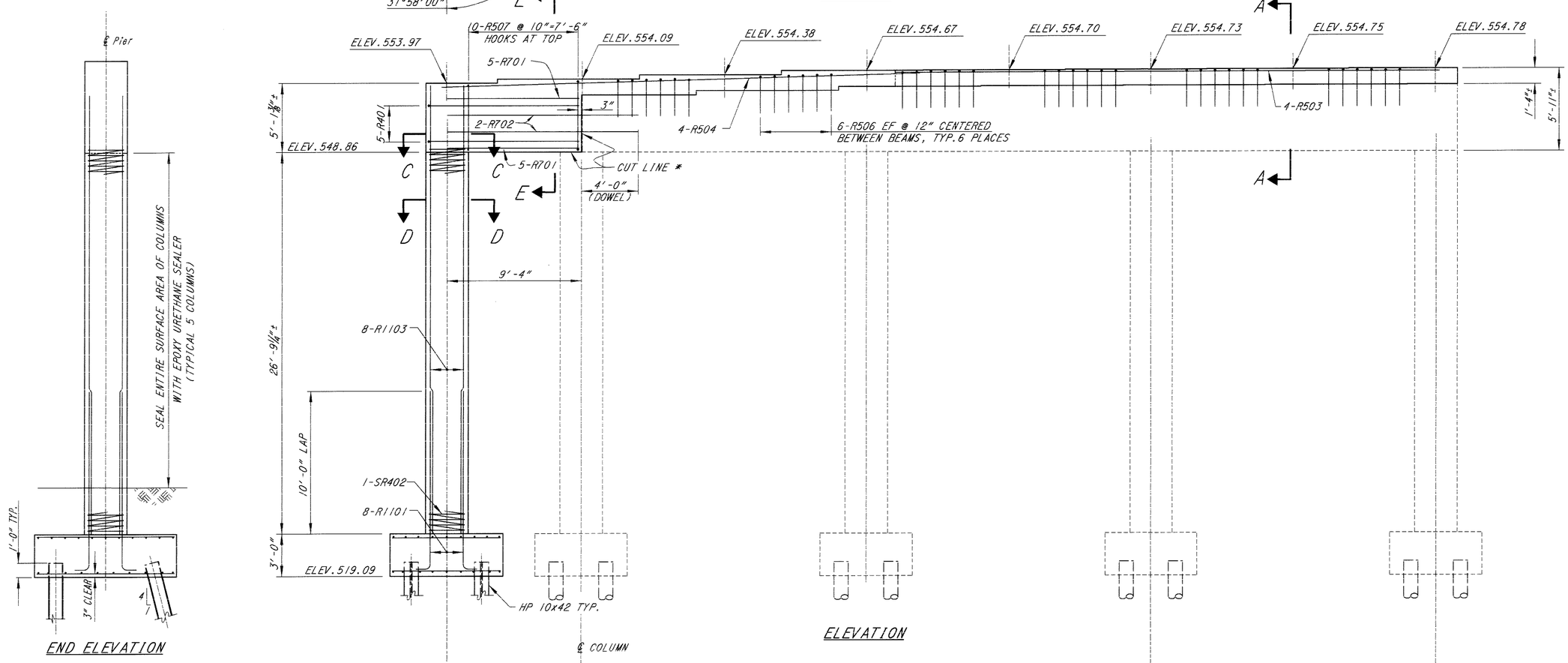

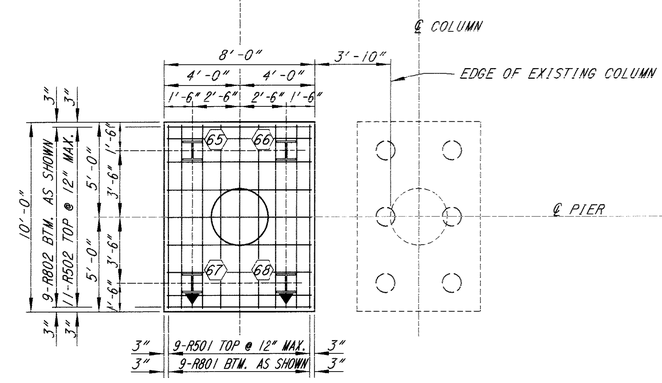

NOTES:

1. ▼ DENOTES HP10x42 PILE BATTERED 1:4 IN DIRECTION OF ARROW.
   (65) DENOTES PILE NUMBER.
2. * REMOVE CONCRETE TO CUT LINE TO ACCOMMODATE NEW CONSTRUCTION. EXISTING REINFORCING STEEL TO REMAIN.
3. FOR SECTION A-A THRU SECTION E-E, SEE SHEET 18 36.

F:\Inroute\CLE275\05499\2.dgn

DESIGN AGENCY
BALKE ENGINEERS
1848 Summit Road
Cincinnati, Ohio 45237

DESIGNED	DRAWN	REVIEWED	DATE
FKL	ALH	CRS	6/01
CHECKED	REVISED	STRUCTURE FILE NUMBER	
MRS	—	1305530 (L.B.) 1305549 (R.B.)	

RIGHT BRIDGE PIER 2 DETAILS
BRIDGE NO. CLE-275-0549
OVER US 50

CLE-275-5.35

17 / 36

646
857

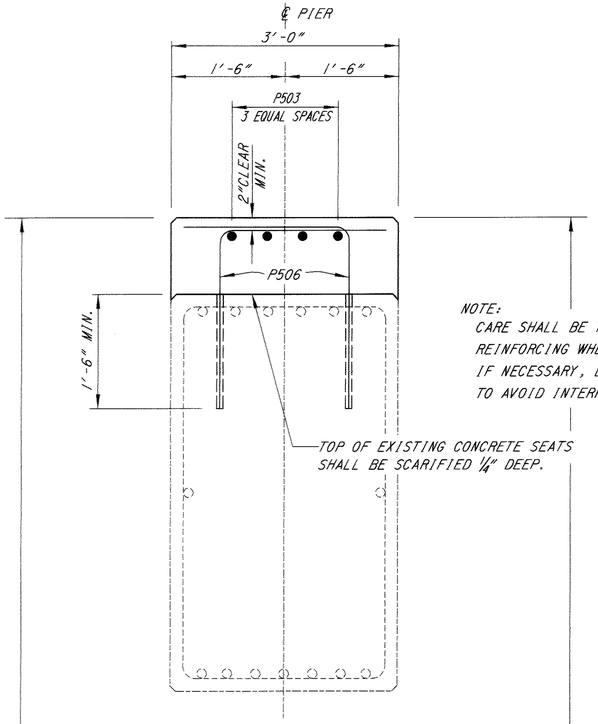

NOTE:
CARE SHALL BE TAKEN TO AVOID EXISTING REINFORCING WHEN DRILLING HOLES FOR DOWELS. IF NECESSARY, LOCATION OF DOWEL SHALL BE MOVED TO AVOID INTERFERENCE.

LIMITS OF SEALING CONCRETE SURFACES WITH EPOXY URETHANE SEALER

SECTION A-A
(PIER 1 LEFT BRIDGE SHOWN; OTHER PIERS SIMILAR)

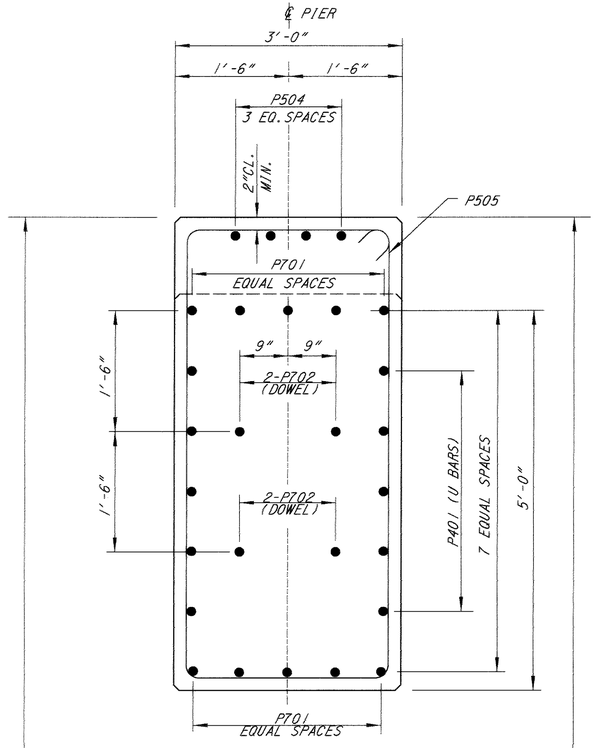

LIMITS OF SEALING CONCRETE SURFACES WITH EPOXY URETHANE SEALER

SECTION B-B
(PIER 1 LEFT BRIDGE SHOWN; OTHER PIERS SIMILAR)

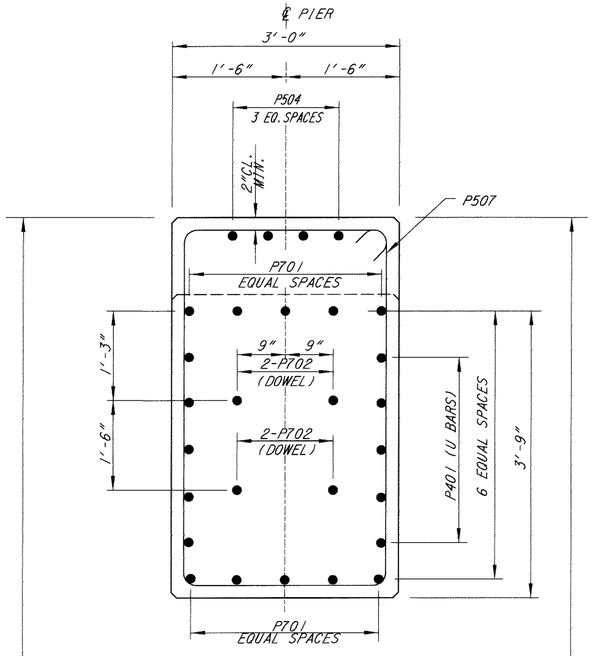

LIMITS OF SEALING CONCRETE SURFACES WITH EPOXY URETHANE SEALER

SECTION E-E
(PIER 1 SHOWN; PIER 2 SIMILAR)

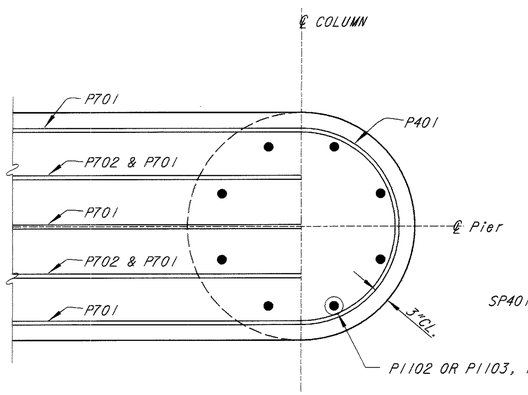

SECTION C-C
(PIER 1 LEFT BRIDGE SHOWN; OTHER PIERS SIMILAR)

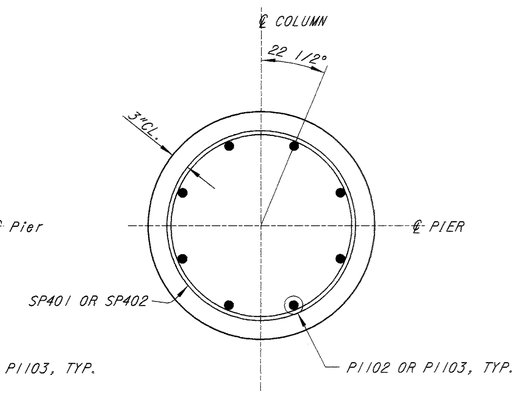

SECTION D-D
(PIER 1 LEFT BRIDGE SHOWN; OTHER PIERS SIMILAR)

DESIGN AGENCY
BALKE ENGINEERS
1848 Summit Road
Cincinnati, Ohio 45237

DESIGNED	DRAWN	REVIEWED	DATE
FKL	ALH	CRS	6-01
CHECKED	REVISED	STRUCTURE FILE NUMBER	
MPS	—	1305530 (L.B.) 1305549 (R.B.)	

BRIDGE PIER DETAILS
BRIDGE NO. CLE-275-0549
OVER US 50

CLE-275-5.35

18/36

647
857

F:\Inventor\CRSB\SPIS.dgn

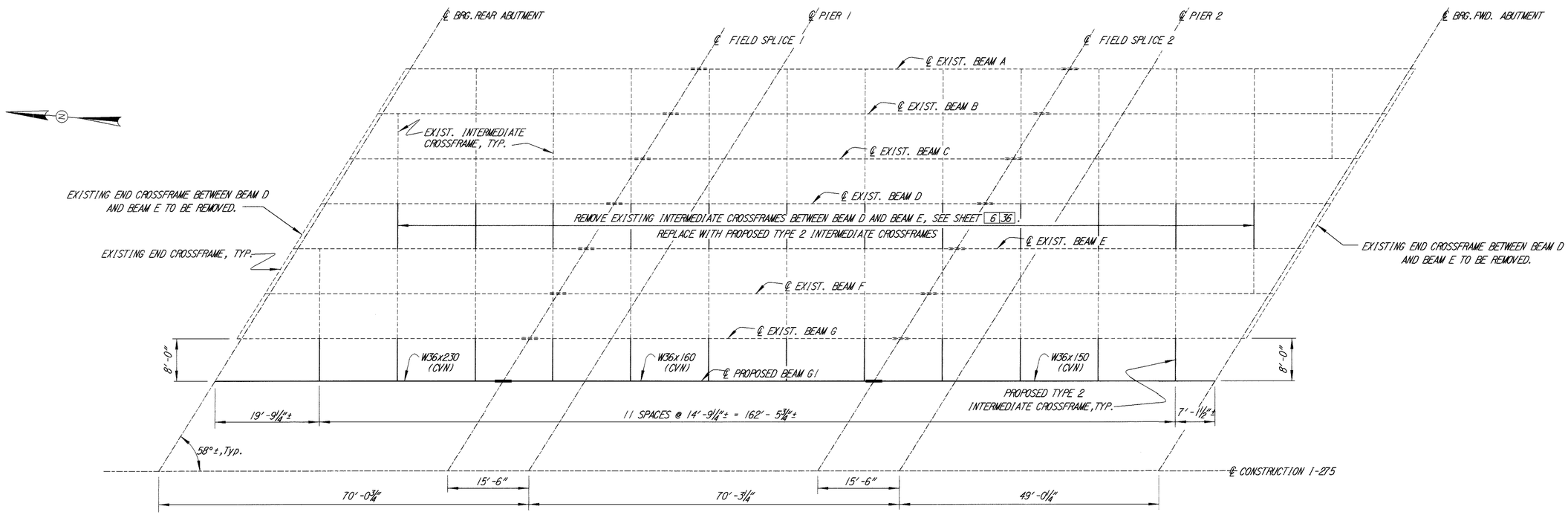

PLAN

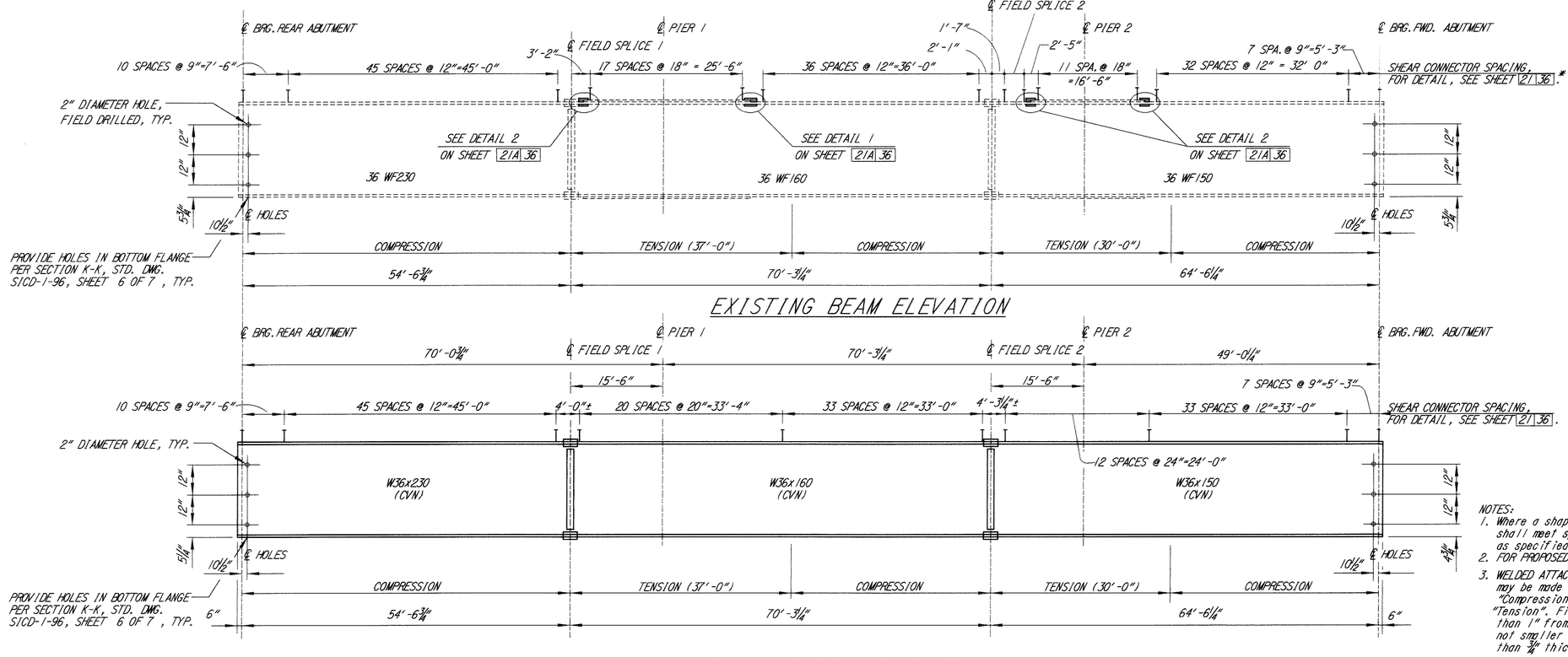

EXISTING BEAM ELEVATION

PROPOSED BEAM ELEVATION

* ADJUST SPACING AS NECESSARY TO CLEAR ENDS OF COVER PLATES BY 4" MIN.

NOTES:
1. Where a shape or plate is designated (CVN) the material shall meet specified minimum notch toughness requirements as specified in 711.01.
2. FOR PROPOSED INTERMEDIATE CROSSFRAME DETAILS, SEE STD.DWG. GSD-1-96.
3. WELDED ATTACHMENT of supports for concrete deck finishing machine may be made to areas of the fascia stringer flanges designated "Compression". Attachments shall not be made to areas designated "Tension". Fillet welds to compression flanges shall be not closer than 1" from edge of flange, be not more than 2" long, and be not smaller than 1/4" for thicknesses up to 3/4" and 5/16" for greater than 3/4" thick.

DESIGN AGENCY
BALKE ENGINEERS
1848 Summit Road
Cincinnati, Ohio 45237

DESIGNED	DRAWN	REVIEWED	DATE
FKL	ALH	CBS	6-01
CHECKED	REVISED	STRUCTURE FILE NUMBER	
MPS	—	1-275-30.11/1.81 1305549	

LEFT BRIDGE FRAMING PLAN
BRIDGE NO. CLE-275-0549
OVER US 50

CLE-275-5.35

19 | 36

648
857

F:\Inroute\05495\Dgn\1.dgn

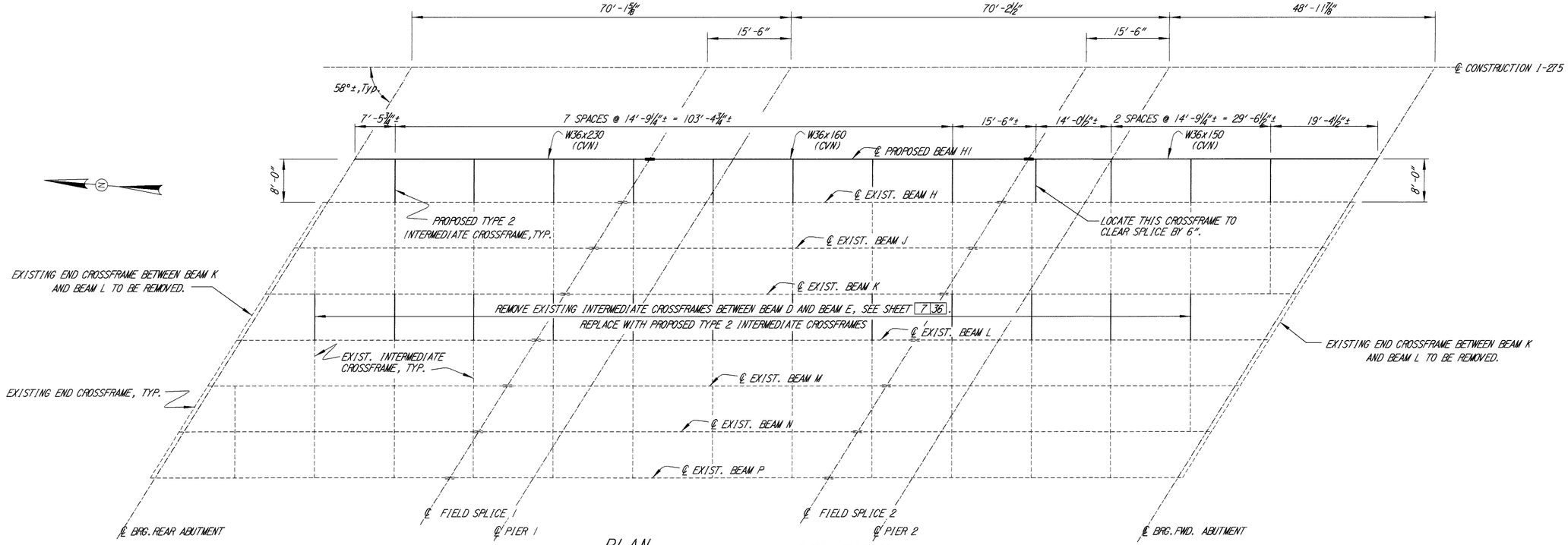

PLAN

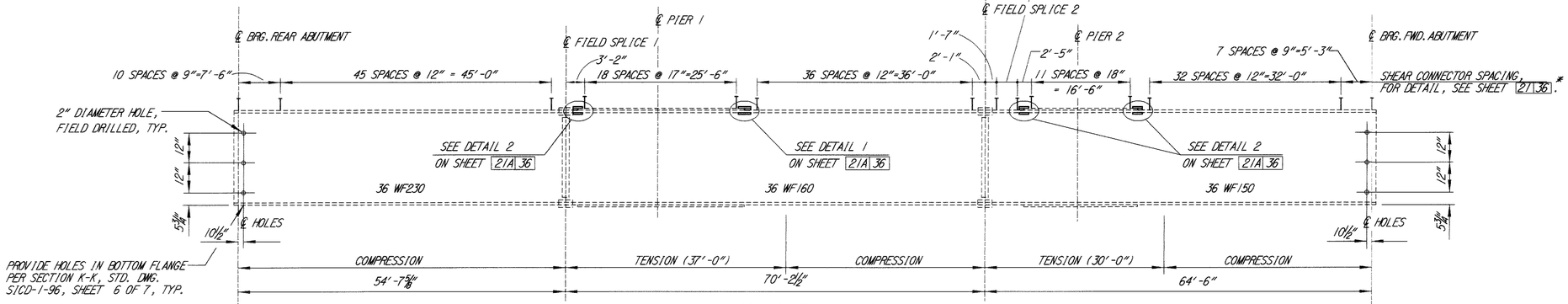

EXISTING BEAM ELEVATION

* ADJUST SPACING AS NECESSARY TO CLEAR ENDS OF COVER PLATES BY 4" MIN.

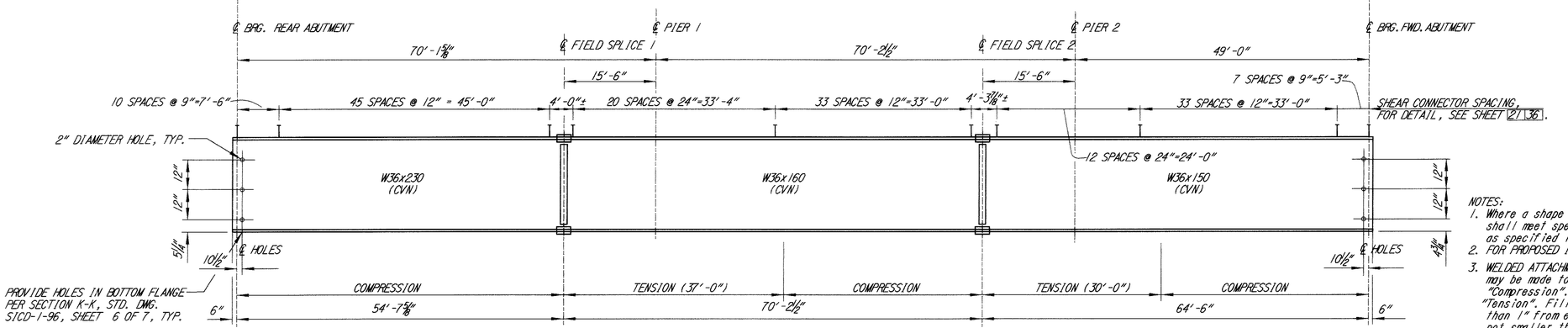

PROPOSED BEAM ELEVATION

NOTES:
1. Where a shape or plate is designated (CVN) the material shall meet specified minimum notch toughness requirements as specified in 711.01.
2. FOR PROPOSED INTERMEDIATE CROSSFRAME DETAILS, SEE STD. DWG. GSD-1-96.
3. WELDED ATTACHMENT of supports for concrete deck finishing machine may be made to areas of the fascia stringer flanges designated "Compression". Attachments shall not be made to areas designated "Tension". Fillet welds to compression flanges shall be not closer than 1" from edge of flange, be not more than 2" long, and be not smaller than 1/4" for thicknesses up to 3/4" and 5/16" for greater than 3/4" thick.

DESIGN AGENCY
BALKE ENGINEERS
1848 Summit Road
Cincinnati, Ohio 45237

DESIGNED	DRAWN	REVIEWED	DATE
FKL	ALH	CBS	6/01
CHECKED	REVISED	STRUCTURE FILE NUMBER 1305549 (R.B.) 1305549 (R.B.)	
MPS	—		

RIGHT BRIDGE FRAMING PLAN
BRIDGE NO. CLE-275-0549
OVER US 50

CLE-275-5.35

20/36

649/857

F:\Bridges\1305549\B1.dgn

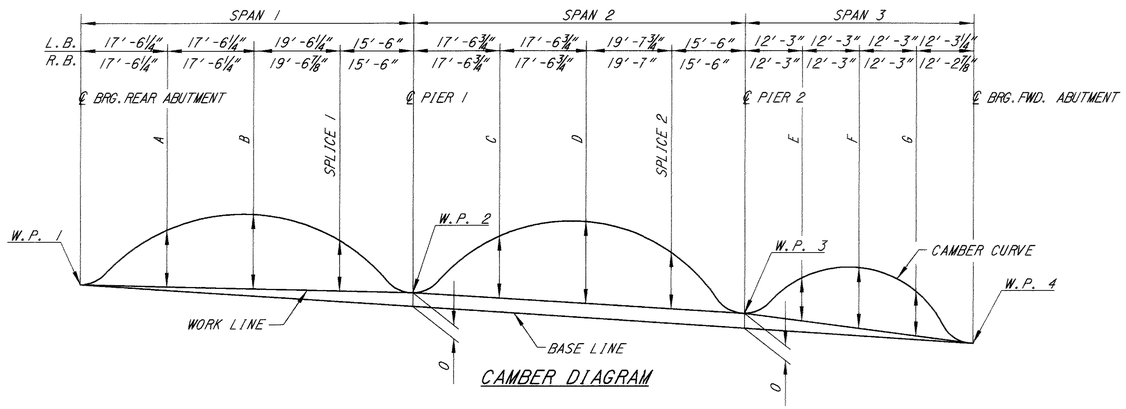

CAMBER DIAGRAM

DEFLECTION AND CAMBER TABLE

	SPAN 1				SPAN 2				SPAN 3				
	REAR ABUTMENT	A	B	SPLICE 1	PIER 1	C	D	SPLICE 2	PIER 2	E	F	G	FORWARD ABUTMENT
DEFLECTION DUE TO WEIGHT OF STEEL	0	1/8	1/8	1/8	0	0	0	0	0	0	0	0	0
DEFLECTION DUE TO REMAINING DL	0	1/2	5/8	1/4	0	1/8	1/4	1/8	0	1/8	1/8	1/8	0
REQUIRED SHOP CAMBER	0	5/8	3/4	3/8	0	1/8	1/4	1/8	0	1/8	1/8	1/8	0

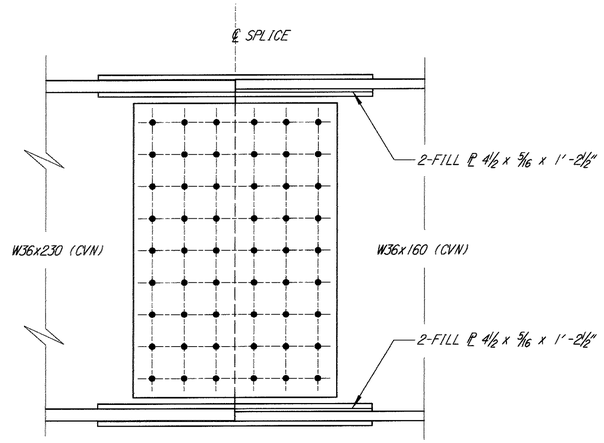

SPLICE 1 ELEVATION LEFT & RIGHT BRIDGE

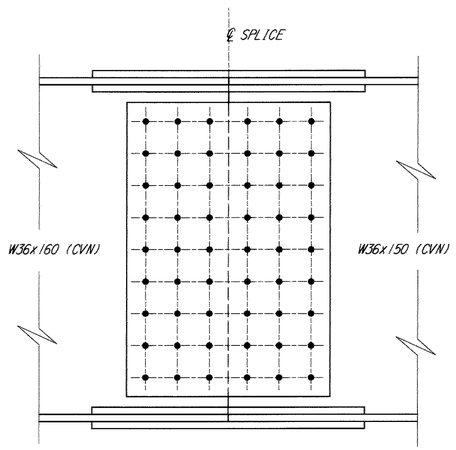

SPLICE 2 ELEVATION LEFT & RIGHT BRIDGE

NOTES FOR CAMBER AND DEFLECTION

1. WORK POINTS (W.P.) ARE AT THE CENTER OF THE BEAM, ON THE CENTERLINE OF BEARINGS.
2. WORK LINES ARE STRAIGHT LINES THROUGH THE WORK POINTS.
3. THE BASE LINE IS A STRAIGHT LINE THROUGH W.P. 1 AND W.P. 4.
4. TABULATED VALUES IN THE DEFLECTION AND CAMBER TABLE ARE MEASURED FROM THE WORK LINE.

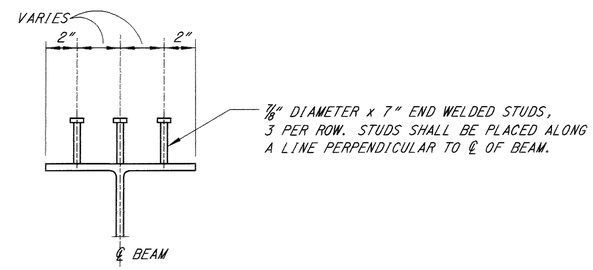

SHEAR CONNECTOR DETAIL

NOTES:
FOR ADDITIONAL SPLICE DETAILS, SEE STD.DWG. BS-1-93.
THE SPLICE DETAIL TO BE USED SHALL BE THAT REQUIRED FOR THE LIGHTER WEIGHT BEAM AT EACH SPLICE.

DESIGN AGENCY
BALKE ENGINEERS
1848 Summit Road
Cincinnati, Ohio 45237

DESIGNED	FKL	REVIEWED	CRS	DATE	6/01
DRAWN	ALH	REVISED	—	STRUCTURE FILE NUMBER	1305530 (L.B.) 1305549 (R.B.)
CHECKED	MRS				

DEFLECTION AND CAMBER DETAILS

BRIDGE NO. CLE-275-0549
OVER US 50

CLE-275-5.35

650
857

Filename: 0549cm.dgn

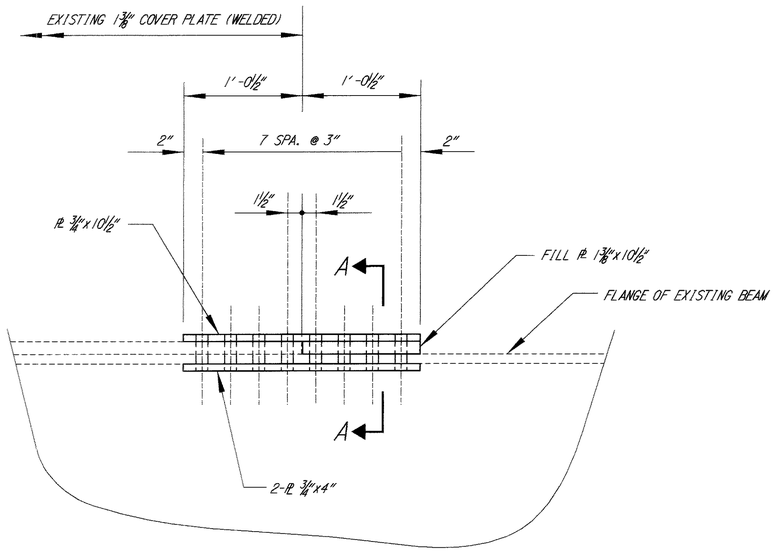

DETAIL 1

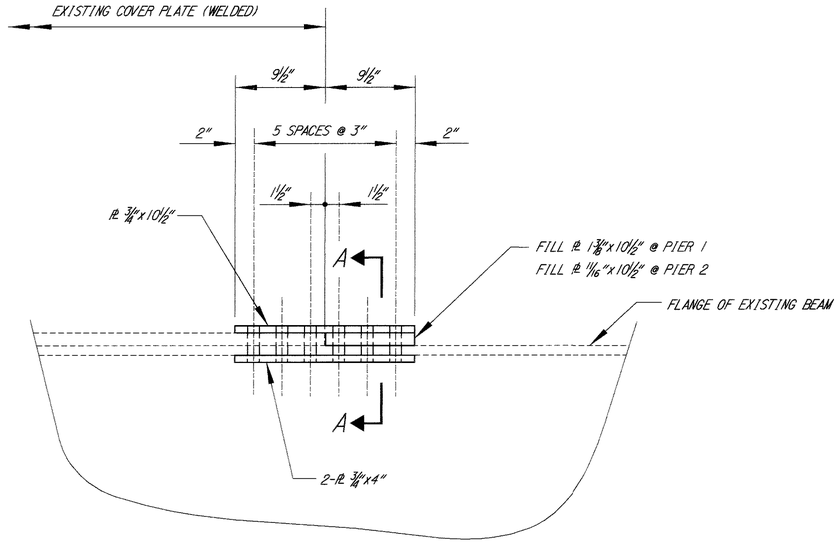

DETAIL 2

NOTE:
ALL BOLTS ARE 1" DIAMETER, A325.

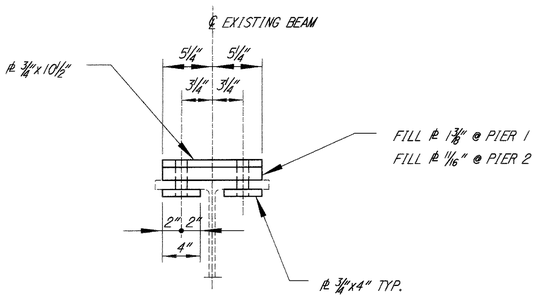

SECTION A-A

DESIGN AGENCY
BALKE ENGINEERS
1848 Summit Road
Cincinnati, Ohio 45237

DESIGNED	DRAWN	REVIEWED	DATE
FKL	WJH	CRS	6/01
CHECKED	REVISED	STRUCTURE FILE NUMBER	
MRS	—	1305530 L.B. 1305549 R.B.	

COVER PLATE RETROFIT DETAILS
BRIDGE NO. CLE-275-0549
OVER US 50

CLE-275-5.35

21A/36

650A
857

Thickness of external elastomer = 0.250"
(2 required)

Thickness of internal elastomer = 0.350"
(5 required)

Internal steel laminate thickness = 0.0747 (14 gage)
(6 required)

D.L. = 163^k
L.L. = 62^k

Total = 225^k

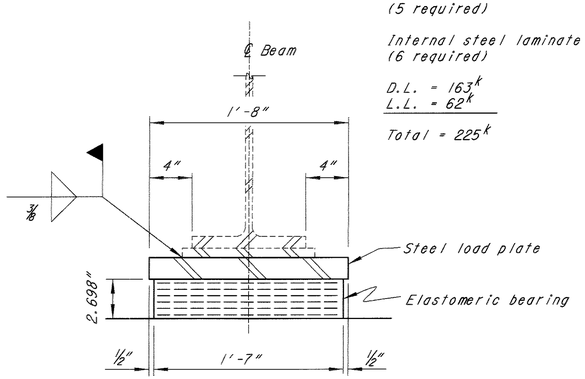

SECTION A-A

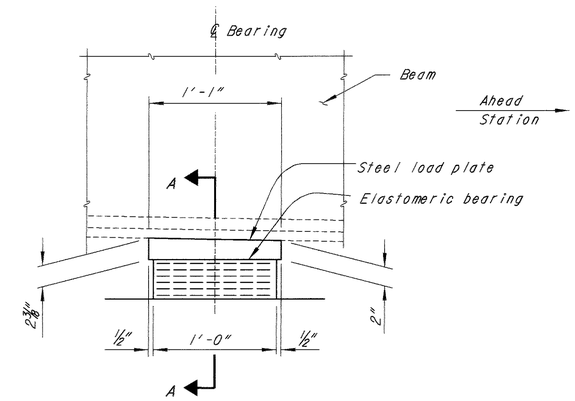

ELEVATION

EXPANSION BEARING AT PIERS

Thickness of external elastomer = 0.200"
(2 required)

Thickness of internal elastomer = 0.280"
(7 required)

Internal steel laminate thickness = 0.0747 (14 gage)
(8 required)

D.L. = 70^k
L.L. = 64^k

Total = 134^k

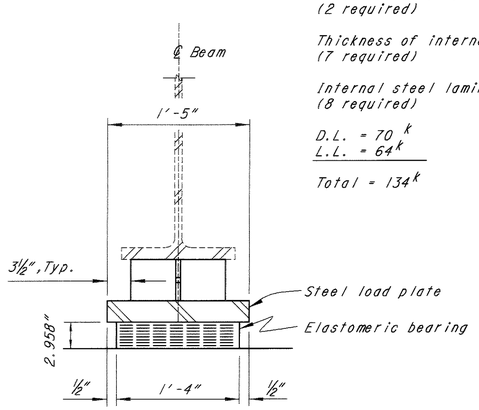

SECTION C-C

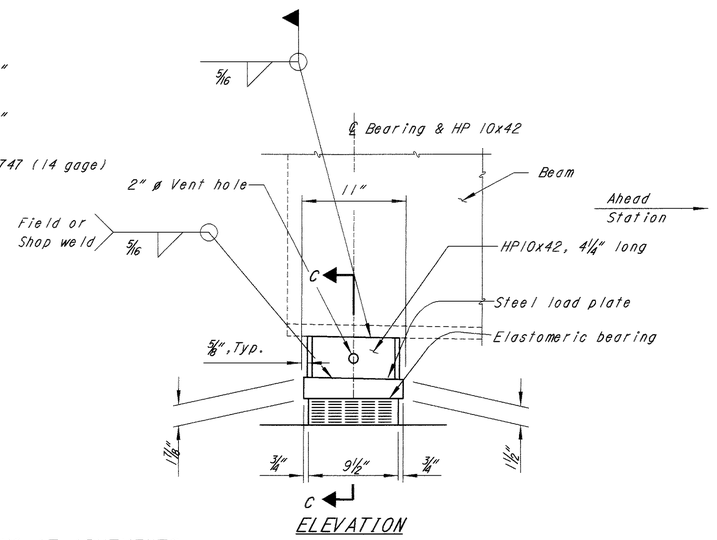

ELEVATION

EXPANSION BEARING AT ABUTMENTS

NOTES FOR LAMINATED ELASTOMERIC BEARINGS AND LOAD PLATE

LOAD PLATE: The steel load plate shall be bonded by vulcanization to the elastomer during the molding process.

The steel load plate and HP 10 x 42 supporting the existing beams shall be A36 steel.

WELDING shall be controlled so that the plate temperature at the elastomer bonded surface does not exceed 300°F as determined by the use of pyrometric sticks or other temperature monitoring devices.

BASIS OF PAYMENT: The unit bid price shall include all materials, labor, testing, anchor rods and incidentals necessary to furnish and install laminated elastomeric bearings. Payment will be made at the contract price for Item 516, each, elastomeric bearings with internal laminates (neoprene). Cost of the HP section shall be included for payment with Item 516 also.

ELASTOMERIC BEARINGS shall comply with Item 516 and AASHTO Standard Specification for Highway Bridges, Section 18, Bearing Devices, Division II, Construction, Articles 18.4.5.1 and 18.5.6.2. Bearings shall be Grade 3, 50 durometer elastomer, and shall be subjected to the load testing requirements defined in Article 18.7.4.5 of the AASHTO document listed above. Bearings were designed under Section 14.6.6 of Section 14, Bearings, Division I, Design. Testing shall be included in the unit price bid for the bearings, each.

BEARING REPOSITIONING: If the steel is erected at an ambient temperature higher than 80° F or lower than 40° F and the bearing shear deflection exceeds 1/6 of the bearing height at 60° F (+/-) 10° F, the beams or girders shall be raised to allow the bearings to return to their undeformed shape at 60° F (+/-) 10° F.

DESIGN AGENCY
BALKE ENGINEERS
1848 Summit Road
Cincinnati, Ohio 45237

DESIGNED	DRAWN	REVIEWED	DATE
FKL	WJH,ALH	CRS	6/01
CHECKED	REVISED	STRUCTURE FILE NUMBER	
MRS	—	1305530 (B.) 1305549 (R.B.)	

BEARING DETAILS (EXISTING BEAMS)
BRIDGE NO. CLE-275-0549
OVER US 50

CLE-275-5.35

Filename0549BEARING2.dgn

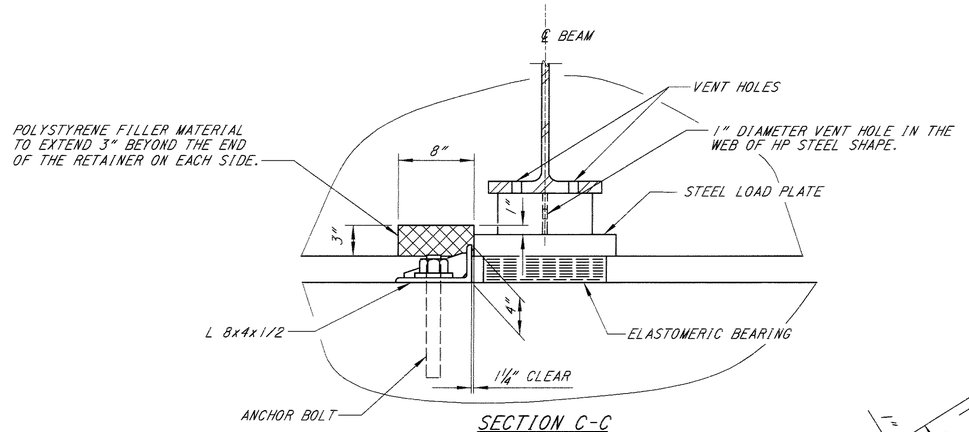

SECTION C-C

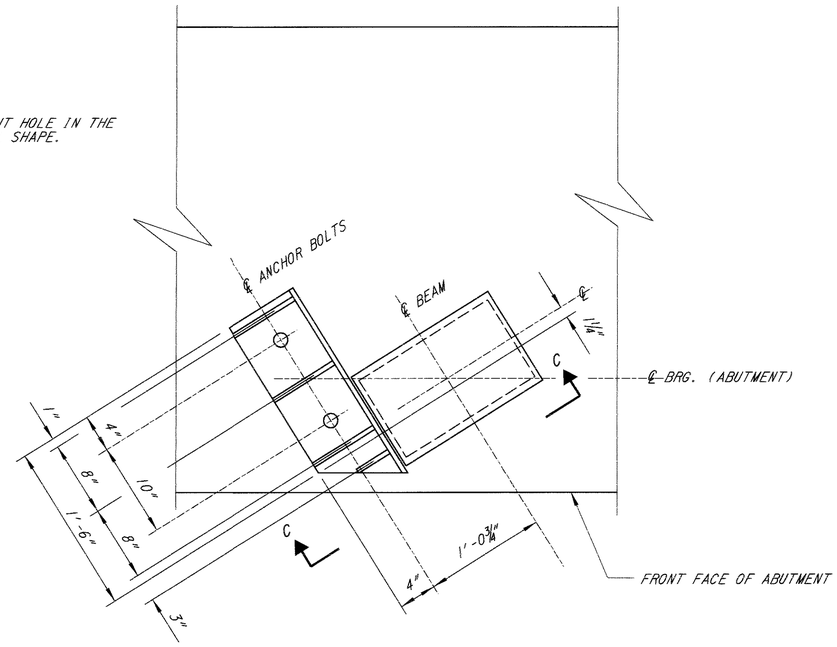

BEARING RETAINER DETAIL

Thickness of external elastomer = 0.250"
(2 required)

Thickness of internal elastomer = 0.350"
(5 required)

Internal steel laminate thickness = 0.0747 (14 gage)
(6 required)

D.L. = 163^k
L.L. = 62^k

Total = 225^k

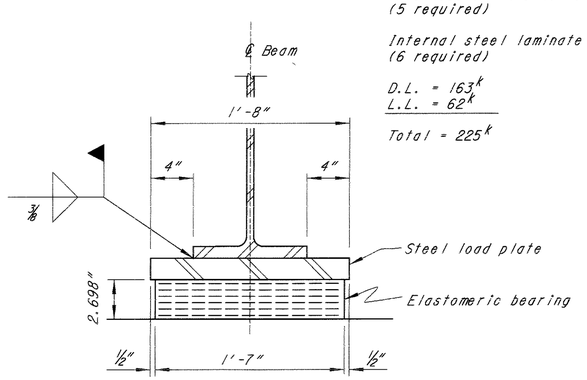

SECTION A-A

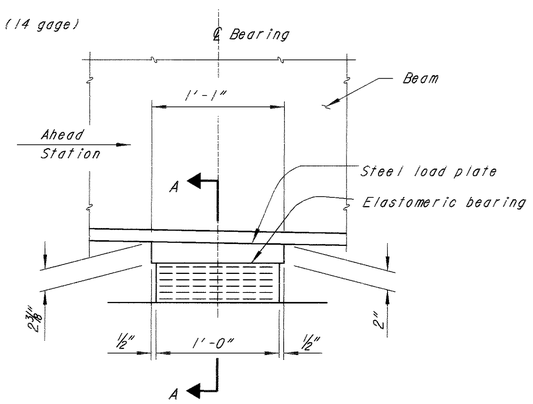

ELEVATION

EXPANSION BEARING AT PIERS

NOTES:
1. FOR ADDITIONAL BEARING RETAINER DETAILS, SEE STD.DWG. SICD-1-96, SHEET 6 OF 7.

Thickness of external elastomer = 0.200"
(2 required)

Thickness of internal elastomer = 0.280"
(7 required)

Internal steel laminate thickness = 0.0747 (14 gage)
(8 required)

D.L. = 70^k
L.L. = 64^k

Total = 134^k

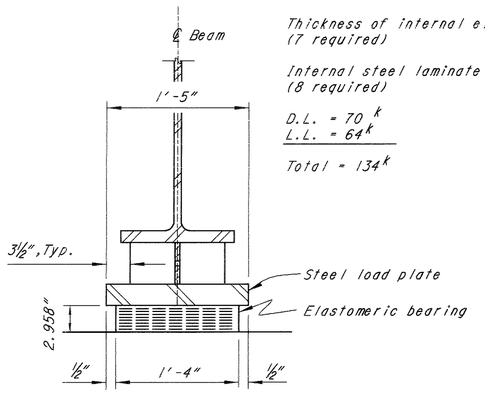

SECTION B-B

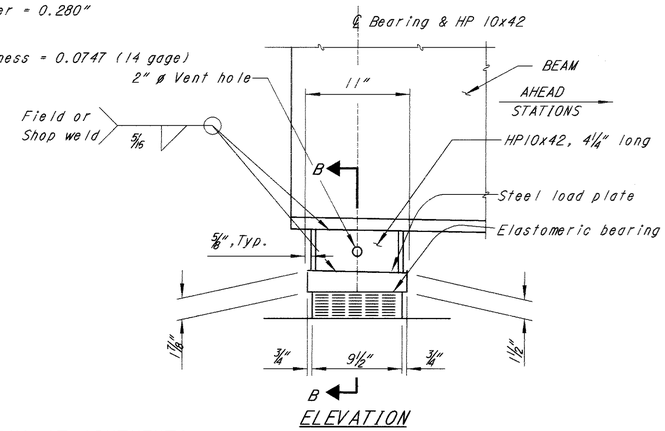

ELEVATION

EXPANSION BEARING AT ABUTMENTS

NOTES FOR LAMINATED ELASTOMERIC BEARINGS AND LOAD PLATE

LOAD PLATE: The steel load plate shall be bonded by vulcanization to the elastomer during the molding process.

The steel load plate and HP 10 x 42 supporting the proposed beam shall be A709, Grade 50, steel.

WELDING shall be controlled so that the plate temperature at the elastomer bonded surface does not exceed 300°F as determined by the use of pyrometric sticks or other temperature monitoring devices.

BASIS OF PAYMENT: The unit bid price shall include all materials, labor, testing, anchor rods and incidentals necessary to furnish and install laminated elastomeric bearings. Payment will be made at the contract price for Item 516, each, elastomeric bearings with internal laminates (neoprene). Cost of the HP section shall be included for payment with Item 516 also.

ELASTOMERIC BEARINGS shall comply with Item 516 and AASHTO Standard Specification for Highway Bridges, Section 18, Bearing Devices, Division II, Construction, Articles 18.4.5.1 and 18.5.6.2. Bearings shall be Grade 3, 50 durometer elastomer, and shall be subjected to the load testing requirements defined in Article 18.7.4.5 of the AASHTO document listed above. Bearings were designed under Section 14.6.6 of Section 14, Bearings, Division I, Design. Testing shall be included in the unit price bid for the bearings, each.

BEARING REPOSITIONING: If the steel is erected at an ambient temperature higher than 80° F or lower than 40° F and the bearing shear deflection exceeds 1/6 of the bearing height at 60° F (+/-) 10° F, the beams or girders shall be raised to allow the bearings to return to their undeformed shape at 60° F (+/-) 10° F.

DESIGN AGENCY
BALKE ENGINEERS
1848 Summit Road
Cincinnati, Ohio 45237

DESIGNED	DRAWN	REVIEWED	DATE
FKL	WJH, ALH	CRS	6/01
CHECKED	REVISED	STRUCTURE FILE NUMBER	
MRS	—	1305530 (L.B.) 1305549 (R.B.)	

BEARING DETAILS (PROPOSED BEAMS)
BRIDGE NO. CLE-275-0549
OVER US 50

CLE-275-5.35

Filename 0549BEARING.dgn

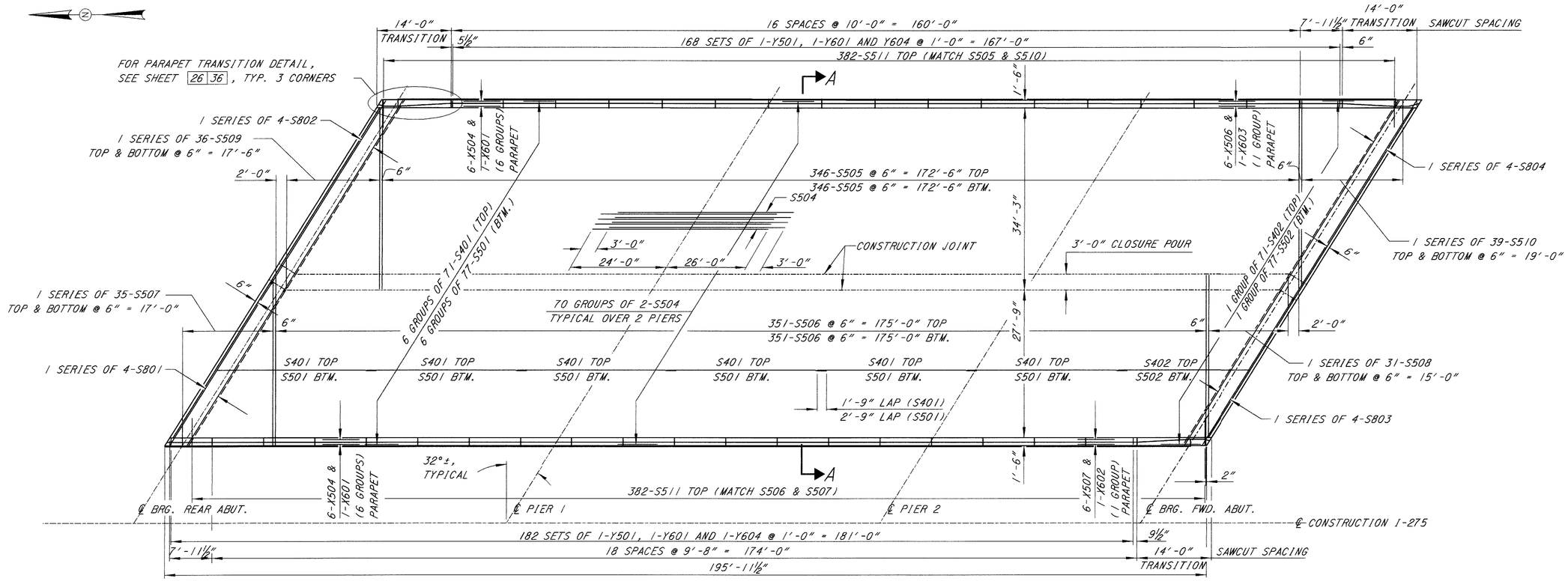

PLAN

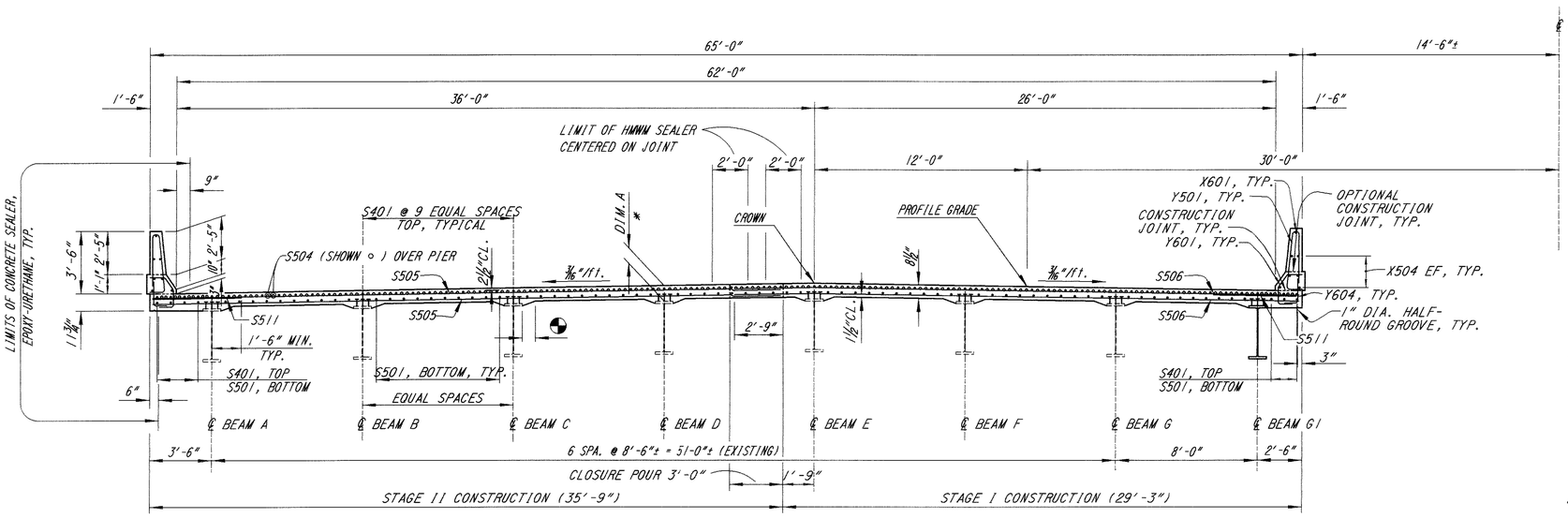

DIM. A		DIM. B
36WF150	= 11⅞"	3¾"
36WF160	= 10½"	2"
36WF230	= 11⅞"	3⅜"
W36x150	= 10⅝"	2⅛"
W36x160	= 10½"	2"
W36x230	= 10⅝"	2⅛"

NOTES:

1. * DECK SLAB DEPTH FOR CONCRETE QUANTITY: THE DIMENSION SHOWN FROM THE TOP OF THE CONCRETE DECK TO THE TOP OF THE FLANGE, MINUS THE DESIGN HAUNCH THICKNESS (DIM. B), HAS BEEN USED FOR COMPUTING THE DECK CONCRETE QUANTITIES. CONCRETE REQUIRED TO FILL THE HAUNCHES, INCLUDING ADDITIONAL OR LESS MATERIAL REQUIRED DUE TO HAUNCH CONSTRUCTION TOLERANCES, SHALL BE CONSIDERED AS INCIDENTAL AND WILL NOT BE INCLUDED IN THE QUANTITY CALCULATIONS FOR PAYMENT.
2. ◒ A HAUNCH WIDTH OF 9"SHALL BE USED. HOWEVER THE HAUNCH WIDTH MAY VARY BETWEEN 6"AND 12"
3. FOR ADDITIONAL INFORMATION ON THE PARAPETS AND SAWCUT JOINTS, SEE STD. DWG. BR-1.
4. HMWM = HIGH MOLECULAR WEIGHT METHACRYLATE.

DESIGN AGENCY
BALKE ENGINEERS
1848 Summit Road
Cincinnati, Ohio 45237

DESIGNED	DRAWN	REVIEWED	DATE
MPS	ALH/NWH	CPS	6/01
CHECKED	REVISED	STRUCTURE FILE NUMBER	
FAL	—	3055301 / 3055349	

LEFT BRIDGE DECK PLAN

BRIDGE NO. CLE-275-0549
OVER US 50

CLE-275-5.35

24/36

653
857

F:\Nwww\05456.DGN

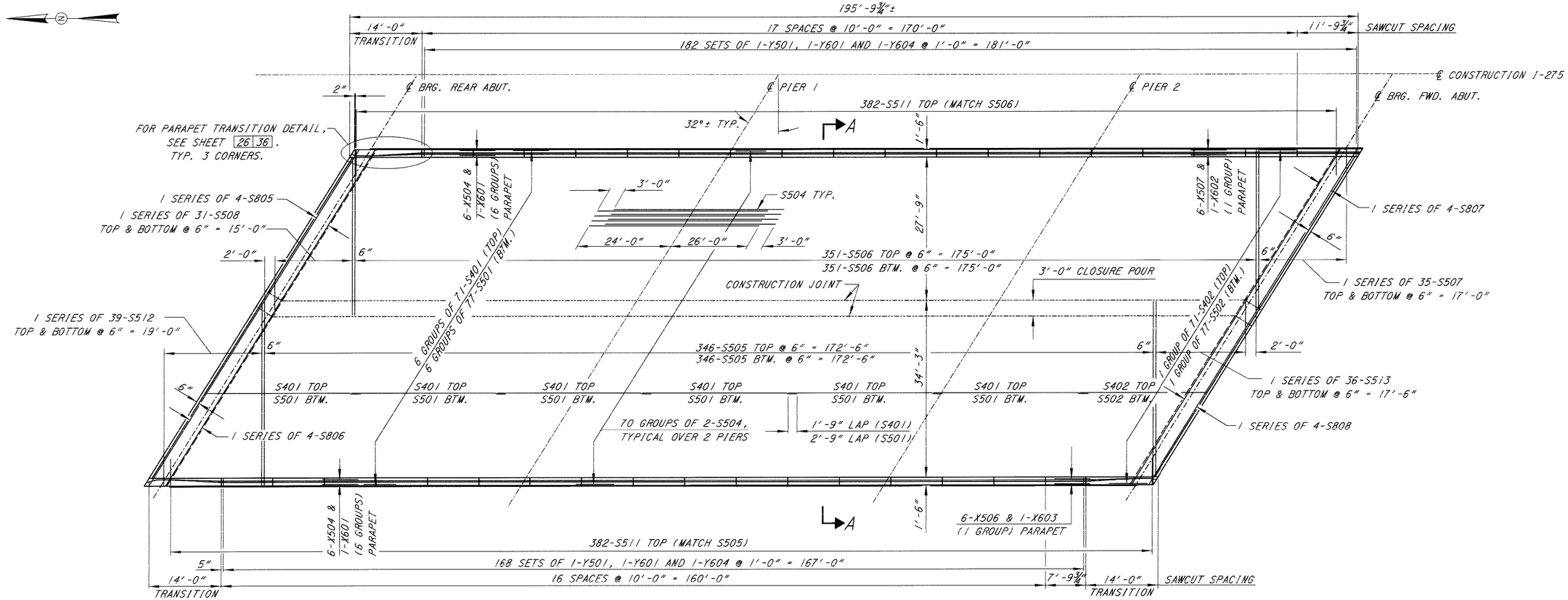

PLAN

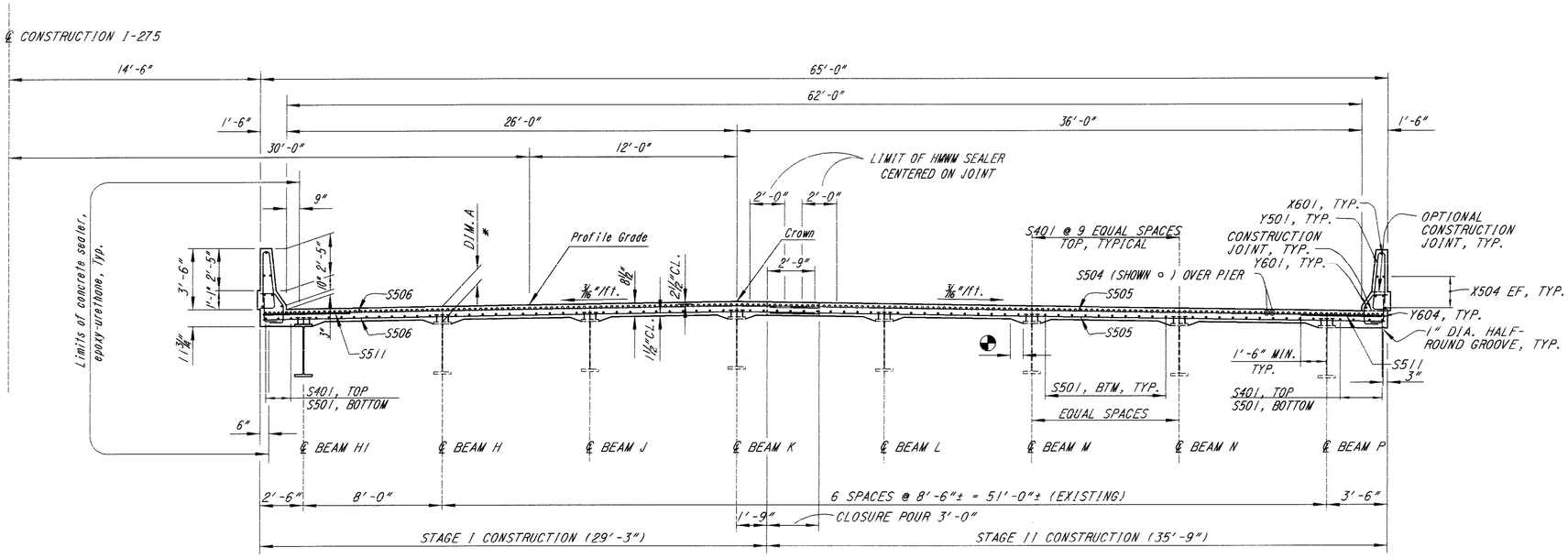

SECTION A-A

DIM. A		DIM. B
36WF150	= 11⅞"	3¾"
36WF160	= 10½"	2"
36WF230	= 11⅞"	3¾"
W36x150	= 10⅝"	2⅛"
W36x160	= 10½"	2"
W36x230	= 10⅝"	2⅛"

NOTES:

1. * DECK SLAB DEPTH FOR CONCRETE QUANTITY: THE DIMENSION SHOWN FROM THE TOP OF THE CONCRETE DECK TO THE TOP OF THE FLANGE, MINUS THE DESIGN HAUNCH THICKNESS (DIM. B), HAS BEEN USED FOR COMPUTING THE DECK CONCRETE QUANTITIES. CONCRETE REQUIRED TO FILL THE HAUNCHES, INCLUDING ADDITIONAL OR LESS MATERIAL REQUIRED DUE TO HAUNCH CONSTRUCTION TOLERANCES, SHALL BE CONSIDERED AS INCIDENTAL AND WILL NOT BE INCLUDED IN THE QUANTITY CALCULATIONS FOR PAYMENT.
2. ◒ A HAUNCH WIDTH OF 9" SHALL BE USED. HOWEVER THE HAUNCH WIDTH MAY VARY BETWEEN 6" AND 12"
3. FOR ADDITIONAL INFORMATION ON THE PARAPETS AND SAWCUT JOINTS, SEE STD. DWG. BR-1.
4. HMWM = HIGH MOLECULAR WEIGHT METHACRYLATE.

DESIGN AGENCY
BALKE ENGINEERS
1848 Summit Road
Cincinnati, Ohio 45237

DESIGNED	DRAWN	REVIEWED	DATE
MPS	ALH/WJH	CRS	6-01
CHECKED	REVISED	STRUCTURE FILE NUMBER	
FKL	—	305530 (R.B.) 305549 (R.B.)	

RIGHT BRIDGE DECK PLAN
BRIDGE NO. CLE-275-0549
OVER US 50

CLE-275-5.35

25/36

654
857

F:\Inwork\1258257.dgn

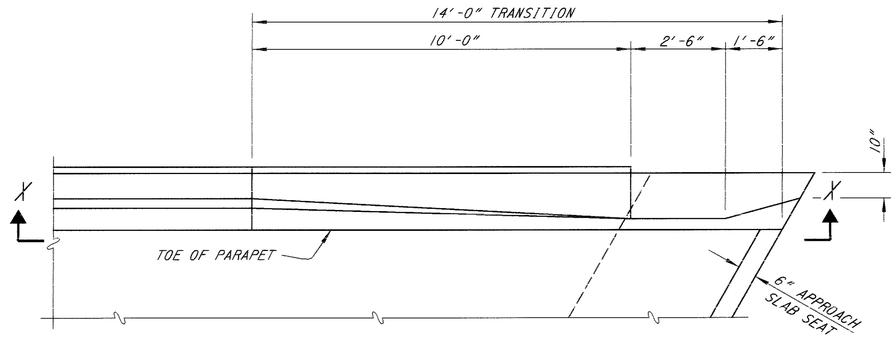

PLAN

(LEFT BRIDGE SHOWN, RIGHT BRIDGE SIMILAR)
(3 REQUIRED LEFT BRIDGE
3 REQUIRED RIGHT BRIDGE)

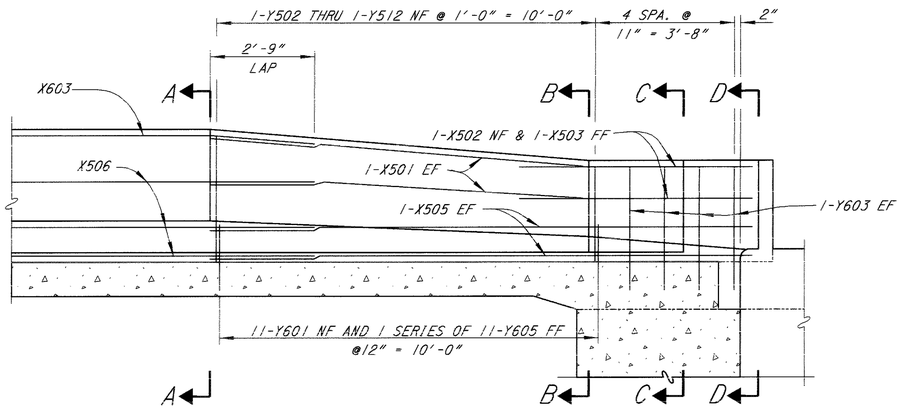

SECTION X-X

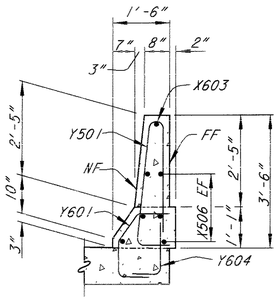

SECTION A-A

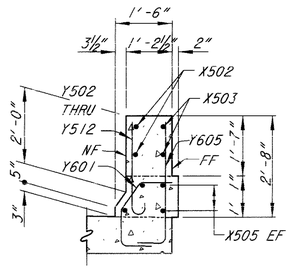

SECTION B-B

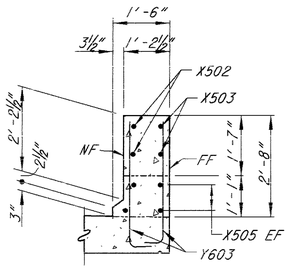

SECTION C-C

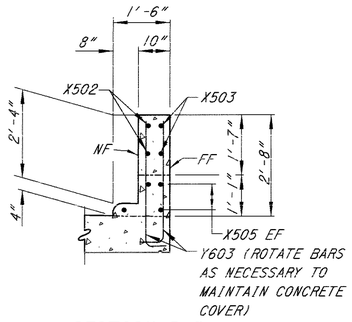

SECTION D-D

NOTES:
1. FOR ADDITIONAL INFORMATION, SEE STD. DWG. BR-1.
2. EF = EACH FACE
NF = NEAR FACE
FF = FAR FACE

DESIGN AGENCY
BALKE ENGINEERS
1848 Summit Road
Cincinnati, Ohio 45237

DESIGNED	DRAWN	REVIEWED	DATE
MRS	ALH	CRS	6/01
CHECKED	REVISED	STRUCTURE FILE NUMBER	
FKL	—	1305530 1305549	

DECK DETAILS
BRIDGE NO. CLE-275-0549
OVER OLD US 50

CLE-275-5.35

Filename=B549TRANSITION.dgn

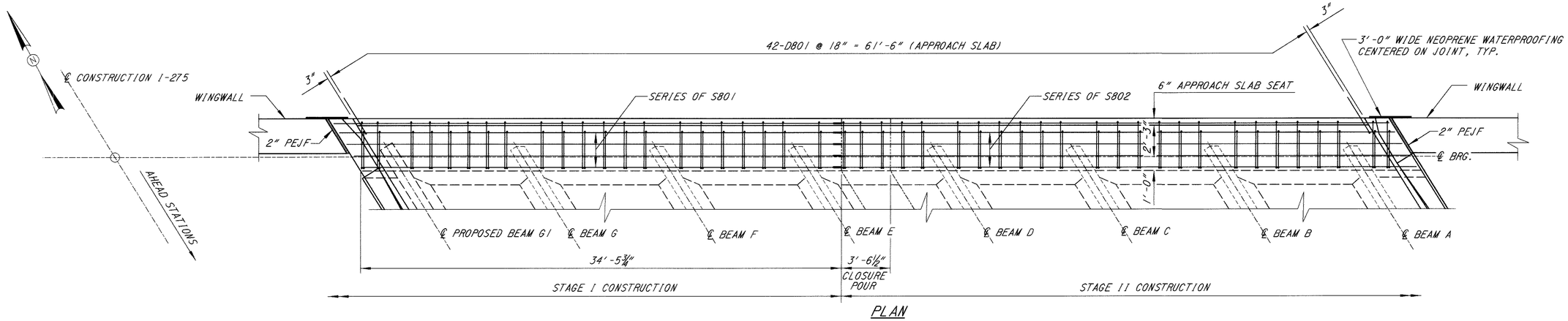

PLAN

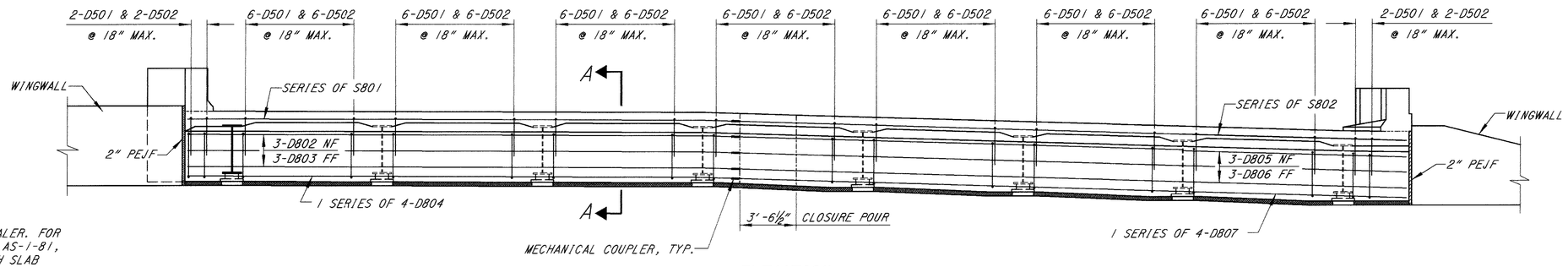

ELEVATION

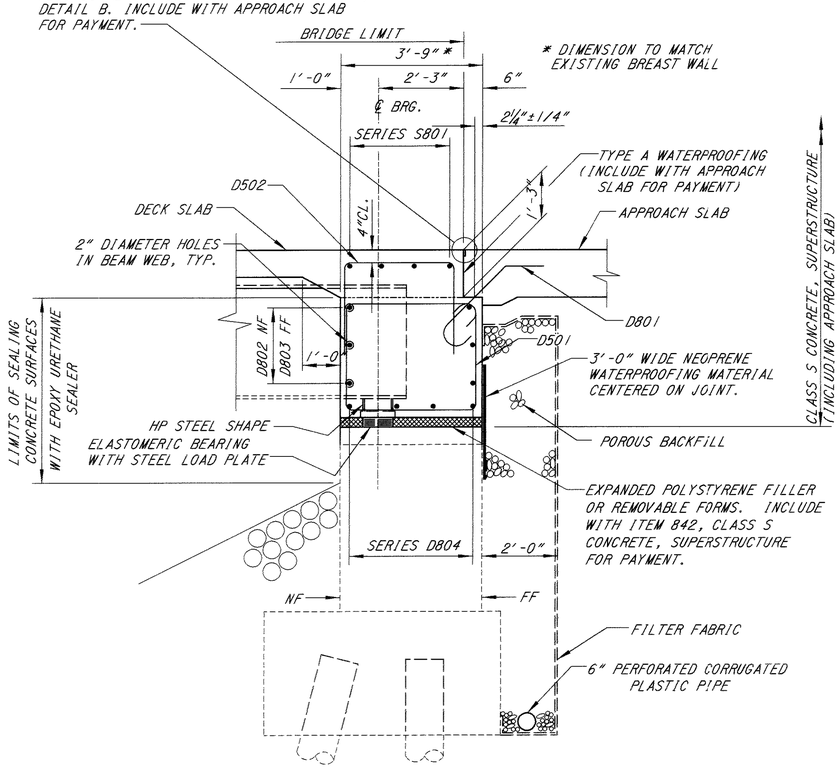

SECTION A-A

NOTES:
1. FOR ADDITIONAL INFORMATION SEE STD. DWG. SCD-1-96.
2. WORK THIS SHEET WITH DECK PLAN SHEET 24 36.
3. PEJF = PREFORMED EXPANSION JOINT FILLER.
   EF = EACH FACE
   NF = NEAR FACE
   FF = FAR FACE
4. ABUTMENT DIAPHRAGM CONCRETE, STEEL SUPERSTRUCTURE: THE CONCRETE ENCASING STRUCTURAL STEEL MEMBERS SUPPORTED IN SEMI-INTEGRAL AND INTEGRAL TYPE ABUTMENTS MAY BE PLACED BEFORE THE ACTUAL DECK CONCRETE IS PLACED. IF THE CONTRACTOR CHOOSES THIS OPTION THE CONCRETE SHALL HAVE HAD AT LEAST 48 HOURS OF SET TIME BEFORE DECK CONCRETE IS PLACED.
5. ABUTMENT DIAPHRAGM CONCRETE, STEEL SUPERSTRUCTURE, PHASED CONSTRUCTION: WHERE THE PLANS DETAIL A SEPARATE CLOSURE POUR SECTION BETWEEN CONSTRUCTION PHASES, THE CONCRETE IN THE ABUTMENT DIAPHRAGM SECTIONS OF THIS SEMI-INTEGRAL OR INTEGRAL ABUTMENT THAT ENCASES ANY STRUCTURAL STEEL MEMBERS OF AN INDIVIDUAL PHASE MAY BE PLACED EITHER SEPARATE OF OR WITH THE DECK CONCRETE OF THAT PHASE. IF THE CONTRACTOR CHOOSES TO PLACE THE DIAPHRAGM CONCRETE SEPARATELY, THE CONCRETE SHALL HAVE AT LEAST 48 HOURS OF SET TIME BEFORE DECK CONCRETE CAN BE PLACED. THE HORIZONTAL CONSTRUCTION JOINT BETWEEN THE DIAPHRAGM AND DECK CONCRETE SHOULD BE AT THE BOTTOM OF THE TOP FLANGE. IF NO SEPARATE CLOSURE POUR SECTION IS DETAILED BETWEEN PHASES THE ABUTMENT DIAPHRAGM CONCRETE SHALL BE POURED SIMULTANEOUSLY WITH THE DECK POUR TO ALLOW FOR EXPECTED DEAD LOAD ROTATION AT THE ABUTMENTS.

DESIGN AGENCY
BALKE ENGINEERS
1848 Summit Road
Cincinnati, Ohio 45237

DESIGNED	DRAWN	REVIEWED	DATE
FKL	WJH/ARH	CRS	6/01
CHECKED	REVISED	STRUCTURE FILE NUMBER	
MPS	—	3025301 (LT. BR.) / 3025549 (RT. BR.)	

LEFT BRIDGE REAR ABUTMENT DIAPHRAGM DETAILS

BRIDGE NO. CLE-275-0549
OVER US 50

CLE-275-5.35

27/36

656/857

F:\Revised\CLE-275-0549\Structure\Left\Rear Abut Diaphragm.dgn

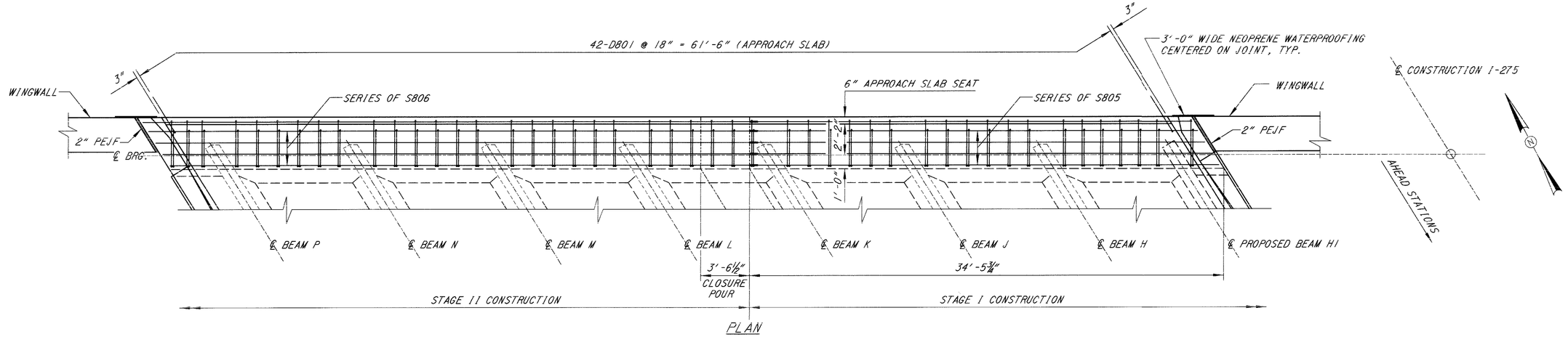

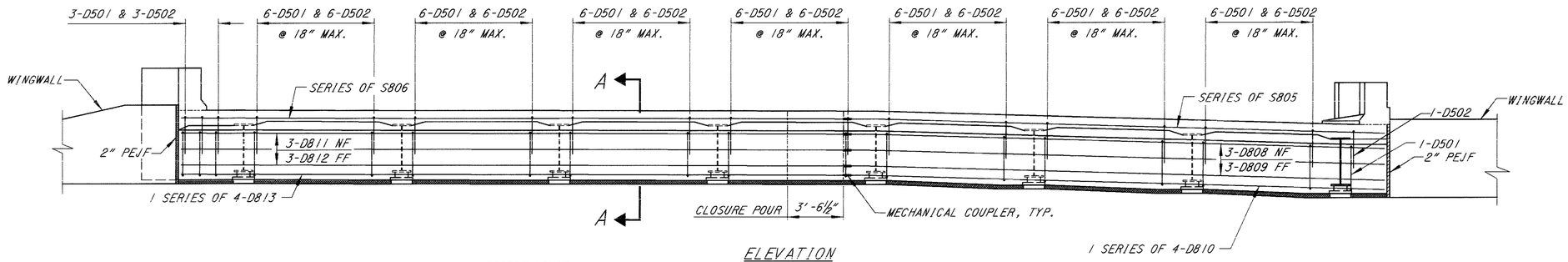

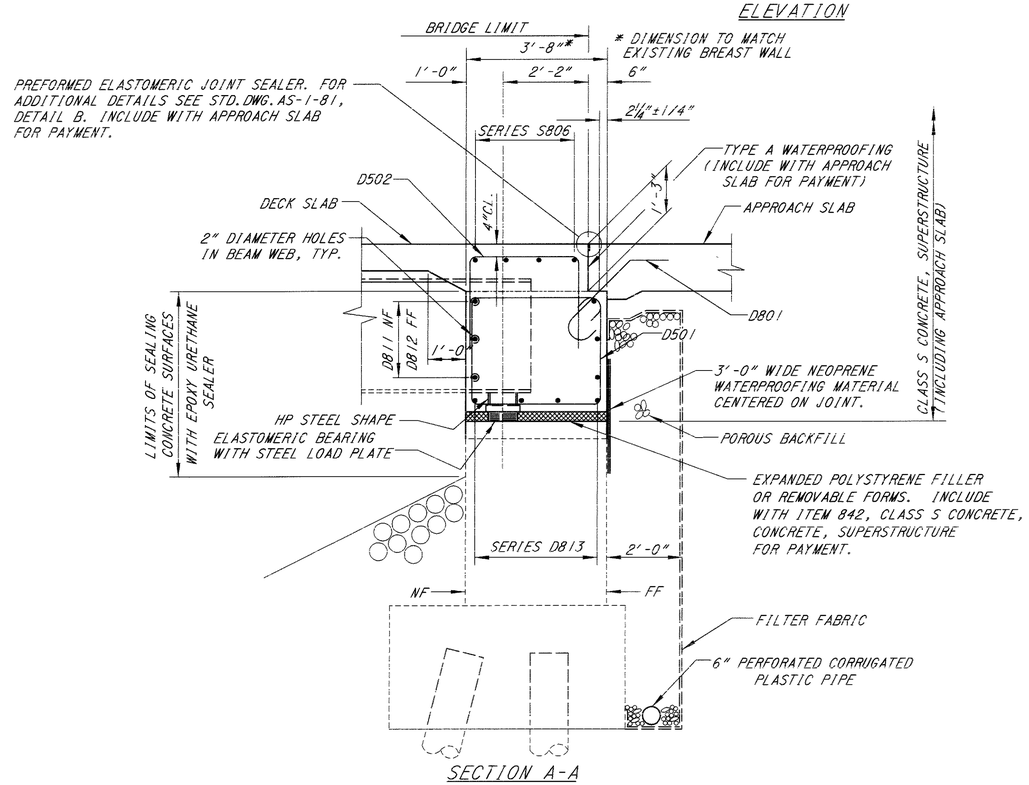

NOTES:
1. FOR ADDITIONAL INFORMATION SEE STD. DWG. SICD-1-96.
2. WORK THIS SHEET WITH DECK PLAN SHEET 25 36.
3. PEJF = PREFORMED EXPANSION JOINT FILLER.
   EF = EACH FACE
   NF = NEAR FACE
   FF = FAR FACE
4. ABUTMENT DIAPHRAGM CONCRETE, STEEL SUPERSTRUCTURE: THE CONCRETE ENCASING STRUCTURAL STEEL MEMBERS SUPPORTED IN SEMI-INTEGRAL AND INTEGRAL TYPE ABUTMENTS MAY BE PLACED BEFORE THE ACTUAL DECK CONCRETE IS PLACED. IF THE CONTRACTOR CHOOSES THIS OPTION THE CONCRETE SHALL HAVE HAD AT LEAST 48 HOURS OF SET TIME BEFORE DECK CONCRETE IS PLACED.
5. ABUTMENT DIAPHRAGM CONCRETE, STEEL SUPERSTRUCTURE, PHASED CONSTRUCTION: WHERE THE PLANS DETAIL A SEPARATE CLOSURE POUR SECTION BETWEEN CONSTRUCTION PHASES, THE CONCRETE IN THE ABUTMENT DIAPHRAGM SECTIONS OF THIS SEMI-INTEGRAL OR INTEGRAL ABUTMENT THAT ENCASES ANY STRUCTURAL STEEL MEMBERS OF AN INDIVIDUAL PHASE MAY BE PLACED EITHER SEPARATE OF OR WITH THE DECK CONCRETE OF THAT PHASE. IF THE CONTRACTOR CHOOSES TO PLACE THE DIAPHRAGM CONCRETE SEPARATELY, THE CONCRETE SHALL HAVE AT LEAST 48 HOURS OF SET TIME BEFORE DECK CONCRETE CAN BE PLACED. THE HORIZONTAL CONSTRUCTION JOINT BETWEEN THE DIAPHRAGM AND DECK CONCRETE SHOULD BE AT THE BOTTOM OF THE TOP FLANGE. IF NO SEPARATE CLOSURE POUR SECTION IS DETAILED BETWEEN PHASES THE ABUTMENT DIAPHRAGM CONCRETE SHALL BE POURED SIMULTANEOUSLY WITH THE DECK POUR TO ALLOW FOR EXPECTED DEAD LOAD ROTATION AT THE ABUTMENTS.

DESIGN AGENCY
BALKE ENGINEERS
1848 Summit Road
Cincinnati, Ohio 45237

DESIGNED	DRAWN	REVIEWED	DATE
FKL	WJH/RHH	CRS	6/01
CHECKED	REVISED	STRUCTURE FILE NUMBER	
MRS	—	3255-30 (R.B.)	
		3255-99 (R.B.)	

RIGHT BRIDGE REAR ABUTMENT DIAPHRAGM DETAILS

BRIDGE NO. CLE-275-0549
OVER US 50

CLE-275-5.35

28 36

657
857

F:\Revised - 0549\rbrdtails.dgn

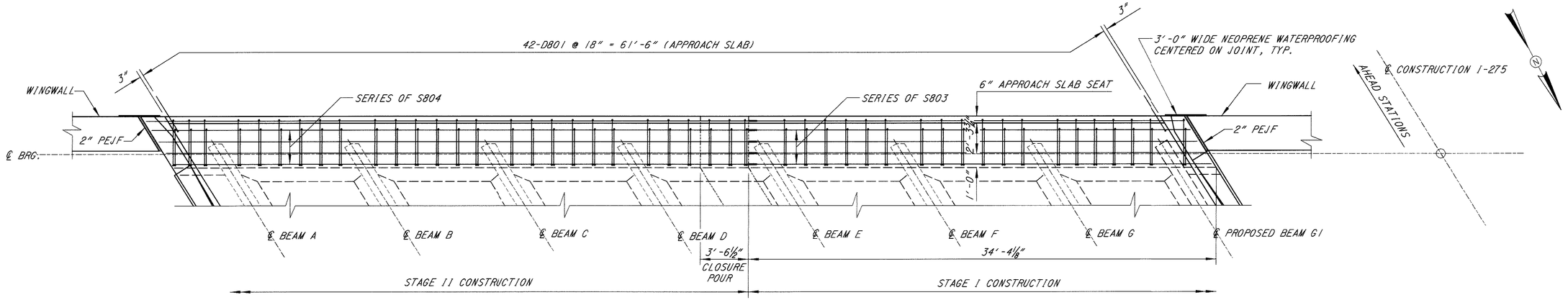

PLAN

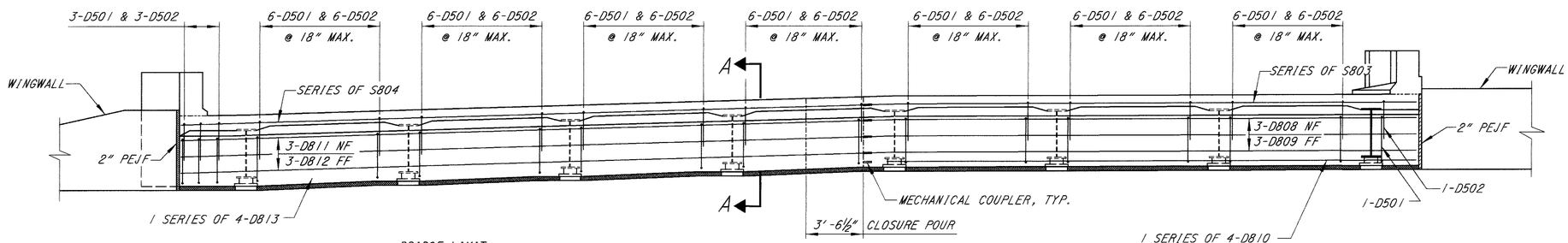

ELEVATION

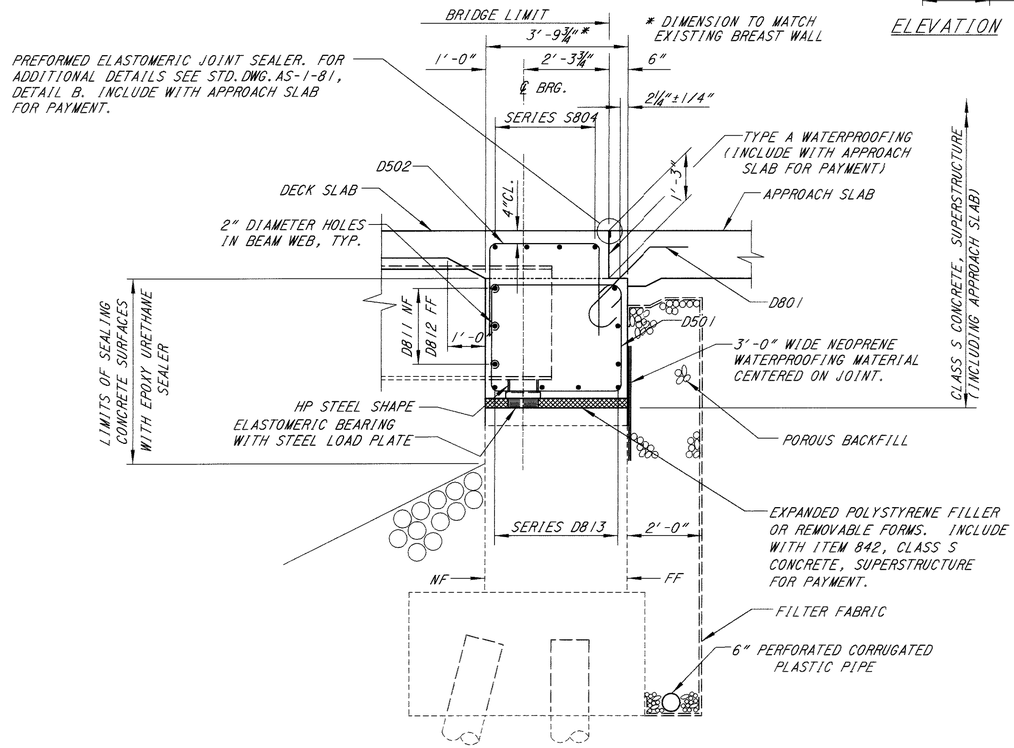

SECTION A-A

NOTES:
1. FOR ADDITIONAL INFORMATION SEE STD. DWG. SICD-1-96.
2. WORK THIS SHEET WITH DECK PLAN SHEET 24 36.
3. PEJF = PREFORMED EXPANSION JOINT FILLER.
   EF = EACH FACE
   NF = NEAR FACE
   FF = FAR FACE
4. ABUTMENT DIAPHRAGM CONCRETE, STEEL SUPERSTRUCTURE: THE CONCRETE ENCASING STRUCTURAL STEEL MEMBERS SUPPORTED IN SEMI-INTEGRAL AND INTEGRAL TYPE ABUTMENTS MAY BE PLACED BEFORE THE ACTUAL DECK CONCRETE IS PLACED. IF THE CONTRACTOR CHOOSES THIS OPTION THE CONCRETE SHALL HAVE HAD AT LEAST 48 HOURS OF SET TIME BEFORE DECK CONCRETE IS PLACED.
5. ABUTMENT DIAPHRAGM CONCRETE, STEEL SUPERSTRUCTURE, PHASED CONSTRUCTION: WHERE THE PLANS DETAIL A SEPARATE CLOSURE POUR SECTION BETWEEN CONSTRUCTION PHASES, THE CONCRETE IN THE ABUTMENT DIAPHRAGM SECTIONS OF THIS SEMI-INTEGRAL OR INTEGRAL ABUTMENT THAT ENCASES ANY STRUCTURAL STEEL MEMBERS OF AN INDIVIDUAL PHASE MAY BE PLACED EITHER SEPARATE OF OR WITH THE DECK CONCRETE OF THAT PHASE. IF THE CONTRACTOR CHOOSES TO PLACE THE DIAPHRAGM CONCRETE SEPARATELY, THE CONCRETE SHALL HAVE AT LEAST 48 HOURS OF SET TIME BEFORE DECK CONCRETE CAN BE PLACED. THE HORIZONTAL CONSTRUCTION JOINT BETWEEN THE DIAPHRAGM AND DECK CONCRETE SHOULD BE AT THE BOTTOM OF THE TOP FLANGE. IF NO SEPARATE CLOSURE POUR SECTION IS DETAILED BETWEEN PHASES THE ABUTMENT DIAPHRAGM CONCRETE SHALL BE POURED SIMULTANEOUSLY WITH THE DECK POUR TO ALLOW FOR EXPECTED DEAD LOAD ROTATION AT THE ABUTMENTS.

DESIGN AGENCY
BALKE ENGINEERS
1848 Summit Road
Cincinnati, Ohio 45237

DESIGNED	DRAWN	REVIEWED	DATE
FKL	WJH/RMH	CRS	6/01
CHECKED	REVISED	STRUCTURE FILE NUMBER	
MPS	—	1305530 (L,R,I) 1305549 (R,B,I)	

LEFT BRIDGE FORWARD ABUTMENT DIAPHRAGM DETAILS

BRIDGE NO. CLE-275-0549
OVER US 50

CLE-275-5.35

29/36

658/857

FT Name= 0549 lot of topo.dgn

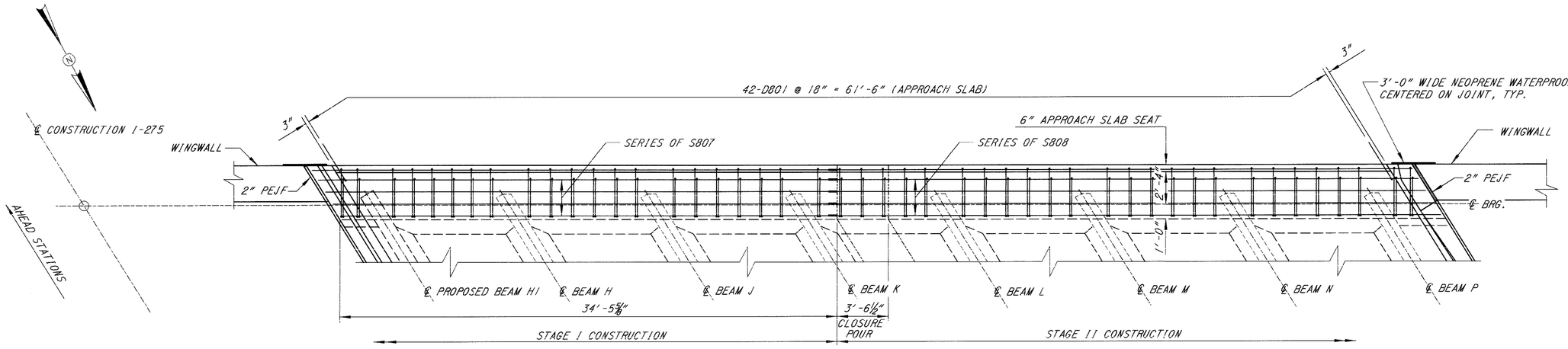

PLAN

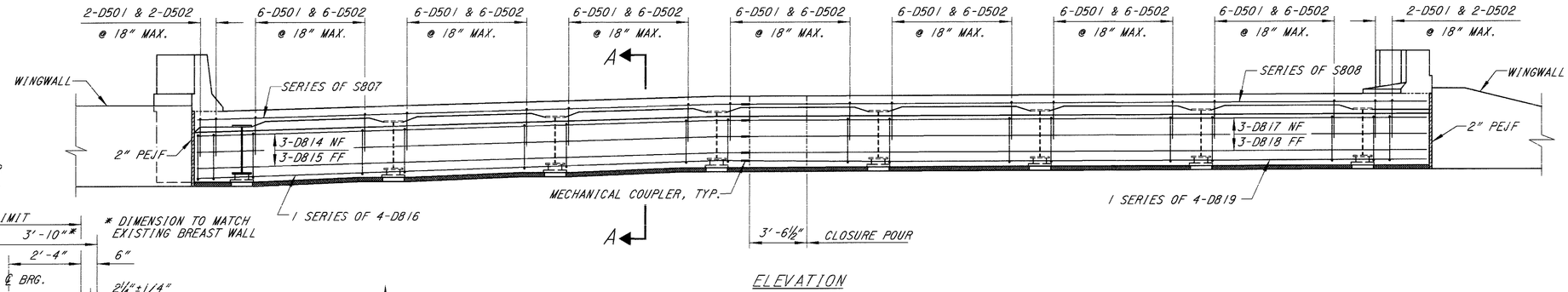

ELEVATION

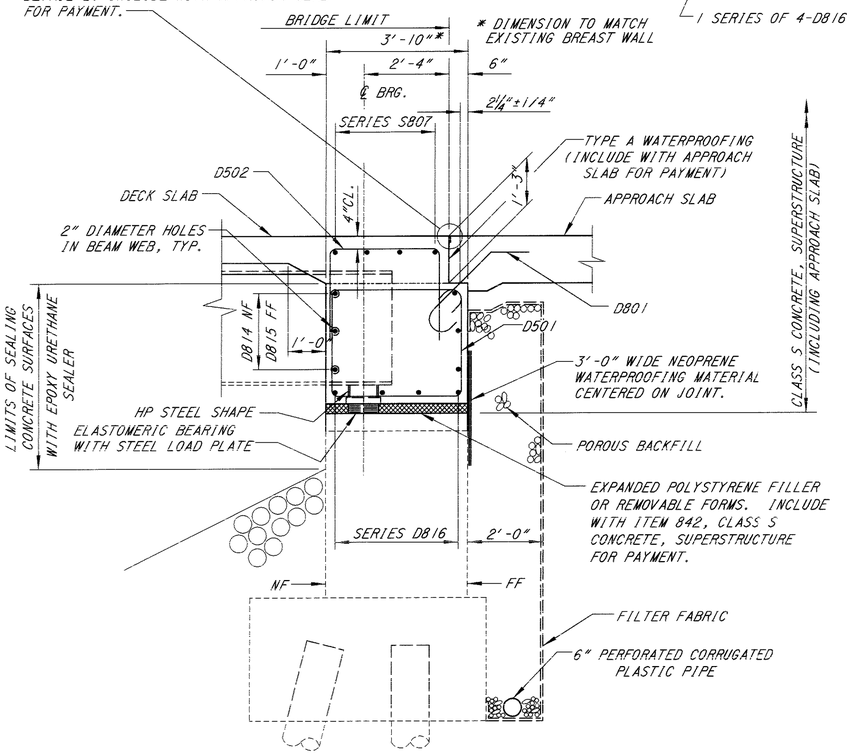

SECTION A-A

NOTES:
1. FOR ADDITIONAL INFORMATION SEE STD. DWG. SICD-1-96.
2. WORK THIS SHEET WITH DECK PLAN SHEET 25 36.
3. PEJF = PREFORMED EXPANSION JOINT FILLER.
   EF = EACH FACE
   NF = NEAR FACE
   FF = FAR FACE
4. ABUTMENT DIAPHRAGM CONCRETE, STEEL SUPERSTRUCTURE: THE CONCRETE ENCASING STRUCTURAL STEEL MEMBERS SUPPORTED IN SEMI-INTEGRAL AND INTEGRAL TYPE ABUTMENTS MAY BE PLACED BEFORE THE ACTUAL DECK CONCRETE IS PLACED. IF THE CONTRACTOR CHOOSES THIS OPTION THE CONCRETE SHALL HAVE HAD AT LEAST 48 HOURS OF SET TIME BEFORE DECK CONCRETE IS PLACED.
5. ABUTMENT DIAPHRAGM CONCRETE, STEEL SUPERSTRUCTURE, PHASED CONSTRUCTION: WHERE THE PLANS DETAIL A SEPARATE CLOSURE POUR SECTION BETWEEN CONSTRUCTION PHASES, THE CONCRETE IN THE ABUTMENT DIAPHRAGM SECTIONS OF THIS SEMI-INTEGRAL OR INTEGRAL ABUTMENT THAT ENCASES ANY STRUCTURAL STEEL MEMBERS OF AN INDIVIDUAL PHASE MAY BE PLACED EITHER SEPARATE OF OR WITH THE DECK CONCRETE OF THAT PHASE. IF THE CONTRACTOR CHOOSES TO PLACE THE DIAPHRAGM CONCRETE SEPARATELY, THE CONCRETE SHALL HAVE AT LEAST 48 HOURS OF SET TIME BEFORE DECK CONCRETE CAN BE PLACED. THE HORIZONTAL CONSTRUCTION JOINT BETWEEN THE DIAPHRAGM AND DECK CONCRETE SHOULD BE AT THE BOTTOM OF THE TOP FLANGE. IF NO SEPARATE CLOSURE POUR SECTION IS DETAILED BETWEEN PHASES THE ABUTMENT DIAPHRAGM CONCRETE SHALL BE POURED SIMULTANEOUSLY WITH THE DECK POUR TO ALLOW FOR EXPECTED DEAD LOAD ROTATION AT THE ABUTMENTS.

DESIGN AGENCY
BALKE ENGINEERS
1848 Summit Road
Cincinnati, Ohio 45237

DESIGNED	DRAWN	REVIEWED	DATE
FKL	WJH/RMH	CRS	6/01
CHECKED	REVISED	STRUCTURE FILE NUMBER	
MPS	—	1305530 (R.B.) / 1305549 (R.B.)	

RIGHT BRIDGE FORWARD ABUTMENT DIAPHRAGM DETAILS
BRIDGE NO. CLE-275-0549
OVER US 50

CLE-275-5.35

30/36

659
857

F:\Bridges\CLE\275\dd\dd1pah.dgn

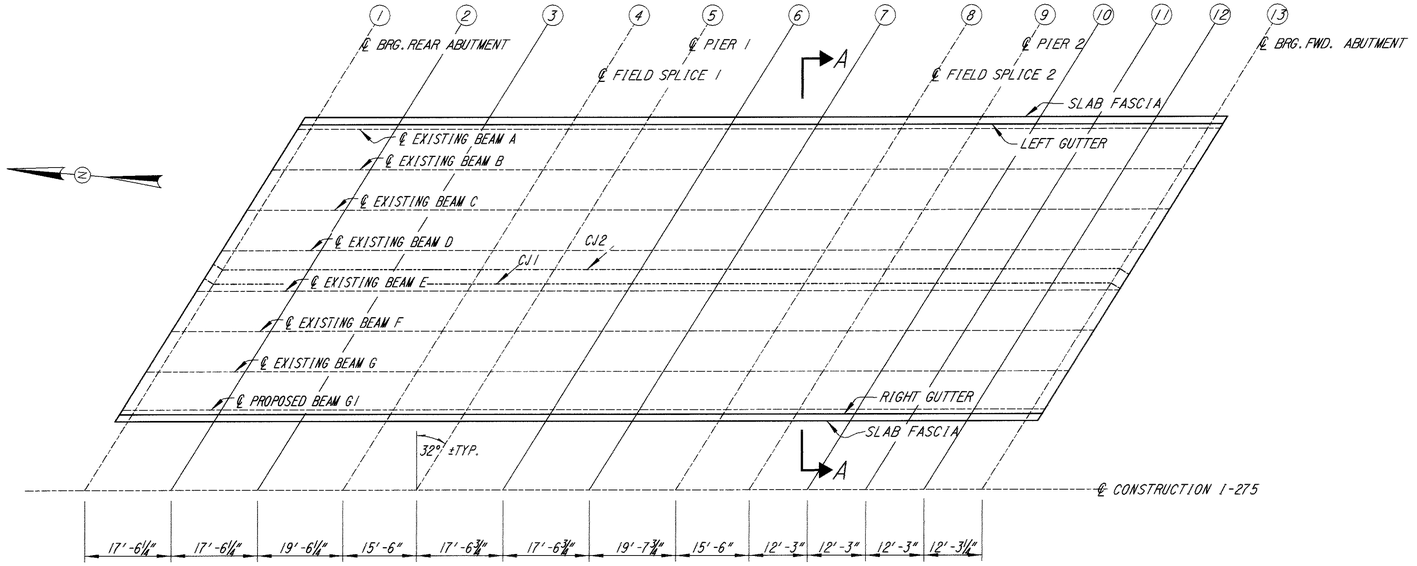

PLAN

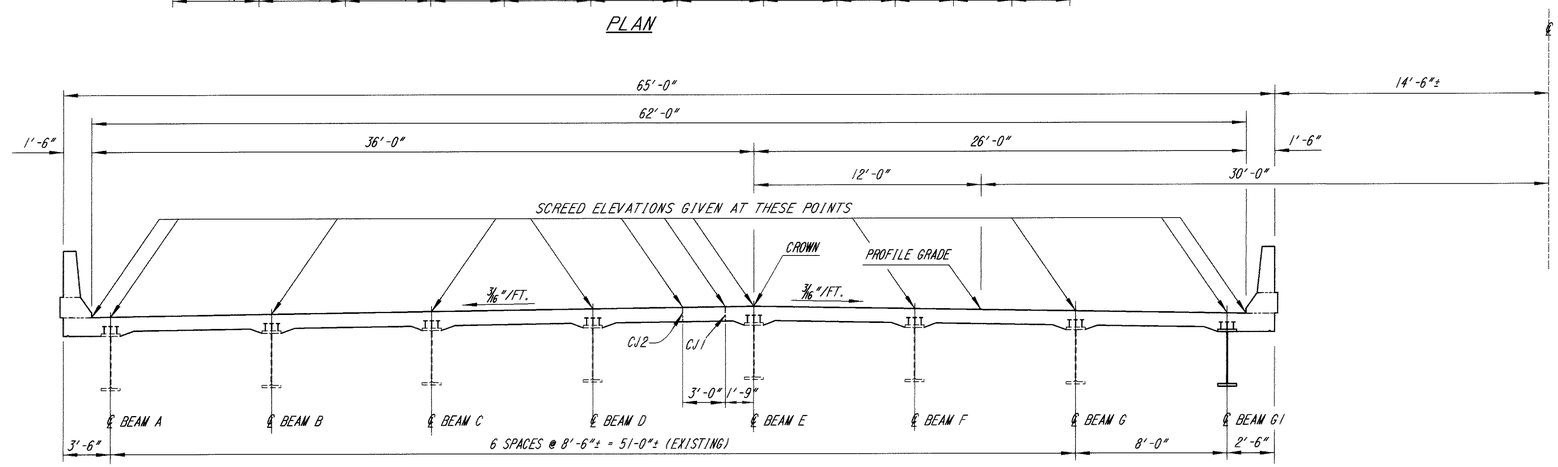

SECTION A-A

SCREED ELEVATIONS

Location	GRID LINE 1	GRID LINE 2	GRID LINE 3	GRID LINE 4	GRID LINE 5	GRID LINE 6	GRID LINE 7	GRID LINE 8	GRID LINE 9	GRID LINE 10	GRID LINE 11	GRID LINE 12	GRID LINE 13
LEFT GUTTER	560.54	560.49	560.05	559.14	558.36	557.31	557.47	556.76	556.17	555.89	555.52	555.16	554.71
BEAM A	560.57	560.53	560.08	559.18	558.39	557.35	557.50	556.79	556.21	555.93	555.55	555.20	554.74
BEAM B	560.87	560.95	560.53	559.55	558.69	558.27	557.85	557.11	556.51	556.25	555.87	555.51	555.03
BEAM C	561.17	561.25	560.83	559.85	558.99	558.57	558.15	557.41	556.80	556.55	556.17	555.80	555.32
BEAM D	561.47	561.55	561.13	560.14	559.29	558.87	558.45	557.71	557.10	556.85	556.47	556.09	555.60
CJ2	561.60	561.68	561.26	560.28	559.42	559.00	558.58	557.84	557.23	556.98	556.60	556.22	555.73
CJ1	561.70	561.78	561.36	560.38	559.52	559.10	558.68	557.95	557.34	557.08	556.70	556.32	555.83
BEAM E/CROWN	561.76	561.84	561.42	560.44	559.59	559.16	558.74	558.01	557.40	557.14	556.76	556.38	555.89
BEAM F	561.80	561.88	561.46	560.47	559.62	559.20	558.78	558.04	557.43	557.18	556.80	556.42	555.91
BEAM G	561.83	561.91	561.49	560.51	559.65	559.23	558.81	558.07	557.47	557.21	556.83	556.45	555.94
BEAM G1	561.86	561.81	561.37	560.46	559.68	559.23	558.79	558.08	557.50	557.21	556.83	556.45	555.97
RIGHT GUTTER	561.86	561.82	561.37	560.47	559.68	559.24	558.79	558.08	557.50	557.22	556.84	556.46	555.98

NOTE:
1. SCREED ELEVATIONS SHOWN ARE FOR THE DECK SLAB SURFACE PRIOR TO CONCRETE PLACEMENT. ALLOWANCE HAS BEEN MADE FOR ANTICIPATED CALCULATED DEAD LOAD DEFLECTIONS.
2. CJ1 = STAGE 1 CONSTRUCTION JOINT
   CJ2 = STAGE 2 CONSTRUCTION JOINT

DESIGN AGENCY
BALKE ENGINEERS
1848 Summit Road
Cincinnati, Ohio 45237

DESIGNED	DRAWN	REVIEWED	DATE
FKL	ALH	CRS	6/01
CHECKED	REVISED	STRUCTURE FILE NUMBER	
MRS	—	3205330 (L.B.) 3205499 (R.B.)	

LEFT BRIDGE SCREED ELEVATIONS

BRIDGE NO. CLE-275-0549
OVER US 50

CLE-275-5.35

F:\Projects\2958\Bridges\3.dgn

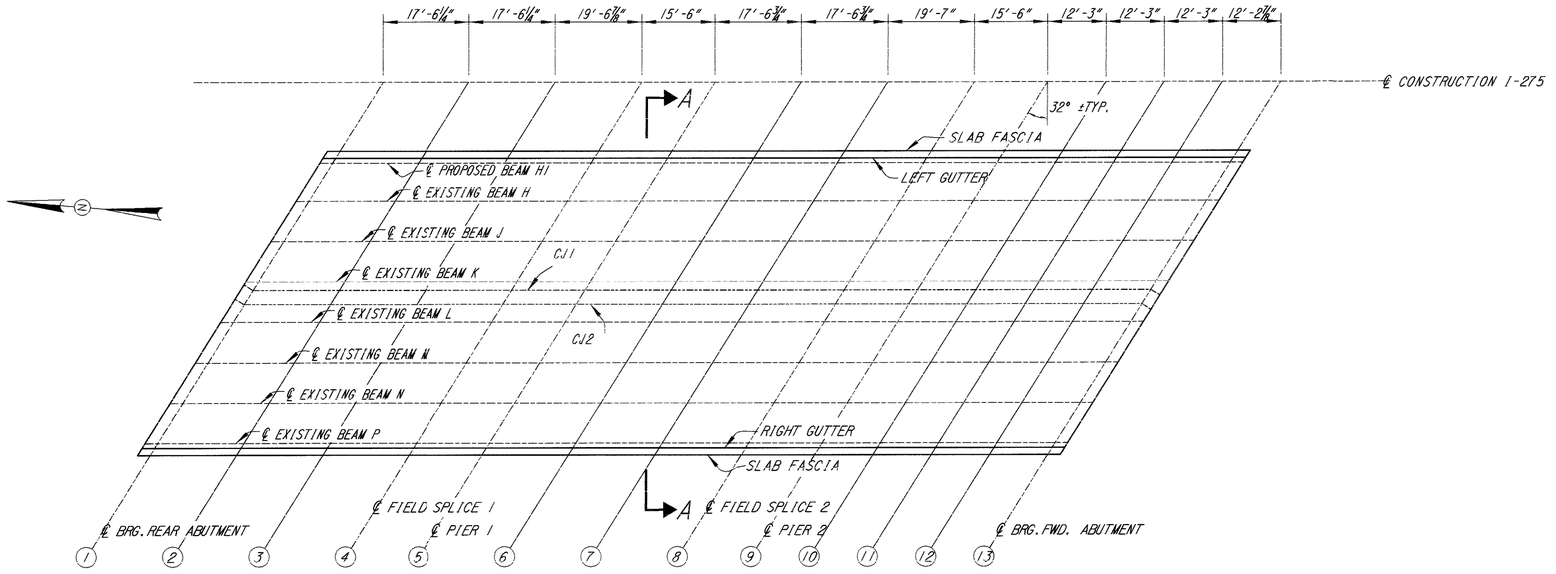

PLAN

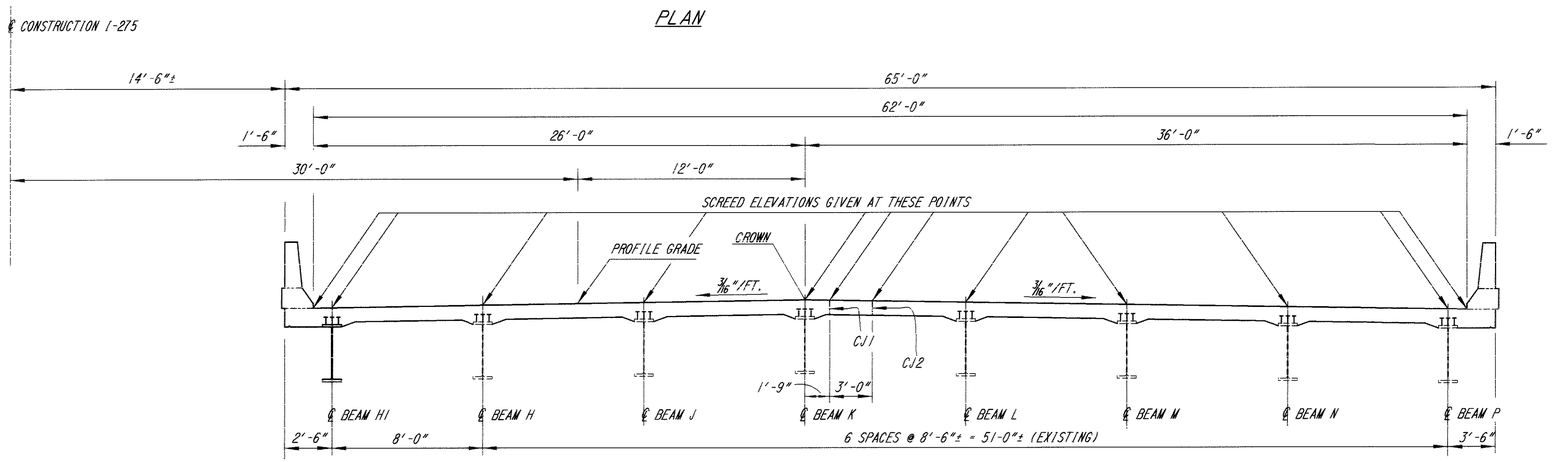

SECTION A-A

SCREED ELEVATIONS

LOCATION	GRID LINE 1	GRID LINE 2	GRID LINE 3	GRID LINE 4	GRID LINE 5	GRID LINE 6	GRID LINE 7	GRID LINE 8	GRID LINE 9	GRID LINE 10	GRID LINE 11	GRID LINE 12	GRID LINE 13
LEFT GUTTER	562.42	562.40	561.97	561.09	560.32	559.89	559.98	558.78	558.21	557.95	557.58	557.21	556.74
BEAM H1	562.46	562.43	562.01	561.12	560.35	559.93	560.01	558.81	558.25	557.98	557.61	557.24	556.78
BEAM H	562.73	562.83	562.43	561.47	560.63	560.23	560.34	559.11	558.52	558.28	557.91	557.54	557.05
BEAM J	563.03	563.13	562.72	561.76	560.92	560.52	560.63	559.40	558.81	558.57	558.20	557.84	557.34
BEAM K/CROWN	563.32	563.42	563.02	562.05	561.21	560.81	560.92	559.70	559.11	558.86	558.50	558.13	557.64
CJ1	563.32	563.42	563.02	562.06	561.22	560.82	560.93	559.70	559.11	558.87	558.50	558.13	557.64
CJ2	563.33	563.43	563.03	562.07	561.23	560.83	560.93	559.71	559.12	558.88	558.51	558.14	557.65
BEAM L	563.34	563.44	563.04	562.08	561.24	560.84	560.95	559.72	559.13	558.89	558.52	558.16	557.66
BEAM M	563.37	563.47	563.07	562.11	561.27	560.87	560.97	559.75	559.16	558.92	558.55	558.18	557.69
BEAM N	563.40	563.50	563.10	562.13	561.29	560.89	561.00	559.78	559.19	558.94	558.58	558.21	557.72
BEAM P	563.42	563.40	562.97	562.09	561.32	560.89	560.98	559.78	559.21	558.95	558.58	558.21	557.74
RIGHT GUTTER	563.43	563.40	562.98	562.09	561.32	560.90	560.98	559.78	559.22	558.95	558.58	558.21	557.74

NOTE:
1. SCREED ELEVATIONS SHOWN ARE FOR THE DECK SLAB SURFACE PRIOR TO CONCRETE PLACEMENT. ALLOWANCE HAS BEEN MADE FOR ANTICIPATED CALCULATED DEAD LOAD DEFLECTIONS.
2. CJ1 = STAGE 1 CONSTRUCTION JOINT
   CJ2 = STAGE 2 CONSTRUCTION JOINT

DESIGN AGENCY
BALKE ENGINEERS
1848 Summit Road
Cincinnati, Ohio 45237

DESIGNED	DRAWN	REVIEWED	DATE
FKL	ALH	CRS	6/01
CHECKED	REVISED	STRUCTURE FILE NUMBER	
MRS	—	3025530 (LT. BR.) 3025549 (RT. BR.)	

RIGHT BRIDGE SCREED ELEVATIONS
BRIDGE NO. CLE-275-0549
OVER US 50

CLE-275-5.35

661/857

F:\Inroads\549\Screeds.dgn

REAR ABUTMENT REINFORCING STEEL LIST

MARK	NUMBER LEFT BRIDGE	NUMBER RIGHT BRIDGE	NUMBER TOTAL	LENGTH	TYPE	DIMENSIONS A	B	C	D	E	INC.
A801	2	---	2	23'-6"	STR.						
A802	2	---	2	24'-9"	STR.						
A803	2	---	2	26'-0"	STR.						
A804	2	---	2	27'-3"	STR.						
A805	2	---	2	9'-0"	STR.						
A806	2	---	2	7'-8"	STR.						
A807	2	---	2	6'-8"	STR.						
A808	2	---	2	5'-5"	STR.						
A809	---	2	2	11'-4"	STR.						
A810	---	2	2	12'-7"	STR.						
A811	---	2	2	13'-8"	STR.						
A812	---	2	2	14'-11"	STR.						
A813	---	2	2	27'-11"	STR.						
A814	---	2	2	26'-8"	STR.						
A815	---	2	2	25'-6"	STR.						
A816	---	2	2	24'-3"	STR.						
A817	24	24	48	6'-0"	STR.						
A501	24	31	55	17'-9"	3	6'-0"	2'-7"	---	---	---	---
A502	2	2	4	13'-4"	2	5'-6"	2'-7"	---	---	---	---
A503	2	2	4	10'-4"	2	4'-0"	2'-7"	---	---	---	---
A504	12	---	12	21'-11"	2	10'-0"	2'-2"	---	---	---	---
A505	1	---	1	11'-10"	1	2'-0"	10'-0"	---	---	---	---
A506	3	---	3	6'-3"	1	2'-0"	4'-5"	---	---	---	---
A507	6	---	6	23'-9"	3	3'-4"	8'-3"	---	---	---	---
A508	2	---	2	8'-2"	1	3'-0"	5'-4"	---	---	---	---
A509	1	---	1	13'-9"	2	5'-4"	3'-4"	---	---	---	---
A510	12	---	12	11'-7"	2	4'-10"	2'-2"	---	---	---	---
A511	1	---	1	6'-8"	1	2'-0"	4'-10"	---	---	---	---
A512	8	---	8	9'-8"	STR.						
A513	10	---	10	19'-0"	STR.						
A514	4	---	4	16'-0"	STR.						
A515	4	---	4	14'-9"	STR.						
A516	4	---	4	12'-0"	STR.						
A517	7	---	7	19'-2"	2	8'-8"	2'-2"	---	---	---	---
A518	3	---	3	11'-8"	2	4'-0"	4'-0"	---	---	---	---
A519	1	---	1	10'-6"	1	2'-0"	8'-8"	---	---	---	---
A520	1	---	1	6'-7"	1	2'-0"	4'-9"	---	---	---	---
	1		1	5'-1"		1'-7"					
A521	SERIES OF	---	SERIES OF	TO	2	TO	2'-2"	---	---	---	1'-1"
	7		7	11'-7"		4'-10"					
A522	4	---	4	2'-3"	STR.						
A523	4	---	4	8'-6"	STR.						
A524	4	---	4	9'-9"	STR.						
A525	2	---	2	6'-2"	STR.						
A526	2	---	2	7'-8"	STR.						
A527	1	---	1	3'-2"	STR.						
A528	1	---	1	4'-8"	STR.						
A529	2	---	2	6'-8"	STR.						
A530	4	---	4	6'-0"	STR.						
A531	84	84	168	4'-6"	1	2'-8"	2'-0"	---	---	---	---
A532	NOT	USED			STR.						
A533	NOT	USED			STR.						
A534	---	11	11	20'-7"	2	9'-4"	2'-2"	---	---	---	---
		1	1	5'-1"		1'-7"					
A535	---	SERIES OF	SERIES OF	TO	2	TO	2'-2"	---	---	---	0'-10"
		8	8	10'-11"		4'-6"					
A536	---	3	3	11'-5"	2	4'-9"	2'-2"	---	---	---	---
A537	---	2	2	13'-1"	2	4'-8"	4'-0"	---	---	---	---
A538	---	3	3	5'-4"	19	4'-0"	0'-10"	1'-4"	1'-6"	---	---
A539	---	4	4	14'-3"	STR.						
A540	---	4	4	12'-10"	STR.						
A541	---	4	4	5'-0"	STR.						
A542	---	2	2	12'-1"	STR.						
A543	---	1	1	8'-2"	STR.						
A544	---	1	1	12'-6"	19	8'-6"	3'-8"	1'-6"	4'-0"	---	---
A545	---	2	2	10'-9"	STR.						

REAR ABUTMENT REINFORCING STEEL LIST

MARK	NUMBER LEFT BRIDGE	NUMBER RIGHT BRIDGE	NUMBER TOTAL	LENGTH	TYPE	DIMENSIONS A	B	C	D	E	INC.
A546	---	1	1	6'-10"	STR.						
A547	---	1	1	11'-6"	19	8'-6"	2'-9"	1'-1"	3'-0"	---	---
A548	NOT	USED									
A549	NOT	USED									
A550	---	14	14	19'-4"	2	8'-9"	2'-2"	---	---	---	---
A551	---	1	1	10'-4"	1	2'-0"	8'-6"	---	---	---	---
A552	---	1	1	6'-3"	1	2'-0"	4'-5"	---	---	---	---
A553	---	5	5	20'-9"	3	6'-9"	3'-4"	---	---	---	---
A554	---	2	2	6'-3"	1	2'-0"	4'-5"	---	---	---	---
A555	---	14	14	10'-2"	2	4'-2"	2'-2"	---	---	---	---
A556	---	1	1	6'-6"	1	2'-0"	4'-8"	---	---	---	---
A557	---	1	1	6'-7"	1	3'-0"	3'-9"	---	---	---	---
A558	---	2	2	10'-6"	2	3'-9"	3'-4"	---	---	---	---
A559	---	6	6	10'-0"	STR.						
A560	---	8	8	21'-0"	STR.						
A561	---	4	4	17'-0"	STR.						
A562	---	4	4	18'-3"	STR.						
A563	---	4	4	10'-0"	STR.						

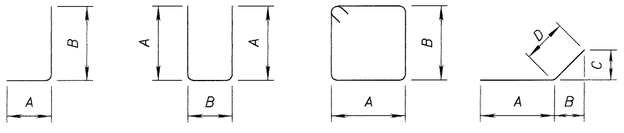

NOTES:

1. ALL DIMENSIONS ARE OUT TO OUT OF BAR.
2. ALL REINFORCING STEEL SHALL BE EPOXY COATED.
3. REINFORCING STEEL: NEW REINFORCING STEEL MAY REQUIRE FIELD CUTTING OR BENDING TO BE PROPERLY FITTED. PAYMENT SHALL BE INCLUDED IN THE APPLICABLE CONCRETE ITEM.

DESIGN AGENCY
BALKE ENGINEERS
1848 Summit Road
Cincinnati, Ohio 45237

DESIGNED MPS | DRAWN WJH/ALH | REVIEWED CBS | DATE 6/01

STRUCTURE FILE NUMBER 1205549

REVISED —

CHECKED FKL

REINFORCING STEEL LIST
BRIDGE NO. CLE-275-0549
OVER US ROUTE 50

CLE-275-5.35

F:\Invent\0549RS02.dgn

FORWARD ABUTMENT REINFORCING STEEL LIST

MARK	NUMBER LEFT BRIDGE	NUMBER RIGHT BRIDGE	NUMBER TOTAL	LENGTH	TYPE	DIMENSIONS A	B	C	D	E	INC.
B801	2	---	2	11'-3"	STR.						
B802	2	---	2	12'-6"	STR.						
B803	2	---	2	13'-9"	STR.						
B804	2	---	2	14'-9"	STR.						
B805	2	---	2	27'-6"	STR.						
B806	2	---	2	26'-6"	STR.						
B807	2	---	2	25'-3"	STR.						
B808	2	---	2	24'-0"	STR.						
B809	---	2	2	23'-9"	STR.						
B810	---	2	2	25'-0"	STR.						
B811	---	2	2	26'-3"	STR.						
B812	---	2	2	27'-6"	STR.						
B813	---	2	2	9'-0"	STR.						
B814	---	2	2	7'-9"	STR.						
B815	---	2	2	6'-9"	STR.						
B816	---	2	2	5'-6"	STR.						
B817	24	24	48	6'-0"	STR.						
B501	31	24	55	17'-9"	3	6'-0"	2'-7"	---	---	---	---
B502	4	4	8	13'-4"	2	5'-6"	2'-7"	---	---	---	---
B503	11	---	11	18'-11"	2	8'-6"	2'-2"	---	---	---	---
B504	2	---	2	11'-5"	2	3'-10"	4'-0"	---	---	---	---
	1		1	5'-1"		1'-7"					
B505	SERIES OF	---	SERIES OF	TO	2	TO	2'-2"	---	---	---	10"
	8		8	10'-11"		4'-6"					
B506	3	---	3	11'-5"	2	4'-9"	2'-2"	---	---	---	---
B507	3	---	3	5'-4"	19	3'-9"	0'-10"	1'-4"	1'-6"	---	---
B508	4	---	4	14'-2"	STR.						
B509	4	---	4	12'-10"	STR.						
B510	2	---	2	12'-1"	STR.						
B511	1	---	1	8'-0"	STR.						
B512	1	---	1	12'-6"	19	8'-6"	3'-8"	1'-6"	4'-0"	---	---
B513	2	---	2	10'-9"	STR.						
B514	1	---	1	6'-9"	STR.						
B515	1	---	1	11'-6"	19	8'-6"	2'-9"	1'-1"	3'-0"	---	---
B516	4	---	4	5'-0"	STR.						
B517	NOT	USED									
B518	NOT	USED									
B519	14	---	14	21'-6"	2	9'-10"	2'-2"	---	---	---	---
B520	1	---	1	11'-8"	1	2'-0"	9'-10"	---	---	---	---
B521	3	---	3	6'-3"	1	2'-0"	4'-5"	---	---	---	---
B522	5	---	5	23'-9"	3	3'-5"	8'-2"	---	---	---	---
B523	14	---	14	11'-5"	2	4'-9"	2'-2"	---	---	---	---
B524	1	---	1	6'-7"	1	2'-0"	4'-9"	---	---	---	---
B525	1	---	1	8'-1"	1	3'-0"	5'-3"	---	---	---	---
B526	2	---	2	13'-7"	2	5'-2"	3'-5"	---	---	---	---
B527	8	---	8	9'-10"	STR.						
B528	10	---	10	20'-0"	STR.						
B529	4	---	4	16'-9"	STR.						
B530	4	---	4	18'-0"	STR.						
B531	4	---	4	13'-7"	STR.						
B532	84	84	168	4'-6"	1	2'-8"	2'-0"	---	---	---	---
B533	---	12	12	20'-5"	2	9'-3"	2'-2"	---	---	---	---
B534	---	1	1	10'-4"	1	2'-0"	8'-6"	---	---	---	---
B535	---	3	3	6'-4"	1	2'-0"	4'-6"	---	---	---	---
B536	---	6	6	21'-1"	3	3'-6"	6'-9"	---	---	---	---
B537	---	12	12	9'-11"	2	4'-0"	2'-2"	---	---	---	---
B538	---	1	1	6'-7"	1	2'-0"	4'-9"	---	---	---	---
B539	---	1	1	5'-7"	1	2'-0"	3'-9"	---	---	---	---
B540	---	1	1	10'-9"	2	3'-9"	3'-6"	---	---	---	---
B541	---	1	1	6'-7"	1	3'-0"	3'-9"	---	---	---	---
B542	---	6	6	9'-9"	STR.						
B543	---	8	8	19'-0"	STR.						
B544	---	4	4	16'-3"	STR.						
B545	---	4	4	15'-0"	STR.						
B546	---	4	4	13'-0"	STR.						
B547	NOT	USED									
B548	NOT	USED									

FORWARD ABUTMENT REINFORCING STEEL LIST

MARK	NUMBER LEFT BRIDGE	NUMBER RIGHT BRIDGE	NUMBER TOTAL	LENGTH	TYPE	DIMENSIONS A	B	C	D	E	INC.
B549	---	7	7	20'-7"	2	9'-4"	2'-2"	---	---	---	---
B550	---	1	1	11'-2"	1	2'-0"	9'-4"	---	---	---	---
B551	---	3	3	12'-7"	2	4'-8"	3'-6"	---	---	---	---
		1	1	5'-1"		1'-7"					
B552	---	SERIES OF	SERIES OF	TO	2	TO	2'-2"	---	---	---	1'-4"
		5	5	10'-5"		4'-3"					
B553	---	2	2	11'-7"	2	4'-10"	2'-2"	---	---	---	---
B554	---	1	1	6'-8"	1	2'-0"	4'-10"	---	---	---	---
B555	---	4	4	2'-3"	STR.						
B556	---	4	4	8'-6"	STR.						
B557	---	4	4	9'-10"	STR.						
B558	---	1	1	6'-3"	STR.						
B559	---	1	1	5'-6"	STR.						
B560	---	1	1	3'-9"	STR.						
B561	---	1	1	7'-0"	19	5'-0"	1'-7"	1'-3"	2'-0"	---	---
B562	---	1	1	7'-3"	STR.						
B563	---	1	1	6'-6"	STR.						
B564	---	1	1	4'-9"	STR.						
B565	---	1	1	8'-0"	19	5'-0"	2'-4"	1'-10"	3'-0"	---	---
B566	---	4	4	5'-6"	STR.						

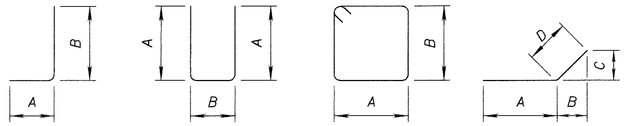

NOTES:

1. ALL DIMENSIONS ARE OUT TO OUT OF BAR.
2. ALL REINFORCING STEEL SHALL BE EPOXY COATED.
3. REINFORCING STEEL: NEW REINFORCING STEEL MAY REQUIRE FIELD CUTTING OR BENDING TO BE PROPERLY FITTED. PAYMENT SHALL BE INCLUDED IN THE APPLICABLE CONCRETE ITEM.

DESIGN AGENCY
BALKE ENGINEERS
1848 Summit Road
Cincinnati, Ohio 45237

DESIGNED	DRAWN	REVIEWED	DATE
MRS	WJH/ALH	CBS	6/01
CHECKED	REVISED	STRUCTURE FILE NUMBER	
FKL	—	1275549	

REINFORCING STEEL LIST
BRIDGE NO. CLE-275-0549
OVER US ROUTE 50

CLE-275-5.35

34/36

663
857

F:\Windows\DESIGN03.dgn

PIER 1 REINFORCING STEEL LIST

MARK	NUMBER LEFT BRIDGE	NUMBER RIGHT BRIDGE	NUMBER TOTAL	LENGTH	TYPE	DIMENSIONS A	B	C	D	E	R
P1101	8	8	16	14'-3"	1	2'-0"	12'-7"				
P1102	8	--	8	27'-6"	STR.						
P1103	--	8	8	31'-0"	STR.						
P801	9	9	18	9'-8"	STR.						
P802	9	9	18	7'-8"	STR.						
P701	10	10	20	9'-4"	STR.						
P702	4	4	8	11'-10"	STR.						
P501	9	9	18	9'-8"	STR.						
P502	11	11	22	7'-8"	STR.						
P503	4	4	8	38'-0"	STR.						
P504	4	4	8	33'-3"	STR.						
P505	10	--	10	18'-1"	3	2'-8"	6'-1"				
P506	72	72	144	4'-5"	1	2'-0"	2'-7"				
P507	--	10	10	15'-5"	3	2'-8"	4'-9"				
P401	5	5	10	22'-6"	24	2'-6"	9'-3"				1'-3"
SP401	1	--	1	21'-11"	27	3"	2'-6"				
SP402	--	1	1	26'-7"	27	3"	2'-6"				

PIER 2 REIFORCING STEEL LIST

MARK	NUMBER LEFT BRIDGE	NUMBER RIGHT BRIDGE	NUMBER TOTAL	LENGTH	TYPE	DIMENSIONS A	B	C	D	E	R
R1101	8	8	16	14'-3"	1	2'-0"	12'-7"				
R1102	8	--	8	28'-3"	STR.						
R1103	--	8	8	31'-0"	STR.						
R801	9	9	18	9'-8"	STR.						
R802	9	9	18	7'-8"	STR.						
R701	10	10	20	9'-4"	STR.						
R702	4	4	8	11'-10"	STR.						
R501	9	9	18	9'-8"	STR.						
R502	11	11	22	7'-8"	STR.						
R503	4	4	8	38'-0"	STR.						
R504	4	4	8	33'-3"	STR.						
R505	10	--	10	18'-1"	3	2'-8"	6'-1"				
R506	72	72	144	4'-6"	1	2'-0"	2'-8"				
R507	--	10	10	15'-5"	3	2'-8"	4'-9"				
R401	5	5	10	22'-6"	24	2'-6"	9'-3"				1'-3"
SR401	1	--	1	22'-11"	27	3"	2'-6"				
SR402	--	1	1	27'-1"	27	3"	2'-6"				

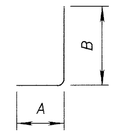

TYPE-1

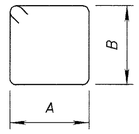

TYPE-3

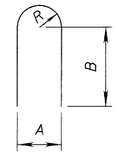

TYPE-24

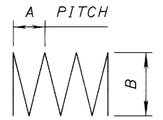

TYPE-27

NOTES:

1. ALL DIMENSIONS ARE OUT TO OUT OF BAR.
2. ALL REINFORCING STEEL SHALL BE EPOXY COATED.
3. SPIRAL REINFORCING BARS: THE "LENGTH" SHOWN IN THE STEEL LIST FOR THE SPIRAL BARS IS THE LENGTH OF THE SPIRAL ALONG THE AXIS OF THE SPIRAL. ONE AND ONE-HALF CLOSED-COIL TURNS SHALL BE PROVIDED AT THE ENDS OF EACH SPIRAL UNIT.
4. SPACERS: CONCRETE SPACERS OR OTHER APPROVED NONCORROSIVE SPACING DEVICES SHALL BE USED AT SUFFICIENT INTERVALS (NEAR THE BOTTOM AND AT INTERVALS NOT EXCEEDING 10 FEET) TO INSURE CONCENTRIC SPACING FOR THE ENTIRE CAGE LENGTH. SPACERS SHALL BE CONSTRUCTED OF APPROVED MATERIAL EQUAL IN QUALITY AND DURABILITY TO THE CONCRETE SPECIFIED FOR THE COLUMN. THE SPACERS SHALL HAVE ADEQUATE DIMENSIONS TO ENSURE A MINIMUM 3 INCHES CLEAR SPACE BETWEEN THE OUTSIDE OF THE REINFORCING CAGE AND THE DESIGN DIMENSION OF THE COLUMN. CYLINDRICAL CONCRETE FEET (BOTTOM SUPPORTS) SHALL BE PROVIDED TO ENSURE THAT THE BOTTOM OF THE CAGE IS MAINTAINED AT THE PROPER DISTANCE ABOVE THE BASE.
5. REINFORCING STEEL: NEW REINFORCING STEEL MAY REQUIRE FIELD CUTTING OR BENDING TO BE PROPERLY FITTED. PAYMENT SHALL BE INCLUDED IN THE APPLICABLE CONCRETE ITEM.

DESIGN AGENCY
BALKE ENGINEERS
1848 Summit Road
Cincinnati, Ohio 45237

DESIGNED	DRAWN	REVIEWED	DATE
MRS	ALH	CRS	6/01
CHECKED	REVISED	STRUCTURE FILE NUMBER	
FKL	—	130549 (1 of 2)	

REINFORCING STEEL LIST
BRIDGE NO. CLE-275-0549
OVER US 50

CLE-275-5.35

FILENAME = 0549RS.dgn

SUPERSTRUCTURE REINFORCING STEEL LIST

MARK	NUMBER			LENGTH	TYPE	DIMENSIONS					
	LEFT BRIDGE	RIGHT BRIDGE	TOTAL			A	B	C	D	E	INC.
	1		1	34'-5"							
S801	SERIES OF	-	SERIES OF	TO	STR.						7"
	4		4	36'-2"							
	1		1	39'-11"							
S802	SERIES OF	-	SERIES OF	TO	STR.						7"
	4		4	41'-8"							
	1		1	32'-4"							
S803	SERIES OF	-	SERIES OF	TO	STR.						7"
	4		4	34'-1"							
	1		1	41'-11"							
S804	SERIES OF	-	SERIES OF	TO	STR.						7"
	4		4	43'-8"							
		1	1	32'-5"							
S805	---	SERIES OF	SERIES OF	TO	STR.						7"
		4	4	34'-2"							
		1	1	42'-1"							
S806	---	SERIES OF	SERIES OF	TO	STR.						7"
		4	4	43'-9"							
		1	1	34'-4"							
S807	---	SERIES OF	SERIES OF	TO	STR.						7"
		4	4	36'-1"							
		1	1	40'-0"							
S808	---	SERIES OF	SERIES OF	TO	STR.						7"
		4	4	41'-9"							
S501	462	462	924	30'-0"	STR.						
S502	77	77	154	30'-10"	STR.						
S503	NOT	USED									
S504	280	280	560	50'-0"	STR.						
S505	692	692	1384	35'-5"	STR.						
S506	702	702	1404	31'-11"	STR.						
	2	2	4	3'-10"							
S507	SERIES OF	SERIES OF	SERIES OF	TO	STR.						9½"
	35	35	35	30'-9"							
	2	2	4	5'-11"							
S508	SERIES OF	SERIES OF	SERIES OF	TO	STR.						9¾"
	31	31	31	30'-3"							
	2		2	5'-5"							
S509	SERIES OF	---	SERIES OF	TO	STR.						9¾"
	36		36	33'-10"							
	2		2	4'-0"							
S510	SERIES OF	---	SERIES OF	TO	STR.						9¾"
	39		39	34'-10"							
S511	764	764	1528	5'-0"	STR.						
		2	2	4'-2"							
S512	---	SERIES OF	SERIES OF	TO	STR.						9¾"
		39	39	35'-0"							
		2	2	5'-1"							
S513	---	SERIES OF	SERIES OF	TO	STR.						9¾"
		36	36	33'-6"							
S401	426	426	852	30'-0"	STR.						
S402	71	71	142	25'-0"	STR.						
X601	12	12	24	30'-0"	STR.						
X602	1	1	2	21'-3"	STR.						
X603	1	1	2	9'-9"	STR.						
X501	12	12	24	10'-0"	STR.						
X502	6	6	12	5'-8"	25	1'-10"	2'-5"	1'-5"	1½"	5"	
X503	6	6	12	5'-8"	STR.						
X504	72	72	144	30'-0"	STR.						
X505	12	12	24	13'-10"	STR.						
X506	6	6	12	9'-9"	STR.						
X507	6	6	12	21'-3"	STR.						
Y601	383	383	766	3'-0"	14	10½"	10"	8½"	6"	9"	
Y603	24	24	48	3'-11"	1	11"	3'-2"				
Y604	350	350	700	2'-3"	1	11"	1'-6"				
	3	3	6	3'-11"			3'-2"				
Y605	SERIES OF	SERIES OF	SERIES OF	TO	1	11"	TO				1"
	11	11	11	4'-8"			3'-11"				

SUPERSTRUCTURE REINFORCING STEEL LIST (CONTINUED)

MARK	NUMBER			LENGTH	TYPE	DIMENSIONS					
	LEFT BRIDGE	RIGHT BRIDGE	TOTAL			A	B	C	D	E	INC.
Y501	350	350	700	7'-1"	23	8"	3'-3"	3'-0"	1½"		
Y502	3	3	6	3'-10"	16	3'-3"					
Y503	3	3	6	3'-9"	16	3'-2"					
Y504	3	3	6	3'-8"	16	3'-1"					
Y505	3	3	6	3'-7"	16	3'-0"					
Y506	3	3	6	3'-6"	16	2'-11"					
Y507	3	3	6	3'-5"	16	2'-10"					
Y508	3	3	6	3'-4"	16	2'-9"					
Y509	3	3	6	3'-3"	16	2'-8"					
Y510	3	3	6	3'-2"	16	2'-7"					
Y511	3	3	6	3'-1"	16	2'-6"					
Y512	3	3	6	3'-0"	16	2'-5"					
D801	84	84	168	5'-9"	18	3'-0"	1'-0"	1'-0"			
D802	3	---	3	34'-8"	STR.						
D803	3	---	3	36'-8"	STR.						
	1	---	1	34'-8"							
D804	SER. OF	---	SER. OF	TO	STR.						8"
	4	---	4	36'-8"							
D805	3	---	3	41'-6"	STR.						
D806	3	---	3	39'-6"	STR.						
	1		1	39'-6"							
D807	SER. OF	---	SER. OF	TO	STR.						8"
	4		4	41'-6"							
D808	3	3	6	33'-11"	STR.						
D809	3	3	6	31'-11"	STR.						
	1	1	2	31'-11"							
D810	SER. OF	SER. OF	SER. OF	TO	STR.						8"
	4	4	4	33'-11"							
D811	3	3	6	42'-1"	STR.						
D812	3	3	6	44'-1"	STR.						
	1	1	2	42'-1"							
D813	SER. OF	SER. OF	SER. OF	TO	STR.						8"
	4	4	4	44'-1"							
D814	---	3	3	34'-4"	STR.						
D815	---	3	3	36'-4"	STR.						
		1	1	34'-4"							
D816	---	SER. OF	SER. OF	TO	STR.						8"
		4	4	36'-4"							
D817	---	3	3	41'-9"	STR.						
D818	---	3	3	39'-9"	STR.						
		1	1	39'-9"							
D819	---	SER. OF	SER. OF	TO	STR.						8"
		4	4	41'-9"							
D501	92	92	184	12'-11"	3	3'-5"	2'-9"				
D502	92	92	184	7'-6"	2	2'-5"	2'-11"				

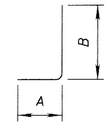

TYPE-1

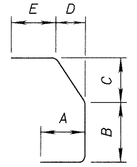

TYPE-14



TYPE-16

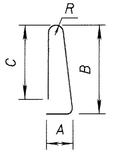

TYPE-23

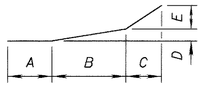

TYPE-25

TYPE-18

TYPE-2

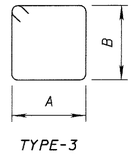

TYPE-3

NOTES:

1. ALL DIMENSIONS ARE OUT TO OUT OF BAR.
2. ALL REINFORCING STEEL SHALL BE EPOXY COATED.
3. REINFORCING STEEL: NEW REINFORCING STEEL MAY REQUIRE FIELD CUTTING OR BENDING TO BE PROPERLY FITTED. PAYMENT SHALL BE INCLUDED IN THE APPLICABLE CONCRETE ITEM.

DESIGN AGENCY
BALKE ENGINEERS
1848 Summit Road
Cincinnati, Ohio 45237

DESIGNED	DRAWN	REVIEWED	DATE
MPS	ALH	CRS	6/01
CHECKED	REVISED	STRUCTURE FILE NUMBER	
FKL	—	1275549	

REINFORCING STEEL LIST
BRIDGE NO. CLE-275-0549
OVER OLD US 50

CLE-275-5.35

36/36

665/857

FT Mission\1275549\S1.dgn

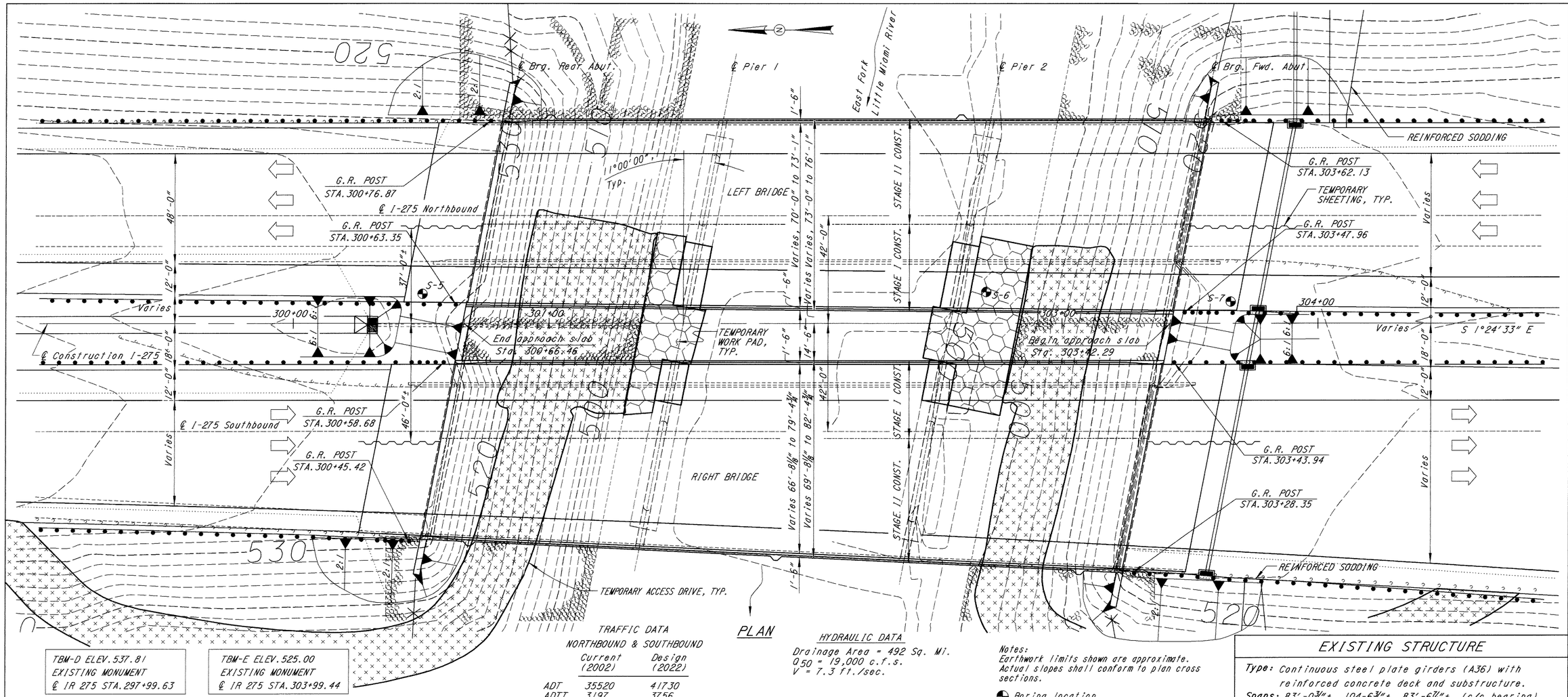
520
530
540
550
560
570
580
590
600
610
620
630
640
650
660
670
680
690
700
710
720
730
740
750
760
770
780
790
800
810
820
830
840
850
860
870
880
890
900
910
920

GENERAL NOTES

REFERENCE SHALL BE MADE TO STANDARD DRAWING(S):

AS-1-81	REVISED 04-20-01
BR-1	REVISED 01-06-99
BS-1-93	DATED 12-19-94
GSD-1-96	DATED 2-12-97
PCB-91	REVISED 07-06-99
SICD-1-96	REVISED 04-20-01
HL-20.14M	DATED 05-01-95

AND TO SUPPLEMENTAL SPECIFICATION(S):

814	DATED 6-2-98
815	DATED 2-22-00
816	DATED 4-21-97
842	DATED 1-6-99
846	DATED 9-9-97
863	DATED 10-12-99
899	DATED 10-21-98
905	DATED 4-1-98
907	DATED 10-21-98
910	DATED 7-11-00
954	DATED 9-9-97

DESIGN SPECIFICATIONS: THIS STRUCTURE CONFORMS TO "STANDARD SPECIFICATIONS FOR HIGHWAY BRIDGES" ADOPTED BY THE AMERICAN ASSOCIATION OF STATE HIGHWAY AND TRANSPORTATION OFFICIALS, 1996, INCLUDING THE 1997 THRU 1999 INTERIM SPECIFICATIONS AND THE ODOT BRIDGE DESIGN MANUAL.

DESIGN LOADING: HS20 , CASE (I) AND THE ALTERNATE MILITARY LOADING.
FUTURE WEARING SURFACE (FWS) OF 60 LBS/FT 2 .

DESIGN DATA:

CONCRETE CLASS S - COMPRESSIVE STRENGTH 4500 PSI (SUPERSTRUCTURE)
CONCRETE CLASS C - COMPRESSIVE STRENGTH 4000 PSI (SUBSTRUCTURE)

REINFORCING STEEL - ASTM A615, A616 OR A617
GRADE 60 MINIMUM YIELD STRENGTH 60,000 PSI

STRUCTURAL STEEL ASTM A709, GRADE 50-YIELD STRENGTH 50 KSI

DECK PROTECTION METHOD:

EPOXY COATED REINFORCING STEEL
2½" CONCRETE COVER

MONOLITHIC WEARING SURFACE IS ASSUMED, FOR DESIGN PURPOSES, TO BE 1 INCH THICK.

PROPOSED WORK:

1. REPLACE THE EXISTING CONCRETE DECK WITH A NEW COMPOSITE CONCRETE DECK WITH BARRIER RAILINGS.
2. WIDEN THE SUPERSTRUCTURE ON THE MEDIAN SIDE BY ADDING GIRDERS AS SHOWN.
3. CONVERT THE EXISTING ABUTMENTS TO SEMI-INTEGRAL. REPLACE U-WINGWALLS WITH STRAIGHT WINGWALLS. REMOVE THE EXISTING ABUTMENTS AND WINGWALLS DOWN TO THE TOP OF THE EXISTING BEAM SEATS.
4. WIDEN THE SUBSTRUCTURE TO ACCOMMODATE THE NEW SUPER-STRUCTURE MEMBERS.
5. REPLACE ALL BEARINGS WITH NEW ELASTOMERIC BEARINGS.
6. ADJUST BEARING SEAT ELEVATIONS BY CONSTRUCTING REINFORCED CONCRETE PEDESTALS.
7. SEAL NEW WINGWALLS, RAILING, ABUTMENTS, BACKWALLS, AND PIERS WITH EPOXY-URETHANE, COLOR SHALL BE BUFF.
8. PROVIDE NEW APPROACH SLABS.
9. PAINT EXISTING STRUCTURAL STEEL WITH SYSEM OZEU, COLOR SHALL BE BLUE, FEDERAL COLOR 15526.
10. PAINT NEW STRUCTURAL STEEL WITH SYSTEM IZEU, COLOR SHALL BE BLUE, FEDERAL COLOR 15526.
11. PATCH EXISTING SUBSTRUCTURE AS SHOWN.

PORTIONS OF STRUCTURE REMOVED, OVER 20' SPAN, AS PER PLAN:
THIS WORK SHALL CONSIST OF THE REMOVAL OF CONCRETE DECKS INCLUDING SIDEWALKS, PARAPETS, RAILINGS, DECK JOINTS AND OTHER APPURTENANCES FROM STEEL SUPPORTING SYSTEMS (BEAMS, GIRDERS, CROSS FRAMES, ETC.). CARE SHALL BE TAKEN DURING DECK REMOVALS TO PROTECT PORTIONS OF SUCH SYSTEMS THAT ARE TO BE SALVAGED AND INCORPORATED INTO THE PROPOSED STRUCTURE. IN THIS RESPECT, THE USE OF EXPLOSIVES, HEADACHE BALLS AND/OR HOE RAM TYPE OF EQUIPMENT IS PROHIBITED.

PROTECTION OF TRAFFIC: PRIOR TO DEMOLITION OF ANY PORTIONS OF THE EXISTING SUPERSTRUCTURE, THE CONTRACTOR SHALL SUBMIT PLANS FOR THE PROTECTION OF TRAFFIC (VEHICULAR, PEDESTRIAN, BOAT, ETC.) ADJACENT TO AND/OR UNDER THE STRUCTURE TO THE DIRECTOR FOR APPROVAL. THESE PLANS SHALL INCLUDE PROVISIONS FOR ANY DEVICES AND STRUCTURES THAT MAY BE NECESSARY TO ENSURE SUCH PROTECTION.
TEMPORARY VERTICAL CLEARANCES SPECIFIED ON THE PLANS OR IN THE PROPOSAL SHALL BE MAINTAINED AT ALL TIMES EXCEPT AS OTHERWISE APPROVED BY THE DIRECTOR.

PROTECTION OF STEEL SUPPORT SYSTEMS: BEFORE DECK SLAB CUTTING IS PERMITTED, THE OUTLINE OF PRIMARY STEEL MEMBERS IN CONTACT WITH THE BOTTOM OF THE DECK SHALL BE DRAWN ON THE SURFACE OF DECK. SMALL DIAMETER PILOT HOLES SHALL BE DRILLED 2 INCHES OUTSIDE THESE LINES TO CONFIRM THE LOCATION OF FLANGE EDGES. DECK CUTS OVER OR WITHIN 2 INCHES OF FLANGE EDGES SHALL NOT EXTEND LOWER THAN THE BOTTOM LAYER OF DECK SLAB REINFORCING STEEL. CUTS MADE OUTSIDE 2 INCHES OF FLANGE EDGES MAY EXTEND THE FULL DEPTH OF THE DECK. DURING CUTTING OF THE DECK SLAB, CARE SHALL BE TAKEN NOT TO DAMAGE STEEL MEMBERS THAT ARE TO BE INCORPORATED INTO THE PROPOSED STRUCTURE.

REMOVAL METHODS: CONCRETE MAY BE REMOVED BY CUTTING AND BY MEANS OF HAND OPERATED PNEUMATIC HAMMERS EMPLOYING POINTED OR BLUNTED CHISEL TYPE TOOLS. FOR REMOVALS OVER BRIDGE MEMBERS (PRESTRESSED BOX BEAM, I-BEAM, STEEL BEAM STEEL GIRDER, ETC), A HAMMER HEAVIER THAN 35 POUNDS BUT NOT TO EXCEED 90 POUNDS MAY BE USED AT THE APPROVAL OF THE ENGINEER. REMOVAL METHODS OVER BRIDGE MEMBERS SHALL ENSURE ADEQUATE DEPTH CONTROL AND PREVENT NICKING OR GOUGING THE PRIMARY STEEL MEMBERS.

DECK REMOVALS: DUE TO THE POSSIBLE PRESENCE OF WELDED ATTACHMENTS TO EXISTING STRUCTURAL STEEL (FINISHING MACHINE, SCUPPER AND FORM SUPPORTS, ETC.), CARE SHALL BE TAKEN DURING DECK REMOVAL TO AVOID DAMAGING STRINGERS WHICH ARE TO REMAIN. STRINGERS DAMAGED BY THE CONTRACTOR'S REMOVAL OPERATIONS SHALL, AT NO COST TO THE PROJECT, BE REPLACED OR REPAIRED. PROPOSED REPAIRS, DEVELOPED BY A OHIO REGISTERED PROFESSIONAL ENGINEER, SHALL BE SUBMITTED IN WRITING FOR REVIEW AND APPROVAL BY THE DIRECTOR.

EXTRANEOUS MEMBERS: EXISTING EXTRANEOUS MEMBERS (I.E., FINISHING MACHINE AND FORM SUPPORTS, ETC., AND THE SUPPORT FOR SCUPPERS AND BULB ANGLES WHICH ARE TO BE REMOVED) ATTACHED BY WELDED CONNECTION TO THE DESIGNATED TENSION PORTIONS OF THE TOP FLANGES OF EXISTING STEEL MEMBERS SHALL BE REMOVED AND THE FLANGE SURFACES GROUND SMOOTH. GRINDING SHALL BE CAREFULLY DONE AND PARALLEL TO THE FLANGES.

LOADING LIMITATIONS: NO PART OF THE STRUCTURE SHALL BE SUBJECTED TO UNIT STRESSES THAT EXCEED 136.5% OF ALLOWABLE UNIT STRESSES AS DEFINED IN THE AASHTO STANDARD SPECIFICATIONS FOR HIGHWAY BRIDGES DUE EITHER TO DEMOLITION, ERECTION OR CONSTRUCTION METHODS, OR TO THE USE OR MOVEMENT OF DEMOLITION OR ERECTION EQUIPMENT ON OR ACROSS THE STRUCTURE. STRUCTURAL ANALYSIS COMPUTATIONS, BY A OHIO REGISTERED PROFESSIONAL ENGINEER, SHOWING THE ALLOWABLE STRESSES AND THE MAXIMUM STRESSES PRODUCED BY THE CONTRACTOR'S METHODS OR EQUIPMENT SHALL BE SUBMITTED TO THE DIRECTOR FOR REVIEW AND APPROVAL AT LEAST TWO WEEKS PRIOR TO THE START OF THE WORK.

PAYMENT: THIS WORK WILL BE PAID FOR AT THE CONTRACT LUMP SUM PRICE BID, WHICH PRICE AND PAYMENT SHALL BE FULL COMPENSATION FOR ALL LABOR, EQUIPMENT, MATERIALS AND INCIDENTALS NECESSARY TO COMPLETE THE WORK IN CONFORMANCE WITH THESE REQUIREMENTS, WITH PERTINENT PROVISIONS OF 202, AND TO THE SATISFACTION OF THE ENGINEER.

CUT LINE CONSTRUCTION JOINT PREPARATION: SAW CUT BOUNDARIES OF PROPOSED CONCRETE REMOVALS 1 INCH DEEP. REMOVE CONCRETE TO A ROUGH SURFACE. THE EXISTING REINFORCING STEEL, IF REQUIRED IN THE PLANS, SHALL BE LEFT IN PLACE. INSTALL DOWEL BARS IF SPECIFIED. PRIOR TO CONCRETE PLACEMENT ABRASIVELY CLEAN JOINT SURFACES AND EXISTING EXPOSED REINFORCEMENT TO REMOVE LOOSE AND DISINTEGRATED CONCRETE AND LOOSE RUST. THE JOINT SURFACE AND EXPOSED REINFORCEMENT SHALL BE THOROUGHLY CLEANED OF ALL DIRT, DUST, RUST OR OTHER FOREIGN MATERIAL BY THE USE OF WATER, AIR UNDER PRESSURE, OR OTHER METHODS THAT PRODUCE SATISFACTORY RESULTS. EXISTING REINFORCING STEEL DOES NOT HAVE TO HAVE A BRIGHT STEEL FINISH BUT ALL PACK AND LOOSE RUST SHALL BE REMOVED. EXISTING CONCRETE SURFACES WHICH NEW CONCRETE WILL BE PLACED AGAINST SHALL BE WET, BUT WITHOUT FREE WATER, AT THE TIME OF CONCRETE PLACEMENT.

SUBSTRUCTURE CONCRETE REMOVAL SHALL BE BY MEANS OF APPROVED PNEUMATIC HAMMERS EMPLOYING POINTED AND BLUNT CHISEL TOOLS. HYDRAULIC HOE-RAM TYPE HAMMERS WILL NOT BE PERMITTED. THE WEIGHT OF THE HAMMER SHALL NOT BE MORE THAN 35 POUNDS FOR REMOVAL WITHIN 18 INCHES OF PORTIONS TO BE PRESERVED. OUTSIDE THE 18 INCH LIMIT, HAMMERS NOT EXCEEDING 90 POUNDS, MAY BE USED UPON THE APPROVAL OF THE ENGINEER. PNEUMATIC HAMMERS SHALL NOT BE PLACED IN DIRECT CONTACT WITH REINFORCING STEEL THAT IS TO BE RETAINED IN THE REBUILT STRUCTURE.

ITEM 518, 6" PERFORATED CORRUGATED PLASTIC PIPE, AS PER PLAN: THIS ITEM SHALL INCLUDE FOR PAYMENT THE 4" NON-PERFORATED PLASTIC PIPE ALONG WITH ALL INCIDENTALS TO THE 4" PIPE.

EXISTING STRUCTURE VERIFICATION: DETAILS AND DIMENSIONS SHOWN ON THESE PLANS PERTAINING TO THE EXISTING STRUCTURE HAVE BEEN OBTAINED FROM PLANS OF THE EXISTING STRUCTURE AND FROM FIELD OBSERVATIONS AND MEASUREMENTS. CONSEQUENTLY, THEY ARE INDICATIVE OF THE EXISTING STRUCTURE AND THE PROPOSED WORK BUT THEY SHALL BE CONSIDERED TENTATIVE AND APPROXIMATE. THE CONTRACTOR IS REFERRED TO CMS SECTIONS 102.05, 105.02 AND 513.02/863.07.

CONTRACT BID PRICES SHALL BE BASED UPON A RECOGNITION OF THE UNCERTAINTIES DESCRIBED ABOVE AND UPON A PREBID EXAMINATION OF THE EXISTING STRUCTURE BY THE CONTRACTOR. HOWEVER, ALL PROJECT WORK SHALL BE BASED UPON ACTUAL DETAILS AND DIMENSIONS WHICH HAVE BEEN VERIFIED BY THE CONTRACTOR IN THE FIELD.

ITEM 509 REINFORCING STEEL, REPLACEMENT OF EXISTING REINFORCING STEEL, AS PER PLAN: ANY EXISTING REINFORCING BARS DEEMED BY THE ENGINEER TO BE UNUSABLE BECAUSE OF CORROSION SHALL BE REPLACED WITH NEW REINFORCING STEEL. ANY EXISTING REINFORCING STEEL BARS WHICH ARE TO BE INCORPORATED INTO THE NEW WORK AND ARE MADE UNUSABLE BY CONCRETE REMOVAL OPERATIONS SHALL BE REPLACED WITH NEW EPOXY COATED REINFORCING STEEL OF THE SAME SIZE AT THE CONTRACTOR'S COST. ALL WORK SHALL BE TO THE SATISFACTION OF THE ENGINEER. THE NUMBER OF POUNDS OF REINFORCING STEEL PAID FOR AT CONTRACT PRICES SHALL BE THE ACTUAL POUNDS OF REPLACEMENT REINFORCING STEEL SPECIFIED BY THE ENGINEER DUE TO CORROSION AND SHALL INCLUDE PLACEMENT, DOWELING, BENDING, SUPPORTING, TIE WIRES AND TYING OF THAT SPECIFIED REINFORCING STEEL.

ITEM 503, UNCLASSIFIED EXCAVATION, AS PER PLAN: UNCLASSIFIED EXCAVATION SHALL BE IN ACCORDANCE WITH 503 EXCEPT THAT THE BACKFILL MATERIAL BEHIND THE ABUTMENTS SHALL BE 203 MATERIAL PLACED IN 6 INCH LIFTS.

PILES TO BEDROCK:
PILES SHALL BE DRIVEN TO REFUSAL ON BEDROCK. REFUSAL SHALL BE CONSIDERED AS OBTAINED BY PENETRATING SOFT BEDROCK FOR SEVERAL INCHES WITH A MINIMUM RESISTANCE OF 20 BLOWS PER INCH OR REFUSAL SHALL BE CONSIDERED AS OBTAINED AFTER THE PILE HAS CONTACTED HARD BEDROCK AND THE PILE HAS THEN RECEIVED AT LEAST 20 BLOWS. THE CONTRACTOR IS RESPONSIBLE FOR SELECTING THE HAMMER SIZE TO ACHIEVE THE REQUIRED DEPTH TO BEDROCK AND REFUSAL.

THE ULTIMATE BEARING VALUE IS 95 TONS PER PILE FOR THE ABUTMENT PILES.
THE ULTIMATE BEARING VALUE IS 85 TONS PER PILE FOR THE PIER PILES.

ABUTMENT PILES:
23 HP10x42 PILES 60 FEET LONG, ESTIMATED LENGTH
24 HP10x42 PILES 55 FEET LONG, ESTIMATED LENGTH
23 PILES OF ORDER LENGTH 60 FEET LONG
24 PILES OF ORDER LENGTH 55 FEET LONG
24 SPLICES

PIER PILES:
81 HP10x42 PILES 25 FEET LONG, ESTIMATED LENGTH
81 PILES OF ORDER LENGTH 25 FEET LONG
41 SPLICES.

DESIGN AGENCY
BALKE ENGINEERS
1848 Summit Road
Cincinnati, Ohio 45237

DESIGNED	DRAWN	REVIEWED	DATE
FKL	WJH	CRS	6/01
CHECKED	REVISED	STRUCTURE FILE NUMBER	
MRS	—	1305573 L.B. 1305581 R.B.	

GENERAL NOTES
BRIDGE NO. CLE-275-0568
OVER EAST FORK OF THE LITTLE MIAMI RIVER

CLE-275-5.35

Filename: 0568NOTE.dgn

GENERAL NOTES

INSPECTION OF EXISTING STRUCTURAL STEEL: THE ENGINEER WILL VISUALLY INSPECT ALL EXISTING BUTT-WELDED SPLICES AND/OR TOP FLANGE COVER PLATE FILLET WELDS TO ENSURE THE WELDS, PLATES AND BEAMS OR GIRDERS ARE FREE OF DEFECTS AND CRACKS. IF THE DECK SLAB HAUNCH FORMS IMMEDIATELY ADJACENT TO SUCH WELDS INTERFERE WITH THE ENGINEER'S INSPECTION THEY SHALL BE REMOVED OR NOT BE ERECTED UNTIL AFTER THE INSPECTION. THE INSPECTION SHALL NOT TAKE PLACE UNTIL AFTER THE TOP FLANGES ARE CLEANED AS SPECIFIED IN SS 842.08, BUT IT SHALL BE DONE BEFORE THE DECK SLAB REINFORCEMENT IS INSTALLED. THE COST ASSOCIATED WITH THIS INSPECTION SHALL BE INCLUDED WITH ITEM SS 842, SUPERSTRUCTURE CONCRETE FOR PAYMENT. ANY CRACKS FOUND SHOULD BE REPORTED TO THE OFFICE OF STRUCTURAL ENGINEERING, BRIDGE CONSTRUCTION SPECIALIST, ALONG WITH SPECIFIC INFORMATION ON LOCATION OF THE CRACKS, LENGTH, AND DEPTH SO AN EVALUATION AND REPAIR OR REPLACEMENT RECOMMENDATION CAN BE MADE.

USE OF NON-ASBESTOS CONTAINING MATERIALS:
THE CONTRACTOR SHALL AT NO TIME INCORPORATE ANY MATERIALS WHICH ARE COMPOSED OF OR CONTAIN ANY AMOUNTS OF ASBESTOS. THE SUBSTITUTION OF MATERIALS WHICH CONTAIN ANY AMOUNTS OF ASBESTOS WILL IN NO CIRCUMSTANCRES BE ACCEPTABLE. UPON COMPLETION OF THE PROJECT, THE CONTRACTOR SHALL SUBMIT A WRITTEN STATEMENT OF CERTIFICATION ASSERTING THAT NO ASBESTOS CONTAINING MATERIALS WERE USED IN ANY PORTION OF THE CONSTRUCTION.

ITEM 863 STRUCTURAL STEEL MEMBERS MISCELLANEOUS FABRICATION, AS PER PLAN, (OTHER DESCRIPTION). ALL SECTIONS OF SS 863 APPLY EXCEPT AS REVISED HEREIN. THE ENGINEER IS RESPONSIBLE FOR ENSURING ANY SHOP OR FIELD FABRICATED STEEL SUPPLIED UNDER THIS BID ITEM IS ACCEPTABLE. THE REQUIREMENTS FOR SUBMITTAL OF SHOP DRAWINGS TO THE OFFICE OF STRUCTURAL ENGINEERING IS WAIVED. AT THE ENGINEER'S OPTION, THE CONTRACTOR SHALL EITHER SUPPLY THE ENGINEER WITH SHOP DRAWINGS, REQUIRED IN SECTION 863.08, PRIOR TO ANY INCORPORATION OF SHOP FABRICATED STEEL AT THE PROJECT, OR SUPPLY THE ENGINEER WITH "AS FABRICATED" DRAWINGS, MEETING 863.08, AFTER COMPLETION OF FIELD FABRICATION. THE ENGINEER SHALL ASSURE THE SUBMITTED DRAWINGS MATCH THE FINAL AS BUILT STEEL INCORPORATED INTO THE WORK. IF THE ENGINEER IS SATISFIED WITH THE DRAWINGS AND THE DELIVERED MATERIALS, THE CONTRACTOR SHALL SUPPLY A COPY SET, STAMPED AND DATED AS PER 863.08, TO THE OFFICE OF STRUCTURAL ENGINEERING FOR RECORD PURPOSES. SUBMITTAL REQUIREMENTS UNDER 863.09, MATERIALS, SHALL BE MADE TO THE ENGINEER. THE CONTRACTOR SHALL FURNISH A COPY OF THE WRITTEN LETTER OF ACCEPTANCE, 863.09, TO THE OFFICE OF STRUCTURAL ENGINEERING WRITTEN LETTER OF ACCEPTANCE.

THE ENGINEER, AT OR BEFORE THE PRE-CONSTRUCTION MEETING, MAY CHOOSE TO REQUEST ASSISTANCE, AS REQUIRED, FROM THE OFFICE OF STRUCTURAL ENGINEERING.

STEEL MEMBERS INCLUDED IN THIS ITEM INCLUDE INTERMEDIATE CROSSFRAMES.

A CLOSURE POUR SHALL BE PROVIDED BETWEEN THE TWO DECK CONSTRUCTION STAGES. THE EXISTING CROSSFRAMES MUST BE CUT TO ISOLATE THE TWO STAGES. THE FALSEWORK FOR THE STAGE 2 DECK CANNOT BE CONNECTED TO THE STAGE 1 FALSEWORK.

ITEM 516, JACKING AND TEMPORARY SUPPORT OF SUPERSTRUCTURE, AS PER PLAN: THIS ITEM SHALL CONSIST OF FURNISHING ALL NECESSARY LABOR, MATERIALS, AND EQUIPMENT TO RAISE OR RE-POSITION ANY EXISTING STRUCTURES TO THE DIMENSIONS AND REQUIREMENTS DEFINED IN THE PROJECT PLANS. THE CONTRACTOR SHALL BE RESPONSIBLE FOR THE DESIGN, INSTALLATION AND OPERATION OF AN ADEQUATE JACKING SYSTEM, INCLUDING ANY TEMPORARY OR PERMANENT SUPPORTS NECESSARY TO PERFORM THE WORK DESCRIBED IN THE PROJECT PLANS. THREE (3) SETS OF JACKING PLANS, WHICH INCLUDE THE INFORMATION DESCRIBED IN THIS NOTE, SHALL BE SUBMITTED TO THE DIRECTOR FOR APPROVAL AT LEAST THIRTY (30) DAYS BEFORE ACTUAL WORK IS TO BEGIN. THE PLANS SHALL BE PREPARED AND STAMPED BY A OHIO REGISTERED PROFESSIONAL ENGINEER. JACKING SUBMITTALS SHALL INCLUDE AT LEAST THE FOLLOWING:

1. THE SIGNATURE AND NUMBER, OR PROFESSIONAL SEAL, OF THE OHIO REGISTERED PROFESSIONAL ENGINEER WHO PREPARED THE SUBMITTAL.

2. CALCULATIONS AND ANALYSES OF THE STRUCTURE TO DETERMINE AND DEFINE THE ACTUAL LOADING APPLIED AT THE CONTRACTOR'S SELECTED JACKING POINTS.

3. A DRAWING SHOWING THE PHYSICAL AND DIMENSIONAL POSITION OF THE JACKS WITH RESPECT TO THE STRUCTURE INCLUDING CLEARANCES AND CENTER OF LIFT.

4. A SCHEMATIC LAYOUT OF JACKS, CHECK VALVES, PUMPS WITH 3 WAY RETRACTOR VALVE, PRESSURE GAGES, FLOW CONTROL VALVES, ETC. IN ACCORDANCE WITH MANUFACTURER'S RECOMMENDATIONS. ALL JACKS FOR EACH ABUTMENT OR PIER SHALL BE CONNECTED TOGETHER. ALL JACKS AT EACH ABUTMENT OR PIER SHALL BE THE SAME SIZE.

5. ANALYSIS AND CALCULATIONS OF THE STRESSES INDUCED OR CREATED IN THE STRUCTURE AND ANY TEMPORARY OR PERMANENT SUPPORTS. DESIGN CALCULATIONS FOR ANY TEMPORARY OR PERMANENT SUPPORTS.

6. PHYSICAL DIMENSIONS, MATERIALS, AND FABRICATION DETAILS OF ANY TEMPORARY OR PERMANENT SUPPORTS. HORIZONTAL AND VERTICAL MOVEMENT RESTRAINT SHALL BE PROVIDED.

7. A STEP BY STEP PROCEDURE DETAILING ALL STEPS IN THE JACKING OPERATION.

8. METHOD OF ATTACHMENT TO STRUCTURAL MEMBERS. WELDING TO TENSION AREAS WILL NOT BE PERMITTED.

THE ENTIRE SYSTEM INCLUDING JACKS SHALL HAVE 20% MORE CAPACITY THAN REQUIRED BASED ON CALCULATED LOADS.

FOR LIFTS GREATER THAN 1 INCH, JACKS SHALL HAVE LOCKING NUTS TO POSITIVELY LOCK AND SUPPORT THE STRUCTURE DURING THE LIFT.

JACKS SHALL HAVE A SWIVEL LOAD CAP, A DOMED PISTON HEAD OR SOME OTHER DEVICE TO PROTECT AGAINST THE EFFECTS OF SIDE LOAD ON THE JACK.

JACKS ALONE SHALL NOT BE USED TO SUPPORT LOADS EXCEPT DURING THE ACTUAL JACKING OPERATION. TEMPORARY SUPPORTS, BLOCKING OR OTHER METHODS APPROVED BY THE DIRECTOR SHALL BE USED.

SINGLE ACTING RAMS WITH NO OVER-TRAVEL PROTECTION SYSTEM SHALL NOT BE USED.

SPARE EQUIPMENT SHALL BE AVAILABLE ON SITE FOR THE REQUIRED STRUCTURE RAISING TO PROCEED IN THE EVENT OF BREAKDOWN. A LIST OF SPARE EQUIPMENT SHALL BE PROVIDED TO THE ENGINEER.

AT A MINIMUM, A JACKING OPERATION SHALL LIFT ALL BEAMS AT ANY ONE ABUTMENT OR PIER SIMULTANEOUSLY. THE ONLY EXCEPTION IS THE SITUATION WHERE THE WORK INVOLVES REPLACING OR REHABILITATING INDIVIDUAL BEARINGS; NO PERMANENT SHIMMING IS REQUIRED AND THE HEIGHT OF THE LIFT SHALL NOT EXCEED ¼ INCH.

MAXIMUM DIFFERENTIAL JACKING HEIGHT BETWEEN ANY ADJACENT ABUTMENTS OR PIERS SHALL BE 1 INCH OR LESS. THIS HEIGHT MAY BE MODIFIED IF CALCULATIONS, BY THE CONTRACTOR'S OHIO REGISTERED PROFESSIONAL ENGINEER, SHOW THE SUPERSTRUCTURE COMPONENTS WILL NOT BE TEMPORARILY STRESSED BEYOND ALLOWABLE STRESSES FOR THOSE COMPONENTS AND THAT NO PERMANENT STRESSES WILL BE INDUCED IN THE COMPONENTS AFTER THEY OBTAIN THEIR FINAL POSITION.

IF, DURING THE JACKING OPERATIONS, CRACKING OF THE CONCRETE SUPERSTRUCTURE, SEPARATION OF THE CONCRETE DECK FROM THE STEEL STRINGERS, OR OTHER DAMAGE TO THE STRUCTURE IS VISUALLY OBSERVED, THE JACKING OPERATION SHALL IMMEDIATELY CEASE AND APPROVED SUPPORTS SHALL BE INSTALLED. THE CONTRACTOR SHALL THEN ANALYZE THE DAMAGE AND SUBMIT A METHOD OF CORRECTION TO THE ENGINEER FOR APPROVAL. ANY BEAMS THAT SEPARATE FROM THE DECK SHALL BE EPOXY INJECTED FOR THE DISTANCE OF THE SEPARATION IN ACCORDANCE WITH ODOT'S PROPOSAL NOTE "CONCRETE REPAIR BY EPOXY INJECTION". COST OF THIS EPOXY INJECTION OR OTHER REQUIRED REPAIRS SHALL BE BORNE BY THE CONTRACTOR.

THE CONTRACTOR SHALL DEMONSTRATE TO THE ENGINEER THAT THE BRIDGE BEARINGS ARE FULLY SEATED AT ALL CONTACT AREAS. IF FULL SEATING IS NOT ATTAINED, SUITABLE MEANS OF REPAIR, SUBJECT TO THE ENGINEER'S APPROVAL, WILL BE REQUIRED AT THE CONTRACTOR'S EXPENSE.

PAYMENT SHALL BE MADE AT THE LUMP SUM PRICE BID FOR ITEM 516, JACKING AND TEMPORARY SUPPORT OF SUPERSTRUCTURE, AS PER PLAN. THIS SHALL INCLUDE ALL NECESSARY TOOLS, LABOR, EQUIPMENT AND MATERIALS NECESSARY TO COMPLETE THIS ITEM OF WORK.

ALL SURFACES TO BE PATCHED AND THE EXPOSED REINFORCING STEEL WITHIN SHALL BE THOROUGHLY CLEANED BY ABRASIVE BLASTING PRIOR TO THE CLEANING SPECIFIED BY 519.04. CLEANING SHALL PRECEDE APPLICATION OF THE PATCHING MATERIAL OR ERECTION OF THE FORMS BY NOT MORE THAN 24 HOURS.

ITEM 842, CLASS C CONCRETE, ABUTMENT INCLUDING FOOTING, AS PER PLAN: IN ADDITION TO THE REQUIREMENTS OF ITEM 842, A REFERENCE DISK SHALL BE CAST IN THE ABUTMENT CONCRETE. THE DISK WILL BE CENTERED ON THE TOP HORIZONTAL SURFACE OF THE FORWARD ABUTMENT RIGHT WINGWALL. THE DISK WILL BE PROVIDED BY THE DISTRICT EIGHT SURVEY MANAGER. THE CONTRACTOR WILL MARK THE DISK WITH THE NAVD88 PROJECT ELEVATION UNDER THE SUPERVISION OF A PROFESSIONAL SURVEYOR REGISTERED IN THE STATE OF OHIO.

CONVERSION OF STANDARD DRAWINGS:
SOME OF THE STANDARD DRAWINGS REFERENCED IN THIS PLANS ARE METRIC. ANY CONVERSION OF DIMENSIONS REQUIRED TO CONSTRUCT THE ITEMS SHOWN ON THE STANDARDS SHALL BE THE RESPONSIBILITY OF THE CONTRACTOR. CONVERSIONS SHALL BE MADE USING THE SI (METRIC) TO ENGLISH CONVERSIONS FACTORS PROVIDED IN SECTION 109.011 OF THE 1997 CONSTRUCTION AND MATERIALS SPECIFICATIONS. THE APPENDIX OF ASTM E380 SHALL BE UTILIZED FOR ANY ADDITIONAL CONVERSION FACTORS REQUIRED. CONVERSIONS SHALL BE APPROPRIATELY PRECISE AND SHALL REFLECT STANDARD INDUSTRY ENGLISH VALUES WHERE SUITABLE.

ITEM 601, ROCK CHANNEL PROTECTION, TYPE B, WITH FILTER FABRIC, AS PER PLAN: A CONTINGENCY QUANTITY HAS BEEN INCLUDED TO BE USED AS DIRECTED BY THE ENGINEER TO REPLACE EXISTING CHANNEL PROTECTION AS NECESSARY. CONTRARY TO SPEC 601, BROKEN CONCRETE AND STONE ARE EXCLUDED AS MATERIALS. ONLY CLEAN, NON-TOXIC, SOUND AND DURABLE ROCK SHALL BE PLACED AS ROCK CHANNEL PROTECTION.

TEMPORARY ACCESS DRIVE AND WORK PADS
TEMPORARY ACCESS DRIVE SHALL BE CONSTRUCTED WITHIN LIMITS SHOWN IN PLANS. WORK PADS IN RIVER SHALL BE CONSTRUCTED OF CLEAN NON-ERODIBLE FILL MATERIAL TO APPROXIMATE LIMITS SHOWN ON PLANS WORK PADS SHALL BE REMOVED IMMEDIATELY FOLLOWING BRIDGE WORK AND STREAM BED RESTORED TO PRE-CONSTRUCTION CONTOURS AND ELEVATIONS.

ALL WORK IN RIVER SHALL BE PERFORMED DURING LOW FLOW STAGES OF THE RIVER.

ALL LABOR, MATERIALS, EQUIPMENT, AND INCIDENTALS REQUIRED TO CONSTRUCT THE TEMPORARY ACCESS DRIVE AND WORK PADS SHALL BE INCLUDED FOR PAYMENT IN THE PRICE BID FOR ITEM 503, COFFERDAMS, CRIBS, AND SHEETING, AS PER PLAN.

ITEM 503, COFFERDAMS, CRIBS, AND SHEETING, AS PER PLAN
DEWATERING OF COFFERDAMS SHALL BE PERFORMED IN ACCORDANCE WITH 503.03 DISCHARGE SHALL BE TREATED AS DIRECTED BY 107.21. UNDER NO CONDITIONS SHALL THE DISCHARGE BE PERMITTED TO FLOW DIRECTLY INTO THE RIVER.

RIVER WORK COORDINATION
THE CONTRACTOR SHALL NOTIFY THE OHIO DEPARTMENT OF NATURAL RESOURCES SCENIC RIVER COORDINATOR 7 DAYS PRIOR TO PERFORMING ANY WORK IN THE RIVER. CONTACT IS:

SW OHIO SCENIC RIVERS COORDINATOR
5349 WILMINGTON ROAD
OREGONIA, OHIO 45054-9740
PH. 513-934-0751

WHILE WORKING IN AND ADJACENT TO THE RIVER, THE CONTRACTOR SHALL NOT STORE ANY FUEL OR TOXIC/HAZARDOUS MATERIALS WITHIN THE 100 YEAR FLOODPLAIN (STA 295+00 TO 318+00) OF THE EAST FORK OF THE LITTLE MIAMI RIVER.

NO DISTURBANCE SHALL BE MADE TO THE RIVER OR RIVER BANKS BEYOND THE WORK PADS AND PIER CONSTRUCTION.

Filename: 0568NOTE2.dgn

DESIGN AGENCY
BALKE ENGINEERS
1848 Summit Road
Cincinnati, Ohio 45237

DESIGNED	DRAWN	REVIEWED	DATE
FKL	WJH	CRS	6/01
CHECKED	REVISED	STRUCTURE FILE NUMBER	
MRS	—	1305573 L.B. 1305581 R.B.	

GENERAL NOTES
BRIDGE NO. CLE-275-0568
OVER EAST FORK OF THE LITTLE MIAMI RIVER

CLE-275-5.35

ITEM 863 - STRUCTURAL STEEL, MISC.: PENCIL ABRASIVE BLASTING, GRINDING AND NDT

This work shall consist of the following sequence of operations performed at locations specified in the plans and directed by the Engineer.

1. Clean the suspected crack area by pencil abrasive blasting the paint and/or rust from the surface of the plates and adjacent welds or as designated in these plans.
2. The Engineer shall carefully visually inspect the cleaned area. Grinding may be directed by the Engineer to enhance investigation for crack presence. All grinding must be done cautiously especially in tension zones.
3. The Contractor shall perform non-destructive testing (NDT) in the area using magnetic particle examination and dye penetrant so that the Engineer may further inspect for cracks. Contractors' personnel performing NDT shall be qualified as per 513.21 of the CMS.
4. All cracks, crack tips and cracked tack welds shall be removed according to and paid for under Item Special - Drilling Structural Steel, and any cracks inaccessible to drilling shall be removed by carefully enlarging the drilled holes by grinding.
5. Perform steps 1 through 4 on the other side of this location.

The Pencil Abrasive Blasting referred to by the various items in these plans shall conform to the following:
The designated non-destructive testing (NDT) areas shall be cleaned of all paint, rust, and foreign materials by abrasive blasting to a surface quality equal to preparation grade Sa 2 1/2. Since the intent of the pencil blasting is to enhance the visual and NDT crack detection techniques performed upon the structural steel, a gentle blast shall be used such that the surface is not peened or otherwise cold worked. Silica sand shall not be used. The blasting shall be performed using a maximum compressed air pressure of 100 psi, a hose nozzle diameter of 1/4"+/-1/16" and a grade 30/60 coal slag abrasive or equivalent. Blasters used for surface preparation of structural steel coating shall not be used for pencil blasting. After abrasive blasting is complete the cleaned area shall be air blown clean.

The accepted number of NDT locations as described in this note will be paid for at the contract unit price per location, which price and payment shall be full compensation for furnishing all material, labor, and equipment necessary to clean, grind, and perform NDT on both sides of the suspected crack location. The Contractor shall demonstrate to the Engineer prior to the start of the work that he can satisfactorily perform pencil abrasive blasting according to these specifications.

Note: The Project Engineer shall inspect each location designated on the plans visually for cracks before any work at that location begins. A quantity for additional holes has been added to this quantity to allow for any unanticipated cracks at the time of plan preparation. The Contractor shall provide a safe and suitable means of access to all areas for inspection purposes in accordance with 105.11 of the CMS.

Payment will be made at the contract price bid under Item 863 - Structual Steel, Misc.: Pencil Abrasive Blasting, Grinding and NDT.

ITEM 863 - STRUCTURAL STEEL, MISC.: DRILLING STRUCTURAL STEEL, METHOD A

This work shall consist of drilling cracks and ends of cracks, grinding, and non-destructive testing as directed by the Engineer. No holes shall be drilled without approval of the Engineer.

Holes shall be drilled to remove entire cracks or the apparent ends of the cracks revealed by the NDT of suspected cracks detailed in these plans under Item 863 - Structural Steel Misc.: Pencil Abrasive Blasting, Grinding and NDT. The exposed circumference of each drilled hole shall be ground smooth and carefully inspected for cracks using magnetic particle examination and dye penetrant. Drilling, grinding, and testing shall continue until all crack ends are removed. When no cracks are detected at a location no holes shall be drilled under this item.

The center of the hole shall be positioned beyond the visible end of the crack so that the edge of the hole coincides with the end of the crack. If the crack on one side of the member is longer than on the other side, the crack shall be positioned relative to the longest crack. Flame cutting of holes is not permitted under any circumstances.

Since any of these cracks could propagate into the tension zones, removing their end is imperative. Cracks less than 1/2" long, and cracked areas or defects less than or equal to 3/4" in diameter shall be removed by a single 1" hole when practical. Ends of cracks longer than 1/2" shall be drilled with 1" diameter holes. 1.5" diameter holes may be drilled where the proximity of the crack and the adjacent steel precludes drilling a 1" diameter hole.

The location of all holes shall be determined by the Engineer and drilled under his direction. Before any drilling takes place the District Bridge Engineer shall be notified and his consent given.

The accepted number of holes drilled in the structural steel as detailed above will be paid for at the contract bid price per each hole, which price and payment shall be full compensation for furnishing all material, labor and equipment necessary for drilling holes, grinding and non-destructive testing. A quantity for additional holes has been added to this quantity to allow for any unanticipated cracks at the time of plan preparation. Payments will be made under:

Item 863 - Each - Structural Steel Misc.: Drilling Structural Steel (1" Dia. Hole, Grinding and NDT), Method A

Item 863 - Each - Structural Steel Misc.: Drilling Structural Steel (1 1/2" Dia. Hole, Grinding and NDT), Method A

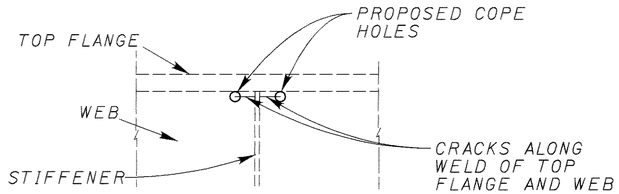

ITEM 863 - STRUCTURAL STEEL, MISC.: DRILLING STRUCTURAL STEEL, METHOD B

This work shall consist of drilling cracks and ends of cracks, grinding and non-destructive testing as directed by the Engineer. No holes shall be drilled without approval of the Engineer.

Holes shall be drilled to remove entire cracks or the apparent ends of the cracks revealed by the NDT of suspected cracks detailed in these plans under Item 863 - Structural Steel Misc.: Pencil Abrasive Blasting, Grinding and NDT. The exposed circumference of each drilled hole shall be ground smooth and carefully inspected for cracks using magnetic particle examination and dye penetrant. Drilling, grinding, and testing shall continue until all crack ends are removed. When no cracks are detected at a location no holes shall be drilled under this item.

The center of the hole shall be positioned beyond the visible end of the crack so that the edge of the hole coincides with the end of the crack. If the crack on one side of the member is longer than on the other side, the crack shall be positioned relative to the longest crack. Flame cutting of holes is not permitted under any circumstances.

Since any of these cracks could propagate into the tension zones, removing their end is imperative. Cracks less than 1.5" long, and cracked areas or defects less than 1.5" in diameter shall be removed by a single hole when practical. Ends of cracks longer than 1.5" and defects smaller than or equal to 1/2" shall be drilled with 1" diameter holes. Holes shall be carefully examined for cracks in the plane of the plate. 1.5" or 2" diameter holes may be drilled where the proximity of the crack and the adjacent steel precludes drilling a 1" diameter hole.

The location of all holes shall be determined by the Engineer and drilled under his direction. Before any drilling takes place the District Bridge Engineer shall be notified and his consent given.

The accepted number of holes drilled in the structural steel as detailed above will be paid for at the contract bid price per each hole, which price and payment shall be full compensation for furnishing all material, labor, and equipment necessary for drilling holes, grinding and non-destructive testing. A quantity for additonal holes has beed added to this quantity to allow for any unanticipated cracks at the time of plan preparation. Payments will be made under:

Item 863 - Each - Structural Steel Misc.: Drilling Structural Steel (1" Dia. Hole, Grinding and NDT), Method B

Item 863 - Each - Structural Steel Misc.: Drilling Structural Steel (1 1/2" Dia. Hole, Grinding and NDT), Method B

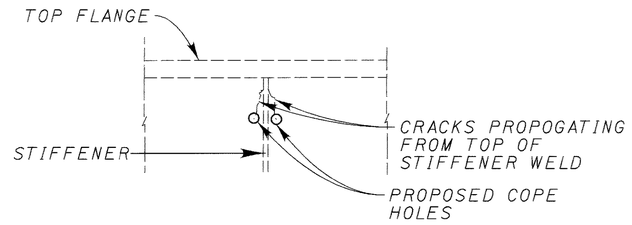

ITEM 863 - STRUCTUAL STEEL, MISC.: WELDING STRUCTUAL STEEL

This item includes welding the intermediate stiffeners with cross frames to the flange of the plate Girder. This includes only the top or bottom of the stiffener which is in contact with the flange. The section of the stiffener with a 1 1/4" ± gap between the stiffener and the flange shall not be welded. This work shall be done in accordance with item 863, and appropriate details in Std. Dwg. GSD-1-96.

Payment shall include all work required to weld the intermediate stiffeners with cross frames to the Girder flange in accordance with the above requirments. Payment will be made under:

Item - 863 - lump - Structural Steel, Misc.: Welding Structural Steel

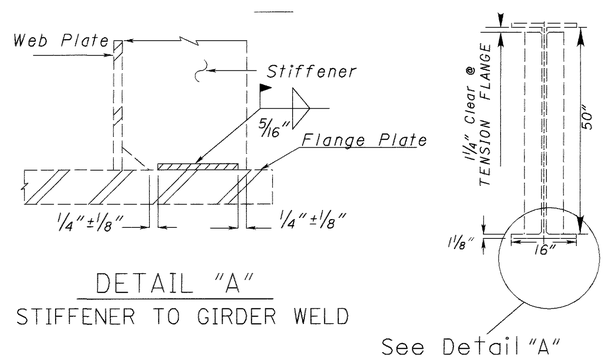

DETAIL "A"
STIFFENER TO GIRDER WELD

Section of Existing Girder
℄-16"x 1 1/8" Flange (Typical)
℄-50" x 5/16" Web (Typical)

DESIGN AGENCY
DISTRICT 8 PRODUCTION BRIDGE OFFICE

DESIGNED	DRAWN	REVIEWED	DATE
RSK	JLA	MLM	8/01
CHECKED	REVISED	STRUCTURE FILE NUMBER	
JFE		130558I & 1305573	

STEEL REPAIR NOTES

3A/37

668A
857

$$$$DATE$$$ $$TIME$$ USERINFO
$$$$$$$$$$$$$$$$$$$$DGNSPEC$$$$$$$$$$$$$$$$$$$$

CLE-275-0568 LEFT

ESTIMATED QUANTITIES

CALCULATED BY: FKL DATED 1-01
CHECKED BY: WJH DATED 6/01

FUNDING ①	FUNDING ②	ITEM	EXTENSION	TOTAL	UNIT	DESCRIPTION	LEFT BRIDGE SUPERSTRUCTURE ①	LEFT BRIDGE SUPERSTRUCTURE ②	LEFT BRIDGE ABUTMENT ①	LEFT BRIDGE ABUTMENT ②	LEFT BRIDGE PIER ①	LEFT BRIDGE PIER ②	GENERAL ①	GENERAL ②	SEE SHEET NO.
LUMP		202	11200	LUMP	-	PORTIONS OF STRUCTURE REMOVED							LUMP		
	LUMP	503	11101	LUMP	-	COFFERDAMS, CRIBS AND SHEETING, AS PER PLAN								LUMP	
	LUMP	503	21301	LUMP	-	UNCLASSIFIED EXCAVATION, AS PER PLAN				LUMP		LUMP			2
	LUMP	505	11100	LUMP	-	PILE DRIVING EQUIPMENT MOBILIZATION								LUMP	
	2520	507	00100	2520	LIN. FT.	STEEL PILES HP10X42, FURNISHED				1320		1200			
	2520	507	00150	2520	LIN. FT.	STEEL PILES HP10X42, DRIVEN				1320		1200			
	36	507	50500	36	EACH	STEEL PILE SPLICES				12		24			
755	54	SPECIAL	5126751O	809	SQ.YD.	SEALING OF CONCRETE SURFACES (EPOXY-URETHANE)*	723		32	54					
	23	516	13600	23	SQ.FT.	1" PREFORMED EXPANSION JOINT FILLER								23	12,13,14-18, 25,26
	66	516	13900	66	SQ.FT.	2" PREFORMED EXPANSION JOINT FILLER				66					
LUMP		516	47001	LUMP	-	JACKING AND TEMPORARY SUPPORT OF SUPERSTRUCTURE, AS PER PLAN	LUMP								
14	4	516	44100	18	EACH	ELASTOMERIC BEARING WITH INTERNAL LAMINATES AND LOAD PLATE (14"X22"X2.594" NEOPRENE)					14	4			
14	4	516	44100	18	EACH	ELASTOMERIC BEARING WITH INTERNAL LAMINATES AND LOAD PLATE (9½"X16"X2.958" NEOPRENE)			14	4					
	LUMP	518	21230	LUMP	-	POROUS BACKFILL WITH FILTER FABRIC				LUMP					
104	80	518	40001	184	LIN. FT.	6" PERFORATED CORRUGATED PLASTIC PIPE, AS PER PLAN			104	80					2
71		518	40010	71	LIN. FT.	6" NON-PERFORATED CORRUGATED PLASTIC PIPE, INCLUDING SPECIALS			71						
	50	601	32101	50	CU. YD.	ROCK CHANNEL PROTECTION, TYPE B WITH FILTER, AS PER PLAN								50	3
28,700		815	00050	28,700	SQ. FT.	SURFACE PREPARATION OF EXISTING STEEL, SYSTEM OZEU	28,700								
28,700		815	00056	28,700	SQ. FT.	FIELD PAINTING OF EXISTING STEEL, PRIME COAT, SYSTEM OZEU	28,700								
28,700		815	00060	28,700	SQ. FT.	FIELD PAINTING OF EXISTING STEEL, INTERMEDIATE COAT, SYSTEM OZEU	28,700								
28,700		815	00066	28,700	SQ. FT.	FIELD PAINTING OF EXISTING STEEL, FINISH COAT, SYSTEM OZEU	28,700								
	9,170	816	00620	9,170	SQ. FT.	FIELD PAINTING OF NEW STEEL, INTERMEDIATE AND FINISH COAT, SYSTEM 1ZEU		9170							
535	180	842	31508	715	CU. YD.	CLASS S CONCRETE, SUPERSTRUCTURE	535	180							
	231	842	41000	231	CU. YD.	CLASS C CONCRETE, PIER ABOVE FOOTINGS						231			
	120	842	43501	120	CU. YD.	CLASS C CONCRETE, ABUTMENT INCLUDING FOOTING, AS PER PLAN				120					3
	79	842	46500	79	CU. YD	CLASS C CONCRETE, FOOTING						79			
124		846	73000	124	SQ. YD	TREATING CONCRETE BRIDGE DECKS WITH HMWM RESIN	124								
	22,800	863	10201	22,800	POUND	STRUCTURAL STEEL MEMBERS, MISCELLANEOUS LEVEL FABRICATION AS PER PLAN		22,800							
	122,600	863	10280	122,600	POUND	STRUCTURAL STEEL MEMBERS, LEVEL FOUR (4) FABRICATION, A 709, GRADE 50		122,600							
4767	1362	863	20000	6129	EACH	WELDED STUD SHEAR CONNECTORS	4767	1362							
LUMP		863	95020	LUMP	-	STRUCTURAL STEEL, MISC.: WELDING STRUCTURAL STEEL	LUMP								
66		863	95030	66	EACH	STRUCTURAL STEEL, MISC.: PENCIL ABRASIVE BLASTING, GRINDING, AND NDT	66								
33		863	95030	33	EACH	STRUCTURAL STEEL, MISC.: DRILLING STRUCTURAL STEEL	33								
						(1" DIAMETER HOLE, GRINDING AND NDT) METHOD A									
2		863	95030	2	EACH	STRUCTURAL STEEL, MISC.: DRILLING STRUCTURAL STEEL	2								
						(1⅛" DIAMETER HOLE, GRINDING AND NDT) METHOD A									
14		863	95030	14	EACH	STRUCTURAL STEEL, MISC.: DRILLING STRUCTURAL STEEL	14								
						(1" DIAMETER HOLE, GRINDING AND NDT) METHOD B									
17		863	95030	17	EACH	STRUCTURAL STEEL, MISC.: DRILLING STRUCTURAL STEEL	17								
						(1⅛" DIAMETER HOLE, GRINDING AND NDT) METHOD B									

① INTERSTATE MAINTENANCE

② NATIONAL HIGHWAY

* SEE PROPOSAL NOTE

DESIGN AGENCY
BALKE ENGINEERS
1848 Summit Road
Cincinnati, Ohio 45237

DESIGNED FKL | DRAWN ALH,WJH | CHECKED MWS | REVISED — | REVISED CMS | DATE 6/01

STRUCTURE FILE NUMBER 1305573 L.B. 1305581 R.B.

ESTIMATED QUANTITIES
BRIDGE NO. CLE-275-0568
OVER EAST FORK OF THE LITTLE MIAMI RIVER

CLE-275-5.35

T:\Bridges\0568EQUAN.dgn

CLE-275-0568 RIGHT

ESTIMATED QUANTITIES

CALCULATED BY: FKL DATED 1-01
CHECKED BY: WJH DATED 6/01

FUNDING (1)	FUNDING (2)	ITEM	EXTENSION	TOTAL	UNIT	DESCRIPTION	RIGHT BRIDGE SUPERSTRUCTURE (1)	RIGHT BRIDGE SUPERSTRUCTURE (2)	RIGHT BRIDGE ABUTMENT (1)	RIGHT BRIDGE ABUTMENT (2)	RIGHT BRIDGE PIER (1)	RIGHT BRIDGE PIER (2)	GENERAL (1)	GENERAL (2)	SEE SHEET NO.
LUMP		202	11200	LUMP	-	PORTIONS OF STRUCTURE REMOVED							LUMP		
	LUMP	503	11101	LUMP	-	COFFERDAMS, CRIBS AND SHEETING, AS PER PLAN								LUMP	
	LUMP	503	21301	LUMP	-	UNCLASSIFIED EXCAVATION, AS PER PLAN				LUMP		LUMP			2
	LUMP	505	11100	LUMP	-	PILE DRIVING EQUIPMENT MOBILIZATION								LUMP	
	2205	507	00100	2205	LIN. FT.	STEEL PILES HP10X42, FURNISHED				1380		825			
	2205	507	00150	2205	LIN. FT.	STEEL PILES HP10X42, DRIVEN				1380		825			
	29	507	50500	29	EACH	STEEL PILE SPLICES				12		17			
761	74	SPECIAL	51267510	835	SQ. YD.	SEALING OF CONCRETE SURFACES (EPOXY-URETHANE)*	723		38	74				23	12,13,14-18, 25,26
	23	516	13600	23	SQ. FT.	1" PREFORMED EXPANSION JOINT FILLER									
	66	516	13900	66	SQ. FT.	2" PREFORMED EXPANSION JOINT FILLER				66					
LUMP		516	47001	LUMP	-	JACKING AND TEMPORARY SUPPORT OF SUPERSTRUCTURE, AS PER PLAN	LUMP								
18	2	516	44100	20	EACH	ELASTOMERIC BEARING WITH INTERNAL LAMINATES AND LOAD PLATE (14"X22"X2.594" NEOPRENE)					18	2			
18	2	516	44100	20	EACH	ELASTOMERIC BEARING WITH INTERNAL LAMINATES AND LOAD PLATE (9½"X16"X2.958" NEOPRENE)			18	2					
	LUMP	518	21230	LUMP	-	POROUS BACKFILL WITH FILTER FABRIC				LUMP					
128	80	518	40001	208	LIN. FT.	6" PERFORATED CORRUGATED PLASTIC PIPE, AS PER PLAN			128	80					2
67		518	40010	67	LIN. FT.	6" NON-PERFORATED CORRUGATED PLASTIC PIPE, INCLUDING SPECIALS			67						
4		519	11100	4	SQ. FT.	PATCHING CONCRETE STRUCTURE			4						
	50	601	32101	50	CU. YD.	ROCK CHANNEL PROTECTION, TYPE B WITH FILTER, AS PER PLAN								50	3
36,600		815	00050	36,600	SQ. FT.	SURFACE PREPARATION OF EXISTING STEEL, SYSTEM OZEU	36,600								
36,600		815	00056	36,600	SQ. FT.	FIELD PAINTING OF EXISTING STEEL, PRIME COAT, SYSTEM OZEU	36,600								
36,600		815	00060	36,600	SQ. FT.	FIELD PAINTING OF EXISTING STEEL, INTERMEDIATE COAT, SYSTEM OZEU	36,600								
36,600		815	00066	36,600	SQ. FT.	FIELD PAINTING OF EXISTING STEEL, FINISH COAT, SYSTEM OZEU	36,600								
	4,650	816	00620	4,650	SQ. FT.	FIELD PAINTING OF NEW STEEL, INTERMEDIATE AND FINISH COAT, SYSTEM IZEU		4650							
648	90	842	31508	738	CU. YD.	CLASS S CONCRETE, SUPERSTRUCTURE	648	90							
	164	842	41000	164	CU. YD.	CLASS C CONCRETE, PIER ABOVE FOOTINGS						164			
	130	842	43501	130	CU. YD.	CLASS C CONCRETE, ABUTMENT INCLUDING FOOTING, AS PER PLAN				130					3
	54	842	46500	54	CU. YD	CLASS C CONCRETE, FOOTING						54			
124		846	73000	124	SQ. YD	TREATING CONCRETE BRIDGE DECKS WITH HMWM RESIN	124								
	11,500	863	10201	11,500	POUND	STRUCTURAL STEEL MEMBERS, MISCELLANEOUS LEVEL FABRICATION AS PER PLAN		11,500							
	61,405	863	10280	61,405	POUND	STRUCTURAL STEEL MEMBERS, LEVEL FOUR (4) FABRICATION, A 709, GRADE 50		61,405							
5211	579	863	20000	5,790	EACH	WELDED STUD SHEAR CONNECTORS	5211	579							
LUMP		863	95020	LUMP	-	STRUCTURAL STEEL, MISC.: WELDING STRUCTURAL STEEL	LUMP								
56		863	95030	56	EACH	STRUCTURAL STEEL, MISC.: PENCIL ABRASIVE BLASTING, GRINDING, AND NDT	56								
35		863	95030	35	EACH	STRUCTURAL STEEL, MISC.: DRILLING STRUCTURAL STEEL	35								
						(1" DIAMETER HOLE, GRINDING AND NDT) METHOD A									
2		863	95030	2	EACH	STRUCTURAL STEEL, MISC.: DRILLING STRUCTURAL STEEL	2								
						(1½" DIAMETER HOLE, GRINDING AND NDT) METHOD A									
9		863	95030	9	EACH	STRUCTURAL STEEL, MISC.: DRILLING STRUCTURAL STEEL	9								
						(1" DIAMETER HOLE, GRINDING AND NDT) METHOD B									
10		863	95030	10	EACH	STRUCTURAL STEEL, MISC.: DRILLING STRUCTURAL STEEL	10								
						(1½" DIAMETER HOLE, GRINDING AND NDT) METHOD B									

(1) INTERSTATE MAINTENANCE

(2) NATIONAL HIGHWAY

* SEE PROPOSAL NOTE

DESIGN AGENCY
BALKE ENGINEERS
1848 Summit Road
Cincinnati, Ohio 45237

DATE 6/01
REVISED CRS
DRAWN ALT, WJH
DESIGNED FKL
CHECKED MRS

STRUCTURE FILE NUMBER 1305573 & 1305581 R.B.

ESTIMATED QUANTITIES
BRIDGE NO. CLE-275-0568
OVER EAST FORK OF THE LITTLE MIAMI RIVER

CLE-275-5.35

4A/37

669A
857

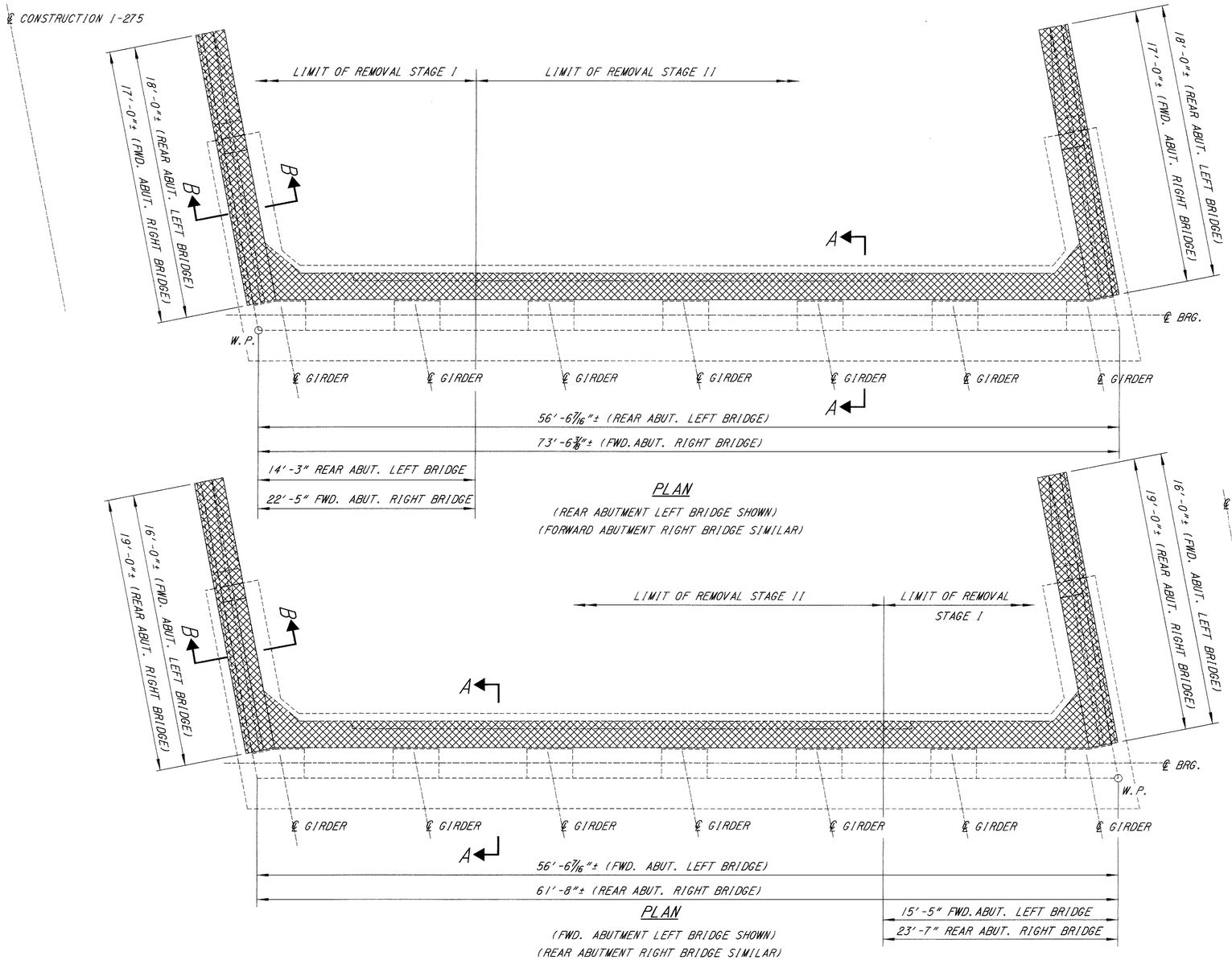

PLAN

(REAR ABUTMENT LEFT BRIDGE SHOWN)
(FORWARD ABUTMENT RIGHT BRIDGE SIMILAR)

PLAN

(FWD. ABUTMENT LEFT BRIDGE SHOWN)
(REAR ABUTMENT RIGHT BRIDGE SIMILAR)

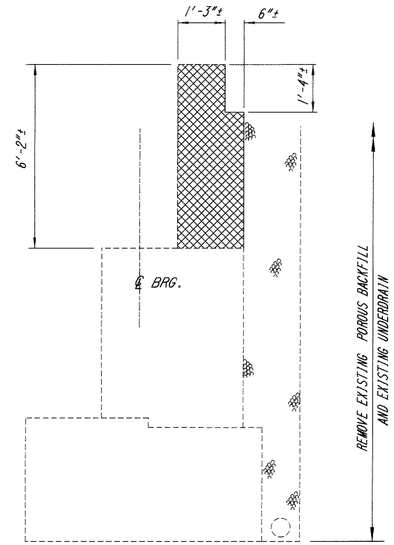

SECTION A-A

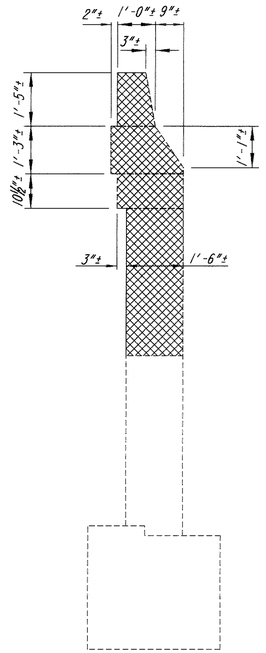

SECTION B-B

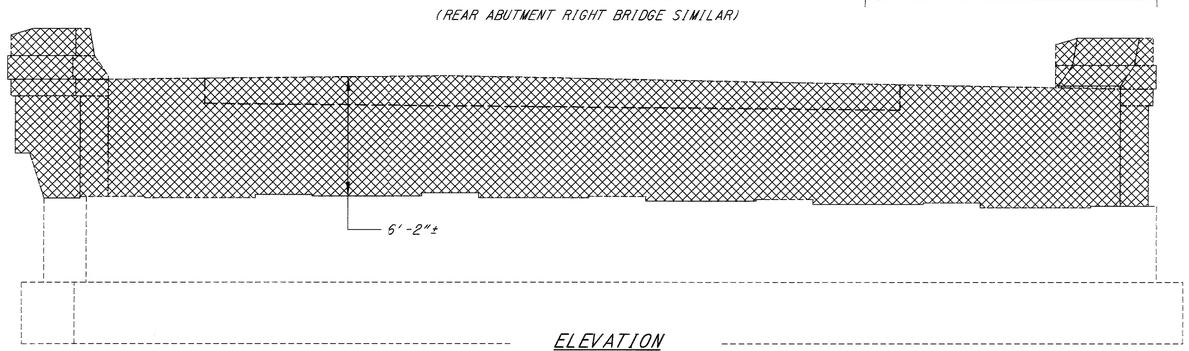

ELEVATION

TYPICAL

NOTES:

1. LIMITS OF CONCRETE AND REINFORCING TO BE REMOVED.
2. W.P. = WORK POINT

DESIGN AGENCY
BALKE ENGINEERS
1848 Summit Road
Cincinnati, Ohio 45237

DESIGNED	DRAWN	REVIEWED	DATE
FKL	WJH	CRS	6/01
CHECKED	REVISED	STRUCTURE FILE NUMBER	
MRS	—	1305573 L.B. 1305581 R.B.	

ABUTMENT CONCRETE REMOVAL DETAILS
BRIDGE NO. CLE-275-0568
OVER EAST FORK OF LITTLE MIAMI RIVER

CLE-275-5.35

Filename: 0568REMOVAL.dgn

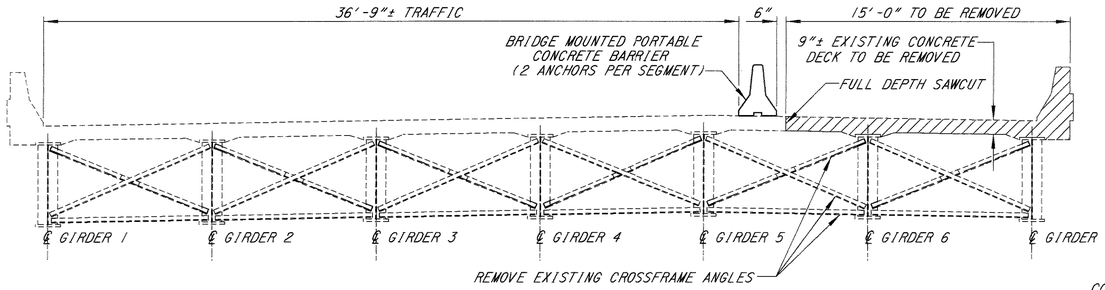

REMOVAL: STAGE I

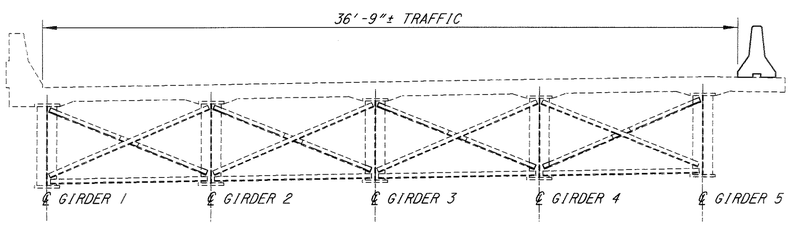

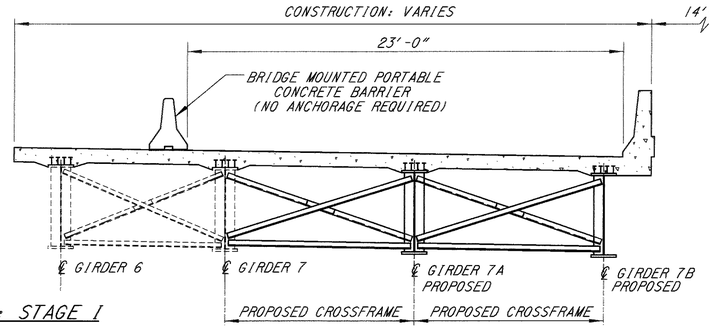

CONSTRUCTION: STAGE I

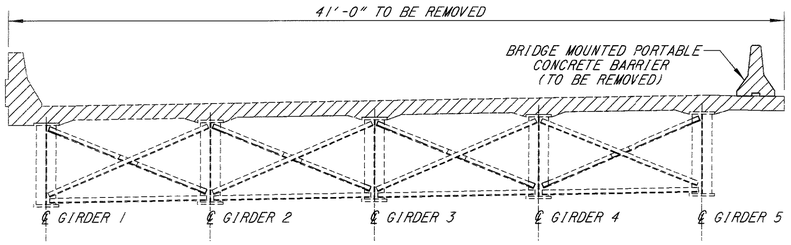

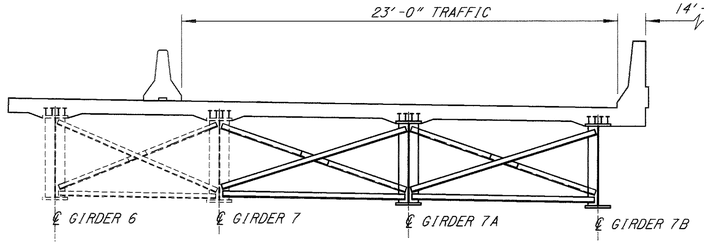

REMOVAL: STAGE II

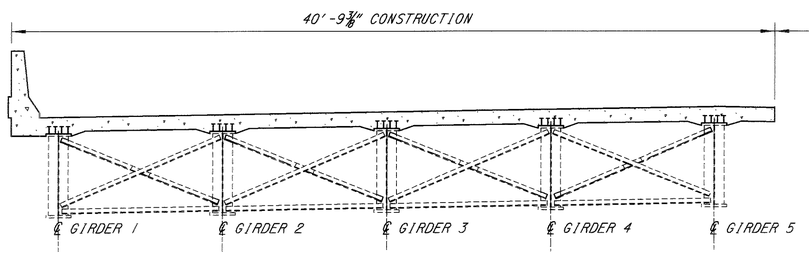

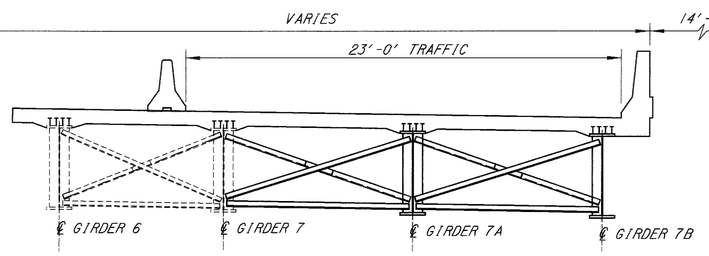

CONSTRUCTION: STAGE II

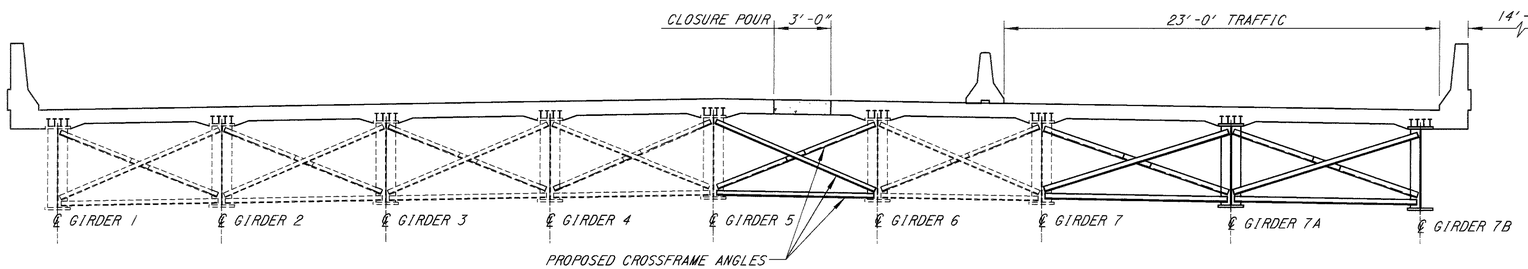

CONSTRUCTION: STAGE II CLOSURE POUR

℄ CONSTRUCTION I-275

REMOVAL: STAGE I
1. INSTALL BRIDGE MOUNTED PORTABLE CONCRETE BARRIER.
2. CLOSE THE WEST SIDE TO TRAFFIC. MAINTAIN TRAFFIC ON THE EAST SIDE.
3. REMOVE THE EXISTING CROSSFRAME ANGLES BETWEEN GIRDERS 5 AND 6.
4. REMOVE THE EXISTING CONCRETE PARAPET AND DECK.

℄ CONSTRUCTION I-275

CONSTRUCTION: STAGE I
1. ERECT NEW GIRDERS 7A AND 7B.
2. INSTALL SHEAR STUDS.
3. INSTALL CROSSFRAME BETWEEN EXISTING GIRDER 7 AND NEW GIRDER 7A AND BETWEEN NEW GIRDERS 7A AND 7B.
4. PLACE NEW CONCRETE DECK AND PARAPET.
5. INSTALL BRIDGE MOUNTED PORTABLE BARRIER ONTO THE NEWLY COMPLETED DECK.
6. MOVE TRAFFIC TO NEW DECK.

℄ CONSTRUCTION I-275

REMOVAL: STAGE II
1. REMOVE BRIDGE MOUNTED PORTABLE BARRIER.
2. REMOVE THE REMAINING PORTION OF THE CONCRETE PARAPET AND DECK.

℄ CONSTRUCTION I-275

CONSTRUCTION: STAGE II
1. INSTALL SHEAR STUDS
2. POUR CONCRETE DECK AND PARAPET.

℄ CONSTRUCTION I-275

CONSTRUCTION: STAGE II CLOSURE POUR
1. INSTALL PROPOSED CROSSFRAME ANGLES BETWEEN GIRDER 5 AND GIRDER 6.
2. POUR CONCRETE DECK CLOSURE POUR
3. SEAL CONSTRUCTION JOINTS IN CONCRETE DECK.
4. REMOVE BRIDGE MOUNTED PORTABLE CONCRETE BARRIER.
5. OPEN COMPLETED BRIDGE TO TRAFFIC.

NOTES:
1. FOR MAINTAINANCE OF TRAFFIC DETAILS, SEE ROADWAY SHEETS.
2. FOR BRIDGE MOUNTED PORTABLE CONCRETE BARRIER DETAILS, SEE STANDARD DRAWING PCB-91.

DESIGN AGENCY
BALKE ENGINEERS
1848 Summit Road
Cincinnati, Ohio 45237

DESIGNED	DRAWN	REVIEWED	DATE
FKL	WJH,ALH	CRS	6/01
CHECKED	REVISED	STRUCTURE FILE NUMBER	
MPS	—	302567, R.B.	

SEQUENCE OF CONSTRUCTION: LEFT BRIDGE

BRIDGE NO. CLE-275-0568
OVER EAST FORK OF THE LITTLE MIAMI RIVER

CLE-275-5.35

File name: 0568sq3x.dgn

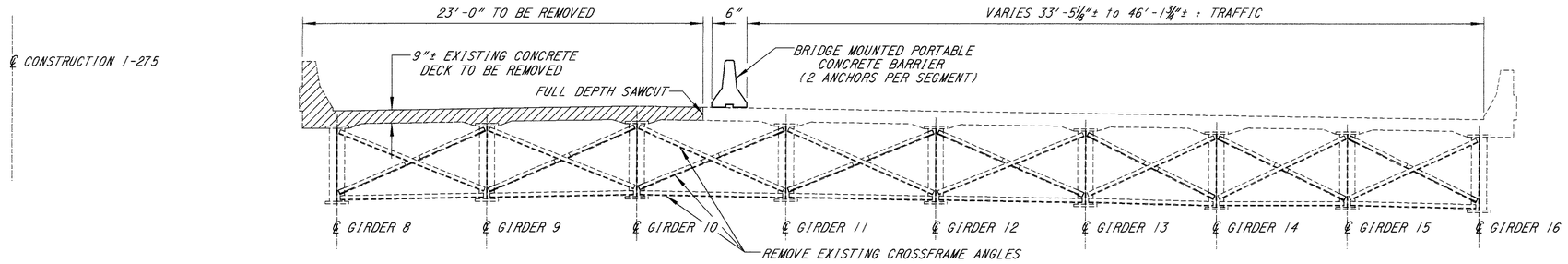

REMOVAL: STAGE I

REMOVAL: STAGE I
1. INSTALL BRIDGE MOUNTED PORTABLE CONCRETE BARRIER.
2. CLOSE THE EAST SIDE TO TRAFFIC. MAINTAIN TRAFFIC ON THE WEST SIDE.
3. REMOVE THE EXISTING CROSSFRAME ANGLES BETWEEN GIRDERS 10 AND 11.
4. REMOVE THE EXISTING CONCRETE PARAPET AND DECK.

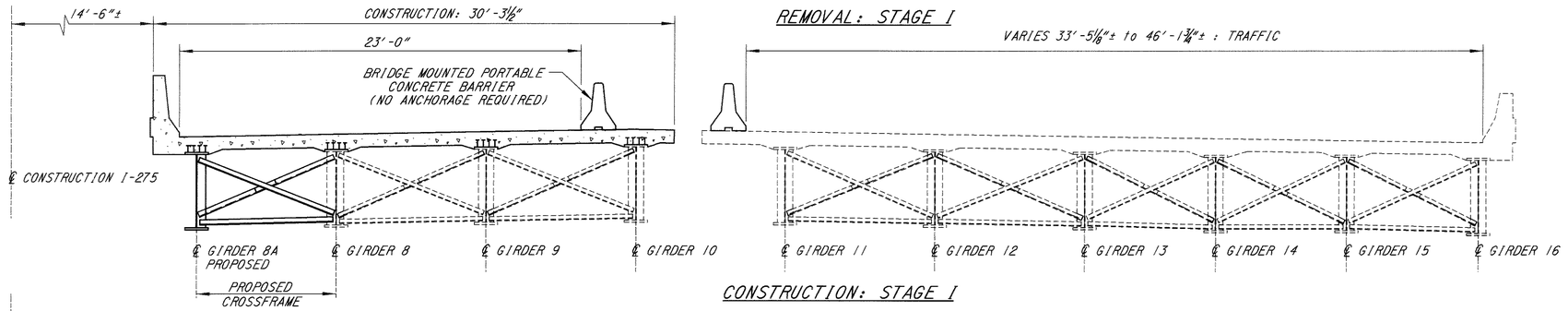

CONSTRUCTION: STAGE I

CONSTRUCTION: STAGE I
1. ERECT NEW GIRDERS 8A.
2. INSTALL SHEAR STUDS.
3. INSTALL CROSSFRAME BETWEEN EXISTING GIRDER 8 AND GIRDER 8A.
4. PLACE NEW CONCRETE DECK AND PARAPET.
5. INSTALL BRIDGE MOUNTED PORTABLE BARRIER ONTO THE NEWLY COMPLETED DECK.
6. MOVE TRAFFIC TO NEW DECK.

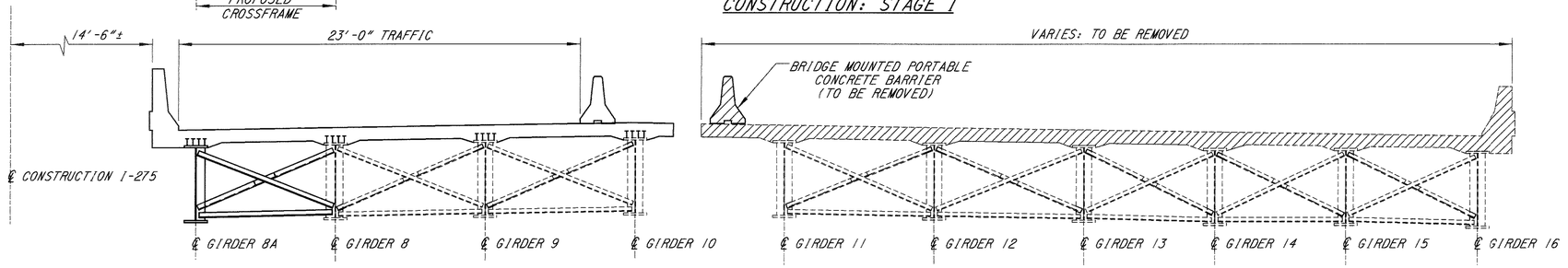

REMOVAL: STAGE II

REMOVAL: STAGE II
1. REMOVE BRIDGE MOUNTED PORTABLE BARRIER.
2. REMOVE THE REMAINING PORTION OF THE CONCRETE PARAPET AND DECK.

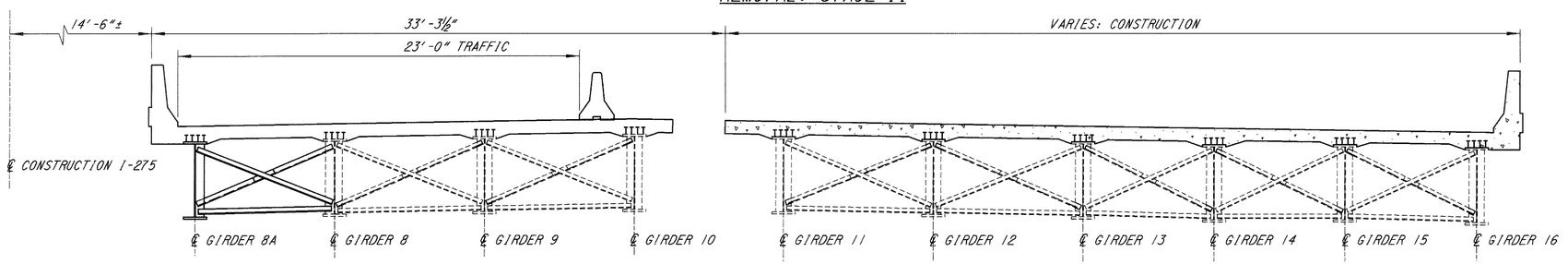

CONSTRUCTION: STAGE II

CONSTRUCTION: STAGE II
1. INSTALL SHEAR STUDS
2. POUR CONCRETE DECK AND PARAPET.

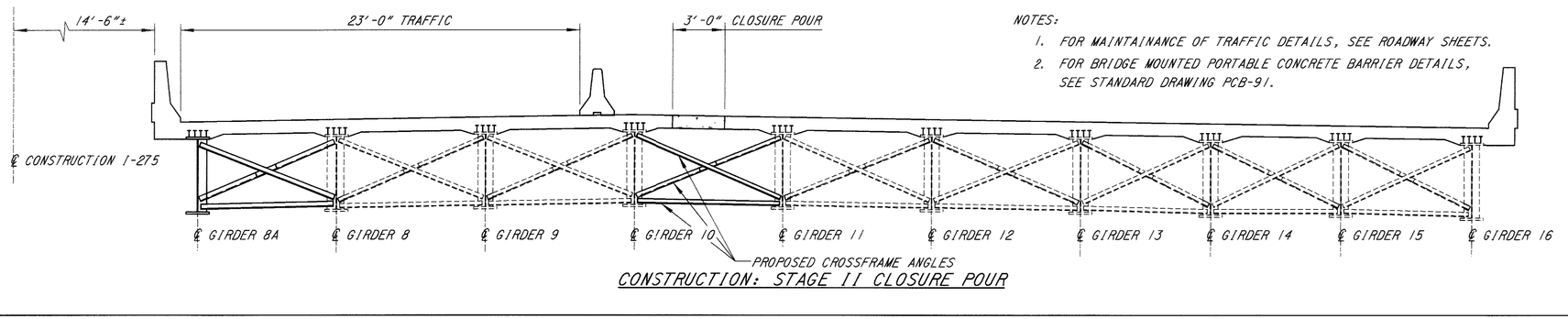

CONSTRUCTION: STAGE II CLOSURE POUR

NOTES:
1. FOR MAINTAINANCE OF TRAFFIC DETAILS, SEE ROADWAY SHEETS.
2. FOR BRIDGE MOUNTED PORTABLE CONCRETE BARRIER DETAILS, SEE STANDARD DRAWING PCB-91.

CONSTRUCTION: STAGE II CLOSURE POUR
1. INSTALL PROPOSED CROSSFRAME ANGLES BETWEEN GIRDER 10 AND GIRDER 11.
2. POUR CONCRETE DECK CLOSURE POUR
3. SEAL CONSTRUCTION JOINTS IN CONCRETE DECK.
4. REMOVE BRIDGE MOUNTED PORTABLE CONCRETE BARRIER.
5. OPEN COMPLETED BRIDGE TO TRAFFIC.

F:\Automa - CE\BSDs\SV_dgn

DESIGN AGENCY
BALKE ENGINEERS
1848 Summit Road
Cincinnati, Ohio 45237

DESIGNED	DRAWN	REVIEWED	DATE
FKL	WJH, ALH	CRS	6-01
CHECKED	REVISED	STRUCTURE FILE NUMBER	
MPS	—	120527 / 120538 / 120539	R.B.

SEQUENCE OF CONSTRUCTION: RIGHT BRIDGE
BRIDGE NO. CLE-275-0568
OVER EAST FORK OF THE LITTLE MIAMI RIVER

CLE-275-5.35

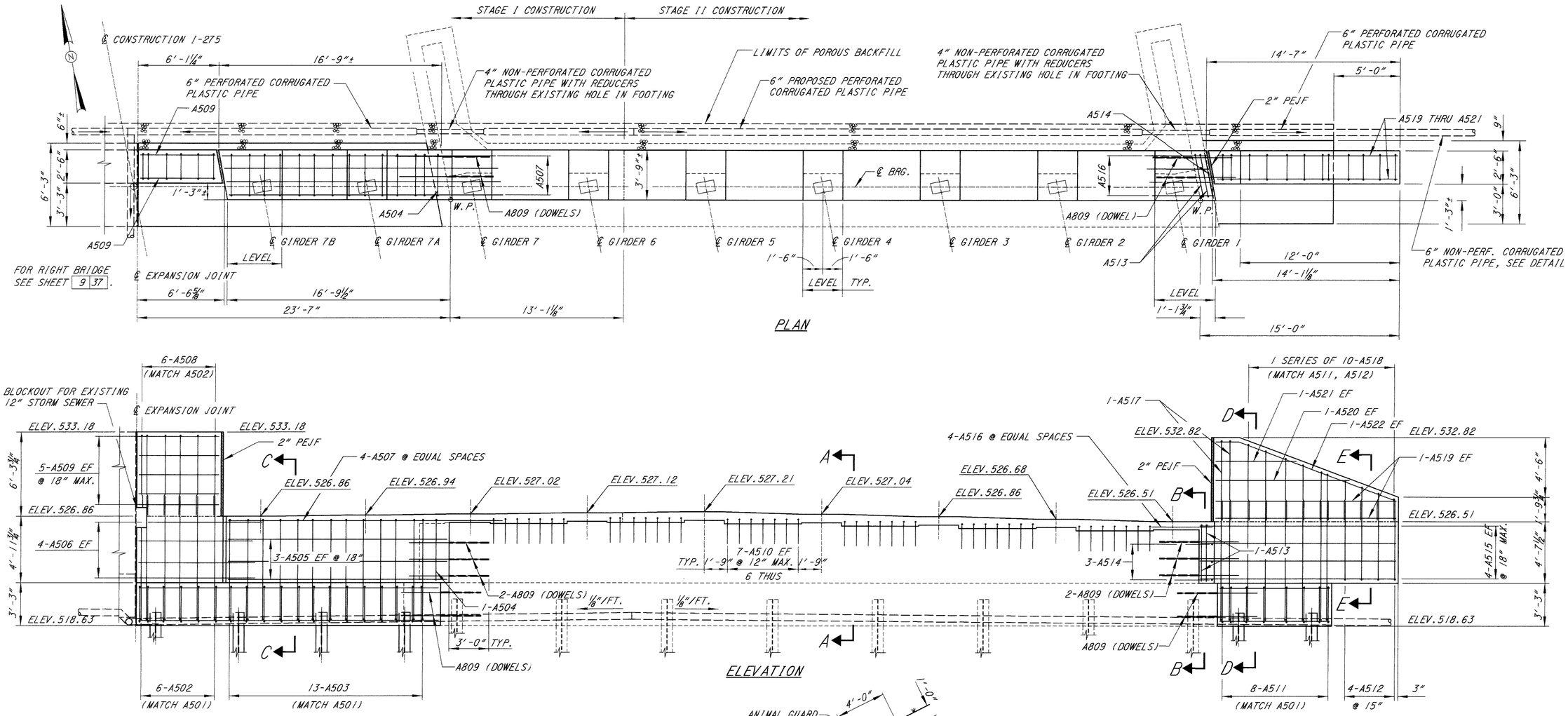

PLAN

ELEVATION

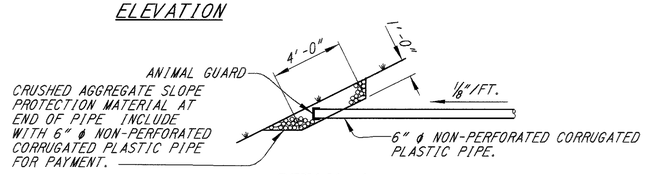

DETAIL 1

FOOTING PLAN

NOTES:

1. FOR ADDITIONAL INFORMATION, SEE STD. SICD-1-96.
2. FOR SECTIONS A-A, B-B, C-C, D-D & E-E, SEE SHEET 12 37 .
3. EF = EACH FACE
   NF = NEAR FACE
   FF = FAR FACE
   PEJF = PREFORMED EXPANSION JOINT FILLER
   W.P. = WORK POINT
4. ▼ DENOTES HP10x42 PILE BATTERED 1:3 IN DIRECTION OF ARROW.
   ④ DENOTES PILE NUMBER.
5. POROUS BACKFILL WITH FILTER FABRIC, 2 FEET THICK SHALL EXTEND UP TO THE PLANE OF THE SUBGRADE, TO 1 FOOT BELOW THE EMBANKMENT AND LATERALLY TO THE ENDS OF THE WINGWALLS.

DESIGN AGENCY
BALKE ENGINEERS
1848 Summit Road
Cincinnati, Ohio 45237

DESIGNED	DRAWN	REVIEWED	DATE
FKL	WJH/RHH	CBS	6/01
CHECKED	REVISED	STRUCTURE FILE NUMBER	
MPS	—	120527 A.B. 120561 A.B.	

LEFT BRIDGE REAR ABUTMENT DETAILS
BRIDGE NO. CLE-275-0568
OVER EAST FORK OF LITTLE MIAMI RIVER

CLE-275-5.35

8 37

673
857

F:\Inroute\DGN\Struct\...dgn

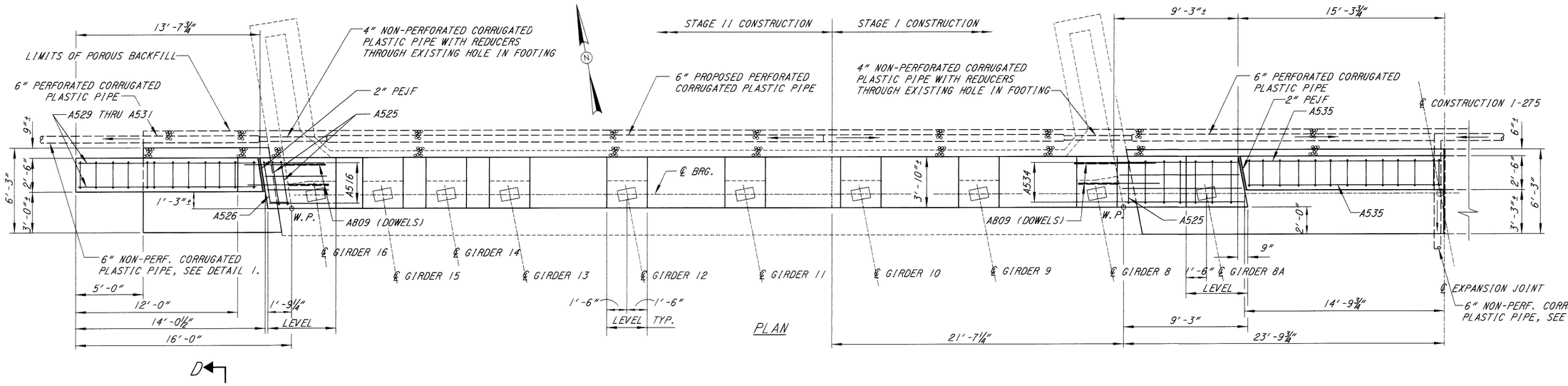

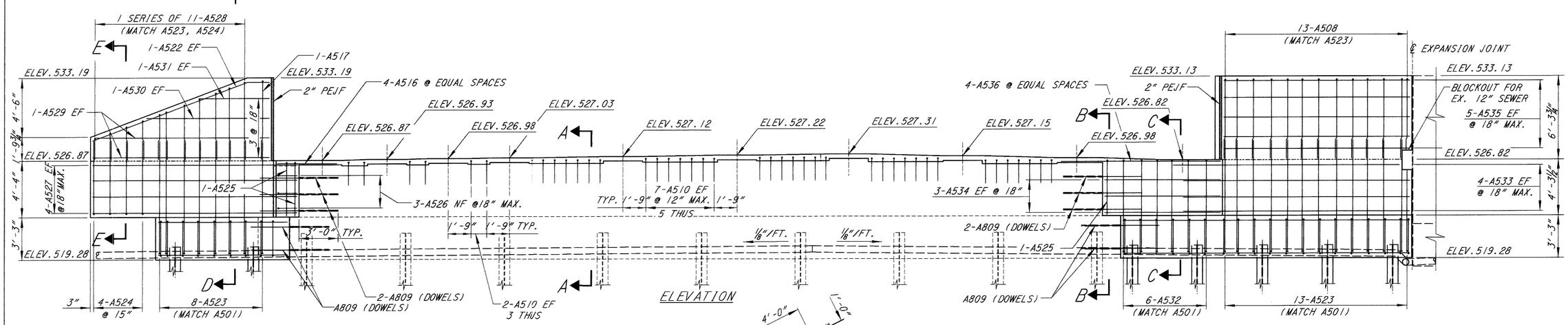

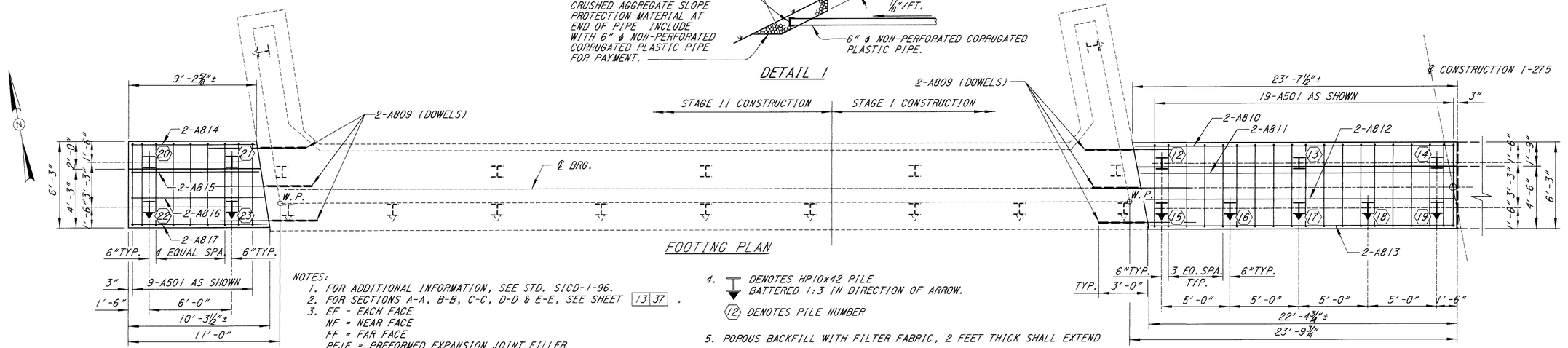

NOTES:
1. FOR ADDITIONAL INFORMATION, SEE STD. SICD-1-96.
2. FOR SECTIONS A-A, B-B, C-C, D-D & E-E, SEE SHEET 13 37 .
3. EF = EACH FACE
   NF = NEAR FACE
   FF = FAR FACE
   PEJF = PREFORMED EXPANSION JOINT FILLER
   W.P. = WORK POINT
4. ▼ DENOTES HP10x42 PILE BATTERED 1:3 IN DIRECTION OF ARROW.
   (12) DENOTES PILE NUMBER
5. POROUS BACKFILL WITH FILTER FABRIC, 2 FEET THICK SHALL EXTEND UP TO THE PLANE OF THE SUBGRADE, TO 1 FOOT BELOW THE EMBANKMENT AND LATERALLY TO THE ENDS OF THE WINGWALLS.

DESIGN AGENCY
BALKE ENGINEERS
1848 Summit Road
Cincinnati, Ohio 45237

DESIGNED	DRAWN	REVIEWED	DATE
FKL	WJH/RHH	CRS	6/01
CHECKED	REVISED	STRUCTURE FILE NUMBER	
MPS	—	120537 H.B. 300567 H.B.	

RIGHT BRIDGE REAR ABUTMENT DETAILS
BRIDGE NO. CLE-275-0568
OVER EAST FORK OF LITTLE MIAMI RIVER

CLE-275-5.35

9 37

674
857

F:\Inventor\0668\brdrv1.dgn

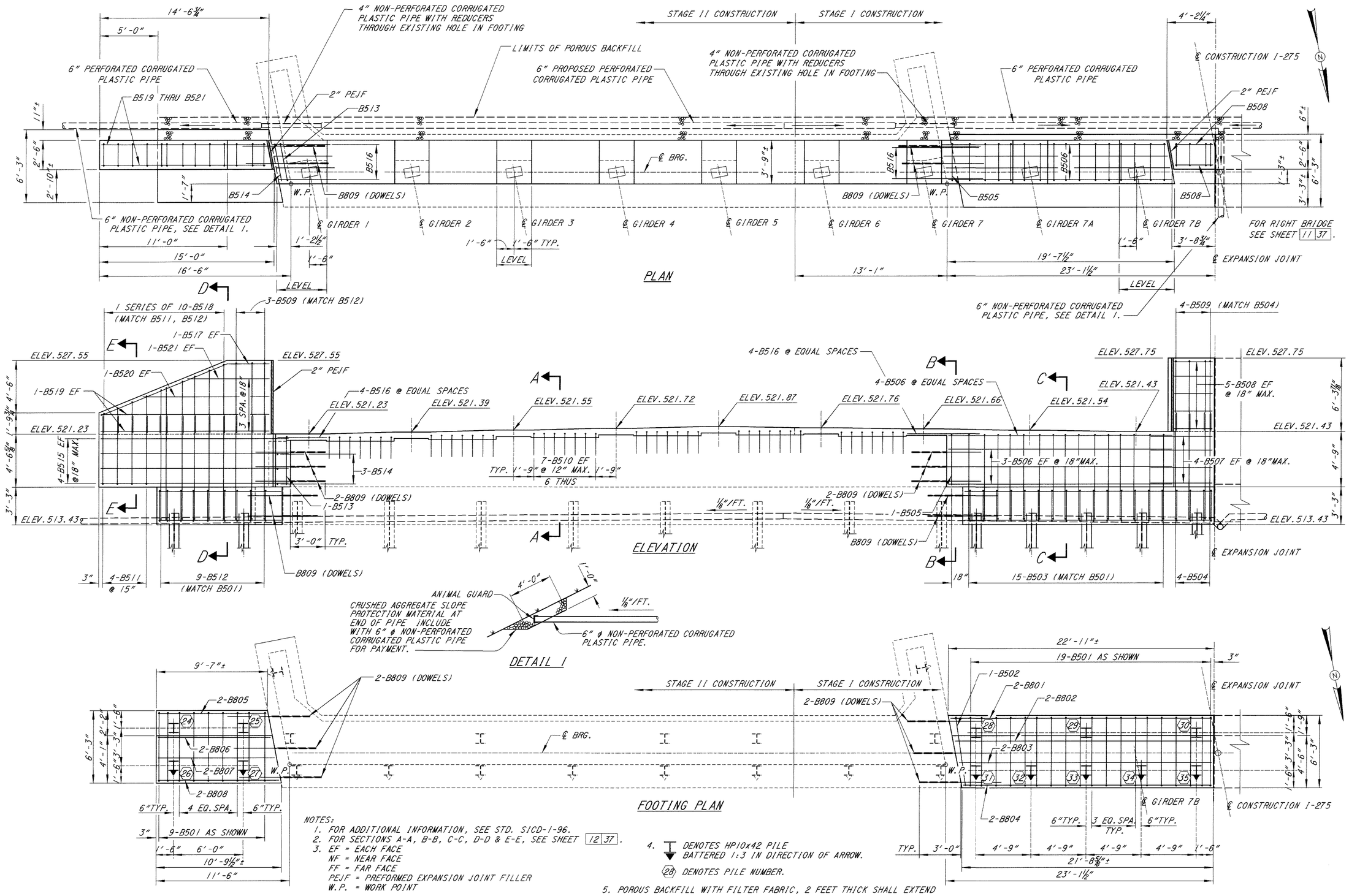

NOTES:
1. FOR ADDITIONAL INFORMATION, SEE STD. SICD-1-96.
2. FOR SECTIONS A-A, B-B, C-C, D-D & E-E, SEE SHEET 12/37.
3. EF = EACH FACE
NF = NEAR FACE
FF = FAR FACE
PEJF = PREFORMED EXPANSION JOINT FILLER
W.P. = WORK POINT
4. DENOTES HP10x42 PILE BATTERED 1:3 IN DIRECTION OF ARROW.
(28) DENOTES PILE NUMBER.
5. POROUS BACKFILL WITH FILTER FABRIC, 2 FEET THICK SHALL EXTEND UP TO THE PLANE OF THE SUBGRADE, TO 1 FOOT BELOW THE EMBANKMENT AND LATERALLY TO THE ENDS OF THE WINGWALLS.

DESIGN AGENCY
BALKE ENGINEERS
1848 Summit Road
Cincinnati, Ohio 45237

DESIGNED	DRAWN	REVIEWED	DATE
FKL	WJH/RHH	CRS	6/01
CHECKED	REVISED	STRUCTURE FILE NUMBER	
MRS	—	1305573 L.B. 1305581 R.B.	

LEFT BRIDGE FORWARD ABUTMENT DETAILS
BRIDGE NO. CLE-275-0568
OVER EAST FORK OF LITTLE MIAMI RIVER

CLE-275-5.35

Filename: C56BLBFAIX.dgn

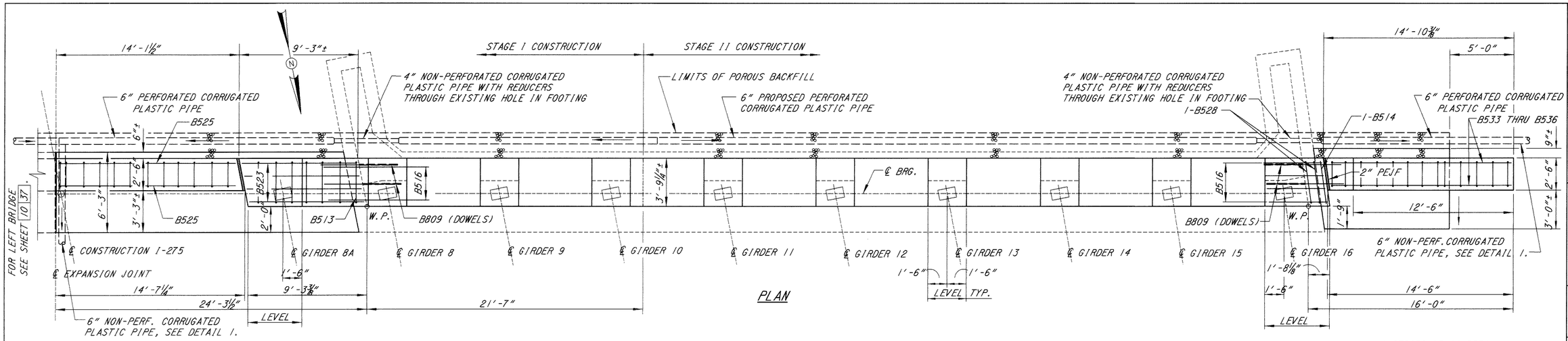

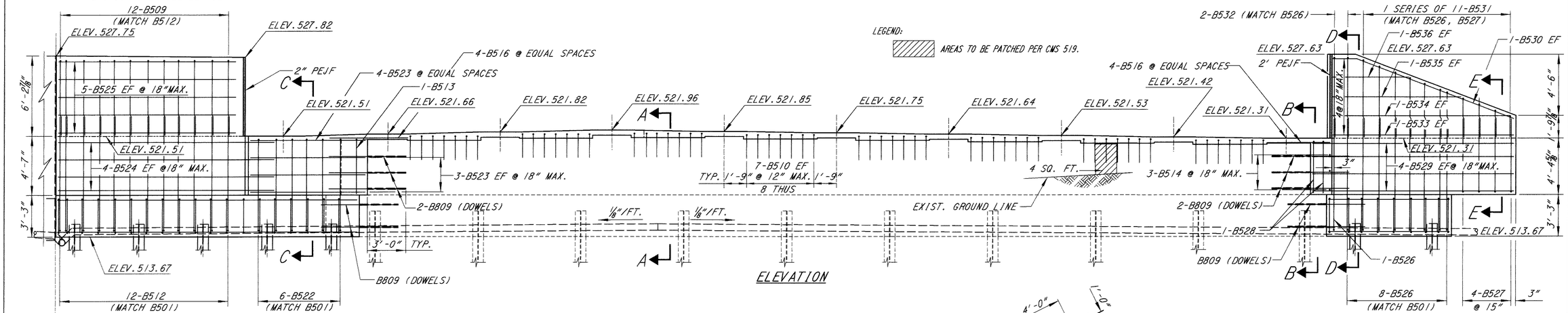

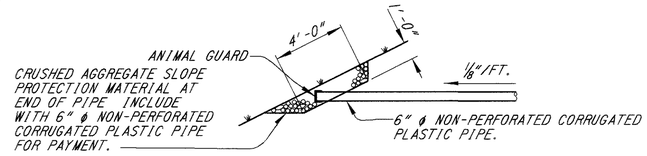

DETAIL 1

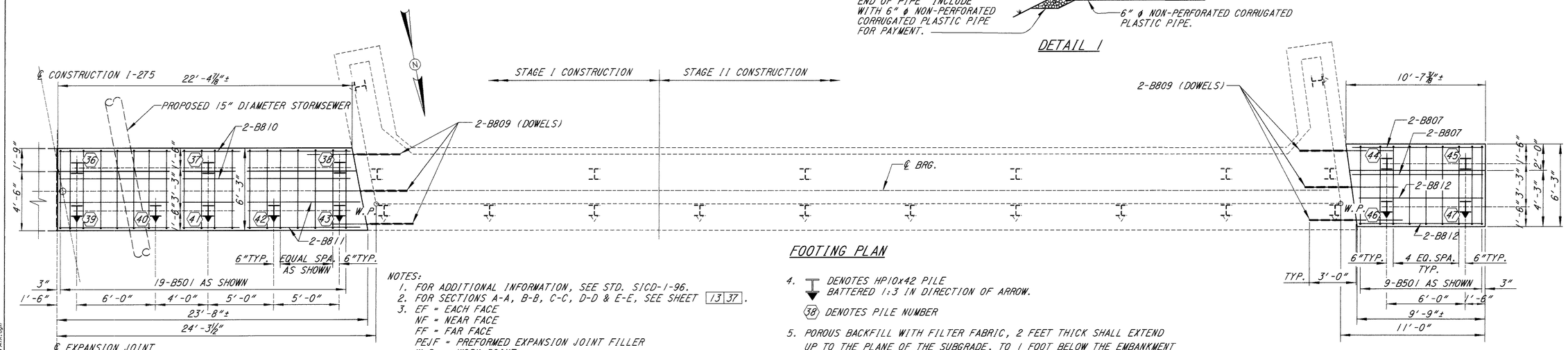

NOTES:
1. FOR ADDITIONAL INFORMATION, SEE STD. SICD-1-96.
2. FOR SECTIONS A-A, B-B, C-C, D-D & E-E, SEE SHEET 13 37.
3. EF = EACH FACE
   NF = NEAR FACE
   FF = FAR FACE
   PEJF = PREFORMED EXPANSION JOINT FILLER
   W.P. = WORK POINT
4. ▼ DENOTES HP10x42 PILE BATTERED 1:3 IN DIRECTION OF ARROW.
   (38) DENOTES PILE NUMBER
5. POROUS BACKFILL WITH FILTER FABRIC, 2 FEET THICK SHALL EXTEND UP TO THE PLANE OF THE SUBGRADE, TO 1 FOOT BELOW THE EMBANKMENT AND LATERALLY TO THE ENDS OF THE WINGWALLS.

DESIGN AGENCY
BALKE ENGINEERS
1848 Summit Road
Cincinnati, Ohio 45237

DESIGNED FKL
DRAWN WJH/ARHH
CHECKED MPS
REVIEWED CBS
DATE 6/01
REVISED —
STRUCTURE FILE NUMBER 130552 & 130553 R.B.

RIGHT BRIDGE FORWARD ABUTMENT DETAILS
BRIDGE NO. CLE-275-0568
OVER EAST FORK OF LITTLE MIAMI RIVER

CLE-275-5.35

11 37

676
857

F:\Honma - 0568RBFAUX.dgn

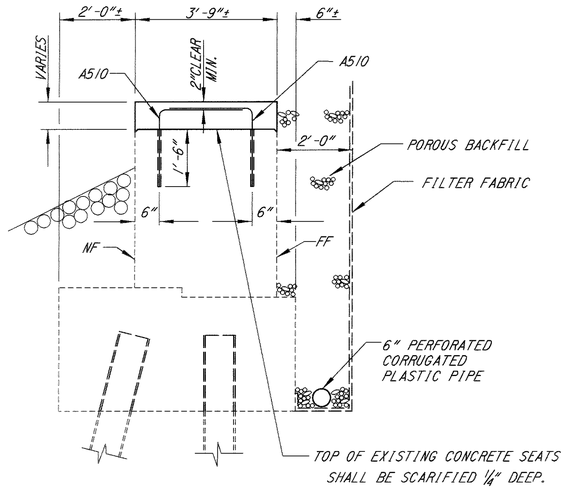

SECTION A-A

REAR ABUTMENT SHOWN
FORWARD ABUTMENT SIMILAR

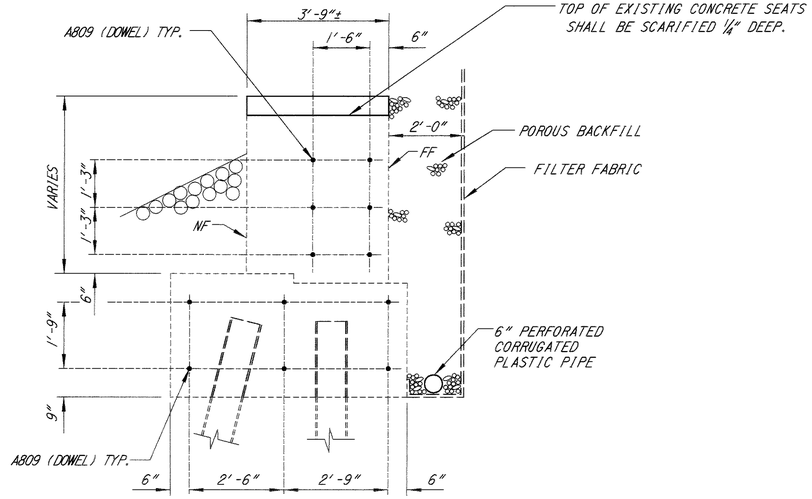

SECTION B-B

REAR ABUTMENT SHOWN
FORWARD ABUTMENT SIMILAR

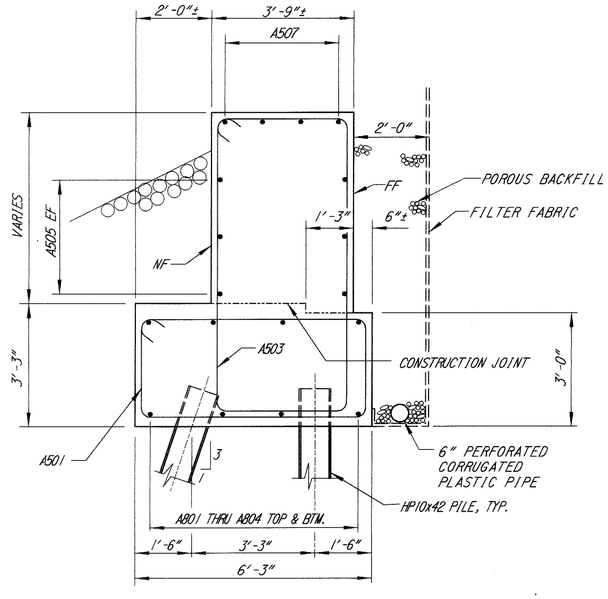

SECTION C-C

REAR ABUTMENT SHOWN
FORWARD ABUTMENT SIMILAR

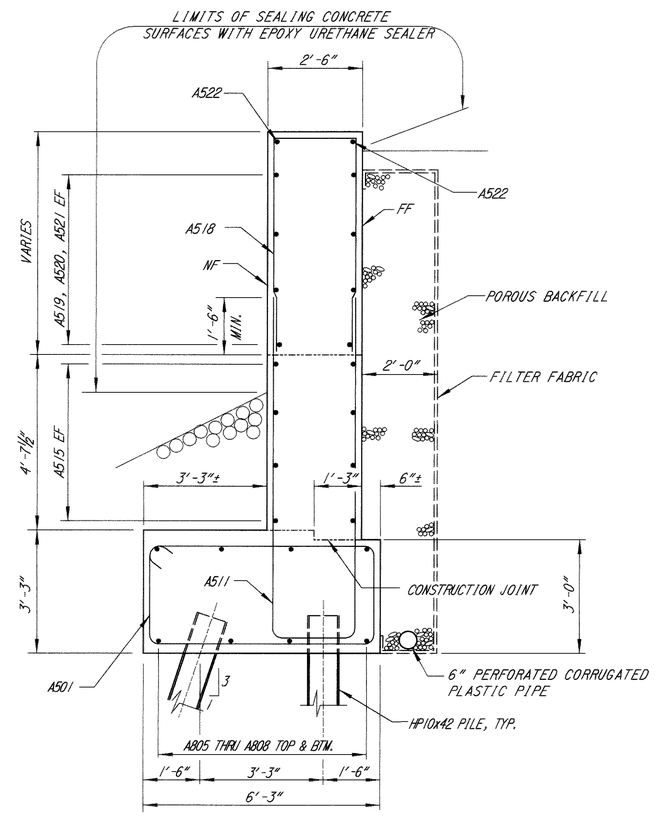

SECTION D-D

REAR ABUTMENT SHOWN
FORWARD ABUTMENT SIMILAR

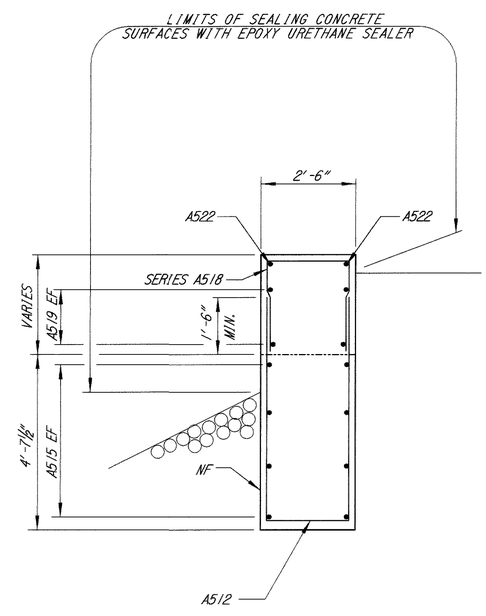

SECTION E-E

REAR ABUTMENT SHOWN
FORWARD ABUTMENT SIMILAR

NOTES:

1. EF = EACH FACE
   NF = NEAR FACE
   FF = FAR FACE
2. POROUS BACKFILL WITH FILTER FABRIC, 2 FEET THICK, SHALL EXTEND UP TO THE PLANE OF THE SUBGRADE, TO 1 FOOT BELOW THE EMBANKMENT AND LATERALLY TO THE ENDS OF THE WINGWALLS.

DESIGN AGENCY
BALKE ENGINEERS
1848 Summit Road
Cincinnati, Ohio 45237

DESIGNED	DRAWN	REVIEWED	DATE
FKL	WJH/ALH	CBS	6/01
CHECKED	REVISED	STRUCTURE FILE NUMBER	
MPS	—	302557 / 302561 / A.B.	

LEFT BRIDGE ABUTMENT DETAILS
BRIDGE NO. CLE-275-0568
OVER EAST FORK OF LITTLE MIAMI RIVER

CLE-275-5.35

12 / 37

677
857

F:\Autocad\...\0568_ABAUT...dgn

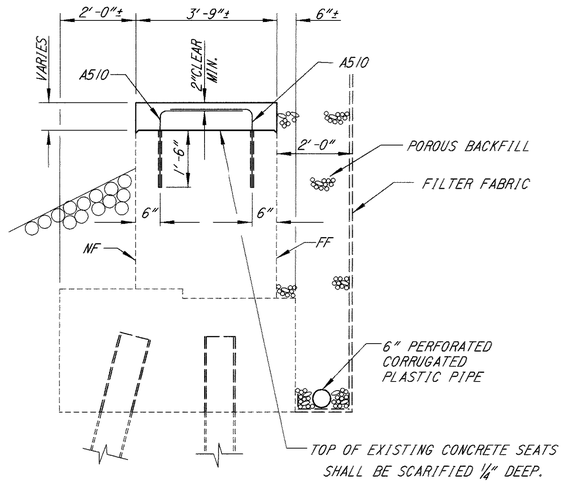

SECTION A-A

REAR ABUTMENT SHOWN
FORWARD ABUTMENT SIMILAR

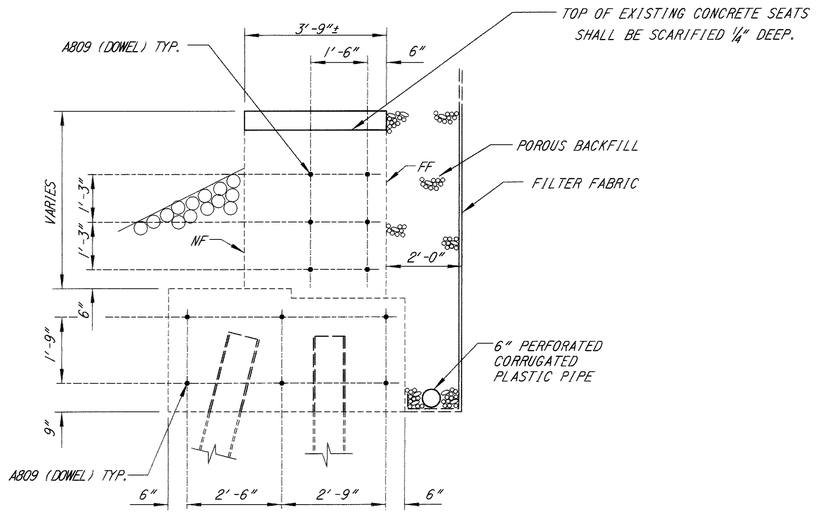

SECTION B-B

REAR ABUTMENT SHOWN
FORWARD ABUTMENT SIMILAR

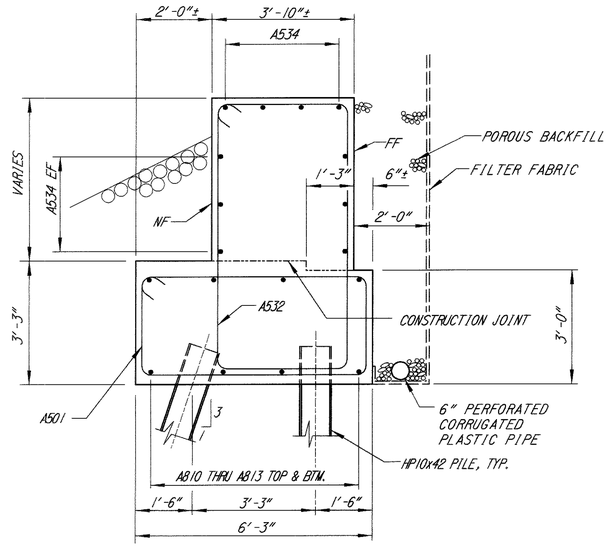

SECTION C-C

REAR ABUTMENT SHOWN
FORWARD ABUTMENT SIMILAR

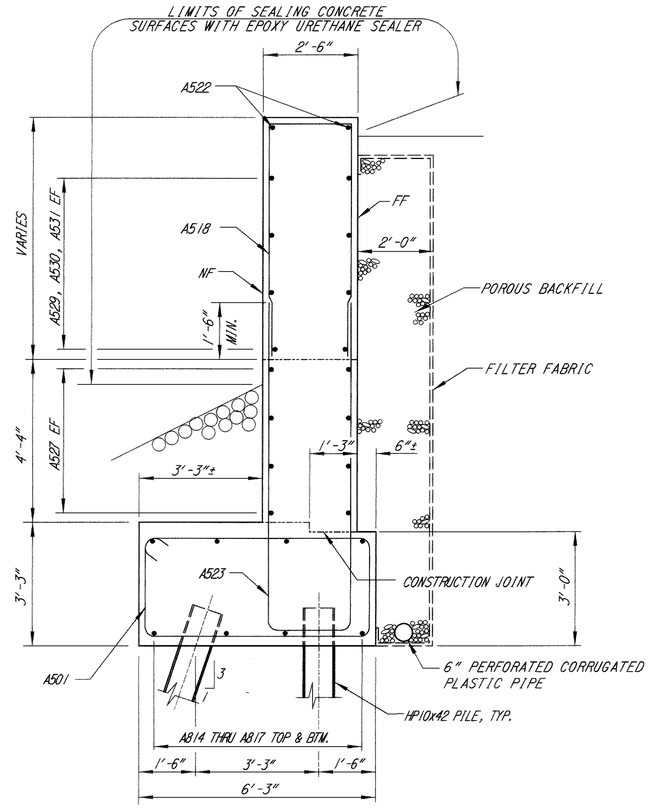

SECTION D-D

REAR ABUTMENT SHOWN
FORWARD ABUTMENT SIMILAR

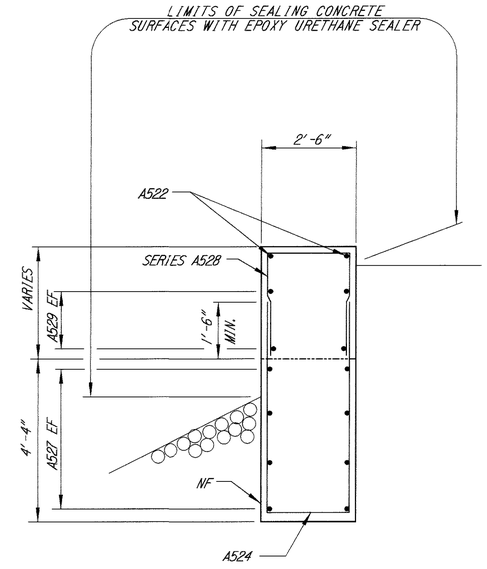

SECTION E-E

REAR ABUTMENT SHOWN
FORWARD ABUTMENT SIMILAR

NOTES:

1. EF = EACH FACE
   NF = NEAR FACE
   FF = FAR FACE
2. POROUS BACKFILL WITH FILTER FABRIC, 2 FEET THICK, SHALL EXTEND UP TO THE PLANE OF THE SUBGRADE, TO 1 FOOT BELOW THE EMBANKMENT AND LATERALLY TO THE ENDS OF THE WINGWALLS.

DESIGN AGENCY
BALKE ENGINEERS
1848 Summit Road
Cincinnati, Ohio 45237

DESIGNED	DRAWN	REVIEWED	DATE
FKL	WJH/ALH	CRS	6/01
CHECKED	REVISED	STRUCTURE FILE NUMBER	
MPS	—	1305573 L.B. 1305581 R.B.	

RIGHT BRIDGE ABUTMENT DETAILS
BRIDGE NO. CLE-275-0568
OVER EAST FORK OF LITTLE MIAMI RIVER

CLE-275-5.35

Filename: C568RBRA1a.dgn

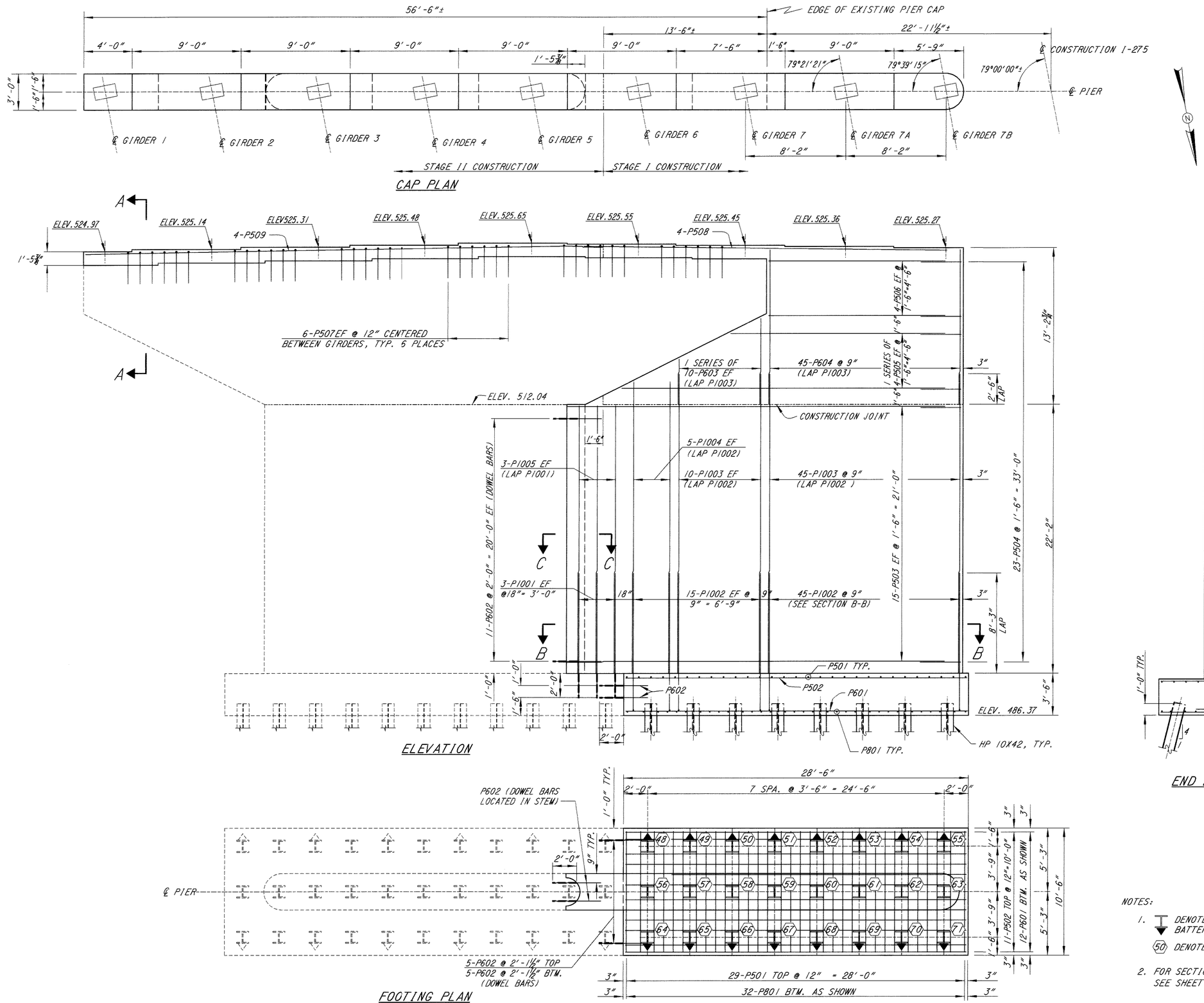

NOTES:

1. DENOTES HP10x42 PILE BATTERED 1:4 IN DIRECTION OF ARROW.
   (50) DENOTES PILE NUMBER.
2. FOR SECTION A-A THRU SECTION C-C, SEE SHEET 18/37.

DESIGN AGENCY
BALKE ENGINEERS
1848 SUMMIT ROAD
CINCINNATI, OHIO 45237

DESIGNED	DRAWN	REVIEWED	DATE
FKL	ALH/WJH	CRS	6/01
CHECKED	REVISED	STRUCTURE FILE NUMBER	
MRS	—	1305573 L.B. 1305581 R.B.	

LEFT BRIDGE PIER I DETAILS
BRIDGE NO. CLE-275-0568
OVER EAST FORK OF LITTLE MIAMI RIVER

CLE-275-5.35

14/37

679/857

FILENAME: 0568LBP1.DGN

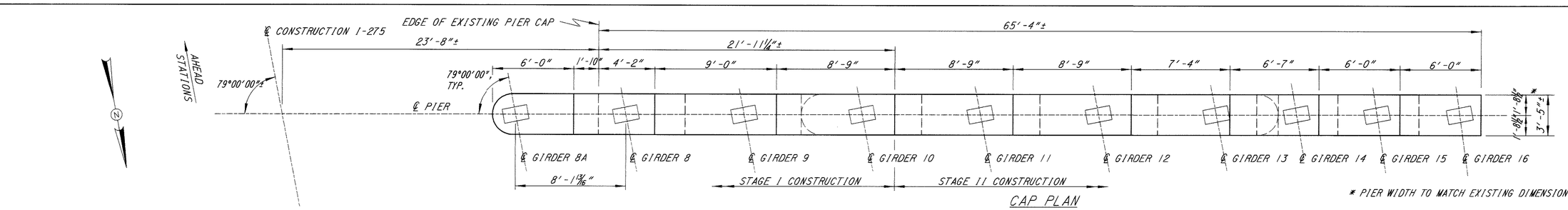

CAP PLAN

* PIER WIDTH TO MATCH EXISTING DIMENSION

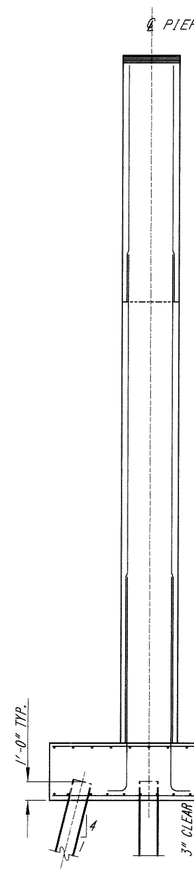

END ELEVATION

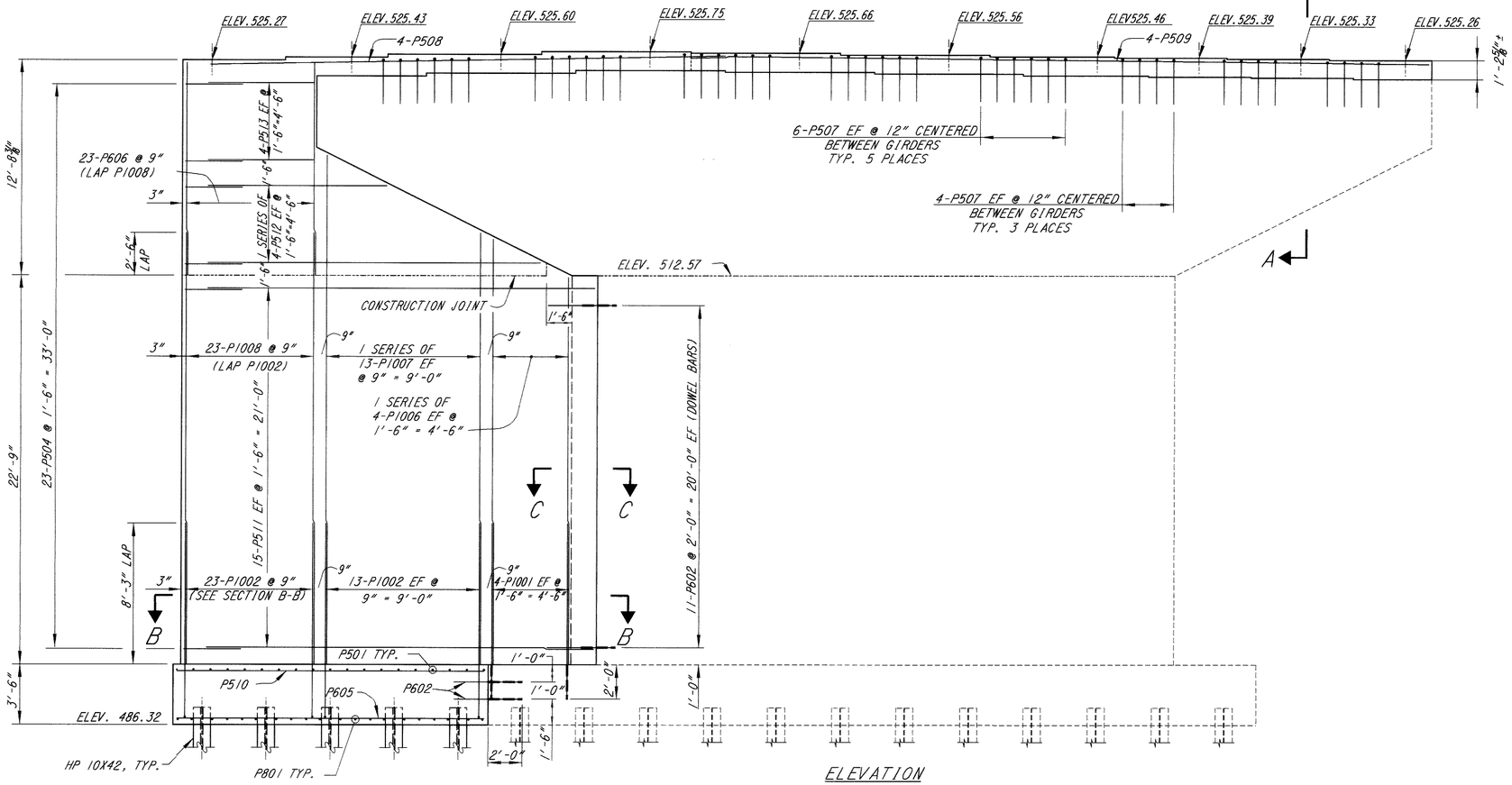

ELEVATION

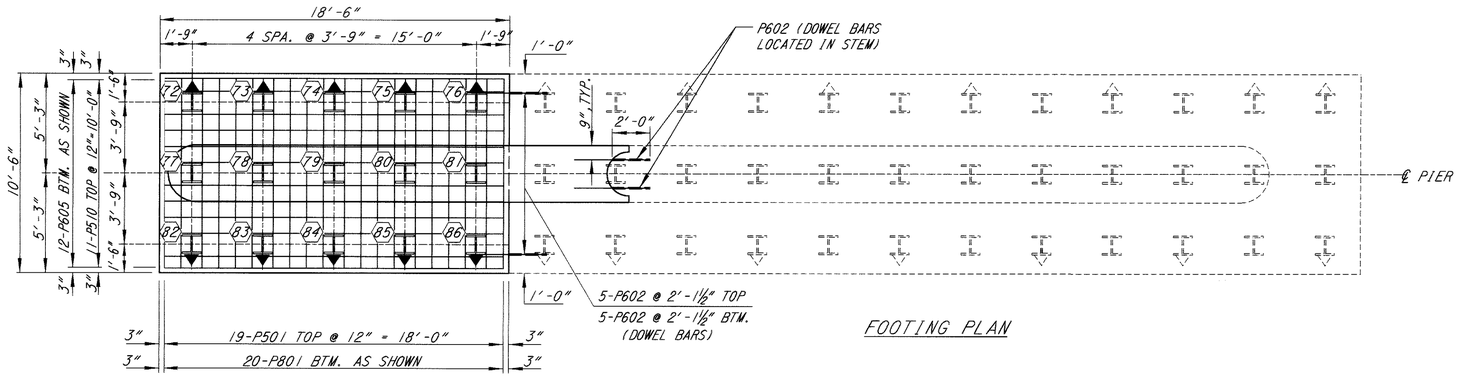

FOOTING PLAN

NOTES:

1. ▼ DENOTES HP10x42 PILE BATTERED 1:4 IN DIRECTION OF ARROW.
   (80) DENOTES PILE NUMBER.
2. FOR SECTION A-A THRU SECTION C-C, SEE SHEET 18 37 .

F:\Inroute\CE\Bridges\CLE-275-0568\Sheets\CLE-275-0568-sht1.dgn

DESIGN AGENCY
BALKE ENGINEERS
1848 SUMMIT ROAD
CINCINNATI, OHIO 45237

DESIGNED	DRAWN	REVIEWED	DATE
FKL	ALH/MJH	CRS	6/01
CHECKED	REVISED	STRUCTURE FILE NUMBER	
MPS	—	1305567 H.B. 1305581 H.B.	

RIGHT BRIDGE PIER I DETAILS
BRIDGE NO. CLE-275-0568
OVER EAST FORK OF LITTLE MIAMI RIVER

CLE-275-5.35

15 / 37

680
85.7

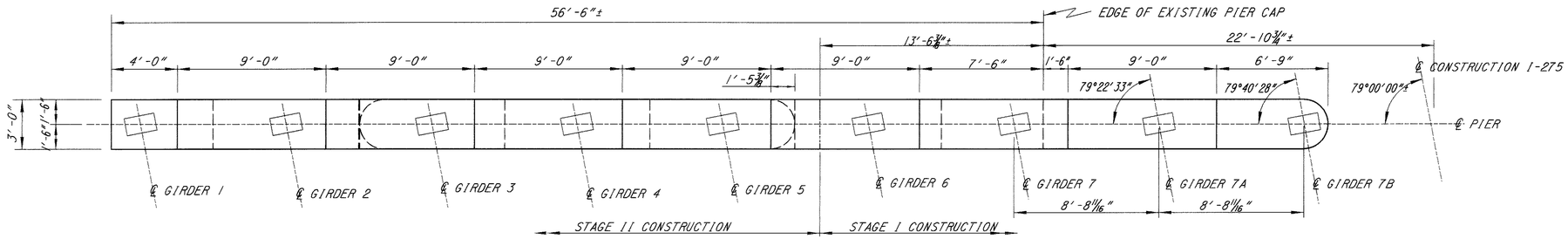

CAP PLAN

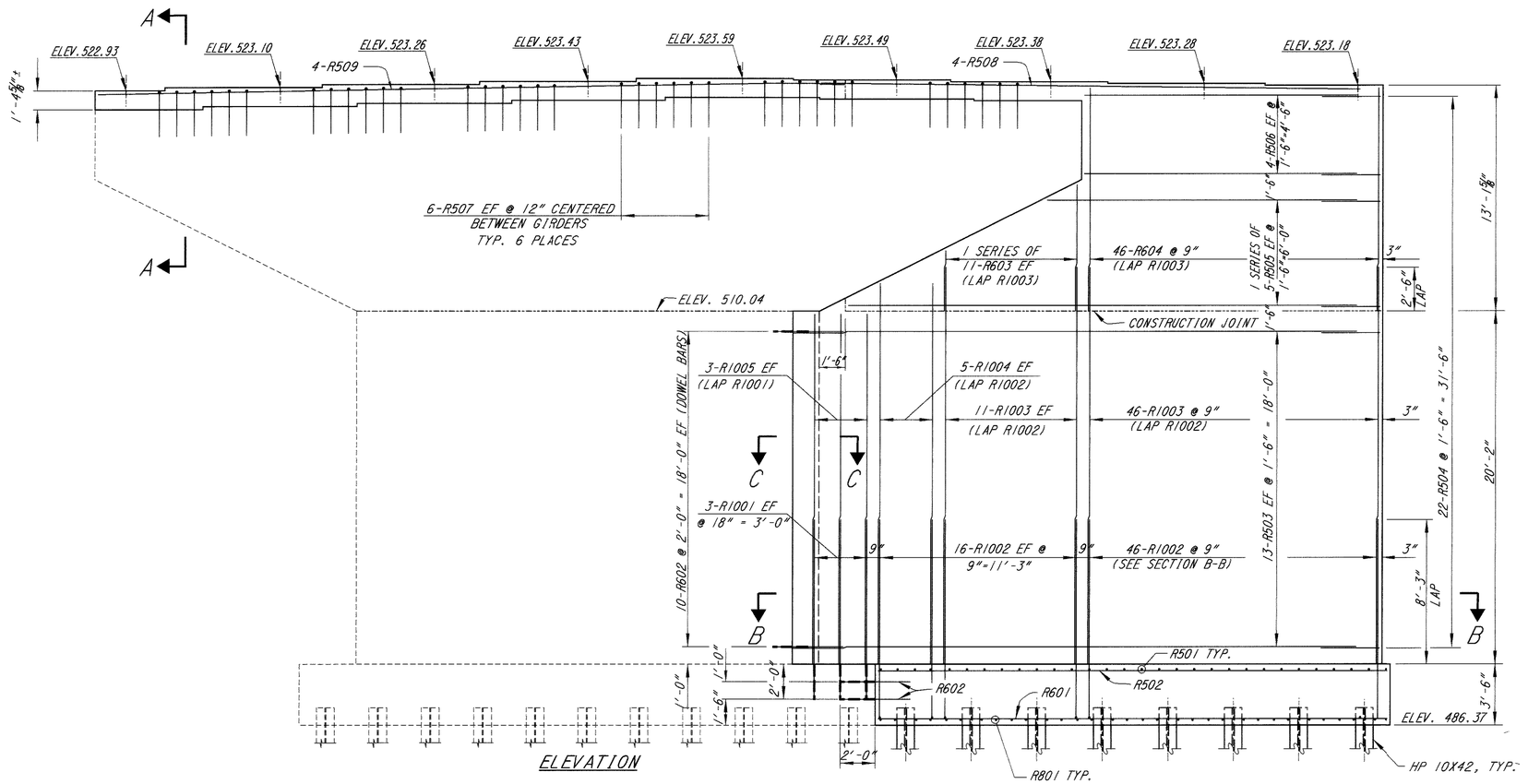

ELEVATION

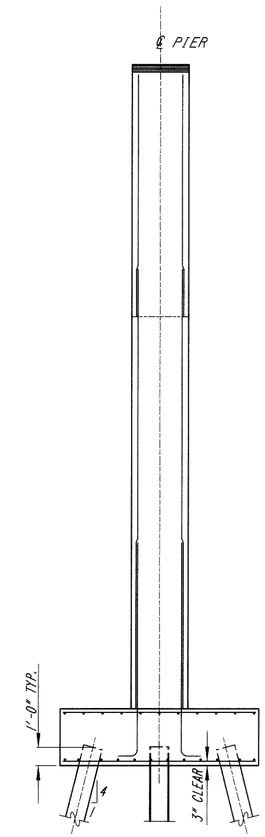

END ELEVATION

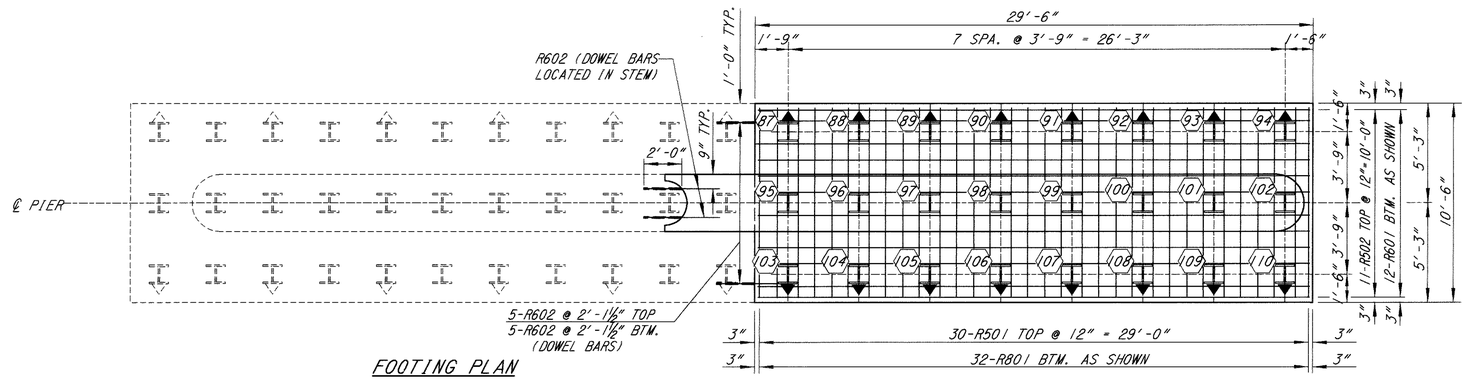

FOOTING PLAN

NOTES:

1. DENOTES HP10x42 PILE BATTERED 1:4 IN DIRECTION OF ARROW.
   (90) DENOTES PILE NUMBER.
2. FOR SECTION A-A THRU SECTION C-C, SEE SHEET 18/37.

DESIGN AGENCY
BALKE ENGINEERS
1848 SUMMIT ROAD
CINCINNATI, OHIO 45237

DESIGNED	DRAWN	REVIEWED	DATE
FKL	ALH/WJH	CRS	6/01
CHECKED	REVISED	STRUCTURE FILE NUMBER	
MPS	—	1305573 L.B. 1305581 R.B.	

LEFT BRIDGE PIER 2 DETAILS
BRIDGE NO. CLE-275-0568
OVER EAST FORK OF LITTLE MIAMI RIVER

CLE-275-5.35

FILENAME: 0568LBP2.DGN

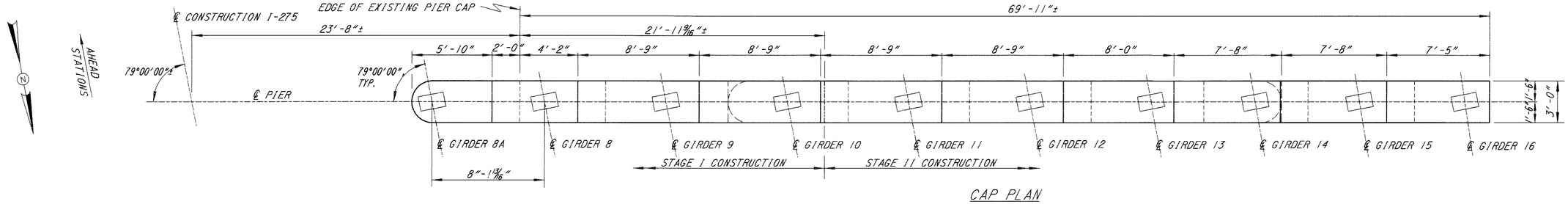

CAP PLAN

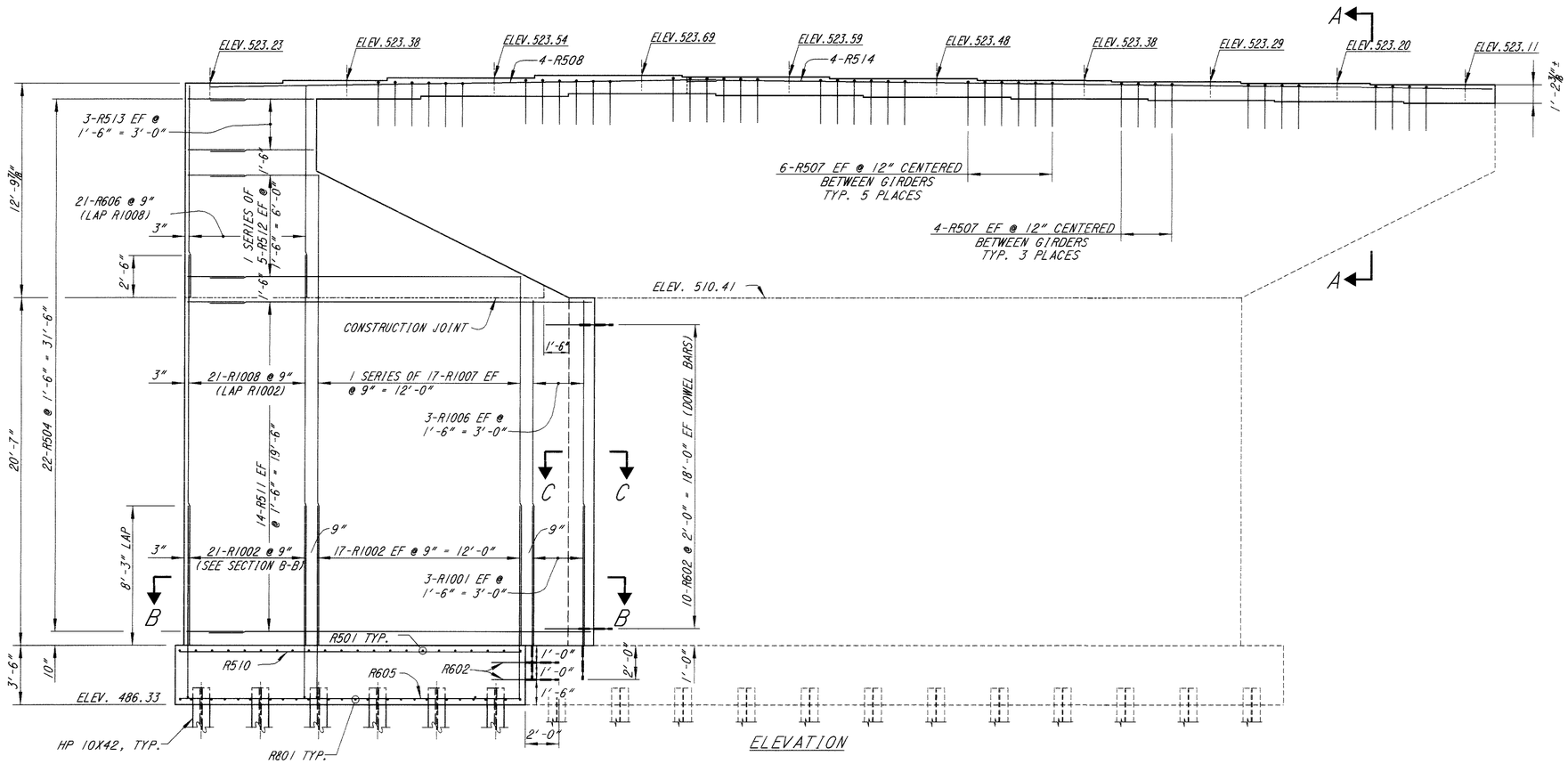

ELEVATION

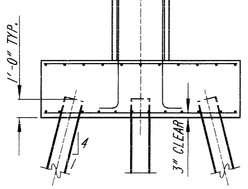

END ELEVATION

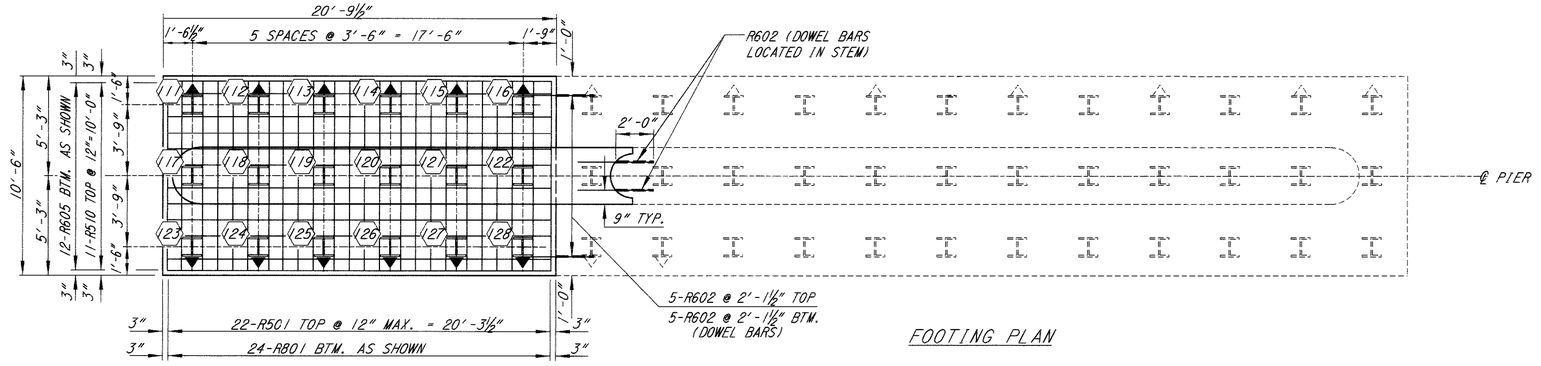

FOOTING PLAN

NOTES:

1. DENOTES HP10x42 PILE BATTERED 1:4 IN DIRECTION OF ARROW.
   (110) DENOTES PILE NUMBER.
2. FOR SECTION A-A THRU SECTION C-C, SEE SHEET 18/37.

FILENAME: 0568RBP2.DGN

DESIGN AGENCY
BALKE ENGINEERS
1848 SUMMIT ROAD
CINCINNATI, OHIO 45237

DESIGNED	DRAWN	REVIEWED	DATE
FKL	ALH/WJH	CRS	6/01
CHECKED	REVISED	STRUCTURE FILE NUMBER	
MRS	—	1305573 L.B. 1305581 R.B.	

RIGHT BRIDGE PIER 2 DETAILS
BRIDGE NO. CLE-275-0568
OVER EAST FORK OF LITTLE MIAMI RIVER

CLE-275-5.35

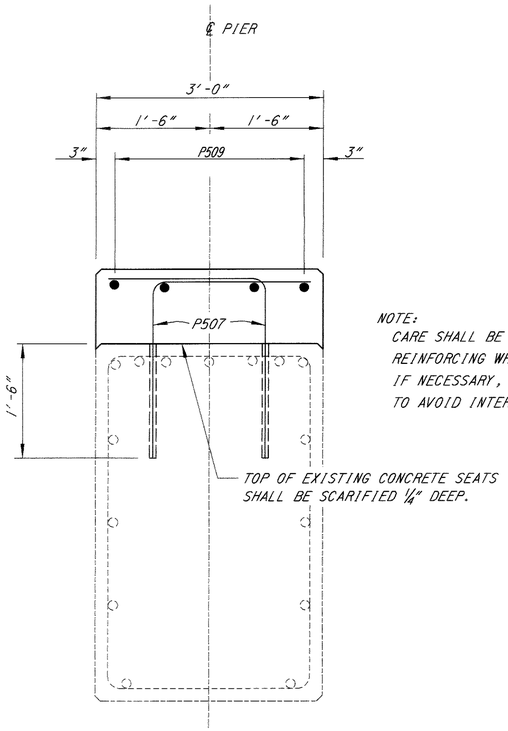

NOTE:
CARE SHALL BE TAKEN TO AVOID EXISTING REINFORCING WHEN DRILLING HOLES FOR DOWELS. IF NECESSARY, LOCATION OF DOWEL SHALL BE MOVED TO AVOID INTERFERENCE.

SECTION A-A
(LEFT BRIDGE SHOWN, RIGHT BRIDGE SIMILAR)

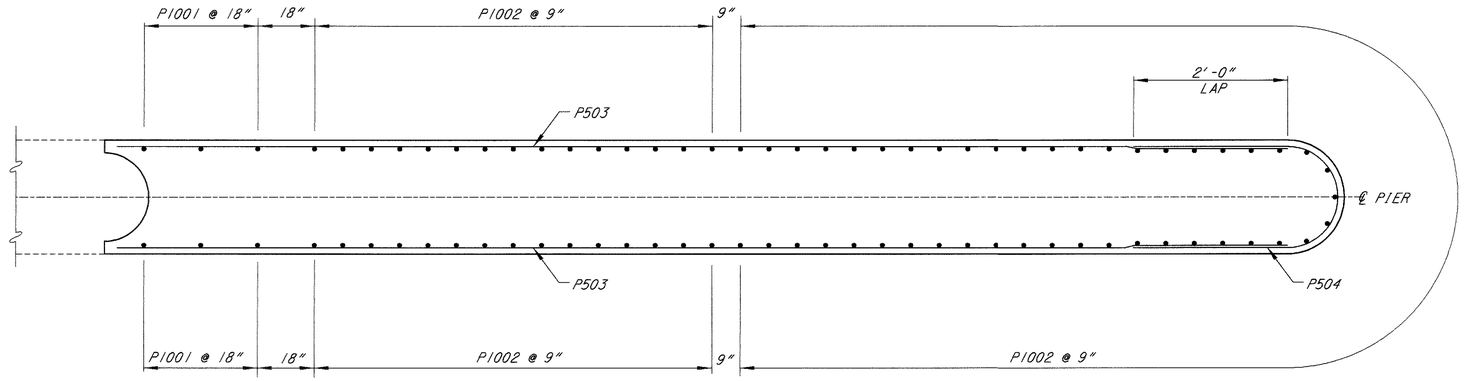

SECTION B-B
(LEFT BRIDGE - PIER 1 SHOWN, PIER 2 SIMILAR)

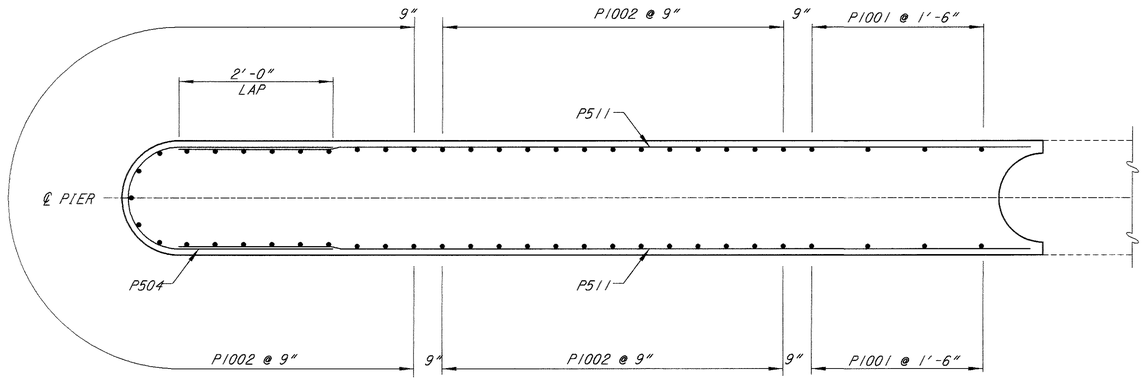

SECTION B-B
(RIGHT BRIDGE - PIER 1 SHOWN, PIER 2 SIMILAR)

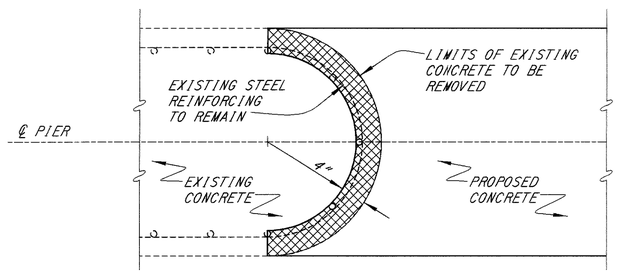

SECTION C-C
(LEFT BRIDGE SHOWN, RIGHT BRIDGE SIMILAR)

DESIGN AGENCY
BALKE ENGINEERS
1848 SUMMIT ROAD
CINCINNATI, OHIO 45237

DESIGNED	DRAWN	REVIEWED	DATE
FKL	ALH	CRS	6/01
CHECKED	REVISED	STRUCTURE FILE NUMBER	
MRS	—	1305573 L.B. 1305581 R.B.	

PIER DETAILS
BRIDGE NO. CLE-275-0568
OVER EAST FORK OF LITTLE MIAMI RIVER

CLE-275-5.35

18/37

683/857

FILENAME: 0568PIER_DETAILS.DGN

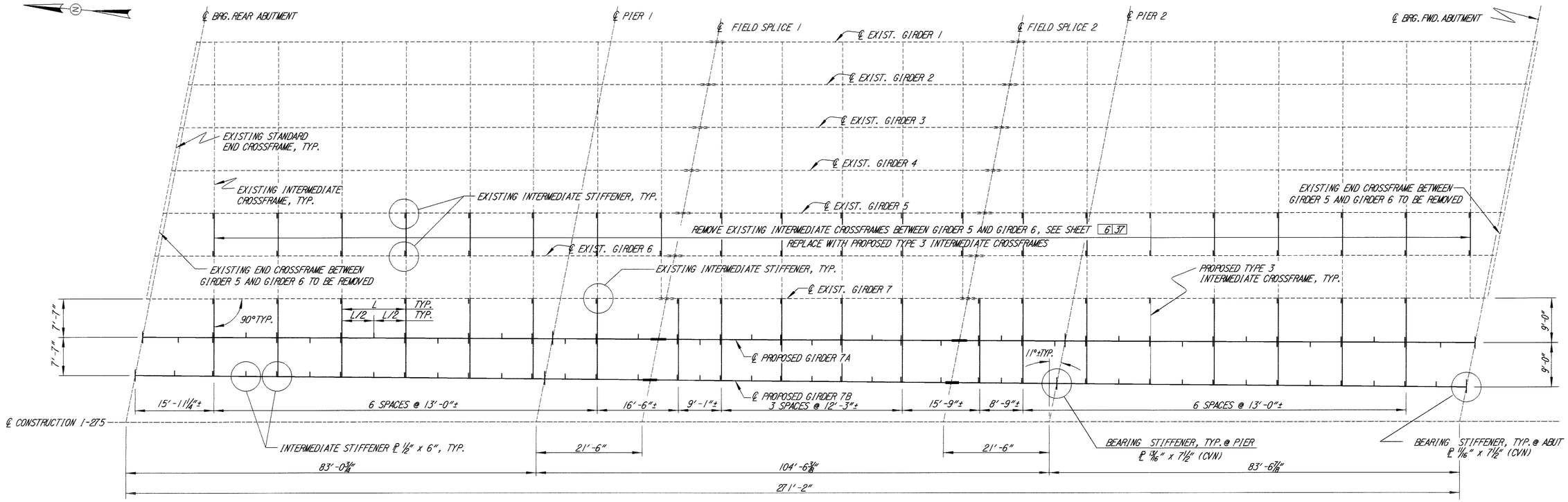

PLAN

* ADJUST SPACING AS NECESSARY TO CLEAR ENDS OF FLANGE SPLICE PLATES BY 3".

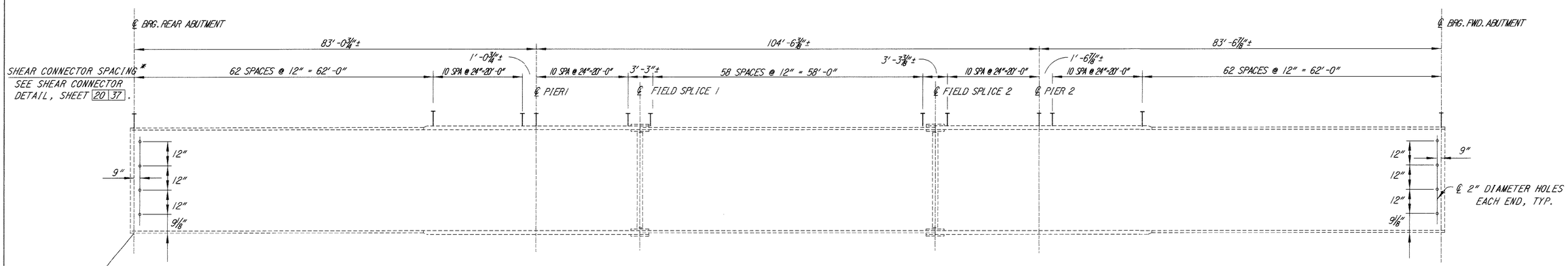

EXISTING GIRDER ELEVATION

STIFFENERS NOT SHOWN FOR CLARITY

NOTES:

1. FOR PROPOSED GIRDER ELEVATION, NOTES AND STEEL DETAILS, SEE SHEET 20 37.
2. FOR PROPOSED TYPE 3 INTERMEDIATE CROSSFRAME DETAILS, SEE STANDARD DRAWING GSD-1-96.

DESIGN AGENCY
BALKE ENGINEERS
1848 Summit Road
Cincinnati, Ohio 45237

DESIGNED	DRAWN	REVIEWED	DATE
FKL	ALH/WJH	CBS	6/01
CHECKED	REVISED	STRUCTURE FILE NUMBER	
MPS	—	1-275/1.72 1.28 /302569/ N.B.	

LEFT BRIDGE FRAMING PLAN
BRIDGE NO. CLE-275-0568
OVER EAST FORK OF THE LITTLE MIAMI RIVER

CLE-275-5.35

19 / 37

684
857

F:\Projects\0568\Dgn\1.dgn

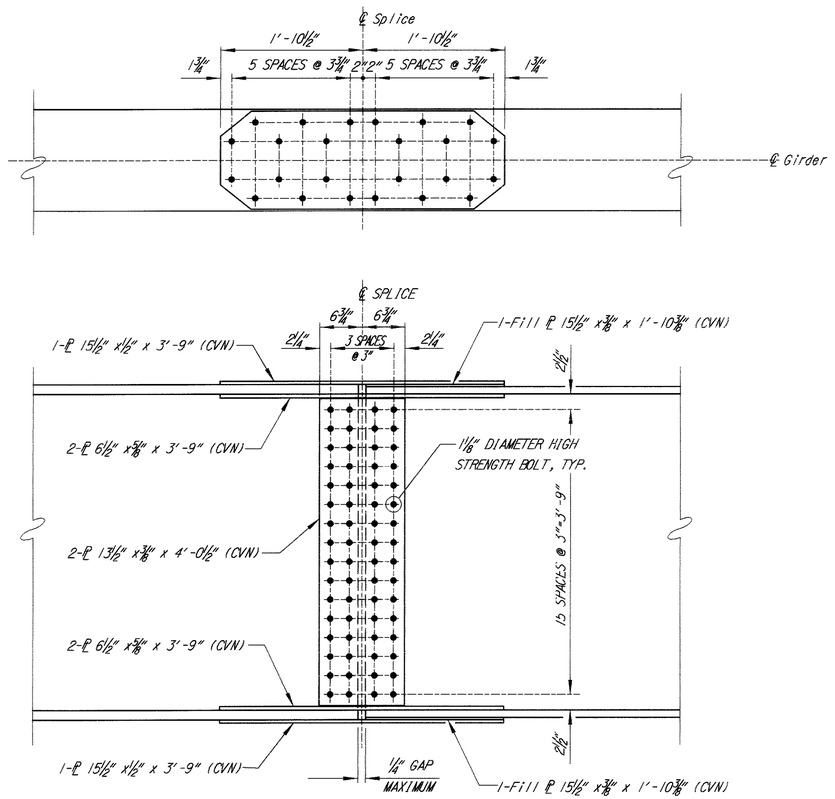

SPLICE DETAIL

(Splice 1 shown, splice 2 opposite hand)

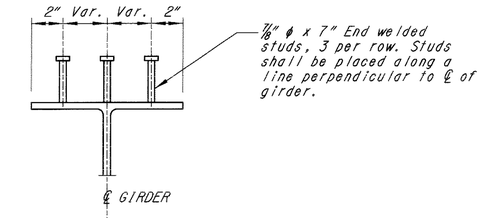

SHEAR CONNECTOR DETAIL

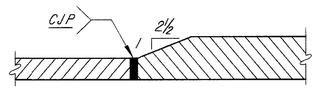

FLANGE THICKNESS TRANSITION DETAIL

NOTES:
1. Where a shape or plate is designated (CVN) the material shall meet specified minimum notch toughness requirements as specified in 711.01 of CMS.
2. WELDED ATTACHMENT of supports for concrete deck finishing machine may be made to areas of the fascia stringer flanges designated Region B. Attachments shall not be made to areas designated Region T. Fillet welds to compression flanges shall not be closer than 1" from edge of flange, be not more than 2" long and be not smaller than the minimum size required by AASHTO.
3. Region B = Bottom flange in tension; top flange in compression.
   Region T = Top flange in tension; bottom flange in compression.
4. CS - Indicates butt weld subject to compressive stresses only.
   CJP - Indicates complete joint penetration.
5. All butt welds shall have weld reinforcement removed by grinding in direction parallel to centerline of GIRDER.
6. For crossframe, stiffener and additional details, see Std. Dwg. GSD-1-96.

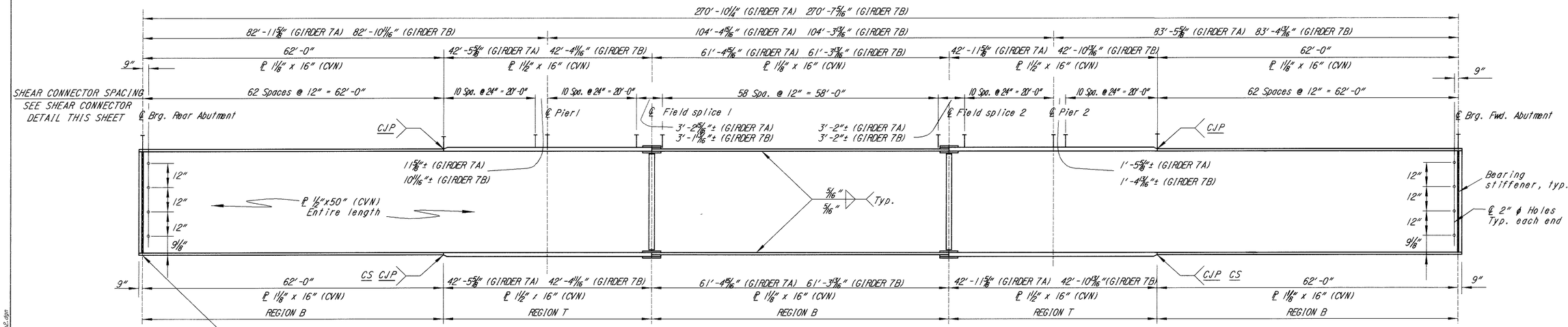

PROPOSED GIRDER ELEVATION

INTERMEDIATE STIFFENERS NOT SHOWN FOR CLARITY

DESIGN AGENCY
BALKE ENGINEERS
1848 Summit Road
Cincinnati, Ohio 45237

DESIGNED	DRAWN	REVIEWED	DATE
FKL	ALH	CBS	6/01
CHECKED	REVISED	STRUCTURE FILE NUMBER	
MPS	—	1302591, H.B.	

LEFT BRIDGE FRAMING PLAN
BRIDGE NO. CLE-275-0568
OVER EAST FORK OF THE LITTLE MIAMI RIVER

CLE-275-5.35

20/37

685/857

F:\Bridges\0568\Sht2.dgn

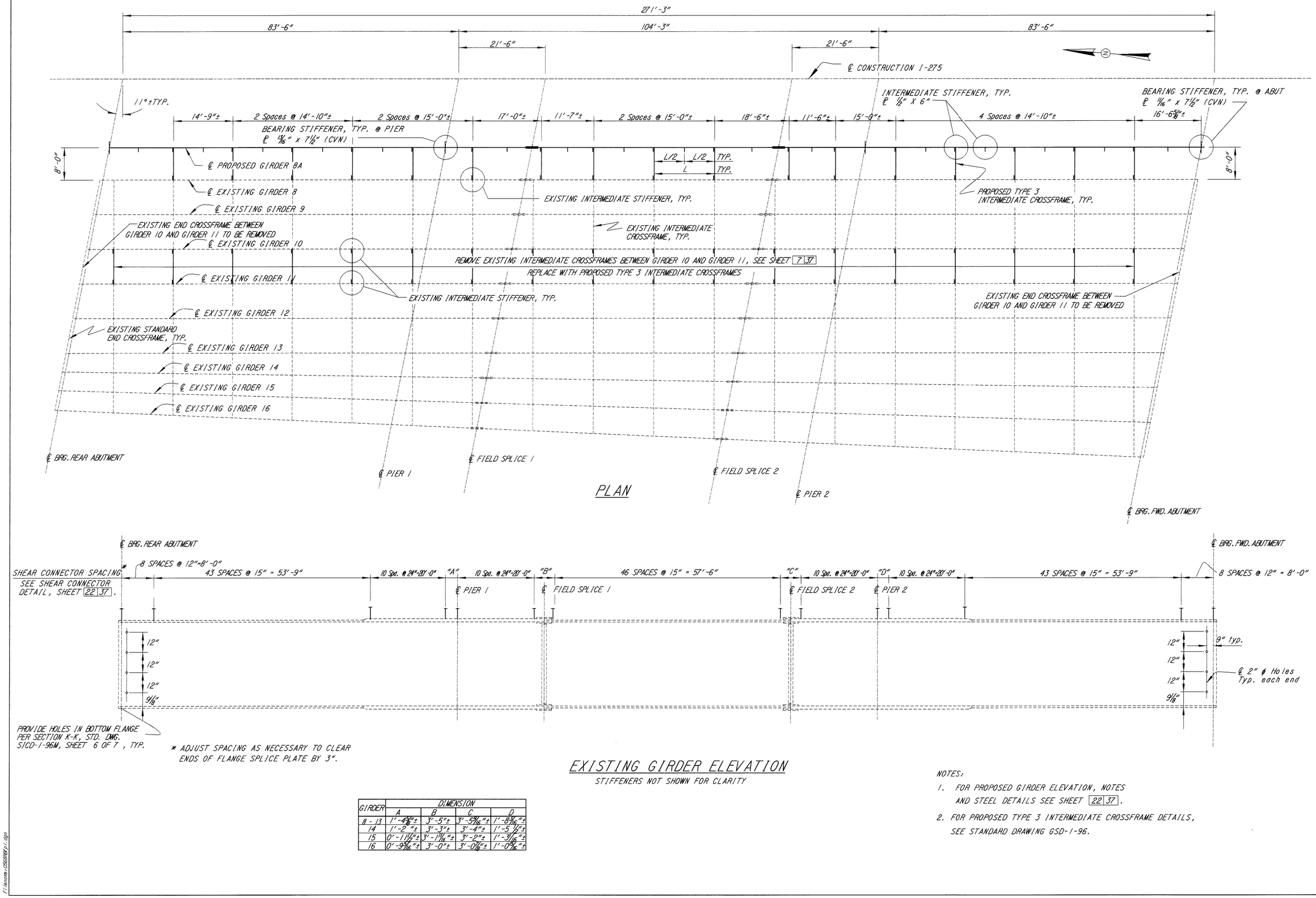

PLAN

EXISTING GIRDER ELEVATION

STIFFENERS NOT SHOWN FOR CLARITY

GIRDER	DIMENSION			
	A	B	C	D
8 - 13	1'-4 3/16"±	3'-5"±	3'-5 11/16"±	1'-8 3/16"±
14	1'-2 "±	3'-3"±	3'-4"±	1'-5 1/2"±
15	0'-11 1/2"±	3'-1 11/16"±	3'-2"±	1'-3 1/16"±
16	0'-9 5/16"±	3'-0"±	3'-0 1/16"±	1'-0 7/16"±

NOTES:

1. FOR PROPOSED GIRDER ELEVATION, NOTES AND STEEL DETAILS SEE SHEET 22 37.
2. FOR PROPOSED TYPE 3 INTERMEDIATE CROSSFRAME DETAILS, SEE STANDARD DRAWING GSD-1-96.

DESIGN AGENCY
BALKE ENGINEERS
1848 Summit Road
Cincinnati, Ohio 45237

DESIGNED	DRAWN	REVIEWED	DATE
FKL	ALH	CBS	6/01
CHECKED	REVISED	STRUCTURE FILE NUMBER	
MPS	—	1302567 A.B.	

RIGHT BRIDGE FRAMING PLAN
BRIDGE NO. CLE-275-0568
OVER EAST FORK OF THE LITTLE MIAMI RIVER

CLE-275-5.35

21 / 37

686
857

F:\Automa-1\2567AB\gsi.dgn

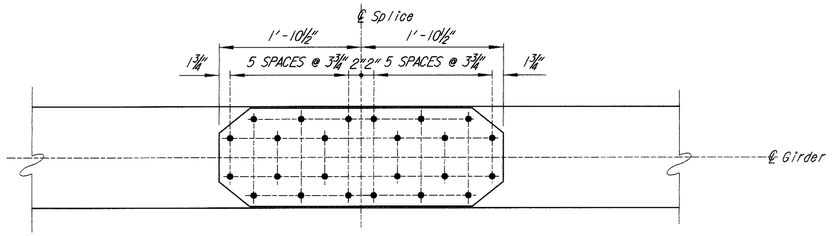

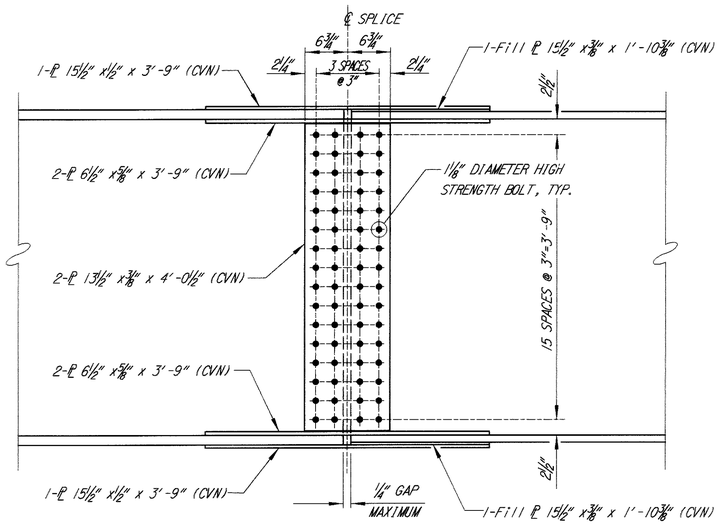

SPLICE DETAIL

(Splice 1 shown, splice 2 opposite hand)

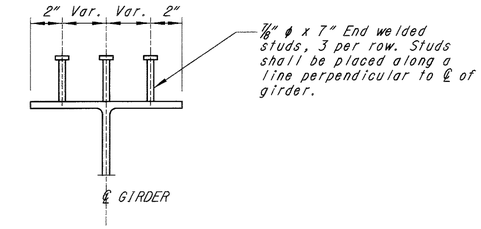

SHEAR CONNECTOR DETAIL

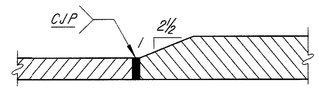

FLANGE THICKNESS TRANSITION DETAIL

NOTES:
1. Where a shape or plate is designated (CVN) the material shall meet specified minimum notch toughness requirements as specified in 711.01 of CMS.
2. WELDED ATTACHMENT of supports for concrete deck finishing machine may be made to areas of the fascia stringer flanges designated Region B. Attachments shall not be made to areas designated Region T. Fillet welds to compression flanges shall not be closer than 1" from edge of flange, be not more than 2" long and be not smaller than the minimum size required by AASHTO.
3. Region B = Bottom flange in tension; top flange in compression.
   Region T = Top flange in tension; bottom flange in compression.
4. CS - Indicates butt weld subject to compressive stresses only.
   CJP - Indicates complete joint penetration.
5. All butt welds shall have weld reinforcement removed by grinding in direction parallel to centerline of girder.
6. For crossframe, stiffener and additional details, see Std. Dwg. GSD-1-96.

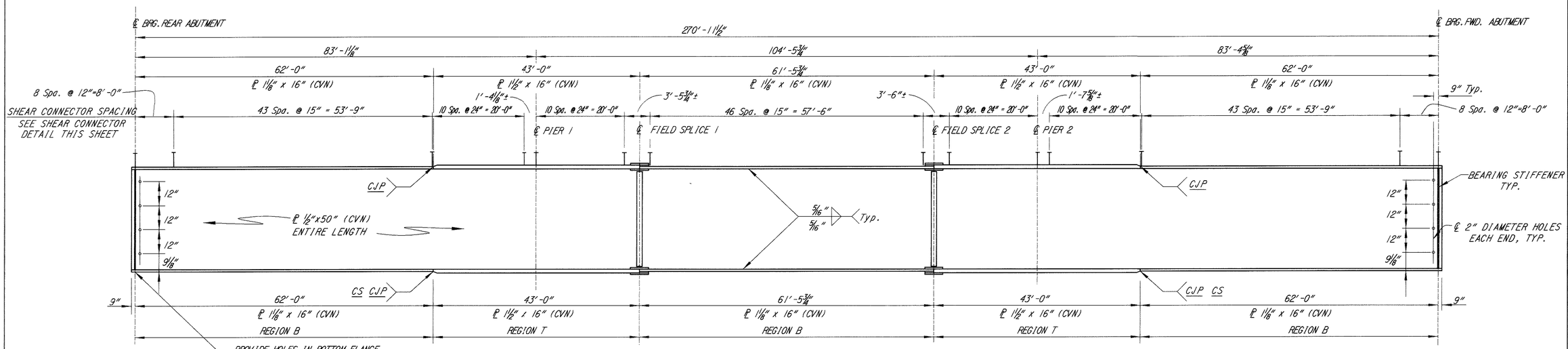

PROPOSED GIRDER ELEVATION

INTERMEDIATE STIFFENERS NOT SHOWN FOR CLARITY

F:\Volume1\CE\SHEET\as2.dgn

DESIGN AGENCY
BALKE ENGINEERS
1848 Summit Road
Cincinnati, Ohio 45237

DESIGNED	DRAWN	REVIEWED	DATE
FKL	ALHANUH	CRS	6/01
CHECKED	REVISED	STRUCTURE FILE NUMBER	
MRS	—	120557 H.B. 120558 H.B.	

RIGHT BRIDGE FRAMING PLAN
BRIDGE NO. CLE-275-0568
OVER EAST FORK OF THE LITTLE MIAMI RIVER

CLE-275-5.35

22/37

687
857

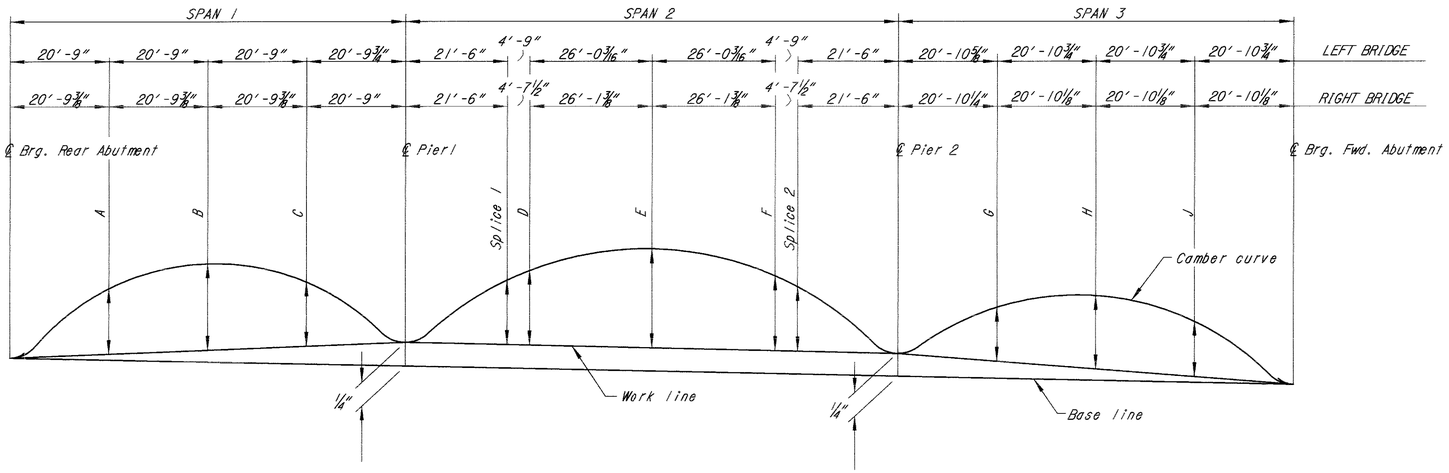

CAMBER DIAGRAM

DEFLECTION AND CAMBER TABLE

	SPAN 1				SPAN 2						SPAN 3				
	REAR ABUTMENT	A	B	C	Pier 1	Splice 1	D	E	F	Splice 2	Pier 2	G	H	J	FORWARD ABUTMENT
Deflection due to weight of steel, ins.	0	1/8	1/8	1/16	0	1/16	1/8	3/16	1/8	1/16	0	1/16	1/8	1/8	0
Deflection due to remaining DL, ins.	0	7/16	9/16	1/4	0	1/4	5/16	5/8	5/16	1/4	0	1/4	9/16	7/16	0
Adjustment Req'd for Vertical Curve, ins.	0	-1/4	-5/16	-1/4	0	-5/16	-3/8	-1/2	-3/8	-5/16	0	-1/4	-5/16	-1/4	0
Required Shop Camber, ins.	0	5/16	3/8	1/16	0	0	1/16	5/16	1/16	0	0	1/16	3/8	5/16	0

NOTES FOR CAMBER AND DEFLECTION

1. Work points (W.P) are at the center of the girder, on the centerline of bearings.
2. Work lines are straight lines through the work points.
3. The base line is a straight line through W.P. 1 and W.P. 4.
4. Tabulated values in the deflection and camber table are measured from the work line.

DESIGN AGENCY
BALKE ENGINEERS
1848 Summit Road
Cincinnati, Ohio 45237

DESIGNED	DRAWN	REVIEWED	DATE
FKL	ALH	CRS	6/01
CHECKED	REVISED	STRUCTURE FILE NUMBER	
MRS	—	1305573 LB 1305581 RB	

DEFLECTION AND CAMBER DETAILS
BRIDGE NO. CLE-275-0568
OVER EAST FORK OF THE LITTLE MIAMI RIVER

CLE-275-5.35

Filename: 0568cam.dgn

Thickness of external elastomer = 0.290"
(2 required)

Thickness of internal elastomer = 0.410"
(4 required)

Internal steel laminate thickness = 0.0747 (14 gage)
(5 required)

D.L. = 212^k
L.L. = 80^k

Total = 292^k

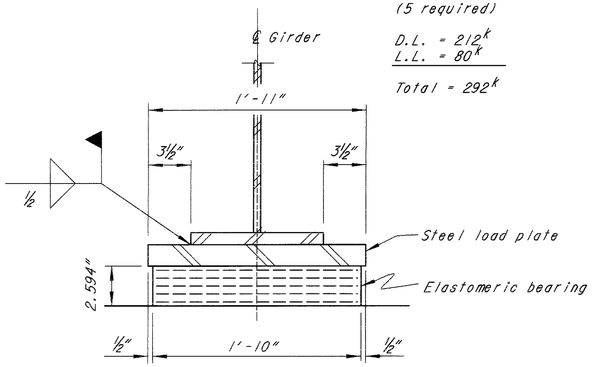

SECTION A-A

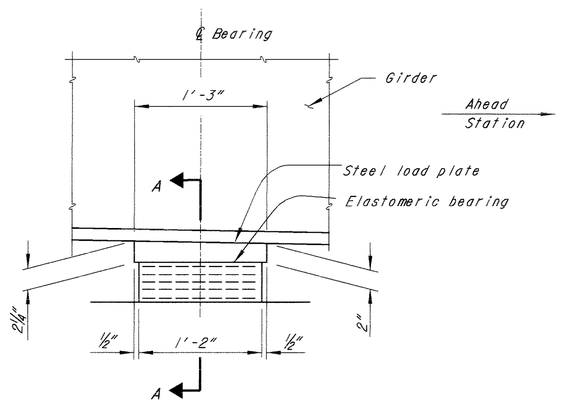

ELEVATION

EXPANSION BEARING AT PIERS

Thickness of external elastomer = 0.200"
(2 required)

Thickness of internal elastomer = 0.280"
(7 required)

Internal steel laminate thickness = 0.0747 (14 gage)
(8 required)

D.L. = 94^k
L.L. = 55^k

Total = 149^k

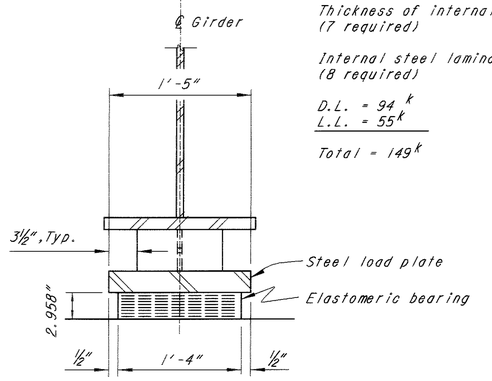

SECTION C-C

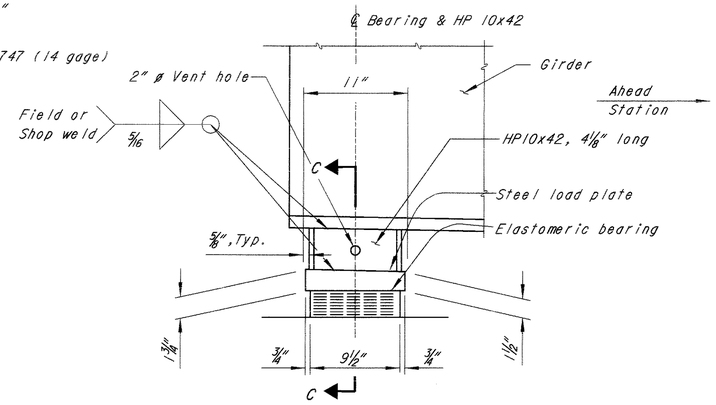

ELEVATION

EXPANSION BEARING AT ABUTMENTS

NOTES FOR LAMINATED ELASTOMERIC BEARINGS AND LOAD PLATE

LOAD PLATE: The steel load plate shall be bonded by vulcanization to the elastomer during the molding process.

The steel load plate and HP 10 x 42 shall be the same material as the attached structural steel. (A36 FOR EXISTING GIRDERS; A 709, GRADE 50 FOR PROPOSED GIRDERS)

WELDING shall be controlled so that the plate temperature at the elastomer bonded surface does not exceed 300°F as determined by the use of pyrometric sticks or other temperature monitoring devices.

BASIS OF PAYMENT: The unit bid price shall include all materials, labor, testing, anchor rods and incidentals necessary to furnish and install laminated elastomeric bearings. Payment will be made at the contract price for Item 516, each, elastomeric bearings with internal laminates (neoprene). Cost of the HP section shall be included for payment with Item 516 also.

ELASTOMERIC BEARINGS shall comply with Item 516 and AASHTO Standard Specification for Highway Bridges, Section 18, Bearing Devices, Division II, Construction, Articles 18.4.5.1 and 18.5.6.2. Bearings shall be Grade 3, 50 durometer elastomer, and shall be subjected to the load testing requirements defined in Article 18.7.4.5 of the AASHTO document listed above. Bearings were designed under Section 14.6.6 of Section 14, Bearings, Division I, Design. Testing shall be included in the unit price bid for the bearings, each.

BEARING REPOSITIONING: If the steel is erected at an ambient temperature higher than 80° F or lower than 40° F and the bearing shear deflection exceeds 1/6 of the bearing height at 60° F (+/-) 10° F, the beams or girders shall be raised to allow the bearings to return to their undeformed shape at 60° F (+/-) 10° F.

DESIGN AGENCY
BALKE ENGINEERS
1848 Summit Road
Cincinnati, Ohio 45237

DESIGNED	DRAWN	REVIEWED	DATE
FKL	ALH	CRS	6/01
CHECKED	REVISED	STRUCTURE FILE NUMBER	
MRS	—	1305573 L.B. 1305581 R.B.	

BEARING DETAILS
BRIDGE NO. CLE-275-0568
OVER EAST FORK OF THE LITTLE MIAMI RIVER

CLE-275-5.35

Filename:E9508BEARING.dgn

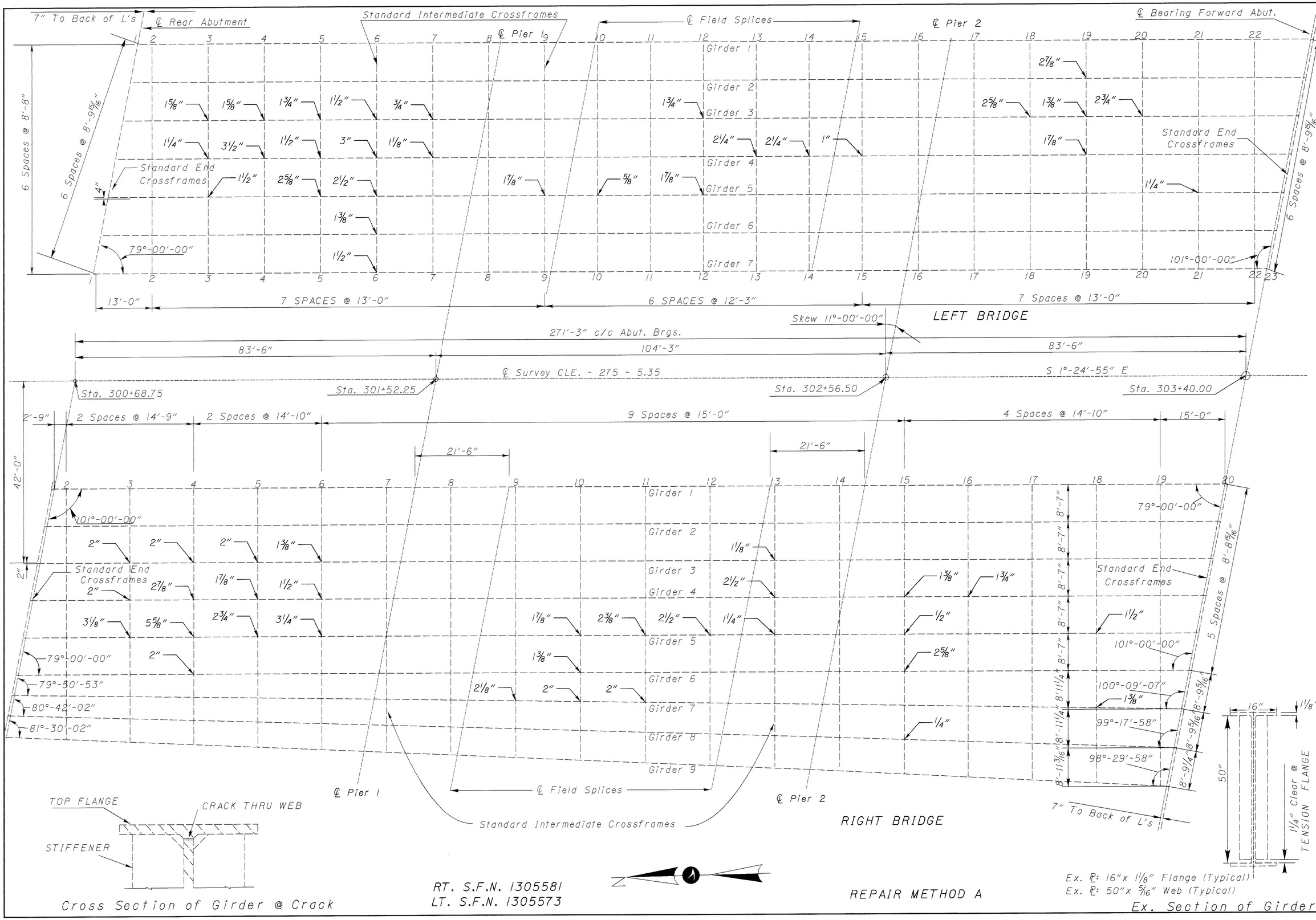

DESIGN AGENCY
DISTRICT 8 PRODUCTION BRIDGE OFFICE

DESIGNED	DRAWN	REVIEWED	DATE
RSK	JLA	MLM	8/01
CHECKED	REVISED	STRUCTURE FILE NUMBER	
JFE		1305581 & 1305573	

Bridge No. CLE-275-0568 Lt. & Rt.
I-275 Over East Fork of Little Miami River
Framing Details REPAIR METHOD A

CLE-275-5.35

24A | 37

687A 857

$$$$DATE$$$ $$TIME$$ USERINFO
$$$$$$$$$$$$$$$$$$$$DGNSPEC$$$$$$$$$$$$$$$$$$$$

7" To Back of L's
℄ Rear Abutment
Standard Intermediate Crossframes
℄ Pier 1
℄ Field Splices
℄ Pier 2
℄ Bearing Forward Abut.
Girder 1
Girder 2
Girder 3
Girder 4
Girder 5
Girder 6
Girder 7
Standard End Crossframes
6 Spaces @ 8'-8"
6 Spaces @ 8'-9 5/16"
4"
79°-00'-00"
101°-00'-00"
13'-0"
7 SPACES @ 13'-0"
6 SPACES @ 12'-3"
7 Spaces @ 13'-0"
LEFT BRIDGE
Skew 11°-00'-00"
271'-3" c/c Abut. Brgs.
83'-6"
104'-3"
℄ Survey CLE. - 275 - 5.35
S 1°-24'-55" E
Sta. 300+68.75
Sta. 301+52.25
Sta. 302+56.50
Sta. 303+40.00
2'-9"
2 Spaces @ 14'-9"
2 Spaces @ 14'-10"
9 Spaces @ 15'-0"
4 Spaces @ 14'-10"
15'-0"
21'-6"
42'-0"
2"
79°-50'-53"
80°-42'-02"
81°-30'-02"
Girder 8
Girder 9
℄ Pier 1
℄ Field Splices
℄ Pier 2
RIGHT BRIDGE
8'-7"
8'-11 1/4"
8'-11 3/16"
8'-9 5/16"
8'-9 1/4"
5 Spaces @ 8'-8 5/16"
99°-17'-58"
98°-29'-58"
16"
1 1/8"
50"
1 1/4" Clear @ TENSION FLANGE
7" To Back of L's
TOP FLANGE
WEB
CRACKS AROUND STIFFENER WELD
STIFFENER
Stiffener Elevation @ Crack
RT. S.F.N. 1305581
LT. S.F.N. 1305573
REPAIR METHOD B
Ex. ℙ: 16"x 1 1/8" Flange (Typical)
Ex. ℙ: 50"x 5/16" Web (Typical)
Ex. Section of Girder

DESIGN AGENCY: DISTRICT 8 PRODUCTION BRIDGE OFFICE
DESIGNED RSK | DRAWN JLA | CHECKED JFE | REVIEWED MLM | DATE 8/01 | REVISED | STRUCTURE FILE NUMBER 1305581 & 1305573

Bridge No. CLE-275-0568 Lt. & Rt.
I-275 Over East Fork of Little Miami River
Framing Details REPAIR METHOD B

CLE-275-5.35

24B | 37

6878
857

$$$$DATE$$$ $$TIME$$ USERINFO
$$$$$$$$$$$$$$$$$$$$DGNSPEC$$$$$$$$$$$$$$$$$$$$

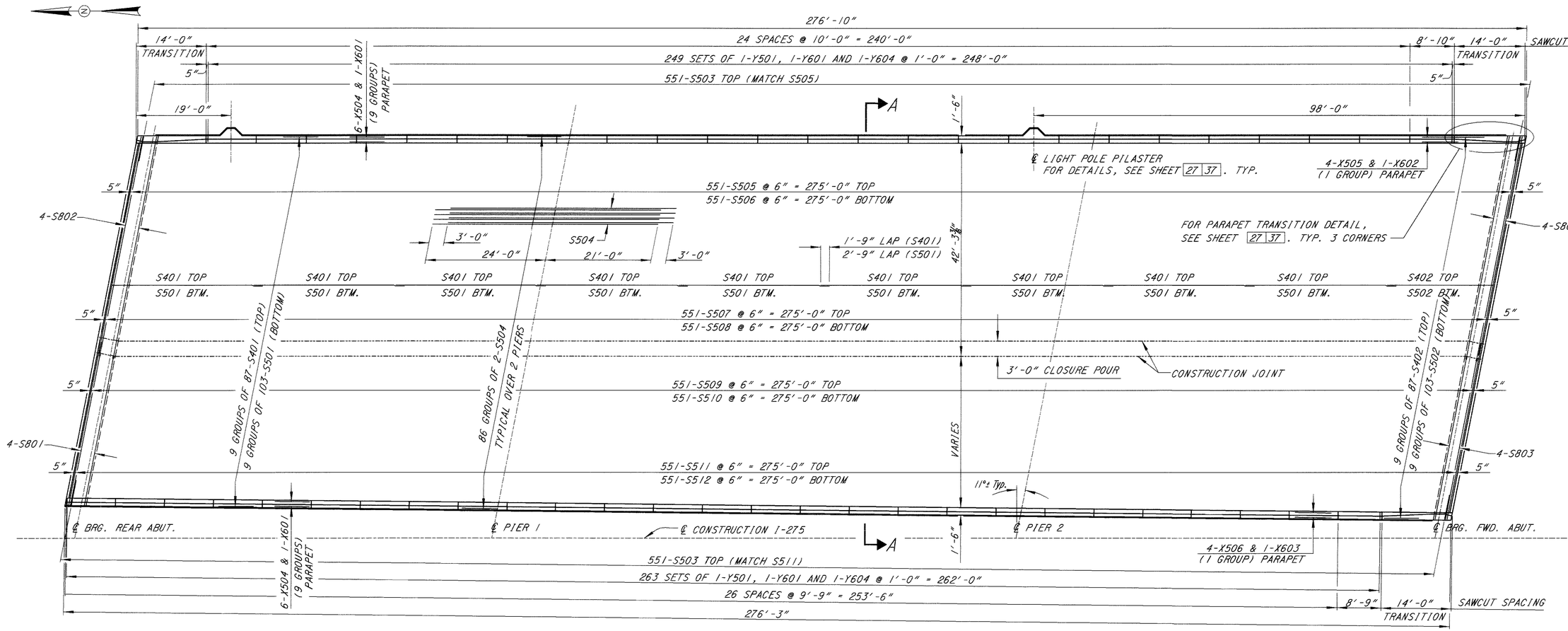

PLAN

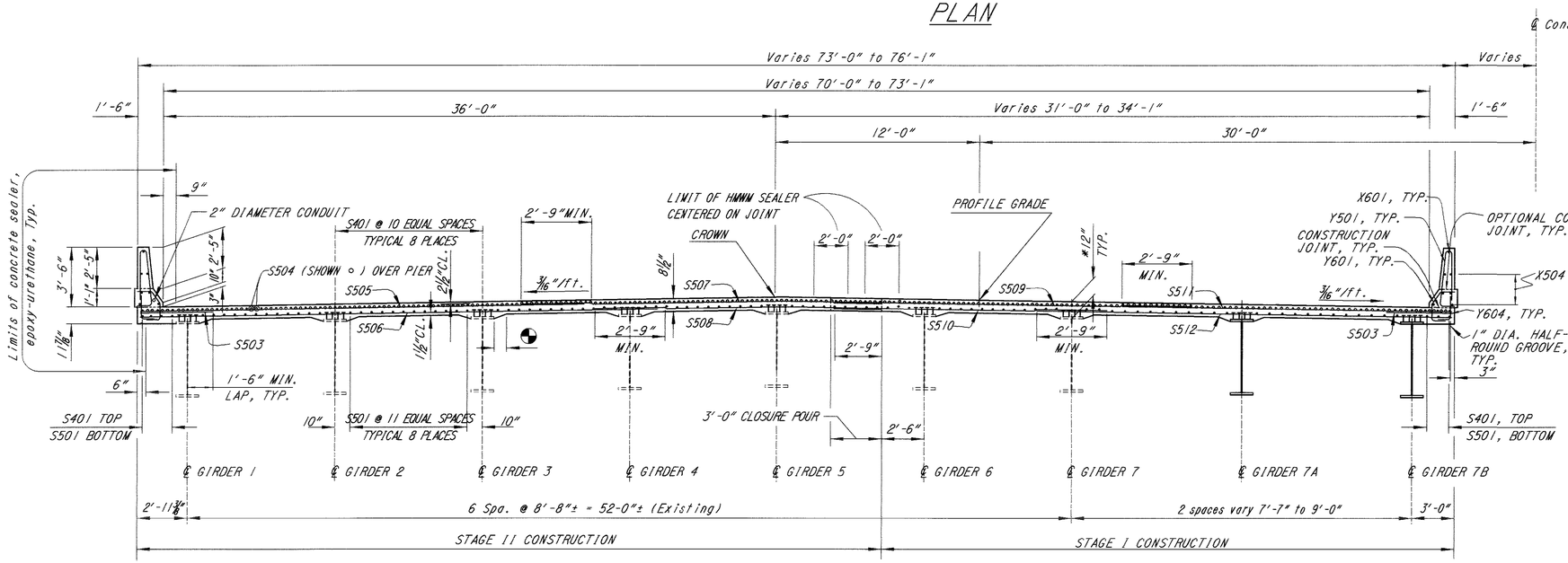

SECTION A-A

NOTES:

1. * DECK SLAB DEPTH FOR CONCRETE QUANTITY: THE DIMENSION SHOWN FROM THE TOP OF THE CONCRETE DECK TO THE TOP OF THE WEB, MINUS THE DESIGN HAUNCH THICKNESS OF 3½", HAS BEEN USED FOR COMPUTING THE DECK CONCRETE QUANTITIES. CONCRETE REQUIRED TO FILL THE HAUNCHES, INCLUDING ADDITIONAL OR LESS MATERIAL REQUIRED DUE TO HAUNCH CONSTRUCTION TOLERANCES, SHALL BE CONSIDERED AS INCIDENTAL AND WILL NOT BE INCLUDED IN THE QUANTITY CALCULATIONS FOR PAYMENT.
2. ◒ A HAUNCH WIDTH OF 9"SHALL BE USED. HOWEVER THE HAUNCH WIDTH MAY VARY BETWEEN 6"AND 12"
3. FOR ADDITIONAL INFORMATION ON THE PARAPETS AND SAWCUT JOINTS, SEE STD. DWG. BR-1.

DESIGN AGENCY
BALKE ENGINEERS
1848 Summit Road
Cincinnati, Ohio 45237

DESIGNED	DRAWN	REVIEWED	DATE
MPS	ALH/WJH	CBS	6/01
CHECKED	REVISED	STRUCTURE FILE NUMBER 1302561, N.B.	
FKL	—		

LEFT BRIDGE DECK PLAN
BRIDGE NO. CLE-275-0568
OVER EAST FORK OF THE LITTLE MIAMI RIVER

CLE-275-5.35

25 37

690
857

FI Version: 05/08, 2001.dgn

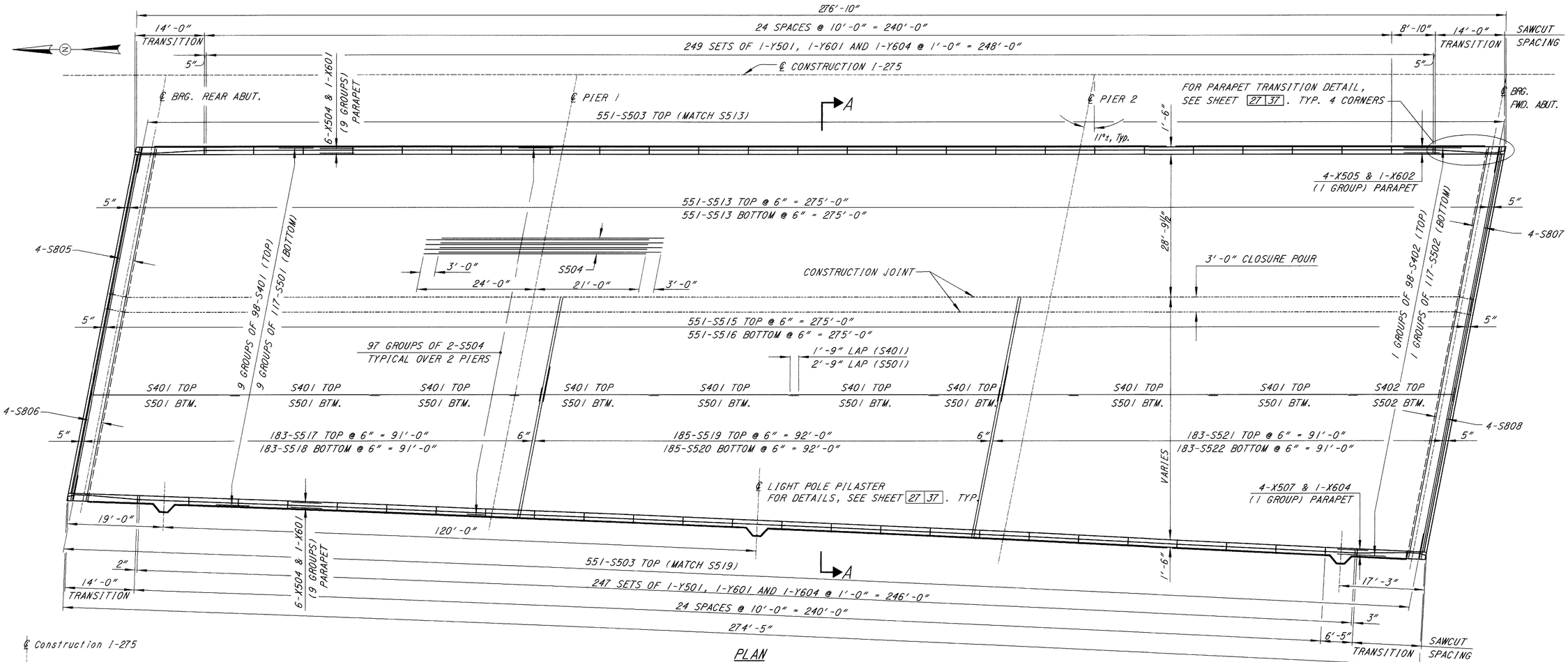

PLAN

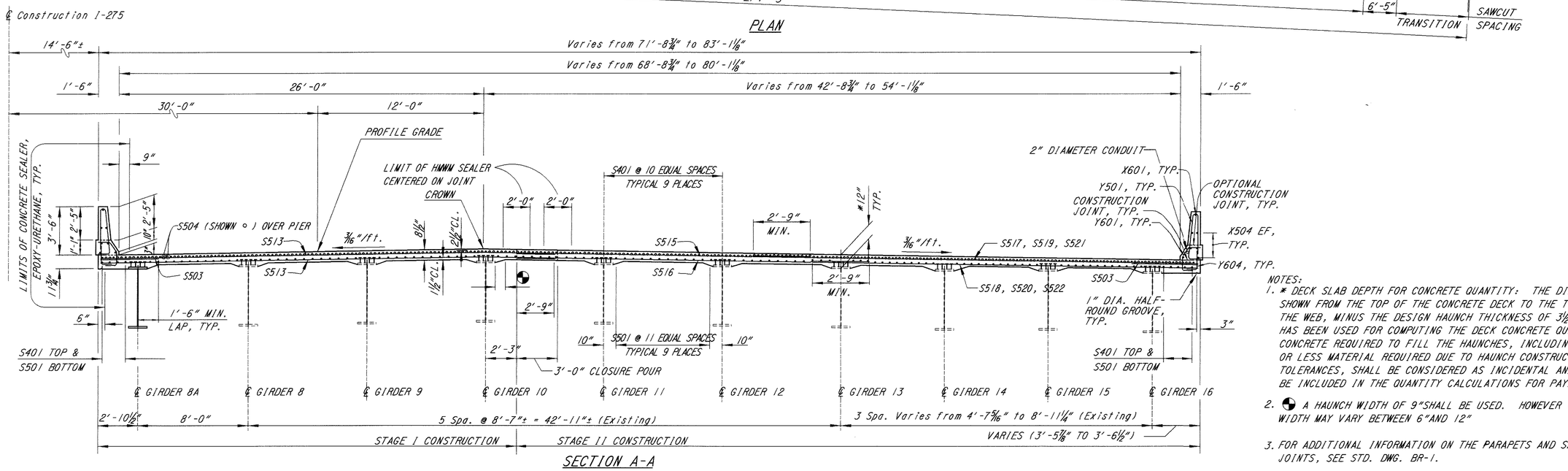

SECTION A-A

NOTES:

1. * DECK SLAB DEPTH FOR CONCRETE QUANTITY: THE DIMENSION SHOWN FROM THE TOP OF THE CONCRETE DECK TO THE TOP OF THE WEB, MINUS THE DESIGN HAUNCH THICKNESS OF 3½", HAS BEEN USED FOR COMPUTING THE DECK CONCRETE QUANTITIES. CONCRETE REQUIRED TO FILL THE HAUNCHES, INCLUDING ADDITIONAL OR LESS MATERIAL REQUIRED DUE TO HAUNCH CONSTRUCTION TOLERANCES, SHALL BE CONSIDERED AS INCIDENTAL AND WILL NOT BE INCLUDED IN THE QUANTITY CALCULATIONS FOR PAYMENT.
2. ◔ A HAUNCH WIDTH OF 9"SHALL BE USED. HOWEVER THE HAUNCH WIDTH MAY VARY BETWEEN 6"AND 12"
3. FOR ADDITIONAL INFORMATION ON THE PARAPETS AND SAWCUT JOINTS, SEE STD. DWG. BR-1.

DESIGN AGENCY
BALKE ENGINEERS
1848 Summit Road
Cincinnati, Ohio 45237

DESIGNED	DRAWN	REVIEWED	DATE
MRS	ALH/WLH	CBS	6/01
CHECKED	REVISED	STRUCTURE FILE NUMBER	
FKL	—	30557 H.E. 30558 H.E.	

RIGHT BRIDGE DECK PLAN
BRIDGE NO. CLE-275-0568
OVER EAST FORK OF THE LITTLE MIAMI RIVER

CLE-275-5.35

26/37

691/857

I:\Bridges\CLE0275\057_dgn

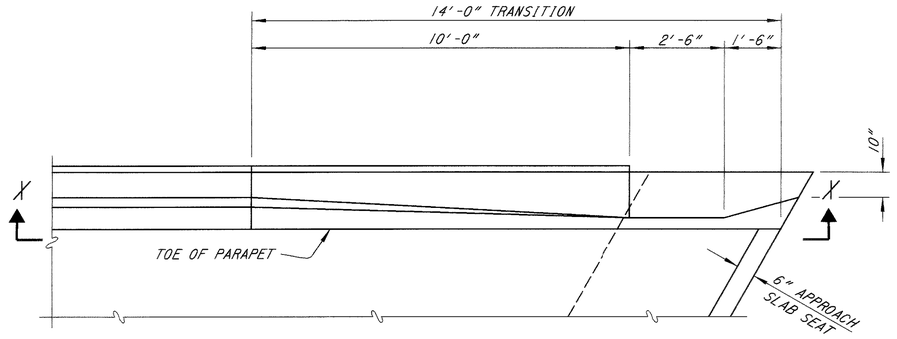

PLAN

(LEFT BRIDGE SHOWN, RIGHT BRIDGE SIMILAR)
(3 REQUIRED LEFT BRIDGE
4 REQUIRED RIGHT BRIDGE)

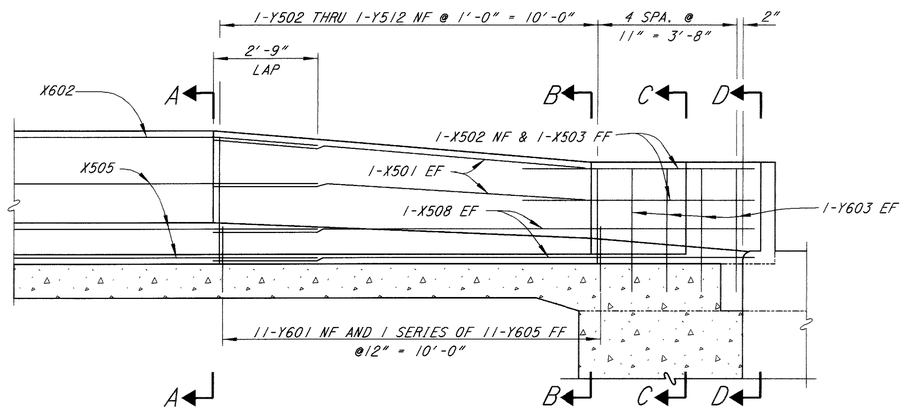

SECTION X-X

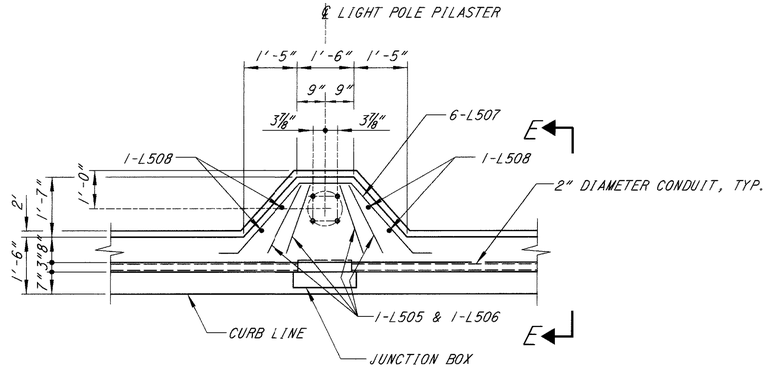

LIGHT POLE PILASTER DETAIL

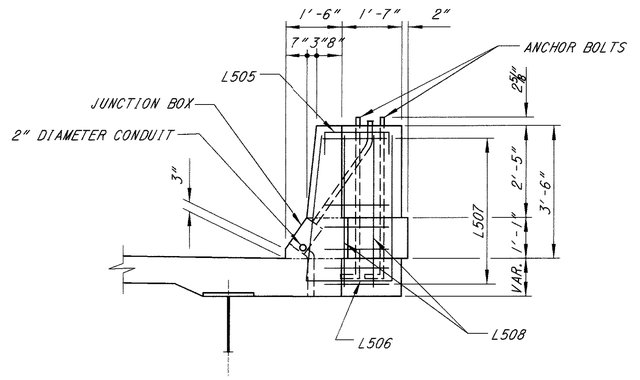

SECTION E-E

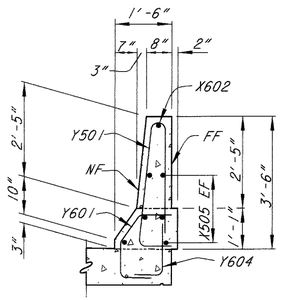

SECTION A-A

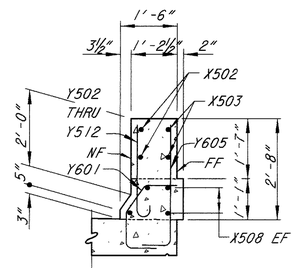

SECTION B-B

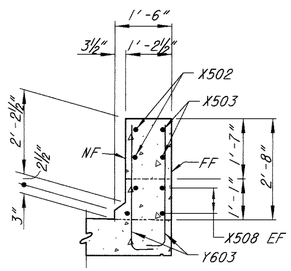

SECTION C-C

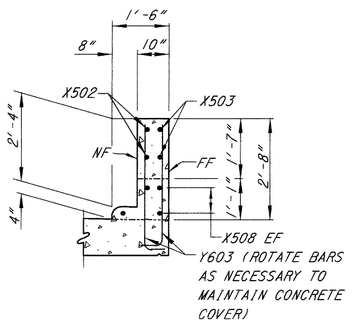

SECTION D-D

NOTES:
1. FOR ADDITIONAL INFORMATION, SEE STD. DWG. BR-1.
2. EF = EACH FACE
   NF = NEAR FACE
   FF = FAR FACE
3. FOR ADDITIONAL INFORMATION ON LIGHT POLE PILASTER, SEE STANDARD CONSTRUCTION DRAWING HL-20.14M.

DESIGN AGENCY
BALKE ENGINEERS
1848 Summit Road
Cincinnati, Ohio 45237

DESIGNED	DRAWN	REVIEWED	DATE
FKL	ALH, WJH	CRS	6/01
CHECKED	REVISED	STRUCTURE FILE NUMBER 302567 & 302568	
MRS	—		

DECK DETAILS
BRIDGE NO. CLE-275-0568
OVER EAST FORK OF LITTLE MIAMI RIVER

CLE-275-5.35

27/37

692/859

F:\Automa~ 05607TRANSITION.dgn

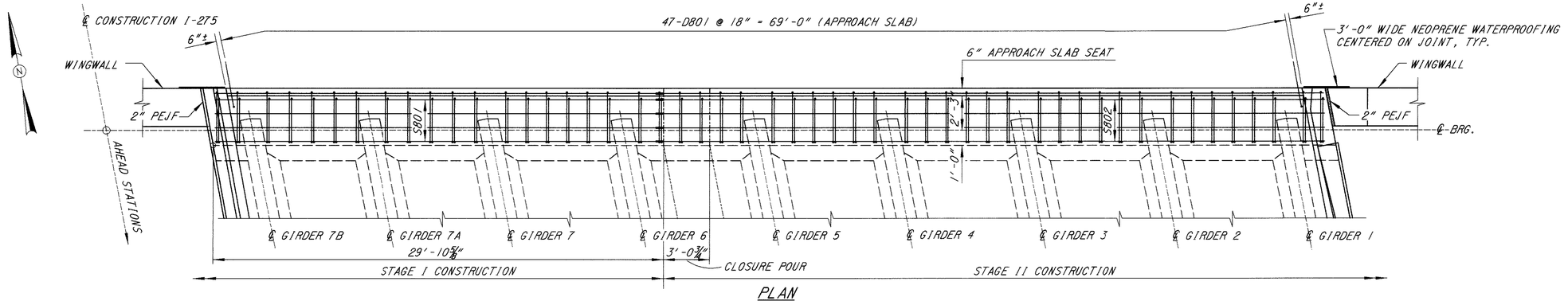

PLAN

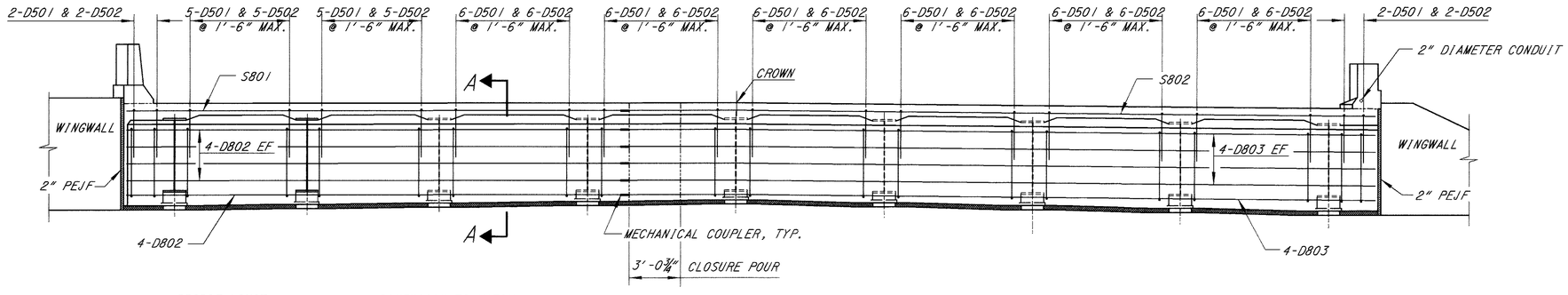

ELEVATION

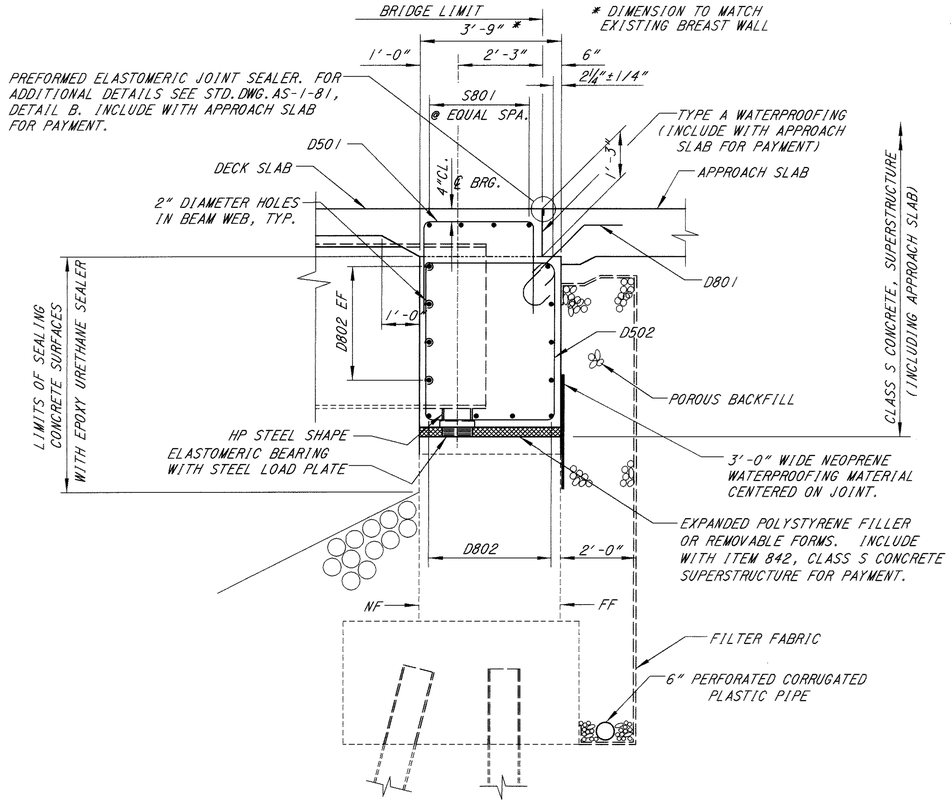

SECTION A-A

NOTES;

1. FOR ADDITIONAL INFORMATION SEE STD. DWG. SICD-1-96.
2. WORK THIS SHEET WITH DECK PLAN SHEET 25 37.
3. PEJF = PREFORMED EXPANSION JOINT FILLER.
   EF = EACH FACE
   NF = NEAR FACE
   FF = FAR FACE
4. ABUTMENT DIAPHRAGM CONCRETE, STEEL SUPERSTRUCTURE: THE CONCRETE ENCASING STRUCTURAL STEEL MEMBERS SUPPORTED IN SEMI-INTEGRAL AND INTEGRAL TYPE ABUTMENTS MAY BE PLACED BEFORE THE ACTUAL DECK CONCRETE IS PLACED. IF THE CONTRACTOR CHOOSES THIS OPTION THE CONCRETE SHALL HAVE HAD AT LEAST 48 HOURS OF SET TIME BEFORE DECK CONCRETE IS PLACED.
5. ABUTMENT DIAPHRAGM CONCRETE, STEEL SUPERSTRUCTURE, PHASED CONSTRUCTION: WHERE THE PLANS DETAIL A SEPARATE CLOSURE POUR SECTION BETWEEN CONSTRUCTION PHASES, THE CONCRETE IN THE ABUTMENT DIAPHRAGM SECTIONS OF THIS SEMI-INTEGRAL OR INTEGRAL ABUTMENT THAT ENCASES ANY STRUCTURAL STEEL MEMBERS OF AN INDIVIDUAL PHASE MAY BE PLACED EITHER SEPARATE OF OR WITH THE DECK CONCRETE OF THAT PHASE. IF THE CONTRACTOR CHOOSES TO PLACE THE DIAPHRAGM CONCRETE SEPARATELY, THE CONCRETE SHALL HAVE AT LEAST 48 HOURS OF SET TIME BEFORE DECK CONCRETE CAN BE PLACED. THE HORIZONTAL CONSTRUCTION JOINT BETWEEN THE DIAPHRAGM AND DECK CONCRETE SHOULD BE AT THE BOTTOM OF THE TOP FLANGE. IF NO SEPARATE CLOSURE POUR SECTION IS DETAILED BETWEEN PHASES THE ABUTMENT DIAPHRAGM CONCRETE SHALL BE POURED SIMULTANEOUSLY WITH THE DECK POUR TO ALLOW FOR EXPECTED DEAD LOAD ROTATION AT THE ABUTMENTS.

DESIGN AGENCY
BALKE ENGINEERS
1848 Summit Road
Cincinnati, Ohio 45237

DESIGNED	DRAWN	REVIEWED	DATE
FKL	WJH/RHH	CRS	6/01
CHECKED	REVISED	STRUCTURE FILE NUMBER	
MPS	—	120571 A.B. 302567 R.B.	

LEFT BRIDGE REAR ABUTMENT DIAPHRAGM DETAILS

BRIDGE NO. CLE-275-0568
OVER EAST FORK OF LITTLE MIAMI RIVER

CLE-275-5.35

28/37

693
857

F:\Projects - CS\CLE\BRIDGE\APPR_dgn

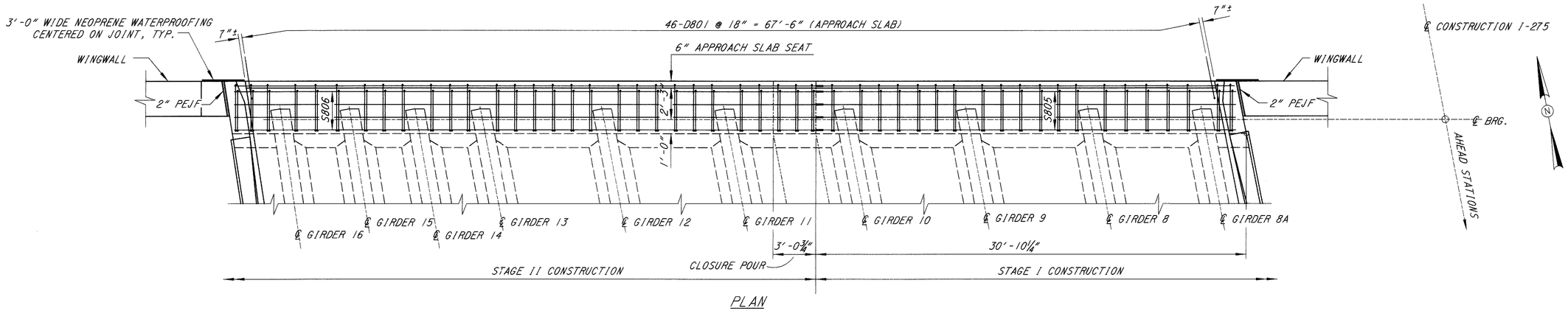

PLAN

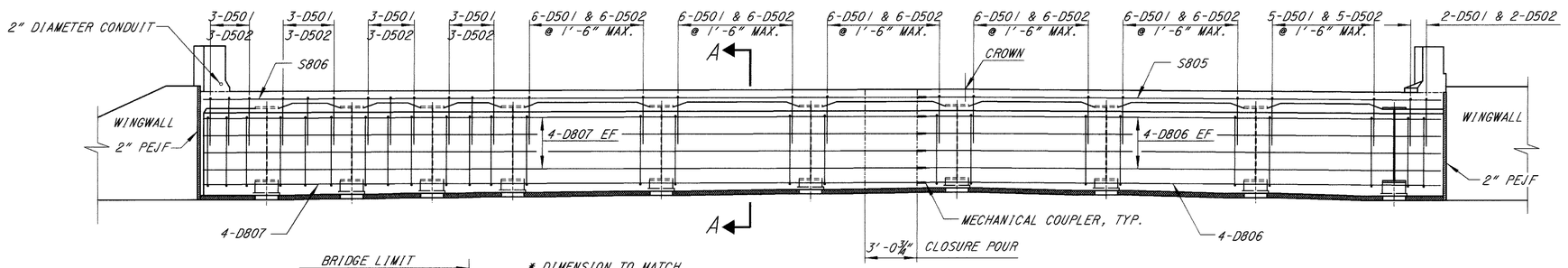

ELEVATION

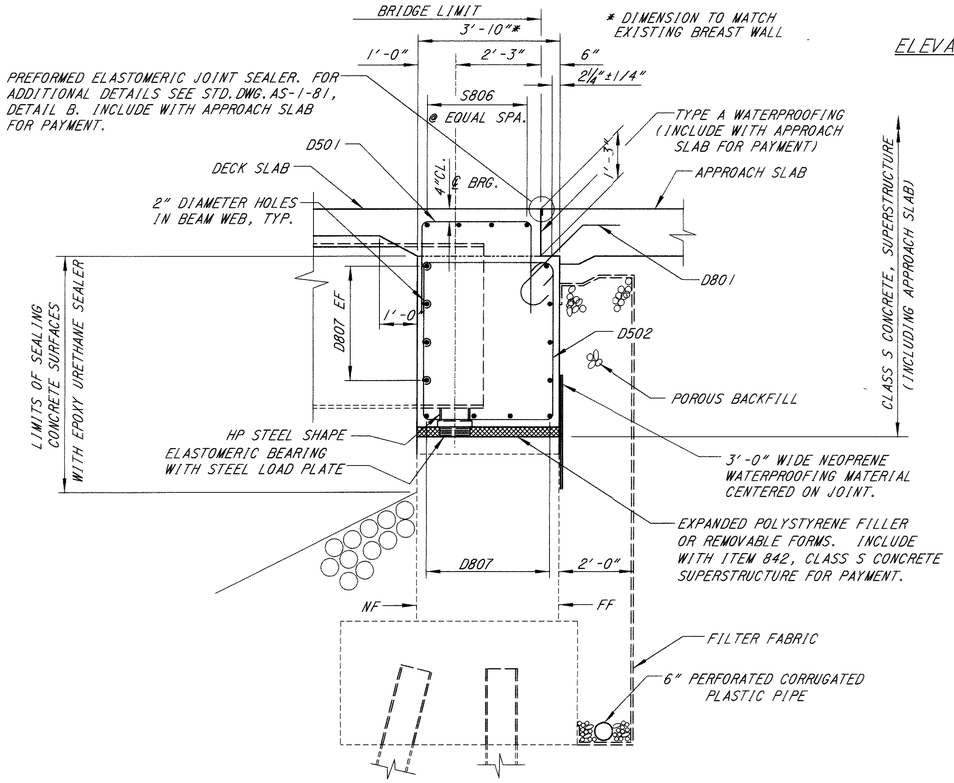

SECTION A-A

NOTES:
1. FOR ADDITIONAL INFORMATION SEE STD. DWG. SICD-1-96.
2. WORK THIS SHEET WITH DECK PLAN SHEET 26 37 .
3. PEJF = PREFORMED EXPANSION JOINT FILLER.
   EF = EACH FACE
   NF = NEAR FACE
   FF = FAR FACE
4. ABUTMENT DIAPHRAGM CONCRETE, STEEL SUPERSTRUCTURE: THE CONCRETE ENCASING STRUCTURAL STEEL MEMBERS SUPPORTED IN SEMI-INTEGRAL AND INTEGRAL TYPE ABUTMENTS MAY BE PLACED BEFORE THE ACTUAL DECK CONCRETE IS PLACED. IF THE CONTRACTOR CHOOSES THIS OPTION THE CONCRETE SHALL HAVE HAD AT LEAST 48 HOURS OF SET TIME BEFORE DECK CONCRETE IS PLACED.
5. ABUTMENT DIAPHRAGM CONCRETE, STEEL SUPERSTRUCTURE, PHASED CONSTRUCTION: WHERE THE PLANS DETAIL A SEPARATE CLOSURE POUR SECTION BETWEEN CONSTRUCTION PHASES, THE CONCRETE IN THE ABUTMENT DIAPHRAGM SECTIONS OF THIS SEMI-INTEGRAL OR INTEGRAL ABUTMENT THAT ENCASES ANY STRUCTURAL STEEL MEMBERS OF AN INDIVIDUAL PHASE MAY BE PLACED EITHER SEPARATE OF OR WITH THE DECK CONCRETE OF THAT PHASE. IF THE CONTRACTOR CHOOSES TO PLACE THE DIAPHRAGM CONCRETE SEPARATELY, THE CONCRETE SHALL HAVE AT LEAST 48 HOURS OF SET TIME BEFORE DECK CONCRETE CAN BE PLACED. THE HORIZONTAL CONSTRUCTION JOINT BETWEEN THE DIAPHRAGM AND DECK CONCRETE SHOULD BE AT THE BOTTOM OF THE TOP FLANGE. IF NO SEPARATE CLOSURE POUR SECTION IS DETAILED BETWEEN PHASES THE ABUTMENT DIAPHRAGM CONCRETE SHALL BE POURED SIMULTANEOUSLY WITH THE DECK POUR TO ALLOW FOR EXPECTED DEAD LOAD ROTATION AT THE ABUTMENTS.

DESIGN AGENCY
BALKE ENGINEERS
1848 Summit Road
Cincinnati, Ohio 45237

DESIGNED	DRAWN	REVIEWED	DATE
FKL	WJH/RHH	CRS	6/01
CHECKED	REVISED	STRUCTURE FILE NUMBER 302557 / 302558 / R.B.	
MPS	—		

RIGHT BRIDGE REAR ABUTMENT DIAPHRAGM DETAILS

BRIDGE NO. CLE-275-0568
OVER EAST FORK OF LITTLE MIAMI RIVER

CLE-275-5.35

29 / 37

694 / 857

F:\Inroms\ OSDIAPHRAGM.dgn

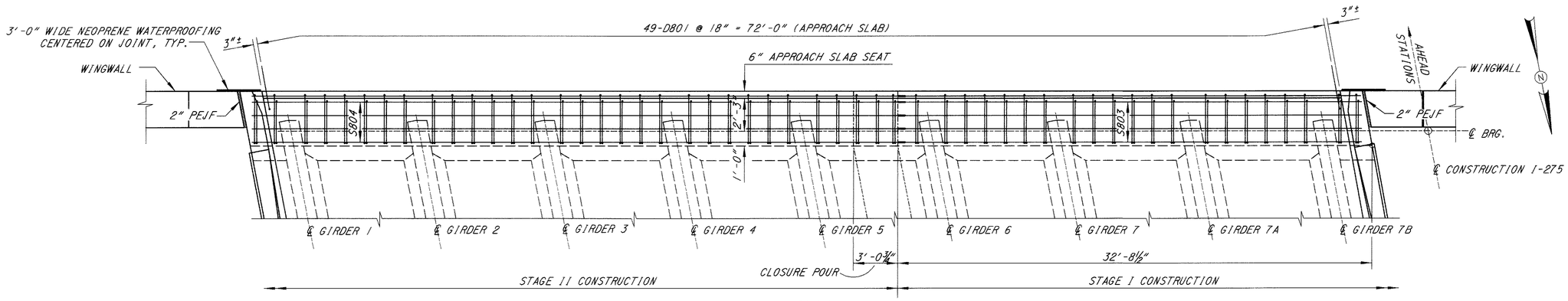

PLAN

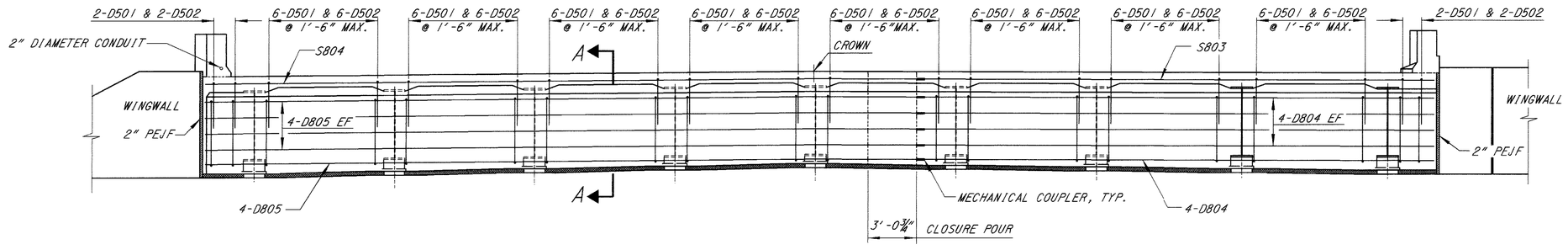

ELEVATION

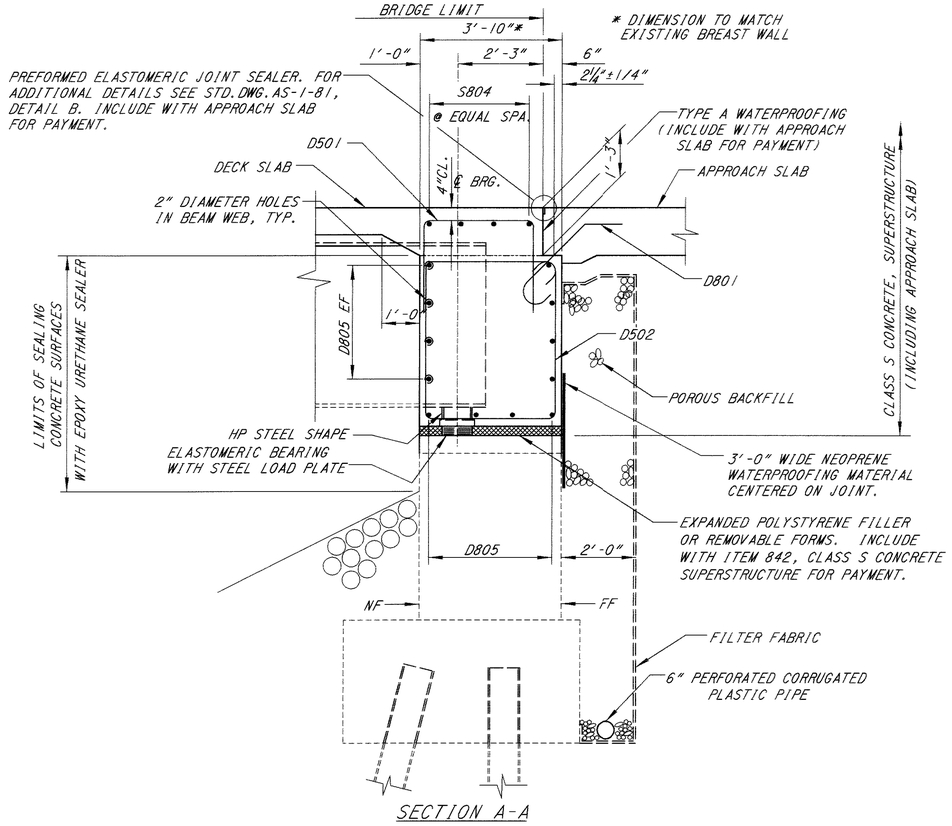

SECTION A-A

NOTES:
1. FOR ADDITIONAL INFORMATION SEE STD. DWG. SICD-1-96.
2. WORK THIS SHEET WITH DECK PLAN SHEET 25 37.
3. PEJF = PREFORMED EXPANSION JOINT FILLER.
   EF = EACH FACE
   NF = NEAR FACE
   FF = FAR FACE
4. ABUTMENT DIAPHRAGM CONCRETE, STEEL SUPERSTRUCTURE: THE CONCRETE ENCASING STRUCTURAL STEEL MEMBERS SUPPORTED IN SEMI-INTEGRAL AND INTEGRAL TYPE ABUTMENTS MAY BE PLACED BEFORE THE ACTUAL DECK CONCRETE IS PLACED. IF THE CONTRACTOR CHOOSES THIS OPTION THE CONCRETE SHALL HAVE HAD AT LEAST 48 HOURS OF SET TIME BEFORE DECK CONCRETE IS PLACED.
5. ABUTMENT DIAPHRAGM CONCRETE, STEEL SUPERSTRUCTURE, PHASED CONSTRUCTION: WHERE THE PLANS DETAIL A SEPARATE CLOSURE POUR SECTION BETWEEN CONSTRUCTION PHASES, THE CONCRETE IN THE ABUTMENT DIAPHRAGM SECTIONS OF THIS SEMI-INTEGRAL OR INTEGRAL ABUTMENT THAT ENCASES ANY STRUCTURAL STEEL MEMBERS OF AN INDIVIDUAL PHASE MAY BE PLACED EITHER SEPARATE OF OR WITH THE DECK CONCRETE OF THAT PHASE. IF THE CONTRACTOR CHOOSES TO PLACE THE DIAPHRAGM CONCRETE SEPARATELY, THE CONCRETE SHALL HAVE AT LEAST 48 HOURS OF SET TIME BEFORE DECK CONCRETE CAN BE PLACED. THE HORIZONTAL CONSTRUCTION JOINT BETWEEN THE DIAPHRAGM AND DECK CONCRETE SHOULD BE AT THE BOTTOM OF THE TOP FLANGE. IF NO SEPARATE CLOSURE POUR SECTION IS DETAILED BETWEEN PHASES THE ABUTMENT DIAPHRAGM CONCRETE SHALL BE POURED SIMULTANEOUSLY WITH THE DECK POUR TO ALLOW FOR EXPECTED DEAD LOAD ROTATION AT THE ABUTMENTS.

DESIGN AGENCY
BALKE ENGINEERS
1848 Summit Road
Cincinnati, Ohio 45237

DESIGNED	DRAWN	REVIEWED	DATE
FKL	WJH/ARHH	CBS	6/01
CHECKED	REVISED	STRUCTURE FILE NUMBER 1305571, P.D. 1305581, R.B.	
MPS	—		

LEFT BRIDGE FORWARD ABUTMENT DETAILS
BRIDGE NO. CLE-275-0568
OVER EAST FORK OF LITTLE MIAMI RIVER

CLE-275-5.35

30/37

695
857

F:\Bridges\CLE0568\DETAILS\DETAILS.dgn

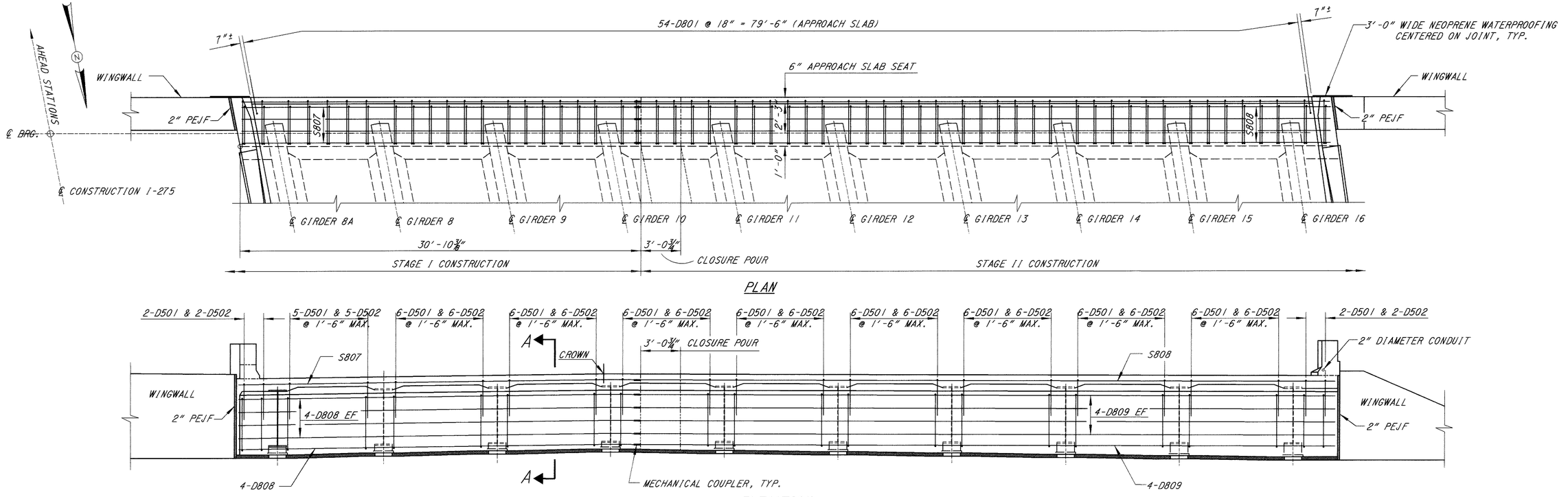

PLAN

ELEVATION

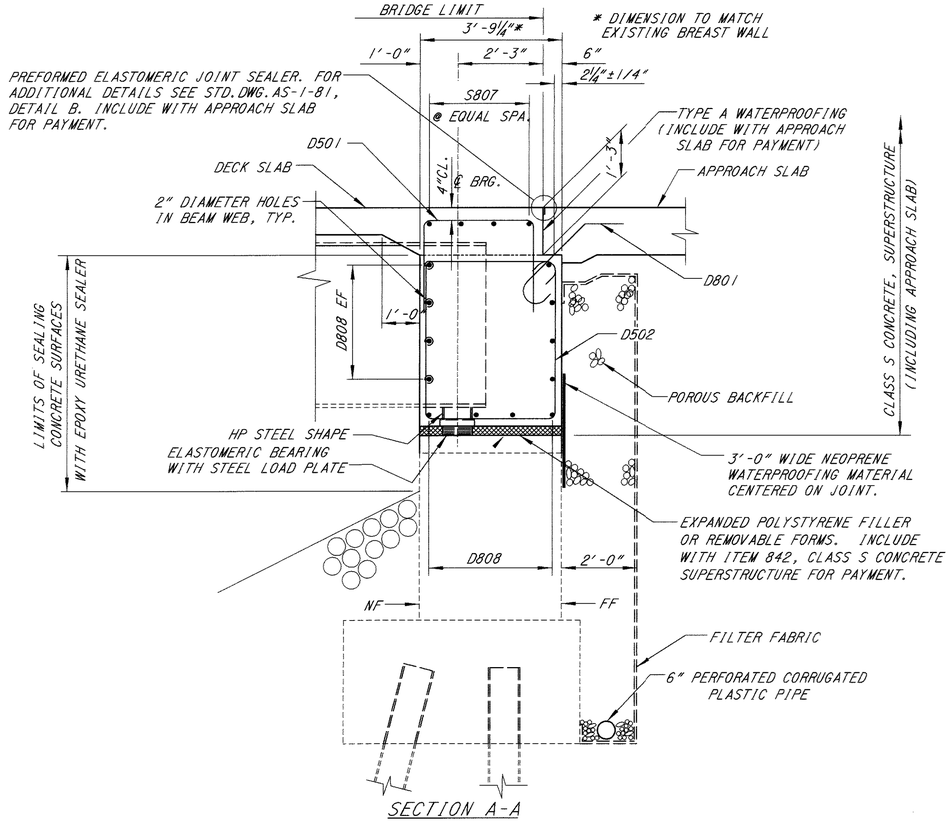

SECTION A-A

NOTES:
1. FOR ADDITIONAL INFORMATION SEE STD. DWG. SCD-1-96.
2. WORK THIS SHEET WITH DECK PLAN SHEET 26 37.
3. PEJF = PREFORMED EXPANSION JOINT FILLER.
   EF = EACH FACE
   NF = NEAR FACE
   FF = FAR FACE
4. ABUTMENT DIAPHRAGM CONCRETE, STEEL SUPERSTRUCTURE: THE CONCRETE ENCASING STRUCTURAL STEEL MEMBERS SUPPORTED IN SEMI-INTEGRAL AND INTEGRAL TYPE ABUTMENTS MAY BE PLACED BEFORE THE ACTUAL DECK CONCRETE IS PLACED. IF THE CONTRACTOR CHOOSES THIS OPTION THE CONCRETE SHALL HAVE HAD AT LEAST 48 HOURS OF SET TIME BEFORE DECK CONCRETE IS PLACED.
5. ABUTMENT DIAPHRAGM CONCRETE, STEEL SUPERSTRUCTURE, PHASED CONSTRUCTION: WHERE THE PLANS DETAIL A SEPARATE CLOSURE POUR SECTION BETWEEN CONSTRUCTION PHASES, THE CONCRETE IN THE ABUTMENT DIAPHRAGM SECTIONS OF THIS SEMI-INTEGRAL OR INTEGRAL ABUTMENT THAT ENCASES ANY STRUCTURAL STEEL MEMBERS OF AN INDIVIDUAL PHASE MAY BE PLACED EITHER SEPARATE OF OR WITH THE DECK CONCRETE OF THAT PHASE. IF THE CONTRACTOR CHOOSES TO PLACE THE DIAPHRAGM CONCRETE SEPARATELY, THE CONCRETE SHALL HAVE AT LEAST 48 HOURS OF SET TIME BEFORE DECK CONCRETE CAN BE PLACED. THE HORIZONTAL CONSTRUCTION JOINT BETWEEN THE DIAPHRAGM AND DECK CONCRETE SHOULD BE AT THE BOTTOM OF THE TOP FLANGE. IF NO SEPARATE CLOSURE POUR SECTION IS DETAILED BETWEEN PHASES THE ABUTMENT DIAPHRAGM CONCRETE SHALL BE POURED SIMULTANEOUSLY WITH THE DECK POUR TO ALLOW FOR EXPECTED DEAD LOAD ROTATION AT THE ABUTMENTS.

DESIGN AGENCY
BALKE ENGINEERS
1848 Summit Road
Cincinnati, Ohio 45237

DESIGNED	DRAWN	REVIEWED	DATE
MRS	WJH/RHH	CRS	6/01
CHECKED	REVISED	STRUCTURE FILE NUMBER	
FKL	—	1305714 R.B. 1305567 R.B.	

RIGHT BRIDGE FORWARD ABUTMENT DIAPHRAGM DETAILS
BRIDGE NO. CLE-275-0568
OVER EAST FORK OF LITTLE MIAMI RIVER

CLE-275-5.35

31/37

696
857

File Name: 0568RBFABDIAPH.dgn

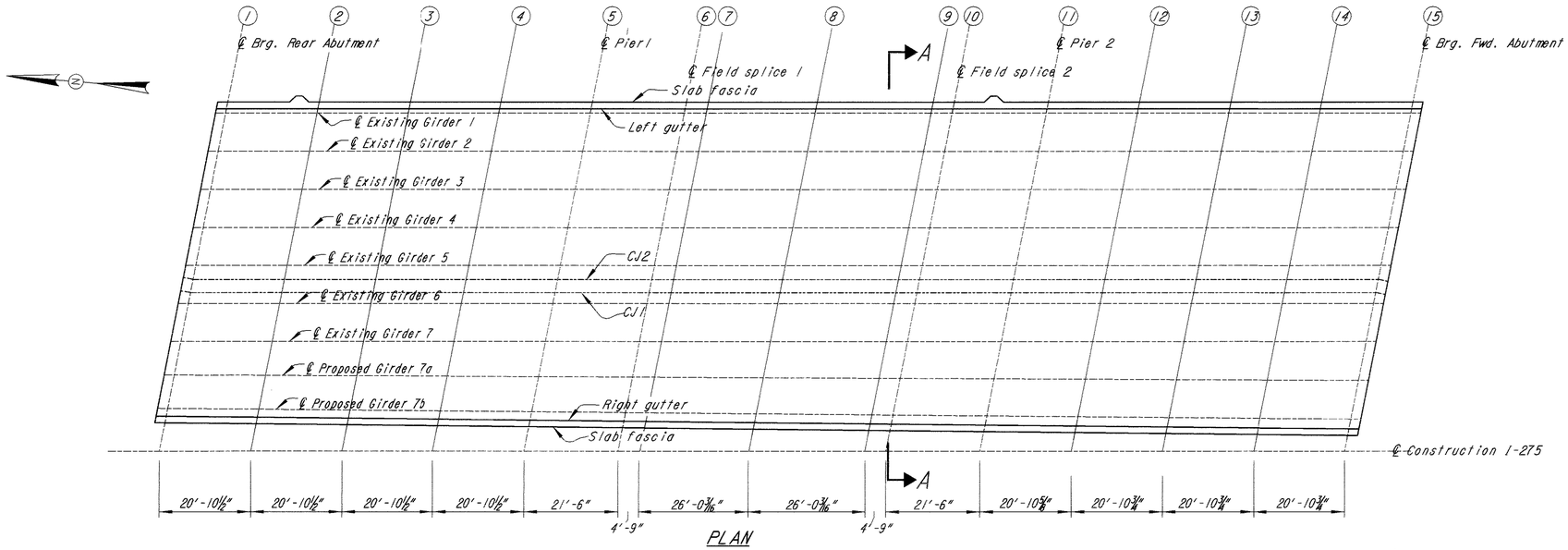

PLAN

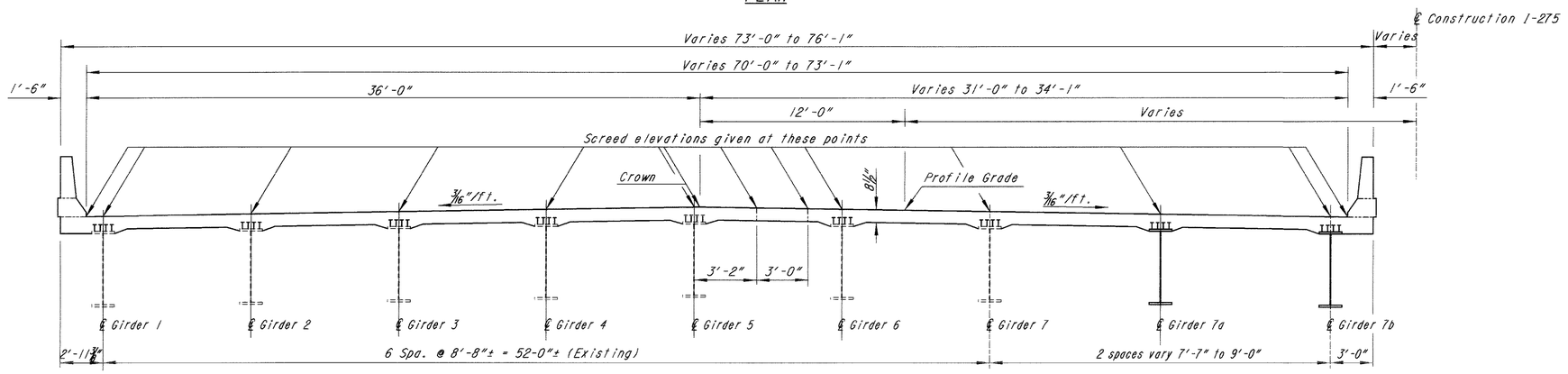

SECTION A-A

SCREED ELEVATIONS

Location	Left gutter	Girder 1	Girder 2	Girder 3	Girder 4	Girder 5	Crown	CJ2	CJ1	Girder 6	Girder 7	Girder 7a	Girder 7b	Right gutter
Grid line 1	532.49	532.52	532.69	532.87	533.04	533.22	533.22	533.18	533.15	533.12	533.03	532.95	532.86	532.85
Grid line 2	532.32	532.35	532.58	532.76	532.88	533.11	533.11	533.07	532.98	533.01	532.86	532.83	532.74	532.67
Grid line 3	531.84	531.87	532.09	532.26	532.38	532.61	532.61	532.57	532.49	532.51	532.36	532.33	532.24	532.17
Grid line 4	531.13	531.16	531.34	531.51	531.67	531.85	531.85	531.82	531.77	531.75	531.65	531.57	531.47	531.45
Grid line 5	530.63	530.65	530.82	530.99	531.17	531.34	531.34	531.30	531.27	531.24	531.14	531.05	530.95	530.94
Grid line 6	530.21	530.24	530.41	530.58	530.75	530.92	530.92	530.88	530.84	530.82	530.71	530.62	530.53	530.51
Grid line 7	530.17	530.20	530.39	530.56	530.71	530.90	530.90	530.86	530.81	530.80	530.68	530.60	530.50	530.47
Grid line 8	529.81	529.84	530.05	530.22	530.35	530.56	530.56	530.52	530.44	530.46	530.31	530.25	530.16	530.09
Grid line 9	529.16	529.19	529.37	529.54	529.69	529.87	529.87	529.83	529.78	529.77	529.65	529.56	529.46	529.43
Grid line 10	529.01	529.04	529.21	529.38	529.54	529.71	529.71	529.67	529.63	529.60	529.49	529.40	529.30	529.27
Grid line 11	528.59	528.62	528.78	528.95	529.11	529.28	529.28	529.24	529.20	529.17	529.07	528.96	528.86	528.84
Grid line 12	528.28	528.31	528.48	528.64	528.80	528.97	528.97	528.93	528.89	528.87	528.75	528.65	528.55	528.52
Grid line 13	528.18	528.20	528.42	528.58	528.69	528.91	528.91	528.87	528.78	528.80	528.64	528.58	528.48	528.40
Grid line 14	527.86	527.88	528.10	528.26	528.37	528.59	528.59	528.55	528.45	528.48	528.31	528.26	528.15	528.07
Grid line 15	527.21	527.24	527.40	527.56	527.72	527.88	527.88	527.84	527.80	527.77	527.66	527.55	527.44	527.42

NOTE:
1. SCREED ELEVATIONS SHOWN ARE FOR THE DECK SLAB SURFACE PRIOR TO CONCRETE PLACEMENT. ALLOWANCE HAS BEEN MADE FOR ANTICIPATED CALCULATED DEAD LOAD DEFLECTIONS.
2. CJ1 = STAGE 1 CONSTRUCTION JOINT
   CJ2 = STAGE 2 CONSTRUCTION JOINT

DESIGN AGENCY
BALKE ENGINEERS
1848 Summit Road
Cincinnati, Ohio 45237

DESIGNED	DRAWN	REVIEWED	DATE
FKL	ALH	CBS	6/01
CHECKED	REVISED	STRUCTURE FILE NUMBER	
MRS	—	1/325/1.12 3035671 R.B.	

LEFT BRIDGE SCREED ELEVATIONS
BRIDGE NO. CLE-275-0568
OVER EAST FORK OF THE LITTLE MIAMI RIVER

CLE-275-5.35

F:\Inroad\0568_Bscreed.dgn

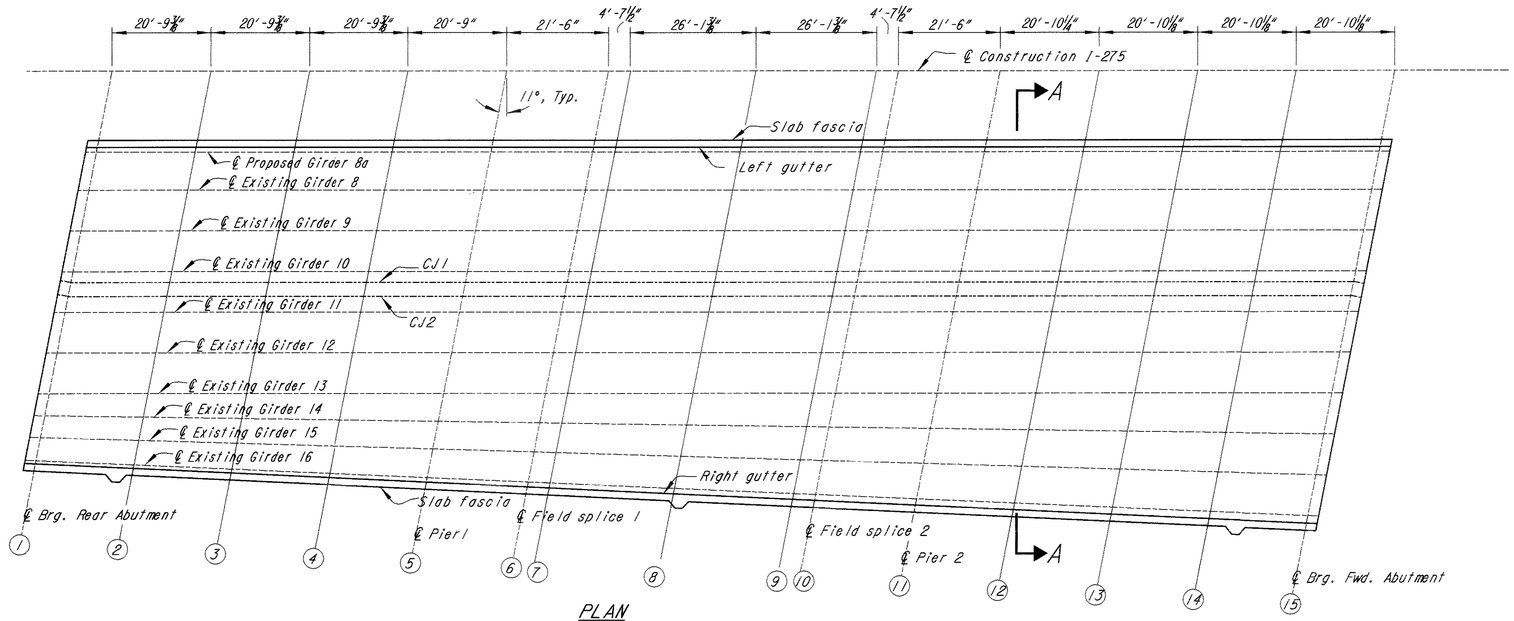

PLAN

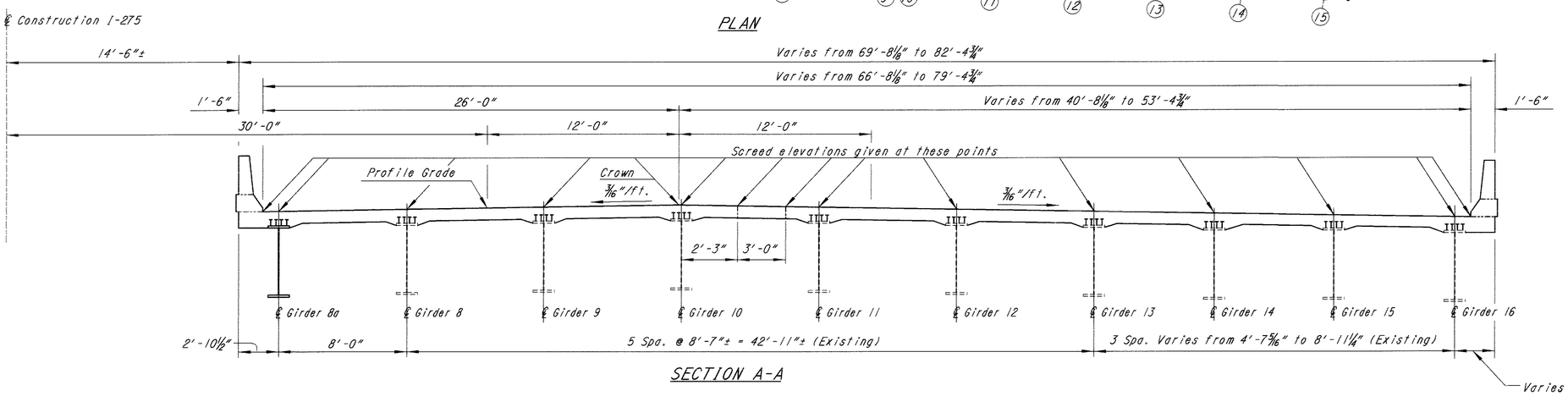

SECTION A-A

SCREED ELEVATIONS

Location	Left gutter	Girder 8a	Girder 8	Girder 9	Crown	Girder 10	CJ1	CJ2	Girder 11	Girder 12	Girder 13	Girder 14	Girder 15	Girder 16	Right gutter
Grid line 1	532.80	532.82	532.99	533.16	533.32	533.32	533.29	533.26	533.22	533.13	533.04	532.98	532.93	532.88	532.86
Grid line 2	532.58	532.60	532.81	532.98	533.15	533.14	533.11	533.08	533.04	532.95	532.85	532.80	532.74	532.68	532.62
Grid line 3	532.16	532.18	532.40	532.57	532.73	532.73	532.70	532.67	532.63	532.53	532.44	532.38	532.32	532.25	532.18
Grid line 4	531.43	531.46	531.63	531.80	531.96	531.95	531.92	531.89	531.85	531.76	531.66	531.59	531.53	531.46	531.43
Grid line 5	530.93	530.96	531.12	531.29	531.44	531.44	531.41	531.38	531.34	531.24	531.14	531.08	531.01	530.94	530.92
Grid line 6	530.48	530.51	530.67	530.83	530.99	530.99	530.96	530.93	530.89	530.79	530.69	530.54	530.47	530.45	530.45
Grid line 7	530.44	530.47	530.63	530.80	530.96	530.95	530.93	530.89	530.85	530.75	530.65	530.58	530.51	530.43	530.41
Grid line 8	530.13	530.16	530.36	530.53	530.68	530.68	530.65	530.62	530.58	530.48	530.37	530.29	530.21	530.13	530.07
Grid line 9	529.42	529.44	529.61	529.77	529.93	529.92	529.90	529.86	529.82	529.72	529.62	529.53	529.44	529.35	529.33
Grid line 10	529.28	529.31	529.46	529.62	529.78	529.77	529.75	529.71	529.67	529.57	529.47	529.38	529.29	529.20	529.18
Grid line 11	528.88	528.91	529.06	529.23	529.38	529.38	529.35	529.31	529.27	529.17	529.06	528.98	528.89	528.80	528.78
Grid line 12	528.57	528.60	528.76	528.92	529.07	529.07	529.04	529.00	528.96	528.86	528.75	528.66	528.56	528.47	528.44
Grid line 13	528.48	528.51	528.71	528.88	529.03	529.02	528.99	528.96	528.92	528.81	528.70	528.60	528.50	528.40	528.32
Grid line 14	528.09	528.11	528.31	528.47	528.62	528.61	528.59	528.55	528.51	528.40	528.29	528.19	528.08	527.98	527.90
Grid line 15	527.49	527.52	527.67	527.83	527.98	527.97	527.94	527.90	527.86	527.75	527.65	527.54	527.43	527.32	527.30

NOTE:
1. SCREED ELEVATIONS SHOWN ARE FOR THE DECK SLAB SURFACE PRIOR TO CONCRETE PLACEMENT. ALLOWANCE HAS BEEN MADE FOR ANTICIPATED CALCULATED DEAD LOAD DEFLECTIONS.
2. CJ1 = STAGE 1 CONSTRUCTION JOINT
   CJ2 = STAGE 2 CONSTRUCTION JOINT

DESIGN AGENCY
BALKE ENGINEERS
1848 Summit Road
Cincinnati, Ohio 45237

DESIGNED	DRAWN	REVIEWED	DATE
FKL	ALH	CRS	6/01
CHECKED	REVISED	STRUCTURE FILE NUMBER	
MRS	—	302571 A.B. 302587 R.B.	

RIGHT BRIDGE SCREED ELEVATIONS
BRIDGE NO. CLE-275-0568
OVER EAST FORK OF THE LITTLE MIAMI RIVER

CLE-275-5.35

Filename: 0568Bscreed.dgn

REAR ABUTMENT REINFORCING STEEL LIST

MARK	NUMBER			LENGTH	TYPE	DIMENSIONS					
	LEFT BRIDGE	RIGHT BRIDGE	TOTAL			A	B	C	D	E	INC.
A801	2	---	2	21'-5"	STR.						
A802	2	---	2	21'-8"	STR.						
A803	2	---	2	23'-1"	STR.						
A804	2	---	2	22'-6"	STR.						
A805	2	---	2	9'-6"	STR.						
A806	2	---	2	9'-1"	STR.						
A807	2	---	2	8'-8"	STR.						
A808	2	---	2	8'-3"	STR.						
A809	24	24	48	6'-0"	STR.						
A810	---	2	2	23'-2"	STR.						
A811	---	2	2	22'-9"	STR.						
A812	---	2	2	22'-6"	STR.						
A813	---	2	2	22'-0"	STR.						
A814	---	2	2	9'-0"	STR.						
A815	---	2	2	9'-3"	STR.						
A816	---	2	2	9'-6"	STR.						
A817	---	2	2	9'-10"	STR.						
A501	27	28	55	16'-11"	3	5'-7"	2'-7"	---	---	---	---
A502	6	---	6	20'-11"	2	9'-6"	2'-2"	---	---	---	---
A503	13	---	13	18'-10"	3	3'-5"	7'-10"	---	---	---	---
A504	1	---	1	8'-4"	2	5'-1"	3'-5"	---	---	---	---
A505	6	---	6	16'-6"	STR.	---	---	---	---	---	---
A506	8	---	8	8'-0"	STR.	---	---	---	---	---	---
A507	4	---	4	21'-1"	STR.	---	---	---	---	---	---
A508	6	13	19	14'-1"	2	6'-1"	2'-2"	---	---	---	---
A509	10	---	10	5'-7"	STR.	---	---	---	---	---	---
A510	84	82	166	4'-6"	1	2'-9"	1'-10"	---	---	---	---
A511	8	---	8	20'-1"	2	9'-1"	2'-2"	---	---	---	---
A512	4	---	4	13'-11"	2	6'-0"	2'-2"	---	---	---	---
A513	2	---	2	12'-0"	2	4'-5"	3'-5"	---	---	---	---
A514	3	---	3	3'-5"	STR.	---	---	---	---	---	---
A515	8	---	8	14'-11"	STR.	---	---	---	---	---	---
A516	4	4	8	5'-0"	STR.	---	---	---	---	---	---
A517	2	1	3	14'-1"	2	6'-1"	2'-2"	---	---	---	---
	1		1	4'-11"		1'-6"					
A518	SERIES OF	---	SERIES OF	TO	2	TO	2'-2"	---	---	---	11"
	10		10	13'-1"		5'-8"					
A519	4	---	4	13'-8"	STR.	---	---	---	---	---	---
A520	2	---	2	10'-0"	STR.	---	---	---	---	---	---
A521	2	---	2	6'-0"	STR.	---	---	---	---	---	---
A522	2	2	4	14'-3"	19	12'-6"	1'-5"	0'-9"	1'-9"	---	---
A523	---	21	21	19'-5"	2	8'-9"	2'-2"	---	---	---	---
A524	---	4	4	13'-1"	2	5'-8"	2'-2"	---	---	---	---
A525	---	3	3	11'-6"	2	4'-2"	3'-5"	---	---	---	---
A526	---	3	3	4'-8"	19	3'-5"	0'-2"	1'-3"	1'-3"	---	---
A527	---	8	8	15'-1"	STR.	---	---	---	---	---	---
		1	1	4'-11"		1'-6"					
A528	---	SERIES OF	SERIES OF	TO	2	TO	2'-2"	---	---	---	10"
		11	11	13'-3"		5'-8"					
A529	---	4	4	13'-0"	STR.	---	---	---	---	---	---
A530	---	2	2	9'-3"	STR.	---	---	---	---	---	---
A531	---	2	2	5'-3"	STR.	---	---	---	---	---	---
A532	---	6	6	21'-9"	3	3'-6"	7'-1"	---	---	---	---
A533	---	8	8	19'-0"	STR.	---	---	---	---	---	---
A534	---	6	6	8'-9"	STR.	---	---	---	---	---	---
A535	---	10	10	14'-3"	STR.	---	---	---	---	---	---
A536	---	4	4	12'-0"	STR.	---	---	---	---	---	---

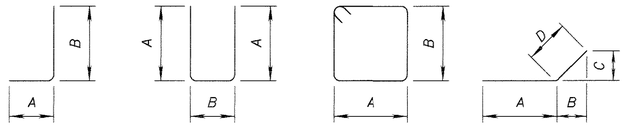

TYPE-1 TYPE-2 TYPE-3 TYPE-19

NOTES:

1. ALL DIMENSIONS ARE OUT TO OUT OF BAR.
2. ALL REINFORCING STEEL SHALL BE EPOXY COATED.
3. REINFORCING STEEL: NEW REINFORCING STEEL MAY REQUIRE FIELD CUTTING OR BENDING TO BE PROPERLY FITTED. PAYMENT SHALL BE INCLUDED IN THE APPLICABLE CONCRETE ITEM.

DESIGN AGENCY
BALKE ENGINEERS
1848 Summit Road
Cincinnati, Ohio 45237

DESIGNED	DRAWN	REVIEWED	DATE
FKL	MJH	CBS	6/01
CHECKED	REVISED	STRUCTURE FILE NUMBER	
MKS	—	1308367 (R.B.)	

REINFORCING STEEL LIST
BRIDGE NO. CLE-275-0568
OVER EAST FORK OF LITTLE MIAMI RIVER

CLE-275-5.35

699/857

FILENAME: C0568MISCBAR1.dgn

FORWARD ABUTMENT REINFORCING STEEL LIST

MARK	NUMBER LEFT BRIDGE	NUMBER RIGHT BRIDGE	NUMBER TOTAL	LENGTH	TYPE	DIMENSIONS A	B	C	D	E	INC.
B801	2	---	2	22'-6"	STR.						
B802	2	---	2	22'-0"	STR.						
B803	2	---	2	21'-9"	STR.						
B804	2	---	2	21'-6"	STR.						
B805	2	---	2	9'-3"	STR.						
B806	2	---	2	9'-9"	STR.						
B807	2	4	6	10'-0"	STR.						
B808	2	---	2	10'-6"	STR.						
B809	24	24	48	6'-0"	STR.						
B810	---	4	4	22'-3"	STR.						
B811	---	4	4	23'-0"	STR.						
B812	---	4	4	9'-6"	STR.						
B501	28	28	56	17'-7"	3	5'-11"	2'-7"	---	---	---	---
B502	1	---	1	14'-2"	2	5'-11"	2'-7"	---	---	---	---
B503	15	---	15	22'-5"	3	3'-5"	7'-6"	---	---	---	---
B504	4	---	4	20'-5"	2	9'-3"	2'-2"	---	---	---	---
B505	1	---	1	13'-4"	2	4'-7"	3'-5"	---	---	---	---
B506	10	---	10	19'-3"	STR.						
B507	8	---	8	6'-0"	STR.						
B508	10	---	10	3'-2"	STR.						
B509	7	12	19	13'-11"	2	6'-0"	2'-2"	---	---	---	---
B510	84	112	196	4'-6"	1	2'-9"	1'-10"	---	---	---	---
B511	4	---	4	13'-9"	2	5'-11"	2'-2"	---	---	---	---
B512	9	12	21	19'-11"	2	9'-0"	2'-2"	---	---	---	---
B513	1	1	2	11'-10"	2	4'-4"	3'-5"	---	---	---	---
B514	3	3	6	3'-5"	STR.						
B515	8	---	8	15'-6"	STR.						
B516	8	8	16	5'-0"	STR.						
B517	2	---	2	14'-9"	19	11'-6"	2'-11"	1'-3"	3'-3"	---	---
	1		1	4'-11"		1'-6"					
B518	SERIES OF	---	SERIES OF	TO	2	TO	2'-2"	---	---	---	11"
	10		10	13'-3"		5'-8"					
B519	4	---	4	14'-0"	STR.						
B520	2	---	2	10'-6"	STR.						
B521	2	---	2	6'-6"	STR.						
B522	---	6	6	22'-1"	3	3'-5"	7'-4"	---	---	---	---
B523	---	10	10	9'-0"	STR.						
B524	---	8	8	17'-0"	STR.						
B525	---	10	10	13'-9"	STR.						
B526	---	9	9	19'-7"	2	8'10"	2'-2"	---	---	---	---
B527	---	4	4	13'-3"	2	5'-8"	2'-2"	---	---	---	---
B528	---	2	2	11'-6"	2	4'-2"	3'-5"	---	---	---	---
B529	---	8	8	15'-10"	STR.						
B530	---	2	2	14'-9"	19	13'-0"	1'-8"	0'-7"	1'-9"	---	---
		1	1	4'-11"		1'-6"					
B531	---	SERIES OF	SERIES OF	TO	2	TO	2'-2"	---	---	---	11"
		11	11	13'-11"		6'-0"					
B532	---	2	2	14'-3"	2	6'-1"	2'-2"	---	---	---	---
B533	---	2	2	14'-0"	STR.						
B534	---	2	2	13'-9"	STR.						
B535	---	2	2	9'-9"	STR.						
B536	---	2	2	5'-9"	STR.						

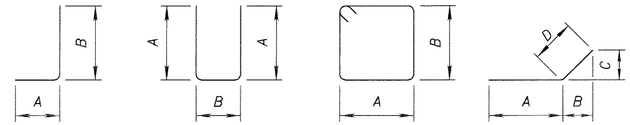

NOTES:

1. ALL DIMENSIONS ARE OUT TO OUT OF BAR.
2. ALL REINFORCING STEEL SHALL BE EPOXY COATED.
3. REINFORCING STEEL: NEW REINFORCING STEEL MAY REQUIRE FIELD CUTTING OR BENDING TO BE PROPERLY FITTED. PAYMENT SHALL BE INCLUDED IN THE APPLICABLE CONCRETE ITEM.

DESIGN AGENCY
BALKE ENGINEERS
1848 Summit Road
Cincinnati, Ohio 45237

DESIGNED	DRAWN	REVIEWED	DATE
FKL	WJH	CBS	6/01
CHECKED	REVISED	STRUCTURE FILE NUMBER	
MRS	—	1305361 (R.B.) 1305361 (R.B.)	

REINFORCING STEEL LIST
BRIDGE NO. CLE-275-0568
OVER EAST FORK OF LITTLE MIAMI RIVER

CLE-275-5.35

700/857

File Name: C0568WC0AB73.dgn

PIER 1 REINFORCING STEEL LIST

MARK	NUMBER			LENGTH	TYPE	DIMENSIONS					
	LEFT BRIDGE	RIGHT BRIDGE	TOTAL			A	B	C	D	R	INC.
P1001	6	8	14	10'-3"	STR.						
P1002	75	49	124	12'-10"	1	1'-10"	11'-4"				
P1003	65	--	65	24'-8"	STR.						
P1004	10	--	10	24'-2"	STR.						
P1005	6	--	6	22'-0"	STR.						
		2	2	22'-6"							
P1006	--	SER. OF	SER. OF	TO	STR.						9"
		4	4	24'-9"							
		2	2	25'-3"							
P1007	--	SER. OF	SER. OF	TO	STR.						4½"
		13	13	29'-9"							
P1008	--	23	23	25'-3"	STR.						
P801	32	20	52	10'-2"	STR.						
P601	12	--	12	28'-2"	STR.						
P602	32	32	64	4'-0"	STR.						
	2		2	3'-9"							
P603	SER. OF	--	SER. OF	TO	STR.						4"
	10		10	6'-9"							
P604	45	--	45	13'-1"	STR.						
P605	--	12	12	18'-2"	STR.						
P606	--	23	23	12'-6"	STR.						
P501	29	19	48	10'-2"	STR.						
P502	11	--	11	28'-2"	STR.						
P503	30	--	30	31'-1"	STR.						
P504	23	23	46	8'-2"	24	2'-8"	2'-0"			1'-4"	
	2		2	17'-9"							
P505	SER. OF	--	SER. OF	TO	STR.						3'-0"
	4		4	26'-9"							
P506	8	--	8	14'-7"	STR.						
P507	72	84	156	4'-2"	1	2'-0"	2'-3"				
P508	4	4	8	30'-0"	STR.						
P509	4	4	8	42'-6"	STR.						
P510	--	11	11	18'-2"	STR.						
P511	--	30	30	22'-6"	STR.						
		2	2	10'-6"							
P512	--	SER. OF	SER. OF	TO	STR.						3'-0"
		4	4	19'-6"							
P513	--	8	8	6'-3"	STR.						

PIER 2 REINFORCING STEEL LIST

MARK	NUMBER			LENGTH	TYPE	DIMENSIONS					
	LEFT BRIDGE	RIGHT BRIDGE	TOTAL			A	B	C	D	R	INC.
R1001	6	6	12	10'-3"	STR.						
R1002	78	55	133	12'-10"	1	1'-10"	11'-4"				
R1003	68	--	68	22'-8"	STR.						
R1004	10	--	10	21'-8"	STR.						
R1005	6	--	6	20'-0"	STR.						
R1006	--	6	6	20'-5"	STR.						
		2	2	21'-9"							
R1007	--	SER. OF	SER. OF	TO	STR.						4½"
		17	17	27'-9"							
R1008	--	21	21	23'-1"	STR.						
R801	32	24	56	10'-2"	STR.						
R601	12	--	12	29'-2"	STR.						
R602	30	30	60	4'-0"	STR.						
	2		2	3'-6"							
R603	SER. OF	--	SER. OF	TO	STR.						4½"
	11		11	7'-3"							
R604	46	--	46	12'-11"	STR.						
R605	--	12	12	20'-5"	STR.						
R606	--	21	21	12'-6"	STR.						
R501	30	22	52	10'-2"	STR.						
R502	11	--	11	29'-2"	STR.						
R503	26	--	26	32'-1"	STR.						
R504	22	22	44	8'-2"	24	2'-8"	2'-0"			1'-4"	
	2		2	17'-9"							
R505	SER. OF	--	SER. OF	TO	STR.						2'-10½"
	5		5	29'-3"							
R506	8	--	8	15'-7"	STR.						
R507	72	84	156	4'-2"	1	2'-0"	2'-3"				
R508	4	4	8	30'-0"	STR.						
R509	4	--	4	42'-6"	STR.						
R510	--	11	11	20'-5"	STR.						
R511	--	28	28	22'-8"	STR.						
		2	2	6'-6"							
R512	--	SER. OF	SER. OF	TO	STR.						3'-0"
		5	5	18'-6"							
R513	--	6	6	6'-3"	STR.						
R514	--	4	4	47'-8"	STR.						

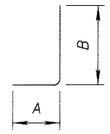

TYPE-1

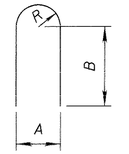

TYPE-24

NOTES:

1. ALL DIMENSIONS ARE OUT TO OUT OF BAR.
2. ALL REINFORCING STEEL SHALL BE EPOXY COATED.
3. REINFORCING STEEL: NEW REINFORCING STEEL MAY REQUIRE FIELD CUTTING OR BENDING TO BE PROPERLY FITTED. PAYMENT SHALL BE INCLUDED IN THE APPLICABLE CONCRETE ITEM.

DESIGN AGENCY
BALKE ENGINEERS
1848 Summit Road
Cincinnati, Ohio 45237

DESIGNED	DRAWN	REVIEWED	DATE
MRS	WJH/ALH	CRS	6/01
CHECKED	REVISED	STRUCTURE FILE NUMBER	
FKL	—	1202380 (R.B.) 1202381 (R.B.)	

REINFORCING STEEL LIST
BRIDGE NO. CLE-275-0568
OVER EAST FORK LITTLE MIAMI RIVER

CLE-275-5.35

701/857

Filename: 0568bars01R.dgn

SUPERSTRUCTURE REINFORCING STEEL LIST

MARK	NUMBER LEFT BRIDGE	NUMBER RIGHT BRIDGE	NUMBER TOTAL	LENGTH	TYPE	DIMENSIONS A	B	C	D	E	INC.
S801	4	---	4	30'-7"	STR.						
S802	4	---	4	43'-9"	STR.						
S803	4	---	4	32'-6"	STR.						
S804	4	---	4	44'-6"	STR.						
S805	---	4	4	30'-0"	STR.						
S806	---	4	4	41'-10"	STR.						
S807	---	4	4	30'-9"	STR.						
S808	---	4	4	53'-2"	STR.						
S501	927	1053	1980	30'-0"	STR.						
S502	103	117	220	34'-0"	STR.						
S503	1102	1102	2204	5'-0"	STR.						
S504	344	388	732	45'-0"	STR.						
S505	551	-	551	26'-4"	STR.						
S506	551	-	551	30'-9"	STR.						
S507	551	-	551	20'-8"	STR.						
S508	551	-	551	16'-4"	STR.						
S509	551	-	551	20'-4"	STR.						
S510	551	-	551	15'-9"	STR.						
S511	551	-	551	18'-0"	STR.						
S512	551	-	551	22'-7"	STR.						
S513	-	1102	1102	33'-5"	STR.						
S514	NOT	USED									
S515	-	551	551	20'-11"	STR.						
S516	-	551	551	24'-10"	STR.						
S517	-	183	183	27'-0"	STR.						
S518	-	183	183	23'-1"	STR.						
S519	-	185	185	31'-0"	STR.						
S520	-	185	185	27'-1"	STR.						
S521	-	183	183	35'-3"	STR.						
S522	-	183	183	31'-8"	STR.						
S401	783	882	1665	30'-0"	STR.						
S402	87	98	185	24'-0"	STR.						

SUPERSTRUCTURE REINFORCING STEEL LIST (CONTINUED)

MARK	NUMBER LEFT BRIDGE	NUMBER RIGHT BRIDGE	NUMBER TOTAL	LENGTH	TYPE	DIMENSIONS A	B	C	D	E	INC.
X601	18	18	36	30'-0"	STR.						
X602	1	1	2	9'-3"	STR.						
X603	1	---	1	20'-0"	STR.						
X604	---	1	1	7'-6"	STR.						
X501	12	16	28	10'-0"	STR.						
X502	6	8	14	5'-8"	25	1'-10"	2'-5"	1'-5"	1½"	5"	
X503	6	8	14	5'-8"	STR.						
X504	108	108	216	30'-0"	STR.						
X505	4	4	8	9'-3"	STR.						
X506	4	---	4	20'-0"	STR.						
X507	---	4	4	7'-6"	STR.						
X508	12	16	28	14'-0"	STR.						
Y601	545	540	1085	3'-0"	14	10⅛"	10"	8½"	6"	9"	
Y603	24	32	56	3'-11"	1	11"	3'-2"				
Y604	512	496	1008	2'-3"	1	11"	1'-6"				
	3	4	7	3'-11"			3'-2"				
Y605	SER. OF	SER. OF	SER. OF	TO	1	11"	TO				
	11	11	11	4'-8"			3'-11"				
Y501	512	496	1008	7'-1"	23	8"	3'-3"	3'-0"	1½"		
Y502	3	4	7	3'-10"	16	3'-3"					
Y503	3	4	7	3'-9"	16	3'-2"					
Y504	3	4	7	3'-8"	16	3'-1"					
Y505	3	4	7	3'-7"	16	3'-0"					
Y506	3	4	7	3'-6"	16	2'-11"					
Y507	3	4	7	3'-5"	16	2'-10"					
Y508	3	4	7	3'-4"	16	2'-9"					
Y509	3	4	7	3'-3"	16	2'-8"					
Y510	3	4	7	3'-2"	16	2'-7"					
Y511	3	4	7	3'-1"	16	2'-6"					
Y512	3	4	7	3'-0"	16	2'-5"					
D801	96	100	196	5'-0"	18	2'-7"	1'-0"	1'-0"			
D802	12	---	12	29'-9"	STR.						
D803	12	---	12	43'-9"	STR.						
D804	12	---	12	31'-10"	STR.						
D805	12	---	12	44'-6"	STR.						
D806	---	12	12	30'-0"	STR.						
D807	---	12	12	41'-8"	STR.						
D808	---	12	12	30'-9"	STR.						
D809	---	12	12	53'-0"	STR.						
D501	102	106	208	7'-6"	2	2'-5"	2'-11"	2'-5"			
D502	102	106	208	15'-11"	3	3'-6"	4'-2"				
L505	8	12	20	2'-10"	2	7"	1'-10"	7"			
L506	8	12	20	10'-0"	9	5"	4'-0"	2'-3"	4'-0"		
L507	12	18	30	7'-2"	21	1'-4"	1'-8"	6"	1'-10"		
L508	8	12	20	4'-0"	STR.						

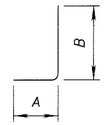

TYPE-1

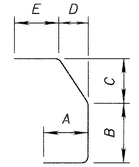

TYPE-14



TYPE-16

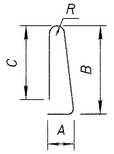

TYPE-23

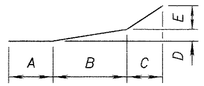

TYPE-25

TYPE-18

TYPE-2

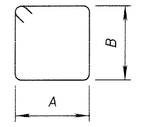

TYPE-3

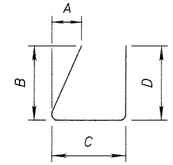

TYPE-9

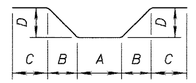

TYPE-21

NOTES:

1. ALL DIMENSIONS ARE OUT TO OUT OF BAR.
2. ALL REINFORCING STEEL SHALL BE EPOXY COATED.
3. REINFORCING STEEL: NEW REINFORCING STEEL MAY REQUIRE FIELD CUTTING OR BENDING TO BE PROPERLY FITTED. PAYMENT SHALL BE INCLUDED IN THE APPLICABLE CONCRETE ITEM.

DESIGN AGENCY
BALKE ENGINEERS
1848 Summit Road
Cincinnati, Ohio 45237

DESIGNED	DRAWN	REVIEWED	DATE
MRS	WJ/HAJH	CBS	6/01
CHECKED	REVISED	STRUCTURE FILE NUMBER	
FKL	—	702857	

REINFORCING STEEL LIST
BRIDGE NO. CLE-275-0568
OVER EAST FORK OF THE LITTLE MIAMI RIVER

CLE-275-5.35

37/37

702/857

FILENAME: D0568RST1.dgn

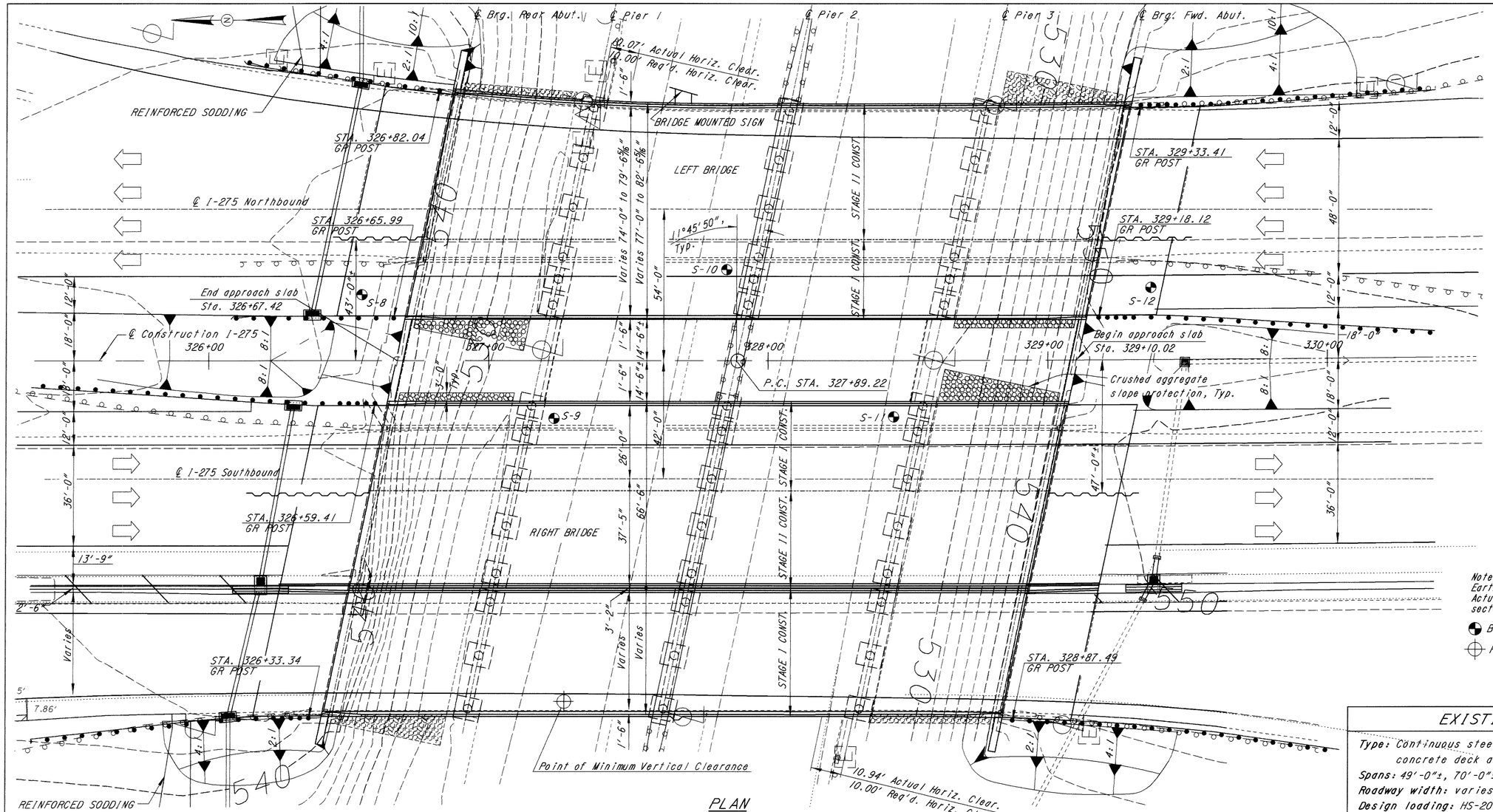

PLAN

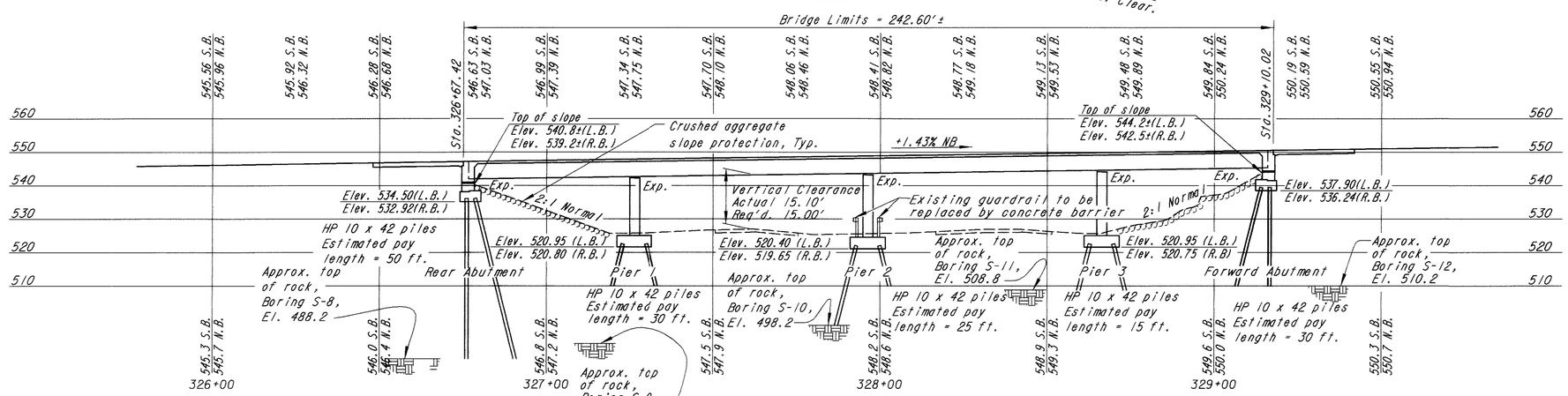

SECTION ALONG EDGE OF PAVEMENT (PROPOSED)

(Left bridge shown, right bridge similar)

T.B.M. "J"-℄ MON. STA. 326+56± ELEV. 545.909

T.B.M. "J" - EXISTING MONUMENT ℄ IR 275 STA. 333+49.70 ELEV. 552.92

℄ SURVEY I-275 CURVE DATA

P.I. Sta. 334+28.89
△ = 3°11'51" Lt.
Dc = 0°15'00"
R = 22,918.31'
L = 1279.00'
T = 639.67'
E = 8.93'

TRAFFIC DATA
NORTHBOUND & SOUTHBOUND

	Current (2002)	Design (2022)
ADT	35520	41730
ADTT	3197	3756

Notes:
Earthwork limits shown are approximate. Actual slopes shall conform to plan cross sections.

Boring location

Point of min. vertical clearance

EXISTING STRUCTURE

Type: Continuous steel beams with reinforced concrete deck and substructure
Spans: 49'-0"±, 70'-0"±, 70'-0"±, 49'-0"± (c/c bearing)
Roadway width: varies
Design loading: HS-20-44
Skew angle: 11°45'50" Tan. to curve L.F.
Wearing surface: Micro Silica Concrete overlay
Approach slabs: AS-1-67 (25'-0")
Date Built: 1971
Structure file number: 1305603 L.B.
1305611 R.B.

PROPOSED STRUCTURE (REHABILITATION)

Proposed work: Widen and replace existing concrete deck with composite concrete deck, widen substructure, convert existing abutments to semi-integral abutments with straight wingwalls.

Spans: 49'-1¼"±, 70'-0"±, 70'-0"±, 49'-0"± (c/c bearing)
Roadway width: Varies
Live loading: HS20 (Case I) & the alternate military
Skew angle: 11°45'50" Tan. to curve L.F.
Wearing surface: Monolithic concrete
Approach slabs: AS-1-81 (25'-0")
Alignment: Tangent and 0°15'00" curve Lt.
Crown: 3/16"/ft.
Latitude: N 39° 09' 30"
Longitude: W 84° 16' 00"

DESIGN AGENCY
BALKE ENGINEERS
1848 Summit Road
Cincinnati, Ohio 45237

DESIGNED	DRAWN	REVIEWED	DATE
FKL	ALH	CRS	6/01
CHECKED	REVISED	STRUCTURE FILE NUMBER	1305603 L.B. 1305611 R.B.
MRS	—		

CLERMONT COUNTY
STA 326+67.42
STA 329+10.02

SITE PLAN
BRIDGE NO. CLE-275-0618
OVER US 50 J

CLE-275-5.35

1 / 49

703 / 857

FileName: 06180p1.dgn

GENERAL NOTES

REFERENCE SHALL BE MADE TO STANDARD DRAWING(S):

AS-1-81	REVISED	04-20-01
BR-1	REVISED	01-06-99
BS-1-93	DATED	12-19-94
GSD-1-96	DATED	02-12-97
PCB-91	REVISED	07-06-99
SICD-1-96	REVISED	04-20-01
HL-20.14M	DATED	05-01-95

AND TO SUPPLEMENTAL SPECIFICATION(S):

814	DATED 6-2-98
815	DATED 2-22-00
816	DATED 4-21-97
842	DATED 1-6-99
846	DATED 9-9-97
863	DATED 10-12-99
899	DATED 10-21-98
905	DATED 4-1-98
907	DATED 10-21-98
910	DATED 7-11-00
954	DATED 9-9-97

DESIGN SPECIFICATIONS: THIS STRUCTURE CONFORMS TO "STANDARD SPECIFICATIONS FOR HIGHWAY BRIDGES" ADOPTED BY THE AMERICAN ASSOCIATION OF STATE HIGHWAY AND TRANSPORTATION OFFICIALS, 1996, INCLUDING THE 1997 THRU 1999 INTERIM SPECIFICATIONS AND THE ODOT BRIDGE DESIGN MANUAL.

DESIGN LOADING: HS20 , CASE (1) AND THE ALTERNATE MILITARY LOADING.
FUTURE WEARING SURFACE (FWS) OF 60 LBS/FT 2 .

DESIGN DATA:

CONCRETE CLASS S - COMPRESSIVE STRENGTH 4500 PSI (SUPERSTRUCTURE)
CONCRETE CLASS C - COMPRESSIVE STRENGTH 4000 PSI (SUBSTRUCTURE)

REINFORCING STEEL - ASTM A615, A616 OR A617
GRADE 60 MINIMUM YIELD STRENGTH 60,000 PSI
SPIRAL REINFORCEMENT MAY BE PLAIN BARS, ASTM A82 OR A615

STRUCTURAL STEEL ASTM A709, GRADE 50-YIELD STRENGTH 50 KSI

DECK PROTECTION METHOD:

EPOXY COATED REINFORCING STEEL
2½" CONCRETE COVER

MONOLITHIC WEARING SURFACE IS ASSUMED, FOR DESIGN PURPOSES, TO BE 1 INCH THICK.

PROPOSED WORK:

1. REPLACE THE EXISTING CONCRETE DECK WITH A NEW COMPOSITE CONCRETE DECK WITH BARRIER RAILINGS.
2. WIDEN THE SUPERSTRUCTURE ON THE MEDIAN SIDE BY ADDING BEAMS AS SHOWN.
3. CONVERT THE EXISTING ABUTMENTS TO SEMI-INTEGRAL. REPLACE U-WINGWALLS WITH STRAIGHT WINGWALLS. REMOVE THE EXISTING ABUTMENTS AND WINGWALLS DOWN TO THE TOP OF THE EXISTING BEAM SEATS.
4. WIDEN THE SUBSTRUCTURE TO ACCOMMODATE THE NEW SUPER-STRUCTURE MEMBERS.
5. REPLACE ALL BEARINGS WITH NEW ELASTOMERIC BEARINGS.
6. ADJUST BEARING SEAT ELEVATIONS BY CONSTRUCTING REINFORCED CONCRETE PEDESTALS.
7. SEAL NEW WINGWALLS, RAILING, ABUTMENTS, BACKWALLS, AND PIERS WITH EPOXY-URETHANE, COLOR SHALL BE BUFF.
8. PROVIDE NEW APPROACH SLABS.
9. PAINT NEW STRUCTURAL STEEL WITH SYSTEM IZEU, COLOR SHALL BE BLUE, FEDERAL COLOR 15526.
10. PATCH EXISTING SUBSTRUCTURE CONCRETE AS SHOWN.

PORTIONS OF STRUCTURE REMOVED, OVER 20' SPAN, AS PER PLAN:
THIS WORK SHALL CONSIST OF THE REMOVAL OF CONCRETE DECKS INCLUDING SIDEWALKS, PARAPETS, RAILINGS, DECK JOINTS AND OTHER APPURTENANCES FROM STEEL SUPPORTING SYSTEMS (BEAMS, GIRDERS, CROSS FRAMES, ETC.). CARE SHALL BE TAKEN DURING DECK REMOVALS TO PROTECT PORTIONS OF SUCH SYSTEMS THAT ARE TO BE SALVAGED AND INCORPORATED INTO THE PROPOSED STRUCTURE. IN THIS RESPECT, THE USE OF EXPLOSIVES, HEADACHE BALLS AND/OR HOE RAM TYPE OF EQUIPMENT IS PROHIBITED.

PROTECTION OF TRAFFIC: PRIOR TO DEMOLITION OF ANY PORTIONS OF THE EXISTING SUPERSTRUCTURE, THE CONTRACTOR SHALL SUBMIT PLANS FOR THE PROTECTION OF TRAFFIC (VEHICULAR, PEDESTRIAN, BOAT, ETC.) ADJACENT TO AND/OR UNDER THE STRUCTURE TO THE DIRECTOR FOR APPROVAL. THESE PLANS SHALL INCLUDE PROVISIONS FOR ANY DEVICES AND STRUCTURES THAT MAY BE NECESSARY TO ENSURE SUCH PROTECTION.
TEMPORARY VERTICAL CLEARANCES SPECIFIED ON THE PLANS OR IN THE PROPOSAL SHALL BE MAINTAINED AT ALL TIMES EXCEPT AS OTHERWISE APPROVED BY THE DIRECTOR.

PROTECTION OF STEEL SUPPORT SYSTEMS: BEFORE DECK SLAB CUTTING IS PERMITTED, THE OUTLINE OF PRIMARY STEEL MEMBERS IN CONTACT WITH THE BOTTOM OF THE DECK SHALL BE DRAWN ON THE SURFACE OF DECK. SMALL DIAMETER PILOT HOLES SHALL BE DRILLED 2 INCHES OUTSIDE THESE LINES TO CONFIRM THE LOCATION OF FLANGE EDGES. DECK CUTS OVER OR WITHIN 2 INCHES OF FLANGE EDGES SHALL NOT EXTEND LOWER THAN THE BOTTOM LAYER OF DECK SLAB REINFORCING STEEL. CUTS MADE OUTSIDE 2 INCHES OF FLANGE EDGES MAY EXTEND THE FULL DEPTH OF THE DECK. DURING CUTTING OF THE DECK SLAB, CARE SHALL BE TAKEN NOT TO DAMAGE STEEL MEMBERS THAT ARE TO BE INCORPORATED INTO THE PROPOSED STRUCTURE.

REMOVAL METHODS: CONCRETE MAY BE REMOVED BY CUTTING AND BY MEANS OF HAND OPERATED PNEUMATIC HAMMERS EMPLOYING POINTED OR BLUNTED CHISEL TYPE TOOLS. FOR REMOVALS OVER BRIDGE MEMBERS (PRESTRESSED BOX BEAM, I-BEAM, STEEL BEAM STEEL GIRDER, ETC), A HAMMER HEAVIER THAN 35 POUNDS BUT NOT TO EXCEED 90 POUNDS MAY BE USED AT THE APPROVAL OF THE ENGINEER. REMOVAL METHODS OVER BRIDGE MEMBERS SHALL ENSURE ADEQUATE DEPTH CONTROL AND PREVENT NICKING OR GOUGING THE PRIMARY STEEL MEMBERS.

DECK REMOVALS: DUE TO THE POSSIBLE PRESENCE OF WELDED ATTACHMENTS TO EXISTING STRUCTURAL STEEL (FINISHING MACHINE, SCUPPER AND FORM SUPPORTS, ETC.), CARE SHALL BE TAKEN DURING DECK REMOVAL TO AVOID DAMAGING STRINGERS WHICH ARE TO REMAIN. STRINGERS DAMAGED BY THE CONTRACTOR'S REMOVAL OPERATIONS SHALL, AT NO COST TO THE PROJECT, BE REPLACED OR REPAIRED. PROPOSED REPAIRS, DEVELOPED BY A OHIO REGISTERED PROFESSIONAL ENGINEER, SHALL BE SUBMITTED IN WRITING FOR REVIEW AND APPROVAL BY THE DIRECTOR.
CONTRACTOR SHALL TAKE CARE DURING DECK REMOVAL OPERATIONS AND SUBSEQUENT CONSTRUCTION PROCEDURES TO AVOID DAMAGING THE PAINT COATING ON THE EXISTING STEEL. ANY DAMAGE TO THE COATING SHALL BE REPAIRED BY THE CONTRACTOR BY SPOT PAINTING TO A TINT MATCHING THE EXISTING PAINT COLOR. ALL SPOT PAINTING SHALL BE DONE AT NO ADDITIONAL COST TO THE PROJECT AND IN ACCORDANCE WITH SYTEM IZEU.

EXTRANEOUS MEMBERS: EXISTING EXTRANEOUS MEMBERS (I.E., FINISHING MACHINE AND FORM SUPPORTS, ETC., AND THE SUPPORT FOR SCUPPERS AND BULB ANGLES WHICH ARE TO BE REMOVED) ATTACHED BY WELDED CONNECTION TO THE DESIGNATED TENSION PORTIONS OF THE TOP FLANGES OF EXISTING STEEL MEMBERS SHALL BE REMOVED AND THE FLANGE SURFACES GROUND SMOOTH. GRINDING SHALL BE CAREFULLY DONE AND PARALLEL TO THE FLANGES.

LOADING LIMITATIONS: NO PART OF THE STRUCTURE SHALL BE SUBJECTED TO UNIT STRESSES THAT EXCEED 136.5% OF ALLOWABLE UNIT STRESSES AS DEFINED IN THE AASHTO STANDARD SPECIFICATIONS FOR HIGHWAY BRIDGES DUE EITHER TO DEMOLITION, ERECTION OR CONSTRUCTION METHODS, OR TO THE USE OR MOVEMENT OF DEMOLITION OR ERECTION EQUIPMENT ON OR ACROSS THE STRUCTURE. STRUCTURAL ANALYSIS COMPUTATIONS, BY A OHIO REGISTERED PROFESSIONAL ENGINEER, SHOWING THE ALLOWABLE STRESSES AND THE MAXIMUM STRESSES PRODUCED BY THE CONTRACTOR'S METHODS OR EQUIPMENT SHALL BE SUBMITTED TO THE DIRECTOR FOR REVIEW AND APPROVAL AT LEAST TWO WEEKS PRIOR TO THE START OF THE WORK.

PAYMENT: THIS WORK WILL BE PAID FOR AT THE CONTRACT LUMP SUM PRICE BID, WHICH PRICE AND PAYMENT SHALL BE FULL COMPENSATION FOR ALL LABOR, EQUIPMENT, MATERIALS AND INCIDENTALS NECESSARY TO COMPLETE THE WORK IN CONFORMANCE WITH THESE REQUIREMENTS, WITH PERTINENT PROVISIONS OF 202, AND TO THE SATISFACTION OF THE ENGINEER.

CUT LINE CONSTRUCTION JOINT PREPARATION: SAW CUT BOUNDARIES OF PROPOSED CONCRETE REMOVALS 1 INCH DEEP. REMOVE CONCRETE TO A ROUGH SURFACE. THE EXISTING REINFORCING STEEL, IF REQUIRED IN THE PLANS, SHALL BE LEFT IN PLACE. INSTALL DOWEL BARS IF SPECIFIED. PRIOR TO CONCRETE PLACEMENT ABRASIVELY CLEAN JOINT SURFACES AND EXISTING EXPOSED REINFORCEMENT TO REMOVE LOOSE AND DISINTEGRATED CONCRETE AND LOOSE RUST. THE JOINT SURFACE AND EXPOSED REINFORCEMENT SHALL BE THOROUGHLY CLEANED OF ALL DIRT, DUST, RUST OR OTHER FOREIGN MATERIAL BY THE USE OF WATER, AIR UNDER PRESSURE, OR OTHER METHODS THAT PRODUCE SATISFACTORY RESULTS. EXISTING REINFORCING STEEL DOES NOT HAVE TO HAVE A BRIGHT STEEL FINISH BUT ALL PACK AND LOOSE RUST SHALL BE REMOVED. EXISTING CONCRETE SURFACES WHICH NEW CONCRETE WILL BE PLACED AGAINST SHALL BE WET, BUT WITHOUT FREE WATER, AT THE TIME OF CONCRETE PLACEMENT.

SUBSTRUCTURE CONCRETE REMOVAL SHALL BE BY MEANS OF APPROVED PNEUMATIC HAMMERS EMPLOYING POINTED AND BLUNT CHISEL TOOLS. HYDRAULIC HOE-RAM TYPE HAMMERS WILL NOT BE PERMITTED. THE WEIGHT OF THE HAMMER SHALL NOT BE MORE THAN 35 POUNDS FOR REMOVAL WITHIN 18 INCHES OF PORTIONS TO BE PRESERVED. OUTSIDE THE 18 INCH LIMIT, HAMMERS NOT EXCEEDING 90 POUNDS, MAY BE USED UPON THE APPROVAL OF THE ENGINEER. PNEUMATIC HAMMERS SHALL NOT BE PLACED IN DIRECT CONTACT WITH REINFORCING STEEL THAT IS TO BE RETAINED IN THE REBUILT STRUCTURE.

ITEM 518, 6" PERFORATED CORRUGATED PLASTIC PIPE, AS PER PLAN: SHALL INCLUDE FOR PAYMENT THE 4" NON-PERFORATED PLASTIC PIPE WITH ALL INCIDENTALS TO THE 4" PIPE.

EXISTING STRUCTURE VERIFICATION: DETAILS AND DIMENSIONS SHOWN ON THESE PLANS PERTAINING TO THE EXISTING STRUCTURE HAVE BEEN OBTAINED FROM PLANS OF THE EXISTING STRUCTURE AND FROM FIELD OBSERVATIONS AND MEASUREMENTS. CONSEQUENTLY, THEY ARE INDICATIVE OF THE EXISTING STRUCTURE AND THE PROPOSED WORK BUT THEY SHALL BE CONSIDERED TENTATIVE AND APPROXIMATE. THE CONTRACTOR IS REFERRED TO CMS SECTIONS 102.05, 105.02 AND 513.02/863.07.

CONTRACT BID PRICES SHALL BE BASED UPON A RECOGNITION OF THE UNCERTAINTIES DESCRIBED ABOVE AND UPON A PREBID EXAMINATION OF THE EXISTING STRUCTURE BY THE CONTRACTOR. HOWEVER, ALL PROJECT WORK SHALL BE BASED UPON ACTUAL DETAILS AND DIMENSIONS WHICH HAVE BEEN VERIFIED BY THE CONTRACTOR IN THE FIELD.

ITEM 509 REINFORCING STEEL, REPLACEMENT OF EXISTING REINFORCING STEEL, AS PER PLAN: ANY EXISTING REINFORCING BARS DEEMED BY THE ENGINEER TO BE UNUSABLE BECAUSE OF CORROSION SHALL BE REPLACED WITH NEW REINFORCING STEEL. ANY EXISTING REINFORCING STEEL BARS WHICH ARE TO BE INCORPORATED INTO THE NEW WORK AND ARE MADE UNUSABLE BY CONCRETE REMOVAL OPERATIONS SHALL BE REPLACED WITH NEW EPOXY COATED REINFORCING STEEL OF THE SAME SIZE AT THE CONTRACTOR'S COST. ALL WORK SHALL BE TO THE SATISFACTION OF THE ENGINEER. THE NUMBER OF POUNDS OF REINFORCING STEEL PAID FOR AT CONTRACT PRICES SHALL BE THE ACTUAL POUNDS OF REPLACEMENT REINFORCING STEEL SPECIFIED BY THE ENGINEER DUE TO CORROSION AND SHALL INCLUDE PLACEMENT, DOWELING, BENDING, SUPPORTING, TIE WIRES AND TYING OF THAT SPECIFIED REINFORCING STEEL.

ITEM 503, UNCLASSIFIED EXCAVATION, AS PER PLAN: UNCLASSIFIED EXCAVATION SHALL BE IN ACCORDANCE WITH 503 EXCEPT THAT THE BACKFILL MATERIAL BEHIND THE ABUTMENTS SHALL BE 203 MATERIAL PLACED IN 6 INCH LIFTS.

PILES TO BEDROCK:
PILES SHALL BE DRIVEN TO REFUSAL ON BEDROCK. REFUSAL SHALL BE CONSIDERED AS OBTAINED BY PENETRATING SOFT BEDROCK FOR SEVERAL INCHES WITH A MINIMUM RESISTANCE OF 20 BLOWS PER INCH OR REFUSAL SHALL BE CONSIDERED AS OBTAINED AFTER THE PILE HAS CONTACTED HARD BEDROCK AND THE PILE HAS THEN RECEIVED AT LEAST 20 BLOWS. THE CONTRACTOR IS RESPONSIBLE FOR SELECTING THE HAMMER SIZE TO ACHIEVE THE REQUIRED DEPTH TO BEDROCK AND REFUSAL.

THE ULTIMATE BEARING VALUE IS 105 TONS PER PILE FOR THE ABUTMENT PILES.
THE ULTIMATE BEARING VALUE IS 80 TONS PER PILE FOR THE PIER PILES.

ABUTMENT PILES:
29 PILES 50 FEET LONG, ESTIMATED LENGTH
27 PILES 30 FEET LONG, ESTIMATED LENGTH
29 PILES OF ORDER LENGTH 50 FEET LONG
27 PILES OF ORDER LENGTH 30 FEET LONG
29 SPLICES

PIER PILES:
12 PILES 30 FEET LONG, ESTIMATED LENGTH
12 PILES 25 FEET LONG, ESTIMATED LENGTH
12 PILES 15 FEET LONG, ESTIMATED LENGTH
12 PILES OF ORDER LENGTH 30 FEET LONG
12 PILES OF ORDER LENGTH 25 FEET LONG
12 PILES OF ORDER LENGTH 15 FEET LONG
18 SPLICES.

Filename: 0618NOTE.dgn

DESIGN AGENCY
BALKE ENGINEERS
1848 Summit Road
Cincinnati, Ohio 45237

DESIGNED	DRAWN	REVIEWED	DATE
FKL	WJH	CRS	6/01
CHECKED	REVISED	STRUCTURE FILE NUMBER	
MRS	—	1305603 LB 1305611 RB	

GENERAL NOTES
BRIDGE NO. CLE-275-0618
OVER US 50 J

CLE-275-5.35

GENERAL NOTES

INSPECTION OF EXISTING STRUCTURAL STEEL: THE ENGINEER WILL VISUALLY INSPECT ALL EXISTING BUTT-WELDED SPLICES AND/OR TOP FLANGE COVER PLATE FILLET WELDS TO ENSURE THE WELDS, PLATES AND BEAMS OR GIRDERS ARE FREE OF DEFECTS AND CRACKS. IF THE DECK SLAB HAUNCH FORMS IMMEDIATELY ADJACENT TO SUCH WELDS INTERFERE WITH THE ENGINEER'S INSPECTION THEY SHALL BE REMOVED OR NOT BE ERECTED UNTIL AFTER THE INSPECTION. THE INSPECTION SHALL NOT TAKE PLACE UNTIL AFTER THE TOP FLANGES ARE CLEANED AS SPECIFIED IN SS 842.08, BUT IT SHALL BE DONE BEFORE THE DECK SLAB REINFORCEMENT IS INSTALLED. THE COST ASSOCIATED WITH THIS INSPECTION SHALL BE INCLUDED WITH ITEM SS 842, SUPERSTRUCTURE CONCRETE FOR PAYMENT. ANY CRACKS FOUND SHOULD BE REPORTED TO THE OFFICE OF STRUCTURAL ENGINEERING, BRIDGE CONSTRUCTION SPECIALIST, ALONG WITH SPECIFIC INFORMATION ON LOCATION OF THE CRACKS, LENGTH, AND DEPTH SO AN EVALUATION AND REPAIR OR REPLACEMENT RECOMMENDATION CAN BE MADE.

USE OF NON-ASBESTOS CONTAINING MATERIALS:
THE CONTRACTOR SHALL AT NO TIME INCORPORATE ANY MATERIALS WHICH ARE COMPOSED OF OR CONTAIN ANY AMOUNTS OF ASBESTOS. THE SUBSTITUTION OF MATERIALS WHICH CONTAIN ANY AMOUNTS OF ASBESTOS WILL IN NO CIRCUMSTANCRES BE ACCEPTABLE. UPON COMPLETION OF THE PROJECT, THE CONTRACTOR SHALL SUBMIT A WRITTEN STATEMENT OF CERTIFICATION ASSERTING THAT NO ASBESTOS CONTAINING MATERIALS WERE USED IN ANY PORTION OF THE CONSTRUCTION.

ITEM 863 STRUCTURAL STEEL MEMBERS MISCELLANEOUS FABRICATION, AS PER PLAN, (OTHER DESCRIPTION). ALL SECTIONS OF SS 863 APPLY EXCEPT AS REVISED HEREIN. THE ENGINEER IS RESPONSIBLE FOR ENSURING ANY SHOP OR FIELD FABRICATED STEEL SUPPLIED UNDER THIS BID ITEM IS ACCEPTABLE. THE REQUIREMENTS FOR SUBMITTAL OF SHOP DRAWINGS TO THE OFFICE OF STRUCTURAL ENGINEERING IS WAIVED. AT THE ENGINEER'S OPTION, THE CONTRACTOR SHALL EITHER SUPPLY THE ENGINEER WITH SHOP DRAWINGS, REQUIRED IN SECTION 863.08, PRIOR TO ANY INCORPORATION OF SHOP FABRICATED STEEL AT THE PROJECT, OR SUPPLY THE ENGINEER WITH "AS FABRICATED" DRAWINGS, MEETING 863.08, AFTER COMPLETION OF FIELD FABRICATION. THE ENGINEER SHALL ASSURE THE SUBMITTED DRAWINGS MATCH THE FINAL AS BUILT STEEL INCORPORATED INTO THE WORK. IF THE ENGINEER IS SATISFIED WITH THE DRAWINGS AND THE DELIVERED MATERIALS, THE CONTRACTOR SHALL SUPPLY A COPY SET, STAMPED AND DATED AS PER 863.08, TO THE OFFICE OF STRUCTURAL ENGINEERING FOR RECORD PURPOSES. SUBMITTAL REQUIREMENTS UNDER 863.09, MATERIALS, SHALL BE MADE TO THE ENGINEER. THE CONTRACTOR SHALL FURNISH A COPY OF THE WRITTEN LETTER OF ACCEPTANCE, 863.09, TO THE OFFICE OF STRUCTURAL ENGINEERING WRITTEN LETTER OF ACCEPTANCE.

THE ENGINEER, AT OR BEFORE THE PRE-CONSTRUCTION MEETING, MAY CHOOSE TO REQUEST ASSISTANCE, AS REQUIRED, FROM THE OFFICE OF STRUCTURAL ENGINEERING.

STEEL MEMBERS INCLUDED IN THIS ITEM INCLUDE INTERMEDIATE CROSSFRAMES AND COVER PLATE RETROFIT

ITEM 516, JACKING AND TEMPORARY SUPPORT OF SUPERSTRUCTURE, AS PER PLAN: THIS ITEM SHALL CONSIST OF FURNISHING ALL NECESSARY LABOR, MATERIALS, AND EQUIPMENT TO RAISE OR RE-POSITION ANY EXISTING STRUCTURES TO THE DIMENSIONS AND REQUIREMENTS DEFINED IN THE PROJECT PLANS. THE CONTRACTOR SHALL BE RESPONSIBLE FOR THE DESIGN, INSTALLATION AND OPERATION OF AN ADEQUATE JACKING SYSTEM, INCLUDING ANY TEMPORARY OR PERMANENT SUPPORTS NECESSARY TO PERFORM THE WORK DESCRIBED IN THE PROJECT PLANS. THREE (3) SETS OF JACKING PLANS, WHICH INCLUDE THE INFORMATION DESCRIBED IN THIS NOTE, SHALL BE SUBMITTED TO THE DIRECTOR FOR APPROVAL AT LEAST THIRTY (30) DAYS BEFORE ACTUAL WORK IS TO BEGIN. THE PLANS SHALL BE PREPARED AND STAMPED BY A OHIO REGISTERED PROFESSIONAL ENGINEER. JACKING SUBMITTALS SHALL INCLUDE AT LEAST THE FOLLOWING:

1. THE SIGNATURE AND NUMBER, OR PROFESSIONAL SEAL, OF THE OHIO REGISTERED PROFESSIONAL ENGINEER WHO PREPARED THE SUBMITTAL.

2. CALCULATIONS AND ANALYSES OF THE STRUCTURE TO DETERMINE AND DEFINE THE ACTUAL LOADING APPLIED AT THE CONTRACTOR'S SELECTED JACKING POINTS.

3. A DRAWING SHOWING THE PHYSICAL AND DIMENSIONAL POSITION OF THE JACKS WITH RESPECT TO THE STRUCTURE INCLUDING CLEARANCES AND CENTER OF LIFT.

4. A SCHEMATIC LAYOUT OF JACKS, CHECK VALVES, PUMPS WITH 3 WAY RETRACTOR VALVE, PRESSURE GAGES, FLOW CONTROL VALVES, ETC. IN ACCORDANCE WITH MANUFACTURER'S RECOMMENDATIONS. ALL JACKS FOR EACH ABUTMENT OR PIER SHALL BE CONNECTED TOGETHER. ALL JACKS AT EACH ABUTMENT OR PIER SHALL BE THE SAME SIZE.

5. ANALYSIS AND CALCULATIONS OF THE STRESSES INDUCED OR CREATED IN THE STRUCTURE AND ANY TEMPORARY OR PERMANENT SUPPORTS. DESIGN CALCULATIONS FOR ANY TEMPORARY OR PERMANENT SUPPORTS.

6. PHYSICAL DIMENSIONS, MATERIALS, AND FABRICATION DETAILS OF ANY TEMPORARY OR PERMANENT SUPPORTS. HORIZONTAL AND VERTICAL MOVEMENT RESTRAINT SHALL BE PROVIDED.

7. A STEP BY STEP PROCEDURE DETAILING ALL STEPS IN THE JACKING OPERATION.

8. METHOD OF ATTACHMENT TO STRUCTURAL MEMBERS. WELDING TO TENSION AREAS WILL NOT BE PERMITTED.

THE ENTIRE SYSTEM INCLUDING JACKS SHALL HAVE 20% MORE CAPACITY THAN REQUIRED BASED ON CALCULATED LOADS.

FOR LIFTS GREATER THAN 1 INCH, JACKS SHALL HAVE LOCKING NUTS TO POSITIVELY LOCK AND SUPPORT THE STRUCTURE DURING THE LIFT.

JACKS SHALL HAVE A SWIVEL LOAD CAP, A DOMED PISTON HEAD OR SOME OTHER DEVICE TO PROTECT AGAINST THE EFFECTS OF SIDE LOAD ON THE JACK.

JACKS ALONE SHALL NOT BE USED TO SUPPORT LOADS EXCEPT DURING THE ACTUAL JACKING OPERATION. TEMPORARY SUPPORTS, BLOCKING OR OTHER METHODS APPROVED BY THE DIRECTOR SHALL BE USED.

SINGLE ACTING RAMS WITH NO OVER-TRAVEL PROTECTION SYSTEM SHALL NOT BE USED.

SPARE EQUIPMENT SHALL BE AVAILABLE ON SITE FOR THE REQUIRED STRUCTURE RAISING TO PROCEED IN THE EVENT OF BREAKDOWN. A LIST OF SPARE EQUIPMENT SHALL BE PROVIDED TO THE ENGINEER.

AT A MINIMUM, A JACKING OPERATION SHALL LIFT ALL BEAMS AT ANY ONE ABUTMENT OR PIER SIMULTANEOUSLY. THE ONLY EXCEPTION IS THE SITUATION WHERE THE WORK INVOLVES REPLACING OR REHABILITATING INDIVIDUAL BEARINGS; NO PERMANENT SHIMMING IS REQUIRED AND THE HEIGHT OF THE LIFT SHALL NOT EXCEED ¼ INCH.

MAXIMUM DIFFERENTIAL JACKING HEIGHT BETWEEN ANY ADJACENT ABUTMENTS OR PIERS SHALL BE 1 INCH OR LESS. THIS HEIGHT MAY BE MODIFIED IF CALCULATIONS, BY THE CONTRACTOR'S OHIO REGISTERED PROFESSIONAL ENGINEER, SHOW THE SUPERSTRUCTURE COMPONENTS WILL NOT BE TEMPORARILY STRESSED BEYOND ALLOWABLE STRESSES FOR THOSE COMPONENTS AND THAT NO PERMANENT STRESSES WILL BE INDUCED IN THE COMPONENTS AFTER THEY OBTAIN THEIR FINAL POSITION.

IF, DURING THE JACKING OPERATIONS, CRACKING OF THE CONCRETE SUPERSTRUCTURE, SEPARATION OF THE CONCRETE DECK FROM THE STEEL STRINGERS, OR OTHER DAMAGE TO THE STRUCTURE IS VISUALLY OBSERVED, THE JACKING OPERATION SHALL IMMEDIATELY CEASE AND APPROVED SUPPORTS SHALL BE INSTALLED. THE CONTRACTOR SHALL THEN ANALYZE THE DAMAGE AND SUBMIT A METHOD OF CORRECTION TO THE ENGINEER FOR APPROVAL. ANY BEAMS THAT SEPARATE FROM THE DECK SHALL BE EPOXY INJECTED FOR THE DISTANCE OF THE SEPARATION IN ACCORDANCE WITH ODOT'S PROPOSAL NOTE "CONCRETE REPAIR BY EPOXY INJECTION". COST OF THIS EPOXY INJECTION OR OTHER REQUIRED REPAIRS SHALL BE BORNE BY THE CONTRACTOR.

THE CONTRACTOR SHALL DEMONSTRATE TO THE ENGINEER THAT THE BRIDGE BEARINGS ARE FULLY SEATED AT ALL CONTACT AREAS. IF FULL SEATING IS NOT ATTAINED, SUITABLE MEANS OF REPAIR, SUBJECT TO THE ENGINEER'S APPROVAL, WILL BE REQUIRED AT THE CONTRACTOR'S EXPENSE.

PAYMENT SHALL BE MADE AT THE LUMP SUM PRICE BID FOR ITEM 516, JACKING AND TEMPORARY SUPPORT OF SUPERSTRUCTURE, AS PER PLAN. THIS SHALL INCLUDE ALL NECESSARY TOOLS, LABOR, EQUIPMENT AND MATERIALS NECESSARY TO COMPLETE THIS ITEM OF WORK.

A CLOSURE POUR SHALL BE PROVIDED BETWEEN THE TWO DECK CONSTRUCTION STAGES. THE EXISTING CROSSFRAMES MUST BE CUT TO ISOLATE THE TWO STAGES. THE FALSEWORK FOR THE STAGE 2 DECK CANNOT BE CONNECTED TO THE STAGE 1 FALSEWORK.

ALL SURFACES TO BE PATCHED AND THE EXPOSED REINFORCING STEEL WITHIN SHALL BE THOROUGHLY CLEANED BY ABRASIVE BLASTING PRIOR TO THE CLEANING SPECIFIED BY 519.04. CLEANING SHALL PRECEDE APPLICATION OF THE PATCHING MATERIAL OR ERECTION OF THE FORMS BY NOT MORE THAN 24 HOURS.

ITEM 842, CLASS C CONCRETE, ABUTMENT INCLUDING FOOTING, AS PER PLAN: IN ADDITION TO THE REQUIREMENTS OF ITEM 842, A REFERENCE DISK SHALL BE CAST IN THE ABUTMENT CONCRETE. THE DISK WILL BE CENTERED ON THE TOP HORIZONTAL SURFACE OF THE FORWARD ABUTMENT RIGHT WINGWALL. THE DISK WILL BE PROVIDED BY THE DISTRICT EIGHT SURVEY MANAGER. THE CONTRACTOR WILL MARK THE DISK WITH THE NAVD88 PROJECT ELEVATION UNDER THE SUPERVISION OF A PROFESSIONAL SURVEYOR REGISTERED IN THE STATE OF OHIO.

CONVERSION OF STANDARD DRAWINGS:
SOME OF THE STANDARD DRAWINGS REFERENCED IN THIS PLANS ARE METRIC. ANY CONVERSION OF DIMENSIONS REQUIRED TO CONSTRUCT THE ITEMS SHOWN ON THE STANDARDS SHALL BE THE RESPONSIBILITY OF THE CONTRACTOR. CONVERSIONS SHALL BE MADE USING THE SI (METRIC) TO ENGLISH CONVERSIONS FACTORS PROVIDED IN SECTION 109.011 OF THE 1997 CONSTRUCTION AND MATERIALS SPECIFICATIONS. THE APPENDIX OF ASTM E380 SHALL BE UTILIZED FOR ANY ADDITIONAL CONVERSION FACTORS REQUIRED. CONVERSIONS SHALL BE APPROPRIATELY PRECISE AND SHALL REFLECT STANDARD INDUSTRY ENGLISH VALUES WHERE SUITABLE.

DESIGN AGENCY
BALKE ENGINEERS
1848 Summit Road
Cincinnati, Ohio 45237

DESIGNED	DRAWN	REVIEWED	DATE
FAL	MJH	CRS	6/01
CHECKED	REVISED	STRUCTURE FILE NUMBER	
MKS	—	3055571 & B. 3055671	

GENERAL NOTES
BRIDGE NO. CLE-275-0618
OVER US 50 J

CLE-275-5.35

705/857

F:\Jobs\2005\3055671\Drawings\3055671_GeneralNotes.dgn

ESTIMATED QUANTITIES — CLE-275-0619 LEFT

CALCULATED BY: FKL DATED 1-01
CHECKED BY: ALH DATED 6/01

FUNDING (1)	FUNDING (2)	ITEM	EXTENSION	TOTAL	UNIT	DESCRIPTION	LEFT BRIDGE SUPERSTRUCTURE (1)	LEFT BRIDGE SUPERSTRUCTURE (2)	LEFT BRIDGE ABUTMENT (1)	LEFT BRIDGE ABUTMENT (2)	LEFT BRIDGE PIER (1)	LEFT BRIDGE PIER (2)	GENERAL (1)	GENERAL (2)	SEE SHEET NO.
LUMP		202	11200	LUMP	-	PORTIONS OF STRUCTURE REMOVED							LUMP		
	LUMP	503	11100	LUMP	-	COFFERDAMS, CRIBS AND SHEETING								LUMP	
	LUMP	503	21301	LUMP	-	UNCLASSIFIED EXCAVATION, AS PER PLAN				LUMP		LUMP			2
	LUMP	505	11100	LUMP	-	PILE DRIVING EQUIPMENT MOBILIZATION								LUMP	
	1760	507	00100	1760	LIN. FT.	STEEL PILES HP10X42, FURNISHED				1200		560			
	1760	507	00150	1760	LIN. FT.	STEEL PILES HP10X42, DRIVEN				1200		560			
	28	507	50500	28	EACH	STEEL PILE SPLICES				16		12			
1040	219	SPECIAL	51267510	1259	SQ. YD.	SEALING OF CONCRETE SURFACES (EPOXY-URETHANE)*	563		64	82	413	137			14 - 26, 34 & 36
	34	516	13600	34	SQ. FT.	1" PREFORMED EXPANSION JOINT FILLER								634	
	52	516	13900	52	SQ. FT.	2" PREFORMED EXPANSION JOINT FILLER				52					
LUMP		516	47001	LUMP	-	JACKING AND TEMPORARY SUPPORT OF SUPERSTRUCTURE, AS PER PLAN	LUMP								
23	4	516	44100	27	EACH	ELASTOMERIC BEARING WITH INTERNAL LAMINATES AND LOAD PLATE (12 "X19"X2.698" NEOPRENE)					23	4			
14	4	516	44100	18	EACH	ELASTOMERIC BEARING WITH INTERNAL LAMINATES AND LOAD PLATE (9 "X14"X2.798" NEOPRENE)			14	4					
	LUMP	518	21230	LUMP	-	POROUS BACKFILL WITH FILTER FABRIC				LUMP					
110	100	518	40001	210	LIN. FT.	6" PERFORATED CORRUGATED PLASTIC PIPE, AS PER PLAN			110	100					2
78		518	40010	78	LIN. FT.	6" NON-PERFORATED CORRUGATED PLASTIC PIPE, INCLUDING SPECIALS			78						
12		519	11100	12	SQ. FT.	PATCHING CONCRETE STRUCTURE			12						
	200	601	20000	200	SQ. YD.	CRUSHED AGGREGATE SLOPE PROTECTION				200					
	5930	816	00620	5930	SQ. FT.	FIELD PAINTING OF NEW STEEL, INTERMEDIATE AND FINISH COAT, SYSTEM IZEU		5930							
495	165	842	31508	660	CU. YD.	CLASS S CONCRETE, SUPERSTRUCTURE	495	165							
	69	842	41000	69	CU. YD.	CLASS C CONCRETE, PIER ABOVE FOOTING						69			
	145	842	43501	145	CU. YD.	CLASS C CONCRETE, ABUTMENT INCLUDING FOOTING, AS PER PLAN				145					3
	48	842	46500	48	CU. YD	CLASS C CONCRETE, FOOTING						48			
107		846	73000	107	SQ. YD	TREATING CONCRETE BRIDGE DECKS WITH HMWM RESIN	107								
	17,300	863	10201	17,300	POUND	STRUCTURAL STEEL MEMBERS, MISCELLANEOUS LEVEL FABRICATION AS PER PLAN		17,300							
	77,700	863	10260	77,700	POUND	STRUCTURAL STEEL MEMBERS, LEVEL THREE (3) FABRICATION, A709, GRADE 50		77,700							
5523	1578	863	20000	7101	EACH	WELDED STUD SHEAR CONNECTORS	5523	1578							

(1) INTERSTATE MAINTENANCE (2) NATIONAL HIGHWAY * SEE PROPOSAL NOTE

ESTIMATED QUANTITIES — CLE-275-0619 RIGHT

CALCULATED BY: FKL DATED 1-01
CHECKED BY: ALH DATED 6/01

FUNDING (1)	FUNDING (2)	ITEM	EXTENSION	TOTAL	UNIT	DESCRIPTION	RIGHT BRIDGE SUPERSTRUCTURE (1)	RIGHT BRIDGE SUPERSTRUCTURE (2)	RIGHT BRIDGE ABUTMENT (1)	RIGHT BRIDGE ABUTMENT (2)	RIGHT BRIDGE PIER (1)	RIGHT BRIDGE PIER (2)	GENERAL (1)	GENERAL (2)	SEE SHEET NO.
LUMP		202	11200	LUMP	-	PORTIONS OF STRUCTURE REMOVED							LUMP		
	LUMP	503	11100	LUMP	-	COFFERDAMS, CRIBS AND SHEETING								LUMP	
	LUMP	503	21301	LUMP	-	UNCLASSIFIED EXCAVATION, AS PER PLAN				LUMP		LUMP			2
	LUMP	505	11100	LUMP	-	PILE DRIVING EQUIPMENT MOBILIZATION								LUMP	
	1340	507	00100	1340	LIN. FT.	STEEL PILES HP10X42, FURNISHED				1060		280			
	1340	507	00150	1340	LIN. FT.	STEEL PILES HP10X42, DRIVEN				1060		280			
	19	507	50500	19	EACH	STEEL PILE SPLICES				13		6			
1652	169	SPECIAL	51267510	1821	SQ. YD.	SEALING OF CONCRETE SURFACES (EPOXY-URETHANE)*	799		131	75	722	94			14 - 26, 34 & 36
	33	516	13600	33	SQ. FT.	1" PREFORMED EXPANSION JOINT FILLER								33	
	52	516	13900	52	SQ. FT.	2" PREFORMED EXPANSION JOINT FILLER				52					
LUMP		516	47001	LUMP		JACKING AND TEMPORARY SUPPORT OF SUPERSTRUCTURE, AS PER PLAN	LUMP								
40	2	516	44100	42	EACH	ELASTOMERIC BEARING WITH INTERNAL LAMINATES AND LOAD PLATE (12 "X19"X2.698" NEOPRENE)					40	2			
26	2	516	44100	28	EACH	ELASTOMERIC BEARING WITH INTERNAL LAMINATES AND LOAD PLATE (9 "X14"X2.798" NEOPRENE)			26	2					
	LUMP	518	21230	LUMP	-	POROUS BACKFILL WITH FILTER FABRIC				LUMP					
210	74	518	40001	284	LIN. FT.	6" PERFORATED CORRUGATED PLASTIC PIPE, AS PER PLAN			210	74					2
36		518	40010	36	LIN. FT.	6" NON-PERFORATED CORRUGATED PLASTIC PIPE, INCLUDING SPECIALS			36						
63		519	11100	63	SQ. FT.	PATCHING CONCRETE STRUCTURE			63						
	90	601	20000	90	SQ. YD.	CRUSHED AGGREGATE SLOPE PROTECTION				90					
	3176	816	00620	3176	SQ. FT.	FIELD PAINTING OF NEW STEEL, INTERMEDIATE AND FINISH COAT, SYSTEM IZEU		3176							
850	120	842	31508	970	CU. YD.	CLASS S CONCRETE, SUPERSTRUCTURE	850	120							
	66	842	41000	66	CU. YD.	CLASS C CONCRETE, PIER ABOVE FOOTING						66			
	128	842	43501	128	CU. YD.	CLASS C CONCRETE, ABUTMENT INCLUDING FOOTING, AS PER PLAN				128					3
	27	842	46500	27	CU. YD	CLASS C CONCRETE, FOOTING						27			
108		846	73000	108	SQ. YD	TREATING CONCRETE BRIDGE DECKS WITH HMWM RESIN	108								
	10,500	863	10201	10,500	POUND	STRUCTURAL STEEL MEMBERS, MISCELLANEOUS LEVEL FABRICATION AS PER PLAN		10,500							
	39,200	863	10260	39,200	POUND	STRUCTURAL STEEL MEMBERS, LEVEL THREE (3) FABRICATION, A709, GRADE 50		39,200							
10,140	765	863	20000	10,905	EACH	WELDED STUD SHEAR CONNECTORS	10,140	765							

DESIGN AGENCY
BALKE ENGINEERS
1848 Summit Road
Cincinnati, Ohio 45237

DESIGNED	DRAWN	REVIEWED	DATE
FKL	ALH	CRS	6/01
CHECKED	REVISED	STRUCTURE FILE NUMBER	
MRS	—	1305603 L.B. 1305611 A.B.	

ESTIMATED QUANTITIES
BRIDGE NO. CLE-275-0618
OVER US 50 J

CLE-275-5.35

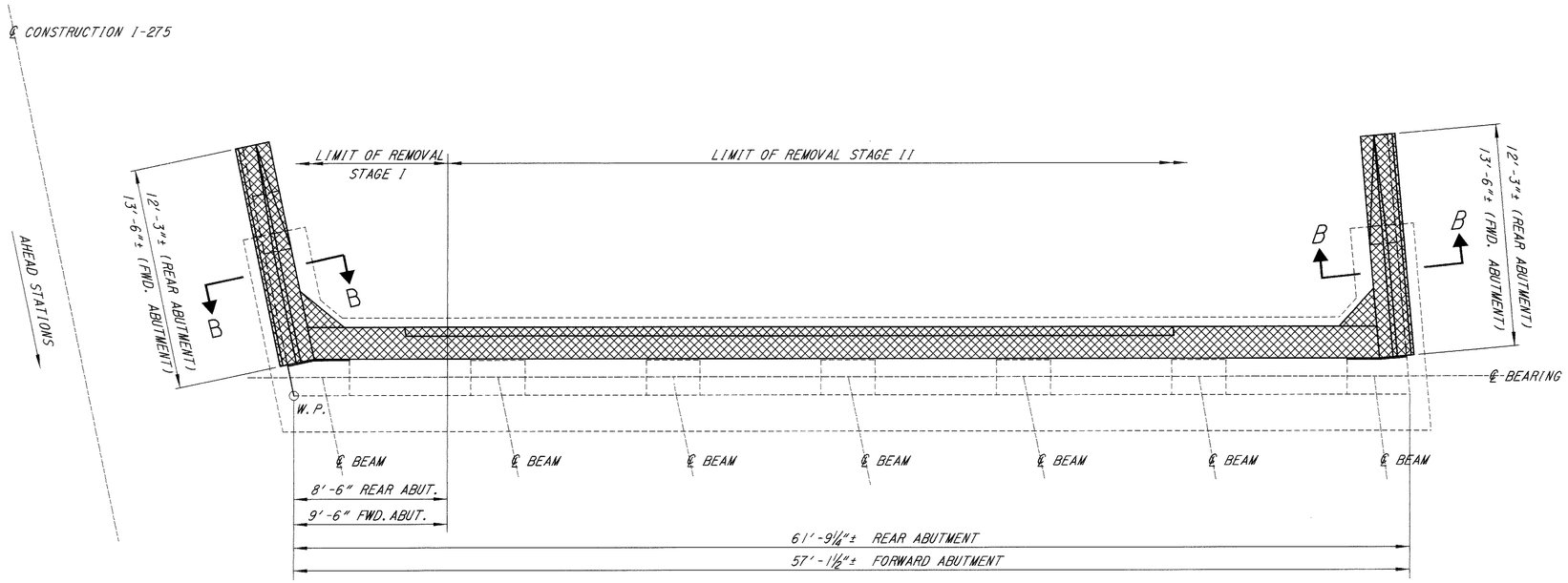

PLAN: LEFT BRIDGE
(REAR ABUTMENT SHOWN)
(FORWARD ABUTMENT SIMILAR)

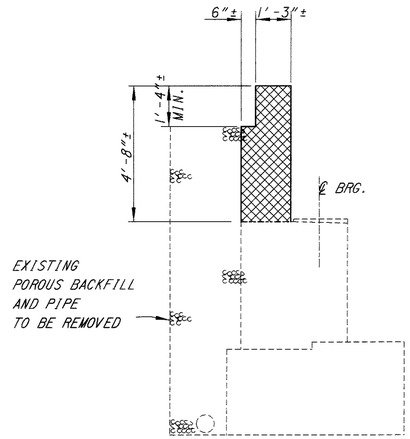

SECTION A-A

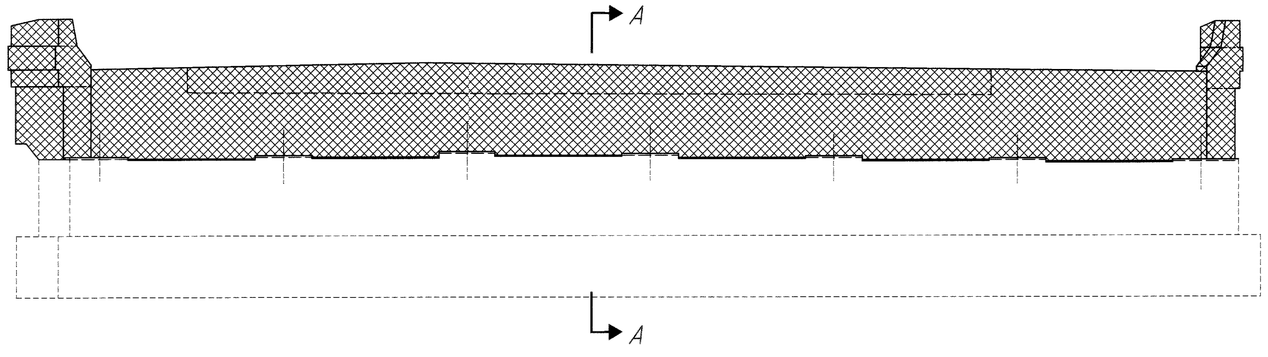

ELEVATION: LEFT BRIDGE
(REAR ABUTMENT SHOWN)
(FORWARD ABUTMENT SIMILAR)

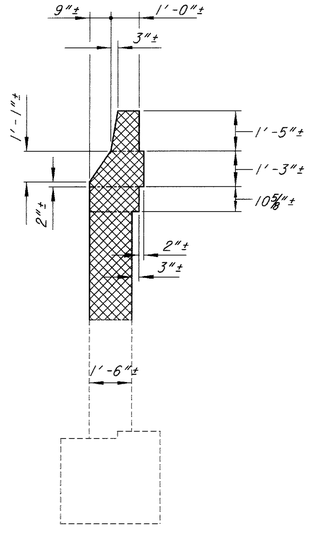

SECTION B-B

NOTES:

1. LIMITS OF CONCRETE AND REINFORCING TO BE REMOVED.
2. W.P. = WORK POINT.

DESIGN AGENCY
BALKE ENGINEERS
1848 Summit Road
Cincinnati, Ohio 45237

DESIGNED	DRAWN	REVIEWED	DATE
FKL	WJH	CRS	6/01
CHECKED	REVISED	STRUCTURE FILE NUMBER	
MRS	—	1305603 L.B. 1305611 R.B.	

ABUTMENT CONCRETE REMOVAL DETAILS
BRIDGE NO. CLE-275-0618
OVER US 50 J

CLE-275-5.35

Filename: 0618REM1.DGN

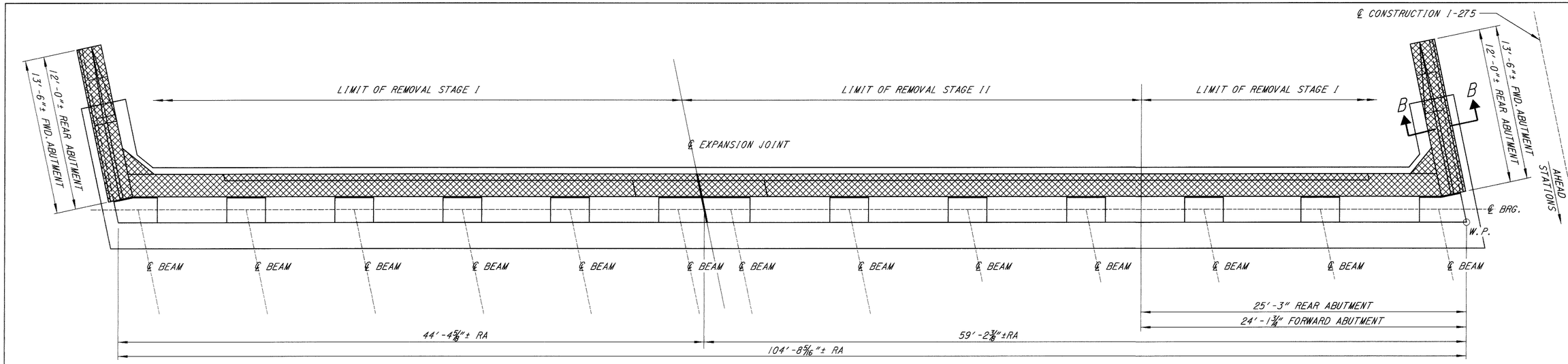

PLAN: RIGHT BRIDGE
(REAR ABUTMENT SHOWN)
(FORWARD ABUTMENT SIMILAR)

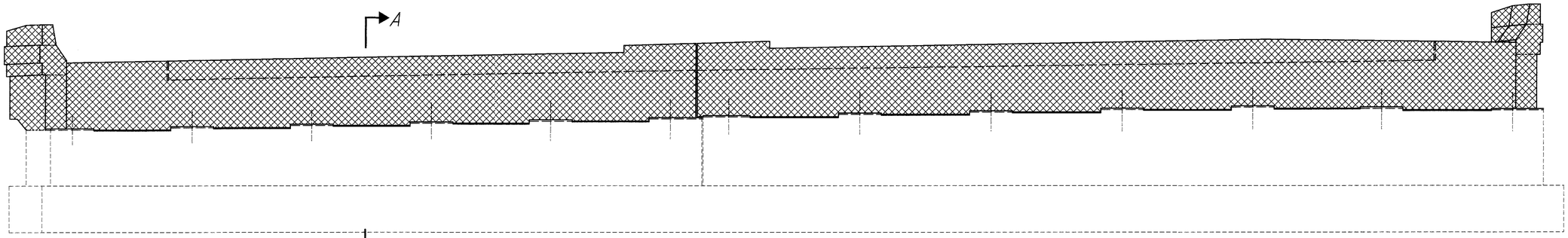

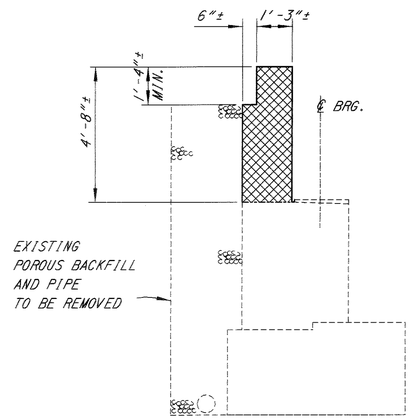

SECTION A-A

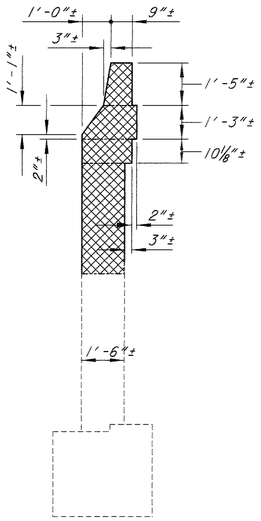

SECTION B-B

ELEVATION: RIGHT BRIDGE
(REAR ABUTMENT SHOWN)
(FORWARD ABUTMENT SIMILAR)

NOTES:

1. LIMITS OF CONCRETE AND REINFORCING TO BE REMOVED.
2. W.P. = WORK POINT.

DESIGN AGENCY
BALKE ENGINEERS
1848 Summit Road
Cincinnati, Ohio 45237

DESIGNED	DRAWN	REVIEWED	DATE
FKL	WJH	CRS	6/01
CHECKED	REVISED	STRUCTURE FILE NUMBER	
MRS	—	3035603 L.B. 3035611 R.B.	

ABUTMENT CONCRETE REMOVAL DETAILS
BRIDGE NO. CLE-275-06/8
OVER US 50 J

CLE-275-5.35

6 / 49

708
857

F:\Inroads - 06\8\rw8.dgn

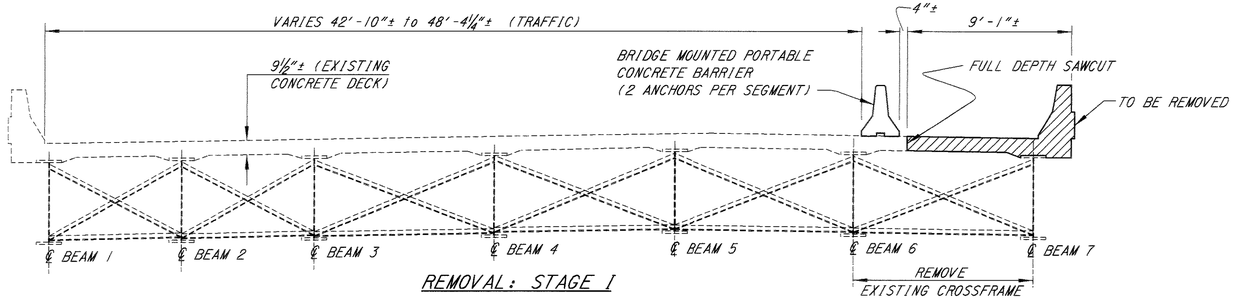

REMOVAL: STAGE I

℄ CONSTRUCTION I-275

REMOVAL: STAGE I
1. INSTALL BRIDGE MOUNTED PORTABLE CONCRETE BARRIER.
2. CLOSE THE WEST SIDE TO TRAFFIC, MAINTAIN TRAFFIC ON THE EAST SIDE.
3. REMOVE EXISTING CROSS FRAMES BETWEEN BEAMS 6 AND 7.
4. REMOVE THE EXISTING CONCRETE PARAPET AND DECK.

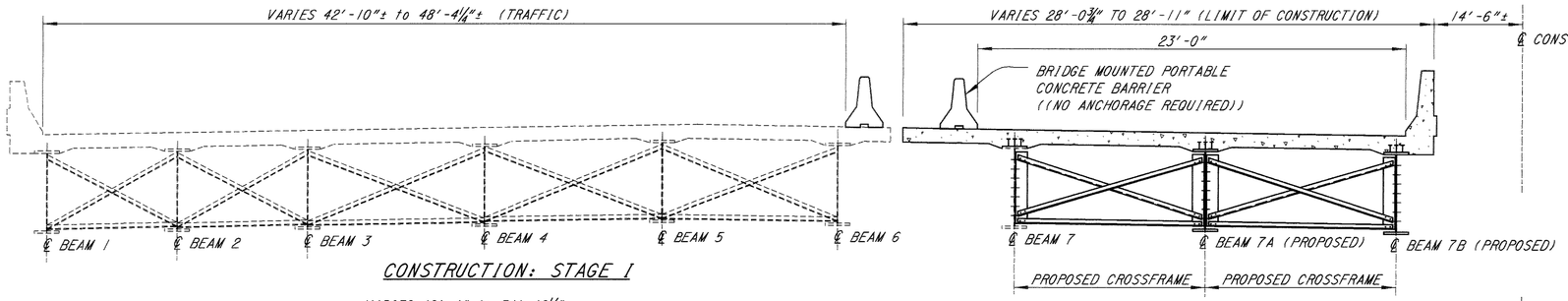

CONSTRUCTION: STAGE I

℄ CONSTRUCTION I-275

CONSTRUCTION: STAGE I
1. ERECT NEW BEAMS 7A AND 7B.
2. INSTALL SHEAR STUDS ON ALL BEAMS.
3. INSTALL CROSSFRAMES BETWEEN EXISTING BEAM 7 & NEW BEAM 7A AND NEW BEAM 7A & NEW BEAM 7B.
4. PLACE NEW CONCRETE DECK.
5. INSTALL BRIDGE MOUNTED PORTABLE BARRIER ONTO THE NEWLY COMPLETED DECK.
6. MOVE TRAFFIC TO NEW DECK.

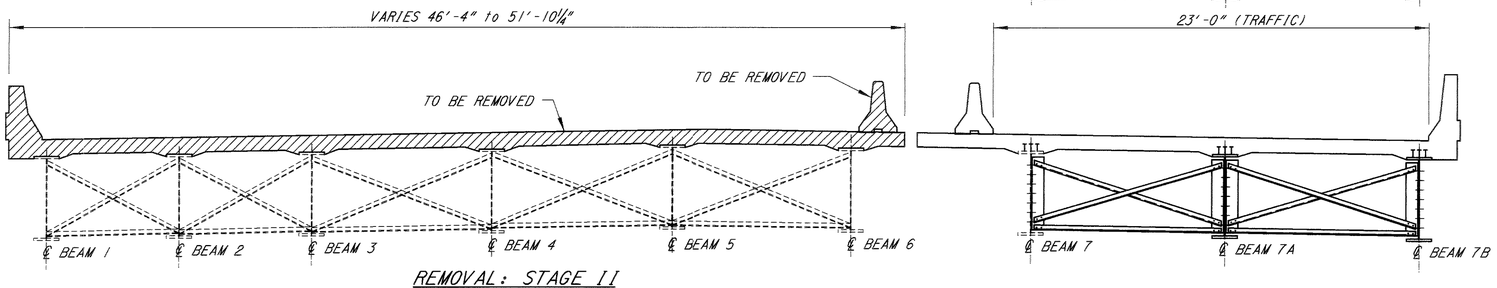

REMOVAL: STAGE II

℄ CONSTRUCTION I-275

REMOVAL: STAGE II
1. REMOVE BRIDGE MOUNTED PORTABLE CONCRETE BARRIER.
2. REMOVE THE REMAINING PORTION OF THE CONCRETE PARAPET AND DECK.

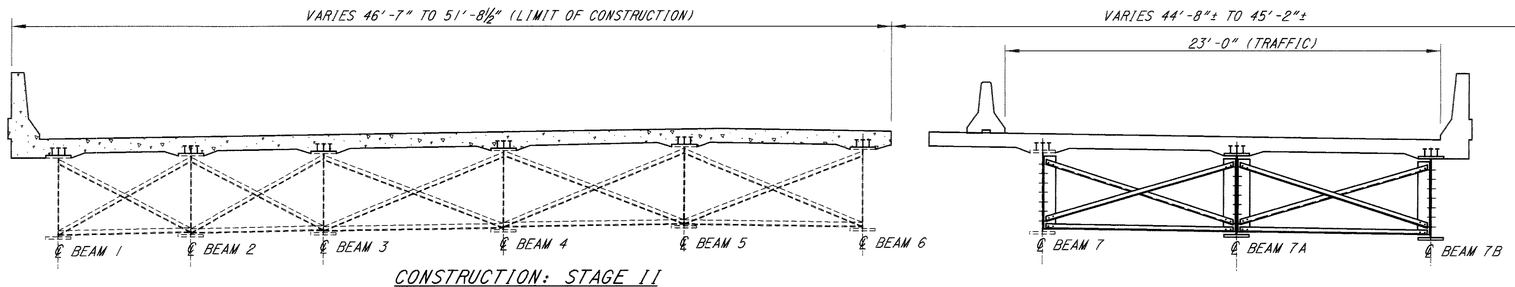

CONSTRUCTION: STAGE II

℄ CONSTRUCTION I-275

CONSTRUCTION: STAGE II
1. INSTALL SHEAR STUDS ON ALL BEAMS.
2. POUR CONCRETE DECK AND PARAPET.

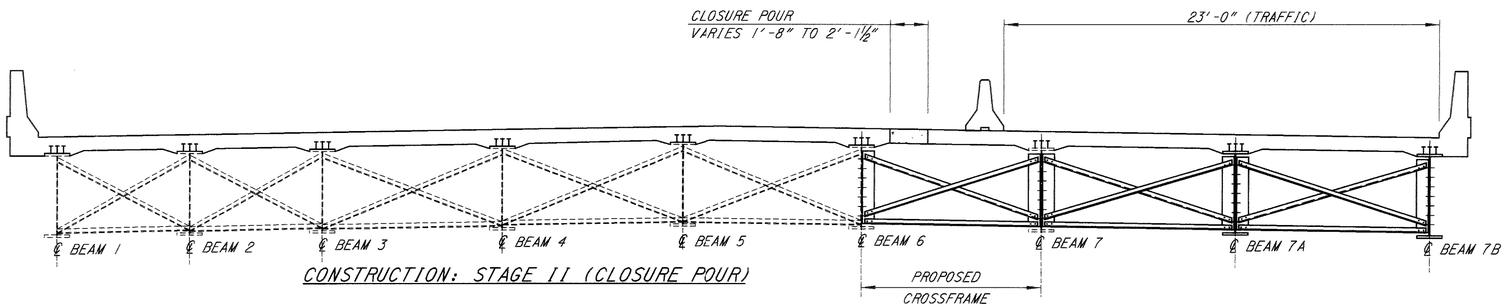

CONSTRUCTION: STAGE II (CLOSURE POUR)

℄ CONSTRUCTION I-275

CONSTRUCTION: STAGE II
1. INSTALL PROPOSED CROSSFRAME BETWEEN BEAM 6 AND BEAM 7.
2. POUR CONCRETE DECK CLOSURE POUR.
3. SEAL CONSTRUCTION JOINTS IN CONCRETE DECK.
4. REMOVE BRIDGE MOUNTED PORTABLE CONCRETE BARRIER.
5. OPEN THE COMPLETED BRIDGE TO TRAFFIC.

NOTES:
1. FOR MAINTAINANCE OF TRAFFIC DETAILS, SEE ROADWAY SHEETS.
2. FOR BRIDGE MOUNTED PORTABLE CONCRETE BARRIER DETAILS, SEE STANDARD DRAWING PCB-91.

SEQUENCE OF CONSTRUCTION: LEFT BRIDGE

BRIDGE NO. CLE-275-0618
OVER US 50 J

DESIGN AGENCY
BALKE ENGINEERS
1848 Summit Road
Cincinnati, Ohio 45237

DESIGNED	DRAWN	REVIEWED	DATE
FKL	ALH	CRS	6/01
CHECKED	REVISED	STRUCTURE FILE NUMBER	
MRS	—	1305603 L.B. 1305611 R.B.	

CLE-275-5.35

7 / 49

709
857

F:\Home\dk\d05921.dgn

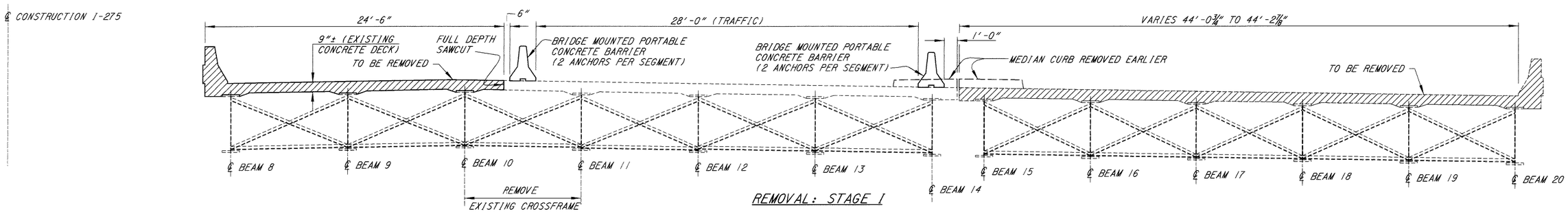

REMOVAL: STAGE I

REMOVAL: STAGE 1
1. INSTALL BRIDGE MOUNTED PORTABLE CONCRETE BARRIERS.
2. CLOSE THE EAST SIDE OF MAINLINE BRIDGE TO TRAFFIC, MAINTAIN TRAFFIC ON THE WEST SIDE.
3. CLOSE RAMP.
4. REMOVE EXISTING CROSSFRAMES BETWEEN BEAMS 10 AND 11.
5. REMOVE THE EXISTING CONCRETE PARAPET AND DECK, AS SHOWN.

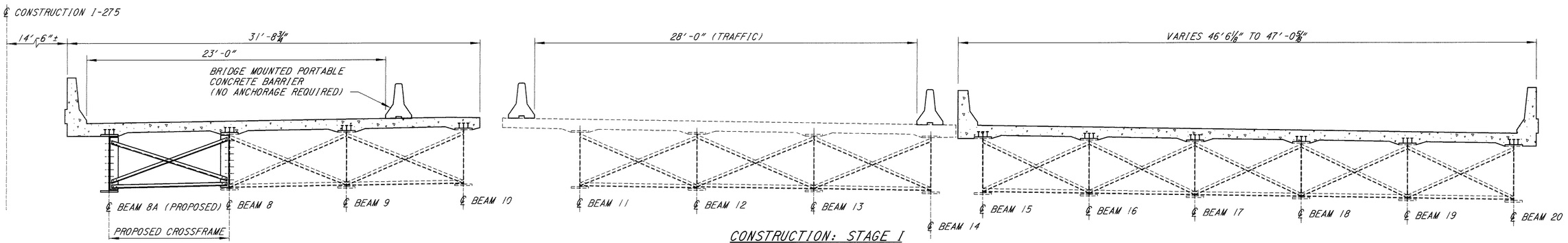

CONSTRUCTION: STAGE I

CONSTRUCTION: STAGE 1
1. ERECT NEW BEAM 8A.
2. INSTALL SHEAR STUDS ON ALL BEAMS.
3. INSTALL CROSSFRAMES BETWEEN EXISTING BEAM 8 AND NEW BEAM 8A.
4. PLACE NEW CONCRETE DECK.
5. INSTALL BRIDGE MOUNTED PORTABLE CONCRETE BARRIER ONTO THE NEWLY COMPLETED MAINLINE DECK.
6. MOVE TRAFFIC TO NEW DECK.

NOTES:
1. FOR MAINTAINANCE OF TRAFFIC DETAILS, SEE ROADWAY SHEETS.
2. FOR BRIDGE MOUNTED PORTABLE CONCRETE BARRIER DETAILS, SEE STANDARD DRAWING PCB-91.

DESIGN AGENCY
BALKE ENGINEERS
1848 Summit Road
Cincinnati, Ohio 45237

DESIGNED	DRAWN	REVIEWED	DATE
FKL	ALH	CRS	6/01
CHECKED	REVISED	STRUCTURE FILE NUMBER	
MRS	—	1305603 L.B. 1305611 R.B.	

SEQUENCE OF CONSTRUCTION: RIGHT BRIDGE
BRIDGE NO. CLE-275-0618
OVER US 50 J

CLE-275-5.35

8 / 49

710
857

F:\Version-08\8SHSK.dgn

℄ CONSTRUCTION I-275

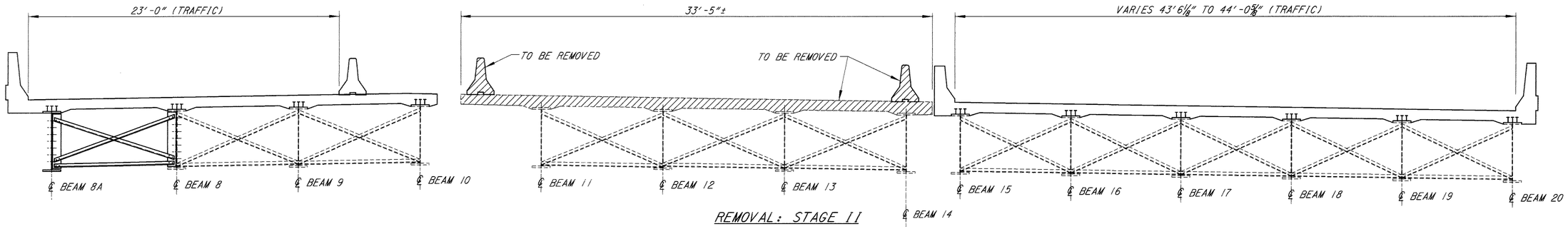

REMOVAL: STAGE II

REMOVAL: STAGE II
1. REMOVE BRIDGE MOUNTED PORTABLE BARRIERS.
2. REMOVE THE REMAINING PORTION OF THE CONCRETE PARAPET AND DECK.

℄ CONSTRUCTION I-275

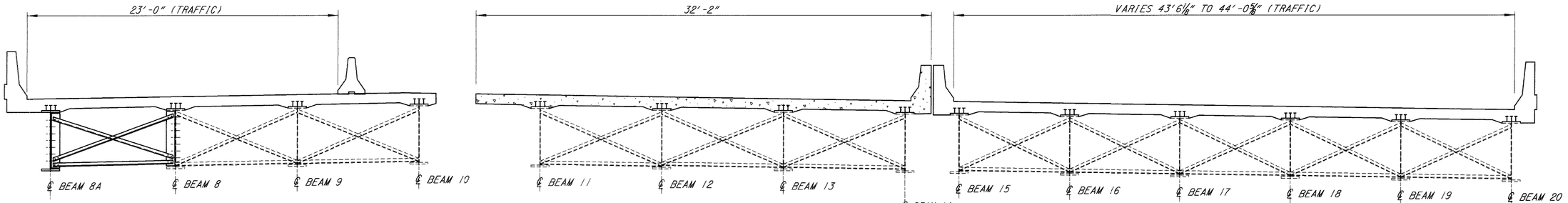

CONSTRUCTION: STAGE II

CONSTRUCTION: STAGE II
1. INSTALL SHEAR STUDS ON ALL BEAMS.
2. POUR CONCRETE DECK AND PARAPET.

℄ CONSTRUCTION I-275

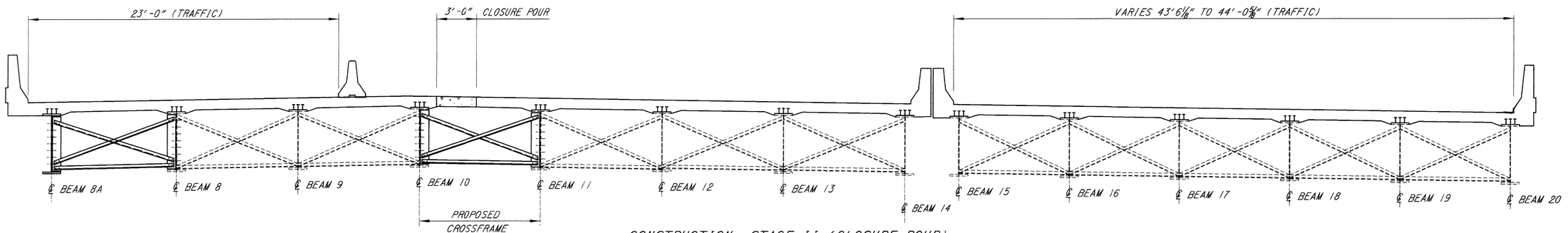

CONSTRUCTION: STAGE II (CLOSURE POUR)

CONSTRUCTION: STAGE II
1. INSTALL PROPOSED CROSSFRAMES BETWEEN BEAM 10 AND BEAM 11.
2. POUR CONCRETE DECK CLOSURE POUR.
3. SEAL CONSTRUCTION JOINTS IN CONCRETE DECK.
4. REMOVE BRIDGE MOUNTED PORTABLE BARRIER.
5. OPEN THE COMPLETED BRIDGE TO TRAFFIC.

NOTES:
1. FOR MAINTAINANCE OF TRAFFIC DETAILS, SEE ROADWAY SHEETS.
2. FOR BRIDGE MOUNTED PORTABLE CONCRETE BARRIER DETAILS, SEE STANDARD DRAWING PCB-91.

DESIGN AGENCY
BALKE ENGINEERS
1848 Summit Road
Cincinnati, Ohio 45237

DESIGNED	DRAWN	REVIEWED	DATE
FKL	ALH	CRS	6/01
CHECKED	REVISED	STRUCTURE FILE NUMBER	
MRS	—	1305603 L.B. 1305611 R.B.	

SEQUENCE OF CONSTRUCTION: RIGHT BRIDGE

BRIDGE NO. CLE-275-0618
OVER US 50 J

CLE-275-5.35

7/11
857

F:\Revisions-06\857941.dgn

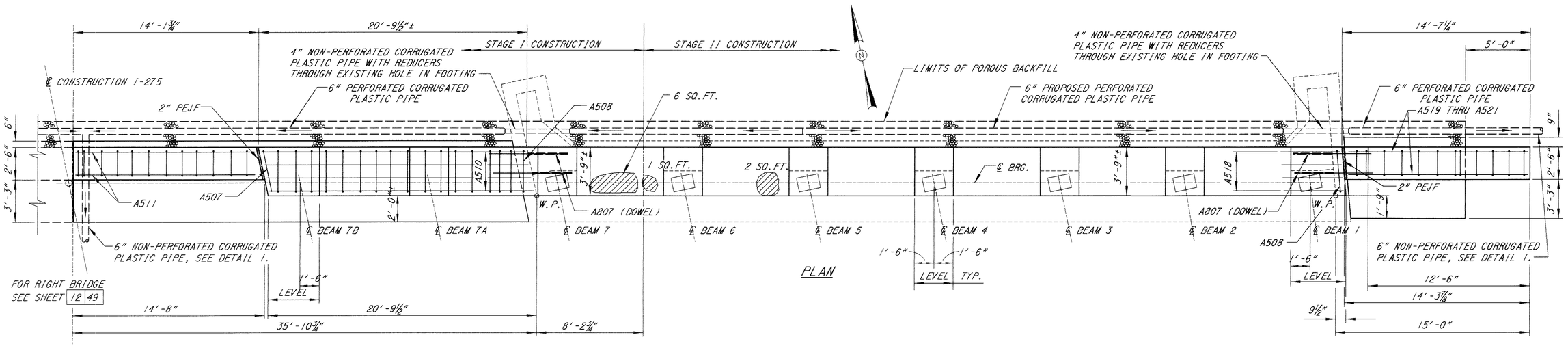

DESIGN AGENCY
BALKE ENGINEERS
1848 Summit Road
Cincinnati, Ohio 45237

DESIGNED	DRAWN	REVIEWED	DATE
FKL	WJHALH	CTS	6/01
CHECKED	REVISED	STRUCTURE FILE NUMBER	
MRS	—	3025603 L.B. 3025611 R.B.	

LEFT BRIDGE REAR ABUTMENT DETAILS
BRIDGE NO. CLE-275-0618
OVER US 50 J

CLE-275-5.35

10 49

712
857

F:\Inroute-DES\DELPAH\...DGN

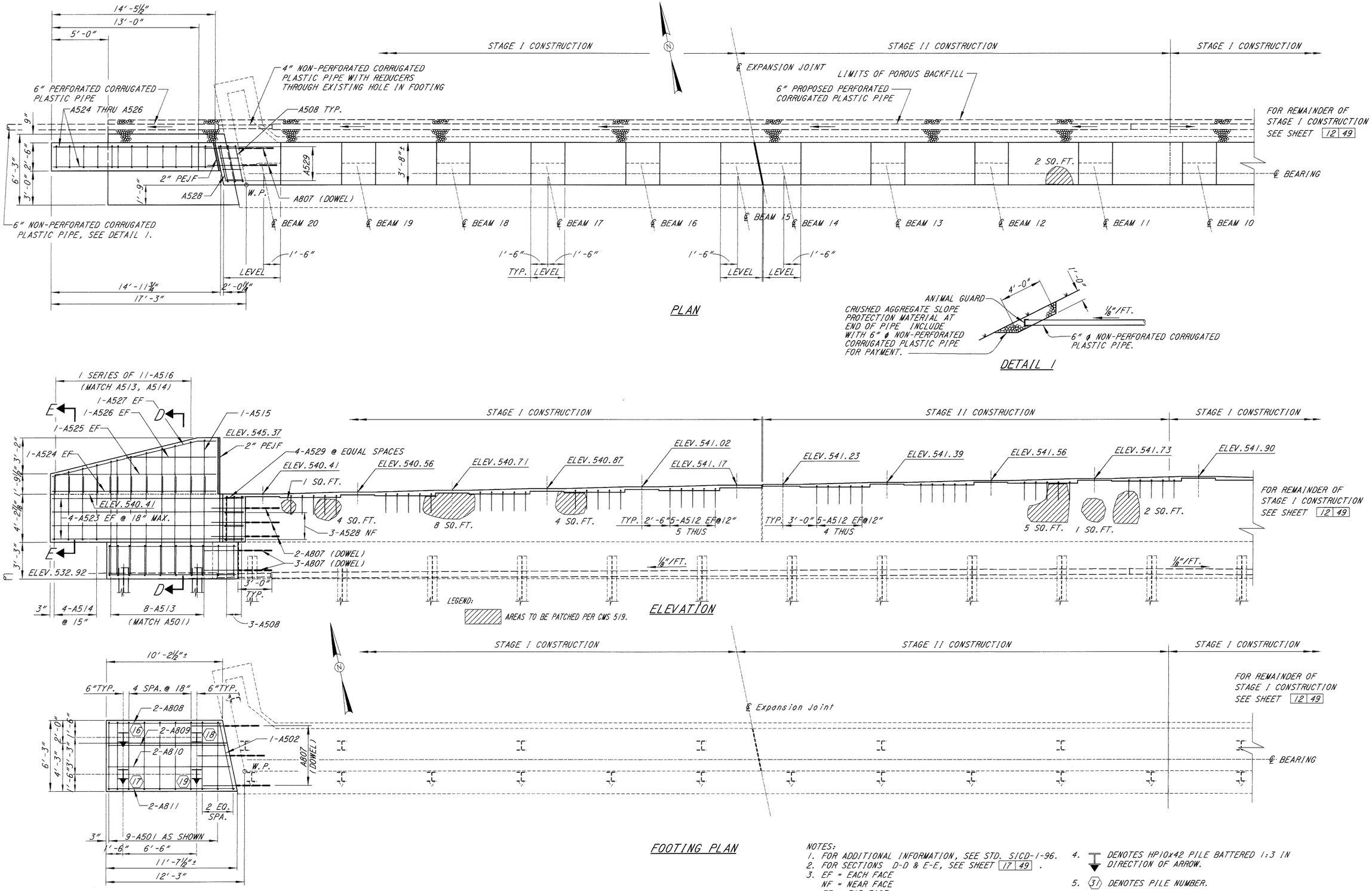

NOTES:
1. FOR ADDITIONAL INFORMATION, SEE STD. SICD-1-96.
2. FOR SECTIONS D-D & E-E, SEE SHEET 17 49 .
3. EF = EACH FACE
   NF = NEAR FACE
   FF = FAR FACE
   PEJF = PREFORMED EXPANSION JOINT FILLER
   W.P. = WORK POINT
4. DENOTES HP10x42 PILE BATTERED 1:3 IN DIRECTION OF ARROW.
5. (31) DENOTES PILE NUMBER.
6. NEW POROUS BACKFILL WITH FILTER FABRIC, 2 FEET THICK SHALL EXTEND UP TO THE PLANE OF THE SUBGRADE, TO 1 FOOT BELOW THE EMBANKMENT SURFACE, AND LATERALLY TO THE ENDS OF THE WINGWALLS.

DESIGN AGENCY
BALKE ENGINEERS
1848 Summit Road
Cincinnati, Ohio 45237

DESIGNED	DRAWN	REVIEWED	DATE
FKL	WJH	CRS	6/01
CHECKED	REVISED	STRUCTURE FILE NUMBER	
MRS	—	1305603 L.B. 1305611 R.B.	

RIGHT BRIDGE REAR ABUTMENT DETAILS
BRIDGE NO. CLE-275-0618
OVER US 50 J

CLE-275-5.35

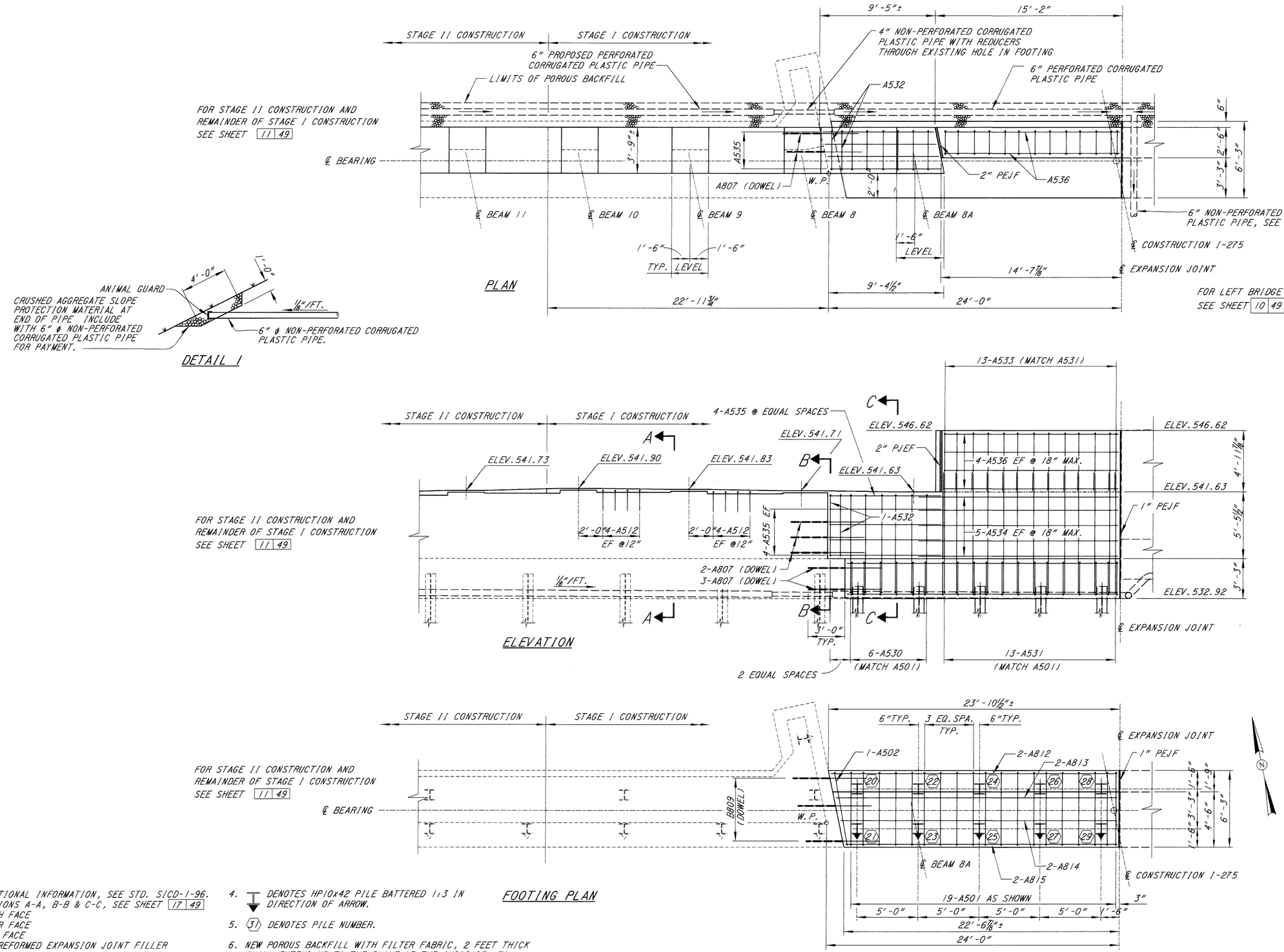

NOTES:
1. FOR ADDITIONAL INFORMATION, SEE STD. SICD-1-96.
2. FOR SECTIONS A-A, B-B & C-C, SEE SHEET 17 49
3. EF = EACH FACE
   NF = NEAR FACE
   FF = FAR FACE
   PEJF = PREFORMED EXPANSION JOINT FILLER
   W.P. = WORK POINT
4. DENOTES HP10x42 PILE BATTERED 1:3 IN DIRECTION OF ARROW.
5. (31) DENOTES PILE NUMBER.
6. NEW POROUS BACKFILL WITH FILTER FABRIC, 2 FEET THICK SHALL EXTEND UP TO THE PLANE OF THE SUBGRADE, TO 1 FOOT BELOW THE EMBANKMENT SURFACE, AND LATERALLY TO THE ENDS OF THE WINGWALLS.

DESIGN AGENCY
BALKE ENGINEERS
1848 Summit Road
Cincinnati, Ohio 45237

DESIGNED	DRAWN	REVIEWED	DATE
FKL	WJH	CRS	6/01
CHECKED	REVISED	STRUCTURE FILE NUMBER	
MRS	—	1305603 L.B. 1305611 R.B.	

RIGHT BRIDGE REAR ABUTMENT DETAILS
BRIDGE NO. CLE-275-0618
OVER US 50 J

CLE-275-5.35

12/49

714/857

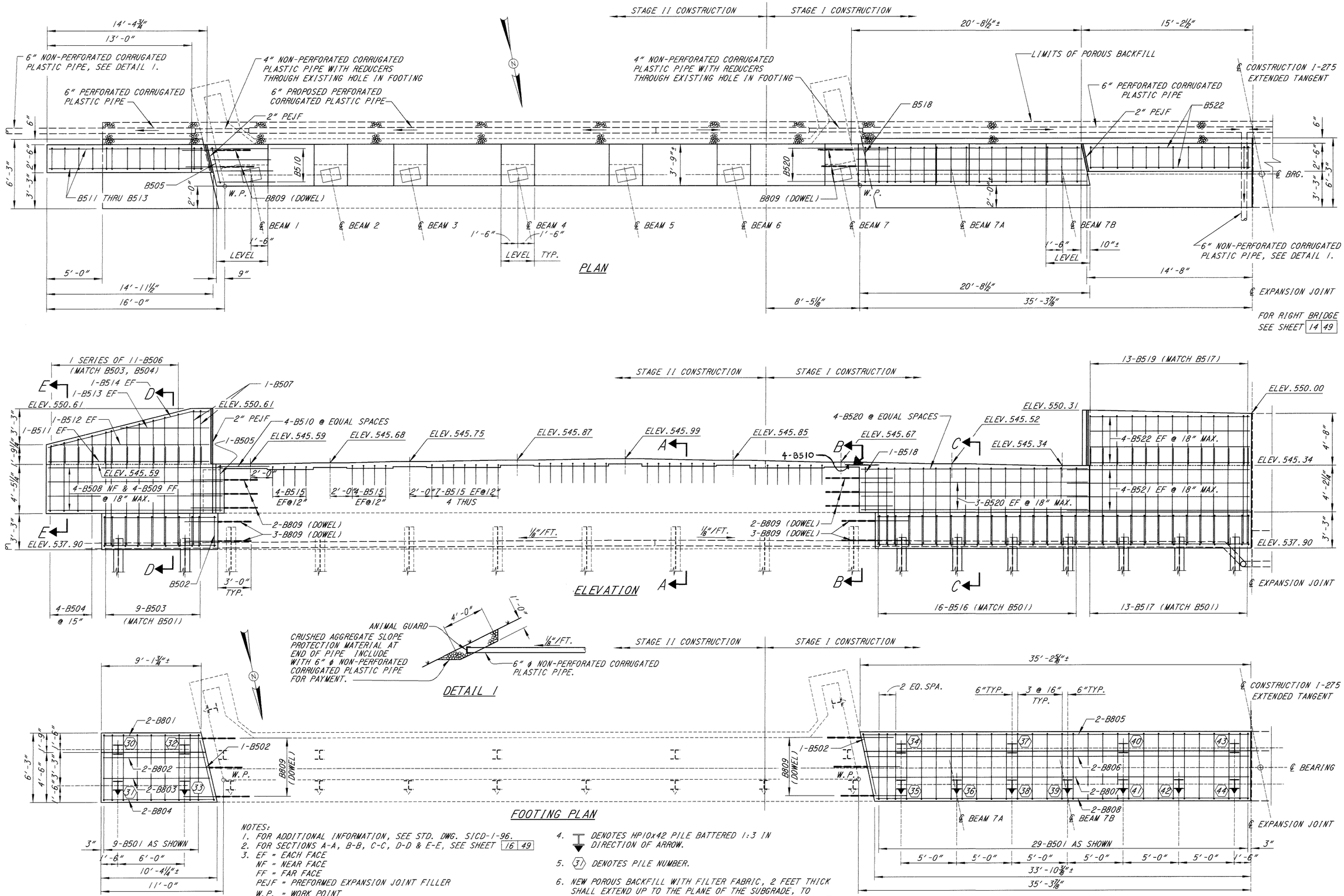

NOTES:
1. FOR ADDITIONAL INFORMATION, SEE STD. DWG. SICD-1-96.
2. FOR SECTIONS A-A, B-B, C-C, D-D & E-E, SEE SHEET 16 49
3. EF = EACH FACE
   NF = NEAR FACE
   FF = FAR FACE
   PEJF = PREFORMED EXPANSION JOINT FILLER
   W.P. = WORK POINT
4. DENOTES HP10x42 PILE BATTERED 1:3 IN DIRECTION OF ARROW.
5. (31) DENOTES PILE NUMBER.
6. NEW POROUS BACKFILL WITH FILTER FABRIC, 2 FEET THICK SHALL EXTEND UP TO THE PLANE OF THE SUBGRADE, TO 1 FOOT BELOW THE EMBANKMENT SURFACE, AND LATERALLY TO THE ENDS OF THE WINGWALLS.

DESIGN AGENCY
BALKE ENGINEERS
1848 Summit Road
Cincinnati, Ohio 45237

DESIGNED	DRAWN	REVIEWED	DATE
FKL	WJH/ALH	CRS	6/01
CHECKED	REVISED	STRUCTURE FILE NUMBER	
MRS	—	1305603 L.B. 1305611 R.B.	

LEFT BRIDGE FORWARD ABUTMENT DETAILS
BRIDGE NO. CLE-275-0618
OVER US 50 J

CLE-275-5.35

13/49

715/857

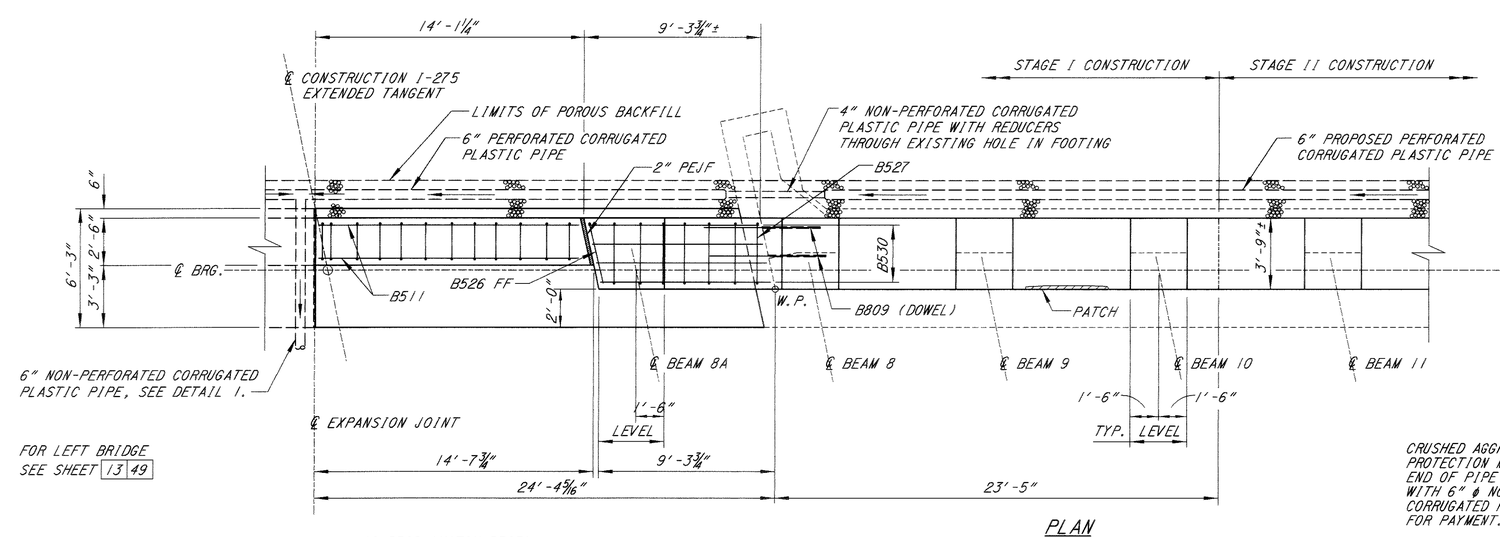

PLAN

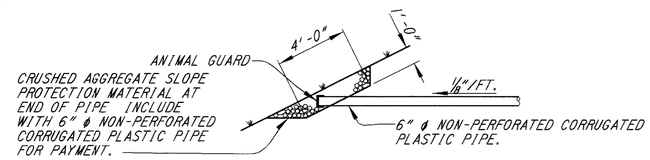

DETAIL 1

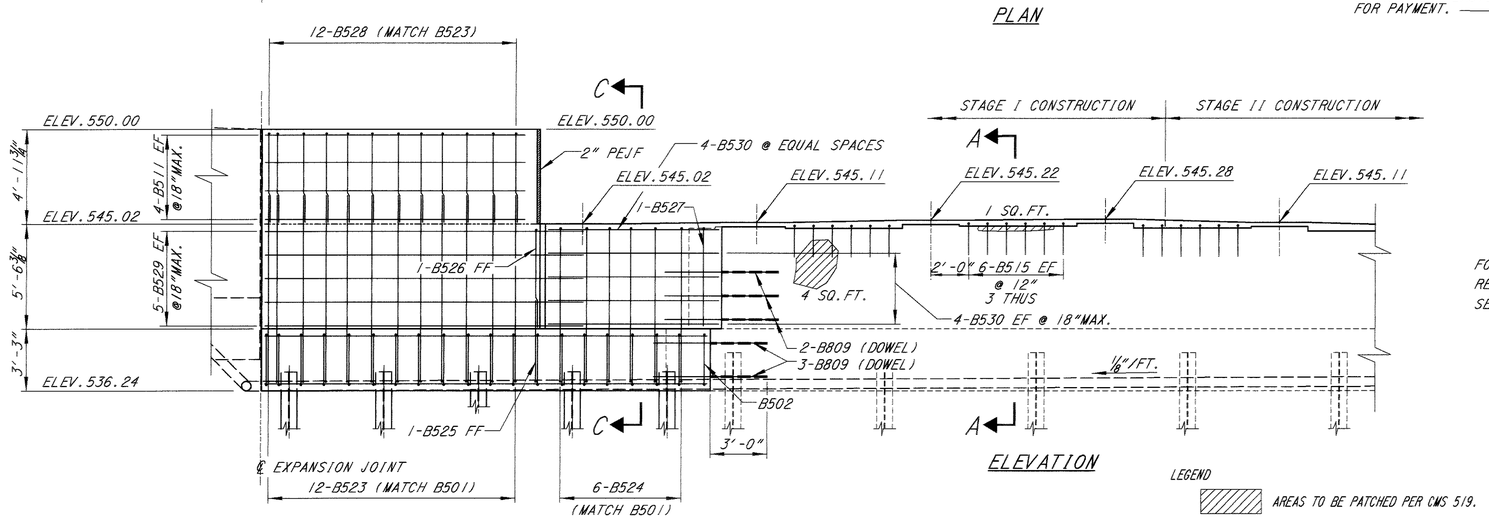

ELEVATION

FOR STAGE II CONSTRUCTION AND
REMAINDER OF STAGE I CONSTRUCTION
SEE SHEET 15 49

LEGEND

AREAS TO BE PATCHED PER CMS 519.

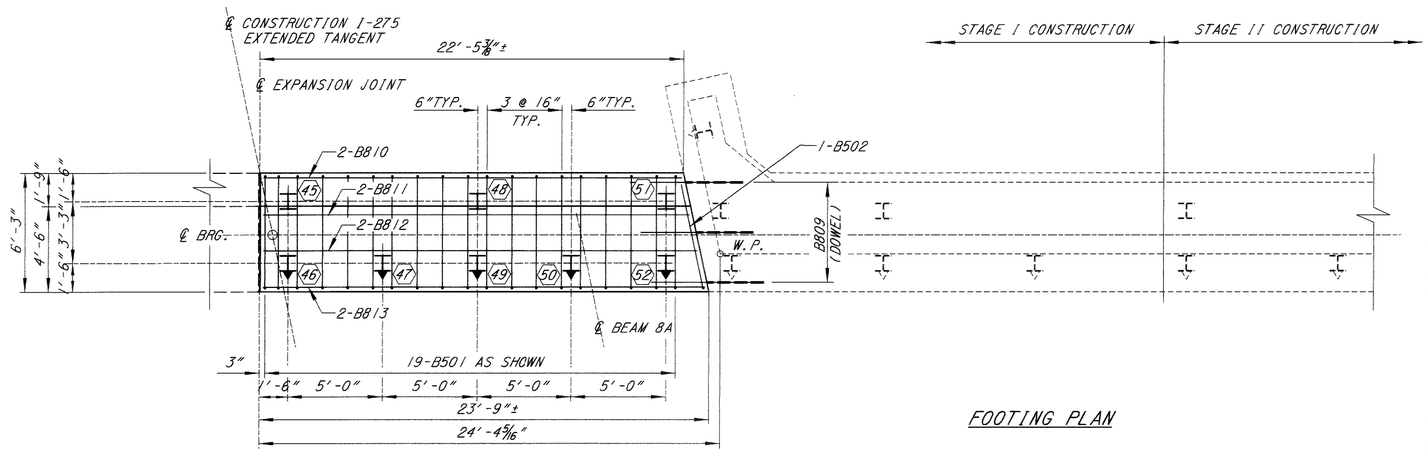

FOOTING PLAN

FOR STAGE II CONSTRUCTION AND
REMAINDER OF STAGE I CONSTRUCTION
SEE SHEET 15 49

NOTES:

1. FOR ADDITIONAL INFORMATION, SEE STD. DWG. SICD-1-96.
2. FOR SECTIONS A-A & C-C, SEE SHEET 17 49
3. EF = EACH FACE
   NF = NEAR FACE
   FF = FAR FACE
   PEJF = PREFORMED EXPANSION JOINT FILLER
   W.P. = WORK POINT
4. ▼ DENOTES HP10x42 PILE BATTERED 1:3 IN DIRECTION OF ARROW.
5. (31) DENOTES PILE NUMBER.
6. NEW POROUS BACKFILL WITH FILTER FABRIC, 2 FEET THICK SHALL EXTEND UP TO THE PLANE OF THE SUBGRADE, TO 1 FOOT BELOW THE EMBANKMENT SURFACE, AND LATERALLY TO THE ENDS OF THE WINGWALLS.

DESIGN AGENCY
BALKE ENGINEERS
1848 Summit Road
Cincinnati, Ohio 45237

DESIGNED	DRAWN	REVIEWED	DATE
FKL	WJ/AJL/H	CRS	6/01
CHECKED	REVISED	STRUCTURE FILE NUMBER	
MPS	—	120501 / 120511 / A.B.	

RIGHT BRIDGE FORWARD ABUTMENT DETAILS
BRIDGE NO. CLE-275-0618
OVER US 50 J

CLE-275-5.35

14 49

716
857

F:\Bridges\CLE\1868PAD.dgn

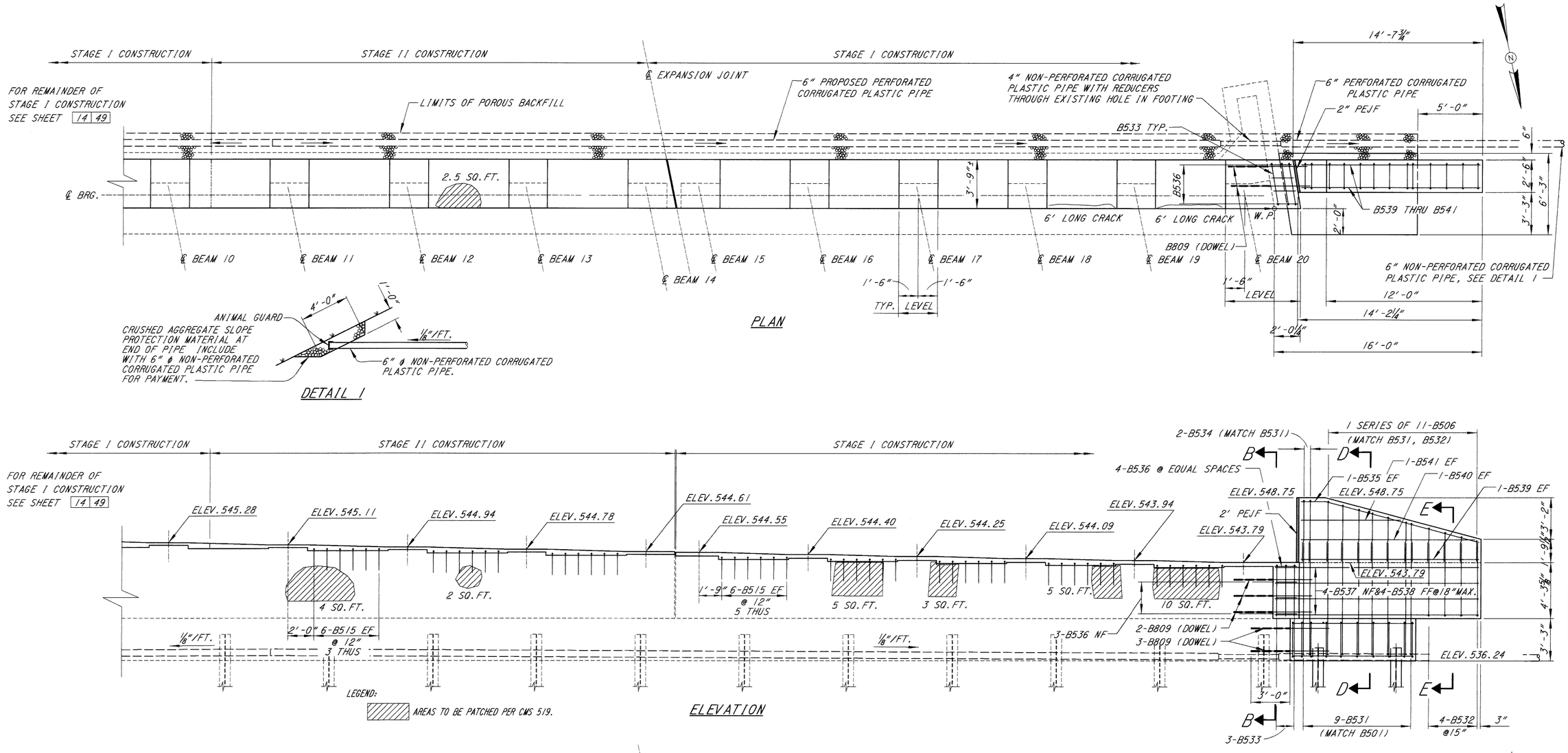

NOTES:
1. FOR ADDITIONAL INFORMATION, SEE STD. DWG. SICD-1-96.
2. FOR SECTIONS B-B, D-D & E-E, SEE SHEET 17 49
3. EF = EACH FACE
   NF = NEAR FACE
   FF = FAR FACE
   PEJF = PREFORMED EXPANSION JOINT FILLER
   W.P. = WORK POINT
4. DENOTES HP10x42 PILE BATTERED 1:3 IN DIRECTION OF ARROW.
5. (31) DENOTES PILE NUMBER.
6. NEW POROUS BACKFILL WITH FILTER FABRIC, 2 FEET THICK SHALL EXTEND UP TO THE PLANE OF THE SUBGRADE, TO 1 FOOT BELOW THE EMBANKMENT SURFACE, AND LATERALLY TO THE ENDS OF THE WINGWALLS.

DESIGN AGENCY
BALKE ENGINEERS
1848 Summit Road
Cincinnati, Ohio 45237

DESIGNED	DRAWN	REVIEWED	DATE
FKL	WJH/ALH	CRS	6/01
CHECKED	REVISED	STRUCTURE FILE NUMBER	
MRS	—	1305603 L.B. 1305611 R.B.	

RIGHT BRIDGE FORWARD ABUTMENT DETAILS
BRIDGE NO. CLE-275-0618
OVER US 50 J

CLE-275-5.35

15/49

717/857

Filename: 0618RBFA3.dgn

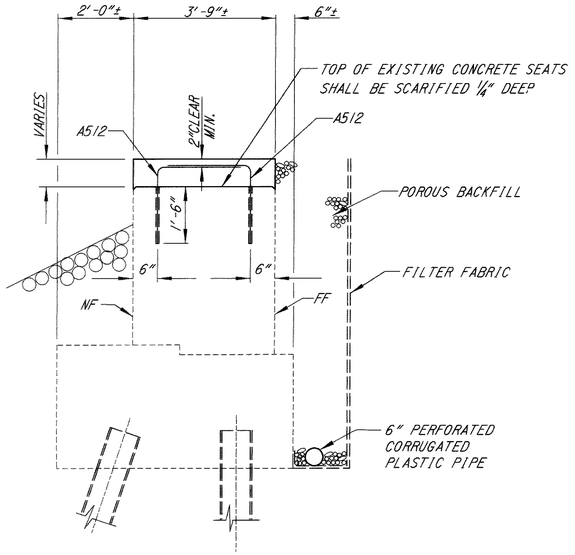

SECTION A-A

REAR ABUTMENT SHOWN
FORWARD ABUTMENT SIMILAR

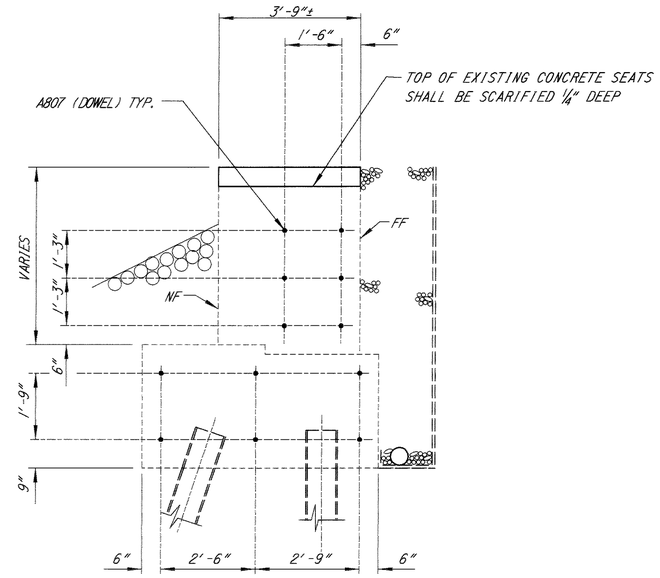

SECTION B-B

REAR ABUTMENT SHOWN
FORWARD ABUTMENT SIMILAR

NOTES:

1. EF = EACH FACE
   NF = NEAR FACE
   FF = FAR FACE
2. NEW POROUS BACKFILL WITH FILTER FABRIC, 2 FEET THICK, SHALL EXTEND UP TO THE PLANE OF THE SUBGRADE, TO 1 FOOT BELOW THE EMBANKMENT AND LATERALLY TO THE ENDS OF THE WINGWALLS.

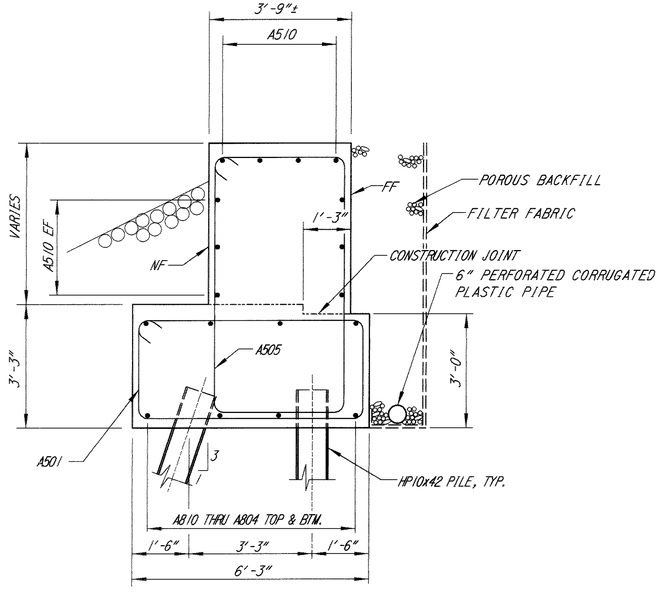

SECTION C-C

REAR ABUTMENT SHOWN
FORWARD ABUTMENT SIMILAR

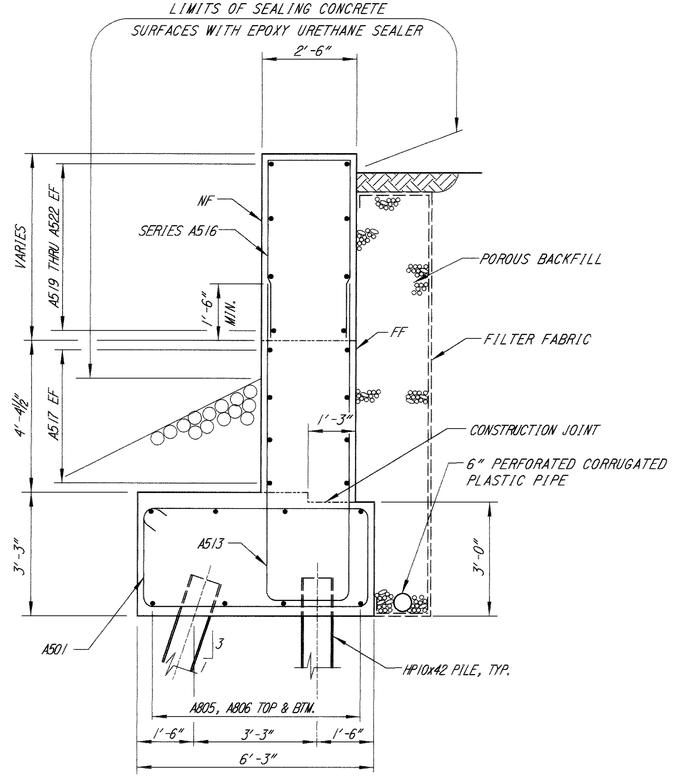

SECTION D-D

REAR ABUTMENT SHOWN
FORWARD ABUTMENT SIMILAR

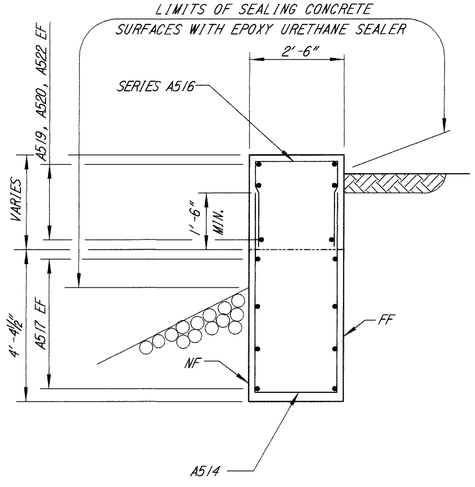

SECTION E-E

REAR ABUTMENT SHOWN
FORWARD ABUTMENT SIMILAR

DESIGN AGENCY
BALKE ENGINEERS
1848 Summit Road
Cincinnati, Ohio 45237

DESIGNED	DRAWN	REVIEWED	DATE
FKL	WJH/ALH	CBS	6/01
CHECKED	REVISED	STRUCTURE FILE NUMBER 1306611 & 1306617 R.B.	
MPS	—		

LEFT BRIDGE ABUTMENT DETAILS

BRIDGE NO. CLE-275-0618
OVER US 50 J

CLE-275-5.35

16 / 49

718 / 857

F:\Projects\06\BLEBRAIA.dgn

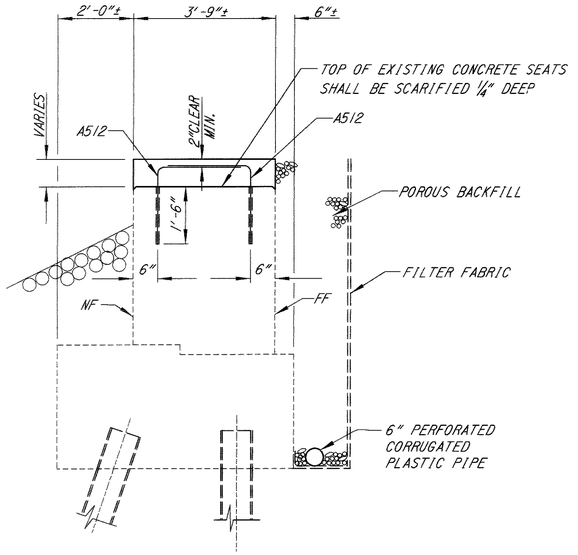

SECTION A-A

REAR ABUTMENT SHOWN
FORWARD ABUTMENT SIMILAR

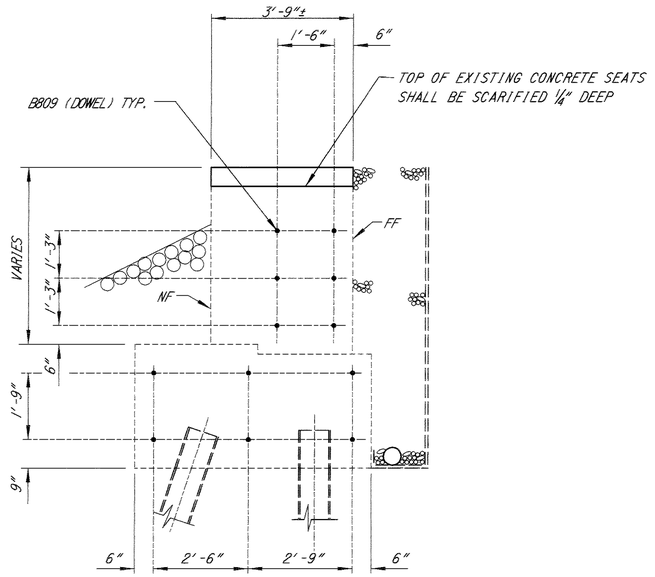

SECTION B-B

REAR ABUTMENT SHOWN
FORWARD ABUTMENT SIMILAR

NOTES:

1. EF = EACH FACE
   NF = NEAR FACE
   FF = FAR FACE
2. NEW POROUS BACKFILL WITH FILTER FABRIC, 2 FEET THICK, SHALL EXTEND UP TO THE PLANE OF THE SUBGRADE, TO 1 FOOT BELOW THE EMBANKMENT AND LATERALLY TO THE ENDS OF THE WINGWALLS.

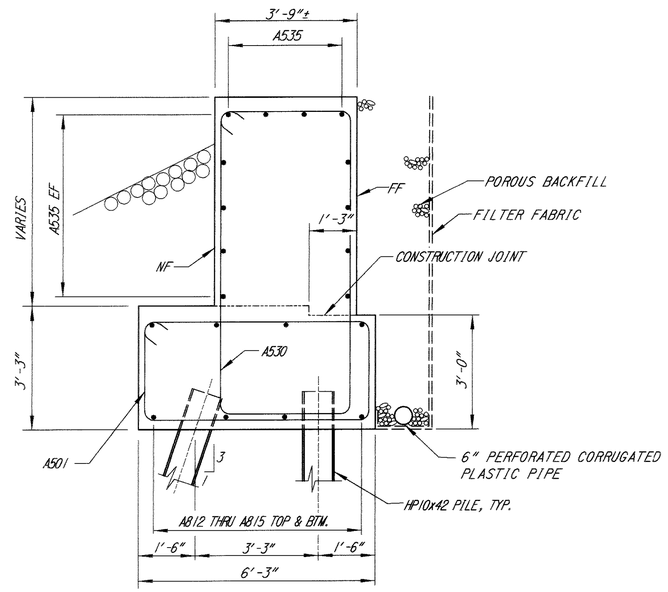

SECTION C-C

REAR ABUTMENT SHOWN
FORWARD ABUTMENT SIMILAR

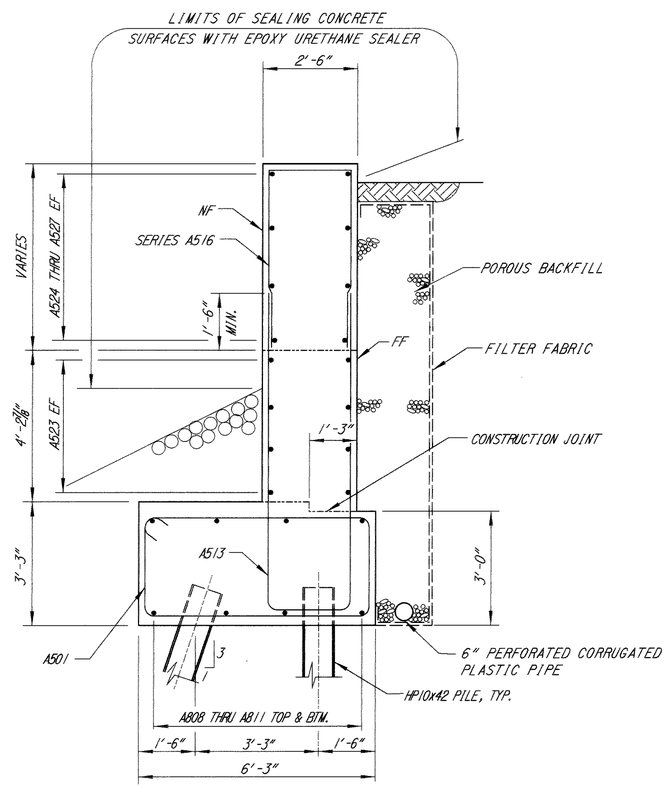

SECTION D-D

REAR ABUTMENT SHOWN
FORWARD ABUTMENT SIMILAR

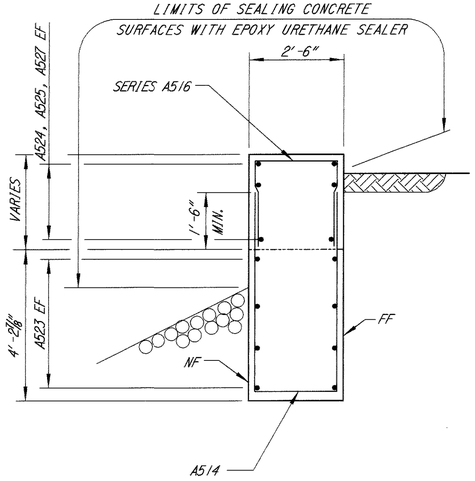

SECTION E-E

REAR ABUTMENT SHOWN
FORWARD ABUTMENT SIMILAR

DESIGN AGENCY
BALKE ENGINEERS
1848 Summit Road
Cincinnati, Ohio 45237

DESIGNED	DRAWN	REVIEWED	DATE
FKL	WJH/ALH	CRS	6/01
CHECKED	REVISED	STRUCTURE FILE NUMBER	
MRS	—	1305603 L.B. 1305611 R.B.	

RIGHT BRIDGE ABUTMENT DETAILS
BRIDGE NO. CLE-275-0618
OVER US 50 J

CLE-275-5.35

Filename: 0618RBRA1A.dgn

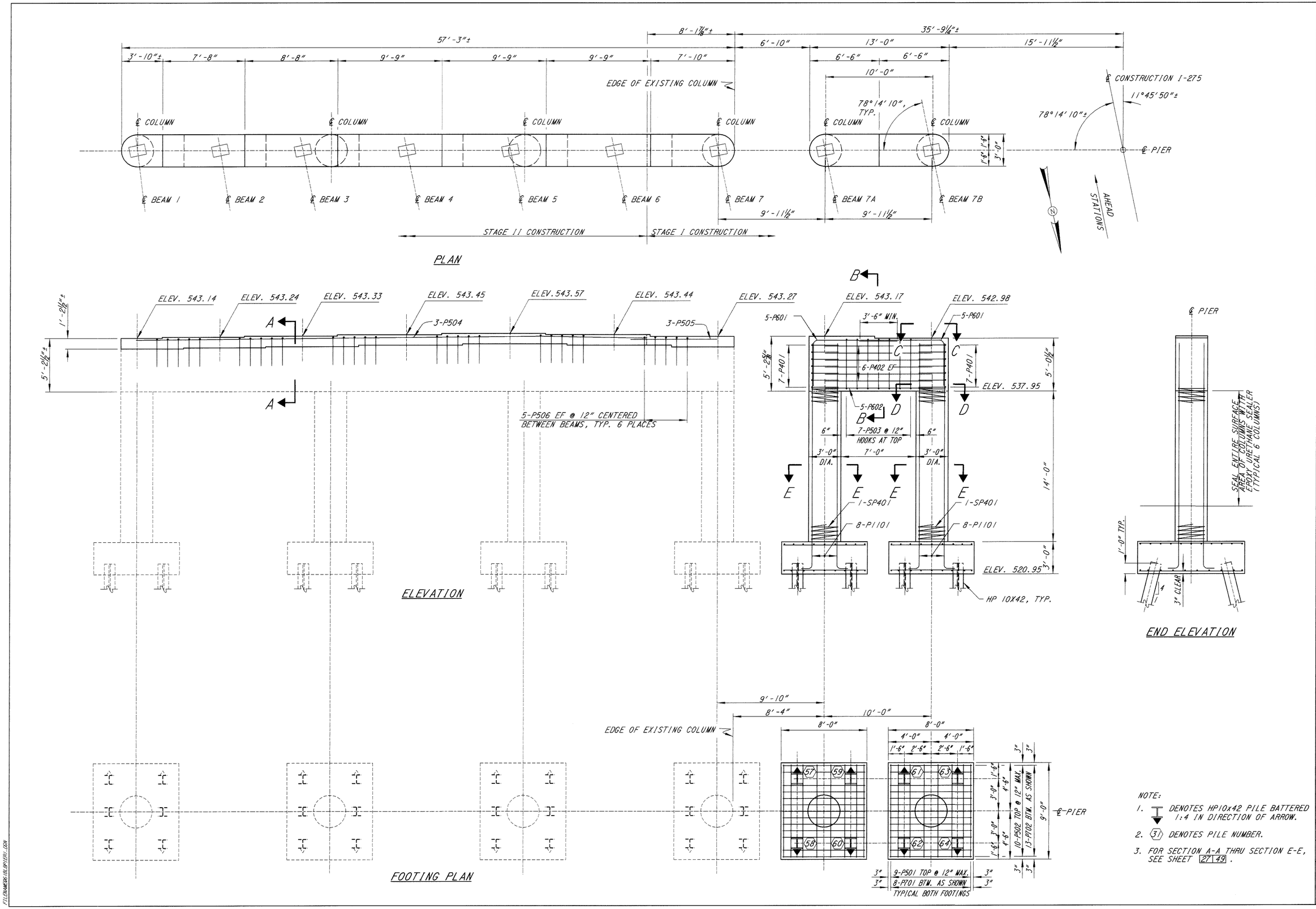

NOTE:

1. DENOTES HP10x42 PILE BATTERED 1:4 IN DIRECTION OF ARROW.
2. (31) DENOTES PILE NUMBER.
3. FOR SECTION A-A THRU SECTION E-E, SEE SHEET 27/49.

DESIGN AGENCY
BALKE ENGINEERS
1848 SUMMIT ROAD
CINCINNATI, OHIO 45237

DESIGNED	DRAWN	REVIEWED	DATE
FKL	ALH/WJH	CRS	6/01
CHECKED	REVISED	STRUCTURE FILE NUMBER	
MRS	—	1305603 L.B. 1305611 R.B.	

LEFT BRIDGE PIER I DETAILS
BRIDGE NO. CLE-275-0618
OVER US 50 J

CLE-275-5.35

18/49

720/857

FILENAME:G61BLBPIER1.DGN

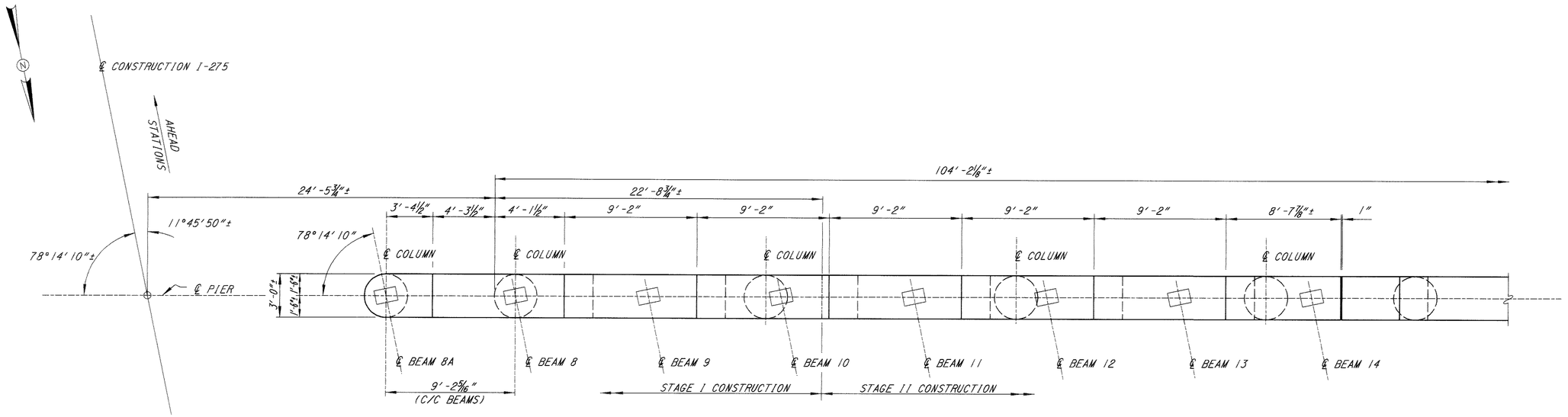

PLAN

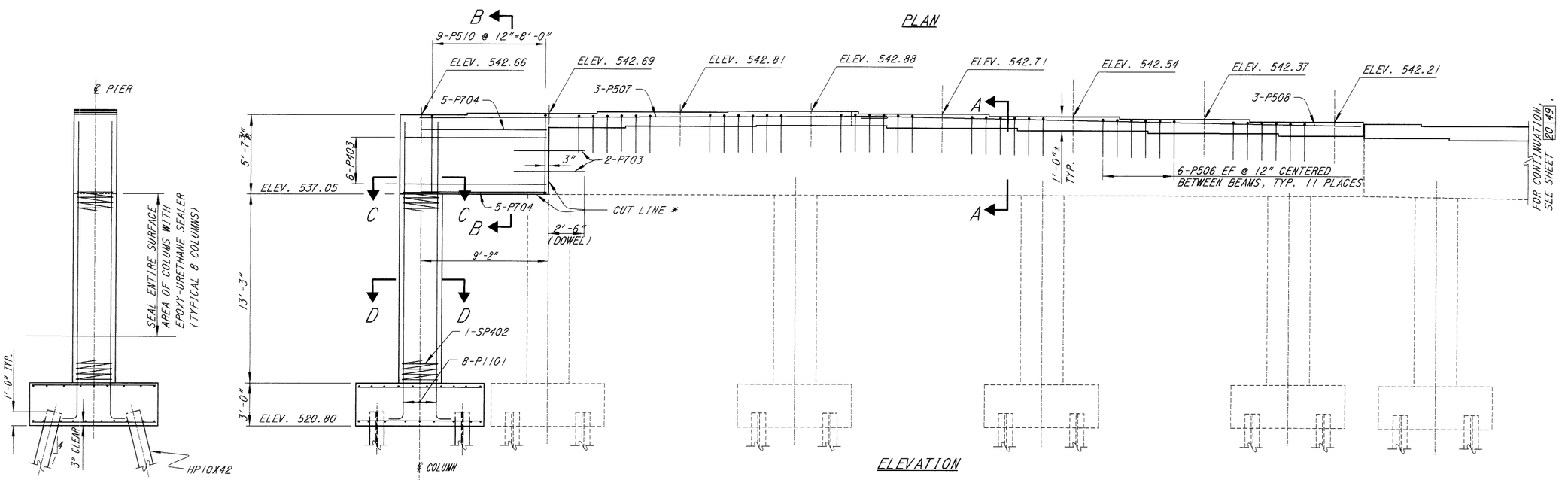

NOTE:

1. ▼ DENOTES HP10x42 PILE BATTERED 1:4 IN DIRECTION OF ARROW.
2. (31) DENOTES PILE NUMBER.
3. * REMOVE TO CUT LINE TO ACCOMMODATE NEW CONSTRUCTION. EXISTING REINFORCING STEEL TO REMAIN.
4. FOR SECTION A-A THRU SECTION D-D, SEE SHEET 28 49.

FILENAME: BRPIER1A.DGN

DESIGN AGENCY
BALKE ENGINEERS
1848 SUMMIT ROAD
CINCINNATI, OHIO 45237

DESIGNED	DRAWN	REVIEWED	DATE
FKL	ALH/MJH	CRS	6/01
CHECKED	REVISED	STRUCTURE FILE NUMBER	
MRS	—	1305603 L.B. 1305611 R.B.	

RIGHT BRIDGE PIER 1 DETAILS

BRIDGE NO. CLE-275-0618
OVER US 50 J

CLE-275-5.35

19 | 49

721 / 857

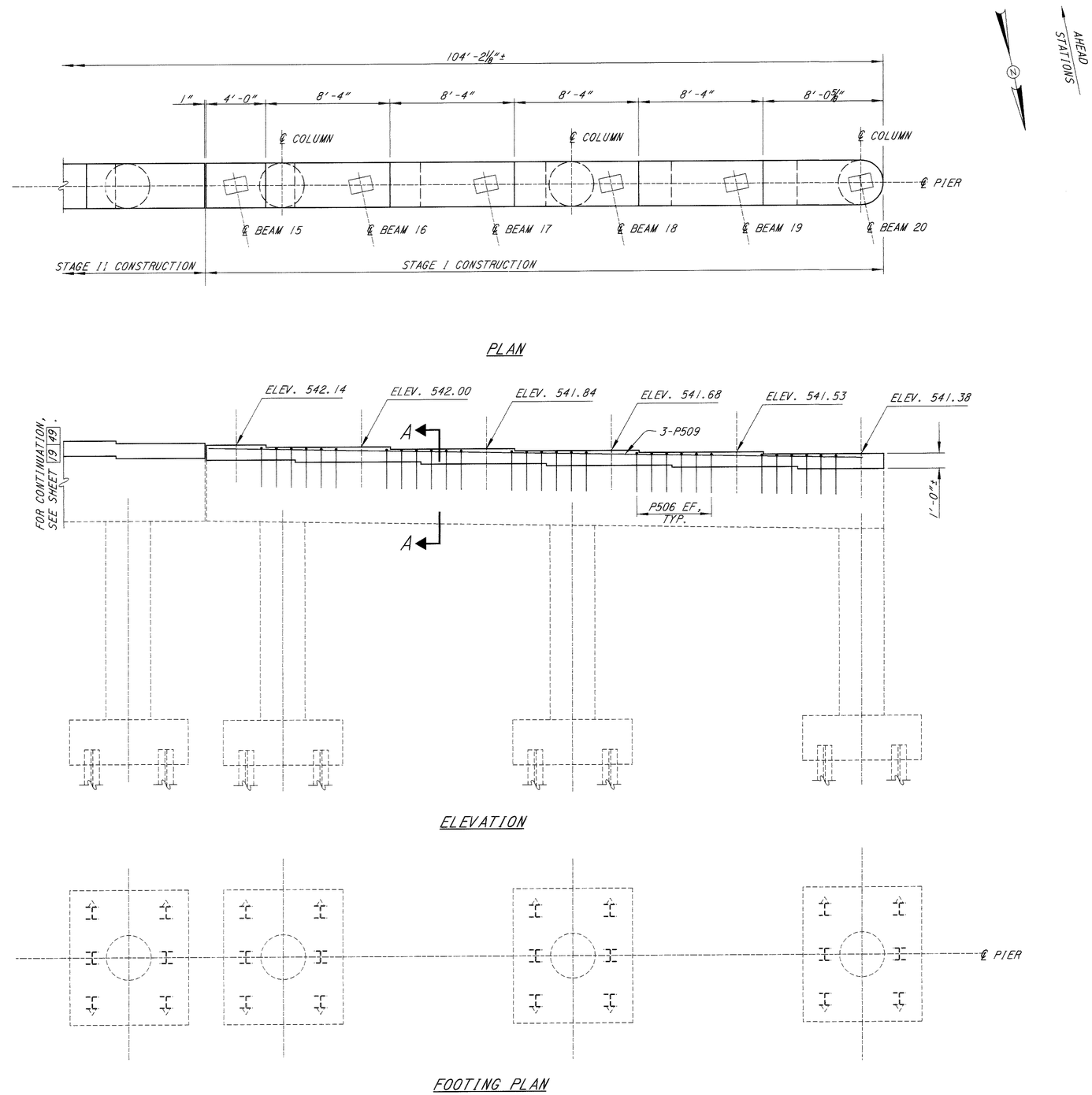

PLAN

ELEVATION

FOOTING PLAN

FOR SECTION A-A, SEE SHEET 28 49.

DESIGN AGENCY
BALKE ENGINEERS
1848 SUMMIT ROAD
CINCINNATI, OHIO 45237

DESIGNED	DRAWN	REVIEWED	DATE
FKL	ALH/WJH	CRS	6/01
CHECKED	REVISED	STRUCTURE FILE NUMBER	
MRS	—	1305603 L.B. 1305611 R.B.	

RIGHT BRIDGE PIER I DETAILS
BRIDGE NO. CLE-275-0618
OVER US 50 J

CLE-275-5.35

FILENAME:0618RBPIERIB.DGN

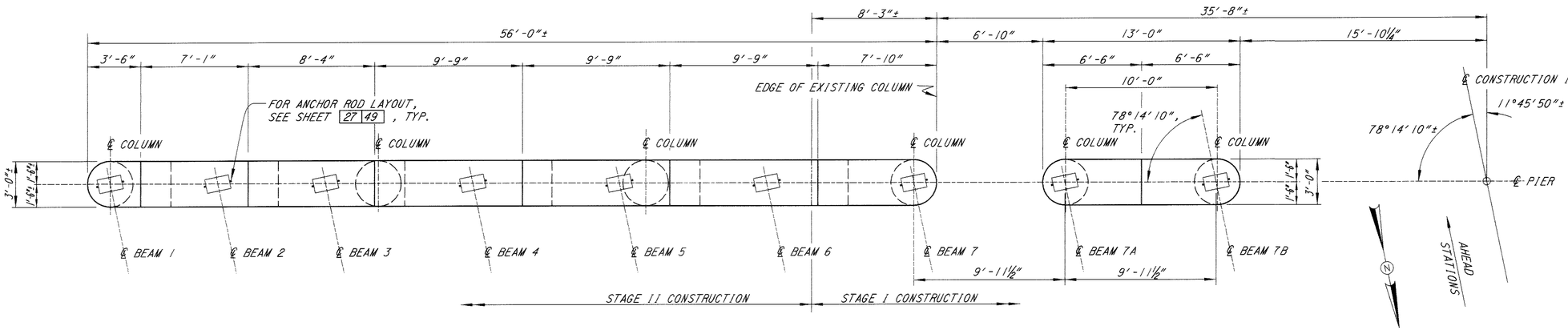

CAP PLAN

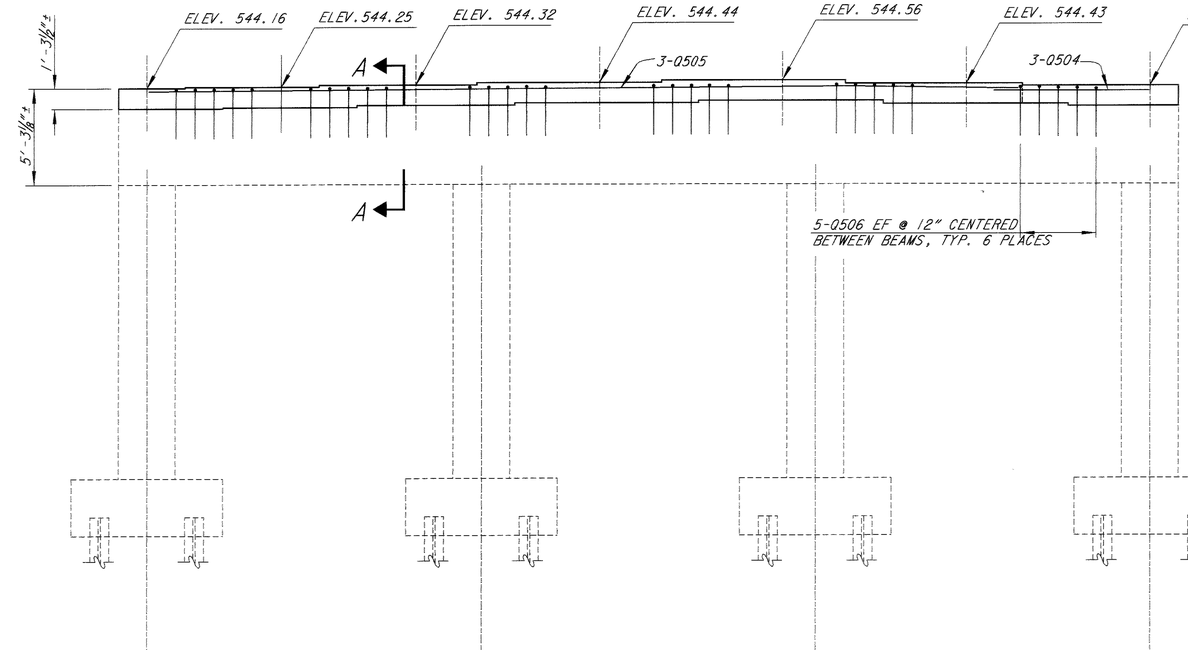

ELEVATION

FOOTING PLAN

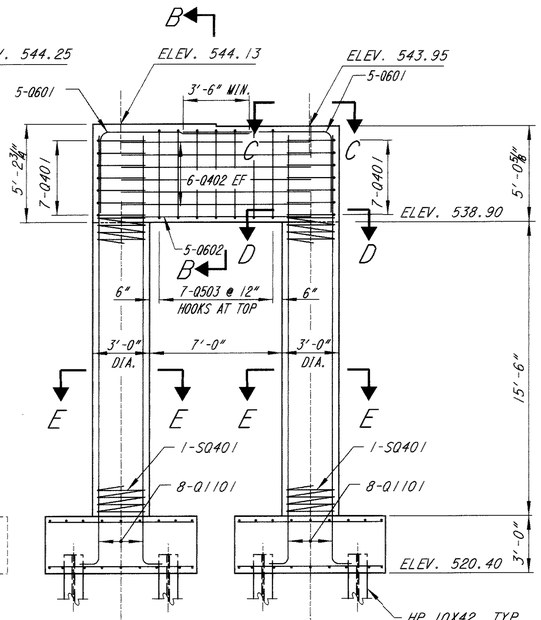

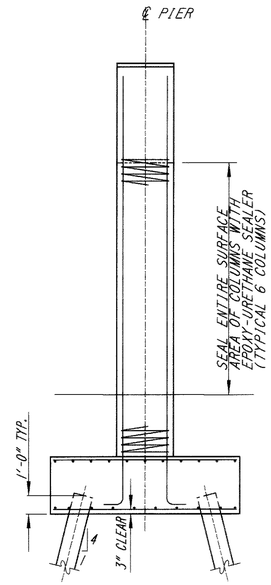

END ELEVATION

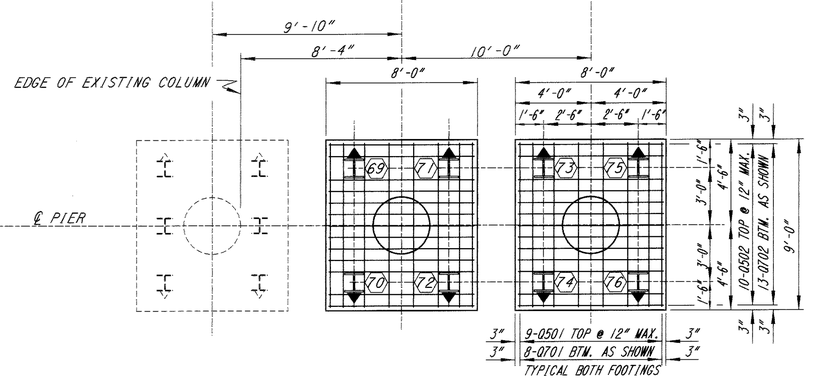

NOTE:

1. ▼ DENOTES HP10x42 PILE BATTERED 1:4 IN DIRECTION OF ARROW.
2. (31) DENOTES PILE NUMBER.
3. FOR SECTION A-A THRU SECTION E-E, SEE SHEET 27 49 .
4. BRIDGE SEAT REINFORCING, SETTING ANCHORS: REINFORCING STEEL IN THE VICINITY OF THE BRIDGE SEAT SHALL BE ACCURATELY PLACED TO AVOID INTERFERENCE WITH THE DRILLING OF BEARING ANCHOR HOLES OR THE PRE-SETTING OF BEARING ANCHORS.

DESIGN AGENCY
BALKE ENGINEERS
1848 SUMMIT ROAD
CINCINNATI, OHIO 45237

DESIGNED	DRAWN	REVIEWED	DATE
FKL	ALH/MWH	CRS	6/01
CHECKED	REVISED	STRUCTURE FILE NUMBER	
MPS	—	1305603 L.B. 1305611 R.B.	

LEFT BRIDGE PIER 2 DETAILS
BRIDGE NO. CLE-275-0618
OVER US 50 /

CLE-275-5.35

21/49

723/857

FILENAME=BRIDGPIER2.DGN

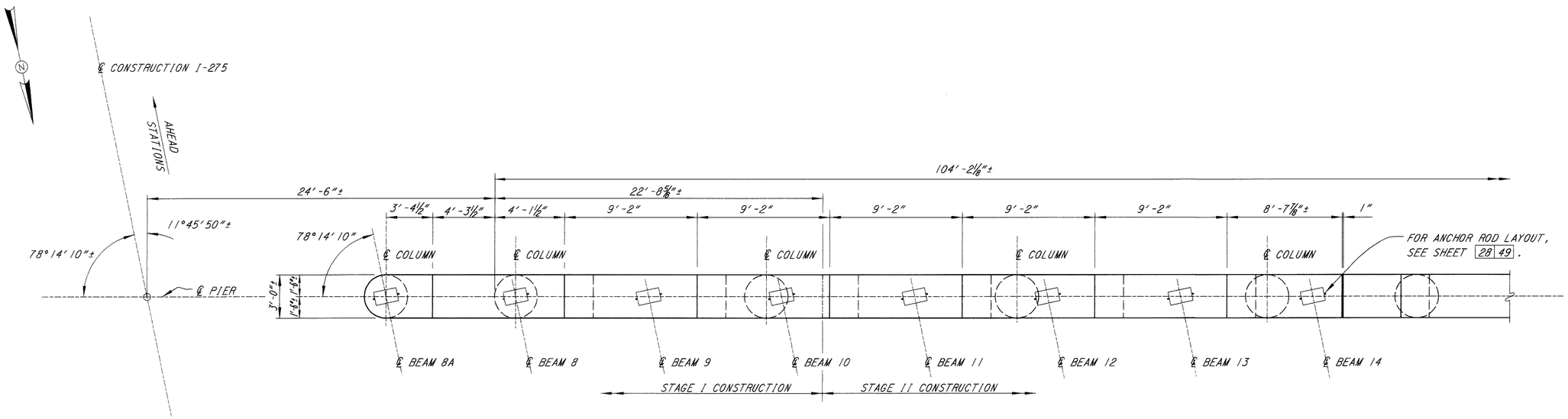

PLAN

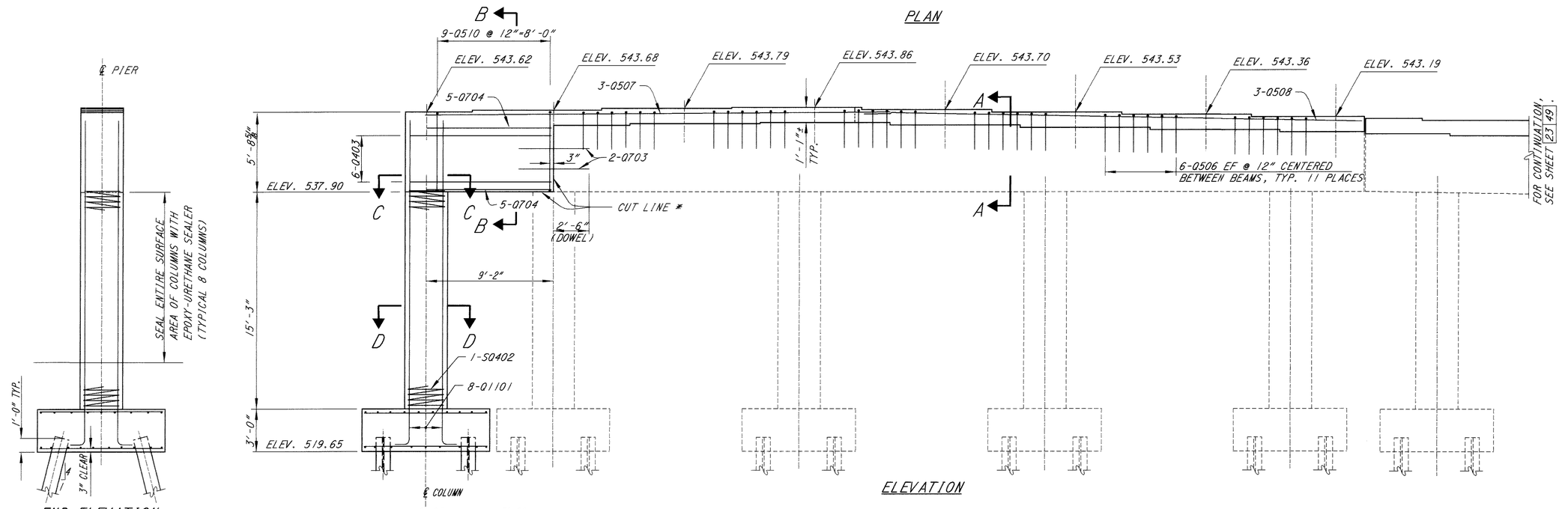

END ELEVATION

ELEVATION

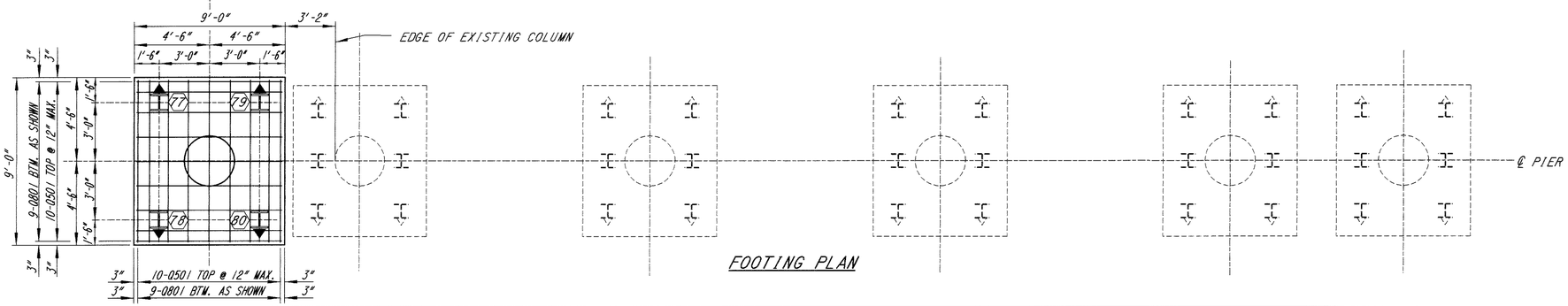

FOOTING PLAN

NOTE:

1. ⊤ DENOTES HP10x42 PILE BATTERED 1:4 IN DIRECTION OF ARROW.
2. (31) DENOTES PILE NUMBER.
3. * REMOVE TO CUT LINE TO ACCOMMODATE NEW CONSTRUCTION. EXISTING REINFORCING STEEL TO REMAIN.
4. FOR SECTION A-A THRU SECTION D-D, SEE SHEET 28 49.
5. BRIDGE SEAT REINFORCING, SETTING ANCHORS: REINFORCING STEEL IN THE VICINITY OF THE BRIDGE SEAT SHALL BE ACCURATELY PLACED TO AVOID INTERFERENCE WITH THE DRILLING OF BEARING ANCHOR HOLES OR THE PRE-SETTING OF BEARING ANCHORS.

FILENAME: 6189PIER2A.DGN

DESIGN AGENCY
BALKE ENGINEERS
1848 SUMMIT ROAD
CINCINNATI, OHIO 45237

DESIGNED	DRAWN	REVIEWED	DATE
FKL	ALH	CRS	6/01
CHECKED	REVISED	STRUCTURE FILE NUMBER	
MRS	—	1305603 L.B. 1305611 R.B.	

RIGHT BRIDGE PIER 2 DETAILS
BRIDGE NO. CLE-275-0618
OVER US 50 J

CLE-275-5.35

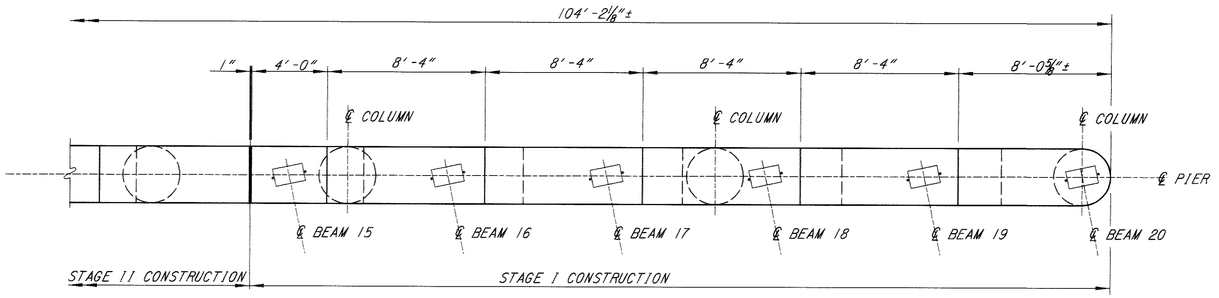

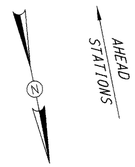

PLAN

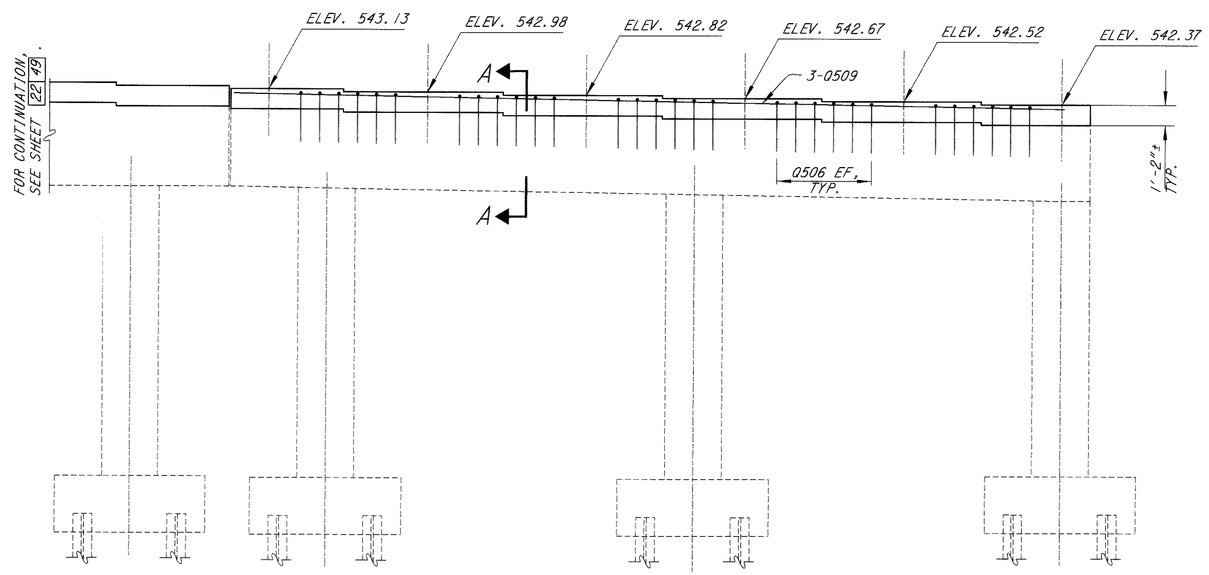

ELEVATION

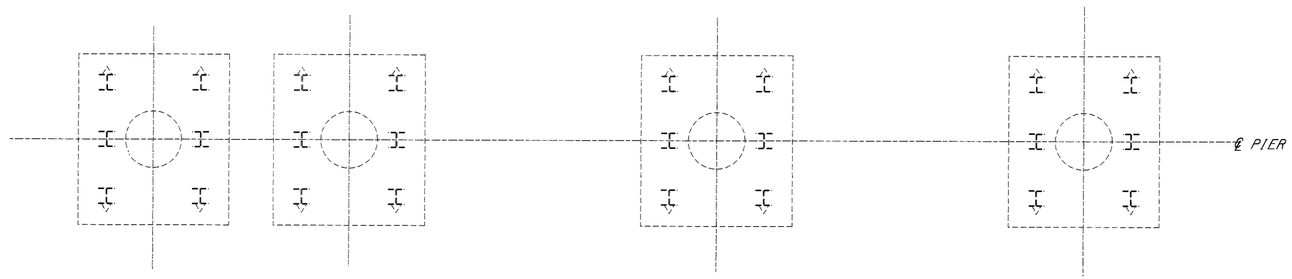

FOOTING PLAN

NOTE:
1. FOR SECTION A-A, SEE SHEET 28 49.
2. BRIDGE SEAT REINFORCING, SETTING ANCHORS: REINFORCING STEEL IN THE VICINITY OF THE BRIDGE SEAT SHALL BE ACCURATELY PLACED TO AVOID INTERFERENCE WITH THE DRILLING OF BEARING ANCHOR HOLES OR THE PRE-SETTING OF BEARING ANCHORS.

DESIGN AGENCY
BALKE ENGINEERS
1848 SUMMIT ROAD
CINCINNATI, OHIO 45237

DESIGNED	DRAWN	REVIEWED	DATE
FKL	ALH	CRS	6/01
CHECKED	REVISED	STRUCTURE FILE NUMBER	
MRS	—	1305603 L.B. 1305611 R.B.	

RIGHT BRIDGE PIER 2 DETAILS
BRIDGE NO. CLE-275-0618
OVER US 50 J

CLE-275-5.35

23 49

725
857

FILENAME: (DESCRIPTION).DGN

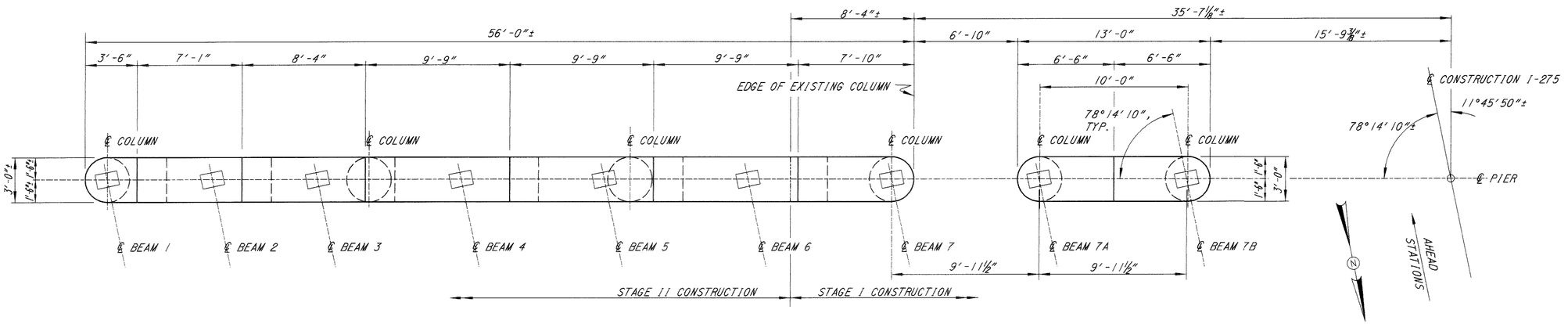

CAP PLAN

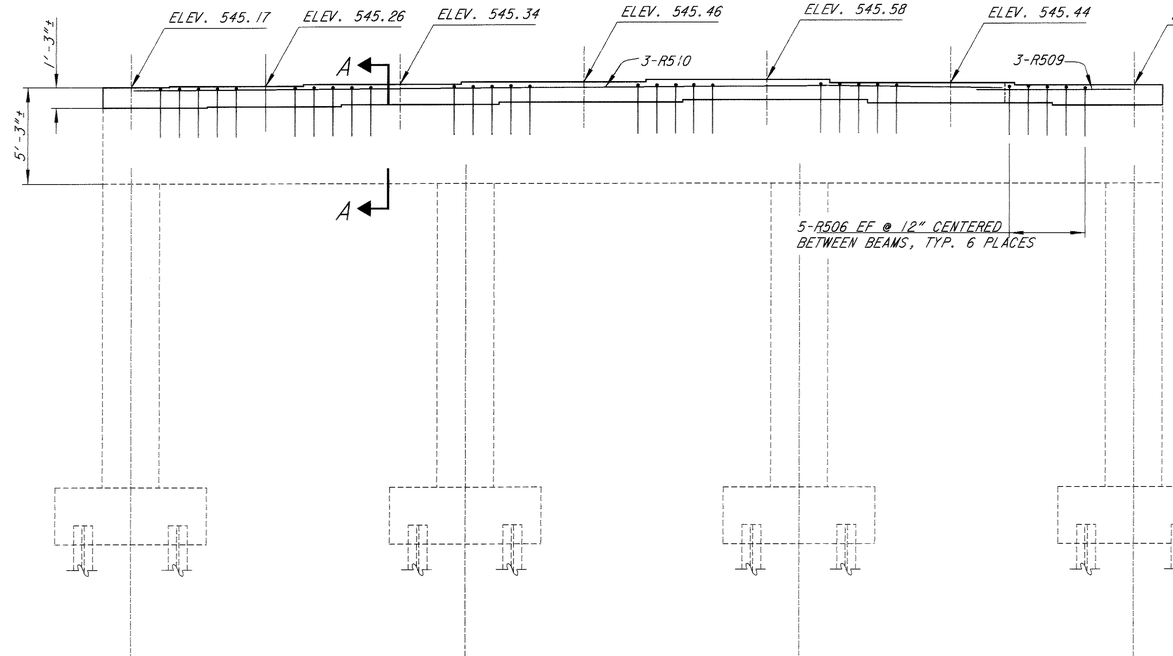

ELEVATION

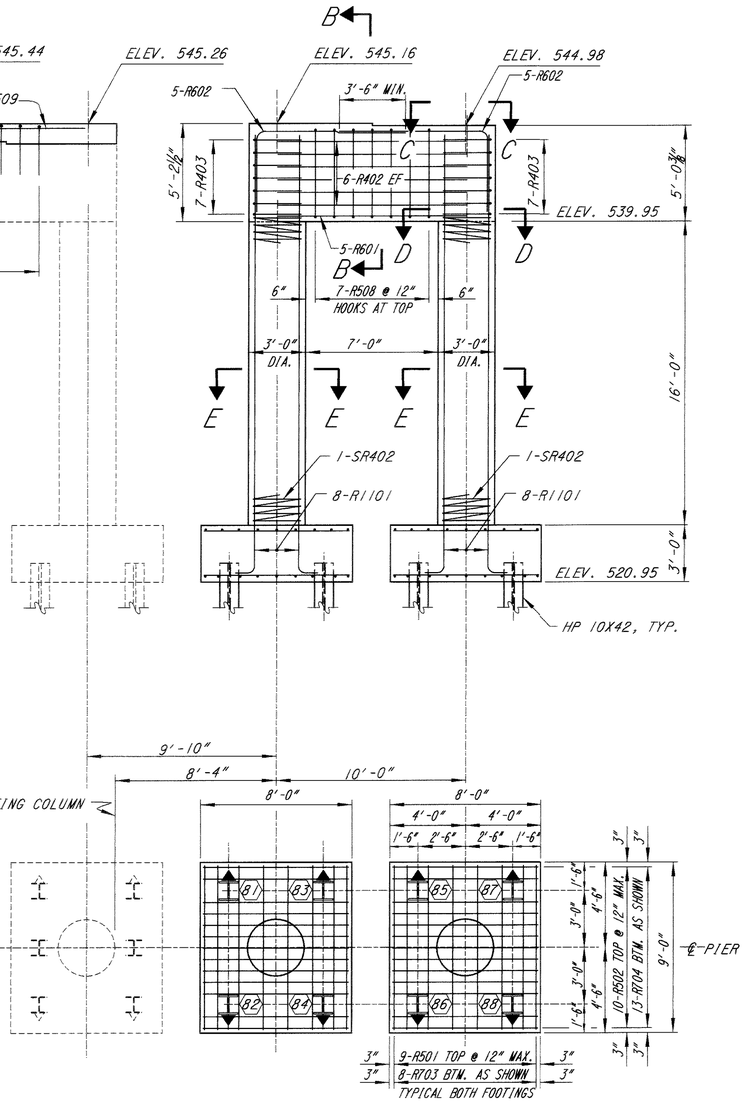

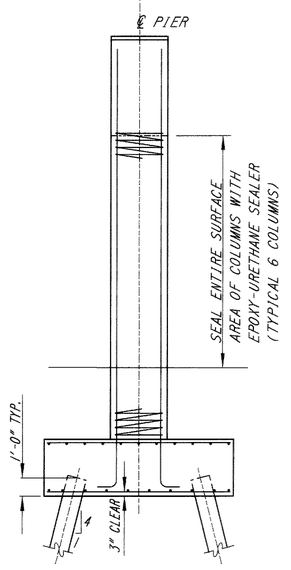

END ELEVATION

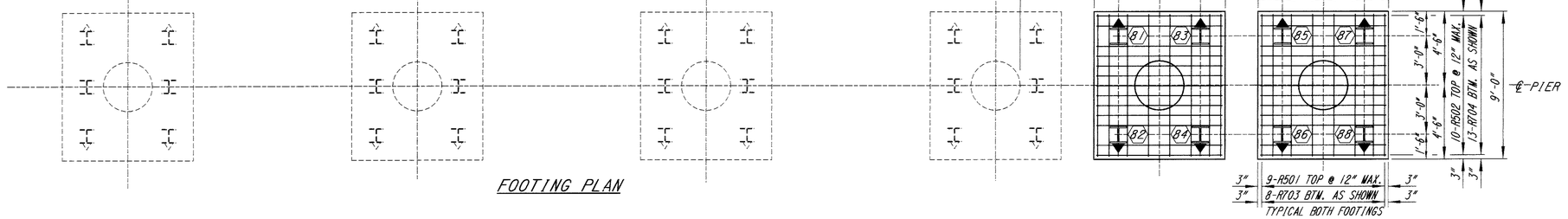

FOOTING PLAN

NOTE:

1. ▼ DENOTES HP10x42 PILE BATTERED 1:4 IN DIRECTION OF ARROW.
2. (31) DENOTES PILE NUMBER.
3. FOR SECTION A-A THRU SECTION E-E, SEE SHEET 27 49 .

DESIGN AGENCY
BALKE ENGINEERS
1848 SUMMIT ROAD
CINCINNATI, OHIO 45237

DESIGNED	DRAWN	REVIEWED	DATE
FKL	ALH/WJH	CRS	6/01
CHECKED	REVISED	STRUCTURE FILE NUMBER	
MRS	———	30560 3 L.B. 30561 1 R.B.	

LEFT BRIDGE PIER 3 DETAILS
BRIDGE NO. CLE-275-0618
OVER US 50 J

CLE-275-5.35

24/49

726/857

FILENAME=S:\BRIDGES\CLE\275\05\CLE275_05_PIER3_DETAILS.DGN

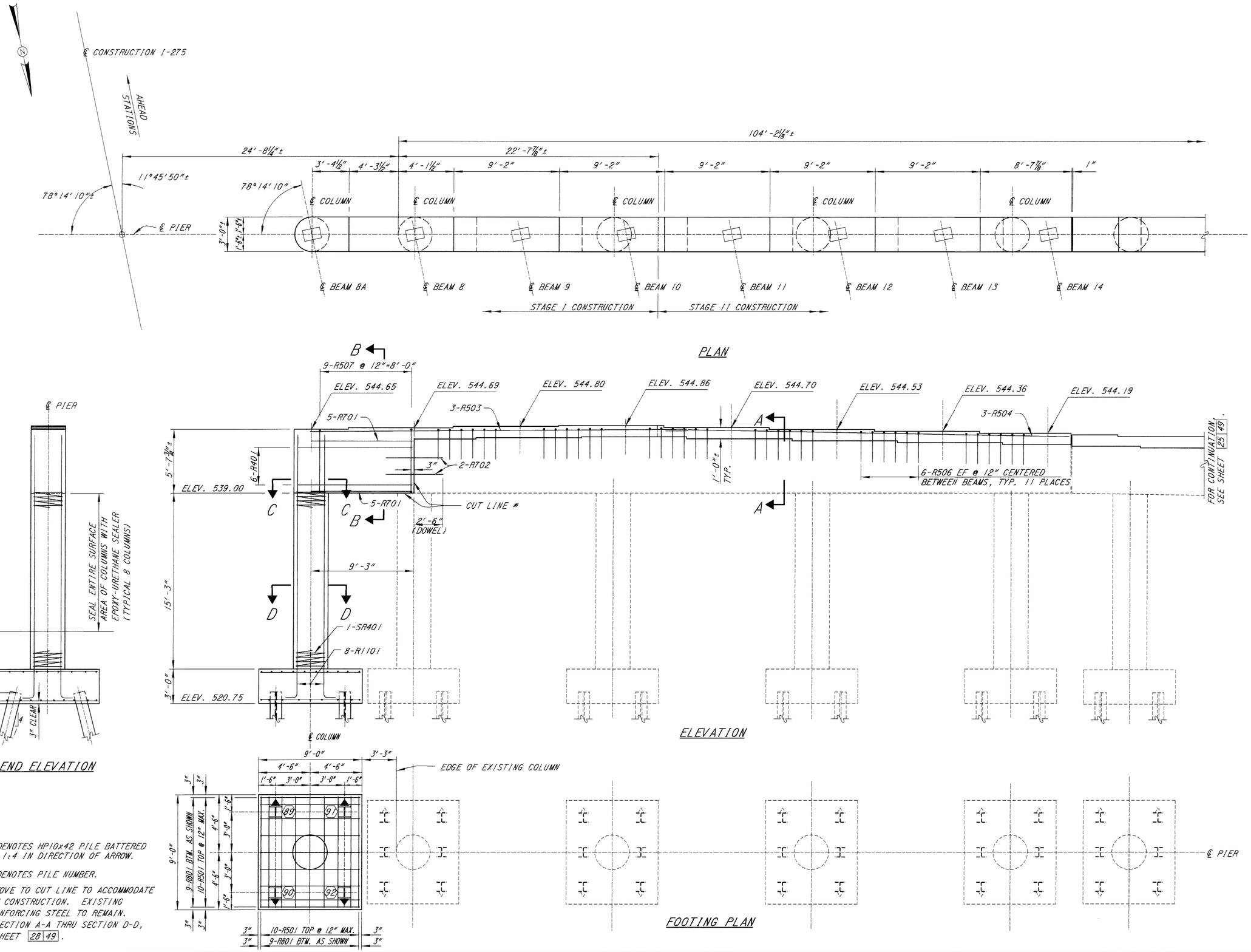

NOTE:

1. ⊤ DENOTES HP10x42 PILE BATTERED 1:4 IN DIRECTION OF ARROW.
2. (31) DENOTES PILE NUMBER.
3. * REMOVE TO CUT LINE TO ACCOMMODATE NEW CONSTRUCTION. EXISTING REINFORCING STEEL TO REMAIN.
4. FOR SECTION A-A THRU SECTION D-D, SEE SHEET 28/49.

FILENAME: 6189P1ER3A.DGN

DESIGN AGENCY
BALKE ENGINEERS
1848 SUMMIT ROAD
CINCINNATI, OHIO 45237

DESIGNED	DRAWN	REVIEWED	DATE
FKL	ALH	CRS	6/01
CHECKED	REVISED	STRUCTURE FILE NUMBER	
MRS	—	1305603 L.B. 1305611 R.B.	

RIGHT BRIDGE PIER 3 DETAILS
BRIDGE NO. CLE-275-0618
OVER US 50 J

CLE-275-5.35

25/49

727/857

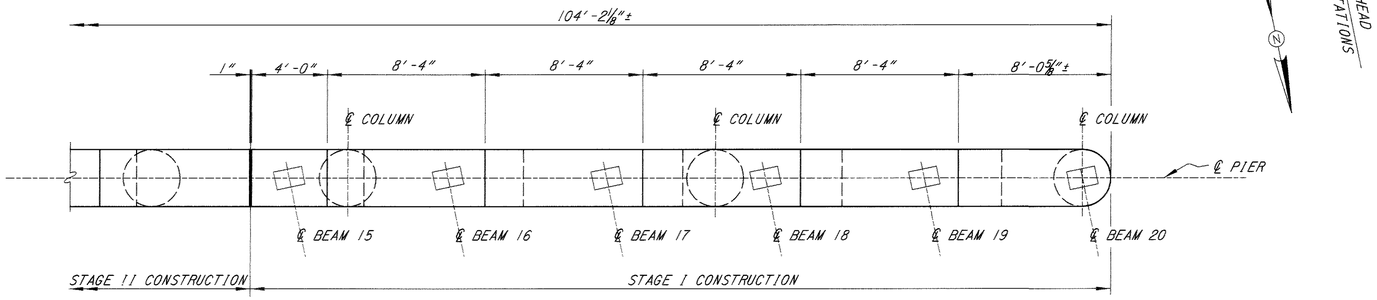

PLAN

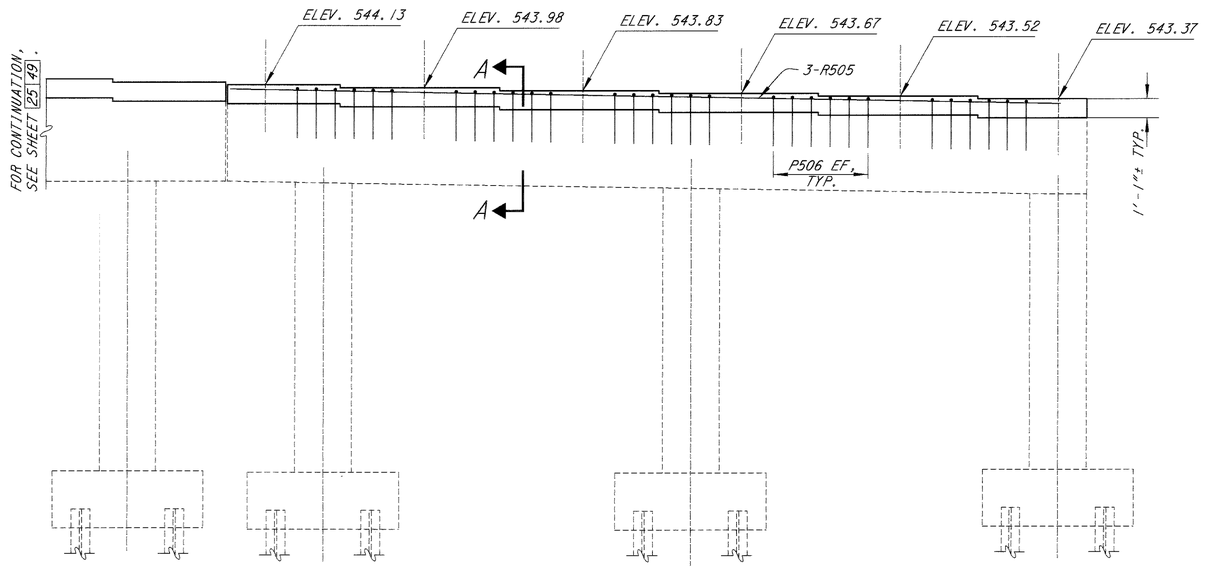

ELEVATION

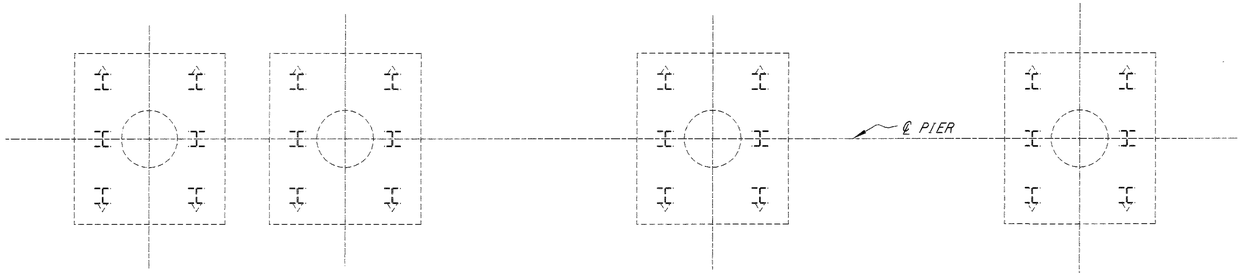

FOOTING PLAN

FILENAME: BRGPIER3B.DGN

DESIGN AGENCY
BALKE ENGINEERS
1848 SUMMIT ROAD
CINCINNATI, OHIO 45237

DESIGNED	DRAWN	REVIEWED	DATE
FKL	ALH	CAS	6/01
CHECKED	REVISED	STRUCTURE FILE NUMBER	
MPS	—	120603 L.B. 120611 R.B.	

RIGHT BRIDGE PIER 3 DETAILS
BRIDGE NO. CLE-275-0618
OVER US 50 J

CLE-275-5.35

26/49

728/857

NOTE:
CARE SHALL BE TAKEN TO AVOID EXISTING REINFORCING WHEN DRILLING HOLES FOR DOWELS. IF NECESSARY, LOCATION OF DOWEL SHALL BE MOVED TO AVOID INTERFERENCE.

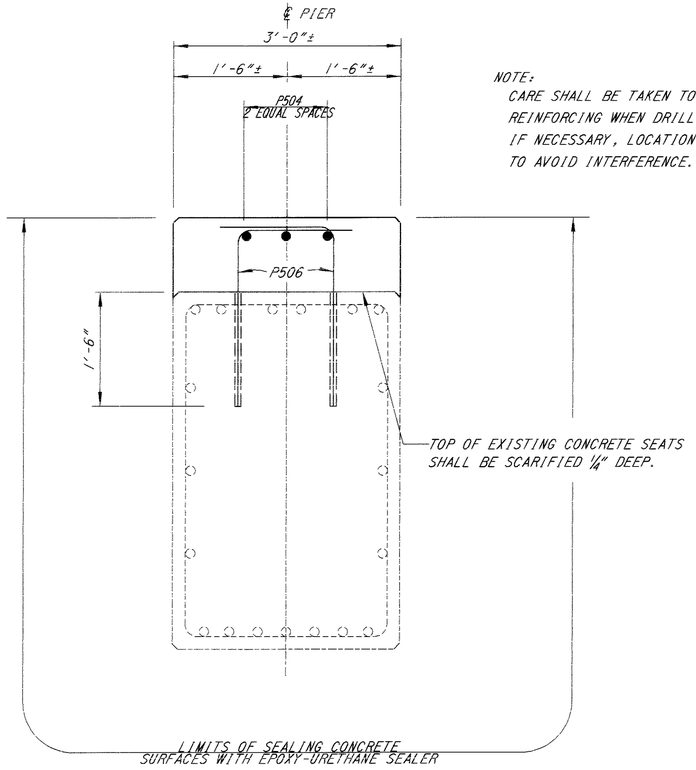

SECTION A-A
(PIER 1 SHOWN, PIERS 2 & 3 SIMILAR)

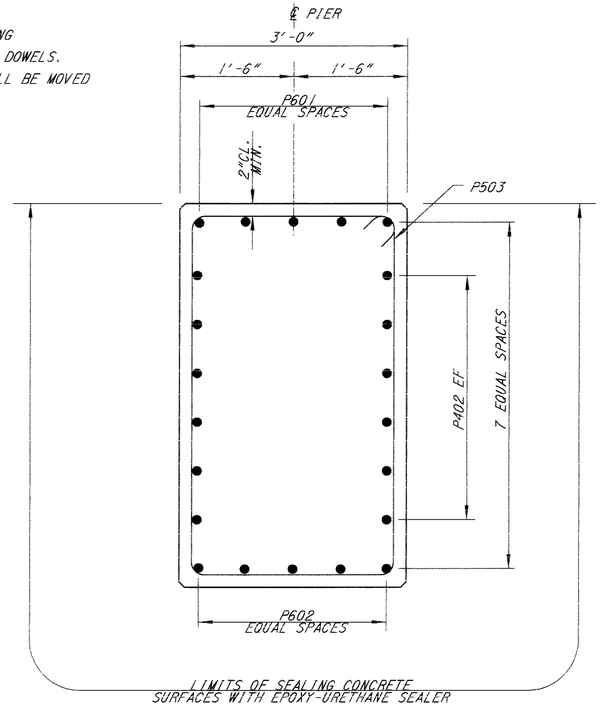

SECTION B-B
(PIER 1 SHOWN, PIERS 2 & 3 SIMILAR)

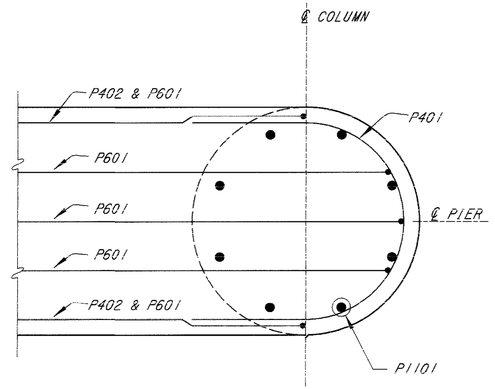

SECTION C-C
(PIER 1 SHOWN, PIERS 2 & 3 SIMILAR)

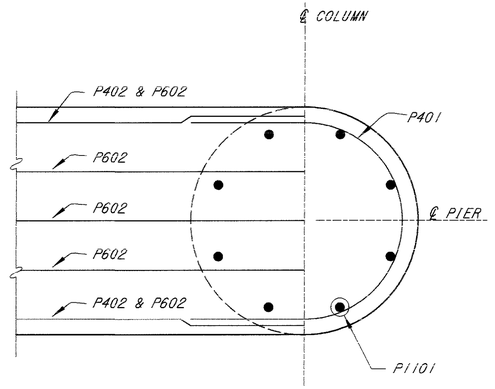

SECTION D-D
(PIER 1 SHOWN, PIERS 2 & 3 SIMILAR)

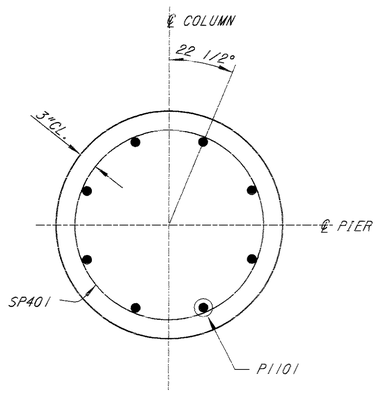

SECTION E-E
(PIER 1 SHOWN, PIERS 2 & 3 SIMILAR)

DESIGN AGENCY
BALKE ENGINEERS
1848 SUMMIT ROAD
CINCINNATI, OHIO 45237

DESIGNED	DRAWN	REVIEWED	DATE
FKL	ALH	CRS	6/01
CHECKED	REVISED	STRUCTURE FILE NUMBER	
MRS	—	1305603 L.B. 1305611 R.B.	

LEFT BRIDGE PIER DETAILS
BRIDGE NO. CLE-275-0618
OVER US 50 J

CLE-275-5.35

FILENAME: BRIDGEPIER_DETAILS.DGN

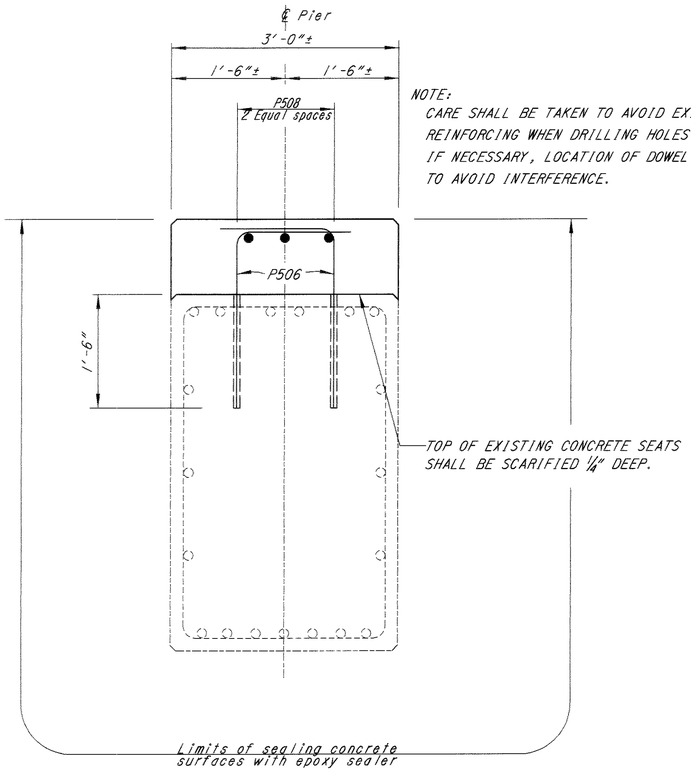

NOTE:
CARE SHALL BE TAKEN TO AVOID EXISTING REINFORCING WHEN DRILLING HOLES FOR DOWELS. IF NECESSARY, LOCATION OF DOWEL SHALL BE MOVED TO AVOID INTERFERENCE.

TOP OF EXISTING CONCRETE SEATS SHALL BE SCARIFIED ¼" DEEP.

SECTION A-A

(PIER 1 SHOWN; PIER 2 & 3 SIMILAR)

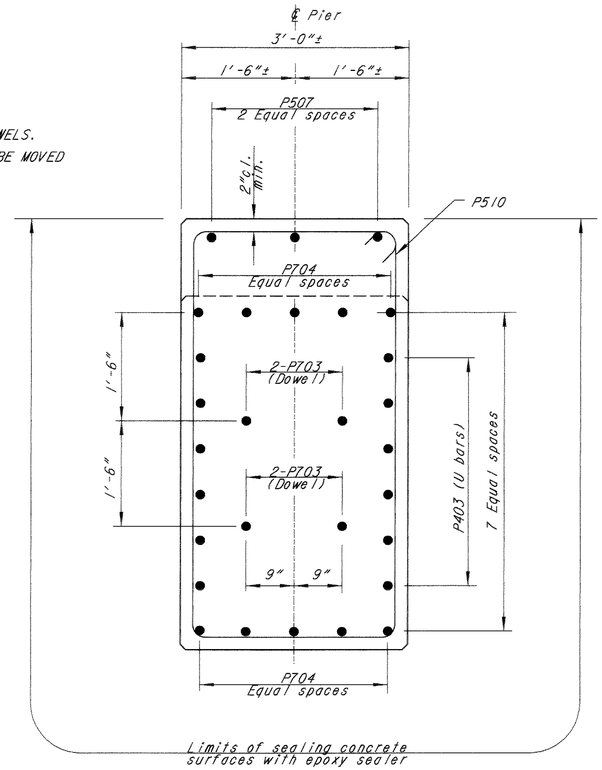

SECTION B-B

(PIER 1 SHOWN; PIER 2 & 3 SIMILAR)

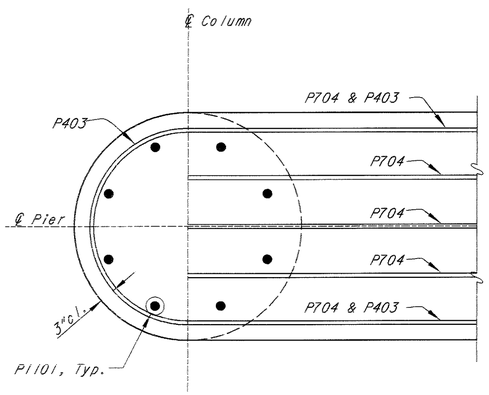

SECTION C-C

(PIER 1 SHOWN; PIER 2 & 3 SIMILAR)

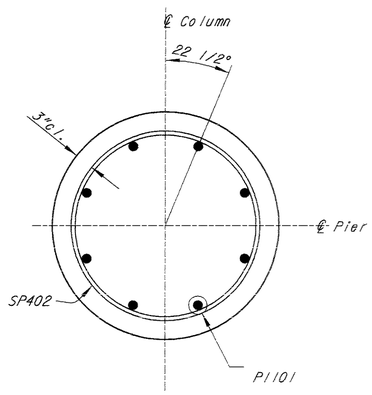

SECTION D-D

(PIER 1 SHOWN; PIER 2 & 3 SIMILAR)

DESIGN AGENCY
BALKE ENGINEERS
1848 Summit Road
Cincinnati, Ohio 45237

DESIGNED	DRAWN	REVIEWED	DATE
FKL	ALH	CRS	6/01
CHECKED	REVISED	STRUCTURE FILE NUMBER	
MRS	—	1305603 L.B. 1305611 R.B.	

RIGHT BRIDGE PIER DETAILS
BRIDGE NO. CLE-275-0618
OVER US 50 J

CLE-275-5.35

28/49

730
857

File:C:\Projects\Bridges\CLE-275-0618\Structure\Sheets\Pier_details.dgn

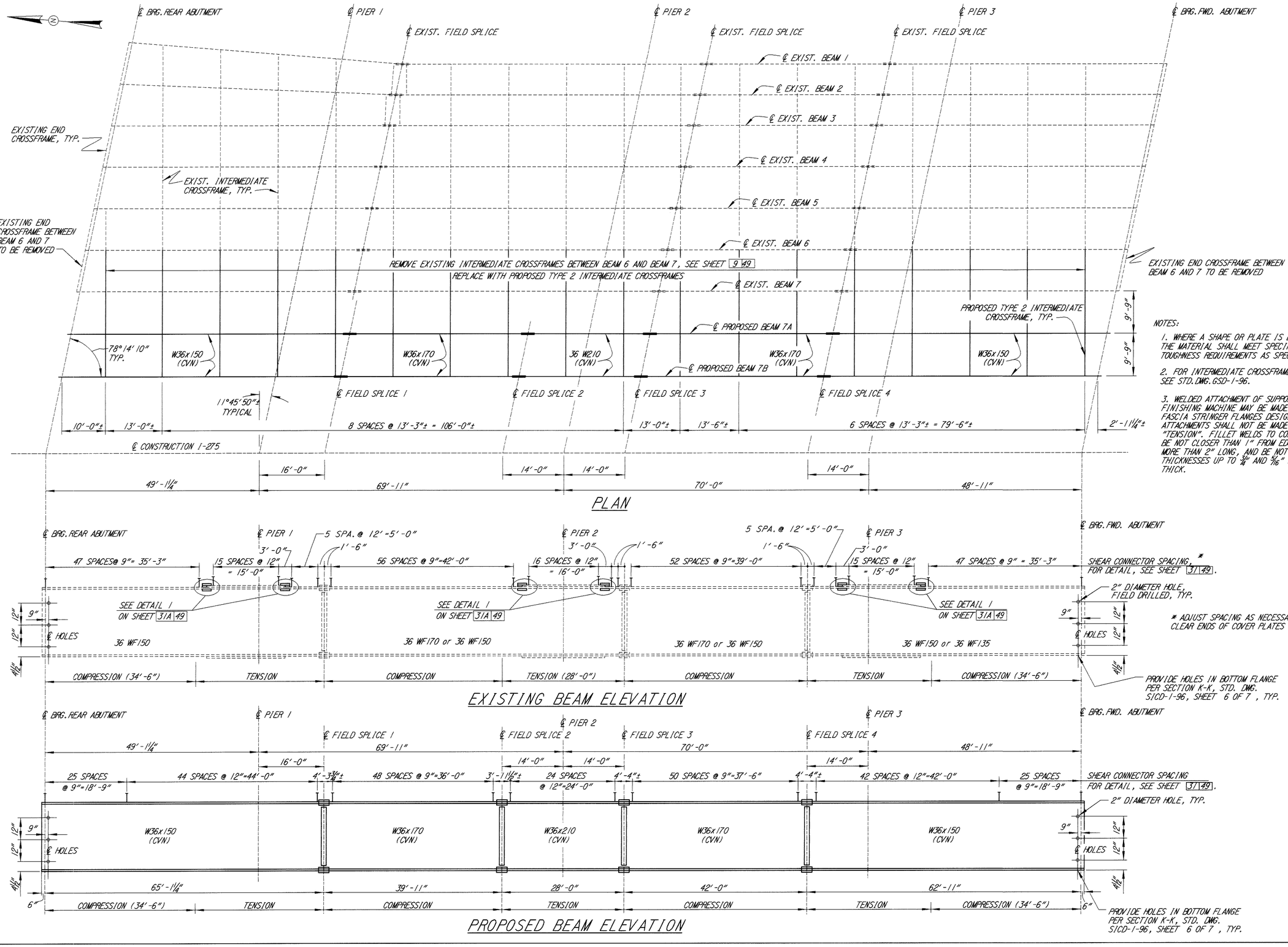

PLAN

EXISTING BEAM ELEVATION

PROPOSED BEAM ELEVATION

NOTES:

1. WHERE A SHAPE OR PLATE IS DESIGNED (CVN) THE MATERIAL SHALL MEET SPECIFIED MINIMUM NOTCH TOUGHNESS REQUIREMENTS AS SPECIFIED IN 711.01.

2. FOR INTERMEDIATE CROSSFRAME DETAILS, SEE STD.DWG.GSD-1-96.

3. WELDED ATTACHMENT OF SUPPORTS FOR CONCRETE DECK FINISHING MACHINE MAY BE MADE TO AREAS OF THE FASCIA STRINGER FLANGES DESIGNATED "COMPRESSION". ATTACHMENTS SHALL NOT BE MADE TO AREAS DESIGNATED "TENSION". FILLET WELDS TO COMPRESSION FLANGES SHALL BE NOT CLOSER THAN 1" FROM EDGE OF FLANGE, BE NOT MORE THAN 2" LONG, AND BE NOT SMALLER THAN 1/4" FOR THICKNESSES UP TO 3/4" AND 5/16" FOR GREATER THAN 3/4" THICK.

DESIGN AGENCY
BALKE ENGINEERS
1848 Summit Road
Cincinnati, Ohio 45237

DESIGNED	DRAWN	REVIEWED	DATE
FKL	ALH	CRS	6/01
CHECKED	REVISED	STRUCTURE FILE NUMBER	
MRS	___	1305603 / A.B. 1305611 / R.B.	

LEFT BRIDGE FRAMING PLAN
BRIDGE NO. CLE-275-06/8
OVER US 50 J

CLE-275-5.35

29/49

731/857

F:\Inroame\DGN\BLEP1.dgn

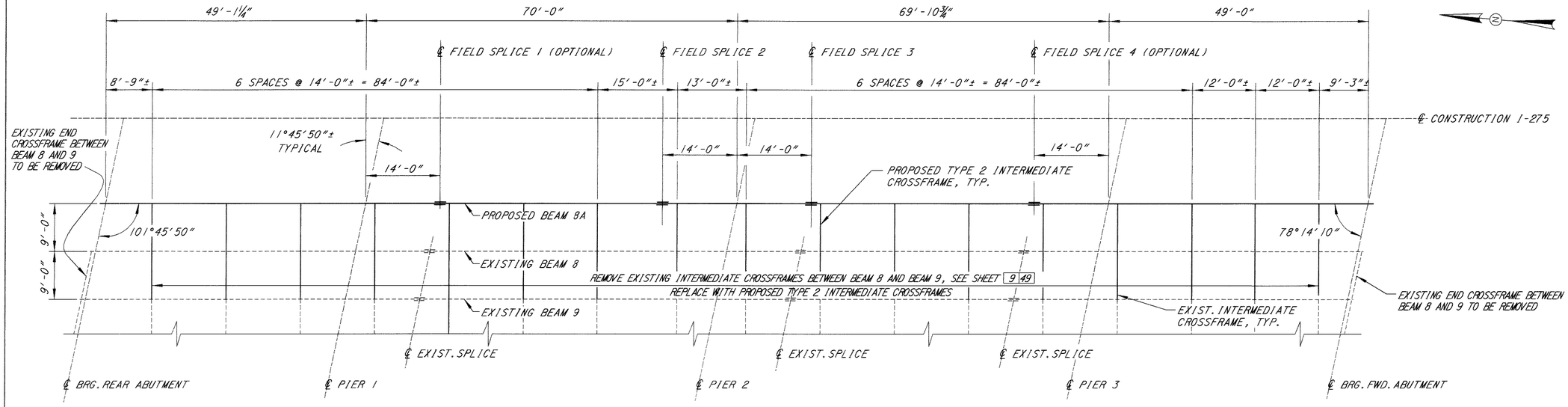

PLAN

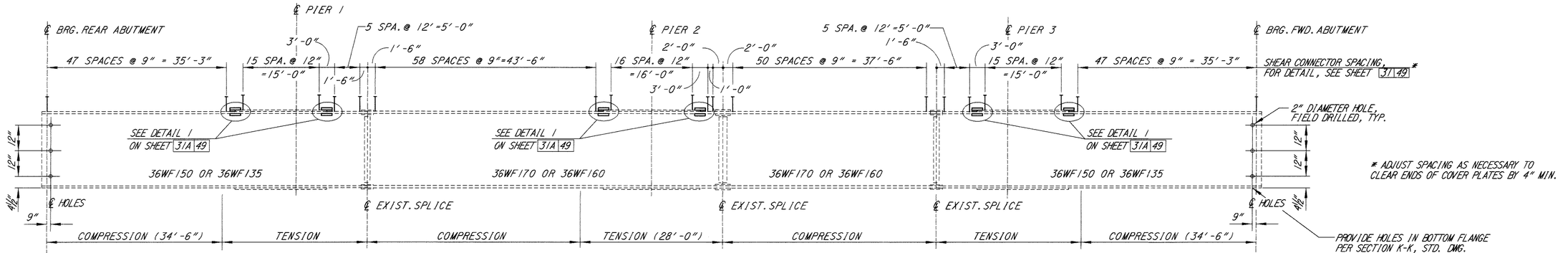

EXISTING BEAM ELEVATION

* ADJUST SPACING AS NECESSARY TO CLEAR ENDS OF COVER PLATES BY 4" MIN.

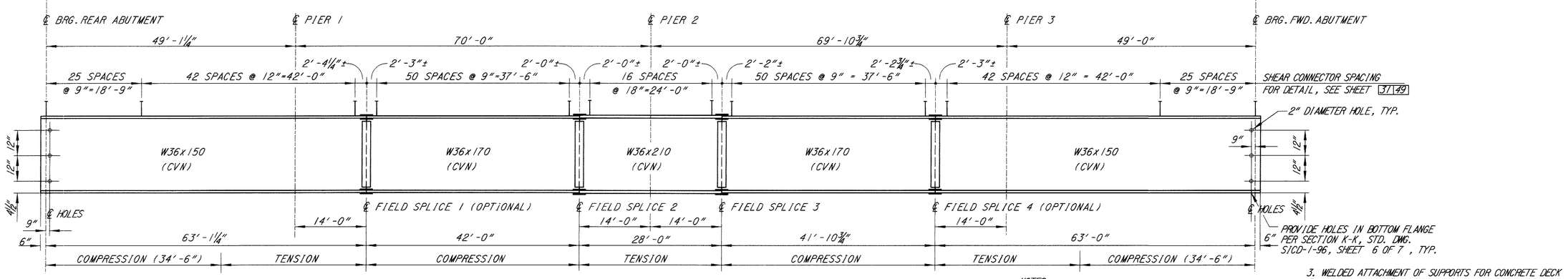

PROPOSED BEAM ELEVATION

NOTES:

1. WHERE A SHAPE OR PLATE IS DESIGNED (CVN) THE MATERIAL SHALL MEET SPECIFIED MINIMUM NOTCH TOUGHNESS REQUIREMENTS AS SPECIFIED IN 711.01.

2. FOR INTERMEDIATE CROSSFRAME DETAILS, SEE STD. DWG. GSD-1-96.

3. WELDED ATTACHMENT OF SUPPORTS FOR CONCRETE DECK FINISHING MACHINE MAY BE MADE TO AREAS OF THE FASCIA STRINGER FLANGES DESIGNATED "COMPRESSION". ATTACHMENTS SHALL NOT BE MADE TO AREAS DESIGNATED "TENSION". FILLET WELDS TO COMPRESSION FLANGES SHALL BE NOT CLOSER THAN 1" FROM EDGE OF FLANGE, BE NOT MORE THAN 2" LONG, AND BE NOT SMALLER THAN 1/4" FOR THICKNESSES UP TO 3/4" AND 5/16" FOR GREATER THAN 3/4" THICK.

DESIGN AGENCY
BALKE ENGINEERS
1848 Summit Road
Cincinnati, Ohio 45237

DESIGNED	DRAWN	REVIEWED	DATE
FKL	MJH	CRS	6/01
CHECKED	REVISED	STRUCTURE FILE NUMBER	
MRS	—	130603 L.B. 130661 R.B.	

RIGHT BRIDGE FRAMING PLAN
BRIDGE NO. CLE-275-0618
OVER US 50 J

CLE-275-5.35

F:\Revisions\CRS\180661RD1.dgn

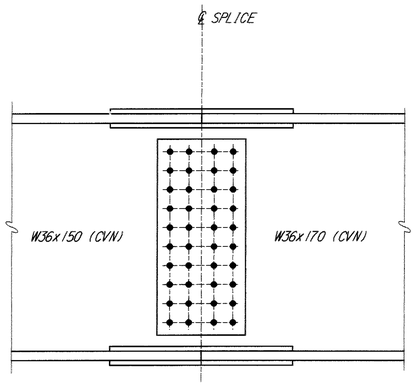

SPLICE 1 & 4 ELEVATION LEFT BRIDGE

(SPLICE 1 SHOWN, SPLICE 4 OPPOSITE HAND)

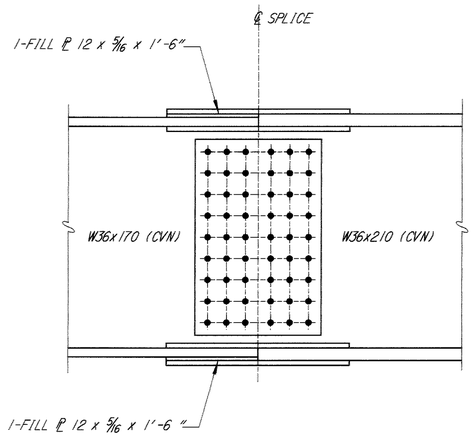

SPLICE 2 ELEVATION LEFT BRIDGE

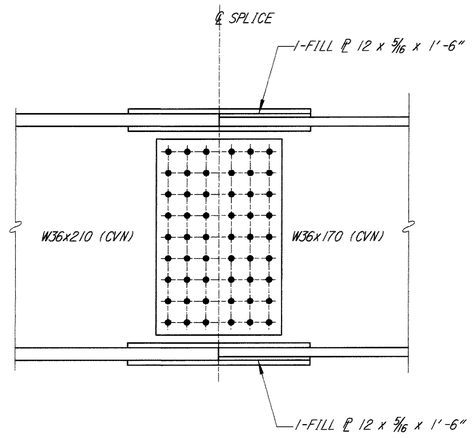

SPLICE 3 ELEVATION LEFT BRIDGE

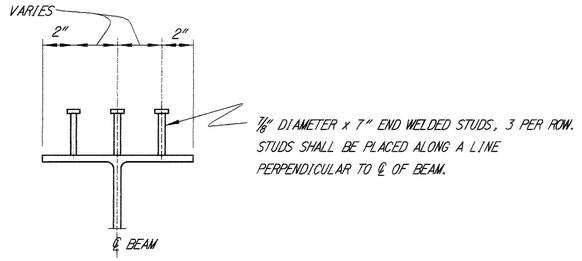

SHEAR CONNECTOR DETAIL

NOTES:

1. FOR ADDITIONAL SPLICE DETAILS, SEE STD.DWG. BS-1-93. WHERE BEAMS OF DIFFERENT SIZES ARE SPLICED, THE DETAIL SHALL BE BASED ON THAT SHOWN FOR THE LIGHTER WEIGHT BEAM.

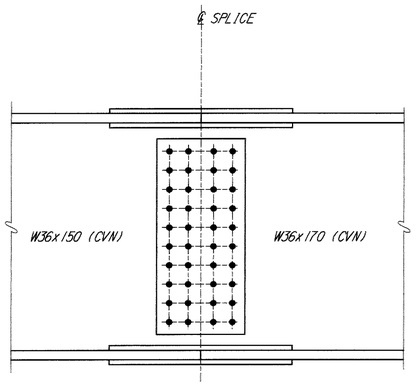

SPLICE 1 & 4 ELEVATION RIGHT BRIDGE

(SPLICE 1 SHOWN, SPLICE 4 OPPOSITE HAND)

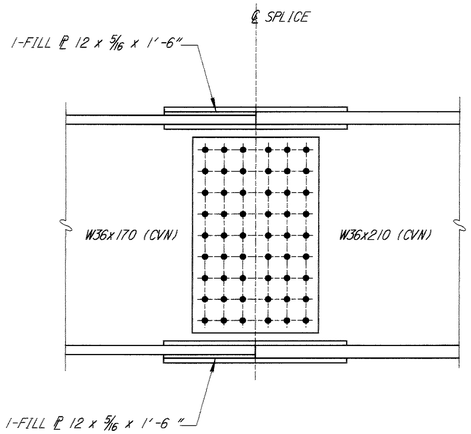

SPLICE 2 ELEVATION RIGHT BRIDGE

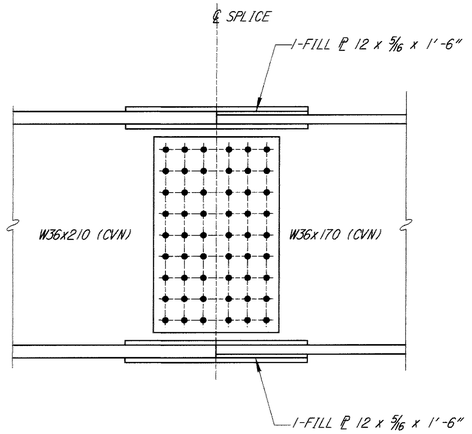

SPLICE 3 ELEVATION RIGHT BRIDGE

F:\Projects\06\BSTEEL.dgn

DESIGN AGENCY
BALKE ENGINEERS
1848 Summit Road
Cincinnati, Ohio 45237

DESIGNED	DRAWN	REVIEWED	DATE
FKL	ALH	CRS	6/01
CHECKED	REVISED	STRUCTURE FILE NUMBER	
MRS	—	1305603 L.B. 1305611 R.B.	

STEEL DETAILS
BRIDGE NO. CLE-275-0618
OVER US 50 /

CLE-275-5.35

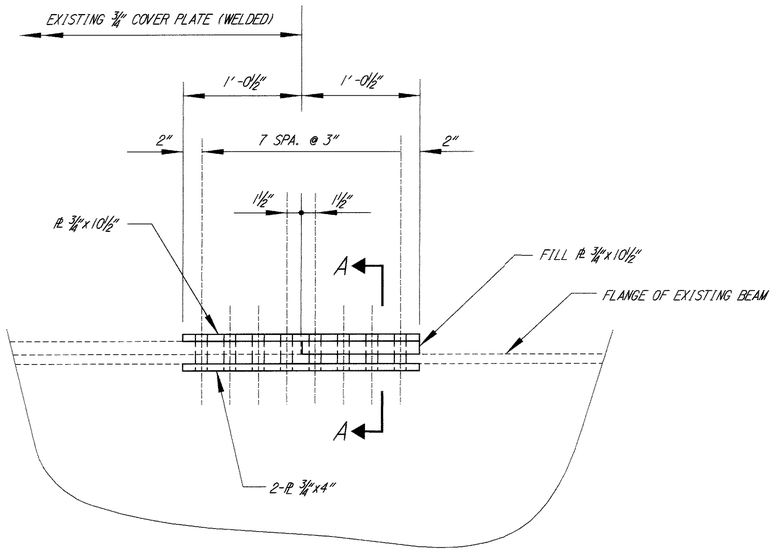

DETAIL 1

NOTE:
ALL BOLTS ARE 1" DIAMETER, A325.

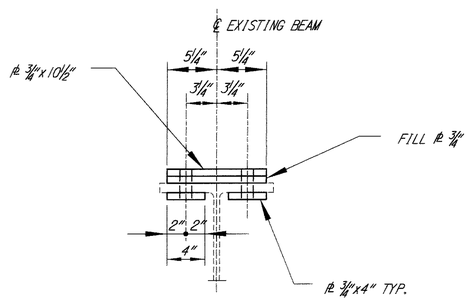

SECTION A-A

DESIGN AGENCY
BALKE ENGINEERS
1848 Summit Road
Cincinnati, Ohio 45237

DESIGNED	DRAWN	REVIEWED	DATE
FKL	WJH	CRS	6/01
CHECKED	REVISED	STRUCTURE FILE NUMBER	
MRS	—	1305603 L.B. 1305611 R.B.	

COVER PLATE RETROFIT DETAILS
BRIDGE NO. CLE-275-0618
OVER US 50 J

CLE-275-5.35

31A/49

734/857

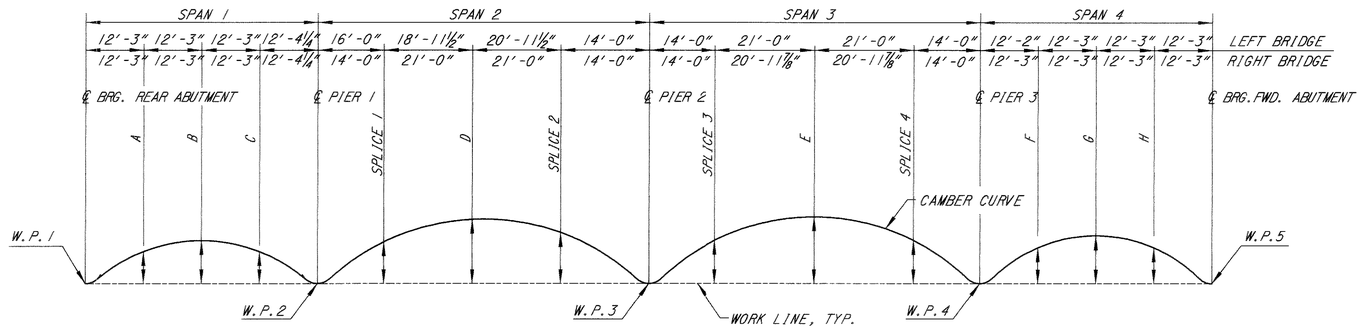

CAMBER DIAGRAM

DEFLECTION AND CAMBER TABLE (LEFT BRIDGE)

	SPAN 1				SPAN 2				SPAN 3				SPAN 4				
	REAR ABUTMENT	A	B	C	PIER 1	SPLICE 1	D	SPLICE 2	PIER 2	SPLICE 3	E	SPLICE 4	PIER 3	F	G	H	FORWARD ABUTMENT
DEFLECTION DUE TO WEIGHT OF STEEL, INS.	0	1/16	1/16	1/16	0	1/16	1/16	1/16	0	1/16	1/8	1/16	0	1/16	1/16	1/16	0
DEFLECTION DUE TO REMAINING DL, INS.	0	1/8	3/16	1/16	0	5/16	1/2	7/16	0	3/16	1/4	1/4	0	1/16	3/16	1/8	0
TOTAL CAMBER REQUIRED, INS.	0	3/16	1/4	1/8	0	3/8	5/8	7/16	0	1/4	5/8	5/16	0	1/8	1/4	3/16	0

DEFLECTION AND CAMBER TABLE (RIGHT BRIDGE)

	SPAN 1				SPAN 2				SPAN 3				SPAN 4				
	REAR ABUTMENT	A	B	C	PIER 1	SPLICE 1	D	SPLICE 2	PIER 2	SPLICE 3	E	SPLICE 4	PIER 3	F	G	H	FORWARD ABUTMENT
DEFLECTION DUE TO WEIGHT OF STEEL, INS.	0	1/16	1/16	0	0	1/16	1/8	1/16	0	1/16	1/8	1/16	0	1/16	1/16	1/16	0
DEFLECTION DUE TO REMAINING DL, INS.	0	1/8	1/8	1/16	0	1/4	7/16	5/16	0	1/8	3/8	3/16	0	1/16	3/16	1/8	0
TOTAL CAMBER REQUIRED, INS.	0	3/16	3/16	1/16	0	5/16	9/16	3/8	0	3/16	1/2	1/4	0	1/8	1/4	3/16	0

NOTES:
1. WORK POINTS (W.P.) ARE AT THE CENTER OF THE BEAM, ON THE CENTERLINE OF BEARING.
2. THE WORK LINES ARE STRAIGHT LINES THROUGH THE WORK POINTS, FROM CENTERLINE OF BEARING TO CENTERLINE OF BEARING.
3. TABULATED VALUES IN THE DEFLECTION AND CAMBER TABLE ARE MEASURED FROM THE WORK LINES.

DESIGN AGENCY
BALKE ENGINEERS
1848 SUMMIT ROAD
CINCINNATI, OHIO 45237

DESIGNED FKL
DRAWN ALH
CHECKED MRS
REVIEWED CRS
DATE 6/01
REVISED —

STRUCTURE FILE NUMBER
1205603 L.T.
1206611 RT.

DEFLECTION AND CAMBER DETAILS
BRIDGE NO. CLE-275-06/8
OVER US 50 J

CLE-275-5.35

FILENAME: DEFBEAM.DGN

THICKNESS OF EXTERNAL ELASTOMER = 0.25"
(2 REQUIRED)

THICKNESS OF INTERNAL ELASTOMER = 0.35"
(5 REQUIRED)

INTERNAL STEEL LAMINATE THICKNESS = 0.0747 (14 GAGE)
(6 REQUIRED)

D.L. = 137 K
L.L. = 64 K
TOTAL = 201 K

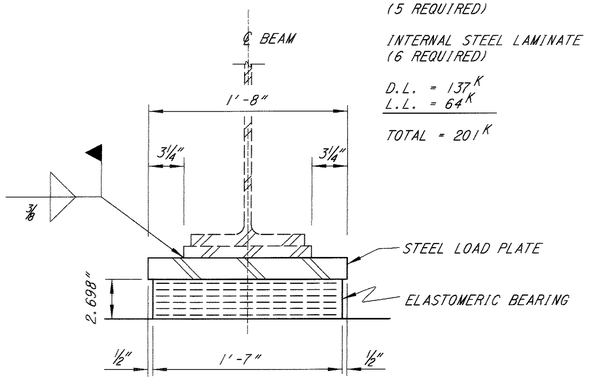

SECTION A-A

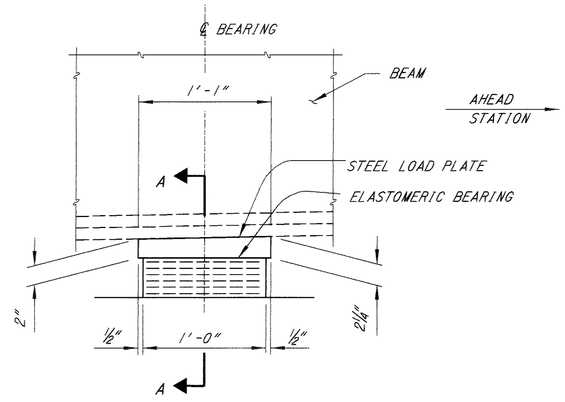

ELEVATION

EXPANSION BEARING AT PIERS

THICKNESS OF EXTERNAL ELASTOMER = 0.190"
(2 REQUIRED)

THICKNESS OF INTERNAL ELASTOMER = 0.260"
(7 REQUIRED)

INTERNAL STEEL LAMINATE THICKNESS = 0.0747 (14 GAGE)
(8 REQUIRED)

D.L. = 63 K
L.L. = 53 K
TOTAL = 115 K

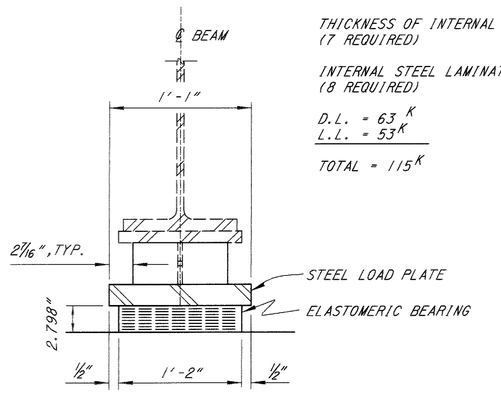

SECTION C-C

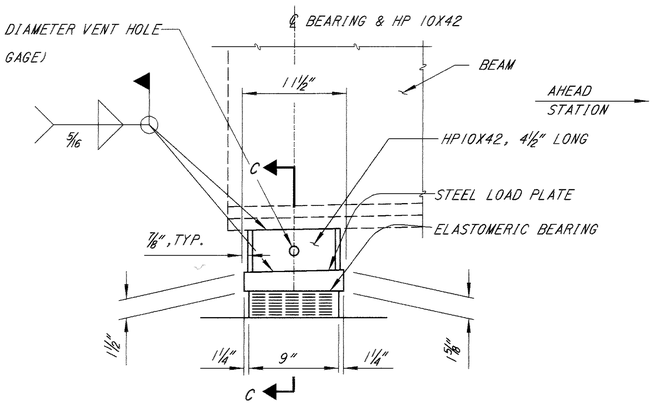

ELEVATION

EXPANSION BEARING AT ABUTMENTS

NOTES FOR LAMINATED ELASTOMERIC BEARINGS AND LOAD PLATE

LOAD PLATE: THE STEEL LOAD PLATE SHALL BE BONDED BY VULCANIZATION TO THE ELASTOMER DURING THE MOLDING PROCESS.

THE STEEL LOAD PLATE AND HP 10 X 42 SHALL BE A36 GRADE STEEL.

WELDING SHALL BE CONTROLLED SO THAT THE PLATE TEMPERATURE AT THE ELASTOMER BONDED SURFACE DOES NOT EXCEED 300°F AS DETERMINED BY THE USE OF PYROMETRIC STICKS OR OTHER TEMPERATURE MONITORING DEVICES.

BASIS OF PAYMENT: THE UNIT BID PRICE SHALL INCLUDE ALL MATERIALS, LABOR, TESTING, ANCHOR RODS AND INCIDENTALS NECESSARY TO FURNISH AND INSTALL LAMINATED ELASTOMERIC BEARINGS. PAYMENT WILL BE MADE AT THE CONTRACT PRICE FOR ITEM 516, EACH, ELASTOMERIC BEARINGS WITH INTERNAL LAMINATES (NEOPRENE). COST OF THE HP SECTION SHALL BE INCLUDED FOR PAYMENT WITH ITEM 516 ALSO.

ELASTOMERIC BEARINGS SHALL COMPLY WITH ITEM 516 AND AASHTO STANDARD SPECIFICATION FOR HIGHWAY BRIDGES, SECTION 18, BEARING DEVICES, DIVISION II, CONSTRUCTION, ARTICLES 18.4.5.1 AND 18.5.6.2. BEARINGS SHALL BE GRADE 3, 50 DUROMETER ELASTOMER, AND SHALL BE SUBJECTED TO THE LOAD TESTING REQUIREMENTS DEFINED IN ARTICLE 18.7.4.5 OF THE AASHTO DOCUMENT LISTED ABOVE. BEARINGS WERE DESIGNED UNDER SECTION 14.6.6 OF SECTION 14, BEARINGS, DIVISION I, DESIGN. TESTING SHALL BE INCLUDED IN THE UNIT PRICE BID FOR THE BEARINGS, EACH.

BEARING REPOSITIONING: IF THE BEARING IS INSTALLED AT AN AMBIENT TEMPERATURE HIGHER THAN 80° F OR LOWER THAN 40° F AND THE BEARING SHEAR DEFLECTION EXCEEDS 1/6 OF THE BEARING HEIGHT AT 60° F (+/-) 10° F, THE BEAMS OR GIRDERS SHALL BE RAISED TO ALLOW THE BEARINGS TO RETURN TO THEIR UNDEFORMED SHAPE AT 60° F (+/-) 10° F.

DESIGN AGENCY
BALKE ENGINEERS
1848 SUMMIT ROAD
CINCINNATI, OHIO 45237

DESIGNED	DRAWN	REVIEWED	DATE
FKL	ALH	CRS	6/01
CHECKED	REVISED	STRUCTURE FILE NUMBER	
MRS	—	1305603 L.B. 1305611 R.B.	

BEARING DETAILS (EXISTING BEARING BEAMS)
BRIDGE NO. CLE-275-0618
OVER US 50 J

CLE-275-5.35

FILENAME: BEARING-1.DGN

THICKNESS OF EXTERNAL ELASTOMER = 0.25"
(2 REQUIRED)

THICKNESS OF INTERNAL ELASTOMER = 0.35"
(5 REQUIRED)

INTERNAL STEEL LAMINATE THICKNESS = 0.0747 (14 GAGE)
(6 REQUIRED)

D.L. = 137 K
L.L. = 64 K

TOTAL = 201 K

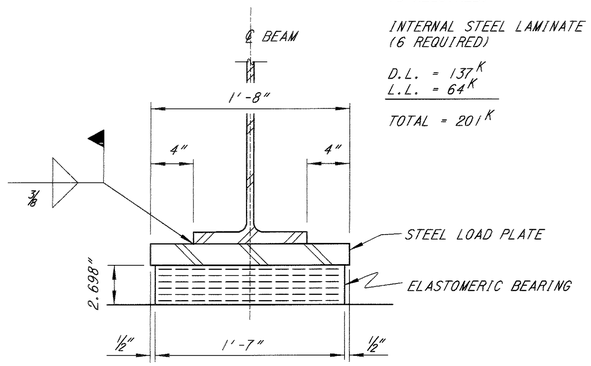

SECTION A-A

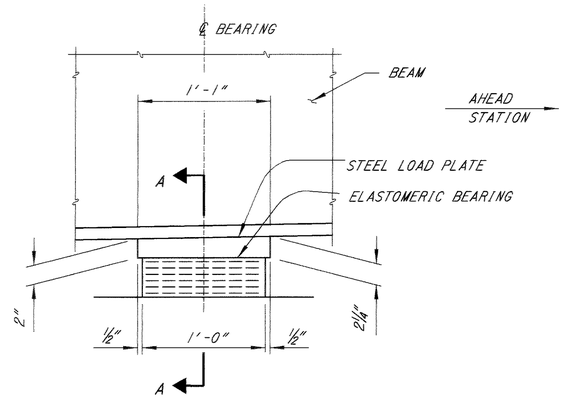

ELEVATION

EXPANSION BEARING AT PIERS

THICKNESS OF EXTERNAL ELASTOMER = 0.190"
(2 REQUIRED)

THICKNESS OF INTERNAL ELASTOMER = 0.260"
(7 REQUIRED)

INTERNAL STEEL LAMINATE THICKNESS = 0.0747 (14 GAGE)
(8 REQUIRED)

D.L. = 63 K
L.L. = 53 K

TOTAL = 115 K

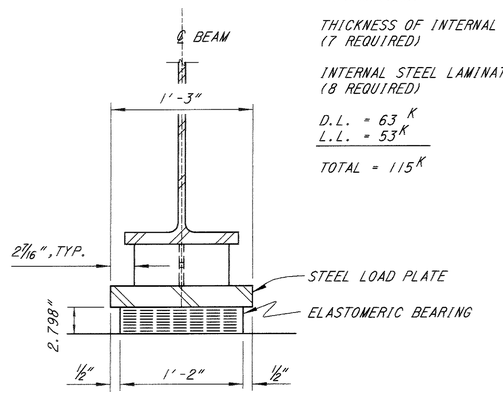

SECTION C-C

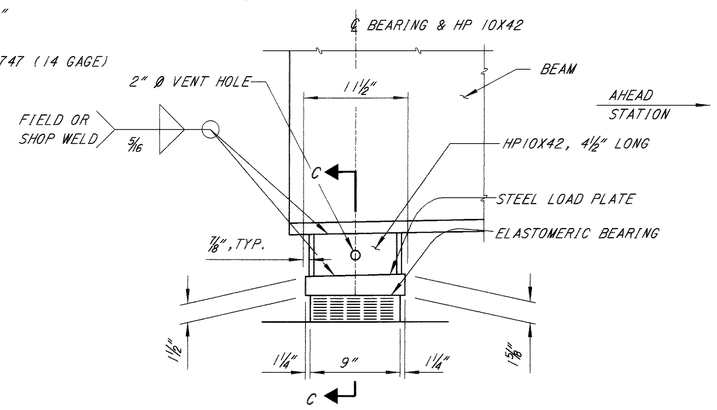

ELEVATION

EXPANSION BEARING AT ABUTMENTS

NOTES FOR LAMINATED ELASTOMERIC BEARINGS AND LOAD PLATE

LOAD PLATE: THE STEEL LOAD PLATE SHALL BE BONDED BY VULCANIZATION TO THE ELASTOMER DURING THE MOLDING PROCESS.

THE STEEL LOAD PLATE AND HP 10 X 42 SHALL BE THE SAME MATERIAL AS THE ATTACHED STRUCTURAL STEEL (A 709, GRADE 50 STEEL).

WELDING SHALL BE CONTROLLED SO THAT THE PLATE TEMPERATURE AT THE ELASTOMER BONDED SURFACE DOES NOT EXCEED 300°F AS DETERMINED BY THE USE OF PYROMETRIC STICKS OR OTHER TEMPERATURE MONITORING DEVICES.

BASIS OF PAYMENT: THE UNIT BID PRICE SHALL INCLUDE ALL MATERIALS, LABOR, TESTING, ANCHOR RODS AND INCIDENTALS NECESSARY TO FURNISH AND INSTALL LAMINATED ELASTOMERIC BEARINGS. PAYMENT WILL BE MADE AT THE CONTRACT PRICE FOR ITEM 516, EACH, ELASTOMERIC BEARINGS WITH INTERNAL LAMINATES (NEOPRENE). COST OF THE HP SECTION SHALL BE INCLUDED FOR PAYMENT WITH ITEM 516 ALSO.

ELASTOMERIC BEARINGS SHALL COMPLY WITH ITEM 516 AND AASHTO STANDARD SPECIFICATION FOR HIGHWAY BRIDGES, SECTION 18, BEARING DEVICES, DIVISION II, CONSTRUCTION, ARTICLES 18.4.5.1 AND 18.5.6.2. BEARINGS SHALL BE GRADE 3, 50 DUROMETER ELASTOMER, AND SHALL BE SUBJECTED TO THE LOAD TESTING REQUIREMENTS DEFINED IN ARTICLE 18.7.4.5 OF THE AASHTO DOCUMENT LISTED ABOVE. BEARINGS WERE DESIGNED UNDER SECTION 14.6.6 OF SECTION 14, BEARINGS, DIVISION I, DESIGN. TESTING SHALL BE INCLUDED IN THE UNIT PRICE BID FOR THE BEARINGS, EACH.

BEARING REPOSITIONING: IF THE STEEL IS ERECTED AT AN AMBIENT TEMPERATURE HIGHER THAN 80° F OR LOWER THAN 40° F AND THE BEARING SHEAR DEFLECTION EXCEEDS 1/6 OF THE BEARING HEIGHT AT 60° F (+/-) 10° F, THE BEAMS OR GIRDERS SHALL BE RAISED TO ALLOW THE BEARINGS TO RETURN TO THEIR UNDEFORMED SHAPE AT 60° F (+/-) 10° F.

DESIGN AGENCY
BALKE ENGINEERS
1848 SUMMIT ROAD
CINCINNATI, OHIO 45237

DESIGNED	DRAWN	REVIEWED	DATE
FKL	ALH	CRS	6/01
CHECKED	REVISED	STRUCTURE FILE NUMBER	
MRS	—	1305603 L.B. 1305611 R.B.	

BEARING DETAILS (PROPOSED BEAMS)
BRIDGE NO. CLE-275-0618
OVER US 50 J

CLE-275-5.35

FILENAME: 9618BEARING.DGN

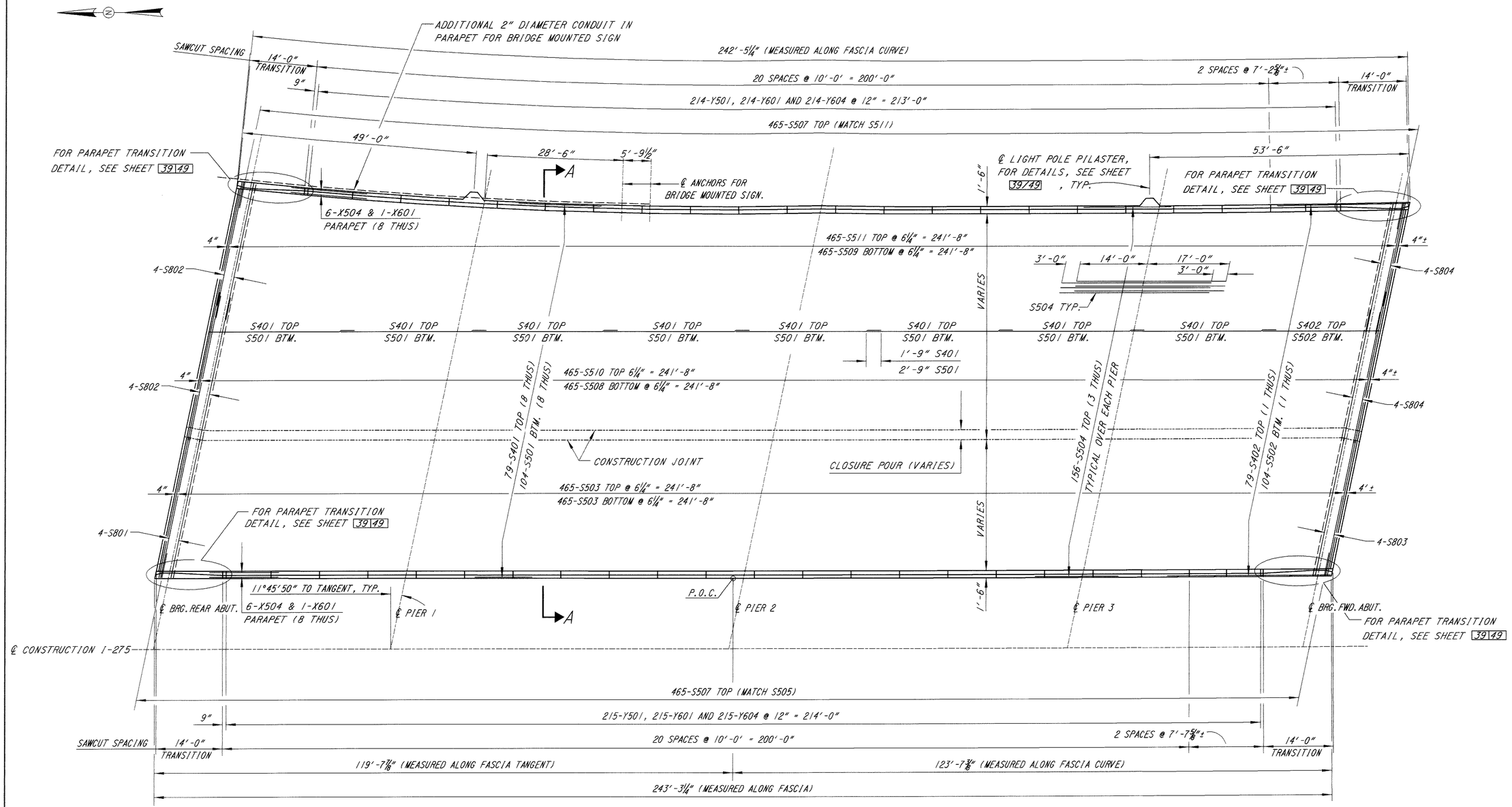

PLAN

NOTES:

1. FOR REAR ABUTMENT DIAPHRAGM, SEE SHEET 40|49
   FOR FWD. ABUTMENT DIAPHRAGM, SEE SHEET 42|49
2. FOR DETAILS OF SIGN SUPPORT, SEE STD. DWG. TC-18.26M DESIGN NO. 2. ANCHORS AND SUPPORTS ARE INCLUDED IN THE PRICE BID FOR THE SIGN FOR PAYMENT.

DESIGN AGENCY
BALKE ENGINEERS
1848 Summit Road
Cincinnati, Ohio 45237

DESIGNED	DRAWN	REVIEWED	DATE
MPS	W.H	CRS	6/01
CHECKED	REVISED	STRUCTURE FILE NUMBER	
FKL	___	130603 A.B. 130611 A.B.	

LEFT BRIDGE DECK PLAN
BRIDGE NO. CLE-275-0618
OVER US 50 /

CLE-275-5.35

35|49

738
857

F:\Projects\05\08.2851\...dgn

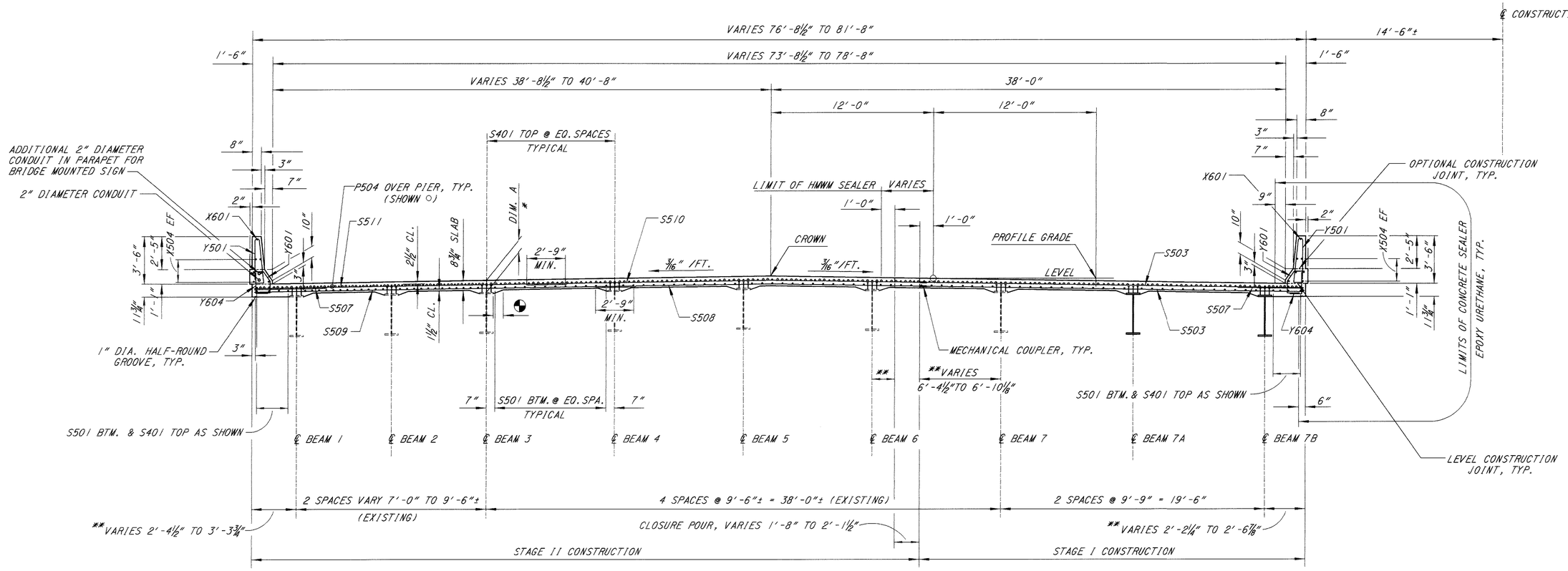

SECTION A-A

	DIM. A	DIM. B
36WF135	11 5/16"	3¼"
36WF150	11 5/16"	3¼"
36WF170	11½"	2¾"
W36x150	11⅛"	2⅜"
W36x210	10¾"	2"

NOTES:

1. * DECK SLAB DEPTH FOR CONCRETE QUANTITY: THE DIMENSION SHOWN FROM THE TOP OF THE CONCRETE DECK TO THE TOP OF THE FLANGE, MINUS THE DESIGN HAUNCH THICKNESS (DIM. B), HAS BEEN USED FOR COMPUTING THE DECK CONCRETE QUANTITIES. CONCRETE REQUIRED TO FILL THE HAUNCHES, INCLUDING ADDITIONAL OR LESS MATERIAL REQUIRED DUE TO HAUNCH CONSTRUCTION TOLERANCES, SHALL BE CONSIDERED AS INCIDENTAL AND WILL NOT BE INCLUDED IN THE QUANTITY CALCULATIONS FOR PAYMENT.
2. ◐ A HAUNCH WIDTH OF 9" SHALL BE USED. HOWEVER THE HAUNCH WIDTH MAY VARY BETWEEN 6" AND 12".
3. FOR ADDITIONAL INFORMATION ON THE PARAPETS AND SAWCUT JOINTS, SEE STD. DWG. BR-1.
4. HMWM = HIGH MOLECULAR WEIGHT METHACRYLATE.
5. ** FOR DIMENSIONS, SEE SHEET 44/49

DESIGN AGENCY
BALKE ENGINEERS
1848 Summit Road
Cincinnati, Ohio 45237

DESIGNED	DRAWN	REVIEWED	DATE
FKL	WJH	CRS	6/01
CHECKED	REVISED	STRUCTURE FILE NUMBER	
MRS	—	1305603 L.B. 1305611 R.B.	

LEFT BRIDGE DECK SECTION
BRIDGE NO. CLE-275-0618
OVER US 50 J

CLE-275-5.35

Filename: 0568DS02.dgn

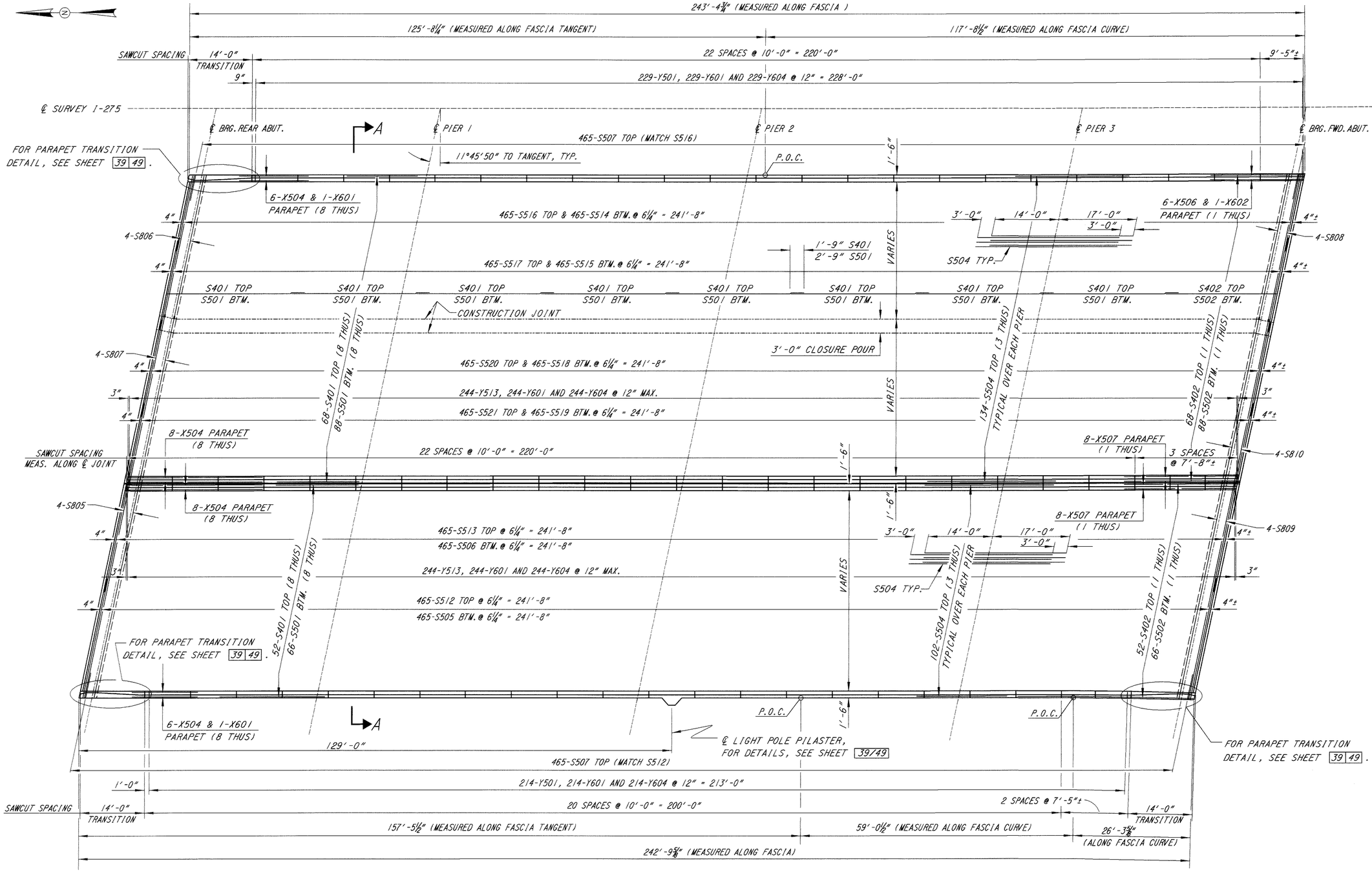

PLAN

DESIGN AGENCY
BALKE ENGINEERS
1848 Summit Road
Cincinnati, Ohio 45237

DESIGNED	DRAWN	REVIEWED	DATE
MKS	MJH	CRS	6-01
CHECKED	REVISED	STRUCTURE FILE NUMBER	
FKL	—	120803 A.B. 130617 A.B.	

RIGHT BRIDGE DECK PLAN
BRIDGE NO. CLE-275-0618
OVER US 50 J

CLE-275-5.35

37/49

740/857

F:\Windows\DGN\BRDG51.dgn

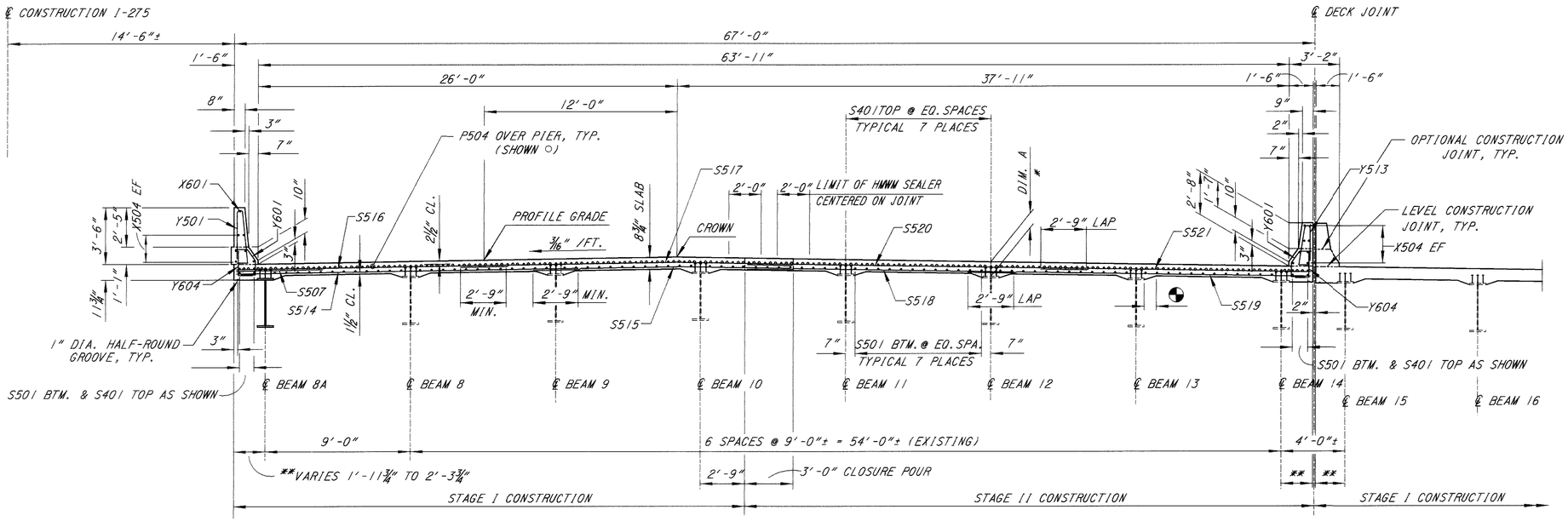

SECTION A-A

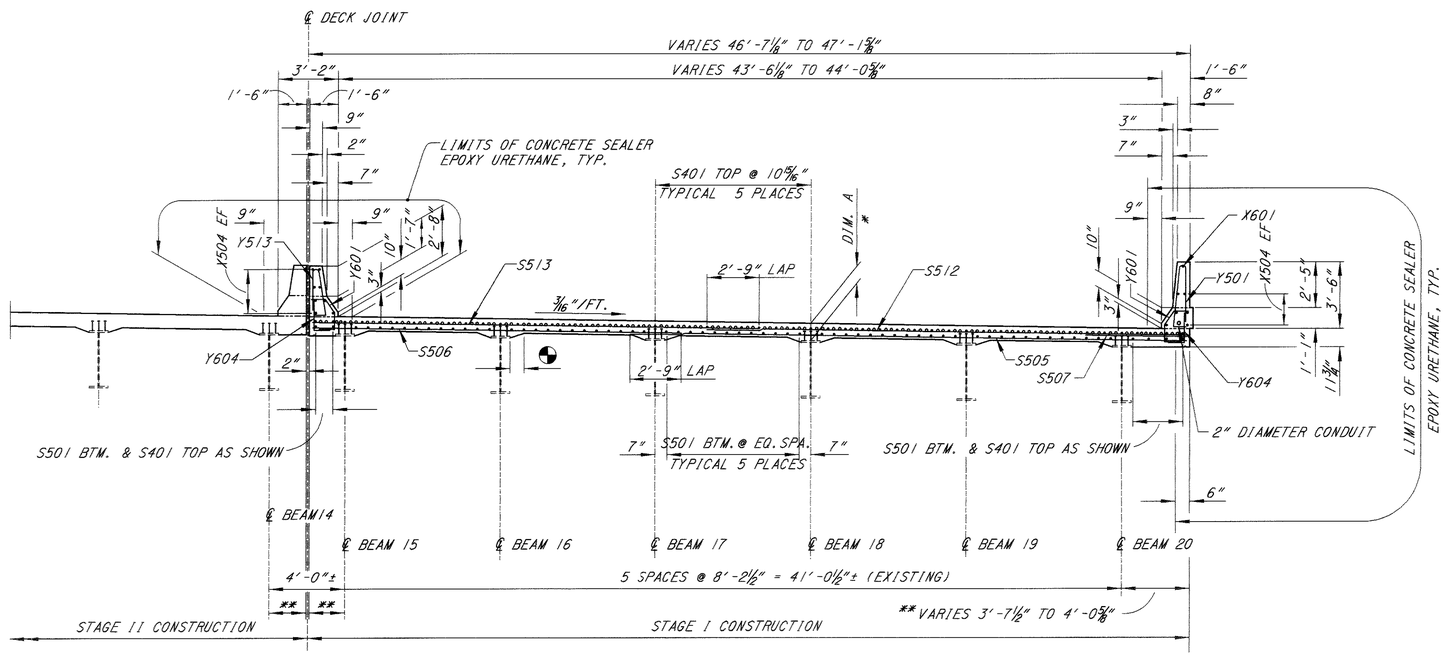

SECTION A-A

	DIM. A	DIM. B
36WF135	11¾"	3"
36WF150	11¾"	2⅛"
36WF160	11½"	2¾"
36WF170	11½"	2¾"
W36x150	11⅛"	2⅜"
W36x210	10¾"	2"

NOTES:
1. * DECK SLAB DEPTH FOR CONCRETE QUANTITY: THE DIMENSION SHOWN FROM THE TOP OF THE CONCRETE DECK TO THE TOP OF THE FLANGE, MINUS THE DESIGN HAUNCH THICKNESS (DIM. B), HAS BEEN USED FOR COMPUTING THE DECK CONCRETE QUANTITIES. CONCRETE REQUIRED TO FILL THE HAUNCHES, INCLUDING ADDITIONAL OR LESS MATERIAL REQUIRED DUE TO HAUNCH CONSTRUCTION TOLERANCES, SHALL BE CONSIDERED AS INCIDENTAL AND WILL NOT BE INCLUDED IN THE QUANTITY CALCULATIONS FOR PAYMENT.
2. ◒ A HAUNCH WIDTH OF 9" SHALL BE USED. HOWEVER THE HAUNCH WIDTH MAY VARY BETWEEN 6" AND 12".
3. FOR ADDITIONAL INFORMATION ON THE PARAPETS AND SAWCUT JOINTS, SEE STD. DWG. BR-1.
4. HMWM = HIGH MOLECULAR WEIGHT METHACRYLATE.
5. ** FOR DECK SLAB OVERHANGS, SEE SHEET 45|49

DESIGN AGENCY
BALKE ENGINEERS
1848 SUMMIT ROAD
CINCINNATI, OHIO 45237

DESIGNED	DRAWN	REVIEWED	DATE
FKL	WJH	CRS	6/01
CHECKED	REVISED	STRUCTURE FILE NUMBER	
MPS	—	1305603 L.B. 1305611 R.B.	

RIGHT BRIDGE DECK SECTION
BRIDGE NO. CLE-275-0618
OVER US 50 J

CLE-275-5.35

FILENAME: 0508051.DGN

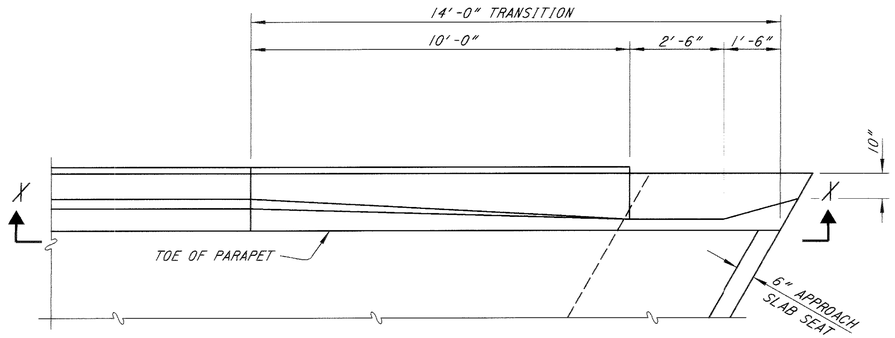

PLAN

(LEFT BRIDGE SHOWN, RIGHT BRIDGE SIMILAR)
(4 REQUIRED LEFT BRIDGE
3 REQUIRED RIGHT BRIDGE)

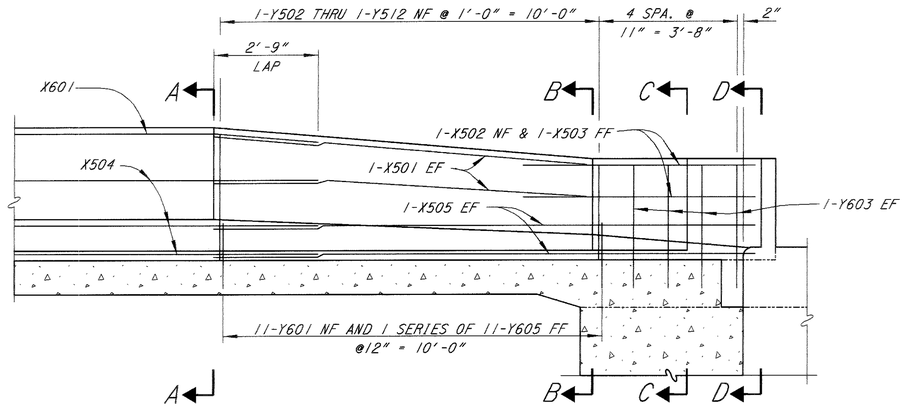

SECTION X-X

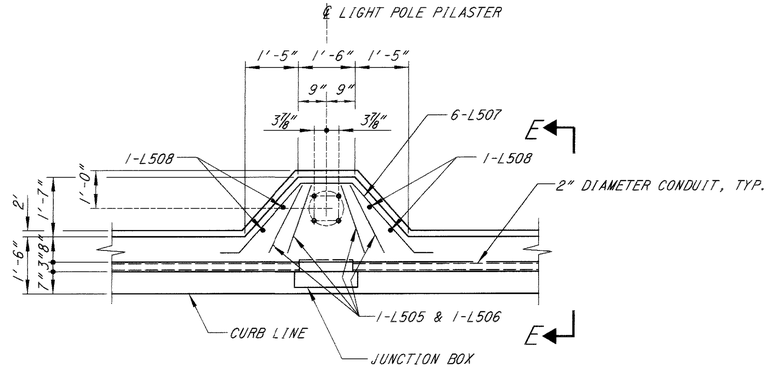

LIGHT POLE PILASTER DETAIL

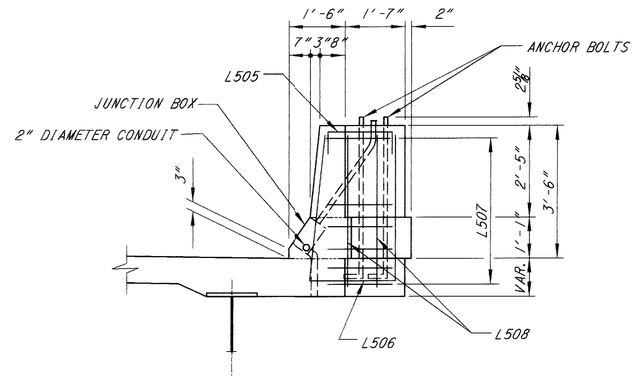

SECTION E-E

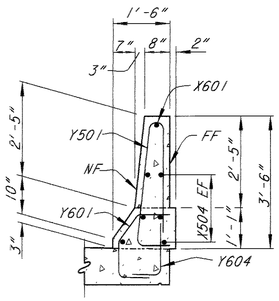

SECTION A-A

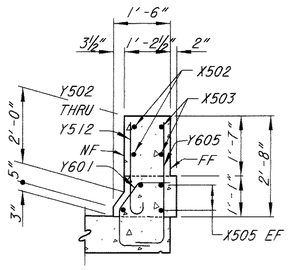

SECTION B-B

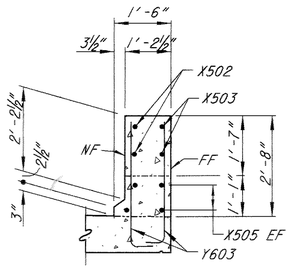

SECTION C-C

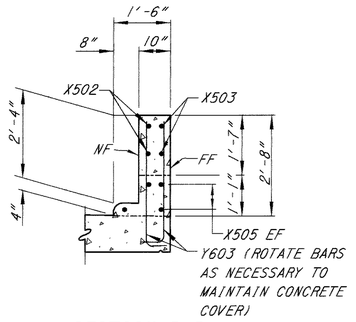

SECTION D-D

NOTES:
1. FOR ADDITIONAL INFORMATION, SEE STD. DWG. BR-1.
2. EF = EACH FACE
   NF = NEAR FACE
   FF = FAR FACE

DESIGN AGENCY
BALKE ENGINEERS
1848 Summit Road
Cincinnati, Ohio 45237

DESIGNED	DRAWN	REVIEWED	DATE
MRS	ALH	CRS	6/01
CHECKED	REVISED	STRUCTURE FILE NUMBER	
FKL	----	120503 J.B. 130561 R.B.	

DECK DETAILS
BRIDGE NO. CLE-275-0618
OVER US 50 J

CLE-275-5.35

39/49

742/857

File name: 06180NOTES.dgn

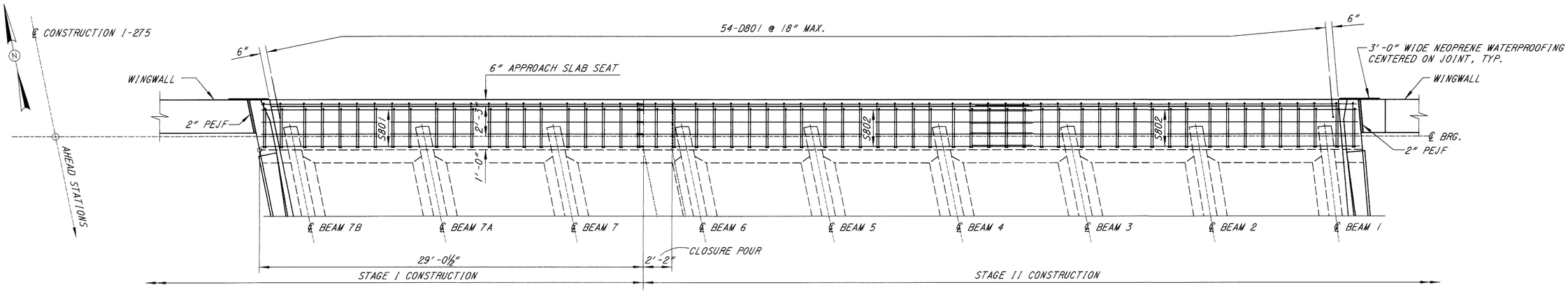

PLAN

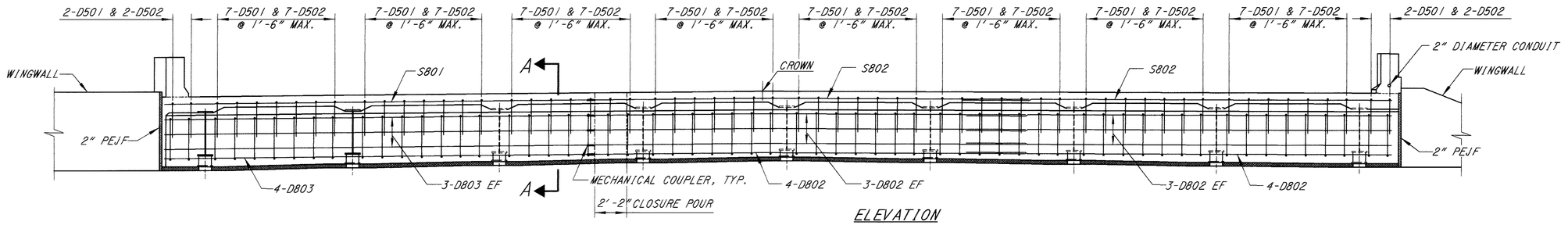

ELEVATION

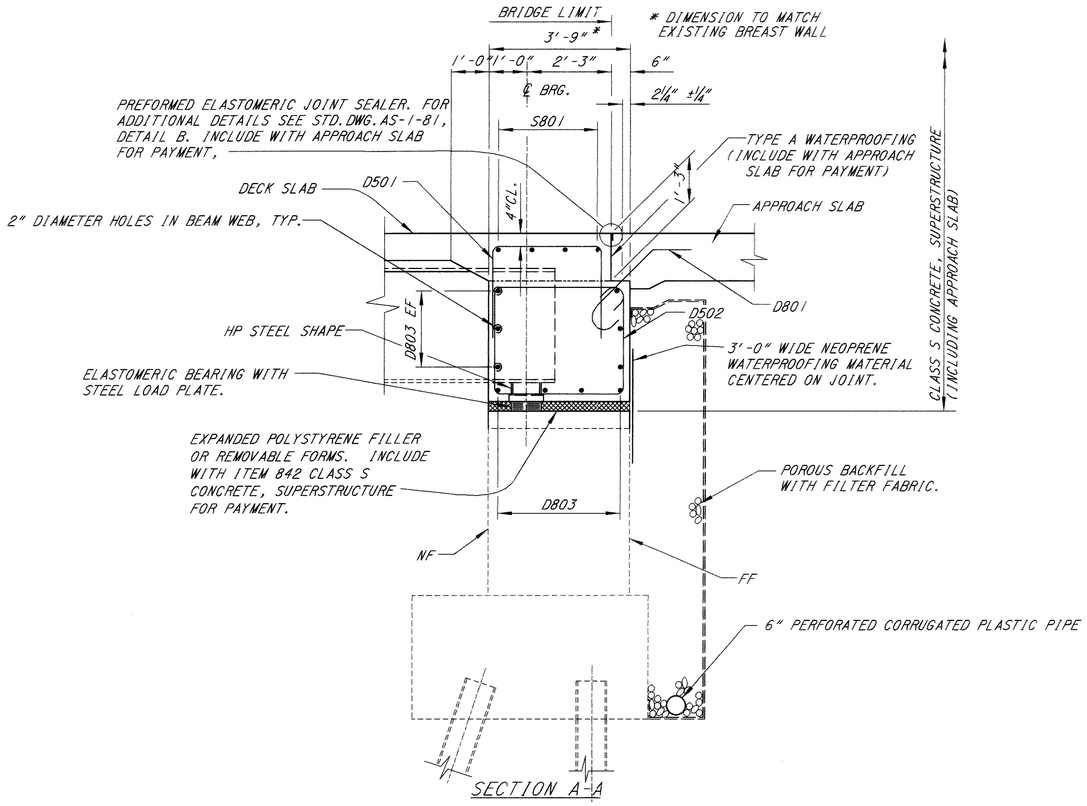

SECTION A-A

MINIMUM LAP LENGTHS:

S802 = 4'-6"
D802 = 4'-0"

NOTES:

1. FOR ADDITIONAL INFORMATION SEE STD. DWG. SICD-1-96.
2. WORK THIS SHEET WITH DECK PLAN SHEET 35 49 .
3. PEJF = PREFORMED EXPANSION JOINT FILLER.
   EF = EACH FACE
   NF = NEAR FACE
   FF = FAR FACE
4. ABUTMENT DIAPHRAGM CONCRETE, STEEL SUPERSTRUCTURE: THE CONCRETE ENCASING STRUCTURAL STEEL MEMBERS SUPPORTED IN SEMI-INTEGRAL AND INTEGRAL TYPE ABUTMENTS MAY BE PLACED BEFORE THE ACTUAL DECK CONCRETE IS PLACED. IF THE CONTRACTOR CHOOSES THIS OPTION THE CONCRETE SHALL HAVE HAD AT LEAST 48 HOURS OF SET TIME BEFORE DECK CONCRETE IS PLACED.
5. ABUTMENT DIAPHRAGM CONCRETE, STEEL SUPERSTRUCTURE, PHASED CONSTRUCTION: WHERE THE PLANS DETAIL A SEPARATE CLOSURE POUR SECTION BETWEEN CONSTRUCTION PHASES, THE CONCRETE IN THE ABUTMENT DIAPHRAGM SECTIONS OF THIS SEMI-INTEGRAL OR INTEGRAL ABUTMENT THAT ENCASES ANY STRUCTURAL STEEL MEMBERS OF AN INDIVIDUAL PHASE MAY BE PLACED EITHER SEPARATE OF OR WITH THE DECK CONCRETE OF THAT PHASE. IF THE CONTRACTOR CHOOSES TO PLACE THE DIAPHRAGM CONCRETE SEPARATELY, THE CONCRETE SHALL HAVE AT LEAST 48 HOURS OF SET TIME BEFORE DECK CONCRETE CAN BE PLACED. THE HORIZONTAL CONSTRUCTION JOINT BETWEEN THE DIAPHRAGM AND DECK CONCRETE SHOULD BE AT THE BOTTOM OF THE TOP FLANGE. IF NO SEPARATE CLOSURE POUR SECTION IS DETAILED BETWEEN PHASES THE ABUTMENT DIAPHRAGM CONCRETE SHALL BE POURED SIMULTANEOUSLY WITH THE DECK POUR TO ALLOW FOR EXPECTED DEAD LOAD ROTATION AT THE ABUTMENTS.

DESIGN AGENCY
BALKE ENGINEERS
1848 Summit Road
Cincinnati, Ohio 45237

DESIGNED	DRAWN	REVIEWED	DATE
FKL	WJH	CRS	6/01
CHECKED	REVISED	STRUCTURE FILE NUMBER	
MPS	—	120803 L.B. 120671 A.B.	

LEFT BRIDGE REAR ABUTMENT DIAPHRAGM DETAILS

BRIDGE NO. CLE-275-0618
OVER US 50 J

CLE-275-5.35

40/49

743/857

File name: 06LBRADIAPH.DGN

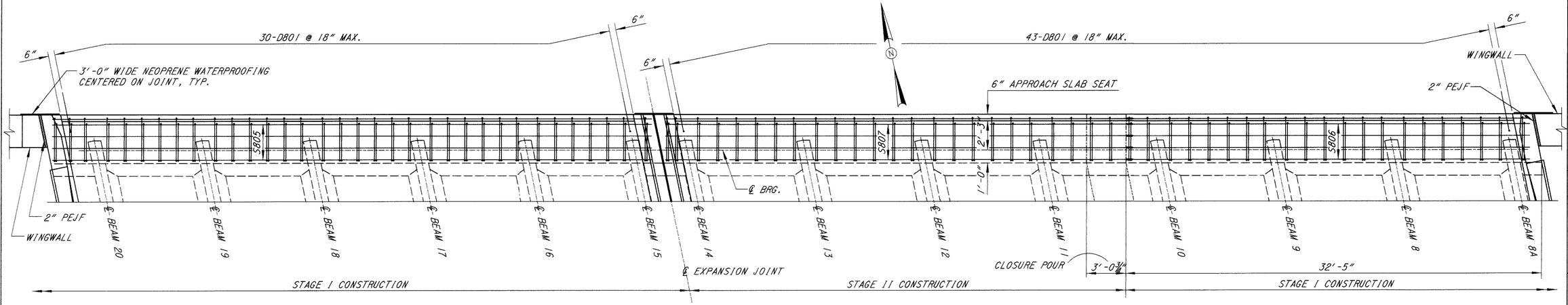

PLAN

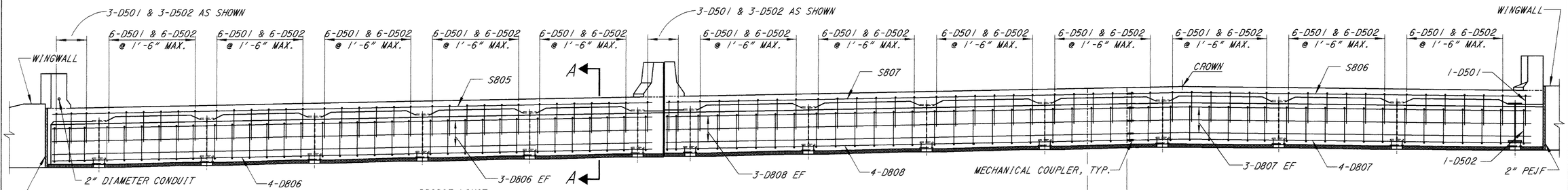

ELEVATION

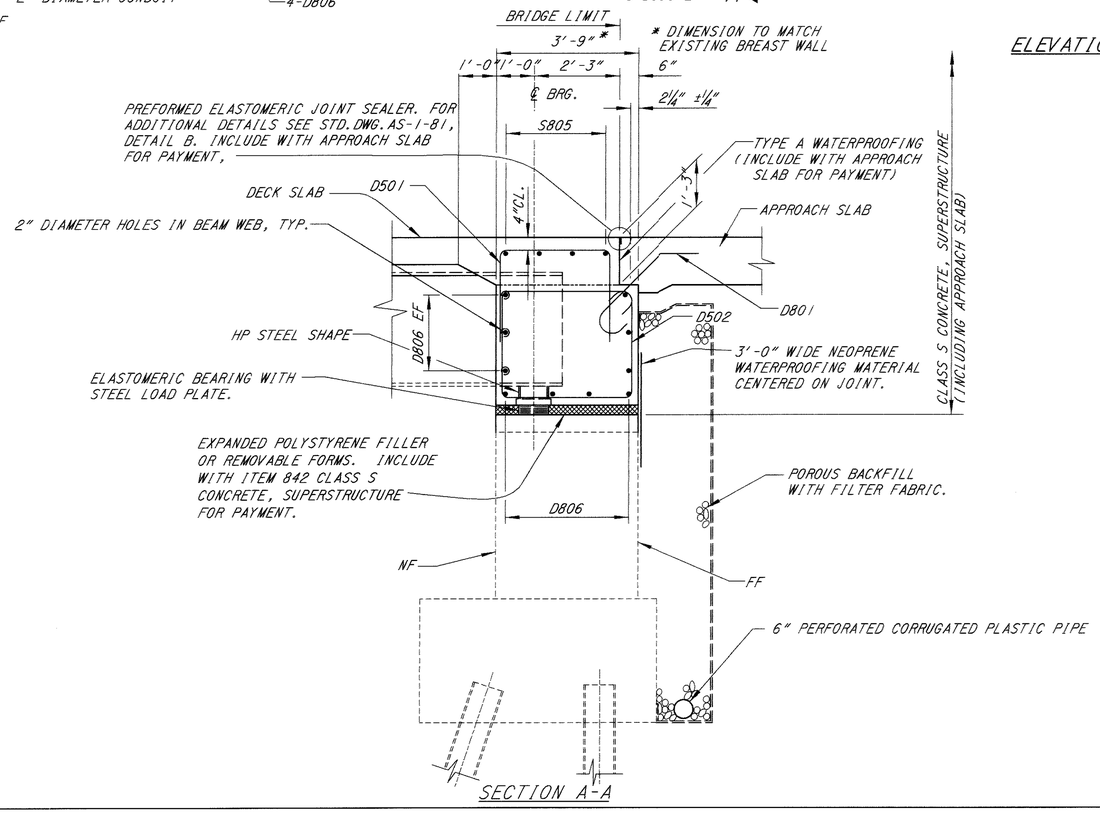

SECTION A-A

NOTES:
1. FOR ADDITIONAL INFORMATION SEE STD. DWG. SICD-1-96.
2. WORK THIS SHEET WITH DECK PLAN SHEET 37149
3. PEJF = PREFORMED EXPANSION JOINT FILLER.
   EF = EACH FACE
   NF = NEAR FACE
   FF = FAR FACE
4. ABUTMENT DIAPHRAGM CONCRETE, STEEL SUPERSTRUCTURE: THE CONCRETE ENCASING STRUCTURAL STEEL MEMBERS SUPPORTED IN SEMI-INTEGRAL AND INTEGRAL TYPE ABUTMENTS MAY BE PLACED BEFORE THE ACTUAL DECK CONCRETE IS PLACED. IF THE CONTRACTOR CHOOSES THIS OPTION THE CONCRETE SHALL HAVE HAD AT LEAST 48 HOURS OF SET TIME BEFORE DECK CONCRETE IS PLACED.
5. ABUTMENT DIAPHRAGM CONCRETE, STEEL SUPERSTRUCTURE, PHASED CONSTRUCTION: WHERE THE PLANS DETAIL A SEPARATE CLOSURE POUR SECTION BETWEEN CONSTRUCTION PHASES, THE CONCRETE IN THE ABUTMENT DIAPHRAGM SECTIONS OF THIS SEMI-INTEGRALOR INTEGRAL ABUTMENT THAT ENCASES ANY STRUCTURAL STEEL MEMBERS OF AN INDIVIDUAL PHASE MAY BE PLACED EITHER SEPARATE OF OR WITH THE DECK CONCRETE OF THAT PHASE. IF THE CONTRACTOR CHOOSES TO PLACE THE DIAPHRAGM CONCRETE SEPARATELY, THE CONCRETE SHALL HAVE AT LEAST 48 HOURS OF SET TIME BEFORE DECK CONCRETE CAN BE PLACED. THE HORIZONTAL CONSTRUCTION JOINT BETWEEN THE DIAPHRAGM AND DECK CONCRETE SHOULD BE AT THE BOTTOM OF THE TOP FLANGE. IF NO SEPARATE CLOSURE POUR SECTION IS DETAILED BETWEEN PHASES THE ABUTMENT DIAPHRAGM CONCRETE SHALL BE POURED SIMULTANEOUSLY WITH THE DECK POUR TO ALLOW FOR EXPECTED DEAD LOAD ROTATION AT THE ABUTMENTS.

DESIGN AGENCY
BALKE ENGINEERS
1848 Summit Road
Cincinnati, Ohio 45237

DESIGNED	DRAWN	REVIEWED	DATE
FKL	W.H	CRS	6/01
CHECKED	REVISED	STRUCTURE FILE NUMBER	
MPS	—	3025611 R.B.	

RIGHT BRIDGE REAR ABUTMENT DETAILS

BRIDGE NO. CLE-275-0618
OVER US 50 J

CLE-275-5.35

41 / 49

744
857

F:\Inroads-06\BRIDGE\ARH_dgn

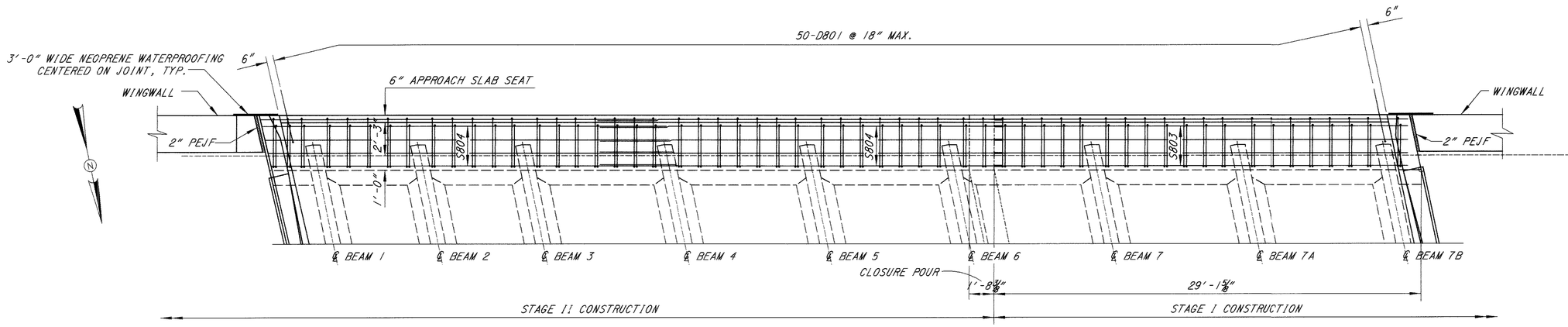

PLAN

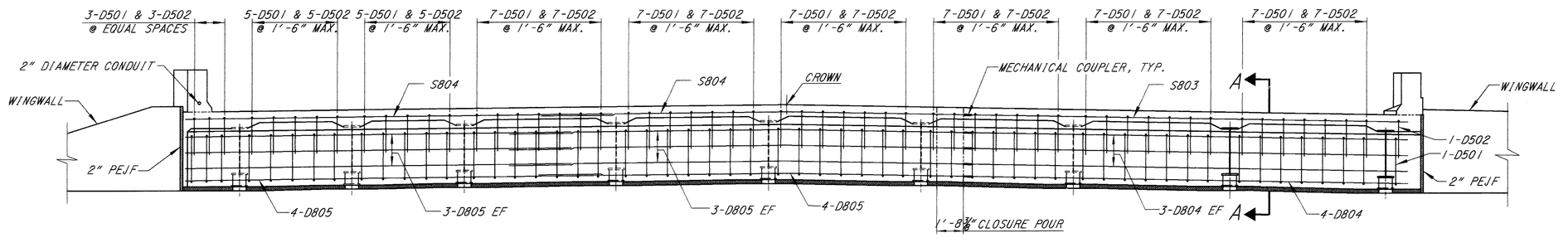

ELEVATION

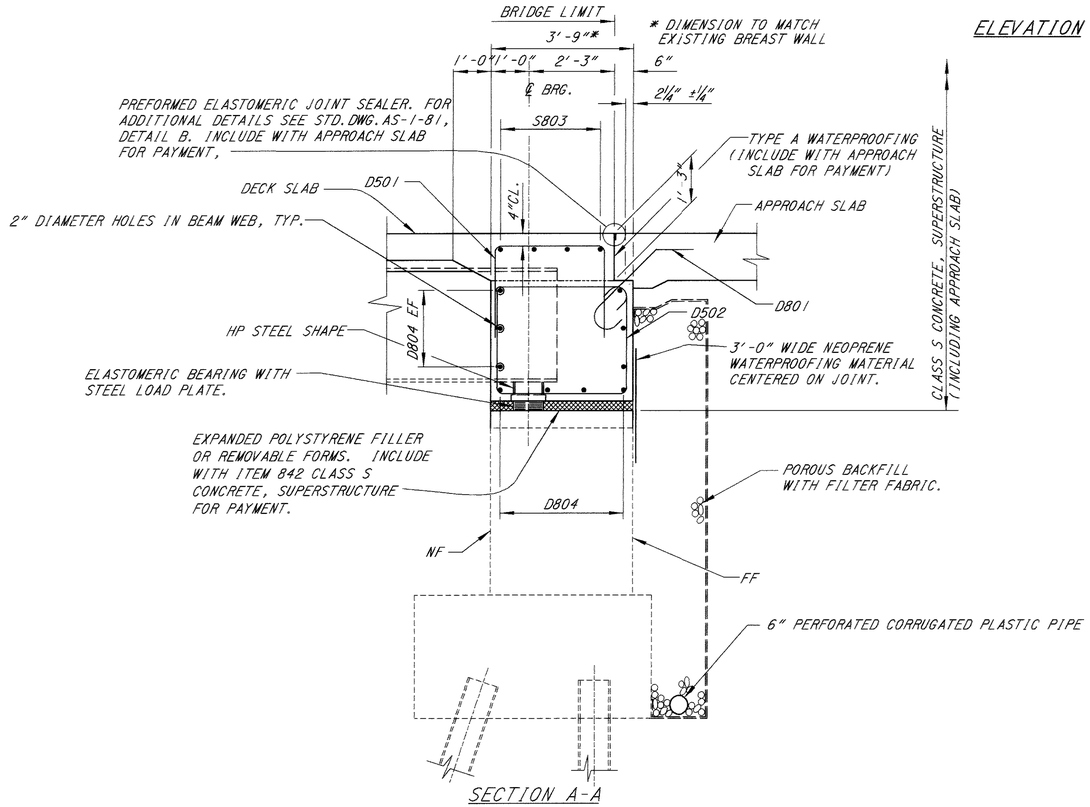

SECTION A-A

MINIMUM LAP LENGTHS:

S804 = 4'-6"
D805 = 4'-0"

NOTES:

1. FOR ADDITIONAL INFORMATION SEE STD. DWG. SICD-1-96.
2. WORK THIS SHEET WITH DECK PLAN SHEET 35 49.
3. PEJF = PREFORMED EXPANSION JOINT FILLER.
   EF = EACH FACE
   NF = NEAR FACE
   FF = FAR FACE
4. ABUTMENT DIAPHRAGM CONCRETE, STEEL SUPERSTRUCTURE: THE CONCRETE ENCASING STRUCTURAL STEEL MEMBERS SUPPORTED IN SEMI-INTEGRAL AND INTEGRAL TYPE ABUTMENTS MAY BE PLACED BEFORE THE ACTUAL DECK CONCRETE IS PLACED. IF THE CONTRACTOR CHOOSES THIS OPTION THE CONCRETE SHALL HAVE HAD AT LEAST 48 HOURS OF SET TIME BEFORE DECK CONCRETE IS PLACED.
5. ABUTMENT DIAPHRAGM CONCRETE, STEEL SUPERSTRUCTURE, PHASED CONSTRUCTION: WHERE THE PLANS DETAIL A SEPARATE CLOSURE POUR SECTION BETWEEN CONSTRUCTION PHASES, THE CONCRETE IN THE ABUTMENT DIAPHRAGM SECTIONS OF THIS SEMI-INTEGRAL OR INTEGRAL ABUTMENT THAT ENCASES ANY STRUCTURAL STEEL MEMBERS OF AN INDIVIDUAL PHASE MAY BE PLACED EITHER SEPARATE OF OR WITH THE DECK CONCRETE OF THAT PHASE. IF THE CONTRACTOR CHOOSES TO PLACE THE DIAPHRAGM CONCRETE SEPARATELY, THE CONCRETE SHALL HAVE AT LEAST 48 HOURS OF SET TIME BEFORE DECK CONCRETE CAN BE PLACED. THE HORIZONTAL CONSTRUCTION JOINT BETWEEN THE DIAPHRAGM AND DECK CONCRETE SHOULD BE AT THE BOTTOM OF THE TOP FLANGE. IF NO SEPARATE CLOSURE POUR SECTION IS DETAILED BETWEEN PHASES THE ABUTMENT DIAPHRAGM CONCRETE SHALL BE POURED SIMULTANEOUSLY WITH THE DECK POUR TO ALLOW FOR EXPECTED DEAD LOAD ROTATION AT THE ABUTMENTS.

DESIGN AGENCY
BALKE ENGINEERS
1848 Summit Road
Cincinnati, Ohio 45237

DESIGNED	DRAWN	REVIEWED	DATE
FKL	WJH	CRS	6/01
CHECKED	REVISED	STRUCTURE FILE NUMBER	
MPS	———	3036103 L.B. 3036111 A.B.	

LEFT BRIDGE FORWARD ABUTMENT DIAPHRAGM DETAILS

BRIDGE NO. CLE-275-0618
OVER US 50 /

CLE-275-5.35

42/49

745/857

F:\Bridges - DB\DB_DPAD\ABPH_DSN

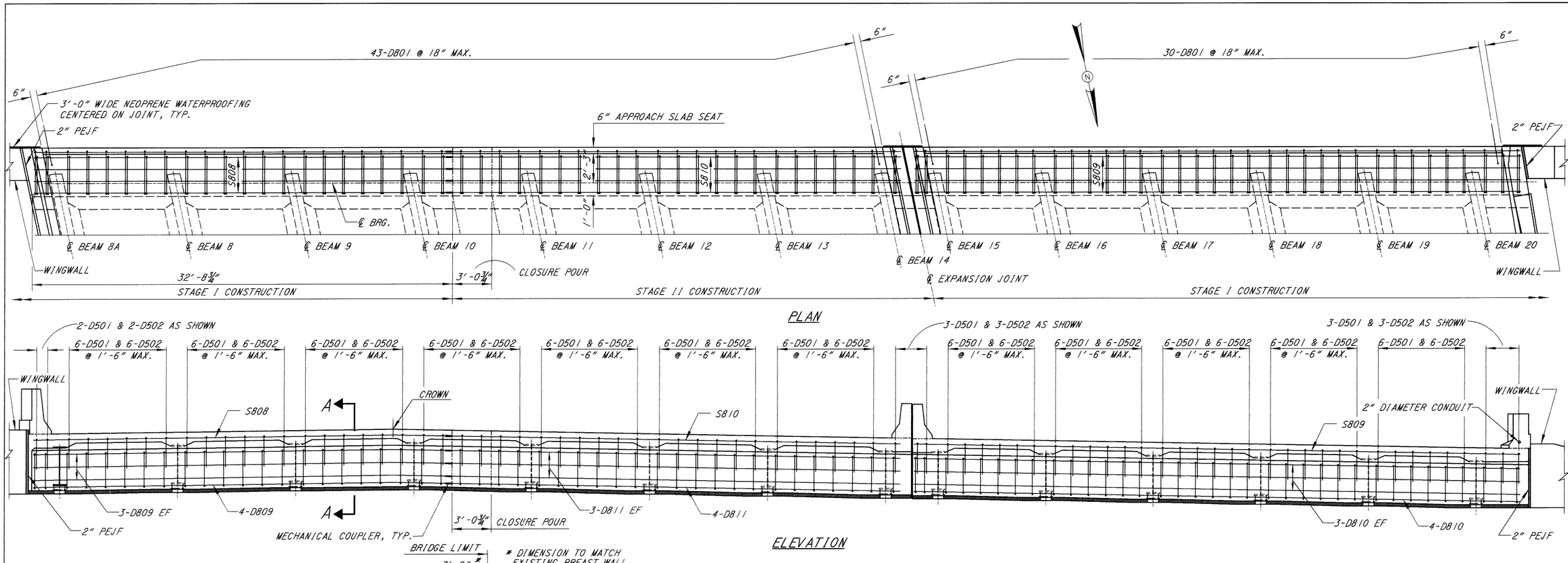

PLAN

ELEVATION

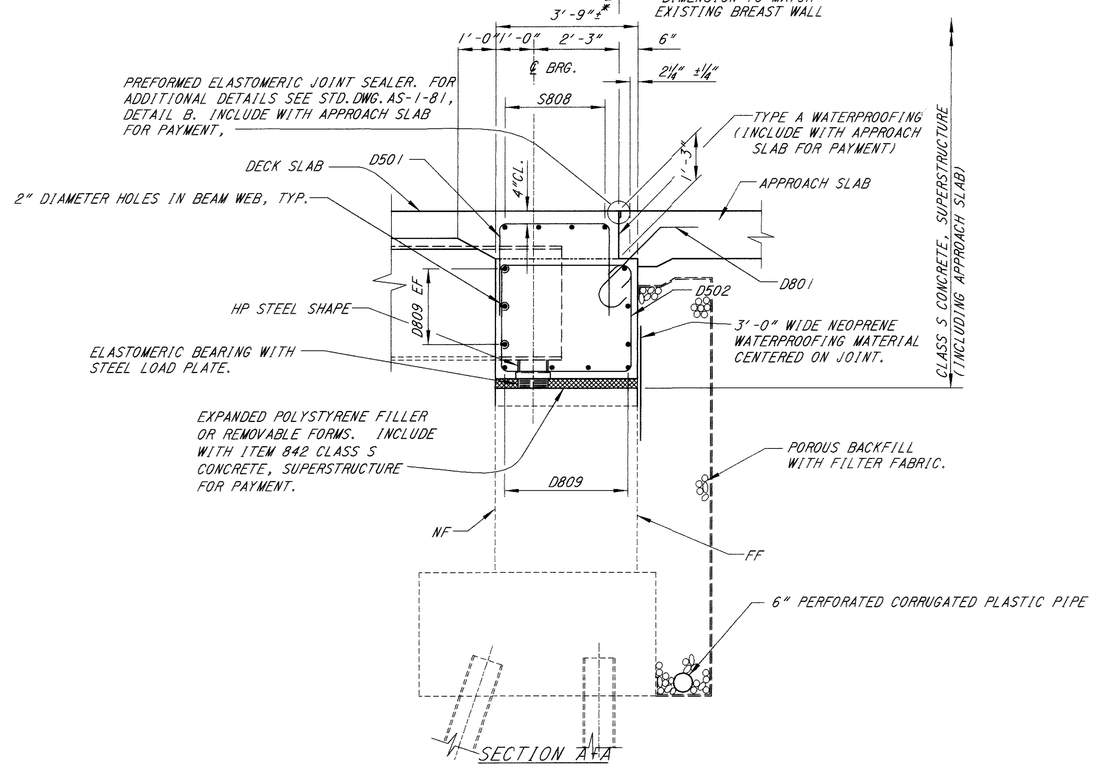

SECTION A-A

NOTES:
1. FOR ADDITIONAL INFORMATION SEE STD. DWG. SICD-1-96.
2. WORK THIS SHEET WITH DECK PLAN SHEET 37 49
3. PEJF = PREFORMED EXPANSION JOINT FILLER.
   EF = EACH FACE
   NF = NEAR FACE
   FF = FAR FACE
4. ABUTMENT DIAPHRAGM CONCRETE, STEEL SUPERSTRUCTURE: THE CONCRETE ENCASING STRUCTURAL STEEL MEMBERS SUPPORTED IN SEMI-INTEGRAL AND INTEGRAL TYPE ABUTMENTS MAY BE PLACED BEFORE THE ACTUAL DECK CONCRETE IS PLACED. IF THE CONTRACTOR CHOOSES THIS OPTION THE CONCRETE SHALL HAVE HAD AT LEAST 48 HOURS OF SET TIME BEFORE DECK CONCRETE IS PLACED.
5. ABUTMENT DIAPHRAGM CONCRETE, STEEL SUPERSTRUCTURE, PHASED CONSTRUCTION: WHERE THE PLANS DETAIL A SEPARATE CLOSURE POUR SECTION BETWEEN CONSTRUCTION PHASES, THE CONCRETE IN THE ABUTMENT DIAPHRAGM SECTIONS OF THIS SEMI-INTEGRALOR INTEGRAL ABUTMENT THAT ENCASES ANY STRUCTURAL STEEL MEMBERS OF AN INDIVIDUAL PHASE MAY BE PLACED EITHER SEPARATE OF OR WITH THE DECK CONCRETE OF THAT PHASE. IF THE CONTRACTOR CHOOSES TO PLACE THE DIAPHRAGM CONCRETE SEPARATELY, THE CONCRETE SHALL HAVE AT LEAST 48 HOURS OF SET TIME BEFORE DECK CONCRETE CAN BE PLACED. THE HORIZONTAL CONSTRUCTION JOINT BETWEEN THE DIAPHRAGM AND DECK CONCRETE SHOULD BE AT THE BOTTOM OF THE TOP FLANGE. IF NO SEPARATE CLOSURE POUR SECTION IS DETAILED BETWEEN PHASES THE ABUTMENT DIAPHRAGM CONCRETE SHALL BE POURED SIMULTANEOUSLY WITH THE DECK POUR TO ALLOW FOR EXPECTED DEAD LOAD ROTATION AT THE ABUTMENTS.

DESIGN AGENCY
BALKE ENGINEERS
1848 Summit Road
Cincinnati, Ohio 45237

DESIGNED	DRAWN	REVIEWED	DATE
FKL	WJH	CRS	6/01
CHECKED	REVISED	STRUCTURE FILE NUMBER	
MPS	—	3026311 P.A. 3026311 R.B.	

RIGHT BRIDGE FORWARD ABUTMENT DETAILS
BRIDGE NO. CLE-275-0618
OVER US 50 J

CLE-275-5.35

43/49

746/857

File name: DETAILS1.dgn

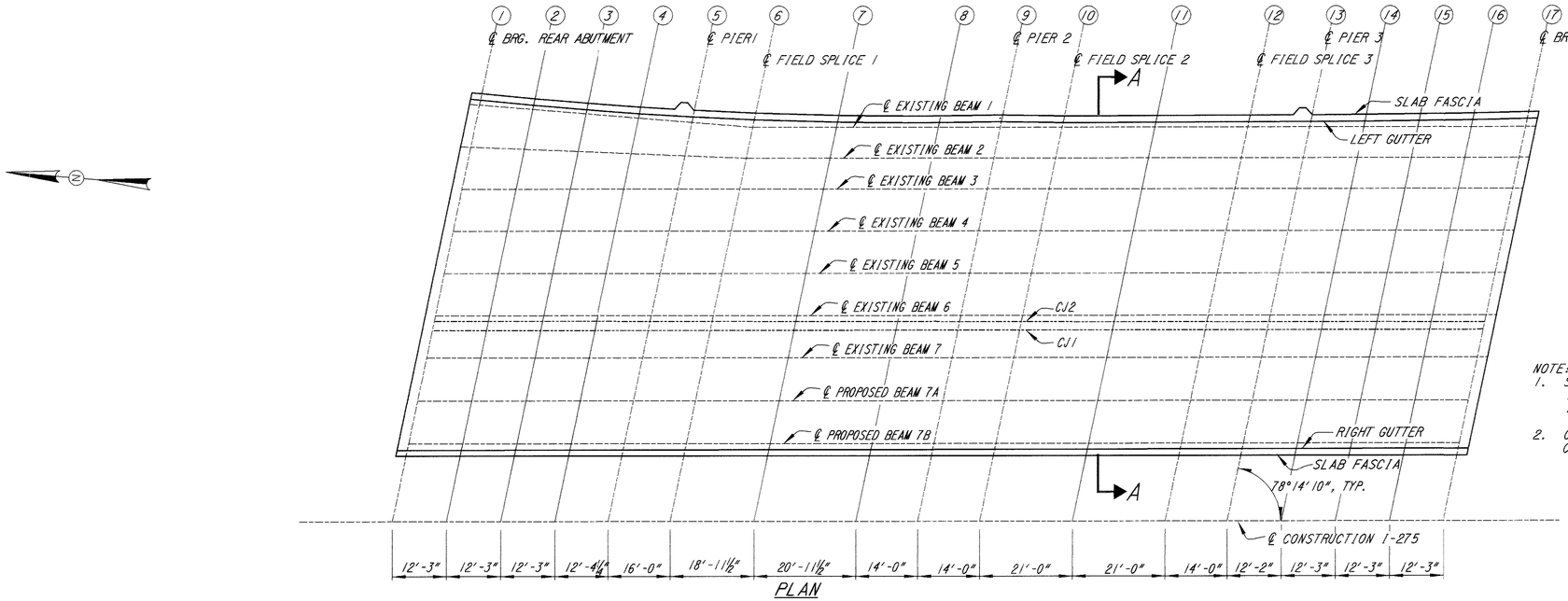

PLAN

NOTE:
1. SCREED ELEVATIONS SHOWN ARE FOR THE DECK SLAB SURFACE PRIOR TO CONCRETE PLACEMENT. ALLOWANCE HAS BEEN MADE FOR ANTICIPATED CALCULATED DEAD LOAD DEFLECTIONS.
2. CJ 1 = STAGE I CONSTRUCTION
   CJ 2 = STAGE II CONSTRUCTION

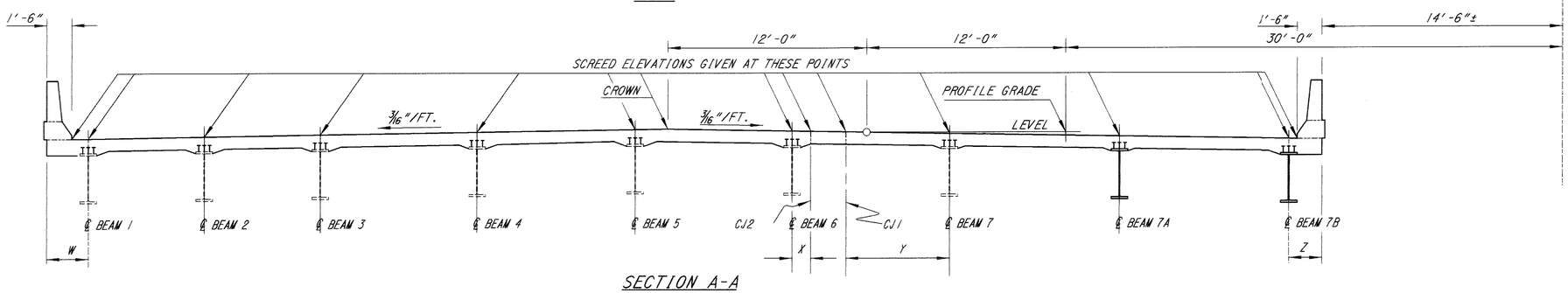

SECTION A-A

SCREED ELEVATIONS

LOCATION	LEFT GUTTER	BEAM 1	BEAM 2	BEAM 3	BEAM 4	BEAM 5	CROWN	BEAM 6	CJ 2	CJ 1	BEAM 7	BEAM 7A	BEAM 7B	RIGHT GUTTER
GRID LINE 1	546.79	546.80	546.92	547.04	547.16	547.28	547.30	547.15	547.13	547.09	546.98	546.79	546.61	546.59
GRID LINE 2	547.12	547.14	547.08	547.23	547.35	547.64	547.66	547.51	547.50	547.46	547.34	547.12	546.94	546.92
GRID LINE 3	547.36	547.38	547.52	547.64	547.76	547.88	547.90	547.75	547.73	547.69	547.58	547.34	547.16	547.14
GRID LINE 4	547.45	547.47	547.59	547.69	547.81	547.93	547.95	547.80	547.78	547.74	547.63	547.42	547.24	547.22
GRID LINE 5	547.54	547.55	547.64	547.74	547.86	547.98	548.00	547.85	547.84	547.80	547.68	547.50	547.31	547.30
GRID LINE 6	548.09	548.11	548.27	548.34	548.46	548.58	548.60	548.46	548.44	548.40	548.28	548.02	541.84	547.82
GRID LINE 7	548.56	548.58	548.79	548.87	548.99	549.11	549.12	548.98	548.96	548.92	548.80	548.50	548.31	548.29
GRID LINE 8	548.71	548.73	548.90	548.98	549.10	549.22	549.24	549.09	549.07	549.03	548.91	548.64	548.46	548.44
GRID LINE 9	548.55	548.56	548.65	548.74	548.86	548.98	549.00	548.85	548.83	548.80	548.68	548.49	548.31	548.29
GRID LINE 10	548.95	548.97	549.10	549.19	549.31	549.43	549.45	549.30	549.28	549.25	549.13	548.89	548.71	548.69
GRID LINE 11	549.55	549.57	549.78	549.87	549.99	550.11	550.13	549.98	549.96	549.92	549.80	549.49	549.31	549.29
GRID LINE 12	549.60	549.62	549.77	549.86	549.98	550.10	550.11	549.96	549.95	549.91	549.79	549.54	549.36	549.34
GRID LINE 13	549.56	549.57	549.66	549.75	549.87	549.99	550.00	549.85	549.83	549.80	549.67	549.49	549.31	549.29
GRID LINE 14	549.83	549.84	549.96	550.04	550.16	550.28	550.30	550.15	550.13	550.10	549.97	549.77	549.58	549.57
GRID LINE 15	550.10	550.12	550.25	550.34	550.46	550.58	550.60	550.44	550.43	550.39	550.27	550.04	549.86	549.84
GRID LINE 16	550.22	550.24	550.36	550.45	550.57	550.69	550.71	550.55	550.53	550.50	550.38	550.16	549.98	549.96
GRID LINE 17	550.24	550.26	550.35	550.44	550.56	550.68	550.69	550.54	550.52	550.49	550.36	550.18	550.00	549.98

DIMENSION

W	X	Y	Z
2'-7½"	0'-9½"	6'-4½"	2'-6⅞"
2'-5"	1'-0"	6'-4⅝"	2'-6⅞"
2'-4½"	1'-0"	6'-4¾"	2'-6⅞"
2'-5¾"	1'-0"	6'-4¾"	2'-6⅞"
2'-9"	1'-0"	6'-4¾"	2'-6⅞"
3'-1¼"	1'-0"	6'-4⅞"	2'-6⅞"
2'-7½"	1'-0"	6'-5¼"	2'-6¾"
2'-6⅝"	1'-0"	6'-5¼"	2'-5⅞"
2'-8½"	1'-0"	6'-5¼"	2'-6⅞"
2'-6¼"	1'-0"	6'-5½"	2'-6⅞"
2'-6¾"	1'-0"	6'-5⅝"	2'-5⅞"
2'-7½"	1'-0"	6'-6⅝"	2'-4⅞"
2'-8⅛"	1'-0"	6'-7¼"	2'-5⅛"
2'-9"	1'-0"	6'-7¾"	2'-4½"
2'-10½"	1'-0"	6'-8½"	2'-3¾"
3'-0⅞"	1'-0"	6'-9¼"	2'-3⅛"
3'-3¾"	1'-2⅛"	6'-10⅛"	2'-2¼"

DESIGN AGENCY
BALKE ENGINEERS
1848 SUMMIT ROAD
CINCINNATI, OHIO 45237

DESIGNED	DRAWN	REVIEWED	DATE
FAL	ALH	CRS	6/01
CHECKED	REVISED	STRUCTURE FILE NUMBER	
MPS	—	1306601 LT. 1306611 RT.	

LEFT BRIDGE SCREED ELEVATIONS
BRIDGE NO. CLE-275-0618
OVER US 50 /

CLE-275-5.35

44/49

747
857

FILENAME: 0618SCREED.DGN

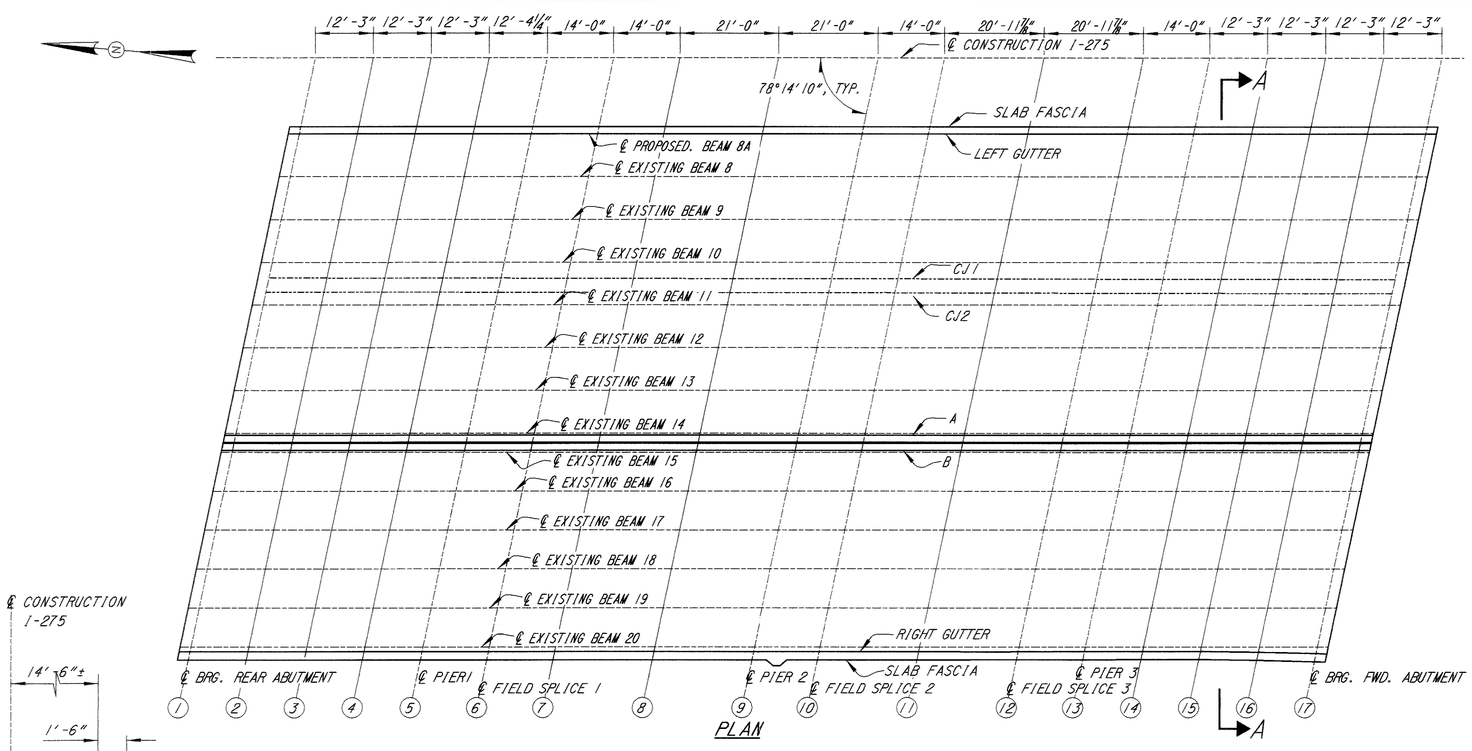

PLAN

DIMENSIONS						
LOCATION	U	V	W	X	Y	Z
GRID LINE 1	1'-11⅞"	2'-9"	3'-3"	1'-11¼"	1'-11"	3'-7¾"
GRID LINE 2	2'-0⅛"	2'-9"	3'-3"	1'-11⅛"	1'-11⅛"	3'-8"
GRID LINE 3	2'-0¼"	2'-9"	3'-3"	1'-11"	1'-11¼"	3'-8¼"
GRID LINE 4	2'-0½"	2'-9"	3'-3"	1'-10⅞"	1'-11⅜"	3'-8½"
GRID LINE 5	1'-11⅞"	2'-9"	3'-3"	1'-10⅞"	1'-11⅛"	3'-7¾"
GRID LINE 6	2'-0⅛"	2'-9"	3'-3"	1'-10⅞"	1'-11¼"	3'-8"
GRID LINE 7	2'-0⅜"	2'-9"	3'-3"	1'-10¾"	1'-11⅜"	3'-8⅜"
GRID LINE 8	2'-0⅝"	2'-9"	3'-3"	1'-10½"	1'-11⅝"	3'-8¾"
GRID LINE 9	1'-11¾"	2'-9"	3'-3"	1'-10⅝"	1'-11⅜"	3'-7¾"
GRID LINE 10	2'-0"	2'-9"	3'-3"	1'-10¾"	1'-11½"	3'-8"
GRID LINE 11	2'-0¼"	2'-9"	3'-3"	1'-10⅝"	1'-11¾"	3'-8½"
GRID LINE 12	2'-0⅜"	2'-9"	3'-3"	1'-10⅜"	2'-0"	3'-8⅞"
GRID LINE 13	2'-1⅛"	2'-9"	3'-3"	1'-10⅛"	2'-0⅛"	3'-7½"
GRID LINE 14	2'-1⅜"	2'-9"	3'-3"	1'-10"	2'-0¼"	3'-7¾"
GRID LINE 15	2'-1½"	2'-9"	3'-3"	1'-9⅞"	2'-0⅜"	3'-8"
GRID LINE 16	2'-1¾"	2'-9"	3'-3"	1'-9¾"	2'-0½"	3'-8¼"
GRID LINE 17	2'-3¾"	2'-9"	3'-3"	1'-8⅝"	2'-1⅝"	3'-11⅛"

NOTE:
1. SCREED ELEVATIONS SHOWN ARE FOR THE DECK SLAB SURFACE PRIOR TO CONCRETE PLACEMENT. ALLOWANCE HAS BEEN MADE FOR ANTICIPATED CALCULATED DEAD LOAD DEFLECTIONS.
2. CJ1 = STAGE 1 CONSTRUCTION JOINT
   CJ2 = STAGE 2 CONSTRUCTION JOINT

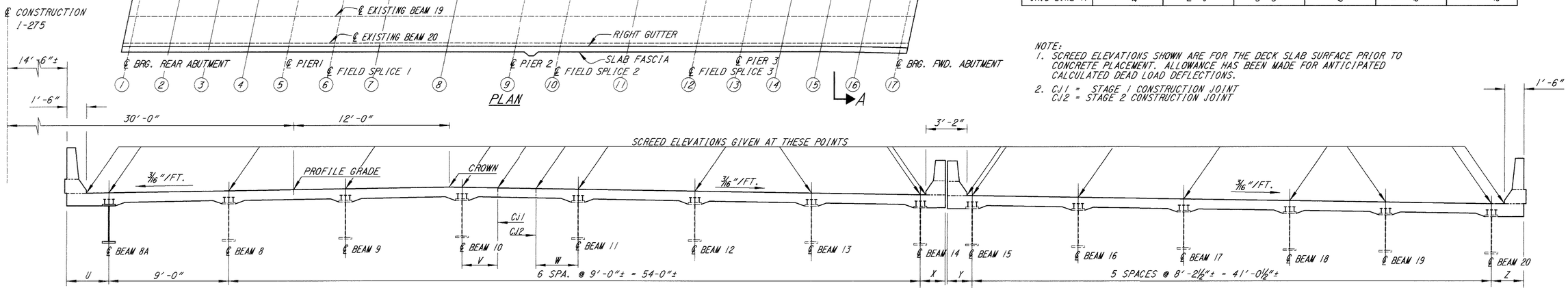

SECTION A-A

SCREED ELEVATIONS																				
LOCATION	LEFT GUTTER	BEAM 8A	BEAM 8	BEAM 9	CROWN	BEAM 10	CJ1	CJ2	BEAM 11	BEAM 12	BEAM 13	BEAM 14	A	B	BEAM 15	BEAM 16	BEAM 17	BEAM 18	BEAM 19	BEAM 20	RIGHT GUTTER
GRID LINE 1	546.28	546.29	546.40	546.52	546.61	546.59	546.53	546.48	546.42	546.25	546.08	545.92	545.91	545.85	545.84	545.69	545.54	545.38	545.23	545.08	545.04
GRID LINE 2	546.61	546.61	546.77	546.88	546.97	546.95	546.90	546.84	546.78	546.61	546.45	546.24	546.23	546.17	546.17	546.05	545.90	545.75	545.59	545.41	545.37
GRID LINE 3	546.78	546.79	546.94	547.05	547.15	547.12	547.07	547.02	546.95	546.79	546.62	546.42	546.41	546.35	546.34	546.23	546.07	545.92	545.77	545.58	545.54
GRID LINE 4	546.86	546.86	546.99	547.10	547.20	547.17	547.12	547.06	547.00	546.84	546.67	546.49	546.48	546.42	546.42	546.28	546.12	545.97	545.82	545.65	545.61
GRID LINE 5	546.98	546.99	547.10	547.22	547.31	547.29	547.23	547.18	547.12	546.95	546.78	546.62	546.61	546.55	546.54	546.39	546.24	546.08	545.93	545.78	545.74
GRID LINE 6	547.43	547.44	547.61	547.73	547.82	547.80	547.75	547.69	547.63	547.46	547.30	547.07	547.06	547.00	546.99	546.90	546.75	546.60	546.44	546.23	546.19
GRID LINE 7	547.83	547.84	548.06	548.18	548.27	548.25	548.20	548.14	548.08	547.91	547.74	547.47	547.46	547.40	547.39	547.35	547.20	547.05	546.89	546.63	546.59
GRID LINE 8	547.98	547.99	548.18	548.29	548.39	548.36	548.31	548.25	548.19	548.02	547.86	547.61	547.61	547.55	547.54	547.46	547.31	547.16	547.01	546.78	546.74
GRID LINE 9	547.98	547.99	548.10	548.21	548.31	548.28	548.23	548.18	547.11	547.95	547.78	547.61	547.61	547.55	547.54	547.39	547.23	547.08	546.93	546.78	546.74
GRID LINE 10	548.33	548.34	548.49	548.60	548.70	548.67	548.62	548.56	548.50	548.33	548.17	547.96	547.96	547.90	547.89	547.77	547.62	547.47	547.31	547.13	547.09
GRID LINE 11	548.88	548.88	549.10	549.21	549.31	549.28	549.23	549.17	549.11	548.95	548.78	548.51	548.50	548.45	548.44	548.38	548.23	548.08	547.93	547.67	547.63
GRID LINE 12	548.98	548.98	549.15	549.26	549.36	549.33	549.28	549.22	549.16	548.99	548.83	548.61	548.60	548.54	548.53	548.43	548.28	548.13	547.97	547.77	547.73
GRID LINE 13	548.98	548.98	549.10	549.21	549.30	548.27	549.22	549.17	548.10	547.94	548.77	548.61	548.60	548.54	548.53	548.38	548.23	548.07	547.92	547.77	547.73
GRID LINE 14	549.25	549.26	549.40	549.51	549.60	549.57	549.52	549.47	549.41	549.24	549.07	548.88	548.87	548.81	548.80	548.68	548.52	548.37	548.22	548.04	548.00
GRID LINE 15	549.53	549.53	549.70	549.81	549.90	549.87	549.82	549.77	549.70	549.54	549.37	549.15	549.15	549.09	549.08	548.97	548.82	548.67	548.52	548.32	548.28
GRID LINE 16	549.65	549.66	549.81	549.93	550.02	549.99	549.93	549.88	549.82	549.65	549.48	549.28	549.27	549.21	549.20	549.09	548.94	548.78	548.63	548.44	548.40
GRID LINE 17	549.67	549.68	549.80	549.91	550.00	549.97	549.92	549.86	549.80	549.63	549.47	549.30	549.29	549.24	549.22	549.07	548.92	548.77	548.61	548.46	548.42

DESIGN AGENCY
BALKE ENGINEERS
1848 SUMMIT ROAD
CINCINNATI, OHIO 45237

DESIGNED	DRAWN	REVIEWED	DATE
FKL	ALH	CBS	6/01
CHECKED	REVISED	STRUCTURE FILE NUMBER 1306603 J.B. 1306611 REF.	
MKS	—		

RIGHT BRIDGE SCREED ELEVATIONS
BRIDGE NO. CLE-275-0618
OVER US 50 J

CLE-275-5.35

45/49

748
857

FILENAME=.\RBSCHEED.DGN

REAR ABUTMENT REINFORCING STEEL LIST

MARK	NUMBER LEFT BRIDGE	NUMBER RIGHT BRIDGE	NUMBER TOTAL	LENGTH	TYPE	DIMENSIONS A	B	C	D	E	INC.
A801	2	---	2	33'-8"	STR.						
A802	2	---	2	34'-0"	STR.						
A803	2	---	2	34'-6"	STR.						
A804	2	---	2	34'-10"	STR.						
A805	4	---	4	8'-10"	STR.						
A806	4	---	4	8'-6"	STR.						
A807	12	12	24	6'-0"	STR.						
A808	---	2	2	10'-0"	STR.						
A809	---	2	2	10'-6"	STR.						
A810	---	2	2	10'-9"	STR.						
A811	---	2	2	11'-3"	STR.						
A812	---	2	2	23'-6"	STR.						
A813	---	2	2	23'-0"	STR.						
A814	---	2	2	22'-9"	STR.						
A815	---	2	2	22'-3"	STR.						
A501	37	28	65	17'-7"	3	5'-11"	2'-7"	---	---	---	---
A502	---	2	2	13'-4"	2	5'-6"	2'-7"	---	---	---	---
A503	12	---	12	19'-1"	2	8'-7"	2'-2"	---	---	---	---
A504	1	---	1	7'-4"	1	3'-0"	4'-5"	---	---	---	---
A505	16	---	16	21'-3"	3	3'-5"	6'-11"	---	---	---	---
A506	12	---	12	11'-5"	2	4'-9"	2'-2"	---	---	---	---
A507	1	---	1	6'-1"	1	2'-2"	4'-0"	---	---	---	---
A508	2	3	5	11'-2"	2	4'-0"	3'-5"	---	---	---	---
A509	8	---	8	17'-0"	STR.	---	---	---	---	---	---
A510	10	---	10	20'-6"	STR.	---	---	---	---	---	---
A511	8	---	8	13'-9"	STR.	---	---	---	---	---	---
A512	84	106	190	4'-1"	1	1'-9"	2'-6"	---	---	---	---
A513	8	8	16	19'-5"	2	8'-9"	2'-2"	---	---	---	---
A514	4	4	8	13'-1"	2	5'-7"	2'-2"	---	---	---	---
A515	1	1	2	11'-5"	2	4'-9"	2'-2"	---	---	---	---
	1	1	2	5'-1"		1'-7"					
A516	SERIES OF	SERIES OF	SERIES OF	TO	2	TO	2'-2"	---	---	---	8"
	11	11	11	11'-5"		4'-9"					
A517	8	---	8	14'-9"	STR.	---	---	---	---	---	---
A518	4	---	4	4'-6"	STR.	---	---	---	---	---	---
A519	2	---	2	14'-0"	STR.	---	---	---	---	---	---
A520	2	---	2	13'-0"	STR.	---	---	---	---	---	---
A521	2	---	2	7'-6"	STR.	---	---	---	---	---	---
A522	2	---	2	13'-9"	19	12'-6"	1'-3"	0'-4"	1'-3"	---	---
A523	---	8	8	16'-0"	STR.	---	---	---	---	---	---
A524	---	2	2	13'-11"	STR.	---	---	---	---	---	---
A525	---	2	2	13'-7"	STR.	---	---	---	---	---	---
A526	---	2	2	7'-6"	STR.	---	---	---	---	---	---
A527	---	2	2	14'-3"	19	13'-0"	1'-3"	0'-4"	1'-3"	---	---
A528	---	3	3	5'-2"	19	3'-6"	0'-4"	1'-6"	1'-6"	---	---
A529	---	4	4	1'-6"	STR.	---	---	---	---	---	---
A530	---	6	6	23'-9"	3	3'-5"	8'-2"	---	---	---	---
A531	---	13	13	23'-3"	2	10'-0"	3'-5"	---	---	---	---
A532	---	2	2	13'-8"	2	5'-3"	3'-5"	---	---	---	---
A533	---	13	13	11'-5"	2	4'-9"	2'-2"	---	---	---	---
A534	---	10	10	16'-6"	STR.	---	---	---	---	---	---
A535	---	12	12	9'-0"	STR.	---	---	---	---	---	---
A536	---	8	8	14'-3"	STR.	---	---	---	---	---	---

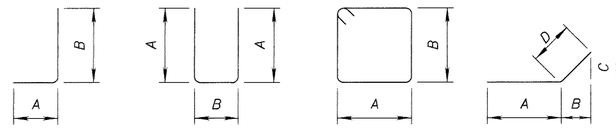

NOTES:

1. ALL DIMENSIONS ARE OUT TO OUT OF BAR.
2. ALL REINFORCING STEEL SHALL BE EPOXY COATED.
3. REINFORCING STEEL: NEW REINFORCING STEEL MAY REQUIRE FIELD CUTTING OR BENDING TO BE PROPERLY FITTED. PAYMENT SHALL BE INCLUDED IN THE APPLICABLE CONCRETE ITEM.

DESIGN AGENCY
BALKE ENGINEERS
1848 Summit Road
Cincinnati, Ohio 45237

DESIGNED	DRAWN	REVIEWED	DATE
MRS	WJH	CAS	6/01
CHECKED	REVISED	STRUCTURE FILE NUMBER	
FKL	---	1308807 / R.B.	

REINFORCING STEEL LIST
BRIDGE NO. CLE-275-0618
OVER US 50 J

CLE-275-5.35

749
857

F:\Projects\05-1308\CAD\...dgn

FORWARD ABUTMENT REINFORCING STEEL LIST

MARK	NUMBER			LENGTH	TYPE	DIMENSIONS					
	LEFT BRIDGE	RIGHT BRIDGE	TOTAL			A	B	C	D	E	INC.
B801	2	---	2	8'-8"	STR.						
B802	2	---	2	9'-2"	STR.						
B803	2	---	2	9'-7"	STR.						
B804	2	---	2	10'-0"	STR.						
B805	2	---	2	34'-9"	STR.						
B806	2	---	2	34'-3"	STR.						
B807	2	---	2	33'-9"	STR.						
B808	2	---	2	33'-6"	STR.						
B809	12	12	24	6'-0"	STR.						
B810	---	2	2	22'-0"	STR.						
B811	---	2	2	22'-6"	STR.						
B812	---	2	2	23'-0"	STR.						
B813	---	2	2	23'-3"	STR.						
B814	---	2	2	10'-3"	STR.						
B815	---	2	2	10'-0"	STR.						
B816	---	2	2	9'-9"	STR.						
B817	---	2	2	9'-3"	STR.						
B501	38	29	67	17'-7"	3	5'-11"	2'-7"				
B502	2	1	3	13'-4"	2	5'-6"	2'-7"				
B503	9	---	9	19'-1"	2	8'-7"	2'-2"	---	---	---	---
B504	4	---	4	13'-5"	2	5'-9"	2'-2"	---	---	---	---
B505	1	---	1	11'-8"	2	4'-3"	3'-5"	---	---	---	---
	1	1	2	4'-11"		1'-6"					
B506	SERIES OF	SERIES OF	SERIES OF	TO	2	TO	2'-2"	---	---	---	7"
	11	11	11	10'-9"		4'-5"					
B507	2	---	2	11'-5"	2	4'-9"	2'-2"	---	---	---	---
B508	4	---	4	15'-3"	STR.	---	---	---	---	---	---
B509	4	---	4	14'-9"	STR.	---	---	---	---	---	---
B510	8	---	8	5'-0"	STR.	---	---	---	---	---	---
B511	2	8	10	13'-9"	STR.	---	---	---	---	---	---
B512	2	---	2	13'-0"	STR.	---	---	---	---	---	---
B513	2	---	2	7'-0"	STR.	---	---	---	---	---	---
B514	2	---	2	14'-0"	19	13'-0"	1'-0"	0'-3"	1'-0"	---	---
B515	72	132	204	4'-1"	1	1'-9"	2'-6"	---	---	---	---
B516	16	---	16	21'-5"	3	3'-5"	7'-0"	---	---	---	---
B517	13	---	13	19'-1"	2	8'-7"	2'-2"	---	---	---	---
B518	1	---	1	11'-2"	2	4'-0"	3'-5"	---	---	---	---
B519	13	---	13	10'-11"	2	4'-6"	2'-2"	---	---	---	---
B520	10	---	10	20'-4"	STR.	---	---	---	---	---	---
B521	8	---	8	17'-6"	STR.	---	---	---	---	---	---
B522	8	---	8	14'-4"	STR.	---	---	---	---	---	---
B523	---	12	12	21'-11"	2	10'-0"	2'-2"	---	---	---	---
B524	---	6	6	23'-11"	3	8'-3"	3'-5"	---	---	---	---
B525	---	1	1	7'-10"	1	3'-5"	4'-6"	---	---	---	---
B526	---	1	1	8'-8"	1	3'-5"	5'-4"	---	---	---	---
B527	---	1	1	13'-10"	2	5'-4"	3'-5"	---	---	---	---
B528	---	12	12	11'-5"	2	4'-9"	2'-2"	---	---	---	---
B529	---	10	10	17'-0"	STR.	---	---	---	---	---	---
B530	---	12	12	9'-0"	STR.	---	---	---	---	---	---
B531	---	9	9	19'-5"	2	8'-9"	2'-2"	---	---	---	---
B532	---	4	4	13'-3"	2	5'-8"	2'-2"	---	---	---	---
B533	---	3	3	11'-4"	2	4'-1"	3'-5"	---	---	---	---
B534	---	2	2	11'-5"	2	4'-9"	2'-2"	---	---	---	---
B535	---	2	2	13'-9"	19	12'-0"	1'-8"	0'-5"	1'-9"	---	---
B536	---	7	7	1'-6"	STR.	---	---	---	---	---	---
B537	---	4	4	15'-9"	STR.	---	---	---	---	---	---
B538	---	4	4	16'-3"	STR.	---	---	---	---	---	---
B539	---	2	2	13'-8"	STR.	---	---	---	---	---	---
B540	---	2	2	12'-9"	STR.	---	---	---	---	---	---
B541	---	2	2	7'-6"	STR.	---	---	---	---	---	---

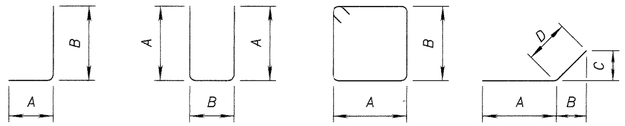

TYPE-1 TYPE-2 TYPE-3 TYPE-19

NOTES:

1. ALL DIMENSIONS ARE OUT TO OUT OF BAR.
2. ALL REINFORCING STEEL SHALL BE EPOXY COATED.
3. REINFORCING STEEL: NEW REINFORCING STEEL MAY REQUIRE FIELD CUTTING OR BENDING TO BE PROPERLY FITTED. PAYMENT SHALL BE INCLUDED IN THE APPLICABLE CONCRETE ITEM.

DESIGN AGENCY
BALKE ENGINEERS
1848 Summit Road
Cincinnati, Ohio 45237

DESIGNED	DRAWN	REVIEWED	DATE
MRS	WJH	CRS	6/01
CHECKED	REVISED	STRUCTURE FILE NUMBER	
FKL	---	1275803 N.B. 1275817 S.B.	

REINFORCING STEEL LIST
BRIDGE NO. CLE-275-0618
OVER US 50 J

CLE-275-5.35

750/857

F:\Roadway\DGN\BARSCL.dgn

PIER 1 REINFORCING STEEL LIST

MARK	NUMBER			LENGTH	TYPE	DIMENSIONS					
	LEFT BRIDGE	RIGHT BRIDGE	TOTAL			A	B	C	D	E	INC.
P1101	16	8	24	22'-2"	1	2'-0"	20'-6"				
P801	-	18	18	8'-8"	STR.						
P701	16	-	16	8'-8"	STR.						
P702	26	-	26	7'-8"	STR.						
P703	-	4	4	5'-0"	STR.						
P704	-	10	10	9'-2"	STR.						
P601	10	-	10	12'-7"	1	4'-8"	8'-1"				
P602	5	-	5	10'-0"	STR.						
P501	18	20	38	8'-8"	STR.						
P502	20	-	20	7'-8"	STR.						
P503	7	-	7	15'-3"	3	2'-8"	4'-8"				
P504	3	-	3	47'-6"	STR.						
P505	3	-	3	8'-3"	STR.						
P506	60	132	192	3'-11"	1	2'-3"	1'-6"				
P507	-	3	3	32'-0"	STR.						
P508	-	3	3	36'-3"	STR.						
P509	-	3	3	43'-8"	STR.						
P510	-	9	9	16'-5"	3	2'-8"	5'-3"				
P401	14	-	14	6'-11"	24	2'-6"	1'-6"				
P402	12	-	12	10'-0"	STR.						
P403	-	6	6	22'-3"	24	2'-6"	9'-2"				
SP401	2	-	2	14'-0"	27	3"	2'-6"				
SP402	-	1	1	13'-3"	27	3"	2'-6"				

PIER 2 REINFORCING STEEL LIST

MARK	NUMBER			LENGTH	TYPE	DIMENSIONS					
	LEFT BRIDGE	RIGHT BRIDGE	TOTAL			A	B	C	D	E	INC.
Q1101	16	8	24	23'-11"	1	2'-0"	22'-3"				
Q801	-	18	18	8'-8"	STR.						
Q701	16	-	16	8'-8"	STR.						
Q702	26	-	26	7'-8"	STR.						
Q703	-	4	4	5'-0"	STR.						
Q704	-	10	10	9'-2"	STR.						
Q601	10	-	10	12'-7"	1	4'-8"	8'-1"				
Q602	5	-	5	10'-0"	STR.						
Q501	18	20	38	8'-8"	STR.						
Q502	20	-	20	7'-8"	STR.						
Q503	7	-	7	15'-5"	3	2'-8"	4'-9"				
Q504	3	-	3	8'-3"	STR.						
Q505	3	-	3	46'-4"	STR.						
Q506	60	132	192	3'-8"	1	2'-3"	1'-6"				
Q507	-	3	3	32'-0"	STR.						
Q508	-	3	3	36'-0"	STR.						
Q509	-	3	3	43'-8"	STR.						
Q510	-	9	9	16'-9"	3	2'-8"	5'-5"				
Q401	14	-	14	6'-11"	24	2'-6"	1'-6"				
Q402	12	-	12	10'-0"	STR.						
Q403	-	6	6	22'-3"	24	2'-6"	9'-2"				
SQ401	2	-	2	15'-6"	27	3"	2'-6"				
SQ402	-	1	1	15'-3"	27	3"	2'-6"				

PIER 3 REINFORCING STEEL LIST

MARK	NUMBER			LENGTH	TYPE	DIMENSIONS					
	LEFT BRIDGE	RIGHT BRIDGE	TOTAL			A	B	C	D	E	INC.
R1101	16	8	24	24'-8"	1	2'-0"	23'-0"				
R801	-	18	18	8'-8"	STR.						
R701	-	10	10	9'-3"	STR.						
R702	-	4	4	5'-0"	STR.						
R703	16	-	16	8'-8"	STR.						
R704	26	-	26	7'-8"	STR.						
R601	5	-	5	10'-0"	STR.						
R602	10	-	10	12'-9"	1	4'-9"	8'-1"				
R501	18	20	38	8'-8"	STR.						
R502	20	-	20	7'-8"	STR.						
R503	-	3	3	32'-10"	STR.						
R504	-	3	3	35'-8"	STR.						
R505	-	3	3	43'-8"	STR.						
R506	60	132	192	3'-8"	1	2'-3"	1'-6"				
R507	-	9	9	16'-5"	3	2'-8"	5'-3"				
R508	7	-	7	15'-3"	3	2'-8"	4'-8"				
R509	3	-	3	8'-3"	STR.						
R510	3	-	3	46'-0"	STR.						
R401	-	6	6	22'-5"	24	2'-6"	9'-3"				
R402	12	-	12	10'-0"	STR.						
R403	14	-	14	6'-11"	24	2'-6"	1'-6"				
SR401	-	1	1	15'-3"	27	3"	2'-6"				
SR402	2	-	2	16'-0"	27	3"	2'-6"				

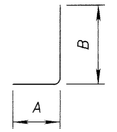

TYPE-1

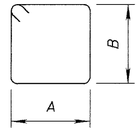

TYPE-3

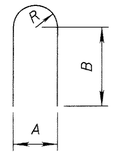

TYPE-24

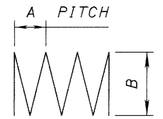

TYPE-27

NOTES:

1. ALL DIMENSIONS ARE OUT TO OUT OF BAR.
2. ALL REINFORCING STEEL SHALL BE EPOXY COATED.
3. SPIRAL REINFORCING BARS: THE "LENGTH" SHOWN IN THE STEEL LIST FOR THE SPIRAL BARS IS THE LENGTH OF THE SPIRAL ALONG THE AXIS OF THE SPIRAL. ONE AND ONE-HALF CLOSED-COIL TURNS SHALL BE PROVIDED AT THE ENDS OF EACH SPIRAL UNIT.
4. SPACERS: CONCRETE SPACERS OR OTHER APPROVED NONCORROSIVE SPACING DEVICES SHALL BE USED AT SUFFICIENT INTERVALS (NEAR THE BOTTOM AND AT INTERVALS NOT EXCEEDING 10 FEET) TO INSURE CONCENTRIC SPACING FOR THE ENTIRE CAGE LENGTH. SPACERS SHALL BE CONSTRUCTED OF APPROVED MATERIAL EQUAL IN QUALITY AND DURABILITY TO THE CONCRETE SPECIFIED FOR THE COLUMN. THE SPACERS SHALL HAVE ADEQUATE DIMENSIONS TO ENSURE A MINIMUM 3 INCHES CLEAR SPACE BETWEEN THE OUTSIDE OF THE REINFORCING CAGE AND THE DESIGN DIMENSION OF THE COLUMN. CYLINDRICAL CONCRETE FEET (BOTTOM SUPPORTS) SHALL BE PROVIDED TO ENSURE THAT THE BOTTOM OF THE CAGE IS MAINTAINED AT THE PROPER DISTANCE ABOVE THE BASE.
5. REINFORCING STEEL: NEW REINFORCING STEEL MAY REQUIRE FIELD CUTTING OR BENDING TO BE PROPERLY FITTED. PAYMENT SHALL BE INCLUDED IN THE APPLICABLE CONCRETE ITEM.

DESIGN AGENCY
BALKE ENGINEERS
1848 Summit Road
Cincinnati, Ohio 45237

DESIGNED	DRAWN	REVIEWED	DATE
MRS	ALH	CRS	6/01
CHECKED	REVISED	STRUCTURE FILE NUMBER	
FKL	—	1275-2007 H.B. 130287 H.B.	

REINFORCING STEEL LIST
BRIDGE NO. CLE-275-0618
OVER US 50 J

CLE-275-5.35

751/85

F:\Revised\CLE1806RS.dgn

SUPERSTRUCTURE REINFORCING STEEL LIST

MARK	NUMBER			LENGTH	TYPE	DIMENSIONS					
	LEFT BRIDGE	RIGHT BRIDGE	TOTAL			A	B	C	D	E	INC.
S801	4	--	4	29'-0"	STR.						
S802	8	--	8	29'-2"	STR.						
S803	4	--	4	28'-3"	STR.						
S804	8	--	8	27'-3"	STR.						
S805	--	4	4	47'-1"	STR.						
S806	--	4	4	31'-1"	STR.						
S807	--	4	4	36'-4"	STR.						
S808	--	4	4	32'-2"	STR.						
S809	--	4	4	47'-9"	STR.						
S810	--	4	4	35'-6"	STR.						
S501	832	1232	2064	30'-0"	STR.						
S502	104	154	258	25'-0"	STR.						
S503	930	--	930	28'-11"	STR.						
S504	468	708	1176	31'-0"	STR.						
S505	--	465	465	30'-9"	STR.						
S506	--	465	465	20'-3"	STR.						
S507	930	930	1860	5'-6"	STR.						
S508	465	--	465	24'-6"	STR.						
S509	465	--	465	32'-9"	STR.						
S510	465	--	465	29'-3"	STR.						
S511	465	--	465	27'-9"	STR.						
S512	--	465	465	27'-0"	STR.						
S513	--	465	465	24'-0"	STR.						
S514	--	465	465	21'-6"	STR.						
S515	--	465	465	16'-3"	STR.						
S516	--	465	465	17'-0"	STR.						
S517	--	465	465	20'-9"	STR.						
S518	--	465	465	16'-9"	STR.						
S519	--	465	465	22'-0"	STR.						
S520	--	465	465	21'-3"	STR.						
S521	--	465	465	17'-6"	STR.						
S401	632	960	1592	30'-0"	STR.						
S402	79	120	199	17'-0"	STR.						
X601	16	16	32	30'-0"	STR.						
X602	--	1	1	15'-0"	STR.						
X501	16	12	28	10'-0"	STR.						
X502	8	6	14	5'-8"	25	1'-10"	2'-5"	1'-5"	1½"	5"	
X503	8	6	14	5'-8"	STR.						
X504	96	224	320	30'-0"	STR.						
X505	16	12	28	13'-10"	STR.						
X506	--	6	6	15'-0"	STR.						
X507	--	16	16	25'-0"	STR.						
Y601	473	964	1437	3'-0"	14	10½"	10"	8½"	6"	9"	
Y602	NOT	USED									
Y603	32	24	56	3'-11"	1	11"	3'-2"				
Y604	429	931	1360	2'-3"	1	11"	1'-6"				
	4	3	7	3'-11"			3'-2"				
Y605	SERIES OF	SERIES OF	SERIES OF	TO	1	11"	TO				
	11	11	11	4'-8"			3'-11"				

SUPERSTRUCTURE REINFORCING STEEL LIST (CONTINUED)

MARK	NUMBER			LENGTH	TYPE	DIMENSIONS					
	LEFT BRIDGE	RIGHT BRIDGE	TOTAL			A	B	C	D	E	R
Y501	429	443	872	7'-1"	23	8"	3'-3"	3'-0"	1¼"		1½"
Y502	4	3	7	3'-10"	16	3'-3"					
Y503	4	3	7	3'-9"	16	3'-2"					
Y504	4	3	7	3'-8"	16	3'-1"					
Y505	4	3	7	3'-7"	16	3'-0"					
Y506	4	3	7	3'-6"	16	2'-11"					
Y507	4	3	7	3'-5"	16	2'-10"					
Y508	4	3	7	3'-4"	16	2'-9"					
Y509	4	3	7	3'-3"	16	2'-8"					
Y510	4	3	7	3'-2"	16	2'-7"					
Y511	4	3	7	3'-1"	16	2'-6"					
Y512	4	3	7	3'-0"	16	2'-5"					
Y513	--	488	488	5'-4"	23	7½"	2'-5"	2'-2"	2⅛"		2¼"
D801	104	146	250	5'-5"	18	2'-8"	1'-0"	1'-0"			
D802	20	--	20	29'-0"	STR.						
D803	10	--	10	29'-0"	STR.						
D804	10	--	10	28'-3"	STR.						
D805	20	--	20	26'-9"	STR.						
D806	--	10	10	47'-1"	STR.						
D807	--	10	10	31'-1"	STR.						
D808	--	10	10	36'-4"	STR.						
D809	--	10	10	32'-2"	STR.						
D810	--	10	10	47'-9"	STR.						
D811	--	10	10	35'-6"	STR.						
D501	116	156	272	7'-6"	2	2'-5"	2'-11"	---	---	---	---
D502	116	156	272	12'-11"	3	3'-5"	2'-9"	---	---	---	---
L505	8	4	12	2'-10"	2	7"	1'-10"	7"			
L506	8	4	12	10'-0"	9	5"	4'-0"	2'-3"	4'-0"		
L507	12	6	18	7'-2"	21	1'-4"	1'-8"	6"	1'-10"		
L508	8	4	12	4'-0"	STR.						

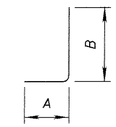

TYPE-1

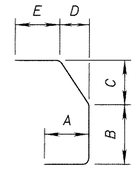

TYPE-14



TYPE-16

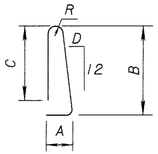

TYPE-23

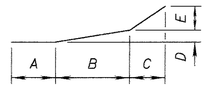

TYPE-25

TYPE-18

TYPE-2

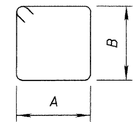

TYPE-3

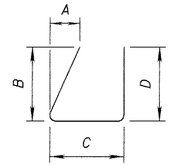

TYPE-9

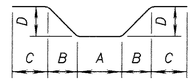

TYPE-21

NOTES:

1. ALL DIMENSIONS ARE OUT TO OUT OF BAR.
2. ALL REINFORCING STEEL SHALL BE EPOXY COATED.
3. REINFORCING STEEL: NEW REINFORCING STEEL MAY REQUIRE FIELD CUTTING OR BENDING TO BE PROPERLY FITTED. PAYMENT SHALL BE INCLUDED IN THE APPLICABLE CONCRETE ITEM.

DESIGN AGENCY
BALKE ENGINEERS
1848 Summit Road
Cincinnati, Ohio 45237

DESIGNED	DRAWN	REVIEWED	DATE
MRS	WJH	CBS	6/01
CHECKED	REVISED	STRUCTURE FILE NUMBER	
FKL	—	1306071 & B 1306071 R.B.	

REINFORCING STEEL LIST
BRIDGE NO. CLE-275-0618
OVER US 50 J

CLE-275-5.35

752
857

F:\Windows\DESIGN\S1.dgn

T.B.M. "L" ℄ MON. STA. 345+75
ELEV. 576.192

TBM "M" EXISTING MONUMENT
℄ IR 275 STA. 349+99.92
ELEV. 581.79

PLAN

℄ Brg. Rear Abut. ℄ Pier 1 ℄ Pier 1a ℄ Pier 2 ℄ Pier 3 ℄ Brg. Fwd. Abut.

REINFORCED SODDING

℄ I-275 Northbound

GR POST STA. 346+29.62

GR POST STA. 345+89.95

Sta 346+76.17 V I-275-I
POS Sta 4675+72 RR

LEFT BRIDGE

29°43'00" Thp.

STAGE II CONSTRUCTION

STAGE I CONST.

GR POST STA. 348+81.93

GR POST STA. 348+42.70

END APPROACH SLAB STA. 345+85.08 (L.B.)

END APPROACH SLAB STA. 345+99.30 (R.B.)

℄ Construction I-275 (S 4° 36' 24" E)

345+00 346+00 348+00 349+00

BEGIN APPROACH SLAB STA. 348+27.72 (L.B.)

BEGIN APPROACH SLAB STA. 348+11.94 (R.B.)

Proposed crushed aggregate slope protection, Typ.

GR POST STA. 348+07.87

℄ I-275 Southbound

GR POST STA. 345+81.25

RIGHT BRIDGE

Varies 103'-0⅝" to 95'-2"

Varies 106'-0⅝" to 98'-2"

Point of Minimum Vertical Clearance

GR POST STA. 345+21.80

GR POST STA. 347+53.99

Varies

1'-6"

2:1

8'-0"

Horizontal Clearance		
Location	Required	Actual (Existing)
1	25.00'	35.19'
2	15.00'	14.96'
3	10.00'	10.00'±
4	10.00'	28.85'±
5	25.00'	31.32'
6	15.00'	14.85'
7	10.00'	10.00'±
8	10.00'	26.88'±

TRAFFIC DATA
NORTHBOUND & SOUTHBOUND

	Current (2002)	Design (2022)
ADT	35520	41730
ADTT	3197	3756

Notes:
Earthwork limits shown are approximate. Actual slopes shall conform to plan cross sections.

Boring location

Point of min. vertical clearance

SECTION ALONG EDGE OF PAVEMENT (PROPOSED)
(Left bridge shown, right bridge similar)

BRIDGE LIMITS = 242.64± (L.B.)
BRIDGE LIMITS = 217.82± (R.B.)

PVI STA. 346+16
ELEV. 578.11 NB
ELEV. 578.07 SB

TOP OF SLOPE
ELEV. 571.79± (L.B.)
ELEV. 569.55± (R.B.)
STA. 345+85.08 (L.B.)
STA. 345+99.30 (R.B.)

TOP OF SLOPE
ELEV. 576.39± (L.B.)
ELEV. 573.85± (R.B.)
STA. 348+27.72 (L.B.)
STA. 348+11.94 (R.B.)

Crushed aggregate slope protection, Typ.

+1.89% NB +1.87% SB

EXP.

Vertical Clr.
Actual 22'-11⅛"
Existing 22'-1½"

2:1 Normal, typ.

ELEV. 565.54 (L.B.)
ELEV. 563.33 (R.B.)

ELEV. 570.10 (L.B.)
ELEV. 567.63 (R.B.)

HP10x42 PILES
ESTIMATED PAY LENGTH = 60 FT.

HP10x42 PILES
ESTIMATED PAY LENGTH = 70 FT.

ELEV. 540.39 (L.B.)
ELEV. 545.25 (R.B.)

ELEV. 540.29 (L.B.)
ELEV. 542.35 (R.B.)

ELEV. 564.3 (L.B.)
ELEV. 564.5 (R.B.)

REAR ABUTMENT PIER 1 PIER 2 PIER 3 FORWARD ABUTMENT

EXISTING SEWER

Approx. top of rock, Boring S-13, El. 510.0

HP10x42 PILES. EST. PAY LENGTH = 35 FT.

Approx. top of rock, Boring S-14, El. 509.5

HP10x42 PILES. EST. PAY LENGTH = 35 FT.

Approx. top of rock, Boring S-15, El. 507.9

HP10x42 PILES. EST. PAY LENGTH = 40 FT.

Approx. top of rock, Boring S-16, El. 507.6

Approx. top of rock, Boring S-17, El. 507.0

590 580 570 560 550 540 530

345+00 346+00 347+00 348+00

EXISTING STRUCTURE

Type: Continuous steel beams with reinforced concrete deck and substructure.
Spans: 45'-6", 64'-6", 75'-6", 52'-6 L.B. c/c brg. 40'-3", 57'-9", 67'-9", 47'-3" R.B. c/c brg.
Roadway width: 48'-6" Toe/Toe parapets L.B., Varies R.B.
Design loading: HS-20-44
Skew angle: 29°43'00" L.F.
Wearing surface: Micro Silica Concrete Overlay
Approach slabs: AS-1-67 (25'-0")
Date Built: 1971
Structure file number: 1305654 (L.B.), 1305662 (R.B.)

PROPOSED STRUCTURE (REHABILITATION)

PROPOSED WORK: Widen & replace existing concrete deck with composite concrete deck, widen substructure, convert existing abutments to semi-integral abutments with straight wingwalls.
Spans:
45'-2⅝"±, 64'-5¾"±, 75'-4¼"±, 52'-4⅞"± L.B. c/c brg.
40'-6¼"±, 57'-6½"±, 67'-8⅜"±, 46'-10¼"± R.B. c/c brg.
Roadway width: 70'-11" Toe/Toe parapets L.B., Varies R.B.
Live loading: HS20 (Case 1) & the alternate military
Skew angle: 29°43'00"± L.F.
Wearing surface: Monolithic concrete
Approach slabs: AS-1-81 (25'-0")
Alignment: Tangent
Crown: 3/16"/ft.
Latitude: N 39° 09' 15"
Longitude: W 84° 16' 00"

DESIGN AGENCY
BALKE ENGINEERS
1848 Summit Road
Cincinnati, Ohio 45237

DESIGNED	DRAWN	REVIEWED	DATE
FKL	ALH	CRS	6/01
CHECKED	REVISED	STRUCTURE FILE NUMBER	1305654 R.B. 1305662 R.B.
MPS	—		

CLERMONT COUNTY
STA 345+85.64
STA 348+28.82

SITE PLAN
BRIDGE NO. CLE-275-0654
OVER NORFOLK & SOUTHERN R.R. & C.R. 106 (ROUND BOTTOM ROAD)

CLE-275-5.35

1 / 45

758
857

FILEname= 0654pl.dgn

GENERAL NOTES

REFERENCE SHALL BE MADE TO STANDARD DRAWING(S):

AS-1-81	REVISED	04-20-01
BR-1	REVISED	01-06-99
BS-1-93	DATED	12-19-94
GSD-1-96	DATED	02-12-97
PCB-91	REVISED	07-06-99
SICD-1-96	REVISED	04-20-01
HL-20.14M	DATED	05-01-95

AND TO SUPPLEMENTAL SPECIFICATION(S):

814	DATED 6-2-98
815	DATED 2-22-00
816	DATED 4-21-97
842	DATED 1-6-99
846	DATED 9-9-97
863	DATED 10-12-99
899	DATED 10-21-98
905	DATED 4-1-98
907	DATED 10-21-98
910	DATED 7-11-00
954	DATED 9-9-97

DESIGN SPECIFICATIONS: THIS STRUCTURE CONFORMS TO "STANDARD SPECIFICATIONS FOR HIGHWAY BRIDGES" ADOPTED BY THE AMERICAN ASSOCIATION OF STATE HIGHWAY AND TRANSPORTATION OFFICIALS, 1996, INCLUDING THE 1997 THRU 1999 INTERIM SPECIFICATIONS AND THE ODOT BRIDGE DESIGN MANUAL.

DESIGN LOADING: HS20 , CASE (I) AND THE ALTERNATE MILITARY LOADING.
FUTURE WEARING SURFACE (FWS) OF 60 LBS/FT 2 .

DESIGN DATA:

CONCRETE CLASS S - COMPRESSIVE STRENGTH 4500 PSI (SUPERSTRUCTURE)
CONCRETE CLASS C - COMPRESSIVE STRENGTH 4000 PSI (SUBSTRUCTURE)

REINFORCING STEEL - ASTM A615, A616 OR A617
GRADE 60 MINIMUM YIELD STRENGTH 60,000 PSI
SPIRAL REINFORCEMENT MAY BE PLAIN BARS, ASTM A82 OR A615

STRUCTURAL STEEL ASTM A709, GRADE 50-YIELD STRENGTH 50 KSI

DECK PROTECTION METHOD:

EPOXY COATED REINFORCING STEEL
2½" CONCRETE COVER

MONOLITHIC WEARING SURFACE IS ASSUMED, FOR DESIGN PURPOSES, TO BE 1 INCH THICK.

PROPOSED WORK:

1. REPLACE THE EXISTING CONCRETE DECK WITH A NEW COMPOSITE CONCRETE DECK WITH BARRIER RAILINGS.
2. WIDEN THE SUPERSTRUCTURE ON THE MEDIAN SIDE BY ADDING TWO LINES OF BEAMS.
3. CONVERT THE EXISTING ABUTMENTS TO SEMI-INTEGRAL. REPLACE U-WINGWALLS WITH STRAIGHT WINGWALLS. REMOVE THE EXISTING ABUTMENTS AND WINGWALLS DOWN TO THE TOP OF THE EXISTING BEAM SEATS.
4. WIDEN THE SUBSTRUCTURE TO ACCOMMODATE THE NEW SUPER-STRUCTURE MEMBERS.
5. REPLACE ALL BEARINGS WITH NEW ELASTOMERIC BEARINGS.
6. ADJUST BEARING SEAT ELEVATIONS BY CONSTRUCTING REINFORCED CONCRETE PEDESTALS.
7. SEAL NEW WINGWALLS, RAILING, ABUTMENTS, BACKWALLS, AND PIERS WITH EPOXY-URETHANE, COLOR SHALL BE BUFF.
8. PROVIDE NEW APPROACH SLABS.
9. PAINT EXISTING STRUCTURAL STEEL WITH SYSTEM OZEU, COLOR SHALL BE BLUE, FEDERAL COLOR 15526.
10. PAINT NEW STRUCTURAL STEEL WITH SYSTEM IZEU, COLOR SHALL BE BLUE, FEDERAL COLOR 15526.
11. PATCH EXISTING SUBSTRUCTURE CONCRETE AS SHOWN.

PORTIONS OF STRUCTURE REMOVED, OVER 20' SPAN, AS PER PLAN:
THIS WORK SHALL CONSIST OF THE REMOVAL OF CONCRETE DECKS INCLUDING SIDEWALKS, PARAPETS, RAILINGS, DECK JOINTS AND OTHER APPURTENANCES FROM STEEL SUPPORTING SYSTEMS (BEAMS, GIRDERS, CROSS FRAMES, ETC.). CARE SHALL BE TAKEN DURING DECK REMOVALS TO PROTECT PORTIONS OF SUCH SYSTEMS THAT ARE TO BE SALVAGED AND INCORPORATED INTO THE PROPOSED STRUCTURE. IN THIS RESPECT, THE USE OF EXPLOSIVES, HEADACHE BALLS AND/OR HOE RAM TYPE OF EQUIPMENT IS PROHIBITED.

PROTECTION OF TRAFFIC: PRIOR TO DEMOLITION OF ANY PORTIONS OF THE EXISTING SUPERSTRUCTURE, THE CONTRACTOR SHALL SUBMIT PLANS FOR THE PROTECTION OF TRAFFIC (VEHICULAR, PEDESTRIAN, BOAT, ETC.) ADJACENT TO AND/OR UNDER THE STRUCTURE TO THE DIRECTOR FOR APPROVAL. THESE PLANS SHALL INCLUDE PROVISIONS FOR ANY DEVICES AND STRUCTURES THAT MAY BE NECESSARY TO ENSURE SUCH PROTECTION.
TEMPORARY VERTICAL CLEARANCES SPECIFIED ON THE PLANS OR IN THE PROPOSAL SHALL BE MAINTAINED AT ALL TIMES EXCEPT AS OTHERWISE APPROVED BY THE DIRECTOR.

PROTECTION OF STEEL SUPPORT SYSTEMS: BEFORE DECK SLAB CUTTING IS PERMITTED, THE OUTLINE OF PRIMARY STEEL MEMBERS IN CONTACT WITH THE BOTTOM OF THE DECK SHALL BE DRAWN ON THE SURFACE OF DECK. SMALL DIAMETER PILOT HOLES SHALL BE DRILLED 2 INCHES OUTSIDE THESE LINES TO CONFIRM THE LOCATION OF FLANGE EDGES. DECK CUTS OVER OR WITHIN 2 INCHES OF FLANGE EDGES SHALL NOT EXTEND LOWER THAN THE BOTTOM LAYER OF DECK SLAB REINFORCING STEEL. CUTS MADE OUTSIDE 2 INCHES OF FLANGE EDGES MAY EXTEND THE FULL DEPTH OF THE DECK. DURING CUTTING OF THE DECK SLAB, CARE SHALL BE TAKEN NOT TO DAMAGE STEEL MEMBERS THAT ARE TO BE INCORPORATED INTO THE PROPOSED STRUCTURE.

REMOVAL METHODS: CONCRETE MAY BE REMOVED BY CUTTING AND BY MEANS OF HAND OPERATED PNEUMATIC HAMMERS EMPLOYING POINTED OR BLUNTED CHISEL TYPE TOOLS. FOR REMOVALS OVER BRIDGE MEMBERS (PRESTRESSED BOX BEAM, I-BEAM, STEEL BEAM STEEL GIRDER, ETC), A HAMMER HEAVIER THAN 35 POUNDS BUT NOT TO EXCEED 90 POUNDS MAY BE USED AT THE APPROVAL OF THE ENGINEER. REMOVAL METHODS OVER BRIDGE MEMBERS SHALL ENSURE ADEQUATE DEPTH CONTROL AND PREVENT NICKING OR GOUGING THE PRIMARY STEEL MEMBERS.

DECK REMOVALS: DUE TO THE POSSIBLE PRESENCE OF WELDED ATTACHMENTS TO EXISTING STRUCTURAL STEEL (FINISHING MACHINE, SCUPPER AND FORM SUPPORTS, ETC.), CARE SHALL BE TAKEN DURING DECK REMOVAL TO AVOID DAMAGING STRINGERS WHICH ARE TO REMAIN. STRINGERS DAMAGED BY THE CONTRACTOR'S REMOVAL OPERATIONS SHALL, AT NO COST TO THE PROJECT, BE REPLACED OR REPAIRED. PROPOSED REPAIRS, DEVELOPED BY A OHIO REGISTERED PROFESSIONAL ENGINEER, SHALL BE SUBMITTED IN WRITING FOR REVIEW AND APPROVAL BY THE DIRECTOR.

EXTRANEOUS MEMBERS: EXISTING EXTRANEOUS MEMBERS (I.E., FINISHING MACHINE AND FORM SUPPORTS, ETC., AND THE SUPPORT FOR SCUPPERS AND BULB ANGLES WHICH ARE TO BE REMOVED) ATTACHED BY WELDED CONNECTION TO THE DESIGNATED TENSION PORTIONS OF THE TOP FLANGES OF EXISTING STEEL MEMBERS SHALL BE REMOVED AND THE FLANGE SURFACES GROUND SMOOTH. GRINDING SHALL BE CAREFULLY DONE AND PARALLEL TO THE FLANGES.

LOADING LIMITATIONS: NO PART OF THE STRUCTURE SHALL BE SUBJECTED TO UNIT STRESSES THAT EXCEED 136.5% OF ALLOWABLE UNIT STRESSES AS DEFINED IN THE AASHTO STANDARD SPECIFICATIONS FOR HIGHWAY BRIDGES DUE EITHER TO DEMOLITION, ERECTION OR CONSTRUCTION METHODS, OR TO THE USE OR MOVEMENT OF DEMOLITION OR ERECTION EQUIPMENT ON OR ACROSS THE STRUCTURE. STRUCTURAL ANALYSIS COMPUTATIONS, BY A OHIO REGISTERED PROFESSIONAL ENGINEER, SHOWING THE ALLOWABLE STRESSES AND THE MAXIMUM STRESSES PRODUCED BY THE CONTRACTOR'S METHODS OR EQUIPMENT SHALL BE SUBMITTED TO THE DIRECTOR FOR REVIEW AND APPROVAL AT LEAST TWO WEEKS PRIOR TO THE START OF THE WORK.

PAYMENT: THIS WORK WILL BE PAID FOR AT THE CONTRACT LUMP SUM PRICE BID, WHICH PRICE AND PAYMENT SHALL BE FULL COMPENSATION FOR ALL LABOR, EQUIPMENT, MATERIALS AND INCIDENTALS NECESSARY TO COMPLETE THE WORK IN CONFORMANCE WITH THESE REQUIREMENTS, WITH PERTINENT PROVISIONS OF 202, AND TO THE SATISFACTION OF THE ENGINEER.

CUT LINE CONSTRUCTION JOINT PREPARATION: SAW CUT BOUNDARIES OF PROPOSED CONCRETE REMOVALS 1 INCH DEEP. REMOVE CONCRETE TO A ROUGH SURFACE. THE EXISTING REINFORCING STEEL, IF REQUIRED IN THE PLANS, SHALL BE LEFT IN PLACE. INSTALL DOWEL BARS IF SPECIFIED. PRIOR TO CONCRETE PLACEMENT ABRASIVELY CLEAN JOINT SURFACES AND EXISTING EXPOSED REINFORCEMENT TO REMOVE LOOSE AND DISINTEGRATED CONCRETE AND LOOSE RUST. THE JOINT SURFACE AND EXPOSED REINFORCEMENT SHALL BE THOROUGHLY CLEANED OF ALL DIRT, DUST, RUST OR OTHER FOREIGN MATERIAL BY THE USE OF WATER, AIR UNDER PRESSURE, OR OTHER METHODS THAT PRODUCE SATISFACTORY RESULTS. EXISTING REINFORCING STEEL DOES NOT HAVE TO HAVE A BRIGHT STEEL FINISH BUT ALL PACK AND LOOSE RUST SHALL BE REMOVED. EXISTING CONCRETE SURFACES WHICH NEW CONCRETE WILL BE PLACED AGAINST SHALL BE WET, BUT WITHOUT FREE WATER, AT THE TIME OF CONCRETE PLACEMENT.

SUBSTRUCTURE CONCRETE REMOVAL SHALL BE BY MEANS OF APPROVED PNEUMATIC HAMMERS EMPLOYING POINTED AND BLUNT CHISEL TOOLS. HYDRAULIC HOE-RAM TYPE HAMMERS WILL NOT BE PERMITTED. THE WEIGHT OF THE HAMMER SHALL NOT BE MORE THAN 35 POUNDS FOR REMOVAL WITHIN 18 INCHES OF PORTIONS TO BE PRESERVED. OUTSIDE THE 18 INCH LIMIT, HAMMERS NOT EXCEEDING 90 POUNDS, MAY BE USED UPON THE APPROVAL OF THE ENGINEER. PNEUMATIC HAMMERS SHALL NOT BE PLACED IN DIRECT CONTACT WITH REINFORCING STEEL THAT IS TO BE RETAINED IN THE REBUILT STRUCTURE.

UTILITY LINES: RAILROAD UTILITIES WITHIN THE CONSTRUCTION LIMITS SHALL NOT BE DISTURBED.

ITEM 518 - 6" PERFORATED CORRUGATED PLASTIC PIPE, AS PER PLAN: THIS ITEM SHALL INCLUDE FOR PAYMENT THE 4" NON-PERFORATED PLASTIC PIPE ALONG WITH ALL INCIDENTALS TO THE 4" PIPE

EXISTING STRUCTURE VERIFICATION: DETAILS AND DIMENSIONS SHOWN ON THESE PLANS PERTAINING TO THE EXISTING STRUCTURE HAVE BEEN OBTAINED FROM PLANS OF THE EXISTING STRUCTURE AND FROM FIELD OBSERVATIONS AND MEASUREMENTS. CONSEQUENTLY, THEY ARE INDICATIVE OF THE EXISTING STRUCTURE AND THE PROPOSED WORK BUT THEY SHALL BE CONSIDERED TENTATIVE AND APPROXIMATE. THE CONTRACTOR IS REFERRED TO CMS SECTIONS 102.05, 105.02 AND 513.02/863.07.

CONTRACT BID PRICES SHALL BE BASED UPON A RECOGNITION OF THE UNCERTAINTIES DESCRIBED ABOVE AND UPON A PREBID EXAMINATION OF THE EXISTING STRUCTURE BY THE CONTRACTOR. HOWEVER, ALL PROJECT WORK SHALL BE BASED UPON ACTUAL DETAILS AND DIMENSIONS WHICH HAVE BEEN VERIFIED BY THE CONTRACTOR IN THE FIELD.

ITEM 509 REINFORCING STEEL, REPLACEMENT OF EXISTING REINFORCING STEEL, AS PER PLAN: ANY EXISTING REINFORCING BARS DEEMED BY THE ENGINEER TO BE UNUSABLE BECAUSE OF CORROSION SHALL BE REPLACED WITH NEW REINFORCING STEEL. ANY EXISTING REINFORCING STEEL BARS WHICH ARE TO BE INCORPORATED INTO THE NEW WORK AND ARE MADE UNUSABLE BY CONCRETE REMOVAL OPERATIONS SHALL BE REPLACED WITH NEW EPOXY COATED REINFORCING STEEL OF THE SAME SIZE AT THE CONTRACTOR'S COST. ALL WORK SHALL BE TO THE SATISFACTION OF THE ENGINEER. THE NUMBER OF POUNDS OF REINFORCING STEEL PAID FOR AT CONTRACT PRICES SHALL BE THE ACTUAL POUNDS OF REPLACEMENT REINFORCING STEEL SPECIFIED BY THE ENGINEER DUE TO CORROSION AND SHALL INCLUDE PLACEMENT, DOWELING, BENDING, SUPPORTING, TIE WIRES AND TYING OF THAT SPECIFIED REINFORCING STEEL.

ITEM 503, UNCLASSIFIED EXCAVATION, AS PER PLAN: UNCLASSIFIED EXCAVATION SHALL BE IN ACCORDANCE WITH 503 EXCEPT THAT THE BACKFILL MATERIAL BEHIND THE ABUTMENTS SHALL BE 203 MATERIAL PLACED IN 6 INCH LIFTS.

PILES TO BEDROCK:
PILES SHALL BE DRIVEN TO REFUSAL ON BEDROCK. REFUSAL SHALL BE CONSIDERED AS OBTAINED BY PENETRATING SOFT BEDROCK FOR SEVERAL INCHES WITH A MINIMUM RESISTANCE OF 20 BLOWS PER INCH OR REFUSAL SHALL BE CONSIDERED AS OBTAINED AFTER THE PILE HAS CONTACTED HARD BEDROCK AND THE PILE HAS THEN RECEIVED AT LEAST 20 BLOWS. THE CONTRACTOR IS RESPONSIBLE FOR SELECTING THE HAMMER SIZE TO ACHIEVE THE REQUIRED DEPTH TO BEDROCK AND REFUSAL.

THE ULTIMATE BEARING VALUE IS 100 TONS PER PILE FOR THE ABUTMENT PILES.
THE ULTIMATE BEARING VALUE IS 95 TONS PER PILE FOR THE PIER PILES.

ABUTMENT PILES:
24 PILES 60 FEET LONG, ESTIMATED LENGTH
26 PILES 70 FEET LONG, ESTIMATED LENGTH
50 PILES OF ORDER LENGTH 60 FEET LONG
26 PILES OF ORDER LENGTH 10 FEET LONG
38 SPLICES

PIER PILES:
32 PILES 35 FEET LONG, ESTIMATED LENGTH
16 PILES 40 FEET LONG, ESTIMATED LENGTH
32 PILES OF ORDER LENGTH 35 FEET LONG
16 PILES OF ORDER LENGTH 40 FEET LONG
24 SPLICES.

PILES NEAR THE EXISTING 54" DIAMETER STORM SEWER SHALL BE PREBORED. CARE SHALL BE TAKEN TO AVOID EXCESSIVE VIBRATION DURING PILE DRIVING. IT IS THE RESPONSIBILITY OF THE CONTRACTOR TO PREVENT ANY DAMAGE TO THE SEWER DURING CONSTRUCTION.

DESIGN AGENCY
BALKE ENGINEERS
1848 Summit Road
Cincinnati, Ohio 45237

DESIGNED	DRAWN	REVIEWED	DATE
FKL	WJH	CRS	6/01
CHECKED	REVISED	STRUCTURE FILE NUMBER	
MRS	—	1305564 R.T. 1305662 L.B.	

GENERAL NOTES
BRIDGE NO. CLE-275-0654
OVER NORFOLK & SOUTHERN RR & C.R. 106 (ROUND BOTTOM RD.)

CLE-275-5.35

2/45

759
857

Filename: 0654NOTE.dgn

GENERAL NOTES

INSPECTION OF EXISTING STRUCTURAL STEEL: THE ENGINEER WILL VISUALLY INSPECT ALL EXISTING BUTT-WELDED SPLICES AND/OR TOP FLANGE COVER PLATE FILLET WELDS TO ENSURE THE WELDS, PLATES AND BEAMS OR GIRDERS ARE FREE OF DEFECTS AND CRACKS. IF THE DECK SLAB HAUNCH FORMS IMMEDIATELY ADJACENT TO SUCH WELDS INTERFERE WITH THE ENGINEER'S INSPECTION THEY SHALL BE REMOVED OR NOT BE ERECTED UNTIL AFTER THE INSPECTION. THE INSPECTION SHALL NOT TAKE PLACE UNTIL AFTER THE TOP FLANGES ARE CLEANED AS SPECIFIED IN SS 842.08, BUT IT SHALL BE DONE BEFORE THE DECK SLAB REINFORCEMENT IS INSTALLED. THE COST ASSOCIATED WITH THIS INSPECTION SHALL BE INCLUDED WITH ITEM SS 842, SUPERSTRUCTURE CONCRETE FOR PAYMENT. ANY CRACKS FOUND SHOULD BE REPORTED TO THE OFFICE OF STRUCTURAL ENGINEERING, BRIDGE CONSTRUCTION SPECIALIST, ALONG WITH SPECIFIC INFORMATION ON LOCATION OF THE CRACKS, LENGTH, AND DEPTH SO AN EVALUATION AND REPAIR OR REPLACEMENT RECOMMENDATION CAN BE MADE.

USE OF NON-ASBESTOS CONTAINING MATERIALS:
THE CONTRACTOR SHALL AT NO TIME INCORPORATE ANY MATERIALS WHICH ARE COMPOSED OF OR CONTAIN ANY AMOUNTS OF ASBESTOS. THE SUBSTITUTION OF MATERIALS WHICH CONTAIN ANY AMOUNTS OF ASBESTOS WILL IN NO CIRCUMSTANCRES BE ACCEPTABLE. UPON COMPLETION OF THE PROJECT, THE CONTRACTOR SHALL SUBMIT A WRITTEN STATEMENT OF CERTIFICATION ASSERTING THAT NO ASBESTOS CONTAINING MATERIALS WERE USED IN ANY PORTION OF THE CONSTRUCTION.

ITEM 863 STRUCTURAL STEEL MEMBERS MISCELLANEOUS FABRICATION, AS PER PLAN, (OTHER DESCRIPTION). ALL SECTIONS OF SS 863 APPLY EXCEPT AS REVISED HEREIN. THE ENGINEER IS RESPONSIBLE FOR ENSURING ANY SHOP OR FIELD FABRICATED STEEL SUPPLIED UNDER THIS BID ITEM IS ACCEPTABLE. THE REQUIREMENTS FOR SUBMITTAL OF SHOP DRAWINGS TO THE OFFICE OF STRUCTURAL ENGINEERING IS WAIVED. AT THE ENGINEER'S OPTION, THE CONTRACTOR SHALL EITHER SUPPLY THE ENGINEER WITH SHOP DRAWINGS, REQUIRED IN SECTION 863.08, PRIOR TO ANY INCORPORATION OF SHOP FABRICATED STEEL AT THE PROJECT, OR SUPPLY THE ENGINEER WITH "AS FABRICATED" DRAWINGS, MEETING 863.08, AFTER COMPLETION OF FIELD FABRICATION. THE ENGINEER SHALL ASSURE THE SUBMITTED DRAWINGS MATCH THE FINAL AS BUILT STEEL INCORPORATED INTO THE WORK. IF THE ENGINEER IS SATISFIED WITH THE DRAWINGS AND THE DELIVERED MATERIALS, THE CONTRACTOR SHALL SUPPLY A COPY SET, STAMPED AND DATED AS PER 863.08, TO THE OFFICE OF STRUCTURAL ENGINEERING FOR RECORD PURPOSES. SUBMITTAL REQUIREMENTS UNDER 863.09, MATERIALS, SHALL BE MADE TO THE ENGINEER. THE CONTRACTOR SHALL FURNISH A COPY OF THE WRITTEN LETTER OF ACCEPTANCE, 863.09, TO THE OFFICE OF STRUCTURAL ENGINEERING WRITTEN LETTER OF ACCEPTANCE.

THE ENGINEER, AT OR BEFORE THE PRE-CONSTRUCTION MEETING, MAY CHOOSE TO REQUEST ASSISTANCE, AS REQUIRED, FROM THE OFFICE OF STRUCTURAL ENGINEERING.

STEEL MEMBERS INCLUDED IN THIS ITEM INCLUDE INTERMEDIATE CROSSFRAMES AND COVER PLATE RETROFIT

ITEM 516, JACKING AND TEMPORARY SUPPORT OF SUPERSTRUCTURE, AS PER PLAN: THIS ITEM SHALL CONSIST OF FURNISHING ALL NECESSARY LABOR, MATERIALS, AND EQUIPMENT TO RAISE OR RE-POSITION ANY EXISTING STRUCTURES TO THE DIMENSIONS AND REQUIREMENTS DEFINED IN THE PROJECT PLANS. THE CONTRACTOR SHALL BE RESPONSIBLE FOR THE DESIGN, INSTALLATION AND OPERATION OF AN ADEQUATE JACKING SYSTEM, INCLUDING ANY TEMPORARY OR PERMANENT SUPPORTS NECESSARY TO PERFORM THE WORK DESCRIBED IN THE PROJECT PLANS. THREE (3) SETS OF JACKING PLANS, WHICH INCLUDE THE INFORMATION DESCRIBED IN THIS NOTE, SHALL BE SUBMITTED TO THE DIRECTOR FOR APPROVAL AT LEAST THIRTY (30) DAYS BEFORE ACTUAL WORK IS TO BEGIN. THE PLANS SHALL BE PREPARED AND STAMPED BY A OHIO REGISTERED PROFESSIONAL ENGINEER. JACKING SUBMITTALS SHALL INCLUDE AT LEAST THE FOLLOWING:

1. THE SIGNATURE AND NUMBER, OR PROFESSIONAL SEAL, OF THE OHIO REGISTERED PROFESSIONAL ENGINEER WHO PREPARED THE SUBMITTAL.

2. CALCULATIONS AND ANALYSES OF THE STRUCTURE TO DETERMINE AND DEFINE THE ACTUAL LOADING APPLIED AT THE CONTRACTOR'S SELECTED JACKING POINTS.

3. A DRAWING SHOWING THE PHYSICAL AND DIMENSIONAL POSITION OF THE JACKS WITH RESPECT TO THE STRUCTURE INCLUDING CLEARANCES AND CENTER OF LIFT.

4. A SCHEMATIC LAYOUT OF JACKS, CHECK VALVES, PUMPS WITH 3 WAY RETRACTOR VALVE, PRESSURE GAGES, FLOW CONTROL VALVES, ETC. IN ACCORDANCE WITH MANUFACTURER'S RECOMMENDATIONS. ALL JACKS FOR EACH ABUTMENT OR PIER SHALL BE CONNECTED TOGETHER. ALL JACKS AT EACH ABUTMENT OR PIER SHALL BE THE SAME SIZE.

5. ANALYSIS AND CALCULATIONS OF THE STRESSES INDUCED OR CREATED IN THE STRUCTURE AND ANY TEMPORARY OR PERMANENT SUPPORTS. DESIGN CALCULATIONS FOR ANY TEMPORARY OR PERMANENT SUPPORTS.

6. PHYSICAL DIMENSIONS, MATERIALS, AND FABRICATION DETAILS OF ANY TEMPORARY OR PERMANENT SUPPORTS. HORIZONTAL AND VERTICAL MOVEMENT RESTRAINT SHALL BE PROVIDED.

7. A STEP BY STEP PROCEDURE DETAILING ALL STEPS IN THE JACKING OPERATION.

8. METHOD OF ATTACHMENT TO STRUCTURAL MEMBERS. WELDING TO TENSION AREAS WILL NOT BE PERMITTED.

THE ENTIRE SYSTEM INCLUDING JACKS SHALL HAVE 20% MORE CAPACITY THAN REQUIRED BASED ON CALCULATED LOADS.

FOR LIFTS GREATER THAN 1 INCH, JACKS SHALL HAVE LOCKING NUTS TO POSITIVELY LOCK AND SUPPORT THE STRUCTURE DURING THE LIFT.

JACKS SHALL HAVE A SWIVEL LOAD CAP, A DOMED PISTON HEAD OR SOME OTHER DEVICE TO PROTECT AGAINST THE EFFECTS OF SIDE LOAD ON THE JACK.

JACKS ALONE SHALL NOT BE USED TO SUPPORT LOADS EXCEPT DURING THE ACTUAL JACKING OPERATION. TEMPORARY SUPPORTS, BLOCKING OR OTHER METHODS APPROVED BY THE DIRECTOR SHALL BE USED.

SINGLE ACTING RAMS WITH NO OVER-TRAVEL PROTECTION SYSTEM SHALL NOT BE USED.

SPARE EQUIPMENT SHALL BE AVAILABLE ON SITE FOR THE REQUIRED STRUCTURE RAISING TO PROCEED IN THE EVENT OF BREAKDOWN. A LIST OF SPARE EQUIPMENT SHALL BE PROVIDED TO THE ENGINEER.

AT A MINIMUM, A JACKING OPERATION SHALL LIFT ALL BEAMS AT ANY ONE ABUTMENT OR PIER SIMULTANEOUSLY. THE ONLY EXCEPTION IS THE SITUATION WHERE THE WORK INVOLVES REPLACING OR REHABILITATING INDIVIDUAL BEARINGS; NO PERMANENT SHIMMING IS REQUIRED AND THE HEIGHT OF THE LIFT SHALL NOT EXCEED 1/4 INCH.

MAXIMUM DIFFERENTIAL JACKING HEIGHT BETWEEN ANY ADJACENT ABUTMENTS OR PIERS SHALL BE 1 INCH OR LESS. THIS HEIGHT MAY BE MODIFIED IF CALCULATIONS, BY THE CONTRACTOR'S OHIO REGISTERED PROFESSIONAL ENGINEER, SHOW THE SUPERSTRUCTURE COMPONENTS WILL NOT BE TEMPORARILY STRESSED BEYOND ALLOWABLE STRESSES FOR THOSE COMPONENTS AND THAT NO PERMANENT STRESSES WILL BE INDUCED IN THE COMPONENTS AFTER THEY OBTAIN THEIR FINAL POSITION.

IF, DURING THE JACKING OPERATIONS, CRACKING OF THE CONCRETE SUPERSTRUCTURE, SEPARATION OF THE CONCRETE DECK FROM THE STEEL STRINGERS, OR OTHER DAMAGE TO THE STRUCTURE IS VISUALLY OBSERVED, THE JACKING OPERATION SHALL IMMEDIATELY CEASE AND APPROVED SUPPORTS SHALL BE INSTALLED. THE CONTRACTOR SHALL THEN ANALYZE THE DAMAGE AND SUBMIT A METHOD OF CORRECTION TO THE ENGINEER FOR APPROVAL. ANY BEAMS THAT SEPARATE FROM THE DECK SHALL BE EPOXY INJECTED FOR THE DISTANCE OF THE SEPARATION IN ACCORDANCE WITH ODOT'S PROPOSAL NOTE "CONCRETE REPAIR BY EPOXY INJECTION". COST OF THIS EPOXY INJECTION OR OTHER REQUIRED REPAIRS SHALL BE BORNE BY THE CONTRACTOR.

THE CONTRACTOR SHALL DEMONSTRATE TO THE ENGINEER THAT THE BRIDGE BEARINGS ARE FULLY SEATED AT ALL CONTACT AREAS. IF FULL SEATING IS NOT ATTAINED, SUITABLE MEANS OF REPAIR, SUBJECT TO THE ENGINEER'S APPROVAL, WILL BE REQUIRED AT THE CONTRACTOR'S EXPENSE.

PAYMENT SHALL BE MADE AT THE LUMP SUM PRICE BID FOR ITEM 516, JACKING AND TEMPORARY SUPPORT OF SUPERSTRUCTURE, AS PER PLAN. THIS SHALL INCLUDE ALL NECESSARY TOOLS, LABOR, EQUIPMENT AND MATERIALS NECESSARY TO COMPLETE THIS ITEM OF WORK.

A CLOSURE POUR SHALL BE PROVIDED BETWEEN THE TWO DECK CONSTRUCTION STAGES. THE EXISTING CROSSFRAMES MUST BE CUT TO ISOLATE THE TWO STAGES. THE FALSEWORK FOR THE STAGE 2 DECK CANNOT BE CONNECTED TO THE STAGE 1 FALSEWORK.

ALL SURFACES TO BE PATCHED AND THE EXPOSED REINFORCING STEEL WITHIN SHALL BE THOROUGHLY CLEANED BY ABRASIVE BLASTING PRIOR TO THE CLEANING SPECIFIED BY 519.04. CLEANING SHALL PRECEDE APPLICATION OF THE PATCHING MATERIAL OR ERECTION OF THE FORMS BY NOT MORE THAN 24 HOURS.

ITEM 842, CLASS C CONCRETE, ABUTMENT INCLUDING FOOTING, AS PER PLAN: IN ADDITION TO THE REQUIREMENTS OF ITEM 842, A REFERENCE DISK SHALL BE CAST IN THE ABUTMENT CONCRETE. THE DISK WILL BE CENTERED ON THE TOP HORIZONTAL SURFACE OF THE FORWARD ABUTMENT RIGHT WINGWALL. THE DISK WILL BE PROVIDED BY THE DISTRICT EIGHT SURVEY MANAGER. THE CONTRACTOR WILL MARK THE DISK WITH THE NAVD88 PROJECT ELEVATION UNDER THE SUPERVISION OF A PROFESSIONAL SURVEYOR REGISTERED IN THE STATE OF OHIO.

CONVERSION OF STANDARD DRAWINGS:
SOME OF THE STANDARD DRAWINGS REFERENCED IN THIS PLANS ARE METRIC. ANY CONVERSION OF DIMENSIONS REQUIRED TO CONSTRUCT THE ITEMS SHOWN ON THE STANDARDS SHALL BE THE RESPONSIBILITY OF THE CONTRACTOR. CONVERSIONS SHALL BE MADE USING THE SI (METRIC) TO ENGLISH CONVERSIONS FACTORS PROVIDED IN SECTION 109.011 OF THE 1997 CONSTRUCTION AND MATERIALS SPECIFICATIONS. THE APPENDIX OF ASTM E380 SHALL BE UTILIZED FOR ANY ADDITIONAL CONVERSION FACTORS REQUIRED. CONVERSIONS SHALL BE APPROPRIATELY PRECISE AND SHALL REFLECT STANDARD INDUSTRY ENGLISH VALUES WHERE SUITABLE.

CONSTRUCTION CLEARANCE OF 8 FEET 6 INCHES HORIZONTALLY FROM THE CENTER OF TRACKS AND 22 FEET VERTICALLY FROM A POINT LEVEL WITH THE TOP OF THE HIGHER RAIL, AND 6 FEET FROM THE CENTER OF TRACKS, SHALL BE MAINTAINED AT ALL TIMES.

DESIGN AGENCY
BALKE ENGINEERS
1848 Summit Road
Cincinnati, Ohio 45237

DESIGNED	DRAWN	REVIEWED	DATE
FAL	WJH	CRS	6/01
CHECKED	REVISED	STRUCTURE FILE NUMBER	
MPS	___	1305564 & 1305662	

GENERAL NOTES
BRIDGE NO. CLE-275-0654
OVER NORFOLK & SOUTHERN RR & C.R. 106 (ROUND BOTTOM RD.)

CLE-275-5.35

3 / 45

760 / 857

F:\Bridges\0654NOTES.dgn

ESTIMATED QUANTITIES — CLE-275-0654 LEFT

CALCULATED BY: FKL DATED 1-01
CHECKED BY: ALH DATED 6/01

FUNDING ①	FUNDING ②	ITEM	EXTENSION	TOTAL	UNIT	DESCRIPTION	LEFT BRIDGE SUPERSTRUCTURE ①	SUPERSTRUCTURE ②	ABUTMENT ①	ABUTMENT ②	PIER ①	PIER ②	GENERAL ①	GENERAL ②	SEE SHEET NO.
LUMP		202	11200	LUMP	-	PORTIONS OF STRUCTURE REMOVED							LUMP		
	LUMP	503	11100	LUMP	-	COFFERDAMS, CRIBS AND SHEETING								LUMP	
	LUMP	503	21301	LUMP	-	UNCLASSIFIED EXCAVATION, AS PER PLAN				LUMP		LUMP			2
	LUMP	505	11100	LUMP	-	PILE DRIVING EQUIPMENT MOBILIZATION								LUMP	
	2440	507	00100	2440	LIN. FT.	STEEL PILES HP10X42, FURNISHED				1560		880			
	2440	507	00150	2440	LIN. FT.	STEEL PILES HP10X42, DRIVEN				1560		880			
	30	507	50500	30	EACH	STEEL PILE SPLICES				18		12			
	160	507	92200	160	LIN. FT.	PREBORED HOLES						160			
1211	291	SPECIAL	51267510	1502	SQ. YD.	SEALING OF CONCRETE SURFACES (EPOXY-URETHANE)*	566		65	83	580	208			15, 16, 17-26, 33, 34
	60	516	13900	60	SQ.FT.	2" PREFORMED EXPANSION JOINT FILLER				60					
LUMP		516	47001	LUMP	-	JACKING AND TEMPORARY SUPPORT OF SUPERSTRUCTURE, AS PER PLAN	LUMP								
20	4	516	44100	24	EACH	ELASTOMERIC BEARING WITH INTERNAL LAMINATES AND LOAD PLATE (12"X19"X2.698" NEOPRENE)					20	4			
12	4	516	44100	16	EACH	ELASTOMERIC BEARING WITH INTERNAL LAMINATES AND LOAD PLATE (9 "X14"X2.798" NEOPRENE)			12	4					
	LUMP	518	21230	LUMP	-	POROUS BACKFILL WITH FILTER FABRIC				LUMP					
110	100	518	40001	210	LIN. FT.	6" PERFORATED CORRUGATED PLASTIC PIPE, AS PER PLAN			110	100					2
85		518	40010	85	LIN. FT.	6" NON-PERFORATED CORRUGATED PLASTIC PIPE, INCLUDING SPECIALS			85						
	409	601	20000	409	SQ. YD.	CRUSHED AGGREGATE SLOPE PROTECTION				409					
15606		815	00050	15606	SQ. FT.	SURFACE PREPARATION OF EXISTING STEEL, SYSTEM OZEU	15606								
15606		815	00056	15606	SQ. FT.	FIELD PAINTING OF EXISTING STEEL, PRIME COAT, SYSTEM OZEU	15606								
15606		815	00060	15606	SQ. FT.	FIELD PAINTING OF EXISTING STEEL, INTERMEDIATE COAT, SYSTEM OZEU	15606								
15606		815	00066	15606	SQ. FT.	FIELD PAINTING OF EXISTING STEEL, FINISH COAT, SYSTEM OZEU	15606								
	5585	816	00620	5585	SQ. FT.	FIELD PAINTING OF NEW STEEL, INTERMEDIATE AND FINISH COAT, SYSTEM IZEU		5585							
474	158	842	31508	632	CU. YD.	CLASS S CONCRETE, SUPERSTRUCTURE	474	158							
	94	842	41000	94	CU. YD.	CLASS C CONCRETE, PIER ABOVE FOOTING						94			
	141	842	43501	141	CU. YD	CLASS C CONCRETE, ABUTMENT INCLUDING FOOTING, AS PER PLAN				141					3
	62	842	46500	62	CU. YD.	CLASS C CONCRETE, FOOTING						62			
109		846	73000	109	SQ. YD	TREATING CONCRETE BRIDGE DECKS WITH HMWM RESIN	109								
	12,400	863	10201	12,400	POUND	STRUCTURAL STEEL MEMBERS, MISCELLANEOUS LEVEL FABRICATION AS PER PLAN		12,400							
	85,230	863	10260	85,230	POUND	STRUCTURAL STEEL MEMBERS, LEVEL THREE (3) FABRICATION, A709, GRADE 50		85,230							
4572	1608	863	20000	6180	EACH	WELDED STUD SHEAR CONNECTORS	4572	1608							

① INTERSTATE MAINTENANCE ② NATIONAL HIGHWAY * SEE PROPOSAL NOTE

ESTIMATED QUANTITIES — CLE-275-0654 RIGHT

CALCULATED BY: FKL DATED 1-01
CHECKED BY: ALH DATED 6/01

FUNDING ①	FUNDING ②	ITEM	EXTENSION	TOTAL	UNIT	DESCRIPTION	RIGHT BRIDGE SUPERSTRUCTURE ①	SUPERSTRUCTURE ②	ABUTMENT ①	ABUTMENT ②	PIER ①	PIER ②	GENERAL ①	GENERAL ②	SEE SHEET NO.
LUMP		202	11200	LUMP	-	PORTIONS OF STRUCTURE REMOVED							LUMP		
	LUMP	503	11100	LUMP	-	COFFERDAMS, CRIBS AND SHEETING								LUMP	
	LUMP	503	21301	LUMP	-	UNCLASSIFIED EXCAVATION, AS PER PLAN				LUMP		LUMP			2
	LUMP	505	11100	LUMP	-	PILE DRIVING EQUIPMENT MOBILIZATION								LUMP	
	2580	507	00100	2580	LIN. FT.	STEEL PILES HP10X42, FURNISHED				1700		880			
	2580	507	00150	2580	LIN. FT.	STEEL PILES HP10X42, DRIVEN				1700		880			
	32	507	50500	32	EACH	STEEL PILE SPLICES				20		12			
	350	507	92200	350	LIN. FT.	PREBORED HOLES				350					
1480	291	SPECIAL	51267510	1771	SQ. YD.	SEALING OF CONCRETE SURFACES (EPOXY-URETHANE)*		514		99	87	867	204		15, 16, 17-26, 33, 34
	60	516	13900	60	SQ.FT.	2" PREFORMED EXPANSION JOINT FILLER					60				
LUMP		516	47001	LUMP	-	JACKING AND TEMPORARY SUPPORT OF SUPERSTRUCTURE, AS PER PLAN		LUMP							
32	4	516	44100	36	EACH	ELASTOMERIC BEARING WITH INTERNAL LAMINATES AND LOAD PLATE (12"X19"X2.698" NEOPRENE)						32	4		
20	4	516	44100	24	EACH	ELASTOMERIC BEARING WITH INTERNAL LAMINATES AND LOAD PLATE (9 "X14"X2.798" NEOPRENE)				20	4				
	LUMP	518	21230	LUMP	-	POROUS BACKFILL WITH FILTER FABRIC					LUMP				
185	60	518	40001	245	LIN. FT.	6" PERFORATED CORRUGATED PLASTIC PIPE, AS PER PLAN				185	60				2
85		518	40010	85	LIN. FT.	6" NON-PERFORATED CORRUGATED PLASTIC PIPE, INCLUDING SPECIALS				85					
21		519	11100	21	SQ. FT.	PATCHING CONCRETE STRUCTURE				2		19			
	356	601	20000	356	SQ. YD.	CRUSHED AGGREGATE SLOPE PROTECTION					356				
22,919		815	00050	22,919	SQ. FT.	SURFACE PREPARATION OF EXISTING STEEL, SYSTEM OZEU		22919							
22,919		815	00056	22,919	SQ. FT.	FIELD PAINTING OF EXISTING STEEL, PRIME COAT, SYSTEM OZEU		22919							
22,919		815	00060	22,919	SQ. FT.	FIELD PAINTING OF EXISTING STEEL, INTERMEDIATE COAT, SYSTEM OZEU		22919							
22,919		815	00066	22,919	SQ. FT.	FIELD PAINTING OF EXISTING STEEL, FINISH COAT, SYSTEM OZEU		22919							
	4869	816	00620	4869	SQ. FT.	FIELD PAINTING OF NEW STEEL, INTERMEDIATE AND FINISH COAT, SYSTEM IZEU			4869						
580	193	842	31508	773	CU. YD.	CLASS S CONCRETE, SUPERSTRUCTURE		580	193						
	99	842	41000	99	CU. YD.	CLASS C CONCRETE, PIER ABOVE FOOTING						99			
	174	842	43501	174	CU. YD	CLASS C CONCRETE, ABUTMENT INCLUDING FOOTING, AS PER PLAN				174					3
	53	842	46500	53	CU. YD.	CLASS C CONCRETE, FOOTING						53			
99		846	73000	99	SQ. YD	TREATING CONCRETE BRIDGE DECKS WITH HMWM RESIN		99							
	10,200	863	10201	10,200	POUND	STRUCTURAL STEEL MEMBERS, MISCELLANEOUS LEVEL FABRICATION AS PER PLAN			10,200						
	67,000	863	10260	67,000	POUND	STRUCTURAL STEEL MEMBERS, LEVEL THREE (3) FABRICATION, A709, GRADE 50			67,000						
7251	1500	863	20000	8751	EACH	WELDED STUD SHEAR CONNECTORS		7251	1500						

DESIGN AGENCY
BALKE ENGINEERS
1848 Summit Road
Cincinnati, Ohio 45237

DESIGNED	DRAWN	REVIEWED	DATE
FKL	ALH	CRS	6/01
CHECKED	REVISED	STRUCTURE FILE NUMBER	
MRS	—	1-3056S4 L.B. 1-3056S2 R.B.	

ESTIMATED QUANTITIES
BRIDGE NO. CLE-275-0654
OVER NORFOLK & SOUTHERN RR & C.R. 106 (ROUND BOTTOM RD.)

CLE-275-5.35

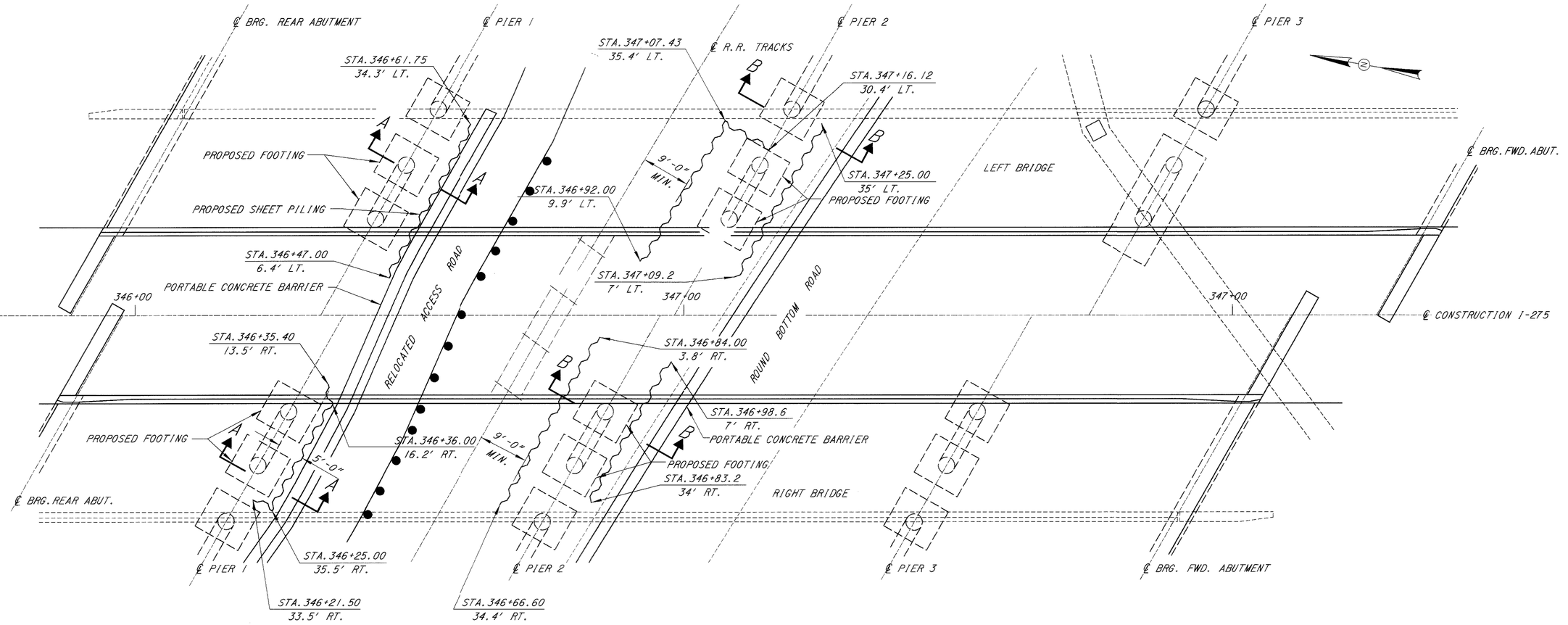

TEMPORARY SHEET PILING LAYOUT PLAN

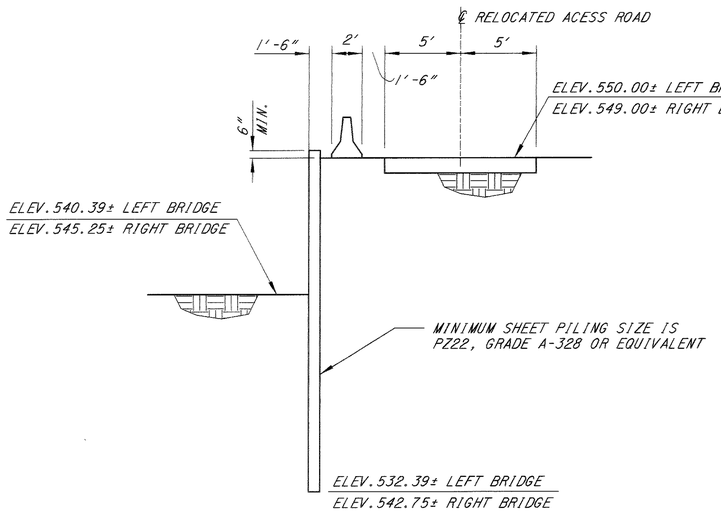

SECTION A-A

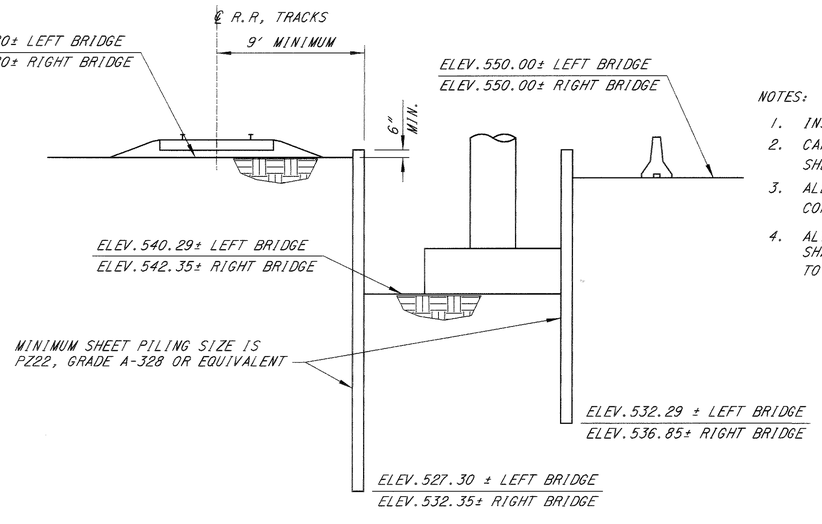

SECTION B-B

NOTES:

1. INSTALL ALL SHEET PILING BEFORE EXCAVATION BEGINS.
2. CARE SHALL BE TAKEN TO AVOID CONFLICT AND DAMAGE BETWEEN THE SHEET PILING AND EXISTING/PROPOSED FOOTING PILES.
3. ALL SHEET PILING SHALL BE REMOVED OR CUT OFF AFTER THE CONSTRUCTION AND BACKFILLING OF PROPOSED PIER FOOTINGS.
4. ALTERNATE DESIGN OF TEMPORARY SHORING BY THE CONTRACTOR SHALL BE SUBMITTED TO THE DIRECTOR FOR APPROVAL PRIOR TO EXCAVATION.

DESIGN AGENCY
BALKE ENGINEERS
1848 Summit Road
Cincinnati, Ohio 45237

DESIGNED	DRAWN	REVIEWED	DATE
FKL	MJH/ALH	CRS	6/01
CHECKED	REVISED	STRUCTURE FILE NUMBER	
MPS	—	120523 L.B. 120552 R.B.	

TEMPORARY SHEET PILING
BRIDGE NO. CLE-275-0654
OVER NORFOLK & SOUTHERN R.R. & C.R. 106 (ROUND BOTTOM ROAD)

CLE-275-5.35

5 / 45

762 / 857

F:\Projects\...\DESIGN\PILE1.dgn

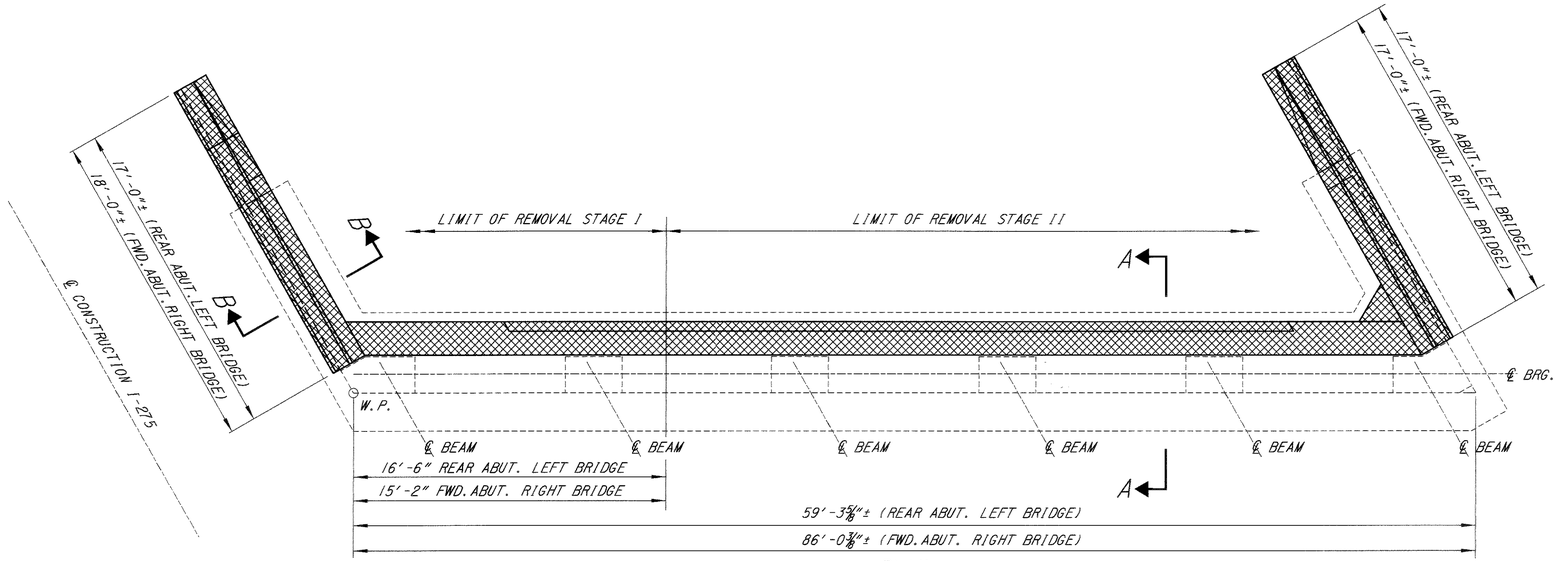

PLAN
(REAR ABUTMENT LEFT BRIDGE SHOWN)
(FORWARD ABUTMENT RIGHT BRIDGE SIMILAR)

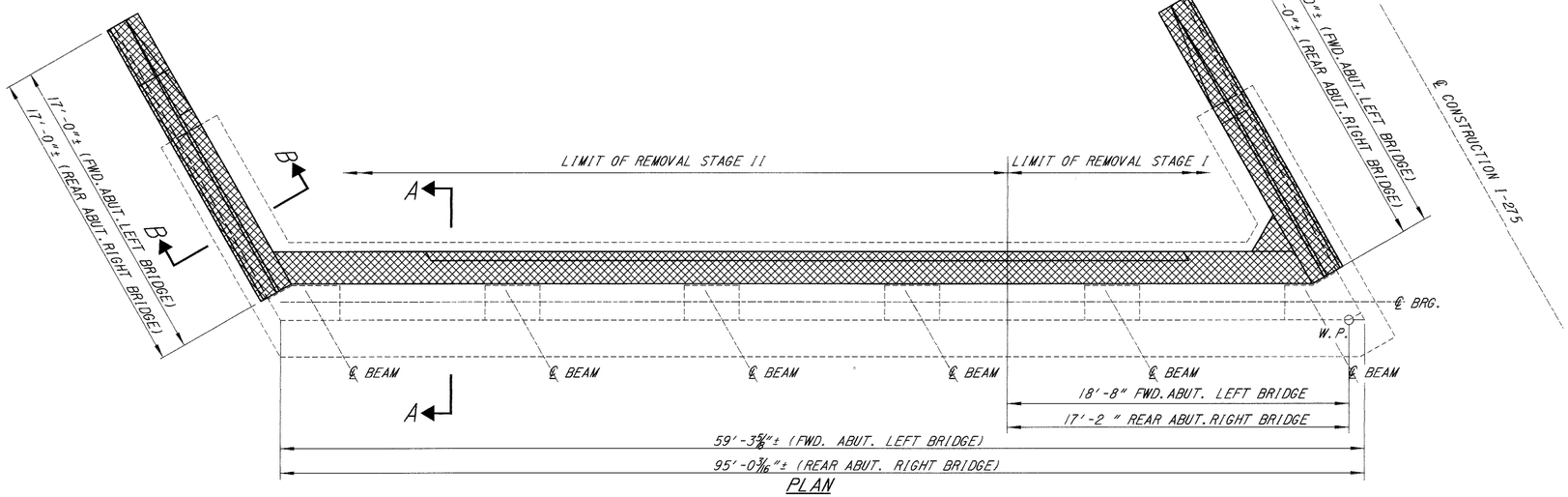

PLAN
(FORWARD ABUTMENT LEFT BRIDGE SHOWN)
(REAR ABUTMENT RIGHT BRIDGE SIMILAR)

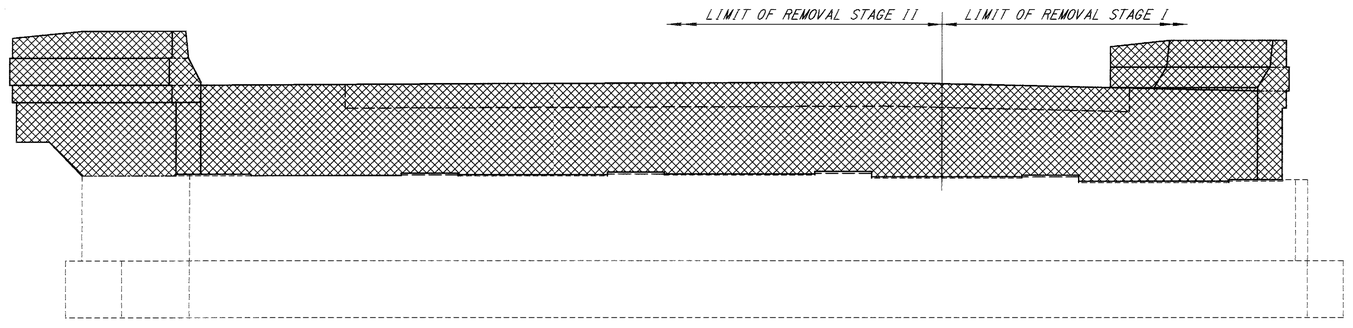

ELEVATION
TYPICAL

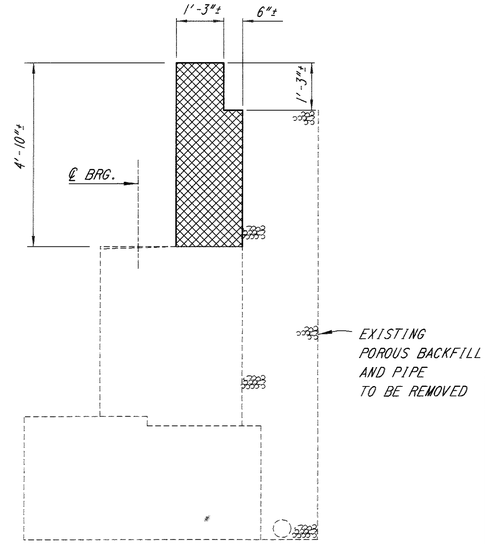

SECTION A-A

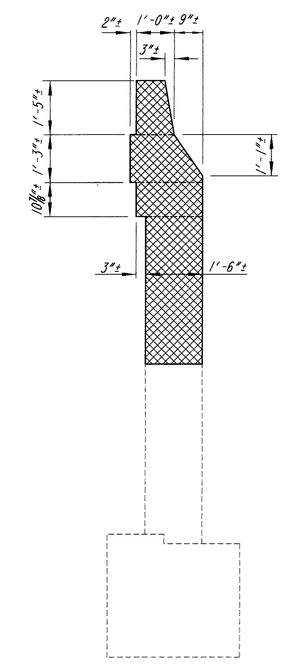

SECTION B-B

NOTES:
1. LIMITS OF CONCRETE AND REINFORCING TO BE REMOVED.
2. W.P. = WORK POINT

DESIGN AGENCY
BALKE ENGINEERS
1848 Summit Road
Cincinnati, Ohio 45237

DESIGNED	DRAWN	REVIEWED	DATE
FKL	ALH	CRS	6/01
CHECKED	REVISED	STRUCTURE FILE NUMBER	
MRS	—	1305654 L.B. 1305662 R.B.	

ABUTMENT CONCRETE REMOVAL DETAILS
BRIDGE NO. CLE-275-0654
OVER NORFOLK & SOTHERN R.R. & C.R. 106 (ROUND BOTTOM RD.)

CLE-275-5.35

Filename: 0654rem1.dgn

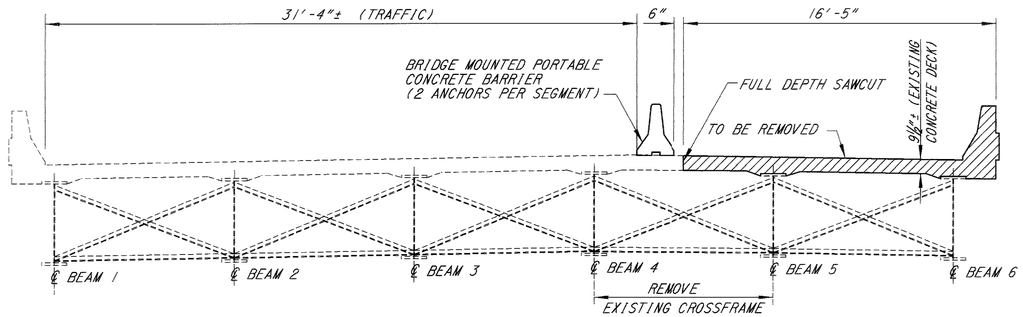

REMOVAL: STAGE I

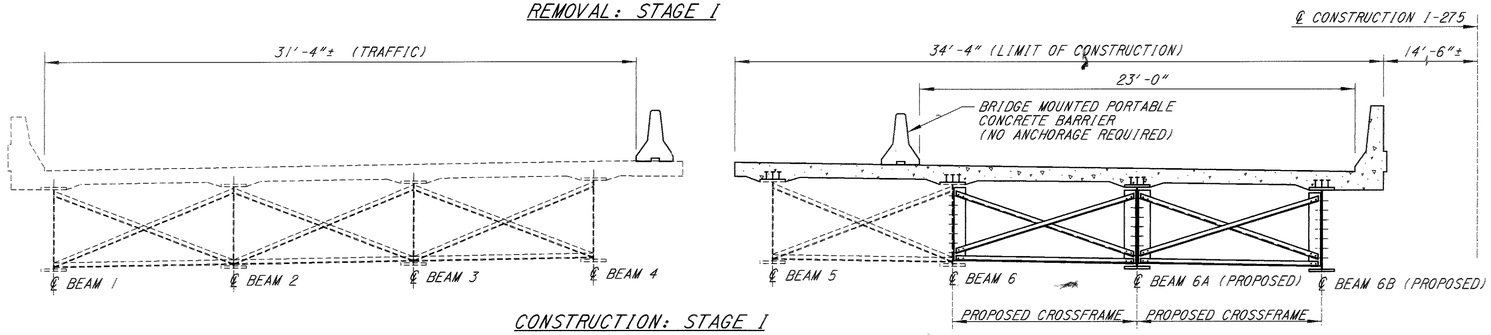

CONSTRUCTION: STAGE I

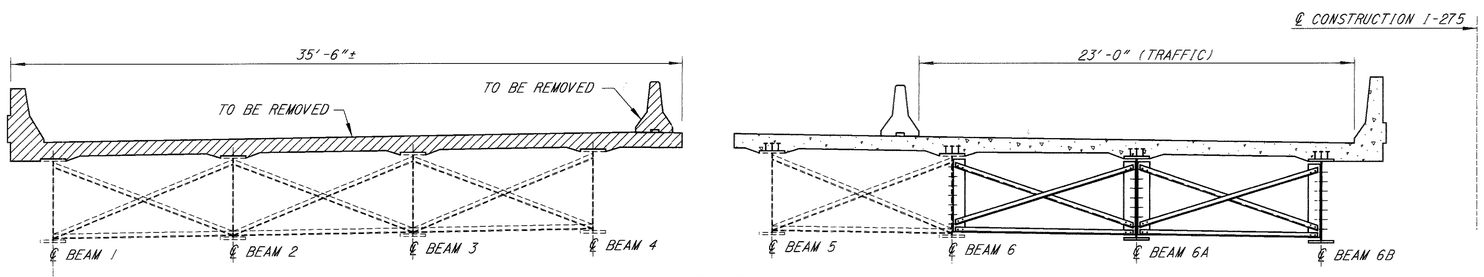

REMOVAL: STAGE II

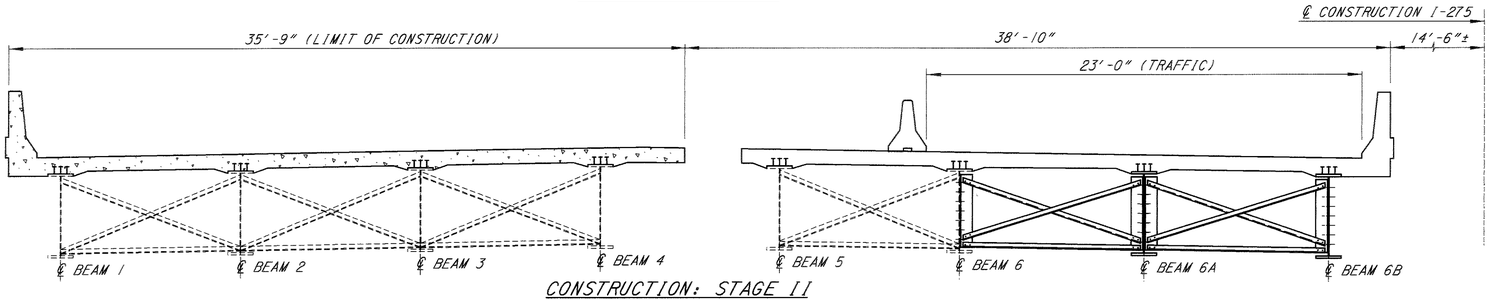

CONSTRUCTION: STAGE II

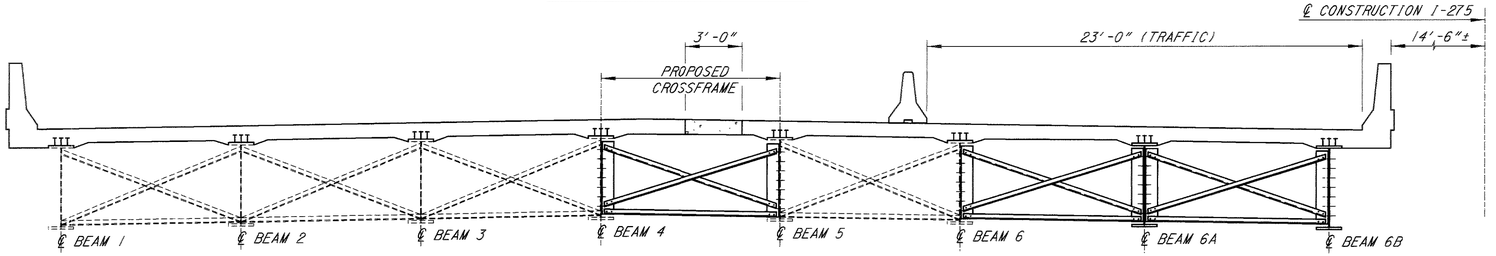

CONSTRUCTION: STAGE II CLOSURE POUR

REMOVAL: STAGE I
1. INSTALL BRIDGE MOUNTED PORTABLE CONCRETE BARRIER.
2. CLOSE THE WEST SIDE TO TRAFFIC, MAINTAIN TRAFFIC ON THE EAST SIDE.
3. REMOVE EXISTING CROSS FRAMES BETWEEN BEAMS 4 AND 5.
4. REMOVE THE EXISTING CONCRETE PARAPET AND DECK.

CONSTRUCTION: STAGE I
1. ERECT NEW BEAMS 6A AND 6B.
2. INSTALL SHEAR STUDS ON ALL BEAMS.
3. INSTALL CROSSFRAMES BETWEEN EXISTING BEAM 6 & NEW BEAM 6A AND NEW BEAM 6A & NEW BEAM 6B.
4. PLACE NEW CONCRETE DECK AND PARAPET.
5. INSTALL BRIDGE MOUNTED PORTABLE BARRIER ONTO THE NEWLY COMPLETED DECK.
6. MOVE TRAFFIC TO NEW DECK.

REMOVAL: STAGE II
1. REMOVE BRIDGE MOUNTED PORTABLE BARRIER.
2. REMOVE THE REMAINING PORTION OF THE CONCRETE PARAPET AND DECK.

CONSTRUCTION: STAGE II
1. INSTALL SHEAR STUDS ON ALL BEAMS.
2. POUR CONCRETE DECK AND PARAPET..

CONSTRUCTION: STAGE II
1. INSTALL PROPOSED CROSSFRAMES BETWEEN BEAM 4 AND BEAM 5.
2. POUR CONCRETE DECK CLOSURE POUR.
3. SEAL CONSTRUCTION JOINTS IN CONCRETE DECK.
4. REMOVE BRIDGE MOUNTED PORTABLE BARRIER.
5. OPEN THE COMPLETED BRIDGE TO TRAFFIC.

NOTES:
1. FOR MAINTAINANCE OF TRAFFIC DETAILS, SEE ROADWAY SHEETS.
2. FOR BRIDGE MOUNTED PORTABLE CONCRETE BARRIER DETAILS, SEE STANDARD DRAWING PCB-91.

DESIGN AGENCY
BALKE ENGINEERS
1848 Summit Road
Cincinnati, Ohio 45237

DESIGNED	DRAWN	REVIEWED	DATE
FKL	ALH/WJH	CRS	6/01
CHECKED	REVISED	STRUCTURE FILE NUMBER	
MRS	—	1305654 L.B. 1305662 R.B.	

SEQUENCE OF CONSTRUCTION: LEFT BRIDGE
BRIDGE NO. CLE-275-0654
OVER NORFOLK & SOUTHERN R.R. & C.R. 106 (ROUND BOTTOM ROAD)

CLE-275-5.35

Filename: 0654sp3X.dgn

REMOVAL: STAGE I
1. INSTALL BRIDGE MOUNTED PORTABLE CONCRETE BARRIER.
2. CLOSE THE EAST SIDE TO TRAFFIC, MAINTAIN TRAFFIC ON THE EAST SIDE.
3. REMOVE EXISTING CROSSFRAMES BETWEEN BEAMS 8 AND 9.
4. REMOVE THE EXISTING CONCRETE PARAPET AND DECK.

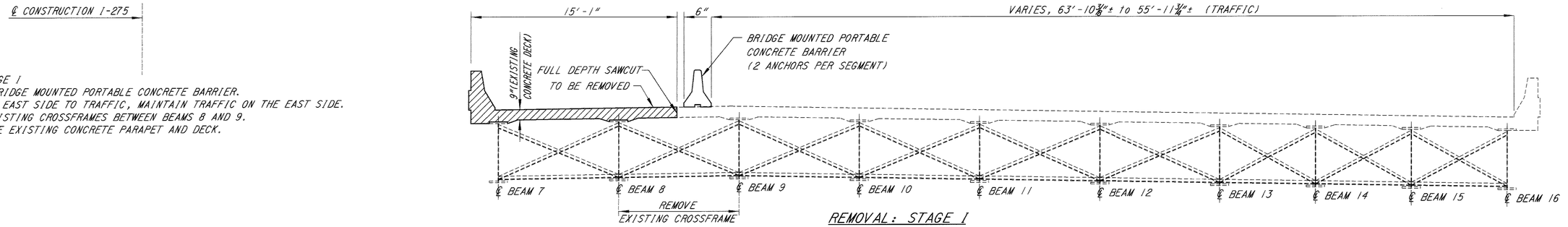

REMOVAL: STAGE I

CONSTRUCTION: STAGE I
1. ERECT NEW BEAMS 7A AND 7B.
2. INSTALL SHEAR STUDS ON ALL BEAMS.
3. INSTALL CROSSFRAMES BETWEEN EXISTING BEAM 7 & NEW BEAM 7A AND NEW BEAM 7A & NEW BEAM 7B.
4. PLACE NEW CONCRETE DECK AND PARAPET.
5. INSTALL BRIDGE MOUNTED PORTABLE BARRIER ONTO THE NEWLY COMPLETED DECK.
6. MOVE TRAFFIC TO NEW DECK.

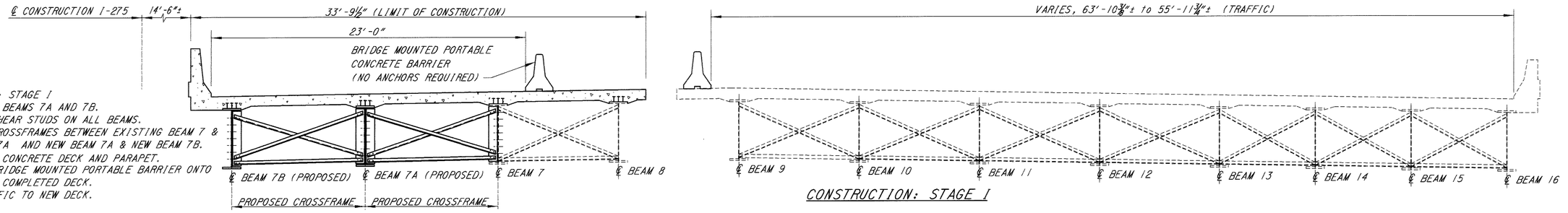

CONSTRUCTION: STAGE I

REMOVAL: STAGE II
1. REMOVE BRIDGE MOUNTED PORTABLE BARRIER.
2. REMOVE THE REMAINING PORTION OF THE CONCRETE PARAPET AND DECK.

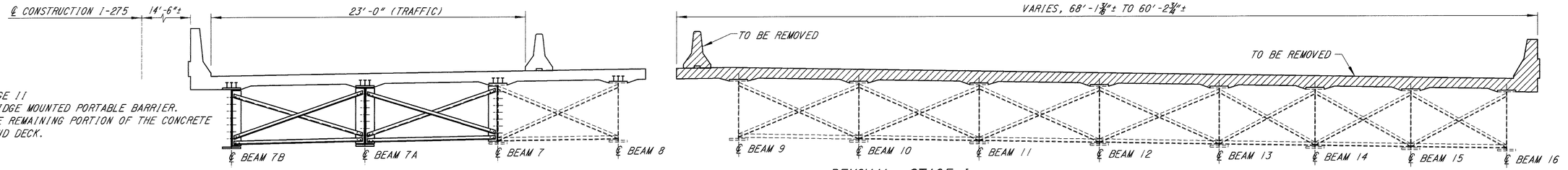

REMOVAL: STAGE I

CONSTRUCTION: STAGE II
1. INSTALL SHEAR STUDS ON ALL BEAMS.
2. POUR CONCRETE DECK AND PARAPET..

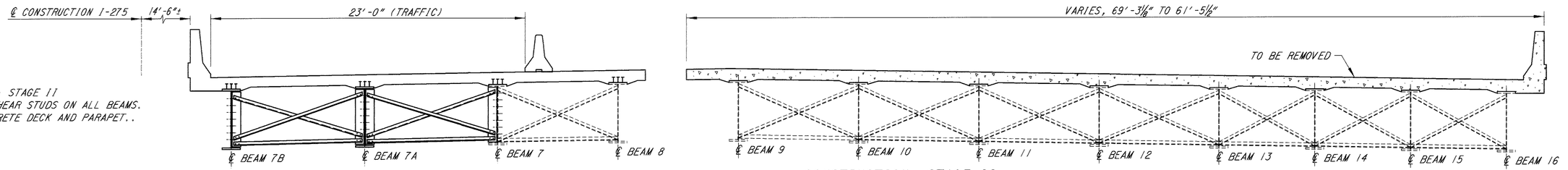

CONSTRUCTION: STAGE II

CONSTRUCTION: STAGE II
1. INSTALL PROPOSED CROSSFRAMES BETWEEN BEAM 8 AND BEAM 9.
2. POUR CONCRETE DECK CLOSURE POUR.
3. SEAL CONSTRUCTION JOINTS IN CONCRETE DECK.
4. REMOVE BRIDGE MOUNTED PORTABLE BARRIER.
5. OPEN THE COMPLETED BRIDGE TO TRAFFIC.

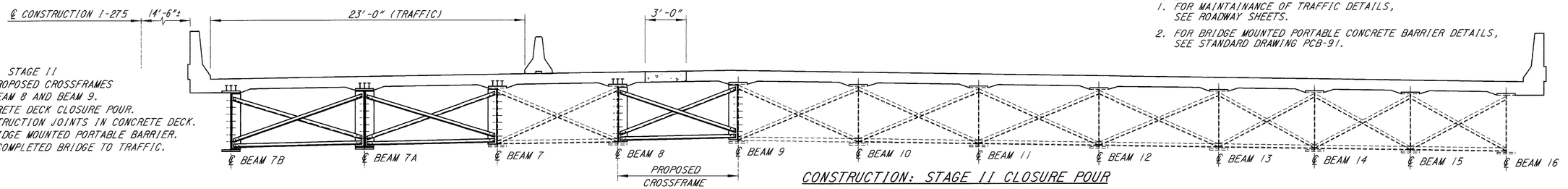

CONSTRUCTION: STAGE II CLOSURE POUR

NOTES:
1. FOR MAINTAINANCE OF TRAFFIC DETAILS, SEE ROADWAY SHEETS.
2. FOR BRIDGE MOUNTED PORTABLE CONCRETE BARRIER DETAILS, SEE STANDARD DRAWING PCB-91.

SEQUENCE OF CONSTRUCTION: RIGHT BRIDGE

BRIDGE NO. CLE-275-0654
OVER NORFOLK & SOUTHERN R.R. & C.R. 106 (ROUND BOTTOM ROAD)

DESIGN AGENCY
BALKE ENGINEERS
1846 Summit Road
Cincinnati, Ohio 45237

DESIGNED	DRAWN	REVIEWED	DATE
FKL	ALH,MJH	CPS	6/01
CHECKED	REVISED	STRUCTURE FILE NUMBER	
MPS	—	1025654 Gen. 1025662 R.R.	

CLE-275-5.35

File name: 0654sq01.dgn

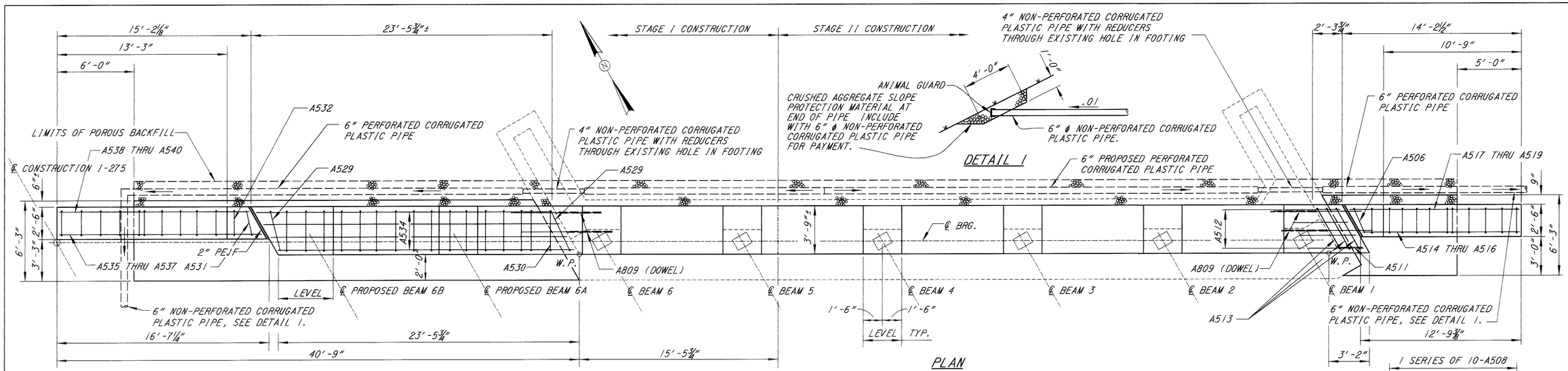

NOTES:
1. FOR ADDITIONAL INFORMATION, SEE STD. DWG. SICD-1-96.
2. FOR SECTIONS A-A, B-B, C-C, D-D & E-E, SEE SHEET 15 45.
3. EF = EACH FACE
   NF = NEAR FACE
   FF = FAR FACE
   PEJF = PREFORMED EXPANSION JOINT FILLER
   W.P. = WORK POINT
4. ▼ DENOTES HP10x42 PILE BATTERED 1:3 IN DIRECTION OF ARROW.
5. ⟨3⟩ DENOTES PILE NUMBER.
6. NEW POROUS BACKFILL WITH FILTER FABRIC, 2 FEET THICK SHALL EXTEND UP TO THE PLANE OF THE SUBGRADE, TO 1 FOOT BELOW THE EMBANKMENT SURFACE, AND LATERALLY TO THE ENDS OF THE WINGWALLS.

DESIGN AGENCY
BALKE ENGINEERS
1848 Summit Road
Cincinnati, Ohio 45237

DESIGNED	DRAWN	REVIEWED	DATE
FKL	ALH	CRS	6/01
CHECKED	REVISED	STRUCTURE FILE NUMBER	
MKS	—	1305654 L.E. 1305662 R.E.	

LEFT BRIDGE REAR ABUTMENT
BRIDGE NO. CLE-275-0654
OVER NORFOLK & SOUTHERN R.R. & C.R. 106 (ROUND BOTTOM RD.)

CLE-275-5.35

F:\Bridges\0654LBRA1.dgn

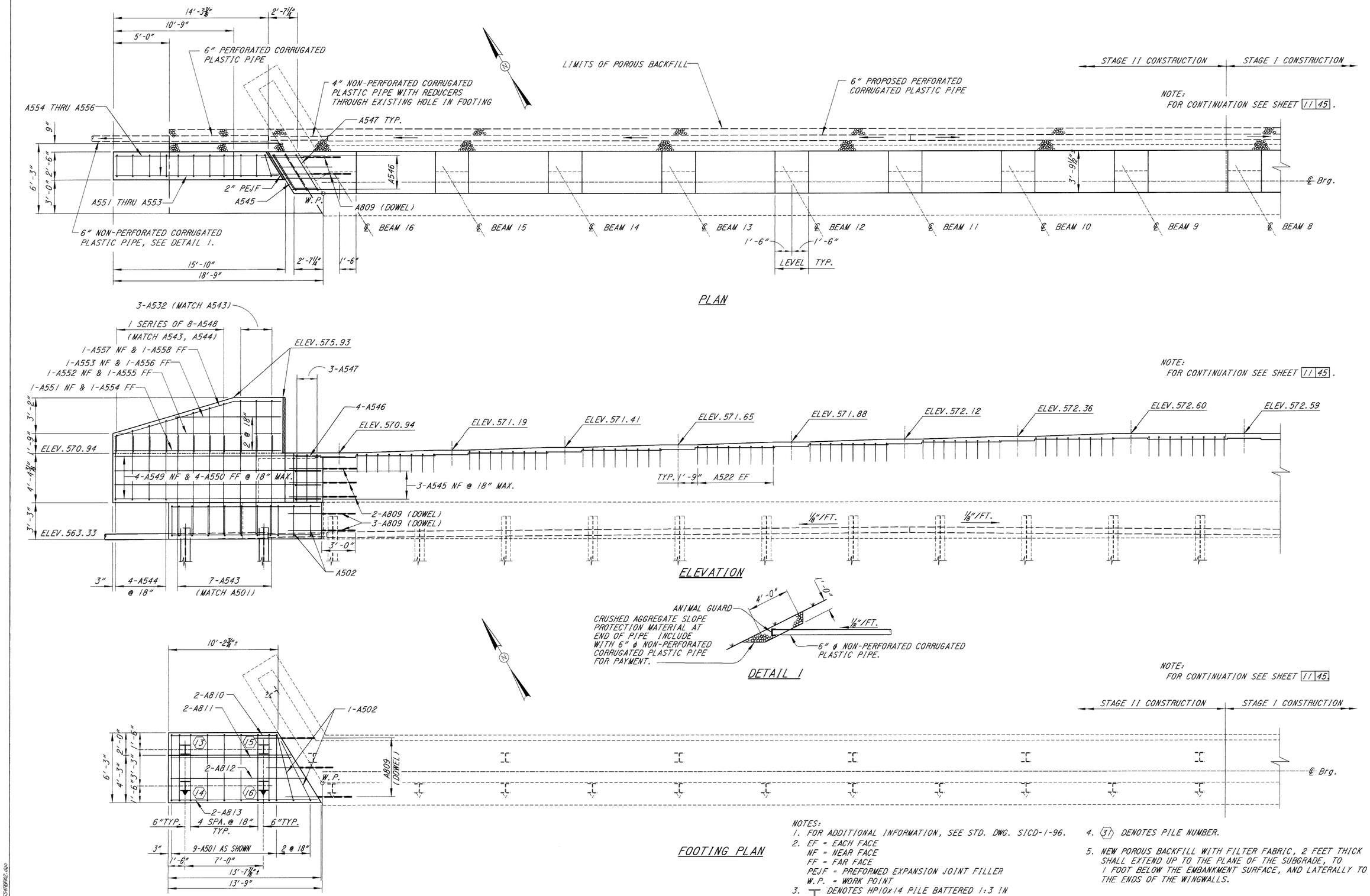

NOTES:
1. FOR ADDITIONAL INFORMATION, SEE STD. DWG. SICD-1-96.
2. EF = EACH FACE
   NF = NEAR FACE
   FF = FAR FACE
   PEJF = PREFORMED EXPANSION JOINT FILLER
   W.P. = WORK POINT
3. ⊤ DENOTES HP10x14 PILE BATTERED 1:3 IN DIRECTION OF ARROW.
4. (31) DENOTES PILE NUMBER.
5. NEW POROUS BACKFILL WITH FILTER FABRIC, 2 FEET THICK SHALL EXTEND UP TO THE PLANE OF THE SUBGRADE, TO 1 FOOT BELOW THE EMBANKMENT SURFACE, AND LATERALLY TO THE ENDS OF THE WINGWALLS.

DESIGN AGENCY
BALKE ENGINEERS
1848 Summit Road
Cincinnati, Ohio 45237

DESIGNED	DRAWN	REVIEWED	DATE
FKL	WJH/ALH	CRS	6/01
CHECKED	REVISED	STRUCTURE FILE NUMBER	
MRS	—	1305654 L.B. 1305662 R.B.	

RIGHT BRIDGE REAR ABUTMENT DETAILS
BRIDGE NO. CLE-275-0654
OVER NORFOLK & SOUTHERN R.R. & C.R. 106 (ROUND BOTTOM RD.)

CLE-275-5.35

10/45

767/857

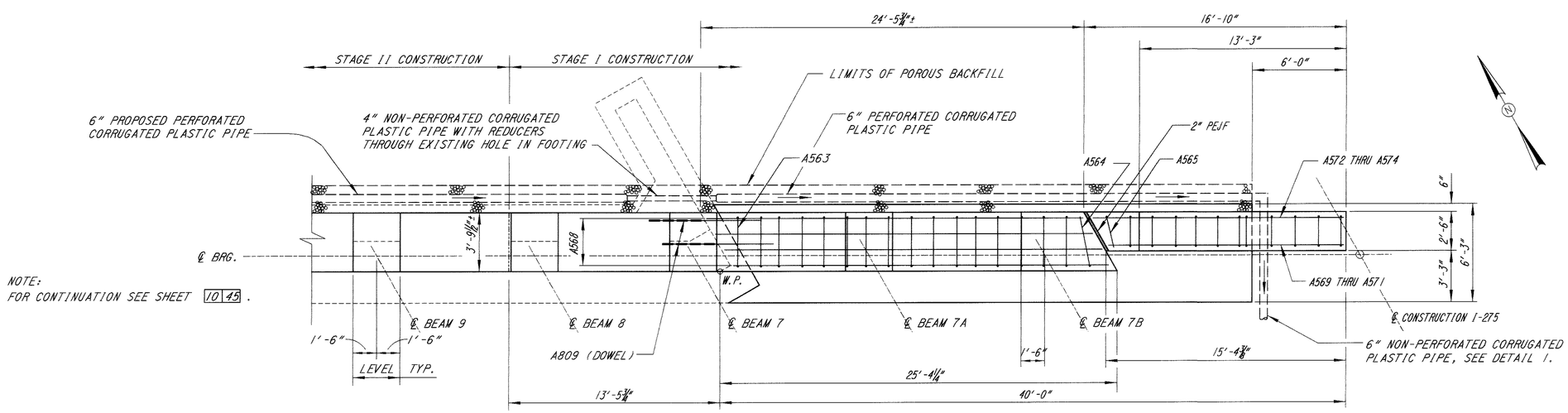

NOTE:
FOR CONTINUATION SEE SHEET 10 45.

PLAN

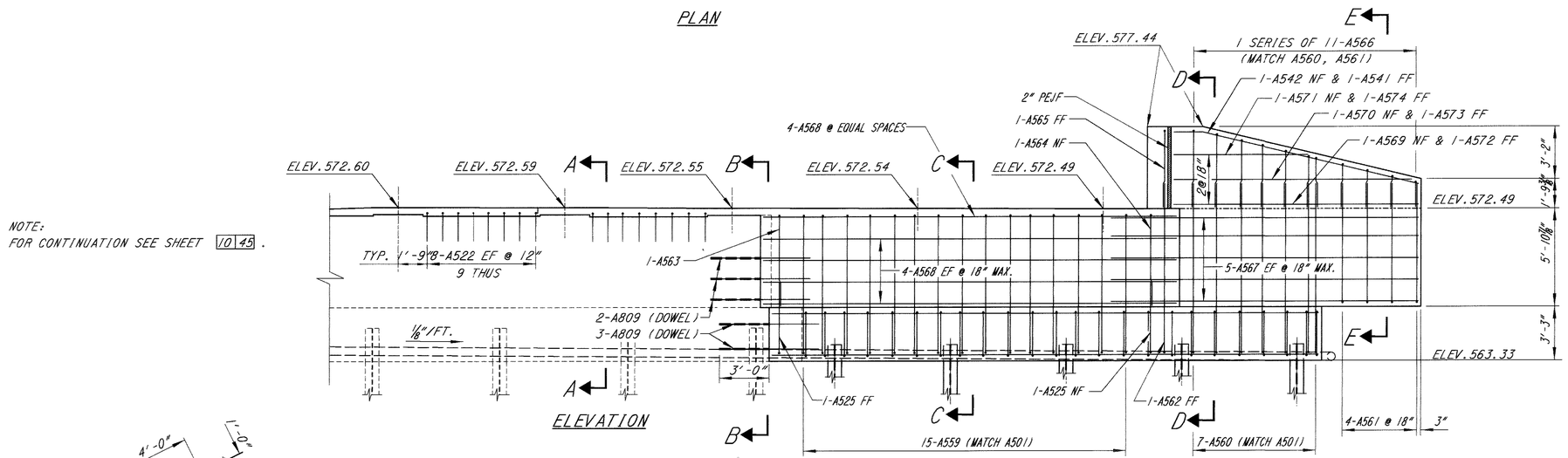

NOTE:
FOR CONTINUATION SEE SHEET 10 45.

ELEVATION

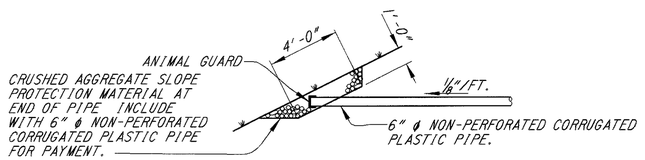

DETAIL 1

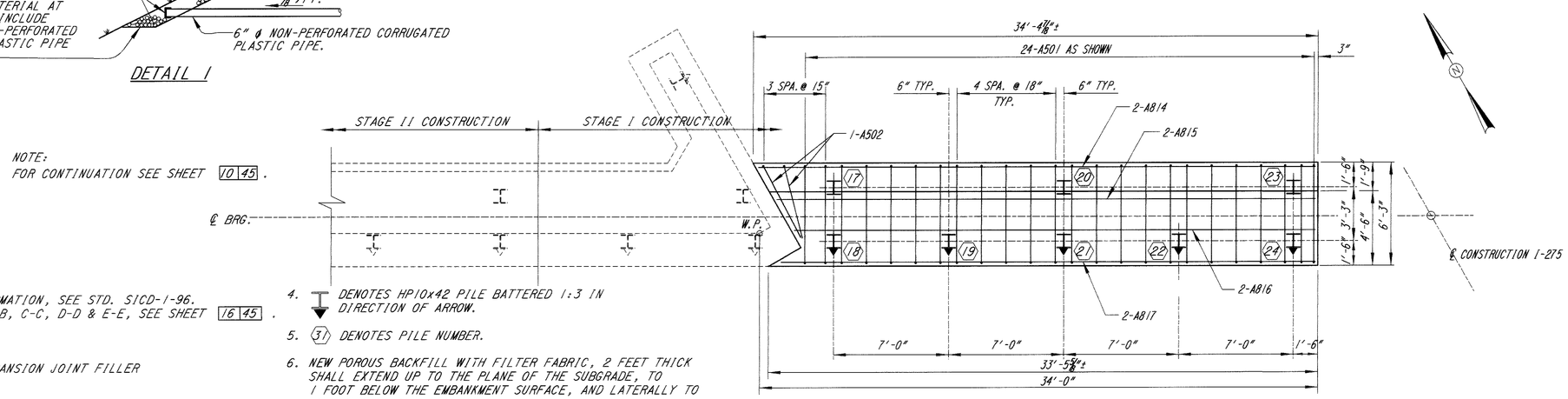

NOTE:
FOR CONTINUATION SEE SHEET 10 45.

FOOTING PLAN

NOTES:
1. FOR ADDITIONAL INFORMATION, SEE STD. SICD-1-96.
2. FOR SECTIONS A-A, B-B, C-C, D-D & E-E, SEE SHEET 16 45.
3. EF = EACH FACE
   NF = NEAR FACE
   FF = FAR FACE
   PEJF = PREFORMED EXPANSION JOINT FILLER
   W.P. = WORK POINT
4. DENOTES HP10x42 PILE BATTERED 1:3 IN DIRECTION OF ARROW.
5. (31) DENOTES PILE NUMBER.
6. NEW POROUS BACKFILL WITH FILTER FABRIC, 2 FEET THICK SHALL EXTEND UP TO THE PLANE OF THE SUBGRADE, TO 1 FOOT BELOW THE EMBANKMENT SURFACE, AND LATERALLY TO THE ENDS OF THE WINGWALLS.

DESIGN AGENCY
BALKE ENGINEERS
1848 Summit Road
Cincinnati, Ohio 45237

DESIGNED	DRAWN	REVIEWED	DATE
FKL	WJH/ALH	CRS	6/01
CHECKED	REVISED	STRUCTURE FILE NUMBER	
MRS	—	1305654 L.B. 1305662 R.B.	

RIGHT BRIDGE REAR ABUTMENT DETAILS
BRIDGE NO. CLE-275-0654
OVER NORFOLK & SOUTHERN R.R. & C.R. 106 (ROUND BOTTOM RD.)

CLE-275-5.35

768/857

Filename: 0654RBRA1.dgn

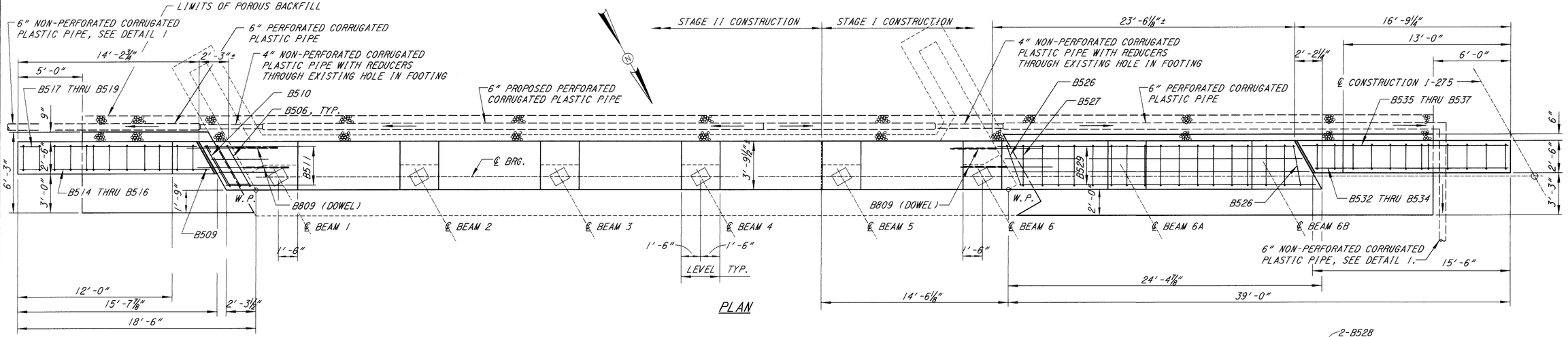

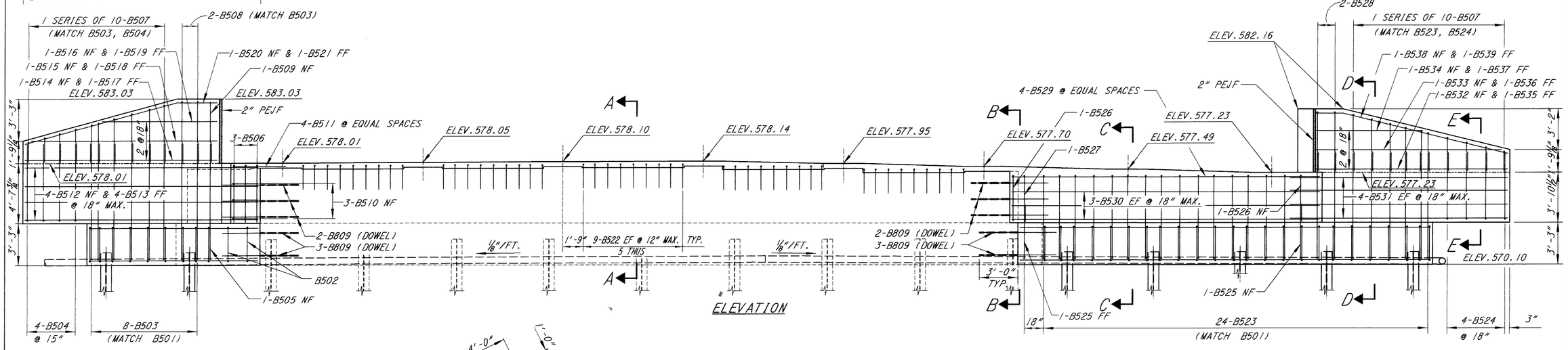

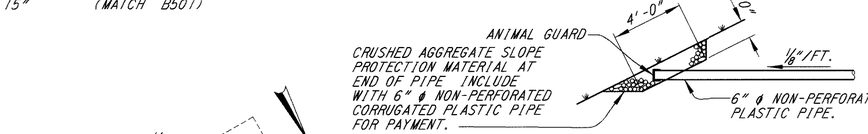

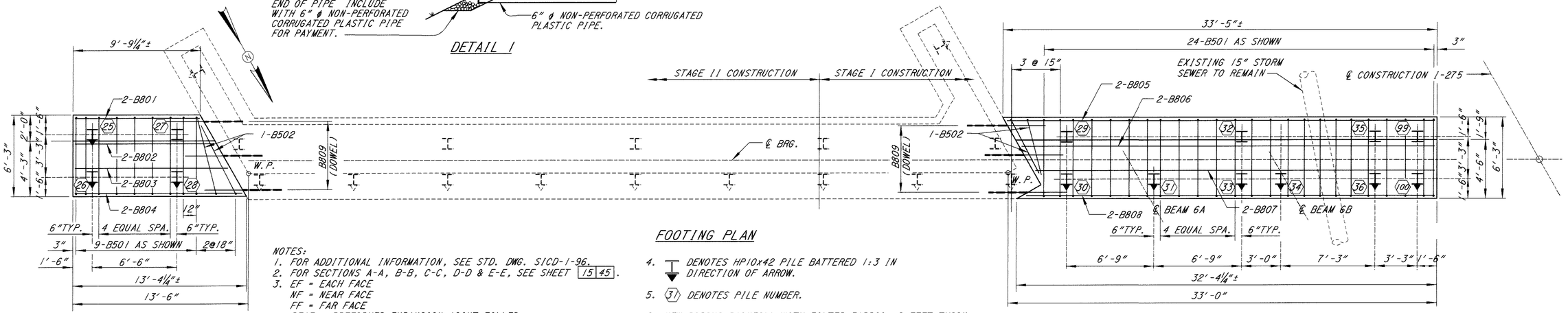

NOTES:
1. FOR ADDITIONAL INFORMATION, SEE STD. DWG. SICD-1-96.
2. FOR SECTIONS A-A, B-B, C-C, D-D & E-E, SEE SHEET 15 45.
3. EF = EACH FACE
   NF = NEAR FACE
   FF = FAR FACE
   PEJF = PREFORMED EXPANSION JOINT FILLER
   W.P. = WORK POINT
4. ▼ DENOTES HP10x42 PILE BATTERED 1:3 IN DIRECTION OF ARROW.
5. (37) DENOTES PILE NUMBER.
6. NEW POROUS BACKFILL WITH FILTER FABRIC, 2 FEET THICK SHALL EXTEND UP TO THE PLANE OF THE SUBGRADE, TO 1 FOOT BELOW THE EMBANKMENT SURFACE, AND LATERALLY TO THE ENDS OF THE WINGWALLS.

DESIGN AGENCY
BALKE ENGINEERS
1848 Summit Road
Cincinnati, Ohio 45237

DESIGNED	DRAWN	REVIEWED	DATE
FKL	ALH	CRS	6/01
CHECKED	REVISED	STRUCTURE FILE NUMBER	
MPS	—	1-275/5.71 & 7.28 / 303662 R.B.	

LEFT BRIDGE FORWARD ABUTMENT DETAILS
BRIDGE NO. CLE-275-0654
OVER NORFOLK & SOUTHERN R.R. & C.R. 106 (ROUND BOTTOM R.D.)

CLE-275-5.35

12/45

769
857

F:\bonms\0654LBA1.dgn

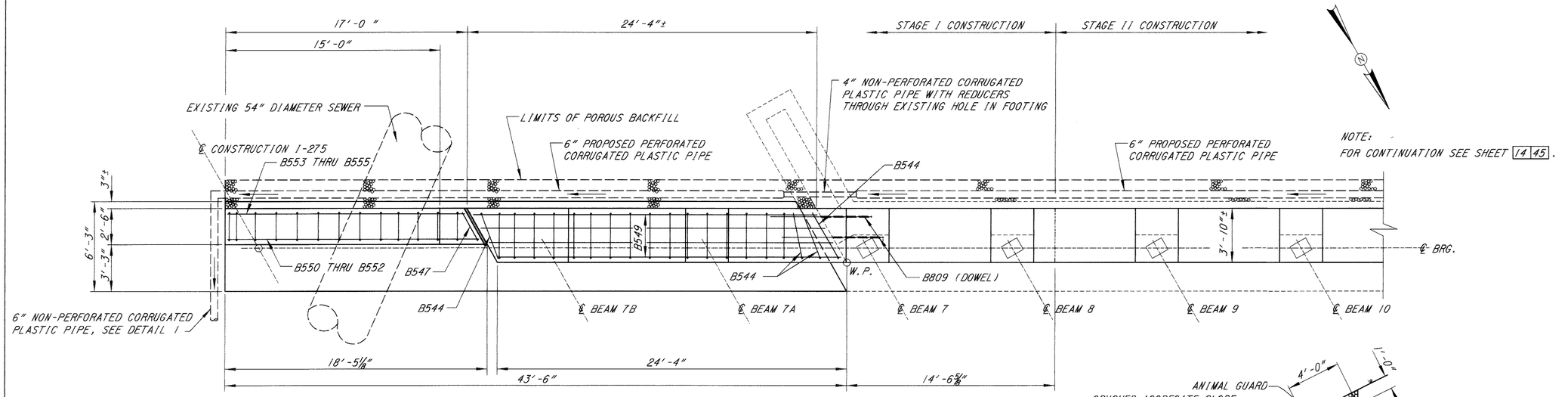

PLAN

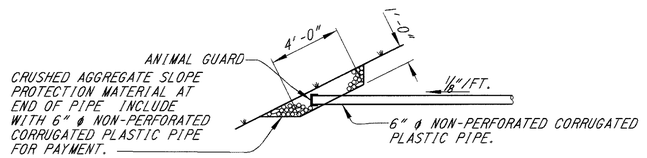

DETAIL 1

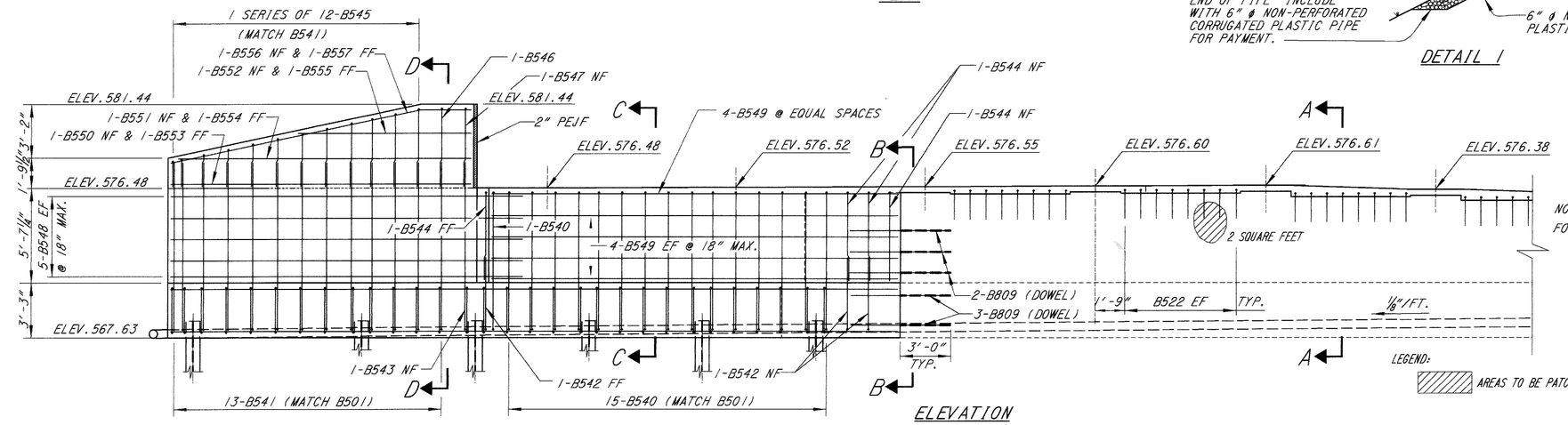

ELEVATION

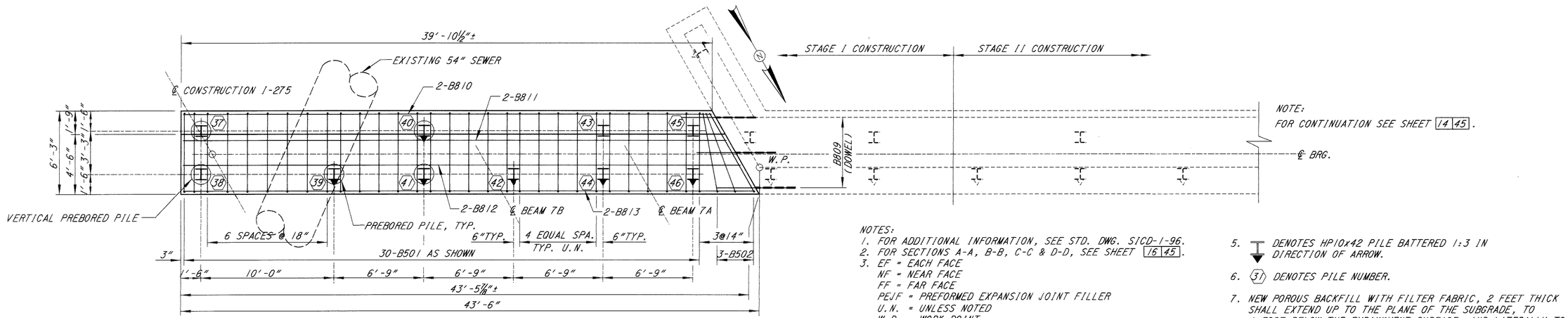

FOOTING PLAN

NOTES:
1. FOR ADDITIONAL INFORMATION, SEE STD. DWG. SICD-1-96.
2. FOR SECTIONS A-A, B-B, C-C & D-D, SEE SHEET 15 45 .
3. EF = EACH FACE
   NF = NEAR FACE
   FF = FAR FACE
   PEJF = PREFORMED EXPANSION JOINT FILLER
   U.N. = UNLESS NOTED
   W.P. = WORK POINT
4. (I) PILES NEAR THE EXISTING 54" DIAMETER SEWER SHALL BE PREBORED TO ELEV. 492.60±. CARE SHALL BE TAKEN TO AVOID EXCESSIVE VIBRATION DURING PILE DRIVING
5. ▼ DENOTES HP10x42 PILE BATTERED 1:3 IN DIRECTION OF ARROW.
6. (37) DENOTES PILE NUMBER.
7. NEW POROUS BACKFILL WITH FILTER FABRIC, 2 FEET THICK SHALL EXTEND UP TO THE PLANE OF THE SUBGRADE, TO 1 FOOT BELOW THE EMBANKMENT SURFACE, AND LATERALLY TO THE ENDS OF THE WINGWALLS.

DESIGN AGENCY
BALKE ENGINEERS
1848 Summit Road
Cincinnati, Ohio 45237

DESIGNED	DRAWN	REVIEWED	DATE
FKL	WJH/ALH	CRS	6/01
CHECKED	REVISED	STRUCTURE FILE NUMBER	
MRS	—	120654 H.B. 1305662 H.B.	

RIGHT BRIDGE FORWARD ABUTMENT DETAILS
BRIDGE NO. CLE-275-0654
OVER NORFOLK & SOUTHERN R.R. & C.R. 106 (ROUND BOTTOM RD.)

CLE-275-5.35

13 / 45

770
857

F:\Division\DESIGN\SICD\SICD-1-96.dgn

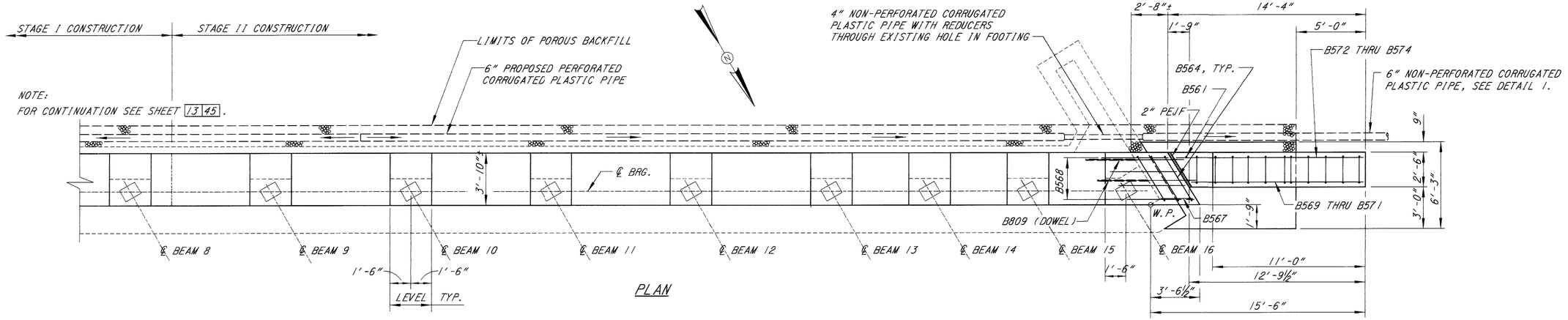

PLAN

NOTE:
FOR CONTINUATION SEE SHEET 13 45 .

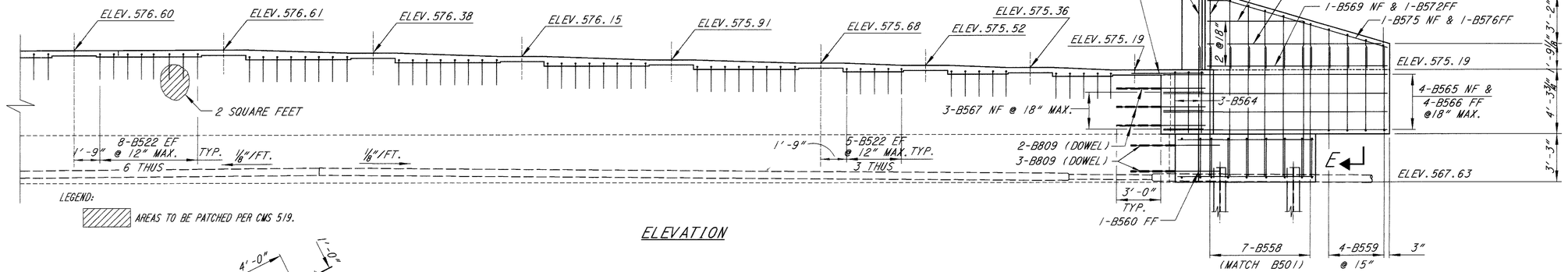

LEGEND:
AREAS TO BE PATCHED PER CMS 519.

ELEVATION

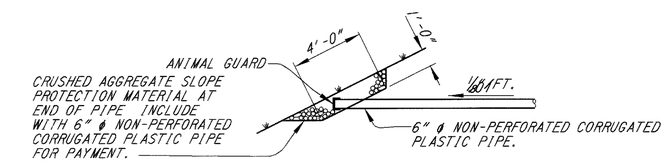

DETAIL 1

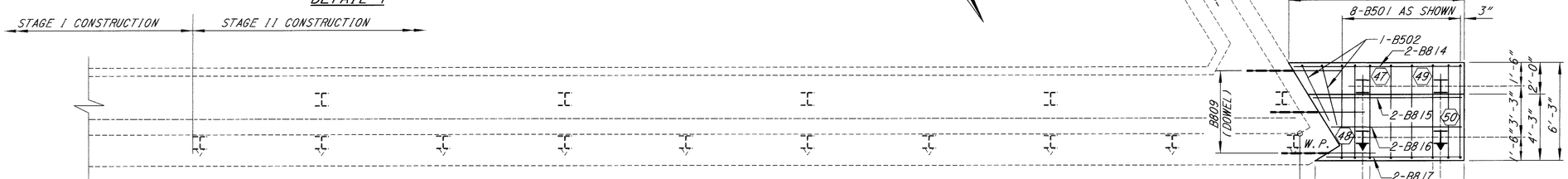

NOTE:
FOR CONTINUATION SEE SHEET 13 45 .

FOOTING PLAN

NOTES:
1. FOR ADDITIONAL INFORMATION, SEE STD. DWG. SICD-1-96.
2. FOR SECTIONS E-E, SEE SHEET 16 45 .
3. EF = EACH FACE
   NF = NEAR FACE
   FF = FAR FACE
   PEJF = PREFORMED EXPANSION JOINT FILLER
   W.P. = WORK POINT
4. ▼ DENOTES HP10x42 PILE BATTERED 1:3 IN DIRECTION OF ARROW.
5. ⟨31⟩ DENOTES PILE NUMBER.
6. NEW POROUS BACKFILL WITH FILTER FABRIC, 2 FEET THICK SHALL EXTEND UP TO THE PLANE OF THE SUBGRADE, TO 1 FOOT BELOW THE EMBANKMENT SURFACE, AND LATERALLY TO THE ENDS OF THE WINGWALLS.

DESIGN AGENCY
BALKE ENGINEERS
1848 Summit Road
Cincinnati, Ohio 45237

DESIGNED	DRAWN	REVIEWED	DATE
FKL	WJH/ALH	CRS	6/01
CHECKED	REVISED	STRUCTURE FILE NUMBER	
MPS	—	1305662 F.L.D. 1305662 H.B.	

RIGHT BRIDGE FORWARD ABUTMENT DETAILS
BRIDGE NO. CLE-275-0654
OVER NORFOLK & SOUTHERN R.R. & C.R. 106 (ROUND BOTTOM RD.)

CLE-275-5.35

14 45

771
857

F:\Bridges\1305-HBP\d2.dgn

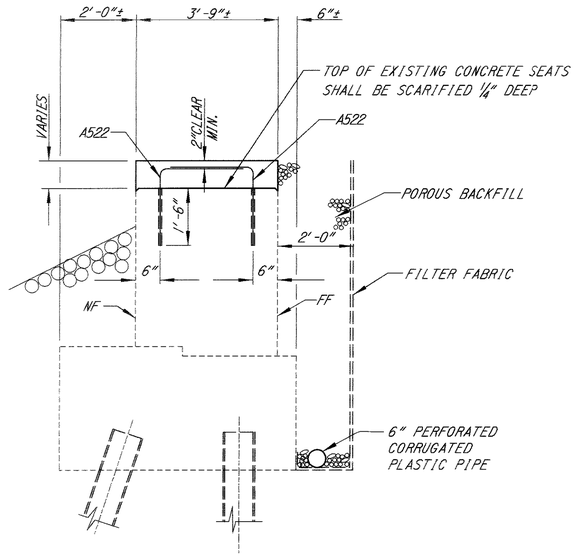

SECTION A-A

REAR ABUTMENT SHOWN
FORWARD ABUTMENT SIMILAR

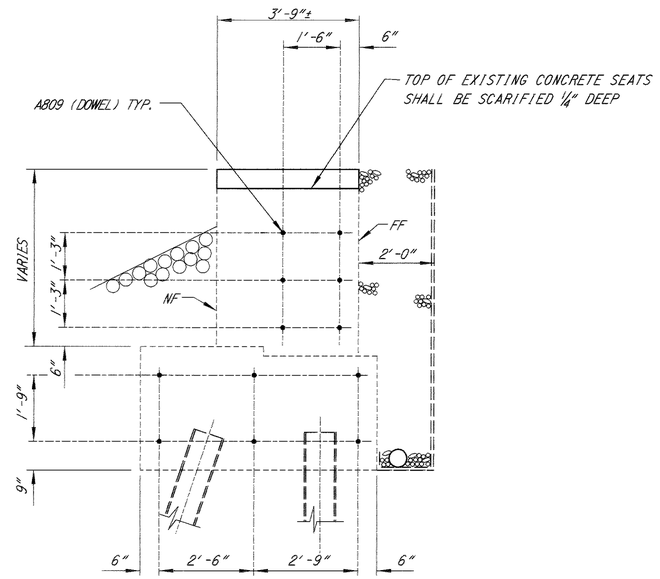

SECTION B-B

REAR ABUTMENT SHOWN
FORWARD ABUTMENT SIMILAR

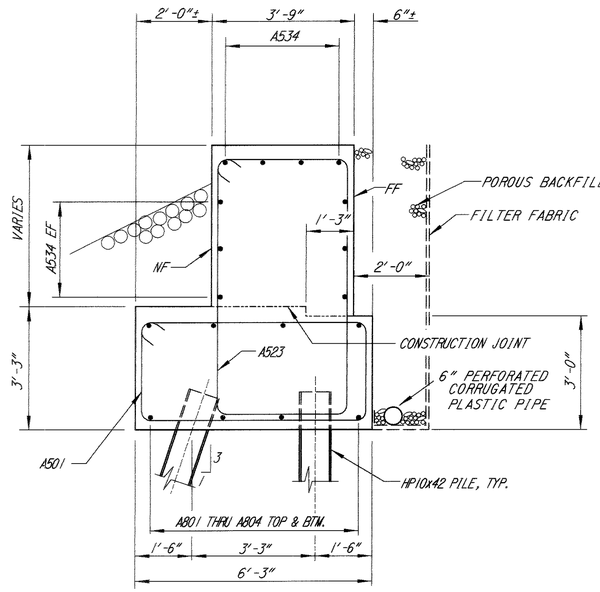

SECTION C-C

REAR ABUTMENT SHOWN
FORWARD ABUTMENT SIMILAR

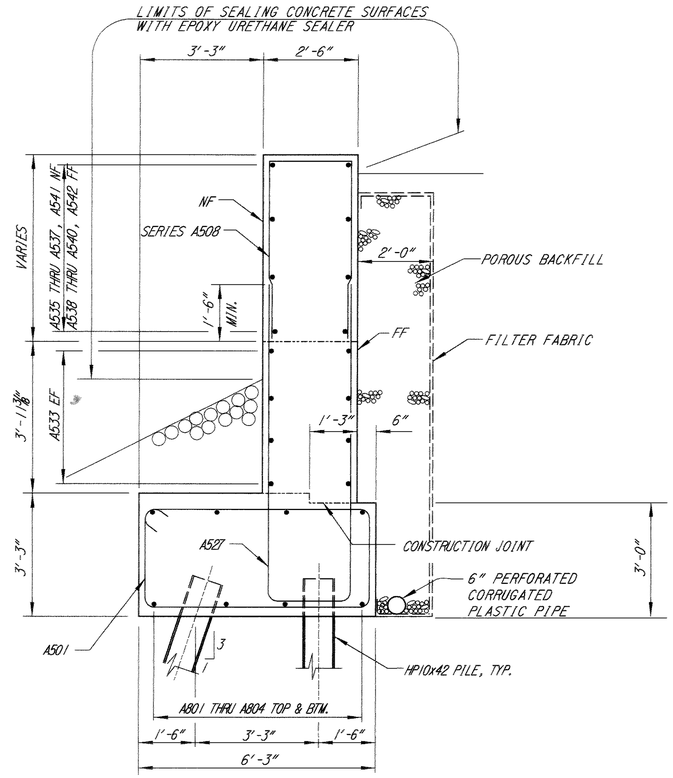

SECTION D-D

REAR ABUTMENT SHOWN
FORWARD ABUTMENT SIMILAR

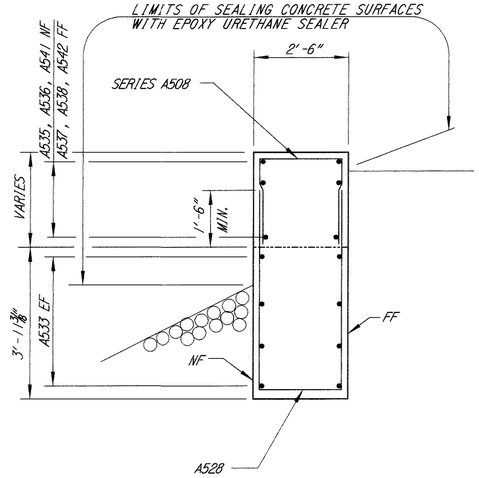

SECTION E-E

REAR ABUTMENT SHOWN
FORWARD ABUTMENT SIMILAR

NOTES:

1. EF = EACH FACE
   NF = NEAR FACE
   FF = FAR FACE
2. NEW POROUS BACKFILL WITH FILTER FABRIC, 2 FEET THICK, SHALL EXTEND UP TO THE PLANE OF THE SUBGRADE, TO 1 FOOT BELOW THE EMBANKMENT AND LATERALLY TO THE ENDS OF THE WINGWALLS.

DESIGN AGENCY
BALKE ENGINEERS
1848 Summit Road
Cincinnati, Ohio 45237

DESIGNED	DRAWN	REVIEWED	DATE
FKL	ALH	CRS	6/01
CHECKED	REVISED	STRUCTURE FILE NUMBER	
MRS	—	1305530 L.B. 1305549 R.B.	

LEFT BRIDGE ABUTMENT DETAILS
BRIDGE NO. CLE-275-0654
OVER NORFOLK & SOUTHERN R.R. & C.R. 106 (ROUND BOTTOM RD.)

CLE-275-5.35

Filename: 0654LBRAIA.dgn

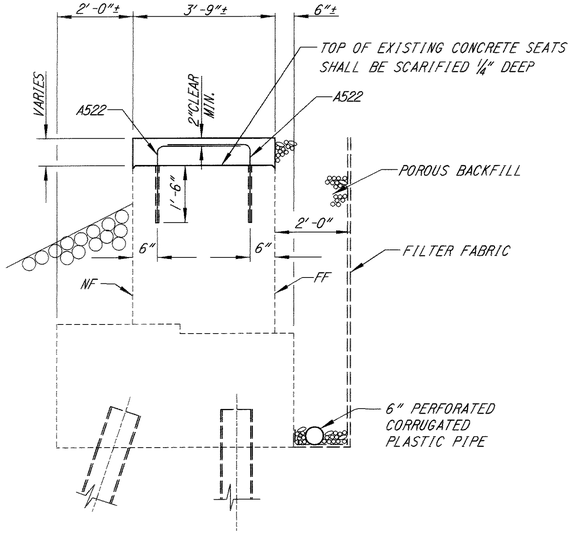

SECTION A-A

REAR ABUTMENT SHOWN
FORWARD ABUTMENT SIMILAR

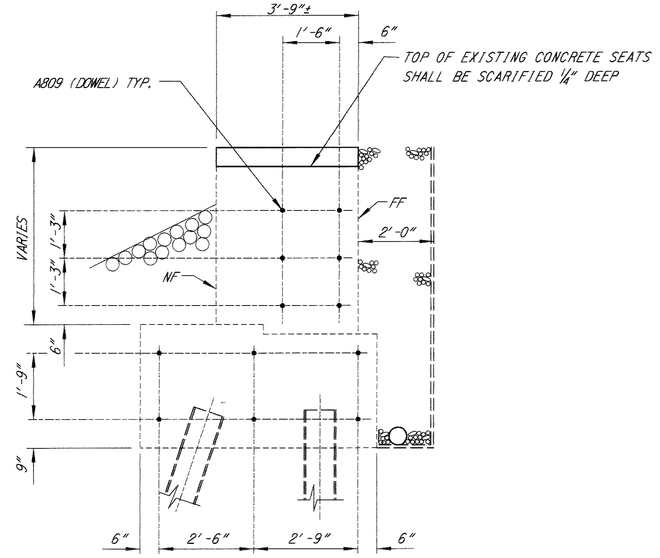

SECTION B-B

REAR ABUTMENT SHOWN
FORWARD ABUTMENT SIMILAR

NOTES:

1. EF = EACH FACE
   NF = NEAR FACE
   FF = FAR FACE
2. NEW POROUS BACKFILL WITH FILTER FABRIC, 2 FEET THICK, SHALL EXTEND UP TO THE PLANE OF THE SUBGRADE, TO 1 FOOT BELOW THE EMBANKMENT AND LATERALLY TO THE ENDS OF THE WINGWALLS.

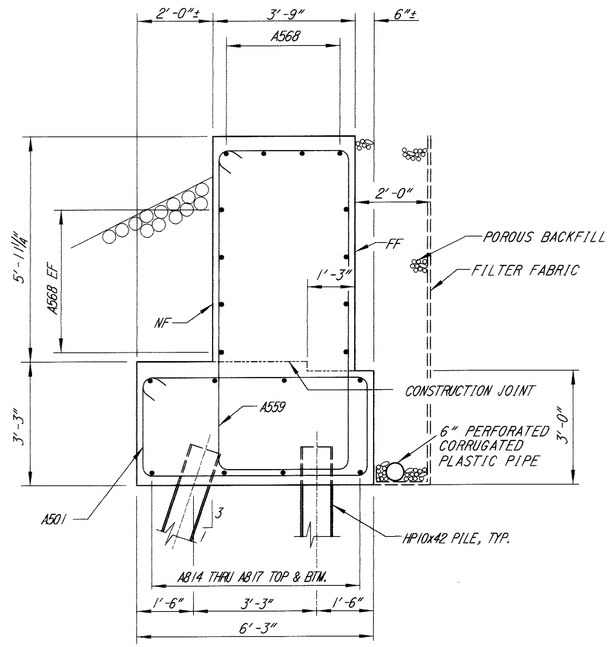

SECTION C-C

REAR ABUTMENT SHOWN
FORWARD ABUTMENT SIMILAR

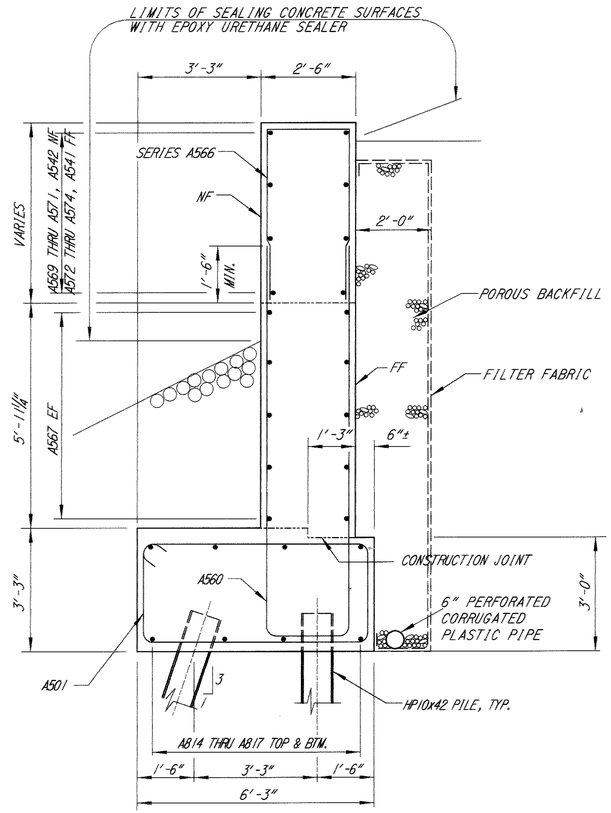

SECTION D-D

REAR ABUTMENT SHOWN
FORWARD ABUTMENT SIMILAR

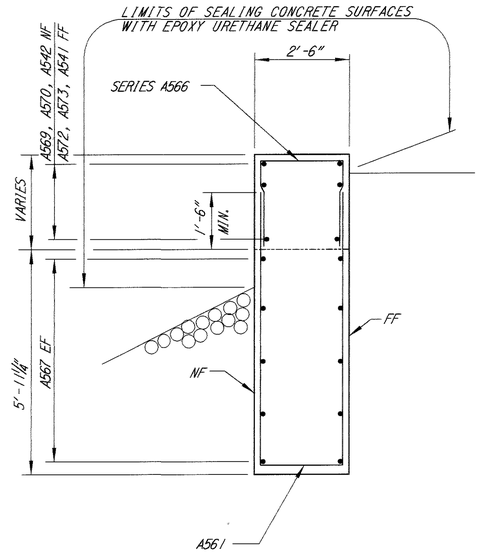

SECTION E-E

REAR ABUTMENT SHOWN
FORWARD ABUTMENT SIMILAR

DESIGN AGENCY
BALKE ENGINEERS
1848 Summit Road
Cincinnati, Ohio 45237

DESIGNED	DRAWN	REVIEWED	DATE
FKL	WJH/ALH	CRS	6/01
CHECKED	REVISED	STRUCTURE FILE NUMBER	
MRS	—	1305530 L.B. 1305549 R.B.	

RIGHT BRIDGE ABUTMENT DETAILS
BRIDGE NO. CLE-275-0654
OVER NORFOLK & SOUTHERN R.R. & C.R. 106 (ROUND BOTTOM RD.)

CLE-275-5.35

Filename: 0654RBRA10.dgn

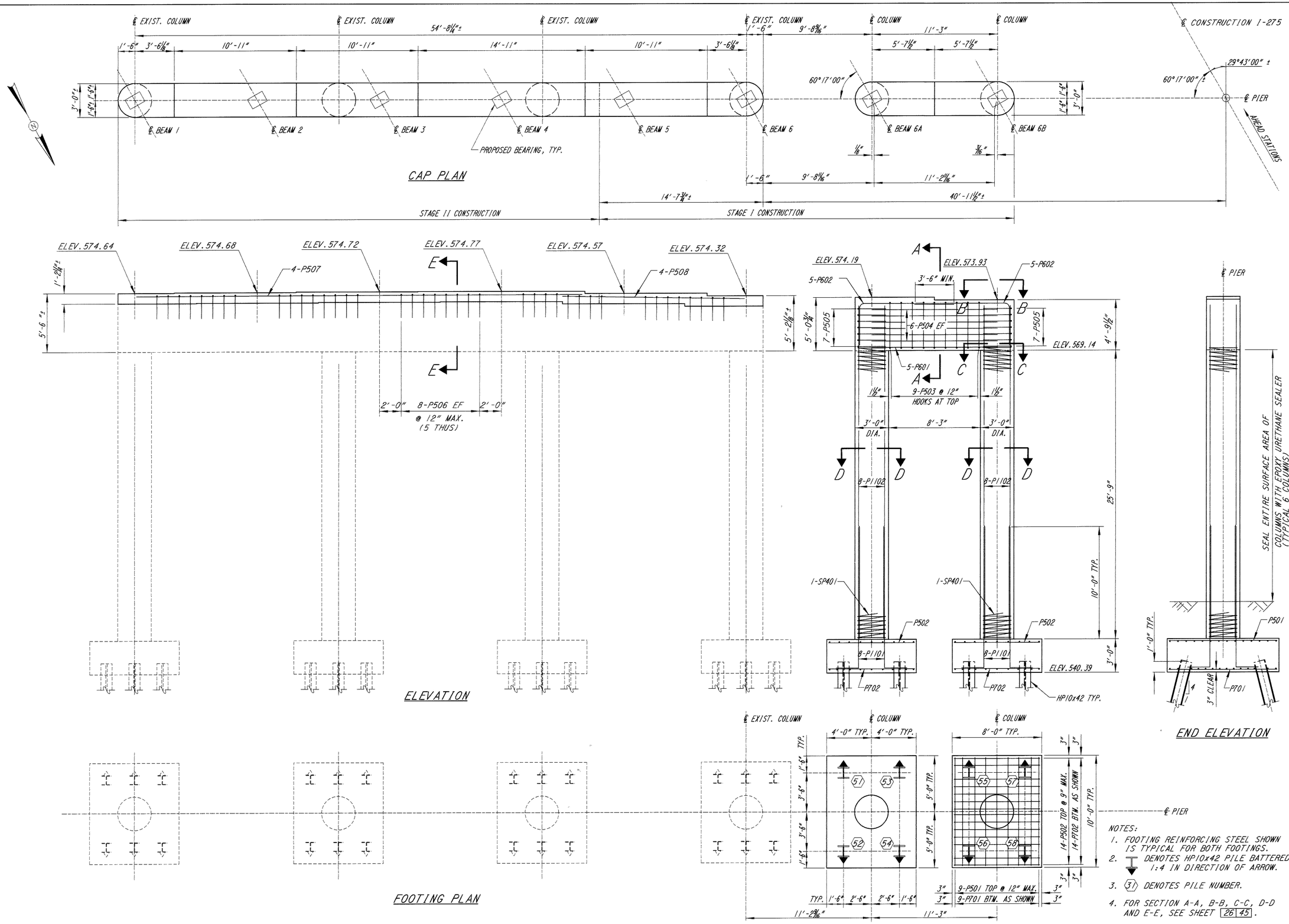

NOTES:

1. FOOTING REINFORCING STEEL SHOWN IS TYPICAL FOR BOTH FOOTINGS.
2. DENOTES HP10x42 PILE BATTERED 1:4 IN DIRECTION OF ARROW.
3. (31) DENOTES PILE NUMBER.
4. FOR SECTION A-A, B-B, C-C, D-D AND E-E, SEE SHEET 26/45.

DESIGN AGENCY
BALKE ENGINEERS
1848 Summit Road
Cincinnati, Ohio 45237

DESIGNED	DRAWN	REVIEWED	DATE
FKL	WJH, ALH	CRS	6/01
CHECKED	REVISED	STRUCTURE FILE NUMBER	
MRS	—	1305654 L.B. 1305662 R.B.	

LEFT BRIDGE PIER I DETAILS
BRIDGE NO. CLE-275-0654
OVER NORFOLK & SOTHERN R.R. & C.R. 106 (ROUND BOTTOM RD.)

CLE-275-5.35

Filename: 0654LBp1.dgn

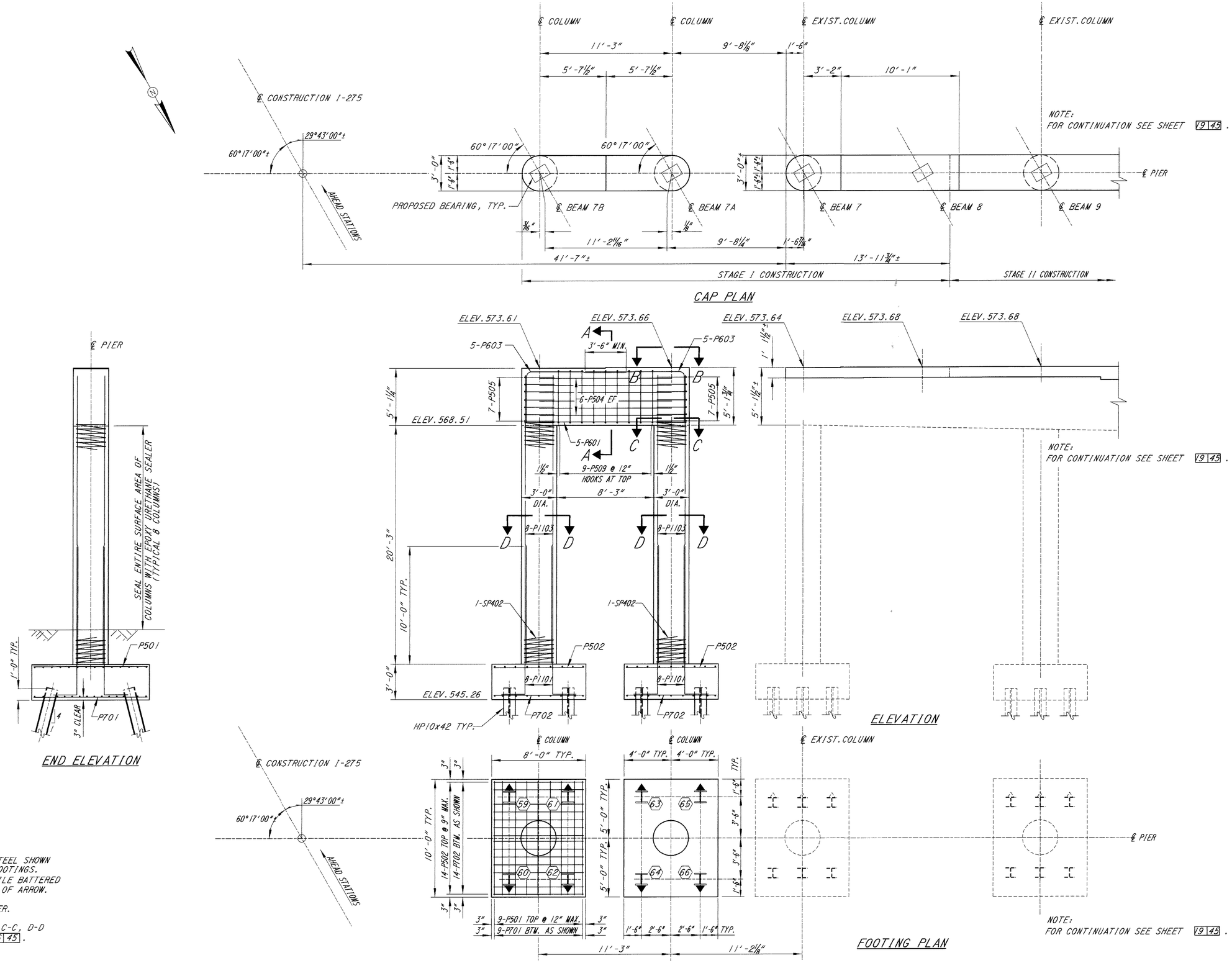

CAP PLAN

ELEVATION

END ELEVATION

FOOTING PLAN

NOTES:
1. FOOTING REINFORCING STEEL SHOWN IS TYPICAL FOR BOTH FOOTINGS.
2. ⊤ DENOTES HP10x42 PILE BATTERED 1:4 IN DIRECTION OF ARROW.
3. (31) DENOTES PILE NUMBER.
4. FOR SECTION A-A, B-B, C-C, D-D AND E-E, SEE SHEET 26 45.

DESIGN AGENCY
BALKE ENGINEERS
1848 Summit Road
Cincinnati, Ohio 45237

DESIGNED	DRAWN	REVIEWED	DATE
FKL	WJH, ALH	CRS	6/01
CHECKED	REVISED	STRUCTURE FILE NUMBER	
MRS	—	1305654 L.B. 1305662 R.B.	

RIGHT BRIDGE PIER I DETAILS
BRIDGE NO. CLE-275-0654
OVER NORFOLK & SOTHERN R.R. & C.R. 106 (ROUND BOTTOM RD.)

CLE-275-5.35

18/45

775/857

Filename: 0654RBP1A.dgn

NOTE:
FOR CONTINUATION SEE SHEET 18 45 .

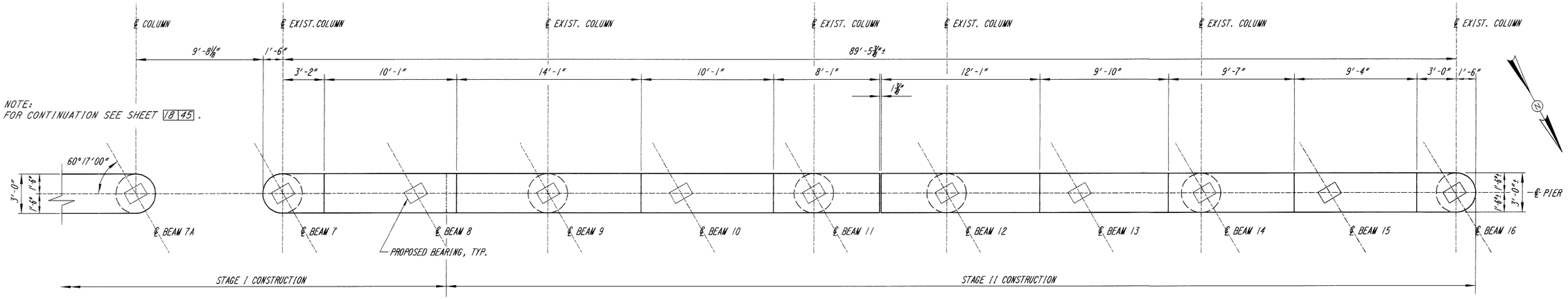

CAP PLAN

NOTE:
FOR CONTINUATION SEE SHEET 18 45 .

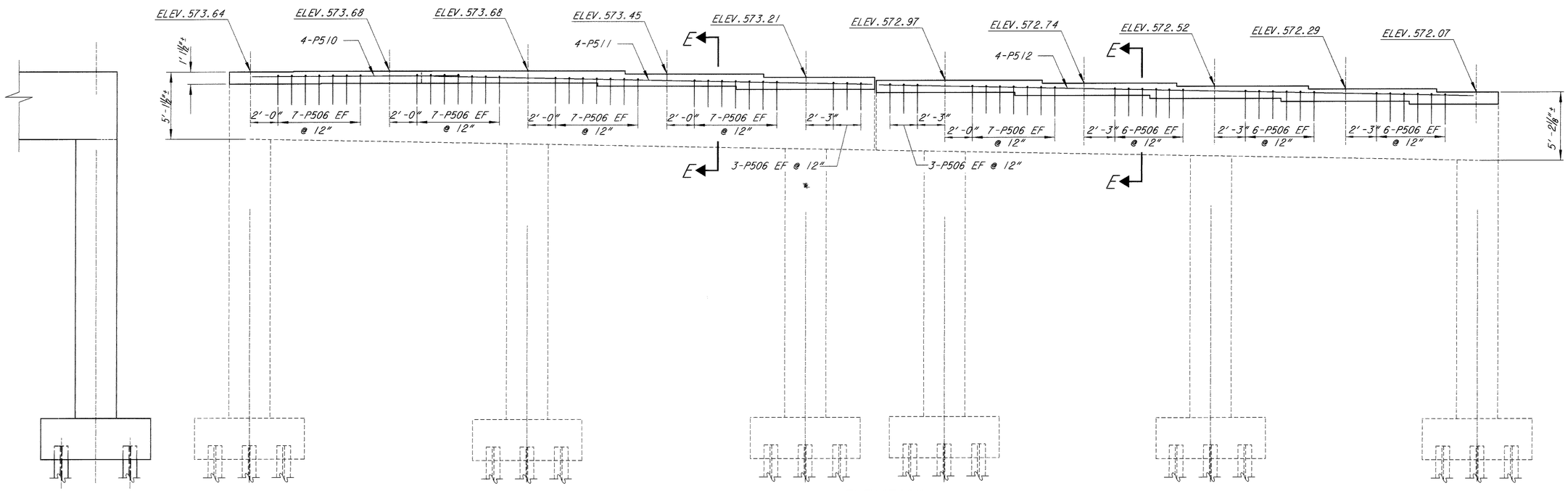

ELEVATION

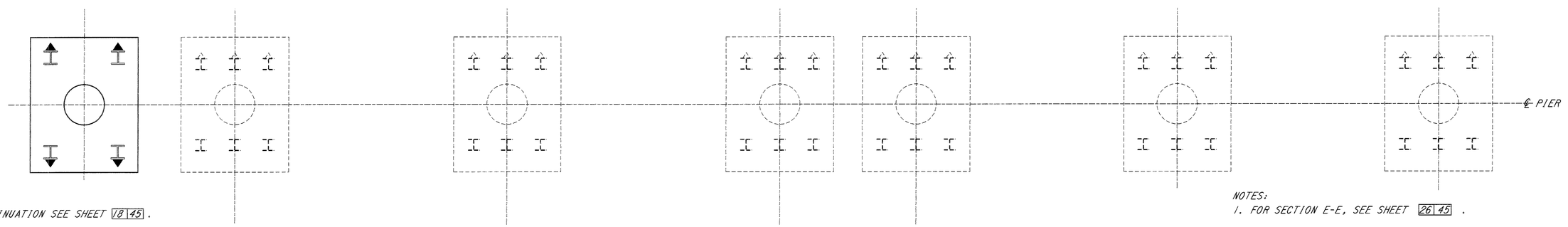

NOTE:
FOR CONTINUATION SEE SHEET 18 45 .

NOTES:
1. FOR SECTION E-E, SEE SHEET 26 45 .

FOOTING PLAN

F:\Roadway\1854\BP18.dgn

DESIGN AGENCY
BALKE ENGINEERS
1848 Summit Road
Cincinnati, Ohio 45237

DESIGNED	DRAWN	REVIEWED	DATE
FKL	WJH, ALH	CRS	6/01
CHECKED	REVISED	STRUCTURE FILE NUMBER	
MPS	—	1305654, R.B. 1305662, R.B.	

RIGHT BRIDGE PIER I DETAILS
BRIDGE NO. CLE-275-0654
OVER NORFOLK & SOTHERN R.R. & C.R. 106 (ROUND BOTTOM R.D.)

CLE-275-5.35

19/45

776
857

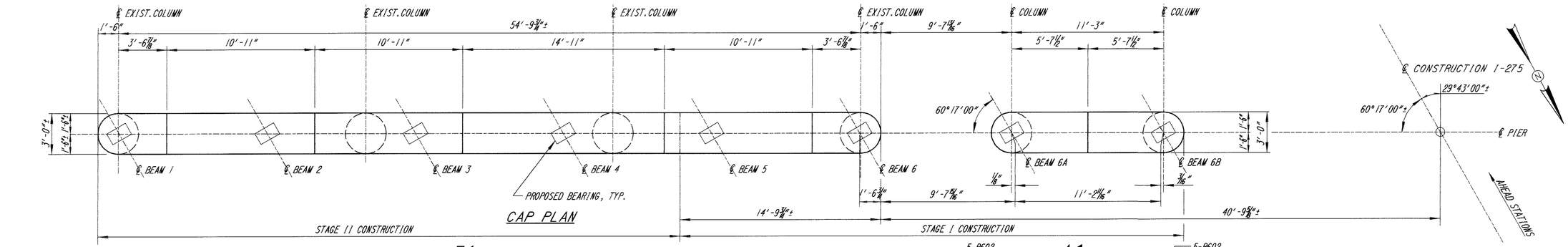

CAP PLAN

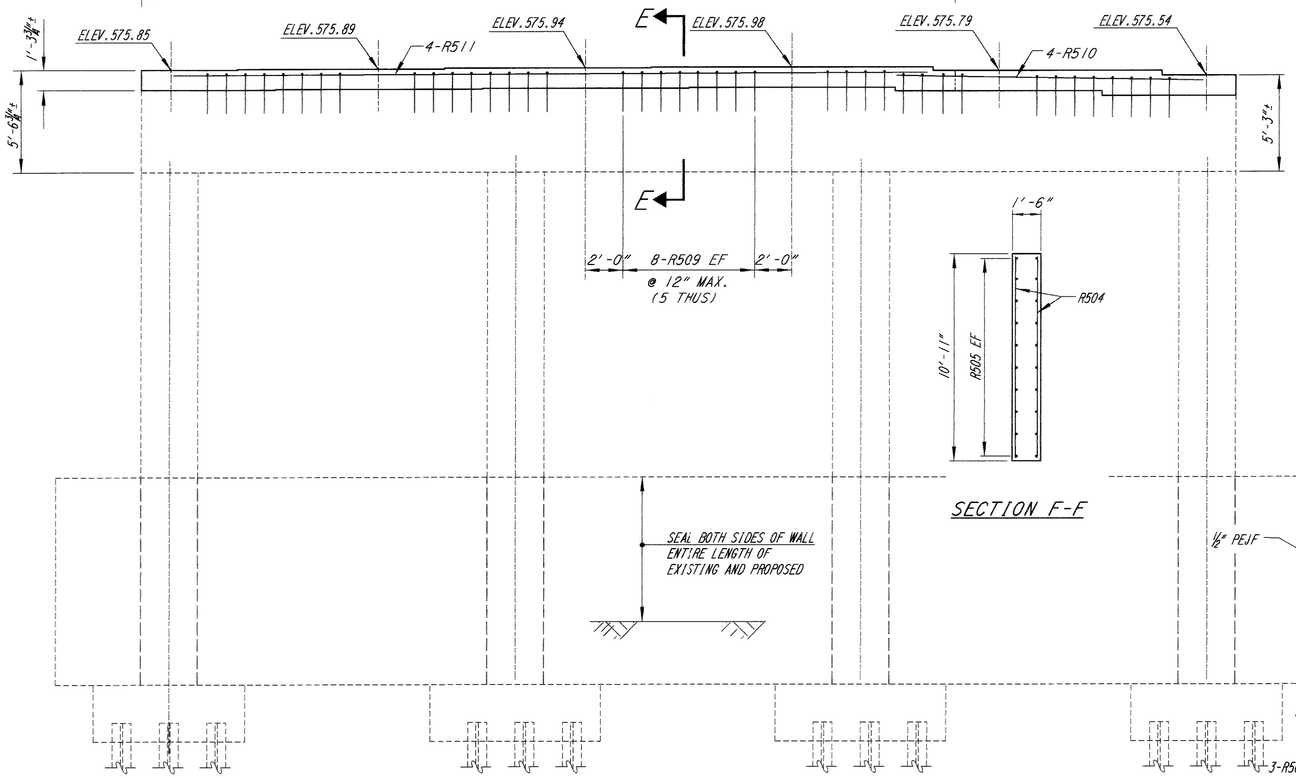

ELEVATION

SECTION F-F

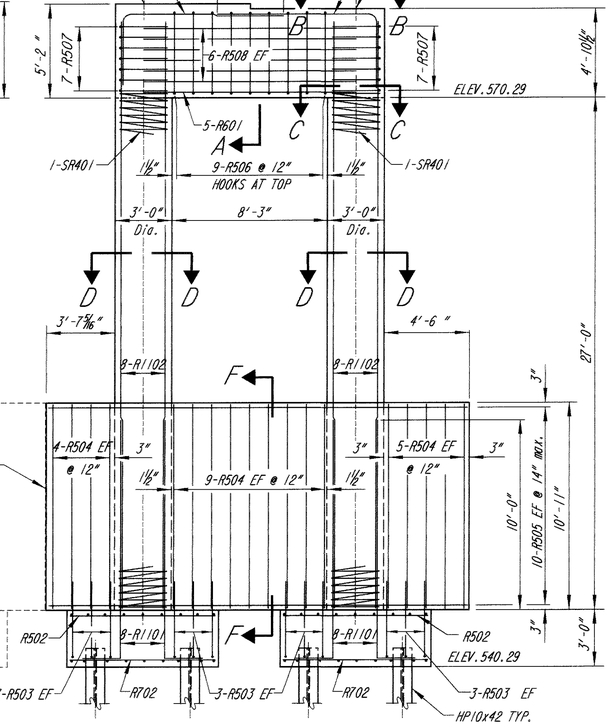

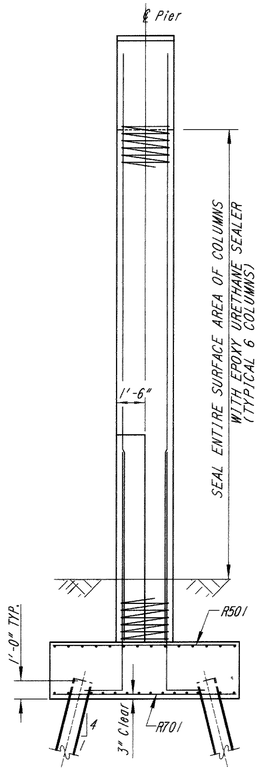

END ELEVATION

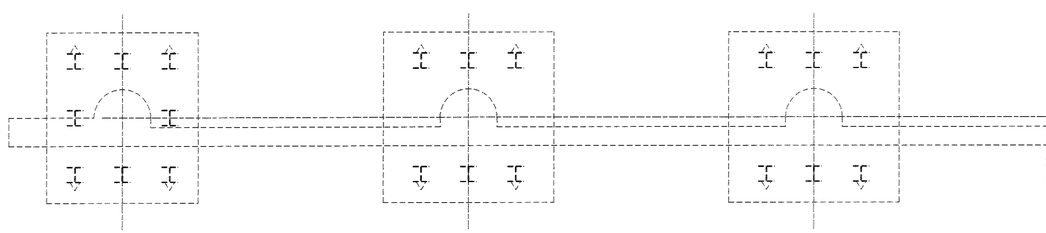

FOOTING PLAN

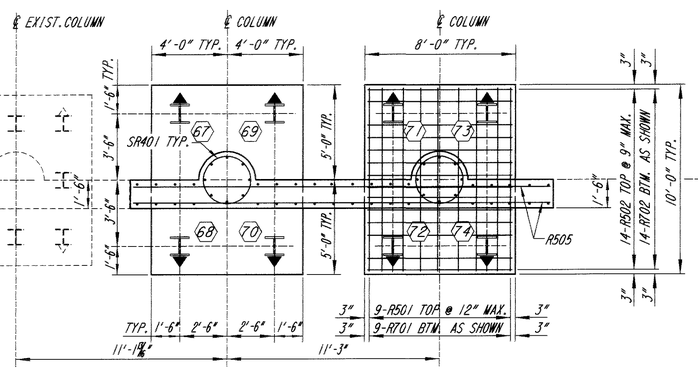

NOTES:

1. FOOTING REINFORCING STEEL SHOWN IS TYPICAL FOR BOTH FOOTINGS.
2. ▼ DENOTES HP10x42 PILE BATTERED 1:4 IN DIRECTION OF ARROW.
3. ⟨31⟩ DENOTES PILE NUMBER.
4. FOR SECTION A-A, B-B, C-C, D-D AND E-E, SEE SHEET 26 45.

DESIGN AGENCY
BALKE ENGINEERS
1848 Summit Road
Cincinnati, Ohio 45237

DESIGNED	DRAWN	REVIEWED	DATE
FKL	W.H./A.L.H.	CRS	6/01
CHECKED	REVISED	STRUCTURE FILE NUMBER	
MPS	—	1305654 L.B. 1305662 R.B.	

LEFT BRIDGE PIER 2 DETAILS

BRIDGE NO. CLE-275-0654
OVER NORFOLK & SOTHERN R.R. & C.R. 106 (ROUND BOTTOM R.D.)

CLE-275-5.35

20/45

777
857

F:\Tensor\ DESIGN\BPD2.dgn

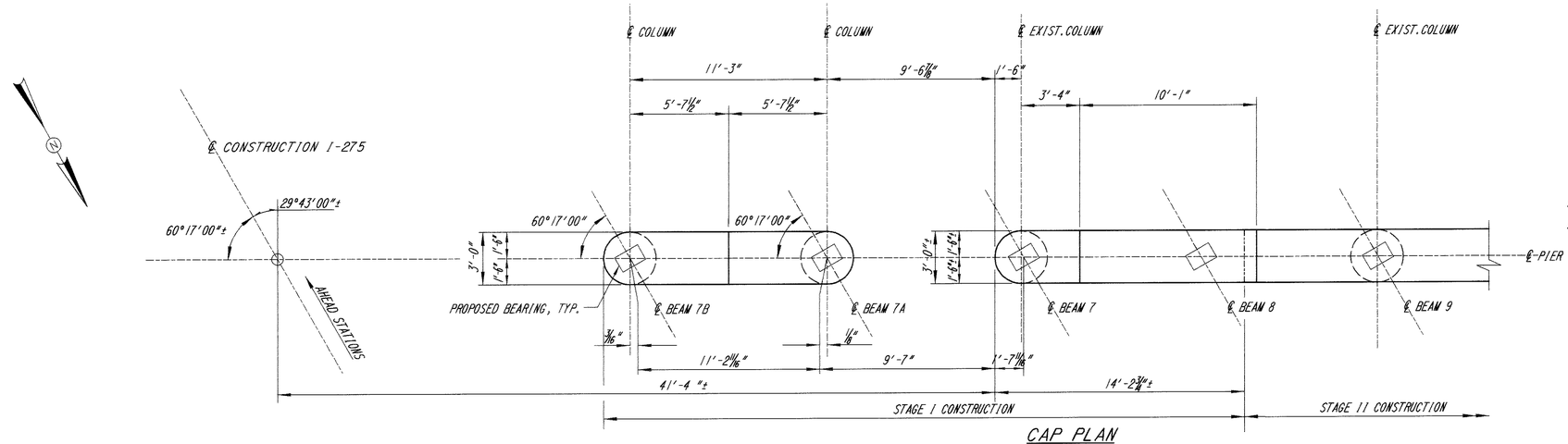

CAP PLAN

NOTE:
FOR CONTINUATION SEE SHEET 22 45.

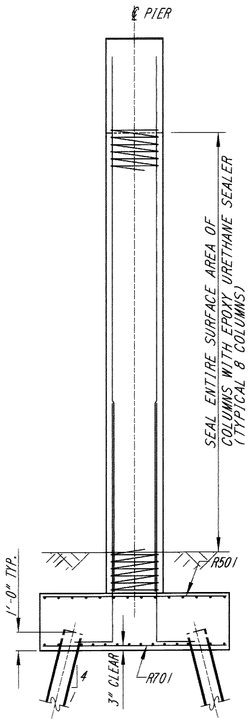

END ELEVATION

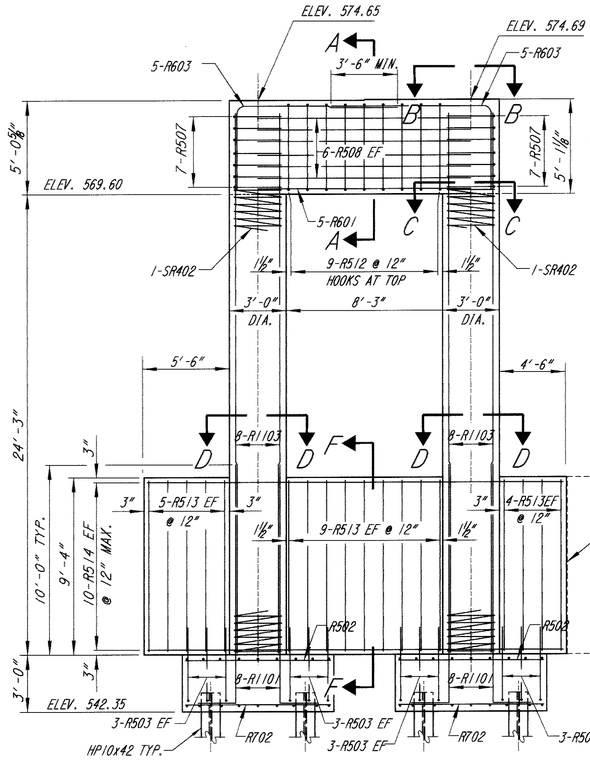

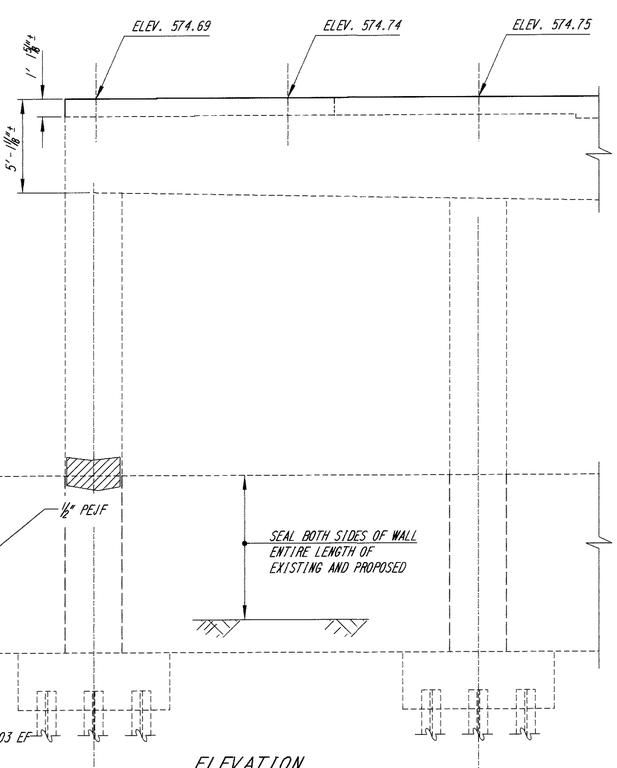

ELEVATION

NOTE:
FOR CONTINUATION SEE SHEET 22 45.

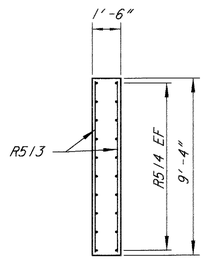

SECTION F-F

NOTES:
1. FOOTING REINFORCING STEEL SHOWN IS TYPICAL FOR BOTH FOOTINGS.
2. ▼ DENOTES HP10x42 PILE BATTERED 1:4 IN DIRECTION OF ARROW.
3. (31) DENOTES PILE NUMBER.
4. FOR SECTION A-A, B-B, C-C, D-D AND E-E, SEE SHEET 26 45.
5. ▨ AREAS TO BE PATCHED PER CMS 519.

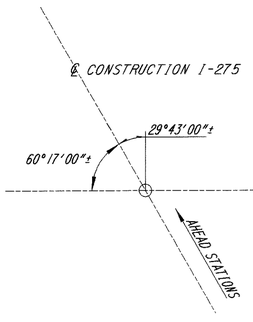

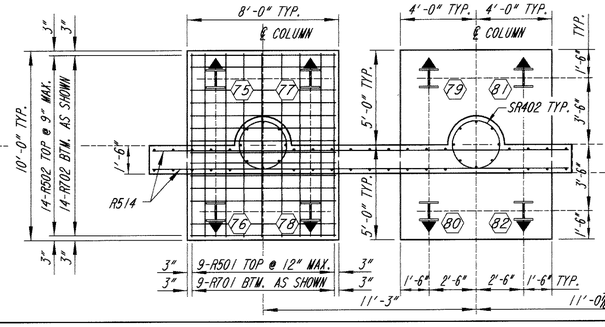

FOOTING PLAN

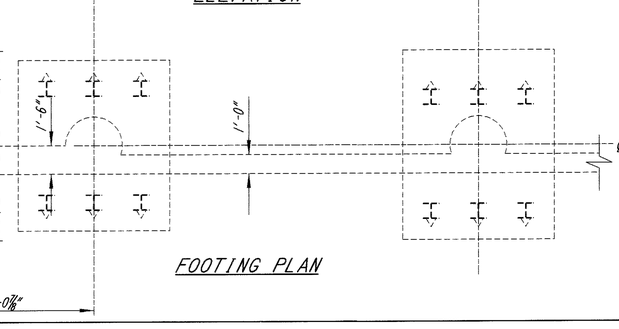

NOTE:
FOR CONTINUATION SEE SHEET 22 45.

DESIGN AGENCY
BALKE ENGINEERS
1848 Summit Road
Cincinnati, Ohio 45237

DESIGNED	DRAWN	REVIEWED	DATE
FHL	WJH, ALH	CRS	6/01
CHECKED	REVISED	STRUCTURE FILE NUMBER	
MRS	—	1305654, 12, 1305662, 12,	

RIGHT BRIDGE PIER 2 DETAILS
BRIDGE NO. CLE-275-0654
OVER NORFOLK & SOTHERN R.R. & C.R. 106 (ROUND BOTTOM R.D.)

CLE-275-5.35

21/45

778
857

F:\Home\DESIGN\PIER2A.dgn

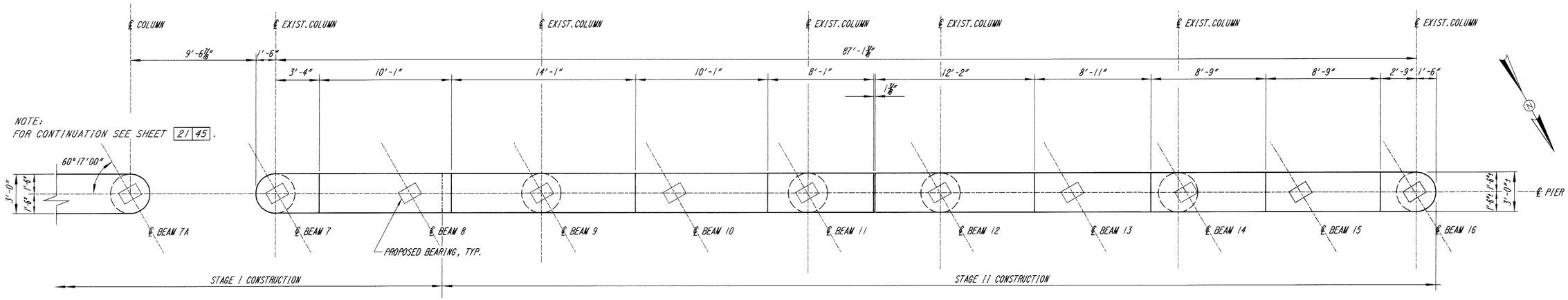

CAP PLAN

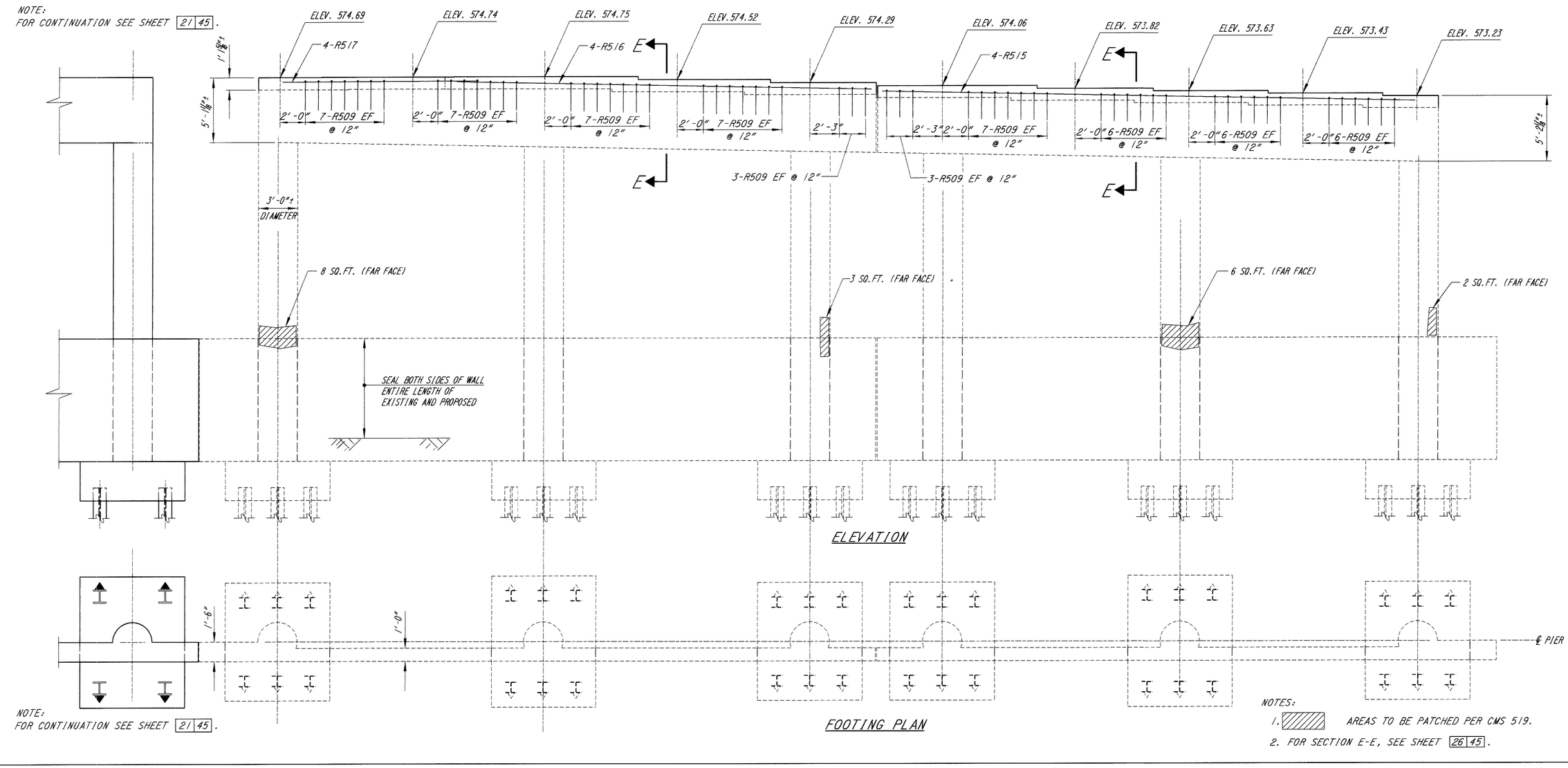

ELEVATION

FOOTING PLAN

NOTES:
1. ▨ AREAS TO BE PATCHED PER CMS 519.
2. FOR SECTION E-E, SEE SHEET 26 45 .

DESIGN AGENCY
BALKE ENGINEERS
1848 Summit Road
Cincinnati, Ohio 45237

DESIGNED	DRAWN	REVIEWED	DATE
FKL	WJH, ALH	CRS	6/01
CHECKED	REVISED	STRUCTURE FILE NUMBER	
MPS	—	1305562 L.B. 1305562 R.B.	

RIGHT BRIDGE PIER 2 DETAILS

BRIDGE NO. CLE-275-0654
OVER NORFOLK & SOTHERN R.R. & C.R. 106 (ROUND BOTTOM RD.)

CLE-275-5.35

22 45

779
857

F:\bridge\cle-0654\PIER2DET.dgn

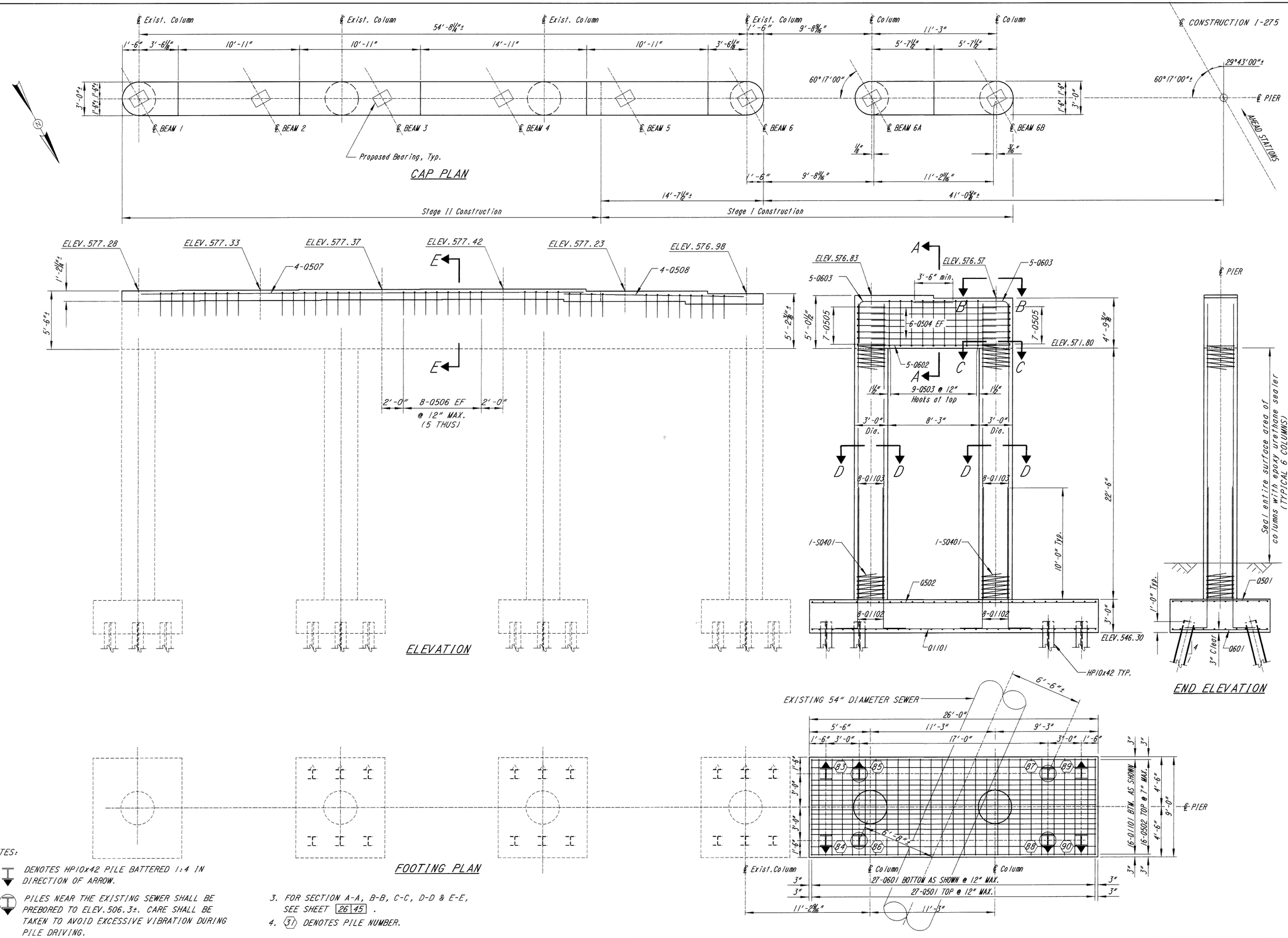

NOTES:

1. DENOTES HP10x42 PILE BATTERED 1:4 IN DIRECTION OF ARROW.
2. PILES NEAR THE EXISTING SEWER SHALL BE PREBORED TO ELEV. 506.3±. CARE SHALL BE TAKEN TO AVOID EXCESSIVE VIBRATION DURING PILE DRIVING.
3. FOR SECTION A-A, B-B, C-C, D-D & E-E, SEE SHEET 26/45.
4. (31) DENOTES PILE NUMBER.

DESIGN AGENCY
BALKE ENGINEERS
1848 Summit Road
Cincinnati, Ohio 45237

DESIGNED	DRAWN	REVIEWED	DATE
FKL	WJH/ ALH	CRS	6/01
CHECKED	REVISED	STRUCTURE FILE NUMBER	
MRS	—	1305654 L.B. 1305662 R.B.	

LEFT BRIDGE PIER 3 DETAILS
BRIDGE NO. CLE-275-0654
OVER NORFOLK & SOTHERN R.R. & C.R. 106 (ROUND BOTTOM RD.)

CLE-275-5.35

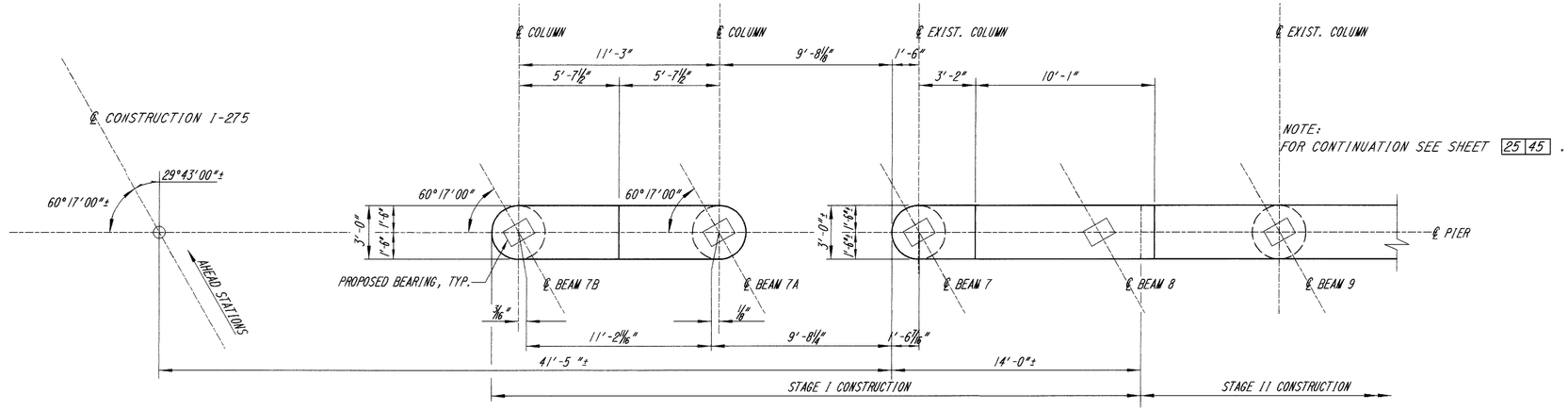

CAP PLAN

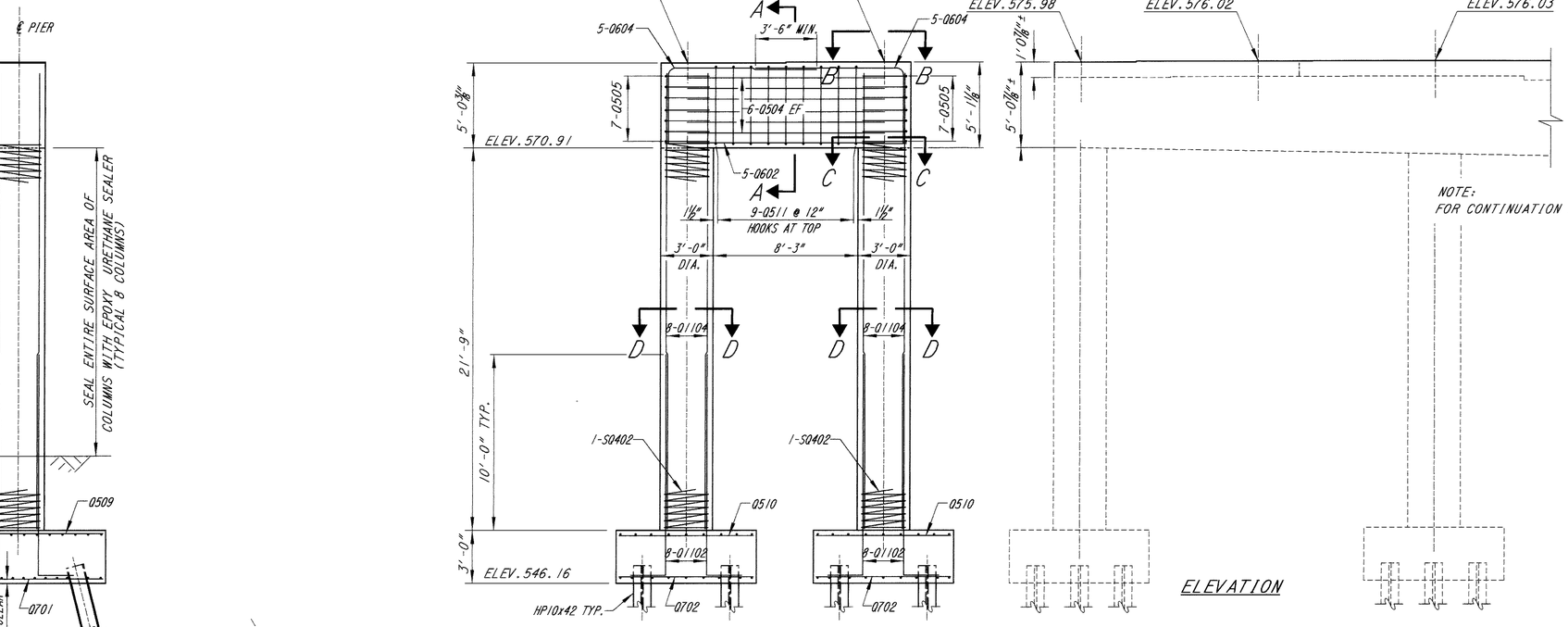

END ELEVATION

ELEVATION

NOTES:

1. FOOTING REINFORCING STEEL SHOWN IS TYPICAL FOR BOTH FOOTINGS.
2. ▼ DENOTES HP10x42 PILE BATTERED 1:4 IN DIRECTION OF ARROW.
3. (31) DENOTES PILE NUMBER.
4. FOR SECTION A-A, B-B, C-C, D-D AND E-E, SEE SHEET 26 45 .

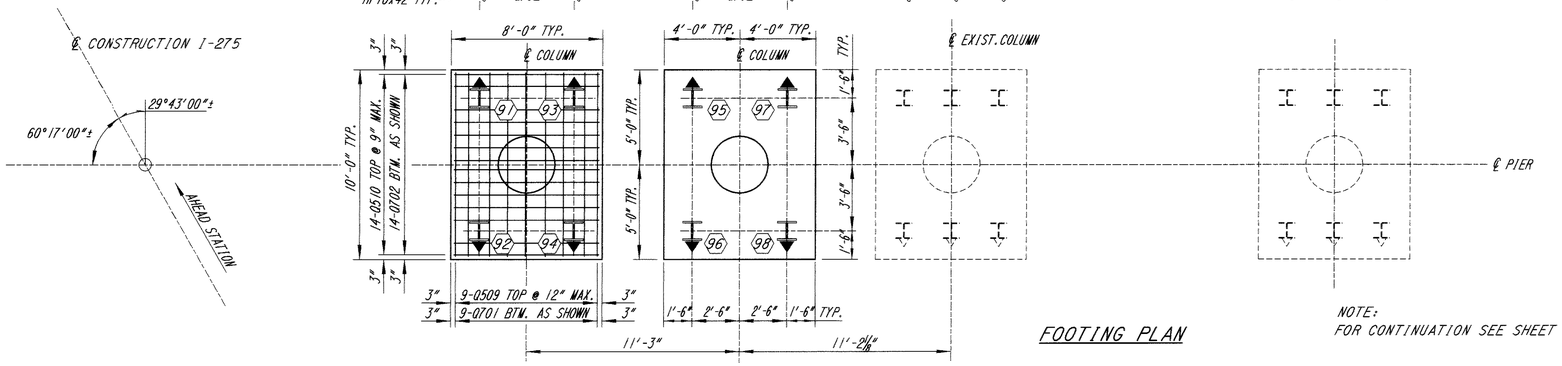

FOOTING PLAN

NOTE:
FOR CONTINUATION SEE SHEET 25 45 .

DESIGN AGENCY
BALKE ENGINEERS
1848 Summit Road
Cincinnati, Ohio 45237

DESIGNED	DRAWN	REVIEWED	DATE
FKL	MJH, ALH	CRS	6/01
CHECKED	REVISED	STRUCTURE FILE NUMBER	
MRS	—	1305654 H.B. 1305662 H.B.	

RIGHT BRIDGE PIER 3 DETAILS
BRIDGE NO. CLE-275-0654
OVER NORFOLK & SOTHERN R.R. & C.R. 106 (ROUND BOTTOM R.D.)

CLE-275-5.35

24/45

781
857

F:\Indot\1305468P3L.dgn

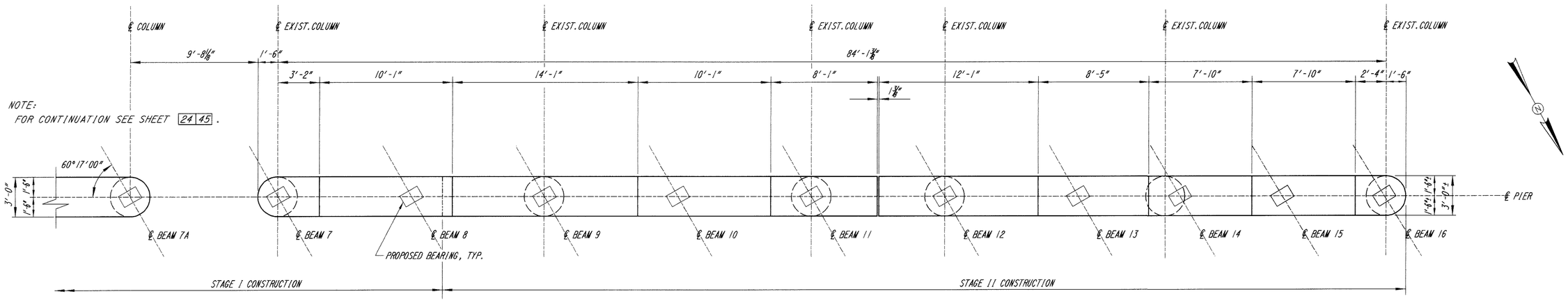

CAP PLAN

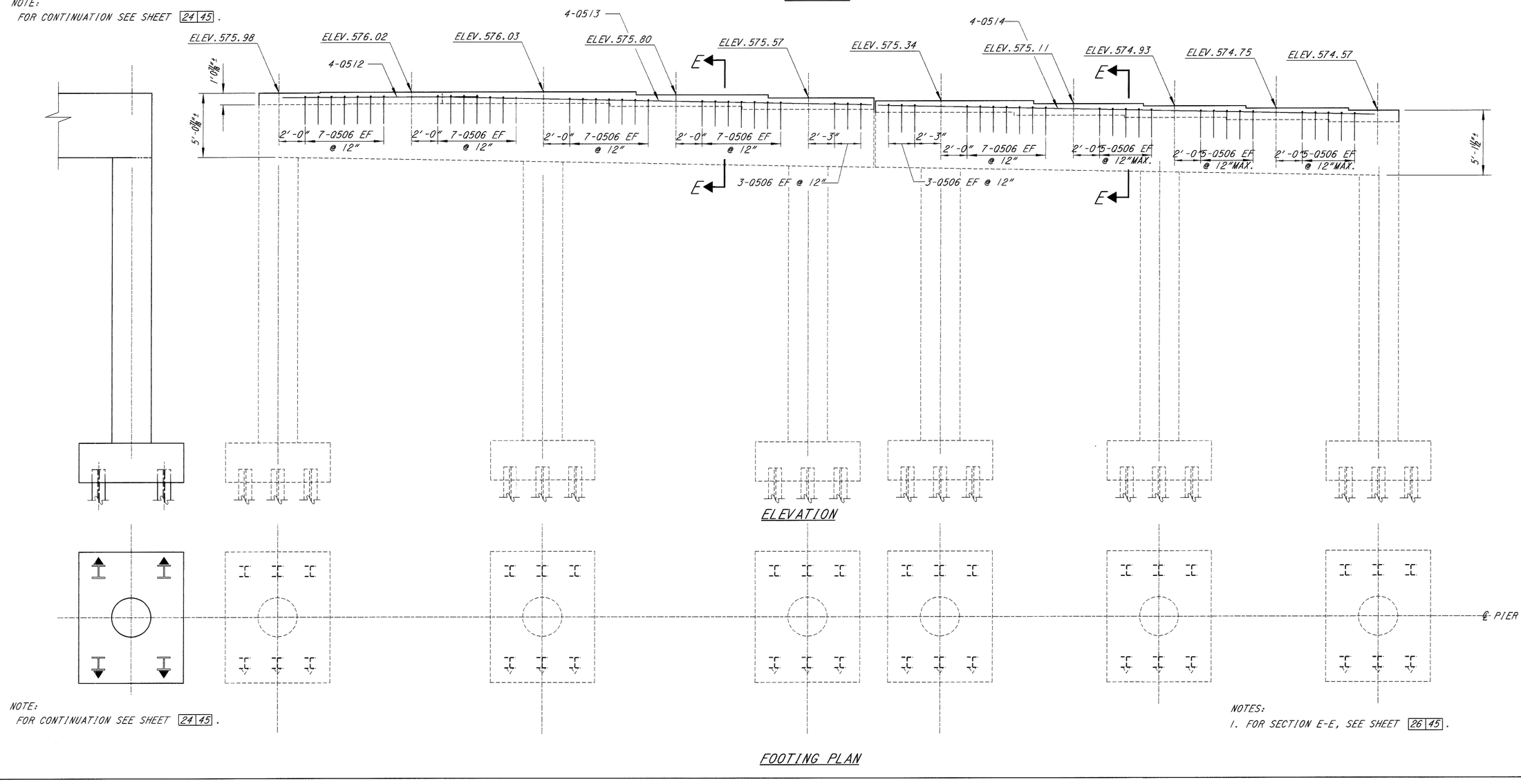

ELEVATION

FOOTING PLAN

DESIGN AGENCY
BALKE ENGINEERS
1848 Summit Road
Cincinnati, Ohio 45237

DESIGNED	DRAWN	REVIEWED	DATE
FKL	W.H., A.L.H	CRS	6/01
CHECKED	REVISED	STRUCTURE FILE NUMBER	
MPS	—	1305654 L.B. 1305662 R.B.	

RIGHT BRIDGE PIER 3 DETAILS

BRIDGE NO. CLE-275-0654
OVER NORFOLK & SOTHERN R.R. & C.R. 106 (ROUND BOTTOM R.D.)

CLE-275-5.35

25/45

782
857

F:\Arizona\065\dgn\065-bridge38.dgn

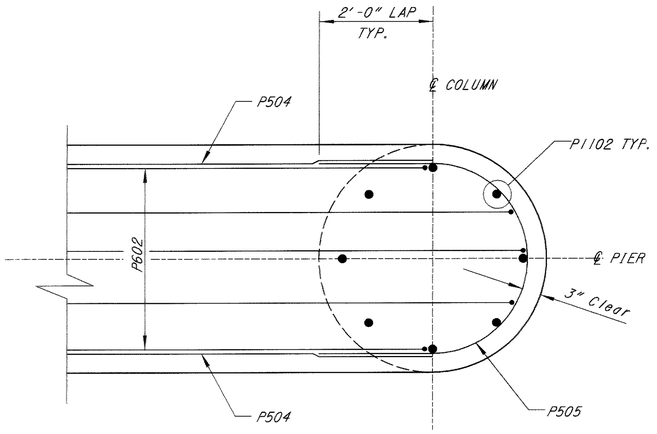

SECTION B-B

(PIER 1 LEFT BRIDGE SHOWN, OTHER PIERS SIMILAR)

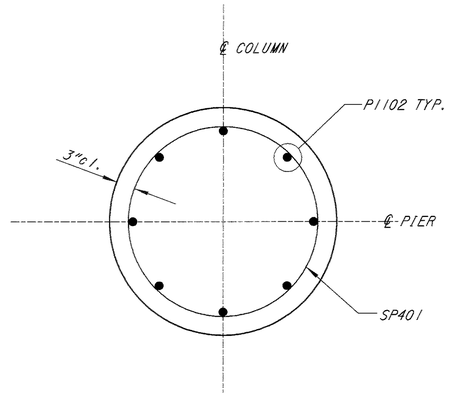

SECTION D-D

(PIER 1 LEFT BRIDGE SHOWN, OTHER PIERS SIMILAR)

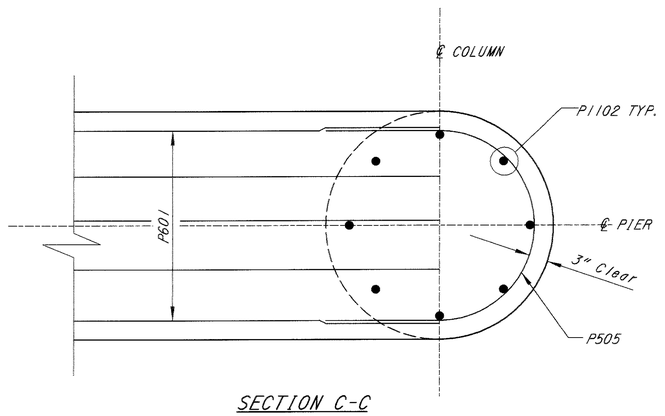

SECTION C-C

(PIER 1 LEFT BRIDGE SHOWN, OTHER PIERS SIMILAR)

NOTE:
CARE SHALL BE TAKEN TO AVOID EXISTING REINFORCING WHEN DRILLING HOLES FOR DOWELS. IF NECESSARY, LOCATION OF DOWEL SHALL BE MOVED TO AVOID INTERFERENCE.

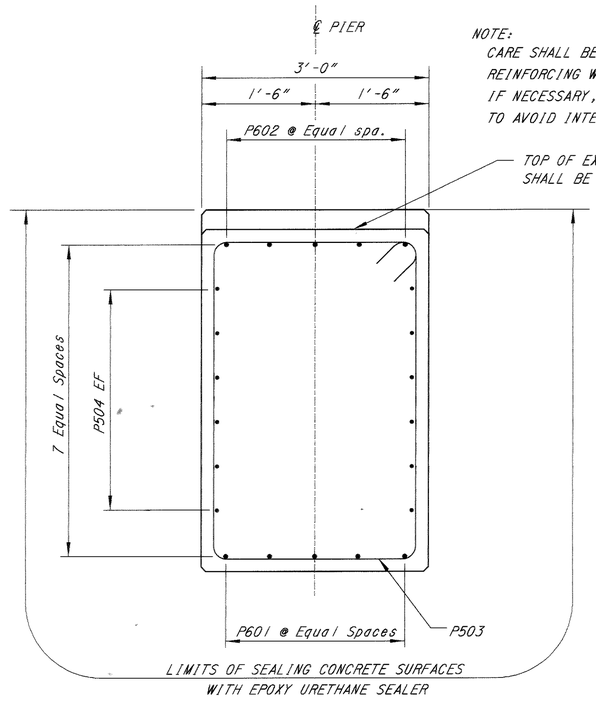

SECTION A-A

(PIER 1 LEFT BRIDGE SHOWN, OTHER PIERS SIMILAR)

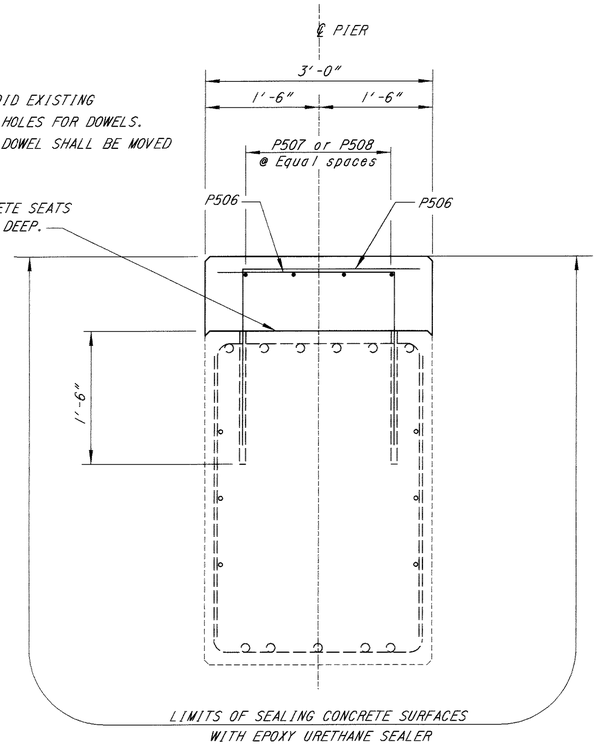

SECTION E-E

(PIER 1 LEFT BRIDGE SHOWN, OTHER PIERS SIMILAR)

DESIGN AGENCY
BALKE ENGINEERS
1848 Summit Road
Cincinnati, Ohio 45237

DESIGNED	DRAWN	REVIEWED	DATE
FKL	WJH	CRS	6/01
CHECKED	REVISED	STRUCTURE FILE NUMBER	
MRS	—	1305530 L.B. 1305549 R.B.	

BRIDGE PIER DETAILS
BRIDGE NO. CLE-275-0654
OVER NORFOLK & SOUTHERN R.R. & C.R.106 (ROUND BOTTOM ROAD)

CLE-275-5.35

Filename: 0654LBP1a.dgn

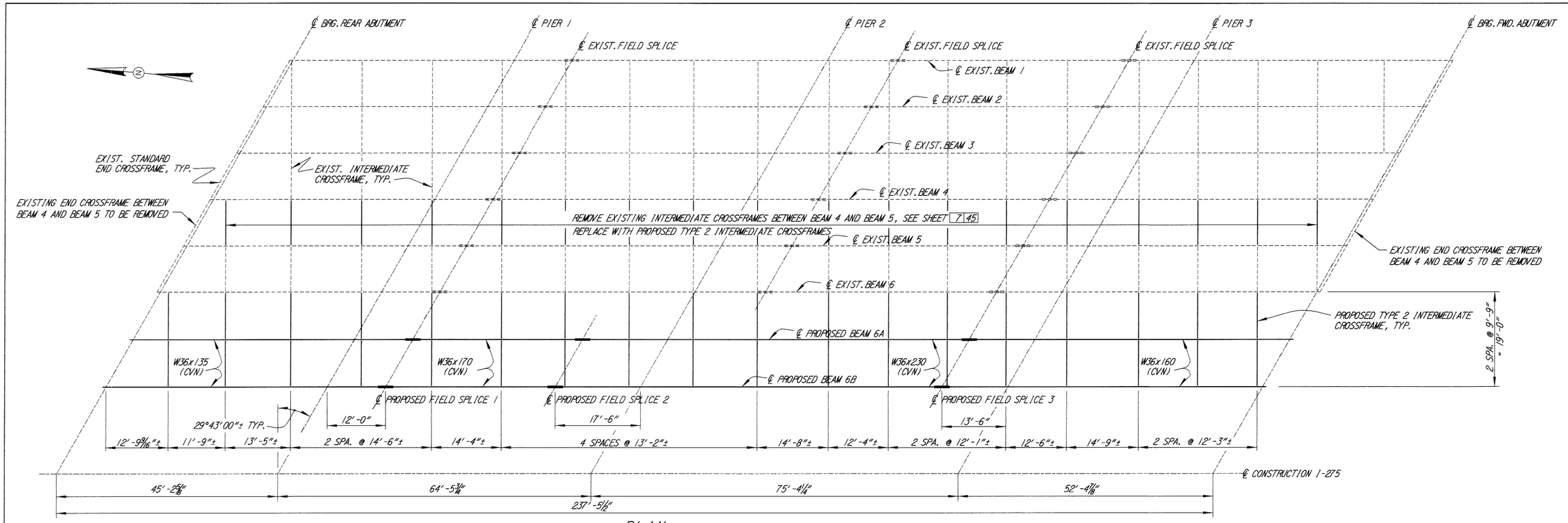

PLAN

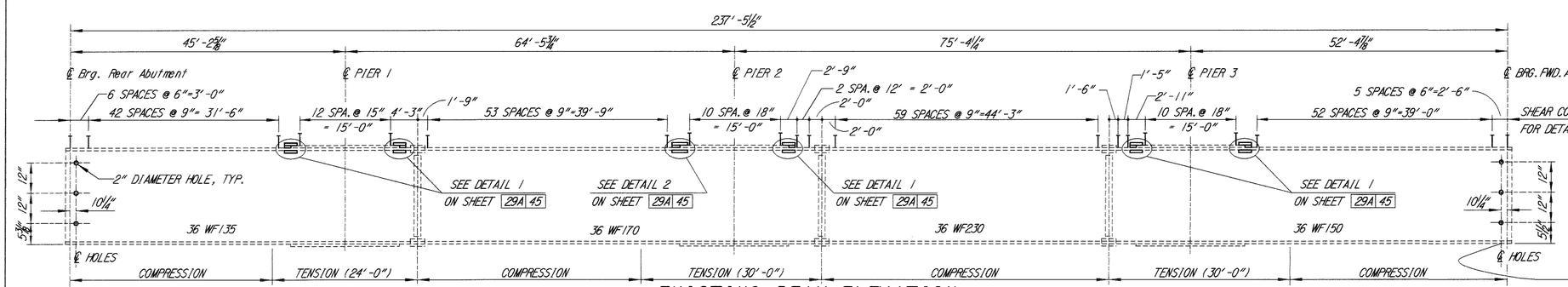

EXISTING BEAM ELEVATION

* ADJUST SPACING AS NECESSARY TO CLEAR ENDS OF COVER PLATES BY 4" MIN.

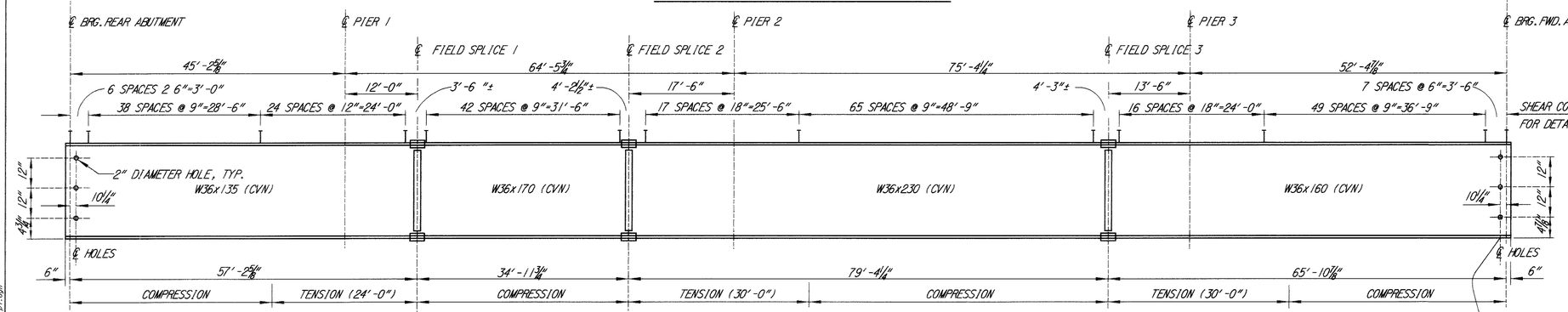

PROPOSED BEAM ELEVATION

NOTES:

1. WHERE A SHAPE OR PLATE IS DESIGNED (CVN) THE MATERIAL SHALL MEET SPECIFIED MINIMUM NOTCH TOUGHNESS REQUIREMENTS AS SPECIFIED IN 711.01.

2. FOR INTERMEDIATE CROSSFRAME DETAILS, SEE STD. DWG. GSD-1-96.

3. WELDED ATTACHMENT OF SUPPORTS FOR CONCRETE DECK FINISHING MACHINE MAY BE MADE TO AREAS OF THE FASCIA STRINGER FLANGES DESIGNATED "COMPRESSION". ATTACHMENTS SHALL NOT BE MADE TO AREAS DESIGNATED "TENSION". FILLET WELDS TO COMPRESSION FLANGES SHALL BE NOT CLOSER THAN 1" FROM EDGE OF FLANGE, BE NOT MORE THAN 2" LONG, AND BE NOT SMALLER THAN 1/4" FOR THICKNESSES UP TO 3/4" AND 5/16" FOR GREATER THAN 3/4" THICK.

DESIGN AGENCY
BALKE ENGINEERS
1848 Summit Road
Cincinnati, Ohio 45237

DESIGNED	DRAWN	REVIEWED	DATE
FKL	WJH	CRS	6/01
CHECKED	REVISED	STRUCTURE FILE NUMBER	
MPS	—	1303562 A.B. 1303562 A.B.	

LEFT BRIDGE FRAMING PLAN
BRIDGE NO. CLE-275-0654
OVER NORFOLK & SOUTHERN R.R. & C.R. 106 (ROUND BOTTOM R.D.)

CLE-275-5.35

27 / 45

784 / 857

F:\Inroads\BESHLBP1.dgn

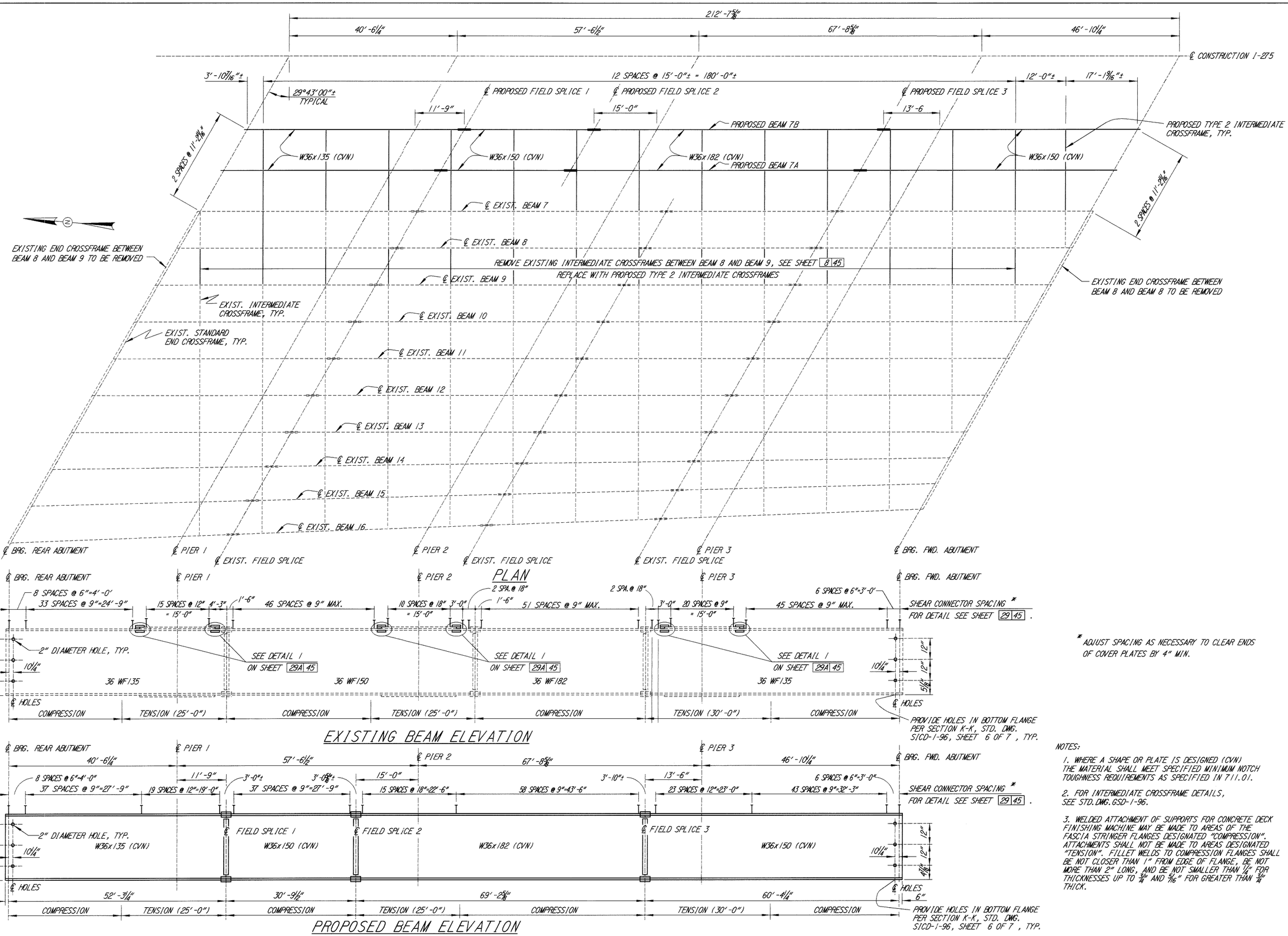

* ADJUST SPACING AS NECESSARY TO CLEAR ENDS OF COVER PLATES BY 4" MIN.

NOTES:

1. WHERE A SHAPE OR PLATE IS DESIGNED (CVN) THE MATERIAL SHALL MEET SPECIFIED MINIMUM NOTCH TOUGHNESS REQUIREMENTS AS SPECIFIED IN 711.01.
2. FOR INTERMEDIATE CROSSFRAME DETAILS, SEE STD. DWG. GSD-1-96.
3. WELDED ATTACHMENT OF SUPPORTS FOR CONCRETE DECK FINISHING MACHINE MAY BE MADE TO AREAS OF THE FASCIA STRINGER FLANGES DESIGNATED "COMPRESSION". ATTACHMENTS SHALL NOT BE MADE TO AREAS DESIGNATED "TENSION". FILLET WELDS TO COMPRESSION FLANGES SHALL BE NOT CLOSER THAN 1" FROM EDGE OF FLANGE, BE NOT MORE THAN 2" LONG, AND BE NOT SMALLER THAN 1/4" FOR THICKNESSES UP TO 3/4" AND 5/16" FOR GREATER THAN 3/4" THICK.

DESIGN AGENCY
BALKE ENGINEERS
1848 Summit Road
Cincinnati, Ohio 45237

DESIGNED	DRAWN	REVIEWED	DATE
FAL	WJH	CRS	6/01
CHECKED	REVISED	STRUCTURE FILE NUMBER 1303622, 1303623, 1303624	
MPS	—		

RIGHT BRIDGE FRAMING PLAN
BRIDGE NO. CLE-275-0654
OVER NORFOLK & SOUTHERN R.R. & C.R. 106 (ROUND BOTTOM R.D.)

CLE-275-5.35

28/45

785
857

F:\Windows\DESKTOP\1.dgn

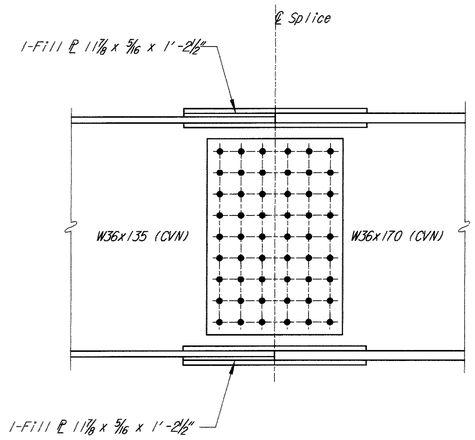

SPLICE 1 ELEVATION LEFT BRIDGE

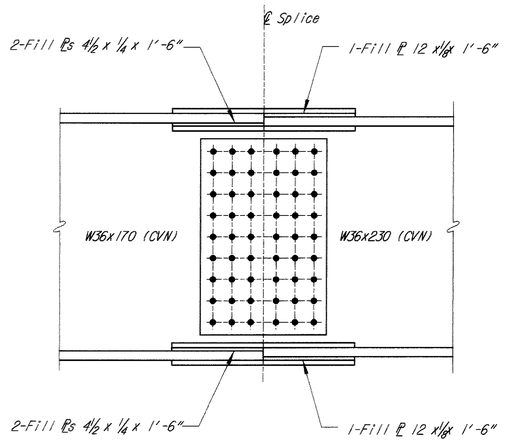

SPLICE 2 ELEVATION LEFT BRIDGE

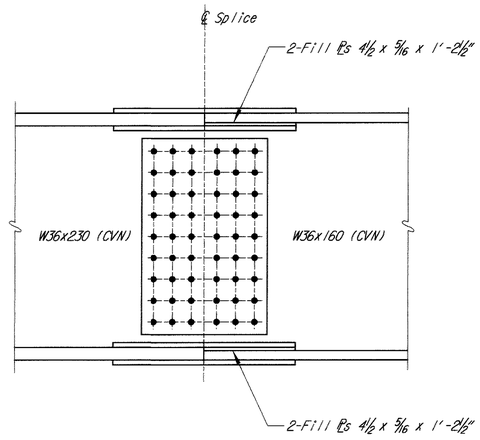

SPLICE 3 ELEVATION LEFT BRIDGE

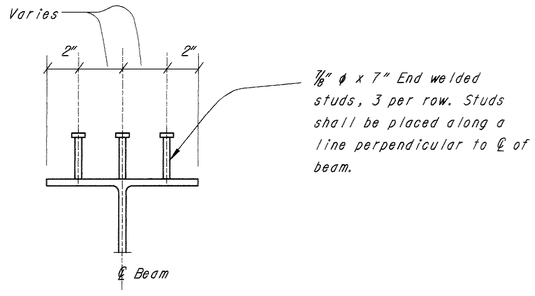

SHEAR CONNECTOR DETAIL

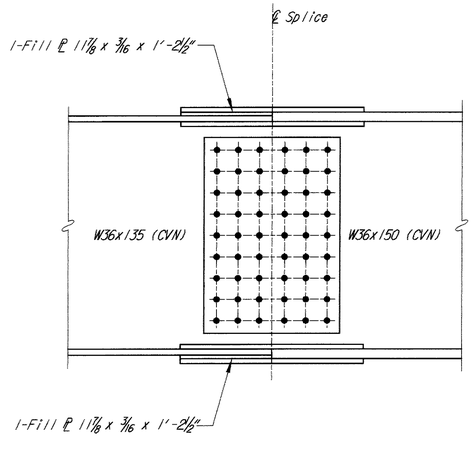

SPLICE 1 ELEVATION RIGHT BRIDGE

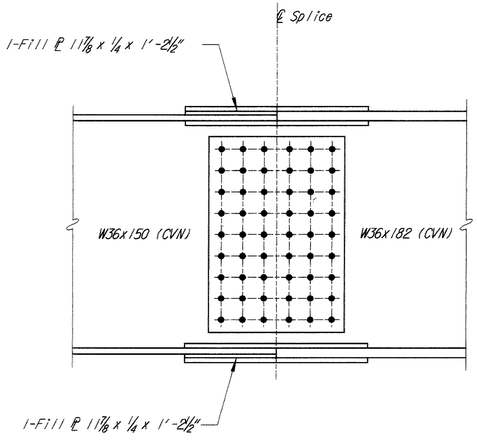

SPLICE 2 ELEVATION RIGHT BRIDGE

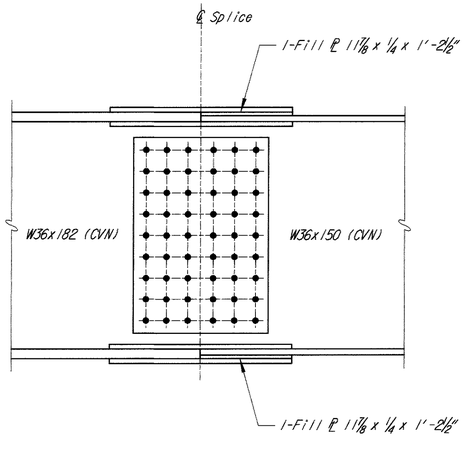

SPLICE 3 ELEVATION RIGHT BRIDGE

NOTE:
FOR ADDITIONAL DETAILS ON SPLICES, SEE STD. DWG. BS-1-93 FOR 50 KSI STEEL. WHERE BEAMS OF DIFFERENT SIZES ARE SPLICED, BASE SPLICE DETAILS ON THOSE SHOWN FOR LIGHTER WEIGHT BEAM.

DESIGN AGENCY
BALKE ENGINEERS
1848 Summit Road
Cincinnati, Ohio 45237

DESIGNED	DRAWN	REVIEWED	DATE
FKL	ALH	CRS	6/01
CHECKED	REVISED	STRUCTURE FILE NUMBER	
MPS	—	1305654 L.B. 1305662 R.B.	

STEEL DETAILS
BRIDGE NO. CLE-275-0654
OVER NORFOLK & SOUTHERN R.R. & C.R. 106 (ROUND BOTTOM R.D.)

CLE-275-5.35

29/45

786
957

F:\bridge\065STEEL.dgn

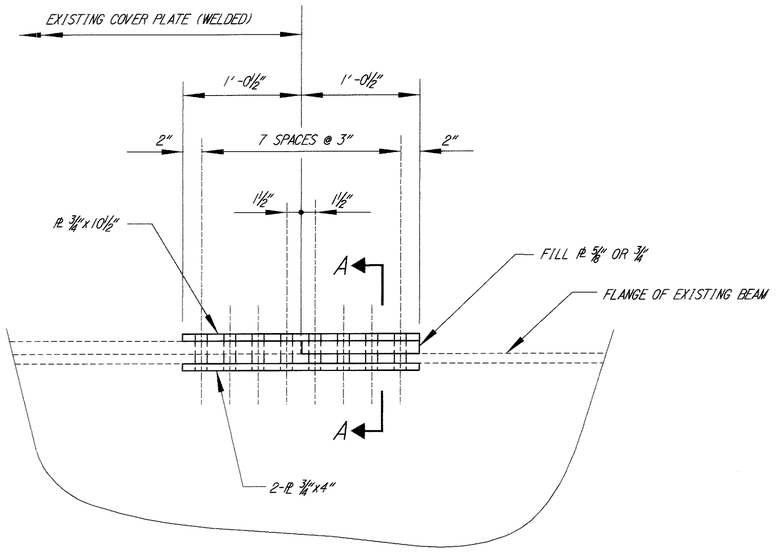

DETAIL 1

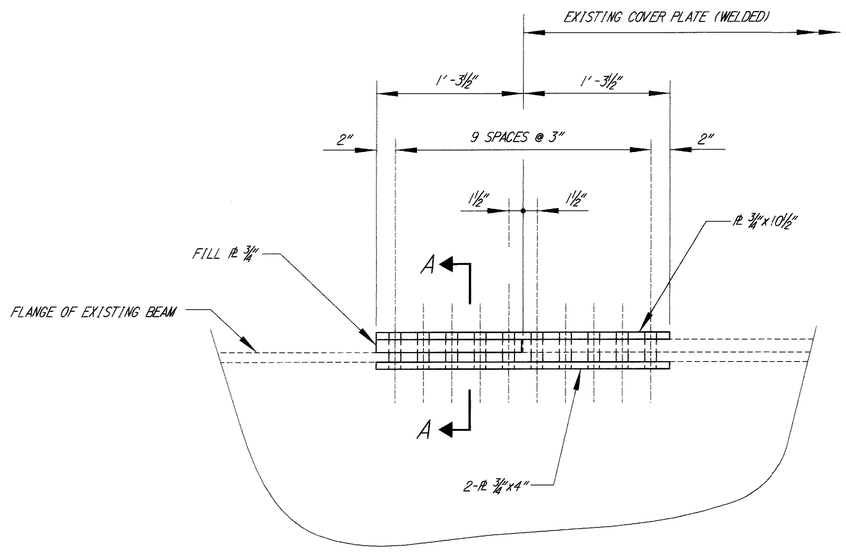

DETAIL 2

NOTE:
ALL BOLTS ARE 1" DIAMETER, A325.

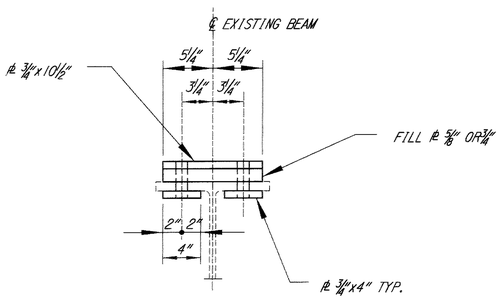

SECTION A-A

DESIGN AGENCY
BALKE ENGINEERS
1848 Summit Road
Cincinnati, Ohio 45237

DESIGNED	DRAWN	REVIEWED	DATE
FKL	WJH	CRS	6/01
CHECKED	REVISED	STRUCTURE FILE NUMBER	
MRS	—	1305654 L.B. 1305662 R.B.	

COVER PLATE RETROFIT DETAILS
BRIDGE NO. CLE-275-0654
OVER NORFOLK & SOUTHERN R.R. & C.R.106 (ROUND BOTTOM RD.)

CLE-275-5.35

Filename: 0654PR2.dgn

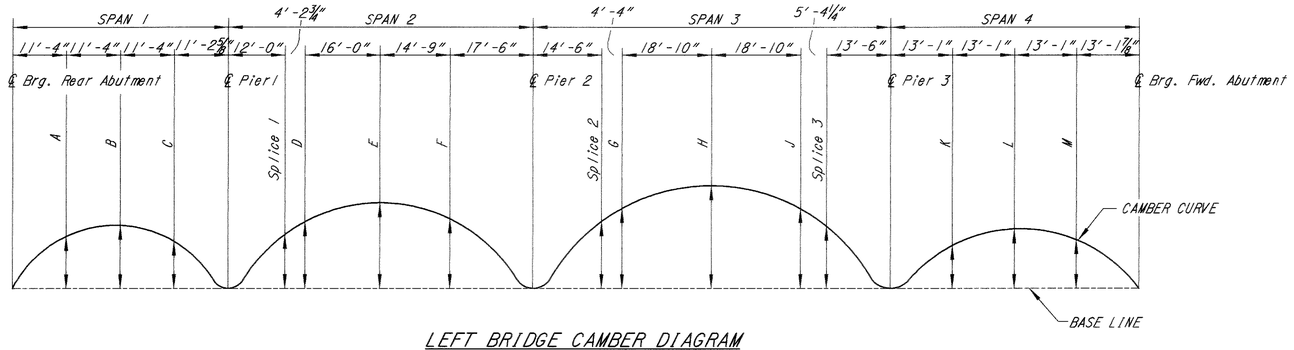

LEFT BRIDGE CAMBER DIAGRAM

LEFT BRIDGE DEFLECTION AND CAMBER TABLE

	SPAN 1				SPAN 2					SPAN 3						SPAN 4				
	REAR ABUTMENT	A	B	C	PIER 1	SPLICE 1	D	E	F	PIER 2	SPLICE 2	G	H	J	SPLICE 3	PIER 3	K	L	M	FORWARD ABUTMENT
DEFLECTION DUE TO WEIGHT OF STEEL, INS.	0	1/16	1/16	1/16	0	1/16	1/16	1/16	1/16	0	1/16	1/8	3/16	1/8	1/16	0	1/16	1/16	1/16	0
DEFLECTION DUE TO REMAINING DL, INS.	0	1/8	3/16	1/16	0	1/8	3/16	1/4	1/8	0	5/16	5/16	9/16	3/8	3/16	0	1/16	1/4	3/16	0
TOTAL, INS.	0	3/16	1/4	1/8	0	3/16	1/4	5/16	3/16	0	3/8	7/16	3/4	1/2	1/4	0	1/8	5/16	1/4	0

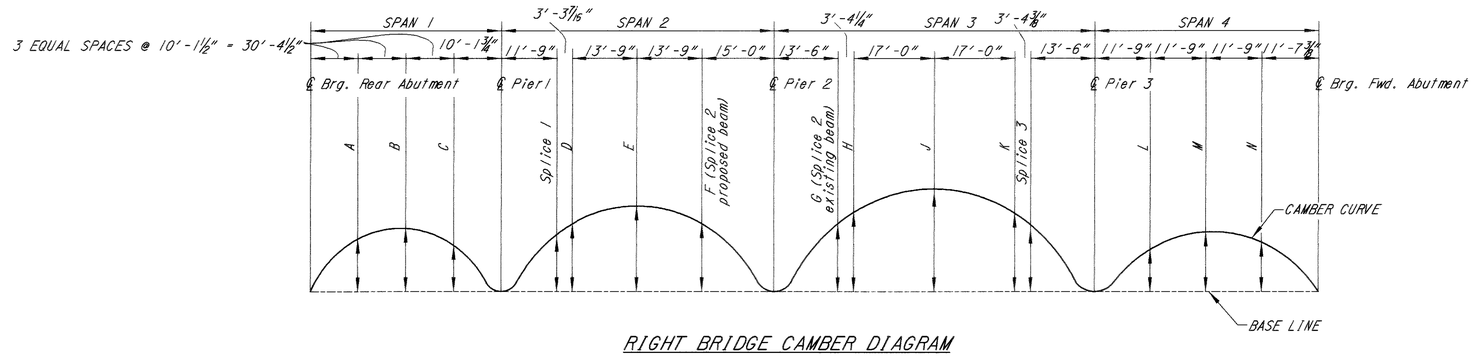

RIGHT BRIDGE CAMBER DIAGRAM

RIGHT BRIDGE DEFLECTION AND CAMBER TABLE

	SPAN 1				SPAN 2					SPAN 3							SPAN 4			
	REAR ABUTMENT	A	B	C	PIER 1	SPLICE 1	D	E	F	PIER 2	SPLICE 2	G	H	J	K	SPLICE 3	PIER 3	L	M	N	FORWARD ABUTMENT
DEFLECTION DUE TO WEIGHT OF STEEL, INS.	0	1/16	1/16	1/16	0	1/16	1/16	1/16	1/16	0	1/16	1/16	1/16	1/8	1/16	1/16	0	1/16	1/16	1/16	0
DEFLECTION DUE TO REMAINING DL, INS.	0	1/16	1/8	0	0	1/16	1/8	3/16	1/16	0	1/4	1/4	5/16	1/4	5/16	1/4	0	0	1/8	1/8	0
TOTAL, INS.	0	1/8	3/16	1/16	0	1/8	3/16	1/4	1/8	0	5/16	5/16	3/8	5/8	3/8	5/16	0	1/16	3/16	3/16	0

NOTES FOR CAMBER AND DEFLECTION

1. The base line is a straight line at the center of the beam, from centerline of bearing to centerline of bearing.
2. Tabulated values in the deflection and camber table are measured from the base line.

DESIGN AGENCY
BALKE ENGINEERS
1848 Summit Road
Cincinnati, Ohio 45237

DESIGNED	DRAWN	REVIEWED	DATE
FKL	ALH	CRS	6/01
CHECKED	REVISED	STRUCTURE FILE NUMBER	
MRS	—	1305654 L.B. 1305662 R.B.	

DEFLECTION AND CAMBER DETAILS
BRIDGE NO. CLE-275-0654
OVER NORFOLK & SOTHERN R.R. & C.R. 106 (ROUND BOTTOM ROAD)

CLE-275-5.35

Filename: 0654cam.dgn

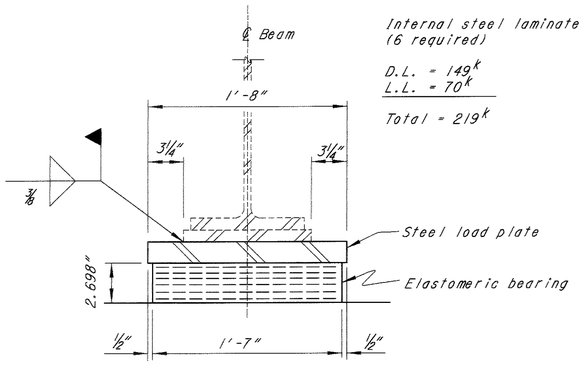

SECTION A-A

Thickness of external elastomer = 0.250"
(2 required)

Thickness of internal elastomer = 0.350"
(5 required)

Internal steel laminate thickness = 0.0747 (14 gage)
(6 required)

D.L. = 149^{k}
L.L. = 70^{k}

Total = 219^{k}

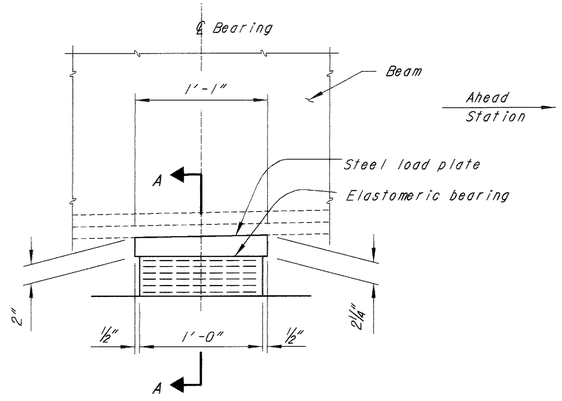

ELEVATION
EXPANSION BEARING AT PIERS

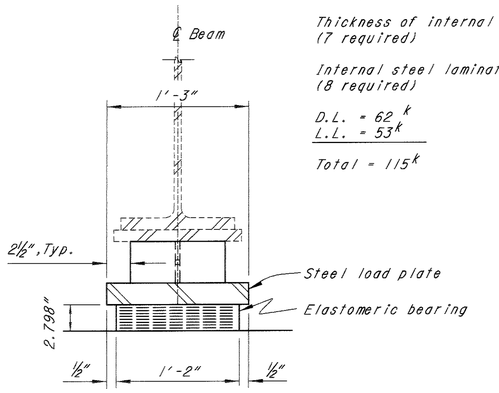

SECTION C-C

Thickness of external elastomer = 0.190"
(2 required)

Thickness of internal elastomer = 0.260"
(7 required)

Internal steel laminate thickness = 0.0747 (14 gage)
(8 required)

D.L. = 62^{k}
L.L. = 53^{k}

Total = 115^{k}

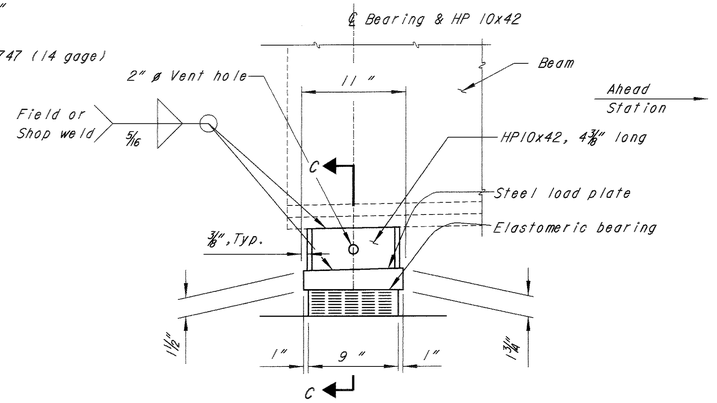

ELEVATION
EXPANSION BEARING AT ABUTMENTS

NOTES FOR LAMINATED ELASTOMERIC BEARINGS AND LOAD PLATE

LOAD PLATE: The steel load plate shall be bonded by vulcanization to the elastomer during the molding process.

The steel load plate and HP 10 x 42 shall be the same material as the attached structural steel (i.e. A36 steel)

WELDING shall be controlled so that the plate temperature at the elastomer bonded surface does not exceed 300°F as determined by the use of pyrometric sticks or other temperature monitoring devices.

BASIS OF PAYMENT: The unit bid price shall include all materials, labor, testing, anchor rods and incidentals necessary to furnish and install laminated elastomeric bearings. Payment will be made at the contract price for Item 516, each, elastomeric bearings with internal laminates (neoprene). Cost of the HP section shall be included for payment with Item 516 also.

ELASTOMERIC BEARINGS shall comply with Item 516 and AASHTO Standard Specification for Highway Bridges, Section 18, Bearing Devices, Division II, Construction, Articles 18.4.5.1 and 18.5.6.2. Bearings shall be Grade 3, 50 durometer elastomer, and shall be subjected to the load testing requirements defined in Article 18.7.4.5 of the AASHTO document listed above. Bearings were designed under Section 14.6.6 of Section 14, Bearings, Division I, Design. Testing shall be included in the unit price bid for the bearings, each.

DESIGN AGENCY
BALKE ENGINEERS
1848 Summit Road
Cincinnati, Ohio 45237

DESIGNED	DRAWN	REVIEWED	DATE
FKL	ALH	CRS	6/01
CHECKED	REVISED	STRUCTURE FILE NUMBER	
MPS	—	1305654 L.B. 1305662 R.B.	

BEARING DETAILS (EXISTING BEARING BEAMS)
BRIDGE NO. CLE-275-0654
OVER NORFOLK & SOUTHERN R.R. & C.R. 106 (ROUND BOTTOM RD.)

CLE-275-5.35

788
857

F:\Bridges\CLE-275\CLE275-0654\BRG-1.dgn

Thickness of external elastomer = 0.250"
(2 required)

Thickness of internal elastomer = 0.350"
(5 required)

Internal steel laminate thickness = 0.0747 (14 gage)
(6 required)

D.L. = 149^k
L.L. = 70^k

Total = 219^k

FOR W36x230 BEAM * = $1\frac{3}{4}$"

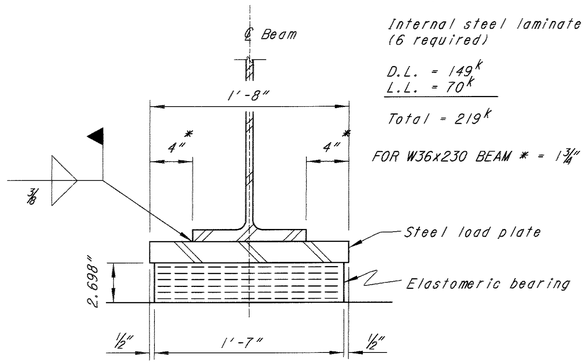

SECTION A-A

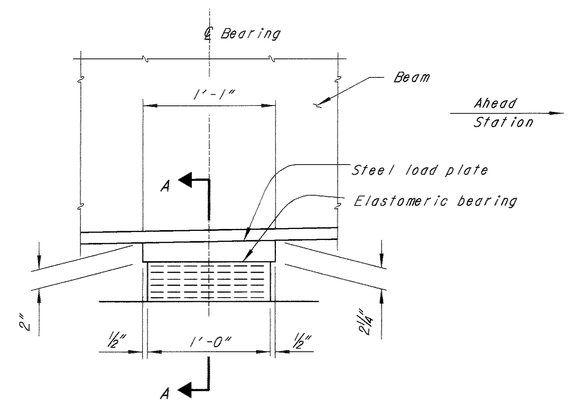

ELEVATION
EXPANSION BEARING AT PIERS

Thickness of external elastomer = 0.190"
(2 required)

Thickness of internal elastomer = 0.260"
(7 required)

Internal steel laminate thickness = 0.0747 (14 gage)
(8 required)

D.L. = 62^k
L.L. = 53^k

Total = 115^k

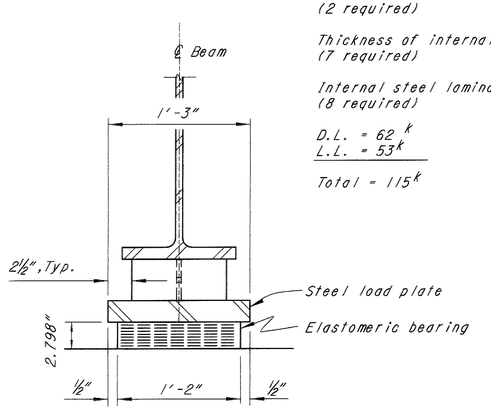

SECTION C-C

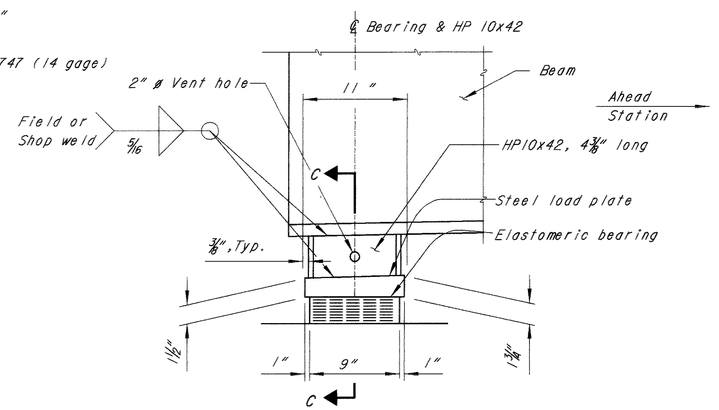

ELEVATION
EXPANSION BEARING AT ABUTMENTS

NOTES FOR LAMINATED ELASTOMERIC BEARINGS AND LOAD PLATE

LOAD PLATE: The steel load plate shall be bonded by vulcanization to the elastomer during the molding process.

The steel load plate and HP 10 x 42 shall be the same material as the attached structural steel (i.e. A709, grade 50 steel).

WELDING shall be controlled so that the plate temperature at the elastomer bonded surface does not exceed 300°F as determined by the use of pyrometric sticks or other temperature monitoring devices.

BASIS OF PAYMENT: The unit bid price shall include all materials, labor, testing, anchor rods and incidentals necessary to furnish and install laminated elastomeric bearings. Payment will be made at the contract price for Item 516, each, elastomeric bearings with internal laminates (neoprene). Cost of the HP section shall be included for payment with Item 516 also.

ELASTOMERIC BEARINGS shall comply with Item 516 and AASHTO Standard Specification for Highway Bridges, Section 18, Bearing Devices, Division II, Construction, Articles 18.4.5.1 and 18.5.6.2. Bearings shall be Grade 3, 50 durometer elastomer, and shall be subjected to the load testing requirements defined in Article 18.7.4.5 of the AASHTO document listed above. Bearings were designed under Section 14.6.6 of Section 14, Bearings, Division I, Design. Testing shall be included in the unit price bid for the bearings, each.

BEARING REPOSITIONING: If the steel is erected at an ambient temperature higher than 80° F or lower than 40° F and the bearing shear deflection exceeds 1/6 of the bearing height at 60° F (+/-) 10° F, the beams or girders shall be raised to allow the bearings to return to their undeformed shape at 60° F (+/-) 10° F.

DESIGN AGENCY
BALKE ENGINEERS
1848 Summit Road
Cincinnati, Ohio 45237

DESIGNED	DRAWN	REVIEWED	DATE
FKL	ALH	CRS	6/01
CHECKED	REVISED	STRUCTURE FILE NUMBER	
MRS	—	1305654 L.B. 1305662 R.B.	

BEARING DETAILS (PROPOSED BEAMS)
BRIDGE NO. CLE-275-0654
OVER NORFOLK & SOUTHERN R.R. & C.R. 106 (ROUND BOTTOM RD.)

CLE-275-5.35

Filename 0654BEARING.dgn

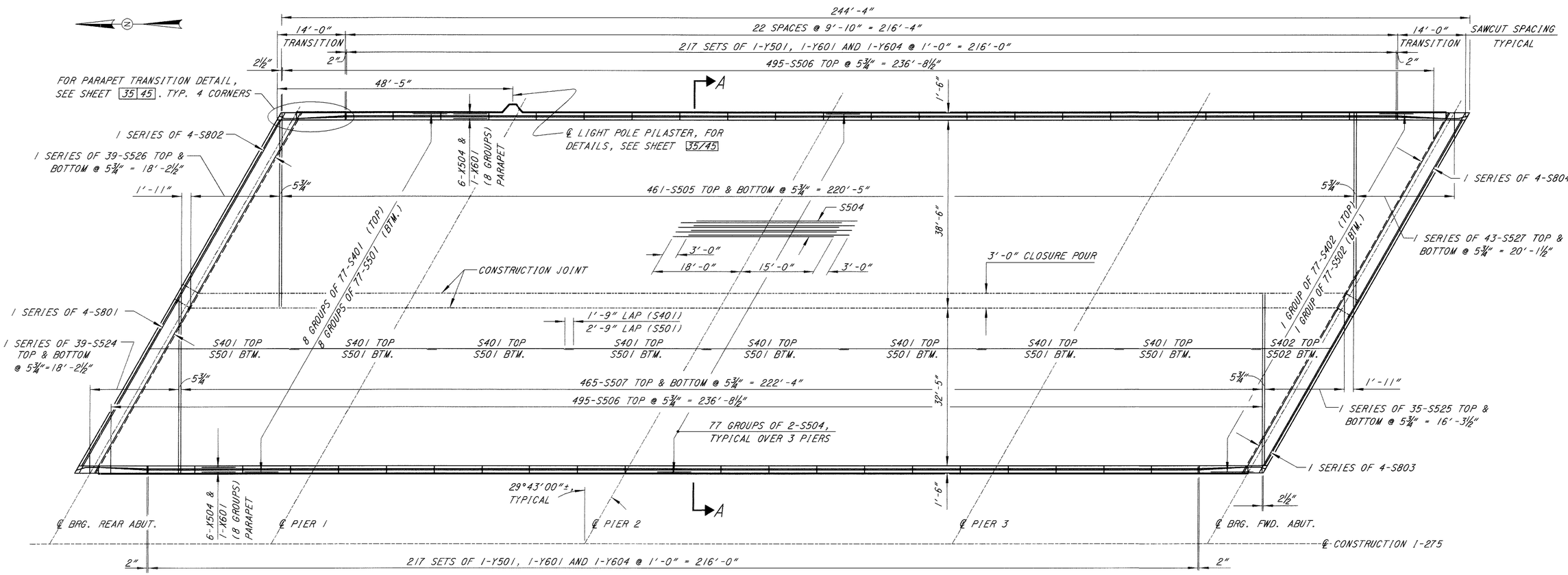

PLAN

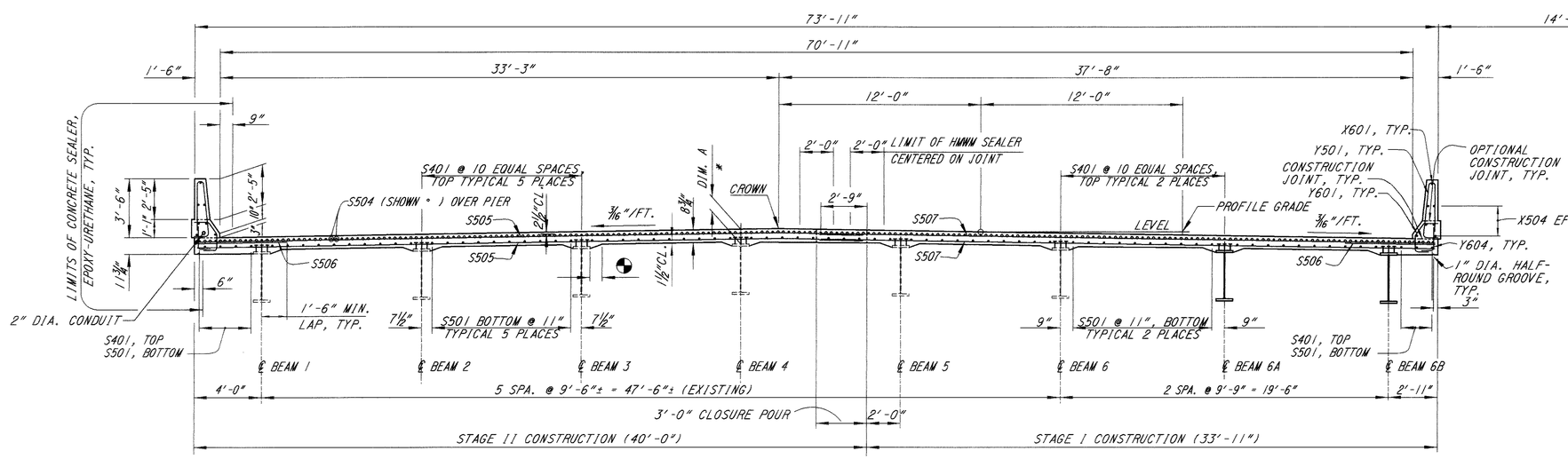

SECTION A-A

	DIM. A	DIM. B
36WF135	11 1/8"	3 1/16"
36WF150	11 3/8"	2 15/16"
36WF170	11 1/2"	2 3/4"
W36x135	11"	2 1/4"
W36x160	10 3/4"	2"
W36x170	10 3/4"	2"
W36x230	10 1/8"	2 1/16"

NOTES:

1. * DECK SLAB DEPTH FOR CONCRETE QUANTITY: THE DIMENSION SHOWN FROM THE TOP OF THE CONCRETE DECK TO THE TOP OF THE FLANGE, MINUS THE DESIGN HAUNCH THICKNESS (DIM. B), HAS BEEN USED FOR COMPUTING THE DECK CONCRETE QUANTITIES. CONCRETE REQUIRED TO FILL THE HAUNCHES, INCLUDING ADDITIONAL OR LESS MATERIAL REQUIRED DUE TO HAUNCH CONSTRUCTION TOLERANCES, SHALL BE CONSIDERED AS INCIDENTAL AND WILL NOT BE INCLUDED IN THE QUANTITY CALCULATIONS FOR PAYMENT.
2. ◓ A HAUNCH WIDTH OF 9"SHALL BE USED. HOWEVER THE HAUNCH WIDTH MAY VARY BETWEEN 6"AND 12"
3. FOR ADDITIONAL INFORMATION ON THE PARAPETS AND SAWCUT JOINTS, SEE STD. DWG. BR-1 AND SHEET 35/45 .
4. HMWM = HIGH MOLECULAR WEIGHT METHACRYLATE.

DESIGN AGENCY
BALKE ENGINEERS
1848 Summit Road
Cincinnati, Ohio 45237

DESIGNED	DRAWN	REVIEWED	DATE
MPS	ALH	CRS	6/01
CHECKED	REVISED	STRUCTURE FILE NUMBER	
FKL	—	130862 F.B. 130862 H.B.	

LEFT BRIDGE DECK PLAN
BRIDGE NO. CLE-275-0654
OVER NORFOLK & SOUTHERN R.R. & C.R. 106 (ROUND BOTTOM ROAD)

CLE-275-5.35

33/45

790/857

F:\Honam\0534\0531.dgn

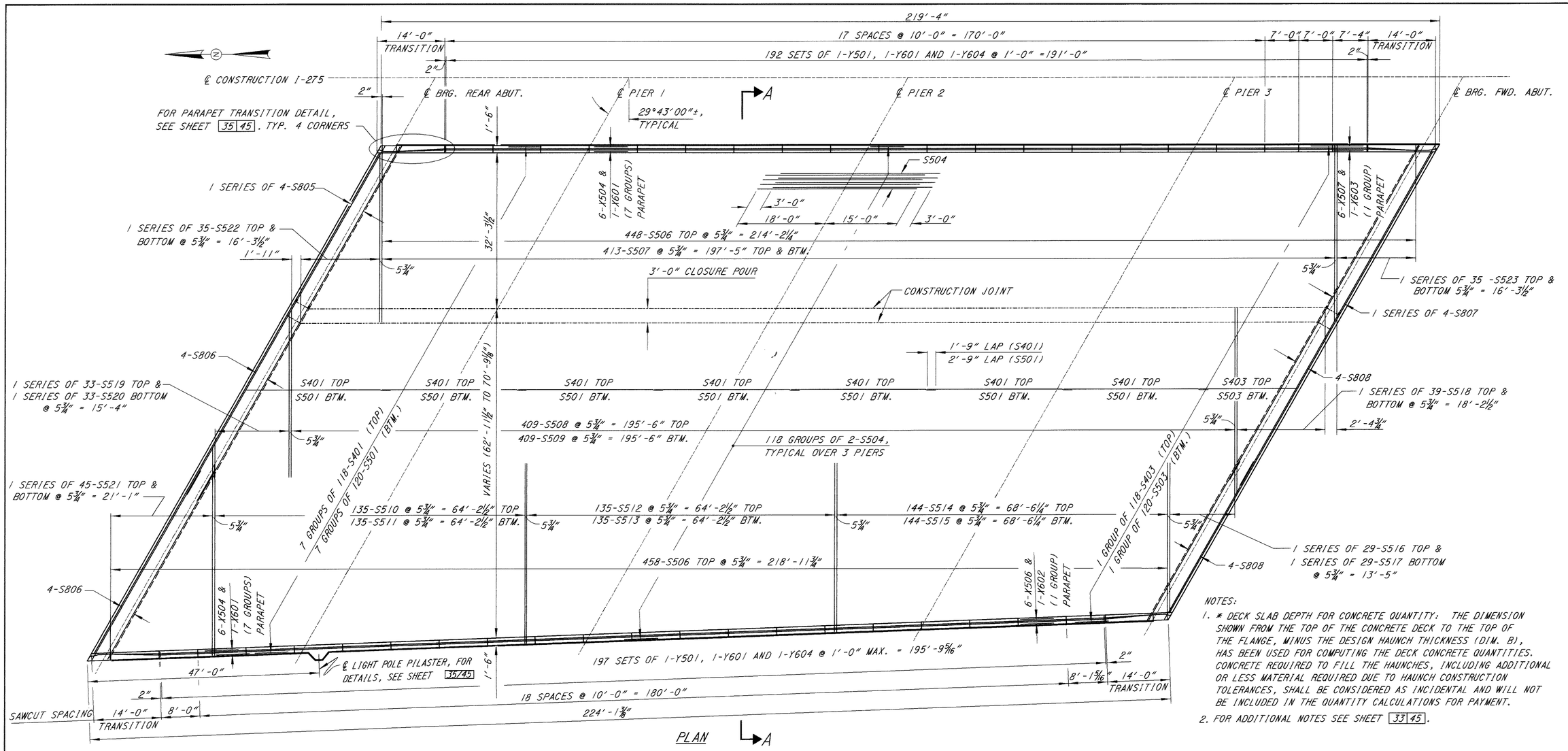

PLAN

NOTES:

1. * DECK SLAB DEPTH FOR CONCRETE QUANTITY: THE DIMENSION SHOWN FROM THE TOP OF THE CONCRETE DECK TO THE TOP OF THE FLANGE, MINUS THE DESIGN HAUNCH THICKNESS (DIM. B), HAS BEEN USED FOR COMPUTING THE DECK CONCRETE QUANTITIES. CONCRETE REQUIRED TO FILL THE HAUNCHES, INCLUDING ADDITIONAL OR LESS MATERIAL REQUIRED DUE TO HAUNCH CONSTRUCTION TOLERANCES, SHALL BE CONSIDERED AS INCIDENTAL AND WILL NOT BE INCLUDED IN THE QUANTITY CALCULATIONS FOR PAYMENT.
2. FOR ADDITIONAL NOTES SEE SHEET 33 45.

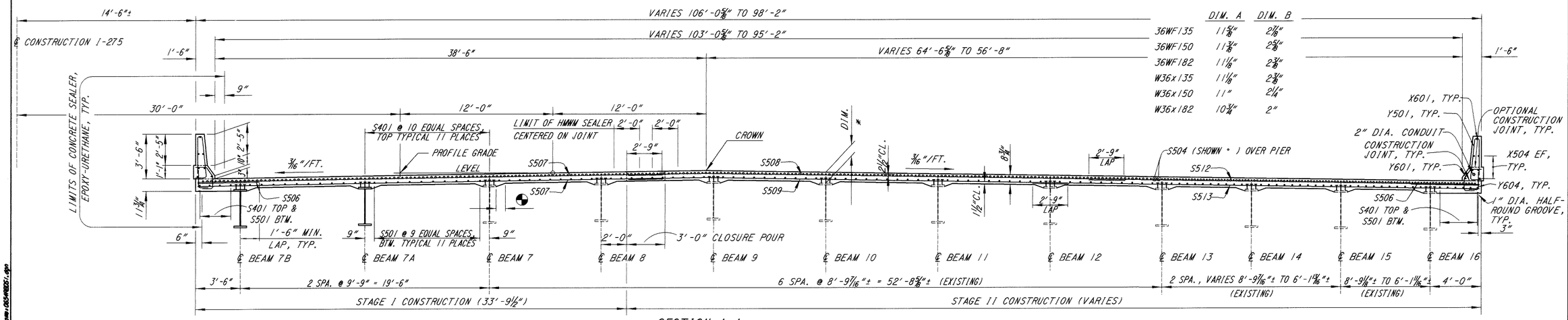

	DIM. A	DIM. B
36WF135	11⅝"	2⅛"
36WF150	11¾"	2⅜"
36WF182	11⅛"	2¾"
W36x135	11⅛"	2⅜"
W36x150	11"	2¼"
W36x182	10¾"	2"

SECTION A-A

DESIGN AGENCY
BALKE ENGINEERS
1848 Summit Road
Cincinnati, Ohio 45237

DESIGNED	DRAWN	REVIEWED	DATE
MPS	ALHAMUH	CRS	6.01
CHECKED	REVISED	STRUCTURE FILE NUMBER	
FKL	—	1-275/5.35/34.45	
		120662 H.B.	

RIGHT BRIDGE DECK PLAN
BRIDGE NO. CLE-275-0654
OVER NORFOLK & SOUTHERN R.R. & C.R. 106 (ROUND BOTTOM ROAD)

CLE-275-5.35

34/45

791/857

F:\Inhome\065498051.dgn

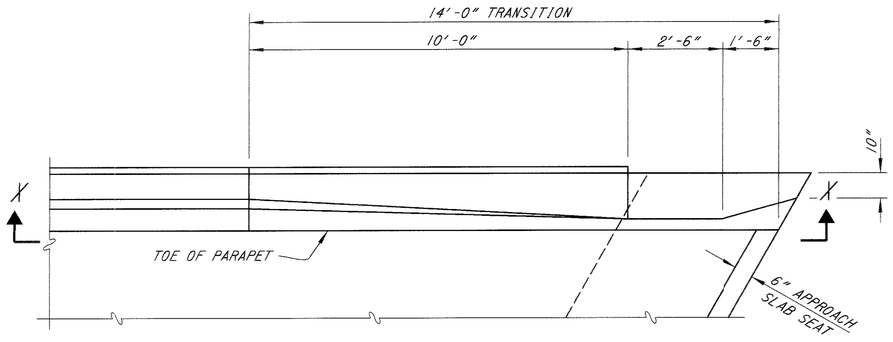

PLAN

(LEFT BRIDGE SHOWN, RIGHT BRIDGE SIMILAR)
(4 REQUIRED LEFT BRIDGE
4 REQUIRED RIGHT BRIDGE)

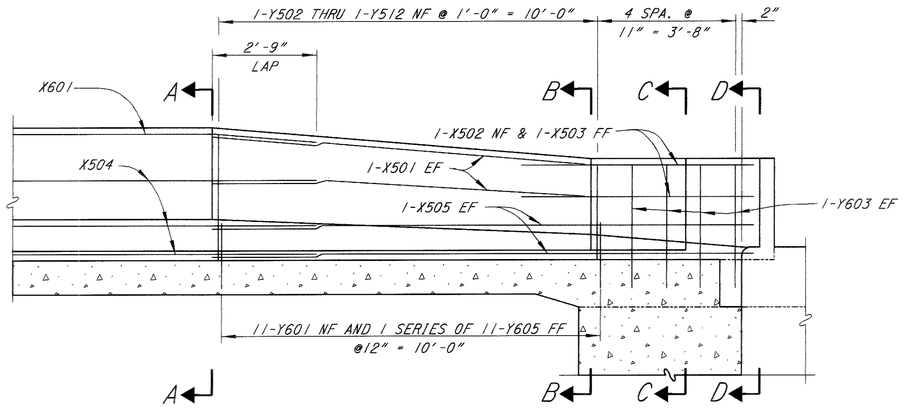

SECTION X-X

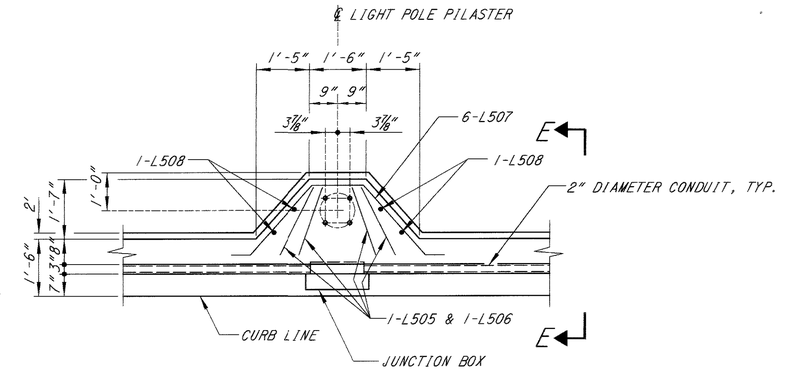

LIGHT POLE PILASTER DETAIL

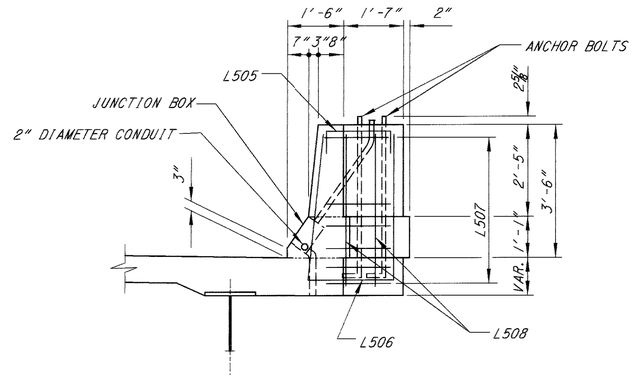

SECTION E-E

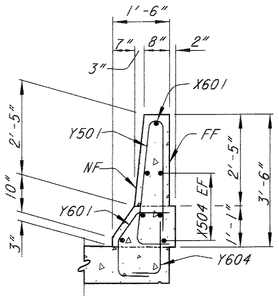

SECTION A-A

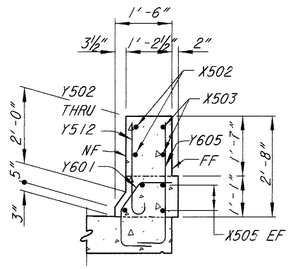

SECTION B-B

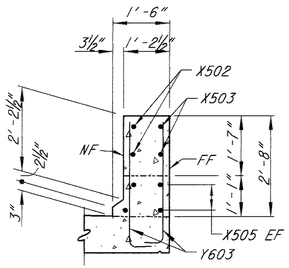

SECTION C-C

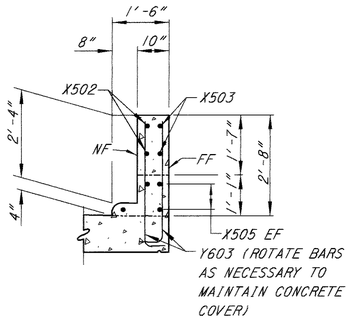

SECTION D-D

NOTES:
1. FOR ADDITIONAL INFORMATION, SEE STD. DWG. BR-1.
2. EF = EACH FACE
NF = NEAR FACE
FF = FAR FACE

DESIGN AGENCY
BALKE ENGINEERS
1848 Summit Road
Cincinnati, Ohio 45237

DESIGNED	DRAWN	REVIEWED	DATE
MRS	ALH	CRS	6/01
CHECKED	REVISED	STRUCTURE FILE NUMBER	
FKL	—	1305654 L.B. 1305662 R.B.	

DECK DETAILS
BRIDGE NO. CLE-275-0654
OVER NORFOLK & SOUTHERN R.R & C.R. 106 (ROUND BOTTOM ROAD)

CLE-275-5.35

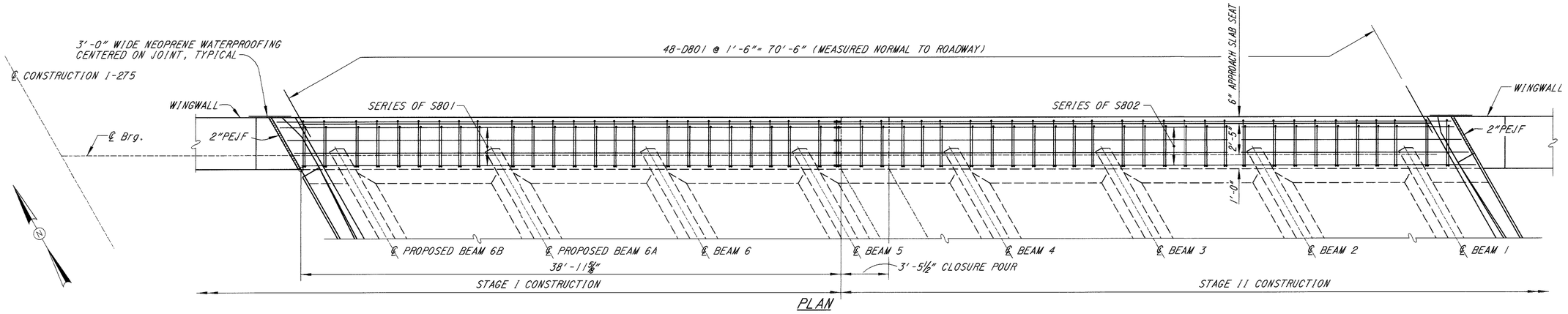

PLAN

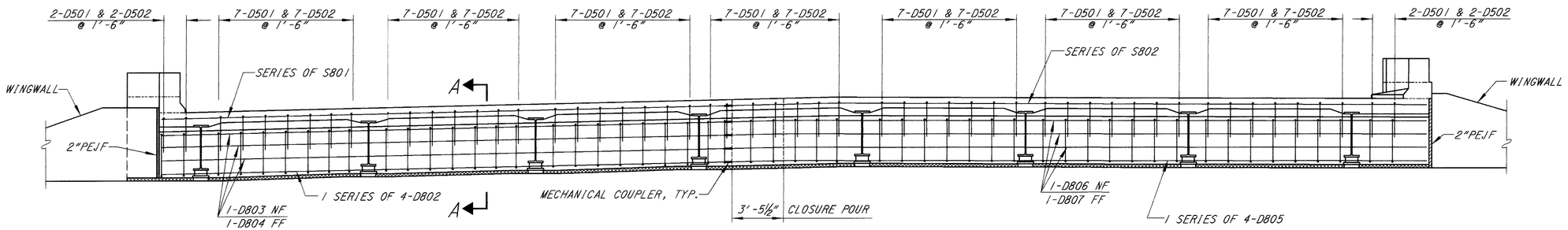

ELEVATION

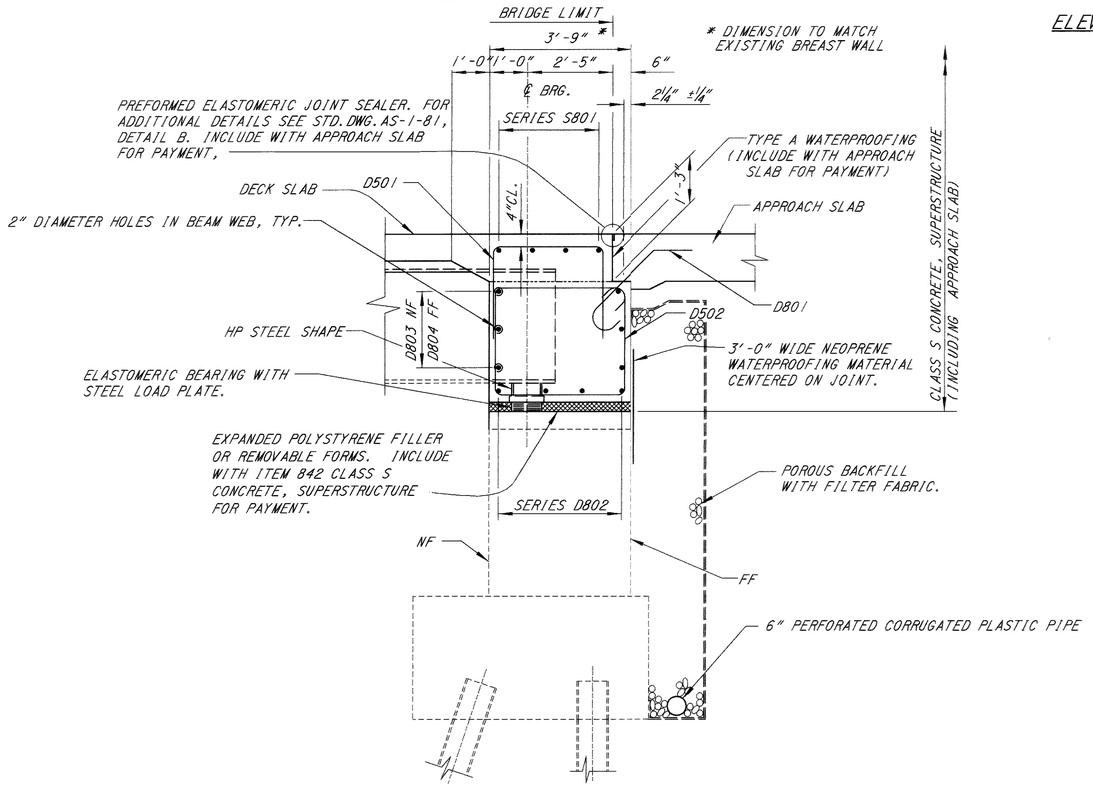

SECTION A-A

NOTES:

1. FOR ADDITIONAL INFORMATION SEE STD. DWG. SICD-1-96.
2. WORK THIS SHEET WITH DECK PLAN SHEET 33 45.
3. PEJF = PREFORMED EXPANSION JOINT FILLER.
   EF = EACH FACE
   NF = NEAR FACE
   FF = FAR FACE
4. ABUTMENT DIAPHRAGM CONCRETE, STEEL SUPERSTRUCTURE: THE CONCRETE ENCASING STRUCTURAL STEEL MEMBERS SUPPORTED IN SEMI-INTEGRAL AND INTEGRAL TYPE ABUTMENTS MAY BE PLACED BEFORE THE ACTUAL DECK CONCRETE IS PLACED. IF THE CONTRACTOR CHOOSES THIS OPTION THE CONCRETE SHALL HAVE HAD AT LEAST 48 HOURS OF SET TIME BEFORE DECK CONCRETE IS PLACED.
5. ABUTMENT DIAPHRAGM CONCRETE, STEEL SUPERSTRUCTURE, PHASED CONSTRUCTION: WHERE THE PLANS DETAIL A SEPARATE CLOSURE POUR SECTION BETWEEN CONSTRUCTION PHASES, THE CONCRETE IN THE ABUTMENT DIAPHRAGM SECTIONS OF THIS SEMI-INTEGRAL OR INTEGRAL ABUTMENT THAT ENCASES ANY STRUCTURAL STEEL MEMBERS OF AN INDIVIDUAL PHASE MAY BE PLACED EITHER SEPARATE OF OR WITH THE DECK CONCRETE OF THAT PHASE. IF THE CONTRACTOR CHOOSES TO PLACE THE DIAPHRAGM CONCRETE SEPARATELY, THE CONCRETE SHALL HAVE AT LEAST 48 HOURS OF SET TIME BEFORE DECK CONCRETE CAN BE PLACED. THE HORIZONTAL CONSTRUCTION JOINT BETWEEN THE DIAPHRAGM AND DECK CONCRETE SHOULD BE AT THE BOTTOM OF THE TOP FLANGE. IF NO SEPARATE CLOSURE POUR SECTION IS DETAILED BETWEEN PHASES THE ABUTMENT DIAPHRAGM CONCRETE SHALL BE POURED SIMULTANEOUSLY WITH THE DECK POUR TO ALLOW FOR EXPECTED DEAD LOAD ROTATION AT THE ABUTMENTS.

DESIGN AGENCY
BALKE ENGINEERS
1848 SUMMIT ROAD
CINCINNATI, OHIO 45237

DESIGNED	DRAWN	REVIEWED	DATE
FKL	ALHNWJH	CRS	6/01
CHECKED	REVISED	STRUCTURE FILE NUMBER	
MPS	____	1305654 L.B. 1305662 R.B.	

LEFT BRIDGE REAR ABUTMENT DIAPHRAGM DETAILS
BRIDGE NO. CLE-275-0654
OVER NORFOLK & SOTHERN R.R. & C.R. 106 (ROUND BOTTOM RD.)

CLE-275-5.35

36/45

793/857

FILENAME=SHLD-RA-DIAPH.DGN

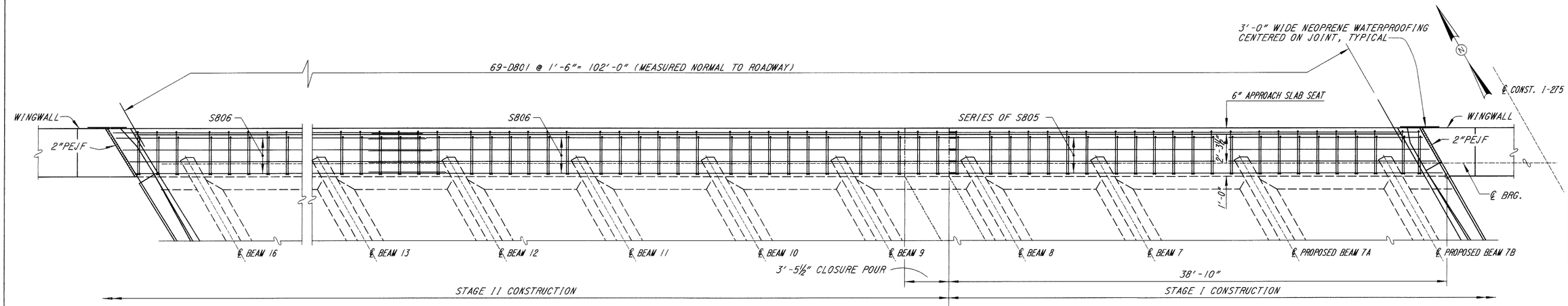

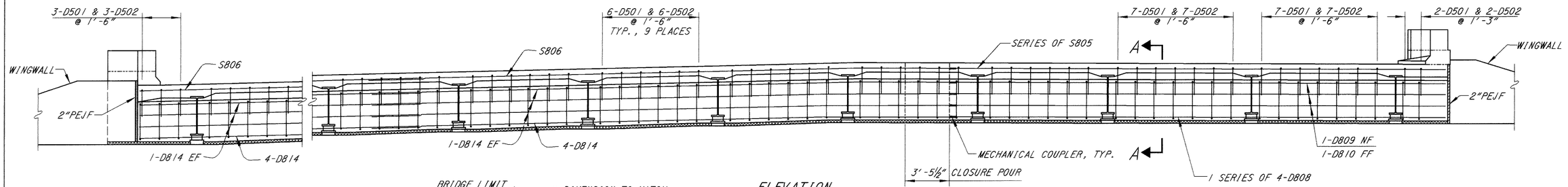

ELEVATION

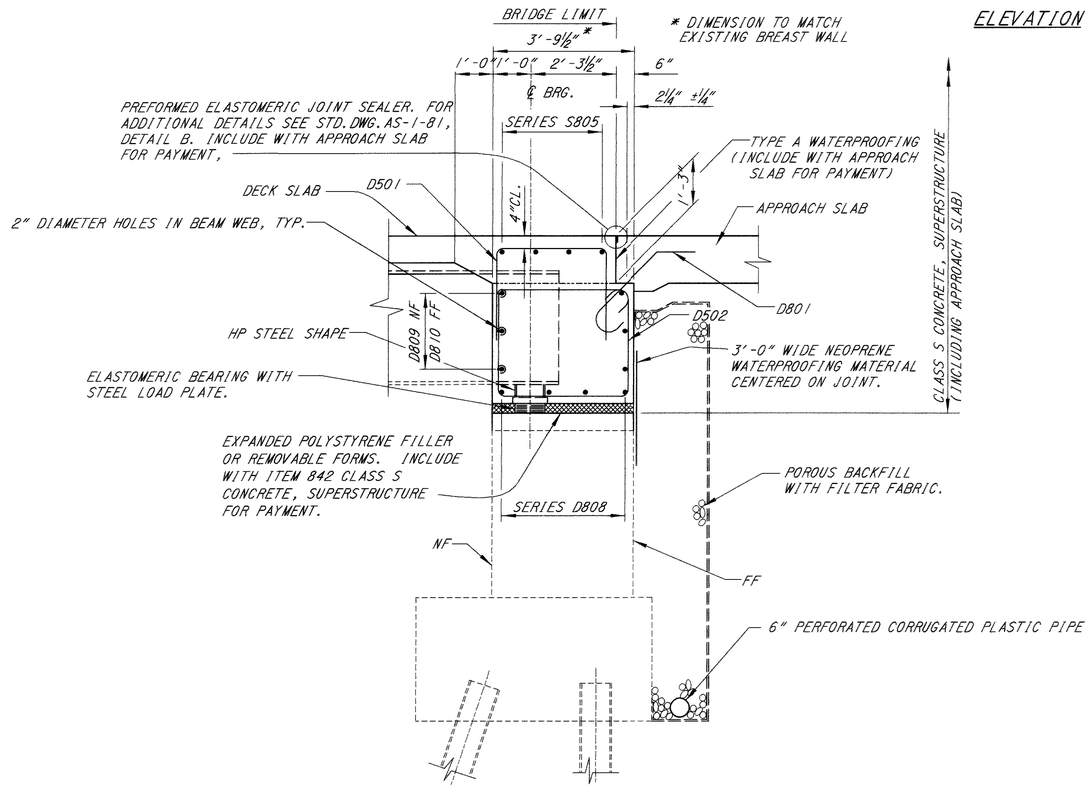

SECTION A-A

MINIMUM LAP LENGTHS:

S806 = 4'-6"
D814 = 4'-0"

NOTES:

1. FOR ADDITIONAL INFORMATION SEE STD. DWG. SICD-1-96.
2. WORK THIS SHEET WITH DECK PLAN SHEET 34 45.
3. PEJF = PREFORMED EXPANSION JOINT FILLER.
   EF = EACH FACE
   NF = NEAR FACE
   FF = FAR FACE
4. ABUTMENT DIAPHRAGM CONCRETE, STEEL SUPERSTRUCTURE: THE CONCRETE ENCASING STRUCTURAL STEEL MEMBERS SUPPORTED IN SEMI-INTEGRAL AND INTEGRAL TYPE ABUTMENTS MAY BE PLACED BEFORE THE ACTUAL DECK CONCRETE IS PLACED. IF THE CONTRACTOR CHOOSES THIS OPTION THE CONCRETE SHALL HAVE HAD AT LEAST 48 HOURS OF SET TIME BEFORE DECK CONCRETE IS PLACED.
5. ABUTMENT DIAPHRAGM CONCRETE, STEEL SUPERSTRUCTURE, PHASED CONSTRUCTION: WHERE THE PLANS DETAIL A SEPARATE CLOSURE POUR SECTION BETWEEN CONSTRUCTION PHASES, THE CONCRETE IN THE ABUTMENT DIAPHRAGM SECTIONS OF THIS SEMI-INTEGRAL OR INTEGRAL ABUTMENT THAT ENCASES ANY STRUCTURAL STEEL MEMBERS OF AN INDIVIDUAL PHASE MAY BE PLACED EITHER SEPARATE OF OR WITH THE DECK CONCRETE OF THAT PHASE. IF THE CONTRACTOR CHOOSES TO PLACE THE DIAPHRAGM CONCRETE SEPARATELY, THE CONCRETE SHALL HAVE AT LEAST 48 HOURS OF SET TIME BEFORE DECK CONCRETE CAN BE PLACED. THE HORIZONTAL CONSTRUCTION JOINT BETWEEN THE DIAPHRAGM AND DECK CONCRETE SHOULD BE AT THE BOTTOM OF THE TOP FLANGE. IF NO SEPARATE CLOSURE POUR SECTION IS DETAILED BETWEEN PHASES THE ABUTMENT DIAPHRAGM CONCRETE SHALL BE POURED SIMULTANEOUSLY WITH THE DECK POUR TO ALLOW FOR EXPECTED DEAD LOAD ROTATION AT THE ABUTMENTS.

DESIGN AGENCY
BALKE ENGINEERS
1848 SUMMIT ROAD
CINCINNATI, OHIO 45237

DESIGNED	DRAWN	REVIEWED	DATE
FKL	ALH/WJH	CBS	6/01
CHECKED	REVISED	STRUCTURE FILE NUMBER	
MPS	—	1305541 & 2, 1305602 & 3	

RIGHT BRIDGE REAR ABUTMENT DIAPHRAGM DETAILS
BRIDGE NO. CLE-275-0654
OVER NORFOLK & SOTHERN R.R. & C.R. 106 (ROUND BOTTOM RD.)

CLE-275-5.35

37/45

794/857

FILENAME=RBD-04-01APR.DGN

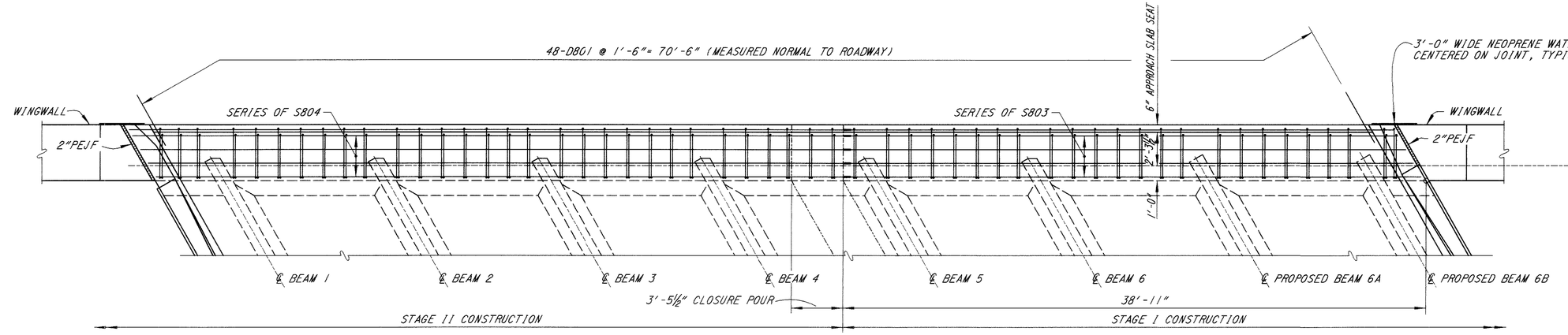

PLAN

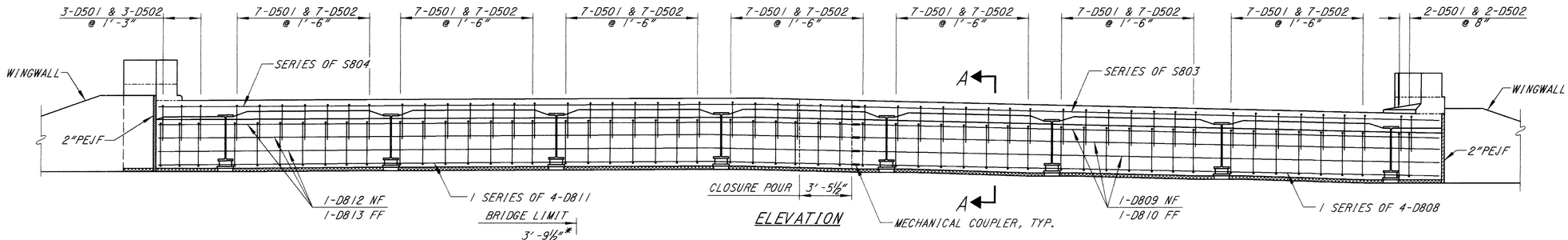

ELEVATION

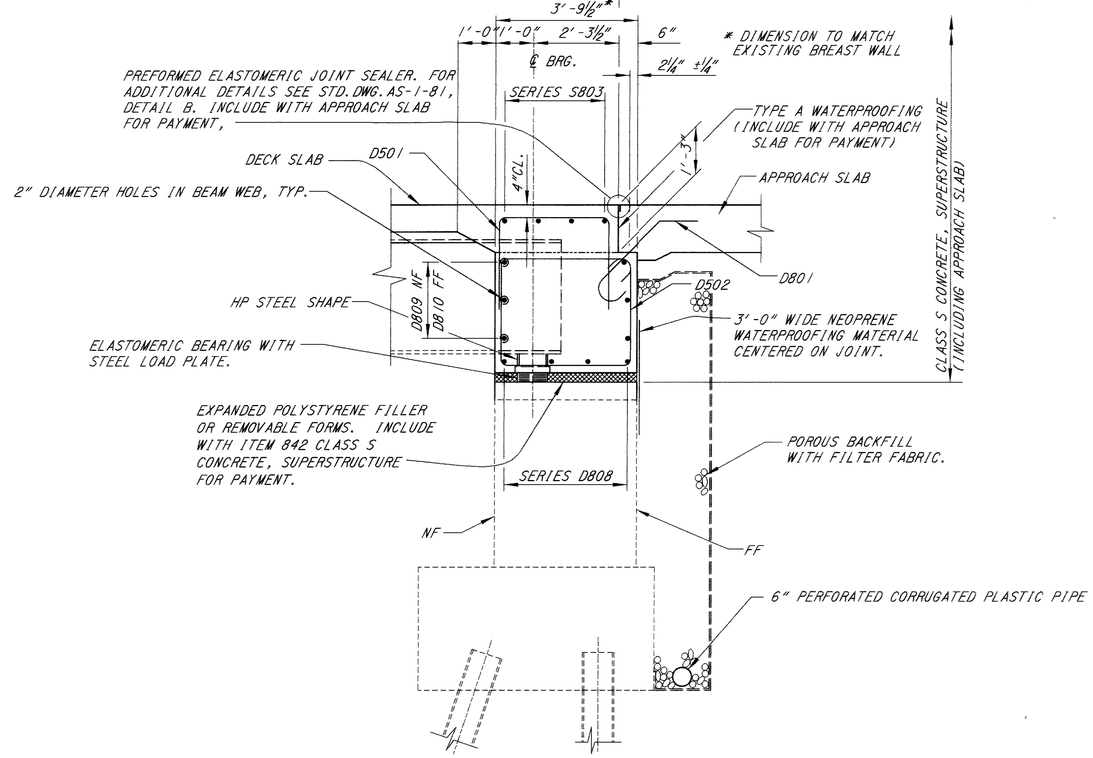

SECTION A-A

NOTES:

1. FOR ADDITIONAL INFORMATION SEE STD. DWG. SICD-1-96.
2. WORK THIS SHEET WITH DECK PLAN SHEET 33 45.
3. PEJF = PREFORMED EXPANSION JOINT FILLER.
   EF = EACH FACE
   NF = NEAR FACE
   FF = FAR FACE
4. ABUTMENT DIAPHRAGM CONCRETE, STEEL SUPERSTRUCTURE: THE CONCRETE ENCASING STRUCTURAL STEEL MEMBERS SUPPORTED IN SEMI-INTEGRAL AND INTEGRAL TYPE ABUTMENTS MAY BE PLACED BEFORE THE ACTUAL DECK CONCRETE IS PLACED. IF THE CONTRACTOR CHOOSES THIS OPTION THE CONCRETE SHALL HAVE HAD AT LEAST 48 HOURS OF SET TIME BEFORE DECK CONCRETE IS PLACED.
5. ABUTMENT DIAPHRAGM CONCRETE, STEEL SUPERSTRUCTURE, PHASED CONSTRUCTION: WHERE THE PLANS DETAIL A SEPARATE CLOSURE POUR SECTION BETWEEN CONSTRUCTION PHASES, THE CONCRETE IN THE ABUTMENT DIAPHRAGM SECTIONS OF THIS SEMI-INTEGRAL OR INTEGRAL ABUTMENT THAT ENCASES ANY STRUCTURAL STEEL MEMBERS OF AN INDIVIDUAL PHASE MAY BE PLACED EITHER SEPARATE OF OR WITH THE DECK CONCRETE OF THAT PHASE. IF THE CONTRACTOR CHOOSES TO PLACE THE DIAPHRAGM CONCRETE SEPARATELY, THE CONCRETE SHALL HAVE AT LEAST 48 HOURS OF SET TIME BEFORE DECK CONCRETE CAN BE PLACED. THE HORIZONTAL CONSTRUCTION JOINT BETWEEN THE DIAPHRAGM AND DECK CONCRETE SHOULD BE AT THE BOTTOM OF THE TOP FLANGE. IF NO SEPARATE CLOSURE POUR SECTION IS DETAILED BETWEEN PHASES THE ABUTMENT DIAPHRAGM CONCRETE SHALL BE POURED SIMULTANEOUSLY WITH THE DECK POUR TO ALLOW FOR EXPECTED DEAD LOAD ROTATION AT THE ABUTMENTS.

DESIGN AGENCY
BALKE ENGINEERS
1848 SUMMIT ROAD
CINCINNATI, OHIO 45237

DESIGNED	DRAWN	REVIEWED	DATE
FKL	ALH/NWJH	CRS	6/01
CHECKED	REVISED	STRUCTURE FILE NUMBER 1306654 L.B. 1306662 R.B.	
MPS	—		

LEFT BRIDGE FORWARD ABUTMENT DIAPHRAGM DETAILS

BRIDGE NO. CLE-275-0654
OVER NORFOLK & SOTHERN R.R. & C.R. 106 (ROUND BOTTOM RD.)

CLE-275-5.35

38/45

795/857

FILENAME: 0654LBP801APH.DGN

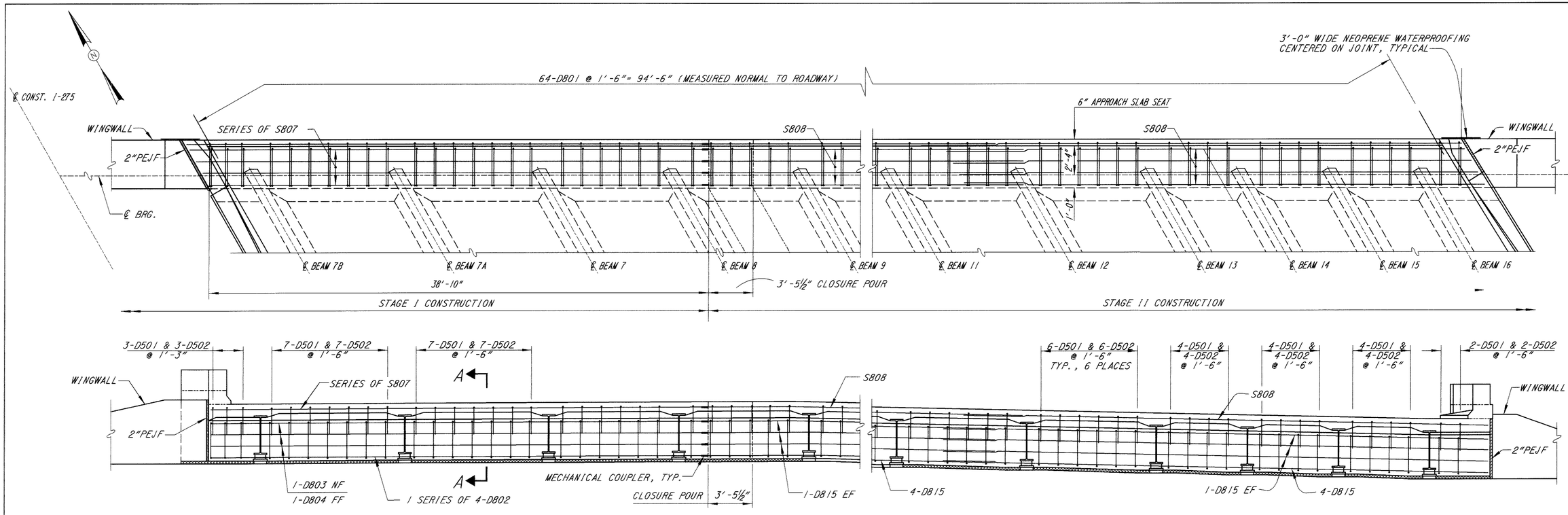

ELEVATION

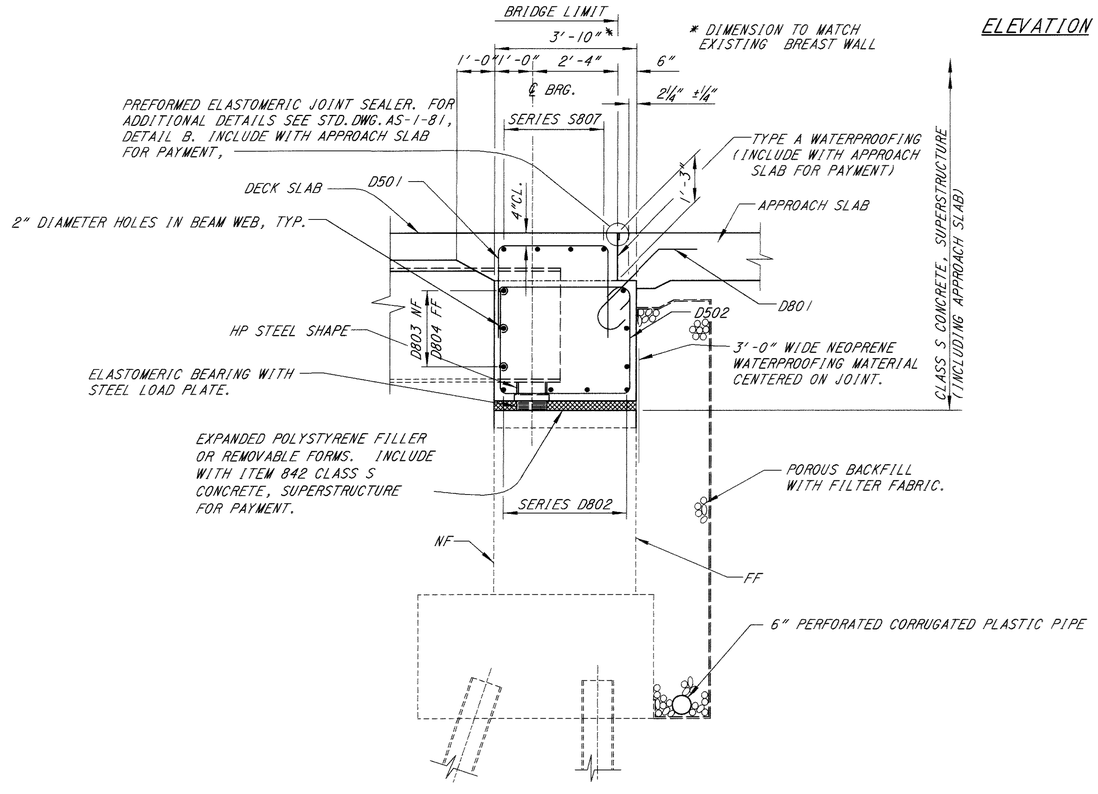

SECTION A-A

MINIMUM LAP LENGTHS:
S808 = 4'-6"
D815 = 4'-0"

NOTES:

1. FOR ADDITIONAL INFORMATION SEE STD. DWG. SICD-1-96.
2. WORK THIS SHEET WITH DECK PLAN SHEET 34 45.
3. PEJF = PREFORMED EXPANSION JOINT FILLER.
   EF = EACH FACE
   NF = NEAR FACE
   FF = FAR FACE
4. ABUTMENT DIAPHRAGM CONCRETE, STEEL SUPERSTRUCTURE: THE CONCRETE ENCASING STRUCTURAL STEEL MEMBERS SUPPORTED IN SEMI-INTEGRAL AND INTEGRAL TYPE ABUTMENTS MAY BE PLACED BEFORE THE ACTUAL DECK CONCRETE IS PLACED. IF THE CONTRACTOR CHOOSES THIS OPTION THE CONCRETE SHALL HAVE HAD AT LEAST 48 HOURS OF SET TIME BEFORE DECK CONCRETE IS PLACED.
5. ABUTMENT DIAPHRAGM CONCRETE, STEEL SUPERSTRUCTURE, PHASED CONSTRUCTION: WHERE THE PLANS DETAIL A SEPARATE CLOSURE POUR SECTION BETWEEN CONSTRUCTION PHASES, THE CONCRETE IN THE ABUTMENT DIAPHRAGM SECTIONS OF THIS SEMI-INTEGRALOR INTEGRAL ABUTMENT THAT ENCASES ANY STRUCTURAL STEEL MEMBERS OF AN INDIVIDUAL PHASE MAY BE PLACED EITHER SEPARATE OF OR WITH THE DECK CONCRETE OF THAT PHASE. IF THE CONTRACTOR CHOOSES TO PLACE THE DIAPHRAGM CONCRETE SEPARATELY, THE CONCRETE SHALL HAVE AT LEAST 48 HOURS OF SET TIME BEFORE DECK CONCRETE CAN BE PLACED. THE HORIZONTAL CONSTRUCTION JOINT BETWEEN THE DIAPHRAGM AND DECK CONCRETE SHOULD BE AT THE BOTTOM OF THE TOP FLANGE. IF NO SEPARATE CLOSURE POUR SECTION IS DETAILED BETWEEN PHASES THE ABUTMENT DIAPHRAGM CONCRETE SHALL BE POURED SIMULTANEOUSLY WITH THE DECK POUR TO ALLOW FOR EXPECTED DEAD LOAD ROTATION AT THE ABUTMENTS.

DESIGN AGENCY
BALKE ENGINEERS
1848 SUMMIT ROAD
CINCINNATI, OHIO 45237

DESIGNED	DRAWN	REVIEWED	DATE
FKL	ALH/KLH	CRS	6.01
CHECKED	REVISED	STRUCTURE FILE NUMBER	
MPS	—	1305544 R.B. 1305562 H.B.	

RIGHT BRIDGE FORWARD ABUTMENT DIAPHRAGM DETAILS
BRIDGE NO. CLE-275-0654
OVER NORFOLK & SOTHERN R.R. & C.R. 106 (ROUND BOTTOM RD.)

CLE-275-5.35

39/45

796/857

FILENAME=SHR-HA-DIAPH.DGN

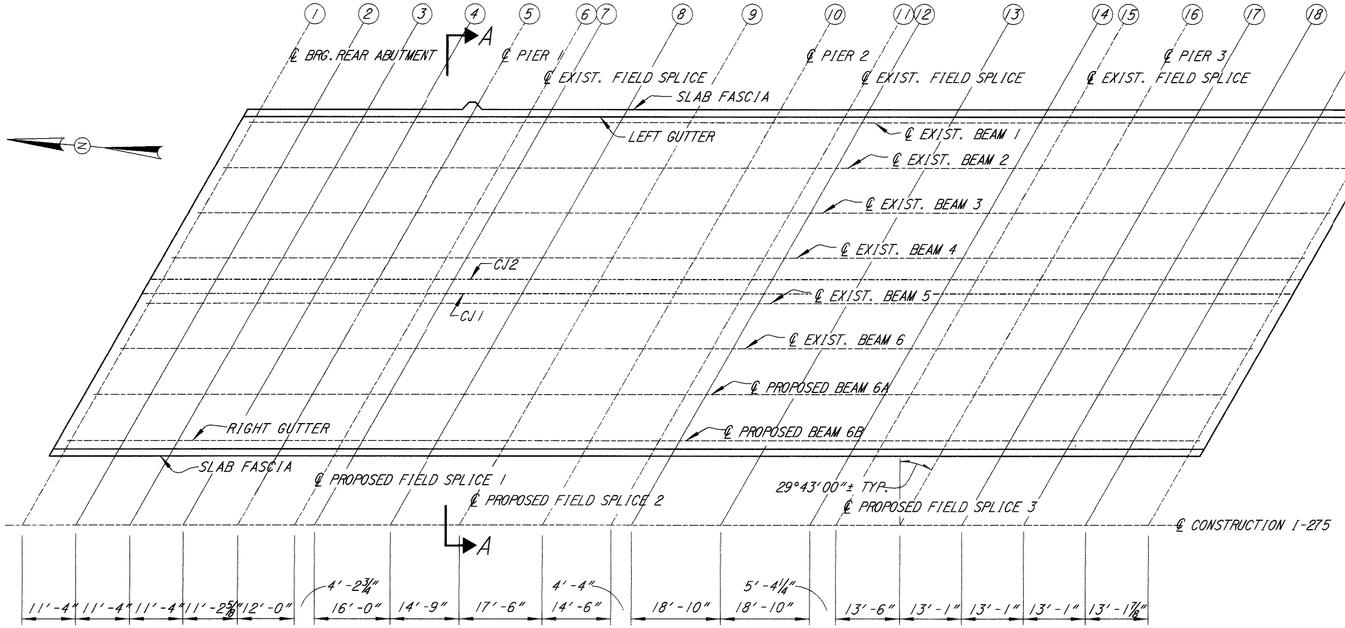

PLAN

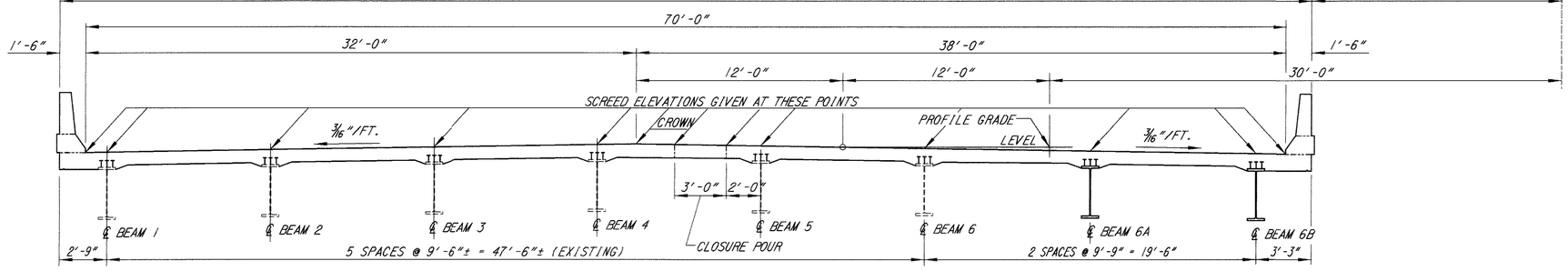

SECTION A-A

NOTES:

1. SCREED ELEVATIONS shown are for the deck slab surface prior to concrete placement. Allowance has been made for anticipated calculated dead load deflections.
2. CJ 1 = STAGE I CONSTRUCTION JOINT
   CJ 2 = STAGE II CONSTRUCTION JOINT

SCREED ELEVATIONS

LOCATION	GRID LINE 1	GRID LINE 2	GRID LINE 3	GRID LINE 4	GRID LINE 5	GRID LINE 6	GRID LINE 7	GRID LINE 8	GRID LINE 9	GRID LINE 10	GRID LINE 11	GRID LINE 12	GRID LINE 13	GRID LINE 14	GRID LINE 15	GRID LINE 16	GRID LINE 17	GRID LINE 18	GRID LINE 19	GRID LINE 20
LEFT GUTTER	578.22	578.59	578.85	578.96	579.06	579.44	579.57	579.93	580.10	580.28	580.86	580.99	581.60	581.56	581.86	581.71	582.05	582.45	582.65	582.70
BEAM 1	578.21	578.58	578.84	578.95	579.06	579.44	579.57	579.93	580.10	580.28	580.86	580.99	581.60	581.56	581.86	581.71	582.05	582.45	582.65	582.69
BEAM 2	578.25	578.66	578.93	579.02	579.11	579.52	579.66	580.03	580.18	580.33	580.98	581.12	581.79	581.65	581.99	581.75	582.12	582.56	582.74	582.74
BEAM 3	578.30	578.70	578.98	579.07	579.15	579.57	579.71	580.07	580.23	580.37	581.02	581.16	581.83	581.70	582.04	581.79	582.17	582.60	582.79	582.78
BEAM 4	578.34	578.75	579.02	579.11	579.20	579.61	579.75	580.12	580.27	580.42	581.06	581.21	581.88	581.74	582.08	581.84	582.21	582.65	582.83	582.83
CROWN	578.35	578.75	579.03	579.12	579.21	579.62	579.76	580.13	580.28	580.42	581.07	581.22	581.89	581.75	582.09	581.85	582.22	582.65	582.84	582.84
CJ 2	578.28	578.68	578.96	579.05	579.13	579.55	579.69	580.06	580.21	580.35	581.00	581.15	581.22	581.68	582.02	581.78	582.15	582.58	582.77	582.77
CJ 1	578.20	578.60	578.88	578.97	579.05	579.47	579.61	579.98	580.13	580.27	580.92	581.07	581.74	581.60	581.94	581.70	582.07	582.50	582.69	582.69
BEAM 5	578.15	578.55	578.83	578.91	579.00	579.42	579.56	579.92	580.08	580.22	580.87	581.01	581.68	581.55	581.89	581.65	582.02	582.45	582.64	582.64
BEAM 6	577.89	578.30	578.58	578.66	578.75	579.17	579.31	579.67	579.83	579.97	580.62	580.76	581.43	581.30	581.64	581.40	581.77	582.20	582.39	582.39
BEAM 6A	577.59	578.04	578.32	578.41	578.49	578.91	579.05	579.41	579.57	579.71	580.36	580.51	581.17	581.04	581.38	581.14	581.51	581.94	582.13	582.13
BEAM 6B	577.37	577.74	578.01	578.12	578.23	578.61	578.74	579.10	579.27	579.45	580.03	580.16	580.77	580.73	581.03	580.88	581.23	581.63	581.82	581.87
RIGHT GUTTER	577.33	577.70	577.97	578.09	578.20	578.58	578.71	579.06	579.24	579.42	579.99	580.13	580.74	580.69	580.99	580.84	581.19	581.59	581.79	581.83

DESIGN AGENCY
BALKE ENGINEERS
1848 Summit Road
Cincinnati, Ohio 45237

DESIGNED	DRAWN	REVIEWED	DATE
FKL	ALH	CRS	6/01
CHECKED	REVISED	STRUCTURE FILE NUMBER	
MPS	—	1305662 H.B.	

LEFT BRIDGE SCREED ELEVATIONS
BRIDGE NO. CLE-275-0654
OVER NORFOLK & SOTHERN R.R. & C.R. 106 (ROUND BOTTOM ROAD)

CLE-275-5.35

F:\Jennifer\BOSHEL\Bscreed.dgn

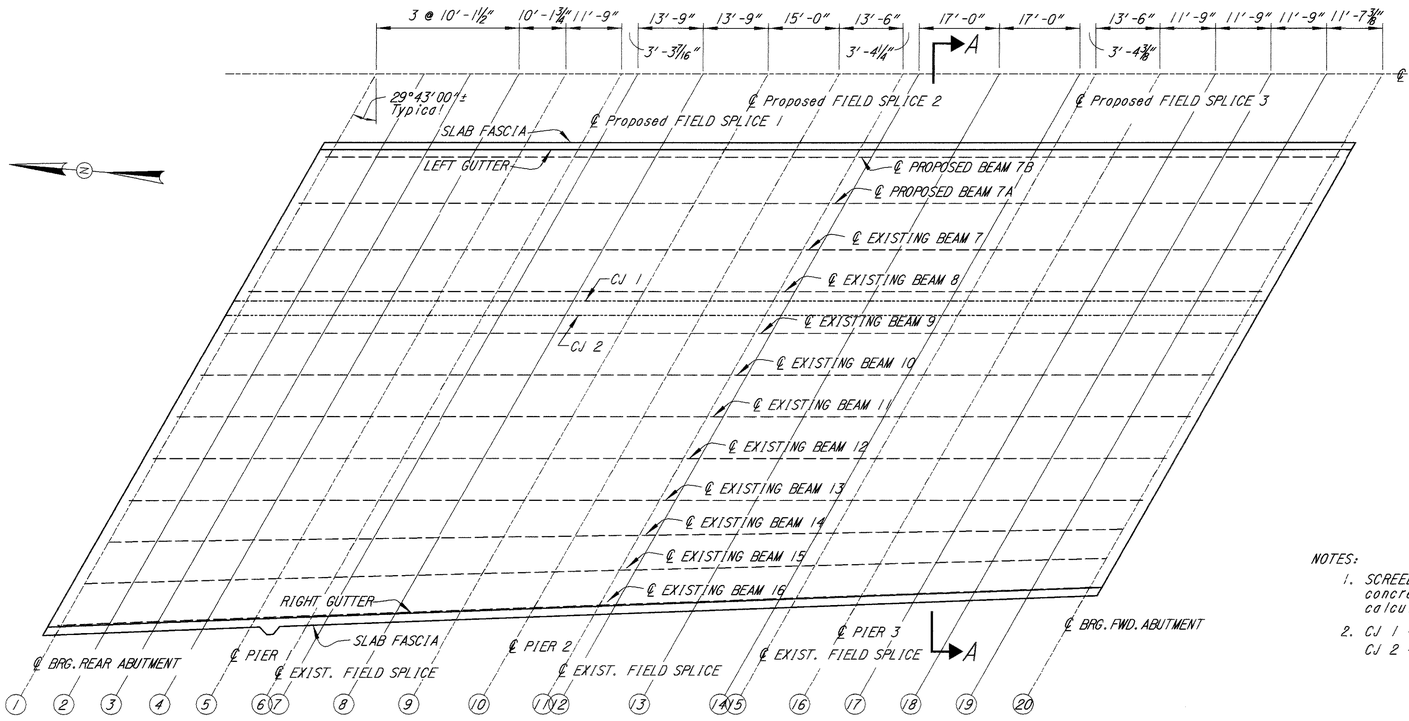

PLAN

NOTES:

1. SCREED ELEVATIONS shown are for the deck slab surface prior to concrete placement. Allowance has been made for anticipated calculated dead load deflections.
2. CJ 1 = STAGE I CONSTRUCTION JOINT
   CJ 2 = STAGE II CONSTRUCTION JOINT

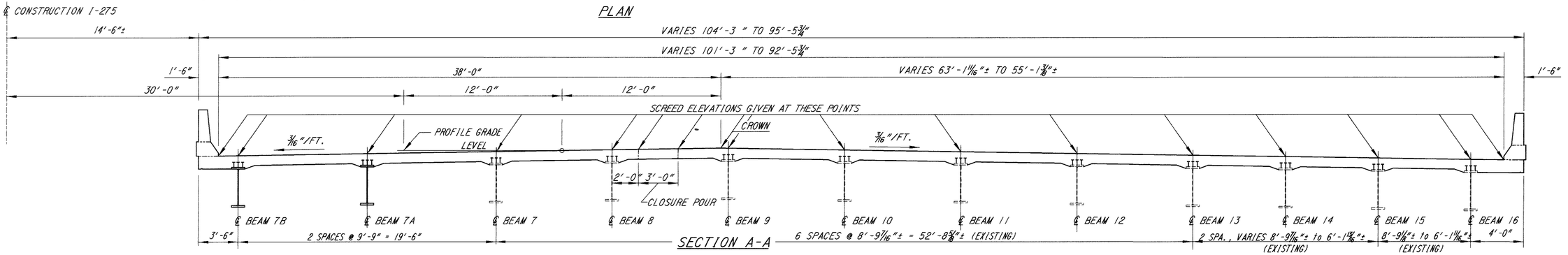

SECTION A-A

SCREED ELEVATIONS

LOCATION	GRID LINE 1	GRID LINE 2	GRID LINE 3	GRID LINE 4	GRID LINE 5	GRID LINE 6	GRID LINE 7	GRID LINE 8	GRID LINE 9	GRID LINE 10	GRID LINE 11	GRID LINE 12	GRID LINE 13	GRID LINE 14	GRID LINE 15	GRID LINE 16	GRID LINE 17	GRID LINE 18	GRID LINE 19	GRID LINE 20
LEFT GUTTER	577.11	577.41	577.65	577.75	577.89	578.21	578.32	578.63	578.79	578.97	579.47	579.58	580.10	580.22	580.23	580.23	580.50	580.82	581.04	581.11
BEAM 7B	577.12	577.42	577.66	577.76	577.90	578.22	578.33	578.64	578.79	578.97	579.48	579.59	580.11	580.23	580.24	580.24	580.51	580.83	581.05	581.11
BEAM 7A	577.16	577.48	577.74	577.81	577.95	578.29	578.41	578.73	578.86	579.02	579.58	579.71	580.28	580.35	580.35	580.29	580.57	580.91	581.13	581.16
BEAM 7	577.20	577.52	577.78	577.86	577.99	578.34	578.46	578.78	578.91	579.07	579.63	579.76	580.32	580.39	580.39	580.33	580.61	580.96	581.18	581.21
BEAM 8	577.24	577.56	577.82	577.89	578.03	578.38	578.50	578.82	578.95	579.11	579.67	579.80	580.37	580.44	580.43	580.38	580.66	581.00	581.22	581.25
CJ 1	577.25	577.57	577.83	577.90	578.04	578.39	578.51	578.83	578.96	579.12	579.68	579.81	580.38	580.44	580.44	580.39	580.67	581.01	581.23	581.26
CJ 2	577.26	577.59	577.84	577.92	578.05	578.40	578.53	578.85	578.98	579.13	579.70	579.82	580.39	580.46	580.46	580.40	580.68	581.03	581.25	581.28
CROWN	577.28	577.60	577.86	577.93	578.06	578.42	578.54	578.86	578.99	579.15	579.71	579.84	580.41	580.47	580.47	580.41	580.70	581.04	581.26	581.29
BEAM 9	577.25	577.57	577.83	577.90	578.04	578.39	578.51	578.83	578.97	579.12	579.69	579.81	580.38	580.45	580.45	580.39	580.67	581.02	581.24	581.27
BEAM 10	577.01	577.33	577.59	577.66	577.80	578.15	578.28	578.60	578.73	578.89	579.45	579.58	580.15	580.22	580.22	580.16	580.44	580.78	581.00	581.03
BEAM 11	576.77	577.10	577.36	577.43	577.56	577.92	578.04	578.37	578.50	578.66	579.22	579.35	579.92	579.98	579.98	579.92	580.21	580.55	580.77	580.80
BEAM 12	576.54	576.86	577.12	577.19	577.33	577.68	577.81	578.14	578.27	578.43	578.99	579.12	579.68	579.75	579.75	579.69	579.97	580.32	580.54	580.57
BEAM 13	576.30	576.62	576.88	576.96	577.09	577.45	577.57	577.90	578.04	578.19	578.76	578.88	579.45	579.52	579.52	579.46	579.74	580.09	580.31	580.34
BEAM 14	576.07	576.39	576.65	576.73	576.87	577.23	577.35	577.69	577.83	577.99	578.56	578.69	579.26	579.33	579.33	579.28	579.57	579.91	580.14	580.17
BEAM 15	575.84	576.17	576.43	576.50	576.65	577.01	577.13	577.47	577.62	577.79	578.36	578.49	579.06	579.14	579.14	579.10	579.39	579.74	579.96	580.01
BEAM 16	575.60	575.90	576.15	576.26	576.43	576.76	576.88	577.20	577.38	577.59	578.11	578.22	578.75	578.88	578.89	578.93	579.20	579.53	579.76	579.85
RIGHT GUTTER	575.53	575.83	576.08	576.19	576.36	576.69	576.81	577.14	577.31	577.53	578.04	578.15	578.68	578.81	578.82	578.86	579.14	579.46	579.69	579.78

DESIGN AGENCY
BALKE ENGINEERS
1848 Summit Road
Cincinnati, Ohio 45237

DESIGNED	DRAWN	REVIEWED	DATE
FKL	ALH	CRS	6/01
CHECKED	REVISED	STRUCTURE FILE NUMBER	
MPS	—	3205541 R.B. / 3205562 R.B.	

RIGHT BRIDGE SCREED ELEVATIONS
BRIDGE NO. CLE-275-0654
OVER NORFOLK & SOTHERN R.R. & C.R. 106 (ROUND BOTTOM ROAD)

CLE-275-5.35

41/45

798/857

F:\Ironmill\BOS\BSBSscreed.dgn

REAR ABUTMENT REINFORCING STEEL LIST

MARK	NUMBER			LENGTH	TYPE	DIMENSIONS					
	LEFT BRIDGE	RIGHT BRIDGE	TOTAL			A	B	C	D	E	INC.
A801	2	---	2	30'-9"	STR.						
A802	2	---	2	32'-0"	STR.						
A803	2	---	2	33'-0"	STR.						
A804	2	---	2	34'-3"	STR.						
A805	2	---	2	10'-0"	STR.						
A806	2	---	2	9'-0"	STR.						
A807	2	---	2	8'-0"	STR.						
A808	2	---	2	8'-0"	STR.						
A809	12	12	24	6'-0"	STR.						
A810	---	2	2	9'-6"	STR.						
A811	---	2	2	10'-9"	STR.						
A812	---	2	2	11'-9"	STR.						
A813	---	2	2	13'-0"	STR.						
A814	---	2	2	33'-9"	STR.						
A815	---	2	2	32'-9"	STR.						
A816	---	2	2	31'-9"	STR.						
A817	---	2	2	32'-6"	STR.						
A501	32	33	65	17'-1"	3	5'-9"	2'-6"	---	---	---	---
A502	4	4	8	12'-3"	2	5'-0"	2'-6"	---	---	---	---
A503	1	---	1	11'-2"	1	2'-2"	9'-2"	---	---	---	---
A504	7	---	7	20'-3"	2	9'-2"	2'-2"	---	---	---	---
A505	4	---	4	14'-1"	2	6'-1"	2'-2"	---	---	---	---
A506	1	---	1	6'-9"	1	2'-2"	4'-9"	---	---	---	---
A507	1	---	1	11'-5"	2	4'-9"	2'-2"	---	---	---	---
	2		2	4'-11"		1'-6"					
A508	SERIES OF	---	SERIES OF	TO	2	TO	2'-2"	---	---	---	8"
	10		10	10'-11"		4'-6"					
A509	4	---	4	14'-9"	STR.	---	---	---	---	---	---
A510	4	---	4	15'-9"	STR.	---	---	---	---	---	---
A511	3	---	3	1'-9"	STR.	---	---	---	---	---	---
A512	4	---	4	5'-6"	STR.	---	---	---	---	---	---
A513	3	---	3	12'-6"	2	4'-6"	3'-9"	---	---	---	---
A514	1	---	1	12'-0"	STR.	---	---	---	---	---	---
A515	1	---	1	11'-0"	STR.						
A516	1	---	1	6'-6"	STR.						
A517	1	---	1	13'-0"	STR.						
A518	1	---	1	12'-0"	STR.						
A519	1	---	1	7'-6"	STR.						
A520	1	---	1	12'-6"	19	11'-0"	1'-5"	0'-5"	1'-6"	---	---
A521	1	---	1	13'-6"	19	11'-0"	2'-5"	0'-9"	2'-6"	---	---
A522	90	144	234	3'-10"	1	2'-3"	1'-9"	---	---	---	---
A523	15	---	15	20'-9"	3	3'-5"	6'-8"	---	---	---	---
A524	1	---	1	12'-2"	2	4'-6"	3'-5"	---	---	---	---
A525	1	2	3	7'-9"	1	3'-5"	4'-6"	---	---	---	---
A526	1	---	1	10'-4"	1	2'-2"	8'-4"	---	---	---	---
A527	7	---	7	18'-7"	2	8'-4"	2'-2"	---	---	---	---
A528	4	---	4	12'-5"	2	5'-3"	2'-2"	---	---	---	---
A529	2	---	2	7'-0"	1	3'-5"	3'-8"	---	---	---	---
A530	1	---	1	10'-6"	2	3'-8"	3'-5"	---	---	---	---
A531	1	---	1	6'-8"	1	2'-2"	4'-8"	---	---	---	---
A532	1	3	4	11'-3"	2	4'-8"	2'-2"	---	---	---	---
A533	8	---	8	18'-6"	STR.						
A534	10	---	10	23'-0"	STR.						
A535	1	---	1	15'-9"	STR.						
A536	1	---	1	15'-3"	STR.						
A537	1	---	1	9'-0"	STR.						
A538	1	---	1	14'-9"	STR.						
A539	1	---	1	14'-3"	STR.						
A540	1	---	1	8'-0"	STR.						
A541	1	1	2	16'-0"	19	13'-6"	2'-5"	0'-7"	2'-6"	---	---
A542	1	1	2	15'-0"	19	13'-6"	1'-5"	0'-4"	1'-6"	---	---
A543	---	7	7	19'-7"	2	8'-10"	2'-2"	---	---	---	---
A544	---	4	4	13'-3"	2	5'-8"	2'-2"	---	---	---	---
A545	---	3	3	5'-5"	19	3'-5"	1'-1"	1'-8"	2'-0"	---	---

REAR ABUTMENT REINFORCING STEEL LIST

MARK	NUMBER			LENGTH	TYPE	DIMENSIONS					
	LEFT BRIDGE	RIGHT BRIDGE	TOTAL			A	B	C	D	E	INC.
A546	---	4	4	5'-0"	STR.						
A547	---	3	3	11'-6"	2	4'-0"	3'-9"	---	---	---	---
		1	1	4'-11"		1'-6"					
A548	---	SERIES OF	SERIES OF	TO	2	TO	2'-2"	---	---	---	10"
		8	8	10'-9"		4'-5"					
A549	---	4	4	17'-6"	STR.						
A550	---	4	4	16'-6"	STR.						
A551	---	1	1	15'-3"	STR.						
A552	---	1	1	14'-9"	STR.						
A553	---	1	1	9'-9"	STR.						
A554	---	1	1	14'-3"	STR.						
A555	---	1	1	13'-9"	STR.						
A556	---	1	1	8'-9"	STR.						
A557	---	1	1	14'-9"	19	11'-0"	3'-7"	1'-1"	3'-9"	---	---
A558	---	1	1	13'-9"	19	11'-0"	2'-8"	0'-9"	2'-9"	---	---
A559	---	15	15	24'-8"	3	3'-5"	8'-8"				
A560	---	7	7	22'-7"	2	10'-4"	2'-2"				
A561	---	4	4	16'-3"	2	7'-2"	2'-2"				
A562	---	1	1	12'-4"	1	2'-2"	10'-4"				
A563	---	1	1	14'-6"	2	5'-8'	3'-5"				
A564	---	1	1	8'-11"	1	3'-5"	5'-8"				
A565	---	1	1	6'-8"	1	2'-2"	4'-8"				
		1	1	4'-11"		1'-6"					
A566	---	SERIES OF	SERIES OF	TO	2	TO	2'-2"				7½"
		11	11	11'-3"		4'-8"					
A567	---	10	10	20'-6"	STR.						
A568	---	12	12	24'-0"	STR.						
A569	---	1	1	14'-9"	STR.						
A570	---	1	1	14'-0"	STR.						
A571	---	1	1	8'-0"	STR.						
A572	---	1	1	15'-9"	STR.						
A573	---	1	1	15'-0"	STR.						
A574	---	1	1	9'-0"	STR.						

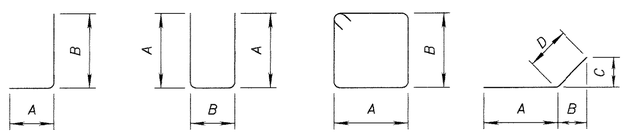

NOTES:

1. ALL DIMENSIONS ARE OUT TO OUT OF BAR.
2. ALL REINFORCING STEEL SHALL BE EPOXY COATED.
3. REINFORCING STEEL: NEW REINFORCING STEEL MAY REQUIRE FIELD CUTTING OR BENDING TO BE PROPERLY FITTED. PAYMENT SHALL BE INCLUDED IN THE APPLICABLE CONCRETE ITEM.

DESIGN AGENCY
BALKE ENGINEERS
1848 Summit Road
Cincinnati, Ohio 45237

DESIGNED	DRAWN	REVIEWED	DATE
MPS	WJH/ALH	CRS	6/01
CHECKED	REVISED	STRUCTURE FILE NUMBER	
FAL	---	1306822 M.B.	

REINFORCING STEEL LIST
BRIDGE NO. CLE-275-0654
OVER NORFOLK & SOUTHERN R.R. & C.R. 106 (ROUND BOTTOM ROAD)

CLE-275-5.35

799
857

F:\Projects\0654\BARS2.dgn

FORWARD ABUTMENT REINFORCING STEEL LIST

MARK	NUMBER			LENGTH	TYPE	DIMENSIONS					
	LEFT BRIDGE	RIGHT BRIDGE	TOTAL			A	B	C	D	E	INC.
B801	2	---	2	9'-6"	STR.						
B802	2	---	2	10'-9"	STR.						
B803	2	---	2	11'-9"	STR.						
B804	2	---	2	13'-0"	STR.						
B805	2	---	2	33'-0"	STR.						
B806	2	---	2	31'-9"	STR.						
B807	2	---	2	30'-9"	STR.						
B808	2	---	2	31'-3"	STR.						
B809	12	12	24	6'-0"	STR.						
B810	---	2	2	39'-6"	STR.						
B811	---	2	2	40'-9"	STR.						
B812	---	2	2	41'-9"	STR.						
B813	---	2	2	43'-0"	STR.						
B814	---	2	2	10'-9"	STR.						
B815	---	2	2	9'-6"	STR.						
B816	---	2	2	8'-3"	STR.						
B817	---	2	2	8'-6"	STR.						
B501	33	38	71	17'-1"	3	5'-9"	2'-6"	---	---	---	---
B502	4	5	9	12'-3"	2	5'-0"	2'-6"	---	---	---	---
B503	8	---	8	20'-1"	2	9'-1"	2'-2"	---	---	---	---
B504	4	---	4	13'-11"	2	6'-0"	2'-2"	---	---	---	---
B505	1	---	1	11'-1"	1	2'-2"	9'-1"	---	---	---	---
B506	3	---	3	12'-0"	2	4'-3"	3'-9"	---	---	---	---
	2		2	4'-11"		1'-6"					
B507	SERIES OF	---	SERIES OF	TO	2	TO	2'-2"	---	---	---	8"
	10		10	10'-11"		4'-6"					
B508	2	---	2	11'-5"	2	4'-9"	2'-2"	---	---	---	---
B509	1	---	1	4'-9"	STR.						
B510	3	---	3	5'-5"	19	3'-5"	1'-1"	1'-8"	2'-0"	---	---
B511	4	---	4	4'-6"	STR.						
B512	4	---	4	17'-0"	STR.						
B513	4	---	4	16'-0"	STR.						
B514	1	---	1	14'-9"	STR.						
B515	1	---	1	14'-3"	STR.						
B516	1	---	1	8'-9"	STR.						
B517	1	---	1	13'-9"	STR.						
B518	1	---	1	13'-3"	STR.						
B519	1	---	1	7'-9"	STR.						
B520	1	---	1	14'-9"	19	12'-0"	2'-8"	0'-9"	2'-9"	---	---
B521	1	---	1	13'-9"	19	12'-0"	1'-8"	0'-5"	1'-9"	---	---
B522	90	126	216	3'-10"	1	2'-3"	1'-9"	---	---	---	---
B523	24	---	24	20'-9"	3	3'-5"	6'-8"	---	---	---	---
B524	4	---	4	12'-5"	2	5'-3"	2'-2"	---	---	---	---
B525	2	---	2	7'-9"	1	3'-5"	4'-6"	---	---	---	---
B526	2	---	2	6'-11"	1	3'-5"	3'-8"	---	---	---	---
B527	1	---	1	10'-6"	2	3'-8"	3'-5"	---	---	---	---
B528	2	---	2	11'-3"	2	4'-8"	2'-2"	---	---	---	---
B529	4	---	4	23'-0"	STR.						
B530	6	---	6	22'-9"	STR.						
B531	8	---	8	20'-0"	STR.						
B532	1	---	1	14'-9"	STR.						
B533	1	---	1	14'-0"	STR.						
B534	1	---	1	8'-0"	STR.						
B535	1	---	1	15'-9"	STR.						
B536	1	---	1	15'-0"	STR.						
B537	1	---	1	9'-0"	STR.						
B538	1	---	1	14'-9"	19	13'-0"	1'-8"	0'-5"	1'-9"	---	---
B539	1	---	1	15'-9"	19	13'-0"	2'-8"	0'-8"	2'-9"	---	---
B540	---	16	16	24'-1"	3	3'-5"	8'-4"	---	---	---	---
B541	---	13	13	22'-1"	2	10'-1"	2'-2"	---	---	---	---
B542	---	3	3	7'-9"	1	3'-5"	4'-6"	---	---	---	---
B543	---	1	1	12'-1"	1	2'-2"	10'-1"	---	---	---	---
B544	---	4	4	8'-7"	1	3'-5"	5'-4"	---	---	---	---
		1	1	4'-11"		1'-6"					
B545	---	SERIES OF	SERIES OF	TO	2	TO	2'-2"	---	---	---	6½"
		12	12	10'-11"		4'-6"					
B546	---	1	1	11'-3"	2	4'-8"	2'-2"	---	---	---	---

FORWARD ABUTMENT REINFORCING STEEL LIST

MARK	NUMBER			LENGTH	TYPE	DIMENSIONS					
	LEFT BRIDGE	RIGHT BRIDGE	TOTAL			A	B	C	D	E	INC.
B547	---	1	1	6'-8"	1	2'-2"	4'-8"	---	---	---	---
B548	---	10	10	20'-6"	STR.						
B549	---	12	12	24'-0"	STR.						
B550	---	1	1	17'-6"	STR.						
B551	---	1	1	16'-9"	STR.						
B552	---	1	1	10'-0"	STR.						
B553	---	1	1	16'-6"	STR.						
B554	---	1	1	15'-9"	STR.						
B555	---	1	1	9'-0"	STR.						
B556	---	1	1	17'-9"	19	15'-0"	2'-8"	0'-7"	2'-9"	---	---
B557	---	1	1	16'-9"	19	15'-0"	1'-8"	0'-4"	1'-9"	---	---
B558	---	7	7	19'-5"	2	8'-9"	2'-2"				
B559	---	4	4	13'-1"	2	5'-7"	2'-2"				
B560	---	1	1	10'-9"	1	2'-2"	8'-9"				
B561	---	1	1	4'-8"	STR.						
B562	---	1	1	11'-3"	2	4'-8"	2'-2"				
		1	1	4'-11"		1'-6"					
B563	---	SERIES OF	SERIES OF	TO	2	TO	2'-2"				8½"
		10	10	11'-3"		4'-8"					
B564	---	3	3	11'-3"	2	4'-0"	3'-6"				
B565	---	4	4	15'-3"	STR.						
B566	---	4	4	16'-3"	STR.						
B567	---	3	3	2'-3"	STR.						
B568	---	4	4	5'-0"	STR.						
B569	---	1	1	12'-3"	STR.						
B570	---	1	1	11'-9"	STR.						
B571	---	1	1	6'-6"	STR.						
B572	---	1	1	13'-3"	STR.						
B573	---	1	1	12'-9"	STR.						
B574	---	1	1	7'-6"	STR.						
B575	---	1	1	12'-3"	19	11'-0"	1'-2"	0'-4"	1'-3"		
B576	---	1	1	13'-3"	19	11'-0"	2'-2"	0'-8"	2'-3"		

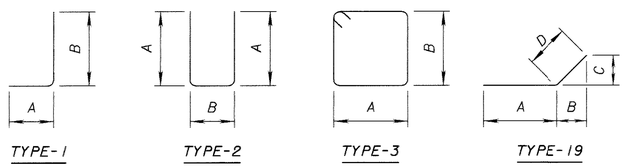

NOTES:

1. ALL DIMENSIONS ARE OUT TO OUT OF BAR.
2. ALL REINFORCING STEEL SHALL BE EPOXY COATED.
3. REINFORCING STEEL: NEW REINFORCING STEEL MAY REQUIRE FIELD CUTTING OR BENDING TO BE PROPERLY FITTED. PAYMENT SHALL BE INCLUDED IN THE APPLICABLE CONCRETE ITEM.

DESIGN AGENCY
BALKE ENGINEERS
1848 Summit Road
Cincinnati, Ohio 45237

DESIGNED	DRAWN	REVIEWED	DATE
MPS	WJH/ALH	CRS	6.01
CHECKED	REVISED	STRUCTURE FILE NUMBER	
FKL	---	120562 H.B.	

REINFORCING STEEL LIST

BRIDGE NO. CLE-275-0654
OVER NORFOLK & SOUTHERN R.R. & C.R. 106 (ROUND BOTTOM ROAD)

CLE-275-5.35

800/857

F:\Revisions\0654BARS3.dgn

PIER 1 REINFORCING STEEL LIST

MARK	NUMBER LEFT BRIDGE	NUMBER RIGHT BRIDGE	TOTAL	LENGTH	TYPE	DIMENSIONS A	B	R
P1101	16	16	32	14'-3"	1	2'-0"	12'-7"	
P1102	16	---	16	29'-9"	STR.			
P1103	---	16	16	24'-3"	STR.			
P701	18	18	36	9'-6"	STR.			
P702	28	28	56	7'-6"	STR.			
P601	5	5	10	11'-3"	STR.			
P602	10	---	10	12'-6"	1	4'-0"	8'-8"	
P603	---	10	10	12'-10"	1	4'-4"	8'-8"	
P501	18	18	36	9'-6"	STR.			
P502	28	28	56	7'-6"	STR.			
P503	9	---	9	14'-9"	3	2'-8"	4'-5"	
P504	12	12	24	11'-3"	STR.			
P505	14	14	28	8'-0"	24	2'-6"	2'-0"	1'-3"
P506	80	118	198	4'-5"	1	2'-3"	2'-3"	
P507	4	---	4	40'-0"	STR.			
P508	4	---	4	16'-0"	STR.			
P509	---	9	9	15'-5"	3	2'-8"	4'-9"	
P510	---	4	4	15'-0"	STR.			
P511	---	4	4	31'-9"	STR.			
P512	---	4	4	43'-6"	STR.			
SP401	2	---	2	25'-9"	27	4½"	2'-6"	
SP402	---	2	2	20'-3"	27	4½"	2'-6"	

PIER 3 REINFORCING STEEL LIST

MARK	NUMBER LEFT BRIDGE	NUMBER RIGHT BRIDGE	TOTAL	LENGTH	TYPE	DIMENSIONS A	B	R
Q1101	16	---	16	25'-6"	STR.			
Q1102	16	---	16	14'-3"	1	2'-0"	12'-7"	
Q1103	16	---	16	26'-6"	STR.			
Q701	---	18	18	9'-6"	STR.			
Q702	---	28	28	7'-6"	STR.			
Q601	27	---	27	8'-6"	STR.			
Q602	5	5	10	11'-3"	STR.			
Q603	10	---	10	12'-6"	1	4'-0"	8'-8"	
Q604	---	10	10	12'-10"	1	4'-4"	8'-8"	
Q501	27	---	27	8'-6"	STR.			
Q502	16	---	16	25'-6"	STR.			
Q503	9	---	9	14'-9"	3	2'-8"	4'-5"	
Q504	12	12	24	11'-3"	STR.			
Q505	14	14	28	8'-0"	24	2'-6"	2'-0"	1'-3"
Q506	80	112	192	4'-5"	1	2'-3"	2'-3"	
Q507	4	---	4	40'-0"	STR.			
Q508	4	---	4	16'-0"	STR.			
Q509	---	18	18	9'-6"	STR.			
Q510	---	28	28	7'-6"	STR.			
Q511	---	9	9	15'-5"	3	2'-8"	4'-9"	
Q512	---	4	4	15'-0"	STR.			
Q513	---	4	4	31'-9"	STR.			
Q514	---	4	4	38'-3"	STR.			
SQ401	2	---	2	22'-6"	27	4½"	2'-6"	
SQ402	---	2	2	21'-9"	27	4½"	2'-6"	

PIER 2 REINFORCING STEEL LIST

MARK	NUMBER LEFT BRIDGE	NUMBER RIGHT BRIDGE	TOTAL	LENGTH	TYPE	DIMENSIONS A	B	R
R1101	16	16	32	14'-3"	1	2'-0"	12'-7"	
R1102	16	---	16	31'-0"	STR.			
R1103	---	16	16	28'-3"	STR.			
R701	18	18	36	9'-6"	STR.			
R702	28	28	56	7'-6"	STR.			
R601	5	5	10	11'-3"	STR.			
R602	10	---	10	12'-7"	1	4'-1"	8'-8"	
R603	---	10	10	12'-10"	1	4'-4"	8'-8"	
R501	18	18	36	9'-6"	STR.			
R502	28	28	56	7'-6"	STR.			
R503	24	24	48	4'-10"	1	0'-10"	4'-1"	
R504	36	---	36	10'-7"	STR.			
R505	20	---	20	22'-0"	STR.			
R506	9	---	9	14'-11"	3	2'-8"	4'-6"	
R507	14	14	28	8'-0"	24	2'-6"	2'-0"	1'-3"
R508	12	12	24	11'-3"	STR.			
R509	80	118	198	4'-5"	1	2'-3"	2'-3"	
R510	4	---	4	16'-0"	STR.			
R511	4	---	4	40'-0"	STR.			
R512	---	9	9	15'-5"	3	2'-8"	4'-9"	
R513	---	36	36	9'-0"	STR.			
R514	---	20	20	23'-11"	STR.			
R515	---	4	4	41'-0"	STR.			
R516	---	4	4	31'-9"	STR.			
R517	---	4	4	15'-0"	STR.			
SR401	2	---	2	27'-0"	27	4½"	2'-6"	
SR402	---	2	2	24'-3"	27	4½"	2'-6"	

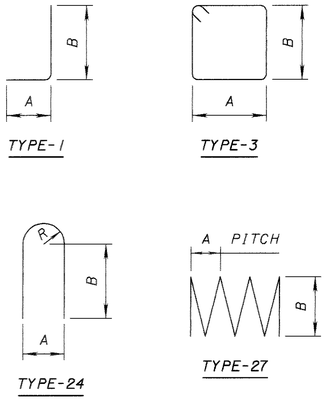

NOTES:

1. ALL DIMENSIONS ARE OUT TO OUT OF BAR.
2. ALL REINFORCING STEEL SHALL BE EPOXY COATED.
3. SPIRAL REINFORCING BARS: THE "LENGTH" SHOWN IN THE STEEL LIST FOR THE SPIRAL BARS IS THE LENGTH OF THE SPIRAL ALONG THE AXIS OF THE SPIRAL. ONE AND ONE-HALF CLOSED-COIL TURNS SHALL BE PROVIDED AT THE ENDS OF EACH SPIRAL UNIT.
4. SPACERS: CONCRETE SPACERS OR OTHER APPROVED NONCORROSIVE SPACING DEVICES SHALL BE USED AT SUFFICIENT INTERVALS (NEAR THE BOTTOM AND AT INTERVALS NOT EXCEEDING 10 FEET) TO INSURE CONCENTRIC SPACING FOR THE ENTIRE CAGE LENGTH. SPACERS SHALL BE CONSTRUCTED OF APPROVED MATERIAL EQUAL IN QUALITY AND DURABILITY TO THE CONCRETE SPECIFIED FOR THE COLUMN. THE SPACERS SHALL HAVE ADEQUATE DIMENSIONS TO ENSURE A MINIMUM 3 INCHES CLEAR SPACE BETWEEN THE OUTSIDE OF THE REINFORCING CAGE AND THE DESIGN DIMENSION OF THE COLUMN. CYLINDRICAL CONCRETE FEET (BOTTOM SUPPORTS) SHALL BE PROVIDED TO ENSURE THAT THE BOTTOM OF THE CAGE IS MAINTAINED AT THE PROPER DISTANCE ABOVE THE BASE.
5. REINFORCING STEEL: NEW REINFORCING STEEL MAY REQUIRE FIELD CUTTING OR BENDING TO BE PROPERLY FITTED. PAYMENT SHALL BE INCLUDED IN THE APPLICABLE CONCRETE ITEM.

DESIGN AGENCY
BALKE ENGINEERS
1848 Summit Road
Cincinnati, Ohio 45237

DESIGNED MPS | DRAWN WJ/HALH | REVIEWED CRS | DATE 6/01

STRUCTURE FILE NUMBER 1-300863, 1-300862, 1-8

CHECKED FAL | REVISED —

REINFORCING STEEL LIST

BRIDGE NO. CLE-275-0654
OVER NORFOLK & SOUTHERN R.R. & C.R. 106 (ROUND BOTTOM ROAD)

CLE-275-5.35

800A
857

F:\Inroads\053484\54_dgn

SUPERSTRUCTURE REINFORCING STEEL LIST

MARK	NUMBER LEFT BRIDGE	NUMBER RIGHT BRIDGE	NUMBER TOTAL	LENGTH	TYPE	DIMENSIONS A	B	C	D	E	INC.
	1		1	38'-9"							
S801	SERIES OF	---	SERIES OF	TO	STR.						7"
	4		4	40'-6"							
	1		1	44'-0"							
S802	SERIES OF	---	SERIES OF	TO	STR.						6"
	4		4	45'-6"							
	1		1	37'-0"							
S803	SERIES OF	---	SERIES OF	TO	STR.						6"
	4		4	38'-6"							
	1		1	45'-9"							
S804	SERIES OF	---	SERIES OF	TO	STR.						7"
	4		4	47'-6"							
		1	1	36'-9"							
S805	---	SERIES OF	SERIES OF	TO	STR.						6"
		4	4	38'-3"							
S806	---	8	8	45'-0"	STR.						
		1	1	38'-9"							
S807	---	SERIES OF	SERIES OF	TO	STR.						6"
		4	4	40'-3"							
S808	---	8	8	39'-6"	STR.						
S501	616	840	1456	30'-0"	STR.						
S502	77	---	77	26'-0"	STR.						
S503	---	120	120	33'-3"	STR.						
S504	462	708	1170	33'-0"	STR.						
S505	922	---	922	39'-7"	STR.						
S506	990	906	1896	5'-6"	STR.						
S507	930	826	1756	36'-6"	STR.						
S508	---	409	409	39'-0"	STR.						
S509	---	409	409	34'-7"	STR.						
S510	---	135	135	35'-4"	STR.						
S511	---	135	135	39'-9"	STR.						
S512	---	135	135	33'-0"	STR.						
S513	---	135	135	37'-5"	STR.						
S514	---	144	144	30'-8"	STR.						
S515	---	144	144	35'-0"	STR.						
		1	1	3'-1"							
S516	-	SERIES OF	SERIES OF	TO	STR.						10"
		29	29	26'-5"							
		1	1	7'-6"							
S517	-	SERIES OF	SERIES OF	TO	STR.						10"
		29	29	30'-10"							
		2	2	6'-5"							
S518	-	SERIES OF	SERIES OF	TO	STR.						10"
		39	39	38'-1"							
		1	1	11'-4"							
S519	-	SERIES OF	SERIES OF	TO	STR.						10"
		33	33	38'-0"							
		1	1	7'-0"							
S520	-	SERIES OF	SERIES OF	TO	STR.						10"
		33	33	33'-8"							
		2	2	6'-3"							
S521	-	SERIES OF	SERIES OF	TO	STR.						10"
		45	45	42'-11"							
		2	2	6'-0"							
S522	-	SERIES OF	SERIES OF	TO	STR.						10"
		35	35	34'-6"							
		2	2	7'-3"							
S523	-	SERIES OF	SERIES OF	TO	STR.						10"
		35	35	35'-7"							
	2		2	4'-2"							
S524	SERIES OF	-	SERIES OF	TO	STR.						10"
	39		39	35'-10"							
	2		2	6'-6"							
S525	SERIES OF	-	SERIES OF	TO	STR.						10"
	35		35	34'-10"							
	2		2	6'-4"							
S526	SERIES OF	-	SERIES OF	TO	STR.						10"
	39		39	38'-0'							
	2		2	4'-2"							
S527	SERIES OF	-	SERIES OF	TO	STR.						10"
	43		43	39'-2"							

SUPERSTRUCTURE REINFORCING STEEL LIST (CONTINUED)

MARK	NUMBER LEFT BRIDGE	NUMBER RIGHT BRIDGE	NUMBER TOTAL	LENGTH	TYPE	DIMENSIONS A	B	C	D	E	INC.
S401	616	826	1442	30'-0"	STR.						
S402	77	---	77	18'-0"	STR.						
S403	---	118	118	26'-3"	STR.						
X601	16	14	30	30'-0"	STR.						
X602	---	1	1	11'-0"	STR.						
X603	---	1	1	6'-0"	STR.						
X501	16	16	32	10'-0"	STR.						
X502	8	8	16	5'-8"	25	1'-10"	2'-5"	1'-5"	1½"	5"	
X503	8	8	16	5'-8"	STR.						
X504	96	84	180	30'-0"	STR.						
X505	16	16	32	13'-10"	STR.						
X506	---	6	6	11'-0"	STR.						
X507	---	6	6	6'-0"	STR.						
Y601	478	433	911	3'-0"	14	10⅛"	10"	8½"	6"	9"	
Y603	32	32	64	3'-11"	1	11"	3'-2"				
Y604	434	389	823	2'-3"	1	11"	1'-6"				
	4	4	8	3'-11"			3'-2"				
Y605	SERIES OF	SERIES OF	SERIES OF	TO	1	11"	TO				
	11	11	11	4'-8"			3'-11"				
Y501	434	389	823	7'-1"	23	8"	3'-3"	3'-0"	1½"		
Y502	4	4	8	3'-10"	16						
Y503	4	4	8	3'-9"	16						
Y504	4	4	8	3'-8"	16						
Y505	4	4	8	3'-7"	16						
Y506	4	4	8	3'-6"	16						
Y507	4	4	8	3'-5"	16						
Y508	4	4	8	3'-4"	16						
Y509	4	4	8	3'-3"	16						
Y510	4	4	8	3'-2"	16						
Y511	4	4	8	3'-1"	16						
Y512	4	4	8	3'-0"	16						
D801	96	133	229	5'-1"	18	2'-9"	1'-0"	1'-0"			
	1	1	2	38'-9"							
D802	SERIES OF	SERIES OF	SERIES OF	TO	STR.						7"
	4	4	4	40'-6"							
D803	3	3	6	38'-9"	STR.						
D804	3	3	6	40'-6"	STR.						
	1		1	44'-0"							
D805	SERIES OF	---	SERIES OF	TO	STR.						7"
	4		4	45'-9"							
D806	3	---	3	45'-9"	STR.						
D807	3	---	3	44'-0"	STR.						
	1	1	2	38'-6"							
D808	SERIES OF	SERIES OF	SERIES OF	TO	STR.						8"
	4	4	4	36'-6"							
D809	3	3	6	38'-6"	STR.						
D810	3	3	6	36'-6"	STR.						
	1		1	45'-9"							
D811	SERIES OF	---	SERIES OF	TO	STR.						8"
	4		4	47'-9"							
D812	3	---	3	45'-9"	STR.						
D813	3	---	3	47'-9"	STR.						
D814	---	20	20	44'-9"	STR.						
D815	---	20	20	39'-3"	STR.						
D501	107	140	247	7'-6"	2	2'-5"	2'-11"				
D502	107	140	247	12'-11"	3	3'-5"	2'-9"				
L505	4	4	8	2'-10"	2	7"	1'-10"	7"			
L506	4	4	8	10'-0"	9	5"	4'-0"	2'-3"	4'-0"		
L507	6	6	12	7'-2"	21	1'-4"	1'-8"	6"	1'-10"		
L508	4	4	8	4'-0"	STR.						

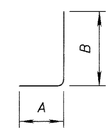

TYPE-1

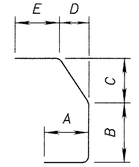

TYPE-14



TYPE-16

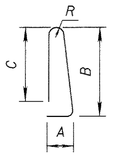

TYPE-23

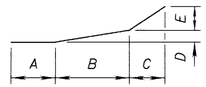

TYPE-25

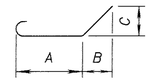

TYPE-18

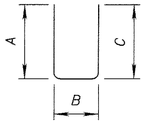

TYPE-2

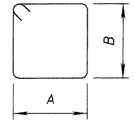

TYPE-3

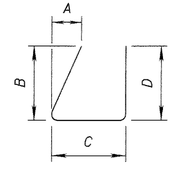

TYPE-9

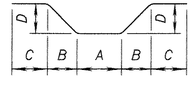

TYPE-21

NOTES:

1. ALL DIMENSIONS ARE OUT TO OUT OF BAR.
2. ALL REINFORCING STEEL SHALL BE EPOXY COATED.
3. REINFORCING STEEL: NEW REINFORCING STEEL MAY REQUIRE FIELD CUTTING OR BENDING TO BE PROPERLY FITTED. PAYMENT SHALL BE INCLUDED IN THE APPLICABLE CONCRETE ITEM.

DESIGN AGENCY
BALKE ENGINEERS
1848 Summit Road
Cincinnati, Ohio 45237

DESIGNED	DRAWN	REVIEWED	DATE
MRS	WJH/ALH	CBS	6/01
CHECKED	REVISED	STRUCTURE FILE NUMBER	
FKL	---	1385523 N.B. 1385562 S.B.	

REINFORCING STEEL LIST
BRIDGE NO. CLE-275-0654
OVER NORFOLK & SOUTHERN R.R. & C.R. 106 (ROUND BOTTOM ROAD)

CLE-275-5.35

45/45

801/857

File Name: 0654RS01.dgn

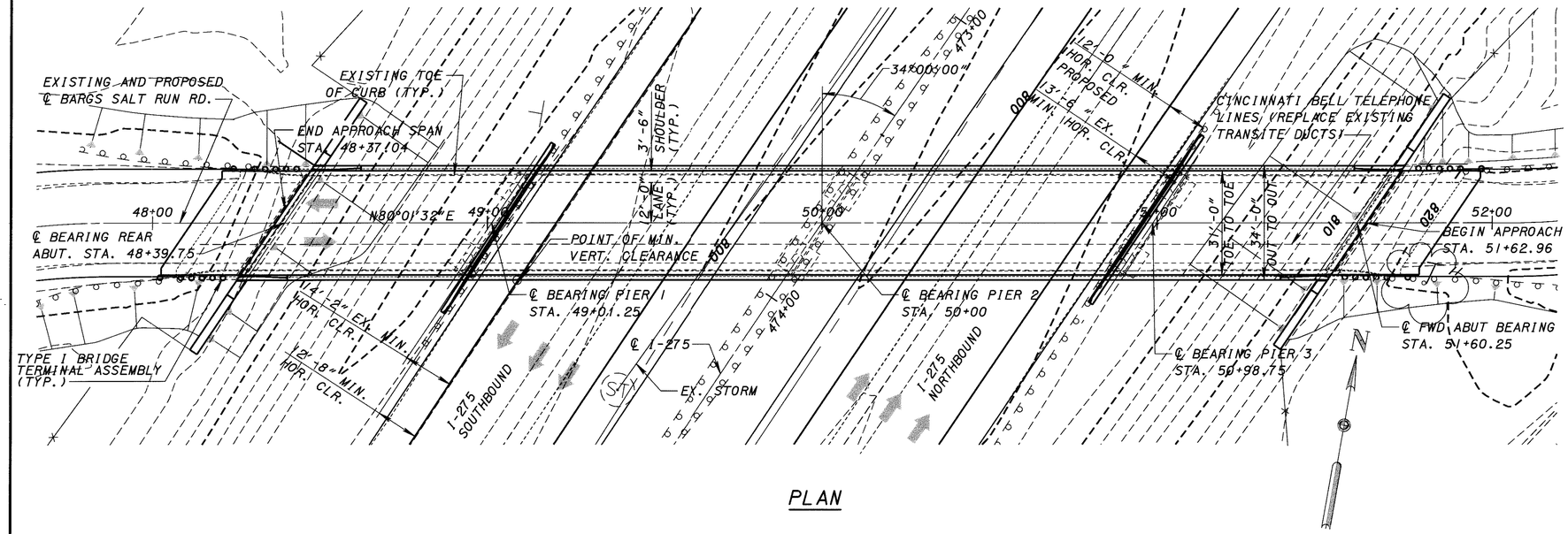

PLAN

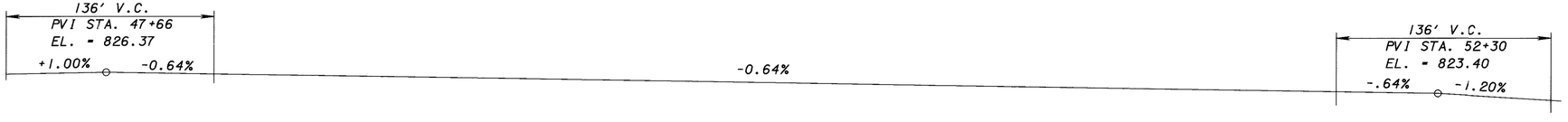

PROFILE

Along ℄ Bargs Salt Run Rd.

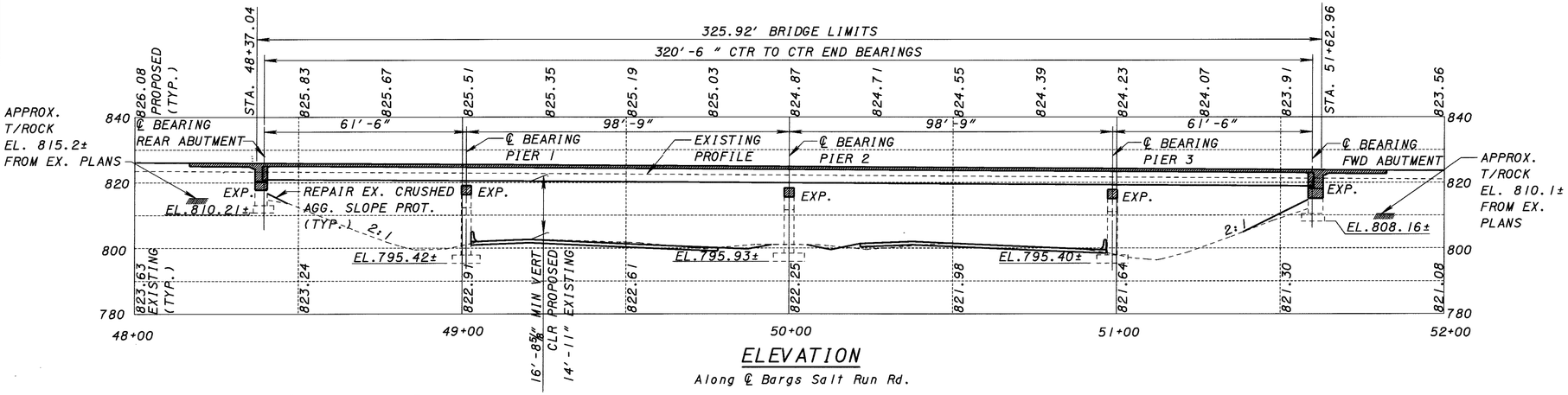

ELEVATION

Along ℄ Bargs Salt Run Rd.

BENCH MARKS

T-62
IRON PIN SET
STA. 51+93.46, 14.02' RT
ELEV. 820.953

T-63
IRON PIN SET
STA. 47+71.96, 12.67' LT
ELEV. 823.587

NOTES:

1. EARTHWORK LIMITS SHOWN ARE APPROX. ACTUAL SLOPES SHALL CONFORM TO PLAN CROSS SECTIONS.
2. FOUNDATION BEARING PRESSURE: NEW WINGWALL FOOTINGS, AS DESIGNED, PRODUCE A MAXIMUM BEARING PRESSURE OF 2 TONS PER SQUARE FOOT. THE ALLOWABLE BEARING PRESSURE IS 5 TONS PER SQUARE FOOT.
3. FOOTINGS SHALL EXTEND A MINIMUM OF 3 INCHES INTO BEDROCK OR TO THE ELEVATION SHOWN, WHICHEVER IS LOWER.

EXISTING STRUCTURE

TYPE: FOUR SPAN CONTINUOUS WELDED PLATE GIRDER WITH REINFORCED CONCRETE DECK AND SUBSTRUCTURE

SPANS: 61'-6", 98'-9", 98'-9", 61'-6" CTR TO CTR OF BEARINGS (MEASURED ALONG ℄ BARGS SALT RUN RD.)

ROADWAY: 28'-0" TOE TO TOE OF CURBS WITH TWO 2'-0" SAFETY CURBS.

SKEW: 34°00'00" LEFT FORWARD

LOADING: CF 130(57)

WEARING SURFACE: 1" MONOLITHIC CONCRETE

APPROACH SLABS: AS-1-67 (20' LONG)

ALIGNMENT: TANGENT

YEAR BUILT: 1970

STRUCTURE FILE NO. 1305697

PROPOSED STRUCTURE

PROPOSED WORK:

1. REMOVE EXISTING CONCRETE DECK
2. MODIFY ABUTMENTS TO SEMI-INTEGRAL
3. RAISE SUPERSTRUCTURE
4. REPLACE BEARINGS
5. HEAT STRAIGHTEN DAMAGED GIRDER
6. CONSTRUCT NEW WIDENED COMPOSITE CONCRETE DECK AND PARAPETS
7. REPLACE APPROACH SLABS

SPANS: 61'-6", 98'-9", 98'-9", 61'-6" CTR TO CTR OF BEARINGS (MEASURED ALONG ℄ BARGS SALT RUN RD.)

ROADWAY: 31'-0" TOE TO TOE OF BARRIERS, INCLUDING TWO 3'-6" SHOULDERS

SKEW: 34°00'00" LEFT FORWARD

LOADING: HS 20 (CASE II) AND ALT. MILT. LOADING

WEARING SURFACE: 1" MONOLITHIC CONCRETE

APPROACH SLABS: AS-1-81 (25' LONG)

ALIGNMENT: TANGENT

BRIDGE COORDINATES: N 39°07'30"
W 84°16'30"

TRAFFIC DATA-

BARGS SALT RUN RD.	ADT	ADTT
YEAR 2002	710	22
YEAR 2022	1880	57

STATION OF FIRST ROADWAY GUARDRAIL POST ADJACENT TO BRIDGE	
LEFT REAR	48+42.75
RIGHT REAR	48+21.84
LEFT FORWARD	51+78.16
RIGHT FORWARD	51+57.25

DESIGN AGENCY
HNTB
85 Erieview Plaza, Suite 800
Cleveland, Ohio 44114-1818
ARCHITECTS ENGINEERS PLANNERS

DESIGNED	DRAWN	REVIEWED	DATE
NDH	NDH	RHW	3/01/01
CHECKED	REVISED	STRUCTURE FILE NUMBER	
JOL		1305697	

CLERMONT COUNTY
STA. 48+37.04
STA. 51+62.96

SITE PLAN

BRIDGE NO. CLE-275-0896
BARGS SALT RUN ROAD (T.R. 211) OVER I-275

CLE-275-5.35

1 / 17

802
857

30-MAY-2001 07:54 MLowler
J:\JOBS\3147\TECHPROD\Final\site.dgn

STRUCTURE GENERAL NOTES

PROPOSED WORK
MAJOR ITEMS OF WORK CONTAINED IN THE BRIDGE PLANS ARE SUMMARIZED BELOW. DETAILS OF THIS WORK ARE SHOWN IN THE PLANS.
1. REMOVE EXISTING CONCRETE DECK
2. MODIFY ABUTMENTS TO SEMI-INTEGRAL
3. RAISE SUPERSTRUCTURE
4. REPLACE BEARINGS
5. HEAT STRAIGHTEN DAMAGED GIRDER
6. CONSTRUCT NEW WIDENED COMPOSITE CONCRETE DECK AND PARAPETS
7. REPLACE APPROACH SLABS

STANDARD DRAWINGS
REFERENCE SHALL BE MADE TO THE FOLLOWING STANDARD DRAWINGS:

AS-1-81	DATED	09-15-94
BR-1	DATED	01-06-99
SICD-1-96M	DATED	02-12-97
VPF-1-90M	DATED	03-20-95

SUPPLEMENTAL SPECIFICATIONS
REFERENCE SHALL BE MADE TO THE FOLLOWING SUPPLEMENTAL SPECIFICATIONS:

814	DATED	06-02-98	863	DATED	10-12-99
843	DATED	05-05-98	894	DATED	10-12-99
844	DATED	01-06-99	905	DATED	04-01-98
846	DATED	09-09-97	907	DATED	10-21-98
848	DATED	06-30-98	954	DATED	09-09-97

DESIGN SPECIFICATIONS
THIS STRUCTURE CONFORMS TO "STANDARD SPECIFICATIONS FOR HIGHWAY BRIDGES" ADOPTED BY THE AMERICAN ASSOCIATION OF STATE HIGHWAY AND TRANSPORTATION OFFICIALS, 1996, INCLUDING THE 1997, 1998, AND 1999 INTERIM SPECIFICATIONS, AND THE ODOT BRIDGE DESIGN MANUAL.

DESIGN LOADING
HS20-44, CASE II, THE ALTERNATE MILITARY LOADING, AND A 30 P.S.F. FUTURE WEARING SURFACE.

DESIGN STRESSES
CONCRETE CLASS S - COMPRESSIVE STRENGTH 4500 PSI (SUPERSTRUCTURE)
CONCRETE CLASS C - COMPRESSIVE STRENGTH 4000 PSI (SUBSTRUCTURE)
REINFORCING STEEL - ASTM A615, A616, OR A617 GRADE 60
MINIMUM YIELD STRENGTH 60,000 PSI
SPIRAL REINFORCEMENT MAY BE PLAIN BARS, ASTM A82 OR A615.

CONVERSION OF METRIC STANDARD BRIDGE DRAWINGS
THE STANDARD BRIDGE DRAWINGS, SICD-1-96M AND VPF-1-90M ARE METRIC. ANY CONVERSION OF DIMENSIONS REQUIRED TO CONSTRUCT THE ITEMS SHOWN ON THE STANDARD SHALL BE THE RESPONSIBILITY OF THE CONTRACTOR. CONVERSIONS SHALL BE MADE USING THE SI (METRIC) TO ENGLISH CONVERSION FACTORS PROVIDED IN SECTION 109.011 OF THE 1997 CONSTRUCTION AND MATERIALS SPECIFICATIONS. THE APPENDIX OF THE ASTM E380 SHALL BE UTILIZED FOR ANY ADDITIONAL CONVERSION FACTORS REQUIRED. CONVERSIONS SHALL
BE APPROPRIATELY PRECISE AND SHALL REFLECT STANDARD INDUSTRY ENGLISH VALUES WHERE SUITABLE.

DIMENSIONS
DIMENSIONS ARE MEASURED HORIZONTALLY AND AT 60°F UNLESS NOTED OTHERWISE. THE UNITS IN THE PLANS AND SPECIFICATIONS SHALL BE CUSTOMARY ENGLISH (U.S.) UNITS.

DECK PROTECTION METHOD
EPOXY COATED REINFORCING STEEL, 2½" CONCRETE COVER, AND SEALING OF CONCRETE SURFACES.

MONOLITHIC WEARING SURFACE
MONOLITHIC WEARING SURFACE IS ASSUMED, FOR DESIGN PURPOSES, TO BE 1 INCH THICK.

UTILITIES
ALL EXPENSE INVOLVED IN MAINTAINING OR TEMPORARILY RELOCATING THE AFFECTED UTILITY LINES SHALL BE BORNE BY THE UTILITY. THE CONTRACTOR AND UTILITY ARE TO COOPERATE BY ARRANGING THEIR WORK IN SUCH A MANNER THAT INCONVENIENCE TO EITHER WILL BE HELD TO A MINIMUM.

ITEM 503, UNCLASSIFIED EXCAVATION, INCLUDING ROCK AND SHALE, AS PER PLAN
UNCLASSIFIED EXCAVATION SHALL BE IN ACCORDANCE WITH 503 EXCEPT THAT THE BACKFILL MATERIAL BEHIND THE ABUTMENTS SHALL BE 203 MATERIAL PLACED IN 6 INCH LIFTS AND COMPACTED IN ACCORDANCE WITH 304.04.

PORTIONS OF STRUCTURE REMOVED, OVER 20' SPAN, AS PER PLAN
SUPERSTRUCTURE:
THIS WORK SHALL CONSIST OF THE REMOVAL OF CONCRETE DECKS INCLUDING SIDEWALKS, PARAPETS, RAILINGS, DECK JOINTS AND OTHER APPURTENANCES FROM STEEL SUPPORTING SYSTEMS (BEAMS, CROSS FRAMES, ETC.). CARE SHALL BE TAKEN DURING DECK REMOVALS TO PROTECT PORTIONS OF SUCH SYSTEMS THAT ARE TO BE SALVAGED AND INCORPORATED INTO THE PROPOSED STRUCTURE. IN THIS RESPECT, THE USE OF EXPLOSIVES, HEADACHE BALLS AND/OR HOE RAM TYPE OF EQUIPMENT IS PROHIBITED.

IT SHALL ALSO INCLUDE THE FIELD DRILLING OF WEB AND FLANGE HOLES IN EXISTING BEAMS AT THE ABUTMENT BEARINGS AS DETAILED IN THE PLANS.

PROTECTION OF TRAFFIC: PRIOR TO DEMOLITION OF ANY PORTIONS OF THE EXISTING SUPERSTRUCTURE, THE CONTRACTOR SHALL SUBMIT PLANS FOR THE PROTECTION OF TRAFFIC (VEHICULAR, PEDESTRIAN, ETC.) ADJACENT TO AND/OR UNDER THE STRUCTURE TO THE DIRECTOR FOR APPROVAL. THESE PLANS SHALL INCLUDE PROVISIONS FOR ANY DEVICES AND STRUCTURES THAT MAY BE NECESSARY TO ENSURE SUCH PROTECTION. TEMPORARY VERTICAL CLEARANCES SPECIFIED ON THE PLANS OR IN THE PROPOSAL SHALL BE MAINTAINED AT ALL TIMES EXCEPT AS OTHERWISE APPROVED BY THE DIRECTOR.

PROTECTION OF STEEL SUPPORT SYSTEMS: BEFORE DECK SLAB CUTTING IS PERMITTED, THE OUTLINE OF PRIMARY STEEL MEMBERS IN CONTACT WITH THE BOTTOM OF THE DECK SHALL BE DRAWN ON THE SURFACE OF DECK. SMALL DIAMETER PILOT HOLES SHALL BE DRILLED 2 INCHES OUTSIDE THESE LINES TO CONFIRM THE LOCATION OF FLANGE EDGES. DECK CUTS OVER OR WITHIN 2 INCHES OF FLANGE EDGES SHALL NOT EXTEND LOWER THAN THE BOTTOM LAYER OF DECK SLAB REINFORCING STEEL. CUTS MADE OUTSIDE 2 INCHES OF FLANGE EDGES MAY EXTEND THE FULL DEPTH OF THE DECK. DURING CUTTING OF THE DECK SLAB, CARE SHALL BE TAKEN NOT TO DAMAGE STEEL MEMBERS THAT ARE TO BE INCORPORATED INTO THE PROPOSED STRUCTURE.

REMOVAL METHODS: CONCRETE MAY BE REMOVED BY CUTTING AND BY MEANS OF HAND OPERATED PNEUMATIC HAMMERS EMPLOYING POINTED OR BLUNTED CHISEL TYPE TOOLS. FOR REMOVALS ABOVE STEEL MEMBERS, A HAMMER HEAVIER THAN 35 POUNDS BUT NOT TO EXCEED 90 POUNDS MAY BE USED AT THE APPROVAL OF THE ENGINEER, REMOVAL METHODS OVER BRIDGE MEMBERS SHALL ENSURE ADEQUATE DEPTH CONTROL AND PREVENT NICKING OR GOUGING THE PRIMARY STEEL MEMBERS.

DECK REMOVALS: DUE TO THE POSSIBLE PRESENCE OF WELDED ATTACHMENTS TO EXISTING STRUCTURAL STEEL (FINISHING MACHINE, SCUPPER AND FORM SUPPORTS, ETC.), CARE SHALL BE TAKEN DURING DECK REMOVAL TO AVOID DAMAGING STRINGERS WHICH ARE TO REMAIN. STRINGERS DAMAGED BY THE CONTRACTOR'S REMOVAL OPERATIONS SHALL, AT NO COST TO THE PROJECT, BE REPLACED OR REPAIRED. PROPOSED REPAIRS, DEVELOPED BY AN OHIO REGISTERED PROFESSIONAL ENGINEER, SHALL BE SUBMITTED IN WRITING FOR REVIEW AND APPROVAL BY THE DIRECTOR. THE CONTRACTOR IS RESPONSIBLE FOR ANY PAINT DAMAGE CAUSED BY THE DECK REMOVAL OPERATIONS. DAMAGED AREAS WILL BE SPOT PAINTED AT THE CONTRACTOR'S COST TO THE SATISFACTION OF THE ENGINEER.

EXTRANEOUS MEMBERS: EXISTING EXTRANEOUS MEMBERS (I.E., FINISHING MACHINE AND FORM SUPPORTS, ETC., AND THE SUPPORT FOR SCUPPERS AND BULB ANGLES WHICH ARE TO BE REMOVED) ATTACHED BY WELDED CONNECTIONS TO PORTIONS OF THE TOP FLANGES DESIGNATED "TENSION" SHALL BE REMOVED AND THE FLANGE SURFACES GROUND SMOOTH. GRINDING SHALL BE CAREFULLY DONE AND PARALLEL TO THE FLANGES.

LOADING LIMITATIONS: NO PART OF THE STRUCTURE SHALL BE SUBJECTED TO UNIT STRESSES THAT EXCEED 136.5% OF ALLOWABLE UNIT STRESSES AS DEFINED IN THE AASHTO STANDARD SPECIFICATIONS FOR HIGHWAY BRIDGES DUE EITHER TO DEMOLITION, ERECTION OR CONSTRUCTION METHODS, OR TO THE USE OR MOVEMENT OF DEMOLITION OR ERECTION EQUIPMENT ON OR ACROSS THE STRUCTURE. STRUCTURAL ANALYSIS COMPUTATIONS, BY AN OHIO REGISTERED PROFESSIONAL ENGINEER, SHOWING THE ALLOWABLE STRESSES AND THE MAXIMUM STRESSES PRODUCED BY THE CONTRACTOR'S METHODS OR EQUIPMENT SHALL BE SUBMITTED TO THE DIRECTOR FOR REVIEW AND APPROVAL AT LEAST TWO WEEKS PRIOR TO THE START OF THE WORK.

SUBSTRUCTURE:
THIS ITEM SHALL INCLUDE THE ELEMENTS INDICATED IN THE PLANS AND GENERAL NOTES THAT ARE NOT SEPARATELY LISTED FOR PAYMENT. ITEMS TO BE REMOVED INCLUDE PORTIONS OF EXISTING ABUTMENTS AND PORTIONS OF THE EXISTING PIERS AND MISCELLANEOUS ITEMS THAT ARE NOT SHOWN TO BE INCORPORATED INTO THE FINAL CONSTRUCTION AND ARE DIRECTED TO BE REMOVED BY THE ENGINEER. HYDRAULIC HOE-RAM TYPE HAMMERS WILL NOT BE PERMITTED. THE WEIGHT OF THE HAMMER SHALL NOT BE MORE THAN 35 POUNDS FOR REMOVAL WITHIN 18 INCHES OF PORTIONS TO BE PRESERVED. OUTSIDE THE 18 INCH LIMIT, HAMMERS NOT EXCEEDING 90 POUNDS, MAY BE USED UPON THE APPROVAL OF THE ENGINEER. ALL WORK SHALL BE DONE IN A MANNER THAT WILL NOT CUT, ELONGATE OR DAMAGE THE EXISTING REINFORCING STEEL TO BE PRESERVED. CHIPPING HAMMERS SHALL NOT BE HEAVIER THAN THE NOMINAL 90 LB CLASS. PNEUMATIC HAMMERS SHALL NOT BE PLACED IN DIRECT CONTACT WITH REINFORCING STEEL THAT IS TO BE RETAINED IN THE REBUILT STRUCTURE.

CUT LINE CONSTRUCTION JOINT PREPARATION
SAW CUT BOUNDARIES OF PROPOSED CONCRETE REMOVALS 1 INCH DEEP. REMOVE CONCRETE TO A ROUGH SURFACE. THE EXISTING REINFORCING STEEL WHERE REQUIRED IN THE PLANS SHALL BE LEFT IN PLACE. INSTALL DOWEL BARS IF SPECIFIED. PRIOR TO CONCRETE PLACEMENT ABRASIVELY CLEAN JOINT SURFACE AND EXPOSED REINFORCEMENT TO REMOVE LOOSE AND DISINTEGRATED CONCRETE AND LOOSE RUST. THE JOINT SURFACE AND EXPOSED REINFORCEMENT SHALL BE THOROUGHLY CLEANED OF ALL DIRT, DUST, OR OTHER FOREIGN MATERIAL BY THE USE OF WATER, AIR UNDER PRESSURE, OR OTHER METHODS THAT PRODUCE SATISFACTORY RESULTS. EXISTING REINFORCING STEEL DOES NOT HAVE TO HAVE A BRIGHT STEEL FINISH BUT ALL PACK AND LOOSE RUST SHALL BE REMOVED. EXISTING CONCRETE SURFACES WHICH NEW CONCRETE WILL BE PLACED AGAINST SHALL BE WET, BUT WITHOUT FREE WATER, AT THE TIME OF CONCRETE PLACEMENT.

PAYMENT: THIS WORK WILL BE PAID FOR AT THE CONTRACT LUMP SUM PRICE BID, WHICH PRICE AND PAYMENT SHALL BE FULL COMPENSATION FOR ALL LABOR, EQUIPMENT, MATERIALS AND INCIDENTALS NECESSARY TO COMPLETE THE WORK IN CONFORMANCE WITH THESE REQUIREMENTS, WITH PERTINENT PROVISIONS OF 202, AND TO THE SATISFACTION OF THE ENGINEER.

J:\JOBS\3II47\TECHPROD\Final\Gennotes.dgn 30-MAY-2001 07:54 MLawler

DESIGN AGENCY
HNTB 55 Erieview Plaza, Suite 500 Cleveland, Ohio 44114-1836
ARCHITECTS ENGINEERS PLANNERS

DESIGNED	DRAWN	REVISED	DATE
NDH	NDH		3/05/01
CHECKED	REVISED		
JOL			

STRUCTURE FILE NUMBER 1305697

GENERAL NOTES-1
BRIDGE NO. CLE-275-0896
BARGS SALT RUN ROAD (T.R. 211) OVER I-275

CLE-275-05.35

803/357

STRUCTURE GENERAL NOTES

EXISTING STRUCTURE VERIFICATION

DETAILS AND DIMENSIONS SHOWN ON THESE PLANS PERTAINING TO THE EXISTING STRUCTURE HAVE BEEN OBTAINED FROM PLANS OF THE EXISTING STRUCTURE AND FROM FIELD OBSERVATIONS AND MEASUREMENTS. CONSEQUENTLY, THEY ARE INDICATIVE OF THE EXISTING STRUCTURE AND THE PROPOSED WORK BUT THEY SHALL BE CONSIDERED TENTATIVE AND APPROXIMATE. THE CONTRACTOR IS REFERRED TO CMS SECTIONS 102.05, 105.02 AND 513.02/863.07.

CONTRACT BID PRICES SHALL BE BASED UPON A RECOGNITION OF THE UNCERTAINTIES DESCRIBED ABOVE AND UPON A PREBID EXAMINATION OF THE EXISTING STRUCTURE BY THE CONTRACTOR. HOWEVER, ALL PROJECT WORK SHALL BE BASED UPON ACTUAL DETAILS AND DIMENSIONS WHICH HAVE BEEN VERIFIED BY THE CONTRACTOR IN THE FIELD.

ITEM 509 REINFORCING STEEL, REPLACEMENT OF EXISTING REINFORCING STEEL

ANY EXISTING REINFORCING BARS DEEMED BY THE ENGINEER TO BE UNUSABLE BECAUSE OF CORROSION SHALL BE REPLACED WITH NEW REINFORCING STEEL. ANY EXISTING REINFORCING BARS WHICH ARE TO BE INCORPORATED INTO THE NEW WORK AND ARE MADE UNUSABLE BY CONCRETE REMOVAL OPERATIONS SHALL BE REPLACED WITH NEW EPOXY COATED REINFORCING STEEL OF THE SAME SIZE AT THE CONTRACTOR'S COST. ALL WORK SHALL BE TO THE SATISFACTION OF THE ENGINEER.

THE NUMBER OF POUNDS OF REINFORCING STEEL PAID FOR AT CONTRACT PRICES SHALL BE THE ACTUAL POUNDS OF REPLACEMENT REINFORCING STEEL SPECIFIED BY THE ENGINEER DUE TO CORROSION AND SHALL INCLUDE PLACEMENT, DOWELING, BENDING, SUPPORTING, TIE WIRES, AND TYING OF THAT SPECIFIED REINFORCING STEEL.

ITEM 842, CONCRETE CLASS C, AS PER PLAN

IN ADDITION TO THE REQUIREMENTS OF ITEM 842, A REFERENCE DISK SHALL BE CAST IN THE ABUTMENT CONCRETE. THE DISK WILL BE CENTERED ON THE TOP HORIZONTAL SURFACE OF THE FORWARD ABUTMENT RIGHT WINGWALL. THE DISK WILL BE PROVIDED BY THE DISTRICT EIGHT SURVEY MANAGER.

INSTALL A 3 FOOT WIDE STRIP, 3/32 INCH THICK, GENERAL PURPOSE, HEAVY DUTY NEOPRENE SHEET WITH NYLON FABRIC REINFORCEMENT AT LOCATIONS SHOWN IN THE PLANS. SECURE THE 3 FOOT WIDE NEOPRENE SHEETING TO THE CONCRETE WITH 1¼" x #10 GAGE (LENGTH x SHANK DIAMETER) GALVANIZED BUTTON HEAD SPIKES THROUGH A 1 INCH OUTSIDE DIAMETER, #10 GAGE GALVANIZED WASHER. MAXIMUM FASTENER SPACING IS 9 INCHES. OTHER SIMILAR GALVANIZED DEVICES WHICH WILL NOT DAMAGE EITHER THE NEOPRENE OR THE CONCRETE MAY BE USED SUBJECT TO THE APPROVAL OF THE ENGINEER.

CENTER THE NEOPRENE STRIPS ON ALL JOINTS. FOR HORIZONTAL JOINTS, SECURE THE HORIZONTAL NEOPRENE STRIP BY USING A SINGLE LINE OF FASTENERS, STARTING AT 6 INCHES (+/-) FROM THE TOP OF THE NEOPRENE STRIP. FOR THE VERTICAL JOINTS SECURE THE VERTICAL NEOPRENE STRIP BY USING A SINGLE VERTICAL LINE OF FASTENERS, STARTING AT 6 INCHES (+/-) FROM THE VERTICAL EDGE OF THE NEOPRENE STRIP NEAREST TO THE CENTERLINE OF ROADWAY. FOR VERTICAL JOINTS, INSTALL 2 ADDITIONAL FASTENERS AT 6 INCHES CENTER TO CENTER ACROSS THE TOP OF THE NEOPRENE STRIP ON THE SAME SIDE OF THE VERTICAL JOINT AS THE SINGLE VERTICAL ROW OF FASTENERS IS LOCATED.

THE VERTICAL NEOPRENE STRIPS SHOULD COMPLETELY OVERLAP THE HORIZONTAL STRIPS. LAPS IN THE LENGTH OF THE HORIZONTAL STRIPS DUE TO MATERIAL MANUFACTURING SHALL BE AT LEAST 1 FOOT IN LENGTH, IF NOT VULCANIZED OR ADHESIVE BONDED, OR 6 INCHES IN LENGTH IF THE LAP IS VULCANIZED OR ADHESIVE BONDED. NO LAPS ARE ACCEPTABLE IN VERTICALLY INSTALLED NEOPRENE STRIPS.

THE NEOPRENE SHEETING SHALL BE 3/32" THICK GENERAL PURPOSE, HEAVY DUTY NEOPRENE SHEET WITH NYLON FABRIC REINFORCEMENT. THE SHEETING SHALL BE "FAIRPRENE NUMBER NN-0003", BY E. I. DUPONT DE NEMOURS AND COMPANY, INC., "WINGPRENE" BY THE GOODYEAR TIRE AND RUBBER COMPANY, OR AN APPROVED ALTERNATE. THE NEOPRENE SHEETING SHALL CONFORM TO THE FOLLOWING:

DESCRIPTION OF TEST	ASTM METHOD	REQUIREMENT
THICKNESS, INCHES	D 751	0.094 +/- .01
BREAKING STRENGTH, GRAB WXF, LBS, MINIMUM	D 751	700 x 700
ADHESIVE 1" STRIP, 2" MINIMUM, LBS MINIMUM	D 751	9
BURST STRENGTH (MULLEN) PSI, MINIMUM	D 751	1400
HEAT AGING 70 HOURS T 212 °F, 180° BEND WITHOUT CRACKING	D 2136	NO CRACKING OF COATING
LOW TEMPERATURE BRITTLENESS 1 HOUR AT -40 °F, BEND AROUND 1/4" MANDREL	D 2136	NO CRACKING OF COATING

IN LIEU OF THE NEOPRENE SHEETING THE CONTRACTOR MAY CHOOSE TO SUPPLY TYPE 3 MEMBRANE, 711.29.

PAYMENT FOR LABOR, MATERIALS AND INSTALLATION OF THESE ITEMS SHALL BE INCLUDED IN ITEM 844, HIGH PERFORMANCE CONCRETE, SUBSTRUCTURE, AS PER PLAN.

ITEM 516, JACKING AND TEMPORARY SUPPORT OF SUPERSTRUCTURE, AS PER PLAN:

THIS ITEM SHALL CONSIST OF FURNISHING ALL NECESSARY LABOR, MATERIALS, AND EQUIPMENT TO RAISE OR RE-POSITION ANY EXISTING STRUCTURES TO THE DIMENSIONS AND REQUIREMENTS DEFINED IN THE PROJECT PLANS.

THE CONTRACTOR SHALL BE RESPONSIBLE FOR THE DESIGN, INSTALLATION AND OPERATION OF AN ADEQUATE JACKING SYSTEM, INCLUDING ANY TEMPORARY OR PERMANENT SUPPORTS NECESSARY TO PERFORM THE WORK DESCRIBED IN THE PROJECT PLANS. THREE (3) SETS OF JACKING PLANS, WHICH INCLUDE THE INFORMATION DESCRIBED IN THIS NOTE, SHALL BE SUBMITTED TO THE DIRECTOR FOR APPROVAL AT LEAST THIRTY (30) DAYS BEFORE ACTUAL WORK IS TO BEGIN. THE PLANS SHALL BE PREPARED AND STAMPED BY AN OHIO REGISTERED PROFESSIONAL ENGINEER.

JACKING SUBMITTALS SHALL INCLUDE AT LEAST THE FOLLOWING:

1. THE SIGNATURE AND NUMBER, OR PROFESSIONAL SEAL, OF THE REGISTERED PROFESSIONAL ENGINEER WHO PREPARED THE SUBMITTAL.
2. CALCULATIONS AND ANALYSES OF THE STRUCTURE TO DETERMINE AND DEFINE THE ACTUAL LOADING APPLIED AT THE CONTRACTOR'S SELECTED JACKING POINTS.
3. A DRAWING SHOWING THE PHYSICAL AND DIMENSIONAL POSITION OF THE JACKS WITH RESPECT TO THE STRUCTURE INCLUDING CLEARANCES AND CENTER OF LIFT.
4. A SCHEMATIC LAYOUT OF JACKS, CHECK VALVES, PUMPS WITH 3 WAY RETRACTOR VALVE, PRESSURE GAGES, FLOW CONTROL VALVES, ETC. IN ACCORDANCE WITH MANUFACTURER'S RECOMMENDATIONS. ALL JACKS FOR EACH ABUTMENT OR PIER SHALL BE CONNECTED TOGETHER. ALL JACKS AT EACH ABUTMENT OR PIER SHALL BE THE SAME SIZE.
5. ANALYSIS AND CALCULATIONS OF THE STRESSES INDUCED OR CREATED IN THE STRUCTURE AND ANY TEMPORARY OR PERMANENT SUPPORTS. DESIGN CALCULATIONS FOR ANY TEMPORARY OR PERMANENT SUPPORTS.
6. PHYSICAL DIMENSIONS, MATERIALS, AND FABRICATION DETAILS OF ANY TEMPORARY OR PERMANENT SUPPORTS. HORIZONTAL AND VERTICAL MOVEMENT RESTRAINT SHALL BE PROVIDED.
7. A STEP BY STEP PROCEDURE DETAILING ALL STEPS IN THE JACKING OPERATION.
8. METHOD OF ATTACHMENT TO STRUCTURAL MEMBERS. WELDING TO TENSION AREAS WILL NOT BE PERMITTED.

THE ENTIRE SYSTEM INCLUDING JACKS SHALL HAVE 20% MORE CAPACITY THAN REQUIRED BASED ON CALCULATED LOADS.

FOR LIFTS GREATER THAN 1 INCH, JACKS SHALL HAVE LOCKING NUTS TO POSITIVELY LOCK AND SUPPORT THE STRUCTURE DURING THE LIFT.

JACKS SHALL HAVE A SWIVEL LOAD CAP, A DOMED PISTON HEAD OR SOME OTHER DEVICE TO PROTECT AGAINST THE EFFECTS OF SIDE LOAD ON THE JACK.

JACKS ALONE SHALL NOT BE USED TO SUPPORT LOADS EXCEPT DURING THE ACTUAL JACKING OPERATION. TEMPORARY SUPPORTS, BLOCKING OR OTHER METHODS APPROVED BY THE DIRECTOR SHALL BE USED.

SINGLE ACTING RAMS WITH NO OVER-TRAVEL PROTECTION SYSTEM SHALL NOT BE USED.

SPARE EQUIPMENT SHALL BE AVAILABLE ON SITE FOR THE REQUIRED STRUCTURE RAISING TO PROCEED IN THE EVENT OF BREAKDOWN. A LIST OF SPARE EQUIPMENT SHALL BE PROVIDED TO THE ENGINEER.

AT A MINIMUM, A JACKING OPERATION SHALL LIFT ALL BEAMS AT ANY ONE ABUTMENT OR PIER SIMULTANEOUSLY. THE ONLY EXCEPTION IS THE SITUATION WHERE THE WORK INVOLVES REPLACING OR REHABILITATING INDIVIDUAL BEARINGS; NO PERMANENT SHIMMING IS REQUIRED AND THE HEIGHT OF THE LIFT SHALL NOT EXCEED ¼".

MAXIMUM DIFFERENTIAL JACKING HEIGHT BETWEEN ANY ADJACENT ABUTMENTS OR PIERS SHALL BE 1 INCH OR LESS. THIS HEIGHT MAY BE MODIFIED IF CALCULATIONS, BY THE CONTRACTOR'S OHIO REGISTERED PROFESSIONAL ENGINEER, SHOW THE SUPERSTRUCTURE COMPONENTS WILL NOT BE TEMPORARILY STRESSED BEYOND ALLOWABLE STRESSES FOR THOSE COMPONENTS AND THAT NO PERMANENT STRESSES WILL BE INDUCED IN THE COMPONENTS AFTER THEY OBTAIN THEIR FINAL POSITION.

THE CONTRACTOR SHALL DEMONSTRATE TO THE ENGINEER THAT THE BRIDGE BEARINGS ARE FULLY SEATED AT ALL CONTACT AREAS. IF FULL SEATING IS NOT ATTAINED, SUITABLE MEANS OF REPAIR, SUBJECT TO THE ENGINEER'S APPROVAL, WILL BE REQUIRED AT THE CONTRACTOR'S EXPENSE.

PAYMENT SHALL BE MADE AT THE LUMP SUM PRICE BID FOR ITEM 516, JACKING AND TEMPORARY SUPPORT OF SUPERSTRUCTURE, AS PER PLAN. THIS SHALL INCLUDE ALL NECESSARY TOOLS, LABOR, EQUIPMENT AND MATERIALS NECESSARY TO COMPLETE THIS ITEM OF WORK.

J:\JOBS\31147\TECHPROD\Final\Gennotes2.dgn 30-MAY-2001 07:54 MLawler

DESIGN AGENCY
HNTB 88 Erieview Plaza, Suite 800 Cleveland, Ohio 44114-1819
ARCHITECTS ENGINEERS PLANNERS

DESIGNED	DRAWN	REVIEWED	DATE
MDH	MDH	RHW	3/05/01
CHECKED	REVISED	STRUCTURE FILE NUMBER	
JOL		1305697	

GENERAL NOTES - 2
BRIDGE NO. CLE-275-0896
BARGS SALT RUN ROAD (T.R. 211) OVER I-275

CLE-275-05.35

3/17

804/857

STRUCTURE GENERAL NOTES

INSPECTION OF EXISTING STRUCTURAL STEEL:
THE ENGINEER SHALL VISUALLY INSPECT ALL EXISTING BUTT-WELDED SPLICES TO ENSURE THE WELDS, PLATES AND BEAMS ARE FREE OF DEFECTS AND CRACKS. THE DECK SLAB HAUNCH FORMS IMMEDIATELY ADJACENT TO SUCH WELDS SHALL NOT BE ERECTED UNTIL AFTER THE ENGINEER HAS COMPLETED THIS INSPECTION. THIS INSPECTION SHALL NOT TAKE PLACE UNTIL AFTER THE TOP FLANGES ARE CLEANED AS SPECIFIED IN SS842.08, BUT IT SHALL BE DONE BEFORE THE DECK SLAB REINFORCEMENT IS INSTALLED. THE COST ASSOCIATED WITH THIS INSPECTION SHALL BE INCLUDED WITH ITEM 842, CONCRETE CLASS S FOR PAYMENT. ANY CRACKS FOUND SHOULD BE REPORTED TO THE OFFICE OF STRUCTURAL ENGINEERING, BRIDGE CONSTRUCTION SPECIALIST, ALONG WITH SPECIFIC INFORMATION ON LOCATION OF THE CRACKS, LENGTH, AND DEPTH SO AN EVALUATION AND REPAIR OR REPLACEMENT RECOMMENDATION CAN BE MADE.

ITEM 202 - FENCE REMOVED FOR STORAGE:
THE EXISTING VANDAL PROTECTION FENCE LOCATED ON THE BRIDGE PARAPETS SHALL BE CAREFULLY REMOVED AND STORED AS DIRECTED BY THE ENGINEER. ALL WORK ASSOCIATED WITH THIS TASK INCLUDING THE CAREFULL REMOVAL OF THE FENCE, FABRIC, FENCE POSTS & RAILS, AND BASE PLATES AS WELL AS THE DELIVERY OF THIS MATERIAL TO THE SELECTED ODOT MAINTENANCE SITE SHALL BE INCLUDED IN THE CONTRACT PRICE BID PER LINEAR FOOT OR ITEM 202 - FENCE REMOVED FOR STORAGE.

ITEM 601 - CRUSHED AGGREGATE SLOPE PROTECTION, AS PER PLAN:
THE ESTIMATED QUANTITY SHOWN IN THE PLANS FOR ITEM 601 IS CONSIDERED A CONTINGENCY QUANTITY AND SHALL BE USED AS DIRECTED BY THE ENGINEER FOR THE REPAIR OF THE EXISTING ABUTMENT SLOPES. ½ CUBIC YARD IS INCLUDED IN THIS QUANTITY FOR EACH ABUTMENT DRAIN OUTLET PIPE. ALL WORK SHALL BE IN ACCORDANCE WITH ITEM 601.

CLEANING STEEL IN PATCHED AREAS
ALL SURFACES TO BE PATCHED AND THE EXPOSED REINFORCING STEEL WITHIN SHALL BE THOROUGHLY CLEANED BY ABRASIVE BLASTING PRIOR TO THE CLEANING SPECIFIED BY 519.04. CLEANING SHALL PRECEDE APPLICATION OF THE PATCHING MATERIAL OR ERECTION OF THE FORMS BY NOT MORE THAN 24 HOURS

NON-USE OF ASBESTOS-CONTAINING MATERIALS
THE CONTRACTOR SHALL AT NO TIME INCORPORATE ANY MATERIALS WHICH ARE COMPOSED OF OR CONTAIN ANY AMOUNTS OF ASBESTOS. THE SUBSTITUTION OF MATERIALS WHICH CONTAIN ANY AMOUNTS OF ASBESTOS WILL IN NO CIRCUMSTANCES BE ACCEPTABLE. UPON COMPLETION OF THE PROJECT, THE CONTRACTOR SHALL SUBMIT A WRITTEN STATEMENT OF CERTIFICATION ASSERTING THAT NO ASBESTOS CONTAINING MATERIALS WERE USED IN ANY PORTION OF THE CONSTRUCTION.

ITEM SPECIAL - HEAT STRAIGHTENING OF DAMAGED STRUCTURAL STEEL
AT THE LOCATION OF THE OUTSIDE EDGE OF PAVEMENT OF THE SOUTHBOUND FAR FASCIA BEAM, FIVE (5) FEET OF THE BEAM SHALL BE HEAT STRAIGHTENED PRIOR TO THE NEW CONCRETE DECK PLACEMENT. THIS ITEM WILL ALSO INCLUDE THE REPLACEMENT OF ONE (1) DAMAGED CROSS FRAME, AND THE OZEU SPOT PAINTING OF THE DAMAGED AREAS TINTED TO THE COLOR OF THE EXISTING BEAMS TO THE SATISFACTION OF THE ENGINEER.

ABBREVIATIONS

ABUT. - ABUTMENT	FWD. - FORWARD	SER - SERIES
APPROX. - APPROXIMATE	HOR. - HORIZONTAL	SHLD - SHOULDER
BOT. - BOTTOM	INV. - INVERT	SPA. - SPACES
BRG. - BEARING	JT. - JOINT	STA. - STATION
CB - CATCH BASIN	L - LEFT	STR - STRAIGHT
CLR. - CLEARANCE	LOC. - LOCATION	TEMP - TEMPORARY
CONSTR. - CONSTRUCTION	MAX. - MAXIMUM	TYP. - TYPICAL
EA. - EACH	MIN. - MINIMUM	VERT - VERTICAL
E.F. - EACH FACE	N - NORTH	V.C. - VERTICAL CURVE
ELEV. - ELEVATION	N.F. - NEAR FACE	C.I.P. - CAST IN PLACE
EQ. - EQUAL	PERF - PERFORATED	CMS - CONSTRUCTION AND MATERIAL SPECIFICATIONS
EX. - EXISTING	PL - PLATE	PVI - POINT OF VERTICAL INTERSECTION
EXP - EXPANSION	PVMT - PAVEMENT	P.E.J.F. - PREFORMED EXPANSION JOINT FILLER
FIX - FIXED	R - RIGHT	
F.F. - FAR FACE	REQ'D - REQUIRED	
F.S. - FIELD SPLICE	ROW - RIGHT OF WAY	

J:\JOBS\3147\TECHPROD\Final\Gennotes3.dgn 30-MAY-2001 07:54 MLawler

DESIGN AGENCY
HNTB 55 Erieview Plaza, Suite 500 Cleveland, Ohio 44114-1816
ARCHITECTS ENGINEERS PLANNERS

DESIGNED	DRAWN	REVISED	DATE
NDH	NDH		3/05/01
CHECKED	REVISED		STRUCTURE FILE NUMBER
JOL			1305697

GENERAL NOTES - 3
BRIDGE NO. CLE-275-0896
BARGS SALT RUN ROAD (T.R. 211) OVER I-275

CLE-275-05.35

805/857

MADE BY: NDH	DATE: 03-01-01
CHECKED BY: JDM	DATE: 03-01-01

ESTIMATED QUANTITIES

ITEM	ITEM EXTENSION	TOTAL	UNIT	DESCRIPTION	ABUTMENTS	PIERS	SUPER-STRUCTURE	GENERAL	AS PER PLAN SHEET NO.
202	11201	LUMP		PORTIONS OF STRUCTURE REMOVED, AS PER PLAN	LUMP	LUMP	LUMP		6 OF 17
202	75100	640	LIN FT	FENCE REMOVED FOR STORAGE			640		
503	22201	143	CU YD	UNCLASSIFIED EXCAVATION, INCLUDING ROCK AND SHALE, AS PER PLAN	143				2 OF 17
509	20001	1000	POUND	REINFORCING STEEL, REPLACEMENT OF EXISTING REINFORCING STEEL, AS PER PLAN	500	500			3 OF 17
SPECIAL	51267510	1089	SQ YD	SEALING OF CONCRETE SURFACES (EPOXY-URETHANE) *	144	223	722		5 OF 17
516	13600	2	SQ FT	1" PREFORMED EXPANSION JOINT FILLER	2				
516	13900	79	SQ FT	2" PREFORMED EXPANSION JOINT FILLER	79				
516	44101	8	EACH	ELASTOMERIC BEARING WITH INTERNAL LAMINATES AND LOAD PLATE (NEOPRENE), AS PER PLAN (8.5"x12"x2.74" BEARING WITH 9.5"x13"x1.54" LOAD PLATE) *	8				12 OF 17
516	44100	12	EACH	ELASTOMERIC BEARING WITH INTERNAL LAMINATES AND LOAD PLATE (NEOPRENE), (12"x20"x2.33" BEARING WITH 13"x21"x2.04" LOAD PLATE) *		12			
516	47001	LUMP	—	JACKING AND TEMPORARY SUPPORT OF SUPERSTRUCTURE, AS PER PLAN			LUMP		
518	21230	LUMP		POROUS BACKFILL WITH FILTER FABRIC	LUMP				
518	40000	91	LIN FT	6" PERFORATED CORRUGATED PLASTIC PIPE	91				
518	40010	35	LIN FT	6" NON-PERFORATED CORRUGATED PLASTIC PIPE, INCLUDING SPECIALS	35				
519	11100	46	SQ FT	PATCHING CONCRETE STRUCTURE	46				
601	20001	198	SQ YD	CRUSHED AGGREGATE SLOPE PROTECTION, AS PER PLAN				198	4 OF 17
SPECIAL	60739900	652	LIN FT	VANDAL PROTECTION FENCE, 6' STRAIGHT, COATED FABRIC			652		4 OF 17
842	31508	441	CU YD	CLASS S CONCRETE, SUPERSTRUCTURE			441		
842	43000	55	CU YD	CLASS C CONCRETE, PIER		55			
842	45501	172	CU YD	CLASS C CONCRETE, ABUTMENT, AS PER PLAN	172				3 OF 17
863	19000	LUMP		HEAT STRAIGHTENING OF DAMAGED STRUCTURAL STEEL			LUMP		4 OF 17
863	20000	2400	EACH	WELDED STUD SHEAR CONNECTORS			2400		

* SEE PROPOSAL NOTE

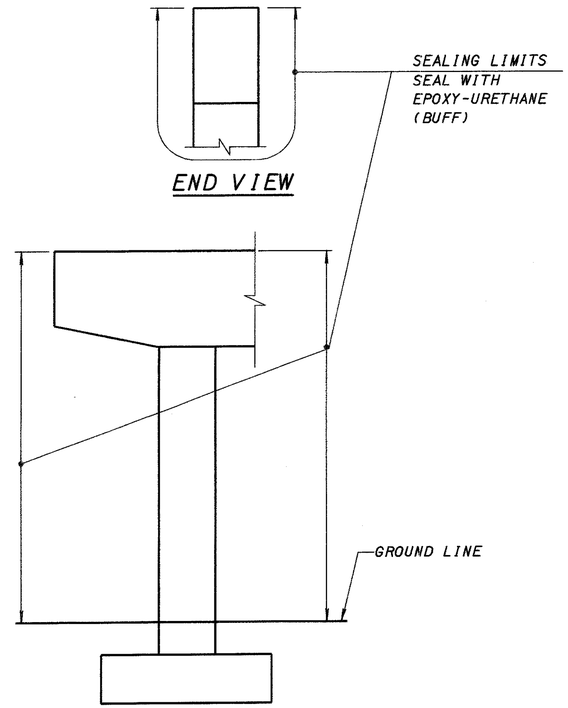

END VIEW

TYPICAL PIER SEALING LIMITS

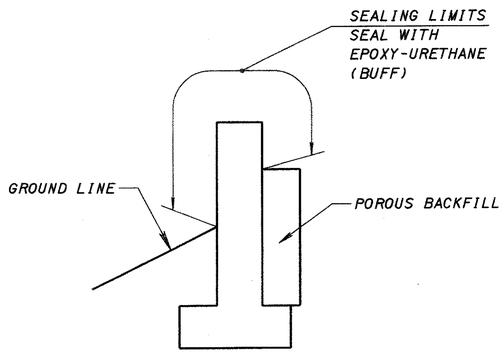

TYPICAL WINGWALL SEALING LIMITS

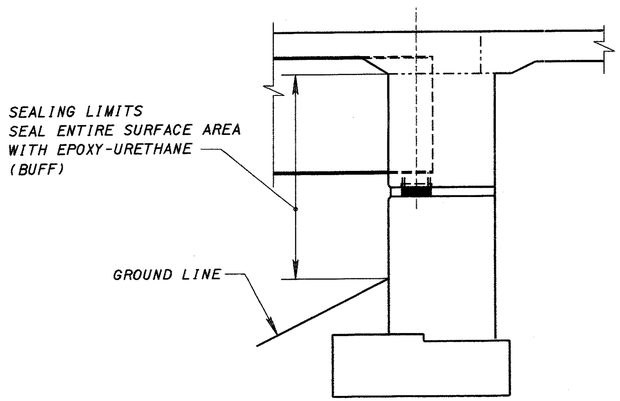

TYPICAL ABUTMENT SEALING LIMITS

DESIGN AGENCY
HNTB 155 Erieview Plaza, Suite 900 Cleveland, Ohio 44114-1888
ARCHITECTS ENGINEERS PLANNERS

DESIGNED	DRAWN	REVISED	DATE
NDH	NDH	AHW	3/05/01
CHECKED	REVISED	STRUCTURE FILE NUMBER	
JDL		1305697	

ESTIMATED QUANTITIES
BRIDGE NO. CLE-275-0896
BARGS SALT RUN ROAD (T.R. 211) OVER I-275

CLE-275-05.35

5 / 17

806
857

MLawler
30-MAY-2001 07:54
J:\JOBS\3II47\TECHPROD\Final\EQ.dgn

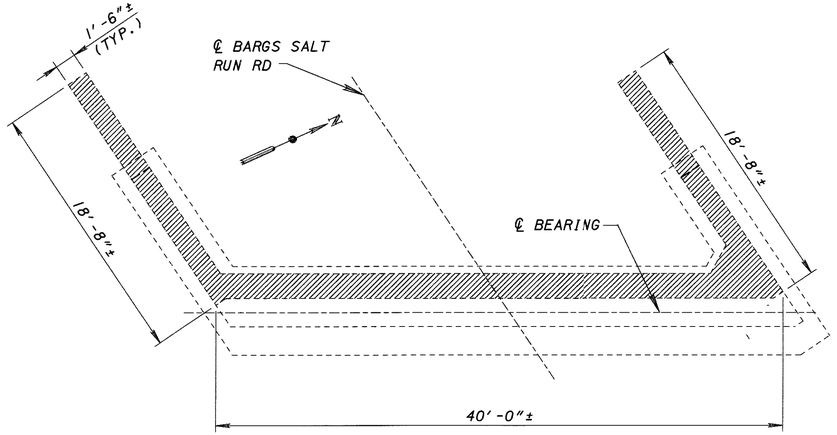

REAR ABUTMENT PLAN

(FORWARD ABUTMENT SIMILAR)

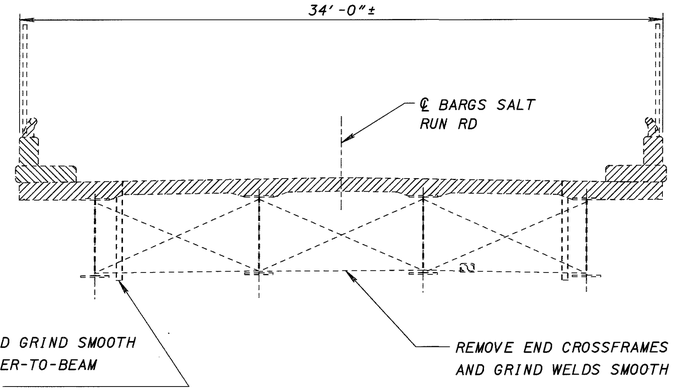

TYPICAL DECK SECTION

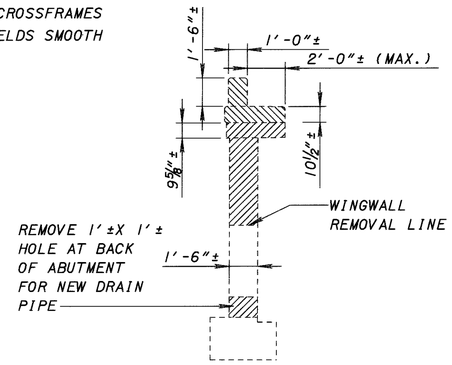

TYPICAL EXISTING
WINGWALL SECTION

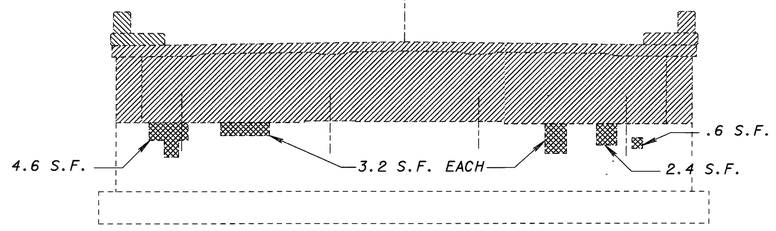

REAR ABUTMENT ELEVATION

14 S.F. x 3.25 CONTINGENCY FACTOR = 46 S.F. TOTAL PATCHING

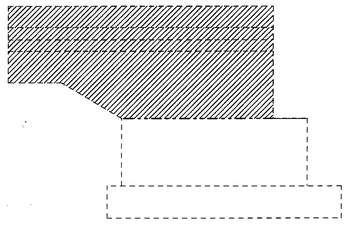

TYPICAL EXISTING
WINGWALL ELEVATION

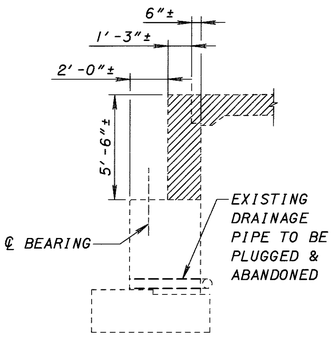

TYPICAL EXISTING
ABUTMENT SECTION

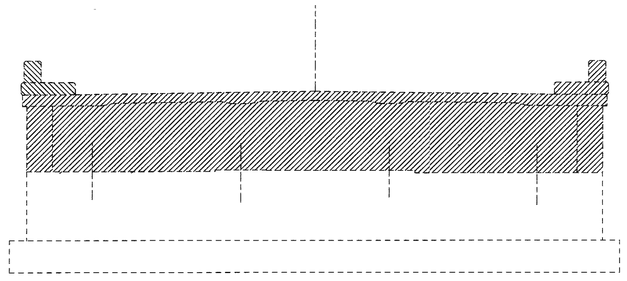

FORWARD ABUTMENT ELEVATION

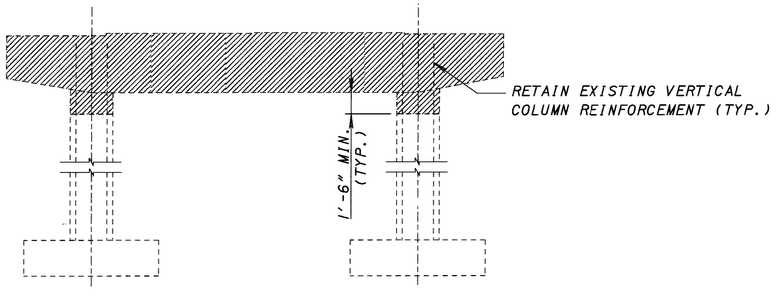

TYPICAL PIER ELEVATION

AREA TO BE REMOVED

AREA TO BE PATCHED ACCORDING TO ITEM 519 AS OF 09/08/99

DESIGN AGENCY
HNTB 55 Erieview Plaza, Suite 500 Cleveland, Ohio 44114-1818
ARCHITECTS ENGINEERS PLANNERS

DESIGNED	DRAWN	REVISED	CHECKED	REVISED	DATE	STRUCTURE FILE NUMBER
NDH	NDH		JOL	RHW	3/05/01	1305697

REMOVAL DETAILS
BRIDGE NO. CLE-275-0896
BARGS SALT RUN ROAD (T.R. 211) OVER I-275

CLE-275-05.35

6/17

807
35

J:\JOBS\31147\TECHPROD\Final\Removal.dgn 30-MAY-2001 07:54 MLawler

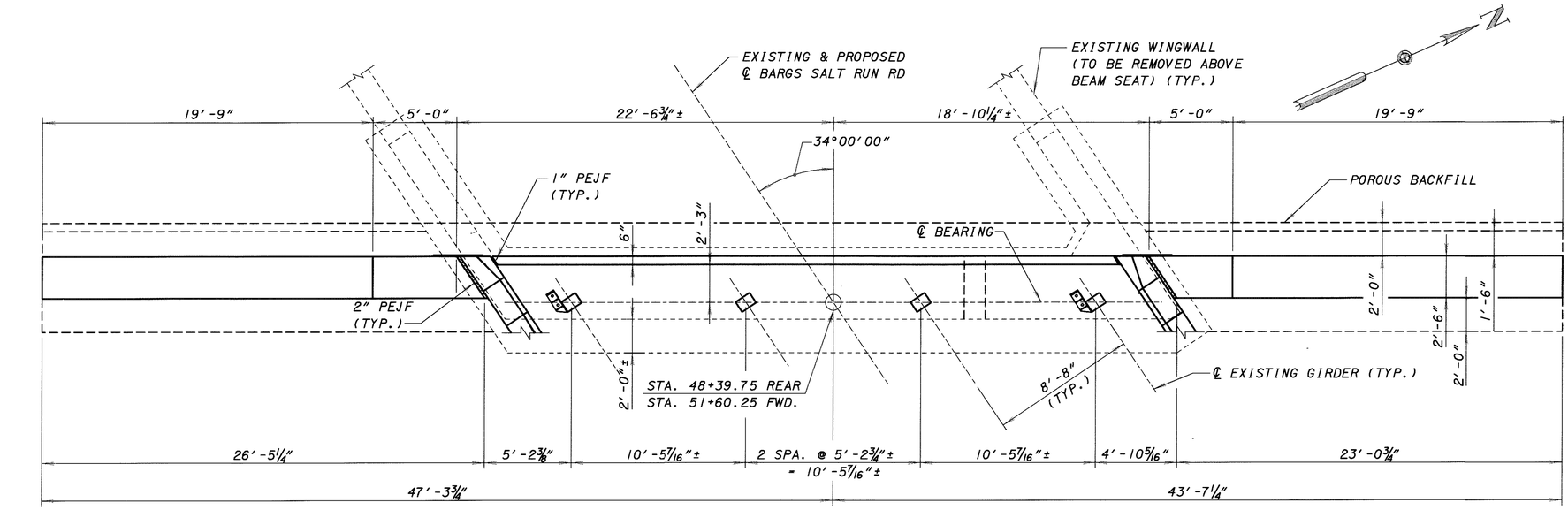

ABUTMENT PLAN

REAR ABUTMENT SHOWN
(FORWARD ABUTMENT SIMILAR)

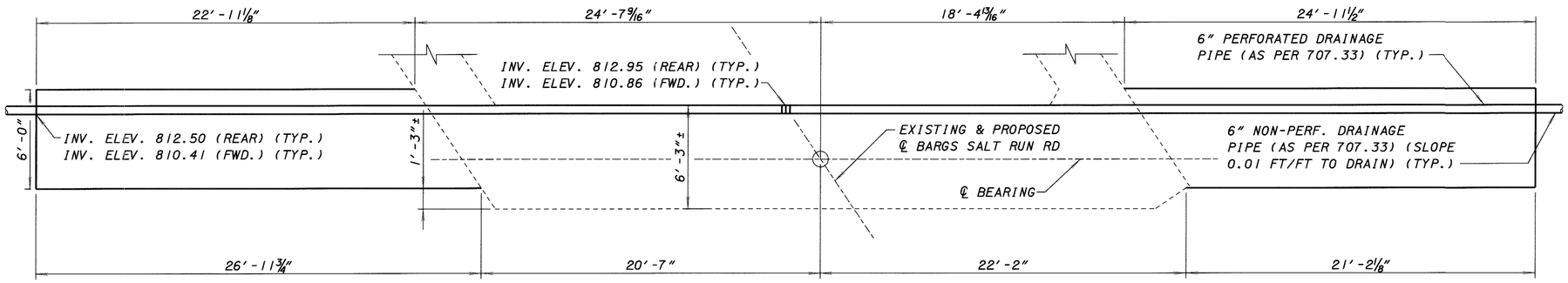

FOOTING PLAN

REAR ABUTMENT SHOWN
(FORWARD ABUTMENT SIMILAR)

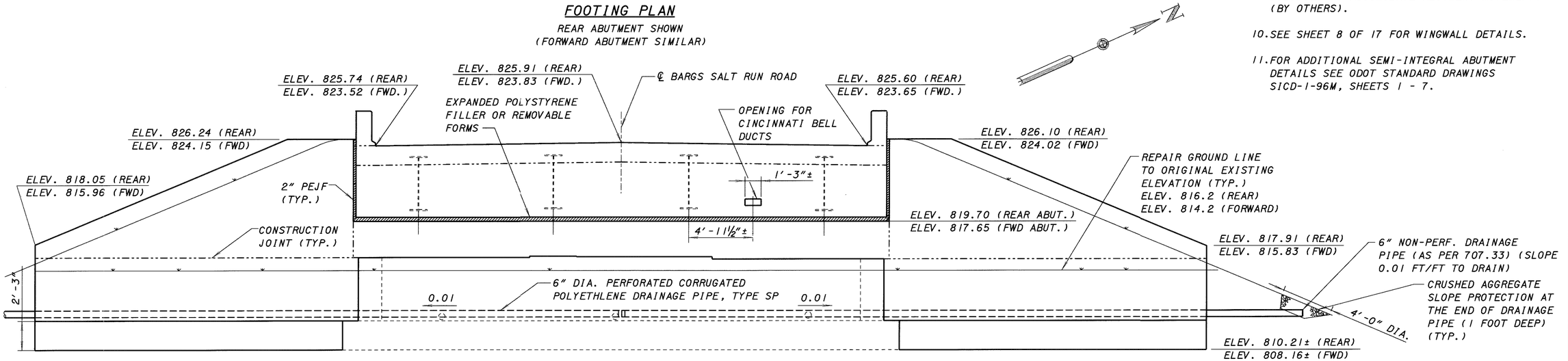

ABUTMENT ELEVATION

REAR ABUTMENT SHOWN
(FORWARD ABUTMENT SIMILAR)

NOTES:

1. THE ABUTMENT DIAPHRAGM CONCRETE SHALL BE PLACED BEFORE THE ACTUAL DECK CONCRETE IS PLACED IN THE INTERIOR SPANS. THE CONCRETE SHALL HAVE HAD AT LEAST 48 HOURS OF SET TIME BEFORE DECK CONCRETE IS PLACED.

2. BACKFILL ABOVE THE BRIDGE SEAT SHALL NOT BE PLACED UNTIL AFTER THE CONCRETE DECK SLAB AND DIAPHRAGM HAS CURED FOR AT LEAST 48 HOURS. BACKFILL SHALL THEN BE PLACED SIMULTANEOUSLY AT BOTH ABUTMENTS.

3. POROUS BACKFILL WITH FILTER FABRIC, 2'-0" THICK SHALL EXTEND UP TO THE PLANE OF THE SUBGRADE, TO 1'-0" BELOW THE EMBANKMENT SURFACE AND LATERALLY TO THE END OF THE WINGWALLS.

4. THE POROUS BACKFILL SHALL BE WRAPPED WITH FILTER FABRIC, 712.09, TYPE A. THE FABRIC SHALL COVER THE VERTICAL FACE BETWEEN THE BACKFILL AND THE EXCAVATION, THE BOTTOM OF THE POROUS BACKFILL AND THE ABUTMENT BARREL AND WINGWALLS.

5. 3 FOOT WIDE NEOPRENE SHEETING SHALL ALSO BE PLACED AT THE VERTICAL JOINTS BETWEEN THE NEW AND EXISTING ABUTMENT BARREL.

6. EXISTING WEEP HOLES SHALL BE PLUGGED USING NON-SHRINK GROUT. PAYMENT SHALL BE INCLUDED IN THE CONTRACT PRICE FOR ITEM 842 - CONCRETE CLASS C, AS PER PLAN.

7. THE BARS LISTED BELOW SHALL BE DOWELED INTO THE EXISTING STRUCTURE:

BAR NUMBER	EMBEDMENT LENGTH
513	1'-6"
516	1'-6"
805	2'-10"

8. FOR BEARING DETAILS AND NOTES SEE SHEET 11 AND 12 OF 17.

9. UTILITY EXPANSION JOINT LAYOUT MUST BE MODIFIED TO ACCOMODATE ABUTMENT MOVEMENTS (BY OTHERS).

10. SEE SHEET 8 OF 17 FOR WINGWALL DETAILS.

11. FOR ADDITIONAL SEMI-INTEGRAL ABUTMENT DETAILS SEE ODOT STANDARD DRAWINGS SICD-1-96M, SHEETS 1 - 7.

DESIGN AGENCY
HNTB 85 Erieview Plaza Suite 500 Cleveland, Ohio 44114-1816
ARCHITECTS ENGINEERS PLANNERS

DESIGNED	DRAWN	REVISED	DATE
NDH	NDH	RHW	3/05/01
CHECKED	REVISED	STRUCTURE FILE NUMBER	
JOL		1305697	

ABUTMENT PLAN AND ELEVATION
BRIDGE NO. CLE-275-0896
BARGS SALT RUN ROAD (T.R. 211) OVER I-275

CLE-275-05.35

7 / 17

808
857

J:\JOBS\31147\TECHPROD\Final\abut1.dgn 30-MAY-2001 07:54 MLawler

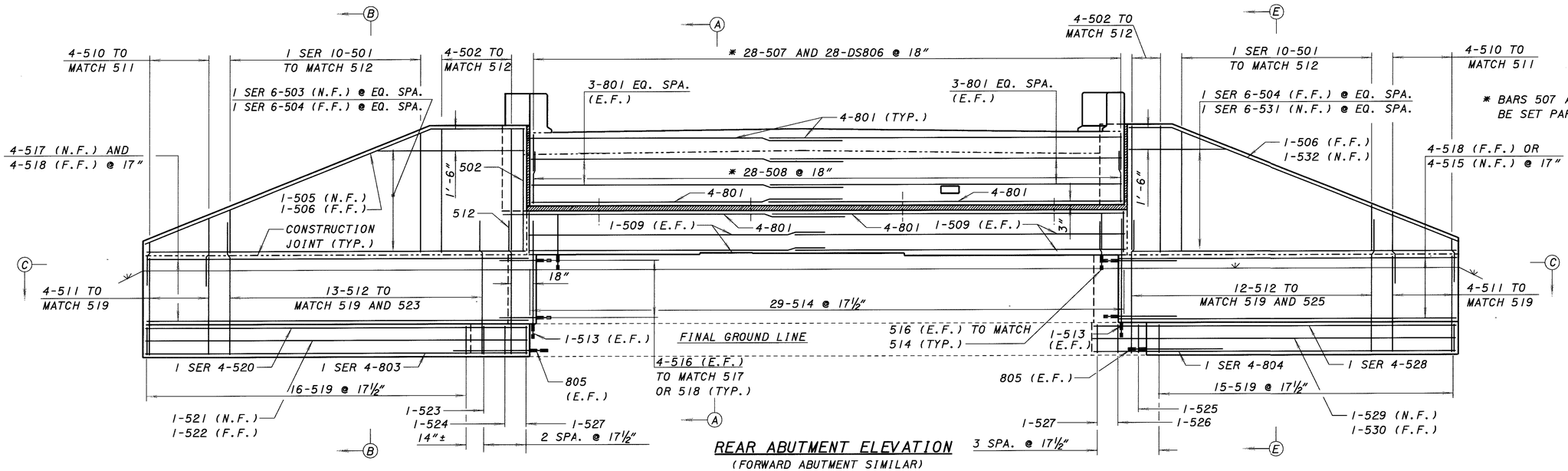

REAR ABUTMENT ELEVATION

(FORWARD ABUTMENT SIMILAR)

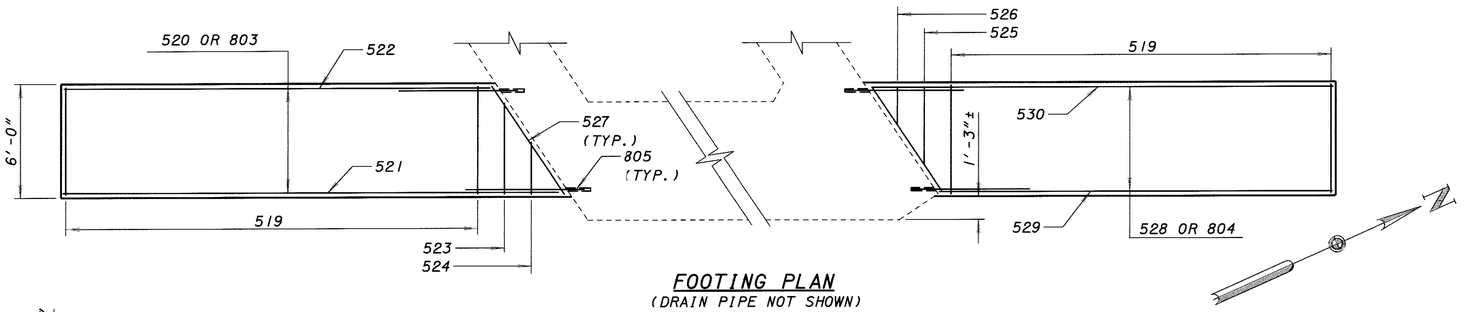

FOOTING PLAN

(DRAIN PIPE NOT SHOWN)

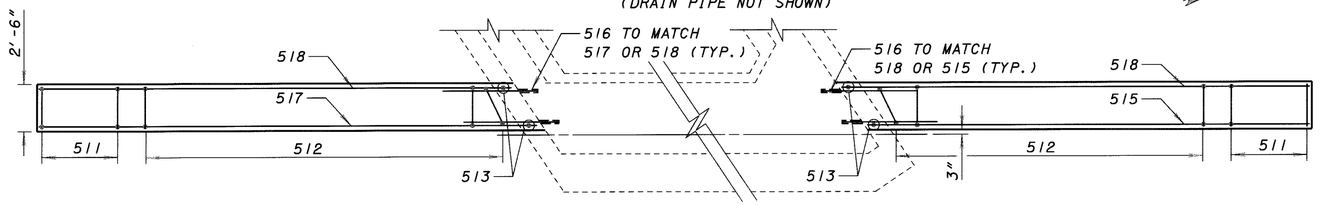

PART SECTION C-C

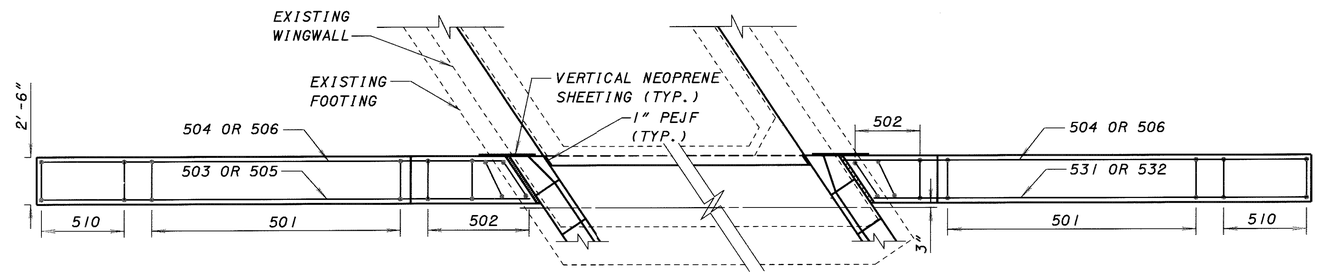

PART PLAN SOUTH WINGWALL

BAR. NO.	REQUIRED LAP LENGTH
NO. 5 VERTICAL BARS	2'-0" MINIMUM
NO. 5 HORIZONTAL BARS	2'-3" MINIMUM
NO. 8 BARS	6'-0" MINIMUM

NOTES:

1. THE BOTTOM OF FOOTING ELEVATION SHALL BE ADJUSTED AS REQUIRED TO MATCH THE EXISTING ABUTMENT BOTTOM OF FOOTING ELEVATION.
2. REINFORCING BARS SHALL BE EPOXY COATED
3. ALL ABUTMENT REINIFORCING BAR MARKS SHALL BE PREFIXED "A".
4. FOR SECTIONS A-A, B-B, AND E-E SEE SHEET 9 OF 17.
5. FOR ADDITIONAL DETAILS, SEE ODOT STANDARD DRAWINGS SICD-1-96M, SHEETS 1-7.
6. FOR BEARING DETAILS AND NOTES, SEE SHEETS 11 AND 12 OF 17.
7. FOR REINFORCING BAR SCHEDULE, SEE SHEET 17 OF 17.
8. FOR ADDITIONAL NOTES SEE SHEET 7 OF 17.

DESIGN AGENCY
HNTB 155 Erieview Plaza, Suite 500 Cleveland, Ohio 44114-1886
ARCHITECTS ENGINEERS PLANNERS

DESIGNED	DRAWN	REVISED	DATE
NDH	NDH	RHW	3/05/01
CHECKED	REVISED	STRUCTURE FILE NUMBER	
JDM		1305697	

ABUTMENT ELEVATION AND DETAILS
BRIDGE NO. CLE-275-0896
BARGS SALT RUN ROAD (T.R. 211) OVER I-275

CLE-275-05.35

8 / 17

809 / 357

J:\JOBS\3II47\TECHPROD\Final\abut12.dgn 30-MAY-2001 07:54 MLawler

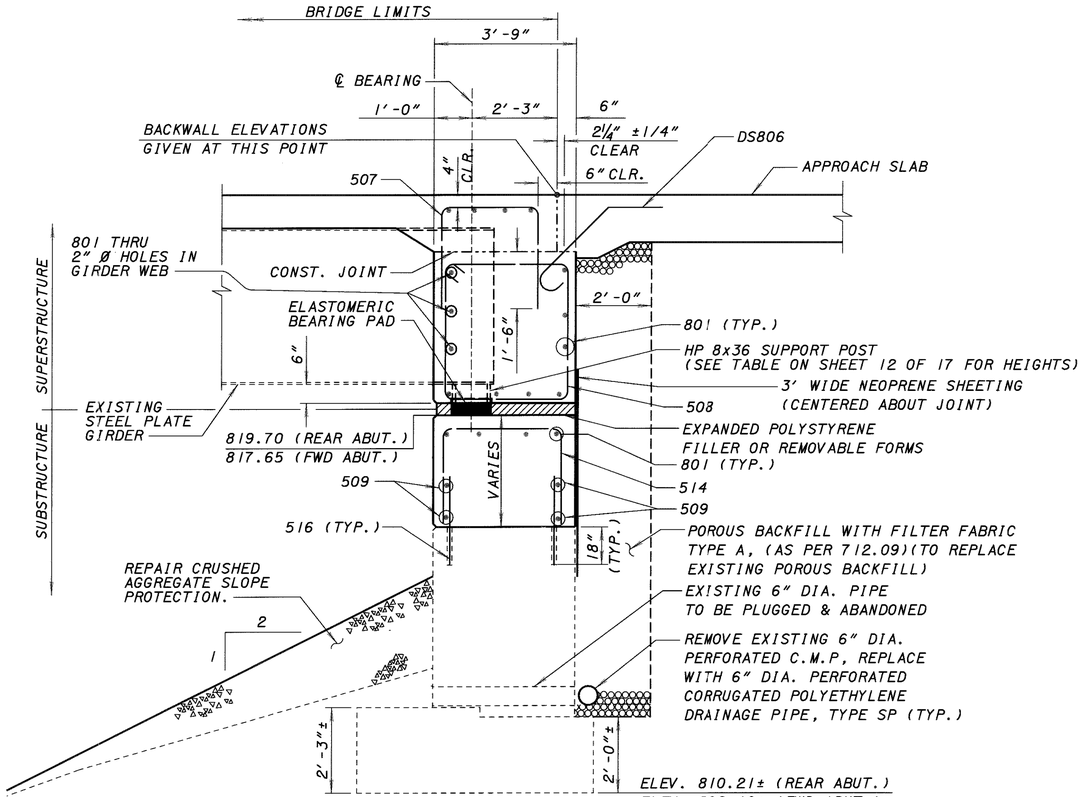

SECTION A-A
(SEE SHEET 8 OF 17)

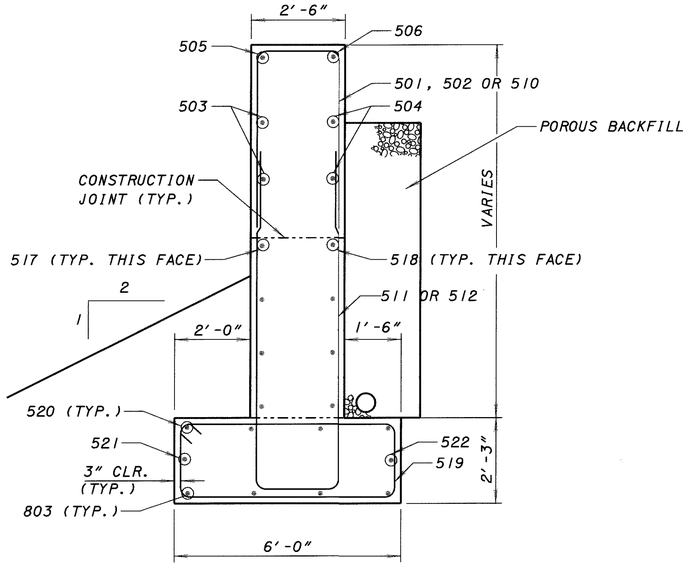

SECTION B-B
(SEE SHEET 8 OF 17)

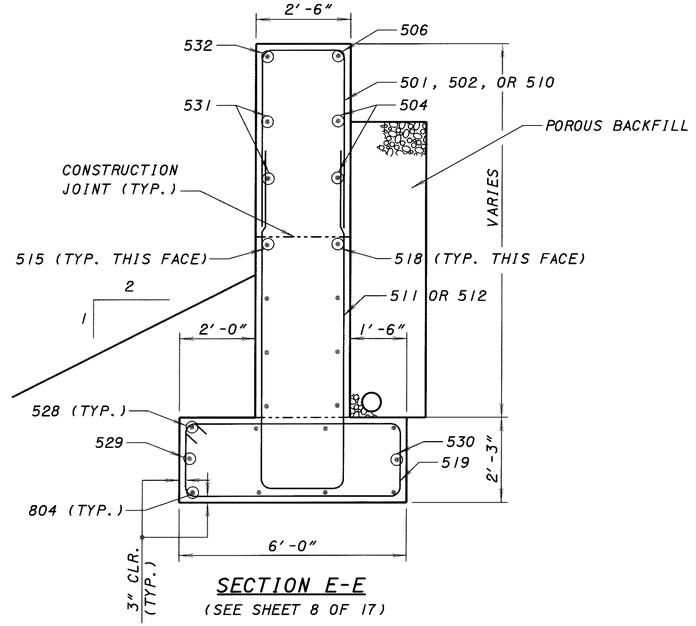

SECTION E-E
(SEE SHEET 8 OF 17)

NOTES:

1. HP 8 x 36 SHALL BE INCLUDED WITH ITEM 516 ELASTOMERIC BEARING, FOR PAYMENT.
2. FOR LOCATION OF SECTIONS A-A, B-B AND E-E SEE SHEET 8 OF 17.
3. ALL ABUTMENT REINFORCING BAR MARKS SHALL BE PREFIXED "A".
4. FOR ADDITIONAL DETAILS, SEE ODOT STANDARD DRAWINGS SICD-1-96M, SHEETS 1-7.
5. FOR ADDITIONAL NOTES, SEE SHEET 7 OF 17.

DESIGN AGENCY
HNTB 85 Erieview Plaza, Suite 500 Cleveland, Ohio 44114-1816
ARCHITECTS ENGINEERS PLANNERS

DESIGNED	DRAWN	REVIEWED	DATE
NDH	NDH	RHW	3/05/01
CHECKED	REVISED	STRUCTURE FILE NUMBER	
JDM		1305697	

ABUTMENT DETAILS
BRIDGE NO. CLE-275-0896
BARGS SALT RUN ROAD (T.R. 211) OVER I-275

CLE-275-05.35

9/17

810/857

J:\JOBS\3147\TECHPROD\Final\abut3.dgn 30-MAY-2001 07:54 MLawler

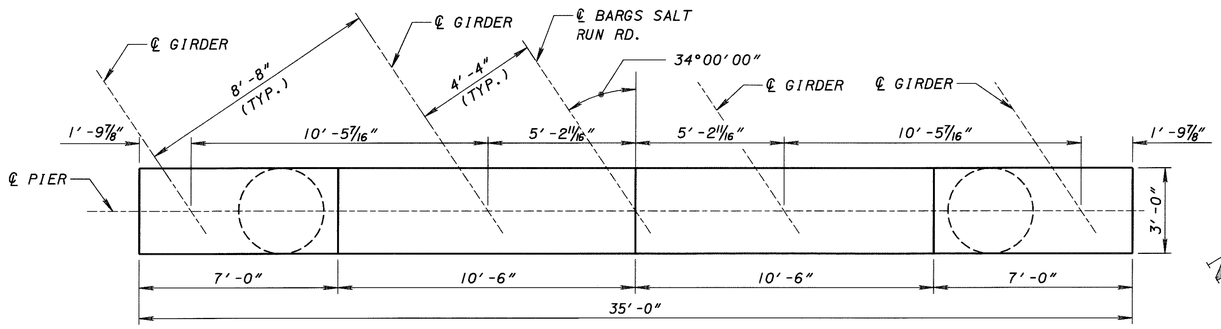

PLAN

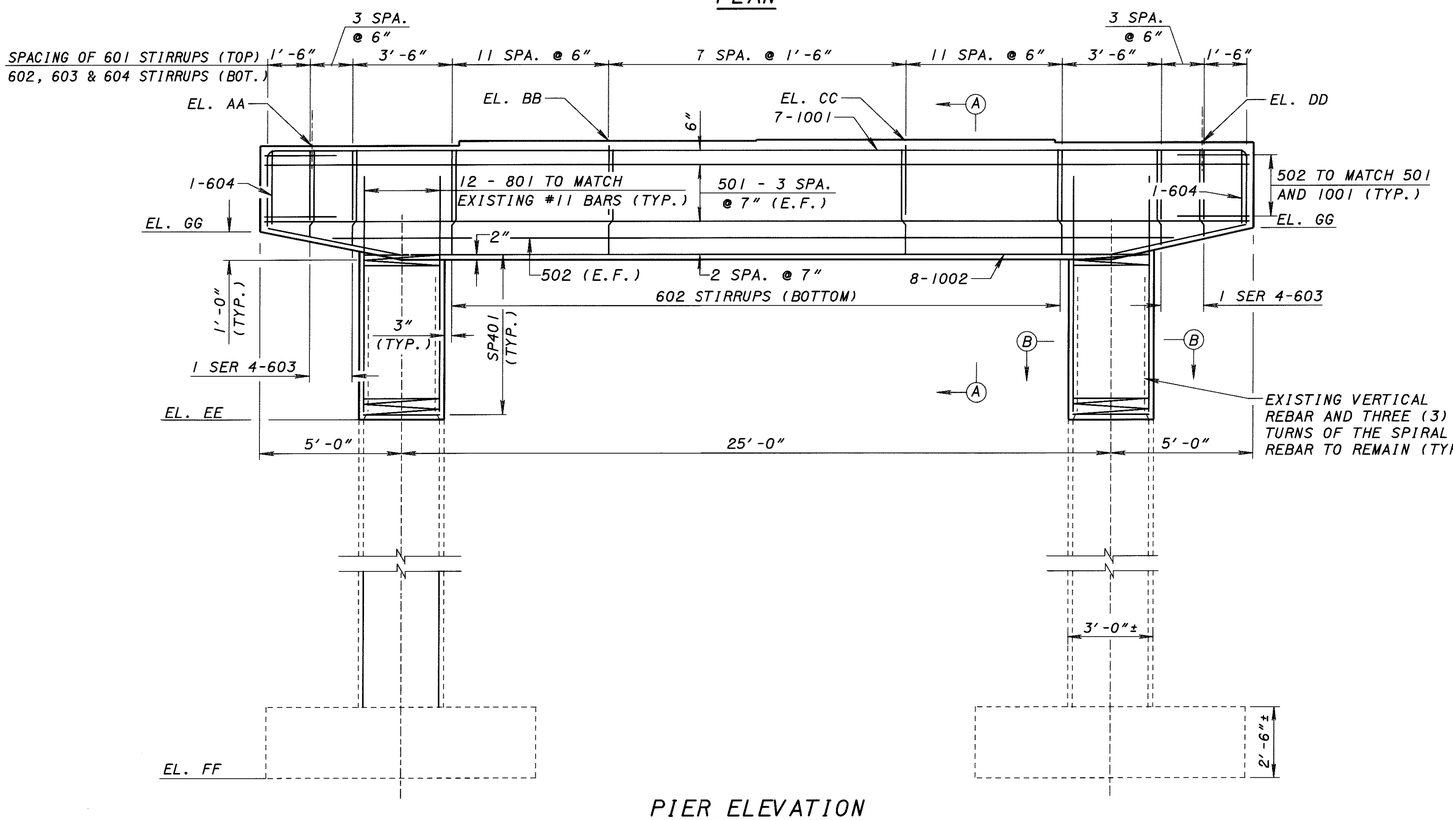

PIER ELEVATION

(LOOKING UPSTATION)

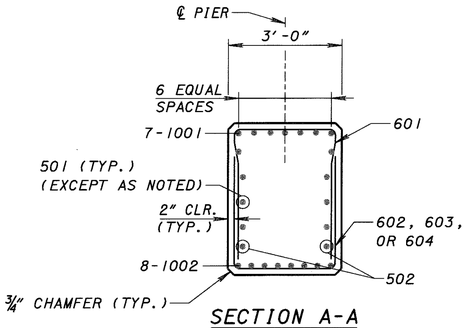

SECTION A-A

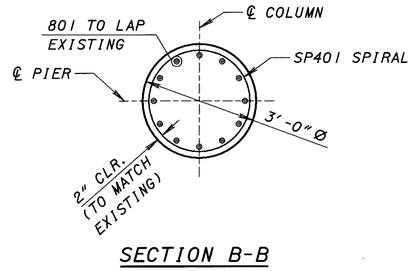

SECTION B-B

ELEVATIONS							
PIER	AA	BB	CC	DD	EE	FF	GG
PIER 1	819.73	819.90	819.94	819.84	810.67	795.42	816.73
PIER 2	819.05	819.23	819.26	819.17	809.93	795.93	816.05
PIER 3	818.46	818.63	818.67	818.57	809.40	795.40	815.46

BAR. NO.	REQUIRED LAP LENGTH
NO. 5 BARS	2'-6" MINIMUM
NO. 6 BARS	3'-1" MINIMUM
NO. 8 BARS	4'-3" MINIMUM
NO. 10 BARS	6'-0" MINIMUM

NOTES:

1. REINFORCING BAR MARKS SHALL BE PREFIXED "P" EXCEPT SPIRAL BAR SHALL BE "SP".
2. FOR LIMITS OF CONCRETE SEALING, SEE SHEET 5 OF 17.
3. FOR REINFORCEMENT SCHEDULE SEE SHEET 17 OF 17.

DESIGN AGENCY
HNTB 85 Erieview Plaza, Suite 500 Cleveland, Ohio 44114-1816
ARCHITECTS ENGINEERS PLANNERS

DESIGNED	DRAWN	REVISED	CHECKED
NDH	NDH		JOL

REVISED	DATE
RHW	3/05/01

STRUCTURE FILE NUMBER
1305697

PIER DETAILS
BRIDGE NO. CLE-275-0896
BARGS SALT RUN ROAD (T.R. 211) OVER I-275

CLE-275-05.35

10/17

811/857

J:\JOBS\31147\TECHPROD\Final\pier.dgn 30-MAY-2001 12:55 MLawler

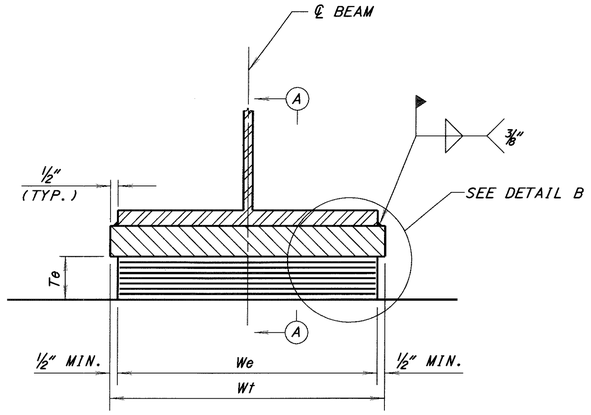

LAMINATED ELASTOMERIC EXPANSION BEARING AT PIER 1, 2, & 3

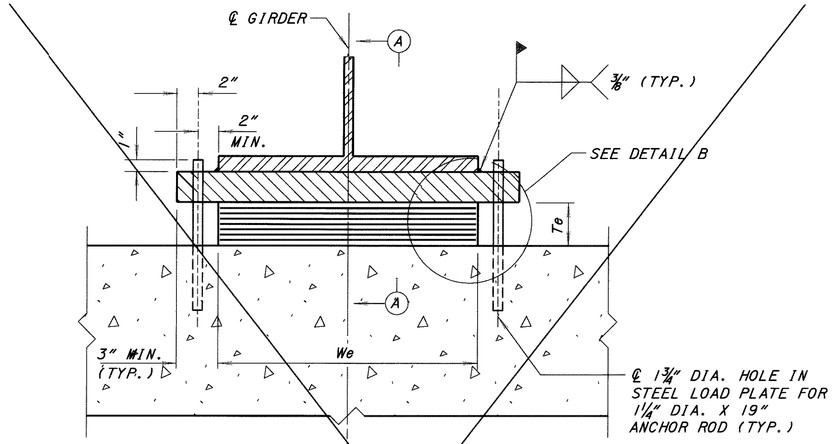

LAMINATED ELASTOMERIC FIXED BEARING AT PIER 2

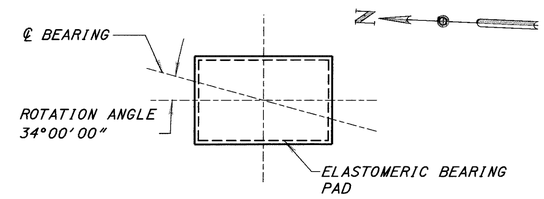

BEARING ORIENTATION PLAN

SECTION A-A

SECTION A-A

DETAIL A
STEEL LOAD PLATE

DETAIL B

ELASTOMERIC BEARING DATA

LOCATION	TYPE	NO. REQ'D.	DL(KIP)	LL(KIP) W/O IMPACT	TOTAL LOAD (DL+LL)	Le (in)	We (in)	Tpi (in)	Tpe (in)	NO. OF Tpi's	NO. OF Tpe's	NO. INTERNAL LAMINATES	Te (in)	STEEL LOAD PLATE Wt (in)	Lt (in)	tj (in)	te (in)	Tt (in)	Th (in)
ABUT.(REAR & FWD)	EXP	8	35	44	79	8.5	12.0	0.30	0.21	6	2	7	2.74	13	9.5	1.57	1.5	1.54	3.84
PIERS 1 & 3	EXP	8	153	58	211	12.0	20.0	0.36	0.26	4	2	5	2.33	21	13.0	2.08	2.0	2.04	4.37
PIER 2	EXP	4	186	58	244	12.0	20.0	0.36	0.26	4	2	5	2.33	21	13.0	2.08	2.0	2.04	4.37

NOTES

1. ELASTOMERIC BEARINGS SHALL COMPLY WITH ITEM 516 AND AASHTO STANDARD SPECIFICATION FOR HIGHWAY BRIDGES, SECTION 18, BEARING DEVICES, DIVISION II, CONSTRUCTION, ARTICLES 18.4.5.1 AND 18.5.6.2. BEARINGS SHALL BE GRADE 3, 50 DUROMETER ELASTOMER, AND SHALL BE SUBJECTED TO THE LOAD TESTING REQUIREMENTS DEFINED IN ARTICLE 18.7.4.5 OF THE AASHTO DOCUMENT LISTED ABOVE. ~~FIXED BEARINGS WERE DESIGNED UNDER SECTION 14.6.6 OF SECTION 14, BEARINGS, DIVISION I, DESIGN.~~ TESTING SHALL BE INCLUDED IN THE UNIT PRICE BID FOR THE BEARINGS, EACH.
2. ~~THE STEEL LOAD PLATE SHALL BE ASTM A36 STEEL AND SHALL BE PAINTED IN ACCORDANCE WITH SUPPLEMENTAL SPECIFICATION 815.~~
3. THE STEEL LOAD PLATE SHALL BE BONDED BY VULCANIZATION TO THE ELASTOMER DURING THE MOLDING PROCESS. WELDING OF LOAD PLATE TO THE SUPERSTURCTURE SHALL BE CONTROLLED SO THAT THE PLATE TEMPERATURE AT THE ELASTOMER BONDED SURFACE DOES NOT EXCEED 300°F AS DETERMINED BY THE USE OF PYROMETRIC STICKS OR OTHER TEMPERATURE MONITORING DEVICES.
4. BEARING REPOSITIONING: IF THE STEEL IS ERECTED AT AN AMBIENT TEMPERATURE HIGHER THAN 80°F OR LOWER THAN 40°F AND THE BEARING SHEAR DEFLECTION EXCEEDS 1/6 OF THE BEARING HEIGHT AT 60°F ± 10°F, THE BEAMS SHALL BE RAISED TO ALLOW THE BEARINGS TO RETURN TO THEIR UNDEFORMED SHAPE AT 60°F ± 10°F.
5. TOTAL DESIGN LOAD FOR BEARINGS EQUALS THE SUM OF THE DEAD LOADS AND LIVE LOADS TABULATED IN THE BEARING TABLE.
6. PAYMENT FOR EACH BEARING TYPE SHALL INCLUDE THE COST FOR ALL MATERIALS, LABOR, TESTING AND INCIDENTALS NECESSARY TO FURNISH AND INSTALL THE LAMINATED ELASTOMERIC BEARINGS, EITHER FIXED OR EXPANSION, AND LOAD PLATES. PAYMENT FOR PIER LAMINATED ELASTOMERIC BEARINGS WILL BE MADE AT THE CONTRACT PRICE FOR ITEM 516, EACH, ELASTOMERIC BEARINGS WITH INTERNAL LAMINATES AND LOAD PLATE (NEOPRENE).

   12 X 20 X 2.33 IN. WITH 13 X 21 X 2.04 IN. BEVELED LOAD PLATE.

   PAYMENT FOR ABUTMENT LAMINATED ELASTOMERIC BEARINGS WILL BE MADE AT THE CONTRACT PRICE FOR ITEM 516, EACH, ELASTOMERIC BEARINGS WITH INTERNAL LAMINATES AND LOAD PLATE (NEOPRENE), AS PER PLAN.

   8.5 X 12 X 2.74 IN. WITH 9.5 X 13 X 1.54 IN. BEVELED LOAD PLATE.
7. FOR BEARINGS AT ABUTMENT SEE SHEET 12 OF 17.

DESIGN AGENCY
HNTB 55 Erieview Plaza, Suite 600 Cleveland, Ohio 44114-1844
ARCHITECTS ENGINEERS PLANNERS

DESIGNED	DRAWN	REVIEWED	DATE
NDH	NDH	RHW	3/05/01
CHECKED	REVISED	STRUCTURE FILE NUMBER	
JDM/JOL		1305697	

BEARING DETAILS - 1
BRIDGE NO. CLE-275-0896
BARGS SALT RUN ROAD (T.R. 211) OVER I-275

CLE-275-05.35

11/17

812
357

MLawler
30-MAY-2001 12:55
J:\JOBS\31147\TECHPROD\Final\bearings.dgn

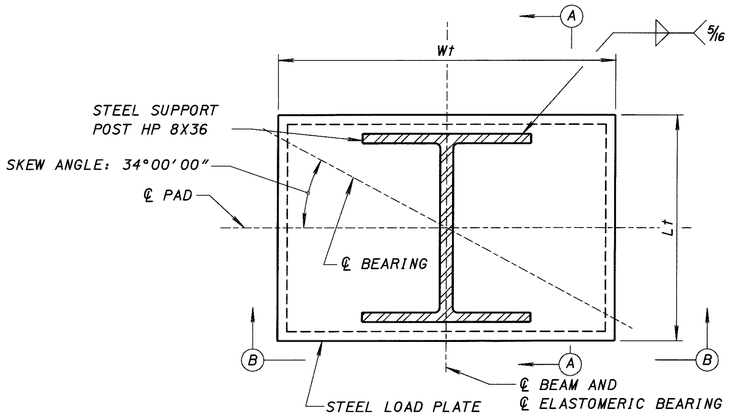

EXPANSION BEARING AT ABUTMENTS

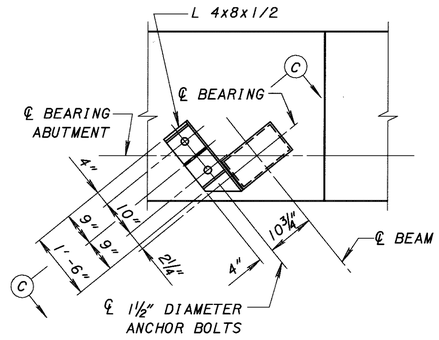

BEARING RETAINER DETAIL

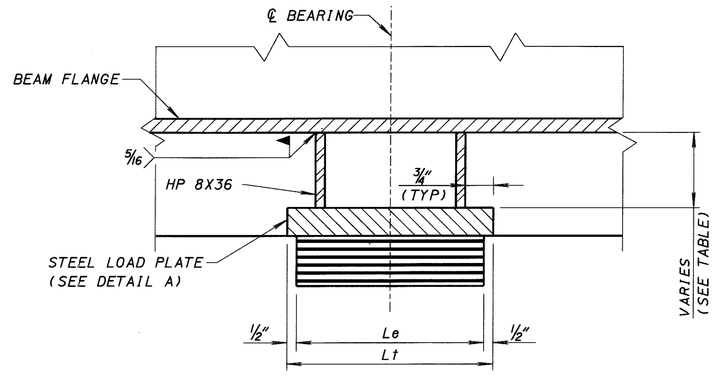

SECTION A-A

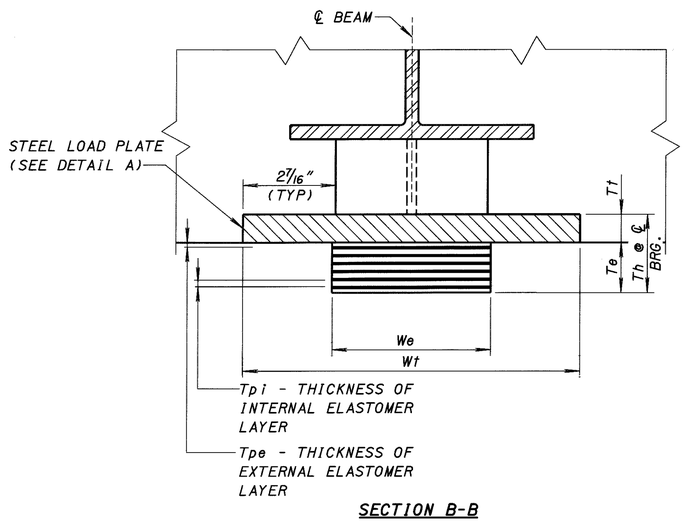

SECTION B-B

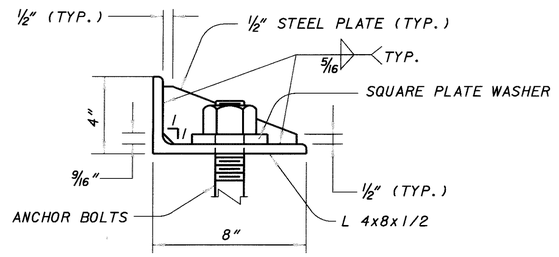

DETAIL D

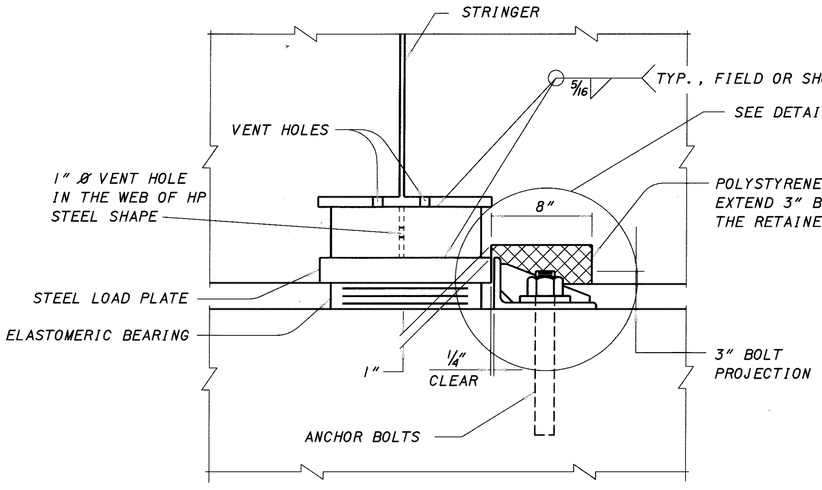

SECTION C-C

STEEL POST HEIGHTS (IN.)				
	GIRDER A	GIRDER B	GIRDER C	GIRDER D
REAR ABUT.	6	8	8.5	7.25
FWD. ABUT.	6	8	8.5	7.25

NOTES

1. HP 8x36 STEEL SUPPORT POST SHALL BE INCLUDED WITH ITEM 516 ELASTOMERIC BEARING FOR PAYMENT.
2. FOR ADDITIONAL NOTES, ABUTMENT BEARING DATA, DETAIL A, AND DETAIL B SEE SHEET 11 OF 17.
3. FOR ADDITIONAL BEARING RETAINER DETAILS, SEE ODOT STANDARD DRAWING SICD-1-96M, SHEET 6 OF 7.

J:\JOBS\3147\TECHPROD\Final\bearingsABUT.dgn 30-MAY-2001 12:55 MLawler

DESIGN AGENCY
HNTB 55 Erieview Plaza, Suite 500 Cleveland, Ohio 44114-1816
ARCHITECTS ENGINEERS PLANNERS

DESIGNED	DRAWN	REVISED	DATE
NDH	NDH		3/05/01
CHECKED	REVISED	STRUCTURE FILE NUMBER	
JDM/JOL	RHW	1305697	

BEARING DETAILS - 2
BRIDGE NO. CLE-275-0896
BARGS SALT RUN ROAD (T.R. 211) OVER I-275

CLE-275-05.35

12/17

813
857

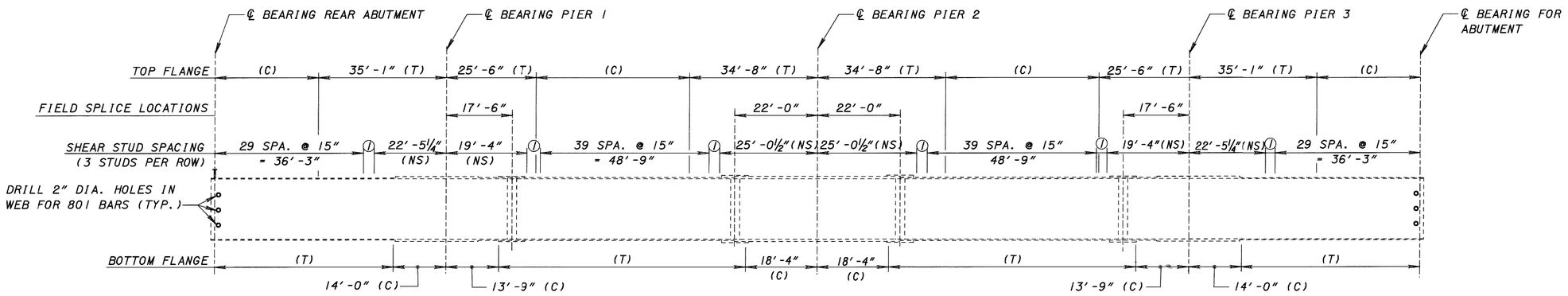

EXISTING GIRDER ELEVATION

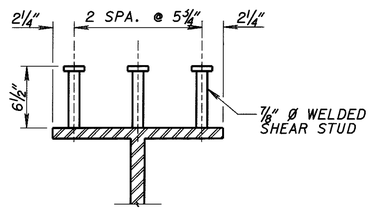

SHEAR STUD DETAIL

NOTES:

1. WELDED ATTACHMENT OF SUPPORTS FOR CONCRETE DECK FINISHING MACHINE MAY BE MADE TO AREAS OF THE FASCIA GIRDER FLANGES DESIGNATED "COMPRESSION". ATTACHMENTS SHALL NOT BE MADE TO AREAS DESIGNATED "TENSION". FILLET WELDS TO COMPRESSION FLANGES SHALL BE NOT CLOSER THAN 1" FROM EDGE OF FLANGE, BE NOT MORE THAN 2" LONG, AND BE NOT SMALLER THAN ¼" FOR THICKNESSES UP TO ¾" AND 5/16" FOR GREATER THAN ¾" THICK.
2. PAYMENT FOR DRILLING OF HOLES IN EXISTING WEB SHALL BE INCLUDED WITH ITEM 202, PORTIONS OF STRUCTURE REMOVED, AS PER PLAN.
3. FOR BEARING DETAILS SEE SHEETS 11 AND 12 OF 17.

LEGEND:

(T) DENOTES AREA OF TENSION IN FLANGE
(C) DENOTES AREA OF COMPRESSION IN FLANGE
(NS) INDICATES NO SHEAR STUDS ARE REQUIRED
SPA. = SPACES

① 10 SPA. @ 3⅜″ = 2′-9¾″

DESIGN AGENCY
HNTB 55 Erieview Plaza, Suite 500 Cleveland, Ohio 44114-1816
ARCHITECTS ENGINEERS PLANNERS

DESIGNED NDH | DRAWN NDH | CHECKED JDL | REVISED

REVIEWED RHW | DATE 3/05/01

STRUCTURE FILE NUMBER 1305697

GIRDER ELEVATION
BRIDGE NO. CLE-275-0896
BARGS SALT RUN ROAD (T.R. 211) OVER I-275

CLE-275-05.35

13/17

814/857

J:\JOBS\31147\TECHPROD\Final\Studs.dgn 30-MAY-2001 12:55 MLawler

BAR. NO.	REQUIRED LAP LENGTH
NO. 5 TOP TRANSV. BARS	2'-6" MINIMUM
NO. 5 BOT. TRANSV. BARS	3'-3" MINIMUM
NO. 5 TOP AND BOT. LONG. BARS	2'-6" MINIMUM
NO. 6 BARS	3'-0" MINIMUM

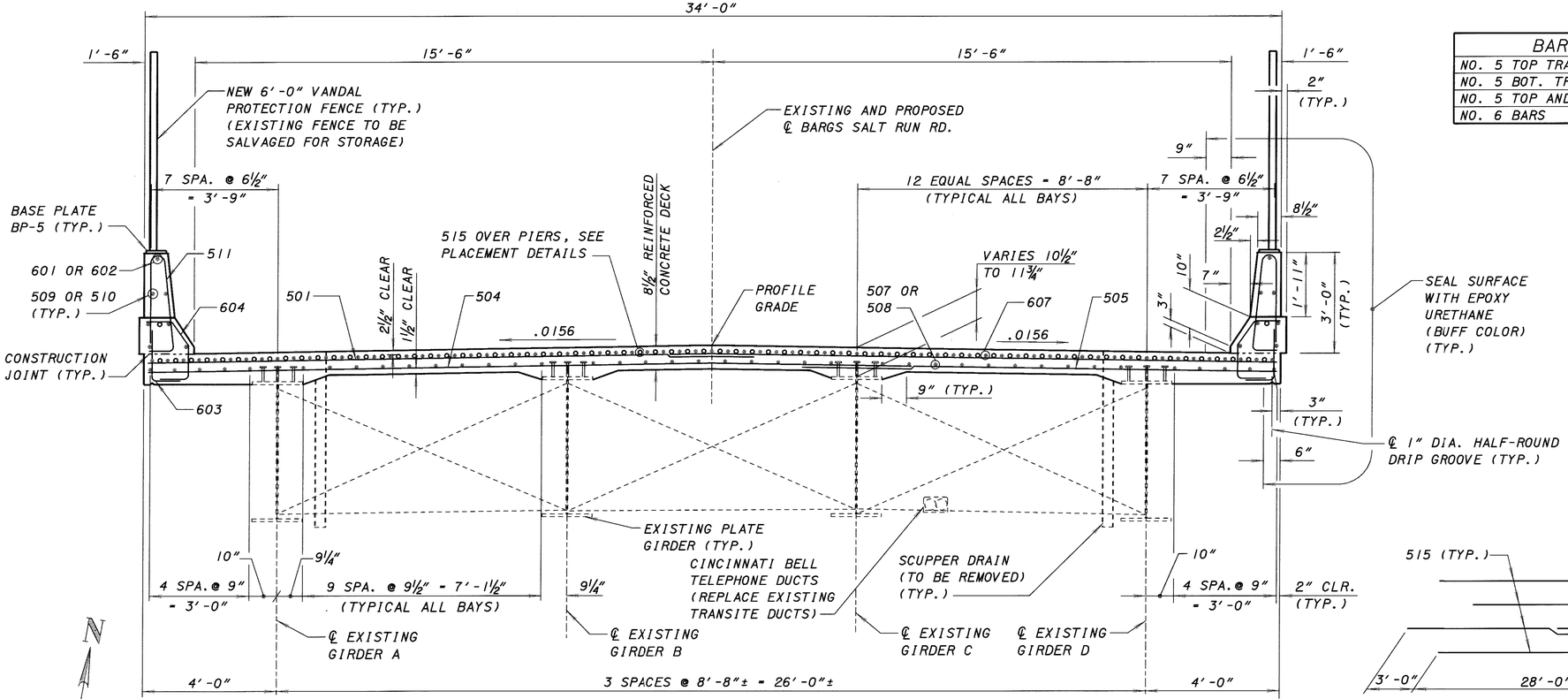

TYPICAL DECK SECTION

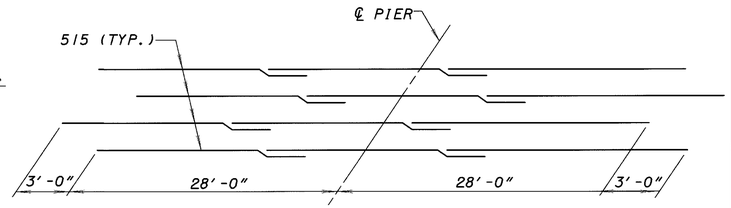

PLACEMENT OF ADDITIONAL REINFORCEMENT OVER PIERS
(TYPICAL AT ALL PIERS)

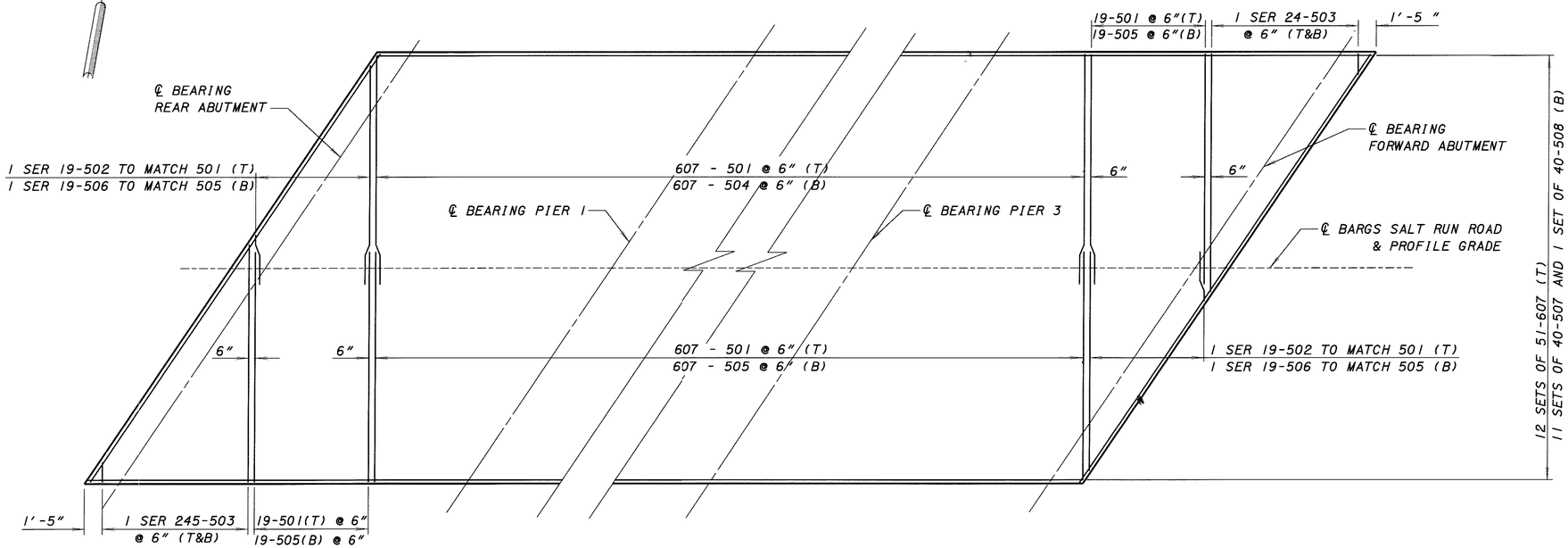

SLAB PLAN

NOTES:

ALL DECK REINFORCING BAR MARKS SHALL BE PREFIXED S.

THE DIMENSION SHOWN FROM THE TOP OF THE CONCRETE DECK TO THE TOP OF THE FLANGE, MINUS THE DESIGN HAUNCH THICKNESS OF 2 INCHES, HAS BEEN USED FOR COMPUTING THE DECK CONCRETE QUANTITIES. CONCRETE REQUIRED TO FILL THE HAUNCHES, INCLUDING ADDITIONAL OR LESS MATERIAL REQUIRED DUE TO HAUNCH CONSTRUCTION TOLERANCES, SHALL BE CONSIDERED AS INCIDENTAL AND WILL NOT BE INCLUDED IN THE QUANTITY CALCULATIONS FOR PAYMENT.

TRANSVERSE REINFORCEMENT SHALL BE FIELD BENT AS REQUIRED. PAYMENT SHALL BE INCLUDED WITH ITEM 842, CONCRETE CLASS S.

A HAUNCH WIDTH OF 9 INCHES SHALL BE USED. HOWEVER, THE HAUNCH WIDTH MAY VARY BETWEEN 6 INCHES AND 12 INCHES.

FOR BARRIER DETAILS SEE SHEET 16 OF 17

FOR DECK SCREED ELEVATIONS, SEE SHEET 15 OF 17.

FOR REINFORCEMENT SCHEDULE, SEE SHEET 17 OF 17.

DESIGN AGENCY
HNTB 55 Erieview Plaza Suite 500 Cleveland, Ohio 44114-1816
ARCHITECTS ENGINEERS PLANNERS

DESIGNED	DRAWN	REVISED	DATE
NDH	NDH	RHW	3/05/01
CHECKED	REVISED	STRUCTURE FILE NUMBER	
JOL		1305697	

SLAB PLAN AND SECTION
BRIDGE NO. CLE-275-0896
BARGS SALT RUN ROAD (T.R. 211) OVER I-275

CLE-275-05.35

14/17

815/857

J:\JOBS\3II47\TECHPROD\Final\slab.dgn 30-MAY-2001 12:55 MLawler

ANTICIPATED DEFLECTIONS DUE TO REMAINING DEAD LOAD (INCHES)								DECK SCREED ELEVATIONS (FEET)						
LOCATIONS	LEFT GUTTER	GIRDER A	GIRDER B	PROFILE GRADE	GIRDER C	GIRDER D	RIGHT GUTTER	LEFT GUTTER	GIRDER A	GIRDER B	PROFILE GRADE	GIRDER C	GIRDER D	RIGHT GUTTER
℄ BEARING REAR ABUTMENT	0.000	0.000	0.000	0.000	0.000	0.000	0.000	825.59	825.64	825.81	825.90	825.85	825.75	825.72
0.25	-0.141	-0.141	-0.142	-0.142	-0.142	-0.141	-0.141	825.50	825.55	825.73	825.81	825.76	825.66	825.64
0.50	-0.129	-0.129	-0.130	-0.130	-0.130	-0.129	-0.129	825.40	825.45	825.63	825.71	825.66	825.57	825.54
0.75	-0.014	-0.014	-0.015	-0.015	-0.015	-0.014	-0.014	825.30	825.35	825.52	825.60	825.56	825.46	825.43
℄ BEARING PIER 1	0.000	0.000	0.000	0.000	0.000	0.000	0.000	825.20	825.25	825.42	825.50	825.46	825.36	825.33
0.25	-0.379	-0.379	-0.371	-0.371	-0.371	-0.379	-0.379	825.07	825.12	825.29	825.38	825.33	825.23	825.20
0.50	-0.593	-0.593	-0.581	-0.581	-0.581	-0.593	-0.593	824.93	824.98	825.15	825.24	825.19	825.09	825.06
0.75	-0.287	-0.287	-0.281	-0.281	-0.281	-0.287	-0.287	824.75	824.79	824.97	825.05	825.01	824.91	824.88
℄ BEARING PIER 2	0.000	0.000	0.000	0.000	0.000	0.000	0.000	824.56	824.61	824.79	824.87	824.82	824.73	824.70
0.25	-0.285	-0.285	-0.281	-0.281	-0.281	-0.285	-0.285	824.43	824.48	824.65	824.74	824.69	824.59	824.56
0.50	-0.591	-0.591	-0.581	-0.581	-0.581	-0.591	-0.591	824.30	824.35	824.52	824.60	824.56	824.46	824.43
0.75	-0.377	-0.377	-0.371	-0.371	-0.371	-0.377	-0.377	824.12	824.17	824.34	824.43	824.38	824.28	824.25
℄ BEARING PIER 3	0.000	0.000	0.000	0.000	0.000	0.000	0.000	823.93	823.98	824.15	824.24	824.19	824.09	824.07
0.25	-0.016	-0.016	-0.015	-0.015	-0.015	-0.016	-0.016	823.83	823.88	824.06	824.14	824.09	824.00	823.97
0.50	-0.132	-0.132	-0.130	-0.130	-0.130	-0.132	-0.132	823.75	823.80	823.97	824.05	824.00	823.91	823.88
0.75	-0.144	-0.144	-0.142	-0.142	-0.142	-0.144	-0.144	823.65	823.70	823.87	823.96	823.91	823.81	823.78
℄ BEARING FORWARD ABUTMENT	0.000	0.000	0.000	0.000	0.000	0.000	0.000	823.54	823.59	823.76	823.85	823.80	823.70	823.67

NOTE:
1. SCREED ELEVATIONS SHOWN ARE FOR THE DECK SLAB SURFACE PRIOR TO CONCRETE PLACEMENT. ALLOWANCE HAS BEEN MADE FOR ANTICIPATED CALCULATED DEAD LOAD DEFLECTIONS OF THE EXISTING GIRDERS.

DESIGN AGENCY
HNTB 55 Erieview Plaza Suite 500 Cleveland, Ohio 44114-1816
ARCHITECTS ENGINEERS PLANNERS

DESIGNED MJL | DRAWN MJL | CHECKED JOL | REVISED | REVIEWED RHW | DATE 3/05/01 | STRUCTURE FILE NUMBER 1305697

DECK SCREED ELEVATIONS
BRIDGE NO. CLE-275-0896
BARGS SALT RUN ROAD (T.R. 211) OVER I-275

CLE-275-05.35

15/17

816/857

30-MAY-2001 12:55 MLawler
J:\JOBS\31147\TECHPROD\Final\screed.dgn

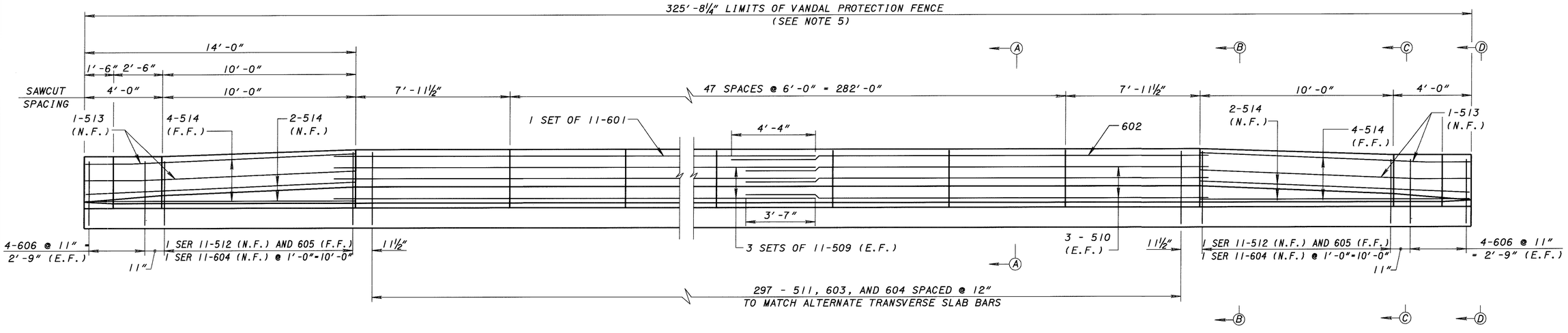

PARAPET ELEVATION

LEFT PARAPET SHOWN
(RIGHT PARAPET SIMILIAR)

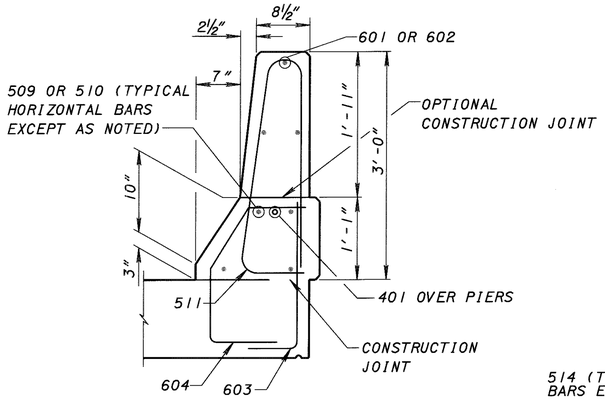

SECTION A-A

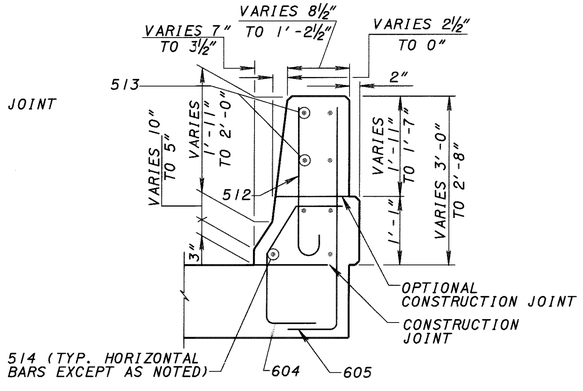

SECTION B-B

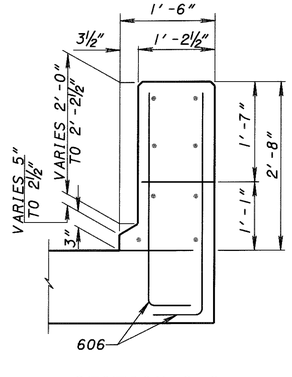

SECTION C-C
(FOR ADDITIONAL DETAILS, SEE SECTION B-B)

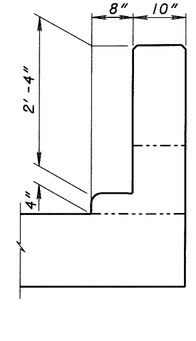

SECTION D-D
(SEE SECTION C-C FOR REINFORCING STEEL DETAILS)

NOTES:

1. ALL REINFORCING BARS SHALL BE PREFIXED S.
2. FOR DECK SLAB DETAILS, SEE SHEET 14 OF 17.
3. FOR REINFORCEMENT SCHEDULE, SEE SHEET 17 OF 17.
4. FOR ADDTIONAL DETAILS, SEE ODOT STANDARD DRAWING BR-1, SHEET 1 OF 2.
5. JOINTS SHALL BE PLACED AT A MINIMUM OF 6 FEET AND MAXIMUM OF 10 FEET ON CENTERS. PARAPET SAWCUTS SHALL NOT BE CONSTRUCTED CLOSER THAN 7" FROM THE CENTER OF THE FENCE POSTS. VERTICAL REINFORCING STEEL SHALL CLEAR THE CONTROL JOINTS BY 3" MINIMUM. CLEARANCE SHALL BE OBTAINED BY FIELD ADJUSTMENT OF THE CONTROL JOINT LOCATION OR REINFORCING STEEL SPACING.

DESIGN AGENCY
HNTB 55 Erieview Plaza, Suite 500 Cleveland, Ohio 44114-1818
ARCHITECTS ENGINEERS PLANNERS

DESIGNED	DRAWN	REVIEWED	DATE
NDH	NDH	RHW	3/05/01
CHECKED	REVISED	STRUCTURE FILE NUMBER	
JOL		1305697	

PARAPET DETAILS
BRIDGE NO. CLE-275-0896
BARGS SALT RUN ROAD (T.R. 211) OVER I-275

CLE-275-05.35

16/17

817/857

J:\JOBS\3147\TECHPROD\Final\barrier.dgn 30-MAY-2001 12:55 MLawler

BAR SCHEDULE

MARK	NUMBER REQ'D	LENGTH	WEIGHT	TYPE	A	B	C	D	E	SER. INCR.
				ABUTMENT - EPOXY COATED BARS						
A 501	4 SER 10	17'-11"	532	105	8'-1"	2'-0"				1'-1¾"
		7'-7"		105	2'-11"	2'-0"				
A 502	18	18'-3"	343	105	8'-3"	2'-0"				
A 503	2 SER 6	25'-8"	223	STR						3'-1⅝"
		10'-0"		STR						
A 504	4 SER 6	24'-3"	409	STR						3'-2"
		8'-5"		STR						
A 505	2	26'-11"	56	108	20'-9"	6'-2"	5	12		
A 506	4	25'-3"	105	108	20'-9"	4'-6"	5	12		
A 507	56	7'-7"	443	105	2'-8"	2'-6"				
A 508	56	13'-10"	809	109	3'-2"	3'-6"				
A 509	16	21'-6"	359	STR						
A 510	4 SER 4	11'-3"	157	105	4'-9"	2'-0"				1'-2⅝"
		7'-7"		105	2'-11"	2'-0"				
A 511	16	14'-9"	246	105	6'-6"	2'-0"				
A 512	26	19'-9"	536	105	9'-0"	2'-0"				
A 513	8	8'-3"	69	STR						
A 514	58	6'-6"	393	105	1'-9"	3'-3"				
A 515	8	23'-0"	192	STR						
A 516	140	5'-6"	803	STR						
A 517	8	26'-4"	220	STR						
A 518	16	24'-6"	409	STR						
A 519	62	15'-0"	970	109	5'-6"	1'-9"				
A 520	2 SER 4	26'-6"	204	STR						1'-4"
		22'-5"		STR						
A 521	2	26'-6"	55	STR						
A 522	2	22'-5"	47	STR						
A 523	2	13'-2"	27	109	4'-7"	1'-9"				
A 524	2	9'-0"	19	109	2'-6"	1'-9"				
A 525	2	12'-3"	25	109	4'-1"	1'-9"				
A 526	2	7'-10"	16	109	1'-11"	1'-9"				
A 527	4	17'-2"	72	109	6'-7"	1'-9"				
A 528	2 SER 4	24'-6"	188	STR						1'-3"
		20'-8"		STR						
A 529	2	20'-8"	43	STR						
A 530	2	24'-6"	51	STR						
A 531	2 SER 6	22'-6"	179	STR						3'-3¼"
		6'-2"		STR						
A 532	2	23'-9"	50	108	20'-9"	3'-0"	5	12		
A 801	72	23'-3"	4470	STR						
A 803	2 SER 4	26'-6"	522	STR						1'-4"
		22'-5"		STR						
A 804	2 SER 4	24'-6"	482	STR						1'-3"
		20'-8"		STR						
A 805	8	8'-1"	173	STR						
	TOTAL WEIGHT =		13897	*						

BAR SCHEDULE

MARK	NUMBER REQ'D	LENGTH	WEIGHT	TYPE	A	B	C	D	E	SER. INCR.
				PIER - EPOXY COATED BARS						
SP 401	6	142'-7"	571	150	2'-8"	17	4½"			
P 501	24	34'-8"	868	STR						
P 502	30	7'-3"	227	105	2'-6"	2'-6"				
P 601	114	8'-8"	1484	105	3'-2"	2'-8"				
P 602	90	9'-10"	1329	105	3'-9"	2'-8"				
P 603	6 SER 4	8'-10"	312	105	3'-3"	2'-8"				1"
		8'-6"			3'-1"	2'-8"				
P 604	6	11'-3"	101	109	2'-8"	2'-8"				
P 801	72	8'-6"	1634	STR						
P 1001	21	39'-1"	3532	105	2'-6"	34'-8"				
P 1002	24	34'-9"	3597	141	25'-0"	4'-11"	1	5		
	TOTAL WEIGHT =		13655	*						
				SUPERSTRUCTURE - EPOXY COATED BARS						
S 501	1252	18'-1"	23614	STR						
S 502	2 SER 19	17'-4"	423	STR						8⅞"
		4'-0"								
S 503	4 SER 24	18'-8"	1018	STR						8⅞"
		1'-8"								
S 504	607	22'-10"	14456	STR						
S 505	645	14'-1"	9474	STR						
S 506	2 SER 19	22'-1"	611	STR						8⅞"
		8'-9"								
S 507	440	30'-0"	13767	STR						
S 508	40	23'-6"	980	STR						
S 509	132	30'-0"	4130	STR						
S 510	12	14'-6"	181	STR						
S 511	594	6'-0"	3717	160	2'-6"	2'-9"	8"	1¼"		
S 512	4 SER 11	3'-4"	145	101	2'-9"					⅜"
		3'-0"			2'-5"					
S 513	8	13'-10"	93	180	10'-0"	2'-5"	1'-5"			
S 514	24	13'-10"	346	STR						
S 515	648	21'-6"	14531	STR						
S 601	22	30'-0"	991	STR						
S 602	2	24'-3"	73	STR						
S 603	594	4'-1"	3643	104	1'-9"	11"				
S 604	638	3'-3"	3114	142	10½"	11½"	10½"	9"		
S 605	4 SER 11	4'-5"	281	104	3'-8"	11"				⅜"
		4'-1"			3'-4"	11"				
S 606	32	3'-7"	172	104	3'-3"	6"				
S 607	612	30'-0"	27577	STR						
DS 806	56	5'-2"	773	107	1'-5"	2'-10"	12	12		
	TOTAL WEIGHT =		124110	*						

BAR BENDING DIAGRAMS

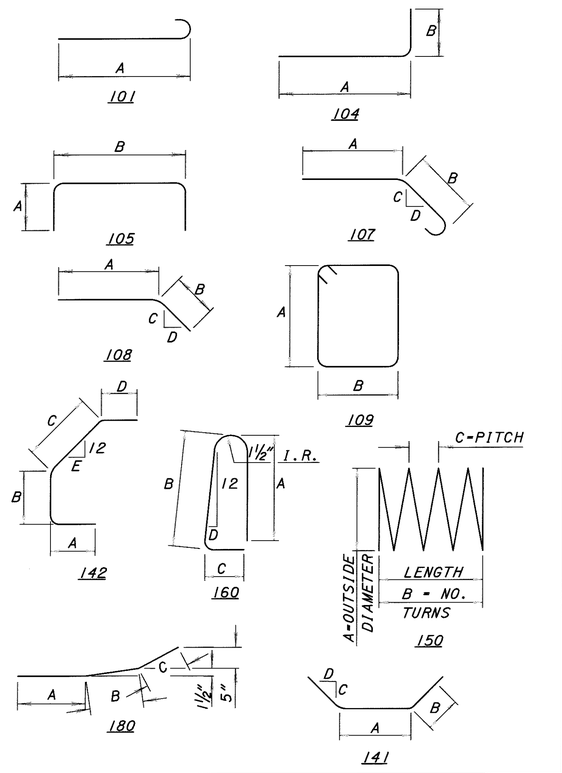

NOTES:

1. THE BAR SIZE NUMBER IS SPECIFIED IN THE BAR MARK COLUMN. THE FIRST DIGIT WHERE THREE DIGITS ARE USED, AND THE FIRST TWO DIGITS WHERE FOUR DIGITS ARE USED, INDICATES THE BAR SIZE NUMBER. FOR EXAMPLE, A 801 IS A NO. 8 BAR. BAR DIMENSIONS SHOWN ARE OUT- TO- OUT UNLESS OTHERWISE INDICATED. "R" INDICATES INSIDE RADIUS, UNLESS OTHERWISE NOTED. "STD." WRITTEN IN PLACE OF A DIMENSION INDICATES A STANDARD BEND AT THE END OF THE BAR.

2. ALL BARS OF A GIVEN SERIES VARY BY A CONSTANT INCREMENT.

3. ALL BARS SHALL BE EPOXY COATED.

4. REINFORCING STEEL SHALL BE INCLUDED WITH ITEM 844 FOR PAYMENT.

5. A - ABUTMENT
   P - PIER
   S - SLAB
   STR - STRAIGHT
   SP - SPIRAL

6. REFER TO CMS SECTIONS 106.03, 700 AND 709.00 THROUGH 709.08. SUFFICIENT ADDITIONAL REINFORCING STEEL SHALL BE PROVIDED FOR SAMPLING. RANDOM SAMPLES SHALL BE REPLACED IN THE STRUCTURES BY THE ADDITIONAL STEEL, SPLICED IN ACCORDANCE WITH 509.08.

* FOR INFORMATION PURPOSES ONLY

DESIGN AGENCY
HNTB
55 Erieview Plaza, Suite 500
Cleveland, Ohio 44114-1815
ARCHITECTS ENGINEERS PLANNERS

DESIGNED	DRAWN	REVIEWED	DATE
NDH	NDH	RHW	3/05/01

CHECKED	REVISED	STRUCTURE FILE NUMBER
JDM		1305697

REINFORCING SCHEDULE
BRIDGE NO. CLE-275-0896
BARGS SALT RUN ROAD (T.R. 211) OVER I-275

CLE-275-05.35

17/17

818/857

J:\JOBS\31147\TECHPROD\Final\Rebar.dgn 30-MAY-2001 12:55 MLawler

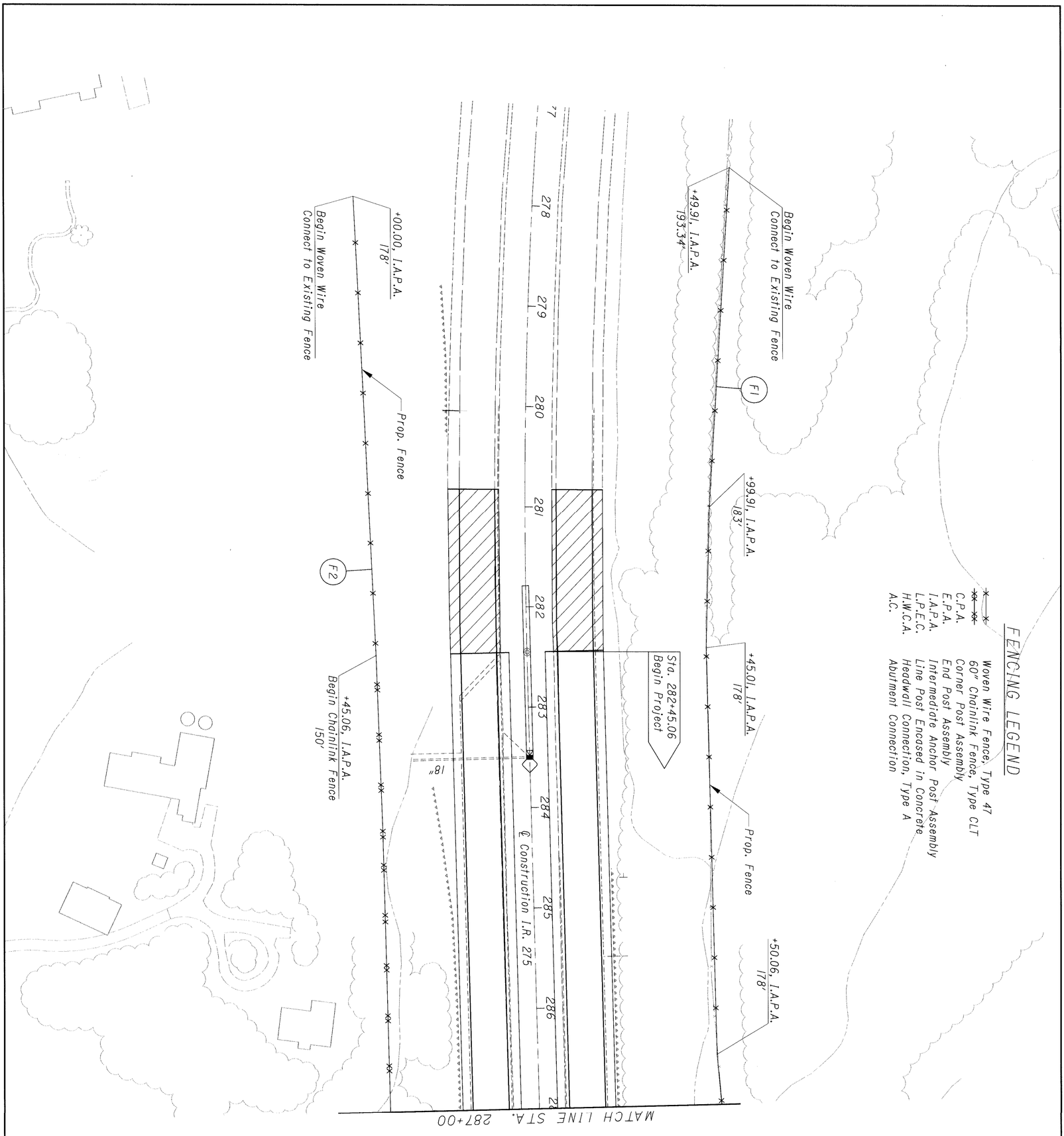

REF NO.	STATION FROM	STATION TO	SIDE	202 FENCE REMOVED	601 R.C.P. TYPE 6 WITH FILTER	607 FENCE TYPE 47	607 FENCE TYPE CLT	625 GROUND ROD	FOR INFORMATION ONLY FENCE TERMINAL TYPE A	FENCE TERMINAL TYPE C	C.P.A.	E.P.A.	I.A..P.A.	L.P.E.C.	H.W.C.A.	A.C.	STREAM CROSSING TYPE 1	STREAM CROSSING TYPE 2	STREAM CROSSING TYPE 3
				L.F.	C.Y.	L.F.	L.F.	EACH	EACH	EACH	EACH	EACH	EACH	EACH	EACH	EACH	EACH	EACH	EACH
F1	277+49.91	287+99.97	LT	1034.52		1034.52							4						
F2	278+00.00	288+50.00	RT	1063.49		458.54	604.95				1		3			1			
TOTALS CARRIED TO SUB-SUMMARY				2098.01		1493.06	604.95				1		7			1			

819
857

CLE-275-5.35

I.R. 275 FENCE PLAN
STA. 277+49.91 TO STA. 287+00

CALCULATED EF
CHECKED AM

0 25 50 100
HORIZONTAL SCALE IN FEET

N

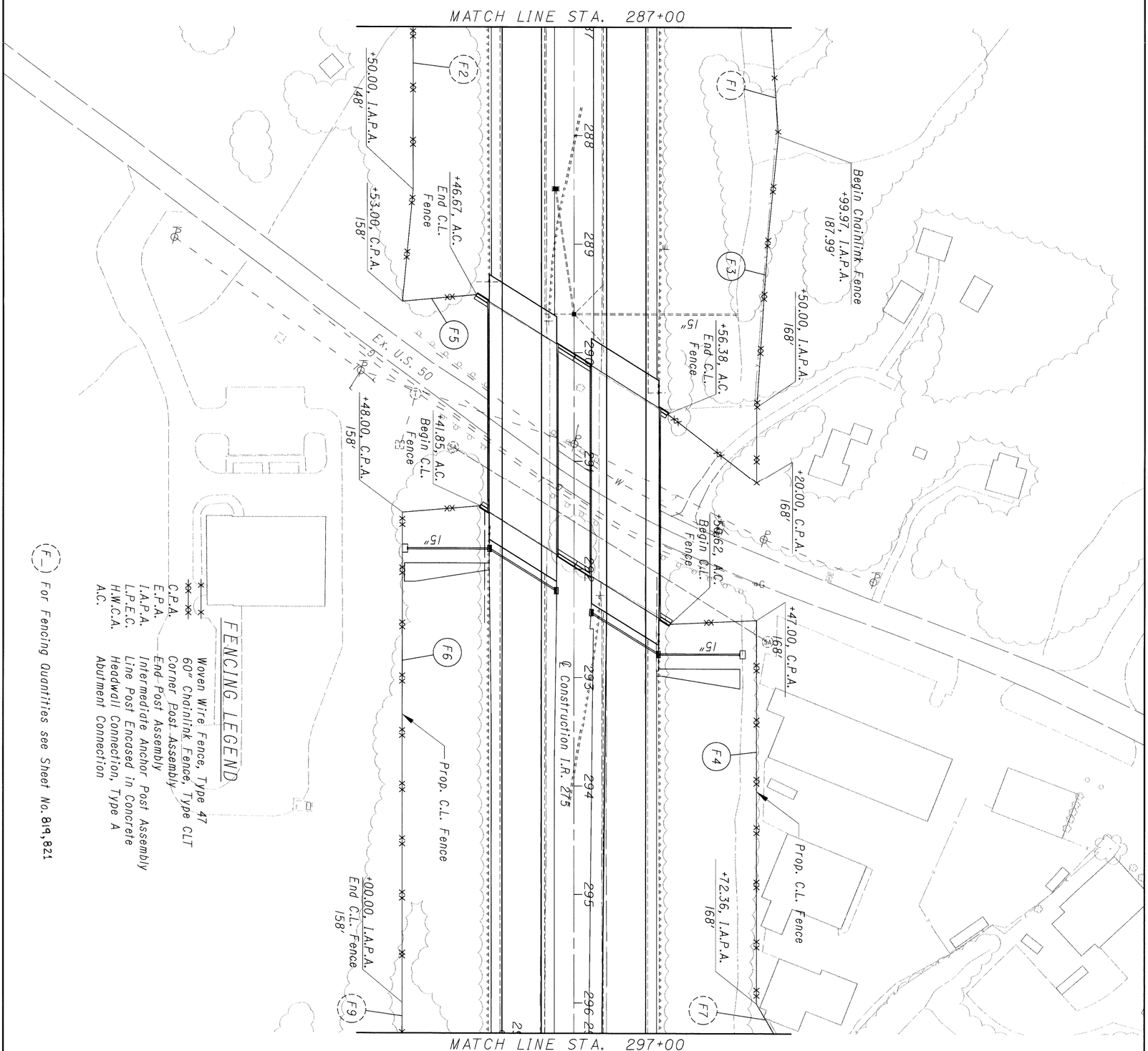

REF NO.	STATION		SIDE	202	601	607	607	625	FOR INFORMATION ONLY										
	FROM	TO		FENCE REMOVED	R.C.P. TYPE 6 WITH FILTER	FENCE TYPE 47	FENCE TYPE CLT	GROUND ROD	FENCE TERMINAL TYPE A	FENCE TERMINAL TYPE C	C.P.A.	E.P.A.	I.A.P.A.	L.P.E.C.	H.W.C.A.	A.C.	STREAM CROSSING TYPE 1	STREAM CROSSING TYPE 2	STREAM CROSSING TYPE 3
				L.F.	C.Y.	L.F.	L.F.	EACH	EACH	EACH	EACH	EACH	EACH	EACH	EACH	EACH	EACH	EACH	EACH	EACH
F3	277+49.91	287+99.97	LT	424.80			424.80				1		2			1			
F4	278+00.00	288+50.00	LT	433.38			433.38				1					1			
F5	288+50.00	289+46.67	RT	172.05			172.05				1		1			1			
F6	291+41.85	296+00.00	RT	524.26			524.26				1					1			
TOTALS CARRIED TO SUB-SUMMARY				1554.49			1554.49				4		3			4			

CLE-275-5.35

I.R. 275 FENCE PLAN
STA. 287+00 TO STA. 297+00

CALCULATED EF
CHECKED AM

0 50
25 100
HORIZONTAL SCALE IN FEET

N

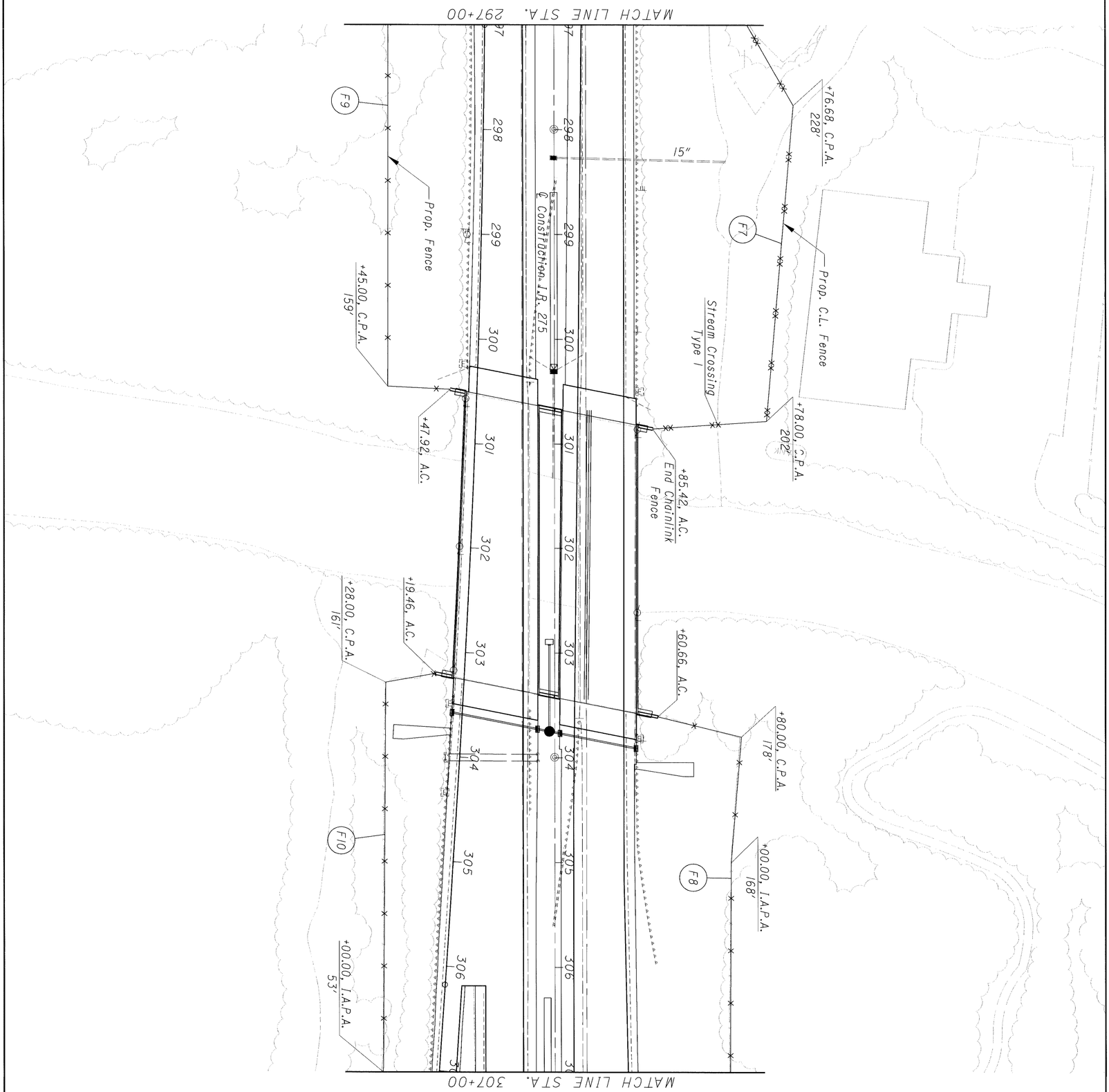

REF NO.	STATION		SIDE	202	601	607	607	625	FOR INFORMATION ONLY										
	FROM	TO		FENCE REMOVED	R.C.P. TYPE 6 WITH FILTER	FENCE TYPE 47	FENCE TYPE CLT	GROUND ROD	FENCE TERMINAL TYPE A	FENCE TERMINAL TYPE C	C.P.A.	E.P.A.	I.A..P.A.	L.P.E.C.	H.W.C.A.	A.C.	STREAM CROSSING TYPE 1	STREAM CROSSING TYPE 2	STREAM CROSSING TYPE 3
				L.F.	C.Y.	L.F.	L.F.	EACH	EACH	EACH	EACH	EACH	EACH	EACH	EACH	EACH	EACH	EACH	EACH	EACH
F7	296+72.36	300+85.42	LT	531.46	2.0		531.46				2		1			1	1		
F8	303+60.66	309+30.00	LT	632.29		632.29					1		1			1			
F9	296+00.00	300+47.92	RT	432.92		432.92					1		1			1			
F10	303+19.46	307+00.00	RT	415.43		415.43					1					1			
TOTALS CARRIED TO SUB-SUMMARY				2012.10	2.0	1480.64	531.46				5		3			4	1		

821
857

CLE-275-5.35

I.R. 275 FENCE PLAN
STA. 297+00 TO STA. 307+00

CALCULATED EF
CHECKED AM

0 25 50 100
HORIZONTAL SCALE IN FEET

N

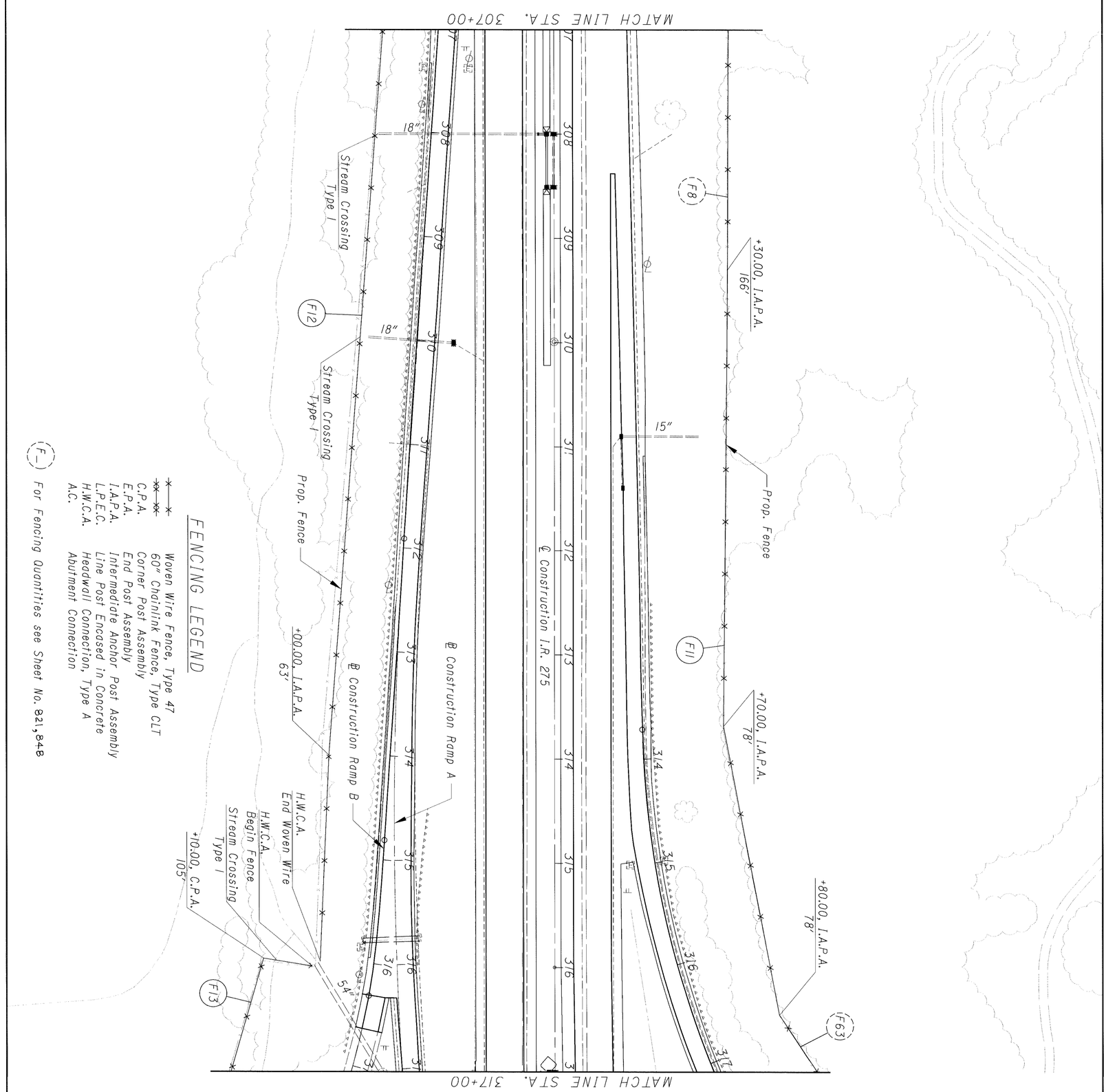

FENCING LEGEND

- Woven Wire Fence, Type 47
- 60" Chainlink Fence, Type CLT
- C.P.A. Corner Post Assembly
- E.P.A. End Post Assembly
- I.A.P.A. Intermediate Anchor Post Assembly
- L.P.E.C. Line Post Encased in Concrete
- H.W.C.A. Headwall Connection, Type A
- A.C. Abutment Connection

(F_) For Fencing Quantities see Sheet No. 821,848

REF NO.	STATION FROM	STATION TO	SIDE	202 FENCE REMOVED	601 R.C.P. TYPE 6 WITH FILTER	607 FENCE TYPE 47	607 FENCE TYPE CLT	625 GROUND ROD	FOR INFORMATION ONLY: FENCE TERMINAL TYPE A	FENCE TERMINAL TYPE C	C.P.A.	E.P.A.	I.A..P.A.	L.P.E.C.	H.W.C.A.	A.C.	STREAM CROSSING TYPE 1	STREAM CROSSING TYPE 2	STREAM CROSSING TYPE 3
				L.F.	C.Y.	L.F.	L.F.	EACH	EACH	EACH	EACH	EACH	EACH	EACH	EACH	EACH	EACH	EACH	EACH
F11	309+30.00	316+80.00	LT	720.41		720.41							2						
F12	307+00.00	316+04.44	RT	900.88	4.0	900.88							2		1		2		
F13	316+10.69	318+50.00	RT	251.60	2.0	251.60					1				1		1		
TOTALS CARRIED TO SUB-SUMMARY				1872.89	6.0	1872.89					1		4		2		3		

822
857

CLE-275-5.35

I.R. 275 FENCE PLAN
STA. 307+00 TO STA. 317+00

CALCULATED EF
CHECKED AM

0 25 50 100
HORIZONTAL SCALE IN FEET

N

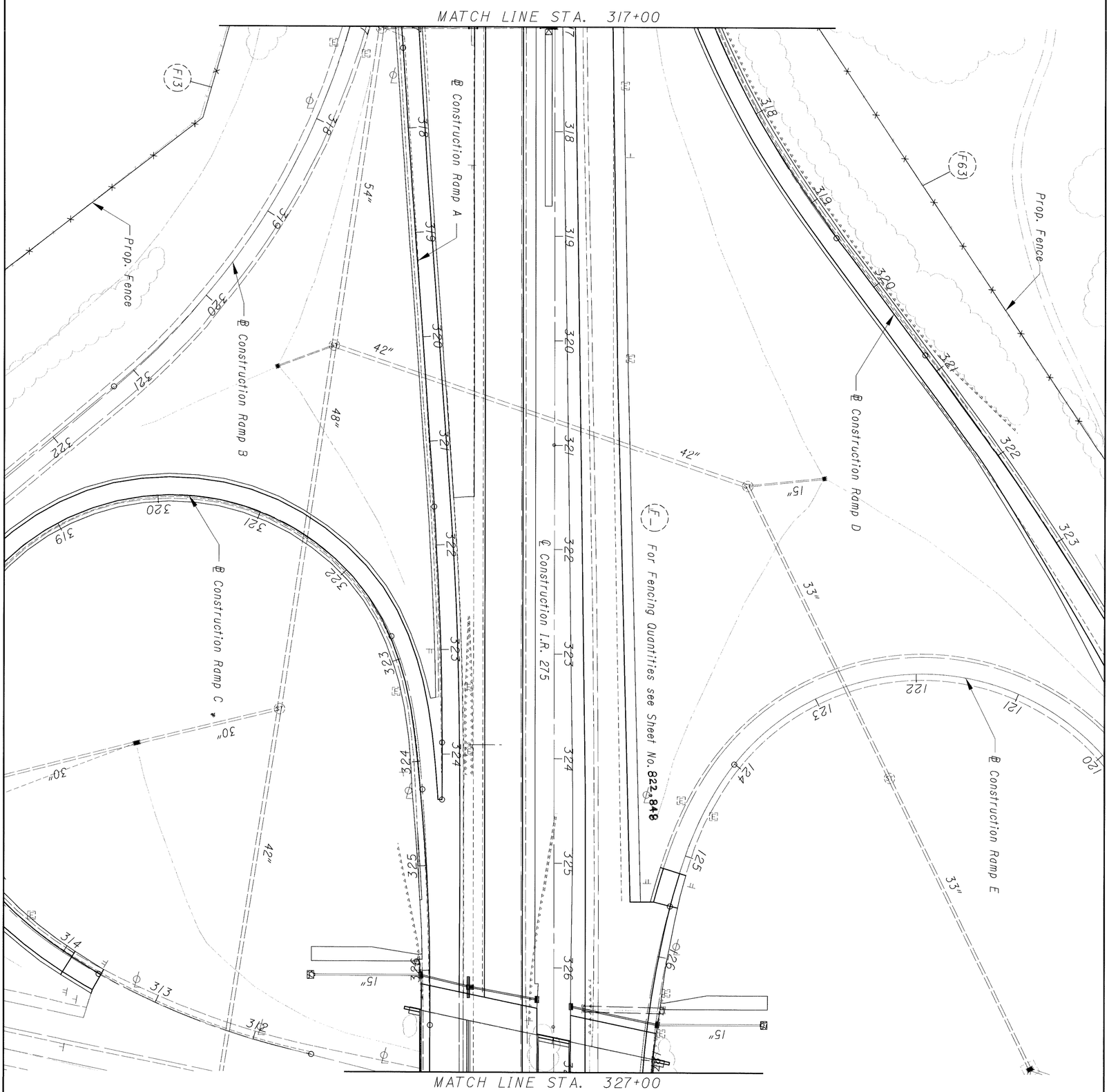

REF NO.	STATION FROM	STATION TO	SIDE											

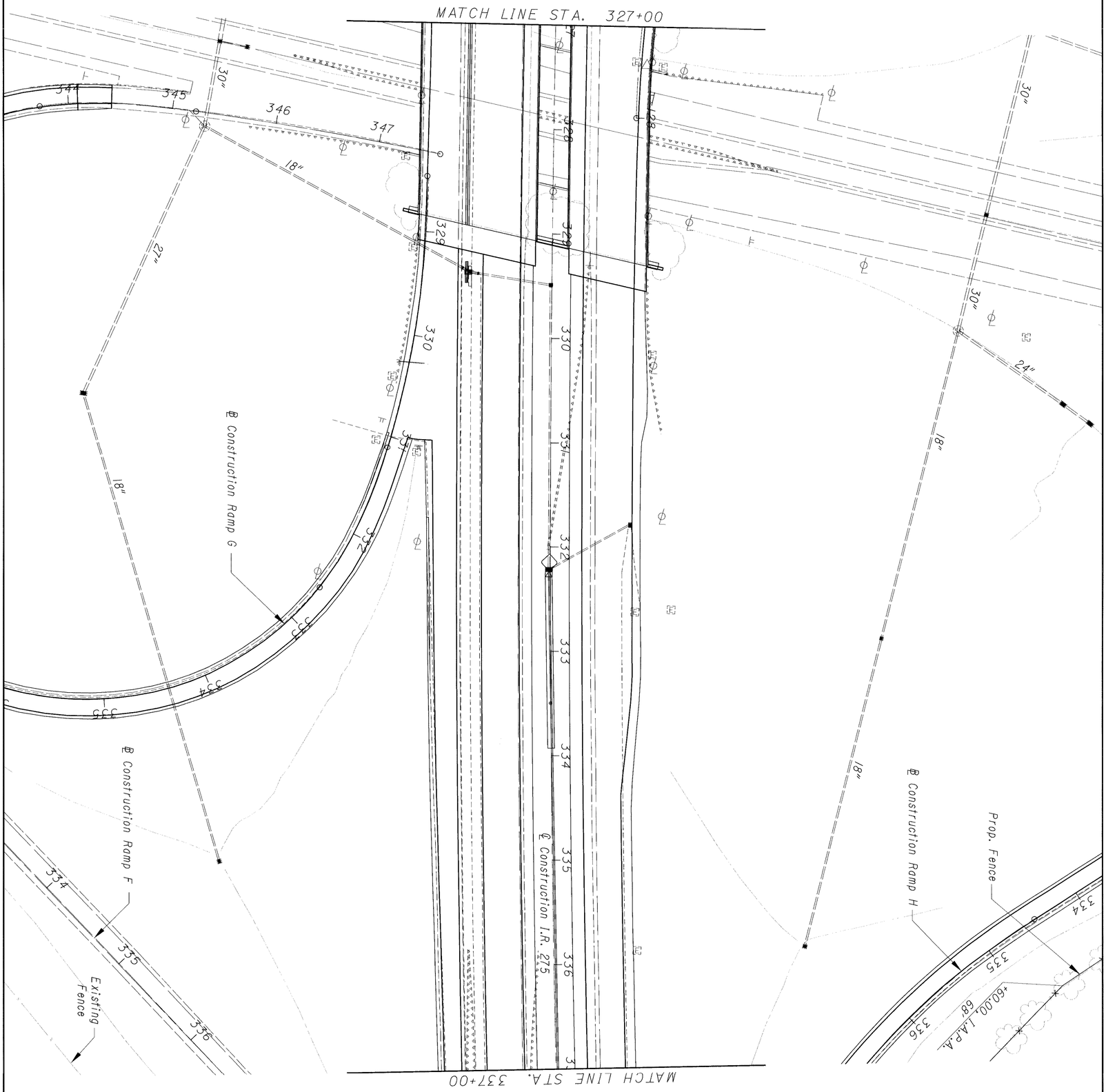

REF NO.	STATION FROM	STATION TO	SIDE											
				NO FENCE QUANTITIES THIS SHEET										
TOTALS CARRIED TO SUB-SUMMARY														

824/857

CLE-275-5.35

I.R. 275 FENCE PLAN
STA. 327+00 TO STA. 337+00

CALCULATED EF
CHECKED AM

0 50
25 100
HORIZONTAL SCALE IN FEET

N

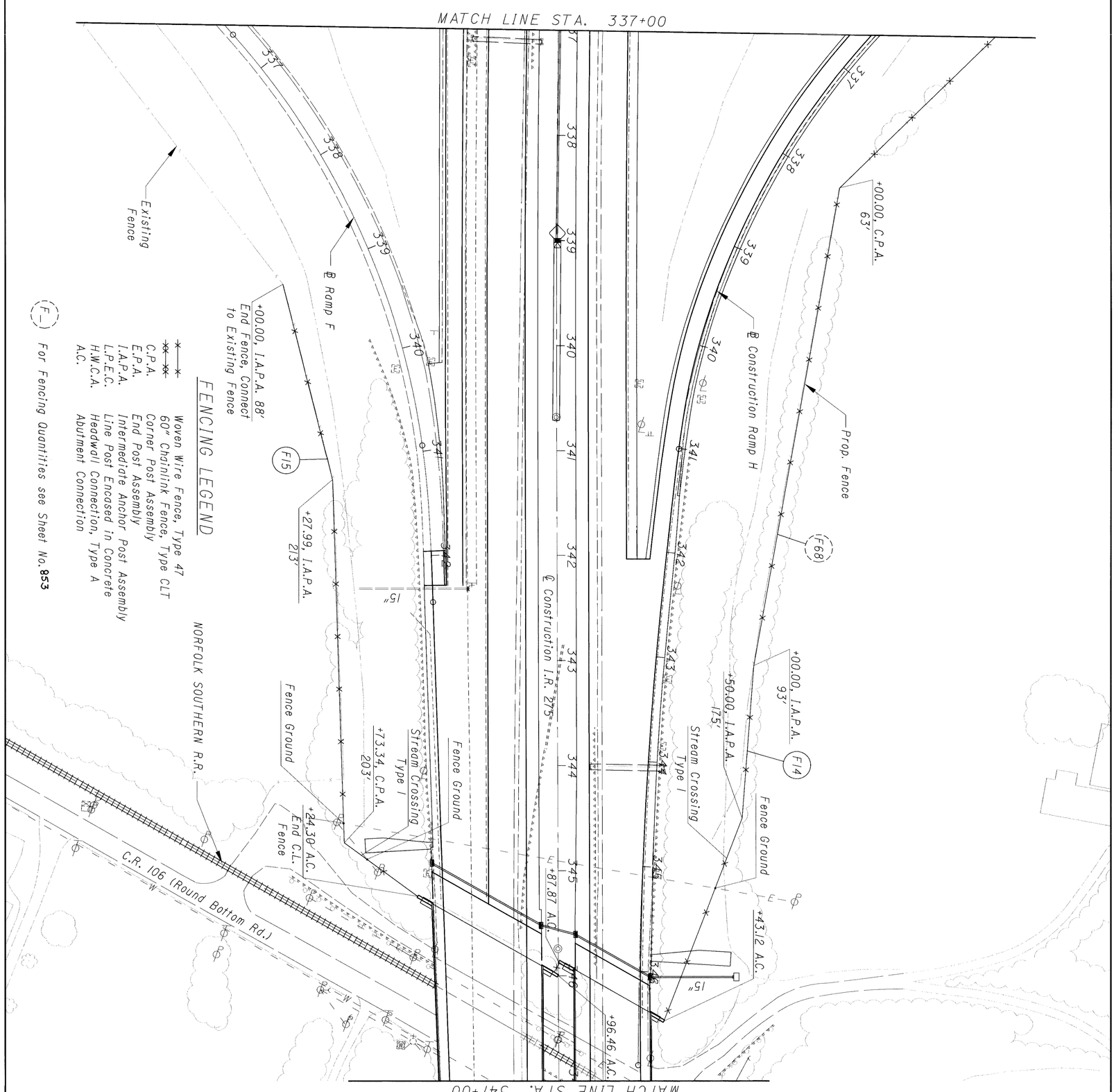

REF NO.	STATION		SIDE	202	601	607	607	625	FOR INFORMATION ONLY										
				FENCE REMOVED	R.C.P. TYPE 6 WITH FILTER	FENCE TYPE 47	FENCE TYPE CLT	GROUND ROD	FENCE TERMINAL TYPE A	FENCE TERMINAL TYPE C	C.P.A.	E.P.A.	I.A..P.A.	L.P.E.C.	H.W.C.A.	A.C.	STREAM CROSSING TYPE 1	STREAM CROSSING TYPE 2	STREAM CROSSING TYPE 3
	FROM	TO		L.F.	C.Y.	L.F.	L.F.	EACH	EACH	EACH	EACH	EACH	EACH	EACH	EACH	EACH	EACH	EACH	EACH	EACH
F14	343+00.00	346+43.12	LT	352.82	2.0	352.82		1					2			1	1		
F15	339+00.00	345+24.30	RT	623.82	2.0		623.82	2			1		2			1	1		
TOTALS CARRIED TO SUB-SUMMARY				976.64	4.0	352.82	623.82	3			1		4			2	2		

825
857

CLE-275-5.35

I.R. 275 FENCE PLAN
STA. 337+00 TO STA. 347+00

CALCULATED EF
CHECKED AM

0 50
25 100
HORIZONTAL SCALE IN FEET

N

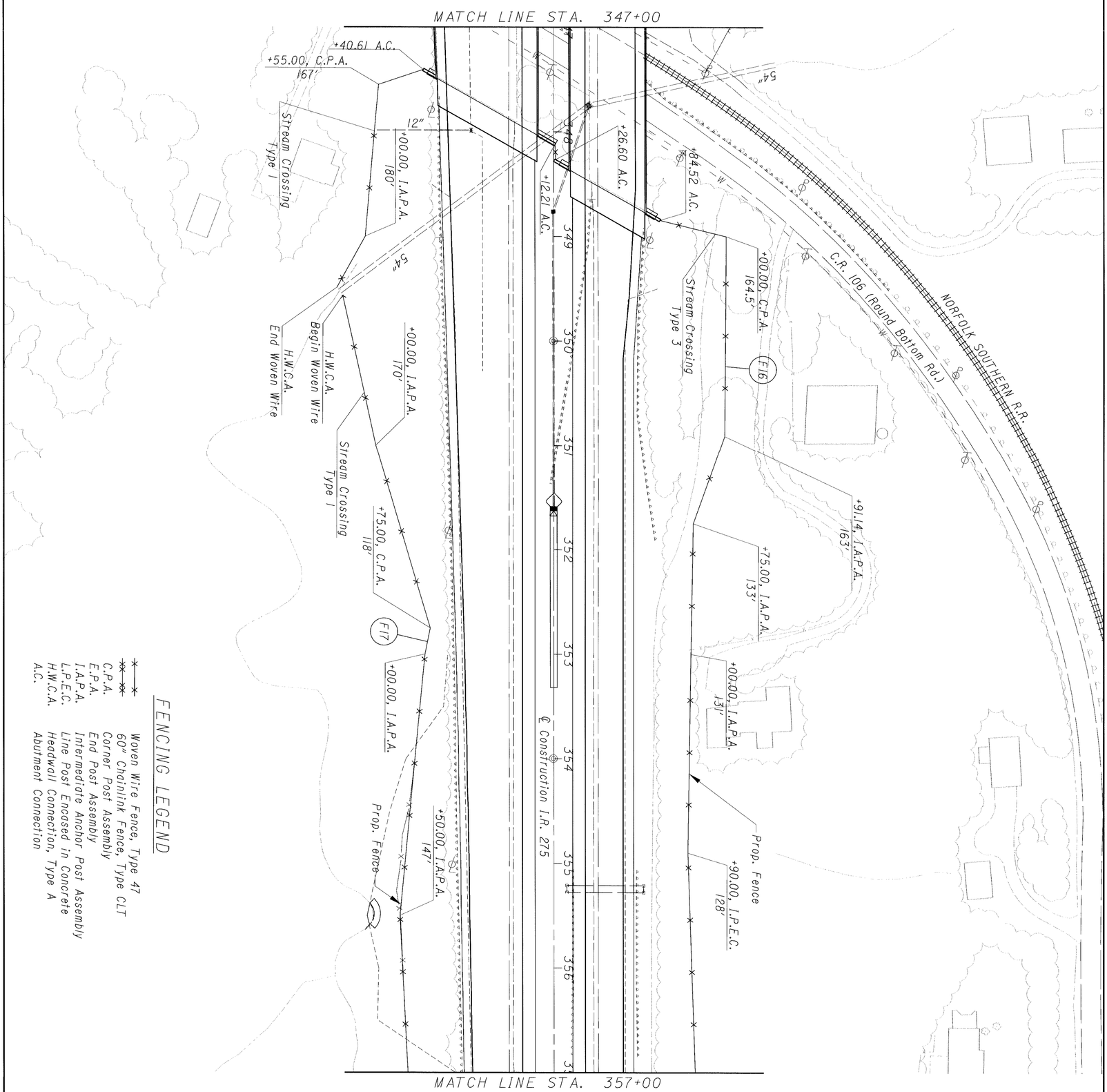

FENCING LEGEND

- Woven Wire Fence, Type 47
- 60" Chainlink Fence, Type CLT
- C.P.A. Corner Post Assembly
- E.P.A. End Post Assembly
- I.A.P.A. Intermediate Anchor Post Assembly
- L.P.E.C. Line Post Encased in Concrete
- H.W.C.A. Headwall Connection, Type A
- A.C. Abutment Connection

REF NO.	STATION		SIDE	202	601	607	607	625	FOR INFORMATION ONLY										
	FROM	TO		FENCE REMOVED	R.C.P. TYPE 6 WITH FILTER	FENCE TYPE 47	FENCE TYPE CLT	GROUND ROD	FENCE TERMINAL TYPE A	FENCE TERMINAL TYPE C	C.P.A.	E.P.A.	I.A..P.A.	L.P.E.C.	H.W.C.A.	A.C.	STREAM CROSSING TYPE 1	STREAM CROSSING TYPE 2	STREAM CROSSING TYPE 3
				L.F.	C.Y.	L.F.	L.F.	EACH	EACH	EACH	EACH	EACH	EACH	EACH	EACH	EACH	EACH	EACH	EACH	EACH
F16	348+84.52	359+50.00	LT	1120.50		1120.50					1		3	1		1			1
F17	347+40.61	357+50.00	RT	1052.98	4.0	1052.98					2		4		2	1	2		
TOTALS CARRIED TO SUB-SUMMARY				2173.48	4.0	2173.48					3		7	1	2	2	2		1

826/857

CLE-275-5.35

I.R. 275 FENCE PLAN
STA. 347+00 TO STA. 357+00

CALCULATED EF
CHECKED AM

0 25 50 100
HORIZONTAL SCALE IN FEET

N

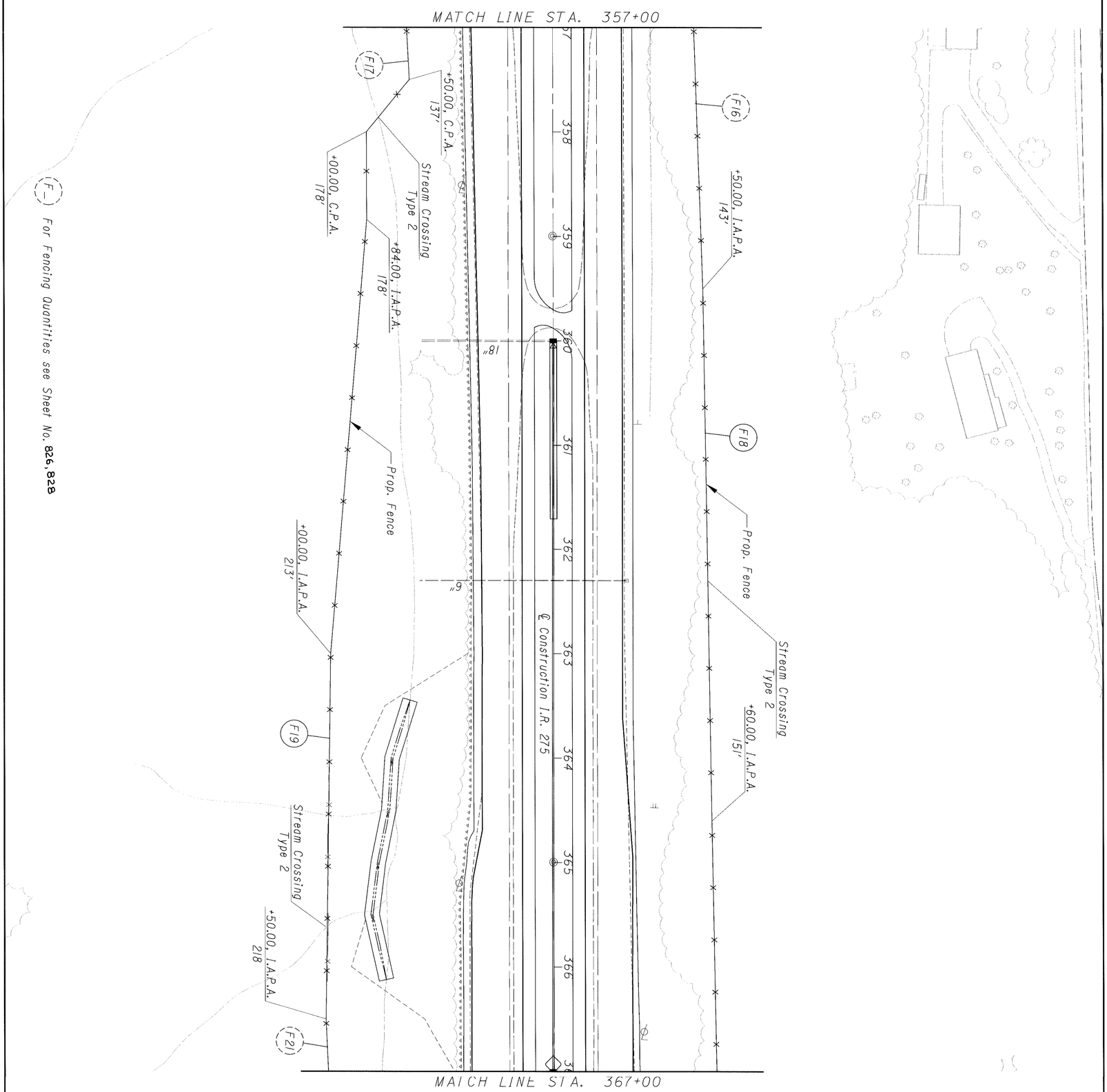

REF NO.	STATION		SIDE	202	601	607	607	625	FOR INFORMATION ONLY										
	FROM	TO		FENCE REMOVED	R.C.P. TYPE 6 WITH FILTER	FENCE TYPE 47	FENCE TYPE CLT	GROUND ROD	FENCE TERMINAL TYPE A	FENCE TERMINAL TYPE C	C.P.A.	E.P.A.	I.A.P.A.	L.P.E.C.	H.W.C.A.	A.C.	STREAM CROSSING TYPE 1	STREAM CROSSING TYPE 2	STREAM CROSSING TYPE 3
				L.F.	C.Y.	L.F.	L.F.	EACH	EACH	EACH	EACH	EACH	EACH	EACH	EACH	EACH	EACH	EACH	EACH	EACH
F18	359+50.00	369+70.00	LT	1020.14	2.0	1020.14							2					1	
F19	357+50.00	366+50.00	RT	916.17	4.0	916.17					2		2					2	
TOTALS CARRIED TO SUB-SUMMARY				1936.31	6.0	1936.31					2		4					3	

827 858

CLE-275-5.35

I.R. 275 FENCE PLAN
STA. 357+00 TO STA. 367+00

CALCULATED EF
CHECKED AM

0 50
25 100
HORIZONTAL SCALE IN FEET

N

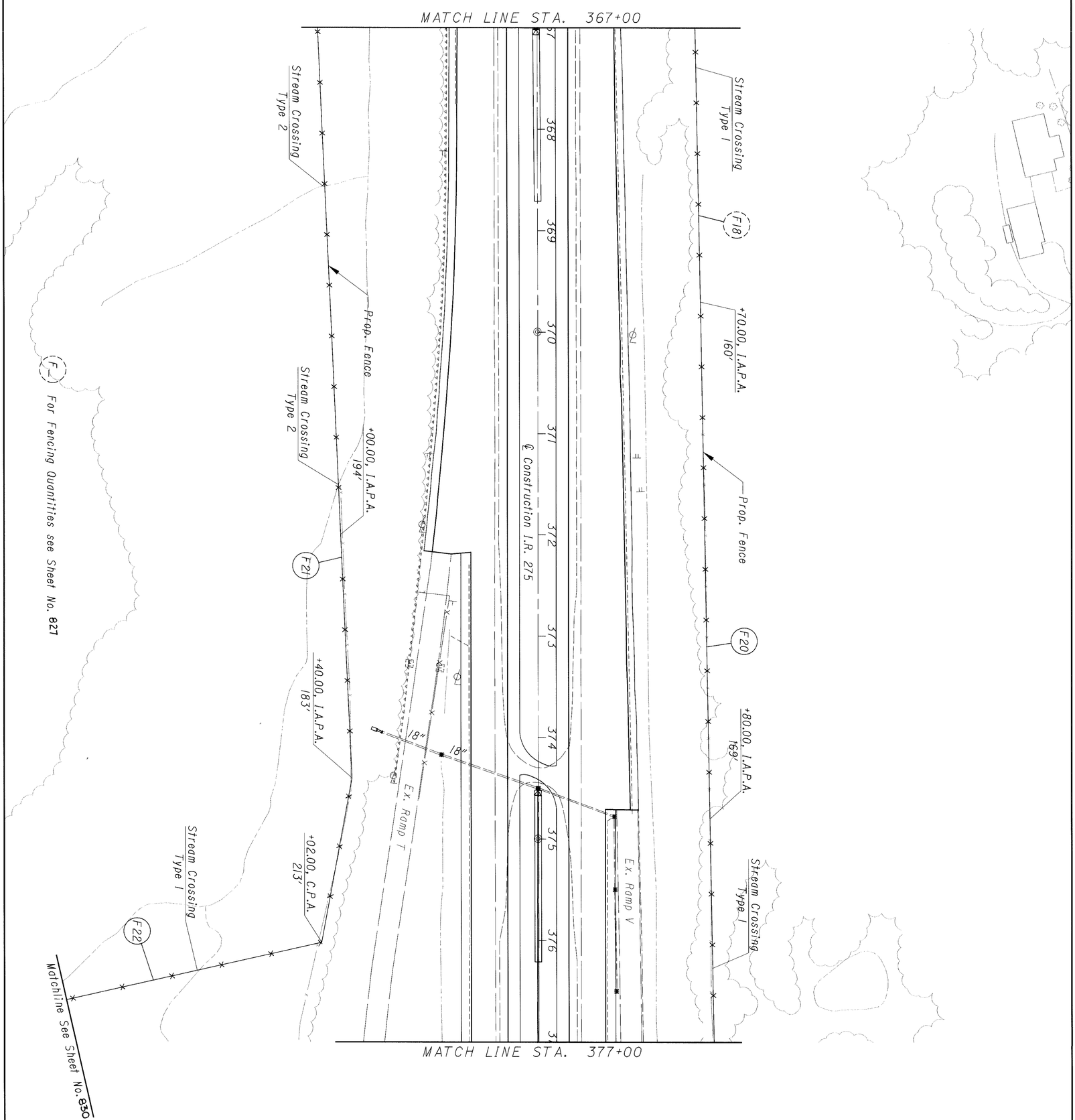

REF NO.	STATION		SIDE	202	601	607	607	625	FOR INFORMATION ONLY										
	FROM	TO		FENCE REMOVED	R.C.P. TYPE 6 WITH FILTER	FENCE TYPE 47	FENCE TYPE CLT	GROUND ROD	FENCE TERMINAL TYPE A	FENCE TERMINAL TYPE C	C.P.A.	E.P.A.	I.A..P.A.	L.P.E.C.	H.W.C.A.	A.C.	STREAM CROSSING TYPE 1	STREAM CROSSING TYPE 2	STREAM CROSSING TYPE 3
				L.F.	C.Y.	L.F.	L.F.	EACH	EACH	EACH	EACH	EACH	EACH	EACH	EACH	EACH	EACH	EACH	EACH
F20	369+70.00	380+00.00	LT	1030.20	2.0	1030.20							2				1		
F21	366+50.00	376+02.00	RT	955.53	4.0	955.53							3					2	
F22	376+02.00	377+12.00	RT	497.32	2.0	497.32					1						1		
TOTALS CARRIED TO SUB-SUMMARY				2483.05	8.0	2483.05					1		5				2	2	

828
857

CLE-275-5.35

I.R. 275 FENCE PLAN
STA. 367+00 TO STA. 377+00

CALCULATED EF
CHECKED AM

0 25 50 100
HORIZONTAL SCALE IN FEET

N

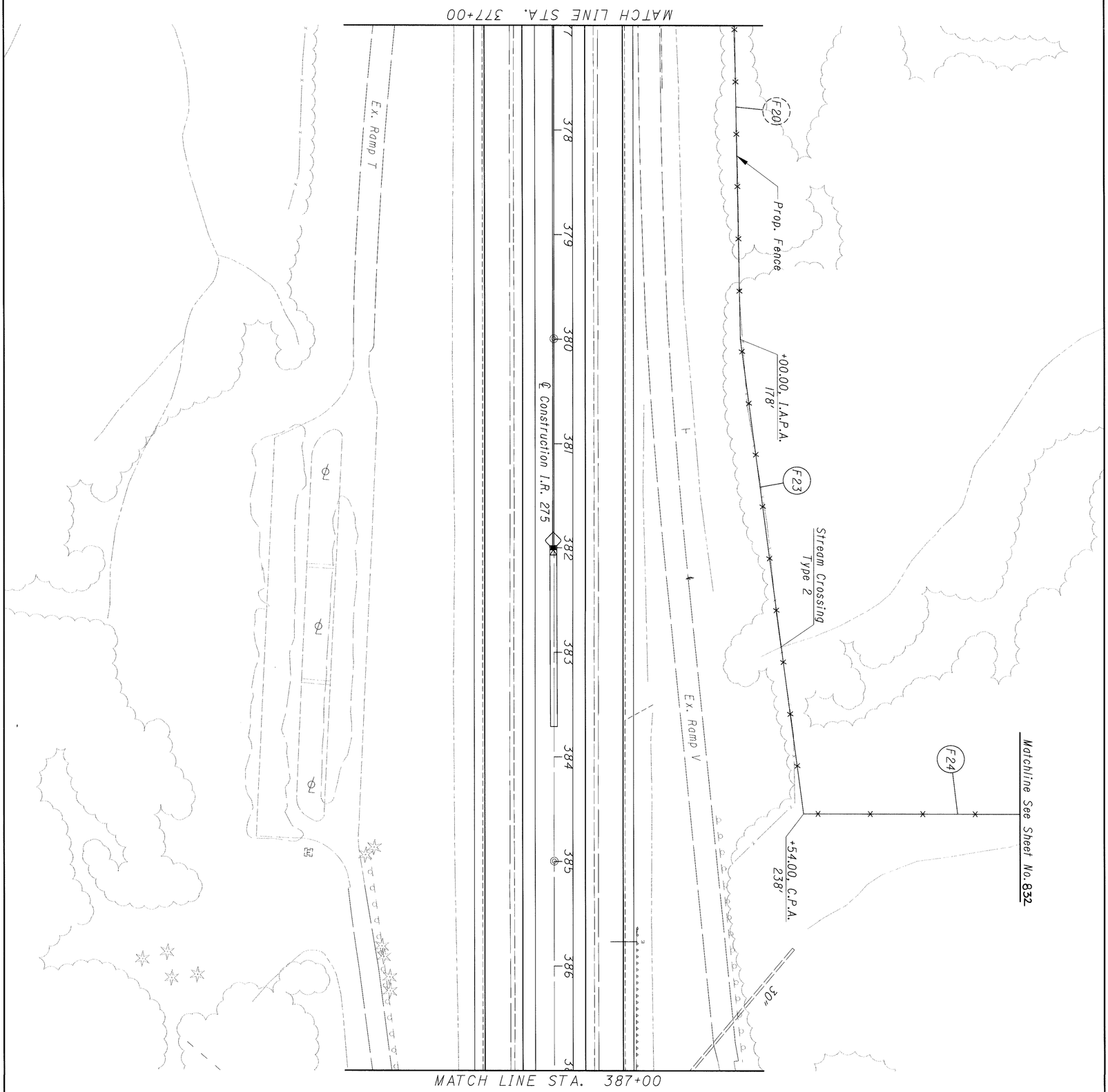

REF NO.	STATION		SIDE	202	601	607	607	625	FOR INFORMATION ONLY										
	FROM	TO		FENCE REMOVED	R.C.P. TYPE 6 WITH FILTER	FENCE TYPE 47	FENCE TYPE CLT	GROUND ROD	FENCE TERMINAL TYPE A	FENCE TERMINAL TYPE C	C.P.A.	E.P.A.	I.A..P.A.	L.P.E.C.	H.W.C.A.	A.C.	STREAM CROSSING TYPE 1	STREAM CROSSING TYPE 2	STREAM CROSSING TYPE 3
				L.F.	C.Y.	L.F.	L.F.	EACH	EACH	EACH	EACH	EACH	EACH	EACH	EACH	EACH	EACH	EACH	EACH
F23	380+00.00	384+54.00	LT	457.95	2.0	457.95							1					1	
F24	384+54.00	384+54.00	LT	460.00	2.0	460.00					1						1		
TOTALS CARRIED TO SUB-SUMMARY				917.95	4.0	917.95					1		1				1	1	

829
857

CLE-275-5.35

I.R. 275 FENCE PLAN
STA. 377+00 TO STA. 387+00

CALCULATED EF
CHECKED AM

0 25 50 100
HORIZONTAL SCALE IN FEET

N

Note:
Offsets for Fence Location are
from ℄ Construction I.R. 275

(F_) For Fencing Quantities see Sheet No. 828, 831

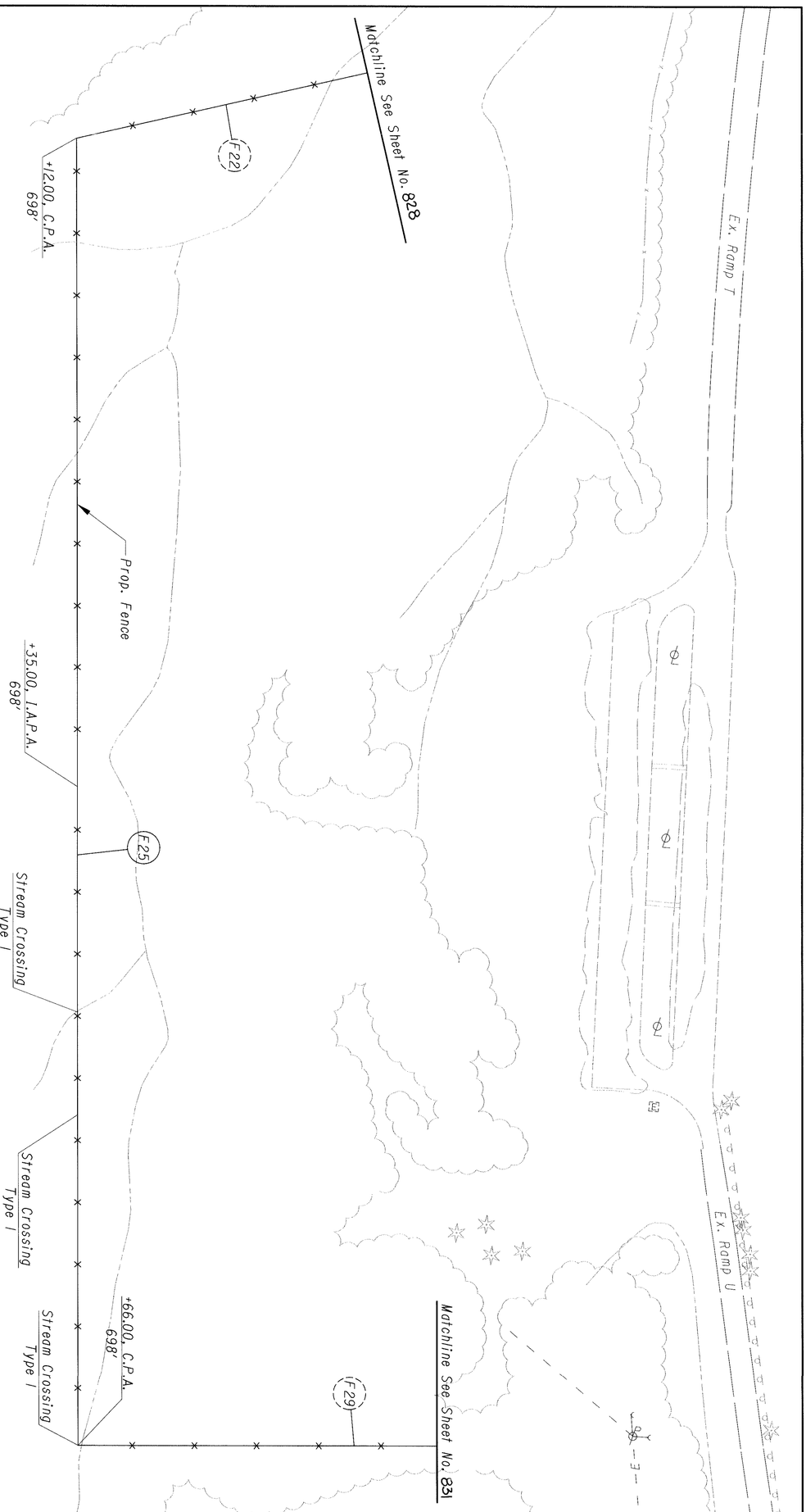

REF NO.	STATION		SIDE	202	601	607	607	625	FOR INFORMATION ONLY										
	FROM	TO		FENCE REMOVED	R.C.P. TYPE 6 WITH FILTER	FENCE TYPE 47	FENCE TYPE CLT	GROUND ROD	FENCE TERMINAL TYPE A	FENCE TERMINAL TYPE C	C.P.A.	E.P.A.	I.A..P.A.	L.P.E.C.	H.W.C.A.	A.C.	STREAM CROSSING TYPE 1	STREAM CROSSING TYPE 2	STREAM CROSSING TYPE 3
				L.F.	C.Y.	L.F.	L.F.	EACH	EACH	EACH	EACH	EACH	EACH	EACH	EACH	EACH	EACH	EACH	EACH	EACH
F25	377+12.00	387+66.00	RT	1053.81	4.0	1053.81					1		1				2		
TOTALS CARRIED TO SUB-SUMMARY				1053.81	4.0	1053.81					1		1				2		

830
357

CLE-275-5.35

I.R. 275 FENCE PLAN
STA. 376+58.96 TO STA. 387+66

CALCULATED EF
CHECKED AM

0 25 50 100
HORIZONTAL SCALE IN FEET

N

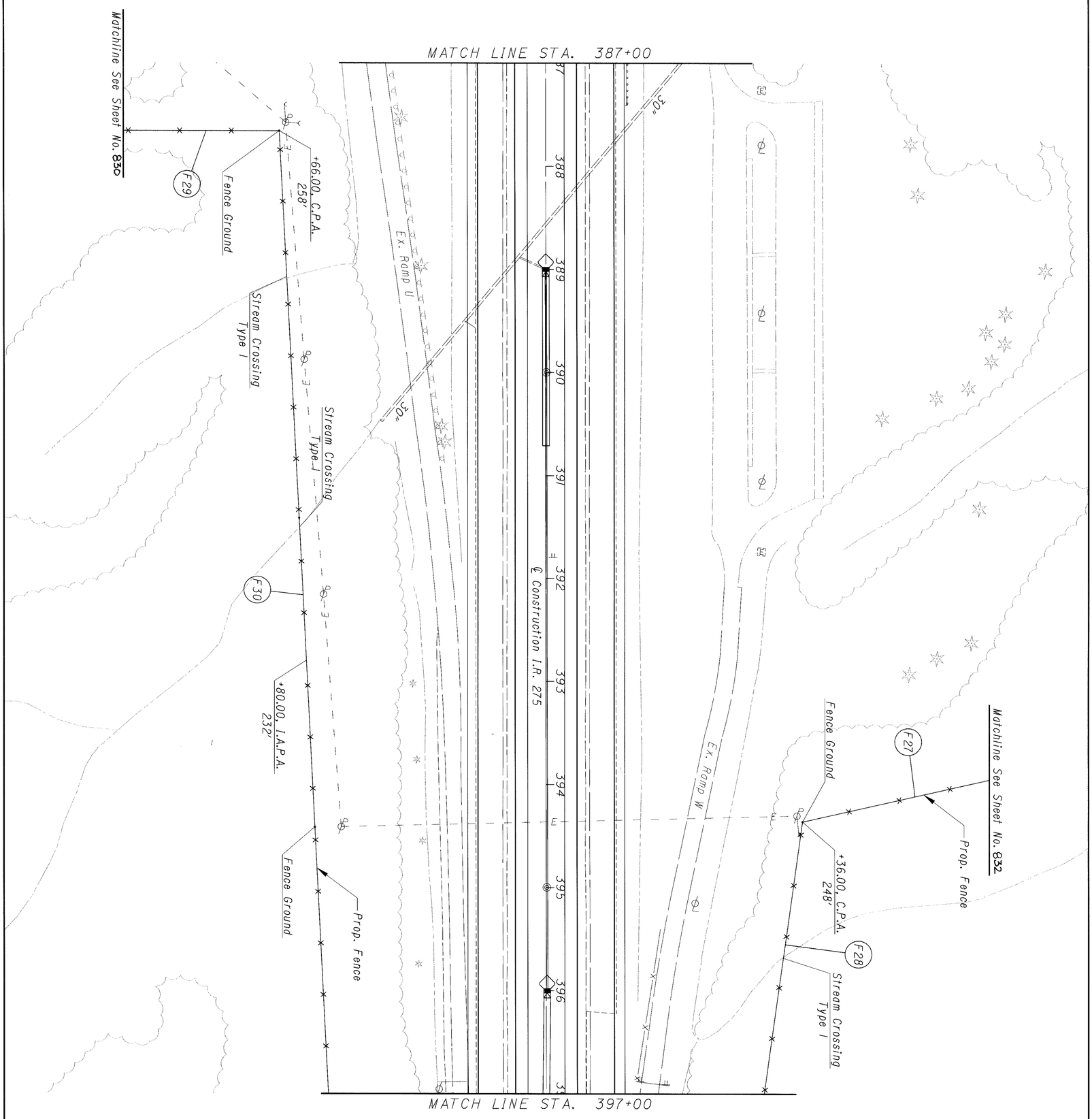

REF NO.	STATION		SIDE	202	601	607	607	625	FOR INFORMATION ONLY										
	FROM	TO		FENCE REMOVED	R.C.P. TYPE 6 WITH FILTER	FENCE TYPE 47	FENCE TYPE CLT	GROUND ROD	FENCE TERMINAL TYPE A	FENCE TERMINAL TYPE C	C.P.A.	E.P.A.	I.A..P.A.	L.P.E.C.	H.W.C.A.	A.C.	STREAM CROSSING TYPE 1	STREAM CROSSING TYPE 2	STREAM CROSSING TYPE 3
				L.F.	C.Y.	L.F.	L.F.	EACH	EACH	EACH	EACH	EACH	EACH	EACH	EACH	EACH	EACH	EACH	EACH	EACH
F27	393+34.00	394+36.00	LT	461.42	2.0	461.42		1			1		1				1		
F28	394+36.00	401+81.00	LT	757.19	4.0	757.19					1						2		
F29	387+66.00	387+66.00	RT	440.00	2.0	440.00		2			1		1				1		
F30	387+66.00	398+00.00	RT	1035.31	4.0	1035.31					1						2		
TOTALS CARRIED TO SUB-SUMMARY				2693.92	12.0	2693.92		3			4		2				6		

831

CLE-275-5.35

I.R. 275 FENCE PLAN
STA. 387+00 TO STA. 397+00

CALCULATED EF
CHECKED AM

0 25 50 100
HORIZONTAL SCALE IN FEET

N

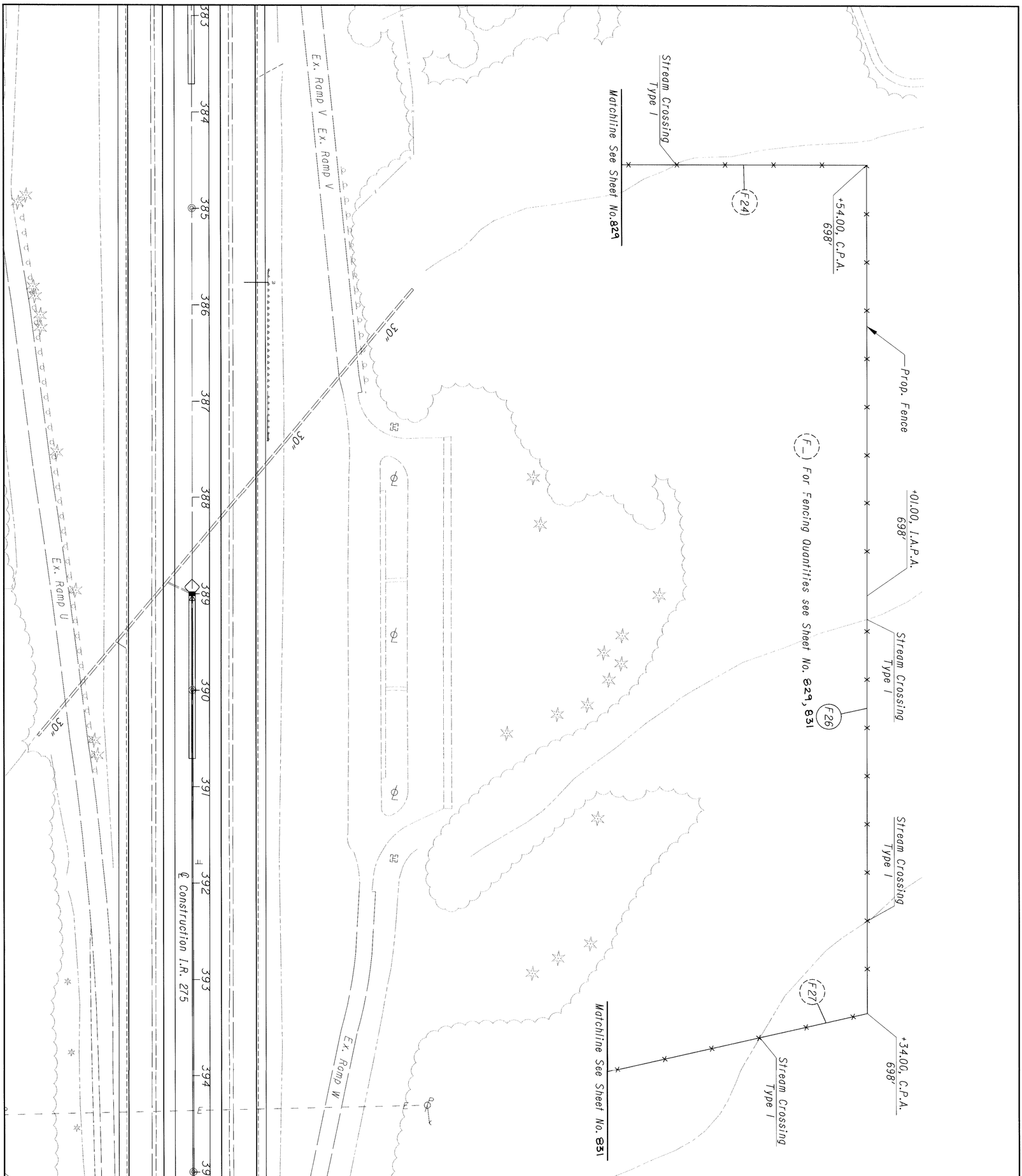

REF NO.	STATION FROM	STATION TO	SIDE	202 FENCE REMOVED	601 R.C.P. TYPE 6 WITH FILTER	607 FENCE TYPE 47	607 FENCE TYPE CLT	625 GROUND ROD	FOR INFORMATION ONLY: FENCE TERMINAL TYPE A	FENCE TERMINAL TYPE C	C.P.A.	E.P.A.	I.A..P.A.	L.P.E.C.	H.W.C.A.	A.C.	STREAM CROSSING TYPE 1	STREAM CROSSING TYPE 2	STREAM CROSSING TYPE 3
				L.F.	C.Y.	L.F.	L.F.	EACH	EACH	EACH	EACH	EACH	EACH	EACH	EACH	EACH	EACH	EACH	EACH
F26	384+54.00	393+34.00	LT	880.00	4.0	880.00					1		1				2		
TOTALS CARRIED TO SUB-SUMMARY				880.00	4.0	880.00					1		1				2		

832
857

CLE-275-5.35

I.R. 275 FENCE PLAN
STA. 384+54 TO STA. 393+95

CALCULATED EF
CHECKED AM

0 50
25 100
HORIZONTAL SCALE IN FEET

N

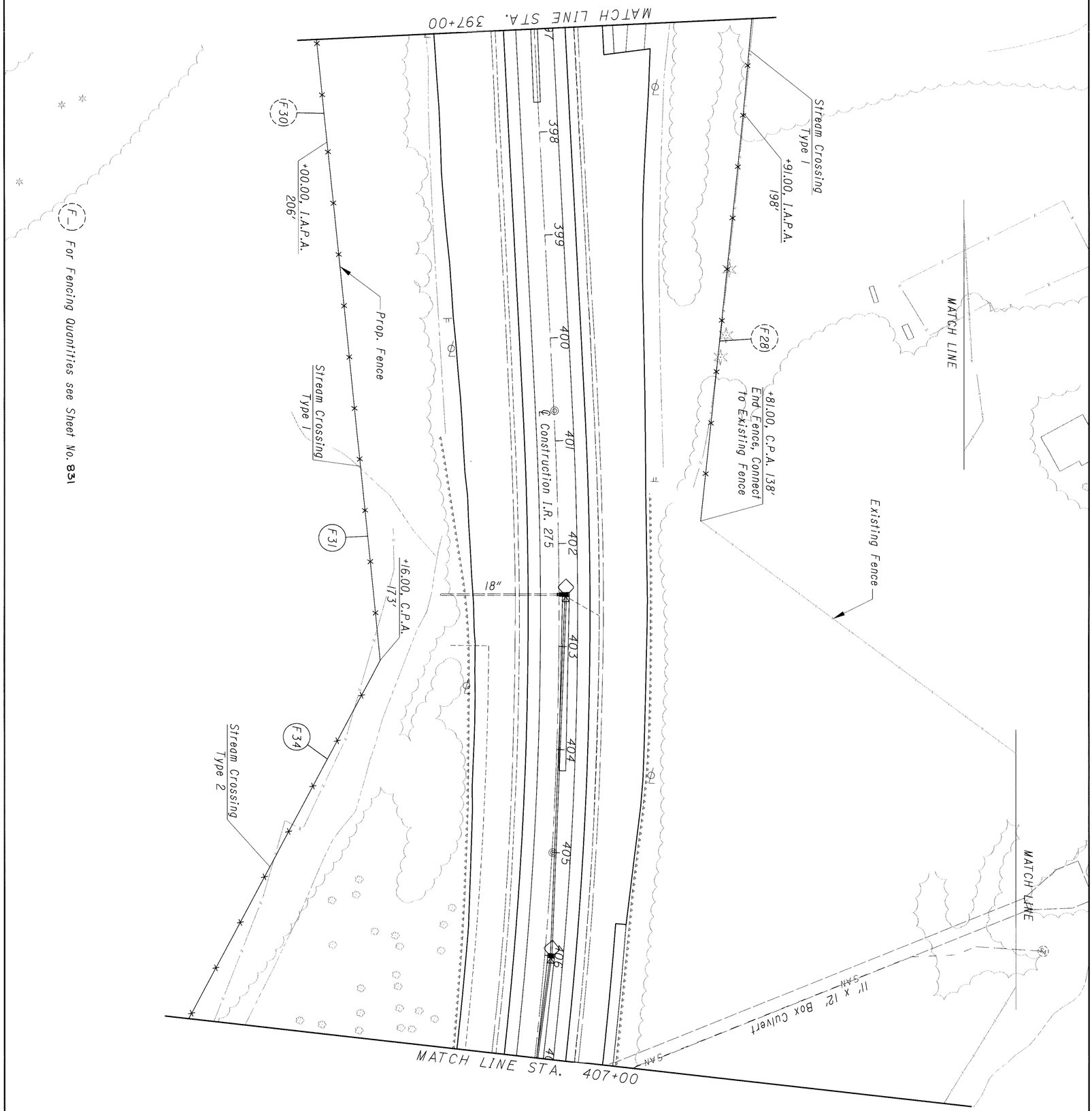

REF NO.	STATION		SIDE	202	601	607	607	625	FOR INFORMATION ONLY										
	FROM	TO		FENCE REMOVED	R.C.P. TYPE 6 WITH FILTER	FENCE TYPE 47	FENCE TYPE CLT	GROUND ROD	FENCE TERMINAL TYPE A	FENCE TERMINAL TYPE C	C.P.A.	E.P.A.	I.A..P.A.	L.P.E.C.	H.W.C.A.	A.C.	STREAM CROSSING TYPE 1	STREAM CROSSING TYPE 2	STREAM CROSSING TYPE 3
				L.F.	C.Y.	L.F.	L.F.	EACH	EACH	EACH	EACH	EACH	EACH	EACH	EACH	EACH	EACH	EACH	EACH
F31	398+00.00	403+16.00	RT	505.63	2.0	505.63							1				1		
F32	NOT USED																		
F33	NOT USED																		
F34	403+16.00	409+60.00	RT	671.19	2.0	671.19				1	2	1						1	
TOTALS CARRIED TO SUB-SUMMARY				1176.82	4.0	1176.82				1	2	1	1				1	1	

833
85

CLE-275-5.35

I.R. 275 FENCE PLAN
STA. 397+00 TO STA. 407+00

CALCULATED EF
CHECKED AM

0 50
25 100
HORIZONTAL SCALE IN FEET

N

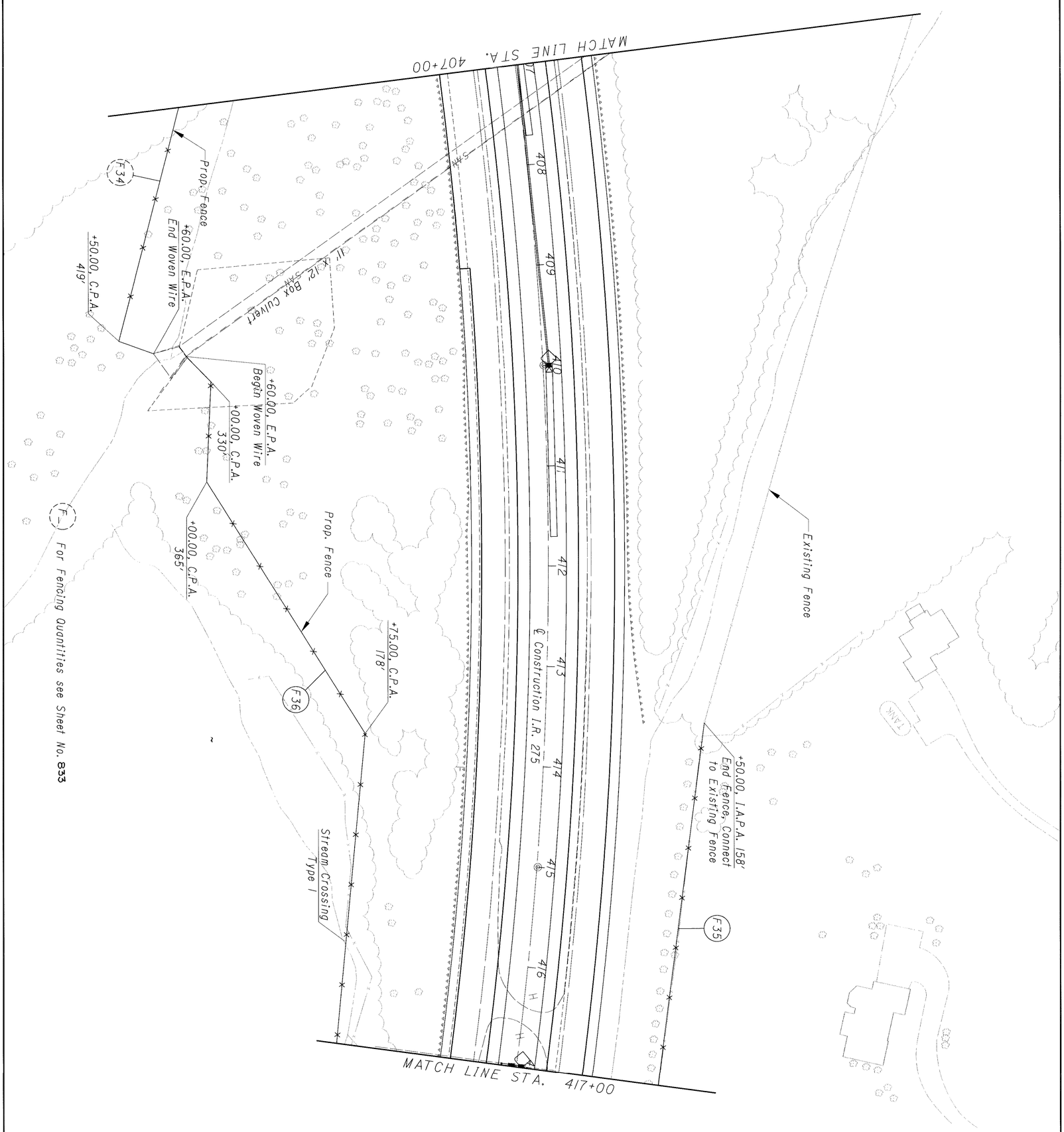

REF NO.	STATION		SIDE	202	601	607	607	625	FOR INFORMATION ONLY										
	FROM	TO		FENCE REMOVED	R.C.P. TYPE 6 WITH FILTER	FENCE TYPE 47	FENCE TYPE CLT	GROUND ROD	FENCE TERMINAL TYPE A	FENCE TERMINAL TYPE C	C.P.A.	E.P.A.	I.A..P.A.	L.P.E.C.	H.W.C.A.	A.C.	STREAM CROSSING TYPE 1	STREAM CROSSING TYPE 2	STREAM CROSSING TYPE 3
				L.F.	C.Y.	L.F.	L.F.	EACH	EACH	EACH	EACH	EACH	EACH	EACH	EACH	EACH	EACH	EACH	EACH
F35	413+50.00	419+00.00	LT	571.55		571.55							1						
F36	409+60.00	420+00.00	RT	1028.13	6.0	1028.13		1		1	3	1					3		
TOTALS CARRIED TO SUB-SUMMARY				1599.68	6.0	1599.68		1		1	3	1	1				3		

834

CLE-275-5.35

I.R. 275 FENCE PLAN
STA. 407+00 TO STA. 417+00

CALCULATED EF
CHECKED AM

0 50
25 100
HORIZONTAL SCALE IN FEET

N

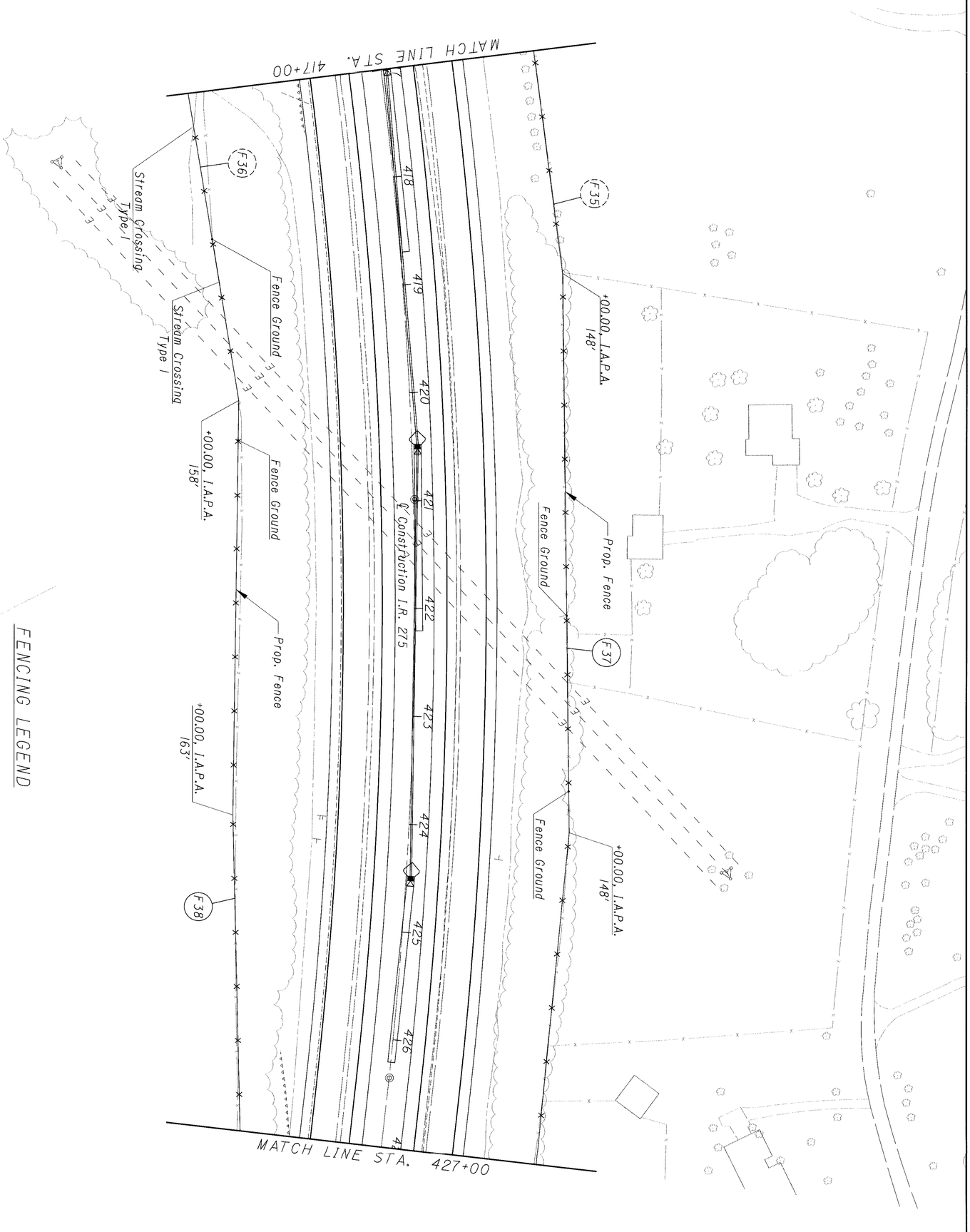

FENCING LEGEND

- Woven Wire Fence, Type 47
- 60" Chainlink Fence, Type CLT
- C.P.A. Corner Post Assembly
- E.P.A. End Post Assembly
- I.A.P.A. Intermediate Anchor Post Assembly
- L.P.E.C. Line Post Encased in Concrete
- H.W.C.A. Headwall Connection, Type A
- A.C. Abutment Connection

(F_) For Fencing Quantities see Sheet No. 834

REF NO.	STATION FROM	STATION TO	SIDE	202 FENCE REMOVED	601 R.C.P. TYPE 6 WITH FILTER	607 FENCE TYPE 47	607 FENCE TYPE CLT	625 GROUND ROD	FOR INFORMATION ONLY: FENCE TERMINAL TYPE A	FENCE TERMINAL TYPE C	C.P.A.	E.P.A.	I.A..P.A.	L.P.E.C.	H.W.C.A.	A.C.	STREAM CROSSING TYPE 1	STREAM CROSSING TYPE 2	STREAM CROSSING TYPE 3
				L.F.	C.Y.	L.F.	L.F.	EACH	EACH	EACH	EACH	EACH	EACH	EACH	EACH	EACH	EACH	EACH	EACH
F37	419+00.00	430+00.00	LT	1127.09		1127.09		2					2						
F38	420+00.00	427+62.00	RT	738.92		738.92		1					2						
TOTALS CARRIED TO SUB-SUMMARY				1866.01		1866.01		3					4						

CLE-275-5.35

I.R. 275 FENCE PLAN
STA. 417+00 TO STA. 427+00

CALCULATED EF
CHECKED AM

0 25 50 100
HORIZONTAL SCALE IN FEET

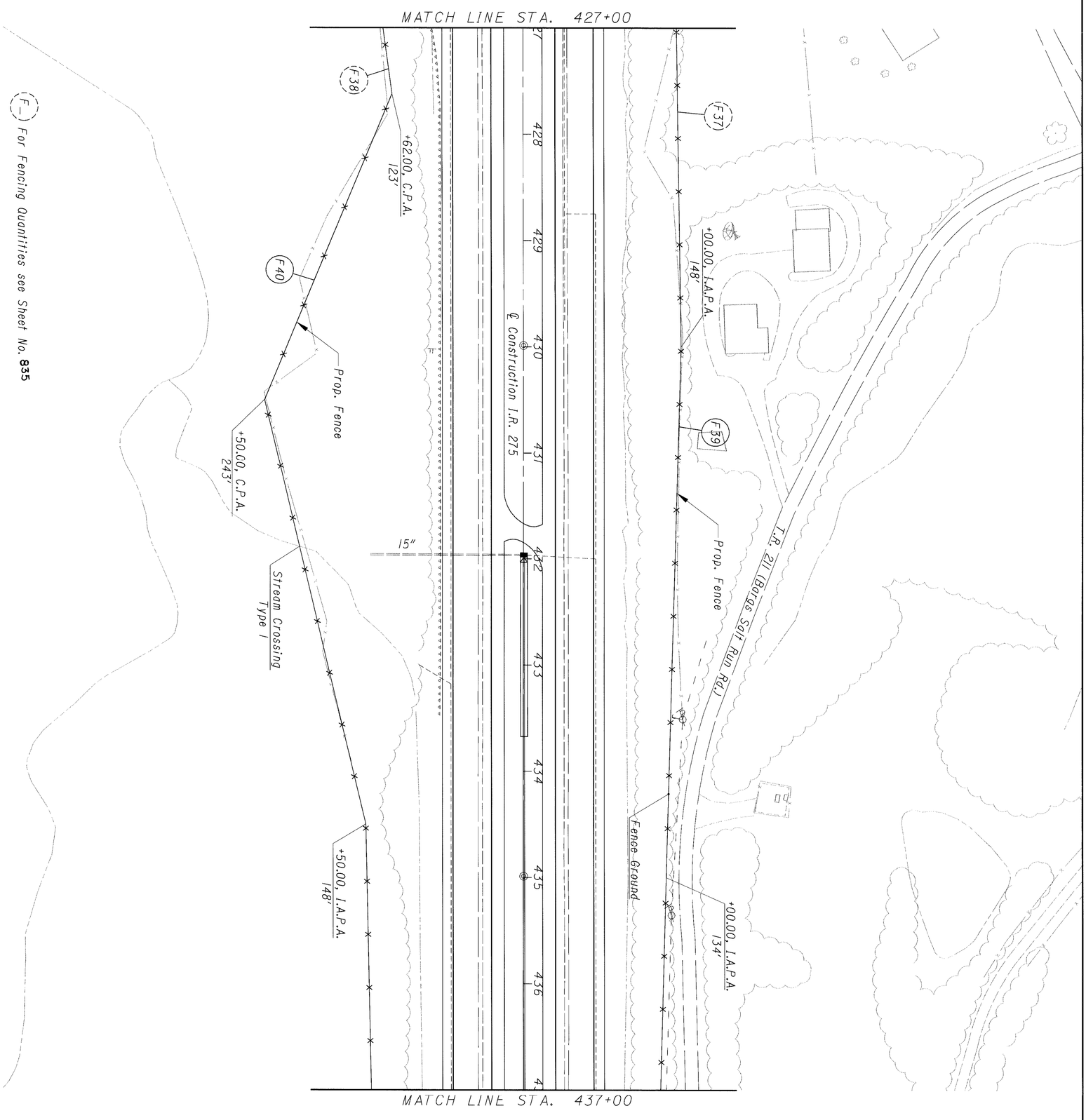

REF NO.	STATION		SIDE	202	601	607	607	625	FOR INFORMATION ONLY										
				FENCE REMOVED	R.C.P. TYPE 6 WITH FILTER	FENCE TYPE 47	FENCE TYPE CLT	GROUND ROD	FENCE TERMINAL TYPE A	FENCE TERMINAL TYPE C	C.P.A.	E.P.A.	I.A..P.A.	L.P.E.C.	H.W.C.A.	A.C.	STREAM CROSSING TYPE 1	STREAM CROSSING TYPE 2	STREAM CROSSING TYPE 3
	FROM	TO		L.F.	C.Y.	L.F.	L.F.	EACH	EACH	EACH	EACH	EACH	EACH	EACH	EACH	EACH	EACH	EACH	EACH	EACH
F39	430+00.00	437+20.00	LT	720.28		720.28		1					2						
F40	427+62.00	439+50.00	RT	1223.23	2.0	1223.23		1			2						1		
TOTALS CARRIED TO SUB-SUMMARY				1943.51	2.0	1943.51		2			2		2				1		

836
857

CLE-275-5.35

I.R. 275 FENCE PLAN
STA. 427+00 TO STA. 437+00

CALCULATED EF
CHECKED AM

0 50
25 100
HORIZONTAL SCALE IN FEET

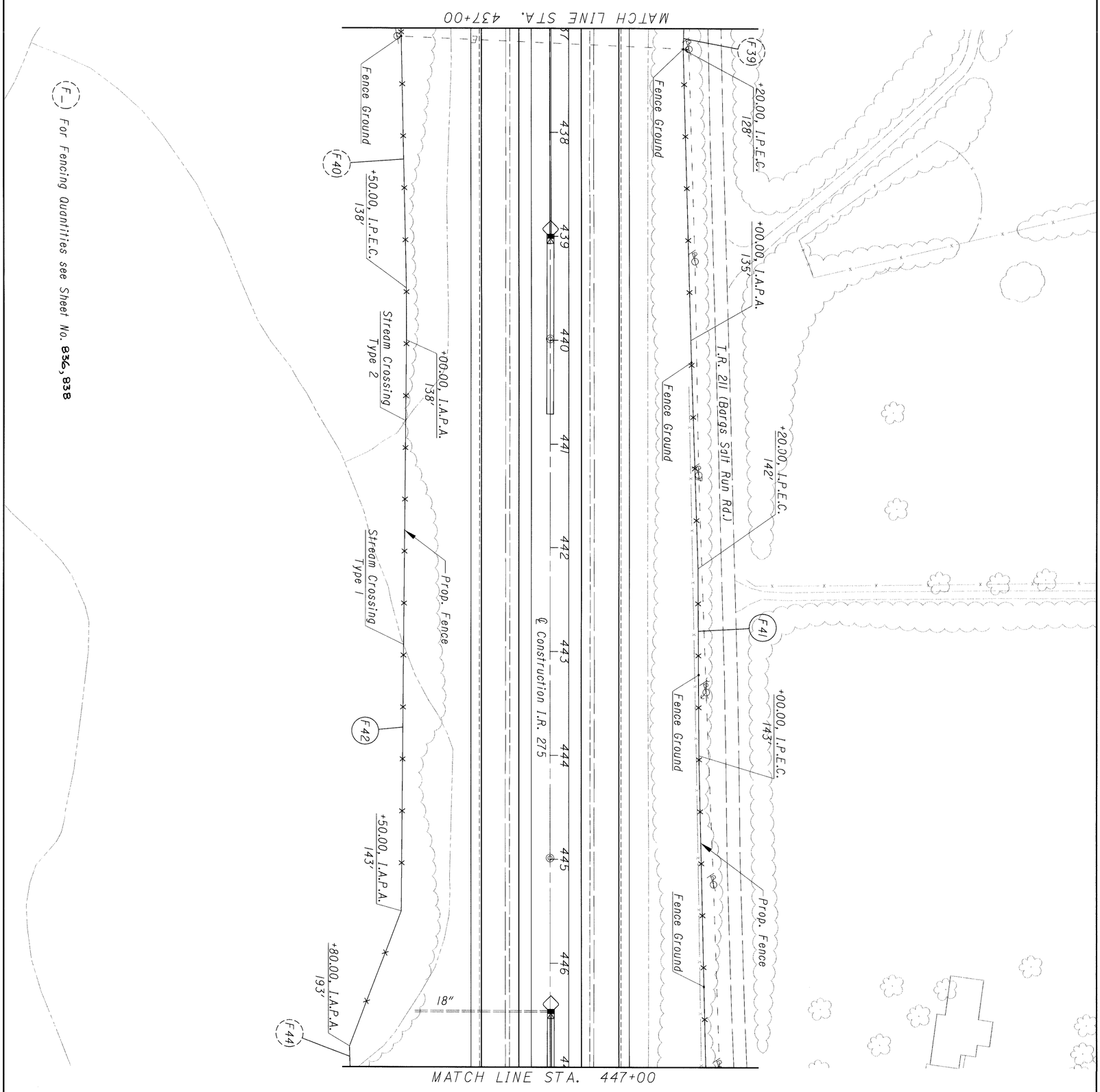

(F_) For Fencing Quantities see Sheet No. 836, 838

REF NO.	STATION		SIDE	202	601	607	607	625	FOR INFORMATION ONLY										
	FROM	TO		FENCE REMOVED	R.C.P. TYPE 6 WITH FILTER	FENCE TYPE 47	FENCE TYPE CLT	GROUND ROD	FENCE TERMINAL TYPE A	FENCE TERMINAL TYPE C	C.P.A.	E.P.A.	I.A..P.A.	L.P.E.C.	H.W.C.A.	A.C.	STREAM CROSSING TYPE 1	STREAM CROSSING TYPE 2	STREAM CROSSING TYPE 3
				L.F.	C.Y.	L.F.	L.F.	EACH	EACH	EACH	EACH	EACH	EACH	EACH	EACH	EACH	EACH	EACH	EACH
F41	437+20.00	450+00.00	LT	1280.34		1280.34		6					1	3					
F42	439+50.00	446+80.00	RT	739.31	4.0	739.31							2	1			1	1	
TOTALS CARRIED TO SUB-SUMMARY				2019.65	4.0	2019.65		6					3	4			1	1	

837
857

CLE-275-5.35

I.R. 275 FENCE PLAN
STA. 437+00 TO STA. 447+00

CALCULATED EF
CHECKED AM

0 25 50 100
HORIZONTAL SCALE IN FEET

N

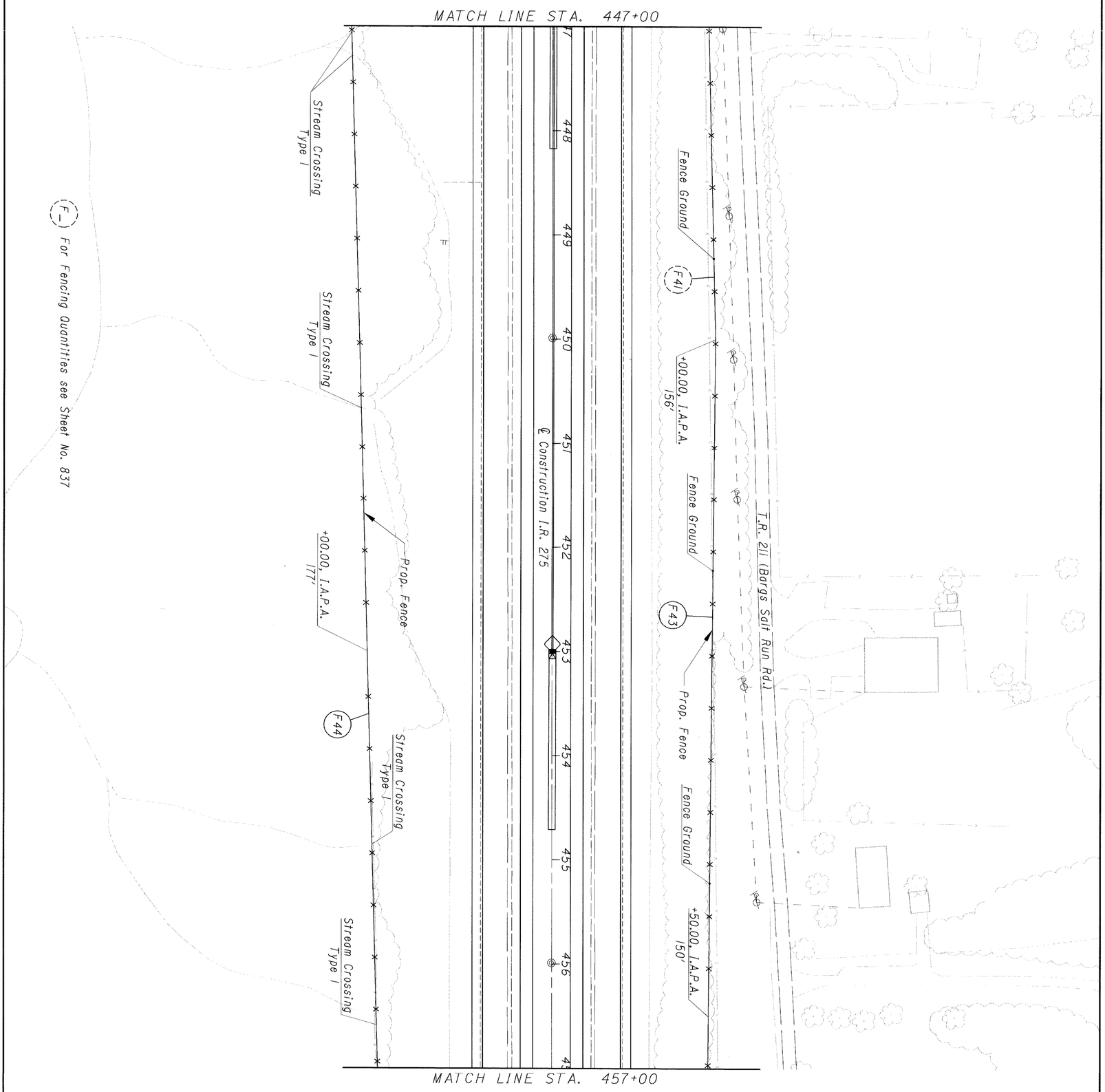

REF NO.	STATION		SIDE	202	601	607	607	625	FOR INFORMATION ONLY										
	FROM	TO		FENCE REMOVED	R.C.P. TYPE 6 WITH FILTER	FENCE TYPE 47	FENCE TYPE CLT	GROUND ROD	FENCE TERMINAL TYPE A	FENCE TERMINAL TYPE C	C.P.A.	E.P.A.	I.A..P.A.	L.P.E.C.	H.W.C.A.	A.C.	STREAM CROSSING TYPE 1	STREAM CROSSING TYPE 2	STREAM CROSSING TYPE 3
				L.F.	C.Y.	L.F.	L.F.	EACH	EACH	EACH	EACH	EACH	EACH	EACH	EACH	EACH	EACH	EACH	EACH
F43	450+00.00	458+43.00	LT	843.04		843.04		3					2						
F44	446+80.00	458+40.00	RT	1160.39	10.0	1160.39							2				5		
TOTALS CARRIED TO SUB-SUMMARY				2003.43	10.0	2003.43		3					4				5		

857 838

CLE-275-5.35

I.R. 275 FENCE PLAN
STA. 447+00 TO STA. 457+00

CALCULATED EF
CHECKED AM

0 25 50 100
HORIZONTAL SCALE IN FEET

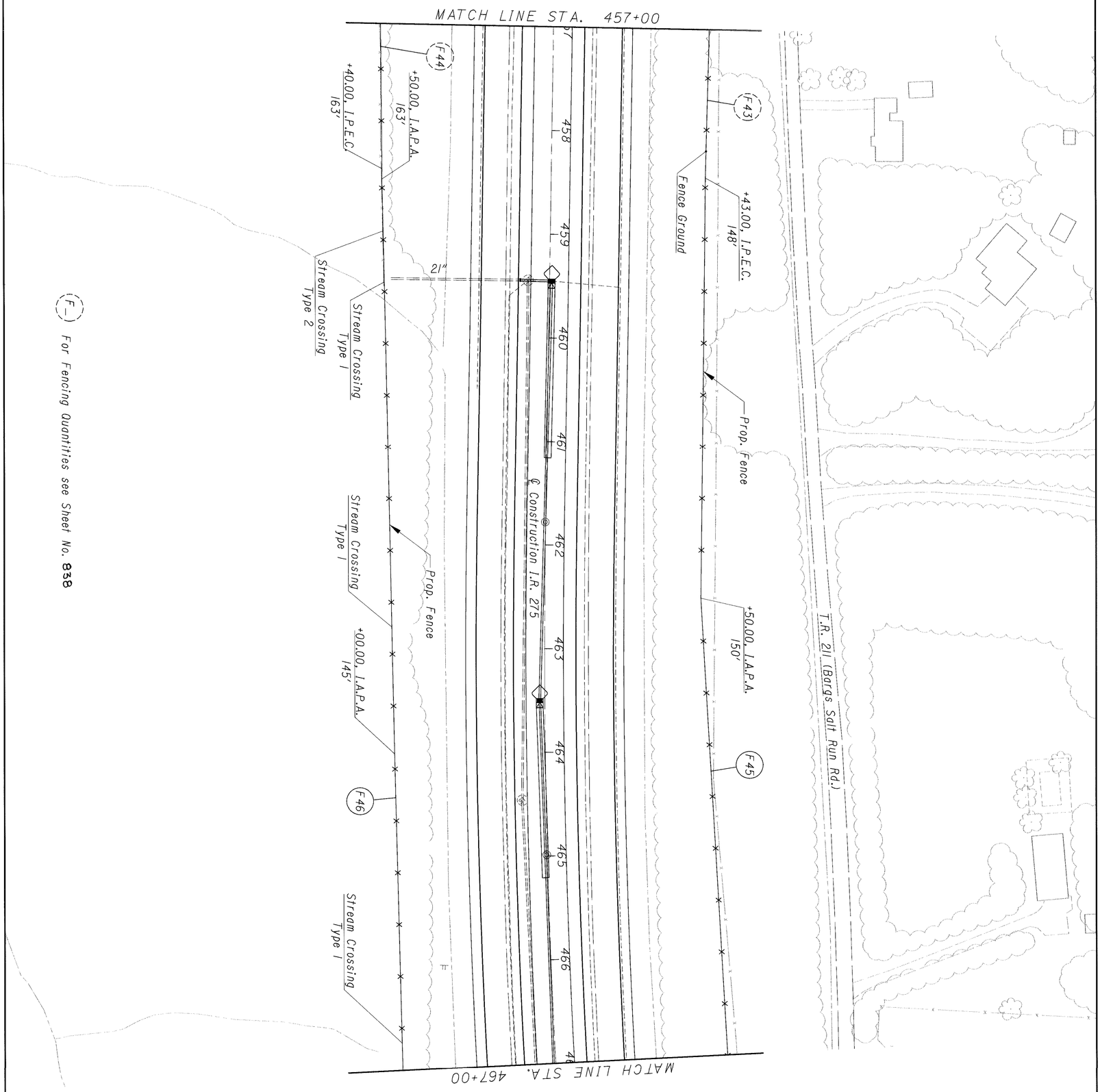

REF NO.	STATION		SIDE	202	601	607	607	625	FOR INFORMATION ONLY										
	FROM	TO		FENCE REMOVED	R.C.P. TYPE 6 WITH FILTER	FENCE TYPE 47	FENCE TYPE CLT	GROUND ROD	FENCE TERMINAL TYPE A	FENCE TERMINAL TYPE C	C.P.A.	E.P.A.	I.A..P.A.	L.P.E.C.	H.W.C.A.	A.C.	STREAM CROSSING TYPE 1	STREAM CROSSING TYPE 2	STREAM CROSSING TYPE 3
				L.F.	C.Y.	L.F.	L.F.	EACH	EACH	EACH	EACH	EACH	EACH	EACH	EACH	EACH	EACH	EACH	EACH
F45	458+43.00	468+50.00	LT	993.18		993.18							1	1					
F46	458+40.00	469+50.00	RT	1125.60	8.0	1125.60							2	1			3	1	
TOTALS CARRIED TO SUB-SUMMARY				2118.78	8.0	2118.78							3	2			3	1	

839
857

CLE-275-5.35

I.R. 275 FENCE PLAN
STA. 457+00 TO STA. 467+00

CALCULATED EF
CHECKED AM

0 25 50 100
HORIZONTAL SCALE IN FEET

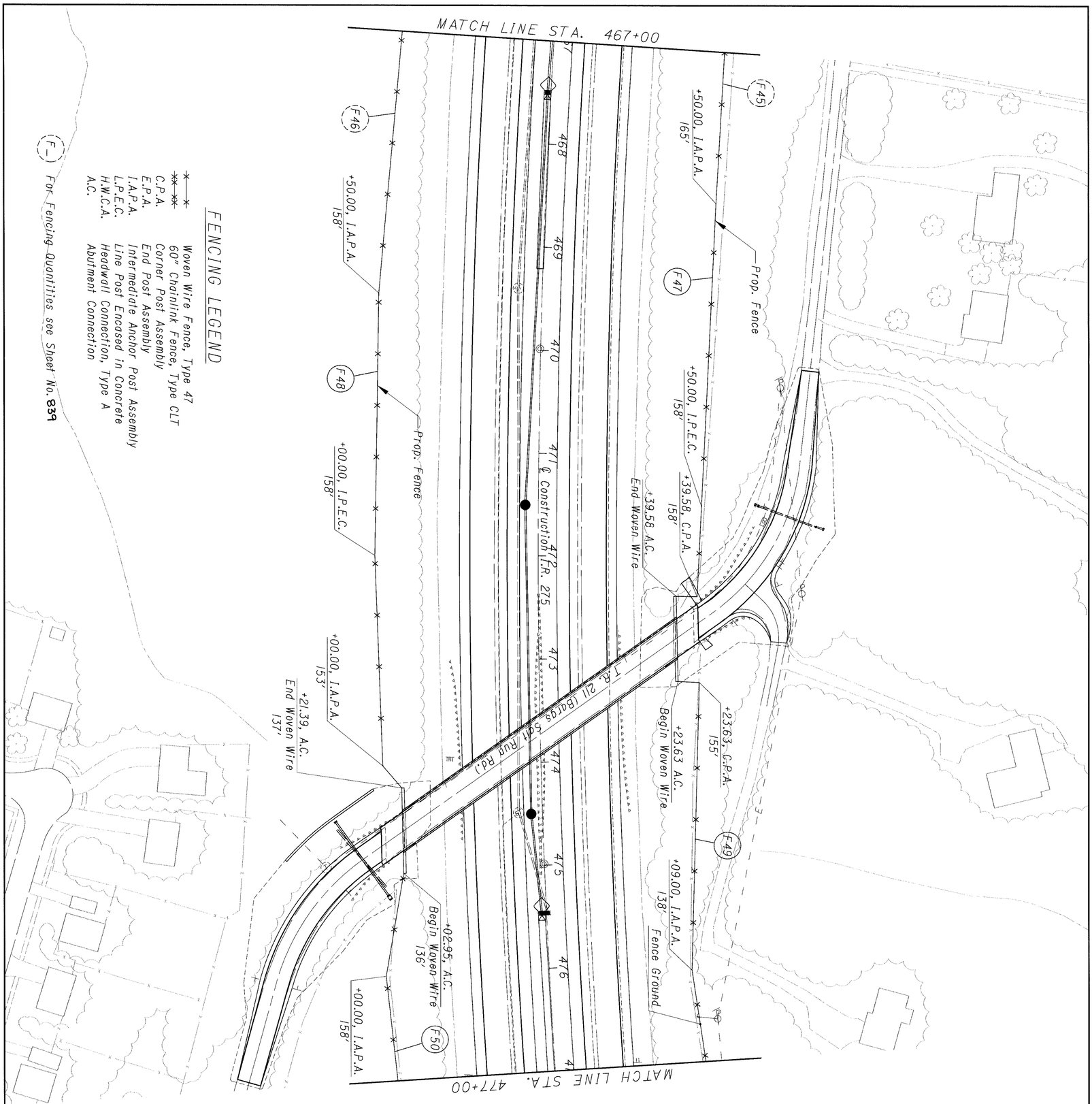

REF NO.	STATION FROM	STATION TO	SIDE	202 FENCE REMOVED L.F.	601 R.C.P. TYPE 6 WITH FILTER C.Y.	607 FENCE TYPE 47 L.F.	607 FENCE TYPE CLT L.F.	625 GROUND ROD EACH	FOR INFORMATION ONLY: FENCE TERMINAL TYPE A EACH	FENCE TERMINAL TYPE C EACH	C.P.A. EACH	E.P.A. EACH	I.A..P.A. EACH	L.P.E.C. EACH	H.W.C.A. EACH	A.C. EACH	STREAM CROSSING TYPE 1 EACH	STREAM CROSSING TYPE 2 EACH	STREAM CROSSING TYPE 3 EACH
F47	468+50.00	472+39.58	LT	402.47		402.47					1		1	1		1			
F48	469+50.00	474+21.39	RT	487.18		487.18							2	1		1			
F49	473+23.63	482+10.96	LT	922.39	4.0	922.39		2	1		2		1		1	1	2		
F50	475+02.95	482+00.00	RT	723.93		723.93		1	1		1		2		1	1			
TOTALS CARRIED TO SUB-SUMMARY				2535.97	4.0	2535.97		3	2		4		6	2	2	4	2		

840 857

CLE-275-5.35

I.R. 275 FENCE PLAN
STA. 467+00 TO STA. 477+00

CALCULATED EF
CHECKED AM

0 50
25 100
HORIZONTAL SCALE IN FEET

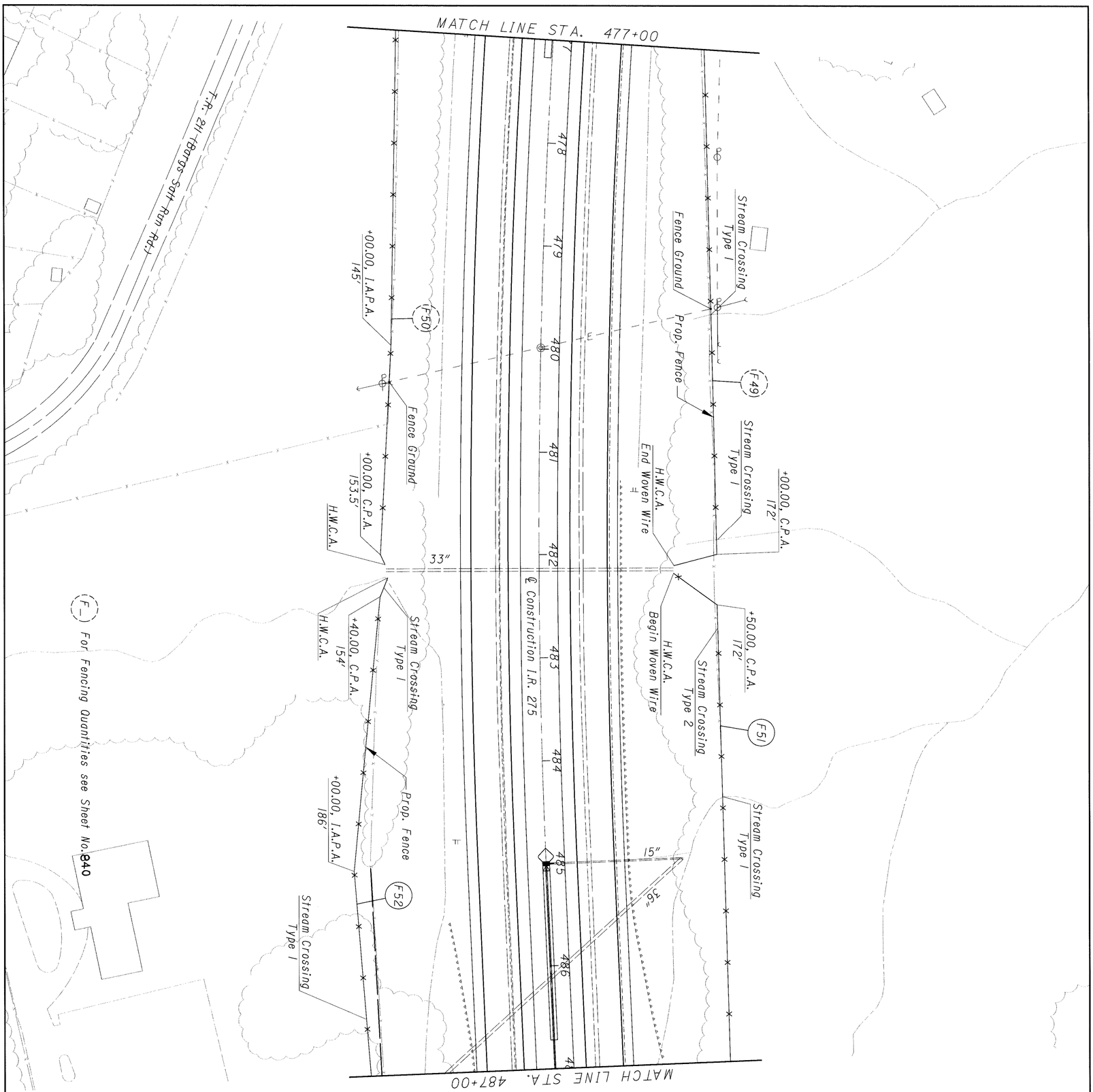

REF NO.	STATION		SIDE	202	601	607	607	625	FOR INFORMATION ONLY										
				FENCE REMOVED	R.C.P. TYPE 6 WITH FILTER	FENCE TYPE 47	FENCE TYPE CLT	GROUND ROD	FENCE TERMINAL TYPE A	FENCE TERMINAL TYPE C	C.P.A.	E.P.A.	I.A..P.A.	L.P.E.C.	H.W.C.A.	A.C.	STREAM CROSSING TYPE 1	STREAM CROSSING TYPE 2	STREAM CROSSING TYPE 3
	FROM	TO		L.F.	C.Y.	L.F.	L.F.	EACH	EACH	EACH	EACH	EACH	EACH	EACH	EACH	EACH	EACH	EACH	EACH	EACH
F51	482+18.59	490+00.00	LT	795.29	4.0	795.29			1		1				1		1	1	
F52	482+22.00	491+00.00	RT	887.34	8.0	887.34			1		1		1		1		4		
TOTALS CARRIED TO SUB-SUMMARY				1682.63	12.0	1682.63			2		2		1		2		5	1	

841
857

CLE-275-5.35

I.R. 275 FENCE PLAN
STA. 477+00 TO STA. 487+00

CALCULATED EF
CHECKED AM

0 50
25 100
HORIZONTAL SCALE IN FEET

N

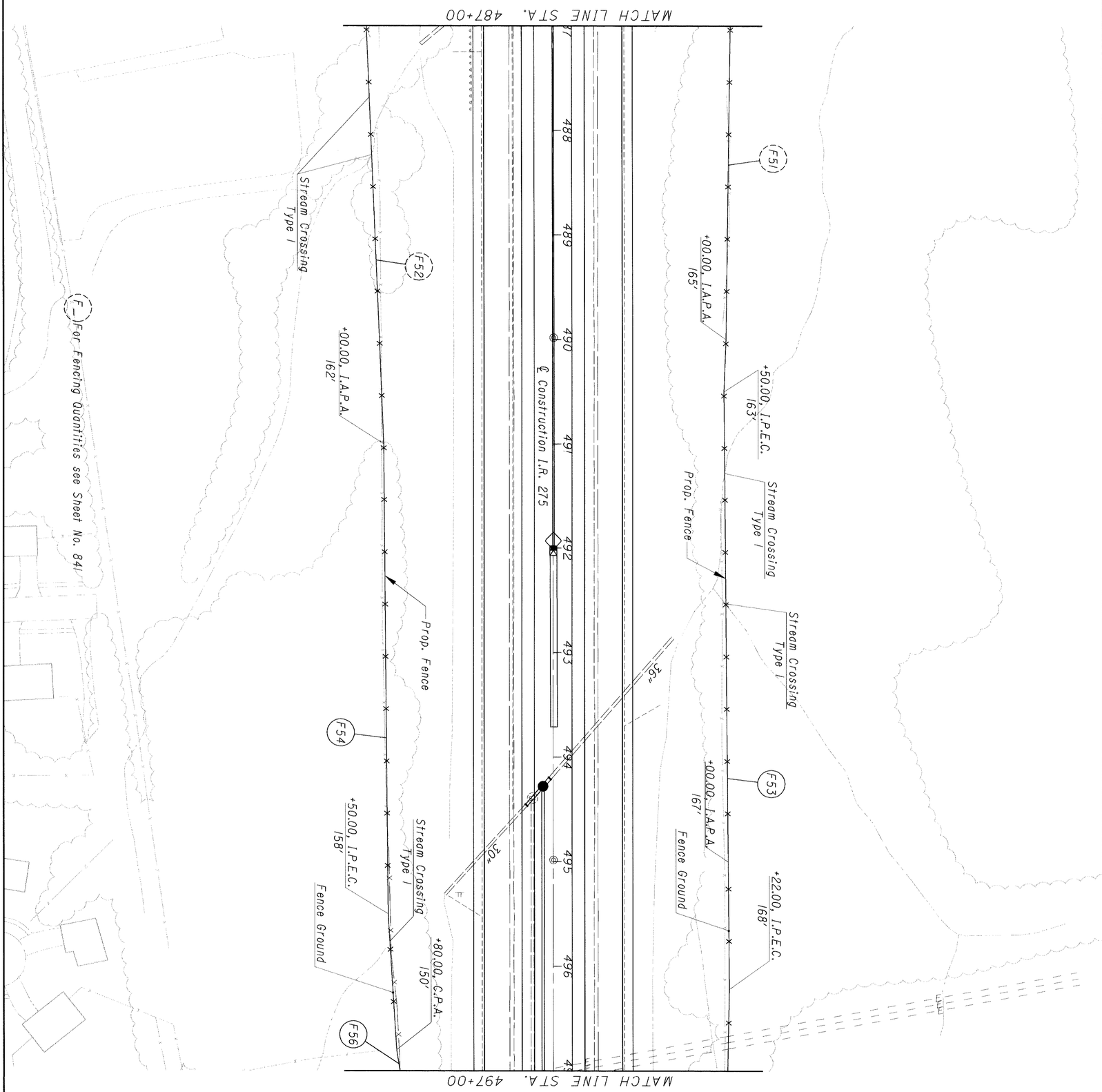

REF NO.	STATION		SIDE	202	601	607	607	625	FOR INFORMATION ONLY										
				FENCE REMOVED	R.C.P. TYPE 6 WITH FILTER	FENCE TYPE 47	FENCE TYPE CLT	GROUND ROD	FENCE TERMINAL TYPE A	FENCE TERMINAL TYPE C	C.P.A.	E.P.A.	I.A..P.A.	L.P.E.C.	H.W.C.A.	A.C.	STREAM CROSSING TYPE 1	STREAM CROSSING TYPE 2	STREAM CROSSING TYPE 3
	FROM	TO		L.F.	C.Y.	L.F.	L.F.	EACH	EACH	EACH	EACH	EACH	EACH	EACH	EACH	EACH	EACH	EACH	EACH	EACH
F53	490+00.00	501+00.00	LT	1100.17	4.0	1100.17		2					2	2			2		
F54	491+00.00	496+80.00	RT	580.26		580.26		1			1		1						
F56	496+80.00	507+00.00	RT	1020.12		70.83													
TOTALS CARRIED TO SUB-SUMMARY				2700.55	4.0	1751.26		3			1		3	2			2		

842
857

CLE-275-5.35

I.R. 275 FENCE PLAN
STA. 487+00 TO STA. 497+00

CALCULATED EF
CHECKED AM

0 50
25 100
HORIZONTAL SCALE IN FEET

N

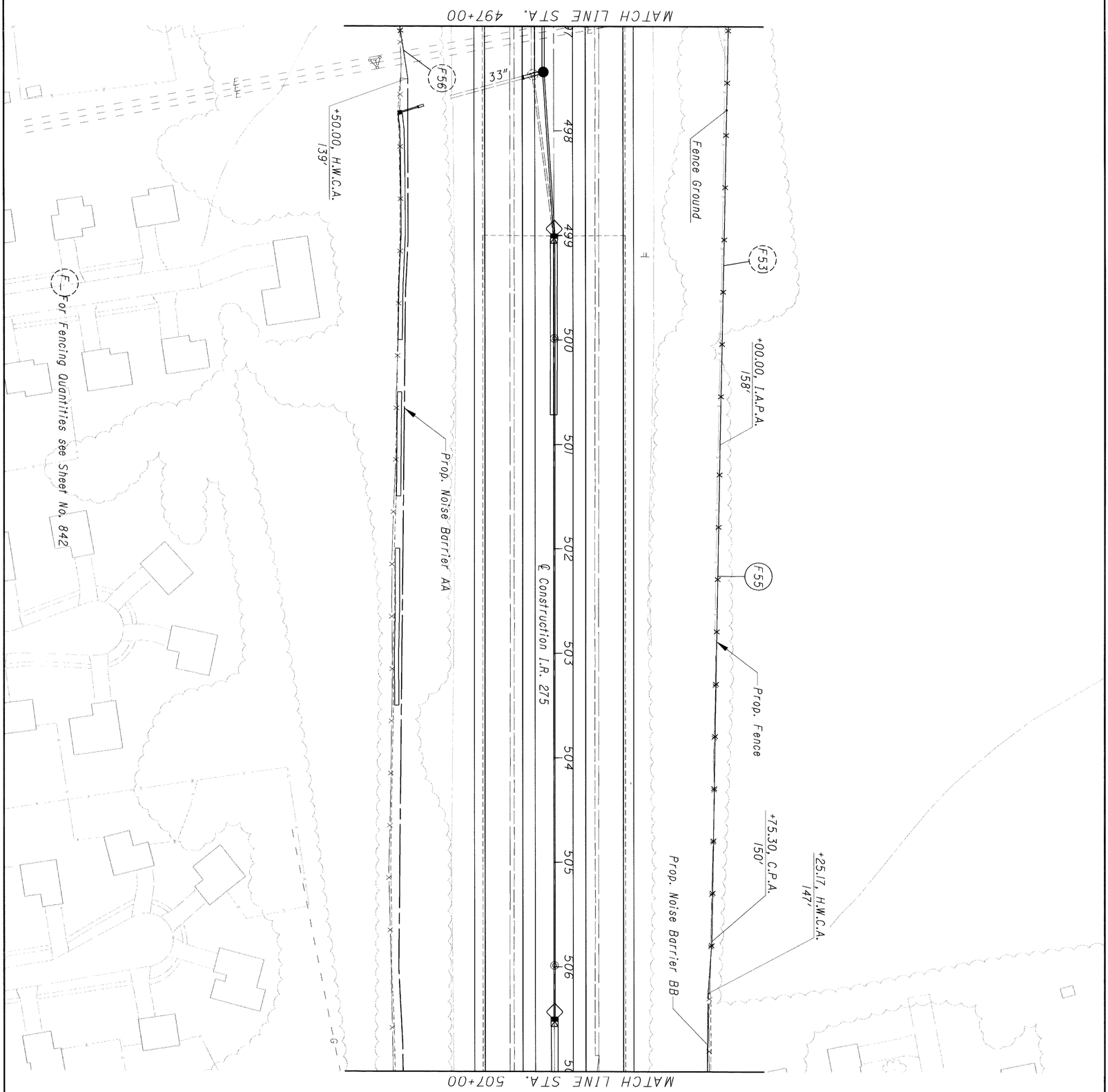

REF NO.	STATION		SIDE	202	601	607	607	625	FOR INFORMATION ONLY										
	FROM	TO		FENCE REMOVED	R.C.P. TYPE 6 WITH FILTER	FENCE TYPE 47	FENCE TYPE CLT	GROUND ROD	FENCE TERMINAL TYPE A	FENCE TERMINAL TYPE C	C.P.A.	E.P.A.	I.A..P.A.	L.P.E.C.	H.W.C.A.	A.C.	STREAM CROSSING TYPE 1	STREAM CROSSING TYPE 2	STREAM CROSSING TYPE 3
				L.F.	C.Y.	L.F.	L.F.	EACH	EACH	EACH	EACH	EACH	EACH	EACH	EACH	EACH	EACH	EACH	EACH	EACH
F55	501+00.00	507+00.00	LT	600.08		525.37					1		1		1				
TOTALS CARRIED TO SUB-SUMMARY				600.08		525.37					1		1		1				

857 | 843

CLE-275-5.35

I.R. 275 FENCE PLAN
STA. 497+00 TO STA. 507+00

CALCULATED EF
CHECKED AM

0 25 50 100
HORIZONTAL SCALE IN FEET

N

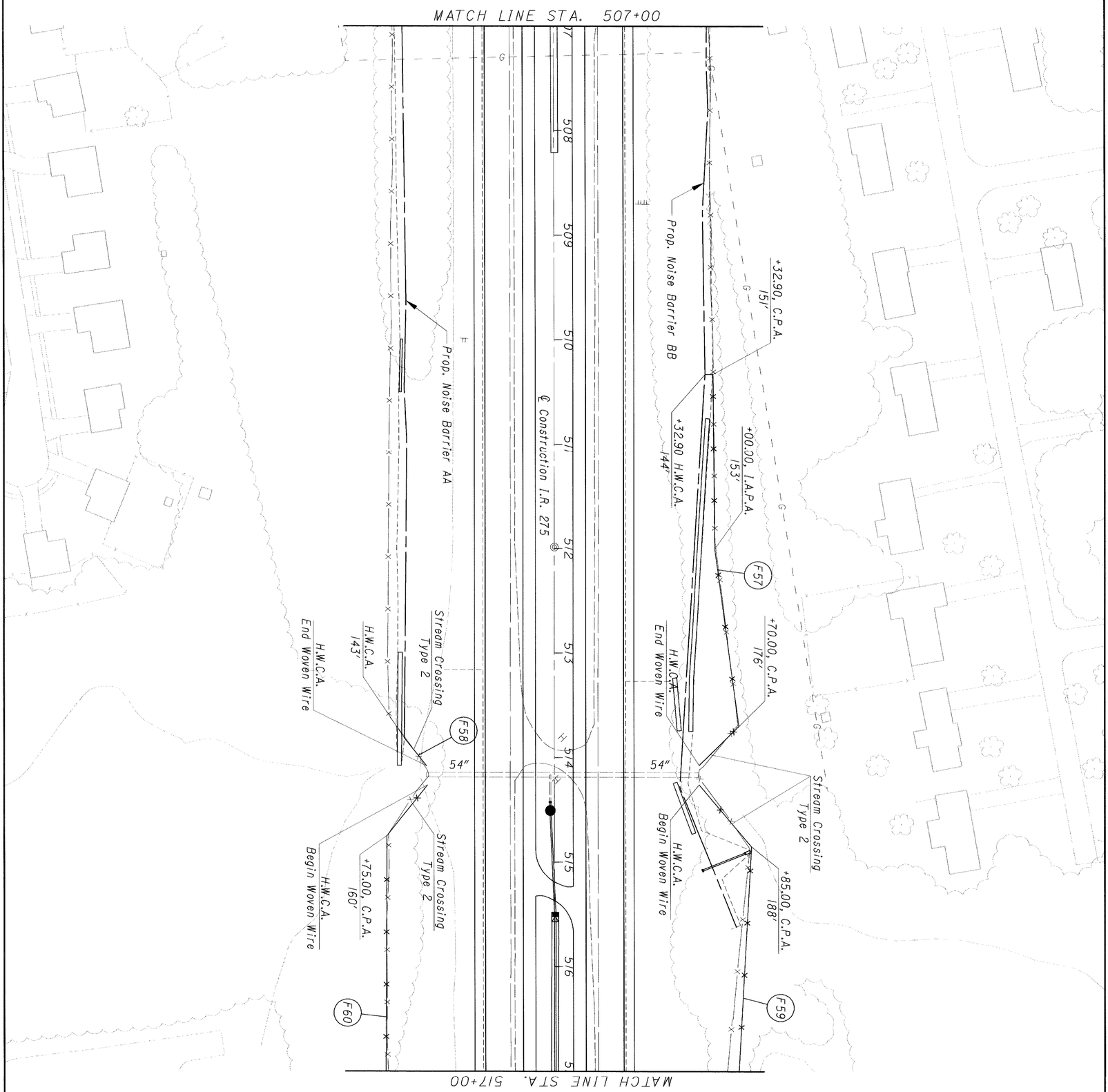

REF NO.	STATION FROM	STATION TO	SIDE	202 FENCE REMOVED	601 R.C.P. TYPE 6 WITH FILTER	607 FENCE TYPE 47	607 FENCE TYPE CLT	625 GROUND ROD	FOR INFORMATION ONLY: FENCE TERMINAL TYPE A	FENCE TERMINAL TYPE C	C.P.A.	E.P.A.	I.A..P.A.	L.P.E.C.	H.W.C.A.	A.C.	STREAM CROSSING TYPE 1	STREAM CROSSING TYPE 2	STREAM CROSSING TYPE 3
				L.F.	C.Y.	L.F.	L.F.	EACH	EACH	EACH	EACH	EACH	EACH	EACH	EACH	EACH	EACH	EACH	EACH
F57	507+00.00	514+07.33	LT	724.84	2.0	399.51			1		2		2		2			1	
F58	507+00.00	514+08.12	RT	721.37	2.0	33.99			1						2			1	
F59	514+25.83	520+00.00	LT	596.56	2.0	596.56			1		1		1		1			1	
F60	514+26.30	521+18.00	RT	700.60	2.0	700.60			1		1		1		1			1	
TOTALS CARRIED TO SUB-SUMMARY				2743.37	8.0	1730.66			4		4		4		6			4	

844
857

CLE-275-5.35

I.R. 275 FENCE PLAN
STA. 507+00 TO STA. 517+00

CALCULATED EF
CHECKED AM

0 50
25 100
HORIZONTAL SCALE IN FEET

N



REF NO.	STATION FROM	STATION TO	SIDE											

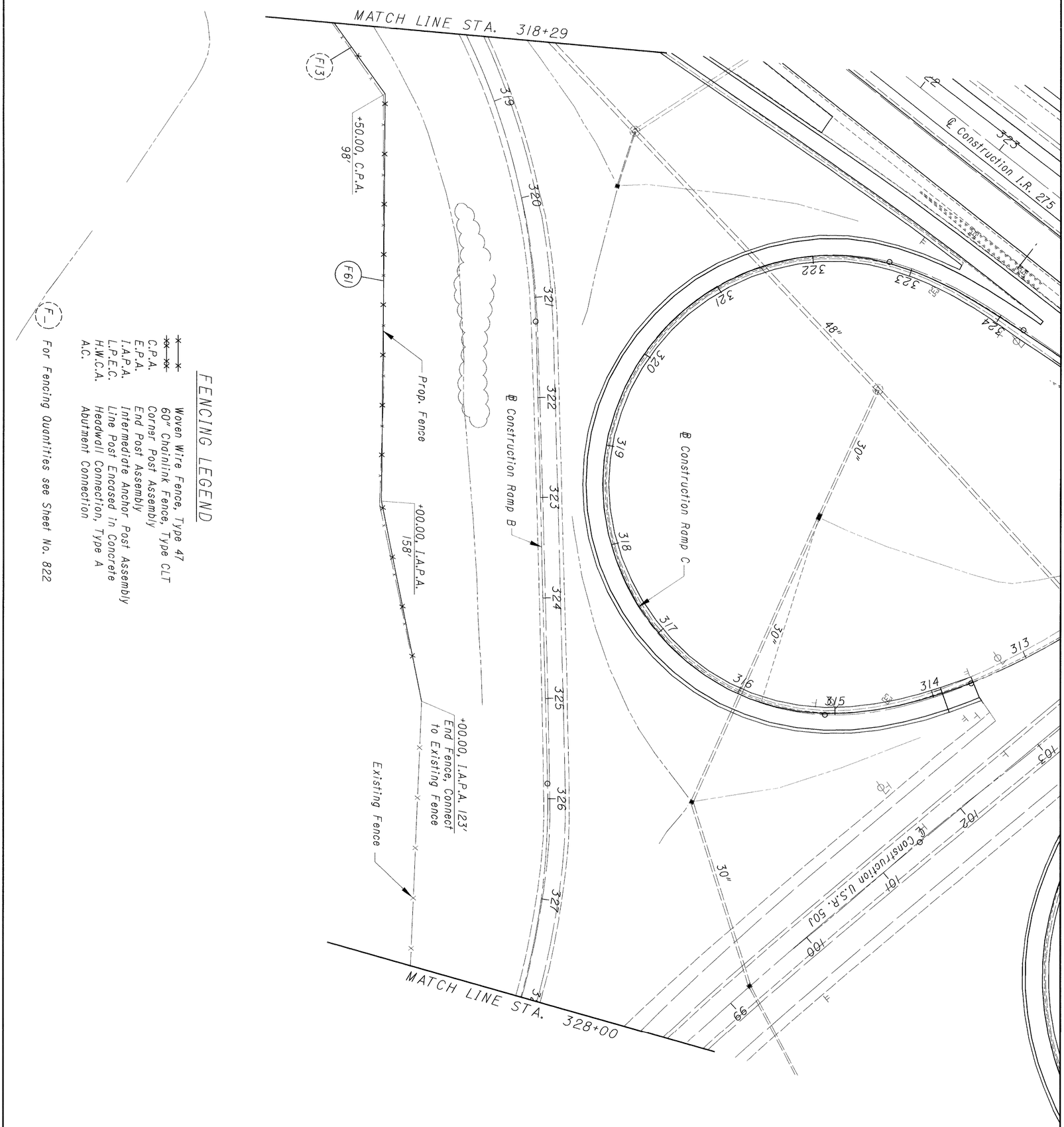

REF NO.	STATION		SIDE	202	601	607	607	625	FOR INFORMATION ONLY										
	FROM	TO		FENCE REMOVED	R.C.P. TYPE 6 WITH FILTER	FENCE TYPE 47	FENCE TYPE CLT	GROUND ROD	FENCE TERMINAL TYPE A	FENCE TERMINAL TYPE C	C.P.A.	E.P.A.	I.A..P.A.	L.P.E.C.	H.W.C.A.	A.C.	STREAM CROSSING TYPE 1	STREAM CROSSING TYPE 2	STREAM CROSSING TYPE 3
				L.F.	C.Y.	L.F.	L.F.	EACH	EACH	EACH	EACH	EACH	EACH	EACH	EACH	EACH	EACH	EACH	EACH	EACH
F61	318+50.00	325+00.00	LT	609.04									1						
TOTALS CARRIED TO SUB-SUMMARY				609.04		609.04							1						

846
857

CLE-275-5.35

RAMP B FENCE PLAN
STA 318+29.00 TO STA 328+00.00

CALCULATED EF
CHECKED AM

0 25 50 100
HORIZONTAL SCALE IN FEET

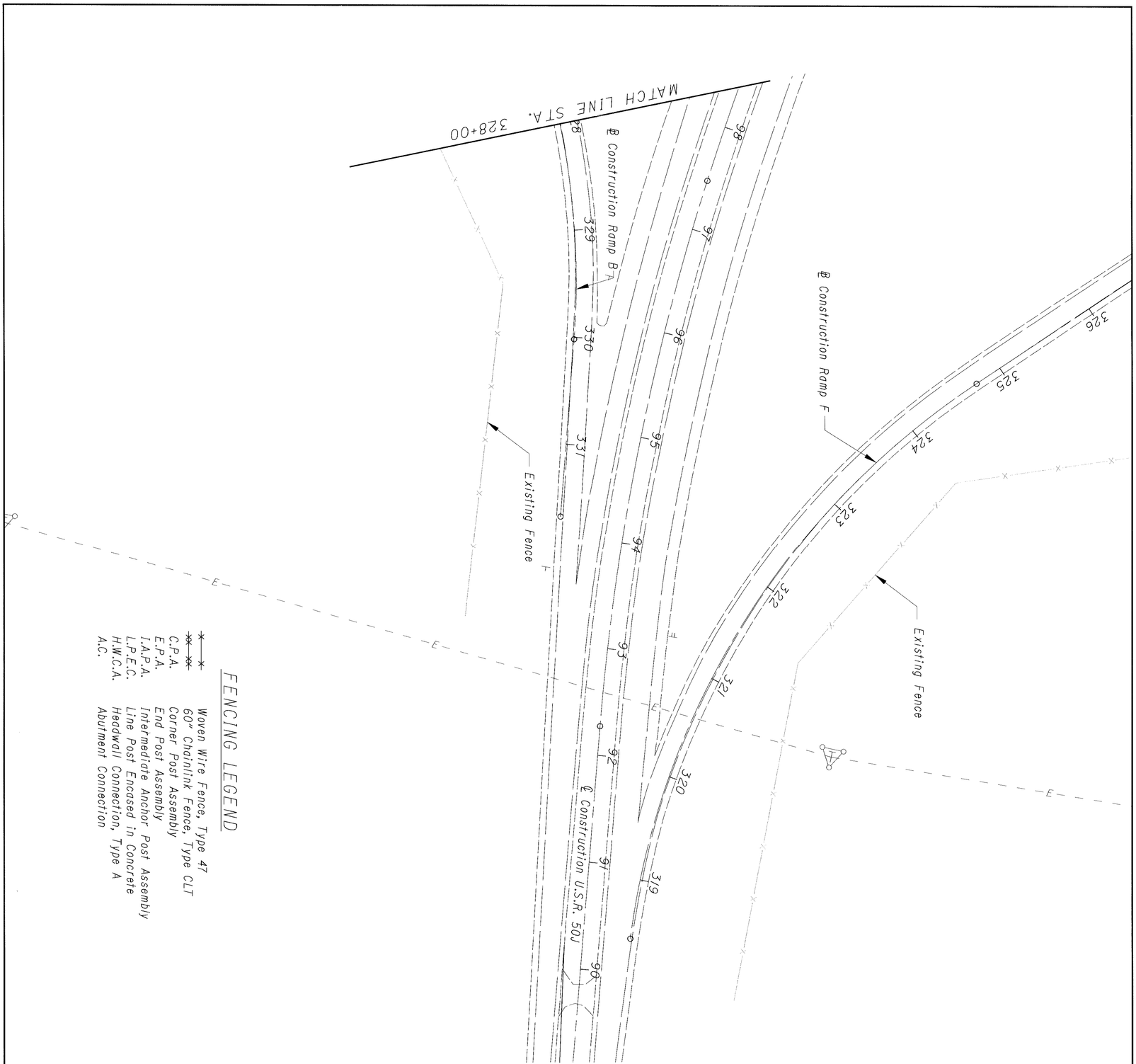

FENCING LEGEND

- Woven Wire Fence, Type 47
- 60" Chainlink Fence, Type CLT
- C.P.A. Corner Post Assembly
- E.P.A. End Post Assembly
- I.A.P.A. Intermediate Anchor Post Assembly
- L.P.E.C. Line Post Encased in Concrete
- H.W.C.A. Headwall Connection, Type A
- A.C. Abutment Connection

REF NO.	STATION FROM	STATION TO	SIDE	202 FENCE REMOVED L.F.	601 R.C.P. TYPE 6 WITH FILTER C.Y.	607 FENCE TYPE 47 L.F.	607 FENCE TYPE CLT L.F.	625 GROUND ROD EACH	FOR INFORMATION ONLY: FENCE TERMINAL TYPE A EACH	FENCE TERMINAL TYPE C EACH	C.P.A. EACH	E.P.A. EACH	I.A.P.A. EACH	L.P.E.C. EACH	H.W.C.A. EACH	A.C. EACH	STREAM CROSSING TYPE 1 EACH	STREAM CROSSING TYPE 2 EACH	STREAM CROSSING TYPE 3 EACH
									NO FENCE QUANTITIES THIS SHEET										
TOTALS CARRIED TO SUB-SUMMARY																			

847
857

CLE-275-5.35

RAMP B - U.S.R. 50J FENCE PLAN
STA. 328+00 RAMP B TO STA. 93+13.98 U.S.R. 50J

CALCULATED EF
CHECKED AM

0 25 50 100
HORIZONTAL SCALE IN FEET

N

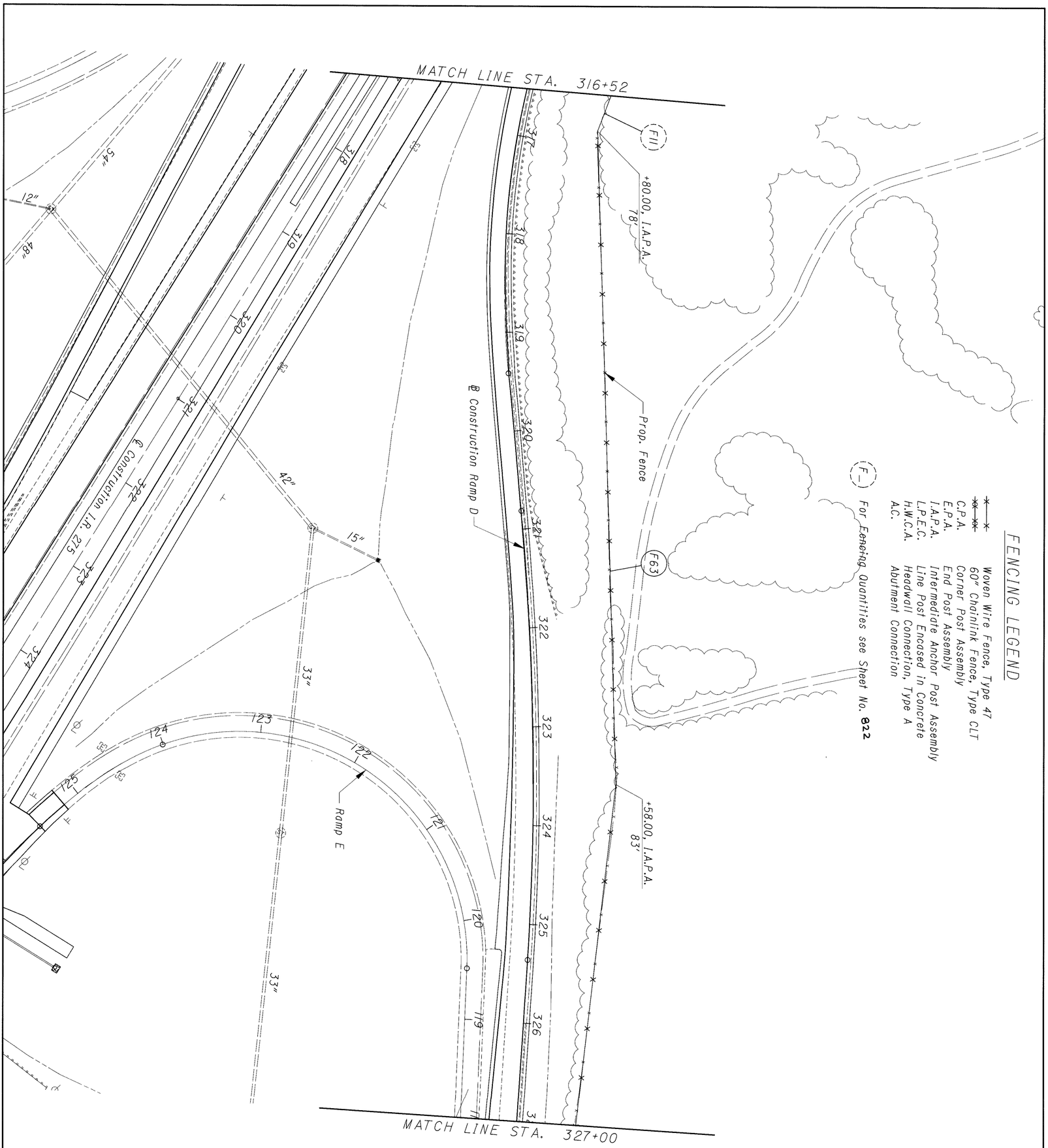

REF NO.	STATION		SIDE	202	601	607	607	625	FOR INFORMATION ONLY										
	FROM	TO		FENCE REMOVED	R.C.P. TYPE 6 WITH FILTER	FENCE TYPE 47	FENCE TYPE CLT	GROUND ROD	FENCE TERMINAL TYPE A	FENCE TERMINAL TYPE C	C.P.A.	E.P.A.	I.A.P.A.	L.P.E.C.	H.W.C.A.	A.C.	STREAM CROSSING TYPE 1	STREAM CROSSING TYPE 2	STREAM CROSSING TYPE 3
				L.F.	C.Y.	L.F.	L.F.	EACH	EACH	EACH	EACH	EACH	EACH	EACH	EACH	EACH	EACH	EACH	EACH	EACH
F63	316+80.00	328+00.00	LT	1105.77		1105.77							2						
TOTALS CARRIED TO SUB-SUMMARY				1105.77		1105.77							2						

848
857

CLE-275-5.35

RAMP D FENCE PLAN
STA 316+52.00 TO STA 327+00.00

CALCULATED EF
CHECKED AM

0 25 50 100
HORIZONTAL SCALE IN FEET

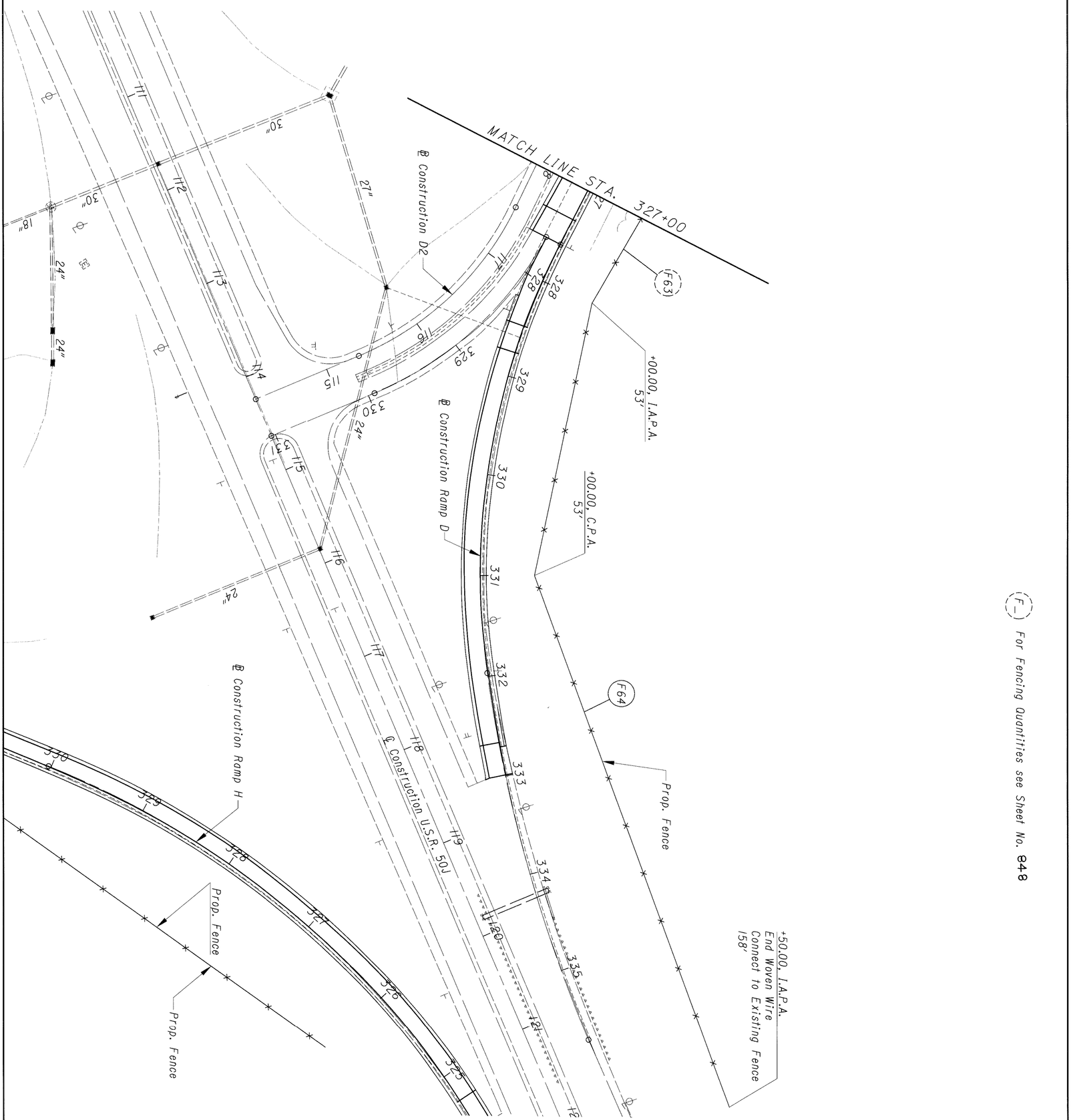

(F-) For Fencing Quantities see Sheet No. 848

REF NO.	STATION FROM	STATION TO	SIDE	202 FENCE REMOVED	601 R.C.P. TYPE 6 WITH FILTER	607 FENCE TYPE 47	607 FENCE TYPE CLT	625 GROUND ROD	FOR INFORMATION ONLY: FENCE TERMINAL TYPE A	FENCE TERMINAL TYPE C	C.P.A.	E.P.A.	I.A..P.A.	L.P.E.C.	H.W.C.A.	A.C.	STREAM CROSSING TYPE 1	STREAM CROSSING TYPE 2	STREAM CROSSING TYPE 3
	FROM	TO		L.F.	C.Y.	L.F.	L.F.	EACH	EACH	EACH	EACH	EACH	EACH	EACH	EACH	EACH	EACH	EACH	EACH
F64	328+00.00	122+50.00	LT	835.12		835.12					1		2						
TOTALS CARRIED TO SUB-SUMMARY				835.12		835.12					1		2						

CLE-275-5.35

RAMP D - U.S.R. 50J FENCE PLAN
STA. 327+00 RAMP D TO STA. 122+50 U.S.R. 50J

CALCULATED EF
CHECKED AM

0 25 50 100
HORIZONTAL SCALE IN FEET

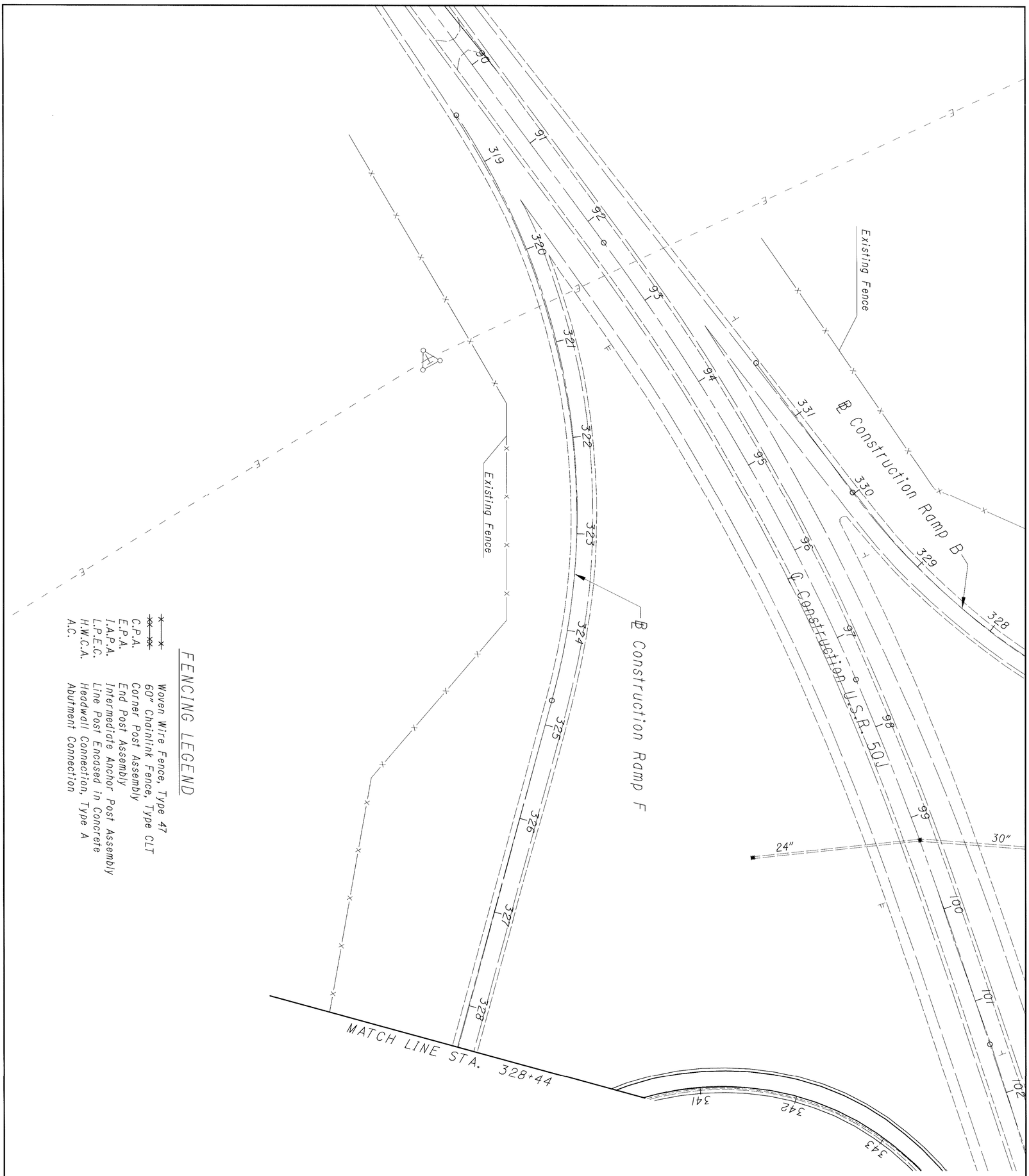

REF NO.	STATION FROM	STATION TO	SIDE	202 FENCE REMOVED	601 R.C.P. TYPE 6 WITH FILTER	607 FENCE TYPE 47	607 FENCE TYPE CLT	625 GROUND ROD	FOR INFORMATION ONLY FENCE TERMINAL TYPE A	FENCE TERMINAL TYPE C	C.P.A.	E.P.A.	I.A..P.A.	L.P.E.C.	H.W.C.A.	A.C.	STREAM CROSSING TYPE 1	STREAM CROSSING TYPE 2	STREAM CROSSING TYPE 3
				L.F.	C.Y.	L.F.	L.F.	EACH	EACH	EACH	EACH	EACH	EACH	EACH	EACH	EACH	EACH	EACH	EACH
								NO FENCE QUANTITIES THIS SHEET											
TOTALS CARRIED TO SUB-SUMMARY																			

850
957

CLE-275-5.35

RAMP F FENCE PLAN
STA 90+00.00 US50J TO STA 328+44.00 RAMP F

CALCULATED EF
CHECKED AM

0 25 50 100
HORIZONTAL SCALE IN FEET

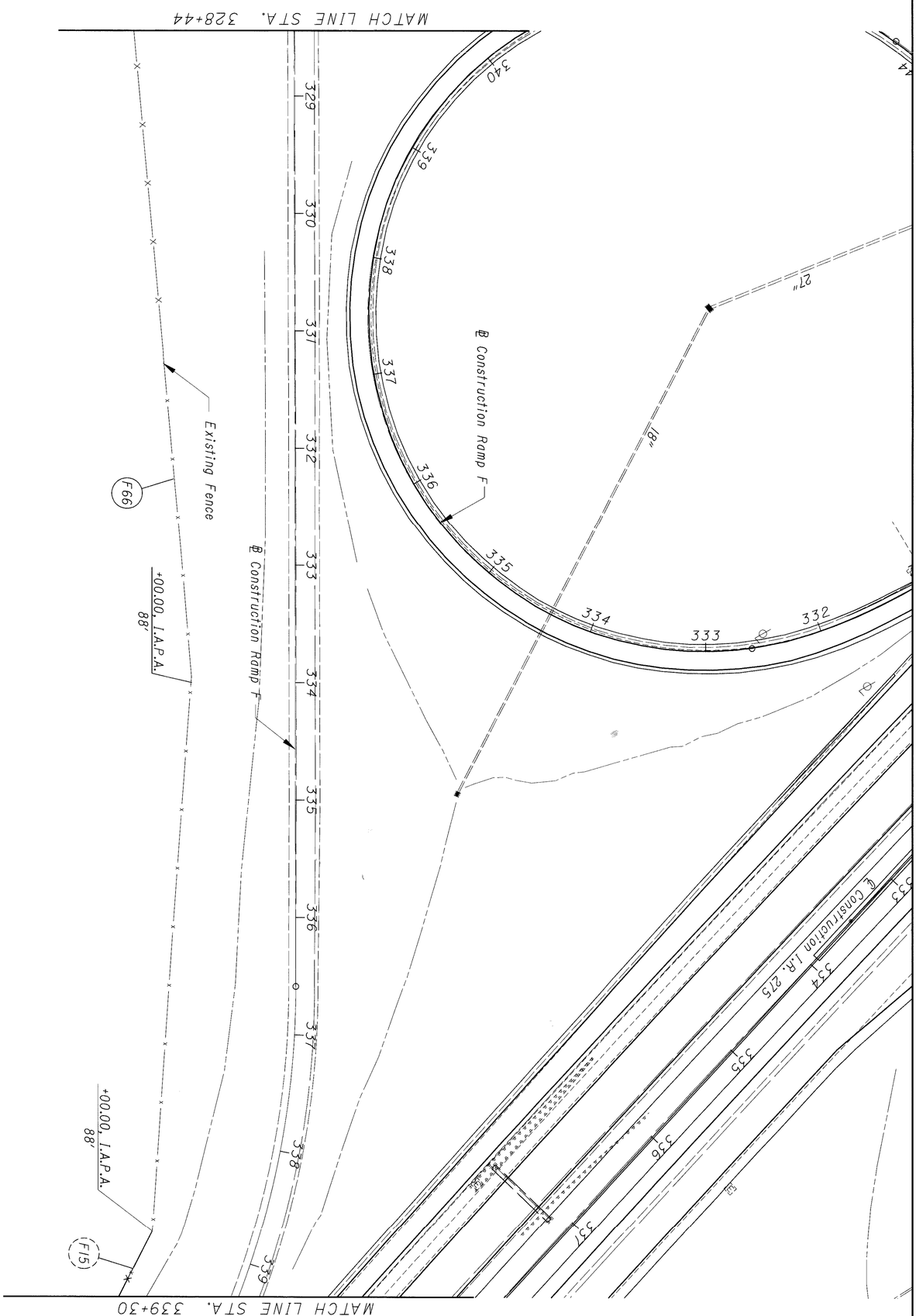

FENCING LEGEND

- Woven Wire Fence, Type 47
- 60" Chainlink Fence, Type CLT
- C.P.A. Corner Post Assembly
- E.P.A. End Post Assembly
- I.A.P.A. Intermediate Anchor Post Assembly
- L.P.E.C. Line Post Encased in Concrete
- H.W.C.A. Headwall Connection, Type A
- A.C. Abutment Connection

(F_) For Fencing Quantities see Sheet No. 825

REF NO.	STATION FROM	STATION TO	SIDE	202 FENCE REMOVED L.F.	601 R.C.P. TYPE 6 WITH FILTER C.Y.	607 FENCE TYPE 47 L.F.	607 FENCE TYPE CLT L.F.	625 GROUND ROD EACH	FOR INFORMATION ONLY: FENCE TERMINAL TYPE A EACH	FENCE TERMINAL TYPE C EACH	C.P.A. EACH	E.P.A. EACH	I.A..P.A. EACH	L.P.E.C. EACH	H.W.C.A. EACH	A.C. EACH	STREAM CROSSING TYPE 1 EACH	STREAM CROSSING TYPE 2 EACH	STREAM CROSSING TYPE 3 EACH
						NO FENCE QUANTITIES THIS SHEET													
TOTALS CARRIED TO SUB-SUMMARY																			

851 837

CLE-275-5.35

RAMP F FENCE PLAN
STA 328+44.00 TO STA 339+30.00

CALCULATED EF
CHECKED AM

0 25 50 100
HORIZONTAL SCALE IN FEET

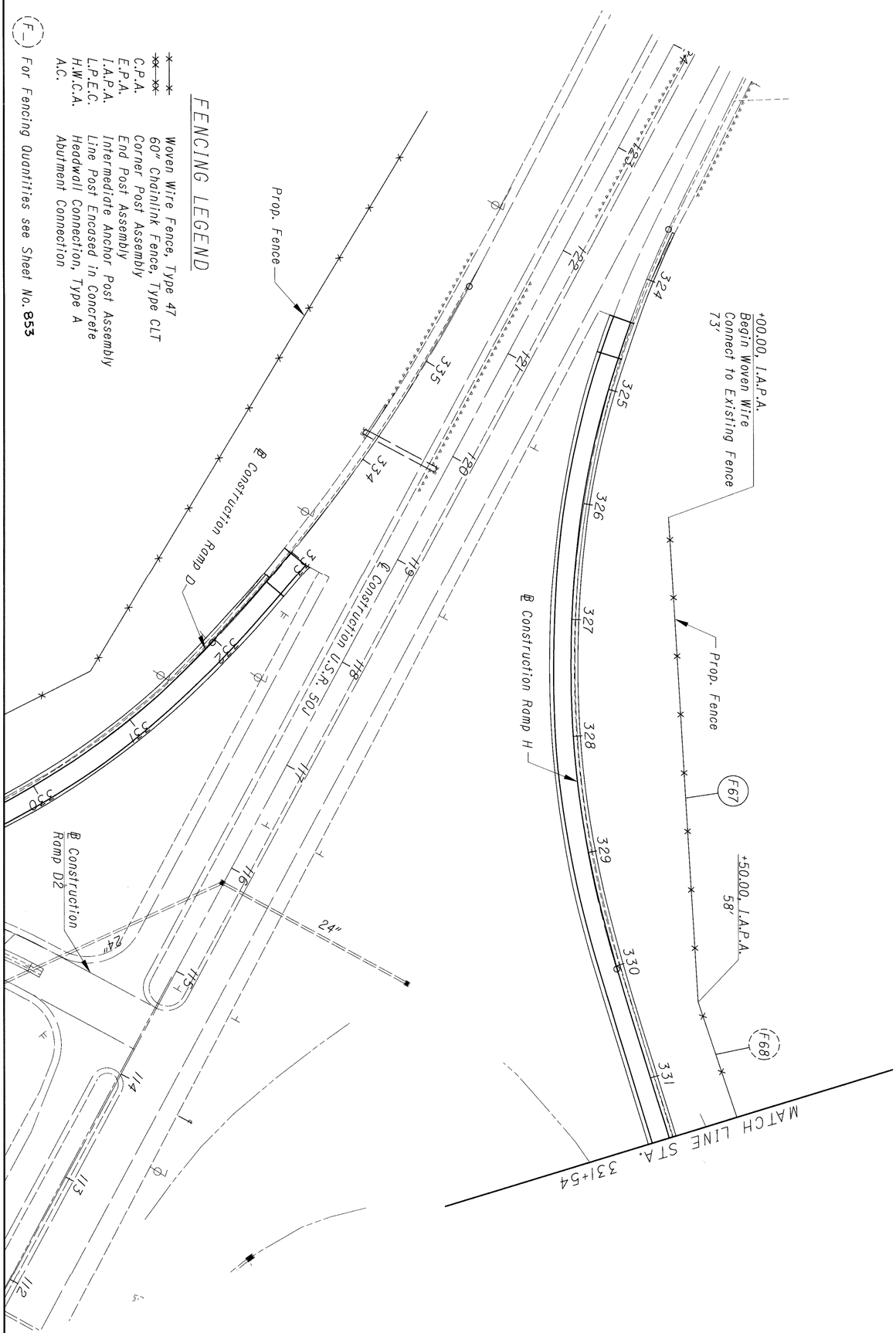

REF NO.	STATION		SIDE	202	601	607	607	625	FOR INFORMATION ONLY										
	FROM	TO		FENCE REMOVED	R.C.P. TYPE 6 WITH FILTER	FENCE TYPE 47	FENCE TYPE CLT	GROUND ROD	FENCE TERMINAL TYPE A	FENCE TERMINAL TYPE C	C.P.A.	E.P.A.	I.A..P.A.	L.P.E.C.	H.W.C.A.	A.C.	STREAM CROSSING TYPE 1	STREAM CROSSING TYPE 2	STREAM CROSSING TYPE 3
				L.F.	C.Y.	L.F.	L.F.	EACH	EACH	EACH	EACH	EACH	EACH	EACH	EACH	EACH	EACH	EACH	EACH	EACH
F67	326+00.00	330+50.00	LT	415.46			415.46						1						
TOTALS CARRIED TO SUB-SUMMARY				415.46			415.46						1						

852 (857)

CLE-275-5.35

RAMP H FENCE PLAN
STA 326+00.00 TO STA 331+54.00

CALCULATED EF
CHECKED AM

0 25 50 100
HORIZONTAL SCALE IN FEET

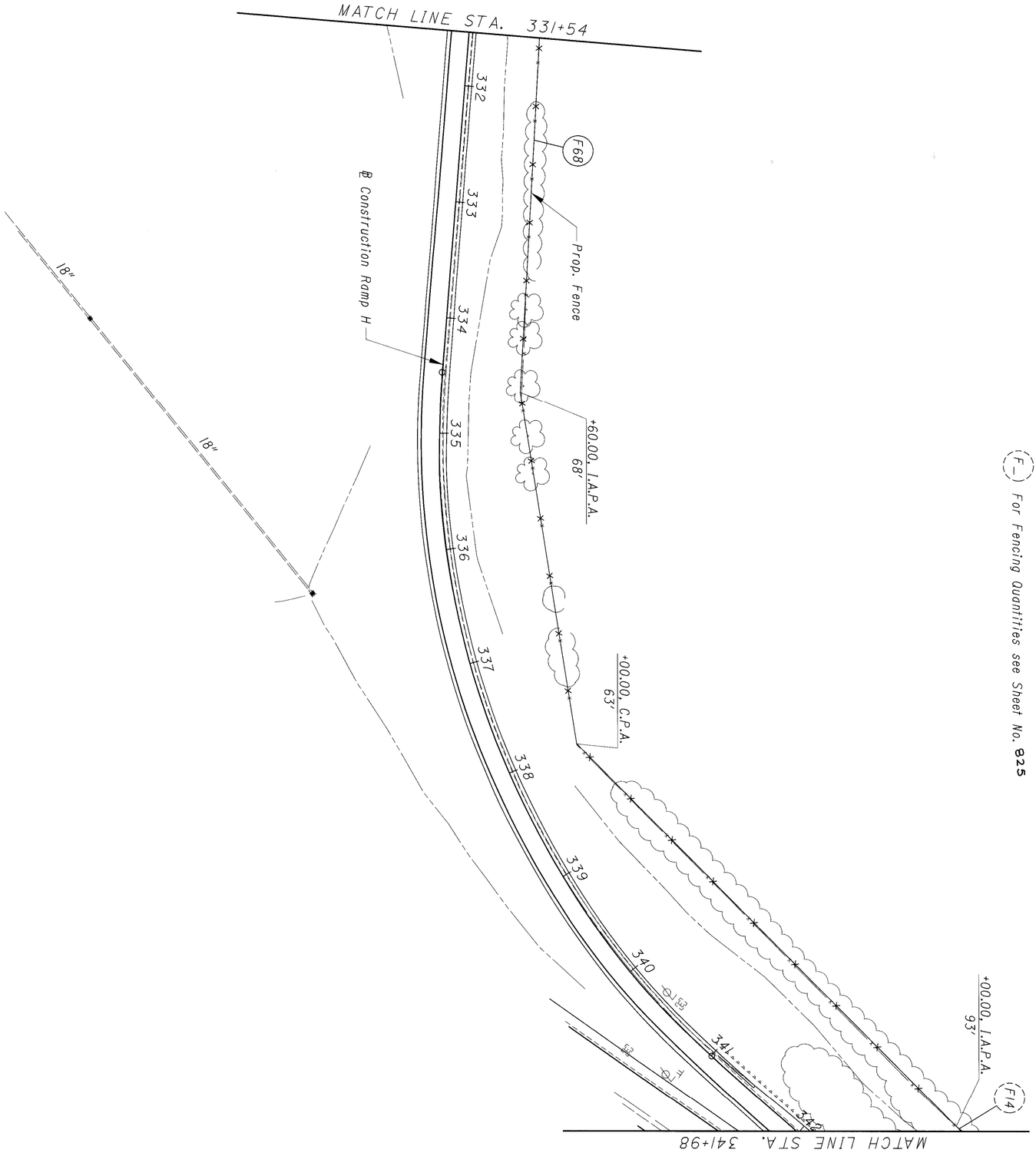

REF NO.	STATION		SIDE	202	601	607	607	625	FOR INFORMATION ONLY										
	FROM	TO		FENCE REMOVED	R.C.P. TYPE 6 WITH FILTER	FENCE TYPE 47	FENCE TYPE CLT	GROUND ROD	FENCE TERMINAL TYPE A	FENCE TERMINAL TYPE C	C.P.A.	E.P.A.	I.A..P.A.	L.P.E.C.	H.W.C.A.	A.C.	STREAM CROSSING TYPE 1	STREAM CROSSING TYPE 2	STREAM CROSSING TYPE 3
				L.F.	C.Y.	L.F.	L.F.	EACH	EACH	EACH	EACH	EACH	EACH	EACH	EACH	EACH	EACH	EACH	EACH	EACH
F68	330+50.00	343+00.00	LT	1177.32			1177.32				1		2						
TOTALS CARRIED TO SUB-SUMMARY				1177.32			1177.32				1		2						

853
857

CLE-275-5.35

RAMP H FENCE PLAN
STA 331+54.00 TO STA 341+98.00

CALCULATED EF
CHECKED AM

0 50
25 100
HORIZONTAL SCALE IN FEET

NOTES: THE LOCATION OF THE UNDERGROUND UTILITIES SHOWN ON THE PLANS ARE OBTAINED FROM THE OWNER OF THE UTILITIES AS REQUIRED BY SECTION 153.64 O.R.C.

REFERENCE POINT INFORMATION IS CONTAINED IN THE CONSTRUCTION PLAN.

CLAY M.S. No. 674
UNION TOWNSHIP
CLERMONT COUNTY

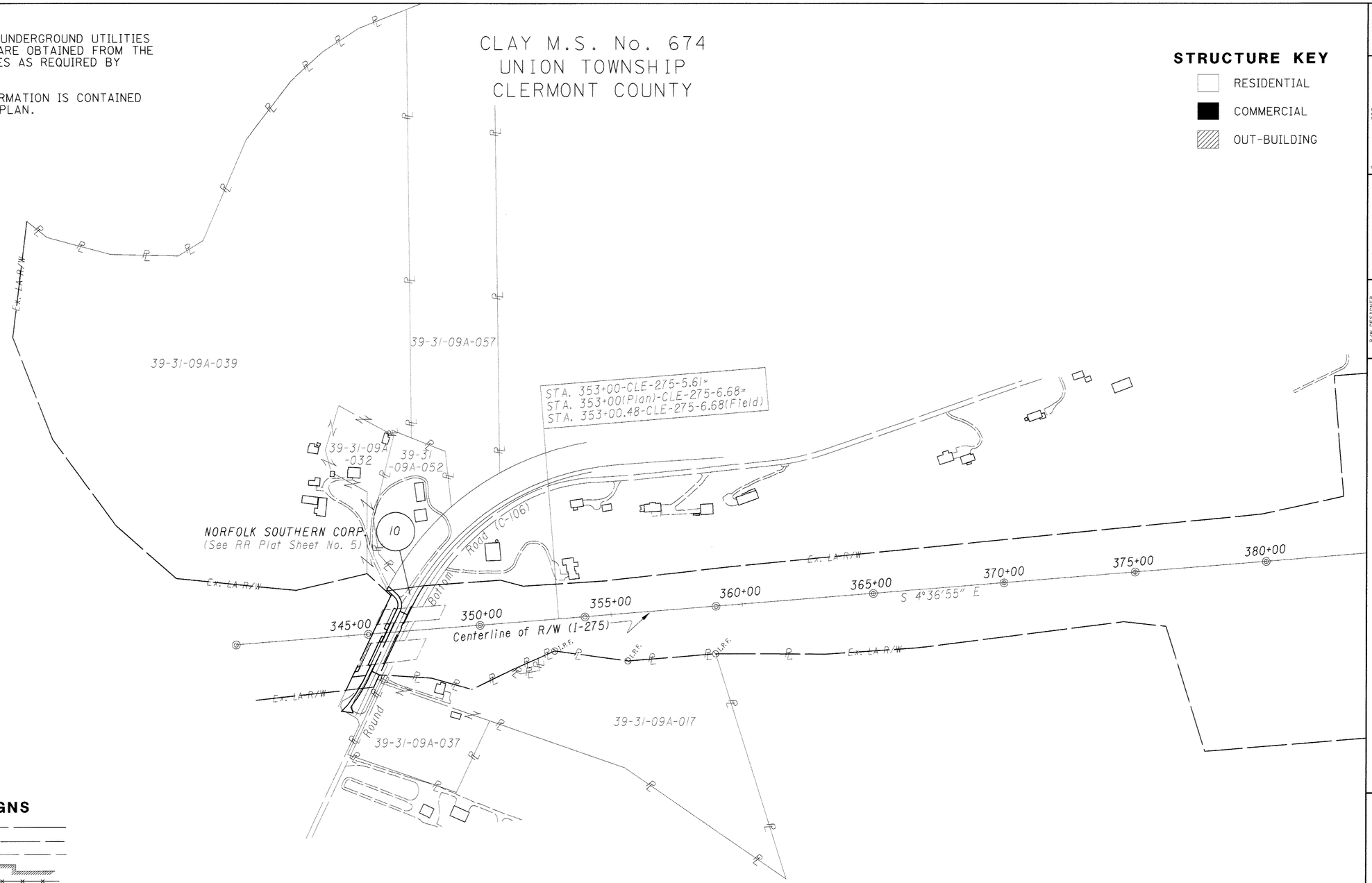

CONVENTIONAL SIGNS

County Line
Township Line
Section Line
Corporation Line or
Fence Line (existing) (proposed)
Center Line
Trees, Stumps (to be removed)
Utility Poles: Telephone, Power, Light
Limited Access (only) LA
Right of Way (only) R/W
Limited Access & Right of Way LA-R/W
Exist. Right of Way R/W
Temp. Right of Way T ESMT
Slope Easement SL ESMT
Utility Easement U ESMT
Property Line (in existing fence)
Railroad or
Guardrail (existing) (proposed)
Construction Limits

MONUMENT LEGEND

Ø - R.R. Spike Found
O I.P.F. - Iron Pin Found
⊙ I.P.F. - Iron Pin w/I.D. Cap Found
◎ - Existing Concrete Monument

REV. BY	DATE	DESCRIPTION

DATE COMPLETED 3/01

PROPERTY MAP

CLE-275-5.35

PID NO. 12436

R/W DESIGNER REH

R/W REVIEWER JDK

1 / 4

854
857

TOTAL NUMBER OF :

1 OWNERSHIPS
8 PARCELS
0 TOTAL TAKES

0 OWNERSHIPS WITH STRUCTURES INVOLVED
0 OWNERSHIPS WITH "P" ITEMS

NET RESIDUE = RECORD AREA - TOTAL PRO - NET TAKE

ALL AREAS IN SQUARE FEET UNLESS OTHERWISE NOTED

PARCEL NO.	OWNER	SHEET NO.	OWNERS RECORD BOOK	OWNERS RECORD PAGE	AUDITOR'S PARCEL	RECORD AREA	TOTAL P.R.O.	GROSS TAKE	P.R.O. IN TAKE	NET TAKE	STRUCTURE	NET RESIDUE LEFT	NET RESIDUE RIGHT	TYPE FUND	REMARKS AND PERSONALTY	AS ACQUIRED BOOK	AS ACQUIRED PAGE
10SH	NORFOLK SOUTHERN CORPORATION	3,5	201	202	No # assigned	N/A	N/A	37	——	37	——						
10SH1								266	——	266	——						
10SH2								55	——	55	——						
10SH3								208	——	208	——						
10SH4								198	——	198	——						
10SH5								98	——	98	——						
10T								14,180	——	14,180	——				Widen Substructure - 709 S.F. overlap with proposed highway easement, 14,180 S.F. overlap with Ex. Aerial easement, 2,742 S.F. overlap with existing Hwy. Ease.		
10T1								8,060	——	8,060	——				Widen Substructure - 153 S.F. overlap with proposed highway easement, 8,060 S.F. overlap with Ex. Aerial easement, 620 S.F. overlap with existing Hwy. Ease.		

NOTE: UNDER NO CIRCUMSTANCES ARE TEMPORARY EASEMENTS TO BE USED FOR STORAGE OF MATERIAL OR EQUIPMENT BY THE CONTRACTOR UNLESS NOTED OTHERWISE.

NOTE: ALL TEMPORARY PARCELS TO BE OF 24 MONTHS DURATION.

REV. BY	DATE	DESCRIPTION

FIELD REVIEW BY DATE:
OWNERSHIP VERIFIED BY DATE:
DATE COMPLETED 3/01

FEDERAL PROJECT NO.

PID NO. 12436

STATE JOB NO. 083930

R/W DESIGNER REH

R/W REVIEWER JDK

SUMMARY OF ADDITIONAL RIGHT OF WAY

CLE-275-5.35

855
857

CLAY M.S. NO. 674
UNION TOWNSHIP
CLERMONT COUNTY

Ex. LA R/W
Ex. R.R. R/W
Ex. R/W
Exist. Aerial Ease. Line
Gravel
Asphalt
Wooded
ROAD
NORFOLK SOUTHERN RR
Ex. R.R. R/W
54" Conc.
4674
CB
226
Aerial

+57.19
162.97'
+74.62
144.14'
Spiral=127.06'
Chd.=127.00',Brg.=S64°07'01"E
Spiral=44.54'
Chd.=44.52',Brg.=S63°17'20"E
20.00'
N64°53'55"W
+41.24
88.74'
2.24'
S4°36'56"E
+43.49
88.74'
12.79'
S42°36'05"W
+83.31
134.75'
1.93'
S4°36'56"E
+51.47
106.11'
+53.40
106.11'
Arc.=54.41',Rad.=33.00'
Chd.=50.85', Brg.=S78°51'05"W
Spiral=20.16'
Chd.=20.16',Brg.=N64°07'00"W
+01.25
77.29'
S25°06'05"W
+89.09
84.23'
+29.47
61.18'
Spiral=82.38'
Chd.=82.34',Brg.=N64°33'29"W
+10.17
34.71'
+47.06
36.02'
+57.29
30.18'
+10.49
34.26'
+12.88
32.89'
Spiral=20.51'
Chd.=20.51',Brg.=N64°40'02"W
+35.88
16.44'
+82.64
10.11'
+09.32
16.44'
+02.64
15.12'
15.12'
N85°23'05"E
+32.72
14.53'
+25.01
10.14'
+46.11
10.60'
+88.23
10.08'
+13.94
29.54'
+72.63
27.65'
+86.84
12.51'
+21.64
33.94'
8.87'
S25°06'05"W
+76.83
30.05'
4.83'
S25°06'05"W
Sta. 346+76.71 I.R. 275=
Sta. 4675+72.00 NS R.R.
ST Sta. 4675+75.05
+21.78
120.13'
+34.00
119.69'
+76.54
141.20'
12.22'
S6°41'28"E
+11.87
137.50'
+24.08
137.06'
+00.71
157.06'
51.76'
S 6°41'28" E
+52.44
155.18'
+04.34
157.06'
+73.34
205'
Exist. Aerial Ease. Line
Service Road No. 2
BOTTOM
ROUND
Gravel
Asphalt
Wooded
12" Conc.
54" CMP
15" Conc.
698.77'
348
349
346
345
344
4°36'55" E
Exist. ℄ I-275 as recorded in P.B. F-1, Pgs. 10,11 & 12
Acquired under CLE-275-5.61
139.60'
275.67'
S 64°53'55" E
251.57'
146.24'
169.23'
N 64°53'55" W
220.81'
4677
4678
4676
20.00'
20.00'
32.49'
32.49'
32.49'
S25°06'05"W
77.72'
55.20'
S 64°53'55" E

(H)	22.55' N64°53'55"W	(J)	22.35' N64°53'55"W
(I)	11.78' S25°06'05"W	(K)	8.87' S25°06'05"W

(A)	11.78' S25°06'05"W	(E)	20.51' N64°53'55"W
(B)	20.20' N64°53'55"W	(F)	2.75' S25°06'08"W
(C)	4.83' S25°06'05"W	(G)	10.60' N85°23'05"E
(D)	2.66' S25°06'05"W		

NORFOLK SOUTHERN R.R. ℄
P.I. Sta = 4670+21.54
D = 61°06'00" (LT)
Dc = 6°00'00"
R = 955.37'
Ls = 200.00'
Theta = 6°00'00"
LT = 133.41'
ST = 66.74'
x = 199.78'
y = 6.98'
k = 99.92'
p = 1.74'
Lc = 818.33'
Ts = 664.82'
Es = 156.02'

FOR CENTERLINE SURVEY PLAT SEE SHEET 393 OF 412 (CLE-275-5.61) AS RECORDED IN P.B. F-1,PGS. 10,11 & 12.

For maintenance of access to #826 & #834 From Round Bottom Road see Sheet ___ of Construction Plan.

REV. BY	DATE	DESCRIPTION
DATE COMPLETED	3/01	

SCALE IN FEET 0 10 20 40

PID NO. 12436

R/W DESIGNER REH
R/W REVIEWER JDK

RIGHT OF WAY PLAN

CLE-275-5.35

3 / 4

856
857

NORFOLK SOUTHERN CORPORATION

CLAY M.S. NO. 674
UNION TOWNSHIP
CLERMONT COUNTY

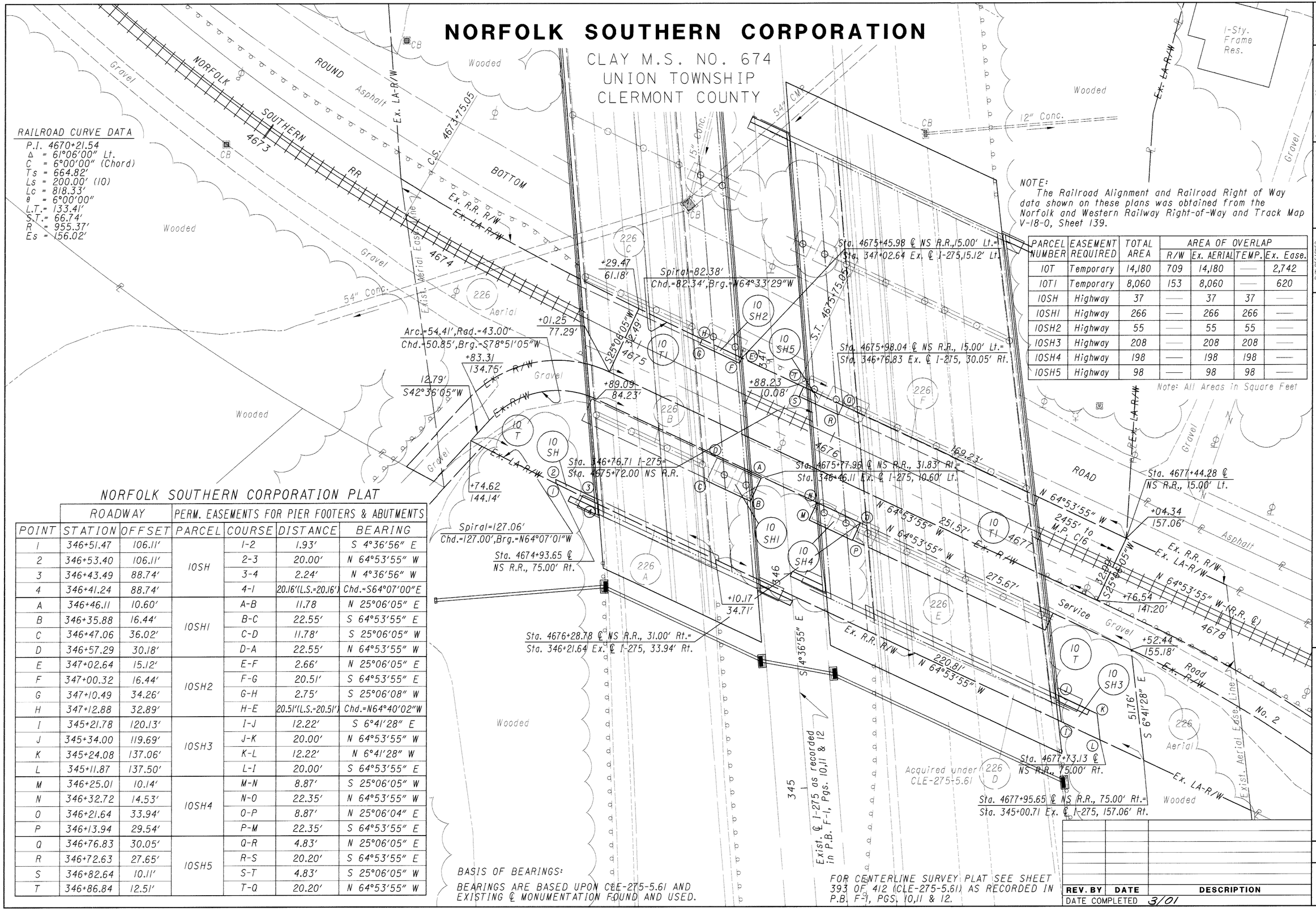

RAILROAD CURVE DATA

P.I. 4670+21.54
Δ = 61°06'00" Lt.
C = 6°00'00" (Chord)
Ts = 664.82'
Ls = 200.00' (10)
Lc = 818.33'
θ = 6°00'00"
L.T.= 133.41'
S.T.= 66.74'
R = 955.37'
Es = 156.02'

NOTE:
The Railroad Alignment and Railroad Right of Way data shown on these plans was obtained from the Norfolk and Western Railway Right-of-Way and Track Map V-18-0, Sheet 139.

PARCEL NUMBER	EASEMENT REQUIRED	TOTAL AREA	AREA OF OVERLAP			
			R/W	Ex. AERIAL	TEMP.	Ex. Ease.
10T	Temporary	14,180	709	14,180	—	2,742
10T1	Temporary	8,060	153	8,060	—	620
10SH	Highway	37	—	37	37	—
10SH1	Highway	266	—	266	266	—
10SH2	Highway	55	—	55	55	—
10SH3	Highway	208	—	208	208	—
10SH4	Highway	198	—	198	198	—
10SH5	Highway	98	—	98	98	—

Note: All Areas in Square Feet

NORFOLK SOUTHERN CORPORATION PLAT

	ROADWAY		PERM. EASEMENTS FOR PIER FOOTERS & ABUTMENTS			
POINT	STATION	OFFSET	PARCEL	COURSE	DISTANCE	BEARING
1	346+51.47	106.11'	10SH	1-2	1.93'	S 4°36'56" E
2	346+53.40	106.11'		2-3	20.00'	N 64°53'55" W
3	346+43.49	88.74'		3-4	2.24'	N 4°36'56" W
4	346+41.24	88.74'		4-1	20.16'(L.S.=20.16')	Chd.=S64°07'00"E
A	346+46.11	10.60'	10SH1	A-B	11.78	N 25°06'05" E
B	346+35.88	16.44'		B-C	22.55'	S 64°53'55" E
C	346+47.06	36.02'		C-D	11.78'	S 25°06'05" W
D	346+57.29	30.18'		D-A	22.55'	N 64°53'55" W
E	347+02.64	15.12'	10SH2	E-F	2.66'	N 25°06'05" E
F	347+00.32	16.44'		F-G	20.51'	S 64°53'55" E
G	347+10.49	34.26'		G-H	2.75'	S 25°06'08" W
H	347+12.88	32.89'		H-E	20.51'(L.S.=20.51')	Chd.=N64°40'02"W
I	345+21.78	120.13'	10SH3	I-J	12.22'	S 6°41'28" E
J	345+34.00	119.69'		J-K	20.00'	N 64°53'55" W
K	345+24.08	137.06'		K-L	12.22'	N 6°41'28" W
L	345+11.87	137.50'		L-I	20.00'	S 64°53'55" E
M	346+25.01	10.14'	10SH4	M-N	8.87'	S 25°06'05" W
N	346+32.72	14.53'		N-O	22.35'	N 64°53'55" W
O	346+21.64	33.94'		O-P	8.87'	N 25°06'04" E
P	346+13.94	29.54'		P-M	22.35'	S 64°53'55" E
Q	346+76.83	30.05'	10SH5	Q-R	4.83'	N 25°06'05" E
R	346+72.63	27.65'		R-S	20.20'	S 64°53'55" E
S	346+82.64	10.11'		S-T	4.83'	S 25°06'05" W
T	346+86.84	12.51'		T-Q	20.20'	N 64°53'55" W

BASIS OF BEARINGS:
BEARINGS ARE BASED UPON CLE-275-5.61 AND EXISTING ℄ MONUMENTATION FOUND AND USED.

FOR CENTERLINE SURVEY PLAT SEE SHEET 393 OF 412 (CLE-275-5.61) AS RECORDED IN P.B. F-1, PGS. 10,11 & 12.

REV. BY	DATE	DESCRIPTION

DATE COMPLETED 3/01

SCALE IN FEET: 0, 10, 20, 40

PID NO. 12436

R/W DESIGNER REH
R/W REVIEWER JDK

RAILROAD PLAT

CLE-275-5.35

4 / 4

857 / 857

INTRODUCTION

THIS REPORT CONSISTS OF THE SOILS INVESTIGATION FOR THE WIDENING OF A 4.65 MILE SECTION OF INTERSTATE I-275. THIS SECTION BEGINS JUST NORTH OF OLD U.S. ROUTE 50 IN MILFORD, OHIO AND ENDS JUST NORTH OF OLD S.R. 74 IN UNION TOWNSHIP, CLERMONT COUNTY, OHIO. THE ALIGNMENT IS ORIENTED GENERALLY IN A NORTH-SOUTH DIRECTION OVER THE LENGTH OF THE PROPOSED WIDENING.

MAXIMUM PROPOSED CUTS AND FILL EMBANKMENTS ARE SHOWN IN THE PROJECT INDEX ON THIS SHEET.

GEOLOGY AND OBSERVATIONS OF THE PROJECT

THE ENTIRE PROJECT ALIGNMENT IS LOCATED WITHIN THE ILLINIOAN TILL PLAIN PHYSIOGRAPHIC REGION. THIS REGION IS COMPRISED OF A ROLLING GROUND MORAINE OF RELATIVELY OLD GLACIAL TILL WITH MODERATELY LOW (APPOXIMATELY 50 FEET) RELIEF. BURIED VALLEYS AND MODERN VALLEYS ALTERNATING BETWEEN BROAD FLOODPLAINS AND BEDROCK GORGES ARE COMMON.

THE NORTHERN PORTION OF THE ALIGNMENT TRAVERSES THE FLOODPLAIN OF THE EAST FORK LITTLE MIAMI RIVER. THE REMAINDER OF THE ALIGNMENT TRAVERSES SEVERAL OTHER SMALLER DRAINAGE WAYS, SUCH AS HALL RUN. DRAINAGE IN THE REFERENCED AREA GENERALLY IS INTO THE EAST FORK LITTLE MIAMI RIVER (AND ITS TRIBUTARIES), WHICH FLOWS INTO THE LITTLE MIAMI RIVER.

WITHIN THE FLOODPLAIN OF THE EAST FORK LITTLE MIAMI RIVER, THE ALIGNMENT IS UNDERLAIN BY FILL MATERIAL, ALLUVIUM, ALLUVIAL TERRACES AND GLACIAL OUTWASH. THE REMAINDER OF THE ALIGNMENT IS GENERALLY UNDERLAIN BY FILL MATERIAL AND/OR AN ILLINOIAN GLACIAL GROUND MORAINE. THE AFOREMENTIONED DEPOSITS ARE UNDERLAIN BY SEDIMENTARY BEDROCK OF THE KOPE FORMATION, THE MIAMITOWN SHALE AND FAIRVIEW FORMATION (UNDIVIDED), AND THE GRANT LAKE FORMATION, EACH REPRESENTING THE ORDIVICIAN GEOLOGIC PERIOD.

ACTIVITY FROM THE CONSTRUCTION OF INTERSTATE I-275 HAS DISTURBED THE SOILS ALONG THE ALIGNMENT. RELATIVELY DEEP CUTS AND FILL EMBANKMENTS ARE PRESENT.

EXPLORATION

SOIL PROFILE BORINGS WERE ADVANCED WITH SOLID-STEM AUGERS POWERED BY TRUCK-MOUNTED DRILL RIGS. THE EXPLORATION WAS CONDUCTED BETWEEN OCTOBER 14 AND NOVEMBER 4, 1999.

INVESTIGATIONAL FINDINGS

MATERIALS ENCOUNTERED ON THE PROJECT ALIGNMENT WERE PREDOMINANTLY COMPRISED OF FILL MATERIAL THAT CLASSIFIED, FOR THE MOST PART, AS SILTY CLAY (A-6b), SILT AND CLAY (A-6a) AND CLAY (A-7-6). TO A LESSER DEGREE, SANDY SILT (A-4a), GRAVEL WITH SAND, SILT AND CLAY (A-2-6) AND GRAVEL WITH SAND AND SILT (A-2-4) WERE ALSO OBSERVED.

BEDROCK WAS ENCOUNTERED AT SHALLOW DEPTHS WITHIN CUT SECTIONS FROM STATION 385+02 TO 396+99, AND AT STATIONS 415+02 AND 438+98. THE BEDROCK CONSISTED OF INTERBEDDED SHALE AND LIMESTONE.

TWO EXISTING LANDSLIDES WERE OBSERVED ALONG THE ALIGNMENT. THESE WERE LOCATED AT STATION 355+00, WEST OF THE SOUTHBOUND LANE, AND AT STATION 364+65, WEST OF THE SOUTHBOUND LANE. ADDITIONAL BORINGS WERE ADVANCED AT THESE SITES.

PROJECT INDEX				
STATIONS FROM TO	PLAN VIEW SHEET	PROFILE SHEET	CUT MAX	FILL EMB. MAX
282+45 293+00	3	3	–	1'±
293+00 323+00	4	4	–	1'±
323+00 353+00	5	5	–	2'±
353+00 383+00	6	6	–	2'±
383+00 413+00	7	7	–	1'±
413+00 443+00	8	8	–	1'±
443+00 473+00	9	9	–	1'±
473+00 503+00	10	10	–	1'±
503+00 517+50	11	11	–	1'±

LEGEND FOR PROJECT AVERAGE RESULTS OF TESTS – 70 SAMPLES TESTED

DESCRIPTION	ODOT CLASS	% AGG.	% C.S.	% F.S.	% SILT	% CLAY	L.L.	P.I.	% W.C	SAMPLES TESTED
GRAVEL AND/OR STONE FRAGMENTS W/SAND AND SILT	A-2-4 (0)	33	18	19	16	14	26	9	17	1
GRAVEL AND/OR STONE FRAG-MENTS W/SAND,SILT & CLAY	A-2-6 (1)	49	12	8	14	17	29	14	15	4
SANDY SILT	A-4a (3)	15	12	23	28	22	22	9	13	6
SILT AND CLAY	A-6a (6)	16	12	18	26	28	27	13	14	28
SILTY CLAY	A-6b (11)	15	8	11	30	36	35	19	16	28
CLAY	A-7-6 (17)	7	5	9	30	49	47	26	20	21

SOD AND/OR TOPSOIL = X = APPROXIMATE DEPTH

SHALE WITH INTERBEDDED LIMESTONE

AUGER BORING – PLAN VIEW

DRIVE SAMPLE AND/OR CORE BORING – PLAN VIEW

ROADWAY OR AUGER BORING PLOTTED TO VERTICAL SCALE ONLY

DRIVE SAMPLE AND/OR CORE BORING PLOTTED TO VERTICAL SCALE ONLY

NOTE: FIGURES BESIDE BORINGS INDICATE WATER CONTENT IN PERCENT.

WATER CONTENT NEARLY EQUAL TO OR GREATER THAN LIQUID LIMIT

INDICATES A NON PLASTIC MATERIAL WITH A HIGH WATER CONTENT

W — FREE WATER

STATIC WATER LEVEL

FIGURES BESIDE THE BORING LOG IN PROFILE INDICATES THE NUMBER OF BLOWS FOR STANDARD PENETRATION TEST.

NUMBER OF BLOWS FOR STANDARD PENETRATION TEST
X = NUMBER OF BLOWS FOR FIRST 6 INCHES
Y = NUMBER OF BLOWS FOR SECOND 6 INCHES
Z = NUMBER OF BLOWS FOR THIRD 6 INCHES

or X/Y/Z

Recon – E.M.K. – 08/99
Drilling – Auger – G.H., A.A.– 10/14/99-11/04/99
Drafting M.S.J. – 12/99-3/00

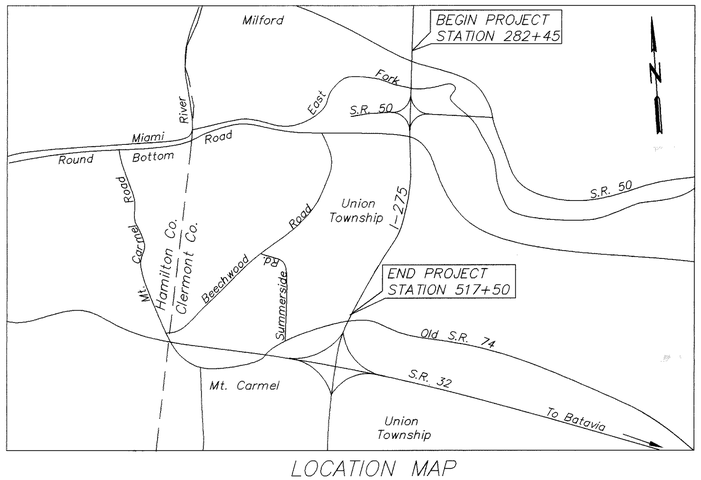

LOCATION MAP

NOTE

ALL AVAILABLE SOIL AND BEDROCK INFORMATION WHICH CAN BE CONVENIENTLY SHOWN ON THE SOIL PROFILE SHEETS HAS BEEN SO REPORTED. ADDITIONAL SUBSURFACE INVESTIGATIONS, SOIL TESTS, AND BEDROCK BORINGS MAY HAVE BEEN MADE TO STUDY SOME SPECIAL ASPECT OF THE PROJECT. COPIES OF THIS DATA, IF ANY, MAY BE INSPECTED IN THE DISTRICT DEPUTY DIRECTOR'S OFFICE, THE OFFICE OF MATERIALS MANAGEMENT AT 1600 WEST BROAD STREET, THE OFFICE OF ROADWAY ENGINEERING OR THE OFFICE OF STRUCTURAL ENGINEERING AT 25 SOUTH FRONT STREET.

DESIGN AGENCY
BALKE ENGINEERS, INC.
CINCINNATI, OHIO

DRAWN	REVISED	DATE	CHECKED
M.S.J.		4/00	E.M.K.
CHECKED			
S.A.H.			

SOIL PROFILE

CLE-275-5.35

SUMMARY OF SOIL TEST DATA

NOTE: NP SHOWN IN LIQUID LIMIT AND PLASTICITY INDEX COLUMNS INDICATES THAT THE MATERIAL IS NON-PLASTIC
* DENOTES SAMPLES TAKEN AT OR NEAR GRADE

Station	Offset	Surface Elev.	Depth (feet)	% Agg	%C.S.	%F.S.	% Silt	% Clay	L.L.	P.I.	% W.C.	ODOT Class.
282+98	14 Rt	582.1	0.3'–6.7'	5	2	3	35	55	44	17	15	A–7–6 (12)
			6.7'–10.0'	30	9	5	23	33	39	18	9	A–6b (8)
288+93	13 Lt	564.3	0.2'–7.2'	3	6	13	30	48	46	26	19	A–7–6 (16)
			7.2'–10.0'	12	8	3	34	43	35	15	11	A–6a (10)
292+80	13 Rt	552.8	0.3'–4.8'	4	3	3	37	53	40	20	12	A–6b (12)
			4.8'–10.0'	14	4	3	35	44	38	18	11	A–6b (11)
299+02	15 Lt	536.1	0.3'–5.2'	12	17	27	25	19	20	6	7	A–4a (2)
			5.2'–10.0'	14	12	18	32	24	23	10	9	A–4a (4)
304+98	13 Rt	523.5	0.3'–5.8'	36	18	14	18	14	28	11	10	A–2–6 (0)
			5.8'–10.0'	33	18	19	16	14	26	9	9	A–2–4 (0)
310+98	14 Lt	523.7	0.3'–5.8'	1	5	37	33	24	23	8	11	A–4a (5)
			5.8'–10.0'	6	9	36	27	22	25	12	13	A–6a (4)
317+07	15 Rt	531.5	0.4'–5.6'	23	14	16	24	23	24	13	7	A–6a (3)
			5.6'–10.0'	11	13	18	29	29	26	14	11	A–6a (6)
323+04	25 Lt	540.5	0.3'–5.8'	5	12	33	21	29	27	14	11	A–6a (4)
			5.8'–10.0'	2	10	30	26	32	28	14	13	A–6a (6)
330+98	14 Rt	551.2	3.0–4.0	2	16	29	23	30	28	13	12	A–6a (4)
			8.5–9.5	2	8	19	37	34	34	18	17	A–6b (11)
337+05	26 Lt	560.3	0.3'–7.8'	15	10	25	25	25	26	12	8	A–6a (4)
			7.8'–10.0'	4	9	21	33	33	34	18	17	A–6b (9)
343+02	22 Rt	570.5	0.4'–8.1'	25	10	19	25	21	22	8	7	A–4a (2)
			8.1'–10.0'	8	10	18	28	36	37	21	15	A–6b (10)
348+98	27 Rt	582.0	0.3'–5.3'	8	10	15	30	37	38	22	18	A–6b (11)
			5.3'–10.0'	15	9	13	27	36	40	23	19	A–6b (11)
353+99	26 Lt	592.1	0.3'–5.8'	17	8	15	31	29	29	16	10	A–6b (7)
			5.8'–10.0'	8	8	12	31	41	34	19	14	A–6b (11)
354+97	139 Rt	575.1	0.7'–6.5'	6	3	9	26	56	49	30	28	A–7–6 (18)
			6.5'–11.5'	3	3	3	31	60	46	23	18	A–7–6 (14)
355+02	86 Rt.	594.4	0.7'–11.7'	20	10	9	19	42	25	12	9	A–6a (6)
			11.7'–24.8'	9	7	15	28	41	39	22	24	A–6b (12)
361+06	26 Rt	610.4	0.5'–6.8'	29	11	16	22	22	25	12	9	A–6a (2)
			6.8'–10.0'	9	8	13	22	48	53	34	20	A–7–6 (17)
364+64	114 Rt	605.8	0.5'–7.0'	7	5	10	29	49	46	27	27	A–7–6 (16)
			7.0'–18.9'	5	4	10	34	47	42	25	22	A–7–6 (14)
			18.9'–29.8'	8	7	12	36	37	30	14	13	A–6a (9)
			29.8'–48.1'	13	7	11	30	39	32	17	14	A–6b (10)
364+71	142 Rt	596.7	0.5'–10.8'	12	4	9	32	43	43	25	31	A–7–6 (15)
			10.8'–29.4'	6	6	9	37	42	35	17	17	A–6b (11)
			29.4'–42.5'	11	9	11	35	34	30	14	15	A–6a (9)
364+72	79 Rt	622.1	1.2'–9.4'	28	13	19	20	20	24	12	13	A–6a (2)
			9.4'–15.3'	12	11	15	31	31	30	15	20	A–6a (8)
			15.3'–22.9'	5	6	13	26	50	51	33	18	A–7–6 (18)
			22.9'–32.8'	4	6	13	45	32	35	15	23	A–6a (10)
			32.8'–40.8'	9	5	11	35	40	39	23	16	A–6b (13)
			40.8'–55.1'	15	8	13	32	32	31	16	16	A–6b (8)
			55.1'–59.9'	8	3	2	43	44	32	15	20	A–6a (10)

Station	Offset	Surface Elev.	Depth (feet)	% Agg	%C.S.	%F.S.	% Silt	% Clay	L.L.	P.I.	% W.C.	ODOT Class.
366+97	25 Lt	628.4	0.2'–7.1'	13	11	18	29	29	32	17	7	A–6b (7)
			7.1'–10.0'	19	15	20	23	23	26	13	10	A–6a (3)
373+05	25 Rt	644.5	0.4'–6.4'	18	17	22	24	19	22	9	27	A–4a (2)
			6.4'–10.0'	7	10	16	24	43	49	25	16	A–7–6 (14)
378+96	26 Lt	655.9	0.2'–5.6'	20	8	8	26	38	34	19	10	A–6b (9)
			5.6'–10.0'	10	7	10	30	43	32	17	11	A–6b (10)
385+02	26 Rt	662.6	0.4'–2.0'	46	8	6	17	23	35	19	6	A–6b (3)
391+20	22 Lt	668.5	0.3'–1.2'	17	18	15	19	31	30	15	6	A–6a (5)
396+99	26 Rt	674.7	0.3'–1.8'	6	3	2	35	54	42	21	13	A–7–6 (13)
402+93	28 Lt	680.4	0.3'–5.7'	9	8	13	31	39	36	21	12	A–6b (11)
			5.7'–10.0'	5	6	13	28	48	48	27	17	A–7–6 (16)
409+05	25 Rt	686.7	0.2'–5.2'	10	8	8	28	46	44	23	13	A–7–6 (14)
			5.2'–10.0'	10	7	5	26	52	43	22	15	A–7–6 (13)
415+02	26 Lt	692.0	0.4'–4.8'	13	9	14	27	37	31	16	10	A–6b (8)
421+01	23 Rt	698.4	0.3'–6.4'	41	10	12	17	20	24	11	9	A–6a (1)
			6.4'–10.0'	14	10	13	27	36	29	13	11	A–6a (7)
426+98	29 Lt	708.5	0.4'–5.3'	15	10	18	30	27	25	13	8	A–6a (6)
			5.3'–10.0'	17	11	16	32	24	22	10	8	A–4a (4)
433+02	26 Rt	723.1	0.4'–5.4'	15	9	17	32	27	24	11	9	A–6a (5)
			5.4'–10.0'	11	13	18	32	26	24	11	10	A–6a (5)
438+98	30 Lt	738.0	0.3'–1.8'	16	9	7	28	40	37	20	11	A–6b (11)
444+96	29 Rt	752.1	0.3'–7.3'	4	4	11	32	49	46	23	19	A–7–6 (14)
			7.3'–10.0'	18	8	13	28	33	32	18	12	A–6b (9)
450+92	29 Lt	766.7	0.3'–6.9'	5	6	10	38	41	40	21	17	A–6b (12)
			6.9'–10.0'	5	3	6	35	51	50	30	23	A–7–6 (18)
457+06	26 Rt	780.5	0.4'–2.7'	52	8	7	13	20	30	15	8	A–2–6 (1)
462+98	30 Lt	789.9	0.4'–2.4'	22	10	7	31	30	30	15	6	A–6a (7)
468+96	26 Rt	795.6	0.3'–1.8'	32	7	10	21	30	35	20	9	A–6b (7)
474+99	28 Lt	801.9	0.3'–6.1'	3	4	8	41	44	41	24	21	A–7–6 (14)
			6.1'–10.0'	1	2	4	44	49	41	23	23	A–7–6 (13)
480+98	25 Rt	807.6	0.4'–6.8'	19	11	16	28	26	25	13	9	A–6a (5)
			6.8'–10.0'	23	12	18	24	23	42	24	9	A–7–6 (7)
486+98	26 Lt	813.4	0.3–5.8'	14	12	17	28	29	27	14	8	A–6a (6)
			5.8'–10.0'	14	12	18	29	27	25	13	8	A–6a (6)
492+98	26 Rt	819.5	0.4'–5.7'	1	3	9	27	60	58	35	26	A–7–6 (20)
			5.7'–10.0'	0	1	6	52	41	37	17	26	A–6b (11)
499+07	27 Lt	825.5	0.2'–1.6'	38	11	6	19	26	30	15	4	A–6a (3)
504+99	26 Rt	831.4	0.3'–2.8'	53	10	5	14	18	28	13	4	A–2–6 (1)
510+99	26 Lt	837.8	0.3'–1.8'	37	15	7	15	26	33	17	6	A–6b (3)
516+95	27 Rt	845.2	0.5'–6.7'	16	6	5	22	51	54	32	21	A–7–6 (18)
			6.7'–10.0'	53	12	5	11	19	30	15	5	A–2–6 (1)
522+99	26 Lt	851.7	0.3'–4.7'	33	10	5	21	31	31	16	7	A–6b (6)

DESIGN AGENCY
BALKE ENGINEERS, INC.
CINCINNATI, OHIO

DRAWN	REVISED	DATE	CHECKED
M.S.J.		4/00	E.M.K.
CHECKED			
S.A.H.			

SOIL PROFILE

CLE-275-5.35

2/47

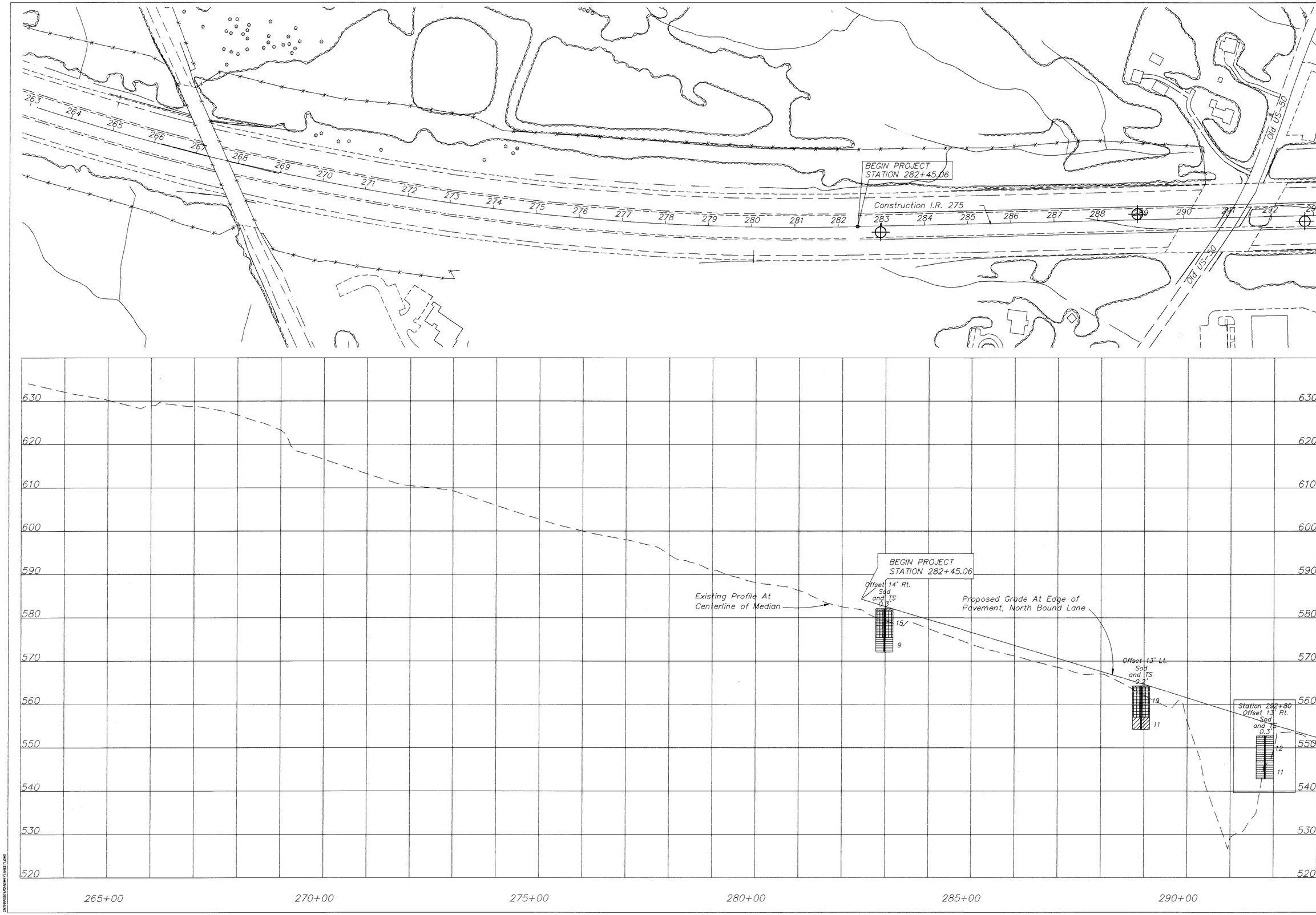

HORIZONTAL SCALE IN FEET
100 50 0 100

DRAWN	REVISED	DATE	CHECKED
M.S.J.		4/00	E.M.K.
CHECKED			
S.A.H.			

SOIL PROFILE

CLE-275-5.35

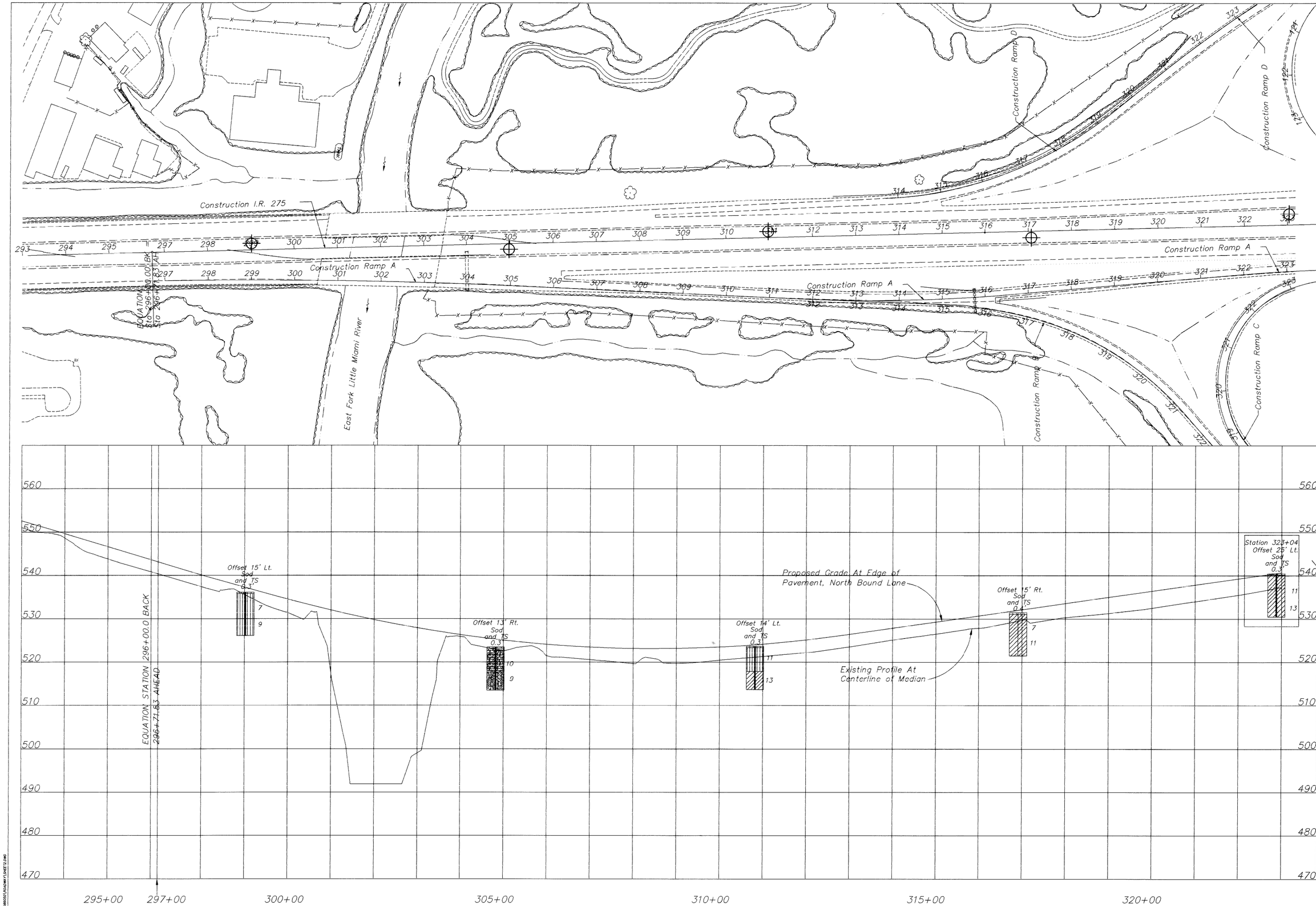

HORIZONTAL SCALE IN FEET

DRAWN	REVISED	DATE	CHECKED
M.S.J.		4/00	E.M.K.
CHECKED			
S.A.H.			

SOIL PROFILE

CLE-275-5.35

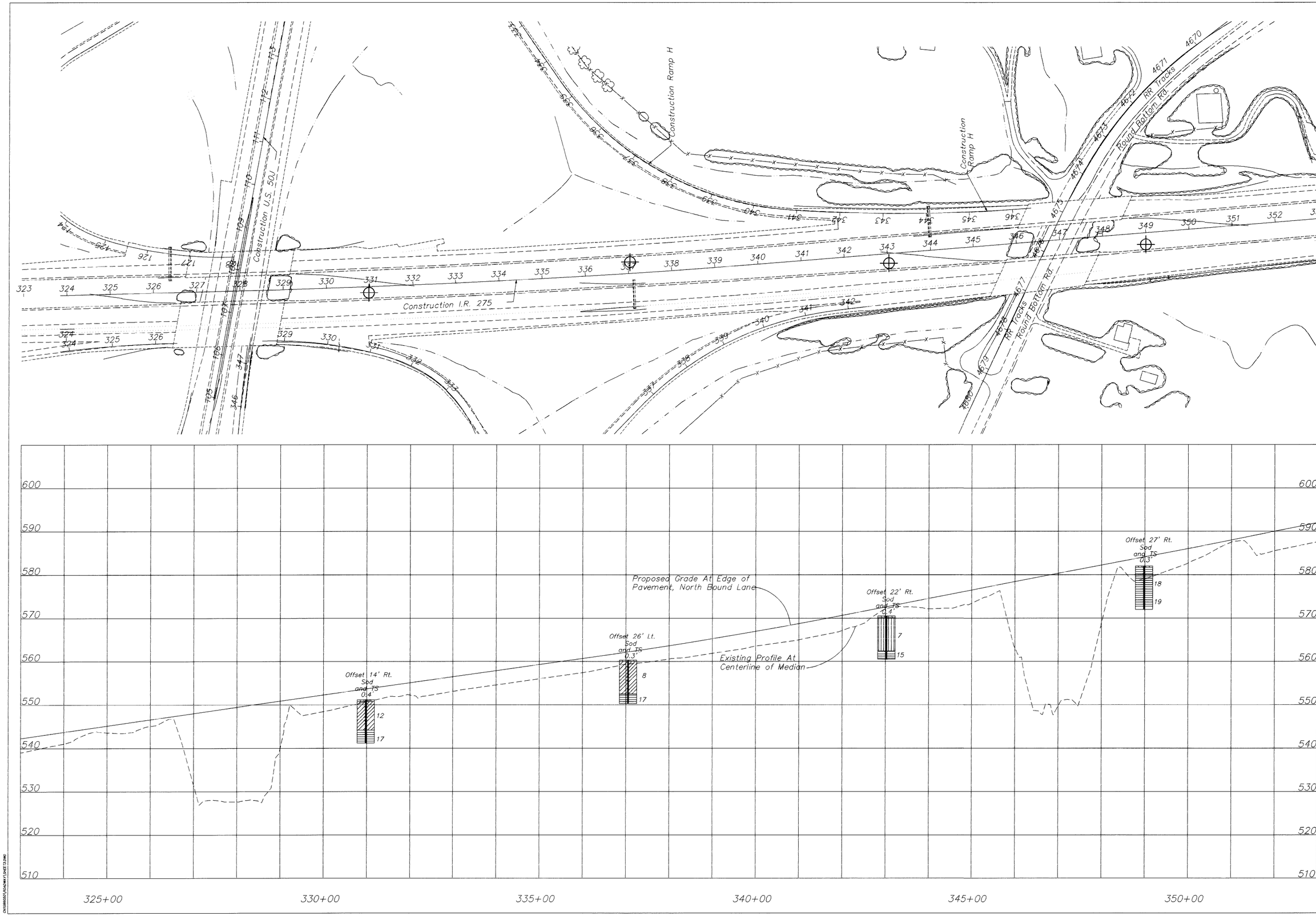

HORIZONTAL SCALE IN FEET

DRAWN	REVISED	DATE	CHECKED
M.S.J.		4/00	E.M.K.
CHECKED			
S.A.H.			

SOIL PROFILE

CLE-275-5.35

5 | 47

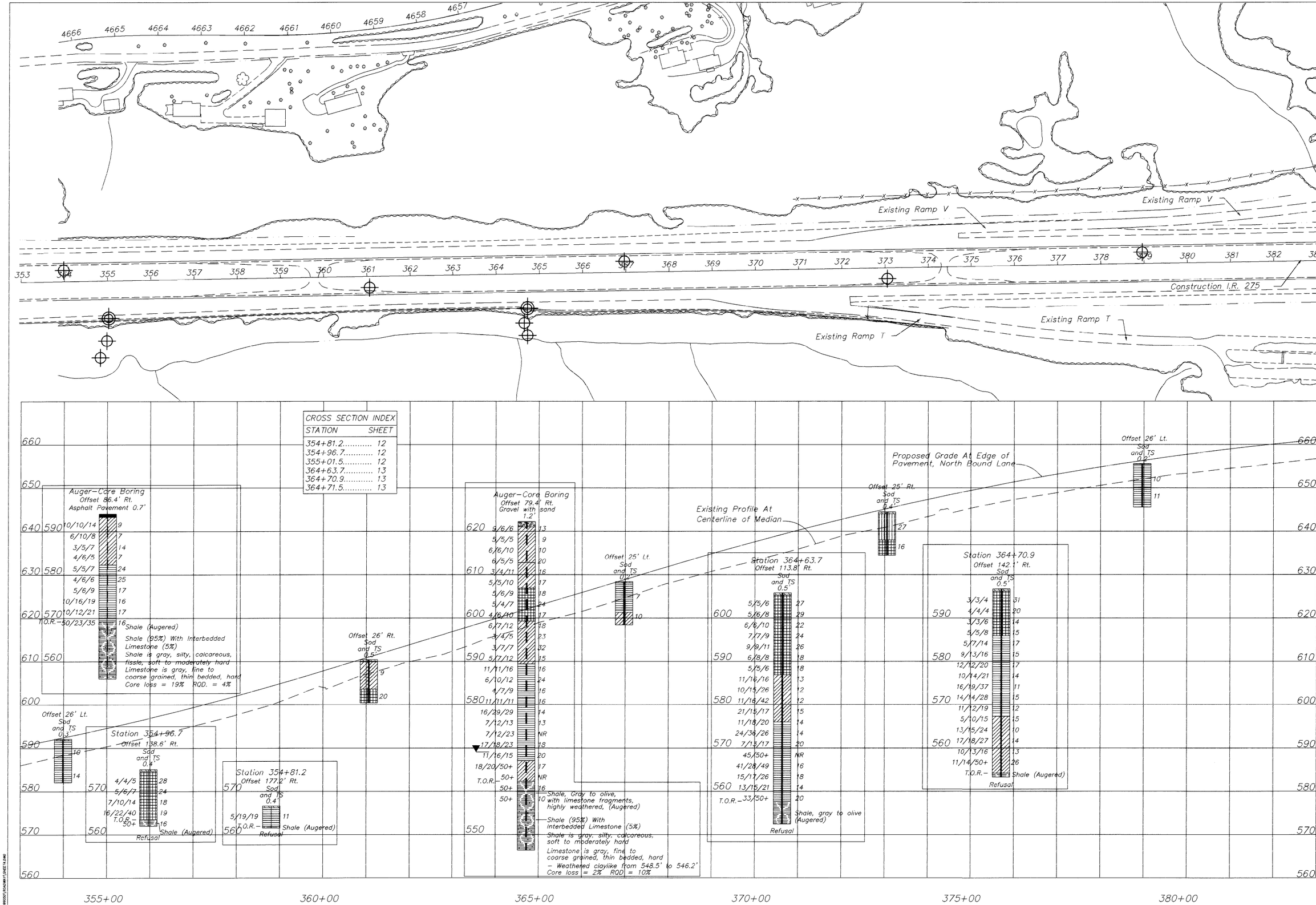

HORIZONTAL SCALE IN FEET 100 50 0 100

DRAWN	REVISED	DATE	CHECKED
M.S.J.		4/00	E.M.K.
CHECKED			
S.A.H.			

SOIL PROFILE

CLE-275-5.35

6 | 47

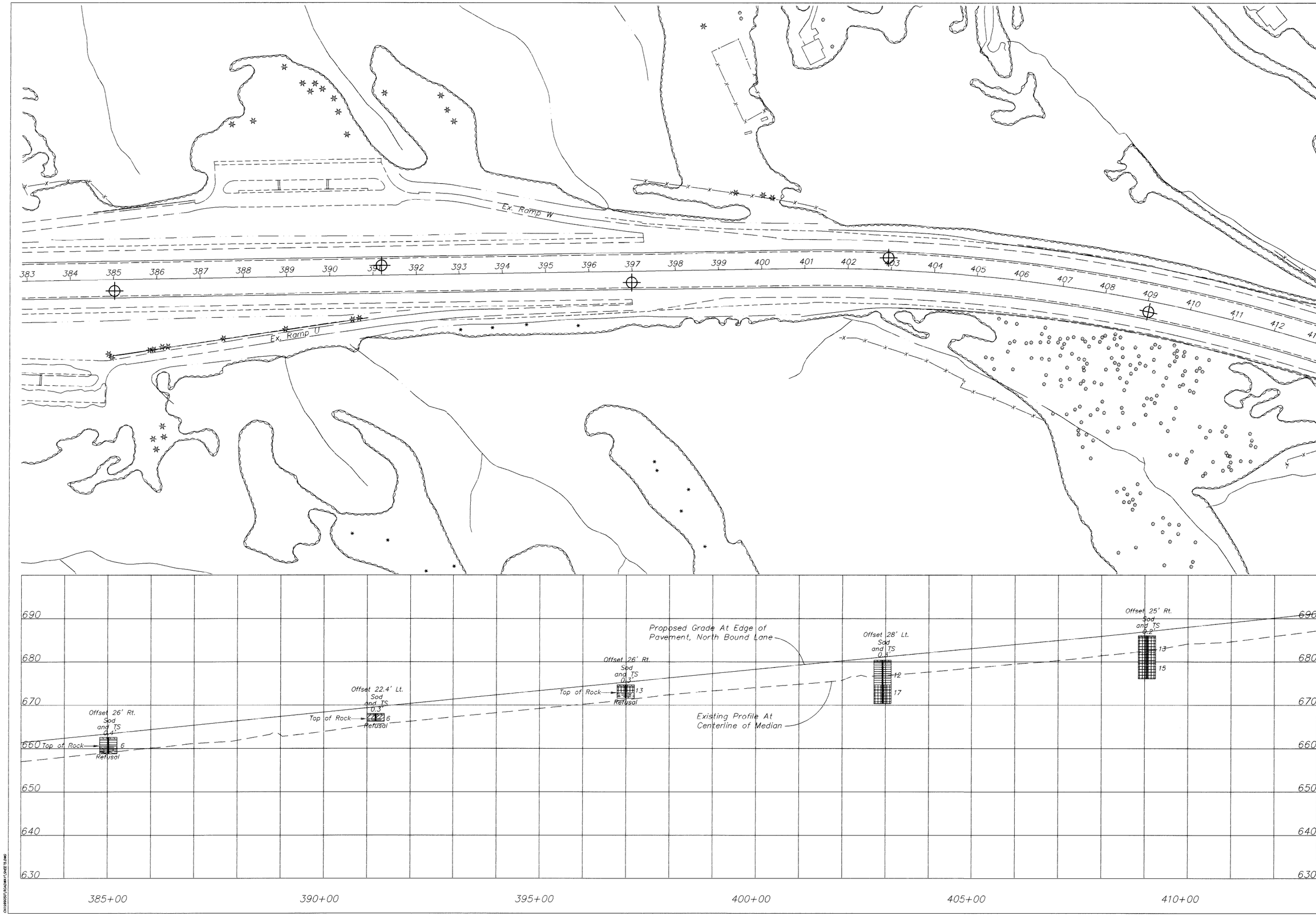

N

HORIZONTAL SCALE IN FEET
100 50 0 100

DRAWN	REVISED	DATE	CHECKED
M.S.J.		4/00	E.M.K.
CHECKED			
S.A.H.			

SOIL PROFILE

CLE-275-5.35

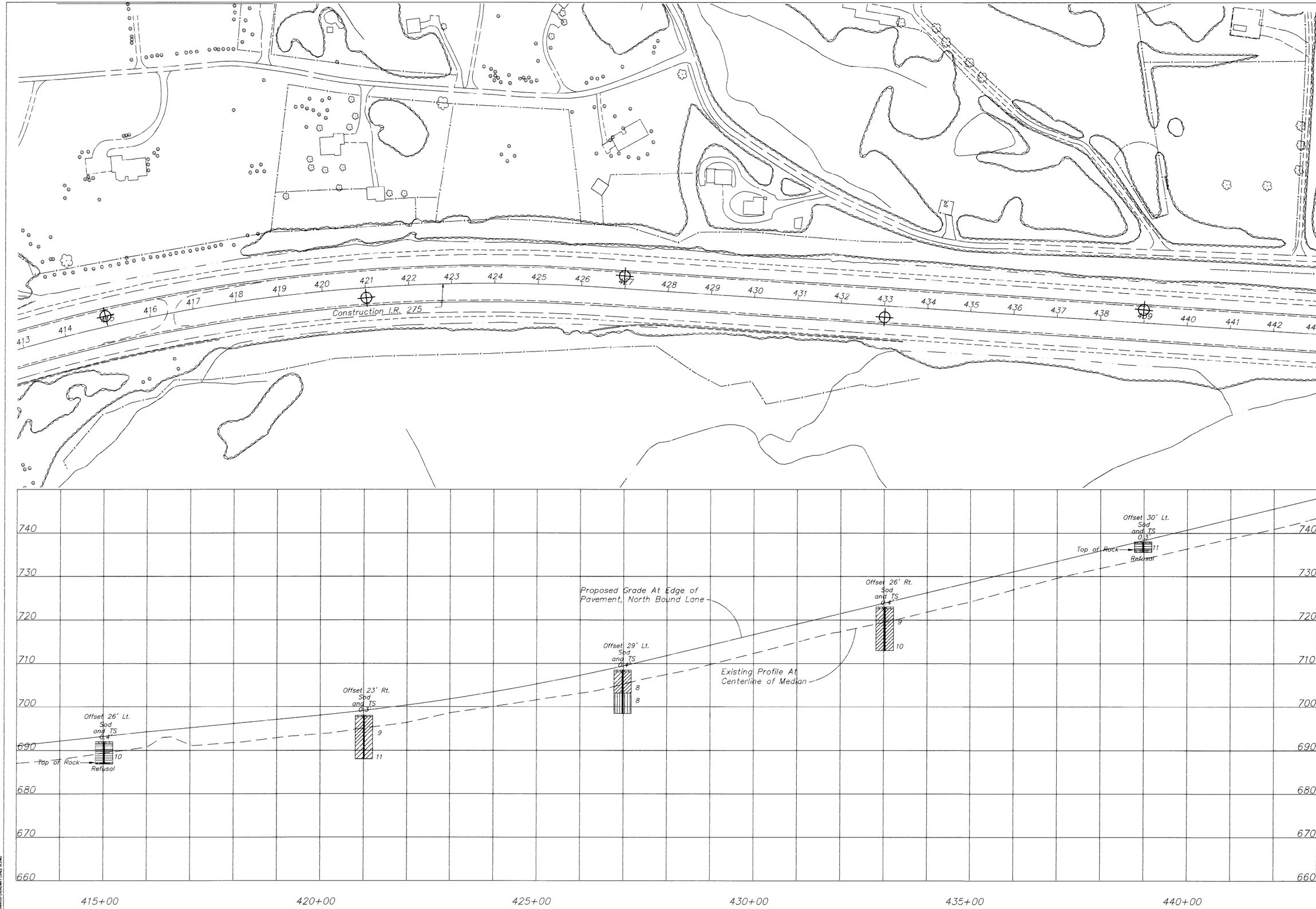

HORIZONTAL SCALE IN FEET
100 50 0 100

DRAWN	REVISED	DATE	CHECKED
M.S.J.		4/00	E.M.K.
CHECKED			
S.A.H.			

SOIL PROFILE

CLE-275-5.35

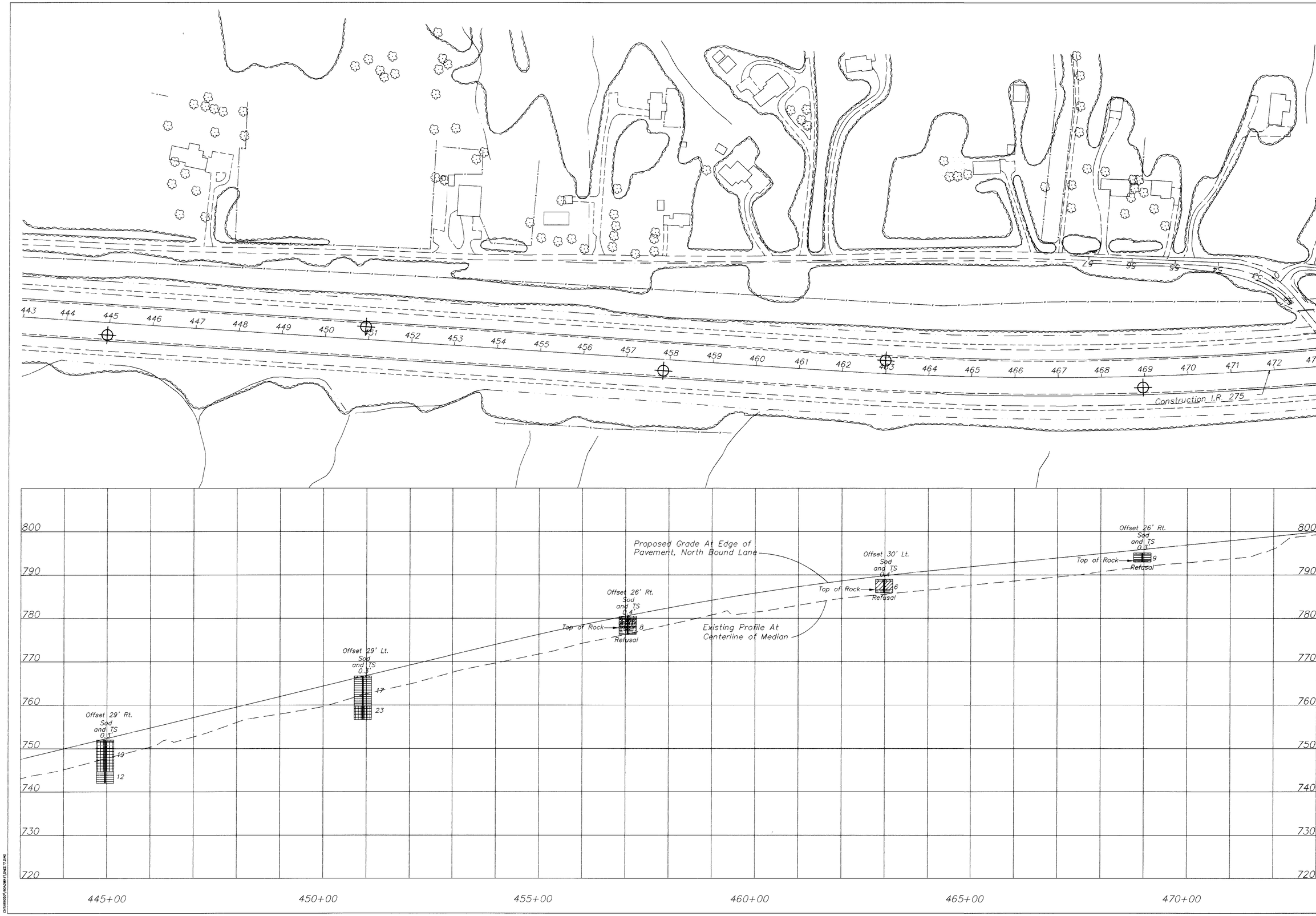

N

HORIZONTAL SCALE IN FEET
100 50 0 100

DRAWN	REVISED	DATE	CHECKED
M.S.J.		4/00	E.M.K.
CHECKED			
S.A.H.			

SOIL PROFILE

CLE-275-5.35

9/47

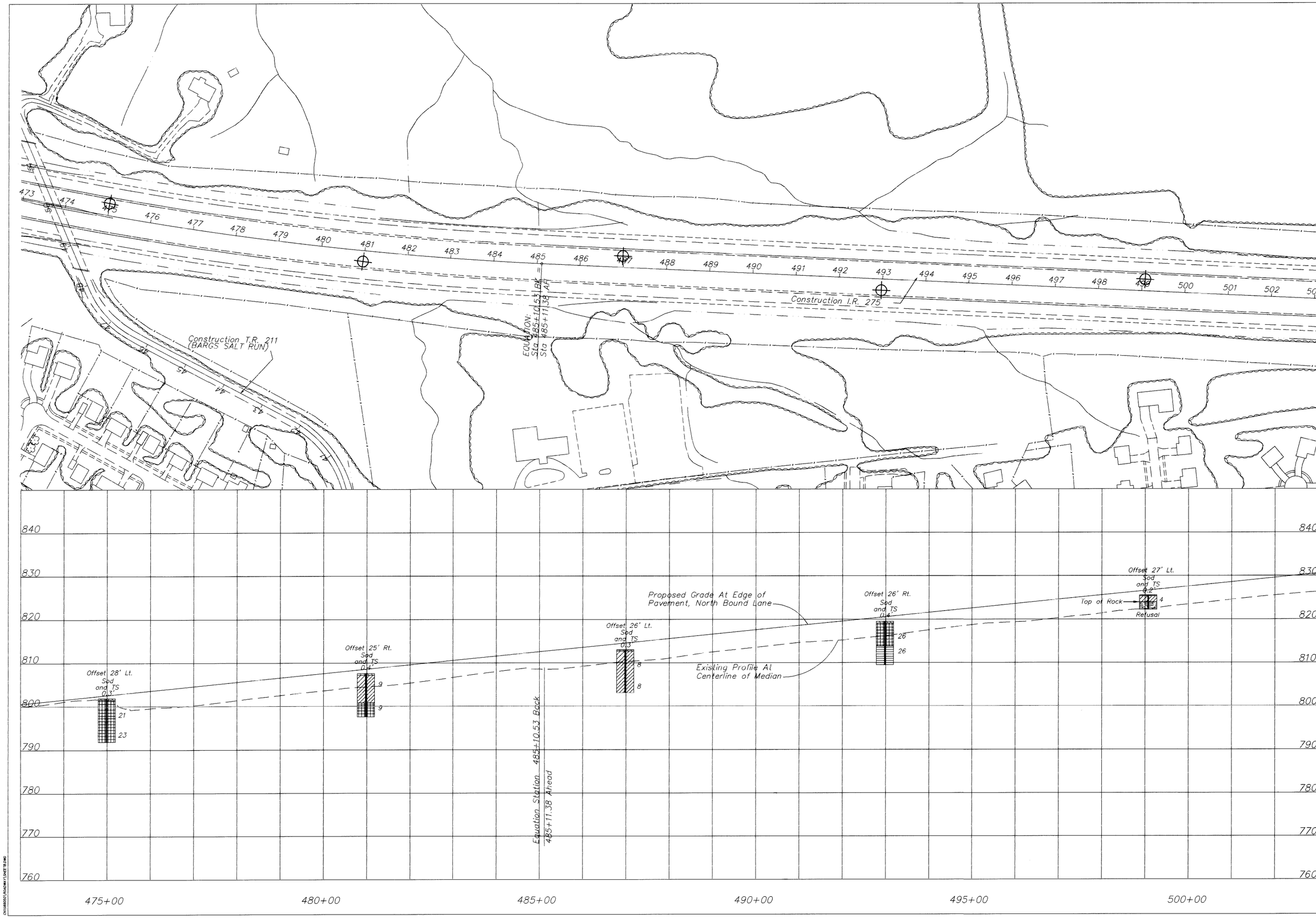

HORIZONTAL SCALE IN FEET

DRAWN	REVISED	DATE	CHECKED
M.S.J.		4/00	E.M.K.
CHECKED			
S.A.H.			

SOIL PROFILE

CLE-275-5.35

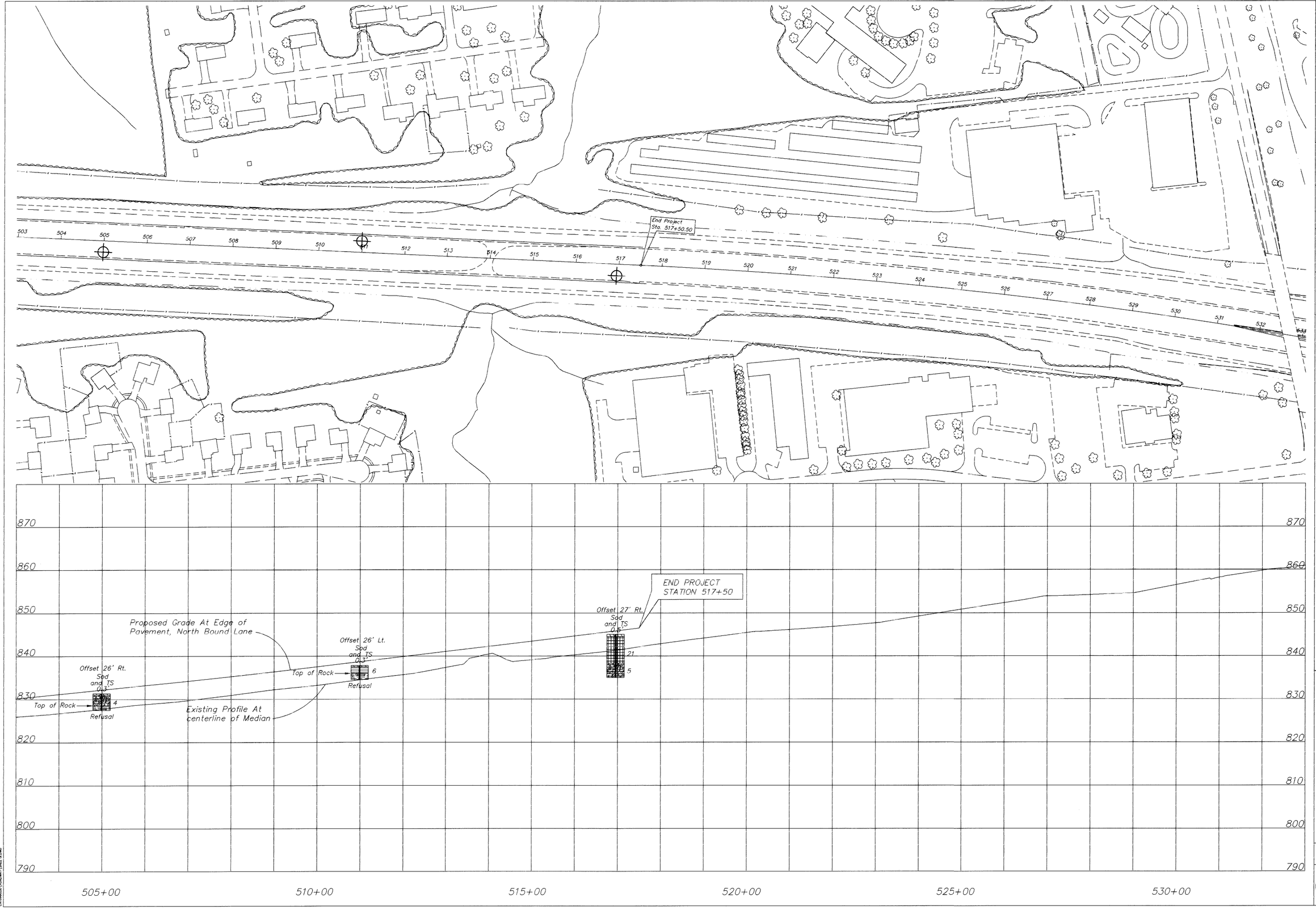

N

HORIZONTAL SCALE IN FEET
100 50 0 100

DRAWN	REVISED	DATE	CHECKED
M.S.J.		4/00	E.M.K.
CHECKED			
S.A.H.			

SOIL PROFILE

CLE-275-5.35

11/47

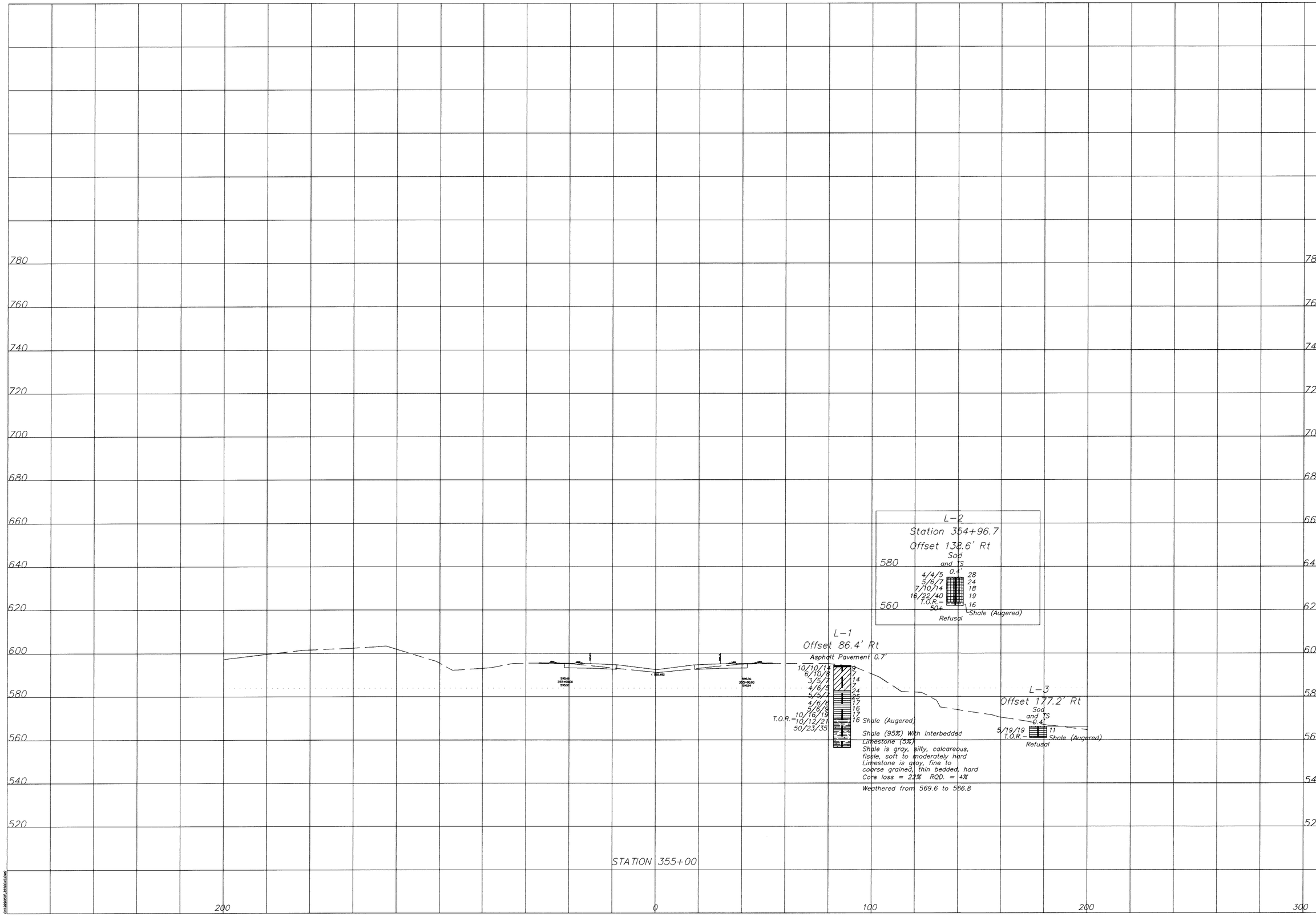

DESIGN AGENCY
BALKE ENGINEERS, INC.
CINCINNATI, OHIO

DATE 4/00
CHECKED E.M.K.
DESIGNED
DRAWN M.S.J.
CHECKED S.A.H.

CROSS-SECTION - STATION 355+00

CLE-275-5.35

12/47

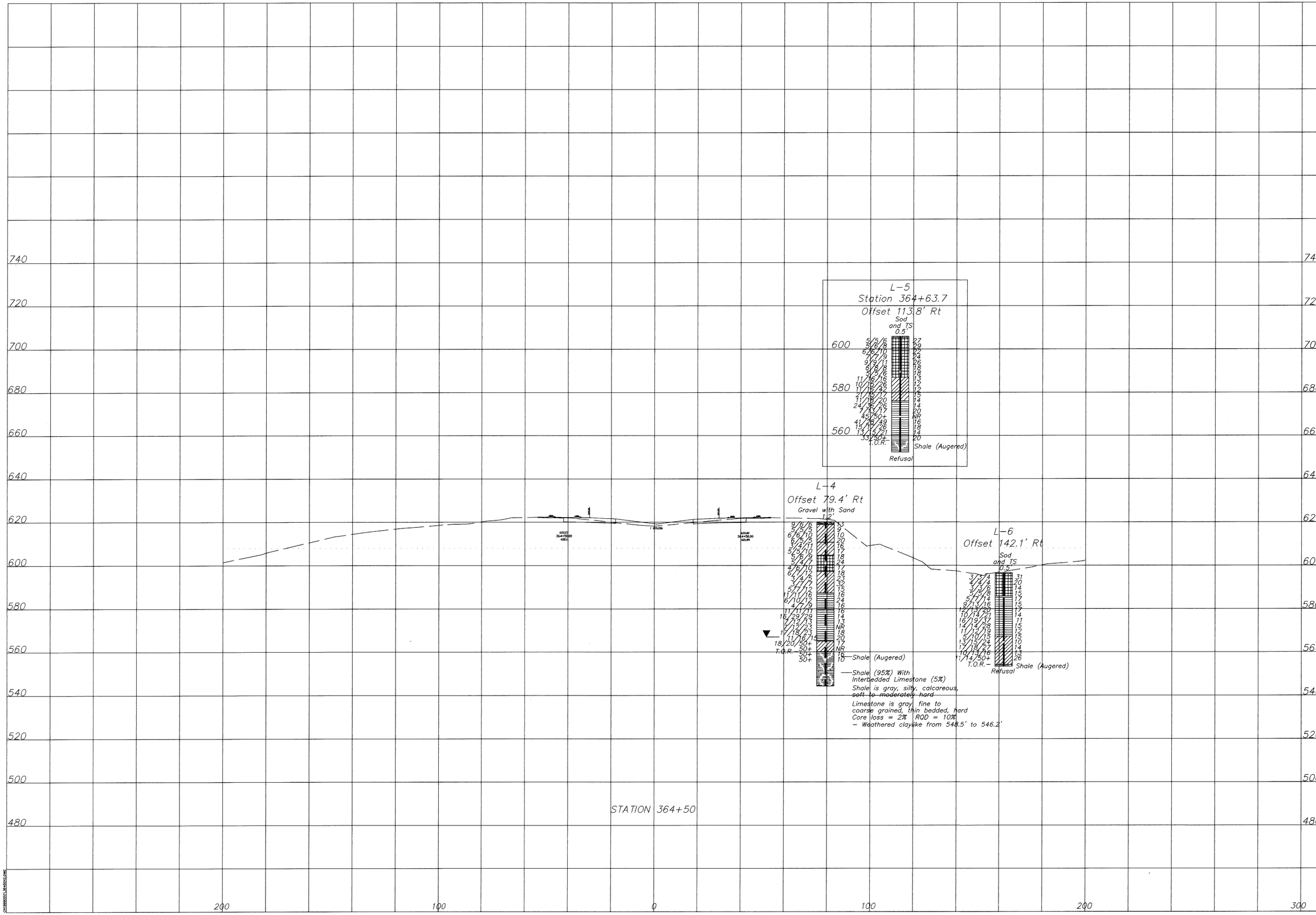

DESIGN AGENCY
BALKE ENGINEERS, INC.
CINCINNATI, OHIO

DATE 4/00

CHECKED E.M.K.

DESIGNED

DRAWN M.S.J.

CHECKED S.A.H.

CROSS-SECTION – STATION 364+50

CLE.-275-5.35

GEOLOGY OF THE SITE

THE STRUCTURE LOCATION IS LOCATED WITHIN THE FLOODPLAIN OF THE EAST FORK LITTLE MIAMI RIVER, IN AN AREA WHERE DEEP ALLUVIAL AND GLACIAL OUTWASH DEPOSITS OVERLIE SEDIMENTARY BEDROCK OF THE KOPE FORMATION, REPRESENTING THE ORDOVICIAN GEOLOGIC AGE.

EXPLORATION

THE EXPLORATION CONSISTED OF FIVE DRIVE SAMPLE–CORE BORINGS, MADE BY MEANS OF A MECHANICALLY–POWERED HOLLOW–STEM ROTARY AUGER MOUNTED ON A MOBILE PLATFORM, PERFORMED BETWEEN SEPTEMBER 20 AND OCTOBER 30, 1999.

INVESTIGATIONAL FINDINGS AND OBSERVATIONS

THE TEST BORINGS DISCLOSED THAT APPOXIMATELY 23 FEET OF CLAYEY FILL IS PRESENT AT THE BRIDGE ABUTMENTS. SILTY ALLUVIAL DEPOSITS WITH ISOLATED LAYERS OF SANDY ALLUVIAL MATERIAL WERE PRESENT ABOVE ELEVATION 489 FEET. BELOW THIS ELEVATION, COARSE–GRAINED GLACIAL OUTWASH DEPOSITS DOMINATED WITH RELATIVELY THIN LAYERS OF FINE–GRAINED GLACIAL OUTWASH DEPOSITS. BEDROCK WAS ENCOUNTERED IN THE BORINGS AT ELEVATIONS RANGING FROM 460.3 TO 463.4 FEET. THE BEDROCK CONSISTED OF SHALE WITH INTERBEDDED LIMESTONE.

STATIC GROUNDWATER WAS ENCOUNTERED IN EACH OF THE BORE HOLES DURING DRILLING. THE ELEVATIONS WHERE GROUNDWATER WAS OBSERVED RANGED FROM 501.1 TO 523.9 FEET.

LEGEND

- PRESS SAMPLE, DRIVE SAMPLE, AND/OR CORE BORING LOCATION
- TR — TOP OF ROCK
- INDICATES FREE WATER ELEVATION
- HORIZONTAL BAR ON BORING INDICATES THE DEPTH THE SAMPLE WAS TAKEN – PROFILE VIEW
- X/Y/Z — FIGURES BESIDE THE BORING IN PROFILE INDICATE THE NUMBER OF BLOWS FOR STANDARD PENETRATION TEST
  - X = NUMBER OF BLOWS FOR FIRST 6 INCHES
  - Y = NUMBER OF BLOWS FOR SECOND 6 INCHES
  - Z = NUMBER OF BLOWS FOR THIRD 6 INCHES
- SHALE WITH INTERBEDDED LIMESTONE

PARTICLE SIZE DEFINITIONS

12"	3"	0.1"		0.42 mm		0.074 mm	0.005 mm	
Boulders	Cobbles	Gravel	Coarse Sand		Fine Sand		Silt	Clay
		No. 10 SIEVE		No. 40 SIEVE		No. 200 SIEVE		

NOTES

ALL AVAILABLE SOIL AND BEDROCK INFORMATION WHICH CAN BE CONVEINIENTLY SHOWN ON THE STRUCTURE FOUNDATION INVESTIGATIONS SHEETS HAS BEEN SO REPORTED. ADDITIONAL SUBSURFACE INVESTIGATIONS MAY HAVE BEEN MADE TO STUDY SOME SPECIAL ASPECT OF THE PROJECT. COPIES OF THIS DATA, IF ANY, MAY BE INSPECTED IN THE DISTRICT DEPUTY DIRECTOR'S OFFICE, THE OFFICE OF MATERIALS MANAGEMENT AT 1600 WEST BROAD STREET, THE OFFICE OF ROADWAY ENGINEERING OR THE OFFICE OF STRUCTURAL ENGINEERING AT 25 SOUTH FRONT STREET, COLUMBUS, OHIO 43215.

DRIVE SAMPLES

DRIVE SAMPLE BORINGS ARE MADE BY MEANS OF A MECHANICALLY–POWERED, ROTARY–TYPE DRILL RIG EMPLOYING A 2–INCH O.D., 1 5/8 INCH, SPLIT–SPOON SAMPLER, AT CONTINUOUS, 2.5 FEET AND/OR 5 FEET DEPTH INTERVALS, DRIVEN BY MEANS OF A 140 LB. HAMMER WITH A FREE FALL OF 30 INCHES. THE NUMBER OF BLOWS REQUIRED TO DRIVE THE SAMPLER THREE 6 INCH INCREMENTS IS CONSIDERED THE STANDARD PENETRATION TEST.

PRESS SAMPLES

PRESS SAMPLES ARE TAKEN BY MEANS OF MECHANICALLY POWERED, ROTARY–TYPE DRILL RIG, EMPLOYING A 3 INCH O.D. THIN–WALL PRESS SAMPLING TUBE. THE PRESS SAMPLING TUBE IS ADVANCED BY CONTINUOUS UNIFORM PRESSURE APPLIED BY THE DRILL RIG.

CORE BORING

CORE BORING ARE MADE BY MEANS OF A MECHANICALLY POWERED, ROTARY–TYPE DRILL RIG, EMPLOYING AN NQ–SIZE BARREL WITH AN INDUSTRIAL DIAMOND CUTTING HEAD.

SAMPLING AND TESTING

THE BORING LOG SHEETS SHOW A GRAPHIC PLOT OF THE INFORMATION OBTAINED, INCLUDING DEPTH AND ELEVATION OF THE SAMPLE, TYPE OF SAMPLE, NUMBER OF BLOWS FOR THE STANDARD PENETRATION TEST IN THREE 6 INCH INCREMENTS, AND A SAMPLE DESCRIPTION BASED ON LABORATORY TEST RESULTS, UTILIZING THE ODOT CLASSIFICATION SYSTEM. RESULTS OF STRENGTH AND CONSOLIDATION TESTING. IF PERFORMED ON UNDISTURBED SAMPLES, APPEAR GRAPHICALLY ON SEPARATE ENCLOSURES. ROCK SAMPLES ARE DISPLAYED ON THE LOG SHEETS, INCLUDING DEPTH AND ELEVATION OF THE SAMPLE, AMOUNT OF RECOVERY, AND A VISUAL CLASSIFICATION BASED ON TYPE, COLOR, DEGREE OF HARDNESS, GRAIN SIZE, DETERIORATION, BEDDING, ACID REACTION, AND OTHER QUALIFYING FACTORS.

AT DEPTHS WHERE MATERIALS ARE BOULDERY OR GRAVELLY TO THE EXTENT THAT A SAMPLER CANNOT BE UTILIZED, A WASH SAMPLE IS PROCURED AND VISUALLY CLASSIFIED, IN ORDER TO DETERMINED THE GENERAL CHARACTERISTIC OF THE MATERIAL. THESE SAMPLES ARE NOT CONSIDERED SUFFICIENTLY REPRESENTATIVE TO WARRANT LABORATORY TESTING.

DESIGN AGENCY: BALKE ENGINEERS, INC. CINCINNATI, OHIO

DRAWN	DESIGNED	REVIEWED	DATE
M.S.J.		E.M.K.	4/00
CHECKED	REVISED		
S.A.H.			

STRUCTURE FOUNDATION INVESTIGATION
BRIDGE NO. CLE–275–0549
OVER OLD U.S. ROUTE 50

CLE–275–5.35

14/47

CN199050/BRIDGES/549LEG.DWG

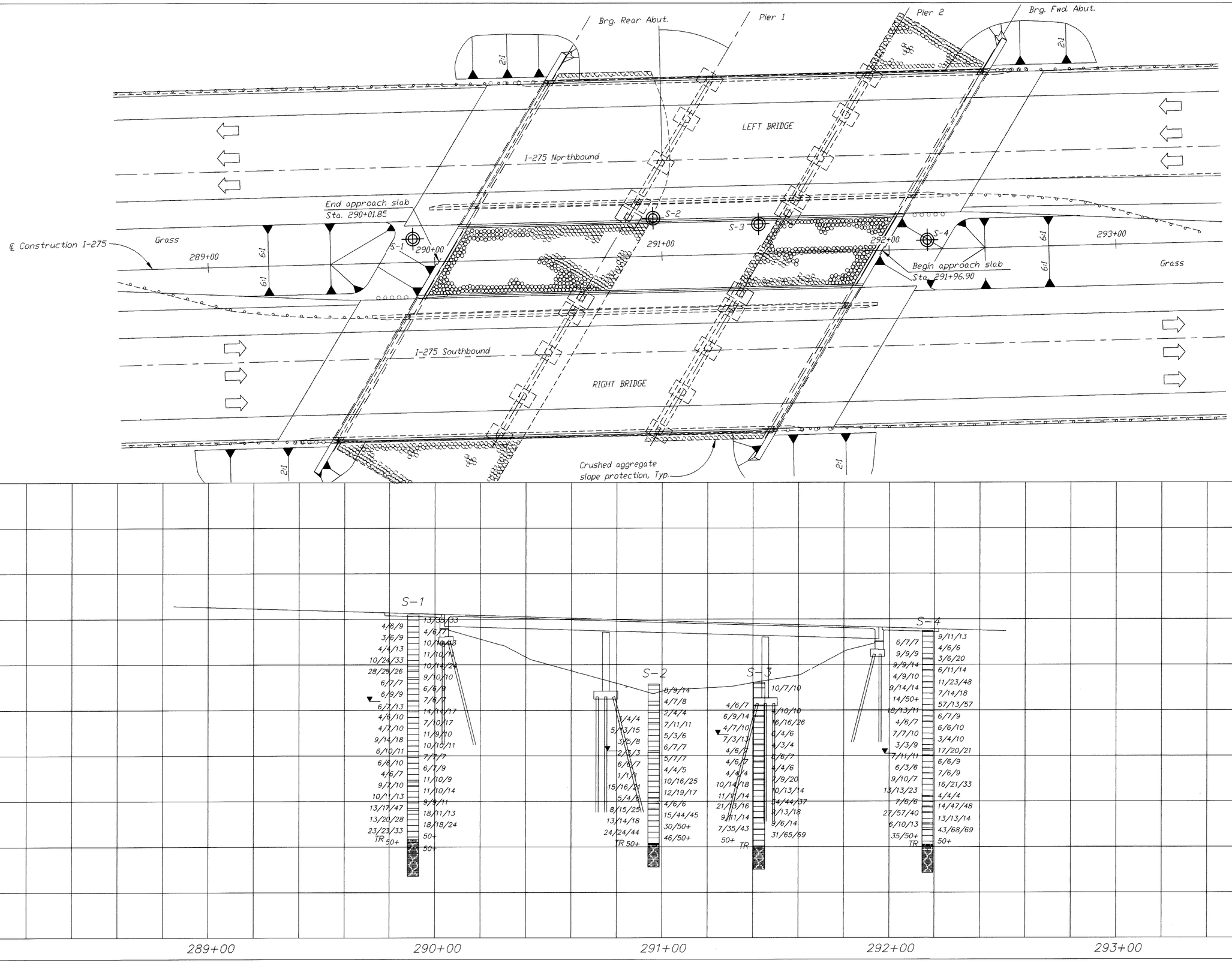

DRAWN M.S.J.
DESIGNED
CHECKED E.M.K.
CHECKED S.A.H.
REVISED
DATE 4/00
STRUCTURE FILE NUMBER

HORIZONTAL SCALE IN FEET
20 10 0 10 20

STRUCTURE FOUNDATION INVESTIGATION

BRIDGE NO. CLE-275-0549
OVER OLD U.S. ROUTE 50

CLE-275-5.35

15/47

CN1999050/BRIDGES/BRIDGSHEET1.DWG

LOG OF BORING

Date Started 10/20/99
Date Completed 10/20/99
Boring No. S-1

Sampler Type SS Dia. 2"
Coring: Length 15.0 ft. Dia. 2"
Station & Offset 289+90.5, 10.2 ft. Lt.

Water Elev. 523.9
Surface Elev. 561.9

Elev. (ft)	Depth (ft)	Std. Pen. /R.Q.D.	Rec. (ft)	Loss (ft)	Description	Sample No.	Physical Characteristics: % Agg.	% C.S.	% F.S.	% Silt	% Clay	LL	PI	WC	ODOT Class
	0														
561.2	1				Topsoil										
	2				Fill; Clay And Silt With A Little Sand And A Trace Of Gravel, tan and gray, damp to moist, stiff to very stiff										
	3	13/35/33				1								17	
	4														
	5	4/6/9				2								18	
	6														
	7														
	8	4/6/7				3	7	5	6	35	47	42	22	15	A-7-6(13)
	9														
	10														
	11	3/6/9				4								24	
	12														
	13	10/10/13				5								16	
	14														
	15	4/4/13				6								21	
	16														
	17														
	18	11/10/11				7								20	
	19														
	20														
	21	10/24/33				8								5	
	22														
	23	10/14/24				9								17	
537.7	24														
	25				Gravel With Some Sand And A Trace Of Silt And Clay, light brown and gray, damp, very dense										
	26	28/28/26				10	56	21	11	8	4	NP	NP	4	A-1-a(0)
	27														
533.5	28	9/10/10				11								28	
	29														
	30														

LOG OF BORING (CONTINUED)

Boring No. S-1 (Cont.)
Station & Offset 289+90.5, 10.2 ft. Lt.
Surface Elev. 561.9

Elev. (ft)	Depth (ft)	Std. Pen. /R.Q.D.	Rec. (ft)	Loss (ft)	Description	Sample No.	Physical Characteristics: % Agg.	% C.S.	% F.S.	% Silt	% Clay	LL	PI	WC	ODOT Class
	30														
	31	6/7/7			Silt And Clay With A Trace Of Sand, gray, moist, very stiff	12								23	
	32														
	33	6/6/9				13	0	0	1	56	43	26	7	27	A-4b(8)
	34														
	35	6/9/9				14								26	
	36														
	37														
523.9	38	7/6/7				15								32	
	39				Silt With Some Clay And A Trace Of Sand, gray, moist, stiff to very stiff										
	40	6/7/13				16								23	
	41														
	42														
	43	14/14/17				17								24	
	44														
	45	4/6/10				18								21	
	46														
	47														
	48	7/10/17				19								23	
	49														
	50	4/7/10				20	0	0	1	76	23	NP	NP	23	A-4b(8)
	51														
	52														
	53	11/9/10				21								25	
	54														
	55	9/14/18				22								25	
	56														
	57														
	58	10/10/11				23								22	
	59														
	60														

DESIGN AGENCY
BALKE ENGINEERS, INC.
CINCINNATI, OHIO

DRAWN	CHECKED	REVISED	DATE	CHECKED
M.S.J.	S.A.H.		4/00	E.M.K.

STRUCTURE FOUNDATION INVESTIGATION
BRIDGE NO. CLE-275-0549
OVER OLD U.S. 50

CLE-275-5.35

16/47

LOG OF BORING (CONTINUED)

Boring No. S-1 (Cont.) Station & Offset 289+90.5, 10.2 ft. Lt. Surface Elev. 561.9

Elev. (ft)	Depth (ft)	Std. Pen. /R.Q.D.	Rec. (ft)	Loss (ft)	Description	Sample No.	Physical Characteristics: % Agg.	% C.S.	% F.S.	% Silt	% Clay	LL	PI	WC	ODOT Class
	60														
	61	6/10/11				24								29	
	62														
	63	7/7/7				25								28	
	64														
496.7	65														
	66	6/6/10			Silty Clay, gray, moist, stiff to very stiff	26	0	0	0	35	65	40	21	25	A-6b(12)
	67														
	68	6/7/9				27								24	
	69														
	70														
	71	4/6/7				28								33	
	72														
488.6	73	11/10/9				29								15	
	74				Gravel With Sand, gray, wet, medium dense										
486.7	75	9/7/10				30	0	3	18	38	41	35	17	19	A-6b(11)
	76				Silty Clay With Some Sand, gray, moist, very stiff										
	77														
	78	11/10/14				31								22	
	79														
	80														
	81	10/11/13				32								22	
	82														
	83	9/9/11				33								24	
	84														
	85														
476.0	86	13/17/47				34								9	
	87				Gravel With Some Sand And A Trace Of Silt And Clay, gray, wet, medium dense to very dense										
	88	18/11/13				35	59	16	12	7	6	19	4	14	A-1-a(0)
	89														
	90														

LOG OF BORING (CONTINUED)

Boring No. S-1 (Cont.) Station & Offset 289+90.5, 10.2 ft. Lt. Surface Elev. 561.9

Elev. (ft)	Depth (ft)	Std. Pen. /R.Q.D.	Rec. (ft)	Loss (ft)	Description	Sample No.	Physical Characteristics: % Agg.	% C.S.	% F.S.	% Silt	% Clay	LL	PI	WC	ODOT Class
	90														
	91	13/20/28				36								12	
	92														
	93	18/18/24				37								13	
	94														
	95														
	96	23/23/33				38								19	
	97														
463.4	98	50+			Top of Bedrock	39								13	
	99				Weathered Shale With Interbedded Limestone (Augered)										
	100	50+				40									No Recovery
	101														
	102														
	103	50+				41									No Recovery
	104														
457.2	105				Start Core										
	106				Shale With Interbedded Limestone										
	107														
	108														
	109														
	110														
	111	0	0	6.0											
	112														
	113														
	114														
467.2	115	0	0	4.0											
					Bottom of Boring										

DESIGN AGENCY: BALKE ENGINEERS, INC. CINCINNATI, OHIO

CHECKED E.M.K. | DATE 4/00 | REVISED | DRAWN M.S.J. | CHECKED S.A.H.

STRUCTURE FOUNDATION INVESTIGATION
BRIDGE NO. CLE-275-0549
OVER OLD U.S. 50

CLE-275-5.35

17/47

LOG OF BORING

Date Started 9/30/99
Date Completed 9/30/99
Boring No. S-2

Sampler Type SS Dia. 2"
Coring: Length 8.6 ft. Dia. 2"
Station & Offset 290+96.4, 16.7 ft. Lt.

Water Elev. 502.2
Surface Elev. 531.4

Elev. (ft)	Depth (ft)	Std. Pen. /R.Q.D.	Rec. (ft)	Loss (ft)	Description	Sample No.	Physical Characteristics: % Agg.	% C.S.	% F.S.	% Silt	% Clay	LL	PI	WC	ODOT Class
	0														
530.9					Topsoil										
	1				Fill; Silty Clay With A Little Sand And Gravel, gray, moist, soft to very stiff										
	2														
	3	8/9/14				1								14	
	4														
	5	ST				2								15	q_u = 0.33 (tsf)
	6														
	7														
	8	4/7/8				3	11	7	10	29	43	36	18	24	A-6b(11)
	9														
522.2					Silt And Clay With A Trace Of Sand, brown to gray, moist, medium stiff										
	10	ST				4								30	q_u = 0.77 (tsf)
	11														
	12														
	13	2/4/4				5	0	0	1	53	46	26	9	29	A-4b(8)
	14														
	15	3/4/4				6								26	
	16														
514.5	17														
	18	7/11/11			Silt With A Little Sand And Clay, gray, moist, stiff to very stiff	7								22	
	19														
	20														
	21	5/13/15				8	0	0	16	70	14	NP	NP	22	A-4b(8)
	22														
	23	5/3/6				9								25	
	24														
	25														
	26	3/5/8				10								26	
	27														
	28	6/7/7				11								25	
502.2	29														
	30														

LOG OF BORING (CONTINUED)

Boring No. S-2 (Cont.)
Station & Offset 290+96.4, 16.7 ft. Lt.
Surface Elev. 531.4

Elev. (ft)	Depth (ft)	Std. Pen. /R.Q.D.	Rec. (ft)	Loss (ft)	Description	Sample No.	Physical Characteristics: % Agg.	% C.S.	% F.S.	% Silt	% Clay	LL	PI	WC	ODOT Class
	30														
	31	2/3/3			Silt And Clay With A Trace Of Sand, gray, moist, soft to stiff	12								28	
	32														
	33	5/7/7				13	0	0	1	41	58	32	15	25	A-6a(10)
	34														
	35	6/6/7				14								25	
	36														
	37														
	38	4/4/5				15								29	
	39														
	40	1/1/1				16								31	
	41														
	42														
488.5	43	10/16/25				17								15	
	44				Gravel With Sand And Silt And A Little Clay, gray, wet, dense										
	45	15/16/21				18	23	32	14	13	18	22	8	14	A-2-4(0)
	46														
	47														
	48	12/19/17				19								18	
	49														
481.7	50														
	51	5/4/6			Silt And Clay With Some Sand And Gravel, gray, damp to moist, stiff	20	21	12	15	27	25	30	14	17	A-6a(5)
	52														
	53	4/6/6				21								10	
	54														
476.9	55														
	56	8/15/25			Gravel With Sand, Silt And Clay, gray, wet, dense to very dense	22								9	
	57														
	58	15/44/45				23	46	19	11	11	13	26	11	17	A-2-6(0)
	59														
	60														

DESIGN AGENCY
BALKE ENGINEERS, INC.
CINCINNATI, OHIO

CHECKED E.M.K.
DATE 4/00
REVISED
DRAWN M.S.J.
CHECKED S.A.H.

STRUCTURE FOUNDATION INVESTIGATION
BRIDGE NO. CLE-275-0549
OVER OLD U.S. 50

CLE-275-5.35

LOG OF BORING (CONTINUED)

Boring No. S-2 (Cont.) Station & Offset 290+96.4, 16.7 ft. Lt. Surface Elev. 531.4

Elev. (ft)	Depth (ft)	Std. Pen. /R.Q.D.	Rec. (ft)	Loss (ft)	Description	Sample No.	Physical Characteristics: % Agg.	% C.S.	% F.S.	% Silt	% Clay	LL	PI	WC	ODOT Class
	60														
	61	13/14/8				24								20	
	62														
	63	30/50+				25								26	
	64														
	65														
	66	24/24/44				26								9	
	67														
	68	46/50+				27								8	
	69														
461.5	70				Top of Bedrock										
461.0		50+			Start Core	28								14	
	71	0	0.4	0.3	Shale (85%) With Interbedded Limestone (15%)										
	72	0	0.5	0.2											
	73				Shale is gray, silty, calcareous, fissile, soft to moderately hard										
	74														
	75				Limestone is gray, fine to coarse grained, thin bedded, hard										
	76														
	77				-Weathered from 461.5' to 457.8'										
	78														
	79														
451.2	80	16	7.5	1.1											
	81				Bottom of Boring										

DESIGN AGENCY: BALKE ENGINEERS, INC. CINCINNATI, OHIO
CHECKED: E.M.K.
DATE: 4/00
REVISED:
DRAWN: M.S.J.
CHECKED: S.A.H.

STRUCTURE FOUNDATION INVESTIGATION
BRIDGE NO. CLE-275-0549
OVER OLD U.S. 50

CLE-275-5.35

LOG OF BORING

Date Started 10/5/99
Date Completed 10/5/99
Boring No. S-3

Sampler Type SS Dia. 2"
Coring: Length 9.1 ft. Dia. 2"
Station & Offset 291+42.8, 13.0 ft. Lt.

Water Elev. 509.2
Surface Elev. 532.2

Elev. (ft)	Depth (ft)	Std. Pen. /R.Q.D.	Rec. (ft)	Loss (ft)	Description	Sample No.	Physical Characteristics: % Agg.	% C.S.	% F.S.	% Silt	% Clay	LL	PI	WC	ODOT Class
	0														
531.7					Gravel with Sand										
	1				Silt And Clay, light brown to gray, moist, soft to very stiff										
	2														
	3	10/7/10				1								21	
	4														
	5	ST				2								21	q_u = 0.92 (tsf)
	6														
	7														
	8	ST				3								23	q_u = 0.27 (tsf)
	9														
	10														
	11	4/6/7				4	0	0	0	56	44	27	10	23	A-4b(8)
	12														
	13	4/10/10				5								27	
	14														
517.6															
	15	6/9/14			Silt And Sand With A Trace Of Clay, brown to gray, moist, stiff to very stiff	6								18	
	16														
	17														
	18	16/16/26				7								14	
	19														
	20														
	21	4/7/10				8	0	0	37	54	9	NP	NP	23	A-4b(6)
	22														
	23	6/4/6				9								26	
	24														
	25														
	26	7/3/13				10								33	
505.1	27														
	28	4/3/4			Silt And Clay With A Trace Of Sand, gray, moist, medium stiff to stiff	11	0	0	1	46	53	27	11	26	A-6a(8)
	29														
	30														

LOG OF BORING (CONTINUED)

Boring No. S-3 (Cont.)
Station & Offset 291+42.8, 13.0 ft. Lt.
Surface Elev. 532.2

Elev. (ft)	Depth (ft)	Std. Pen. /R.Q.D.	Rec. (ft)	Loss (ft)	Description	Sample No.	Physical Characteristics: % Agg.	% C.S.	% F.S.	% Silt	% Clay	LL	PI	WC	ODOT Class
	30														
	31	4/6/7				12								30	
	32														
	33	6/6/7				13								31	
	34														
497.6															
	35	4/6/7			Silt And Clay With A Trace Of Sand, gray, moist, stiff	14								26	
	36														
	37														
	38	4/4/6				15	0	0	1	54	45	27	10	31	A-4a(8)
	39														
492.4	40														
	41	4/4/4			Clay With Some Silt, gray, moist, medium stiff	16	0	0	0	31	69	42	20	35	A-7-6 (12)
	42														
489.3	43	7/9/20				17								18	
	44				Gravel With Sand And Silt And A Trace Of Clay, brownish gray, wet, medium dense to very dense										
	45	10/14/18				18								16	
	46														
	47														
	48	10/13/14				19	34	36	15	5	10	19	7	14	A-2-4(0)
	49														
	50														
	51	11/11/14				20								15	
	52														
	53	54/44/37				21								14	
	54														
477.7															
	55	21/13/16			Sandy Silt, gray, wet, very stiff	22								26	Visual
	56														
475.3	57														
	58	9/13/18			Gravel With Sand, Silt And Clay, grayish brown, wet, medium dense	23								8	Visual
	59														
472.6	60														

DESIGN AGENCY
BALKE ENGINEERS, INC.
CINCINNATI, OHIO

CHECKED E.M.K.
DATE 4/00
REVISED
DRAWN M.S.J.
CHECKED S.A.H.

STRUCTURE FOUNDATION INVESTIGATION
BRIDGE NO. CLE-275-0549
OVER OLD U.S. 50

CLE-275-5.35

LOG OF BORING (CONTINUED)

Boring No. S-3 (Cont.) Station & Offset 291+42.8, 13.0 ft. Lt. Surface Elev. 532.2

Elev. (ft)	Depth (ft)	Std. Pen. /R.Q.D.	Rec. (ft)	Loss (ft)	Description	Sample No.	Physical Characteristics: % Agg.	% C.S.	% F.S.	% Silt	% Clay	LL	PI	WC	ODOT Class
	60														
	61	9/11/14			Silty Clay With A Little Sand, gray, moist, very stiff	24								30	
	62														
	63	9/6/14				25	0	4	7	25	64	39	21	29	A-6b(12)
	64														
467.5	65														
	66	7/35/43			Gravel With Some Sand And Traces Of Silt And Clay, brownish gray, wet, very dense	26	64	14	10	6	5	19	6	7	A-1-a(0)
	67														
	68	31/65/69				27								11	
	69														
	70														
	71	50+				28								12	
460.3	72				Top of Bedrock										
					Shale (Augered)										
459.2	73				Start Core										
	74				Shale (95%) With Interbedded Limestone (5%)										
	75														
	76				Shale is gray, silty, calcareous, fissile, soft to moderately hard										
	77														
	78				Limestone is gray, fine to coarse grained, thin bedded, hard										
		11	5.4	0.0											
	79														
	80				-Weathered from 460.3' to 457.8'										
	81														
450.1	82	8	3.7	0.0											
	83				Bottom of Boring										

DESIGN AGENCY: BALKE ENGINEERS, INC. CINCINNATI, OHIO
CHECKED: E.M.K.
DATE: 4/00
REVISED:
DRAWN: M.S.J.
CHECKED: S.A.H.

STRUCTURE FOUNDATION INVESTIGATION
BRIDGE NO. CLE-275-0549
OVER OLD U.S. 50

CLE-275-5.35

LOG OF BORING

Date Started 10/19/99
Date Completed 10/19/99
Boring No. S-4

Sampler Type SS Dia. 2"
Coring: Length 11.9 ft. Dia. 2"
Station & Offset 292+17.0, 4.0 ft. Lt.

Water Elev. 501.0
Surface Elev. 554.8

Elev. (ft)	Depth (ft)	Std. Pen. /R.Q.D.	Rec. (ft)	Loss (ft)	Description	Sample No.	Physical Characteristics								
							% Agg.	% C.S.	% F.S.	% Silt	% Clay	LL	PI	WC	ODOT Class
	0														
554.3					Topsoil										
	1				Fill; Silty Clay With A Little Sand And Gravel, brown and gray, moist, stiff to very stiff										
	2														
	3	9/11/13				1								15	
	4														
	5	6/7/7				2	14	6	9	32	39	38	21	15	A-6b(12)
	6														
	7														
	8	4/6/6				3								16	
	9														
	10	9/9/9				4								19	
	11														
542.7	12														
	13	3/6/20			Fill; Silty Clay With A Trace Of Sand And Gravel, gray, damp, very stiff	5	1	4	3	43	49	38	19	10	A-6b(12)
	14														
	15	9/9/14				6								15	
	16														
537.6	17														
	18	6/11/14			Fill; Silty Clay With A Little Sand And A Trace Of Gravel, olive-brown to orangish brown, moist, very stiff	7	3	5	10	35	47	40	22	19	A-6b(13)
	19														
	20														
	21	4/9/10				8								18	
	22														
532.2	23	11/23/48			Silty Clay With Some Sand And A Little Gravel, brown to orangish brown, moist, very stiff	9								19	
	24														
	25														
	26	9/14/14				10								16	
	27														
	28	7/14/18				11	10	9	12	30	39	38	20	17	
	29														
	30														

LOG OF BORING (CONTINUED)

Boring No. S-4 (Cont.)
Station & Offset 292+17.0, 4.0 ft. Lt.
Surface Elev. 554.8

Elev. (ft)	Depth (ft)	Std. Pen. /R.Q.D.	Rec. (ft)	Loss (ft)	Description	Sample No.	Physical Characteristics								
							% Agg.	% C.S.	% F.S.	% Silt	% Clay	LL	PI	WC	ODOT Class
	30														
	31	14/50+				12								4	
	32														
	33	57/13/57				13								19	
	34														
	35	18/13/11				14								21	
	36														
	37														
	38	6/7/9				15								17	
	39														
515.1	40														
	41	4/6/7			Silty Clay With A Little Sand And A Trace of Gravel, brown to orangish brown and grayish brown, moist, stiff to very stiff	16									23	
	42														
	43	6/6/10				17								25	
	44														
	45	7/7/10				18	1	2	18	46	33	32	16	26	A-6b(10)
	46														
	47														
	48	3/4/10				19								24	
	49														
	50														
	51	3/3/9				20								28	
502.9	52														
	53	17/20/21			Gravel With Sand And A Little Silt, brown, moist to wet, dense	21								10	Visual
	54														
500.2	55														
	56	7/11/11			Sandy Silt And Clay With A Trace Of Sand, brown to brownish gray, moist, stiff to very stiff	22								29	
	57														
	58	6/6/9				23	0	1	2	47	50	28	10	28	A-4a(8)
	59														
	60														

DESIGN AGENCY
BALKE ENGINEERS, INC.
CINCINNATI, OHIO

CHECKED E.M.K.
DATE 4/00
REVISED
DRAWN M.S.J.
CHECKED S.A.H.

STRUCTURE FOUNDATION INVESTIGATION
BRIDGE NO. CLE-275-0549
OVER OLD U.S. 50

CLE-275-5.35

LOG OF BORING (CONTINUED)

Boring No. S-4 (Cont.) Station & Offset 292+17.0, 4.0 ft. Lt. Surface Elev. 554.8

Elev. (ft)	Depth (ft)	Std. Pen. /R.Q.D.	Rec. (ft)	Loss (ft)	Description	Sample No.	Physical Characteristics: % Agg.	% C.S.	% F.S.	% Silt	% Clay	LL	PI	WC	ODOT Class
	60														
	61	6/3/6				24								33	
	62														
	63	7/6/9				25								27	
	64														
489.8	65														
	66	9/10/7			Coarse And Fine Sand With A Little Silt And A Trace Of Gravel And Clay, brown, wet, medium dense to dense	26								20	
	67														
	68	16/21/33				27	9	36	35	12	8	NP	NP	16	A-3a(0)
	69														
	70														
	71	13/13/23				28								16	
	72														
481.9	73	4/4/4			Sandy Silt With A Little Clay, gray, wet, medium stiff to stiff	29								20	
	74														
	75	7/6/6				30	0	1	33	46	20	22	7	20	A-4a(6)
	76														
477.7	77														
	78	14/47/48			Coarse And Fine Sand With A Little Silt And A Trace Of Clay And Gravel, brownish gray, wet, very dense	31	6	44	31	11	8	NP	NP	15	A-1-b(0)
	79														
475.2	80														
	81	27/57/40			Gravel With Sand And Silt And Clay, brownish gray, wet, medium dense to very dense	32								10	
	82														
	83	13/13/14				33	14	24	28	15	19	22	11	14	A-2-6
	84														
470.3	85														
	86	6/10/13			Clay With Silt, gray, moist, very stiff	34								29	Visual
468.1	87														
	88	43/68/69			Gravel With Sand, Silt And Clay, brownish gray, wet, very dense	35								11	Visual
	89														
	90														

LOG OF BORING (CONTINUED)

Boring No. S-4 (Cont.) Station & Offset 292+17.0, 4.0 ft. Lt. Surface Elev. 554.8

Elev. (ft)	Depth (ft)	Std. Pen. /R.Q.D.	Rec. (ft)	Loss (ft)	Description	Sample No.	Physical Characteristics: % Agg.	% C.S.	% F.S.	% Silt	% Clay	LL	PI	WC	ODOT Class
	90														
	91	35/50+				36									Visual
	92														
	93	50+				37									Visual
461.0	94				Top of Bedrock										
460.5					Start Core										
	95				Shale (90%) With Interbedded Limestone (10%)										
	96	0	1.6	0.3											
	97				Shale is gray, silty, calcareous, fissle, soft to moderately hard										
	98														
	99				Limestone is gray, fine to coarse grained, thin bedded, hard										
	100														
	101														
	102				-Weathered fom 460.5' to 460.0'										
	103														
	104														
	105														
448.6	106	0.1	7.8	2.2											
	107				Bottom of Boring										

DESIGN AGENCY: BALKE ENGINEERS, INC. CINCINNATI, OHIO

CHECKED E.M.K. | DATE 4/00 | REVISED | DRAWN M.S.J. | CHECKED S.A.H.

STRUCTURE FOUNDATION INVESTIGATION
BRIDGE NO. CLE-275-0549
OVER OLD U.S. 50

CLE-275-5.35

GEOLOGY OF THE SITE

THE STRUCTURE LOCATION IS LOCATED WITHIN THE FLOODPLAIN OF THE EAST FORK LITTLE MIAMI RIVER, IN AN AREA WHERE DEEP ALLUVIAL AND GLACIAL OUTWASH DEPOSITS OVERLIE SEDIMENTARY BEDROCK OF THE KOPE FORMATION, REPRESENTING THE ORDOVICIAN GEOLOGIC AGE.

EXPLORATION

THE EXPLORATION CONSISTED OF THREE DRIVE SAMPLE–CORE BORINGS, MADE BY MEANS OF A MECHANICALLY–POWERED HOLLOW–STEM ROTARY AUGER MOUNTED ON A MOBILE PLATFORM, PERFORMED BETWEEN OCTOBER 7 AND 27, 1999. THE AREA SURROUNDING THE NORTH PIER WAS INACCESSABLE WITH CONVENTIONAL DRILLING EQUIPMENT.

INVESTIGATIONAL FINDINGS AND OBSERVATIONS

THE TEST BORINGS DISCLOSED THAT APPOXIMATELY 17 FEET OF CLAYEY FILL IS PRESENT AT THE NORTH BRIDGE ABUTMENT AND APPROXIMATELY 34 FEET OF CLAYEY FILL IS PRESENT AT THE SOUTH BRIDGE ABUTMENT. PREDOMINANTLY FINE–GRAINED ALLUVIAL DEPOSITS CONSISTING OF SANDY SILT, SILT AND CLAY AND CLAY WERE OBSERVED ABOVE APPOXIMATE ELEVATION 490 FEET. BELOW THIS ELEVATION, COARSE–GRAINED GLACIAL OUTRASH DEPOSITS WERE FOUND CONSISTING OF GRAVEL, GRAVEL WITH SAND, AND COARSE AND FINE SAND. BEDROCK WAS ENCOUNTERED IN THE BORINGS AT ELEVATIONS RANGING FROM 461.7 TO 463.9. THE BEDROCK CONSISTED OF SHALE WITH INTERBEDDED LIMESTONE.

STATIC GROUNDWATER WAS ENCOUNTERED IN EACH OF THE BORE HOLES DURING DRILLING. THE ELEVATIONS WHERE GROUNDWATER WAS OBSERVED RANGED FROM 493.1 TO 494.5 FEET.

LEGEND

- PRESS SAMPLE, DRIVE SAMPLE, AND/OR CORE BORING LOCATION
- TR — TOP OF ROCK
- INDICATES STATIC WATER ELEVATION
- HORIZONTAL BAR ON BORING INDICATES THE DEPTH THE SAMPLE WAS TAKEN – PROFILE VIEW
- X/Y/Z — FIGURES BESIDE THE BORING IN PROFILE INDICATE THE NUMBER OF BLOWS FOR STANDARD PENETRATION TEST
  - X = NUMBER OF BLOWS FOR FIRST 6 INCHES
  - Y = NUMBER OF BLOWS FOR SECOND 6 INCHES
  - Z = NUMBER OF BLOWS FOR THIRD 6 INCHES
- SHALE WITH INTERBEDDED LIMESTONE

PARTICLE SIZE DEFINITIONS

12"	3"	0.1"		0.42 mm		0.074 mm	0.005 mm
Boulders	Cobbles	Gravel	Coarse Sand		Fine Sand	Silt	Clay
			No. 10 SIEVE		No. 40 SIEVE	No. 200 SIEVE	

NOTES

ALL AVAILABLE SOIL AND BEDROCK INFORMATION WHICH CAN BE CONVEINIENTLY SHOWN ON THE STRUCTURE FOUNDATION INVESTIGATIONS SHEETS HAS BEEN SO REPORTED. ADDITIONAL SUBSURFACE INVESTIGATIONS MAY HAVE BEEN MADE TO STUDY SOME SPECIAL ASPECT OF THE PROJECT. COPIES OF THIS DATA, IF ANY, MAY BE INSPECTED IN THE DISTRICT DEPUTY DIRECTOR'S OFFICE, THE OFFICE OF MATERIALS MANAGEMENT AT 1600 WEST BROAD STREET, THE OFFICE OF ROADWAY ENGINEERING OR THE OFFICE OF STRUCTURAL ENGINEERING AT 25 SOUTH FRONT STREET, COLUMBUS, OHIO 43215.

DRIVE SAMPLES

DRIVE SAMPLE BORINGS ARE MADE BY MEANS OF A MECHANICALLY–POWERED, ROTARY–TYPE DRILL RIG EMPLOYING A 2–INCH O.D., 1 5/8 INCH, SPLIT–SPOON SAMPLER, AT CONTINUOUS, 2.5 FEET AND/OR 5 FEET DEPTH INTERVALS, DRIVEN BY MEANS OF A 140 LB. HAMMER WITH A FREE FALL OF 30 INCHES. THE NUMBER OF BLOWS REQUIRED TO DRIVE THE SAMPLER THREE 6 INCH INCREMENTS IS CONSIDERED THE STANDARD PENETRATION TEST.

PRESS SAMPLES

PRESS SAMPLES ARE TAKEN BY MEANS OF MECHANICALLY POWERED, ROTARY–TYPE DRILL RIG, EMPLOYING A 3 INCH O.D. THIN–WALL PRESS SAMPLING TUBE. THE PRESS SAMPLING TUBE IS ADVANCED BY CONTINUOUS UNIFORM PRESSURE APPLIED BY THE DRILL RIG.

CORE BORING

CORE BORING ARE MADE BY MEANS OF A MECHANICALLY POWERED, ROTARY–TYPE DRILL RIG, EMPLOYING AN NQ–SIZE BARREL WITH AN INDUSTRIAL DIAMOND CUTTING HEAD.

SAMPLING AND TESTING

THE BORING LOG SHEETS SHOW A GRAPHIC PLOT OF THE INFORMATION OBTAINED, INCLUDING DEPTH AND ELEVATION OF THE SAMPLE, TYPE OF SAMPLE, NUMBER OF BLOWS FOR THE STANDARD PENETRATION TEST IN THREE 6 INCH INCREMENTS, AND A SAMPLE DESCRIPTION BASED ON LABORATORY TEST RESULTS, UTILIZING THE ODOT CLASSIFICATION SYSTEM. RESULTS OF STRENGTH AND CONSOLIDATION TESTING. IF PERFORMED ON UNDISTURBED SAMPLES, APPEAR GRAPHICALLY ON SEPARATE ENCLOSURES. ROCK SAMPLES ARE DISPLAYED ON THE LOG SHEETS, INCLUDING DEPTH AND ELEVATION OF THE SAMPLE, AMOUNT OF RECOVERY, AND A VISUAL CLASSIFICATION BASED ON TYPE, COLOR, DEGREE OF HARDNESS, GRAIN SIZE, DETERIORATION, BEDDING, ACID REACTION, AND OTHER QUALIFYING FACTORS.

AT DEPTHS WHERE MATERIALS ARE BOULDERY OR GRAVELLY TO THE EXTENT THAT A SAMPLER CANNOT BE UTILIZED, A WASH SAMPLE IS PROCURED AND VISUALLY CLASSIFIED, IN ORDER TO DETERMINED THE GENERAL CHARACTERISTIC OF THE MATERIAL. THESE SAMPLES ARE NOT CONSIDERED SUFFICIENTLY REPRESENTATIVE TO WARRANT LABORATORY TESTING.

DESIGN AGENCY: BALKE ENGINEERS, INC. CINCINNATI, OHIO

DRAWN	DESIGNED	REVIEWED	DATE
M.S.J.		E.M.K.	4/00
CHECKED	REVISED		
S.A.H.			

STRUCTURE FOUNDATION INVESTIGATION

BRIDGE NO. CLE–275–0568
OVER EAST FORK OF THE LITTLE MIAMI RIVER

CLE–275–5.35

24/47

CN199050\BRIDGES\568LEG.DWG

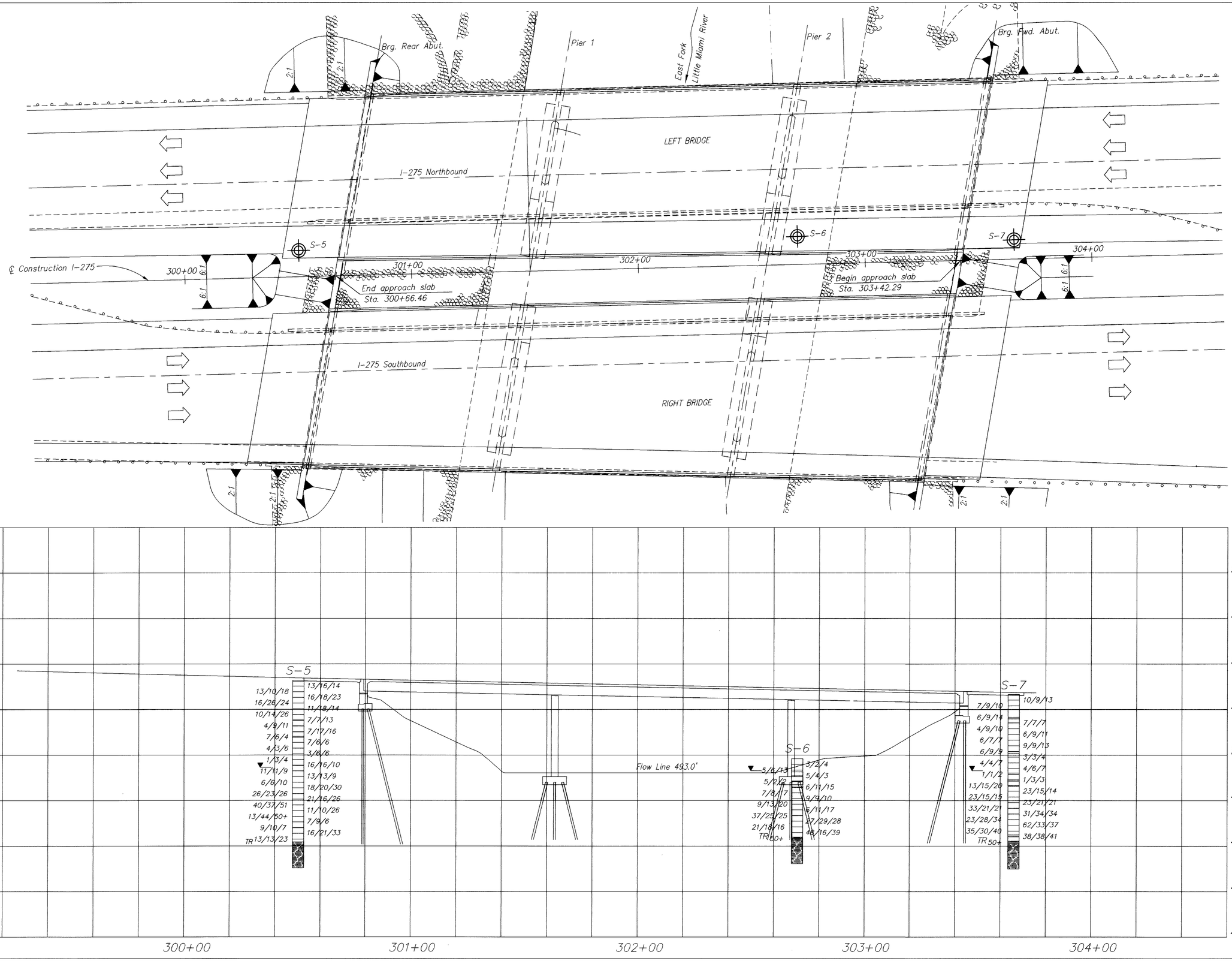

N

HORIZONTAL SCALE IN FEET
20 10 0 20

DRAWN	M.S.J.
CHECKED	S.A.H.
DESIGNED	
CHECKED	E.M.K
REVISED	
DATE	4/00
STRUCTURE FILE NUMBER	

STRUCTURE FOUNDATION INVESTIGATION

BRIDGE NO. CLE-275-0568
OVER EAST FORK OF THE LITTLE MIAMI RIVER

CLE-275-5.35

CN1999050/BRIDGES/BRIDGSHEET2.DWG

LOG OF BORING

Date Started 10/12/99
Date Completed 10/12/99
Boring No. S-5

Sampler Type SS Dia. 2"
Coring: Length 11.6 ft. Dia. 2"
Station & Offset 300+50.3, 11.5 ft. Lt.

Water Elev. 494.5
Surface Elev. 532.7

Elev. (ft)	Depth (ft)	Std. Pen. /R.Q.D.	Rec. (ft)	Loss (ft)	Description	Sample No.	Physical Characteristics: % Agg.	% C.S.	% F.S.	% Silt	% Clay	LL	PI	WC	ODOT Class
	0														
532.2					Topsoil										
	1				Fill; Sandy Silt With Some Gravel And Clay, brown, moist, very stiff										
	2														
	3	13/16/14				1								14	
	4														
	5	13/10/18				2	29	14	16	21	20	24	10	15	A-4a(1)
	6														
	7														
	8	16/18/23				3								10	
	9														
	10														
	11	16/26/24				4								9	
	12														
	13	11/18/14				5								8	
	14														
	15														
	16	10/14/26				6								5	
	17														
515.3															
	18	7/7/13			Sandy Silt With Some Gravel And A Little Clay, brown into gray, damp, very stiff	7								10	
	19														
	20														
	21	4/9/11				8	21	13	18	30	18	22	8	16	A-4a(3)
	22														
510.1															
	23	7/17/16			Coarse And Fine Sand With Some Gravel, brown, damp, dense	9								5	Visual
	24														
508.1															
	25				Sandy Silt With Some Clay, gray, moist, stiff	10								18	Visual
	26	7/6/4													
505.5	27														
	28	7/6/6			Silt And Clay With A Little Sand, gray, moist, medium stiff to stiff	11								22	
	29														
	30														

LOG OF BORING (CONTINUED)

Boring No. S-5 (Cont.)
Station & Offset 300+50.3, 11.5 ft. Lt.
Surface Elev. 532.7

Elev. (ft)	Depth (ft)	Std. Pen. /R.Q.D.	Rec. (ft)	Loss (ft)	Description	Sample No.	Physical Characteristics: % Agg.	% C.S.	% F.S.	% Silt	% Clay	LL	PI	WC	ODOT Class
	30														
	31	4/3/6				12								26	
	32														
	33	3/6/6				13	0	0	10	62	27	31	12	31	A-6a(9)
	34														
	35	1/3/4				14								40	
	36														
	37														
495.4															
	38	16/16/10			Gravel With Sand And A Trace Of Silt And Clay, brown to grayish brown, wet, medium dense to very dense	15								8	
	39														
	40	11/11/9				16								12	
	41														
	42														
	43	13/13/9				17								11	
	44														
	45	6/6/10				18								15	
	46														
	47														
	48	18/20/30				19	43	31	16	7	3	NP	NP	15	A-1-b(0)
	49														
	50														
	51	26/23/26				20								8	
	52														
	53	21/16/26				21								11	
	54														
	55														
	56	40/37/51				22								11	
	57														
	58	11/10/26				23								9	
	59														
	60														

DESIGN AGENCY
BALKE ENGINEERS, INC.
CINCINNATI, OHIO

CHECKED E.M.K.
DATE 4/00
REVISED
DRAWN M.S.J.
CHECKED S.A.H.

STRUCTURE FOUNDATION INVESTIGATION
BRIDGE NO. CLE-275-0568
OVER EAST FORK LITTLE MIAMI RIVER

CLE-275-5.35

LOG OF BORING (CONTINUED)

Boring No. S-5 (Cont.) Station & Offset 300+50.3, 11.5 ft. Lt. Surface Elev. 532.7

Elev. (ft)	Depth (ft)	Std. Pen. /R.Q.D.	Rec. (ft)	Loss (ft)	Description	Sample No.	Physical Characteristics								
							% Agg.	% C.S.	% F.S.	% Silt	% Clay	LL	PI	WC	ODOT Class
	60														
	61	13/44/50+				24								8	
	62														
	63	7/9/6				25	54	15	17	9	5	NP	NP	11	A-1-b(0)
	64														
	65														
	66	9/10/7				26								9	
	67														
	68	16/21/33				27								7	
	69														
	70														
	71	13/13/23				28								10	
461.7					Top of Bedrock										
	72				Shale (Augered)										
460.4					Start Core										
	73				Shale (85%) With Interbedded Limestone (15%)										
	74														
	75				Shale is gray, silty, calcarous, fissle, soft to moderately hard										
	76														
	77				Limestone is gray, fine to coarse grained, thin bedded, hard										
	78														
	79														
	80				-Weathered from 460.4' to 459.2'										
	81														
	82														
450.4		17	10.0	0.0											
	83				Bottom of Boring										

DESIGN AGENCY
BALKE ENGINEERS, INC.
CINCINNATI, OHIO

CHECKED E.M.K.
DATE 4/00
REVISED
DRAWN M.S.J.
CHECKED S.A.H.

STRUCTURE FOUNDATION INVESTIGATION
BRIDGE NO. CLE-275-0568
OVER EAST FORK LITTLE MIAMI RIVER

CLE-275-5.35

LOG OF BORING

Date Started 10/27/99 | Sampler Type SS Dia. 2" | Water Elev. 493.1
Date Completed 10/27/99 | Coring: Length 10.3 ft. Dia. 2"
Boring No. S-6 | Station & Offset 302+70.4, 12.3 ft. Lt. | Surface Elev. 498.4

Elev. (ft)	Depth (ft)	Std. Pen. /R.Q.D.	Rec. (ft)	Loss (ft)	Description	Sample No.	Physical Characteristics: % Agg.	% C.S.	% F.S.	% Silt	% Clay	LL	PI	WC	ODOT Class
	0														
	1				Sandy Silt With Some Clay And A Trace Of Gravel, brown, moist, loose										
	2														
	3	3/2/4				1	1	2	46	30	21	28	10	22	A-4a(3)
	4														
	5	5/6/13				2								12	
492.6	6														
	7				Gravel With Sand And A Trace Of Silt And Clay, grayish brown, wet, loose										
	8	5/4/3				3	53	16	18	8	5	NP	NP	14	A-1b(0)
	9														
488.6	10														
	11	5/2/2			Clay With Some Silt And A Trace Of Sand, gray, wet, soft	4	0	1	1	30	68	42	22	33	A-7-6(13)
	12														
485.8	13	6/11/15			Gravel With Some Sand And A Trace Of Silt And Clay, gray, wet, medium dense	5								22	
	14														
	15	7/8/17				6	55	23	11	6	5	18	3	14	A-1a(0)
	16														
	17														
	18	9/9/10				7								21	
	19														
	20														
	21	9/13/20			Gravel With Sand And A Trace Of Silt And Clay, brown and gray, wet, medium dense	8	31	30	27	7	4	NP	NP	14	A-1b(0)
	22														
	23	6/11/17				9								20	
	24														
	25														
	26	37/25/25				10								11	
	27														
	28	27/29/28				11								9	
	29														
	30														

LOG OF BORING (CONTINUED)

Boring No. S-6 (Cont.) | Station & Offset 302+70.4, 12.3 ft. Lt. | Surface Elev. 498.4

Elev. (ft)	Depth (ft)	Std. Pen. /R.Q.D.	Rec. (ft)	Loss (ft)	Description	Sample No.	Physical Characteristics: % Agg.	% C.S.	% F.S.	% Silt	% Clay	LL	PI	WC	ODOT Class
	30														
	31	21/18/16			Gravel With Some Silt, A Little Sand And A Trace Of Clay, gray, wet, dense to very dense	12								11	
	32														
	33	48/16/39				13	63	17	12	5	4	NP	NP	14	A-1a(0)
	34														
463.9	35				Top of Bedrock Weathered Shale (Augered)										
	36	50+			Start Core	14								16	
	37				Shale (90%) With Interbedded Limestone (10%)										
	38	0	2.2	0											
	39				Shale is gray, silty, calcareous, fissle, soft to moderately hard										
	40														
	41				Limestone is gray, fine to coarse grained, thin bedded, hard										
	42														
	43				-Weathered from 462.6' to 461.2'										
	44														
	45														
452.3	46	0.1	8.1	0											
	47				Bottom of Boring										

DESIGN AGENCY: BALKE ENGINEERS, INC. CINCINNATI, OHIO
CHECKED: E.M.K.
DATE: 4/00
REVISED:
DRAWN: M.S.J. CHECKED: S.A.H.

STRUCTURE FOUNDATION INVESTIGATION
BRIDGE NO. CLE-275-0568
OVER EAST FORK LITTLE MIAMI RIVER

CLE-275-5.35

LOG OF BORING

Date Started 10/7/99
Date Completed 10/7/99
Boring No. S-7

Sampler Type SS Dia. 2"
Coring: Length 11.1 ft. Dia. 2"
Station & Offset 303+65.9, 8.5 ft. Lt.

Water Elev. 493.1
Surface Elev. 526.6

Elev. (ft)	Depth (ft)	Std. Pen. /R.Q.D.	Rec. (ft)	Loss (ft)	Description	Sample No.	Physical Characteristics: % Agg.	% C.S.	% F.S.	% Silt	% Clay	LL	PI	WC	ODOT Class
	0														
526.3					Topsoil										
	1				Fill; Clay With Some Silt, A Little Sand And A Trace Of Gravel, light brown to orangish brown and gray, moist, stiff to very stiff											
	2														
	3	10/9/13				1								21	
	4														
	5	7/9/10				2	2	4	11	33	50	41	22	21	A-7-6(13)
	6														
	7														
	8	ST				3									
	9														
	10	6/9/14				4								15	
515.9	11				Fill; Sandy Silt With A Little Clay And Gravel, brownish gray, moist, stiff to very stiff										
	12														
	13	7/7/7				5								15	
	14														
	15	4/9/10				6	11	9	41	19	20	21	7	16	A-4a(1)
	16														
	17														
	18	6/9/11				7								14	
	19														
	20														
	21	6/7/7				8								20	
	22														
	23	9/9/13				9								16	
	24														
	25														
	26	6/9/9				10								12	
500.7	27														
	28	3/3/4			Fill; Coarse And Fine Sand With A Little Silt And Clay And A Trace Of Gravel, brown to grayish brown, moist, loose to medium dense	11	9	12	49	19	11	NP	NP	25	A-3a(0)
	29														
	30														

LOG OF BORING (CONTINUED)

Boring No. S-7 (Cont.)
Station & Offset 303+65.9, 8.5 ft. Lt.
Surface Elev. 526.6

Elev. (ft)	Depth (ft)	Std. Pen. /R.Q.D.	Rec. (ft)	Loss (ft)	Description	Sample No.	Physical Characteristics: % Agg.	% C.S.	% F.S.	% Silt	% Clay	LL	PI	WC	ODOT Class
	30														
	31	4/4/7				12								11	
	32														
	33	4/6/7				13								21	
	34														
492.1	35				Clay With Some Silt And A Trace Of Sand, gray, moist, soft	14	0	0	1	31	68	42	21	31	A-7-6 (13)
	36	1/1/2													
	37														
488.6	38	1/3/3				15								20	Visual
	39				Fine Sand And Silt, brown to grayish brown, wet, loose										
	40														
486.3	41	13/15/20				16								14	
	42				Gravel With Sand And Traces Of Silt And Clay, brown and gray, wet, medium dense to very dense										
	43	23/15/14				17								10	
	44														
	45	23/15/15				18								14	
	46														
	47														
	48	23/21/21				19	40	37	15	4	4	NP	NP	11	A-1-b(0)
	49														
	50														
	51	33/21/21				20								10	
	52														
	53	31/34/34				21								11	
	54														
	55														
	56	23/28/34				22								11	
	57														
	58	62/33/37				23								11	
	59														
	60														

DESIGN AGENCY: BALKE ENGINEERS, INC. CINCINNATI, OHIO
CHECKED: E.M.K.
DATE: 4/00
REVISED:
DRAWN: M.S.J.
CHECKED: S.A.H.

STRUCTURE FOUNDATION INVESTIGATION
BRIDGE NO. CLE-275-0568
OVER EAST FORK LITTLE MIAMI RIVER

CLE-275-5.35

LOG OF BORING (CONTINUED)

Boring No. S-7 (Cont.) Station & Offset 303+65.9, 8.5 ft. Lt. Surface Elev. 526.6

Elev. (ft)	Depth (ft)	Std. Pen. /R.Q.D.	Rec. (ft)	Loss (ft)	Description	Sample No.	Physical Characteristics								
							% Agg.	% C.S.	% F.S.	% Silt	% Clay	LL	PI	WC	ODOT Class
	60														
	61	35/30/40				24								10	
464.9	62				Coarse And Fine Sand With Traces Of Silt And Clay, wet, very dense										
	63	38/38/41				25	0	33	48	10	9	NP	NP	18	A-3a(0)
	64														
462.1					Top of Bedrock										
	65				Shale (Augered)										
461.1		50+			Start Core	26								7	
	66				Shale (90%) With Interbedded Limestone (10%)										
	67	0	1.0	0.0											
	68				Shale is gray, silty, calcareous, fissile, soft to moderately hard										
	69														
	70				Limestone is gray, fine to coarse grained, thin bedded, hard										
	71														
	72				-Weathered from 462.1' to 459.8'										
	73														
	74														
	75														
	76														
450.0		15	10.0	0.0											
	77				Bottom of Boring										

DESIGN AGENCY
BALKE ENGINEERS, INC.
CINCINNATI, OHIO

CHECKED E.M.K.
DATE 4/00
REVISED
DRAWN M.S.J.
CHECKED S.A.H.

STRUCTURE FOUNDATION INVESTIGATION
BRIDGE NO. CLE-275-0568
OVER EAST FORK LITTLE MIAMI RIVER

CLE-275-5.35

30/47

GEOLOGY OF THE SITE

THE STRUCTURE LOCATION IS LOCATED WITHIN THE FLOODPLAIN OF THE EAST FORK LITTLE MIAMI RIVER, IN AN AREA WHERE GLACIAL OUTWASH DEPOSITS OVERLIE SEDIMENTARY BEDROCK OF THE KOPE FORMATION, REPRESENTING THE ORDOVICIAN GEOLOGIC AGE.

EXPLORATION

THE EXPLORATION CONSISTED OF FIVE DRIVE SAMPLE–CORE BORINGS, MADE BY MEANS OF A MECHANICALLY–POWERED HOLLOW–STEM ROTARY AUGER MOUNTED ON A MOBILE PLATFORM, PERFORMED BETWEEN SEPTEMBER 28 AND OCTOBER 6, 1999.

INVESTIGATIONAL FINDINGS AND OBSERVATIONS

THE TEST BORINGS DISCLOSED THAT APPOXIMATELY 13 FEET OF CLAYEY FILL IS PRESENT AT THE BRIDGE ABUTMENTS. PREDOMINANTLY COARSE–GRAINED OUTWASH DEPOSITS CONSISTING OF GRAVEL WITH SAND AND COARSE AND FINE SAND WERE OBSERVED UNDERLYING THE FILL MATERIAL. BENEATH THE AFOREMENTIONED SOILS, SILTY DEPOSITS WERE FOUND CONSISTING OF SANDY SILT, SILT AND CLAY AND SILTY CLAY. BEDROCK WAS ENCOUNTERED IN THE BORINGS AT ELEVATIONS RANGING FROM 488.2 TO 510.2 FEET, SLOPING UPWARD FROM NORTH TO SOUTH. THE BEDROCK CONSISTED OF SHALE WITH INTERBEDDED LIMESTONE.

STATIC GROUNDWATER WAS ENCOUNTERED IN EACH OF THE BORE HOLES DURING DRILLING. THE ELEVATIONS WHERE GROUNDWATER WAS OBSERVED RANGED FROM 513.6 TO 520.4 FEET.

LEGEND

- PRESS SAMPLE, DRIVE SAMPLE, AND/OR CORE BORING LOCATION
- TR — TOP OF ROCK
- INDICATES STATIC WATER ELEVATION
- HORIZONTAL BAR ON BORING INDICATES THE DEPTH THE SAMPLE WAS TAKEN – PROFILE VIEW
- X/Y/Z — FIGURES BESIDE THE BORING IN PROFILE INDICATE THE NUMBER OF BLOWS FOR STANDARD PENETRATION TEST
  - X = NUMBER OF BLOWS FOR FIRST 6 INCHES
  - Y = NUMBER OF BLOWS FOR SECOND 6 INCHES
  - Z = NUMBER OF BLOWS FOR THIRD 6 INCHES
- SHALE WITH INTERBEDDED LIMESTONE

PARTICLE SIZE DEFINITIONS

12"	3"	0.1"		0.42 mm		0.074 mm	0.005 mm	
Boulders	Cobbles	Gravel	Coarse Sand		Fine Sand		Silt	Clay
			No. 10 SIEVE		No. 40 SIEVE	No. 200 SIEVE		

NOTES

ALL AVAILABLE SOIL AND BEDROCK INFORMATION WHICH CAN BE CONVEINIENTLY SHOWN ON THE STRUCTURE FOUNDATION INVESTI–GATIONS SHEETS HAS BEEN SO REPORTED. ADDITIONAL SUBSUR–FACE INVESTIGATIONS MAY HAVE BEEN MADE TO STUDY SOME SPECIAL ASPECT OF THE PROJECT. COPIES OF THIS DATA, IF ANY, MAY BE INSPECTED IN THE DISTRICT DEPUTY DIRECTOR'S OFFICE, THE OFFICE OF MATERIALS MANAGEMENT AT 1600 WEST BROAD STREET, THE OFFICE OF ROADWAY ENGINEERING OR THE OFFICE OF STRUCTURAL ENGINEERING AT 25 SOUTH FRONT STREET, COLUMBUS, OHIO 43215.

DRIVE SAMPLES

DRIVE SAMPLE BORINGS ARE MADE BY MEANS OF A MECHANICALLY–POWERED, ROTARY–TYPE DRILL RIG EMPLOYING A 2–INCH O.D., 1 5/8 INCH, SPLIT–SPOON SAMPLER, AT CONTINUOUS, 2.5 FEET AND/OR 5 FEET DEPTH INTERVALS, DRIVEN BY MEANS OF A 140 LB. HAMMER WITH A FREE FALL OF 30 INCHES. THE NUMBER OF BLOWS REQUIRED TO DRIVE THE SAMPLER THREE 6 INCH INCREMENTS IS CONSIDERED THE STANDARD PENETRATION TEST.

PRESS SAMPLES

PRESS SAMPLES ARE TAKEN BY MEANS OF MECHANICALLY POWERED, ROTARY–TYPE DRILL RIG, EMPLOYING A 3 INCH O.D. THIN–WALL PRESS SAMPLING TUBE. THE PRESS SAMPLING TUBE IS ADVANCED BY CONTINUOUS UNIFORM PRESSURE APPLIED BY THE DRILL RIG.

CORE BORING

CORE BORING ARE MADE BY MEANS OF A MECHANICALLY POWERED, ROTARY–TYPE DRILL RIG, EMPLOYING AN NQ–SIZE BARREL WITH AN INDUSTRIAL DIAMOND CUTTING HEAD.

SAMPLING AND TESTING

THE BORING LOG SHEETS SHOW A GRAPHIC PLOT OF THE INFORMATION OBTAINED, INCLUDING DEPTH AND ELEVATION OF THE SAMPLE, TYPE OF SAMPLE, NUMBER OF BLOWS FOR THE STANDARD PENETRATION TEST IN THREE 6 INCH INCREMENTS, AND A SAMPLE DESCRIPTION BASED ON LABORATORY TEST RESULTS, UTILIZING THE ODOT CLASSIFICATION SYSTEM. RESULTS OF STRENGTH AND CONSOLIDATION TESTING. IF PERFORMED ON UNDISTURBED SAMPLES, APPEAR GRAPHICALLY ON SEPARATE ENCLOSURES. ROCK SAMPLES ARE DISPLAYED ON THE LOG SHEETS, INCLUDING DEPTH AND ELEVATION OF THE SAMPLE, AMOUNT OF RECOVERY, AND A VISUAL CLASSIFICATION BASED ON TYPE, COLOR, DEGREE OF HARDNESS, GRAIN SIZE, DETERIORATION, BEDDING, ACID REACTION, AND OTHER QUALIFYING FACTORS.

AT DEPTHS WHERE MATERIALS ARE BOULDERY OR GRAVELLY TO THE EXTENT THAT A SAMPLER CANNOT BE UTILIZED, A WASH SAMPLE IS PROCURED AND VISUALLY CLASSIFIED, IN ORDER TO DETERMINED THE GENERAL CHARACTERISTIC OF THE MATERIAL. THESE SAMPLES ARE NOT CONSIDERED SUFFICIENTLY REPRESENTATIVE TO WARRANT LABORATORY TESTING.

DESIGN AGENCY: BALKE ENGINEERS, INC. CINCINNATI, OHIO

DRAWN	DESIGNED	REVIEWED	DATE
M.S.J.		E.M.K.	4/00
CHECKED	REVISED		
S.A.H.			

STRUCTURE FOUNDATION INVESTIGATION
BRIDGE NO. CLE–275–0618
OVER U.S. ROUTE 50

CLE–275–5.35

31 / 47

CN19905D/BRIDGES/FIBLEG.DWG

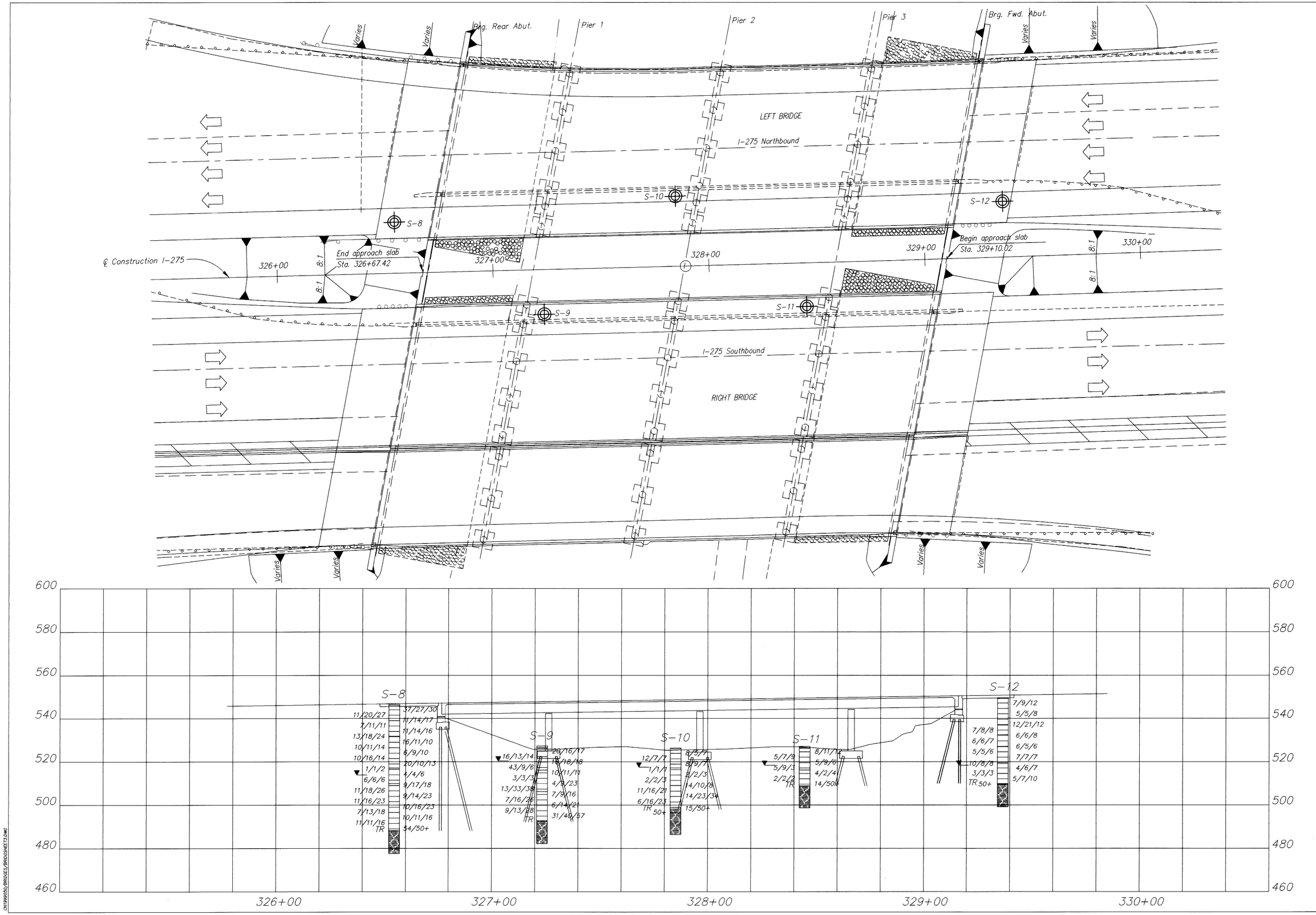

HORIZONTAL SCALE IN FEET
20 10 0 20

DRAWN	DESIGNED	CHECKED	DATE
M.S.J.		E.M.K	4/00
CHECKED	REVISED	STRUCTURE FILE NUMBER	
S.A.H.			

STRUCTURE FOUNDATION INVESTIGATION
BRIDGE NO. CLE-275-0618
OVER U.S. ROUTE 50

CLE-275-5.35

CN1999030/BRIDGES/BRIDGSHEET3.DWG

LOG OF BORING

Date Started 10/6/99
Date Completed 10/6/99
Boring No. S-8

Sampler Type SS Dia. 2"
Coring: Length 10.0 ft. Dia. 2"
Station & Offset 326+54.7, 23.6 ft. Lt.

Water Elev. 513.9
Surface Elev. 546.5

Elev. (ft)	Depth (ft)	Std. Pen. /R.Q.D.	Rec. (ft)	Loss (ft)	Description	Sample No.	Physical Characteristics: % Agg.	% C.S.	% F.S.	% Silt	% Clay	LL	PI	WC	ODOT Class
	0														
546.0					Topsoil										
	1				Fill; Silt And Clay With Some Sand And A Trace Of Gravel, orangish brown to grayish brown, damp to moist, very stiff											
	2														
	3	37/27/30				1								13	
	4														
	5	11/20/27				2	2	8	20	35	35	32	15	10	A-6a(8)
	6														
	7														
	8	11/14/17				3								18	
	9														
	10														
	11	7/11/11				4								13	
	12														
	13	11/14/16				5								12	
	14														
531.8					Gravel With Sand, A Little Silt And A Trace of Clay, grayish brown, damp to moist, medium dense to dense										
	15	13/18/24				6								10	
	16														
	17														
	18	16/11/10				7								12	
	19														
	20														
	21	10/11/14				8								5	
	22														
	23	6/9/10				9	34	31	18	12	5	NP	NP	6	A-1-b(0)
	24														
	25														
	26	10/16/14				10								5	
	27														
	28	20/10/13				11								10	
	29														
517.1															
	30														

LOG OF BORING (CONTINUED)

Boring No. S-8 (Cont.)
Station & Offset 326+54.7, 23.6 ft. Lt.
Surface Elev. 546.5

Elev. (ft)	Depth (ft)	Std. Pen. /R.Q.D.	Rec. (ft)	Loss (ft)	Description	Sample No.	Physical Characteristics: % Agg.	% C.S.	% F.S.	% Silt	% Clay	LL	PI	WC	ODOT Class
	30														
	31	1/1/2			Sandy Silt With A Little Clay And Gravel, brownish gray, moist, soft to stiff	12								21	
	32														
	33	4/4/6				13	11	12	35	29	13	22	8	20	A-4a(0)
	34														
	35	6/6/6				14								14	
	36														
509.9					Clay With Some Silt And A Trace Of Sand And Gravel, tan to gray, moist, very stiff										
	37														
	38	9/17/18				15								19	
	39														
	40														
	41	11/18/26				16								18	
	42														
	43	9/14/23				17								19	
	44														
	45														
	46	11/16/23				18								21	
	47														
	48	10/16/23				19								22	
	49														
	50														
	51	7/13/18				20								23	
	52														
	53	10/11/16				21								19	
	54														
	55														
	56	11/11/16				22								24	
	57														
488.2	58	54/50+			Top of Bedrock	23								3	
487.6	59				Start Core										
	60														

DESIGN AGENCY
BALKE ENGINEERS, INC.
CINCINNATI, OHIO

DRAWN	CHECKED	REVISED	DATE	CHECKED
M.S.J.	S.A.H.		4/00	E.M.K.

STRUCTURE FOUNDATION INVESTIGATION
BRIDGE NO. CLE-275-0618
OVER U.S. 50 INTERCHANGE

CLE-275-5.35

LOG OF BORING (CONTINUED)

Boring No. S-8 (Cont.) Station & Offset 326+54.7, 23.6 ft. Lt. Surface Elev. 546.5

Elev. (ft)	Depth (ft)	Std. Pen. /R.Q.D.	Rec. (ft)	Loss (ft)	Description	Sample No.	Physical Characteristics								
							% Agg.	% C.S.	% F.S.	% Silt	% Clay	LL	PI	WC	ODOT Class
	60														
	61				Shale (95%) With Interbedded Limestone (5%)										
	62														
	63				Shale is gray, silty, calcareous, fissile, soft to moderately hard										
	64														
	65				Limestone is gray, fine to coarse grained, thin bedded, hard										
	66														
	67				–Weathered from 488.2' to 484.7'										
	68														
477.6	69	26	10.0	0.0											
					Bottom of Boring										
	70														

DESIGN AGENCY
BALKE ENGINEERS, INC.
CINCINNATI, OHIO

CHECKED E.M.K.

DATE 4/00

REVISED

DRAWN M.S.J.

CHECKED S.A.H.

STRUCTURE FOUNDATION INVESTIGATION
BRIDGE NO. CLE-275-0618
OVER U.S. 50 INTERCHANGE

CLE-275-5.35

LOG OF BORING

Date Started 9/28/99
Date Completed 9/29/99
Boring No. S-9

Sampler Type SS Dia. 2"
Coring: Length 10.1 ft. Dia. 2"
Station & Offset 327+23.4, 20.6 ft. Rt.

Water Elev. 520.4
Surface Elev. 527.3

Elev. (ft)	Depth (ft)	Std. Pen. /R.Q.D.	Rec. (ft)	Loss (ft)	Description	Sample No.	Physical Characteristics: % Agg.	% C.S.	% F.S.	% Silt	% Clay	LL	PI	WC	ODOT Class
	0														
526.7					Asphalt Pavement										
526.2	1				Gravel With Sand										
	2				Gravel With Sand, A Little Silt And A Trace Of Clay, brown, dry to wet, medium dense to dense										
	3	20/16/17				1								9	
	4														
	5	16/13/14				2	32	35	17	11	15	NP	NP	4	A-1-b(0)
	6														
	7														
	8	16/18/18				3								8	
	9														
	10														
	11	43/9/6				4								17	
516.1					Gravel With Sand And Silt And Clay, grayish brown, wet, loose to dense										
	12														
	13	10/11/11				5								12	
	14														
	15	3/3/3				6	22	22	24	16	16	29	13	27	A-2-6(1)
	16														
	17														
	18	4/9/23				7								25	
	19														
	20														
	21	13/33/38				8								17	
506.2	22				Clay And Silt With Traces Of Sand And Gravel, gray to brown, moist, very stiff										
	23	7/9/16				9								NR	
	24														
	25														
	26	7/16/26				10								22	
	27														
	28	6/14/21				11	2	3	4	38	53	46	26	20	A-7-6(16)
	29														
	30														

LOG OF BORING (CONTINUED)

Boring No. S-9 (Cont.)
Station & Offset 327+23.4, 20.6 ft. Rt.
Surface Elev. 527.3

Elev. (ft)	Depth (ft)	Std. Pen. /R.Q.D.	Rec. (ft)	Loss (ft)	Description	Sample No.	Physical Characteristics: % Agg.	% C.S.	% F.S.	% Silt	% Clay	LL	PI	WC	ODOT Class
	30														
	31	9/13/28				12								22	
	32														
	33	31/40/57				13								20	
	34														
492.7					Top of Bedrock										
492.3	35				Start Core										
	36	0	0.8	0.4	Shale (95%) With Interbedded Limestone (5%)										
	37				Shale is gray, silty, calcareous, fissile, soft to moderately hard										
	38														
	39				Limestone is gray, fine to coarse grained, thin bedded, hard										
	40														
	41				-Weathered from 492.7' to 490.1'										
	42														
	43														
	44														
482.2	45	48	8.9	0.0											
	46				Bottom of Boring										

DESIGN AGENCY
BALKE ENGINEERS, INC.
CINCINNATI, OHIO

CHECKED E.M.K.
DATE 4/00
REVISED
DRAWN M.S.J.
CHECKED S.A.H.

STRUCTURE FOUNDATION INVESTIGATION
BRIDGE NO. CLE-275-0618
OVER U.S. 50 INTERCHANGE

CLE-275-5.35

35/47

LOG OF BORING

Date Started 9/29/99
Date Completed 9/29/99
Boring No. S-10

Sampler Type SS Dia. 2"
Coring: Length 10.0 ft. Dia. 2"
Station & Offset 327+85.2, 32.4 ft. Lt.

Water Elev. 517.5
Surface Elev. 526.4

Elev. (ft)	Depth (ft)	Std. Pen. /R.Q.D.	Rec. (ft)	Loss (ft)	Description	Sample No.	Physical Characteristics: % Agg.	% C.S.	% F.S.	% Silt	% Clay	LL	PI	WC	ODOT Class
	0														
526.0					Topsoil										
	1				Gravel With Sand And A Little Silt And A Trace Of Clay, brown, damp to moist, medium dense										
	2														
	3	8/5/7				1								8	
	4														
	5	12/7/7				2	29	28	19	15	9	NP	NP	7	A-1-b(0)
	6														
	7														
	8	8/9/7				3								11	
	9														
517.2					Silt And Clay And Sand With A Trace Of Gravel, gray, wet, soft to medium stiff										
	10	1/1/1				4								21	
	11														
	12														
	13	2/2/3				5	7	14	36	20	23	26	12	21	A-6a(3)
	14														
	15	2/2/3				6								24	
	16														
	17														
509.0					Silty Clay With Traces Of Sand And Gravel, gray and brown, moist, very stiff										
	18	14/10/8				7								26	
	19														
	20	11/16/21				8								22	
	21														
	22														
	23	14/23/34				9	2	3	4	40	51	40	22	22	A-6b(13)
	24														
	25	6/16/23				10								19	
	26														
	27														
498.2	28	15/50+			Top of Bedrock Shale (Augered)	11								19	
	29														
	30	50+				12								13	

LOG OF BORING (CONTINUED)

Boring No. S-10 (Cont.)
Station & Offset 327+85.2, 32.4 ft. Lt.
Surface Elev. 526.4

Elev. (ft)	Depth (ft)	Std. Pen. /R.Q.D.	Rec. (ft)	Loss (ft)	Description	Sample No.	Physical Characteristics: % Agg.	% C.S.	% F.S.	% Silt	% Clay	LL	PI	WC	ODOT Class
	30				Start Core										
	31				Shale, gray to dark gray, silty, calcareous, fissile										
	32														
	33														
	34				-Weathered from 498.2' to 495.1'										
	35														
	36														
	37														
	38														
	39														
486.4	40	52	10.0	0.0											
					Bottom of Boring										
	41														

DESIGN AGENCY
BALKE ENGINEERS, INC.
CINCINNATI, OHIO

CHECKED E.M.K.
DATE 4/00
REVISED
DRAWN M.S.J.
CHECKED S.A.H.

STRUCTURE FOUNDATION INVESTIGATION
BRIDGE NO. CLE-275-0618
OVER U.S. 50 INTERCHANGE

CLE-275-5.35

36/47

LOG OF BORING

Date Started 9/29/99
Date Completed 9/29/99
Boring No. S-11

Sampler Type SS Dia. 2"
Coring: Length 10.0 ft. Dia. 2"
Station & Offset 328+44.9, 20.1 ft. Rt.

Water Elev. 518.4
Surface Elev. 527.1

Elev. (ft)	Depth (ft)	Std. Pen. /R.Q.D.	Rec. (ft)	Loss (ft)	Description	Sample No.	Physical Characteristics								
							% Agg.	% C.S.	% F.S.	% Silt	% Clay	LL	PI	WC	ODOT Class
	0														
526.6					Asphalt Pavement										
526.2	1				Gravel With Sand										
	2				Gravel With Sand A Little Silt And A Trace Of Clay, brown, damp to wet, medium dense										
	3	8/11/12				1								8	
	4														
	5	5/7/9				2	30	35	18	11	6	NP	NP	7	A-1-b(0)
	6														
	7														
	8	5/9/6				3								11	
	9														
	10	5/9/3				4								19	
516.2	11				Silt And Clay And Sand With A Little Gravel, gray, moist, soft to medium stiff										
	12														
	13	4/2/4				5	13	15	34	14	24	29	14	20	A-6a(2)
	14														
	15	2/2/2				6								26	
	16														
	17														
	18	14/50+				7								15	
508.8					Top of Bedrock										
508.6	19				Start Core										
	20				Shale (85%) With Interbedded Limestone (15%)										
	21														
	22				Shale is gray, silty, calcareous, fissile, soft to moderately hard										
	23				Limestone is gray, fine to coarse grained, thin bedded, hard										
	24														
	25				-Weathered from 508.8' to 508.6' and from 503.6' to 502.1'										
	26														
	27														
	28														
498.6		31	10.0	0.0											
	29				Bottom of Boring										

DESIGN AGENCY
BALKE ENGINEERS, INC.
CINCINNATI, OHIO

CHECKED E.M.K.
DATE 4/00
REVISED
DRAWN M.S.J.
CHECKED S.A.H.

STRUCTURE FOUNDATION INVESTIGATION
BRIDGE NO. CLE-275-0618
OVER U.S. 50 INTERCHANGE

CLE-275-5.35

LOG OF BORING

Date Started 10/1/99 | Sampler Type SS Dia. 2" | Water Elev. 518.8
Date Completed 10/1/99 | Coring: Length 10.0 ft. Dia. 2"
Boring No. S-12 | Station & Offset 329+36.8, 25.8 ft. Lt. | Surface Elev. 550.0

Elev. (ft)	Depth (ft)	Std. Pen. /R.Q.D.	Rec. (ft)	Loss (ft)	Description	Sample No.	Physical Characteristics: % Agg.	% C.S.	% F.S.	% Silt	% Clay	LL	PI	WC	ODOT Class
	0														
549.6					Topsoil										
	1				Fill; Silty Clay With A Little Sand And A Trace Of Gravel, gray and brown, moist, medium stiff to very stiff										
	2														
	3	7/9/12				1								18	
	4														
	5	ST				2								16	q_u = 0.59 (tsf)
	6														
	7														
	8	5/5/8				3	4	4	11	37	44	40	18	20	A-6b(11)
	9														
	10														
	11	ST				4								15	q_u = 1.78 (tsf)
	12														
537.3	13	12/21/12				5								8	
	14				Coarse And Fine Sand With Some Gravel And A Little Silt And Clay, grayish brown, moist, medium dense to dense											
	15	7/8/8				6	23	27	23	14	13	19	5	11	A-3a(0)
	16														
532.9	17														
	18	6/6/8			Silty Clay With Some Sand And A Little Gravel, grayish brown, moist, stiff	7								21	
	19														
	20	6/6/7				8	17	20	7	23	33	40	20	18	A-6b(9)
	21														
	22														
527.3	23	6/5/6				9								6	
	24				Gravel With Sand And A Trace Of Silt And Clay, grayish brown, damp to moist, medium dense										
	25														
	26	5/5/6				10	35	35	16	9	5	NP	NP	4	A-1-b(0)
	27														
	28	7/7/7				11								8	
	29														
	30														

LOG OF BORING (CONTINUED)

Boring No. S-12 (Cont.) | Station & Offset 329+36.8, 25.8 ft. Lt. | Surface Elev. 550.0

Elev. (ft)	Depth (ft)	Std. Pen. /R.Q.D.	Rec. (ft)	Loss (ft)	Description	Sample No.	Physical Characteristics: % Agg.	% C.S.	% F.S.	% Silt	% Clay	LL	PI	WC	ODOT Class
	30														
519.5		10/8/8				12								10	
	31				Sandy Silt With A Little Clay And A Trace Of Gravel, gray, moist, medium stiff to very stiff											
	32														
	33	4/6/7				13	2	20	35	25	18	31	9	30	A-4a(2)
	34														
	35														
	36	3/3/3				14								29	
	37														
	38	5/7/10				15								14	
	39														
510.2	40				Top of Bedrock										
509.6		50+			Start Core	16								10	
	41				Shale (80%) With Interbedded Limestone (20%)										
	42														
	43				Shale is gray, silty, calcareous, fissile, soft to moderately hard										
	44														
	45				Limestone is gray, fine to coarse grained, thin bedded, hard										
	46														
	47				-Weathered from 509.8' to 508.9'										
	48														
	49														
	50														
499.6		21	10.0	0.0											
	51				Bottom of Boring										

DESIGN AGENCY: BALKE ENGINEERS, INC. CINCINNATI, OHIO
CHECKED E.M.K. | DATE 4/00 | REVISED | DRAWN M.S.J. | CHECKED S.A.H.

STRUCTURE FOUNDATION INVESTIGATION
BRIDGE NO. CLE-275-0618
OVER U.S. 50 INTERCHANGE

CLE-275-5.35

GEOLOGY OF THE SITE

THE STRUCTURE LOCATION IS LOCATED WITHIN THE FLOODPLAIN OF THE EAST FORK LITTLE MIAMI RIVER, IN AN AREA WHERE ALLUVIAL AND GLACIAL OUTWASH DEPOSITS OVERLIE SEDIMENTARY BEDROCK OF THE KOPE FORMATION, REPRESENTING THE ORDOVICIAN GEOLOGIC AGE.

EXPLORATION

THE EXPLORATION CONSISTED OF FIVE DRIVE SAMPLE–CORE BORINGS, MADE BY MEANS OF A MECHANICALLY–POWERED HOLLOW–STEM ROTARY AUGER MOUNTED ON A MOBILE PLATFORM, PERFORMED BETWEEN SEPTEMBER 27 AND OCTOBER 11, 1999.

INVESTIGATIONAL FINDINGS AND OBSERVATIONS

THE TEST BORINGS DISCLOSED THAT APPOXIMATELY 24 FEET OF CLAYEY FILL IS PRESENT AT THE NORTH BRIDGE ABUTMENT AND APPROXIMATELY 29 FEET OF CLAYEY FILL IS PRESENT AT THE SOUTH BRIDGE ABUTMENT. ALTERNATING LAYERS OF FINE–GRAINED AND COARSE–GRAINED ALLUVIAL AND GLACIAL OUTWASH WERE OBSERVED UNDERLYING THE FILL MATERIAL. FINE–GRAINED SOILS CONSISTED OF CLAY, SILTY CLAY, SILT AND CLAY, AND SANDY SILT. COARSE–GRAINED SOILS CLASSIFIED AS GRAVEL, GRAVEL WITH SAND, GRAVEL WITH SAND AND SILT, AND COARSE AND FINE SAND. BEDROCK WAS ENCOUNTERED IN THE BORINGS AT ELEVATIONS RANGING FROM 506.7 TO 510.0 FEET. THE BEDROCK CONSISTED OF SHALE WITH INTERBEDDED LIMESTONE.

STATIC GROUNDWATER WAS ENCOUNTERED IN EACH OF THE BORE HOLES DURING DRILLING. THE ELEVATIONS WHERE GROUNDWATER WAS OBSERVED RANGED FROM 519.4 TO 524.9 FEET. FREE GROUNDWATER WAS DETECTED IN BORING S–17 AT AN ELEVATION OF 534.0 FEET.

LEGEND

⊕	PRESS SAMPLE, DRIVE SAMPLE, AND/OR CORE BORING LOCATION
TR	TOP OF ROCK
W———	INDICATES FREE WATER ELEVATION
▼———	INDICATES STATIC WATER ELEVATION
⊢	HORIZONTAL BAR ON BORING INDICATES THE DEPTH THE SAMPLE WAS TAKEN – PROFILE VIEW
X/Y/Z	FIGURES BESIDE THE BORING IN PROFILE INDICATE THE NUMBER OF BLOWS FOR STANDARD PENETRATION TEST X = NUMBER OF BLOWS FOR FIRST 6 INCHES Y = NUMBER OF BLOWS FOR SECOND 6 INCHES Z = NUMBER OF BLOWS FOR THIRD 6 INCHES
▨	SHALE WITH INTERBEDDED LIMESTONE

PARTICLE SIZE DEFINITIONS

12"	3"	0.1"		0.42 mm		0.074 mm	0.005 mm	
Boulders	Cobbles	Gravel	Coarse Sand		Fine Sand		Silt	Clay
			No. 10 SIEVE		No. 40 SIEVE	No. 200 SIEVE		

NOTES

ALL AVAILABLE SOIL AND BEDROCK INFORMATION WHICH CAN BE CONVEINIENTLY SHOWN ON THE STRUCTURE FOUNDATION INVESTI–GATIONS SHEETS HAS BEEN SO REPORTED. ADDITIONAL SUBSUR–FACE INVESTIGATIONS MAY HAVE BEEN MADE TO STUDY SOME SPECIAL ASPECT OF THE PROJECT. COPIES OF THIS DATA, IF ANY, MAY BE INSPECTED IN THE DISTRICT DEPUTY DIRECTOR'S OFFICE, THE OFFICE OF MATERIALS MANAGEMENT AT 1600 WEST BROAD STREET, THE OFFICE OF ROADWAY ENGINEERING OR THE OFFICE OF STRUCTURAL ENGINEERING AT 25 SOUTH FRONT STREET, COLUMBUS, OHIO 43215.

DRIVE SAMPLES

DRIVE SAMPLE BORINGS ARE MADE BY MEANS OF A MECHANICALLY–POWERED, ROTARY–TYPE DRILL RIG EMPLOYING A 2–INCH O.D., 1 5/8 INCH, SPLIT–SPOON SAMPLER, AT CONTINUOUS, 2.5 FEET AND/OR 5 FEET DEPTH INTERVALS, DRIVEN BY MEANS OF A 140 LB. HAMMER WITH A FREE FALL OF 30 INCHES. THE NUMBER OF BLOWS REQUIRED TO DRIVE THE SAMPLER THREE 6 INCH INCREMENTS IS CONSIDERED THE STANDARD PENETRATION TEST.

PRESS SAMPLES

PRESS SAMPLES ARE TAKEN BY MEANS OF MECHANICALLY POWERED, ROTARY–TYPE DRILL RIG, EMPLOYING A 3 INCH O.D. THIN–WALL PRESS SAMPLING TUBE. THE PRESS SAMPLING TUBE IS ADVANCED BY CONTINUOUS UNIFORM PRESSURE APPLIED BY THE DRILL RIG.

CORE BORING

CORE BORING ARE MADE BY MEANS OF A MECHANICALLY POWERED, ROTARY–TYPE DRILL RIG, EMPLOYING AN NQ–SIZE BARREL WITH AN INDUSTRIAL DIAMOND CUTTING HEAD.

SAMPLING AND TESTING

THE BORING LOG SHEETS SHOW A GRAPHIC PLOT OF THE INFORMATION OBTAINED, INCLUDING DEPTH AND ELEVATION OF THE SAMPLE, TYPE OF SAMPLE, NUMBER OF BLOWS FOR THE STANDARD PENETRATION TEST IN THREE 6 INCH INCREMENTS, AND A SAMPLE DESCRIPTION BASED ON LABORATORY TEST RESULTS, UTILIZING THE ODOT CLASSIFICATION SYSTEM. RESULTS OF STRENGTH AND CONSOLIDATION TESTING. IF PERFORMED ON UNDISTURBED SAMPLES, APPEAR GRAPHICALLY ON SEPARATE ENCLOSURES. ROCK SAMPLES ARE DISPLAYED ON THE LOG SHEETS, INCLUDING DEPTH AND ELEVATION OF THE SAMPLE, AMOUNT OF RECOVERY, AND A VISUAL CLASSIFICATION BASED ON TYPE, COLOR, DEGREE OF HARDNESS, GRAIN SIZE, DETERIORATION, BEDDING, ACID REACTION, AND OTHER QUALIFYING FACTORS.

AT DEPTHS WHERE MATERIALS ARE BOULDERY OR GRAVELLY TO THE EXTENT THAT A SAMPLER CANNOT BE UTILIZED, A WASH SAMPLE IS PROCURED AND VISUALLY CLASSIFIED, IN ORDER TO DETERMINED THE GENERAL CHARACTERISTIC OF THE MATERIAL. THESE SAMPLES ARE NOT CONSIDERED SUFFICIENTLY REPRESENTATIVE TO WARRANT LABORATORY TESTING.

DESIGN AGENCY: BALKE ENGINEERS, INC. CINCINNATI, OHIO

DRAWN	DESIGNED	REVIEWED	DATE
M.S.J.		E.M.K.	4/00
CHECKED	REVISED		
S.A.H.			

STRUCTURE FOUNDATION INVESTIGATION

BRIDGE NO. CLE–274–0654

OVER NORFOLK & SOUTHERN R.R. AND C.R. 106 (ROUNDBOTTOM ROAD)

CLE–275–5.35

CN199050/BRIDGES/6541EG.DWG

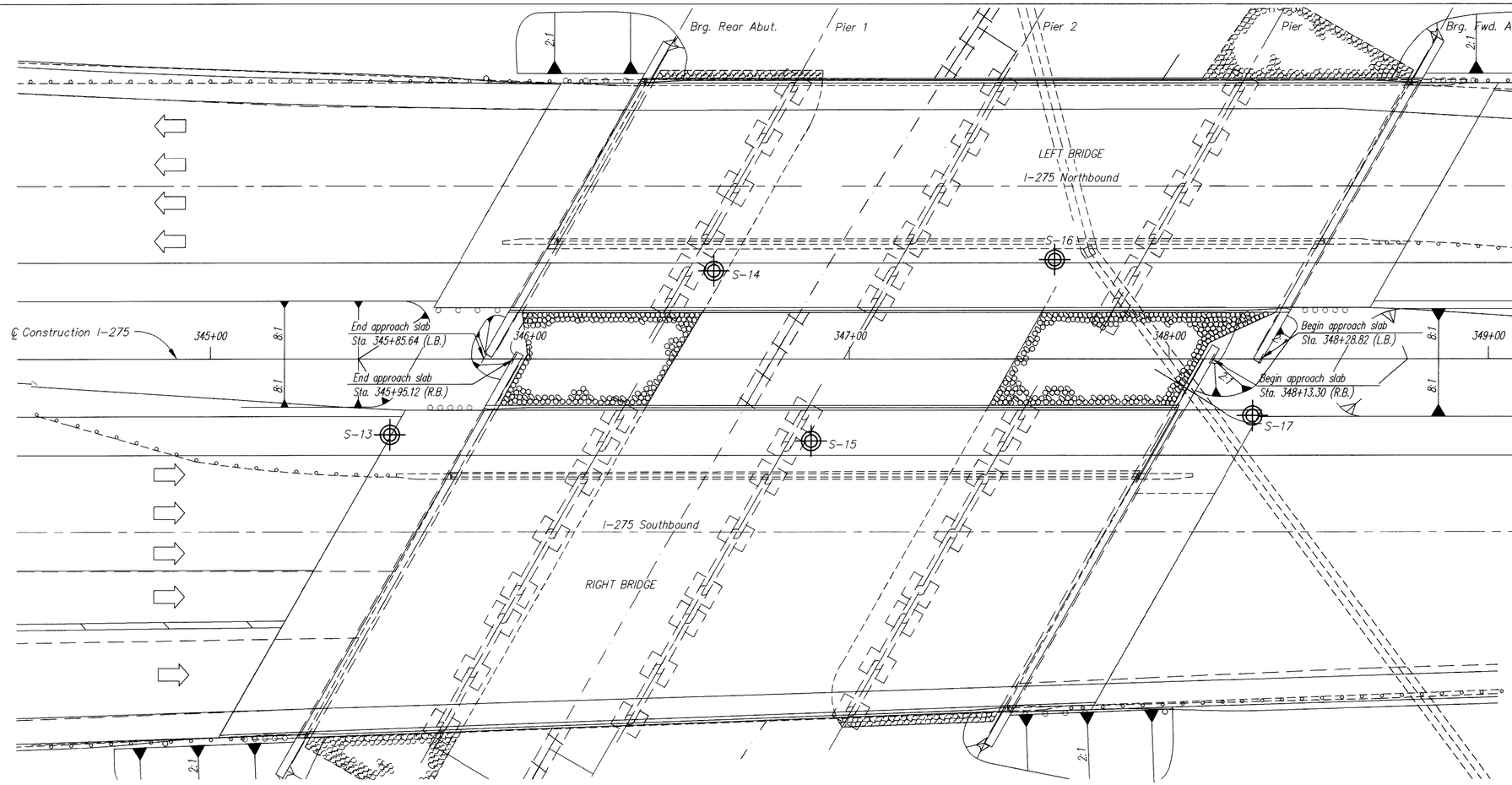

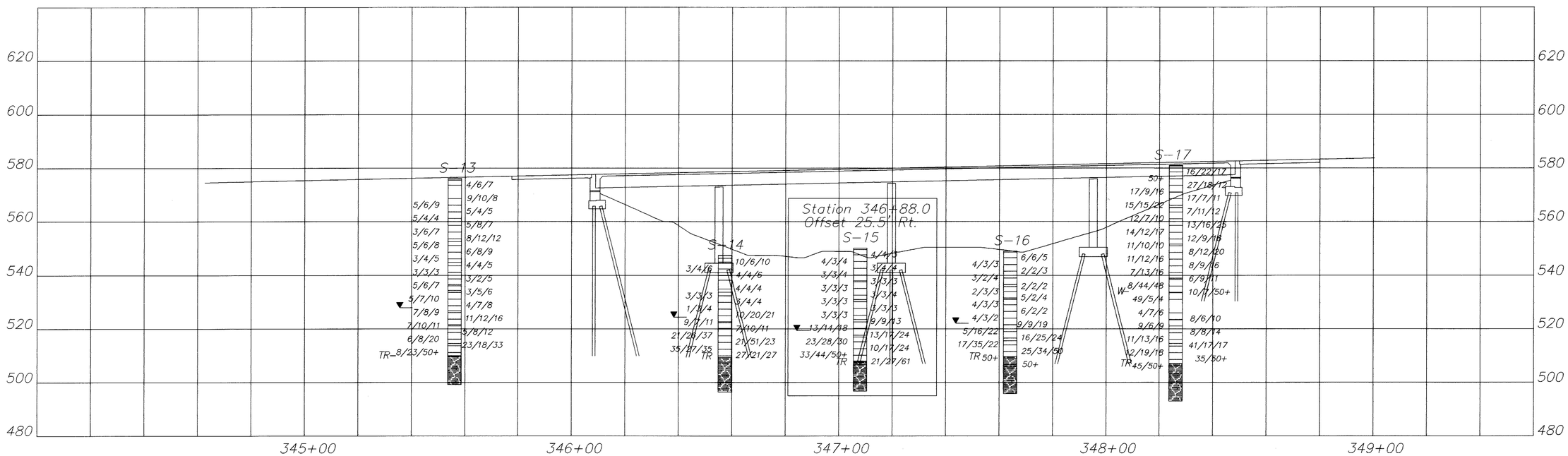

HORIZONTAL SCALE IN FEET
20 10 0 20

DRAWN	DESIGNED	CHECKED	DATE
M.S.J.		E.M.K	4/00
CHECKED	REVISED	STRUCTURE FILE NUMBER	
S.A.H.			

STRUCTURE FOUNDATION INVESTIGATION

BRIDGE NO. CLE-275-0654
OVER NORFOLK & SOUTHERN R.R. & C.R.106 (ROUNDBOTTOM ROAD)

CLE-275-5.35

40/47

CN1999045/BRIDGES/BRIDGSHEET4.DWG

LOG OF BORING

Date Started 10/6/99
Date Completed 10/6/99
Boring No. S-13

Sampler Type SS Dia. 2"
Coring: Length 10.4 ft. Dia. 2"
Station & Offset 345+56.1, 23.6 ft. Rt.

Water Elev. 524.9
Surface Elev. 576.1

Elev. (ft)	Depth (ft)	Std. Pen. /R.Q.D.	Rec. (ft)	Loss (ft)	Description	Sample No.	Physical Characteristics: % Agg.	% C.S.	% F.S.	% Silt	% Clay	LL	PI	WC	ODOT Class
	0														
575.5	1				Topsoil										
	2				Fill; Silty Clay With Some Sand And A Little Gravel, brown to brownish gray, moist, medium stiff to very stiff										
	3	4/6/7				1								19	
	4														
	5	ST				2								21	q_u = 0.92 (tsf)
	6														
	7														
	8	9/10/8				3	13	8	15	24	40	38	21	15	A-6b(10)
	9														
	10	5/6/9				4								13	
	11														
	12														
	13	5/4/5				5								22	
	14														
	15	5/4/4				6								17	
	16														
	17														
	18	5/8/7				7								20	
	19														
	20	3/6/7				8								22	
	21														
	22														
	23	8/12/12				9								19	
552.5	24				Silty Clay With Some Sand And A Trace Of Gravel, light brown to orangish brown, moist, stiff to very stiff										
	25	5/6/8				10	2	3	18	36	41	38	20	19	A-6b(12)
	26														
	27														
	28	6/8/9				11								19	
	29														
	30														

LOG OF BORING (CONTINUED)

Boring No. S-13 (Cont.)
Station & Offset 345+56.1, 23.6 ft. Rt.
Surface Elev. 576.1

Elev. (ft)	Depth (ft)	Std. Pen. /R.Q.D.	Rec. (ft)	Loss (ft)	Description	Sample No.	Physical Characteristics: % Agg.	% C.S.	% F.S.	% Silt	% Clay	LL	PI	WC	ODOT Class
	30														
	31	3/4/5				12								19	
544.8	32				Gravel With Sand, And Silt And A Little Clay, brown, damp to moist, loose										
	33	4/4/5				13								15	
	34														
	35	3/3/3				14	12	43	27	3	15	25	10	11	A-2-4(0)
	36														
	37														
	38	3/2/5				15								8	
	39														
536.5	40	5/6/7			Silt With Some Clay And A Trace Of Sand, gray, moist, stiff	16	0	0	3	64	33	25	9	18	A-4b(8)
	41														
534.4	42				Coarse And Fine Sand With A Little Silt And Gravel And A Trace Of Clay, brown, damp, medium dense										
	43	3/5/6				17								6	
	44														
	45	5/7/10				18	12	22	44	13	9	NP	NP	8	A-3a(0)
	46														
	47														
	48	4/7/8				19								10	
526.8	49														
	50	7/8/9			Gravel With Sand And Silt And A Trace Of Clay, brown, moist to wet, medium dense	20	51	24	9	10	6	20	10	11	A-2-4(0)
	51														
	52														
	53	11/12/16				21								13	
	54														
521.6	55	7/10/11			Silty Clay With A Little Sand And A Trace Of Gravel, grayish brown, moist, very stiff	22								23	
	56														
	57														
	58	5/8/12				23	3	4	11	33	49	38	20	20	A-6b(12)
	59														
	60														

DESIGN AGENCY
BALKE ENGINEERS, INC.
CINCINNATI, OHIO

CHECKED E.M.K.
DATE 4/00
REVISED
DRAWN M.S.J.
CHECKED S.A.H.

STRUCTURE FOUNDATION INVESTIGATION
BRIDGE NO. CLE-275-0654
OVER NORFOLK & SOUTHERN R.R & C.R. 106 (ROUND BOTTOM ROAD)

CLE-275-5.35

LOG OF BORING (CONTINUED)

Boring No. S-13 (Cont.) Station & Offset 345+56.1, 23.6 ft. Rt. Surface Elev. 576.1

Elev. (ft)	Depth (ft)	Std. Pen. /R.Q.D.	Rec. (ft)	Loss (ft)	Description	Sample No.	Physical Characteristics: % Agg.	% C.S.	% F.S.	% Silt	% Clay	LL	PI	WC	ODOT Class
	60														
		6/8/20				24								15	
515.0	61														
	62				Gravel With Sand, Silt And Clay, grayish brown, wet, dense										
	63	23/18/33				25	68	10	6	7	9	26	11	8	A-2-6(0)
	64														
	65														
		8/23/50+				26								11	
510.0	66				Top of Bedrock										
509.6					Start Core										
	67				Shale (95%) With Interbedded Limestone (5%)										
	68														
	69				Shale is gray, silty, calcareous, fissle, soft to moderately hard										
	70														
	71				Limestone is gray, fine to coarse grained, thin bedded, hard										
	72														
	73				-Weathered from 510.0' to 509.2'										
	74														
	75														
		20	8.9	0.1											
	76														
499.2	77	30	1.4	0.0											
					Bottom of Boring										
	78														

DESIGN AGENCY: BALKE ENGINEERS, INC. CINCINNATI, OHIO
CHECKED: E.M.K.
DATE: 4/00
REVISED:
DRAWN: M.S.J.
CHECKED: S.A.H.

STRUCTURE FOUNDATION INVESTIGATION
BRIDGE NO. CLE-275-0654
OVER NORFOLK & SOUTHERN R.R & C.R. 106 (ROUND BOTTOM ROAD)

CLE-275-5.35

LOG OF BORING

Date Started 10/8/99
Date Completed 10/8/99
Boring No. S-14

Sampler Type SS Dia. 2"
Coring: Length 11.0 ft. Dia. 2"
Station & Offset 346+87.4, 27.5 ft. Lt.

Water Elev. 524.6
Surface Elev. 547.6

Elev. (ft)	Depth (ft)	Std. Pen. /R.Q.D.	Rec. (ft)	Loss (ft)	Description	Sample No.	% Agg.	% C.S.	% F.S.	% Silt	% Clay	LL	PI	WC	ODOT Class
	0														
546.5	1				Gravel With Sand										
	2				Fill; Clay With Some Silt, A Little Sand And A Trace Of Gravel, light brown to orangish brown and gray, moist, stiff to very stiff											
	3	10/6/10				1								10	
	4														
	5	3/4/6				2	16	8	12	29	35	35	18	13	A-6b(9)
	6														
	7														
	8	4/4/6				3								20	
538.4	9														
	10				Silty Clay With Some Sand And A Trace Of Gravel, orangish brown, moist, medium stiff										
	11	ST				4								20	q_u = 0.97 (tsf)
	12														
	13	4/4/4				5	4	8	20	35	33	35	16	20	A-6b(9)
533.9	14														
	15				Sandy Silt With Some Clay And A Trace Of Gravel, brownish gray, moist, medium stiff to very stiff											
	16	3/3/3				6								26	
	17														
	18	3/4/4				7								17	
	19														
	20														
	21	1/3/4				8	9	9	38	22	22	26	10	24	A-4a(2)
	22														
	23	10/20/21				9								17	
	24														
522.9	25														
	26	9/7/11			Silt And Clay With A Trace Of Sand, brownish gray, moist, very stiff	10	0	1	2	38	59	43	24	19	A-7-6(14)
520.4	27														
	28	7/10/11			Gravel With Sand, Silt And Clay, brown and gray, moist, medium medium to very dense	11								16	
	29														
	30														

LOG OF BORING (CONTINUED)

Boring No. S-14 (Cont.)
Station & Offset 346+87.4, 27.5 ft. Lt.
Surface Elev. 547.6

Elev. (ft)	Depth (ft)	Std. Pen. /R.Q.D.	Rec. (ft)	Loss (ft)	Description	Sample No.	% Agg.	% C.S.	% F.S.	% Silt	% Clay	LL	PI	WC	ODOT Class
	30														
	31	21/26/37				12								9	
	32														
	33	21/51/23				13	56	13	8	11	12	28	12	8	A-2-6 (1)
	34														
	35														
	36	35/27/35				14								4	
	37														
509.5	38	27/21/27			Top of Bedrock	15								16	
	39				Shale, Gray (Augered)										
507.6	40				Start Core										
	41				Shale (95%) With Interbedded Limestone (5%)										
	42	15	1.3	0.7											
	43				Shale is gray, silty, calcareous, fissile, soft to moderately hard										
	44														
	45				Limestone is gray, fine to coarse grained, thin bedded, hard										
	46														
	47				-Weathered from 509.5' to 504.9' and from 502.5' to 500.9'										
	48														
	49														
	50														
496.6	51	20	8.1	0.9											
	52				Bottom of Boring										

DESIGN AGENCY
BALKE ENGINEERS, INC.
CINCINNATI, OHIO

CHECKED E.M.K.
DATE 4/00
REVISED
DRAWN M.S.J.
CHECKED S.A.H.

STRUCTURE FOUNDATION INVESTIGATION
BRIDGE NO. CLE-275-0654
OVER NORFOLK & SOUTHERN R.R & C.R. 106 (ROUND BOTTOM ROAD)

CLE-275-5.35

LOG OF BORING

Date Started 10/11/99
Date Completed 10/11/99
Boring No. S-15

Sampler Type SS Dia. 2"
Coring: Length 10.0 ft. Dia. 2"
Station & Offset 346+88.0, 25.5 ft. Rt.

Water Elev. 519.4
Surface Elev. 550.1

Elev. (ft)	Depth (ft)	Std. Pen. /R.Q.D.	Rec. (ft)	Loss (ft)	Description	Sample No.	Physical Characteristics: % Agg.	% C.S.	% F.S.	% Silt	% Clay	LL	PI	WC	ODOT Class
	0														
549.6	1				Topsoil										
	2				Silty Clay With A Trace Of Sand And Gravel, light brown to brown, moist, medium stiff										
	3	4/4/3				1								20	
	4														
	5	4/3/4				2	1	3	7	43	46	39	21	19	A-6b(12)
	6														
	7														
	8	3/4/4				3								26	
	9														
	10														
	11	3/3/4				4								30	
538.0	12														
	13	3/3/3			Silty Clay With Some Sand And A Trace Of Gravel, brown to brownish gray, moist, medium stiff	5								30	
	14														
	15	3/3/3				6	1	4	21	36	38	32	16	26	A-6b(14)
	16														
	17														
	18	3/3/4				7								23	
530.9	19														
	20				Sandy Silt With Some Clay And A Trace Of Gravel, brown to brownish gray, moist, medium stiff										
	21	3/3/3				8								21	
	22														
	23	3/3/3				9	5	6	31	34	24	25	9	22	A-4a(5)
	24														
	25														
	26	3/3/3				10								27	
523.5	27														
	28	9/9/13			Silty Clay With Some Gravel And A Little Sand, gray, moist, very stiff	11	32	11	7	24	26	37	20	19	A-6b(7)
	29														
	30														

LOG OF BORING (CONTINUED)

Boring No. S-15 (Cont.)
Station & Offset 346+88.0, 25.5 ft. Rt.
Surface Elev. 550.1

Elev. (ft)	Depth (ft)	Std. Pen. /R.Q.D.	Rec. (ft)	Loss (ft)	Description	Sample No.	Physical Characteristics: % Agg.	% C.S.	% F.S.	% Silt	% Clay	LL	PI	WC	ODOT Class
	30														
	31	13/14/18				12								12	
	32														
516.9	33	13/17/24				13								14	
	34				Gravel With Sand And Silt And A Trace Of Clay, brownish gray, moist to wet, medium dense to very dense										
	35														
	36	23/28/30				14								8	
	37														
	38	10/17/24				15	69	12	6	7	6	26	10	9	A-2-4(0)
	39														
	40														
	41	33/44/50+				16								5	
507.9	42				Top of Bedrock										
	43	21/27/61			Shale (Augered)	17								9	
506.7					Start Core										
	44				Shale (80%) With Interbedded Limestone (20%)										
	45														
	46				Shale is gray silty, calcareous, fissle, soft to moderately hard										
	47	18	4.0	0.0											
	48				Limestone is gray, fine to coarse grained, thin bedded, hard										
	49														
	50				-Weathered from 506.7' to 504.2'										
	51														
	52														
	53														
496.7		22	6.0	0.0											
	54				Bottom of Boring										

DESIGN AGENCY
BALKE ENGINEERS, INC.
CINCINNATI, OHIO

CHECKED E.M.K.
DATE 4/00
REVISED
DRAWN M.S.J.
CHECKED S.A.H.

STRUCTURE FOUNDATION INVESTIGATION
BRIDGE NO. CLE-275-0654
OVER NORFOLK & SOUTHERN R.R & C.R. 106 (ROUND BOTTOM ROAD)

CLE-275-5.35

LOG OF BORING

Date Started 10/28/99
Date Completed 10/28/99
Boring No. S-16

Sampler Type SS Dia. 2"
Coring: Length 10.0 ft. Dia. 2"
Station & Offset 347+64.1, 31.0 ft. Lt.

Water Elev. 522.1

Surface Elev. 549.0

Elev. (ft)	Depth (ft)	Std. Pen. /R.Q.D.	Rec. (ft)	Loss (ft)	Description	Sample No.	Physical Characteristics: % Agg.	% C.S.	% F.S.	% Silt	% Clay	LL	PI	WC	ODOT Class
	0														
548.6					Gravel With Sand										
	1				Sandy Silt With Some Clay And A Little Gravel, grayish brown to orangish brown, moist, medium stiff to stiff										
	2														
	3	6/6/5				1								25	
	4														
	5	4/3/3				2	10	7	15	36	32	32	10	20	A-4a(7)
	6														
	7														
	8	2/2/3				3								21	
	9														
	10														
	11	3/2/4				4								19	
	12														
535.8	13	2/2/2				5								17	
	14				Gravel With Sand And A Little Silt And Clay, brown, moist, loose										
	15	2/3/3				6	24	30	22	14	10	19	5	10	A-1-b(0)
	16														
	17														
531.0	18	5/2/4				7								21	
	19				Sandy Silt With Some Clay And A Trace Of Gravel, gray, moist, soft to very stiff										
	20														
	21	4/3/3				8								17	
	22														
	23	6/2/2				9	4	9	30	33	24	25	8	18	A-4a(5)
	24														
	25														
	26	4/3/2				10								25	
	27														
	28	9/9/19				11								NR	
	29														
	30														

LOG OF BORING (CONTINUED)

Boring No. S-16 (Cont.)
Station & Offset 347+64.1, 31.0 ft. Lt.
Surface Elev. 549.0

Elev. (ft)	Depth (ft)	Std. Pen. /R.Q.D.	Rec. (ft)	Loss (ft)	Description	Sample No.	Physical Characteristics: % Agg.	% C.S.	% F.S.	% Silt	% Clay	LL	PI	WC	ODOT Class
	30														
	31	5/16/22				12								23	
	32														
	33	16/25/24				13								27	
515.5	34				Gravel With Sand, Silt And Clay, gray, wet, very dense										
	35	17/35/22				14								10	
	36														
	37														
	38	25/34/50				15	67	10	6	8	9	28	12	13	A-2-6(0)
	39														
509.6	40				Top of Bedrock Weathered Shale (Augered)										
	41	50+				16								12	
	42														
505.8	43	50+			Start Core										
	44				Shale (95%) With Interbedded Limestone (5%)										
	45														
	46				Shale is gray, silty, calcareous, fissle, soft to moderately hard										
	47														
	48				Limestone is gray, fine to coarse grained, thin bedded, hard										
	49														
	50				-Weathered from 505.8' to 505.5'										
	51														
	52														
495.8	53	0	9.6	0.4											
	54				Bottom of Boring										

DESIGN AGENCY
BALKE ENGINEER, INC.
CINCINNATI, OHIO

CHECKED E.M.K.
DATE 4/00
REVISED
DRAWN M.S.J.
CHECKED S.A.H.

STRUCTURE FOUNDATION INVESTIGATION
BRIDGE NO. CLE-275-0654
OVER NORFOLK & SOUTHERN R.R & C.R. 106 (ROUND BOTTOM ROAD)

CLE-275-5.35

LOG OF BORING

Date Started 9/27/99
Date Completed 10/14/99
Boring No. S-17

Sampler Type SS Dia. 2"
Coring: Length 10.1 ft. Dia. 2"
Station & Offset 348+26.2, 17.6 ft. Rt.

Water Elev. 534.0
Surface Elev. 581.0

Elev. (ft)	Depth (ft)	Std. Pen. /R.Q.D.	Rec. (ft)	Loss (ft)	Description	Sample No.	Physical Characteristics: % Agg.	% C.S.	% F.S.	% Silt	% Clay	LL	PI	WC	ODOT Class
	0														
580.8					Topsoil										
	1				Fill; Silty Clay With Some Sand And A Little Gravel, brown to grayish brown and orangish brown, damp to moist, very stiff											
	2														
	3	16/22/17				1								12	
	4														
	5														
	6	50+				2								11	
	7														
	8	27/18/12				3	12	12	17	26	33	32	16	10	A-6b(7)
	9														
	10														
	11	17/9/16				4								7	
	12														
	13	17/7/11				5								21	
	14														
	15	15/15/22				6								19	
565.2	16														
	17				Fill; Silty Sand With A Little Sand And A Trace Of Gravel, brown to gray, damp to moist, very stiff											
	18	7/11/12				7								16	
	19														
	20														
	21	12/7/10				8	7	5	8	30	51	39	21	14	A-6b(12)
	22														
	23	13/16/25				9								12	
	24														
	25														
	26	14/12/17				10								16	
	27														
	28	12/9/16				11								21	
551.6	29														
	30														

LOG OF BORING (CONTINUED)

Boring No. S-17 (Cont.)
Station & Offset 348+26.2, 17.6 ft. Rt.
Surface Elev. 581.0

Elev. (ft)	Depth (ft)	Std. Pen. /R.Q.D.	Rec. (ft)	Loss (ft)	Description	Sample No.	Physical Characteristics: % Agg.	% C.S.	% F.S.	% Silt	% Clay	LL	PI	WC	ODOT Class
	30														
	31	11/10/10			Silty Clay With A Little Sand And A Trace Of gravel, brown and gray, moist, very stiff	12								18	
	32														
	33	8/12/20				13	9	6	12	35	38	39	20	19	A-6b(12)
	34														
	35														
	36	11/12/16				14								17	
	37														
	38	8/9/16				15								19	
	39														
	40														
	41	7/13/16				16								11	
538.9	42														
	43	6/9/11			Silt And Clay With Some Sand And A Little Gravel, brown to gray, moist, very stiff	17	15	14	18	27	25	27	13	15	A-6a(5)
	44														
	45	8/44/48				18								12	
	46														
	47														
533.6	48	14/10/50+			Gravel With Sand And Silt And A Trace Of Clay, brown, moist to wet, medium dense	19								12	Visual
	49														
	50	69/7/6				20								15	Visual
	51														
	52														
	53														
	54														
	55	6/10/9				21								14	Visual
	56														
	57														
523.4	58	11/9/14			Gravel With Some Silt, A Little Sand And A Trace Of Gravel, gray, moist, very stiff	22								24	
	59														
	60														

DESIGN AGENCY
BALKE ENGINEERS, INC.
CINCINNATI, OHIO

DRAWN	CHECKED	REVISED	DATE	CHECKED
M.S.J.	S.A.H.		4/00	E.M.K.

STRUCTURE FOUNDATION INVESTIGATION
BRIDGE NO. CLE-275-0654
OVER NORFOLK & SOUTHERN R.R & C.R. 106 (ROUND BOTTOM ROAD)

CLE-275-5.35

LOG OF BORING (CONTINUED)

Boring No. S-17 (Cont.) Station & Offset 348+26.2, 17.6 ft. Rt. Surface Elev. 581.0

Elev. (ft)	Depth (ft)	Std. Pen. /R.Q.D.	Rec. (ft)	Loss (ft)	Description	Sample No.	Physical Characteristics: % Agg.	% C.S.	% F.S.	% Silt	% Clay	LL	PI	WC	ODOT Class
	60														
	61	13/9/13				23								27	
	62														
	63	11/11/20				24	6	6	9	31	48	42	21	22	A-7-6 (13)
	64														
	65														
	66	16/18/23				25								20	
514.5	67				Gravel With Sand, Silt And A Trace Of Clay, brownish gray, wet, dense										
	68	58/24/24				26								9	
	69														
	70														
	71	17/27/26				27								7	
	72														
	73	50/50+				28								20	
507.0	74				Top of Bedrock										
	75				Weathered Shale (Augered)										
	76	63/50+				29								6	
	77														
503.1	78				Start Core										
	79				Shale (85%) With Interbedded Limestone (15%)										
	80														
	81				Shale is gray silty, calcareous, fissle, soft to moderately hard										
	82														
	83				Limestone is gray, fine to coarse grained, thin bedded, hard										
	84														
	85				-Weathered from 503.1' to 502.0'										
	86														
	87														
493.0	88	23	10.0	0.0											
					Bottom of Boring										

DESIGN AGENCY: BALKE ENGINEERS, INC. CINCINNATI, OHIO

CHECKED: E.M.K. DATE: 4/00 REVISED: DRAWN: M.S.J. CHECKED: S.A.H.

STRUCTURE FOUNDATION INVESTIGATION
BRIDGE NO. CLE-275-0654
OVER NORFOLK & SOUTHERN R.R & C.R. 106 (ROUND BOTTOM ROAD)

CLE-275-5.35

47/47