STATE OF OHIO
DEPARTMENT OF TRANSPORTATION

BRS-557(2)

COL-170-18.95

UNITY TOWNSHIP
COLUMBIANA COUNTY

FHWA REGION	STATE	PROJECT	
	OHIO	BRS-557(2)	

1/21

COL-170-18.95

DESIGN DESIGNATION

CURRENT A.D.T. (1989)	= 2480
DESIGN YEAR A.D.T. (2009)	= 4352
D.H.V.	= 435
D	= 60%
T (% B & C TRUCKS)	= 5%
DESIGN SPEED	= 55 M.P.H.
LEGAL SPEED	= 55 M.P.H.
FUNCTIONAL CLASSIFICATION	= MAJOR COLLECTOR (RURAL)

DESIGN EXCEPTION

	APPROVAL DATE
SUPERELEVATION	9/11/86

CONVENTIONAL SIGNS

COUNTY LINE
TOWNSHIP LINE
SECTION LINE
CORPORATION LINE — OR
FENCE (EXISTING) — (PROPOSED)
CENTERLINE
TREES STUMPS
(TO BE REMOVED)
UTILITY POLES: POWER, LIGHT
TELEPHONE
LIMITED ACCESS (ONLY) L/A — L/A
RIGHT OF WAY (ONLY) R/W — R/W

LIMITED ACCESS & RIGHT OF WAY L/A & R/W
EXISTING RIGHT OF WAY R/W
PROPERTY LINE PL
IN EXISTING FENCE PL
RAILROAD — OR
GUARDRAIL (EXISTING)
(PROPOSED)
GAS LINE G — G
WATER LINE W — W
SANITARY SEWER SAN. — SAN.

INDEX OF SHEETS

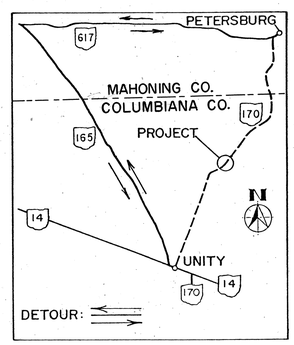

LINE DATA

BEGIN PROJECT	STA. 87+90.92
END PROJECT	STA. 89+11.81
NET LENGTH OF PROJECT	120.89 L.F. OR 0.023 MI.
BEGIN WORK	STA. 86+71.07
END WORK	STA. 90+15.00
NET LENGTH OF WORK	343.93 L.F. OR 0.065 MI.

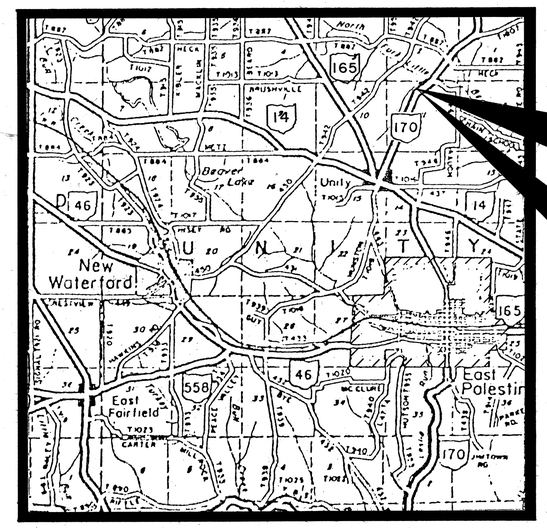

LOCATION MAP

SCALE IN MILES
0 1 2

PORTION TO BE IMPROVED
STATE & FEDERAL ROUTES
OTHER ROADS

SCALES

PLAN: 0' 20'
PROFILE: HORIZONTAL 0' 20' VERTICAL 0' 10'
CROSS SECTION: HORIZONTAL 0' 10' VERTICAL 0' 10'

1989 SPECIFICATIONS

THE STANDARD SPECIFICATIONS OF THE STATE OF OHIO, DEPARTMENT OF TRANSPORTATION, INCLUDING CHANGES AND SUPPLEMENTAL SPECIFICATIONS LISTED IN THE PROPOSAL SHALL GOVERN THIS IMPROVEMENT.

I HEREBY APPROVE THESE PLANS AND DECLARE THAT THE MAKING OF THIS IMPROVEMENT WILL REQUIRE THE CLOSING TO TRAFFIC OF THE HIGHWAY AND THAT DETOURS WILL BE PROVIDED AS INDICATED ON THE PLANS.

APPROVED William P. McKenna
DATE 7-5-89 DISTRICT DEPUTY DIRECTOR OF TRANSPORTATION

B+N APPROVED B. D. Hankammi / WTL
DATE 8/3/89 ENGINEER, BUREAU OF BRIDGES AND STRUCTURAL DESIGN

APPROVED Theodore J. Stitt
DATE 9/21/89 DEPUTY DIRECTOR, PLANNING AND DESIGN

APPROVED Richard D. Hurst
DATE 9/21/89 DIRECTOR, DEPARTMENT OF TRANSPORTATION

UNDERGROUND UTILITIES
TWO WORKING DAYS
BEFORE YOU DIG
CALL 800-362-2764 (TOLL FREE)
OHIO UTILITIES PROTECTION SERVICE
NON-MEMBERS
MUST BE CALLED DIRECTLY

STRUCTURE PLANS REVIEWED BY:
Burgess & Niple, Limited
Columbus, Ohio

SUPPLEMENTAL PRINTS OF STANDARD CONSTRUCTION DRAWINGS					SUPPLEMENTAL SPECIFICATIONS	
AS-1-81	11/27/81	MC-11	8/1/78			
CPA-2-73	4/10/73	GR-1	1/11/85		836	11/12/85
CPP-2-73	4/10/73	GR-3	1/21/85		802	5/4/88
CS-2-73	4/10/73				847	10/17/83
DBR-2-73	4/10/73	GR-4A	1/30/84		947	10/17/83
		GR-4	2/5/82			
MT-99.10	11/14/86	GR-2B	2/5/82			
		BP-5	10/1/87			

PROJECT	COL-170-18.95
FILE NO.	DATE OF LETTING _____ 19__
	CONTRACT NO.

environmental design group
Engineers · Landscape Architects · Surveyors
1533 Commerce Drive · Stow, OH. 44224
(216) 686-1898

DEPARTMENT OF TRANSPORTATION
FEDERAL HIGHWAY ADMINISTRATION

APPROVED:
DIVISION ADMINISTRATOR DATE

TYPICAL SECTIONS

TYPE 611

FHWA REGION	STATE	PROJECT	
	OHIO	BRS-557(2)	

2/21

COL-170-18.95

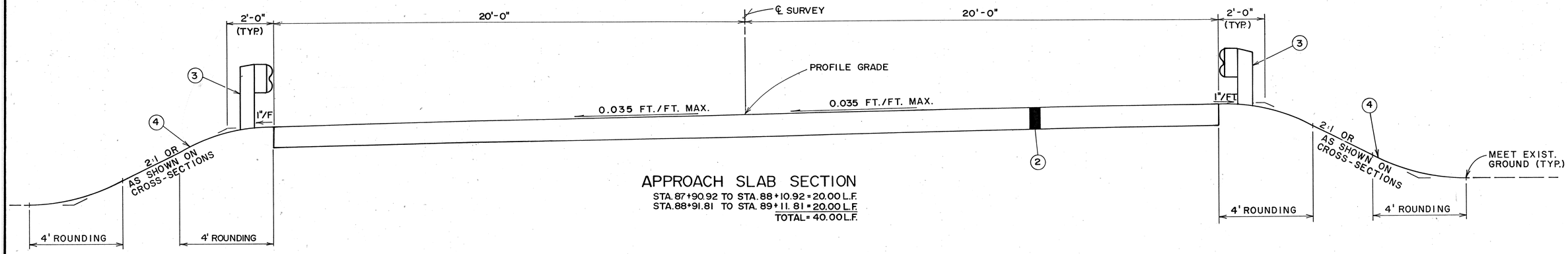

APPROACH SLAB SECTION

STA. 87+90.92 TO STA. 88+10.92 = 20.00 L.F.
STA. 88+91.81 TO STA. 89+11.81 = 20.00 L.F.
TOTAL = 40.00 L.F.

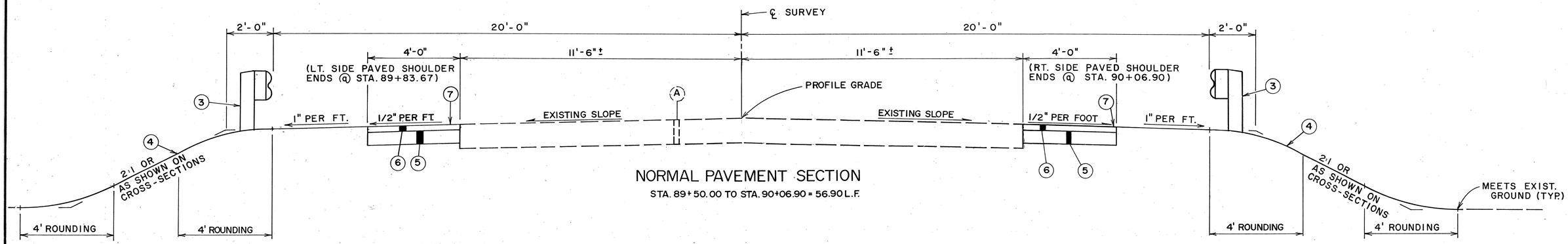

NORMAL PAVEMENT SECTION

STA. 89+50.00 TO STA. 90+06.90 = 56.90 L.F.

(A) EXISTING FLEXIBLE PAVEMENT
(1) ITEM 407 - TACK COAT
(2) ITEM 611 - REINFORCED CONCRETE APPROACH SLAB (T=13")
(3) ITEM 606 - TYPE 5 GUARDRAIL
(4) ITEM 659 - SEEDING & MULCHING
(5) ITEM 304 - 5" AGGREGATE BASE
(6) ITEM 301 - 3" BITUMINOUS AGGREGATE BASE, AC-20
(7) ITEM 409 - SEAL COAT AND COVER AGGREGATE
(8) ITEM 404 - 1 1/4" ASPHALT CONCRETE, AC-20

FHWA REGION	STATE	PROJECT	
	OHIO	BRS-557(2)	

COL - 170.-18.95

TYPICAL SECTIONS

TYPE 404

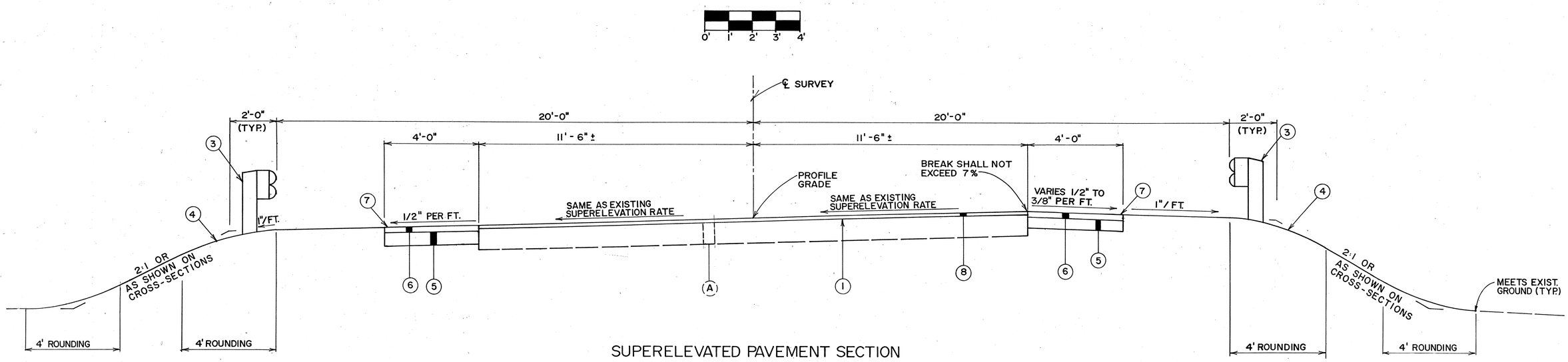

SUPERELEVATED PAVEMENT SECTION

STA.87+50.00 TO STA.87+90.92= 40.92 L.F.
STA.89+11.81 TO STA. 89+50.00= 38.19 L.F.
TOTAL = 79.11 L.F.

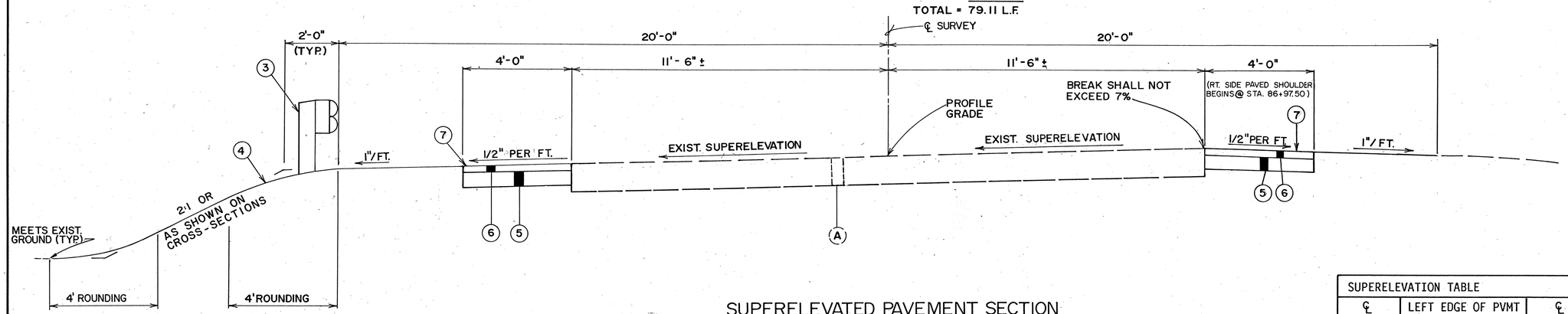

SUPERELEVATED PAVEMENT SECTION

STA.86+71.07 TO STA.87+50.00= 78.93 L.F.

(A) EXIST. FLEXIBLE PAVEMENT
(1) ITEM 407-TACK COAT
(2) ITEM 611-REINFORCED CONC. APPROACH SLAB (T=13")
(3) ITEM 606-TYPE 5 GUARDRAIL
(4) ITEM 659-SEEDING & MULCHING
(5) ITEM 304-5" AGGREGATE BASE
(6) ITEM 301-3" BITUMINOUS AGGREGATE BASE, AC-20
(7) ITEM 409-SEAL COAT AND COVER AGGREGATE
(8) ITEM 404-1 1/4" ASPHALT CONCRETE, AC-20

SUPERELEVATION TABLE

℄ STATION	LEFT EDGE OF PVMT OFFSET	LEFT EDGE OF PVMT ELEVATION	℄ ELEVATION	RIGHT EDGE OF PVMT ELEVATION	RIGHT EDGE OF PVMT OFFSET
87+50	11.5'	1018.96	1019.32	1019.49	11.5'
87+75	11.5'	1018.32	1018.65	1018.93	11.5'
88+00	20.0'	1017.40	1018.10	1018.80	20.0'
88+25	20.0'	1017.16	1017.66	1018.16	20.0'
88+50	20.0'	1016.93	1017.23	1017.53	20.0'
88+75	20.0'	1016.57	1016.79	1016.94	20.0'
89+00	20.0'	1016.21	1016.36	1016.36	20.0'
89+25	11.5'	1015.83	1015.92	1015.88	11.5'
89+50	11.5'	1015.48	1015.58	1015.48	11.5'

GENERAL NOTES

FIELD OFFICE
The Contractor shall provide a suitable field office having a minimum of 300 sq. ft. of floor space which shall be in accordance with 619.01 and 619.02. Payment shall be included in the lump sum price bid for Item 619, Field Office.

ROUNDING OF CORNERS SHOWN ON CROSS SECTIONS:
The rounded corners shown on the typical sections, apply to all cross sections even though otherwise shown on the plans.

CONTINGENCY QUANTITIES: The Contractor shall not order materials or perform work listed in the General Summary for items designated by plan note to be used "as directed by the Engineer" unless authorized by the Engineer. The actual work locations and quantities used at the Engineers discretion shall be made a matter of record by incorporation into the final change order governing completion of this project.

ITEM 407 TACK COAT
The rate of application of 407 tack coat shall be subject to adjustment, as directed by the Engineer. Plan quantities indicate average application rates of 0.10 gallons per square yard of tack coat for estimating purposes only.

EXISTING DEEP BEAM RAILING WITH TUBULAR BACKUP
The existing deep beam railing with tubular backup and posts shall be salvaged and stored on site for removal by State forces. This item to be paid for under 'Portions of Structure Removed, As Per Plan.'

CLEARING AND GRUBBING
Although there are no trees and/or stumps specifically marked for removal within the limits of this project, a lump sum quantity has been included in the general summary for Item 201, Clearing and Grubbing. All provisions as set forth in the specifications under this item shall be followed and all costs shall be included in the lump sum price bid for Item 201, Clearing and Grubbing.

TEMPORARY SOIL EROSION AND SEDIMENT CONTROL
The following estimated quantities are to be used as directed by the Engineer for temporary erosion and sediment control measures:

Item 207 Straw or Hay Bales 50 Each

EROSION CONTROL
Item 601 is provided in the plans for erosion control. Rock of a stable nature will not be removed in order to place Item 601. The Engineer shall check and non-perform quantities or adjust locations and quantities for rock channel protection where indicated by field conditions during construction.

SEEDING:
Quantities for seeding are calculated for the soil areas between the work limits, as shown on the cross sections.

LOCATION OF GUARDRAIL
The locations of guardrail runs, as shown in these plans, are subject to adjustment prior to final acceptance. The Engineer shall be satisfied that all installations will afford maximum protection for traffic.

PERMANENT SEEDING AREAS
The following estimated quantity is to be used as directed by the Engineer to promote growth and to care for the Permanent Seeded Areas, as per Item 659.

Item 659 Water: 1 M. Gal.

U.S.C. AND G.S. U148-1949
The Contractor will be required to notify District 11 Office, of ODOT, 5 (five) working days prior to any activity that would disturb the location or elevation of the benchmark monument.

The District Office will furnish the Contractor with a replacement disc monument, which the Contractor will place in an accessible and preferably horizontal location on the structure, as directed by the Engineer, at the time of construction. The existing disc monument shall be salvaged and returned to District 11 Office.

Payment for the above shall be included in the lump sum price bid for Item 623 Construction Layout Stakes, As Per Plan.

UNDERGROUND UTILITIES
The locations of the underground utilities shown on the plans are as obtained from the owners of the utility as required by Section 153.64 ORC.

MAINTENANCE OF TRAFFIC
The detour shown on Sheet No. 1 shall not be placed into effect until the Contractor is ready to remove the existing bridge. Until the detour is placed into effect, two-way traffic shall be maintained at all times. While the detour is in effect the Contractor shall continuously proceed with work on the bridge, including approach slabs and guardrail, until that portion of the work is completed. If the Contractor cannot proceed with construction of the adjoining pavement because of weather or scheduling limitations, the detour shall be removed and the remainder of the work shall be accomplished under traffic. The duration of the detour shall be subject to the approval of the Engineer.

The Contractor shall furnish, erect, maintain and subsequently remove approved traffic control devices as per Item 614, Maintaining Traffic, including barricades and signs in accordance with Plate C-7 of the Ohio Manual of Uniform Traffic Control Devices, Current Edition, Latest Revision. Detour signs and supports will be erected and maintained by the State. The Contractor shall provide at least two weeks notice to the District Traffic Engineer prior to closure.

Access to local property owners shall be maintained at all times.

Either permanent or temporary centerline markings must be in place prior to opening the roadway to traffic

Payment for all of the above shall be included in the unit price bid for Item 614, Maintaining Traffic.

The following estimated quantity has been carried to the General Summary to be used as required:

Item 614 Temporary Centerline, Class II. 200 L.F. = 0.04 Mi.

UTILITY OWNERSHIP
The following utilities and owners are located within the work limits of this project:

Ohio Edison Company
730 South Avenue
Youngstown, Ohio 44502
PH. (216) 747-2071

Ohio Bell Telephone Company
P.O. Box 1587
City Center 1, 2nd Floor
Youngstown, Ohio 44501
PH. (216) 744-6571

CALCULATIONS

FHWA REGION	STATE	PROJECT	
	OHIO	BRS-557 (2)	

COL-170-18.95

ITEM 202 WEARING COURSE REMOVED

Feather Areas:

STA. 87+50.00 TO STA 87+90.92

40.92' x 23.0' x $\frac{\text{S.Y.}}{\text{9 S.F.}}$ = 104.57 SQ. YDS.

STA. 89+11.81 TO STA. 89+50.00

38.19' x 23.0' x $\frac{\text{S.Y.}}{\text{9 S.F.}}$ = 97.60 SQ. YDS.

TOTAL = 202.17 SQ. YDS. USE = 203.0 SQ. YDS.

ITEM 203 SUBGRADE COMPACTION

Approach Slabs:

20.0' x 40.0' x 2 x $\frac{\text{S.Y.}}{\text{9 S.F.}}$ = 177.78 SQ. YDS.

Paved Shoulders:

STA. 86+71.07 TO STA. 87+83.13, Lt.

112.06' x 4.0' x $\frac{\text{S.Y.}}{\text{9 S.F.}}$ = 49.80 SQ. YDS.

STA. 86+97.50 TO STA. 87+98.71, Rt.

101.21' x 4.0' x $\frac{\text{S.Y.}}{\text{9 S.F.}}$ = 44.98 SQ. YDS.

STA. 89+04.02 TO STA. 89+83.67, Lt.

79.65' x 4.0' x $\frac{\text{S.Y.}}{\text{9 S.F.}}$ = 35.40 SQ. YDS.

STA. 89+19.60 TO STA. 90+06.90, Rt.

87.30' x 4.0' x $\frac{\text{S.Y.}}{\text{9 S.F.}}$ = 38.80 SQ. YDS.

TOTAL = 346.76 SQ. YDS. USE = 347.0 SQ. YDS.

ITEM 301 BITUMINOUS AGGREGATE BASE, T=3"

Paved Shoulders: (Stations same as Item 203 Subgrade Compaction)

112.06' x 4.0' x 0.25' x $\frac{\text{C.Y.}}{\text{27 C.F.}}$ =4.15 CU. YDS.

101.21' x 4.0' x 0.25 x $\frac{\text{C.Y.}}{\text{27 C.F.}}$ =3.75 CU. YDS.

79.65' x 4.0' x 0.25' x $\frac{\text{C.Y.}}{\text{27 C.F.}}$ =2.95 CU. YDS.

87.30' x 4.0' x 0.25' x $\frac{\text{C.Y.}}{\text{27 C.F.}}$ =3.23 CU. YDS.

TOTAL = 14.08 CU. YDS. USE = 14.0 CU YDS.

ITEM 304 AGGREGATE BASE, T = 5"

Paved Shoulders: (Stations same as Item 203 Subgrade Compaction)

112.06' x 4.0' x 0.42' x $\frac{\text{C.Y.}}{\text{27 C.F.}}$ =6.97 CU. YDS.

101.21' x 4.0' x 0.42' x $\frac{\text{C.Y.}}{\text{27 C.F.}}$ =6.30 CU. YDS.

79.65' x 4.0' x 0.42'x $\frac{\text{C.Y.}}{\text{27 C.F.}}$ =4.96 CU. YDS.

87.30' x 4.0' x 0.42' x $\frac{\text{C.F.}}{\text{27 C.F.}}$ =5.43 CU. YDS.

TOTAL = 23.66 CU. YDS. USE = 24.0 CU. YDS.

ITEM 404 ASPHALT CONCRETE, AC-20

Feather Areas: (Stations same as Item 202 Wearing Course Removed)

40.92' x 23.0' x 0.104' x $\frac{\text{C.Y.}}{\text{27 C.F.}}$ = 3.62 CU. YDS.

38.19' x 23.0' x 0.104' x $\frac{\text{C.Y.}}{\text{27 C.F.}}$ = 3.38 CU. YDS.

TOTAL = 7.0 CU. YDS.

ITEM 407 TACK COAT

Feather Areas: (Stations same as Item 202 Wearing Course Removed)

40.92' x 23.0' x $\frac{\text{S.Y.}}{\text{9 S.F.}}$ x $\frac{\text{0.10 GAL.}}{\text{S.Y.}}$ = 10.46 GAL.

38.29' x 23.0' x $\frac{\text{S.Y.}}{\text{9 S.F.}}$ x $\frac{\text{0.10 GAL.}}{\text{S.Y.}}$ = 9.76 GAL.

TOTAL = 20.22 GAL. USE = 21.0 GAL.

ITEM 409 SEAL COAT - BITUMINOUS MATERIAL

Paved Shoulders: (Stations same as Item 203 Subgrade Compaction)

112.06' x 4.0' $\frac{\text{S.Y.}}{\text{9 S.F.}}$ x $\frac{\text{0.3 GAL.}}{\text{S.Y.}}$ = 14.94 GAL.

101.21' x 4.0' $\frac{\text{S.Y.}}{\text{9 S.F.}}$ x $\frac{\text{0.3 GAL.}}{\text{S.Y.}}$ = 13.49 GAL.

79.65' x 4.0' $\frac{\text{S.Y.}}{\text{9 S.F.}}$ x $\frac{\text{0.3 GAL.}}{\text{S.Y.}}$ = 10.62 GAL.

87.30 x 4.0' x $\frac{\text{S.Y.}}{\text{9 S.F.}}$ x $\frac{\text{0.3 gal.}}{\text{S.Y.}}$ = 11.64 GAL.

TOTAL = 50.69 GAL. USE = 51.0 GAL.

ITEM 409 SEAL COAT COVER AGGREGATE, NO. 8

Paved Shoulders: (Stations same as Item 203 Subgrade Compaction)

112.06' x 4.0' x $\frac{\text{S.Y.}}{\text{9 S.F.}}$ x $\frac{\text{0.008 C.Y.}}{\text{S.Y.}}$ = 0.40 CU. YDS.

101.21' x 4.0' x $\frac{\text{S. Y.}}{\text{9 S.F.}}$ x $\frac{\text{0.008 C.Y.}}{\text{S.Y.}}$ = 0.36 CU. YDS.

79.65' x 4.0' x $\frac{\text{S.Y.}}{\text{9 S.F.}}$ x $\frac{\text{0.008 C.Y.}}{\text{S.Y.}}$ = 0.28 CU. YDS.

87.30' x 4.0' x $\frac{\text{S.Y.}}{\text{9 S.F.}}$ x $\frac{\text{0.008 C.Y.}}{\text{S.Y.}}$ = 0.31 CU. YDS.

TOTAL = 1.35 CU. YDS. USE = 2.0 CU. YDS.

ITEM 611 REINFORCED CONCRETE APPROACH SLABS, T=13"

20.0' x 40.0' x $\frac{\text{S.Y.}}{\text{9 S.F.}}$ x 2 = 177.78 SQ. YDS.

USE = 178.0 SQ. YDS.

ITEM 621 EDGE LINES

STA. 87+50.00 to STA. 89+50.00

200.0' x 2 x $\frac{\text{MI.}}{\text{5280 FT.}}$ = 0.08 MI

ITEM 621 CENTER LINE

STA. 87+50.00 to STA. 89+50.00

200.0' x $\frac{\text{MI.}}{\text{5280 FT}}$ = 0.04 MI.

ITEM 659 AGRICULTURAL LIMING

495.0. S.Y. x $\frac{\text{9 S.F.}}{\text{S.Y.}}$ x $\frac{\text{100 LBS.}}{\text{1000 S.F.}}$ x $\frac{\text{1 T.}}{\text{2000 LBS.}}$ = 0.22 TONS

ITEM 659 COMMERCIAL FERTILIZER

495.0 S.Y. x $\frac{\text{9 S.F.}}{\text{S.Y.}}$ x $\frac{\text{20 LBS.}}{\text{1000 S.F.}}$ x $\frac{\text{1 T.}}{\text{2000 LBS.}}$ = 0.04 TONS

EARTHWORK & SEEDING

SHEET NO.	ITEM 203 EXCAVATION	ITEM 203 EMBANKMENT	ITEM 659 SEEDING & MULCHING
8	26	71	208
9	13	76	240
10	278	27	7
11	73	14	40
TOTALS	390 cu.yds.	188 cu.yds.	495 sq. yds.

GENERAL SUMMARY

ITEM	SHEET NUMBER 4	5	7	GRAND TOTAL	UNIT	ITEM	ITEM EXT.	DESCRIPTION
								ROADWAY
201	LUMP			LUMP		201		CLEARING AND GRUBBING
202			450	450	L.F.	202		GUARDRAIL REMOVED
202		203		203	SQ.YD.	202		WEARING COURSE REMOVED
203		390		390	CU.YD.	203		EXCAVATION NOT INCLUDING EMBANKMENT CONSTRUCTION
203		188		188	CU.YD.	203		EMBANKMENT
203		347		347	SQ.YD.	203		SUBGRADE COMPACTION
606			325	325	L.F.	606		GUARDRAIL TYPE 5
606			3	3	EACH	606		ANCHOR ASSEMBLY, TYPE A
606			1	1	EACH	606		ANCHOR ASSEMBLY, TYPE T
606			4	4	EACH	606		BRIDGE TERMINAL ASSEMBLY, TYPE B
								EROSION CONTROL
601			266	266	CU.YD.	601		ROCK CHANNEL PROTECTION, TYPE C, W/O FILTER
659		0.04		0.04	TON	659		COMMERCIAL FERTILIZER
659		0.22		0.22	TON	659		AGRICULTURAL LIMING
659		495		495	SQ.YD.	659		SEEDING AND MULCHING
659	1			1	M.GAL.	659		WATER
207	50			50	EACH	207		STRAW OR HAY BALES
								PAVEMENT
301		14		14	CU.YD.	301		BITUMINOUS AGGREGATE BASE, AC-20
304		24		24	CU.YD.	304		AGGREGATE BASE
404		7		7	CU.YD.	404		ASPHALT CONCRETE, AC-20
407		21		21	GAL.	407		TACK COAT
409		2		2	CU.YD.	409		SEAL COAT COVER AGGREGATE, NO.8
409		51		51	GAL.	409		SEAL COAT, BITUMINOUS MATERIAL
611		178		178	SQ.YD.	611		REINFORCED CONCRETE APPROACH SLAB, T = 13"
								TRAFFIC CONTROL
621		0.08		0.08	MI.	621		EDGE LINES
621		0.04		0.04	MI.	621		CENTER LINES
802			6	6	EACH	802		BARRIER REFLECTOR, TYPE A
								MAINTENANCE OF TRAFFIC
614	0.04			0.04	MI.	614		TEMPORARY CENTERLINES, CLASS II
								FOR STRUCTURES 20' & OVER SEE SHEETS 12 THRU 21.
				LUMP		624		MOBILIZATION
619	LUMP			LUMP		619		FIELD OFFICE
				LUMP		623		CONSTRUCTION LAYOUT STAKES, AS PER PLAN
614	LUMP			LUMP		614		MAINTAINING TRAFFIC

FHWA REGION	STATE	PROJECT	
	OHIO	BRS-557 (2)	

COL.-170-18.95

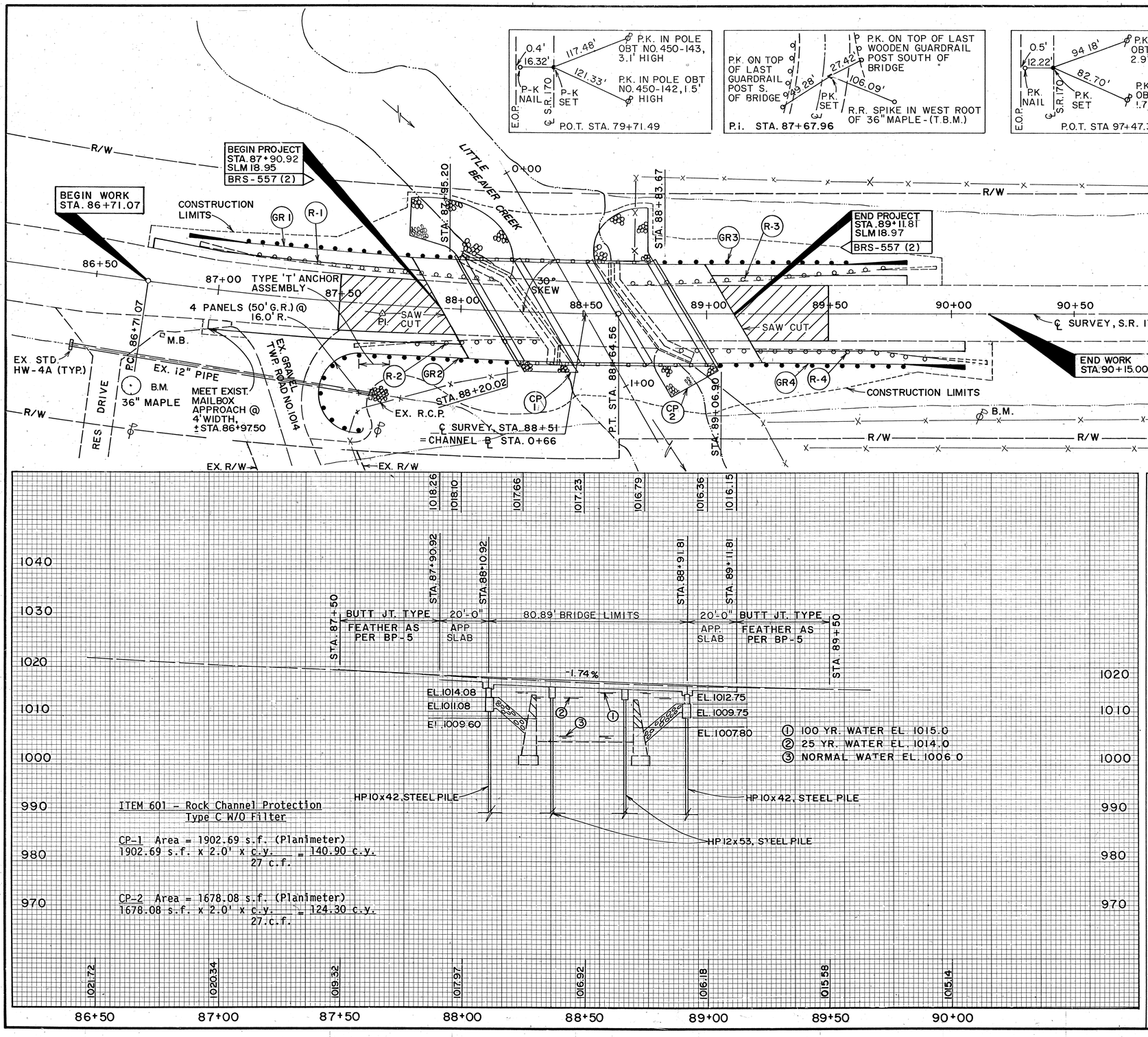

B.M. R.R. SPIKE IN WEST ROOT OF 36" MAPLE STA. 86+70 42' RT. EL. 1022.36

B.M. - MINE SPIKE SET IN POWER POLE STA. 90+11.5±, 42' RT. EL. 1012.92

EXISTING STRUCTURE DATA

SFN: 1504568 DATE BUILT: 1924

TYPE: CONCRETE GIRDER
SPAN: 40'-0"
ROADWAY: 24'-0"
SKEW: 35°
ABUTMENTS: FULL HEIGHT REINFORCED CONCRETE
WEARING SURFACE: 404 ASPHALT
APPROACH SLABS: NONE
ALIGNMENT: AS SHOWN

PROPOSED STRUCTURE

TYPE: CONTINUOUS SLAB BRIDGE W/ CAPPED PILE ABUTMENTS AND PIERS.
SPAN: 24'-0", 30'-0", & 24'-0"
ROADWAY: 40'-0" F/F GUARDRAIL
SKEW: 30° TO REFERENCE LINE
WEARING SURFACE: MONOLITHIC CONCRETE
LIVE LOAD: HS20-44 AND ALTERNATE MILITARY
APPROACH SLABS: 20'-0" (AS-1-81)
ALIGNMENT: 4° CURVE AND TANGENT
SUPERELEVATION: VARIES

HORIZONTAL CURVE DATA

Δ	7°44' 23"
Dc	4°00' Lt.
T	96.89'
L	193.49'
R	1432.39'
P.I.	STA. 87+67.96

QUANTITIES

REF. NO.	STATION TO STATION	SIDE	ITEM 202 GUARDRAIL REMOVED	ITEM 606 GUARDRAIL TYPE 5	ITEM 606 BRIDGE TERM. ASSY. TYPE B	ITEM 606 ANCHOR ASSEMBLY TYPE T	ITEM 606 ANCHOR ASSEMBLY TYPE A	ITEM 601 ROCK CHAN. PROTECT. TYPE C	ITEM 802 BARRIER REFLECTOR TYPE A
			L.F.	L.F.	EA.	EA.	EA.	C.Y.	EA.
GR-1	STA. 86+95.20 TO STA. 87+95.20	LT.		75	1	1	1		2
GR-2	STA. 87+42.78 TO 88+20.02	RT.		*100	1	1			1
GR-3	STA. 88+83.67 TO STA. 89+83.67	LT.		75	1		1		1
GR-4	STA. 89+06.90 TO STA. 90+06.90	RT.		75	1		1		2
R-1	STA. 86+87.70 TO STA. 88+12.70	LT.	125						
R-2	STA. 87+56.00 TO STA. 88+31.00	RT.	75						
R-3	STA. 88+70.00 TO STA. 89+95.00	LT.	125						
R-4	STA. 88+90.00 TO STA. 90+15.00	RT.	125						
CP-1	SEE CALC. THIS SHEET							140.9	
CP-2	SEE CALC. THIS SHEET							124.3	
TOTALS			450	325	4	1	3	266	6

*RUN GR-2 INCLUDES 50' OF TYPE 5 G.R. ON A 16' RADIUS

PLAN & PROFILE

FHWA REGION	STATE	PROJECT	
	OHIO	BRS-557 (2)	

COL-170-18.95

8/21

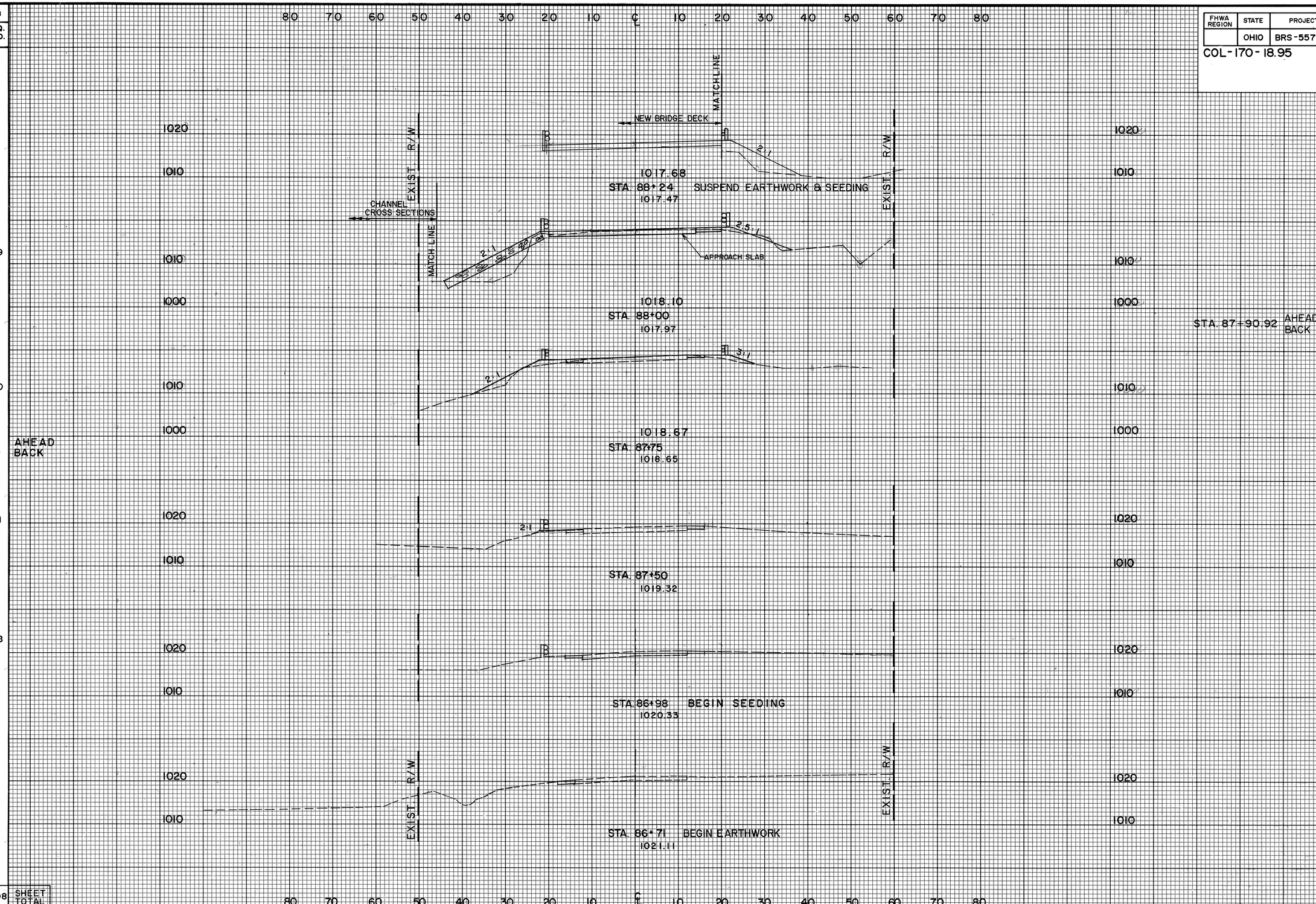

SEEDING END WIDTH	SEEDING SQ. YD.		END AREA CUT	END AREA FILL	VOLUME CUT	VOLUME FILL
20	49	STA. 88+24	0	47	2	24
17	60	STA. 88+00	5	6	4	33
		STA. 87+90.92 AHEAD	5	47		
26		STA. 87+75	3	24		
36		AHEAD / BACK				
8	61	STA. 87+50	5	2	4	12
5	38	STA. 86+98	6	0	11	2
		STA. 86+71	3	0	5	0
	208 SHEET TOTAL		SHEET TOTAL		26	71

CROSS SECTIONS

FHWA REGION	STATE	PROJECT	
	OHIO	BRS-557 (2)	

COL-170-18.95

9
21

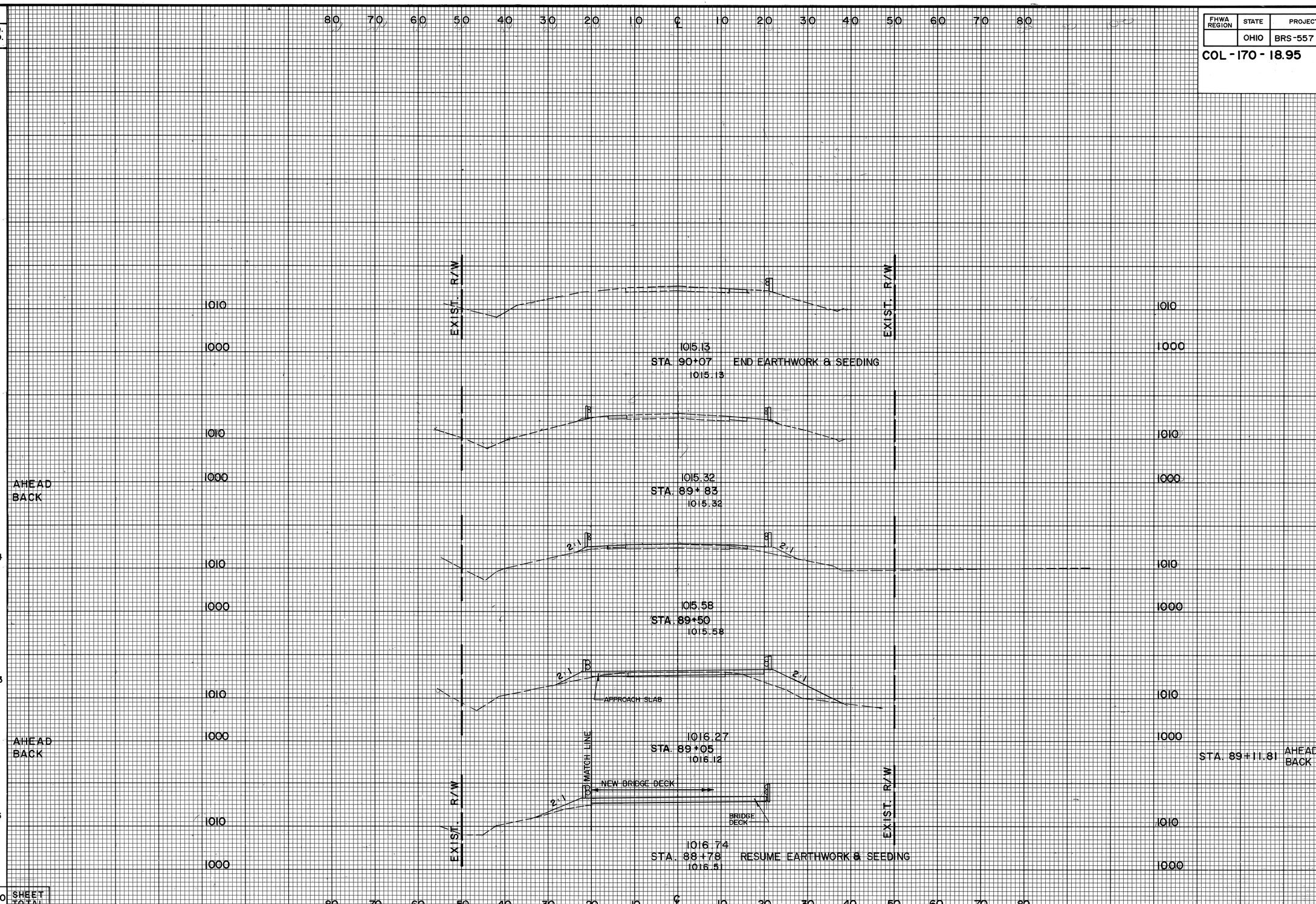

SEEDING END WIDTH	SEEDING SQ. YD.	END AREA CUT	END AREA FILL	VOLUME CUT	VOLUME FILL
5		3	0		
	17			4	1
8					
15		6	2		
	64			6	12
20		4	17		
	123			3	53
29		0	46		
9		0	8		
	36			0	10
15		0	12		
	240 SHEET TOTAL	SHEET TOTAL		13	76

CROSS SECTIONS

FHWA REGION	STATE	PROJECT	
	OHIO	BRS-557 (2)	

COL-170-18.95

10/21

SEEDING END WIDTH	SEEDING SQ. YD.
	7
0	

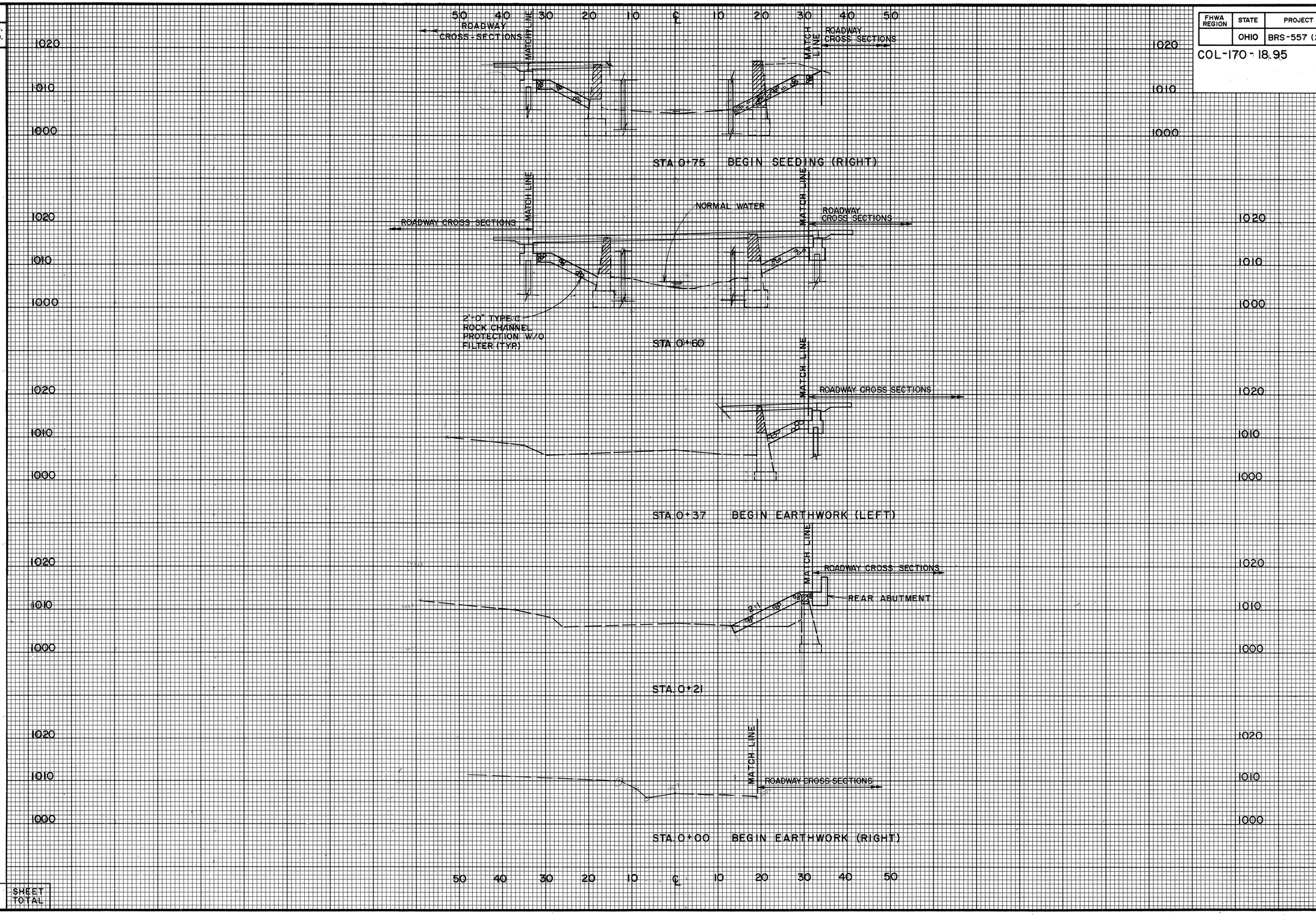

	END AREA CUT	END AREA FILL	VOLUME CUT	VOLUME FILL
			37	1
	172	1		
			101	1
	192	0		
			114	0
	76	0		
			24	11
	4	36		
			2	14
	0	0		
SHEET TOTAL			278	27

7	SHEET TOTAL

CHANNEL CROSS-SECTIONS

FHWA REGION	STATE	PROJECT	
	OHIO	BRS-557 (2)	

11
21

COL-170-18.95

SEEDING END WIDTH	SEEDING SQ. YD.		END AREA CUT	END AREA FILL	VOLUME CUT	VOLUME FILL
8	17	STA 1+25 END EARTHWORK & SEEDING (LEFT)	0	0	1	5
20		AHEAD	1	22		
23		BACK	85	0	35	9
19	23	STA. 0+92 END EARTHWORK & SEEDING (RIGHT)	115	0	37	0
40	SHEET TOTAL		SHEET TOTAL		73	14

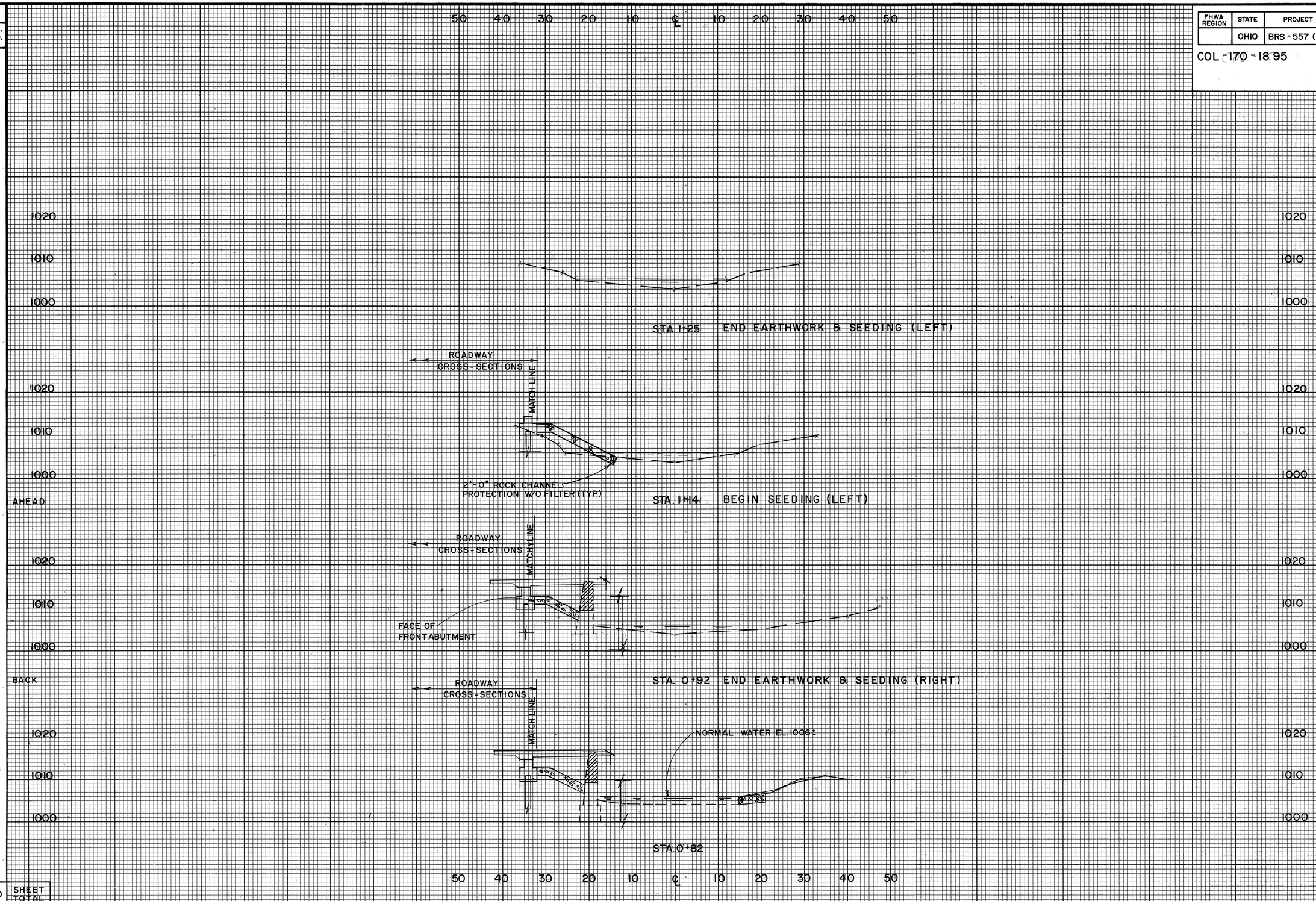

CHANNEL CROSS-SECTIONS

FHWA REGION	STATE	PROJECT NO.	
	OHIO		

COL.-170-18.95

12/21

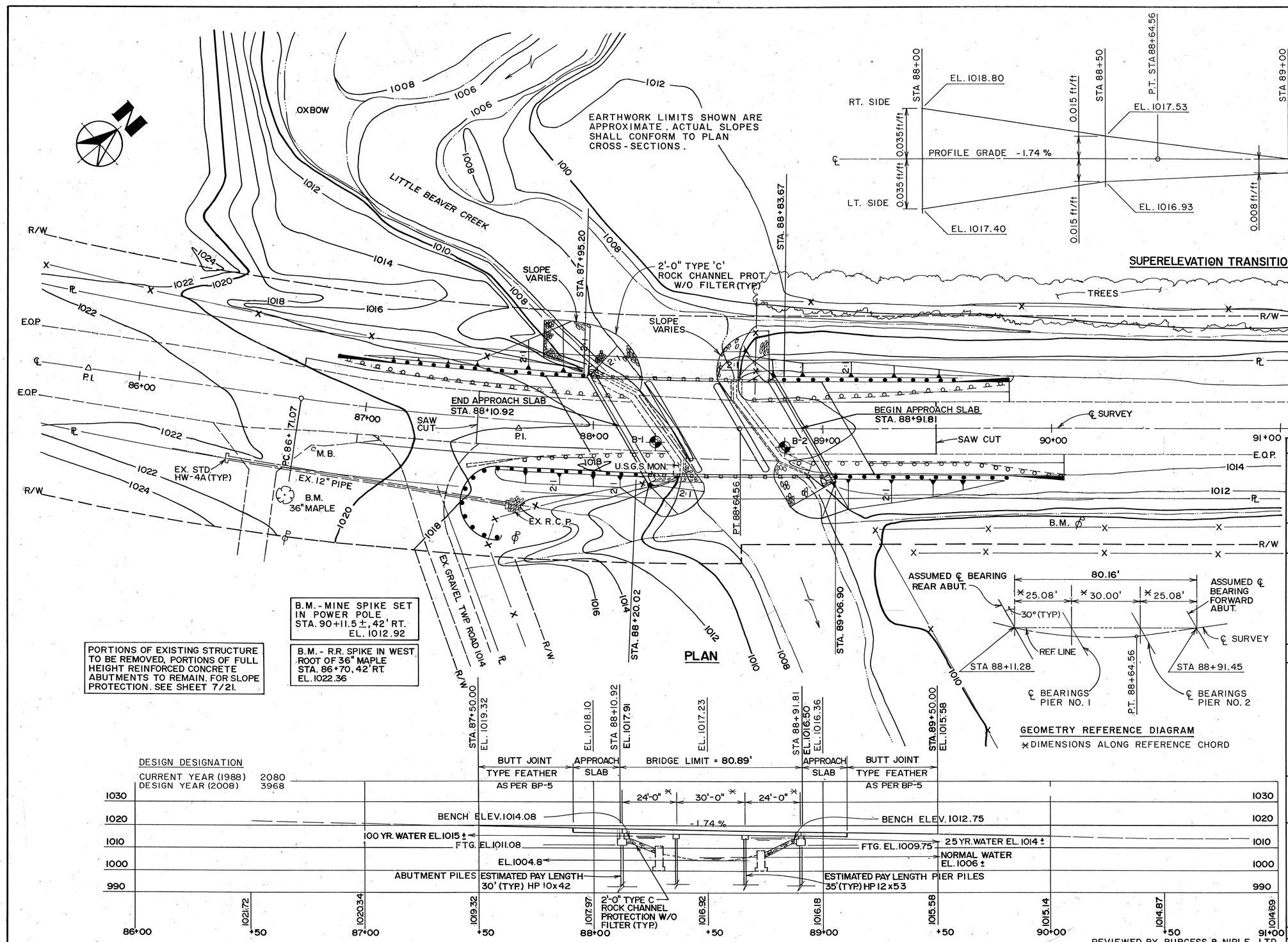

PLAN

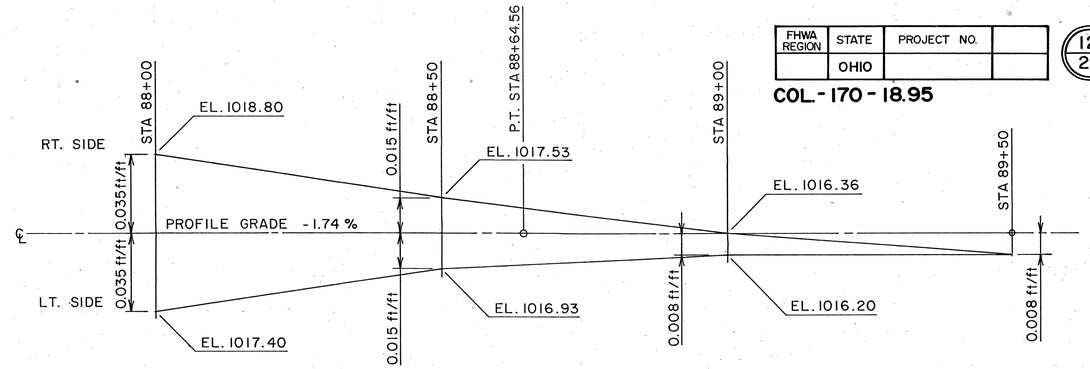

SUPERELEVATION TRANSITION DIAGRAM

CURVE DATA

△ = 7°44'23"
D = 4°
R = 1432.39'
P.I. = 87+67.96
Lc = 193.49
T = 96.89

GEOMETRY REFERENCE DIAGRAM

* DIMENSIONS ALONG REFERENCE CHORD

DESIGN DESIGNATION

CURRENT YEAR (1988) 2080
DESIGN YEAR (2008) 3968

PROFILE ALONG ℄ SURVEY S.R. 170

REVIEWED BY BURGESS & NIPLE, LTD.
T.J.K. 5-8-89

STREAM DATA

DRAINAGE AREA = 13.6 MI.²
Q100 = 2593 CFS
V100 = 7.98 FPS
EL100 = 1014.7
Q25 = 1900 CFS
V25 = 6.74 FPS
EL25 = 1013.5

EXISTING STRUCTURE DATA

SFN: 1504568 DATE BUILT: 1923

TYPE: CONCRETE GIRDER
SPAN: 40'-0"
ROADWAY: 24'-0"
SKEW: 35°
ABUTMENTS: FULL HEIGHT REINFORCED CONCRETE
WEARING SURFACE: 404 ASPHALT
APPROACH SLABS: NONE
ALIGNMENT: AS SHOWN

PROPOSED STRUCTURE

TYPE: CONTINUOUS SLAB BRIDGE WITH CAPPED PILE ABUTMENTS AND PIERS.
SPANS: 24'-0", 30'-0", 24'-0"
ROADWAY: 40'-0" F/F GUARDRAIL
SKEW: 30° TO REFERENCE LINE
WEARING SURFACE: MONOLITHIC CONCRETE
LIVE LOADING: HS 20-44 AND ALTERNATE MILITARY
APPROACH SLABS: 20'-0" (AS-1-81)
ALIGNMENT: 4° CURVE AND TANGENT
SUPERELEVATION: VARIES

environmental design group
Engineers · Landscape Architects · Surveyors
1533 Commerce Drive Stow, OH 44224
(216) 686-1898

1/10

SITE PLAN

BRIDGE NO. COL.-170-1895
OVER LITTLE BEAVER CREEK

STA. 88+10.92
STA. 88+91.81

COLUMBIANA COUNTY, OH.

PRESENT TOPOGRAPHY		PROPOSED WORK			
SURVEYED	DRAWN	DESIGNED	DRAWN	CHECKED	REVIEWED
RJW	EDH	PJR	PSG	CAF	DHG

FHWA REGION	STATE	PROJECT NO.	
	OHIO	BRS-557 (2)	

13
21

COL.-170-18.95

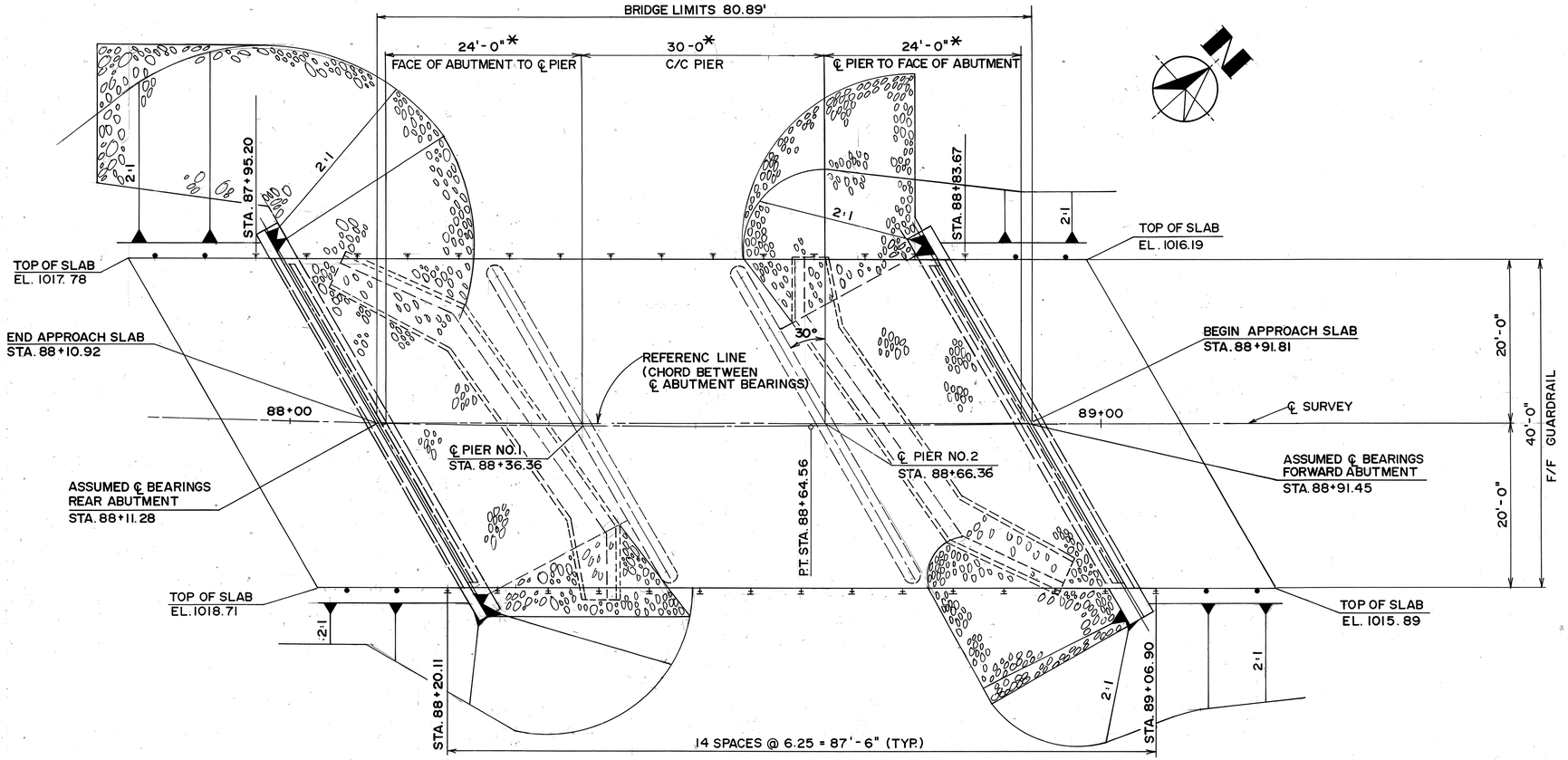

PLAN

*SPAN DIMENSIONS MEASURED ALONG REFERENCE CHORD

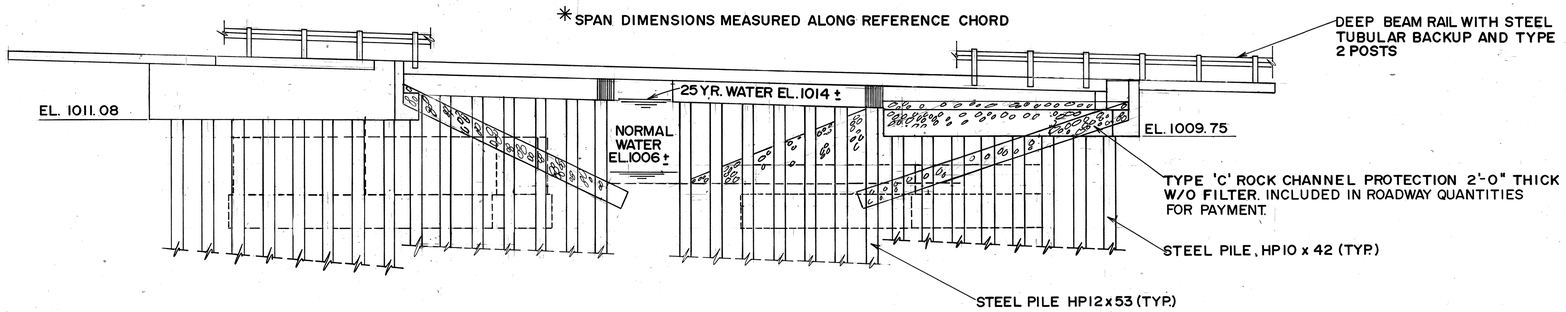

*DIMENSIONS ALONG REFERENCE CHORD

ELEVATION

environmental design group
Engineers - Landscape Architects - Surveyors
1533 Commerce Drive Stow, OH 44224
(216) 688-1889

2/10

GENERAL PLAN & ELEVATION
BRIDGE NO. COL.-170-1895
OVER LITTLE BEAVER CREEK

COLUMBIANA COUNTY, OHIO

DESIGNED	DRAWN	TRACED	CHECKED	REVIEWED DATE	REVISED
RJW	PSG	PSG	PJR	DHG 7/13/88	

FHWA REGION	STATE	PROJECT	
	OHIO	BRS-557(2)	

COL.-170-18.95

ESTIMATED QUANTITIES

CALC. BY CAF (DATE) 2/9/88
CHECKED BY PJR (DATE) 2/11/88

ITEM	TOTAL	UNIT	DESCRIPTION	ABUT.	PIER	SUPER.	GEN.	AS BUILT	AS BUILT	AS BUILT
202	LUMP		PORTIONS OF STRUCTURE REMOVED, AS PER PLAN				LUMP			
503	LUMP		COFFERDAMS, CRIBS AND SHEETING.				LUMP			
503	113	CU. YD.	UNCLASSIFIED EXCAVATION				113			
505	LUMP		PILE DRIVING EQUIPMENT MOBILIZATION				LUMP			
507	490	LIN. FT.	STEEL PILES, HP12x53		490					
507	480	LIN. FT.	STEEL PILES, HP10x42	480						
509	8189	LB.	REINFORCING STEEL, GRADE 60	6572	1617					
511	56	CU. YD.	CLASS C CONCRETE, ABUTMENTS	56						
511	16	CU. YD.	CLASS C CONCRETE, PIERS		16					
511	166	CU. YD.	CLASS S CONCRETE, SUPERSTRUCTURE			166				
517	175	LIN. FT.	RAILING (DEEP BEAM RAIL W/STEEL TUBULAR BACKUP AND TYPE 2 POST AND BOLTS) (SEE PROPOSAL NOTE)				175			
518	14	CU. YD.	POROUS BACKFILL, AS PER PLAN	14						
509	38,742	LB.	EPOXY COATED REINFORCING STEEL, GRADE 60		2355	36,387				
SPECIAL	60	SQ. YD.	SEALING OF CONCRETE SURFACES (SEE PROPOSAL NOTE)	14		46				

GENERAL NOTES

DESIGN SPECIFICATIONS:
This structure conforms to "Standard Specifications for Highway Bridges" adopted by the American Association of State Highway and Transportation Officials, 1983, the 1984, 1985, 1986, 1987, and 1988 Interim Specifications, and the Ohio "Supplement" to these specifications.

REFERENCE shall be made to Standard Drawings:

AS-1-81 dated 11/27/81
CPA-2-73 dated 4/10/73
CPP-2-73 dated 4/10/73
CS-2-73 dated 4/10/73
DBR-2-73 dated 4/10/73

and to Supplemental Specifications:

836 dated 11/12/85

DESIGN DATA:

Design Loading - HS 20-44 and the alternate military loading.
Design Stresses - Concrete Class S - Unit Stress 1500 P.S.I. (Superstructure). Concrete Class C - Unit Stress 1333 P.S.I. (Substructure)
Reinforcing Steel -ASTM A616 or A617. Grade 60 - Unit Stress 24,000 P.S.I.

Abutment Piling - Abutment Piling bending stress may approach, reach, or exceed yield stress.

DECK PROTECTION METHOD: Epoxy coated reinforcing steel, top and bottom mats and sealing of concrete surfaces.

MONOLITHIC WEARING SURFACE: is assumed for design purposes, to be 1" thick.

PILES:

The design load is 32.7 tons per pile for the abutment piles and 57.1 tons per pile for the pier piles.

PILE ENCASEMENT:

Exposed steel piles and pile casings in capped pile piers shall have pile encasement similar to that shown on standard drawing CPP-2-73. The encasement shall consist of Class C concrete placed within a shell of extra-strength vitrified clay pipe, galvanized corrugated steel pipe, or plain or corrugated plastic pipe all having the minimum inside diameter of approximately 18 inches for HP 12x53 approximately 4 feet below the waterline up to the bottom of the pier cap. Cost of encasement shall be included with the piles for payment.

ABUTMENT PILES: At the Contractor's option and expense HP 12x53 piles may be used.

EMBANKMENT CONSTRUCTION: The embankments shall be constructed to the level of the subgrade for a minimum distance of 200 feet back of the abutments. Excavation may then be made for the abutments, benches, for Piers No. 1 and 2 and piles driven.

ITEM SPECIAL, SEALING OF CONCRETE SURFACES:
A concrete sealer shall be applied to the following concrete surfaces: See Sheets 4/10, 5/10 & 9/10. See proposal note for surface preparation requirements, application rates, materials requirements and application procedures.

UTILITY LINES: All expense involved in relocating the affected utility lines shall be borne by the Owners. The Contractor and Owners are requested to cooperate by arranging their work in such a manner that inconvenience to either will be held a minimum.

REMOVAL OF EXISTING STRUCTURE:

When no longer needed to maintain traffic, the existing structure shall be removed. Suitable waste masonry may be placed as bank protection as directed by the engineer.

PROPOSED WORK

1. Traffic shall be detoured.
2. Remove existing structure and approach slabs.
3. Build embankments, excavate for abutments.
4. Drive piles for abutments and piers.
5. Construct abutments and piers to the elevation of the bridge seat.
6. Place reinforced concrete bridge deck.
7. Place abutment and wingwall backfill.
8. Complete construction of abutments and approach slabs.
9. Construct all incidental roadway items.
10. Reroute traffic onto COL 170-1895 structure.

environmental design group
Engineers • Landscape Architects • Surveyors
1533 Commerce Drive Stow, OH 44224
(216) 686-1886

GENERAL NOTES & ESTIMATED QUANTITIES
BRIDGE NO. COL.-170-1895
OVER LITTLE BEAVER CREEK

COLUMBIANA COUNTY

DESIGNED	DRAWN	TRACED	CHECKED	REVIEWED DATE	REVISED
RJW	CAF	CAF	PJR	DHG 7/13/88	

FHWA REGION	STATE	PROJECT	
	OHIO	BRS-557 (2)	

15/21

COL-170-18.95

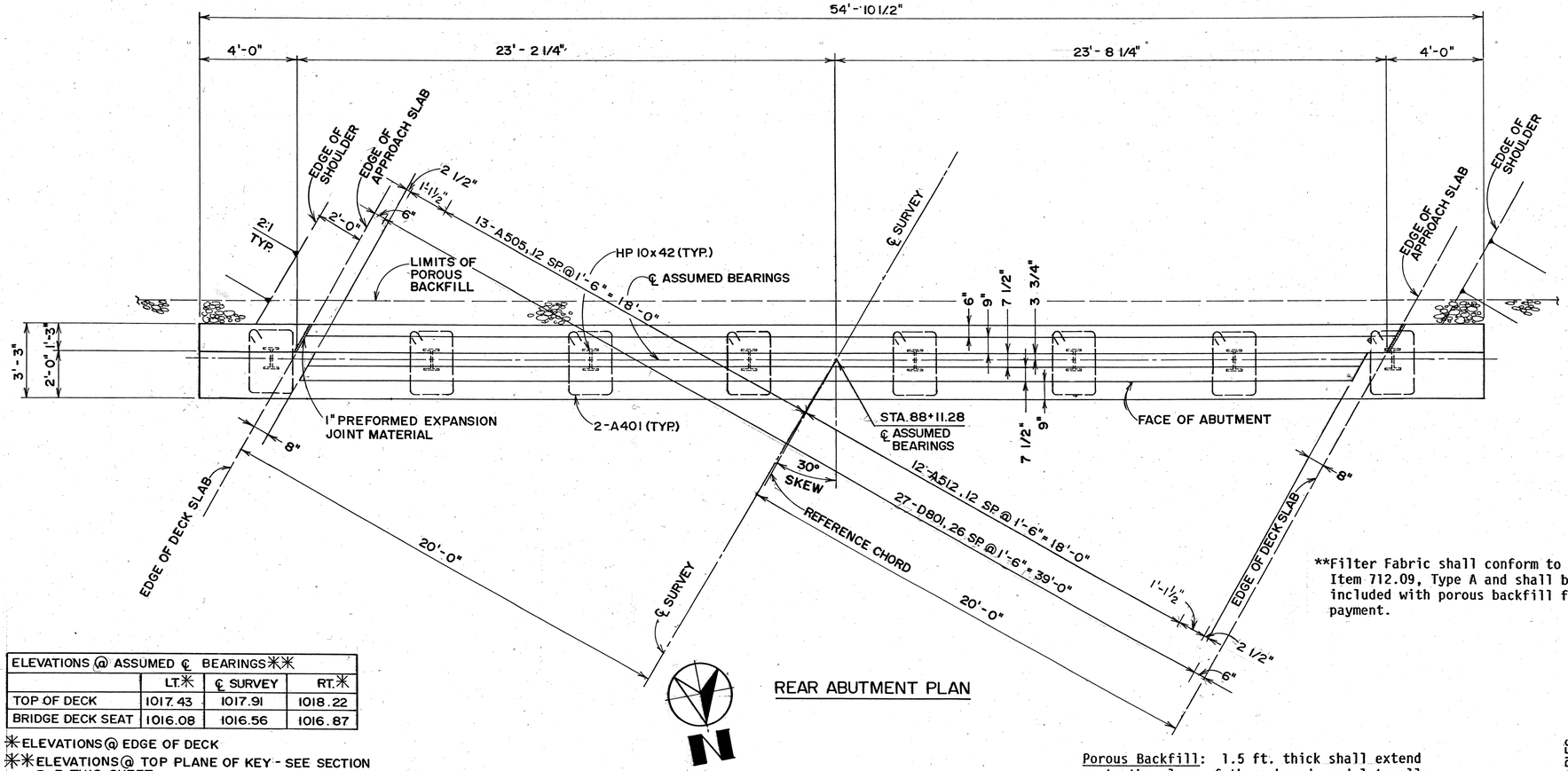

REAR ABUTMENT PLAN

ELEVATIONS @ ASSUMED ℄ BEARINGS ✳✳			
	LT.✳	℄ SURVEY	RT.✳
TOP OF DECK	1017.43	1017.91	1018.22
BRIDGE DECK SEAT	1016.08	1016.56	1016.87

✳ ELEVATIONS @ EDGE OF DECK

✳✳ ELEVATIONS @ TOP PLANE OF KEY - SEE SECTION B-B THIS SHEET.

NOTE:
REINFORCING STEEL LAP LENGTHS SHALL BE AS FOLLOWS:
LAP NO. 5 BARS 1'-8" (MIN.)
LAP NO. 8 BARS 3'-3" (MIN.)
LAP NO. 10 BARS 5'-3" (MIN)

**Filter Fabric shall conform to Item 712.09, Type A and shall be included with porous backfill for payment.

Porous Backfill: 1.5 ft. thick shall extend up to the plane of the subgrade and laterally to the ends of the wingwalls. Filter fabric shall conform with 712.09 Type A and shall be included with porous backfill for payment.

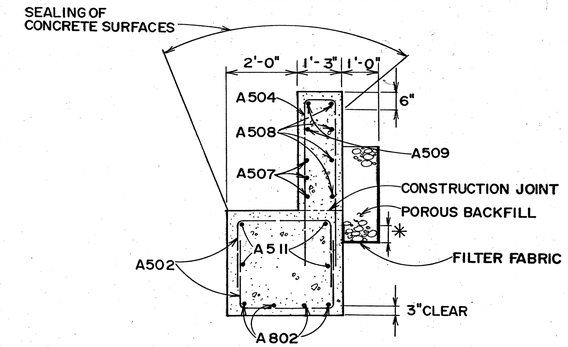

SECTION A-A

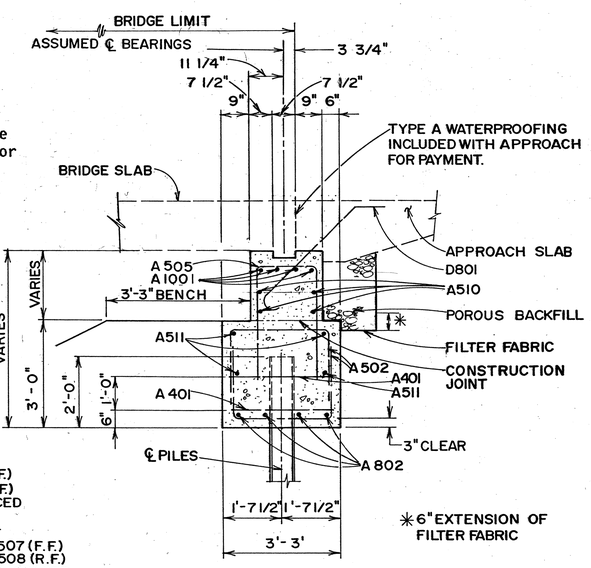

SECTION B-B

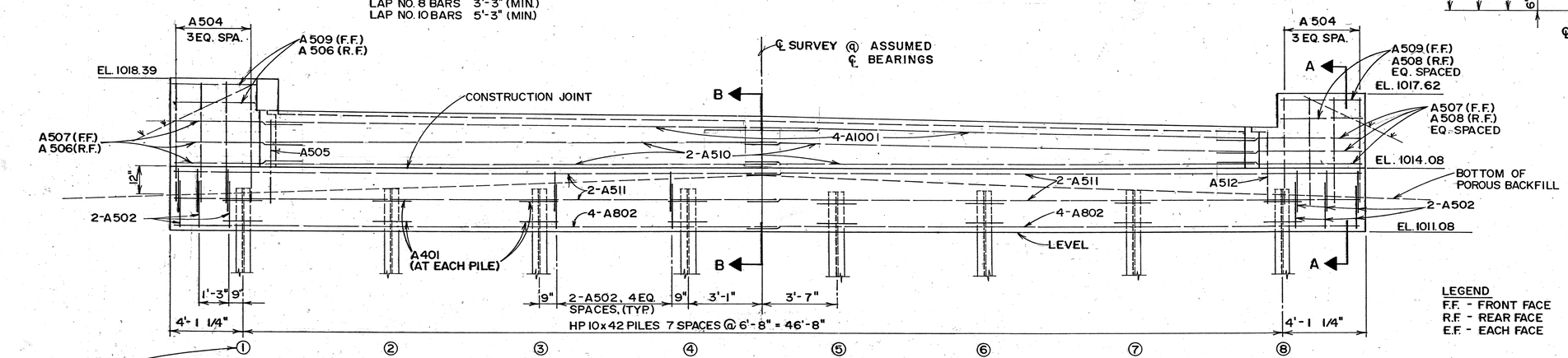

REAR ABUTMENT ELEVATION

LEGEND
F.F. - FRONT FACE
R.F. - REAR FACE
E.F. - EACH FACE

NOTE: ALL REINFORCEMENT 2" CLEAR UNLESS OTHERWISE NOTED.

environmental design group
Engineers - Landscape Architects - Surveyors
1533 Commerce Drive Stow, OH 44224
(216) 686-1898

4/10

REAR ABUTMENT
PLAN AND ELEVATION
BRIDGE NO. COL-170-1895
OVER LITTLE BEAVER CREEK
COLUMBIANA COUNTY

DESIGNED	DRAWN	TRACED	CHECKED	REVIEWED DATE	REVISED
R.J.W.	D.R.G.	D.R.G.	P.J.R.	DHG 7/13/88	

FHWA REGION	STATE	PROJECT	
	OHIO	BRS-557 (2)	

16/21

COL-170-18.95

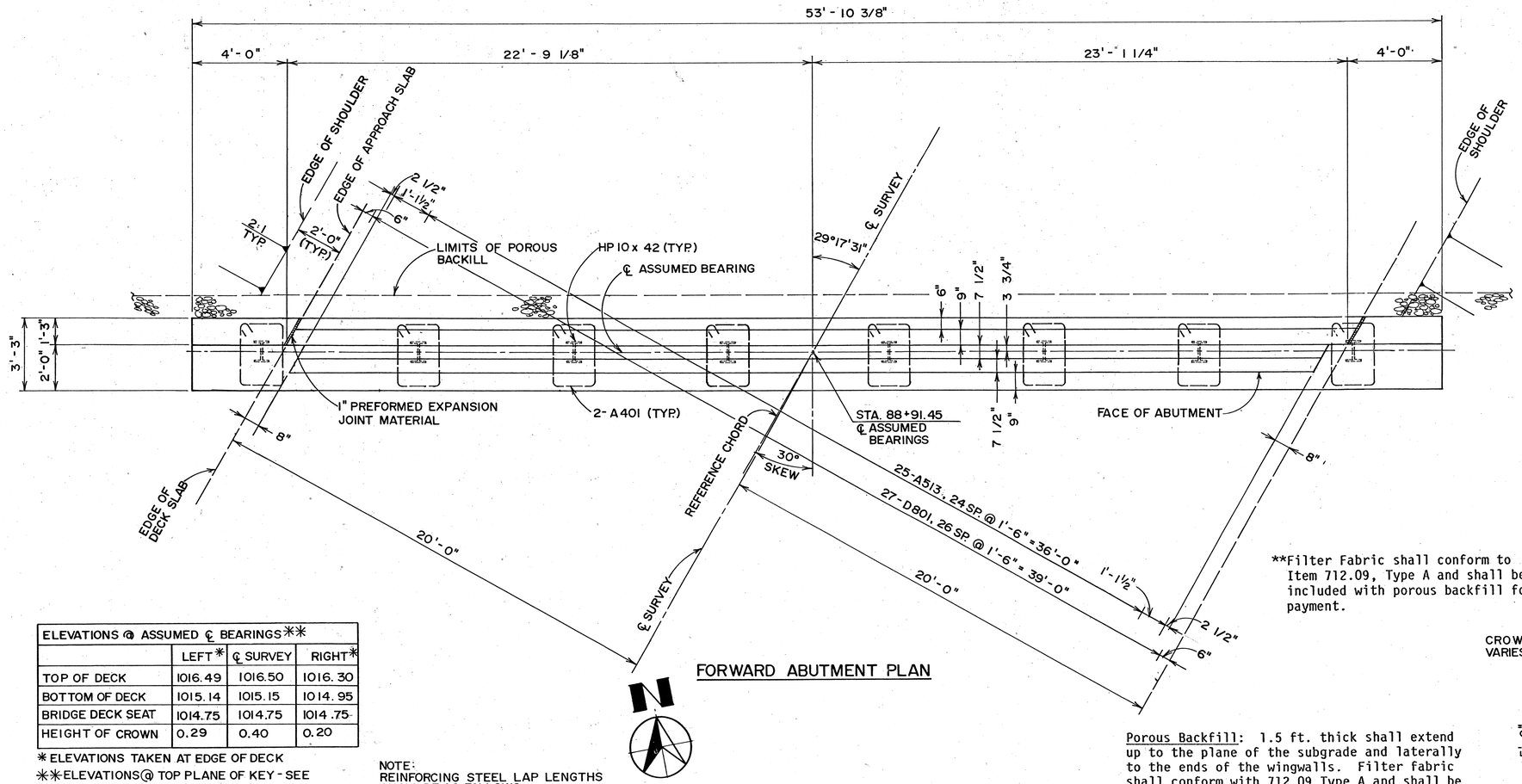

FORWARD ABUTMENT PLAN

ELEVATIONS @ ASSUMED ℄ BEARINGS **			
	LEFT *	℄ SURVEY	RIGHT *
TOP OF DECK	1016.49	1016.50	1016.30
BOTTOM OF DECK	1015.14	1015.15	1014.95
BRIDGE DECK SEAT	1014.75	1014.75	1014.75
HEIGHT OF CROWN	0.29	0.40	0.20

* ELEVATIONS TAKEN AT EDGE OF DECK

** ELEVATIONS @ TOP PLANE OF KEY - SEE SECTION B-B THIS SHEET

NOTE:
REINFORCING STEEL LAP LENGTHS SHALL BE AS FOLLOWS:

LAP NO. 5 BARS	1'-8" (MIN.)
LAP NO. 8 BARS	3'-3" (MIN.)
LAP NO. 10 BARS	5'-3" (MIN.)

**Filter Fabric shall conform to Item 712.09, Type A and shall be included with porous backfill for payment.

Porous Backfill: 1.5 ft. thick shall extend up to the plane of the subgrade and laterally to the ends of the wingwalls. Filter fabric shall conform with 712.09 Type A and shall be included with porous backfill for payment.

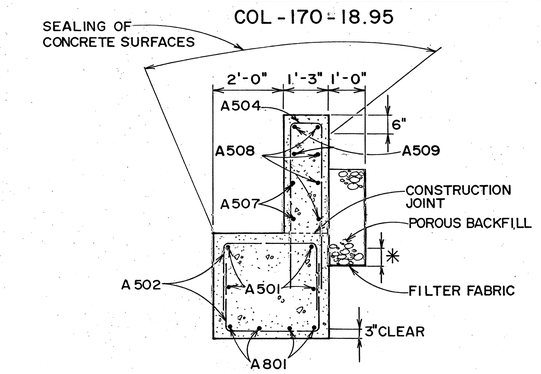

SECTION A-A

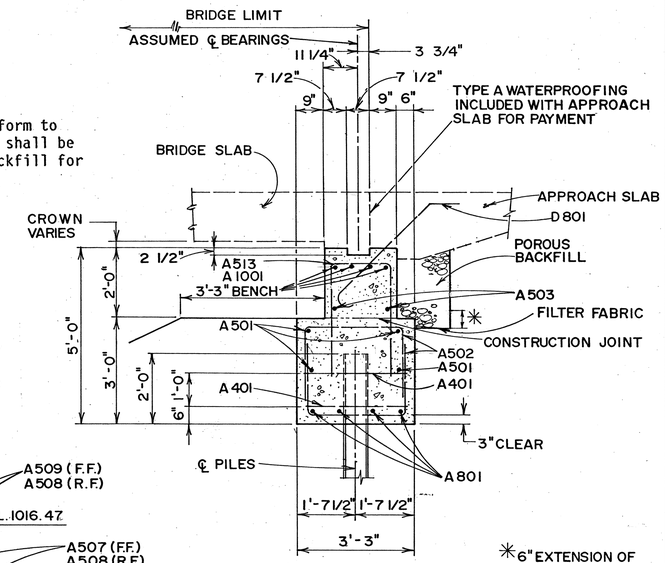

SECTION B-B

*6" EXTENSION OF FILTER FABRIC

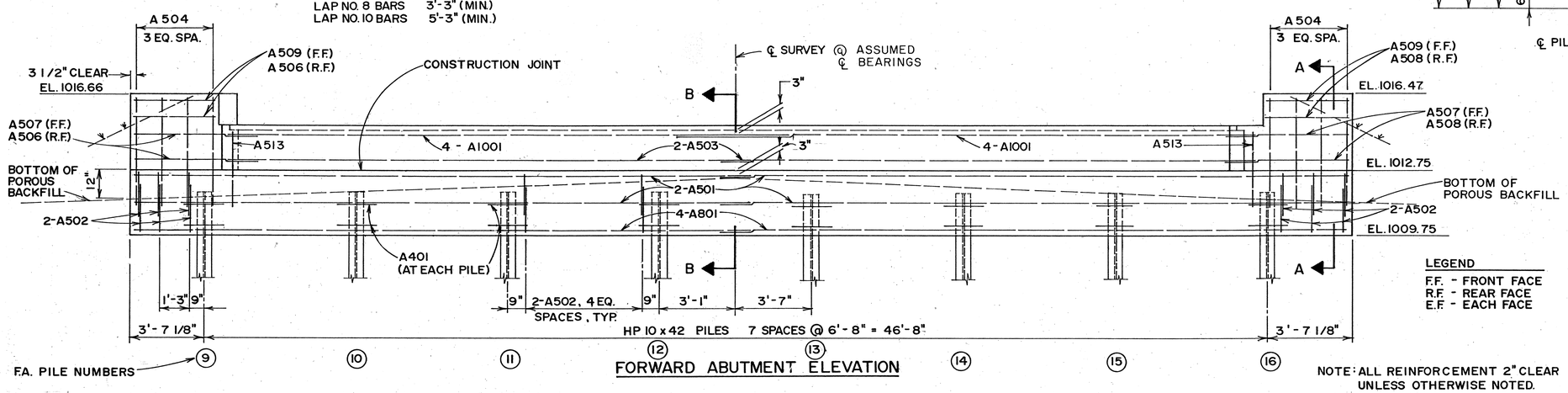

FORWARD ABUTMENT ELEVATION

NOTE: ALL REINFORCEMENT 2" CLEAR UNLESS OTHERWISE NOTED.

LEGEND
F.F. - FRONT FACE
R.F. - REAR FACE
E.F. - EACH FACE

environmental design group
Engineers • Landscape Architects • Surveyors
1333 Commerce Drive Stow, OH 44224
(216) 686-1686

5/10

FORWARD ABUTMENT PLAN AND ELEVATION
BRIDGE NO. COL-170-1895
OVER LITTLE BEAVER CREEK
COLUMBIANA COUNTY

DESIGNED	DRAWN	TRACED	CHECKED	REVIEWED	DATE	REVISED
R.J.W.	D.R.G.	D.R.G.	P.J.R.	D.H.G.	7/13/88	

FHWA REGION	STATE	PROJECT	
	OHIO	BRS-557 (2)	

17 / 21

COL-170-18.95

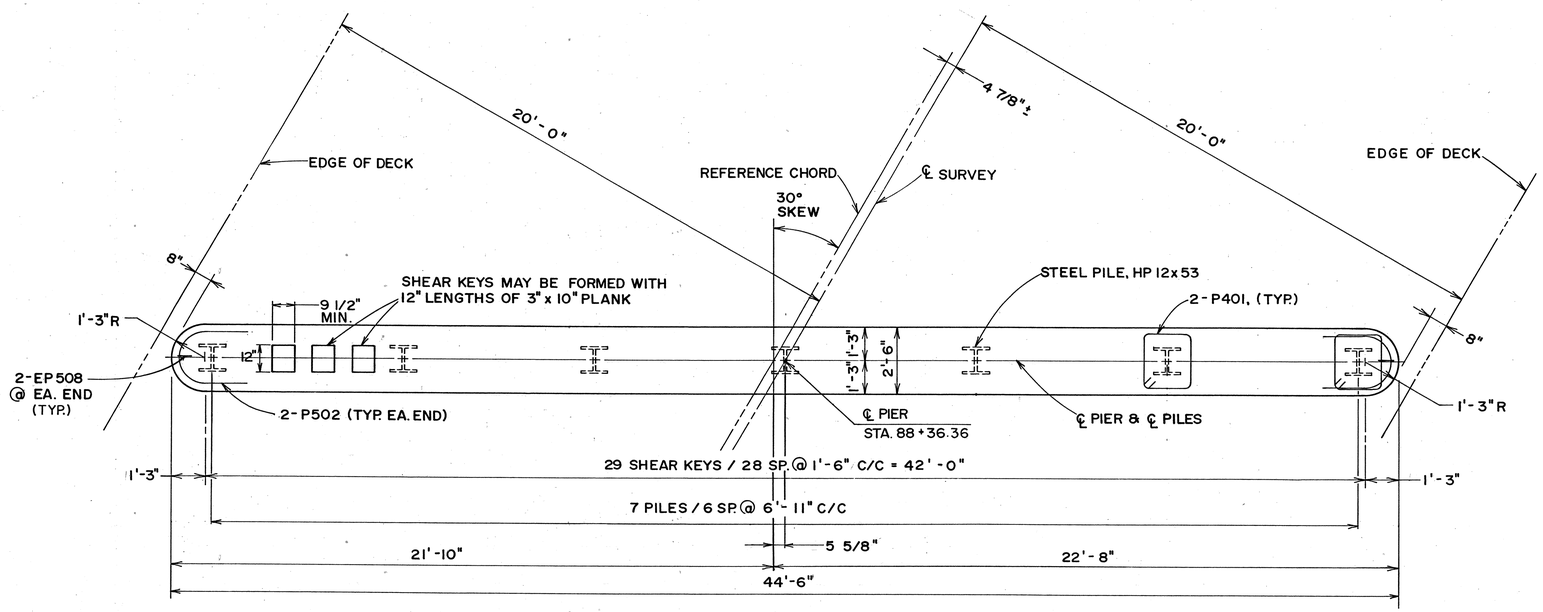

PIER NO.1 PLAN

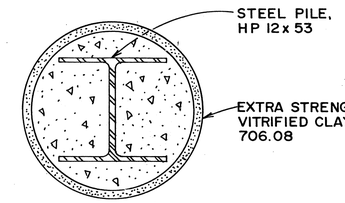

SECTION B-B

After driving the pile, place the pipe into position, and fill with concrete. The concrete encasement may be placed in water as per 511, care being taken to remove all dirt between the pile and the pipe. The concrete and clay pipe shall be included with piles for payment. See pile encasement note in general notes.

SUPERELEVATION @ ℄ OF PIER			
	LT. *	℄ SURVEY	RT *
TOP OF DECK	1017.17	1017.46	1017.57
BOTTOM OF DECK	1015.82	1016.11	1016.22
PIER CAP	1015.82	1015.82	1015.82
HEIGHT OF CROWN	0.00	0.29	0.40

*ELEVATIONS TAKEN AT EDGE OF PIER

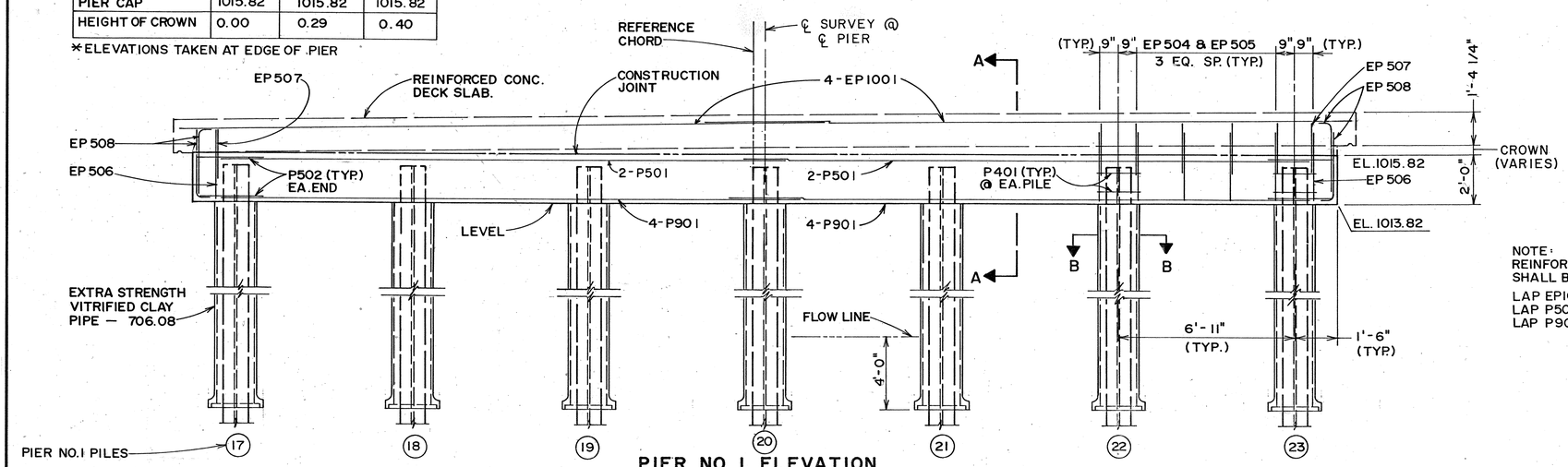

PIER NO. 1 ELEVATION

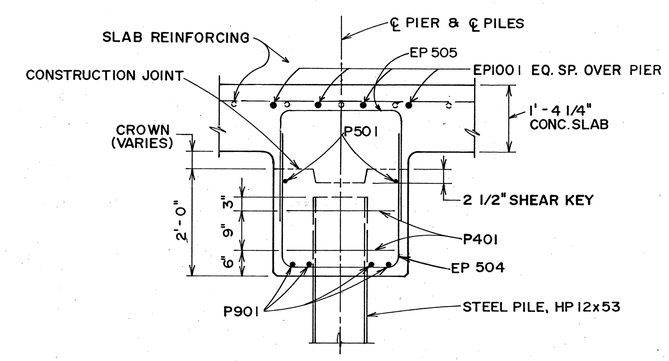

SECTION A-A

NOTE:
REINFORCING STEEL LAP LENGTHS SHALL BE AS FOLLOWING:
LAP EP1001 - 5'-3" MIN.
LAP P501 - 1'-8" MIN.
LAP P901 - 4'-2" MIN.

environmental design group
Engineers • Landscape Architects • Surveyors
1333 Commerce Drive Stow, OH 44224
(216) 686-1866

6 / 10

PIER NO. 1
PLAN & ELEVATION

BRIDGE NO. COL-170-1895
OVER LITTLE BEAVER CREEK

COLUMBIANA COUNTY

DESIGNED	DRAWN	TRACED	CHECKED	REVIEWED DATE	REVISED
RJW	CAF	CAF	PJR	DHG 7/13/88	

FHWA REGION	STATE	PROJECT	
	OHIO	BRS-557(2)	

18/21

COL-170-18.95

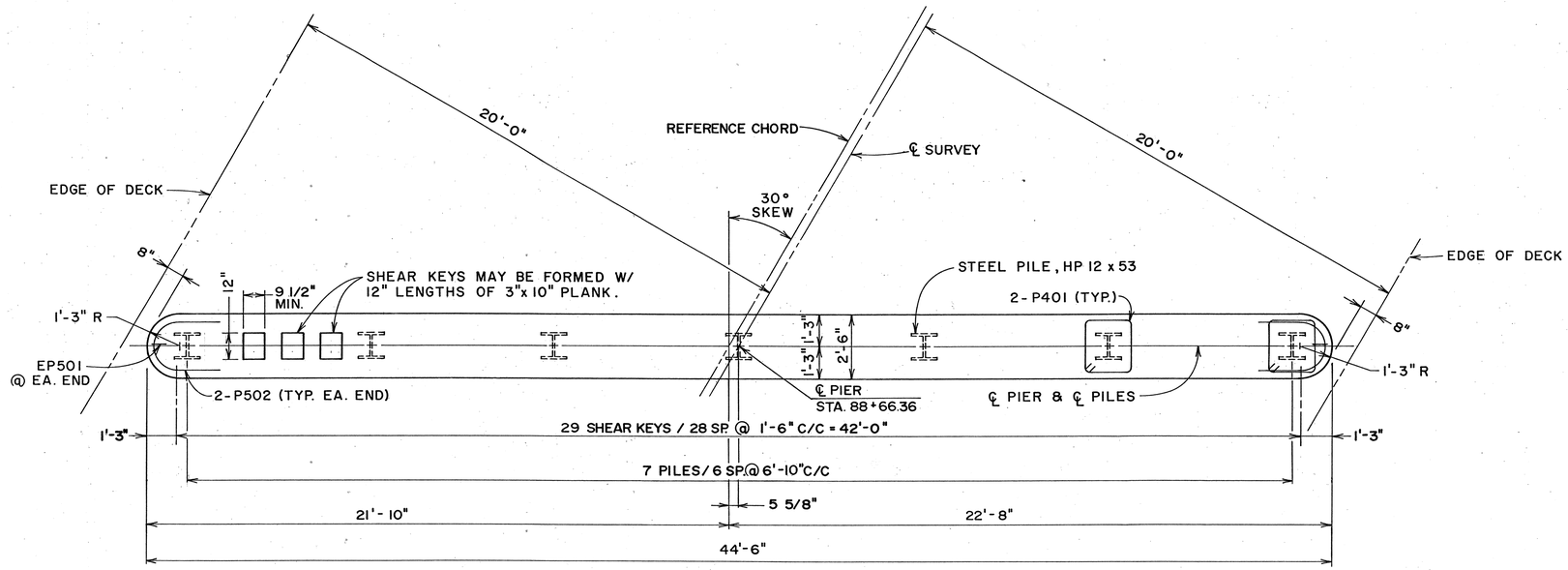

PIER NO.2 PLAN

After driving the pile, place the pipe into position, and fill with concrete. The concrete encasement may be placed in water as per 511, care being taken to remove all dirt between the pile and the pipe. The concrete and clay pipe shall be included with piles for payment. See pile encasement note in general notes.

For encasement section see sheet 6/10

SUPERELEVATION @ ℄ OF PIER			
	LT. *	REF. CHORD	RT. *
TOP OF DECK	1016.86	1016.94	1016.89
BOTTOM OF DECK	1015.51	1015.59	1015.54
PIER CAP	1015.51	1015.51	1015.51
HEIGHT OF CROWN	0.00	0.08	0.03

* ELEVATIONS TAKEN AT EDGE OF PIER

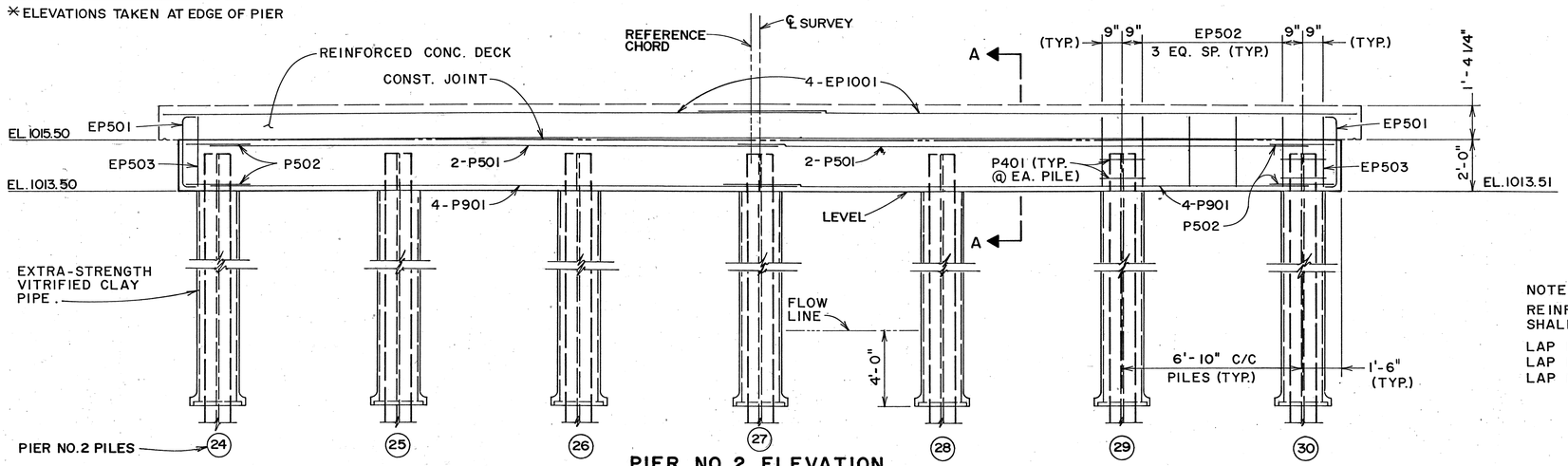

PIER NO. 2 ELEVATION

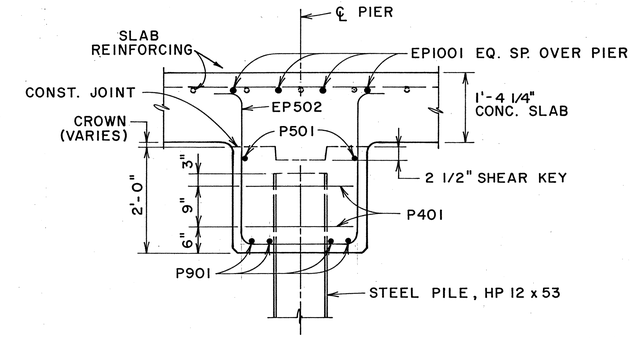

SECTION A-A

NOTE:

REINFORCING STEEL LAP LENGTHS SHALL BE AS FOLLOWS:

LAP EP1001 ~ 5'-3" MIN.
LAP P501 ~ 1'-8" MIN.
LAP P901 ~ 4'-2" MIN.

environmental design group — Engineers · Landscape Architects · Surveyors, 1533 Commerce Drive, Stow, OH 44224, (216) 686-1898

7/10

PIER NO. 2 PLAN & ELEVATION

BRIDGE NO. COL-170-1895
OVER LITTLE BEAVER CREEK

COLUMBIANA COUNTY

DESIGNED	DRAWN	TRACED	CHECKED	REVIEWED DATE	REVISED
RJW	CAF	CAF	PJR	DHG 7/13/88	

FHWA REGION	STATE	PROJECT	
	OHIO	BRS-557 (2)	

19/21

COL-170-18.95

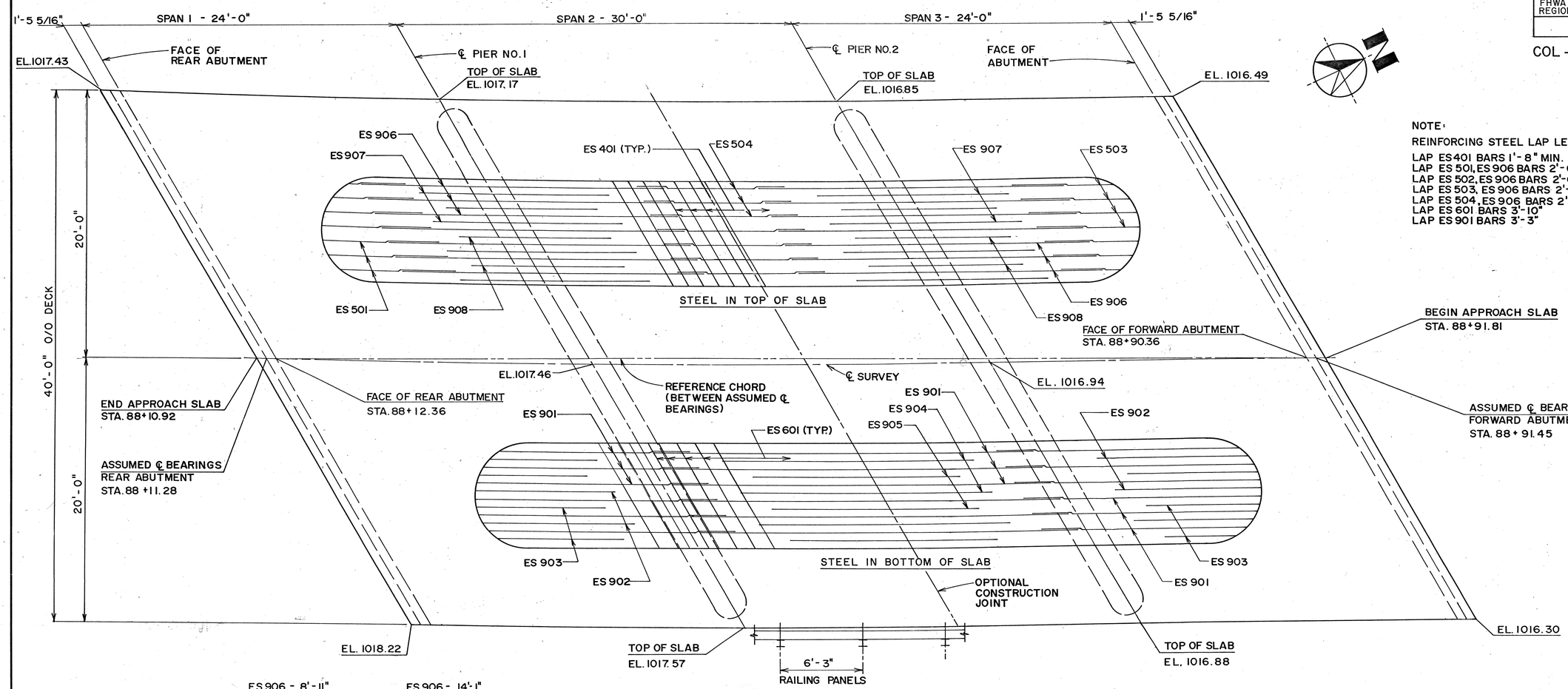

SLAB PLAN

NOTE:
REINFORCING STEEL LAP LENGTHS ARE AS FOLLOWS:
LAP ES401 BARS 1'-8" MIN.
LAP ES501, ES906 BARS 2'-6" MIN.
LAP ES502, ES906 BARS 2'-6" MIN.
LAP ES503, ES906 BARS 2'-6" MIN.
LAP ES504, ES906 BARS 2'-1" MIN.
LAP ES601 BARS 3'-10"
LAP ES901 BARS 3'-3"

NOTE: ALL BARS WITH PREFIX "E" ARE EPOXY COATED.

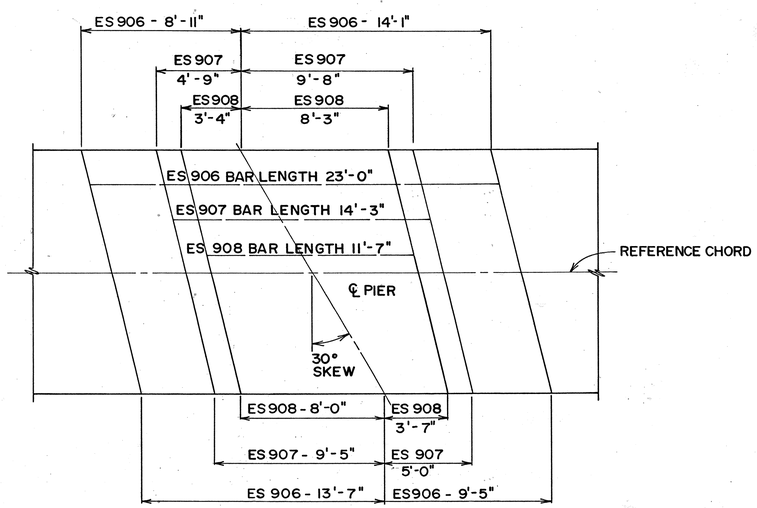

BAR REPLACEMENT DIAGRAM
(TYPICAL PLACEMENT OVER PIERS)

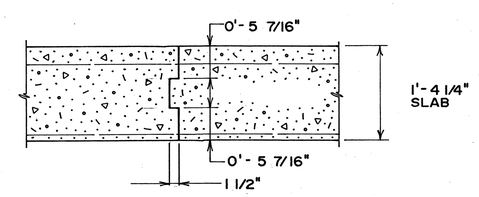

OPTIONAL CONSTRUCTION JOINT

environmental design group
Engineers - Landscape Architects - Surveyors
1533 Commerce Drive Stow, OH 44224
(216) 686-1599

8/10

SUPERSTRUCTURE DETAILS

BRIDGE NO. COL-170-1895
OVER LITTLE BEAVER CREEK

COLUMBIANA COUNTY

DESIGNED	DRAWN	TRACED	CHECKED	REVIEWED DATE	REVISED
RJW	CAF	CAF	PJR	DHG 7/13/88	

FHWA REGION	STATE	PROJECT	
	OHIO	BRS-557 (2)	

20/21

COL-170-18.95

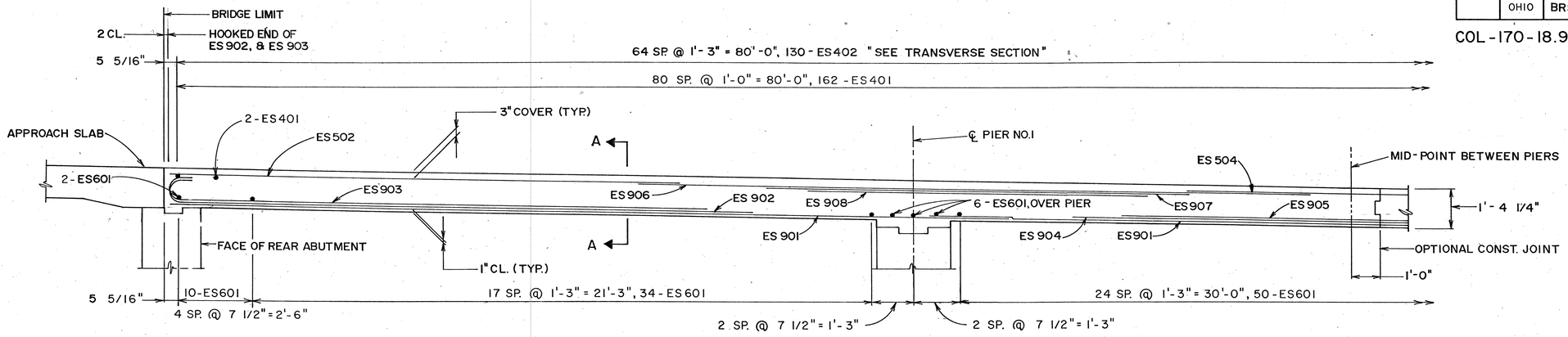

SLAB PROFILE (REAR)

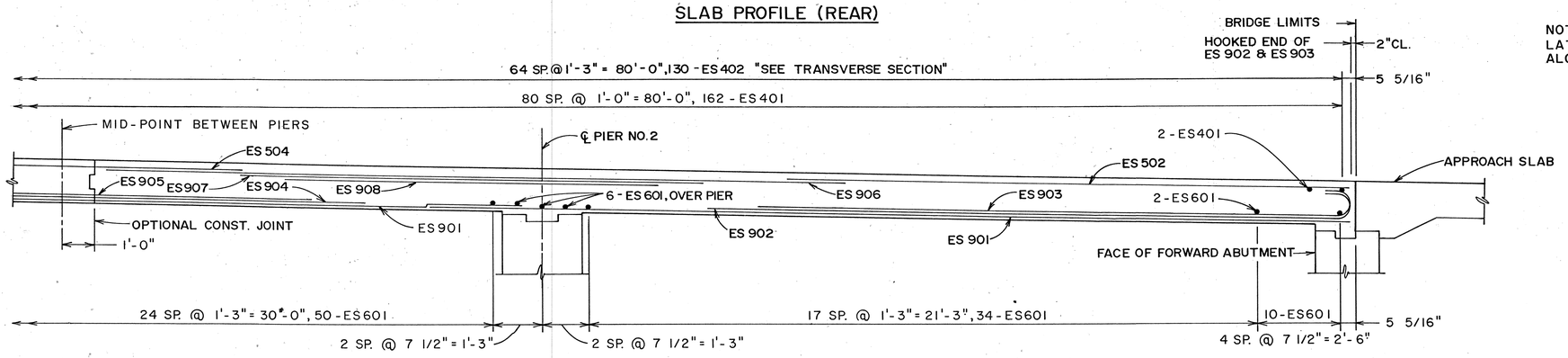

NOTE:
LATERAL BAR SPACING MEASURED ALONG CENTERLINE.

✳ - REINFORCING STEEL IN SPAN NO.2

✳✳ - REINFORCING STEEL IN SPAN NO.3

SLAB PROFILE (FORWARD)

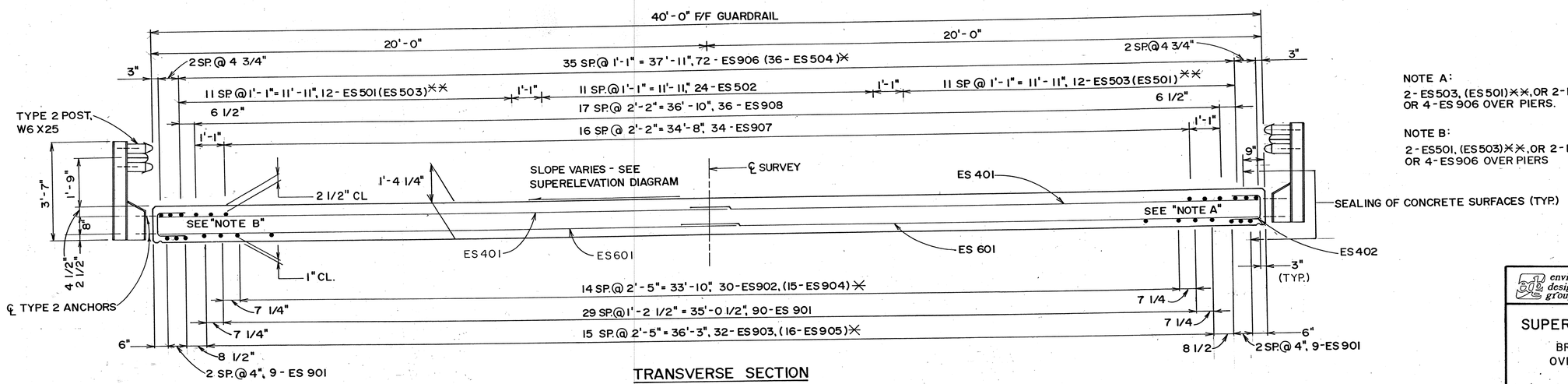

NOTE A:
2-ES503, (ES501)✳✳, OR 2-ES 504✳, OR 4-ES 906 OVER PIERS.

NOTE B:
2-ES501, (ES503)✳✳, OR 2-ES 504 ✳, OR 4-ES906 OVER PIERS

TRANSVERSE SECTION
(TAKEN THRU SPAN NO.1)
A - A

environmental design group
Engineers • Landscape Architects • Surveyors
1933 Commerce Drive, Stow, OH 44224
(216) 686-1888

9/10

SUPERSTRUCTURE DETAILS

BRIDGE NO. COL-170-1895
OVER LITTLE BEAVER CREEK

COLUMBIANA COUNTY

DESIGNED	DRAWN	TRACED	CHECKED	REVIEWED DATE	REVISED
RJW	CAF	CAF	PJR	DHG 7/13/88	

FHWA REGION	STATE	PROJECT	
	OHIO	BRS-557(2)	

21/21

COL-170-18.95

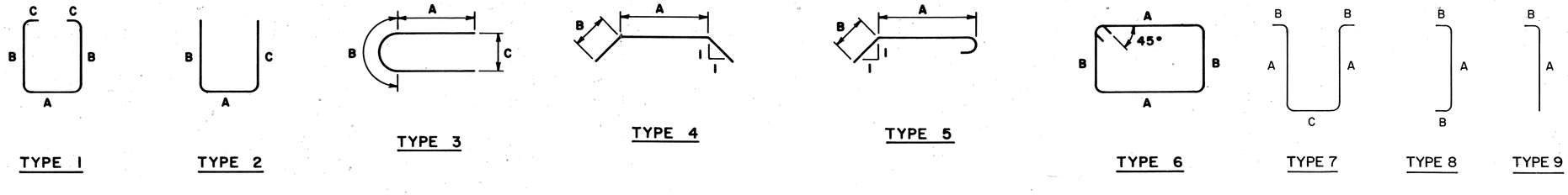

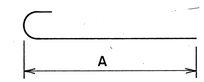

MARK	NO.	LENGTH	WT.	TYPE	A	B	C	D		REAR ABUT.	FWD. ABUT.	PIER #1	PIER #2	SUPER.	
					ABUTMENTS										
A401	32	8'-4"	178	6	1'-9"	2'-8"				16	16				
A501	8	27'-7"	230	S							8				
A502	164	6'-10"	1168	2	2'-11"	2'-1"	2'-1"			82	82				
A503	4	23'-4"	97	S							4				
A504	16	10'-0"	167	2	11"	4'-8"	4'-8"			8	8				
A505	14	8'-7"	125	2	1'-8"	3'-7"	3'-7"			14					
A506	9	4'-5"	42	S						5	4				
A507	10	6'-6"	68	S						6	4				
A508	9	2'-11"	28	S						5	4				
A509	8	3'-8"	31	S						4	4				
A510	8	23'-3"	194	S						8					
A511	8	28'-0"	234	S						8					
A512	13	7'-11"	107	2	1'-8"	3'-3"	3'-3"			13					
A513	27	7'-1"	199	2	1'-8"	2'-10"	2'-10"				27				
A801	8	27'-11"	596	S							8				
A802	8	28'-9"	614	S						8					
A1001	16	25'-1"	1726	S						8	8				
D801	54	5'-4"	768	5	3'-9"	1'-5"				27	27				
		TOTAL	6572												
					PIERS										
P401	28	7'-0"	131	6	2'-0"	1'-9"						14	14		
P501	8	21'-9"	182	S								4	4		
P502	8	6'-4"	53	3	1'-7"	3'-2"	2'-1"					4	4		
P901	16	23'-0"	1251	S								8	8		
		TOTAL	1617												
			8189		TOTAL - REINFORCING STEEL, GRADE 60										

MARK	NO.	LENGTH	WT.	TYPE	A	B	C	D		REAR ABUT.	FWD. ABUT.	PIER #1	PIER #2	SUPER.	
					EPOXY COATED PIERS										
EP501	2	3'-6"	7	8	2'-9"	0'-6"							2		
EP502	24	8'-2"	204	7	2'-9"	0'-6"	2'-2'						24		
EP503	2	8'-0"	17	7	2'-9"	0'-6"	2'-0"						2		
EP504	24	6'-11"	173	2	2'-2"	2'-6"	2'-6"					24			
EP505	24	6'-1"	152	2	2'-2"	2'-1"	2'-1"					24			
EP506	2	6'-9"	14	2	2'-0"	2'-6"	2'-6"					2			
EP507	2	5'-11"	13	2	2'-0"	2'-1"	2'-1"					2			
EP508	4	3'-2"	13	9	2'-9"	0'-6"						4			
EP1001	16	25'-7"	1762	S								8	8		
		TOTAL	2355												
					EPOXY COATED (SUPERSTRUCTURE)										
ES401	162	23'-9"	2570	S										162	
ES402	130	2'-10"	246	2	1'-0"	1'-0"	1'-0"							130	
ES501	28	19'-0"	555	S										28	
ES502	24	17'-4"	434	S										24	
ES503	28	19'-9"	577	S										28	
ES504	36	11'-2"	420	S										36	
ES601	150	24'-10"	5595	S										150	
ES901	108	28'-8"	10,528	S										108	
ES902	30	21'-3"	2168	10	20'-0"									30	
ES903	32	19'-8"	2140	10	18'-5"									32	
ES904	15	18'-11"	965	S										15	
ES905	16	15'-7"	848	S										16	
ES906	80	23'-0"	6256	S										80	
ES907	34	14'-5"	1667	S										34	
ES908	36	11'-7"	1418	S										36	
		TOTAL	36,387												
			38,742		TOTAL - EPOXY COATED REINFORCING STEEL										

NOTES:

BAR SIZE: The bar size is indicated in the bar mark. The first digit where three digits are used, and the first two digits where four are used, indicate the bar size number. For example: A506 is a No. 5 size bar and P1101 is a No. 11 size bar.

REINFORCING STEEL SAMPLES: Refer to CMS Sections 106.03, 700, 709.01 through 709.05 and 709.08. Sufficient additional reinforcing steel shall be provided for sampling. Random samples shall be replaced in the structures by the additional steel, spliced in accordance with 509.088.

environmental design group
Engineers - Landscape Architects - Surveyors
1333 Commerce Drive Stow, OH 44224
(216) 686-1896

10/10

REINFORCING STEEL LIST

BRIDGE NO. COL-170-1895
OVER LITTLE BEAVER CREEK

COLUMBIANA COUNTY

DESIGNED	DRAWN	TRACED	CHECKED	REVIEWED DATE	REVISED
RJW	CAF	CAF	PJR	DHG 7/13/88	

TR-110
000-6-72

GEOLOGY OF THE SITE

THE STRUCTURE SITE IS LOCATED IN THE MODERATELY DISSECTED GLACIATED PORTION OF THE ALLEGHENY PLATEAU REGION, IN AN AREA WHERE MODERATELY DEEP GLACIAL AND ALLUVIAL DEPOSITS OVERLIE BEDROCK, OF PENNSYLVANIAN AGE.

EXPLORATION

THE EXPLORATION CONSISTED OF TWO DRIVE SAMPLE BORINGS MADE BY MEANS OF A MECHANICALLY-POWERED HOLLOW STEM ROTARY AUGER MOUNTED ON A MOBILE PLATFORM, PERFORMED ON JANUARY 30, 1985.

INVESTIGATIONAL FINDINGS AND OBSERVATIONS

THE BORINGS ENCOUNTERED INTERVALS OF EXTREMELY LOOSE TO EXTREMELY DENSE UNSTRATIFIED BASIC SILTS, SAND AND GRAVEL MODIFIED WITH CLAYS, WOOD FRAGMENTS AND VARIOUS PERCENTAGES OF EACH OTHER THAT GRADUALLY INCREASE (ERRATIC AT TIMES) IN DENSITY WITH INCREASE IN DEPTH. BORING B-1 (IN THE GENERAL VICINITY OF THE REAR ABUTMENT) PENETRATED TO A DEPTH OF 30.5 FEET, ELEVATION 986.5 FEET AND WAS TERMINATED AT THAT POINT AFTER PENETRATING IN EXCESS OF 13.0 FEET OF MATERIAL REQUIRING IN EXCESS OF 30 BLOWS PER FOOT IN THE STANDARD PENETRATION TEST IMMEDIATELY PRIOR TO TERMINATION. BORING B-2 (IN THE GENERAL VICINITY OF THE FORWARD ABUTMENT) PENETRATED TO A DEPTH OF 31.5 FEET, ELEVATION 985.5 FEET AND WAS TERMINATED AT THAT POINT AFTER PENETRATING IN EXCESS OF 6.5 FEET OF MATERIAL REQUIRING IN EXCESS OF 30 BLOWS PER FOOT IN THE STANDARD PENETRATION TEST IMMEDIATELY PRIOR TO TERMINATION.

BEDROCK SURFACE WAS NOT ENCOUNTERED IN EITHER OF THE TEST BORINGS PERFORMED.

FREE WATER WAS OBSERVED AND MEASURED IN BORING B-1 AT 14.0-FOOT DEPTH, ELEVATION 1003.0 FEET AND IN BORING B-2 AT 10.0-FOOT DEPTH, ELEVATION 1007.0 FEET.

LEGEND

- Auger Boring Location - Plan View.
- Press and / or Drive Sample and / or Core Boring Location - Plan View.
- Drive Rod Penetration Resistance Sounding Location - Plan View.
- Capped Pile
- Footing
- Footing on Pile
- TR — Top of Rock
- H — Horizontal Bar on Boring Log Indicates the Depth the Sample Was Taken.
- X/Y/Z — Figures Beside the Boring Log in Profile Indicate the Number of Blows for Standard Penetration Test.
  X = Number of Blows for First 6 inches.
  Y = Number of Blows for Second 6 inches.
  Z = Number of Blows for Third 6 inches.
- Drive Rod Penetration Resistance Sounding Log - Profile
- Casing
- Resistance "R" < 10,000 lbs.
- Resistance "R" > 10,000 lbs.
- Z — Indicates Final Measurement of Penetration, in Inches.
- W — Indicates Free Water Elevation.
- Indicates Static Water Elevation.

SYMBOLS OF ROCK TYPES

- Coal
- Weathered Mudstone or Claystone
- Mudstone or Claystone
- Weathered Shale
- Shale
- Weathered Siltstone
- Siltstone
- Weathered Sandstone
- Sandstone
- Leached Dolomite
- Dolomite
- Leached Limestone
- Limestone
- Boulders or Cobbles

GENERAL INFORMATION

Drive Rod Penetration Sounding Tests

Drive rod penetration resistance tests constitute driving a 1.315-inch diameter steel rod, with a 45° cone point, into the ground, using a 122-pound drop-hammer with a free fall of five feet. At one or two-foot depth intervals, a measurement is taken to determine the amount of penetration achieved in three hammer drops. This reading is converted to an empirical value for capacity "R", in thousands of pounds (which is a measure of both the point resistance and frictional resistance on the rod), by using charts prepared by the Ohio Department of Highways, Bureau of Bridges, on the basis of correlation study of rod penetration with past performance of pile driving. For interpretation, a graph is prepared by plotting the value "R" against the depth at which the reading was taken, and connecting the plotted points. The curve so obtained reflects the density of subsurface materials in a manner that can be readily compared with data from similar tests at other locations on the structure site. From this comparison, the overall uniformity of subsurface condition may be evaluated.

Drive Sample Borings - Drive-Press Sample Borings

Drive sample borings are made by means of a rotary-type drill rig, employing a 2" O.D., 1-3/8" I.D. sampler, at 2-1/2 and / or 5-foot depth intervals, driven by means of a 140 - pound drop-hammer with a free fall of 30 inches. The number of blows required to drive the sampler 18 inches is considered the standard penetration test.

Drive-press sample borings are made by means of a rotary-type drill rig, employing a 2" O.D., 1-3/8" I.D. drive sampler, and 3" O.D. thin-wall press sampler. The press sampler is advanced by continuous uniform pressure, applied by the drill rig.

The boring log sheets show a graphic plot of the information obtained, including depth and elevation of the sample, number of blows for the standard penetration tests in three 6-inch increments, depth of press samples, field sample number, sample description - based on laboratory tests and the Casagrande AC classification system - and gradation, plasticity, and moisture content determinations. Results of strength and consolidation testing, if performed, appear on separate enclosures.

At depths where materials are bouldery or gravelly to the extent that the sampler can not be driven, a wash sample is procured for visual classification, in order to determine the general character of the material. These samples are not considered sufficiently representative to warrant laboratory testing.

Particle Size Definitions

Boulders | 12" Cobbles | 3" Gravel | 2.0mm (No. 10 sieve) Coarse Sand | 0.42mm (No. 40 sieve) Fine Sand | 0.074mm (No. 200 sieve) Silt | 0.005mm Clay

NOTE - ALL AVAILABLE SOIL AND BEDROCK INFORMATION WHICH CAN BE CONVENIENTLY SHOWN ON THE STRUCTURE FOUNDATION INVESTIGATION SHEETS HAS BEEN SO REPORTED. ADDITIONAL SUBSURFACE INVESTIGATIONS MAY HAVE BEEN MADE TO STUDY SOME SPECIAL ASPECT OF THE PROJECT. COPIES OF THIS DATA, IF ANY, MAY BE INSPECTED IN THE DISTRICT DEPUTY DIRECTOR'S OFFICE, THE BUREAU OF TESTS AT 1600 WEST BROAD STREET, THE PAVEMENT AND SOILS SECTION OF THE BUREAU OF LOCATION AND DESIGN OR IN THE BRIDGE BUREAU AT 25 SOUTH FRONT STREET.

LOG OF BORING

Date Started 1/30/85 | Sampler Type SS | Dia. 1 3/8" | Approx. Water Elev. 1003.0'
Date Completed 1/30/85 | Casing: Length ____ | Dia. ____ | Approx. Surface Elev. 1017.0'
Boring No. B-1 | Station & Offset 89+50 6' RT. (REAR ABUTMENT)

Elev.	Depth	Std. Pen. (N)	Rec. ft.	Loss ft.	Description	Sample No.	% Agg.	% C.S.	% F.S.	% Silt	% Clay	L.L.	P.I.	W.C.	SHTL Class.
1017.0	0														
1016.6					BLACKTOP	-	-	-	-	-	-	-	-	-	VISUAL
1014.5	2				BROWN SAND AND GRAVEL (FILL MATERIAL)	-	-	-	-	-	-	-	-	-	VISUAL
	4	AUGERED			BROWN SILTY GRAVELLY SAND	1	32	16	23	17	12	NP	NP	12	A-2-4
1012.0	6	2/3/6			BROWN SILTY GRAVELLY SAND	2	36	23	21	12	8	NP	NP	10	A-1-b
1009.5	8	1/3/5			GRAY SILTY GRAVELLY SAND	3	17	29	31	12	11	NP	NP	16	A-3a
1007.0	10	7/6/5			GRAY SILTY SANDY GRAVEL	4	48	7	24	15	6	NP	NP	21	A-1-b
1004.5	12	2/2/5			GRAY GRAVELLY SANDY SILT	5	23	7	24	29	17	NP	NP	10	A-4a
1002.0	14	2/5/10			GRAY SANDY SILT	6	11	6	41	33	9	NP	NP	10	A-4a
999.5	16	9/16/24			GRAY SANDY SILT	7	11	5	40	35	9	NP	NP	13	A-4a
997.0	18	14/30/45			GRAY SILTY SAND	8	0	5	82	9	4	NP	NP	18	A-3a
992.0	20	30/50			GRAY SILTY SAND	9	0	3	79	14	4	NP	NP	20	A-3a
987.0	30	75(0.5')			GRAY SILTY SAND	10	0	1	87	10	2	NP	NP	20	A-3a
986.5					BOTTOM OF BORING										

LOG OF BORING

Date Started 1/30/85 | Sampler Type SS | Dia. 1 3/8" | Approx. Water Elev. 1007.0'
Date Completed 1/30/85 | Casing: Length ____ | Dia. ____ | Approx. Surface Elev. 1017.0'
Boring No. B-2 | Station & Offset 90+00 9' RT. (FORWARD ABUTMENT)

Elev.	Depth	Std. Pen. (N)	Rec. ft.	Loss ft.	Description	Sample No.	% Agg.	% C.S.	% F.S.	% Silt	% Clay	L.L.	P.I.	W.C.	SHTL Class.
1017.0	0														
1015.5	2				BLACKTOP AND CONCRETE	-	-	-	-	-	-	-	-	-	VISUAL
1012.0	6	25/13/3			BROWN SILTY SANDY GRAVEL AND BOULDERS	1	52	13	24	6	5	NP	NP	13	A-1-b
1007.0	10	1/2/2			GRAY SILTY GRAVELLY SAND	2	18	12	31	25	14	NP	NP	19	A-4a
1004.5	12	1/23/12			GRAY SILTY GRAVELLY SAND WITH WOOD FRAGMENTS	3	36	16	23	19	6	NP	NP	24	A-1-b
1002.0	16	2/4/6			GRAY GRAVELLY SANDY SILT	4	21	9	22	31	17	NP	NP	12	A-4a
999.5	18	4/5/6			GRAY GRAVELLY SANDY SILT	5	20	7	24	31	18	NP	NP	12	A-4a
997.0	22	8/7/10			GRAY SILTY GRAVELLY SAND	6	26	5	33	26	10	NP	NP	13	A-4a
992.0	26	8/19/28			GRAY SILT	7	0	1	7	70	22	NP	NP	16	A-4b
987.0	30														
985.5	32	15/15/20			GRAY SANDY SILT	8	9	5	14	47	25	NP	NP	8	A-4a
					BOTTOM OF BORING										

NOTE: Information shown by this subsurface investigation was obtained solely for the use in establishing design controls for the project. The State of Ohio does not guarantee the accuracy of this data and it is not to be construed as a part of the plans governing construction of the project.

OHIO DEPARTMENT OF TRANSPORTATION
DIVISION OF HIGHWAYS — TESTING LABORATORY
1600 WEST BROAD STREET, COLUMBUS, OHIO 43223

STRUCTURE FOUNDATION INVESTIGATION
BRIDGE NO. COL-170-1895
OVER NORTH FORK LITTLE BEAVER CK.
SEC. COL-170-18.95

CHECKED BY	REVIEWED BY	DATE
L. N. L.	R. D. R.	3/6/85

COL-170-18.95 (2/2)

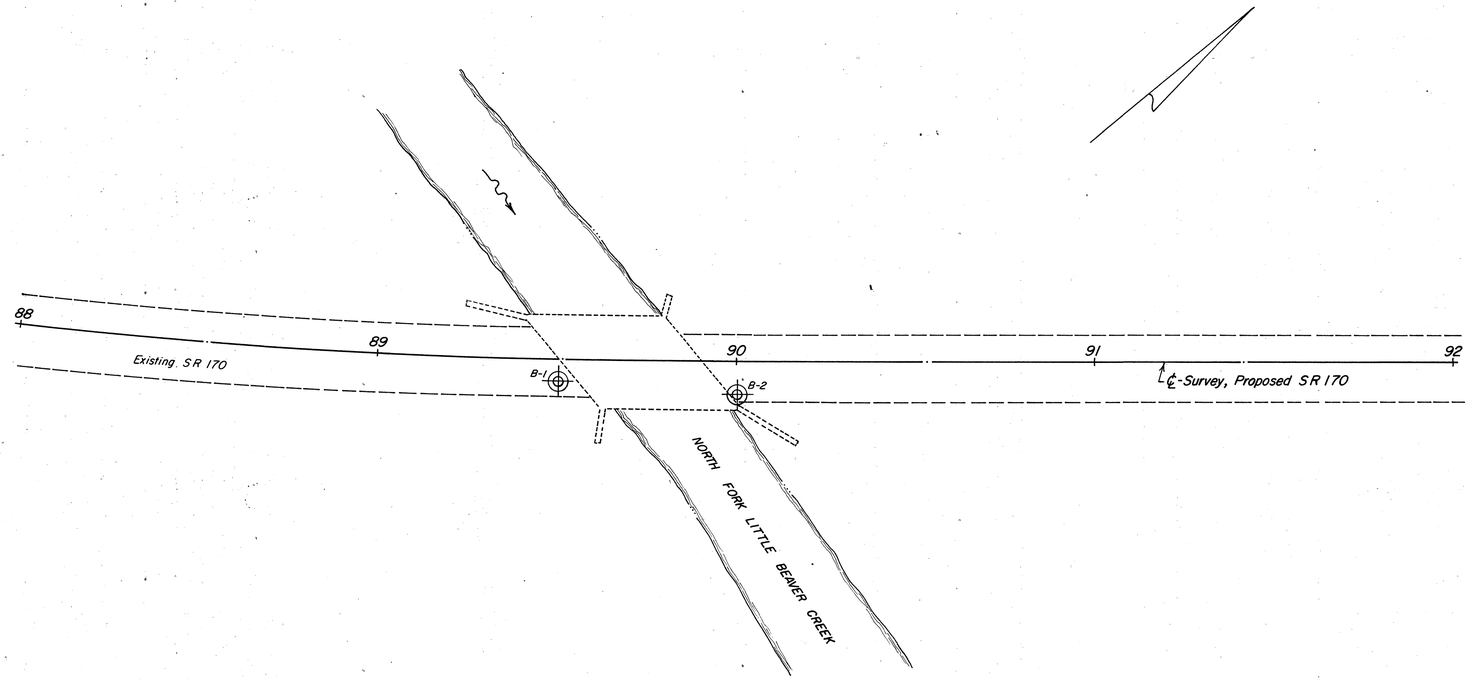

NOTE: Ground line was fabricated from a topography map and is very approximate.

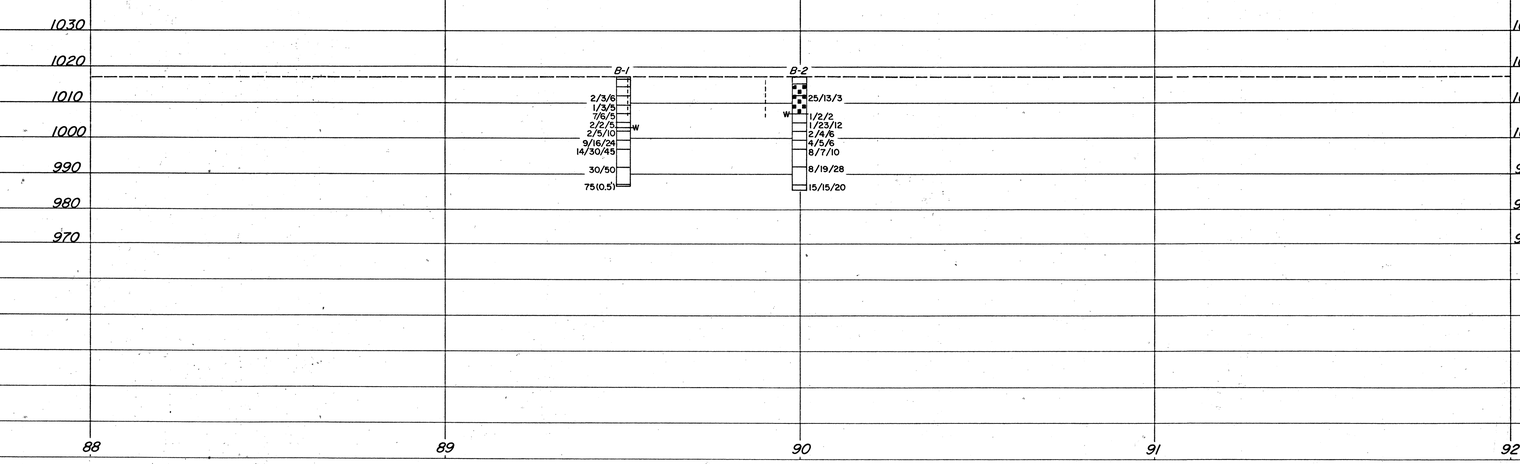

SCALE: 1" = 20'

OHIO DEPARTMENT OF TRANSPORTATION
DIVISION OF HIGHWAYS - TESTING LABORATORY
1600 WEST BROAD STREET COLUMBUS, OHIO 43223

STRUCTURE FOUNDATION INVESTIGATION
BRIDGE NO. COL-170-1895
OVER NORTH FORK LITTLE BEAVER CK.
SEC. COL-170-18.95

PLAN AND PROFILE

DRAWN BY	CHECKED BY	REVIEWED BY	DATE
L. N. L.	L. N. L.	R. D. R.	3/6/85

COL-170-18.95 2/2