STATE OF OHIO
DEPARTMENT OF TRANSPORTATION

CUY/LAK-LG-FY2025

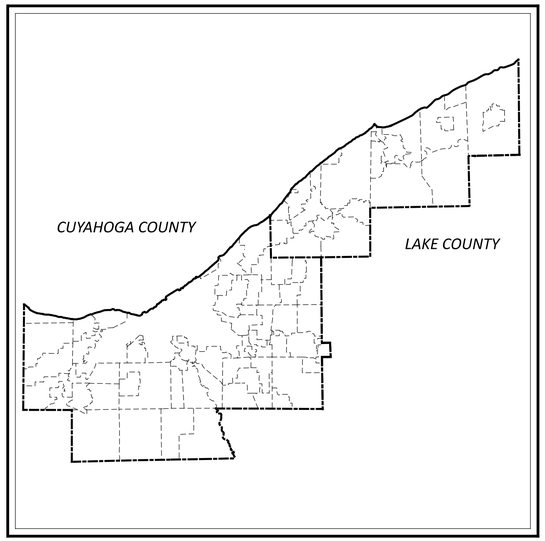

LOCATION MAP

LATITUDE: 41°24'54" LONGITUDE: 81°36'54"

N

PORTION TO BE IMPROVED
INTERSTATE HIGHWAY
FEDERAL ROUTES
STATE ROUTES
COUNTY & TOWNSHIP ROADS
OTHER ROADS

INDEX OF SHEETS:

Title Sheet	P.1
Location Map	P.2
Lighting Notes	P.3-P.8
General Summary	P.9
Subsummaries	P.10-P.11, P.11A-P.11D
Circuit Diagrams	P.12-P.43, P.43A
Lighting Plans	P.44-P.51,P.51A, P.52, P.52A, P.53, P.53A, P.54, P.55 (Not Used), P.56 (Not Used), P.57-P.58, P.58A, P.58B, P.59-P.60, P.60A, P.60B, P.61-P.79, P.79A, P.80

FEDERAL PROJECT NUMBER

N/A

RAILROAD INVOLVEMENT

NONE

PROJECT DESCRIPTION

2025 DISTRICT 12 LIGHTING MAINTENANCE

EARTH DISTURBED AREAS

PROJECT EARTH DISTURBED AREA:	*N/A MAINTENANCE PROJECT*
ESTIMATED CONTRACTOR EARTH DISTURBED AREA:	*N/A MAINTENANCE PROJECT*
NOTICE OF INTENT EARTH DISTURBED AREA:	*N/A MAINTENANCE PROJECT*

LIMITED ACCESS

THIS IMPROVEMENT IS ESPECIALLY DESIGNED FOR THROUGH TRAFFIC AND HAS BEEN DECLARED A LIMITED ACCESS HIGHWAY OR FREEWAY BY ACTION OF THE DIRECTOR IN ACCORDANCE WITH THE PROVISIONS OF SECTION 5511.02 OF THE OHIO REVISED CODE.

2023 SPECIFICATIONS

THE STANDARD SPECIFICATIONS OF THE STATE OF OHIO, DEPARTMENT OF TRANSPORTATION, INCLUDING SUPPLEMENTAL SPECIFICATIONS LISTED IN THE PLANS, CHANGES LISTED IN THE PROPOSAL, AND THE SUPPLEMENTAL SPECIFICATION 800 VERSION INDICATED ON THE PROPOSAL SHALL GOVERN THIS IMPROVEMENT.

I HEREBY APPROVE THESE PLANS AND DECLARE THAT THE MAKING OF THIS IMPROVEMENT WILL NOT REQUIRE THE CLOSING TO TRAFFIC OF THE HIGHWAY AND THAT PROVISIONS FOR THE MAINTENANCE AND SAFETY OF TRAFFIC WILL BE AS SET FORTH ON THE PLANS AND ESTIMATES.

DESIGN EXCEPTIONS

NONE

ADA DESIGN WAIVERS

NONE REQUIRED

DISTRICT DEPUTY DIRECTOR

John Picuri, P.E., P.S.
District 12 Deputy Director

DIRECTOR, DEPARTMENT OF TRANSPORTATION

Pamela Boratyn

UNDERGROUND UTILITIES
Contact Two Working Days Before You Dig
OHIO811.org Before You Dig
OHIO811, 8-1-1, or 1-800-362-2764
(Non members must be called directly)

PLAN PREPARED BY:
OHIO DEPARTMENT OF TRANSPORTATION
DISTRICT 12
PLANNING AND ENGINEERING

STANDARD CONSTRUCTION DRAWINGS							*SUPPLEMENTAL SPECIFICATIONS*		*SPECIAL PROVISIONS*
F-3.2	*7/18/14*	*MT-95.30*	*7/19/19*				*800*	*1/17/25*	
		MT-95.31	*7/19/19*				*821*	*4/20/12*	
HL-10.11	*7/21/23*	*MT-95.32*	*4/19/19*				*832*	*7/15/22*	
HL-10.12	*7/21/23*	*MT-95.45*	*7/21/23*				*916*	*7/15/22*	
HL-10.13	*1/20/23*	*MT-95.50*	*7/21/17*				*921*	*4/20/12*	
HL-10.31	*7/15/22*	*MT-98.10*	*1/17/20*						
HL-20.11	*7/21/23*	*MT-98.11*	*1/17/20*						
HL-20.21	*1/15/21*	*MT-98.20*	*4/19/19*						
HL-30.11	*7/21/23*	*MT-98.22*	*1/17/20*						
HL-40.20	*7/21/23*	*MT-98.28*	*1/17/20*						
HL-60.11	*7/21/17*	*MT-98.29*	*1/17/20*						
HL-60.21	*7/20/18*	*MT-99.60*	*7/15/16*						
HL-60.31	*7/21/23*								

ENGINEER'S SEAL

STATE OF OHIO
JAMES ALBRIGHT
E-89299
REGISTERED
PROFESSIONAL ENGINEER

TITLE SHEET

DESIGN AGENCY

DESIGNER JDA
REVIEWER DAB 12/12/24
PROJECT ID 110602
SHEET P.1 TOTAL 80

CUY/LAK-LG-FY2025

MODEL: Sheet PAPERSIZE: 34x22 (in.) DATE: 4/10/2025 TIME: 9:51:13 AM USER: jalbrig1
pw:\\ohiodot-pw.bentley.com:ohiodot-pw-02\Documents\01 Active Projects\District 12\Cuyahoga\110602\400-Engineering\Roadway\Sheets\110602_GT001.dgn

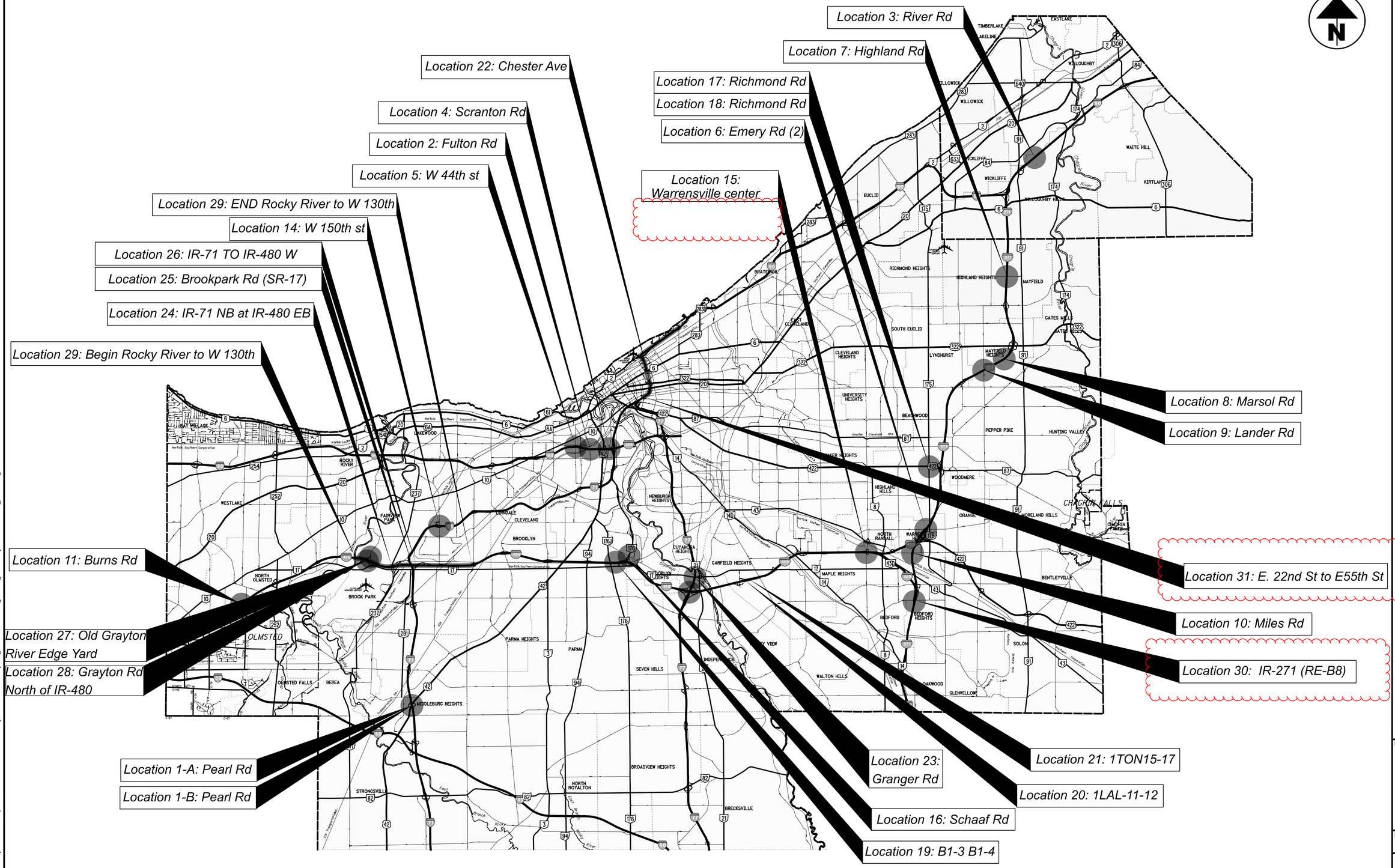

Location Map - Cuyahoga County and Partial Lake County

DESIGN AGENCY

DESIGNER
JDA

REVIEWER
DAB 12/12/24

PROJECT ID
110602

SHEET P.2 TOTAL 80

CUY/LAK-LG-FY2025

MODEL: Sheet PAPERSIZE: 34x22 (in.) DATE: 4/9/2025 TIME: 11:09:14 AM USER: jalbrig1
pw:\\ohiodot-pw.bentley.com:ohiodot-pw-02\Documents\01 Active Projects\District 12\Cuyahoga\110602\400-Engineering\Roadway\Sheets\110602_GB001.dgn

Scope Of Work

The intent of this contract is to provide for the expeditious maintenance of highway lighting infrastructure throughout district 12. The following major work items are proposed:

- Replace conventional light poles with low mast poles and led luminaires.
- Install new control centers and power services.
- Replace poles that were knocked down with low mast poles and led luminaires
- Replace conventional light poles with like poles.

The highway lighting components noted in the proposed work items shall be restored as noted in the plans and standard construction drawings.

All work (fabrication / installation) shall be performed in accordance with the following manuals:

2023 construction and material specifications handbook
Traffic engineering manual (with current revisions)
Highway lighting standard construction drawings (with current revisions)

Utilities

In addition to the requirements of section 107 of the construction and material specifications handbook, the contractor shall be responsible for all underground utilities as described below:

Due to the scope of this project and the number of utilities that may be involved, the contractor shall obtain the district 12 utility list at:

http://portal.dot.state.oh.us/districts/d12/production/default.aspx

There are no underground utilties shown on this plan. Go online and visit ohio811.org two (2) working days before you dig.

Staging Areas

There are no specific areas given in the plans for the contractor to use as a staging area(s). If the contractor wants to use an area(s) for staging, regardless if it falls within the project limits or not, the contractor is to use the right of way e-permitting system at https://odhcp.bemcorp.net/accounts/account/account in order to apply for a permit per section 107.02 of the CMS. For specific permitting questions, the contractor can contact the district permitting office, (Melvin Safford) at 216-584-2137, (Andrew Tomko) at 216-584-2195 or at district12permits@dot.ohio.gov.

If a permit is granted, all conditions of the permit shall be met in addition to the requirements of 104.04 of the CMS, at no additional cost to the state. If the project engineer deems that all the conditions of the permit were not met, then 10% of the contract bid amount for mobilization shall be withheld until all the conditions of the permit are satisfied.

Cooperation Between Contractors

The contractor shall cooperate and coordinate his operations with the contractor's operations on other projects that may be in force during the life of this contract. No waiver of any provisions of 105.07 of the construction and material specifications is intended.

Work Limits

The work limits shown on these plans are for physical construction only. The installation and operation of all temporary traffic control and temporary traffic control devices required by these plans shall be provided by the contractor, whether inside or outside these work limits.

Contingency Quantities

The contractor shall not order materials or perform work for items designated by plan note to be used "as directed by the engineer" unless authorized by the engineer.

Restoration And Clean Up

Restore all disturbed areas to a condition equal to that existing before the work was started per cms 104.04.

Remove any broken glassware found by crews in the work area. Dispose of any broken glass in regular rubbish disposal units. Dispose of all broken concrete off the right of way. Payment for restoration work in included in the unit price bid for the various items.

Existing Lighting Items, Duct Cable And Conduit

The locations of existing lighting items, conduit and duct cable shown on the plans have been obtained by searches of available records and field checks. It is believed that they are essentially correct, however, the state of Ohio does not guarantee their accuracy or completeness. The contractor shall field verify all work locations to properly orient and familiarize themselves to the existing conditions as a part of this contract.

The location sheets in this plan are for "information only". Pole data, pole names and luminaire wattage/distribution type is tabulated in the subsummary sheets and described in the general notes. Unless otherwise noted in this plan the stationing in the subsummary sheets is approximate and references the existing locations of poles, pull boxes and other lighting items only. The stationing was used to calculate trench and cable lengths.

Power Agencies

The power supplying agencies for this project are:

First Energy-The Illuminating Company
6896 miller road
Brecksville, Ohio 44141
Attn: call for new service request
Phone: 1-800-589-3101

City Of Cleveland, Division Of Public Power
1300 Lakeside Ave.
Cleveland, Ohio 44114
Attn: Chris Hirzel
Phone: (216) 664-3922, ext. 115

ODOT circuits

The contacts for the ODOT maintained circuits are:

Ohio Department of Transportation
Department of roadway services

5500 Transportation Blvd.
Garfield Hts., Ohio 44125

Attn: David Nimrichter (lighting/traffic circuits)
(216) 584-2296

The contractor shall notify David Nimrichter a minimum of 48 hours prior to performing any lighting work.

GENERAL NOTES

DESIGN AGENCY

DESIGNER JDA
REVIEWER DAB 12/12/24
PROJECT ID 110602
SHEET P.3 TOTAL 80

CUY/LAK-LG-FY2025

MODEL: Sheet PAPERSIZE: 34x22 (in.) DATE: 4/9/2025 TIME: 11:09:21 AM USER: jalbrig1
pw:\\ohiodot-pw.bentley.com:ohiodot-pw-02\Documents\01 Active Projects\District 12\Cuyahoga\110602\400-Engineering\Lighting\Sheets\110602_LN001.dgn

Airway/Highway Clearance For Airports And Heliports

This project has been identified as being within the influence area of a public use airport or heliport. No temporary structures or construction equipment at maximum operating height shall exceed a height of 60 ft. If any temporary structures or construction equipment will exceed this height, further coordination with the federal aviation administration (FAA), and the ODOT office of aviation, will be necessary prior to erecting such temporary structures or operating such equipment on the project. The contractor will be required to file a new FAA form 7460-1, advising the FAA that aeronautical study number 2025-agl-310-oe through 2025-agl-318-oe is being resubmitted and that an alteration to the original submission is requested.

Notify the ODOT office of aviation when resubmitting FAA form 7460-1. No temporary structures or construction equipment shall exceed the permissible height, until a copy of the FAA approval and the ODOT office of aviation permit has been furnished to the project engineer.

Faa approval may take up to 45 days. All submissions shall be directed to these offices:

Federal Aviation Administration
Southwest Regional Office
Obstruction Evaluation Group
10101 Hillwood Parkway
Fort Worth, Tx 76177
Fax: (817) 222-5920
Http://ceaaa.faa.gov

Ohio Department Of Transportation
Office Of Aviation
2829 West Dublin-Granville Road
Columbus, Ohio 43235

Light Pole Identification

Identification of the new and existing light poles shall be considered as incidental work per CMS 625.09.

Item 201-Clearing And Grubbing

Although there are no trees or stumps specifically marked for removal within the limits of the project, a lump sum quantity has been included in the general summary for item 201–clearing and grubbing. This item shall consist of the removal of trees and or brush to clear access to service poles, proposed control centers and trenching operations.

All provisions as set forth in C.M.S. 201 under this item shall be included in the lump sum price bid for item 201-clearing and grubbing.

The following estimated quantity has been carried to the general summary:

Item 201-Clearing And Grubbing……. Lump Sum

Item 607-Gate, Type Clt, As Per Plan

Chain link walk gates may be constructed through the existing r/w fences if a proposed relocated control center is not accessible for maintenance purposes or as determined by the engineer. The proposed gates shall be constructed per SCD F-3.2. The gate widths shall be 4' and constructed with new fence material and new end posts. Any existing fence that needs to be removed shall be incidental to this pay item

Payment will be made at the unit bid price of each for item 607-gate, type clt, as per plan which shall be full compensation for all labor, materials and incidentals required to complete this item in a satisfactory and workmanlike manner.

The following contingency quantity has been carried to the general summary to be used as directed by the engineer:

Payment for the above work shall be included in the unit bid price for item 607 – gate, type clt, as per plan.

Item 625-Connection, Fused Pull Apart, As Per Plan

The fused pull apart connections from distribution/duct cable to the pole and bracket cable shall be the brand Homac Y-Type Street lighting kits.

Item 625-Connection, Unfused Pull Apart, As Per Plan

The unfused pull apart connections from distribution/duct cable to the pole and bracket cable shall be the brand Homac Y-Type Street lighting kits.

Item 625-Lightpole, Low Mast, As Per Plan , (ALM45)

The contractor shall verify that the original bolts are suitable for this installation. New galvanized nuts and washers will be required. All poles at location 29 shall be ALM as per SCD HL-10. 15.

Item 625-Lightpole, Low Mast, As Per Plan , (ALM50)

The contractor shall field verify the existing bolt circle of the anchor base foundation at location 30 prior to ordering and fabrication to ensure that the proposed pole can be secured to the top of the existing transformer base. The pole at location 30 shall be ALM as per SCD HL-10. 15.

Item 625-Power Service, As Per Plan

In addition to the requirements of CMS 625.15 and 625.22 or otherwise noted in this plan, the following shall apply:

Immediately upon receiving a signed contract, the contractor shall contact the corresponding power company(s) and establish work orders to define the scope of any and all work that will be necessary to supply and complete an appropriate connection from a power source to the ODOT maintained control center for the highway lighting circuits to function properly.

The intent of this pay item is to install a new power service complete with the contractors physical work up to the weather head with dead-ending for service drop. The project engineer shall have the discretion and final say in any decision to alter any portion of this item of work from the control center back to the service drop.

Any conduit and no. 2 AWG distribution cable from the control center to the pull box(s) prior to branch circuit(s) distribution shall be considered a part of this pay item. The above noted pull box(s) shall be considered the pull box(s) referenced as "at the power service location" and will include any permanent connections needed to the branch circuit(s). Where a meter needs to be separated and located away from the control center assembly, any trenching, conduit, cable, underground warning/marking tape, and meter base equipment shall be considered as part of this pay item.

When a new power service has been established the contractor shall present an invoice to the project engineer for any charges made by the power company for work by the company in conjunction with the establishment of the required service. The invoice shall include itemized materials, labor and all overhead costs supplied by the power company in establishing the service. Once the invoice is approved by the project engineer, the contractor shall be reimbursed accordingly for work done by the power company.

The new ODOT maintained power services shall be metered services.

Electrical energy from existing power services shall continue to be charged to the maintaining agency. The contractor shall pay electrical energy charges for new power services established by this project. After acceptance of the lighting, the engineer shall ensure that each power services' electrical energy account and billing address are in the name of the maintaining agency noted in the plans. This shall be done for each new power service established by this project.

Payment will be made at the unit bid price of each for item 625-power service, as per plan a which shall be full compensation for all labor, materials and incidentals required to complete this item in a satisfactory and workmanlike manner.

Item 625-Light Pole Removed, As Per Plan

This item shall consist of any removal, storage, and disposal of existing light poles. Disposal shall follow any applicable local, state, or federal laws regarding such disposal.

Removed light poles in good condition shall remain the property of the state and shall be salvaged for reuse, as directed by the engineer. The engineer shall specify poles to be salvaged. Care shall be taken with removal and during delivery so as to not damage the pole designated for salvage.

All poles designated for salvage shall be delivered by the contractor to:

ODOT – Warrensville Traffic Department
25609 Emery Rd. Warrensville Heights, 44128
Attn: Leonard Paige
Office: (216) 312-0085

Provide a minimum of one week notice to designate ODOT maintenance contact to coordinate and schedule delivery.

Payment for the above work shall be included in the unit bid price for item 625 – Light Pole Removed, As Per Plan.

Item 625-Power Service Removed, As Per Plan

Prior to removing and detaching the existing power service/control center from the branch circuitry and prior to the installation of the new power service components, the contractor shall energized each individual circuit branch at each location where this work is being performed and identify and tag the cables with the corresponding circuit name. This will allow for the proper wiring and tagging of the branch circuits in the new control center. In addition,

Item 625-Luminaire, Low Mast, Solid State (LED), As Per Plan

In addition to Supplemental Specification 813, the contractors shall supply the following luminaire to be used on the new low poles itemized in the Plan at Location No. 29:

GE Lighting ERHM-03-5-50-VW-7-30-N-1-4B-GRAY-R with a color temperature of 3000K, Type V distribution and a maximum lumen output of 50305.

In addition to Supplemental Specification 813, the contractors shall supply the following luminaire to be used on the new low pole itemized in the Plan at Location No. 30:

GE Lighting ERHM-01-H-40-VM-7-30-N-1-4B-GRAY-R-005 with a color temperature of 3000K, Type V distribution an average of 30000-31500 Lumin performance.

Payment will be made at the unit bid price of each for Item 625-Luminaire, Low Mast, Solid State (LED), As Per Plan A which shall be full compensation for all labor, materials and incidentals required to complete this item in a satisfactory and workmanlike manner.

Item 202- Removal, Misc: Control Center and Disconnect

This item shall consist of any removal, storage, and disposal of existing Control Centers and Disconnects. Disposal shall follow any applicable local, state, or federal laws regarding such disposal.

Removed Control Centers and Disconnects in good condition shall remain the property of the state and shall be salvaged for reuse, as directed by the engineer. The engineer shall specify Control Centers and Disconnects to be salvaged. Care shall be taken with removal and during delivery so as to not damage the Control Center and Disconnect designated for salvage.

All Control Centers and Disconnects designated for salvage shall be delivered by the contractor to:

ODOT – Warrensville Traffic Department
25609 Emery Rd. Warrensville Heights, 44128
Attn: Leonard Paige
Office: (216) 312-0085

Provide a minimum of one week notice to designate ODOT maintenance contact to coordinate and schedule delivery.

Payment for the above work shall be included in the unit bid price for Item 202 – Removal, Misc: Control Center and Disconnect.

The following quantity has been carried to the general summary:

Item 202-Removal Misc.: Control Center and Disconnect…… 22 Each

Item 625-Lighting Misc.: Removal Of Underpass Lighting Components

This pay item shall consist of the removal of existing underpass lighting components as detailed in this plan. The work shall include removal of the luminaire, flexible conduit and distribution cable in the existing conduit (from luminaire to junction box).
Also included shall be the removal of any mounting anchors from the above noted items that have been embedded in the piers and pier caps. Once the anchors have been removed any voids that have been left shall be filled and smoothed with non-shrink, non-metallic grout per CMS 705.20. If any attachment hardware is unable to be removed, it shall be cut or ground smooth with the concrete surface.

Payment shall be made at the unit bid price for item 625-lighting misc.: removal of underpass lighting components for each location and itemized for each underpass luminaire to be removed which shall be full compensation for all labor, material and incidentals required to complete this item in a satisfactory and workmanlike manner.

Item 625-Luminaire, Underpass, Solid State (LED), As Per Plan (480V)

In addition to the requirements of ODOT C&MS 625 & 725, underpass luminaires shall be one of the following products:

Holophane W4GLED-10C1000-30K-T3S-480-SPD
GE Evolve EWAS-01-5-B3-AW-7-30-N-1-FM-GRAY-F
Cooper Streetworks – WAL-PAK-WKP-6B-LED-E-8-GL-AP-10K-7030-B

All fixtures shall comply with ODOT Supplemental Specification 813 and 913.

Item 625, Luminaire, Conventional, Solid State (Led), As Per Plan, 480 Volt

In Addition To The Requirements Of ODOT's Construction And Material Specification, Item 625 And SS 813, Luminaires For Conventional Lighting Units Shall Be As Follows:

Luminaire Shall Be Rated For Connection To Existing 480V Lighting Circuit.

Luminaires For Conventional Lighting Units Shall Be 3000k CCT, Full Cutoff, Medium, And Have Output Characteristics Equivalent To:

Type Led 2: (Type II Dist., Total Quantity: 1)
American Electric "Autobahn ATB0" With Photometric Distribution "ATB0-P203-480-R2, 10150 Lumens Output
.
Cooper "Verdeon" With Photometric Distribution "VERD- CA2-80-740-8-T2-AP-10K", 11550 Lumens Output
.
General Electric "Evolve Erl1" With Photometric Distribution "ERL1_5-11-85-40-Gray-LR10K", 11000 Lumens Output.

Or Equal As Approved By The Engineer.

Type Led 2a: (Type II Dist., Total Quantity: 1)
American Electric "Autobahn ATB2" With Photometric Distribution "Atb2-P601-480-R2, 27200 Lumens Output
.
Cooper "Navion" With Photometric Distribution "NVN-SA4C- 740-8-T2R-AP-10K", 30380 Lumens Output.

General Electric "Evolve ERL2" With Photometric Distribution "ERL2_5-27-85-40-Gray-LR10K", 27000 Lumens Output

Or Equal As Approved By The Engineer.

Payment Will Be Made At The Unit Bid Price For Each CMS Item 625, "Luminaire, Conventional, Solid State (Led), As Per Plan" For each luminaire which shall be full compensation for all labor, materials and incidentals required to complete this item in a satisfactory and workmanlike manner.

Item Special-Maintain Existing Lighting

Existing roadways which are to remain open to traffic during construction of this project and which are lighted shall have the lighting maintained as described herein.

Before any work is started in the immediate vicinity of the existing lighting circuits, representatives of ODOT, the maintaining agency and the contractor shall make a visual inspection of the existing roadway lighting circuits to be maintained. During this inspection, a written record of the condition of existing lighting shall be made by ODOT'S representative. This written report shall note individual luminaires which are not in working order, individual poles which are not standing, and individual circuits which are not in working order. The completed report shall be signed by the representatives of ODOT, the maintaining agency and the contractor.

If, as a result of this inspection, it is determined that the condition of the existing system is below that required for the safety of the traveling public, then the maintaining agency shall make the repairs necessary to return the system to an acceptable condition. Following these repairs, the system shall again be inspected and a report shall be made and signed as outlined herein.

When the existing system is in an acceptable condition, it shall be turned over to the contractor who shall then be required to maintain the existing lighting to the condition outlined in this report with the exception of knockdowns due to traffic accidents.

Replacement of knocked downed units shall be done only when the engineer has determined that the replacement of the knocked down unit is necessary and shall be paid separately on a unit basis.
Betterments shall be covered in items of work pertaining to the construction of permanent improvement.

When the sequence of construction activities requires, or should the contractor desire, the removal of the existing lighting before the new lighting is operational, the contractor shall be responsible for providing temporary lighting of this portion of the roadway. Temporary lighting to maintain existing lighting is not required provided that service is only interrupted for a maximum of twenty-one (21) days or less.

Prior to installing such lighting, the contractor shall prepare and submit four sets of the temporary lighting plan to the engineer for review and approval.

This plan shall show locations of poles, lengths of bracket arms, styles of luminaires, mounting heights, wiring methods and other pertinent information. The temporary lighting shall provide an average initial intensity of 1.2 footcandles with an average to minimum uniformity not to exceed 3:1. Mounting height of temporary luminaires shall not be less than 30 feet, and the minimum overhead conductor clearance shall be 20 feet. Temporary overhead construction shall not be less than grade "a" for strength requirements as defined by the national electric safety code. Wood poles with overhead wiring may be used. However, temporary lighting shall meet federal and state safety criteria. If breakaway poles are used to meet these criteria, then underground wiring shall be used. Reconditioned or used materials may be furnished for temporary lighting.

All materials necessary to complete the temporary lighting shall be furnished and installed by the contractor. When no longer needed, the temporary lighting installation shall be removed and properly disposed of by the contractor.
The maintaining agency will pay for electrical energy consumed by existing power services and by proposed permanent power services after acceptance of the lighting work. The contractor will pay for electrical energy, installation, removal and maintenance of any temporary power services.

The lump sum price bid for item special "maintain existing lighting" shall include payment for all labor, equipment, materials and incidentals necessary to maintain the existing lighting as specified herein.

The unit price bid for item special "replacement of existing lighting unit" shall be full payment for the replacement of an existing lighting unit which has been knocked down after the aforementioned inspection and shall include all labor, equipment, materials and incidentals necessary to provide a replacement for such unit.

Item 630 – Removal Of Pole Mounted Sign And Reerection
Item 630 – Sign Support Assembly, Pole Mounted

The following quantities are being carried to the general summary for the purpose of removing and re-erecting miscellaneous flat sheet signs that are mounted on the existing conventional light poles at location no. 29. It is the responsibility of the contractor to ensure that the signs do not get misplaced or lost. New signs will be provided at not cost to the state if the plan contractor is unable to provide the existing sign at locations noted in the plan.

Item 630 – Removal Or Pole Mounted Sign And Re-Erection….3 Each
Item 630 – Sign Support Assembly, Pole Mounted …..... 3 Each

Item 625-Lighting Misc.: Test Circuits

Once construction work is complete the contractor shall test and inspect the new control centers listed below to verify that power is being supplied to all light poles and the circuits are functional and free of damage. Both the project engineer and the district lighting supervisor, David Nimrichter shall be present for the testing and inspection. The following shall be tested:

Control Center PRS	Control Center ARD
Control Center Prn	Control Center MW
Control Center FR	Control Center SCH
Control Center RIV	Control Center B
Control Center SC	Control Center C
Control Center SM	Control Center BPR
Control Center F	Control Center B2
Control Center HIG	Control Center GR-1
Control Center MR	Control Center GR-3
Control Center LA	
Control Center H	
Control Center 1	

The following quantity has been carried to the general summary:

Item 625-Lighting Misc.: Test Circuits…… Lump Sum

GENERAL NOTES

DESIGN AGENCY

DESIGNER
JDA

REVIEWER
DAB 12/12/24

PROJECT ID
110602

SHEET P.6 TOTAL 80

CUY/LAK-LG-FY2025

MODEL: Sheet 4 PAPERSIZE: 34x22 (in.) DATE: 4/9/2025 TIME: 11:10:49 AM USER: jalbrig1
pw:\\ohiodot-pw.bentley.com:ohiodot-pw-02\Documents\01 Active Projects\District 12\Cuyahoga\110602\400-Engineering\Lighting\Sheets\110602_LN001.dgn

SHEET NUM. 3-6	7-8	10	11	11A	11B	11C	11D	80					PART. 01/NFP/21	ITEM	ITEM EXT	GRAND TOTAL	UNIT	DESCRIPTION	SEE SHEET NO.
																		ROADWAY	
LS													LS	201	11000	LS		CLEARING AND GRUBBING	4
		22											22	202	75704	22	EACH	REMOVAL OF EXISTING CONTROL CENTER AND FOUNDATION	
22													22	202	98100	22	EACH	REMOVAL MISC.:CONTROL CENTER AND DISCONNECT	5
		1											1	607	61201	1	EACH	GATE, TYPE CLT, AS PER PLAN	4
																		EROSION CONTROL	
													1,000	832	30000	1,000	EACH	EROSION CONTROL	
																		LIGHTING	
		182	29	44	54	48	24	154					535	625	00451	535	EACH	CONNECTION, FUSED PULL APART, AS PER PLAN	4
		16	29					154					199	625	00461	199	EACH	CONNECTION, UNFUSED PULL APART, AS PER PLAN	4
		22		24	16	22	8						92	625	00480	92	EACH	CONNECTION, UNFUSED PERMANENT	
		3											3	625	10490	3	EACH	LIGHT POLE, CONVENTIONAL, AT15B41	
		3											3	625	10490	3	EACH	LIGHT POLE, CONVENTIONAL, AT30B40	
			29										29	625	10495	29	EACH	LIGHT POLE, LOW MAST, AS PER PLAN, ALM45	4
		2											2	625	10495	2	EACH	LIGHT POLE, LOW MAST, AS PER PLAN, ALM50	
		6											6	625	14100	6	EACH	LIGHT POLE FOUNDATION, 24" X 8' DEEP	
				19,890									19,890	625	22900	19,890	FT	NO. 1/0 AWG 2400 VOLT DISTRIBUTION CABLE	
				3,912	27,123	27,288	7,200						65,523	625	23200	65,523	FT	NO. 4 AWG 2400 VOLT DISTRIBUTION CABLE	
				13,017			9,765						22,782	625	23300	22,782	FT	NO. 2 AWG 2400 VOLT DISTRIBUTION CABLE	
		1,028	4,350					4,978					10,356	625	23400	10,356	FT	NO. 10 AWG POLE AND BRACKET CABLE	
		1,130											1,130	625	24100	1,130	FT	1-1/2" DUCT CABLE WITH TWO NO. 4 AWG 2400 VOLT CABLES	
		1,040											1,040	625	24320	1,040	FT	1-1/2" DUCT CABLE WITH THREE NO. 4 AWG 2400 VOLT CABLES	
		106											106	625	25900	106	FT	CONDUIT, JACKED OR DRILLED, 725.051 3"	
				12,273	9,041	9,096	5,655						36,065	625	25910	36,065	FT	CONDUIT CLEANED AND CABLES REMOVED	
		7											7	625	26253	7	EACH	LUMINAIRE, CONVENTIONAL, SOLID STATE (LED), AS PER PLAN, 480 VOLT	5
		1	29										30	625	26273	30	EACH	LUMINAIRE, LOW MAST, SOLID STATE (LED), AS PER PLAN, 480 VOLT	5
								154					154	625	27503	154	EACH	LUMINAIRE, UNDERPASS, SOLID STATE (LED), AS PER PLAN, 480 VOLT	5
		2,170				171	3,600						5,941	625	29002	5,941	FT	TRENCH, 24" DEEP	
								154					154	625	29900	154	EACH	JUNCTION BOX	
		11					10						21	625	30700	21	EACH	PULL BOX, 725.08, 18"	
		29											29	625	32000	29	EACH	GROUND ROD	
		22											22	625	34001	22	EACH	POWER SERVICE, AS PER PLAN	4
		2,170											2,170	625	36010	2,170	FT	UNDERGROUND WARNING/MARKING TAPE	
LS													LS	SPECIAL	62540000	LS		MAINTAIN EXISTING LIGHTING	6
		4	29										33	625	75401	33	EACH	LIGHT POLE REMOVED, AS PER PLAN	5
		7											7	625	75500	7	EACH	LIGHT POLE FOUNDATION REMOVED	
		4											4	625	75506	4	EACH	LUMINAIRE REMOVED	
		22											22	625	75511	22	EACH	POWER SERVICE REMOVED, AS PER PLAN	5
								154					154	625	98000	154	EACH	LIGHTING, MISC.:REMOVAL OF UNDERPASS LIGHTING COMPONENTS	5
LS													LS	625	98200	LS		LIGHTING, MISC.:TEST CIRCUITS	6
																		TRAFFIC CONTROL	
3													3	630	79500	3	EACH	SIGN SUPPORT ASSEMBLY, POLE MOUNTED	
3													3	630	87520	3	EACH	REMOVAL OF POLE MOUNTED SIGN AND REERECTION	
																		MAINTENANCE OF TRAFFIC	
	150												150	614	11110	150	HOUR	LAW ENFORCEMENT OFFICER WITH PATROL CAR FOR ASSISTANCE	
	100												100	630	97800	100	SF	SIGNING, MISC.: ADDITIONAL SIGNS, GROUND MOUNTED, AS DIRECTED BY THE ENGINEER	8
																		INCIDENTALS	
													LS	614	11000	LS		MAINTAINING TRAFFIC	
													LS	624	10000	LS		MOBILIZATION	

GENERAL SUMMARY

DESIGN AGENCY

DESIGNER JDA

REVIEWER DAB 12/12/24

PROJECT ID 110602

SHEET P.9 TOTAL 80

CUY/LAK-LG-FY2025

MODEL: Sheet PAPERSIZE: 34x22 (in.) DATE: 4/9/2025 TIME: 11:12:22 AM USER: jalbrig1
pw:\\ohiodot-pw.bentley.com:ohiodot-pw-02\Documents\01 Active Projects\District 12\Cuyahoga\110602\400-Engineering\Roadway\Sheets\110602_GG001.dgn

LOCATION NO.	SPLIT	CIRCUIT & NEW POLE NUMBER	Location	625 POWER SERVICE REMOVED, AS PER PLAN	625 CONNECTION, FUSED PULL APART, AS PER PLAN	202 REMOVAL OF EXISTING CONTROL CENTER AND FOUNDATION	625 LIGHT POLE, CONVENTIONAL, AT15B40	625 1-1/2" DUCT CABLE WITH THREE NO. 4 AWG 2400 VOLT CABLES	625 TRENCH, 24" DEEP	625 LIGHT POLE, CONVENTIONAL, AT15B41	625 CONNECTION, UNFUSED PULL APART, AS PER PLAN	625 NO. 10 AWG POLE AND BRACKET CABLE	625 LIGHT POLE FOUNDATION, 24" X 8' DEEP	625 GROUND ROD	625 UNDERGROUND WARNING/MARKING TAPE	625 LIGHT POLE REMOVED, AS PER PLAN	625 LIGHT POLE FOUNDATION REMOVED	625 LUMINAIRE REMOVED	625 LIGHT POLE, CONVENTIONAL, AT30B40	625 PULL BOX, 725.08, 18"	625 CONDUIT, JACKED OR DRILLED, 725.051 3"		625 LIGHT POLE, LOW MAST, AS PER PLAN, ALM50	625 LUMINAIRE, LOW MAST, SOLID STATE (LED), AS PER PLAN, 480 VOLT	625 POWER SERVICE, AS PER PLAN	607 GATE, TYPE CLT, AS PER PLAN	625 1-1/2" DUCT CABLE WITH TWO NO. 4 AWG 2400 VOLT CABLES	625 CONNECTION, UNFUSED PERMANENT				625 LUMINAIRE, CONVENTIONAL, SOLID STATE (LED), AS PER PLAN, 480 VOLT
				EACH	EACH	EACH	EACH	FT	FT	EACH	EACH	FT	EACH	EACH	FT	EACH	EACH	EACH	EACH	EACH	FT		EACH	EACH	EACH	EACH	FT	EACH				EACH
1a	1	PRS	IR-71 at Pearl Road	1		1								1											1								
1b	1	PRN	IR-71 at Pearl Road	1		1								1											1								
2	1	FR	IR-90 at Fulton Rd (Vega Ave)	1		1								1											1	1							
3	1	RIV	IR-90 at River Rd	1		1								1											1								
4	1	SC	IR-90 at Scranton Rd	1		1								1											1								
5	1	SM	IR-90 at West 44th St	1		1								1											1								
6a	1	F	IR-271 at Emery Rd	1		1								1											1								
6b	1	G	IR-271 at Emery Rd	1		1								1											1								
7	1	HIG	IR-271 at Highland Rd	1	12	1								1											1								
8	1	MR	IR-271 at Marsol Rd	1	10	1								1											1								
9	1	LA	IR-271 at Lander Rd	1	8	1								1											1								
10	1	H	IR-271 at Miles Rd	1	10	1								1											1								
			Location 11 "Not Used"																														
			Location 12 "Not Used"																														
			Location 13 "Not Used"																														
14	1	ARD	IR-480 at W 150th St	1		1								1											1								
15	1	MW	IR-480 at Warrensville Rd	1	20	1								1											1								
16	1	SCH	SR-176 at Schaaf Rd	1	8	1								1											1								
17	1	B	US-422 at Richmond Rd	1	12	1								1						1					1								
18	1	C	US-422 at Richmond Rd	1	10	1								1						1					1								
19	1	B1	SR-176 Ramp JN-OBW						175		6				175												175						
20	1	LAL	IR-480 EB Express Lane		8			500	500	2	4	224	2	2	500	2	2	2															2
21	1	1TON	IR-480 WB Local Lane		3				375	1	3	145	1	1	375	1	1	1									375						1
22	1	CHE2	IR-90 at Chester Ave					1620	540						540					9	106							18					
23	1	2TOM	IR-480 at Granger Rd						300			287	1	2	300		2		2								300						2
23	1	1BAM	IR-480 at Granger Rd		1				200		1	110	1	1	200		1		1	1							200	2					1
24	1	BP	IR-480 EB Ramp to IR 71 NB		37				80		1	112	1	1	80	1	1	1		1			1				80	2					1
25	1	BPR	SR 17 (Brook Park Rd) at IR-71 Ramps	1		1								1											1								
26	1	B2	IR-71 SB to IR-480 WB	1		1								1											1								
27	1	GR-1	Old Grayton River Edge Yard	1		1								1											1								
28	1	GR-3	Grayton Rd North of IR-480	1		1								1											1								
30	1	RE-B	IR-271 435+88		1						1	150											1	1									
SUBTOTALS				21	140	21		2120	2170	3	16	1028	6	28	2170	4	7	4	3	13	106		2	1	21	1	1130	22				7
TOTALS CARRIED TO GENERAL SUMMARY				21	140	21		2120	2170	3	16	1028	6	28	2170	4	7	4	3	13	106		2	1	21	1	1130	22				7

LIGHTING SUBSUMMARY

DESIGN AGENCY

DESIGNER
JDA

REVIEWER
DAB 12/12/24

PROJECT ID
110602

SHEET P.10 TOTAL 80

CUY/LAK-LG-FY2025

MODEL: Sheet PAPERSIZE: 34x22 (in.) DATE: 4/9/2025 TIME: 4:29:05 PM USER: jalbrig1
pw:\\ohiodot-pw.bentley.com:ohiodot-pw-02\Documents\01 Active Projects\District 12\Cuyahoga\110602\400-Engineering\Lighting\Sheets\110602_LS001.dgn

LOCATION NO.	SPLIT	CIRCUIT & NEW POLE NUMBER	STATION TO STATION	625 POWER SERVICE REMOVED, AS PER PLAN EACH	625 CONNECTION, FUSED PULL APART, AS PER PLAN EACH	202 REMOVAL OF EXISTING CONTROL CENTER AND FOUNDATION EACH	625 LIGHT POLE, CONVENTIONAL, AT15B40 EACH	625 1-1/2" DUCT CABLE WITH THREE NO. 4 AWG 2400 VOLT CABLES FT	625 TRENCH, 24" DEEP FT	625 LIGHT POLE, CONVENTIONAL, AT15B41 EACH	625 CONNECTION, UNFUSED PULL APART, AS PER PLAN EACH	625 NO. 10 AWG POLE AND BRACKET CABLE FT	625 LIGHT POLE FOUNDATION, 24" X 8' DEEP EACH	625 GROUND ROD EACH	625 UNDERGROUND WARNING/MARKING TAPE FT	625 LIGHT POLE REMOVED, AS PER PLAN EACH	625 LIGHT POLE FOUNDATION REMOVED EACH	625 LUMINAIRE REMOVED EACH	625 LIGHT POLE, CONVENTIONAL, AT30B40 EACH	625 PULL BOX, 725.08, 18" EACH	625 CONDUIT, JACKED OR DRILLED, 725.051 3" FT		625 LIGHT POLE, LOW MAST, AS PER PLAN, ALM45 EACH	625 LUMINAIRE, LOW MAST, SOLID STATE (LED), AS PER PLAN, 480 VOLT EACH	625 POWER SERVICE, AS PER PLAN EACH	607 GATE, TYPE CLT, AS PER PLAN EACH	625 1-1/2" DUCT CABLE WITH TWO NO. 4 AWG 2400 VOLT CABLES FT	625 CONNECTION, UNFUSED PERMANENT, AS PER PLAN EACH				625 LUMINAIRE, CONVENTIONAL, SOLID STATE (LED), AS PER PLAN, 480 VOLT EACH
29	1	BPR-1-35	478+70		1						1	150				1							1	1								
	1	BPR-1-34	484+00		1						1	150				1							1	1								
	1	BPR-1-30	489+41		1						1	150				1							1	1								
	1	BPR-1-31	495+81		1						1	150				1							1	1								
	1	BPR-1-32	502+20		1						1	150				1							1	1								
	1	BPR-1-33	508+18		1						1	150				1							1	1								
	1	BPR-2-33	481+80		1						1	150				1							1	1								
	1	BPR-2-32	486+21		1						1	150				1							1	1								
	1	BPR-2-31	492+61		1						1	150				1							1	1								
	1	BPR-2-29	499+01		1						1	150				1							1	1								
	1	BPR-2-30	505+19		1						1	150				1							1	1								
	1	ARD-1-3	511+17		1						1	150				1							1	1								
	1	ARD-1-2	517+64		1						1	150				1							1	1								
	1	ARD-1-1	523+14		1						1	150				1							1	1								
	1	ARD-1-6	541+64		1						1	150				1							1	1								
	1	ARD-2-1	514+40		1						1	150				1							1	1								
	1	ARD-2-2	520+39		1						1	150				1							1	1								
	1	ARD-2-5	538+70		1						1	150				1							1	1								
	1	BR-2-9	544+91		1						1	150				1							1	1								
	1	BR-2-8	551+11		1						1	150				1							1	1								
	1	BR-2-7	557+36		1						1	150				1							1	1								
	1	BR-2-6	563+66		1						1	150				1							1	1								
	1	BR-2-5	569+96		1						1	150				1							1	1								
	1	BR-1-5	584+04		1						1	150				1							1	1								
	1	BR-1-6	554+21		1						1	150				1							1	1								
	1	BR-1-7	560+51		1						1	150				1							1	1								
	1	BR-1-8	566+81		1						1	150				1							1	1								
	1	BR-1-9	573+11		1						1	150				1							1	1								
	1	WOT-T-1	576+50		1						1	150				1							1	1								
SUBTOTALS					29						29	4350				29							29	29								
TOTALS CARRIED TO GENERAL SUMMARY					29						29	4350				29							29	29								

LIGHTING SUBSUMMARY

DESIGN AGENCY

DESIGNER JDA

REVIEWER DAB 12/12/24

PROJECT ID 110602

SHEET P.11 TOTAL 80

CUY/LAK-LG-FY2025

MODEL: Sheet 2 PAPERSIZE: 34x22 (in.) DATE: 4/9/2025 TIME: 4:29:05 PM USER: jalbrig1
pw:\\ohiodot-pw.bentley.com:ohiodot-pw-02\Documents\01 Active Projects\District 12\Cuyahoga\110602\400-Engineering\Lighting\Sheets\110602_LS001.dgn

Circuit	PLAN SPLIT NO.	LOCATION	STATION FROM	STATION TO	LENGTH	625 NO. 2 AWG 2400 VOLT DISTRIBUTION CABLE	625 NO. 2/0 AWG 2400 VOLT DISTRIBUTION CABLE	625 NO. 4 AWG 2400 VOLT DISTRIBUTION CABLE	625 CONNECTION, UNFUSED PERMANENT	625 CONNECTION, FUSED PULL APART, AS PER PLAN	625 TRENCH, 24" DEEP	625 PULL BOX, 725.08, 18"	625 LIGHT TOWER FOUNDATION REMOVED	625 CONDUIT CLEANED AND CABLES REMOVED
					FT	FT	FT	FT	EACH	EACH	FT	EACH	EACH	FT
RIV	1	Location 3 - IR-90 at River Rd	Pullbox 192+10	Tower RIV1-6	155	480			1	2				160
	1		Tower RIV1-6	Tower RIV1-5	509	1542				2				514
	1		Tower RIV1-5	Pullbox 198+15	162	501			1					167
	1		Tower RIV1-5	Tower RIV1-4	534	1617				2				539
	1		Tower RIV1-4	Pullbox 205+30	168	519			1					173
	1		Tower RIV1-4	Tower RIV1-3	534	1617				2				539
	1		Tower RIV1-3	Pullbox 211+00	162	501			1					167
	1		Tower RIV-3	Tower RIV1-2	540	1635				2				545
	1		Tower RIV1-2	Tower RIV1-1	521	1578				2				526
	1		Tower RIV1-1	Pullbox 234+58	837	2526								842
	1		Pullbox 234+58	Control Center RIV	162	501			1					167
HIG		Location 7 - IR-271 at Highland Rd												
	1		Tower HIG1-6	Pullbox 43+00	240		735		1	2				245
	1		Pullbox 43+00	Tower HIG1-5	250		765			2				255
	1		Tower HIG1-5	Pullbox 48+00	250		765		1					255
	1		Pullbox 48+00	Tower HIG1-4	240		735			2				245
	1		Tower HIG1-4	Pullbox 53+00	260		795		1					265
	1		Pullbox 53+00	Tower HIG1-3	230		705			2				235
	1		Tower HIG1-3	Pullbox 57+30	200		615		1					205
	1		Pullbox 57+30	Tower HIG1-2	295		900			2				300
	1		Tower HIG1-2	Pullbox 63+00	275		840		1					280
	1		Pullbox 63+00	Tower HIG1-1	300		915			2				305
	1		Tower HIG1-1	Pullbox 70+40	440		1335		1					445
	1		Pullbox 70+40	Control Center HIG	155		480							160
	1		Pullbox 70+40	Tower HIG2-1	110		345			2				115
	1		Tower HIG2-1	Pullbox 74+00	250		765							255
	1		Pullbox 74+00	Tower HIG2-2	250		765		1	2				255
	1		Tower HIG2-2	Pullbox 79+00	250		765		1					255
	1		Pullbox 79+00	Tower HIG2-3	300		915			2				305
	1		Tower HIG2-3	Pullbox 83+70	170		525		1					175
	1		Pullbox 83+70	Pullbox 85+50	180		555		1					185
	1		Pullbox 85+50	Tower HIG2-4	200		615			2				205
	1		Tower HIG2-4	Pullbox 89+50	200		615		1					205
	1		Pullbox 89+50	Pullbox 91+60	210		645		2					215
	1		Pullbox 91+60	Tower HIG2-5	140		435			2				145
	1		Towe HIG2-5	Pullbox 95+75	275		840		1					280
	1		Pullbox 95+75	Tower HIG2-6	275		840			2				280
	1		Tower HIG2-6	Pullbox 101+25	275		840		1					280
	1		Pullbox 101+25	Tower HIG2-7	275		840			2				280
MR		Location 8 - IR-271 at Marsol Rd												
	1		Control Center MR	Pullbox 685+67	191			588	1					196
	1		Pullbox 685+67	Tower MR1	83			264	1	2				88
	1		Tower MR1	Pullbox 682+35	249			762	1					254
	1		Pullbox 682+35	Tower MR2	251			768		2				256
	1		Tower MR2	Pullbox 677+35	249			762	1					254
	1		Pullbox 677+35	Tower MR3	251			768		2				256
SUBTOTALS					12053	13017	19890	3912	24	44				12273
TOTALS CARRIED TO GENERAL SUMMARY					12053	13017	19890	3912	24	44				12273

LIGHTING SUBSUMMARY

DESIGN AGENCY

DESIGNER JDA

REVIEWER DAB 3-20-25

PROJECT ID 110602

SHEET P.11A TOTAL 80

CUY/LAK-LG-FY2025

MODEL: Sheet PAPERSIZE: 34x22 (in.) DATE: 4/9/2025 TIME: 4:29:12 PM USER: jalbrig1
pw:\\ohiodot-pw.bentley.com:ohiodot-pw-02\Documents\01 Active Projects\District 12\Cuyahoga\110602\400-Engineering\Lighting\Sheets\110602_LS002.dgn

Circuit	PLAN SPLIT NO.	LOCATION	STATION FROM	STATION TO	LENGTH	625 NO. 2 AWG 2400 VOLT DISTRIBUTION CABLE	625 NO. 4/0 AWG 2400 VOLT DISTRIBUTION CABLE	625 NO. 4 AWG 2400 VOLT DISTRIBUTION CABLE	625 CONNECTION, UNFUSED PERMANENT	625 CONNECTION, FUSED PULL APART, AS PER PLAN	625 TRENCH, 24" DEEP	625 PULL BOX, 725.08, 18"	625 LIGHT TOWER FOUNDATION REMOVED	625 CONDUIT CLEANED AND CABLES REMOVED
					FT	FT	FT	FT	EACH	EACH	FT	EACH	EACH	FT
MR	1	Location 8 - IR-271 at Marsol Rd	Tower MR3	Pullbox 672+90	194			597	1					199
	1		Pullbox 672+90	Pullbox 671+35	155			480	1					160
	1		Pullbox 671+35	Tower MR4	151			468		2				156
	1		Tower MR4	Pullbox 667+35	249			762	1					254
	1		Pullbox 667+35	Tower MR5	251			768		2				256
	1		Tower MR5	Pullbox 664+05	79			252	1					84
LA	1	Location 9 - IR-271 at Lander Rd	Tower WLA4	Pullbox 627+30	250			765	1	2				255
	1		Pullbox 627+30	Tower WLA3	254			777		2				259
	1		Tower WLA3	Pullbox 632+35	251			768	1					256
	1		Pullbox 632+35	Tower WLA2	249			762		2				254
	1		Tower WLA2	Pullbox 635+20	36			123	1					41
	1		Pullbox 635+20	Pullbox 637+35	215			660	1					220
	1		Pullbox 637+35	Tower WLA1	230			705		2				235
	1		Tower WLA1	Pullbox 641+90	225			690	1					230
	1		Pullbox 641+90	Control Center LA	142			441						147
	1		Control Center LA	Pullbox 641+90	142			441						147
	1		Pullbox 641+90	Pullbox 644+50	260			795						265
	1		Pullbox 644+50	Tower ELA1	49			162	1	2				54
	1		Tower ELA1	Pullbox 647+35	236			723	1					241
	1		Pullbox 647+35	Tower ELA2	249			762		2				254
	1		Tower ELA2	Pullbox 652+35	251			768	1	2				256
	1		Pullbox 652+35	Tower ELA3	249			762		2				254
	1		Tower ELA3	Pullbox 656+00	116			363	1					121
	1		Pullbox 656+00	Pullbox 657+90	190			585						195
	1		Pullbox 657+90	Tower ELA4	194			597	1	2				199
H		Location 10 - IR-271 at Miles Rd												
	1		Tower HA1	Tower HA2	360			1095		2				365
	1		Tower HA2	Tower HA3	400			1215		2				405
	1		Tower HA3	Tower HA4	420			1275		2				425
	1		Tower HA4	Pullbox 22+30	66			213	1	2				71
	1		Pullbox 22+30	Tower HA5	356			1083		2				361
		Location 11 - Not Used												
SUBTOTALS					6469			19857	15	32				6619
TOTALS CARRIED TO GENERAL SUMMARY					6469			19857	15	32				6619

LIGHTING SUBSUMMARY

DESIGN AGENCY

DESIGNER JDA

REVIEWER DAB 03-20-25

PROJECT ID 110602

SHEET P.11B TOTAL 80

CUY/LAK-LG-FY2025

MODEL: Sheet 2 PAPERSIZE: 34x22 (in.) DATE: 4/9/2025 TIME: 4:29:12 PM USER: jalbrig1
pw:\\ohiodot-pw.bentley.com:ohiodot-pw-02\Documents\01 Active Projects\District 12\Cuyahoga\110602\400-Engineering\Lighting\Sheets\110602_LS002.dgn

Circuit No.	PLAN SPLIT NO.	LOCATION	STATION FROM	STATION TO	LENGTH FT	625 NO. 2 AWG 2400 VOLT DISTRIBUTION CABLE FT	625 NO. ⅞ AWG 2400 VOLT DISTRIBUTION CABLE FT	625 NO. 4 AWG 2400 VOLT DISTRIBUTION CABLE FT	625 CONNECTION, UNFUSED PERMANENT EACH	625 CONNECTION, FUSED PULL APART, AS PER PLAN EACH	625 TRENCH, 24" DEEP FT	625 PULL BOX, 725.08, 18" EACH	625 LIGHT TOWER FOUNDATION REMOVED EACH	625 CONDUIT CLEANED AND CABLES REMOVED FT
1		Location 11 - Not Used												
MW	1	Location 15 - IR-480 at Warrensville Rd	Pullbox 1284+75	Tower AMW2	132			411	1	2				137
	1		Pullbox 1284+75	Tower AMW4	726			2193		2				731
	1		Tower AMW4	Tower AMW5	396			1203		2				401
	1		Tower AMW5	Pullbox 1295+25	41			138	1					46
	1		Pullbox 1284+75	Pullbox 1287+59	360			1095	1					365
	1		Pullbox 1287+59	Pullbox 1287+59	210			645	1					215
	1		Pullbox 1287+59	Pullbox 1286+62	95			300	1					100
	1		Pullbox 1287+59	Tower CMW4	366			1113	1	2				371
	1		Tower CMW4	Pullbox 12+52	95			300	1					100
	1		Pullbox 12+52	Pullbox 12+63	98			309	1					103
	1		Pullbox 1287+59	Tower CMW6	381			1158	1	2				386
	1		Tower CMW6	Tower CMW7	371			1128		2				376
	1		Tower CMW7	Tower CMW8	480			1455		2				485
	1		Pullbox 1284+75	Junction Box 1282+90	357			1086	1					362
	1		Junction Box 1282+90	Junction Box 1282+90	105			330	1					110
	1		Junction Box 1282+90	Tower BMW4	531			1608	1	2				536
	1		Junction Box 1282+90	Tower BMW3	30			105		2				35
	1		Tower BMW3	Junction Box 1284+10	102			321	1					107
SCH	1	Location 16 - SR-176 at Schaaf Rd	Pullbox 17+50	Pullbox 42+35	100			315	1					105
	1		Pullbox 42+35	Pullbox 42+25	108			339	1					113
	1		Pullbox 42+25	Tower EL-2	128			399		2				133
	1		Tower EL-2	Pullbox 38+50	166			513	1					171
	1		Pullbox 38+50	Tower EL-3	430			1305		2				435
	1		Pullbox 42+25	Pullbox 117+65	82			261	1					87
	1		Pullbox 42+35	Pullbox 41+10	123			384	1					128
	1		Pullbox 41+10	Tower E1-1	130			405	1	2				135
	1		Tower E1-1	Pullbox 121+70	152			471	1					157
	1		Pullbox 121+70	Tower E1-4	206			633		2				211
SUBTOTALS					6501			19923	20	26				6641
TOTALS CARRIED TO GENERAL SUMMARY					6501			19923	20	26				6641

LIGHTING SUBSUMMARY

DESIGN AGENCY

DESIGNER
JDA

REVIEWER
DAB 03-20-FY25

PROJECT ID
110602

SHEET P.11C TOTAL 80

CUY/LAK-LG-FY25

MODEL: Sheet 3 PAPERSIZE: 34x22 (in.) DATE: 4/9/2025 TIME: 4:29:13 PM USER: jalbrig1
pw:\\ohiodot-pw.bentley.com:ohiodot-pw-02\Documents\01 Active Projects\District 12\Cuyahoga\110602\400-Engineering\Lighting\Sheets\110602_LS002.dgn

Circuit No.	PLAN SPLIT NO.	LOCATION	STATION FROM	STATION TO	LENGTH	625 NO. 2 AWG 2400 VOLT DISTRIBUTION CABLE	625 NO. 1/0 AWG 2400 VOLT DISTRIBUTION CABLE	625 NO. 4 AWG 2400 VOLT DISTRIBUTION CABLE	625 CONNECTION, UNFUSED PERMANENT	625 CONNECTION, FUSED PULL APART, AS PER PLAN	625 TRENCH, 24" DEEP	625 PULL BOX, 725.08, 18"	625 LIGHT TOWER FOUNDATION REMOVED	625 CONDUIT CLEANED AND CABLES REMOVED
					FT	FT	FT	FT	EACH	EACH	FT	EACH	EACH	FT
B	1	Location 17 - US-422 at Richmond Rd		Tower BA1	370	1125			1	2				375
	1		Tower BA1	Tower BA3	470	1425				2				475
	1		Tower BA3	Pullbox 27	260	795			1					265
	1		Pullbox 27	Tower BA5	350	1065				2				355
	1		Tower BA5	Pullbox 28	320	975			1					325
	1		Pullbox 28	Tower BA7	370	1125				2				375
	1		Pullbox 28	Tower BA6	270	825				2				275
	1		Tower BA6	Tower BA9	480	1455				2				485
	1		Tower BA9	Pulllbox 34	320	975			1	2				325
C	1	Location 18 - US-422 at Richmond Rd	Power Service C	Pullbox 29	130			405	1					135
	1		Pullbox 29	Tower CA1	160			495		2				165
	1		Pullbox 29	Pullbox 30	200			615	1					205
	1		Pullbox 30	Tower CA3	390			1185		2				395
	1		Tower CA3	Pullbox 30A	440			1335	1					445
	1		Pullbox 30A	Tower CA4	70			225		2				75
	1		Power Service C	Tower CA5	510			1545	1	2				515
	1		Tower CA5	Tower CA6	460			1395		2				465
	1	Contingency Quantities									3600	10		
SUBTOTALS					5570	9765		7200	8	24	3600	10		5655
TOTALS CARRIED TO GENERAL SUMMARY					5570	9765		7200	8	24	3600	10		5655

LIGHTING SUBSUMMARY

DESIGN AGENCY

DESIGNER JDA

REVIEWER DAB 03-20-25

PROJECT ID 110602

SHEET P.11D TOTAL 80

CUY/LAK-LG-FY25

MODEL: Sheet 4 PAPERSIZE: 34x22 (in.) DATE: 4/9/2025 TIME: 4:29:13 PM USER: jalbrig1
pw:\\ohiodot-pw.bentley.com:ohiodot-pw-02\Documents\01 Active Projects\District 12\Cuyahoga\110602\400-Engineering\Lighting\Sheets\110602_LS002.dgn

PROPOSED WORK:

1. REMOVE AND DISPOSE OF EXISTING CONTROL CENTER.
2. INSTALL DISCONNECT AND METER PER SCD HL-40.20.
3. REMOVE AND REPLACE EXISTING PULL BOX WITH LARGER 24" PULL BOX.
4. INSTALL NEW CONTROL CENTER PER SCD HL-40.20.
5. CONNECT NEW CONTROL CENTER WITH NEW METER

HORIZONTAL SCALE IN FEET

0 10 20 40

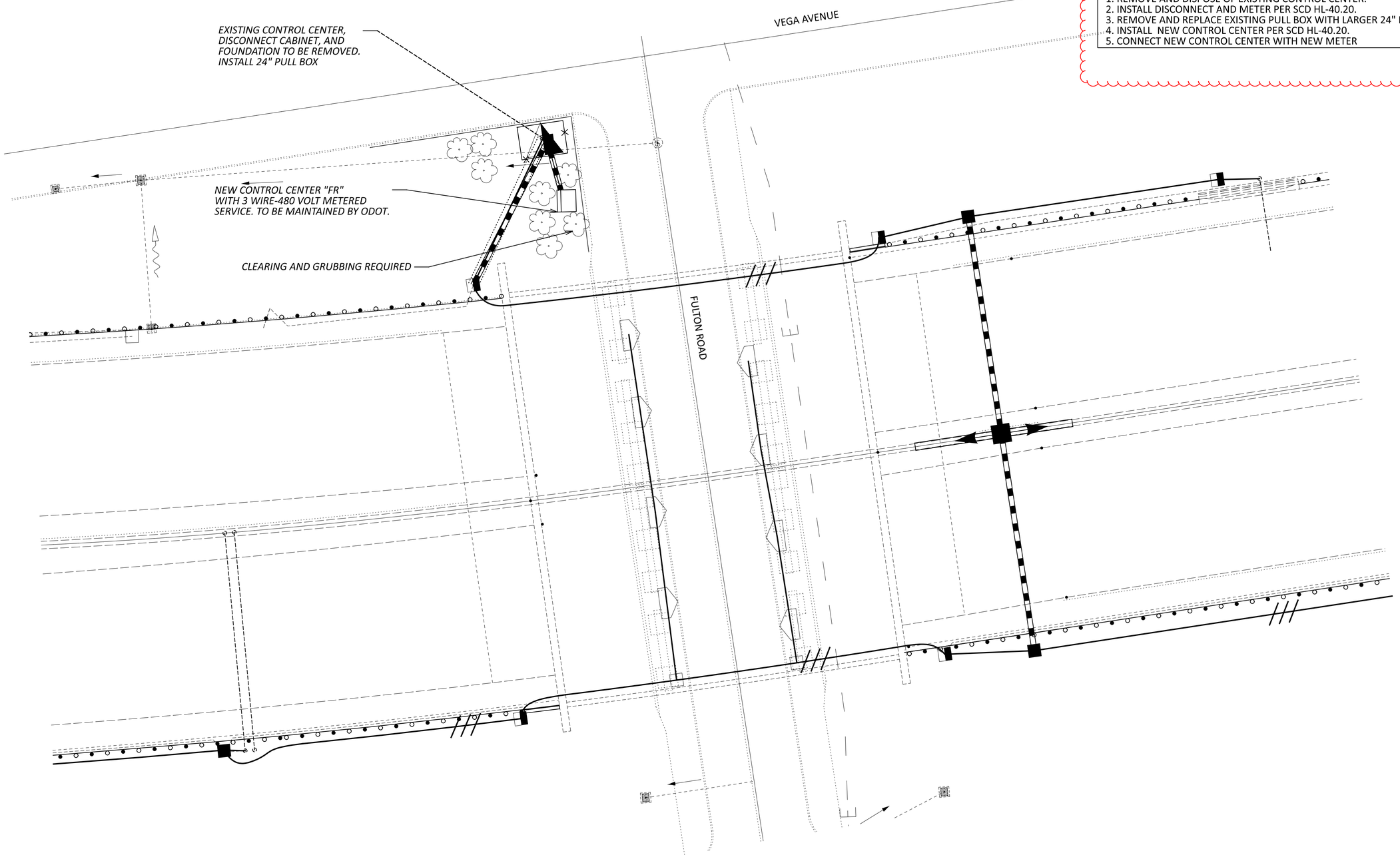

LOCATION NO. 2
IR-90 AT FULTON RD/ VEGA AVE

NOTES: FOR CIRCUIT DIAGRAM SEE SHEET P.13

DESIGN AGENCY

DESIGNER
JDA

REVIEWER
DAB 12/12/24

PROJECT ID
110602

SHEET P.46 TOTAL 80

CUY/LAK-LG-FY2025

MODEL: Sheet PAPERSIZE: 34x22 (in.) DATE: 4/9/2025 TIME: 11:32:01 AM USER: jalbrig1
pw:\\ohiodot-pw.bentley.com:ohiodot-pw-02\Documents\01 Active Projects\District 12\Cuyahoga\110602\400-Engineering\Lighting\Sheets\110602_LP002.dgn

PROPOSED WORK:

1. REMOVE EXISTING 2-WIRE CABLE AND CLEAN EXISTING CONDUITS.
2. INTALL 3-WIRE DISTRIBUTION CABLE.
3. REMOVE AND DISPOSE OF EXISTING CONTROL CENTER.
4. REMOVE AND REPLACE EXISTING PULL BOX WITH LARGER 24" PULL BOX.
5. INSTALL NEW CONTROL CENTER PER SCD HL-40.20.
6. CONNECT NEW CONTROL CENTER WITH NEW METER

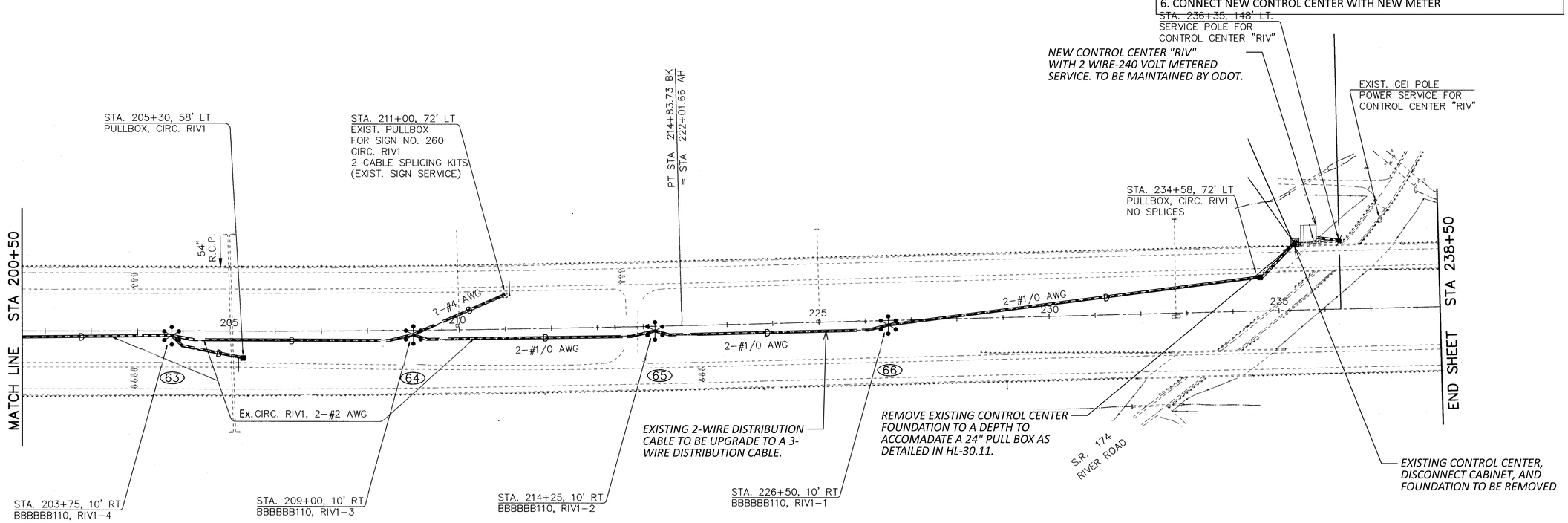

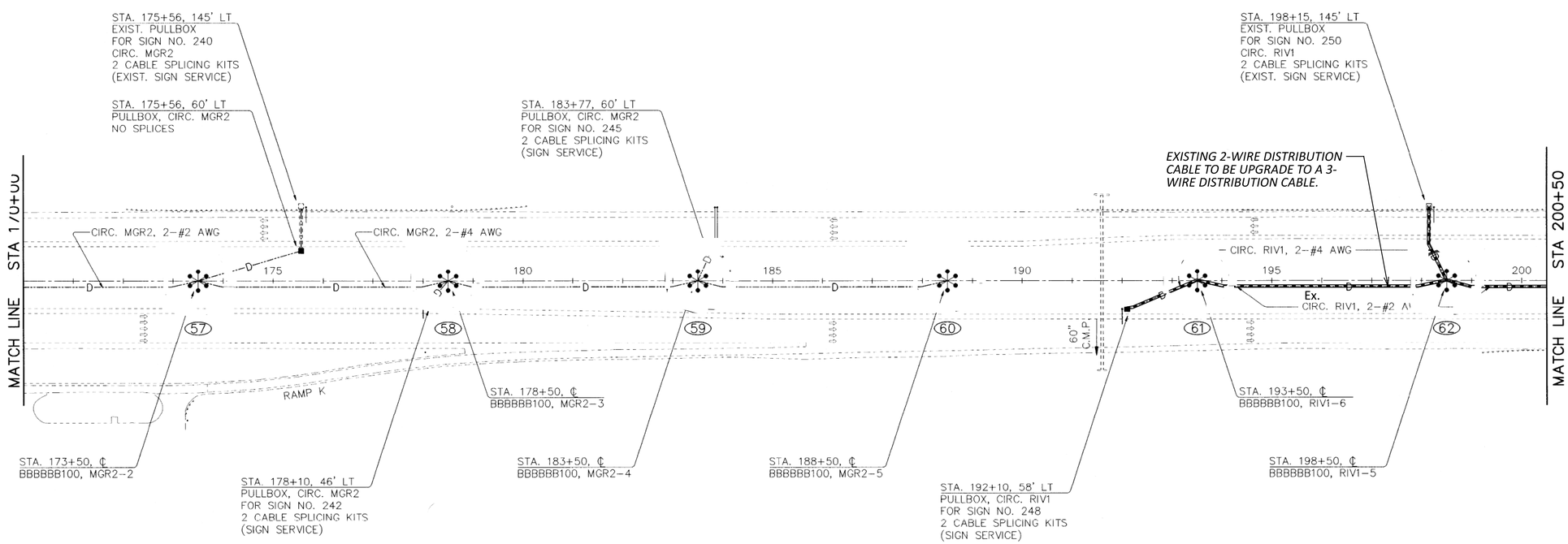

NOTES: FOR CIRCUIT DIAGRAM SEE SHEET P.14

HORIZONTAL SCALE IN FEET 0 0 0 0

LOCATION NO. 3
RIVER RD

DESIGN AGENCY

DESIGNER JDA
REVIEWER DAB 12/12/24
PROJECT ID 110602
SHEET P.47 TOTAL 80

CUY/LAK-LG-FY2025

MODEL: Sheet PAPERSIZE: 34x22 (in.) DATE: 4/9/2025 TIME: 11:32:08 AM USER: jalbrig1
pw:\\ohiodot-pw.bentley.com:ohiodot-pw-02\Documents\01 Active Projects\District 12\Cuyahoga\110602\400-Engineering\Lighting\Sheets\110602_LP003.dgn

PROPOSED WORK:

1. REMOVE AND DISPOSE OF EXISTING CONTROL CENTER.
2. INSTALL NEW CONTROL CENTER PER SCD HL-40.20.
3. REMOVE AND REPLACE EXISTING PULL BOX WITH LARGER 24" BOX.
4. CONNECT NEW CONTROL CENTER WITH NEW METER

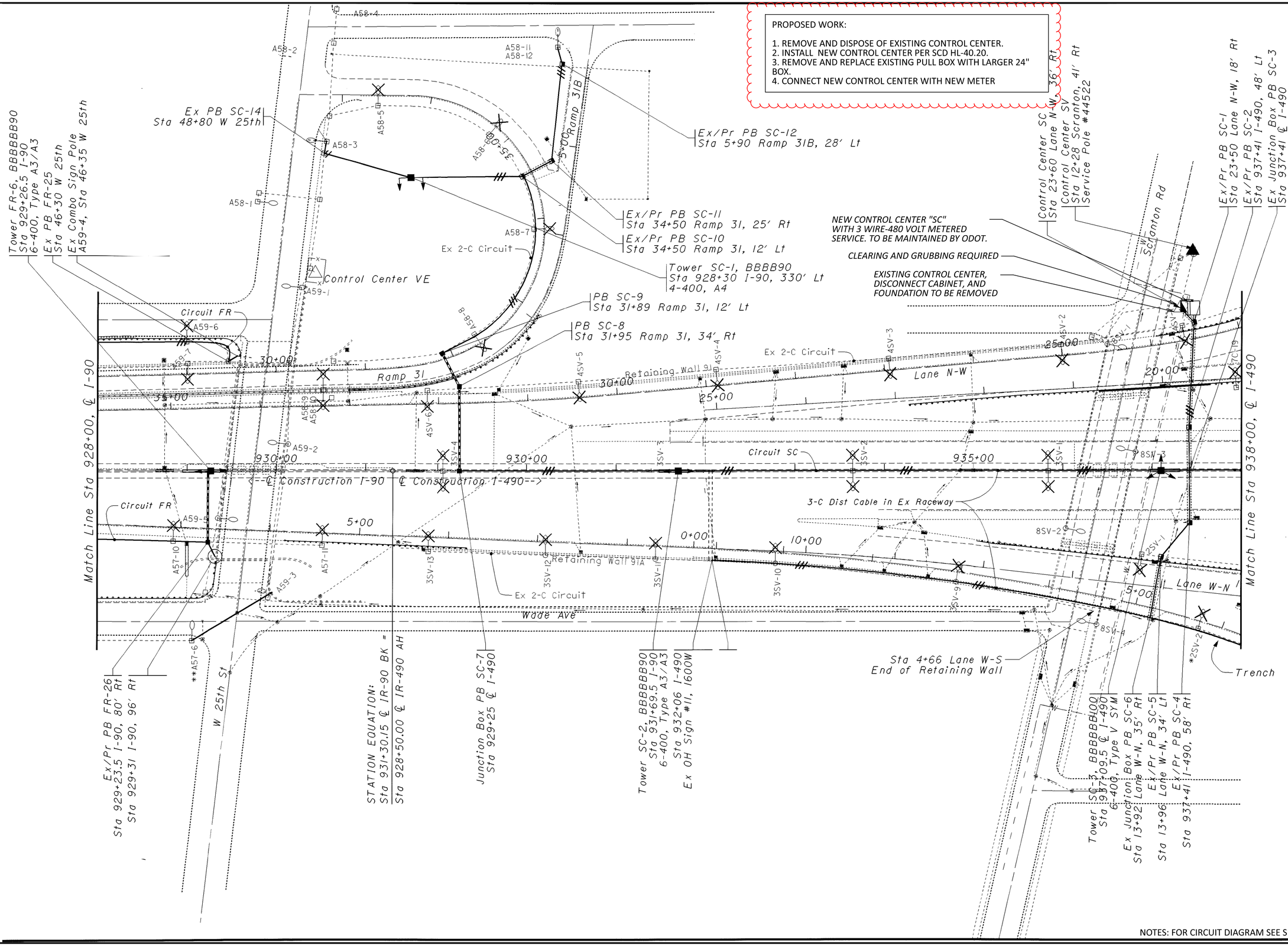

NOTES: FOR CIRCUIT DIAGRAM SEE SHEET P.15

HORIZONTAL SCALE IN FEET 0 0 0

LOCATION NO. 4
IR-90 AT SCRANTON (SC CIRCUIT)

DESIGN AGENCY

DESIGNER: JDA

REVIEWER: DAB 12/12/24

PROJECT ID: 110602

SHEET P.48 TOTAL 80

CUY/LAK-LG-FY2025

MODEL: Sheet PAPERSIZE: 34x22 (in.) DATE: 4/9/2025 TIME: 11:32:43 AM USER: jalbrig1
pw:\\ohiodot-pw.bentley.com:ohiodot-pw-02\Documents\01 Active Projects\District 12\Cuyahoga\110602\400-Engineering\Lighting\Sheets\110602_LP004.dgn

PROPOSED WORK:

1. REMOVE AND DISPOSE OF EXISTING CONTROL CENTER.
2. REMOVE EXISTING 2-WIRE CABLE AND CLEAN EXISTING CONDUIT.
3. INSTALL 3-WIRE DISTRIBUTION CABLE.
4. REMOVE EXISTING CONTROL CENTER FOUNDATION.
5. INSTALL NEW PULL BOX, CONDUIT AND DISTRIBUTION CABLE.
6. INSTALL NEW CONTROL CENTER PER SCD HL-40.20.

HORIZONTAL SCALE IN FEET 0 0 0 0

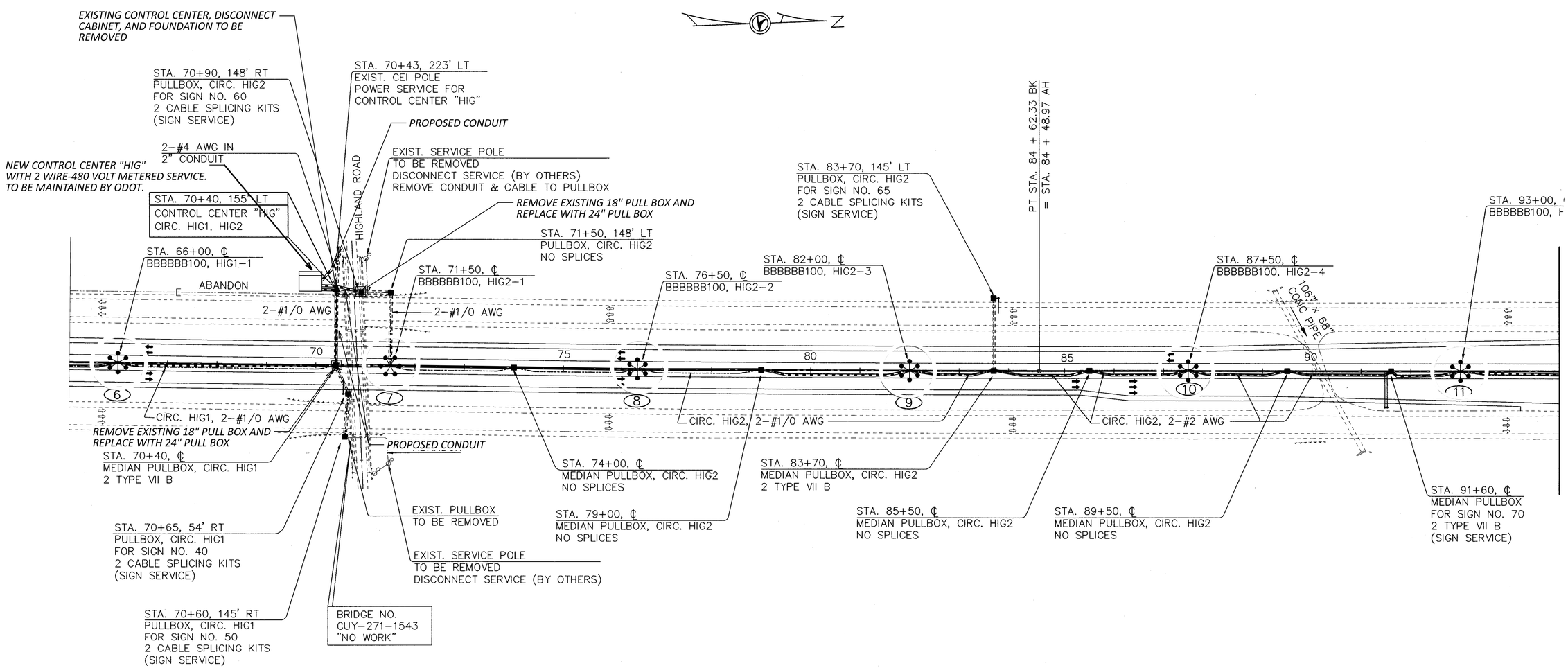

NOTES: FOR CIRCUIT DIAGRAM SEE SHEET P.18

LOCATION NO. 7
IR-271 AT HIGHLAND ROAD

DESIGN AGENCY

DESIGNER
JDA

REVIEWER
DAB 12/12/24

PROJECT ID
110602

SHEET P.51 TOTAL 80

CUY/LAK-LG-FY2025

MODEL: Sheet PAPERSIZE: 34x22 (in.) DATE: 4/9/2025 TIME: 11:34:27 AM USER: jalbrig1
pw:\\ohiodot-pw.bentley.com:ohiodot-pw-02\Documents\01 Active Projects\District 12\Cuyahoga\110602\400-Engineering\Lighting\Sheets\110602_LP007.dgn

PROPOSED WORK:

1. REMOVE EXISTING 2-WIRE DISTRIBUTION CABLE AND CLEAN EXISTING CONDUIT.
2. INSTALL 3-WIRE DISTRIBUTION CABLE.

HORIZONTAL SCALE IN FEET
0 0 0 0

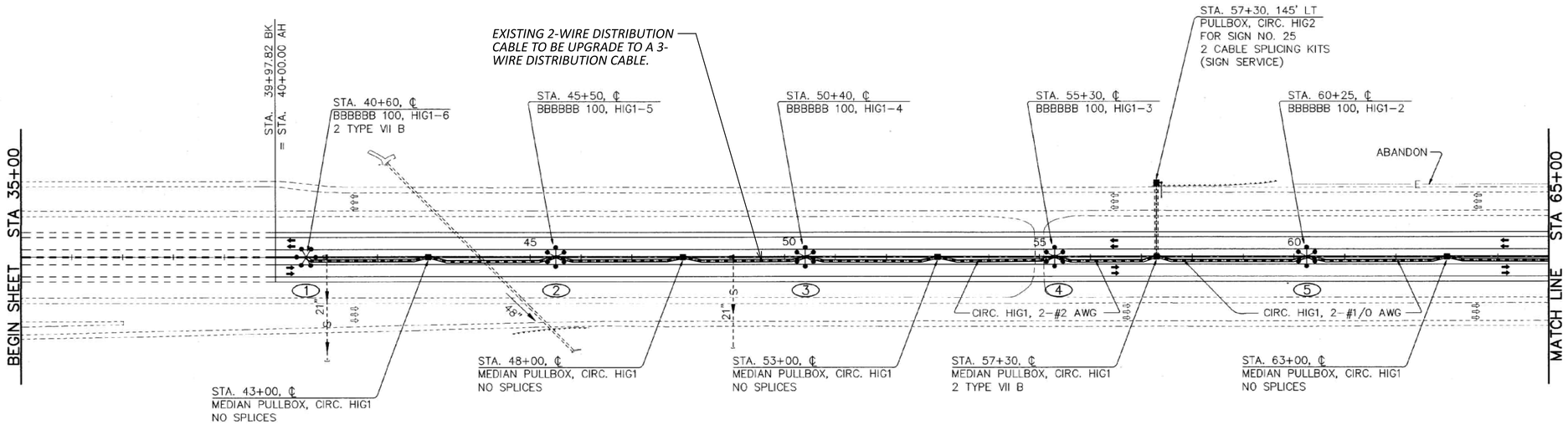

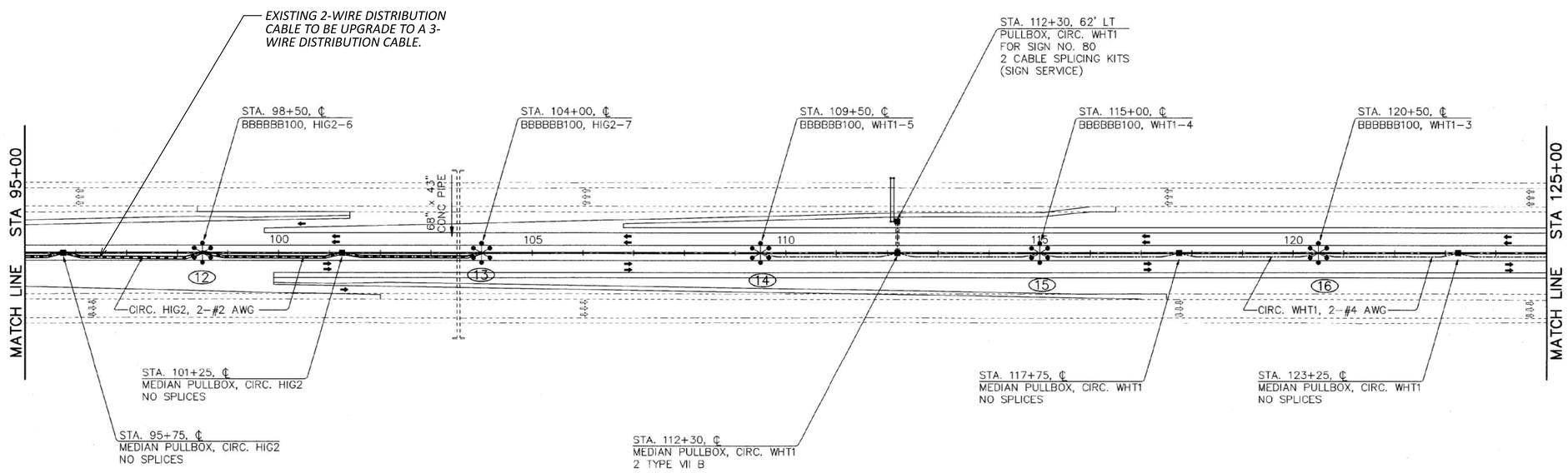

NOTES: FOR CIRCUIT DIAGRAM SEE SHEET P.18

LOCATION NO. 7
IR-271 AT HIGHLAND ROAD

DESIGN AGENCY

DESIGNER
JDA

REVIEWER
DAB 12/12/24

PROJECT ID
110602

SHEET P.51A TOTAL 80

CUY/LAK-LG-FY2025

MODEL: Sheet - Copy-2 PAPERSIZE: 34x22 (in.) DATE: 4/9/2025 TIME: 11:34:58 AM USER: jalbrig1
pw:\\ohiodot-pw.bentley.com:ohiodot-pw-02\Documents\01 Active Projects\District 12\Cuyahoga\110602\400-Engineering\Lighting\Sheets\110602_LP007.dgn

PROPOSED WORK:

1. REMOVE AND DISPOSE OF EXISTING CONTROL CENTER.
2. REMOVE EXISTING 2-WIRE DISTRIBUTION CABLE AND CLEAN EXISTING CONDUITS.
3. INSTALL 3-WIRE DISTRIBUTION CABLE.
4. REMOVE EXISTING CONTROL CENTER FOUNDATION.
5. INSTALL NEW CONTROL CENTER PER SCD HL-40.20.
6. REMOVE AND REPLACE EXISTING PULL BOX WITH LARGER 24" BOX.
7. CONNECT NEW CONTROL CENTER WITH NEW METER.

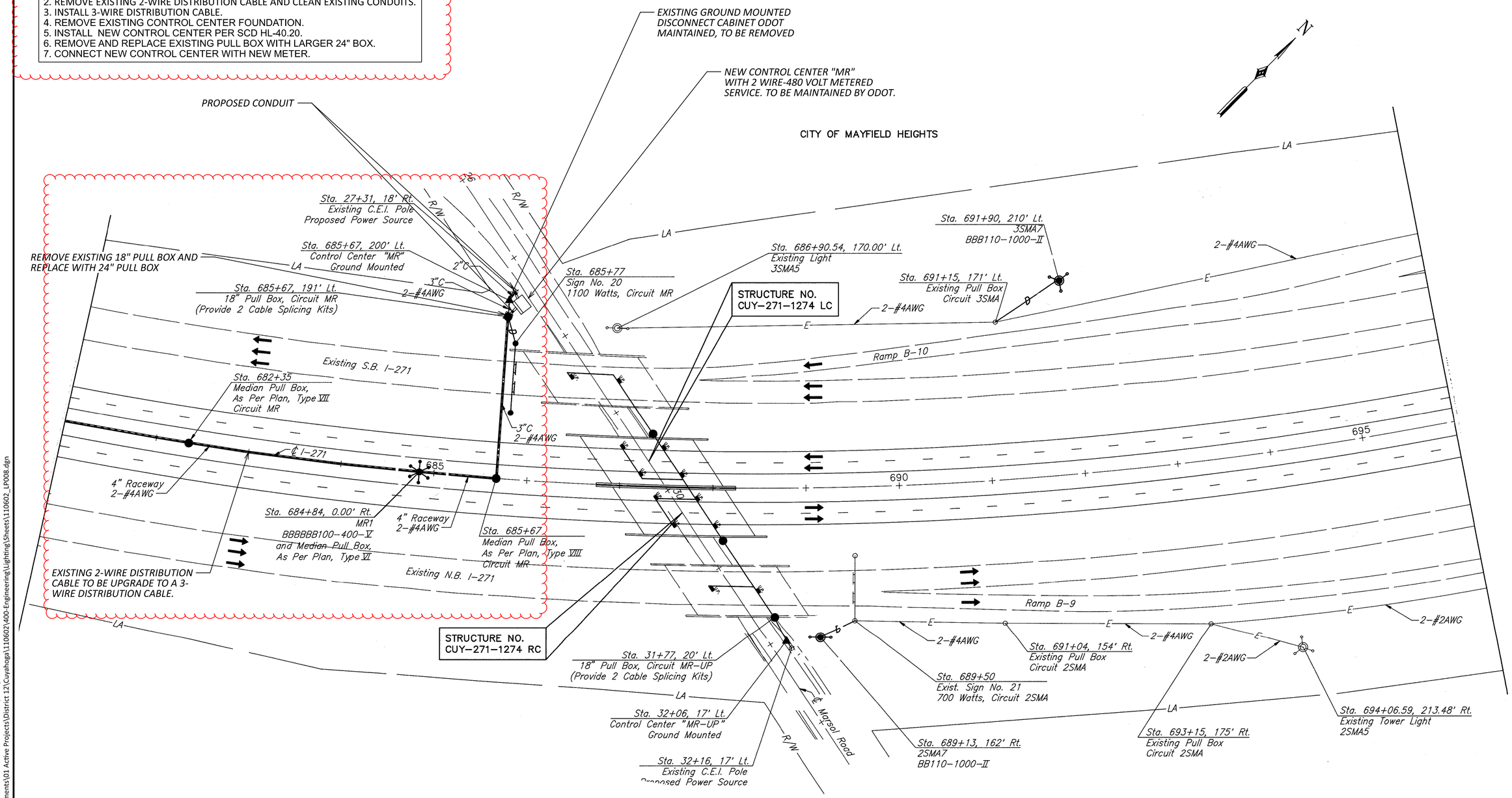

NOTES: FOR CIRCUIT DIAGRAMS SEE SHEET P.19

HORIZONTAL SCALE IN FEET 0 0 0 0

LOCATION NO. 8
IR-271 AT MARSOL ROAD

DESIGN AGENCY

DESIGNER
JDA

REVIEWER
DAB 12/12/24

PROJECT ID
110602

SHEET P.52 TOTAL 80

CUY/LAK-LG-FY2025

MODEL: Sheet PAPERSIZE: 34x22 (in.) DATE: 4/9/2025 TIME: 11:35:35 AM USER: jalbrig1
pw:\\ohiodot-pw.bentley.com:ohiodot-pw-02\Documents\01 Active Projects\District 12\Cuyahoga\110602\400-Engineering\Lighting\Sheets\110602_LP008.dgn

PROPOSED WORK:

1. REMOVE EXISTING 2-WIRE DISTRIBUTION CABLE AND CLEAN EXISTING CONDUITS.
2. INSTALL 3-WIRE DISTRIBUTION CABLE.

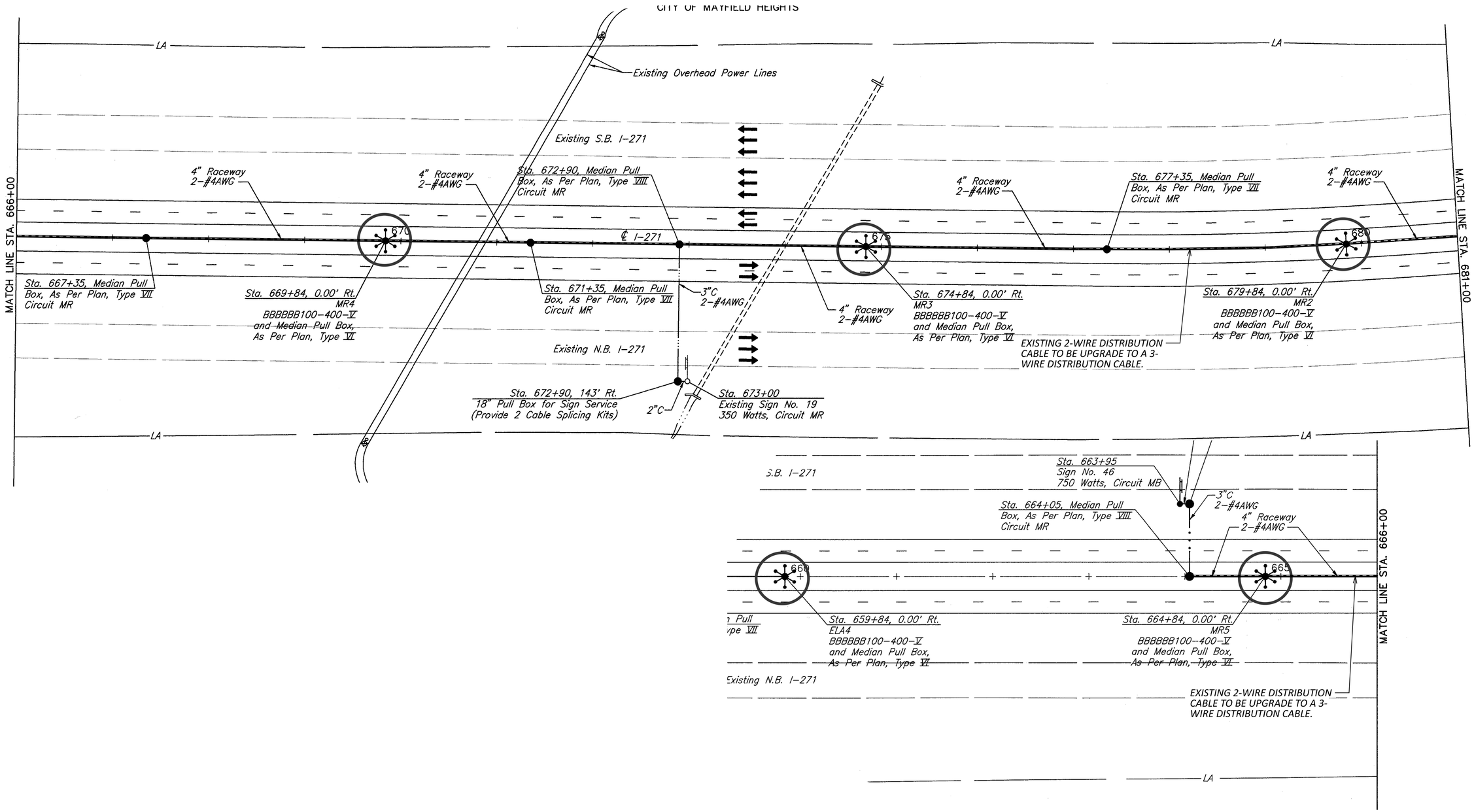

NOTES: FOR CIRCUIT DIAGRAMS SEE SHEET P.19

HORIZONTAL SCALE IN FEET 0 0 0 0

LOCATION NO. 8
IR-271 AT MARSOL ROAD

DESIGN AGENCY

DESIGNER JDA

REVIEWER DAB 12/12/24

PROJECT ID 110602

SHEET P.52A TOTAL 80

CUY/LAK-LG-FY2025

MODEL: Sheet - Copy-2 PAPERSIZE: 34x22 (in.) DATE: 4/9/2025 TIME: 11:36:02 AM USER: jalbrig1
pw:\\ohiodot-pw.bentley.com:ohiodot-pw-02\Documents\01 Active Projects\District 12\Cuyahoga\110602\400-Engineering\Lighting\Sheets\110602_LP008.dgn

PROPOSED WORK:

1. REMOVE AND DISPOSE OF EXISTING CONTROL CENTER.
2. REMOVE EXISTING 2-WIRE CABLE AND CLEAN EXISTING CONDUITS.
3. INSTALL 3-WIRE DISTRIBUTION CABLE.
4. REMOVE EXISTING CONTROL CENTER FOUNDATION.
5. INSTALL NEW CONTROL CENTER PER SCD HL-40.20.
6. REMOVE AND REPLACE EXISTING PULL BOX WITH LARGER 24" BOX.
7. CONNECT NEW CONTROL CENTER WITH NEW METER.

HORIZONTAL SCALE IN FEET 0 0 0 0

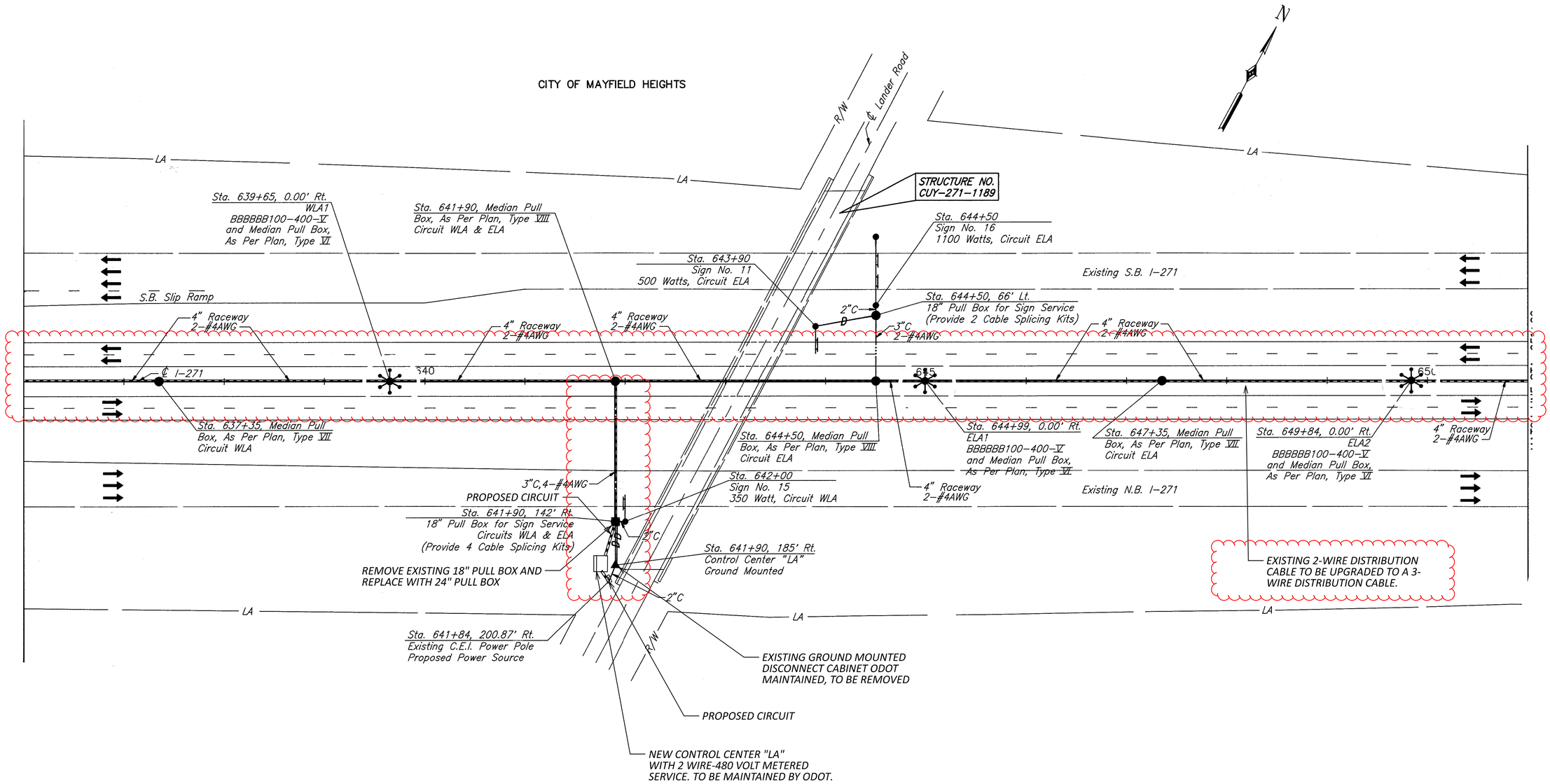

NOTES: FOR CIRCUIT DIAGRAMS SEE SHEET P.20

LOCATION NO. 9
IR-271 AT LANDER RD

DESIGN AGENCY

DESIGNER
JDA

REVIEWER
DAB 12/12/24

PROJECT ID
110602

SHEET P.53 TOTAL 80

CUY/LAK-LG-FY2025

MODEL: Sheet PAPERSIZE: 34x22 (in.) DATE: 4/9/2025 TIME: 11:36:42 AM USER: jalbrig1
pw:\\ohiodot-pw.bentley.com:ohiodot-pw-02\Documents\01 Active Projects\District 12\Cuyahoga\110602\400-Engineering\Lighting\Sheets\110602_LP009.dgn

PROPOSED WORK:

1. REMOVE EXISTING 2-WIRE DISTRIBUTION CABLE AND CLEAN EXISTING CONDUITS.
2. INSTALL 3-WIRE DISTRIBUTION CABLE.

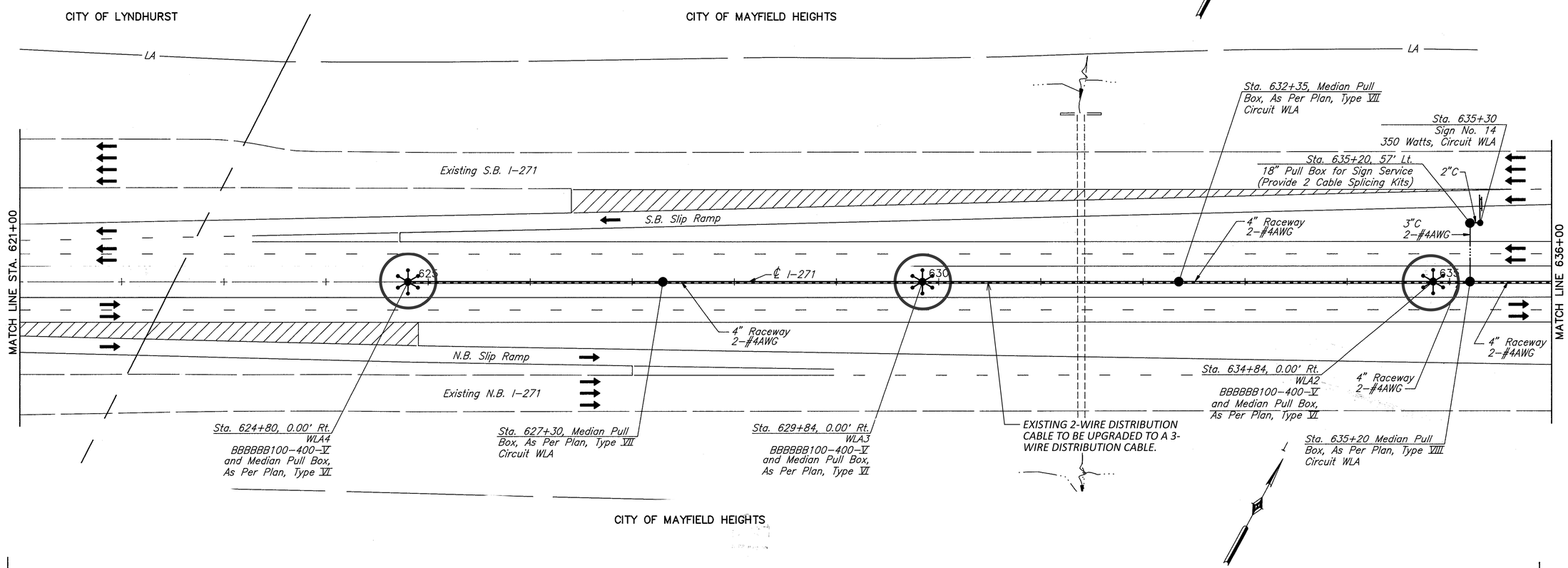

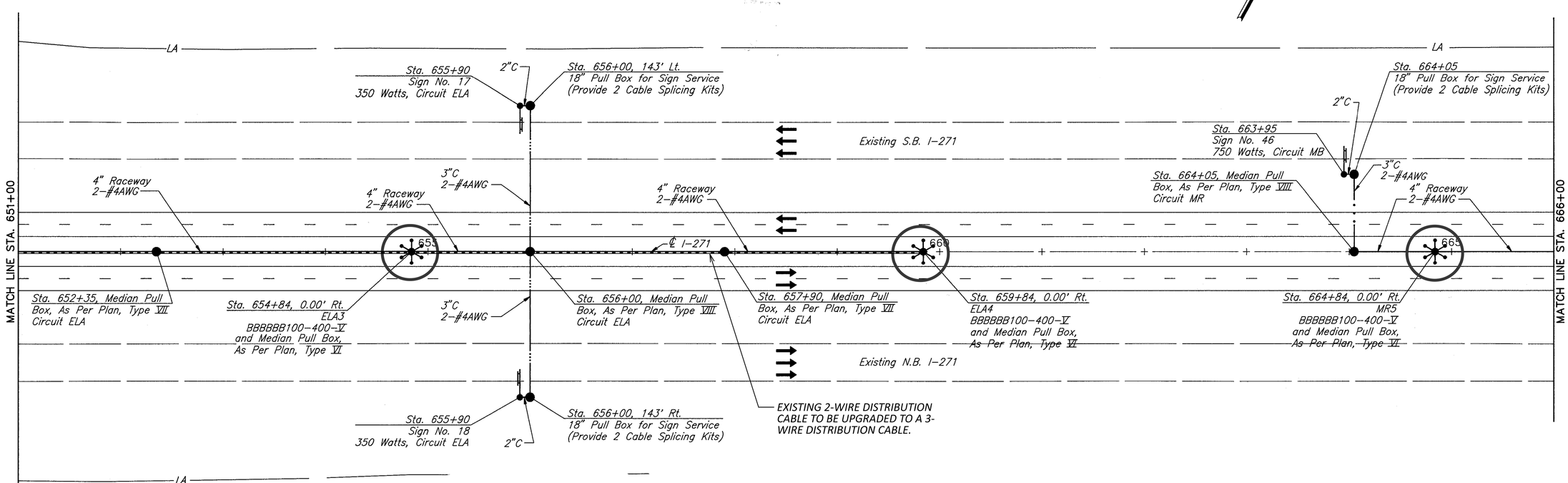

HORIZONTAL SCALE IN FEET 0 0 0 0

LOCATION NO. 9
IR-271 AT LANDER RD

DESIGN AGENCY

DESIGNER JDA

REVIEWER DAB 12/12/24

PROJECT ID 110602

SHEET P.53A TOTAL 80

NOTES: FOR CIRCUIT DIAGRAMS SEE SHEET P.20

CUY/LAK-LG-FY2025

MODEL: Sheet - Copy-2 PAPERSIZE: 34x22 (in.) DATE: 4/9/2025 TIME: 11:37:08 AM USER: jalbrig1
pw:\\ohiodot-pw.bentley.com:ohiodot-pw-02\Documents\01 Active Projects\District 12\Cuyahoga\110602\400-Engineering\Lighting\Sheets\110602_LP009.dgn

PROPOSED WORK:

1. REMOVE AND DISPOSE OF EXISTING CONTROL CENTER.
2. REMOVE EXISTING 2-WIRE DISTRIBUTION CABLE AND CLEAN EXISTING CONDUITS.
3. INSTALL 3-WIRE DISTRIBUTION CABLE.
4. REMOVE EXISTING CONTROL CENTER FOUNDATION.
5. INSTALL NEW CONTROL CENTER PER SCD HL-40.20.
6. REMOVE AND REPLACE EXISTING PULL BOX WITH LARGER 24" BOX.
7. CONNECT NEW CONTROL CENTER WITH NEW METER.

HORIZONTAL SCALE IN FEET 0 0 0 0

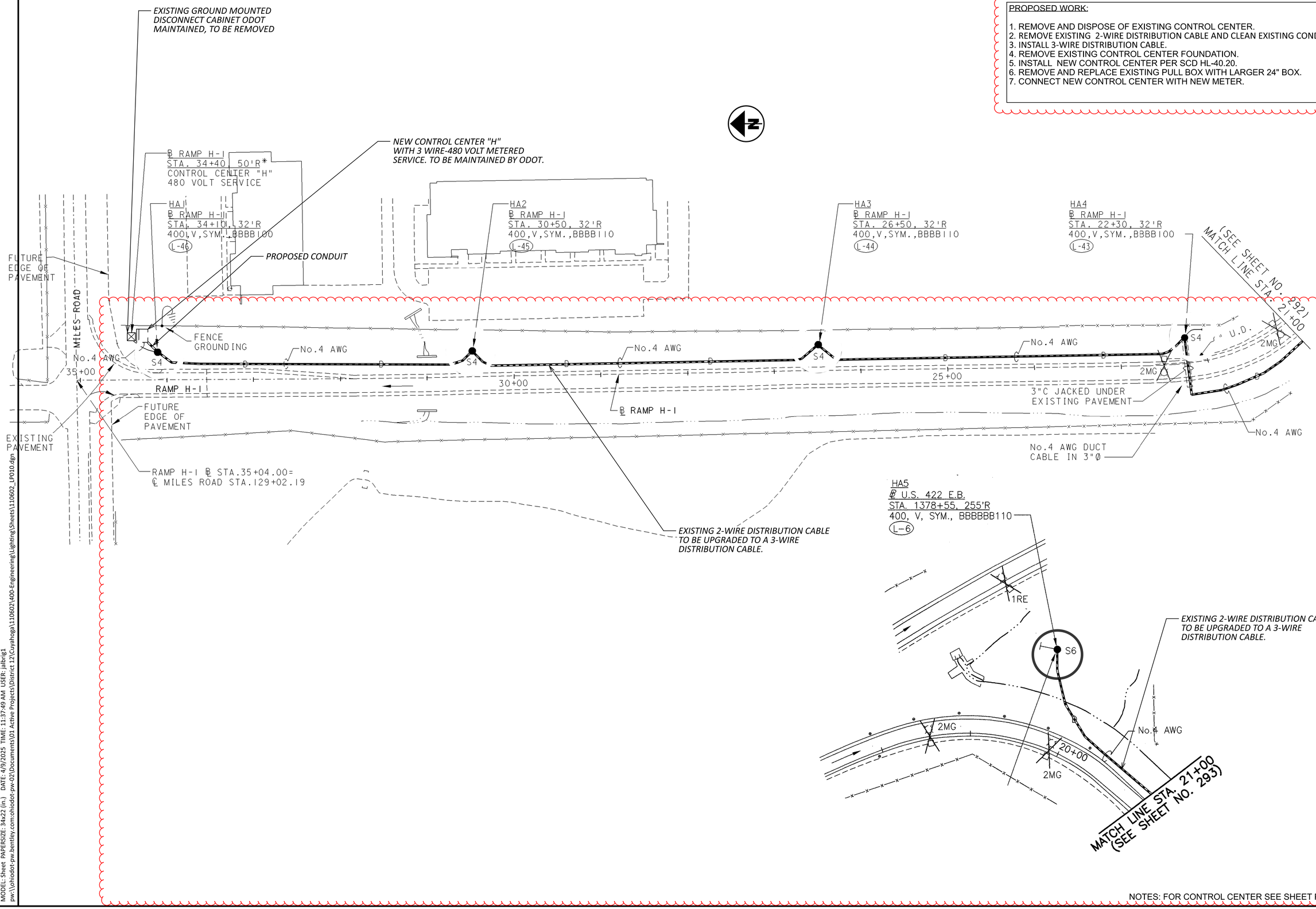

NOTES: FOR CONTROL CENTER SEE SHEET P.21

LOCATION NO. 10
IR-271 AT MILES ROAD

DESIGN AGENCY

DESIGNER JDA
REVIEWER DAB 12/12/24
PROJECT ID 110602
SHEET P.54 TOTAL 80

CUY/LAK-LG-FY2025

MODEL: Sheet PAPERSIZE: 34x22 (in.) DATE: 4/9/2025 TIME: 11:37:49 AM USER: jalbrig1
pw:\\ohiodot-pw.bentley.com:ohiodot-pw-02\Documents\01 Active Projects\District 12\Cuyahoga\110602\400-Engineering\Lighting\Sheets\110602_LP010.dgn

PROPOSED WORK:

1. REMOVE AND DISPOSE OF EXISTING CONTROL CENTER.
2. REMOVE EXISTING 2-WIRE DISTRIBUTION CABLE AND CLEAN EXISTING CONDUITS.
3. INSTALL 3-WIRE DISTRIBUTION CABLE.
4. REMOVE EXISTING CONTROL CENTER FOUNDATION.
5. INSTALL NEW CONTROL CENTER PER SCD HL-40.20.
6. REMOVE AND REPLACE EXISTING PULL BOX WITH LARGER 24" BOX.
7. CONNECT NEW CONTROL CENTER WITH NEW METER.

HORIZONTAL SCALE IN FEET 0 25 50 100 150

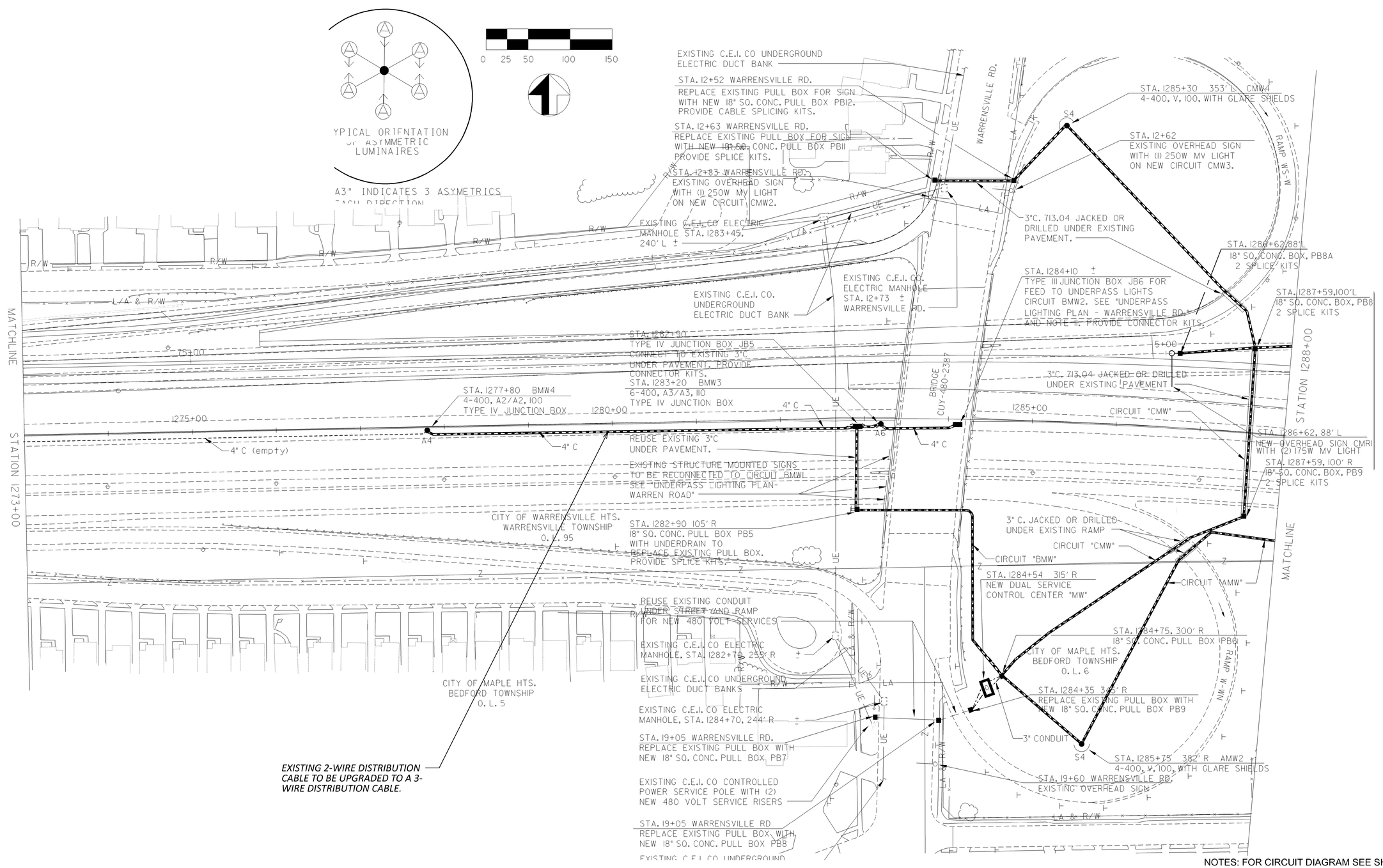

NOTES: FOR CIRCUIT DIAGRAM SEE SHEET P.25

LOCATION NO. 15
IR-480 AT WARRENSVILLE ROAD

DESIGN AGENCY

DESIGNER JDA

REVIEWER DAB 12/12/24

PROJECT ID 110602

SHEET P.58A TOTAL 80

CUY/LAK-LG-FY2025

MODEL: Sheet - Copy-2 PAPERSIZE: 34x22 (in.) DATE: 4/9/2025 TIME: 11:40:50 AM USER: jalbrig1
pw:\\ohiodot-pw.bentley.com:ohiodot-pw-02\Documents\01 Active Projects\District 12\Cuyahoga\110602\400-Engineering\Lighting\Sheets\110602_LP015.dgn

PROPOSED WORK:

1. REMOVE AND DISPOSE OF EXISTING CONTROL CENTER.
2. REMOVE EXISTING 2-WIRE DISTRIBUTION CABLE AND CLEAN EXISTING CONDUITS.
3. INSTALL 3-WIRE DISTRIBUTION CABLE.
4. REMOVE EXISTING CONTROL CENTER FOUNDATION.
5. INSTALL NEW CONTROL CENTER PER SCD HL-40.20.
6. REMOVE AND REPLACE EXISTING PULL BOX WITH LARGER 24" BOX.
7. CONNECT NEW CONTROL CENTER WITH NEW METER.

HORIZONTAL SCALE IN FEET 0 0 0 0

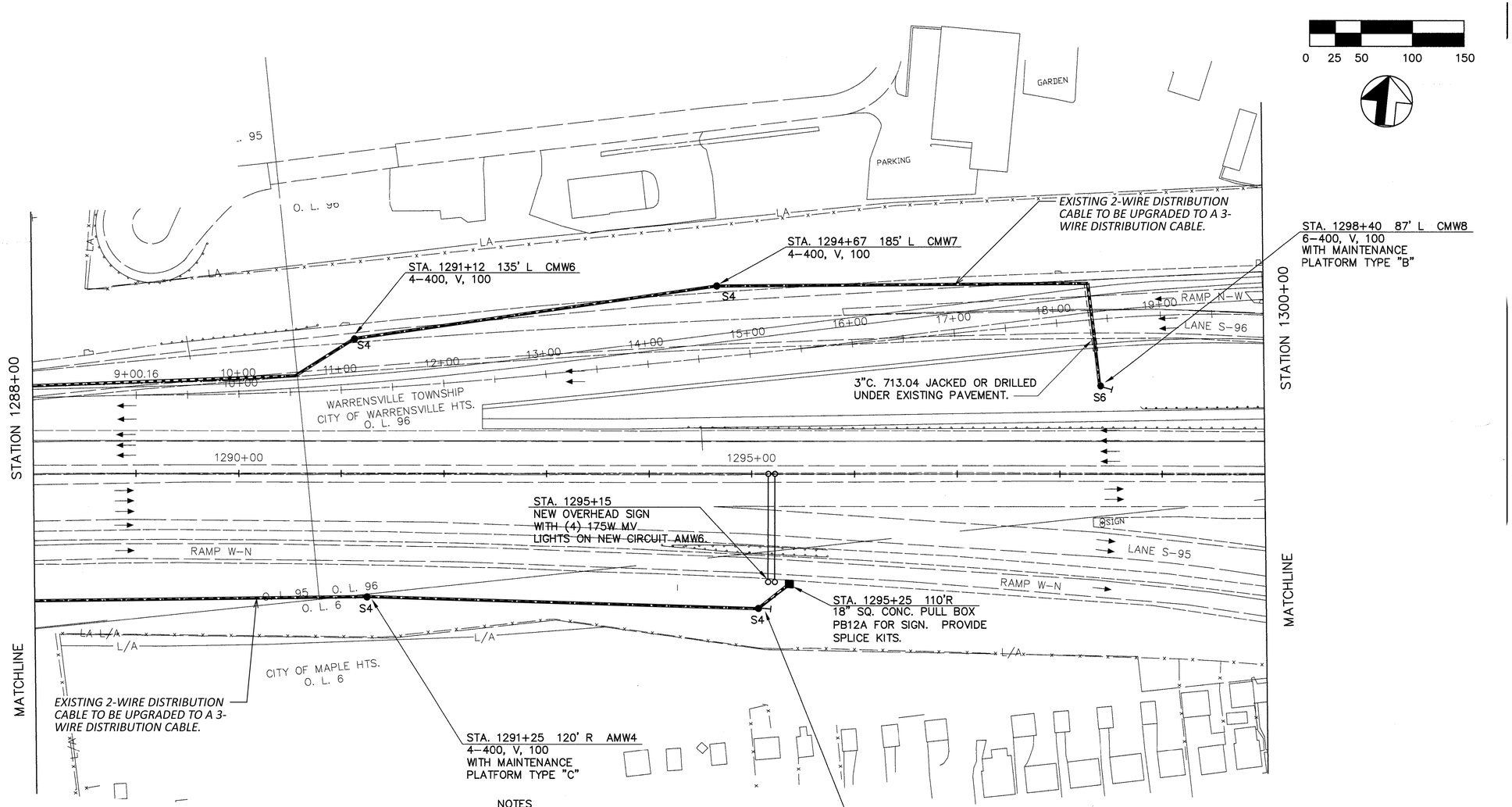

NOTES

SHEET 358.

NS, SEE DRAWING HL-20.21.
BY 25'-0" DEEP.

EE DRAWING HL-10.12

SEE LINE AND GRADE

RAWING HL-10.12

NOTES: FOR CIRCUIT DIAGRAM SEE SHEET P.25

LOCATION NO. 15
IR-480 AT WARRENSVILLE ROAD

DESIGN AGENCY

DESIGNER JDA
REVIEWER DAB 12/12/24
PROJECT ID 110602
SHEET P.58B TOTAL 80

CUY/LAK-LG-FY2025

MODEL: Sheet - Copy-3 PAPERSIZE: 34x22 (in.) DATE: 4/9/2025 TIME: 11:41:16 AM USER: jalbrig1
pw:\\ohiodot-pw.bentley.com:ohiodot-pw-02\Documents\01 Active Projects\District 12\Cuyahoga\110602\400-Engineering\Lighting\Sheets\110602_LP015.dgn

PROPOSED WORK:

1. REMOVE AND DISPOSE OF EXISTING CONTROL CENTER.
2. REMOVE EXISTING 2-WIRE DISTRIBUTION CABLE AND CLEAN EXISTING CONDUITS.
3. INSTALL 3-WIRE DISTRIBUTION CABLE.
4. REMOVE EXISTING CONTROL CENTER FOUNDATION.
5. INSTALL NEW CONTROL CENTER PER SCD HL 40-20.
6. REMOVE AND REPLACE EXISTING PULL BOX WITH LARGER 24" BOX.
7. CONNECT NEW CONTROL CENTER WITH NEW METER.

HORIZONTAL SCALE IN FEET 0 0 0 0

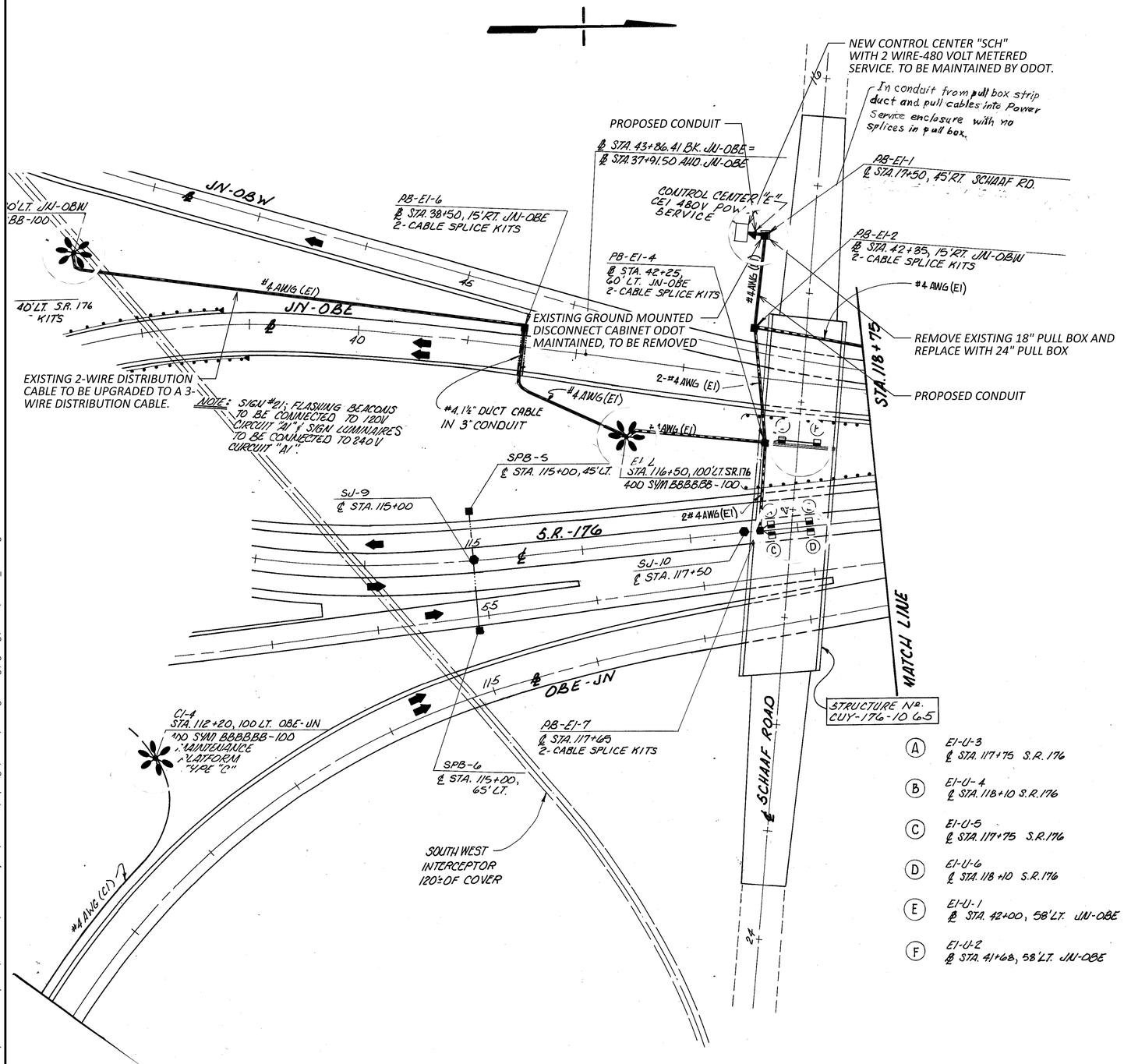

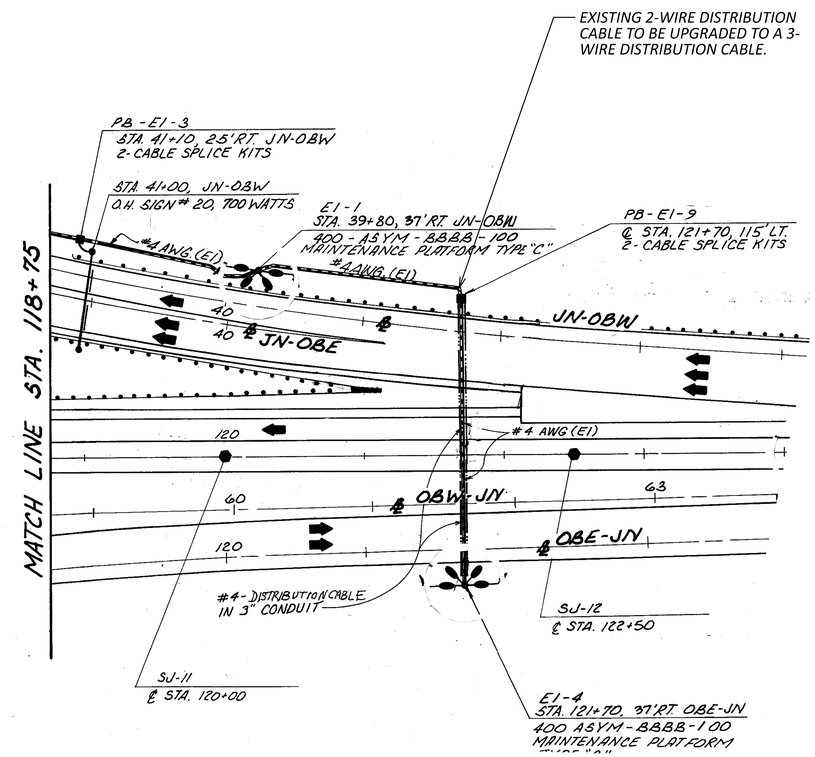

LOCATION NO. 16
SR-176 AT SCHAAF ROAD

DESIGN AGENCY

DESIGNER JDA
REVIEWER DAB 12/12/24
PROJECT ID 110602
SHEET P.59 TOTAL 80

NOTES: FOR CIRCUIT DIAGRAM SEE SHEET P.26

CUY/LAK-LG-FY2025

MODEL: Sheet PAPERSIZE: 34x22 (in.) DATE: 4/9/2025 TIME: 11:41:48 AM USER: jalbrig1
pw:\\ohiodot-pw.bentley.com:ohiodot-pw-02\Documents\01 Active Projects\District 12\Cuyahoga\110602\400-Engineering\Lighting\Sheets\110602_LP016.dgn

PROPOSED WORK:

1. REMOVE AND DISPOSE OF EXISTING CONTROL CENTERS "B" AND "C".
2. REMOVE EXISTING 2-WIRE DISTRIBUTION CABLE AND CLEAN EXISTING CONDUITS.
3. INSTALL 3-WIRE DISTRIBUTION CABLE.
4. REMOVE EXISTING CONTROL CENTER FOUNDATION.
5. INSTALL NEW CONTROL CENTERS "B" AND "C".
6. REMOVE AND REPLACE EXISTING PULL BOX WITH LARGER 24" BOX.
7. CONNECT NEW CONTROL CENTER WITH NEW METER.

HORIZONTAL SCALE IN FEET 0 0 0 0

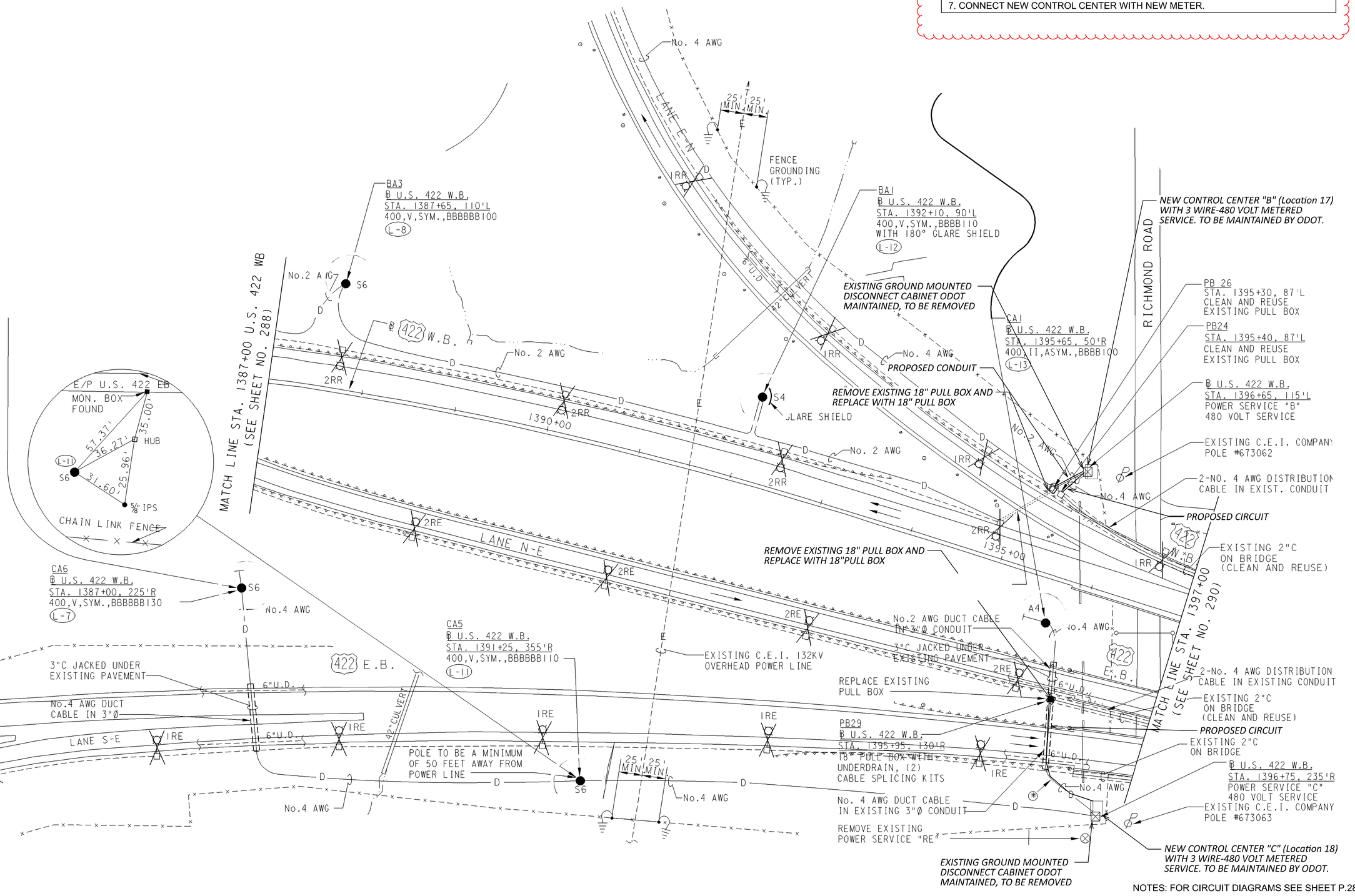

NOTES: FOR CIRCUIT DIAGRAMS SEE SHEET P.28

PLAN SHEET - LOCATION NO. 17 AND 18 US-422/RICHMOND ROAD (CIRCUIT B/C)

DESIGN AGENCY

DESIGNER: JDA

REVIEWER: DAB 12/12/24

PROJECT ID: 110602

SHEET: P. 60 TOTAL: 80

CUY/LAK-LG-FY2025

MODEL: Sheet PAPERSIZE: 34x22 (in.) DATE: 4/9/2025 TIME: 11:42:26 AM USER: jalbrig1
pw:\\ohiodot-pw.bentley.com:ohiodot-pw-02\Documents\01 Active Projects\District 12\Cuyahoga\110602\400-Engineering\Lighting\Sheets\110602_LP018.dgn

PROPOSED WORK:

1. REMOVE EXISTING 2-WIRE DISTRIBUTION CABLE AND CLEAN EXISTING CONDUITS.
2. INSTALL 3-WIRE DISTRIBUTION CABLE.

HORIZONTAL SCALE IN FEET

0 0 0 0

CIRCUIT B - A

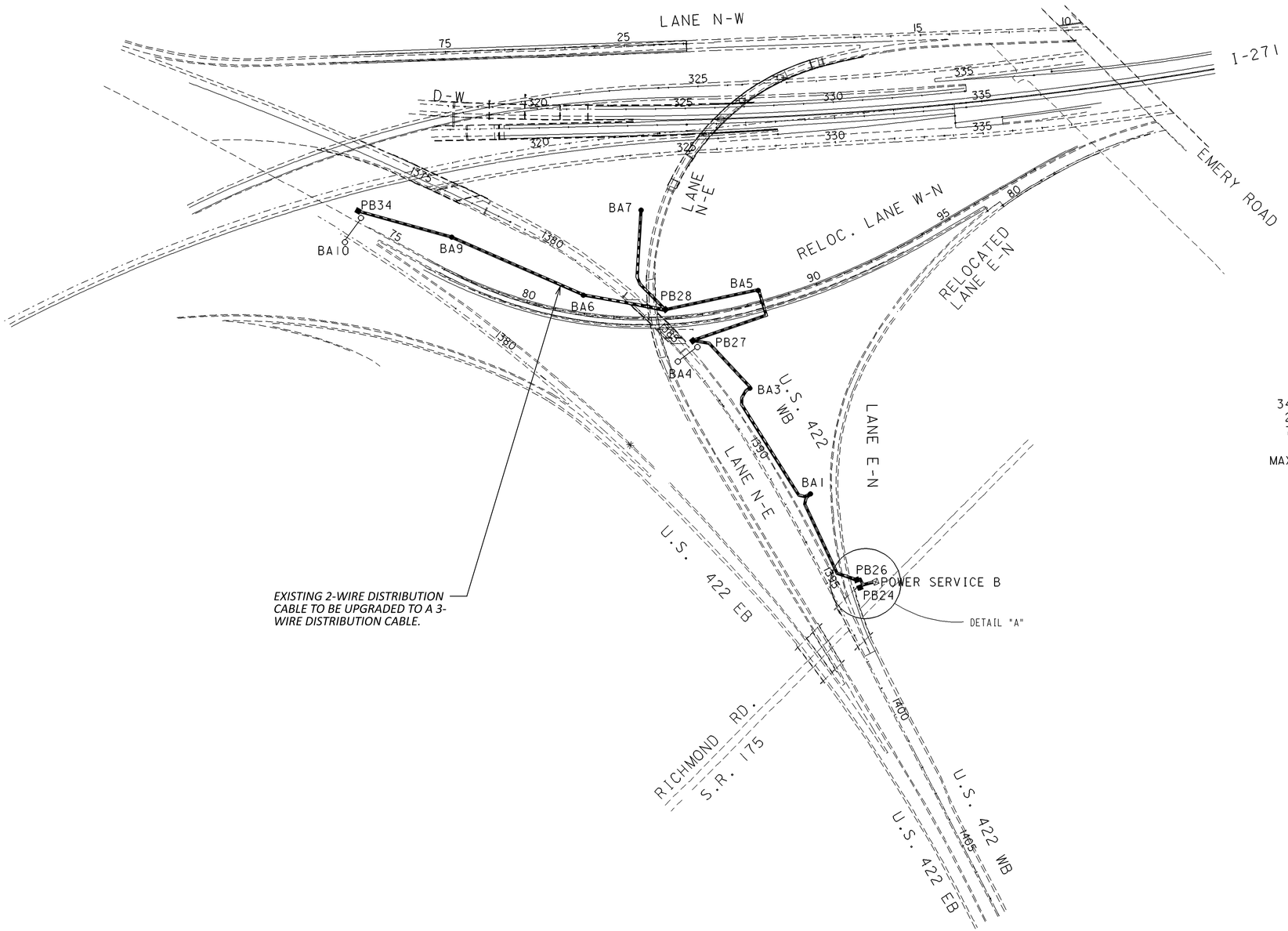

CIRCUIT "B-A"

34 - 400 WATT LAMPS
2 - 175 WATT SIGN LAMPS
7 - 250 WATT SIGN LAMPS

MAX VOLTAGE DROP = 4.94%

NOTES: FOR CIRCUIT DIAGRAMS SEE SHEET P.28

LOCATION NO. 17/18
SHEET SUB-TITLE

DESIGN AGENCY

DESIGNER JDA

REVIEWER DAB 12/12/24

PROJECT ID 110602

SHEET P.60A TOTAL 80

CUY/LAK-LG-FY2025

MODEL: Sheet - Copy-2 PAPERSIZE: 34x22 (in.) DATE: 4/9/2025 TIME: 11:42:56 AM USER: jalbrig1
pw:\\ohiodot-pw.bentley.com:ohiodot-pw-02\Documents\01 Active Projects\District 12\Cuyahoga\110602\400-Engineering\Lighting\Sheets\110602_LP018.dgn

PROPOSED WORK:

1. REMOVE EXISTING 2-WIRE DISTRIBUTION CABLE AND CLEAN EXISTING CONDUITS.
2. INSTALL 3-WIRE DISTRIBUTION CABLE.

HORIZONTAL SCALE IN FEET
0 0 0 0

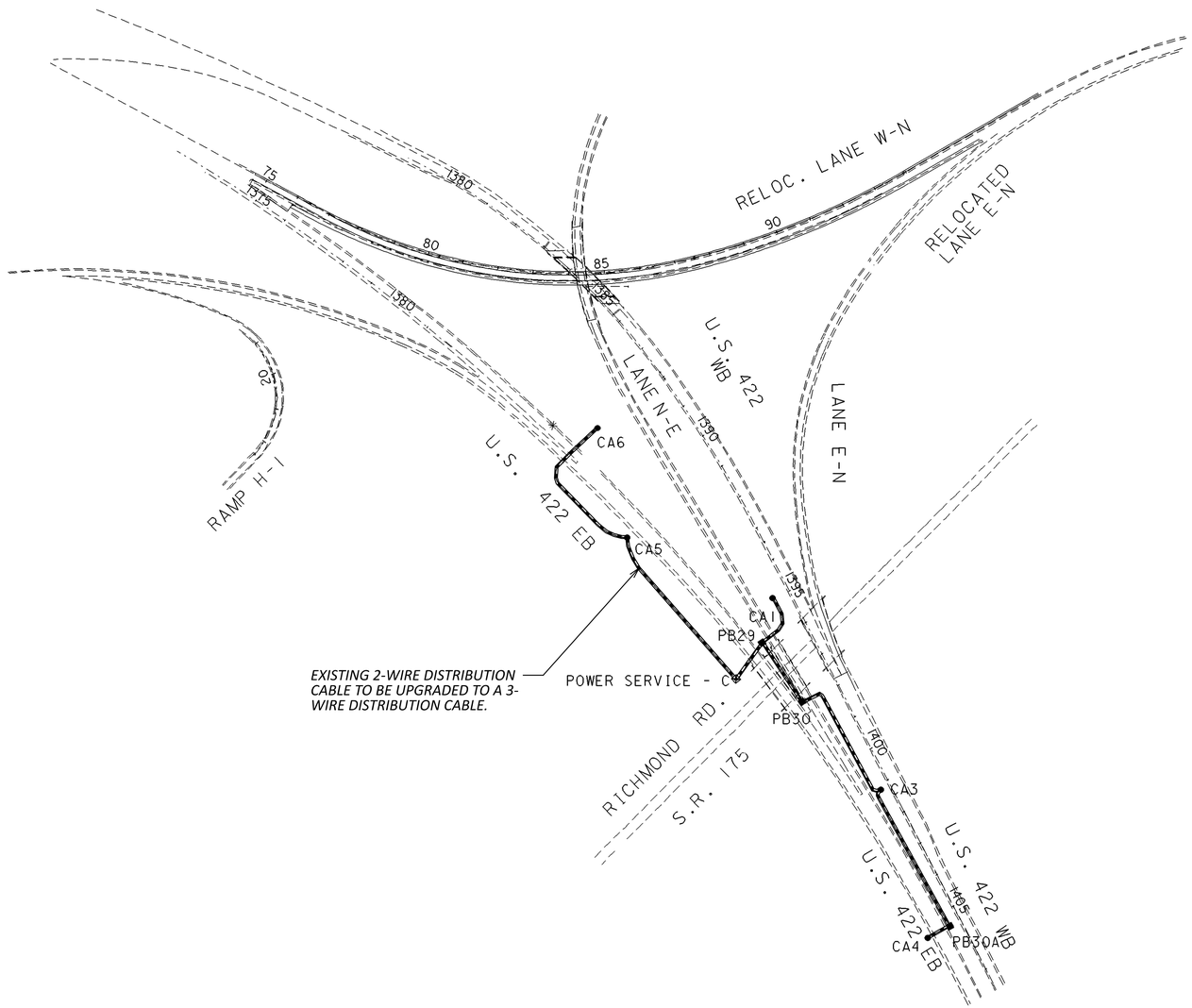

CIRCUIT "C-A"

24 - 400 WATT LAMPS
NO SIGN LAMPS

MAX VOLTAGE DROP = 1.16%

NOTES: FOR CIRCUIT DIAGRAMS SEE SHEET P.28

LOCATION NO. 17/18
SHEET SUB-TITLE

DESIGN AGENCY

DESIGNER
JDA

REVIEWER
DAB 12/12/24

PROJECT ID
110602

SHEET P.60B TOTAL 80

CUY/LAK-LG-FY2025

MODEL: Sheet - Copy-3 PAPERSIZE: 34x22 (in.) DATE: 4/9/2025 TIME: 11:43:26 AM USER: jalbrig1
pw:\\ohiodot-pw.bentley.com:ohiodot-pw-02\Documents\01 Active Projects\District 12\Cuyahoga\110602\400-Engineering\Lighting\Sheets\110602_LP018.dgn

PROPOSED WORK:

1. REMOVE EXISTING FOUNDATION OF POLE 2BAM4 AND REPLACE WITH 18" PULL BOX
2. REMOVE AND DISPOSE OF EXISTING DAMAGED POLE.
3. INSTALL NEW LIGHT POLES, FOUNDATIONS, AND LUMINAIRES.
4. INSTALL NEW CONNECTOR KITS.
5. INSTALL NEW DUCT CABLE

HORIZONTAL SCALE IN FEET 0 0 0 0

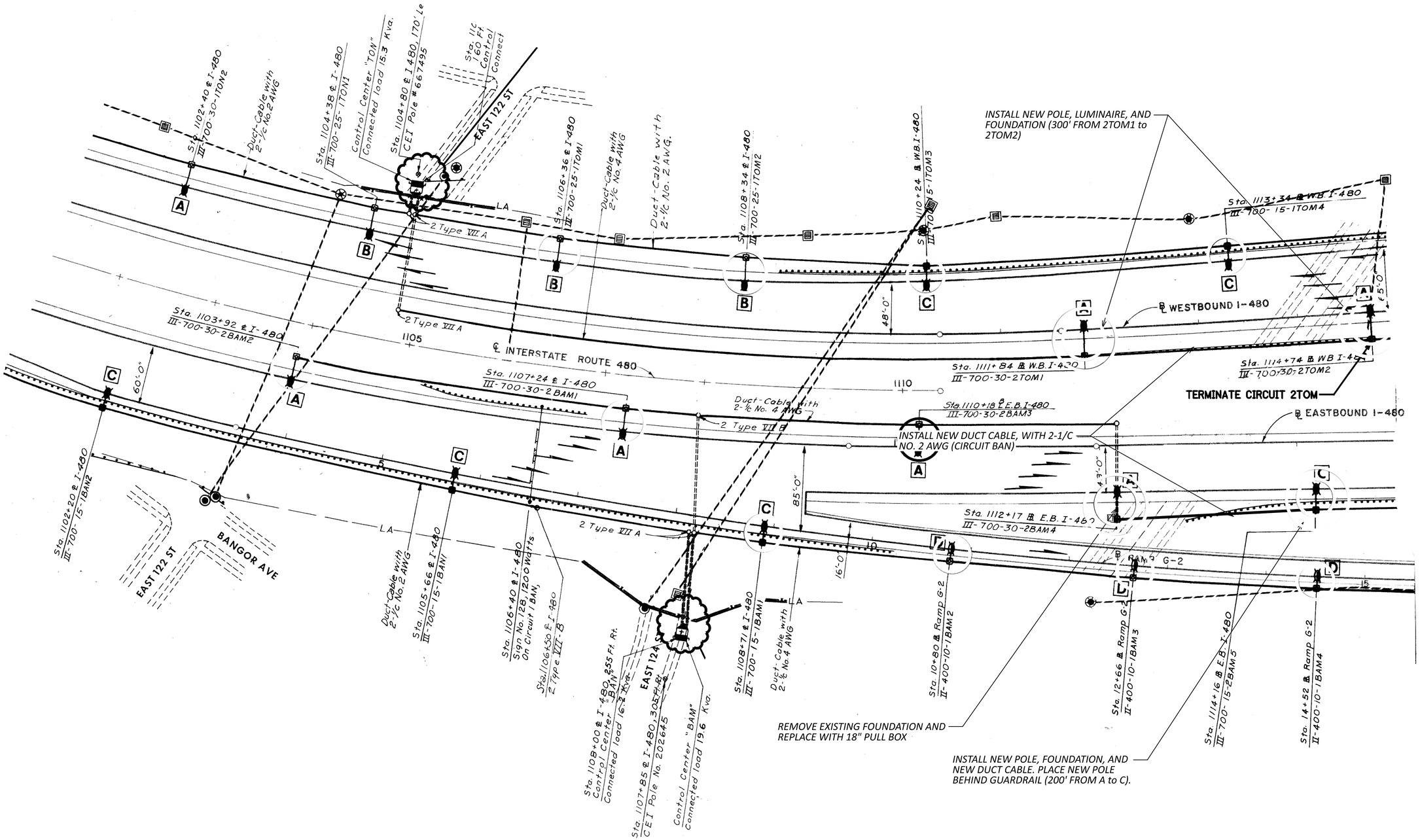

NOTES: FOR CIRCUIT DIAGRAMS SEE SHEET P.35 AND P.35

LOCATION NO. 23
GRANGER ROAD

DESIGN AGENCY

DESIGNER JDA

REVIEWER DAB 12/12/24

PROJECT ID 110602

SHEET P.67 TOTAL 80

CUY/LAK-LG-FY2025

MODEL: Sheet PAPERSIZE: 34x22 (in.) DATE: 4/9/2025 TIME: 11:48:08 AM USER: jalbrig1
pw:\\ohiodot-pw.bentley.com:ohiodot-pw-02\Documents\01 Active Projects\District 12\Cuyahoga\110602\400-Engineering\Lighting\Sheets\110602_LP023.dgn

PROPOSED WORK:

1. REMOVE AND DISPOSE OF EXISTING CONVENTIONAL LIGHT POLES AND LUMINAIRES.
2. EXTEND MEDIAN BARRIER FOUNDATION ANCHOR BOLTS.
3. INSTALL NEW MEDIAN MOUNTED LOW MAST LIGHT POLES WITH NEW POLE AND BRACKET CABLE AND LED LUMINAIRES.

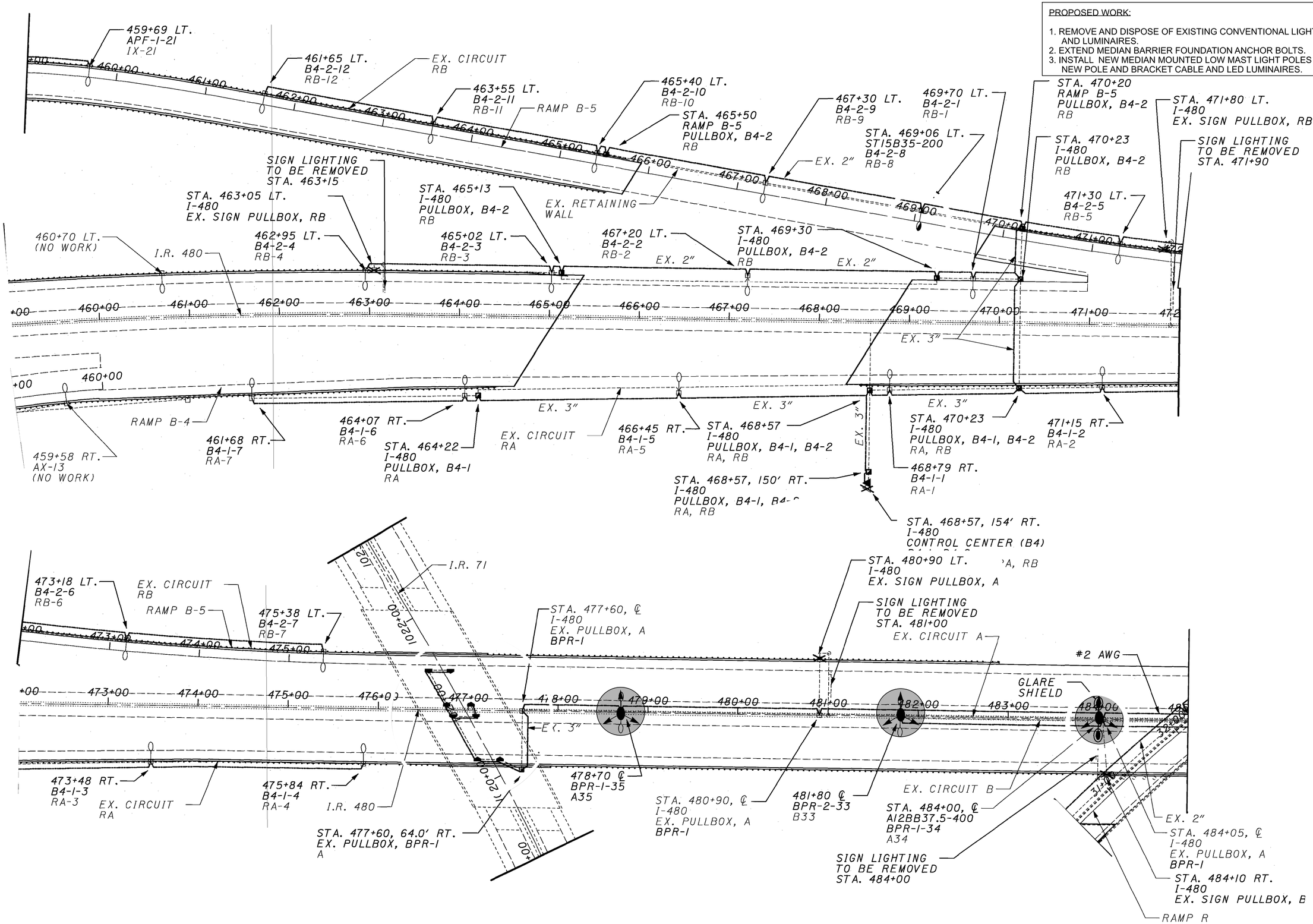

HORIZONTAL SCALE IN FEET

0 0 0 0

LOCATION NO. 29
IR-480 FROM ROCKY RIVER BRIDGE TO W 130TH ST

DESIGN AGENCY

DESIGNER
JDA

REVIEWER
DAB 12/12/24

PROJECT ID
110602

SHEET P.73 TOTAL 80

CUY/LAK-LG-FY2025

MODEL: Location 29 Sheet 1 PAPERSIZE: 34x22 (in.) DATE: 4/9/2025 TIME: 11:51:46 AM USER: jalbrig1
pw:\\ohiodot-pw.bentley.com:ohiodot-pw-02\Documents\01 Active Projects\District 12\Cuyahoga\110602\400-Engineering\Lighting\Sheets\110602_LP029.dgn

PROPOSED WORK:

1. REMOVE AND DISPOSE OF EXISTING CONVENTIONAL LIGHT POLES AND LUMINAIRES.
2. EXTEND MEDIAN BARRIER FOUNDATION ANCHOR BOLTS.
3. INSTALL NEW MEDIAN MOUNTED LOW MAST LIGHT POLES WITH NEW POLE AND BRACKET CABLE AND LED LUMINAIRES.

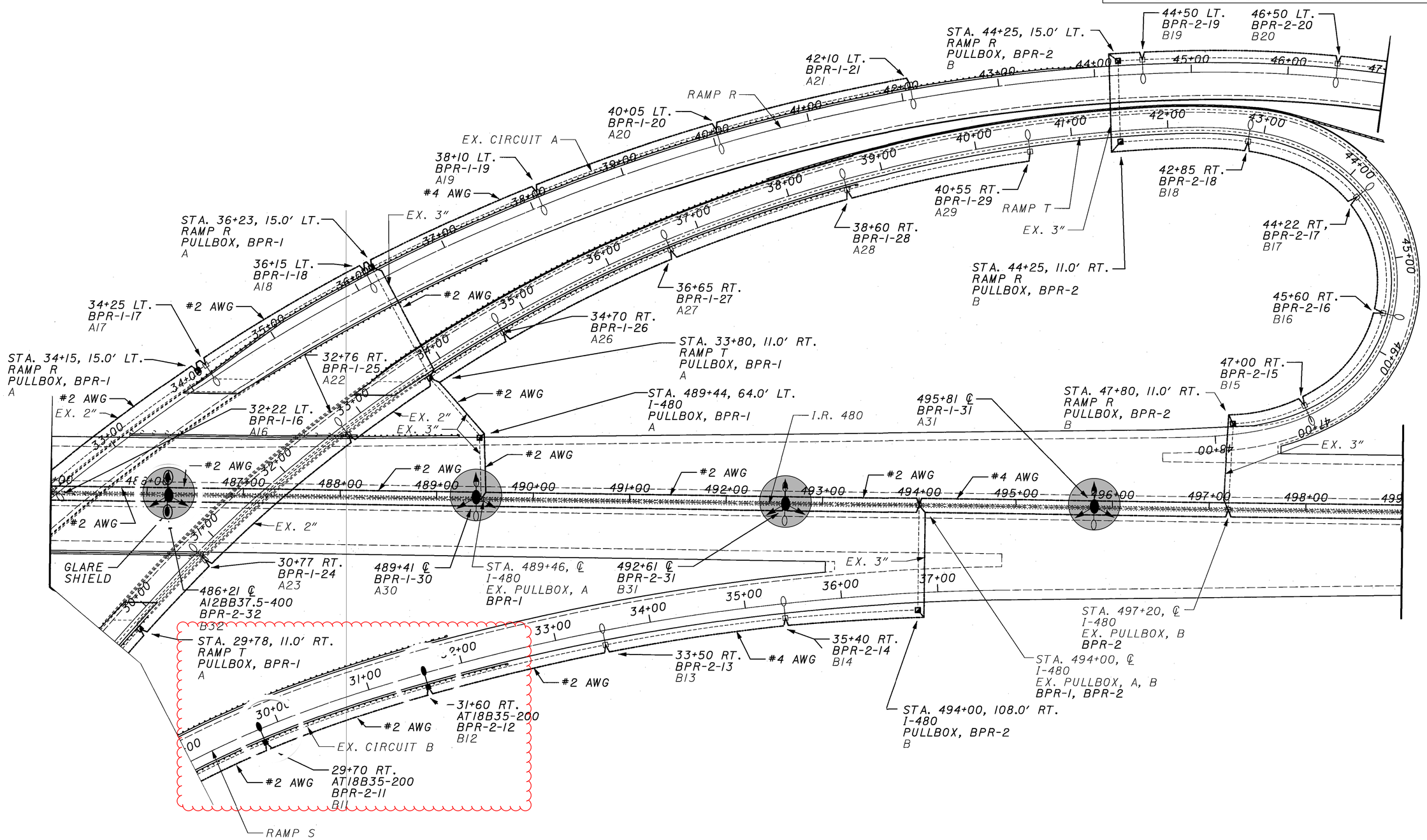

HORIZONTAL SCALE IN FEET

0 0 0

LOCATION NO. 29
IR-480 FROM ROCKY RIVER BRIDGE TO W 130TH ST

DESIGN AGENCY

DESIGNER
JDA

REVIEWER
DAB 12/12/24

PROJECT ID
110602

SHEET P.74 TOTAL 80

CUY/LAK-LG-FY2025

MODEL: Location 29 sheet 2 PAPERSIZE: 34x22 (in.) DATE: 4/9/2025 TIME: 11:52:18 AM USER: jalbrig1
pw:\\ohiodot-pw.bentley.com:ohiodot-pw-02\Documents\01 Active Projects\District 12\Cuyahoga\110602\400-Engineering\Lighting\Sheets\110602_LP029.dgn

PROPOSED WORK:

1. REMOVE AND DISPOSE OF EXISTING CONVENTIONAL LIGHT POLES AND LUMINAIRES.
2. EXTEND MEDIAN BARRIER FOUNDATION ANCHOR BOLTS.
3. INSTALL NEW MEDIAN MOUNTED LOW MAST LIGHT POLES WITH NEW POLE AND BRACKET CABLE AND LED LUMINAIRES.

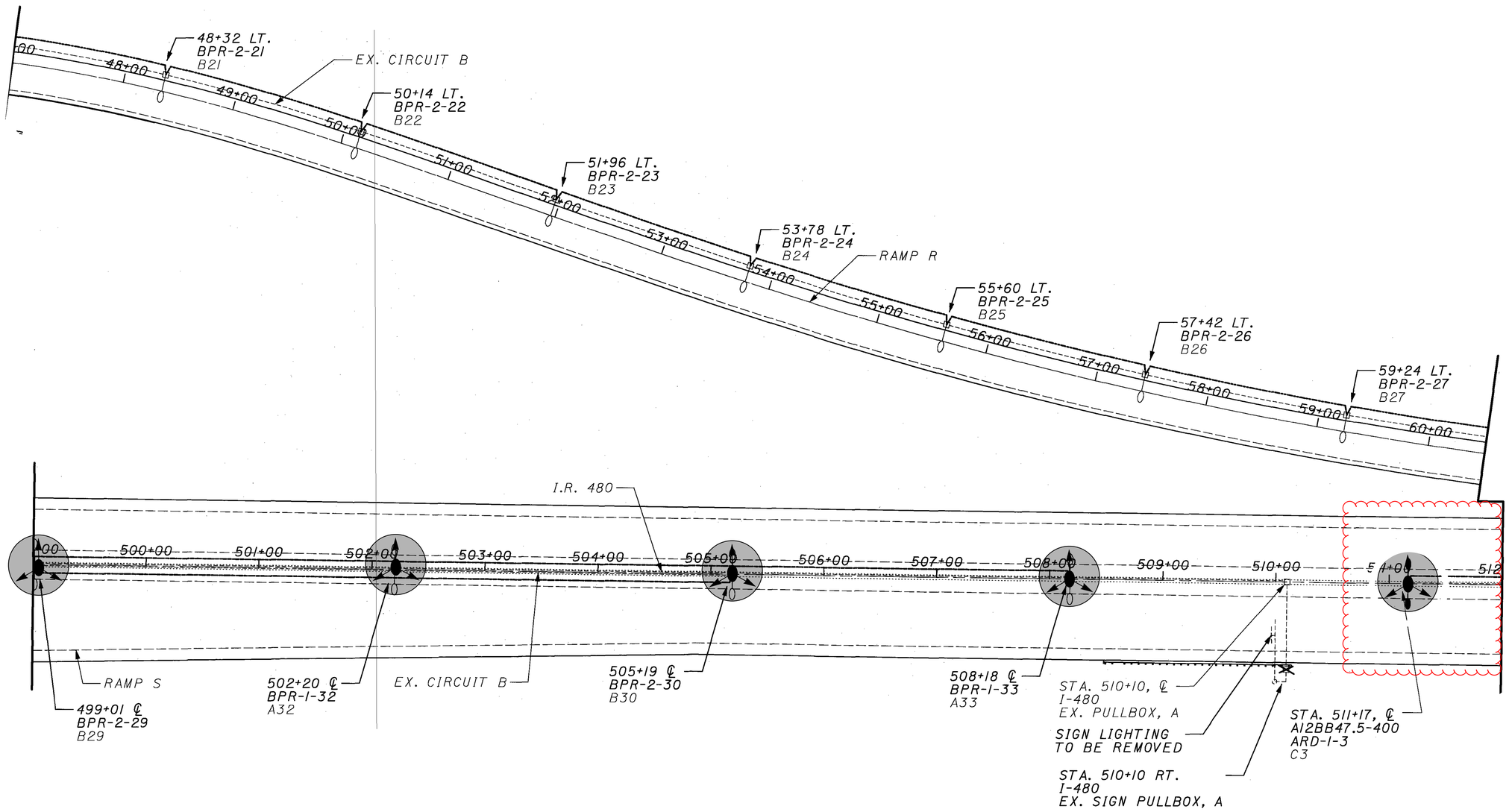

HORIZONTAL SCALE IN FEET

0 0 0 0

LOCATION NO. 29
IR-480 FROM ROCKY RIVER BRIDGE TO W 130TH ST

DESIGN AGENCY

DESIGNER
JDA

REVIEWER
DAB 12/12/24

PROJECT ID
110602

SHEET P.75 TOTAL 80

CUY/LAK-LG-FY2025

MODEL: Location 29 sheet 3 PAPERSIZE: 34x22 (in.) DATE: 4/9/2025 TIME: 11:52:46 AM USER: jalbrig1
pw:\\ohiodot-pw.bentley.com:ohiodot-pw-02\Documents\01 Active Projects\District 12\Cuyahoga\110602\400-Engineering\Lighting\Sheets\110602_LP029.dgn

PROPOSED WORK:

1. REMOVE AND DISPOSE OF EXISTING CONVENTIONAL LIGHT POLES AND LUMINAIRES.
2. EXTEND MEDIAN BARRIER FOUNDATION ANCHOR BOLTS.
3. INSTALL NEW MEDIAN MOUNTED LOW MAST LIGHT POLES WITH NEW POLE AND BRACKET CABLE AND LED LUMINAIRES.

HORIZONTAL SCALE IN FEET 0 0 0 0

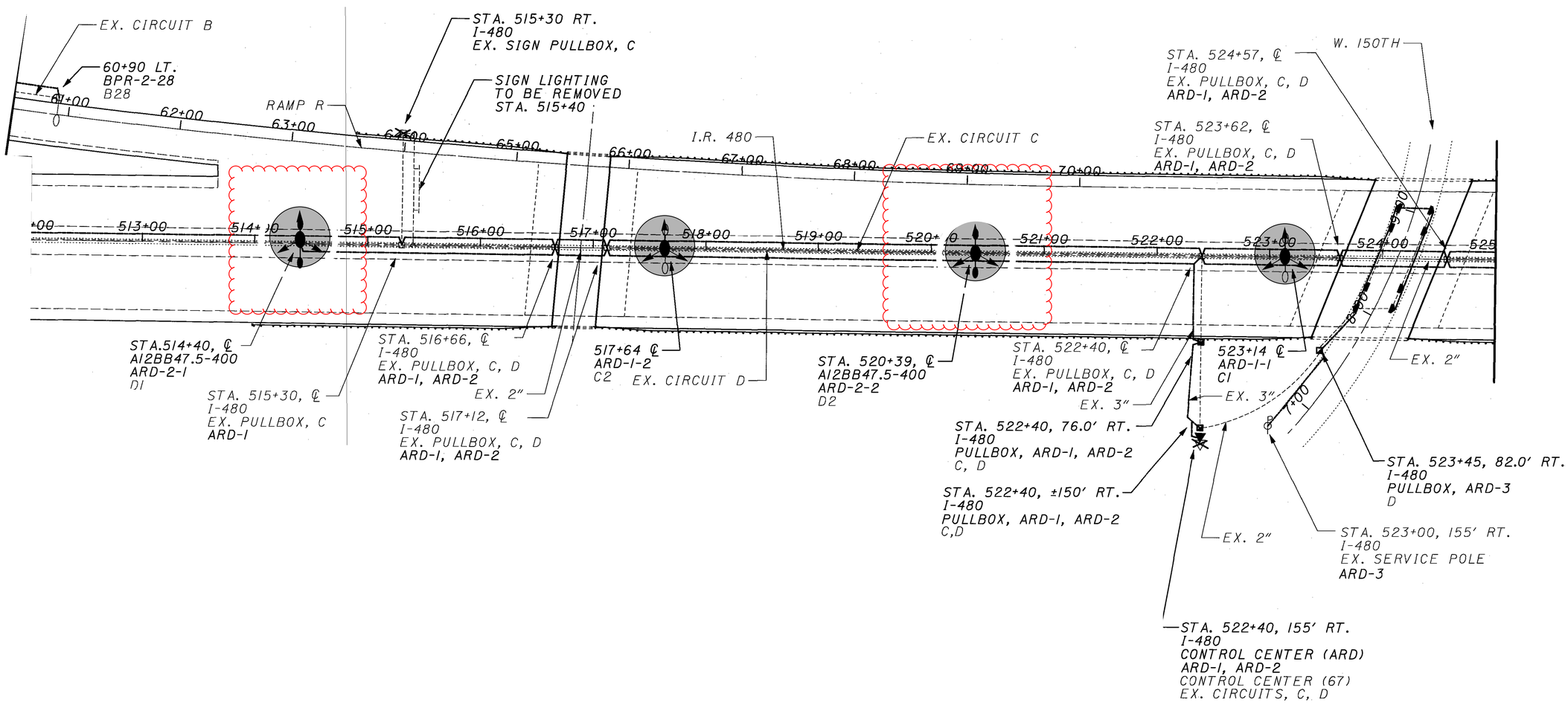

LOCATION NO. 29
IR-480 FROM ROCKY RIVER BRIDGE TO W 130TH ST

DESIGN AGENCY

DESIGNER JDA

REVIEWER DAB 12/12/24

PROJECT ID 110602

SHEET P.76 TOTAL 80

CUY/LAK-LG-FY2025

MODEL: Location 29 sheet 4 PAPERSIZE: 34x22 (in.) DATE: 4/9/2025 TIME: 11:53:15 AM USER: jalbrig1
pw:\\ohiodot-pw.bentley.com:ohiodot-pw-02\Documents\01 Active Projects\District 12\Cuyahoga\110602\400-Engineering\Lighting\Sheets\110602_LP029.dgn

PROPOSED WORK:

1. REMOVE AND DISPOSE OF EXISTING CONVENTIONAL LIGHT POLES AND LUMINAIRES.
2. EXTEND MEDIAN BARRIER FOUNDATION ANCHOR BOLTS.
3. INSTALL NEW MEDIAN MOUNTED LOW MAST LIGHT POLES WITH NEW POLE AND BRACKET CABLE AND LED LUMINAIRES.

HORIZONTAL SCALE IN FEET 0 0 0 0

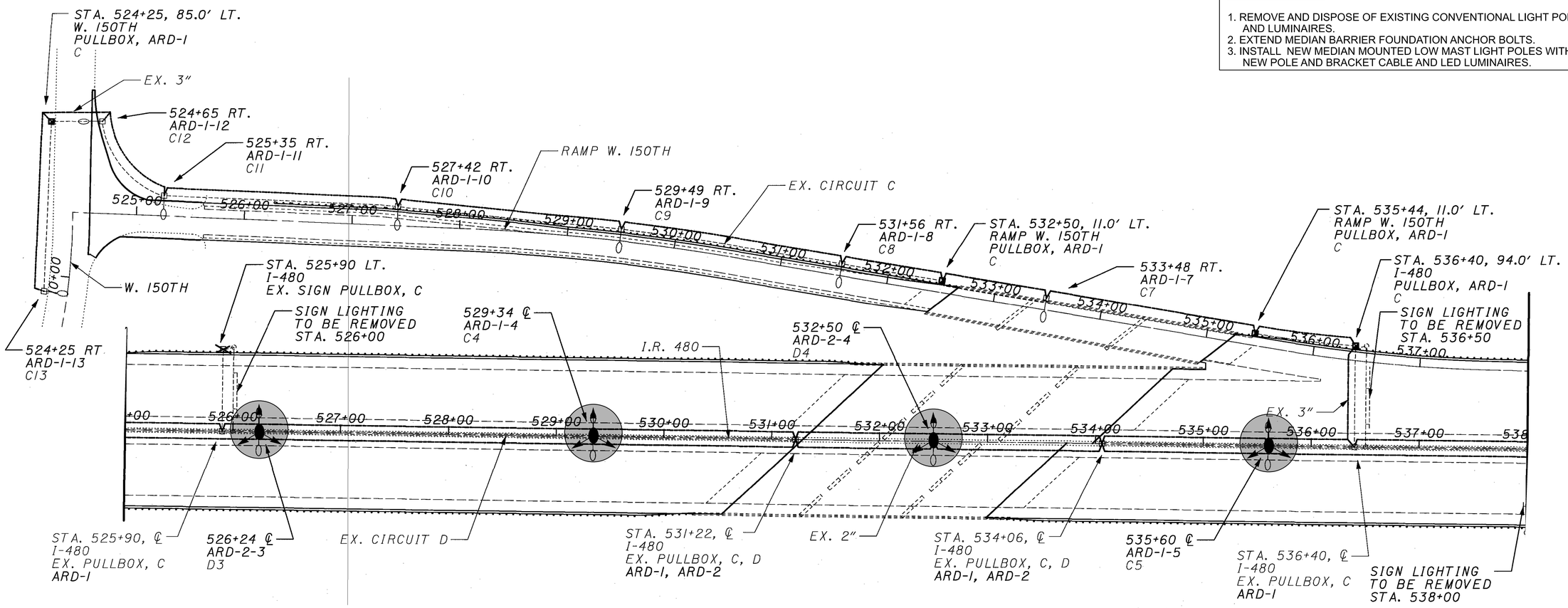

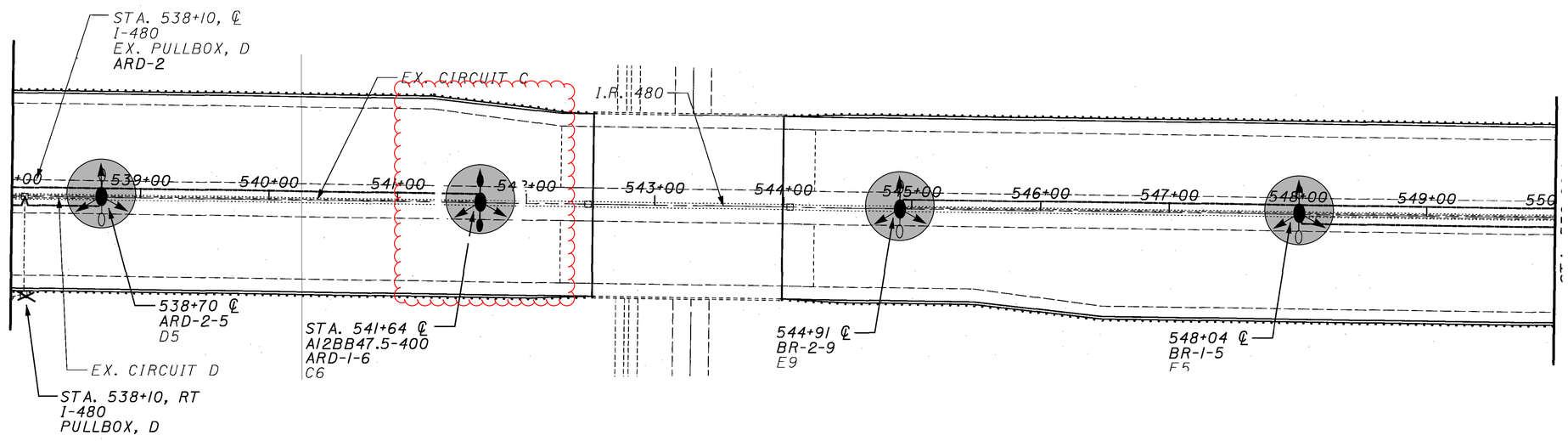

LOCATION NO. 29
IR-480 FROM ROCKY RIVER BRIDGE TO W 130TH ST

DESIGN AGENCY

DESIGNER JDA
REVIEWER DAB 12/12/24
PROJECT ID 110602
SHEET P.77 TOTAL 80

CUY/LAK-LG-FY2025

MODEL: Location 29 sheet 5 PAPERSIZE: 34x22 (in.) DATE: 4/9/2025 TIME: 11:53:43 AM USER: jalbrig1
pw:\\ohiodot-pw.bentley.com:ohiodot-pw-02\Documents\01 Active Projects\District 12\Cuyahoga\110602\400-Engineering\Lighting\Sheets\110602_LP029.dgn

PROPOSED WORK:

1. REMOVE AND DISPOSE OF EXISTING CONVENTIONAL LIGHT POLES AND LUMINAIRES.
2. EXTEND MEDIAN BARRIER FOUNDATION ANCHOR BOLTS.
3. INSTALL NEW MEDIAN MOUNTED LOW MAST LIGHT POLES WITH NEW POLE AND BRACKET CABLE AND LED LUMINAIRES.

HORIZONTAL SCALE IN FEET

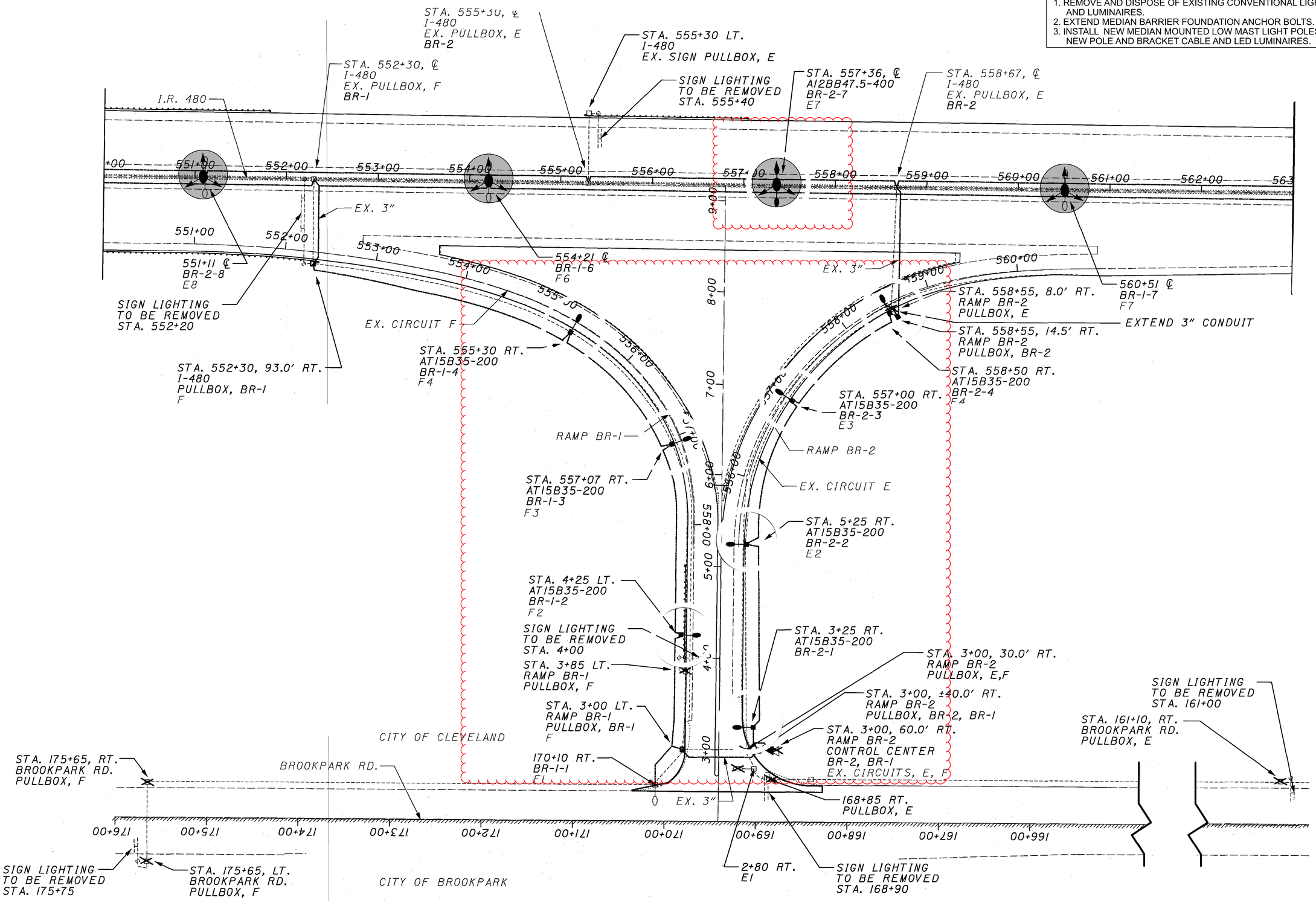

LOCATION NO. 29
IR-480 FROM ROCKY RIVER BRIDGE TO W 130TH ST

DESIGN AGENCY

DESIGNER JDA

REVIEWER DAB 12/12/24

PROJECT ID 110602

SHEET P.78 TOTAL 80

CUY/LAK-LG-FY2025

MODEL: Location 29 sheet 6 PAPERSIZE: 34x22 (in.) DATE: 4/9/2025 TIME: 11:54:16 AM USER: jalbrig1
pw:\\ohiodot-pw.bentley.com:ohiodot-pw-02\Documents\01 Active Projects\District 12\Cuyahoga\110602\400-Engineering\Lighting\Sheets\110602_LP029.dgn

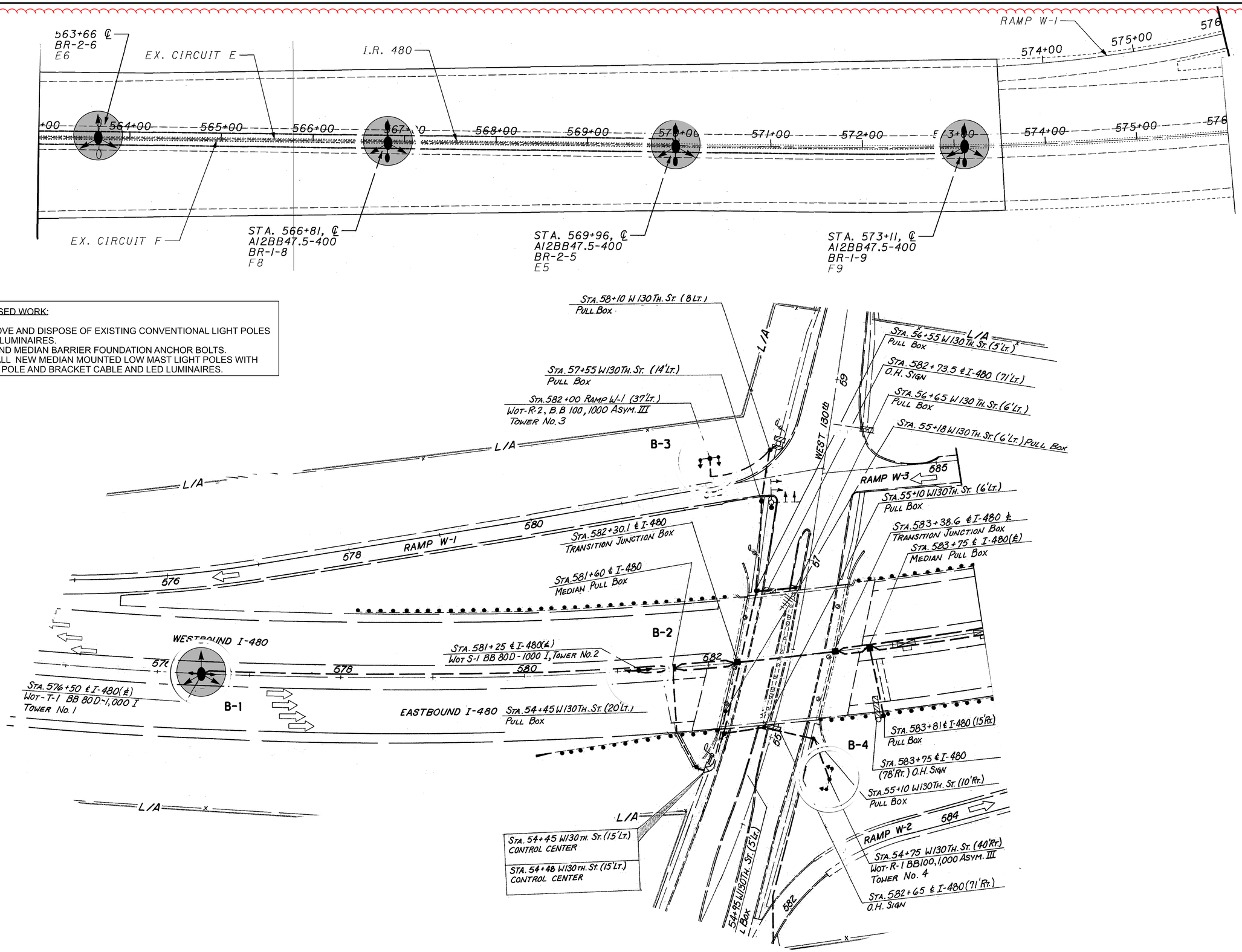

PROPOSED WORK:

1. REMOVE AND DISPOSE OF EXISTING CONVENTIONAL LIGHT POLES AND LUMINAIRES.
2. EXTEND MEDIAN BARRIER FOUNDATION ANCHOR BOLTS.
3. INSTALL NEW MEDIAN MOUNTED LOW MAST LIGHT POLES WITH NEW POLE AND BRACKET CABLE AND LED LUMINAIRES.

HORIZONTAL SCALE IN FEET

LOCATION NO. 29
IR-480 FROM ROCKY RIVER BRIDGE TO W 130TH ST

DESIGN AGENCY

DESIGNER
JDA

REVIEWER
DAB 12/12/24

PROJECT ID
110602

SHEET P.79 TOTAL 80

CUY/LAK-LG-FY2025

MODEL: Location 29 sheet 7 PAPERSIZE: 34x22 (in.) DATE: 4/9/2025 TIME: 11:54:46 AM USER: jalbrig1
pw:\\ohiodot-pw.bentley.com:ohiodot-pw-02\Documents\01 Active Projects\District 12\Cuyahoga\110602\400 Engineering\Lighting\Sheets\110602_LP029.dgn

PROPOSED WORK:

1. INSTALL NEW LOW MAST LIGHT POLE WITH NEW POLE AND BRACKET CABLE AND LED LUMINAIRE.

HORIZONTAL SCALE IN FEET 0 0 0 0

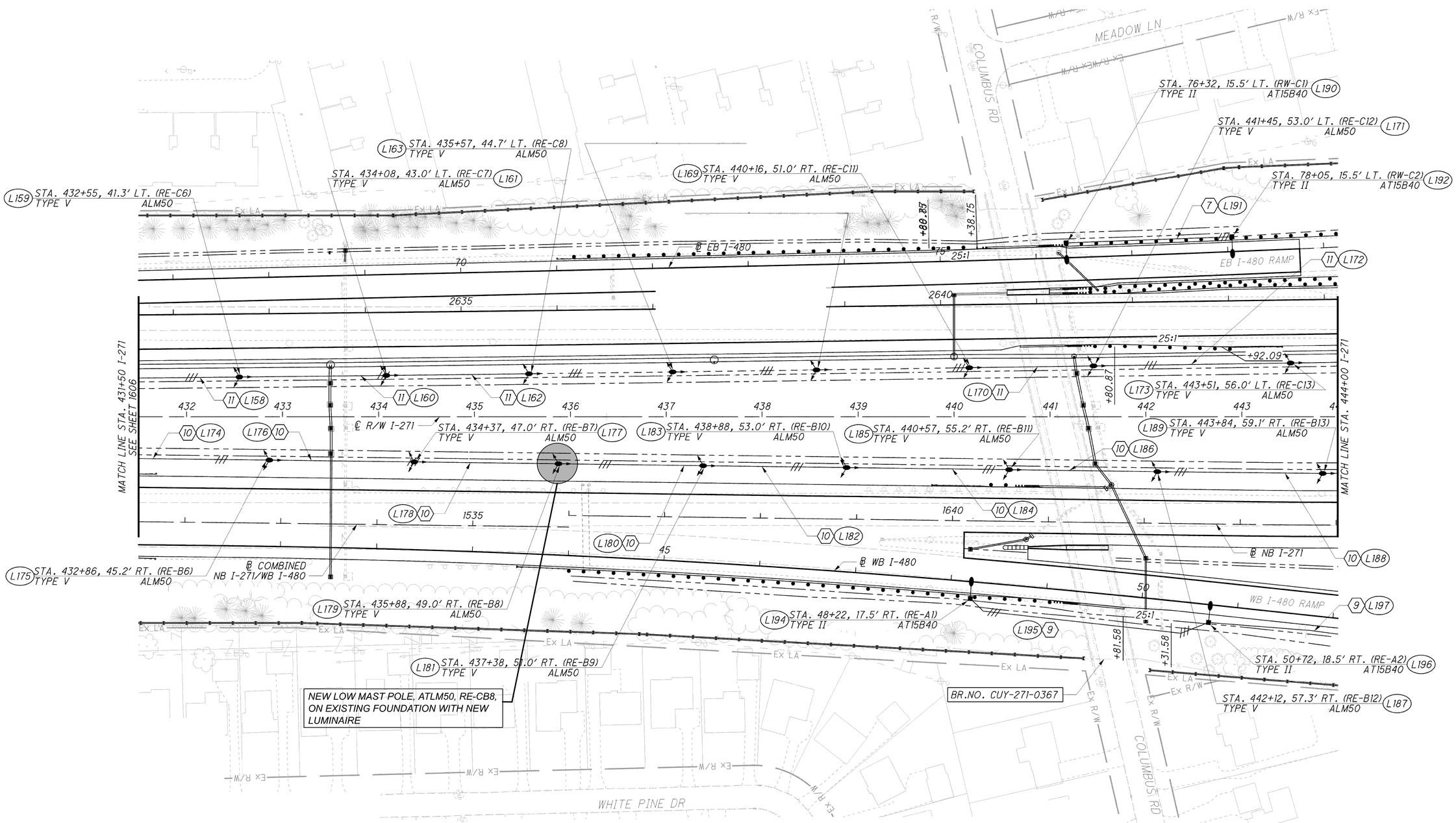

NOTES: FOR CIRCUIT DIAGRAMS SEE SHEET P.43a

PLAN SHEET - LOCATION NO. 30
IR-271 (CIRCUIT RE-B)

DESIGN AGENCY

DESIGNER: JDA

REVIEWER: DAB 02-12-2025

PROJECT ID: 110602

SHEET: P. 79A TOTAL: 80

CUY/LAK-LG-FY2025

MODEL: Sheet PAPERSIZE: 34x22 (in.) DATE: 4/9/2025 TIME: 11:55:23 AM USER: jalbrig1
DW:\\ohiodot-pw.bentley.com:ohiodot-pw-02\Documents\04 Active Projects\District 12\Cuyahoga\110602\400-Engineering\Lighting\Sheets\110602_1P081.dgn

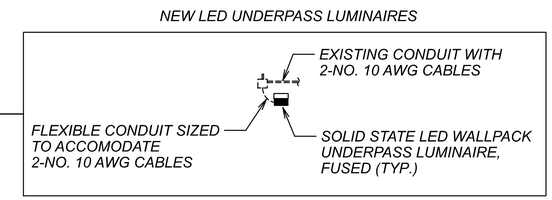

LOCATION NO.	PLAN SPLIT NO.	LOCATION	Underpass Luminaire Existing	Underpass Luminaire Proposed	625 LUMINAIRE, UNDERPASS, SOLID STATE (LED), AS PER PLAN, 480 VOLT EACH	625 NO. 10 AWG POLE AND BRACKET CABLE FT	625 LIGHTING, MISC.:REMOVAL OF UNDERPASS LIGHTING COMPONENTS EACH	625 JUNCTION BOX EACH	625 CONNECTION, FUSED PULL APART, AS PER PLAN EACH	625 CONNECTION, UNFUSED PULL APART, AS PER PLAN EACH
		IR-90 Overhead Bridge (Street/SFN)								
30	1	Prospect Ave E (SFN 1807927)	8	8	8	320	8	8	8	8
	1	Euclid Ave (SFN 1807951)	8	8	8	288	8	8	8	8
	1	Chester Ave (SFN 1807986)	12	12	12	412	12	12	12	12
	1	Payne Ave (SFN 1808044)	8	8	8	308	8	8	8	8
	1	Superior Ave (SFN 1808079)	8	8	8	392	8	8	8	8
	1	St Clair Ave. (SFN 1808109)	8	8	8	324	8	8	8	8
	1	Hamilton Ave (SFN 1808133)	8	8	8	200	8	8	8	8
	1	RR (SFN 1809350)	58	58	58	1,364	58	58	58	58
	1	Lakeside Ave E (SFN 1808168)	4	4	4	228	4	4	4	4
	1	RR (SFN 1809415)	16	16	16	466	16	16	16	16
	1	S Marginal Rd (SFN 1808192)	0	0	0	0	0	0	0	0
	1	SR 2 (SFN 1808222)	8	8	8	348	8	8	8	8
	1	E 55th ST (SFN 1808257)	8	8	8	328	8	8	8	8
SUBTOTALS					154	4978	154	154	154	154
TOTALS CARRIED TO GENERAL SUMMARY					154	4978	154	154	154	154

HORIZONTAL SCALE IN FEET 0 0 0 0

CIRCUIT DIAGRAM - LOCATION NO. 31
IR-90 UNDERPASS LIGHTING

DESIGN AGENCY

DESIGNER JDA

REVIEWER DAB 12/12/24

PROJECT ID 110602

SHEET P.80 TOTAL 80

CUY/LAK-LG-FY2025

MODEL: Sheet PAPERSIZE: 34x22 (in.) DATE: 4/9/2025 TIME: 11:55:50 AM USER: jalbrig1

pw:\\ohiodot.pw.bentley.com:ohiodot_pw-02\Documents\01 Active Projects\District 12\Cuyahoga\110602\409-Engineering\Lighting\Sheets\110602_LP030.dgn