CUY - US-US 42-04.29
190433 PID - 105726
Dist 12 8/8/2019

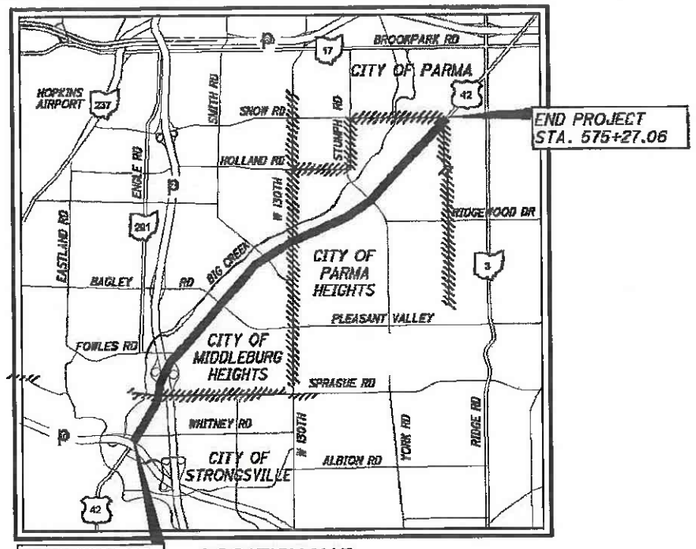


LOCATION MAP

LATITUDE: N 41°-22'-47" LONGITUDE: W 81°-47'-13"

SCALE IN MILES
0 1 2 3 4

N

PORTION TO BE IMPROVED
INTERSTATE AND DIVIDED HIGHWAY
UNDIVIDED STATE AND FEDERAL ROUTES
COUNTY AND OTHER ROADS

## DESIGN DESIGNATION

| | |
|---|---|
| CURRENT ADT (2018) | 24,820 |
| DESIGN YEAR ADT (2038) | 24,820 |
| DESIGN HOURLY VOLUME (2038) | 2482 |
| DIRECTIONAL DISTRIBUTION | 50% |
| TRUCKS (24 HOUR B&C) | 6.8% |
| DESIGN SPEED | 40 MPH |
| LEGAL SPEED | 25 & 35 MPH |
| DESIGN FUNCTIONAL CLASSIFICATION | PRINCIPAL ARTERIAL (URBAN) |
| NHS PROJECT | FEDERAL AIDE PRIMARY ROUTE |

## DESIGN EXCEPTIONS

NONE REQUIRED

**UNDERGROUND UTILITIES**

CONTACT BOTH SERVICES
CALL TWO WORKING DAYS
BEFORE YOU DIG

CALL
1-800-362-2764
(TOLL FREE)

OHIO UTILITIES PROTECTION SERVICE
NON-MEMBERS
MUST BE CALLED DIRECTLY

OIL & GAS PRODUCERS UNDERGROUND
PROTECTION SERVICE CALL: 1-800-925-0988

PLAN PREPARED BY:

OSBORN ENGINEERING
1201 East Market Street
Suite 200
Akron, Ohio 44305

ENGINEERS SEAL:

STATE OF OHIO
DONALD R. PHIFER
61193
REGISTERED
PROFESSIONAL ENGINEER

SIGNED:
DATE: 3-1-2019

# STATE OF OHIO
# DEPARTMENT OF TRANSPORTATION

# CUY-US-042-4.29

## CITY OF PARMA
## CITY OF PARMA HEIGHTS
## CITY OF MIDDLEBURG HEIGHTS
## CITY OF STRONGSVILLE
## CUYAHOGA COUNTY

INDEX OF SHEETS:


| | |
|---|---|
| TITLE SHEET | 1 |
| SCHEMATIC PLANS | 2-9 |
| TYPICAL SECTIONS | 10-12 |
| GENERAL NOTES | 13-17 |
| MAINTENANCE OF TRAFFIC NOTES | 18-21 |
| MAINTENANCE OF TRAFFIC GENERAL SUMMARY | 22 |
| MAINTENANCE OF TRAFFIC SUB-SUMMARY | 23-29 |
| MAINTENANCE OF TRAFFIC TYPICAL SECTIONS | 30 |
| MAINTENANCE OF TRAFFIC PHASE PLAN | 31-49 |
| GENERAL SUMMARY | 50-51 |
| PLAN SHEETS | 52-66 |
| STORM SEWER PLAN AND PROFILE | 67-68 |
| PAVEMENT DETAILS | 69-70 |
| TRAFFIC CONTROL GENERAL SUMMARY | 71-72 |
| TRAFFIC CONTROL SUB-SUMMARY | 73-86 |
| TRAFFIC CONTROL PLAN SHEETS | 87-111 |
| TRAFFIC SIGNAL | 112-115 |
| STREETSCAPING | 116-127 |


**CONFORMED SET**

| STANDARD CONSTRUCTION DRAWINGS | | | | | | | | SUPPLEMENTAL SPECIFICATIONS | |
|---|---|---|---|---|---|---|---|---|---|
| BP-1.1 | 7/28/00 | CB-2.1 | 7/20/18 | TC-21.20 | 7/20/18 | TC-83.10 | 1/19/18 | 800 | 07/19/19 |
| BP-2.1 | 7/17/15 | CB-2.2 | 7/20/18 | TC-22.20 | 1/17/14 | TC-83.20 | 7/21/17 | 832 | 10/19/18 |
| BP-2.2 | 7/18/08 | | | TC-41.20 | 10/18/13 | TC-85.20 | 7/20/18 | 875 | 1/18/19 |
| BP-2.5 | 7/19/13 | MT-95.31 | 7/21/17 | TC-41.40 | 10/18/13 | | | | |
| BP-3.1 | 7/18/14 | MT-95.32 | 7/21/17 | TC-41.41 | 10/18/13 | HL-30.11 | 1/18/19 | | |
| BP-5.1 | 1/18/19 | MT-97.10 | 7/18/14 | TC-42.20 | 10/18/13 | HL-30.22 | 1/17/14 | | |
| BP-7.1 | 7/20/18 | MT-97.11 | 1/20/17 | TC-52.10 | 10/18/13 | | | SPECIAL PROVISIONS | |
| | | MT-105.10 | 7/19/13 | TC-52.20 | 7/20/18 | | | | |
| RM-1.1 | 7/18/14 | MT-110.10 | 7/19/13 | TC-71.10 | 1/19/18 | | | | |
| | | MT-120.00 | 1/19/18 | TC-81.21 | 1/18/19 | | | | |
| | | | | TC-82.10 | 1/18/19 | | | | |

## PROJECT DESCRIPTION

THE PROJECT WORK INVOLVES THE REHABILITATION OF APPROXIMATELY 6.3 MILES OF PEARL ROAD (US 42) FROM THE OHIO TURNPIKE BRIDGE TO SOUTH OF SNOW ROAD IN THE CITIES OF STRONGSVILLE, MIDDLEBURG HEIGHTS, PARMA AND PARMA HEIGHTS. THIS PROJECT INCLUDES WEARING COURSE REMOVAL, BASE REPAIR AND NEW ASPHALT PAVEMENT. ALSO INCLUDED ARE SPOT REPAIRS TO CURBS, SIDEWALKS AND DRIVEWAY APRONS. NON COMPLIANT CURBS RAMPS WILL BE REPLACED WITH NEW A.D.A. COMPLIANT RAMPS. PAVEMENT MARKINGS WILL BE UPGRADED. UTILITY CASTINGS WILL BE ADJUSTED AND/OR REPLACED AS NECESSARY. STORM STRUCTURE REPAIRS ARE INCLUDED AS NOTED IN THE CITY OF MIDDLEBURG HEIGHTS. WAYFARING SIGNS, DECORATIVE CROSSWALKS, PEDESTRIAN HYBRID BEACON, AND A ROAD DIET INCLUDING BUFFERED BIKE LANES WILL BE INSTALLED THROUGH THE PARMA HEIGHTS COMPLETE AND GREEN STREETS INITIATIVES (NOACA TLCI IMPLEMENTATION GRANT).

## EARTH DISTURBED AREAS

| | |
|---|---|
| PROJECT EARTH DISTURBED AREA | - < 1.0 ACRE |
| ESTIMATED CONTRACTOR EARTH DISTURBED AREA | - N/A (MAINT. PROJ.) |
| NOTICE OF INTENT EARTH DISTURBED AREA | - N/A (MAINT. PROJ.) |

## 2016 SPECIFICATIONS

THE STANDARD SPECIFICATIONS OF THE STATE OF OHIO, DEPARTMENT OF TRANSPORTATION, INCLUDING SUPPLEMENTAL SPECIFICATIONS LISTED IN THE PLANS AND CHANGES LISTED IN THE PROPOSAL SHALL GOVERN THIS IMPROVEMENT

I HEREBY APPROVE THESE PLANS AND DECLARE THAT THE MAKING OF THIS IMPROVEMENT WILL NOT REQUIRE THE CLOSING TO TRAFFIC OF THE HIGHWAY AND THAT PROVISIONS FOR THE MAINTENANCE AND SAFETY OF TRAFFIC WILL BE AS SET FORTH ON THE PLANS AND ESTIMATES.

APPROVED
DATE 8-08-19 DISTRICT DEPUTY DIRECTOR

APPROVED
DATE 8/8/19 DIRECTOR, DEPARTMENT OF TRANSPORTATION

FEDERAL PROJECT NO. FAN E180(661)
PID NO. 105726
CONSTRUCTION PROJECT NO. <>
RAILROAD INVOLVEMENT NONE
CUY-US-042-4.29



Contract Proposal Available@
www.contracts.dotstate.oh.us/home

\105726GT001.dwg 01-Mar-19 4:0
P:\Middl

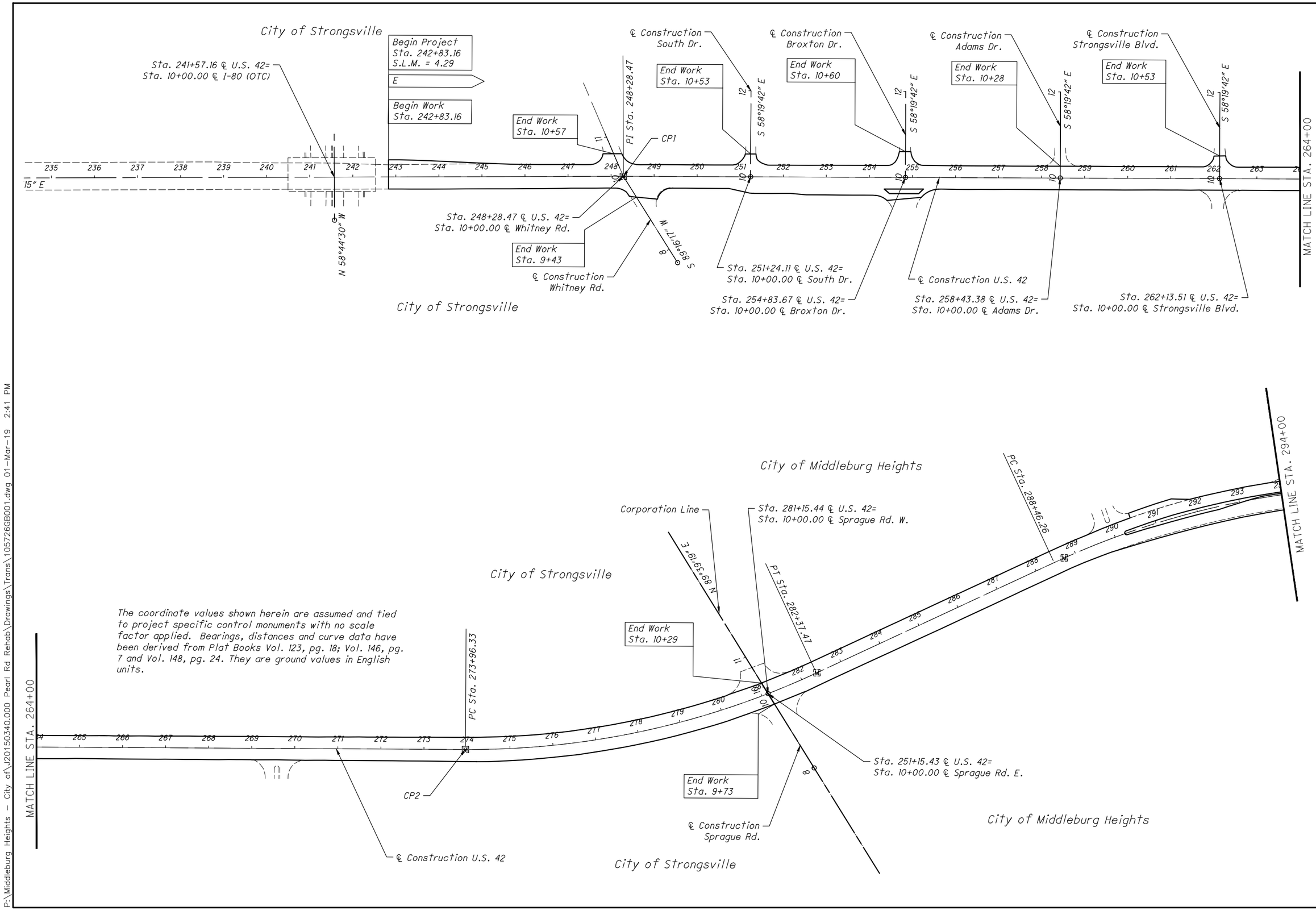


# SCHEMATIC PLAN

CUY-US-042-4.29



P:\Middleburg Heights - City of\J20150340.000 Pearl Rd Rehab\Drawings\Trans\1057266B001.dwg 01-Mar-19 2:41 PM

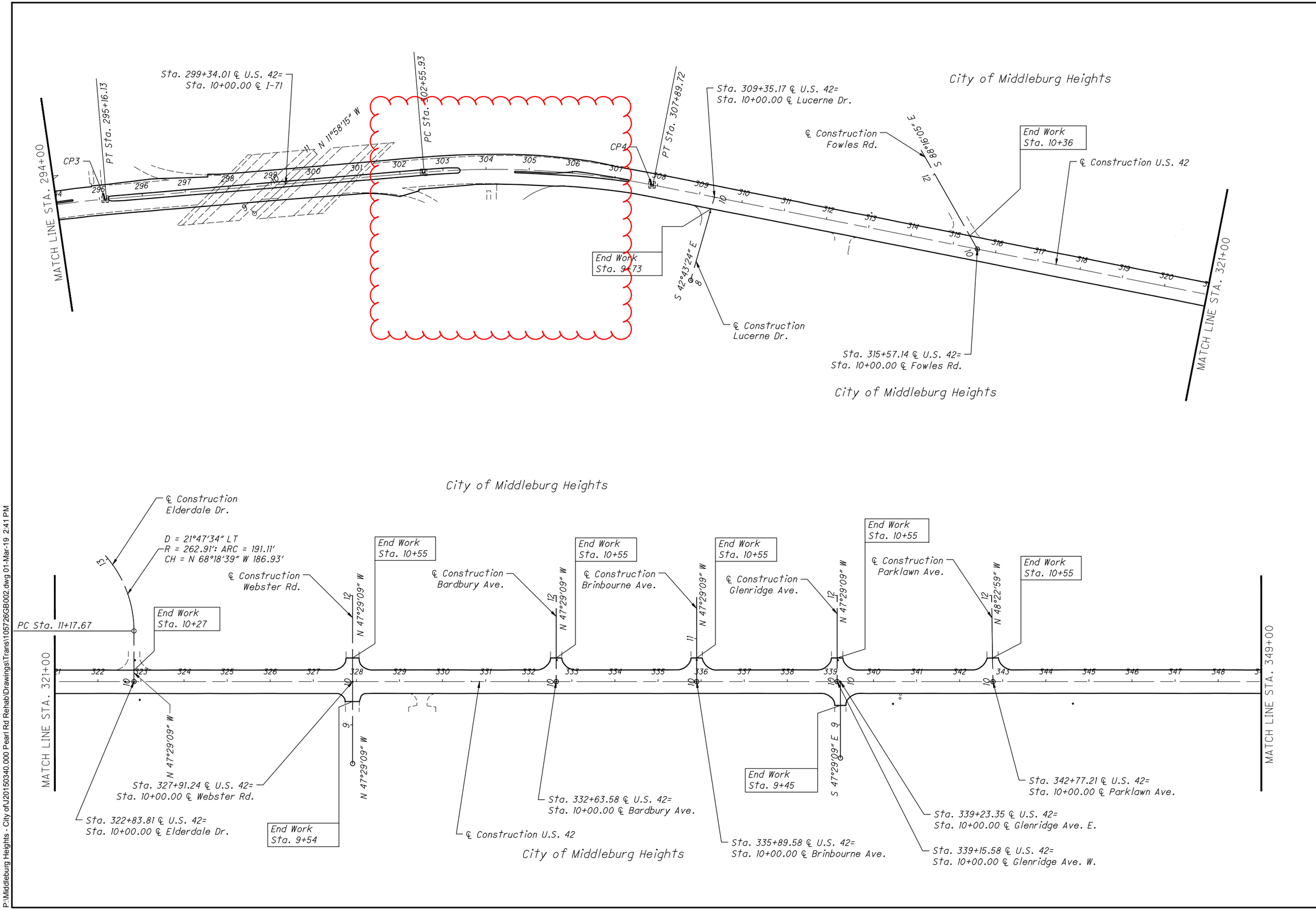


# SCHEMATIC PLAN

CUY-US-042-4.29



P:\Middleburg Heights - City of\J20150340.000 Pearl Rd Rehab\Drawings\Trans\105726GB002.dwg 01-Mar-19 2:41 PM

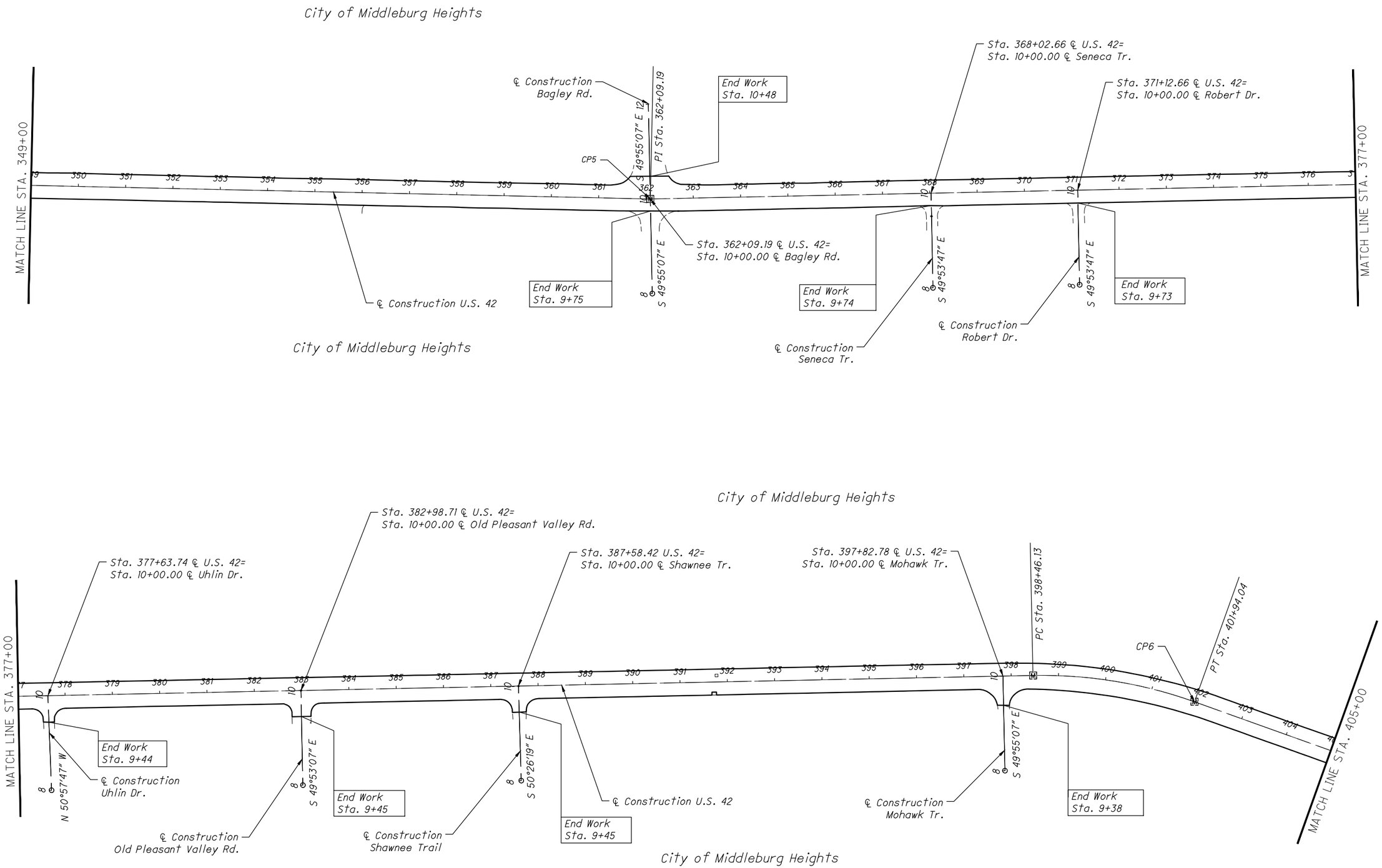


HORIZONTAL SCALE IN FEET
0 50 100 200

CALCULATED TWC
CHECKED BT

# SCHEMATIC PLAN

CUY-US-042-4.29



P:\Middleburg Heights - City of\J20150340.000 Pearl Rd Rehab\Drawings\Trans\105726GB003.dwg 01-Mar-19 2:42 PM

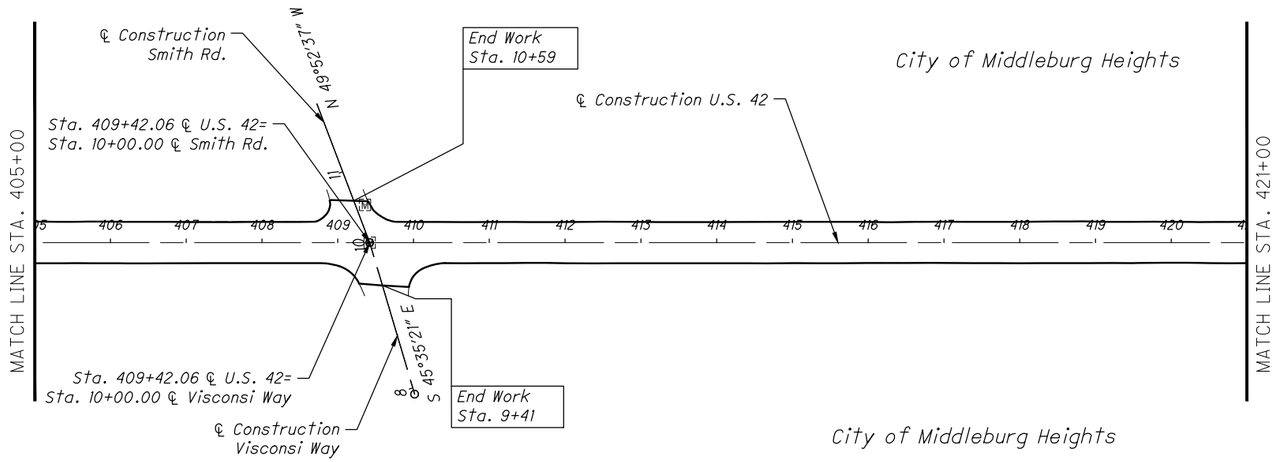


End Work
PART 1
Sta. 432+31.11

Begin Work
PART 2
Sta. 432+31.11

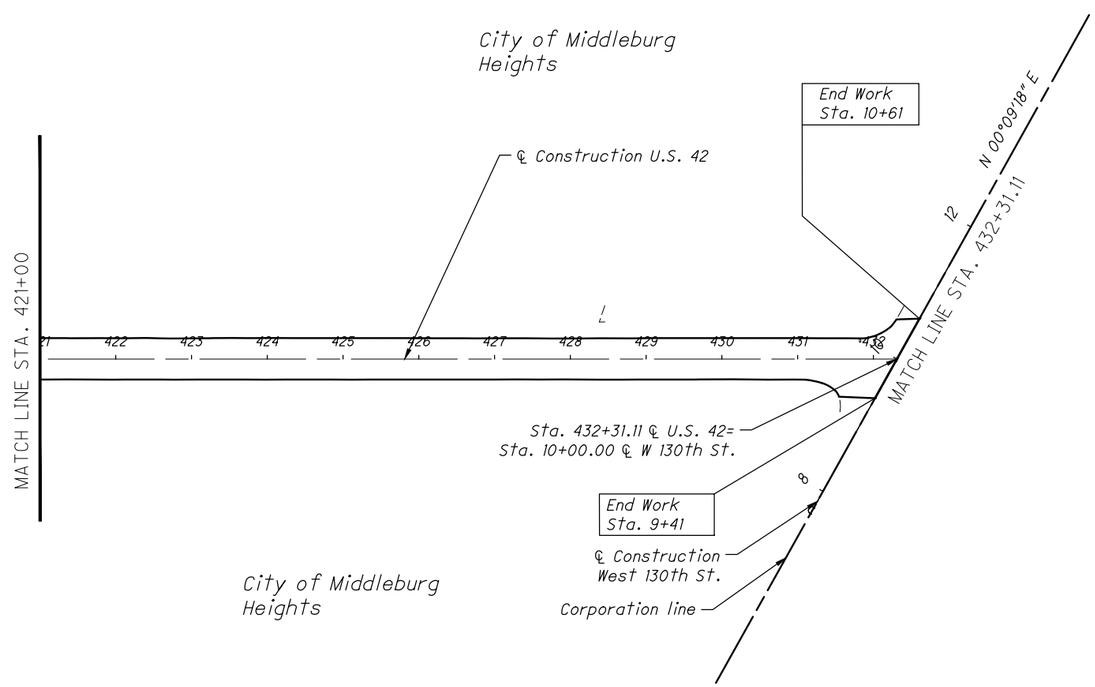


HORIZONTAL SCALE IN FEET
0 50 100 200

CALCULATED TWC
CHECKED BT

# SCHEMATIC PLAN

CUY-US-042-4.29



P:\Middleburg Heights - City of\J20150340.000 Pearl Rd Rehab\Drawings\Trans\1057266B004.dwg 01-Mar-19 2:42 PM

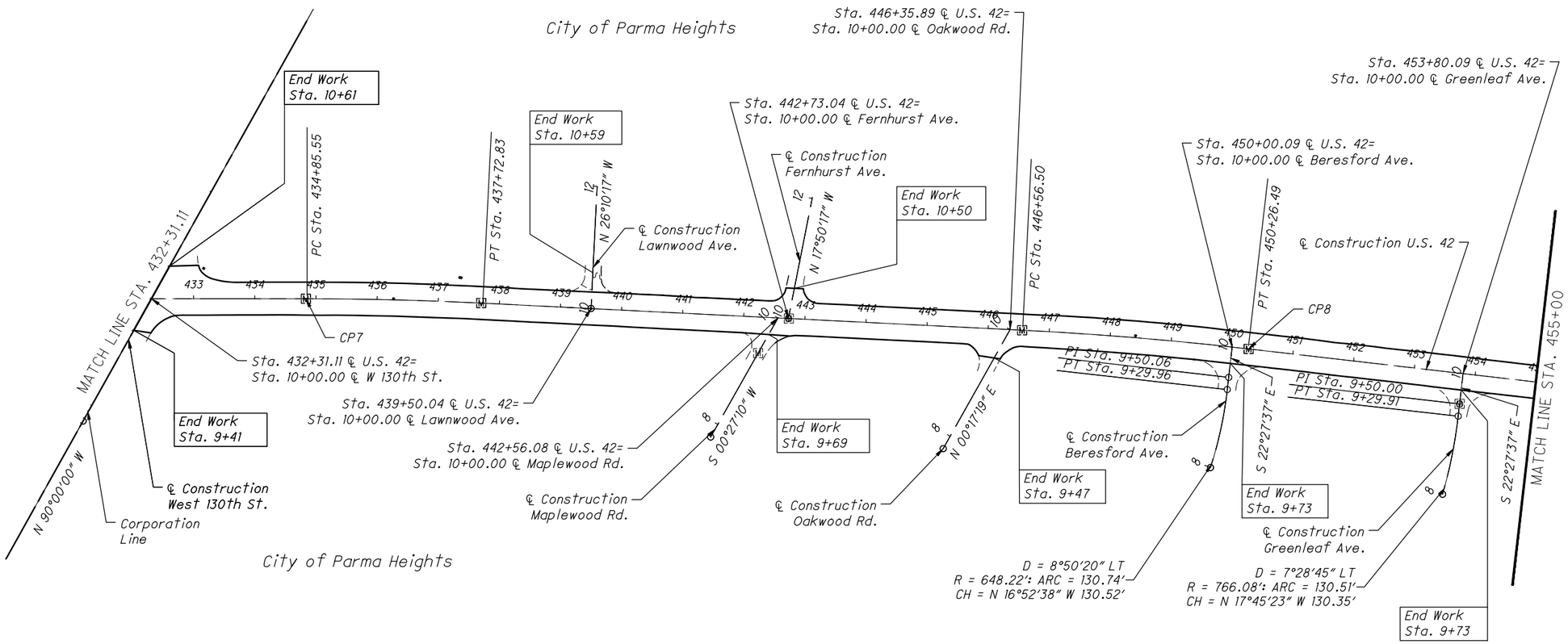


HORIZONTAL SCALE IN FEET
0 50 100 200

CALCULATED TWC
CHECKED BT

# SCHEMATIC PLAN

CUY-US-042-4.29



P:\Middleburg Heights – City of\J20150340.000 Pearl Rd Rehab\Drawings\Trans\1057266B005.dwg 01-Mar-19 2:42 PM

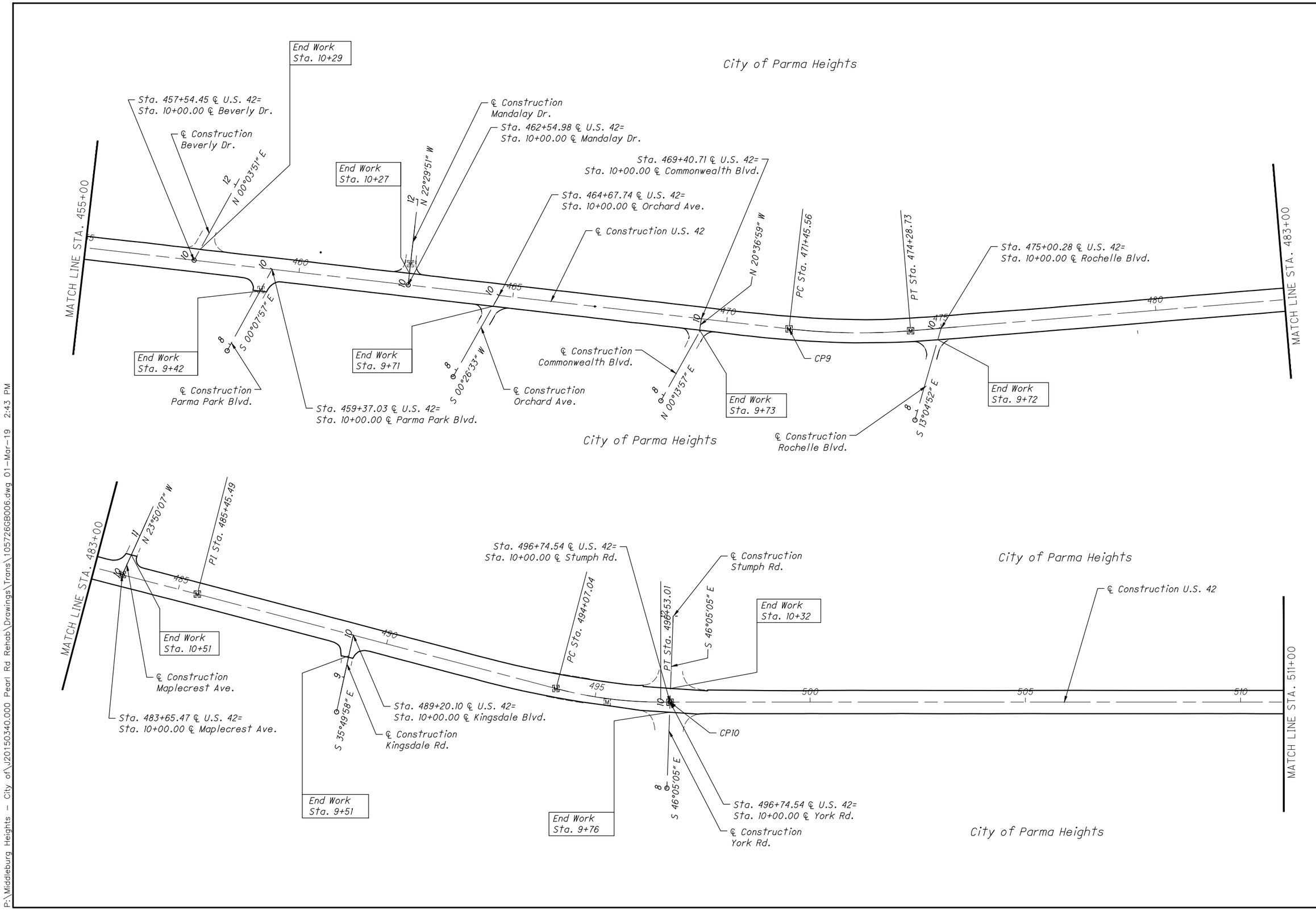


HORIZONTAL SCALE IN FEET
0 50 100 200

CALCULATED TWC
CHECKED BT

# SCHEMATIC PLAN

CUY-US-042-4.29



P:\Middleburg Heights - City of\J20150340.000 Pearl Rd Rehab\Drawings\Trans\1057266B006.dwg 01-Mar-19 2:43 PM

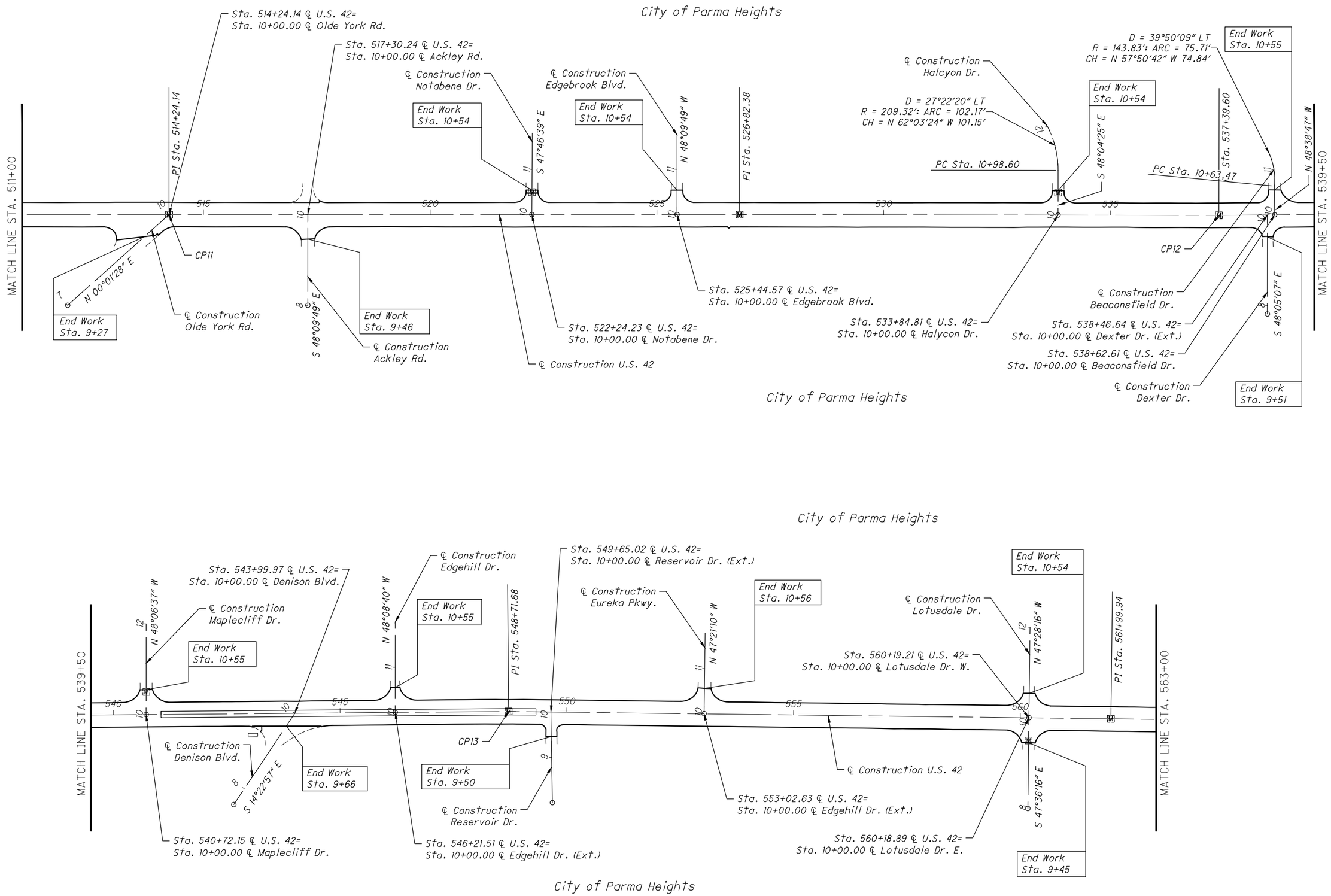


HORIZONTAL SCALE IN FEET
0 50 100 200

CALCULATED TWC
CHECKED BT

# SCHEMATIC PLAN

CUY-US-042-4.29



P:\Middleburg Heights - City of\J20150340.000 Pearl Rd Rehab\Drawings\Trans\1057266B007.dwg 01-Mar-19 2:43 PM

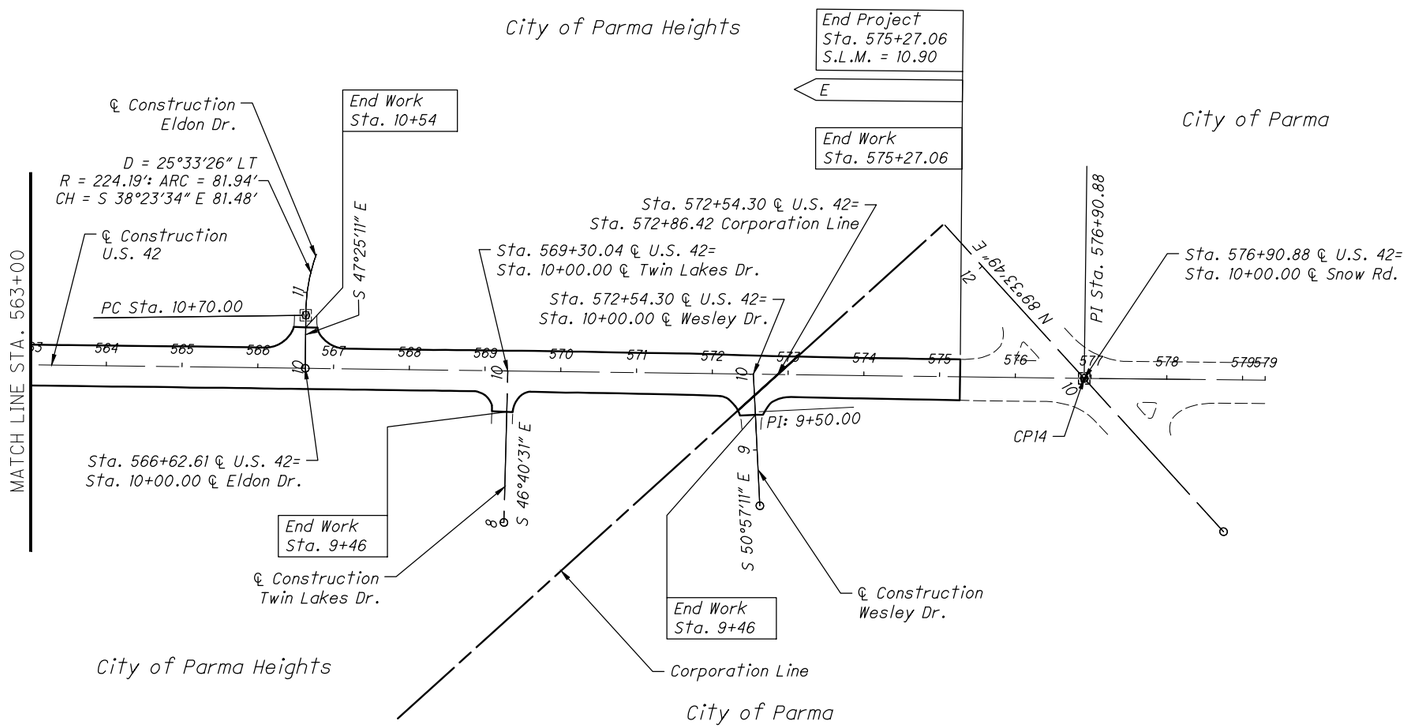


HORIZONTAL SCALE IN FEET
0 50 100 100

CALCULATED TWC
CHECKED BT

# SCHEMATIC PLAN

CUY-US-042-4.29



P:\Middleburg Heights - City of\J20150340.000 Pearl Rd Rehab\Drawings\Trans\105726GB008.dwg 01-Mar-19 2:43 PM

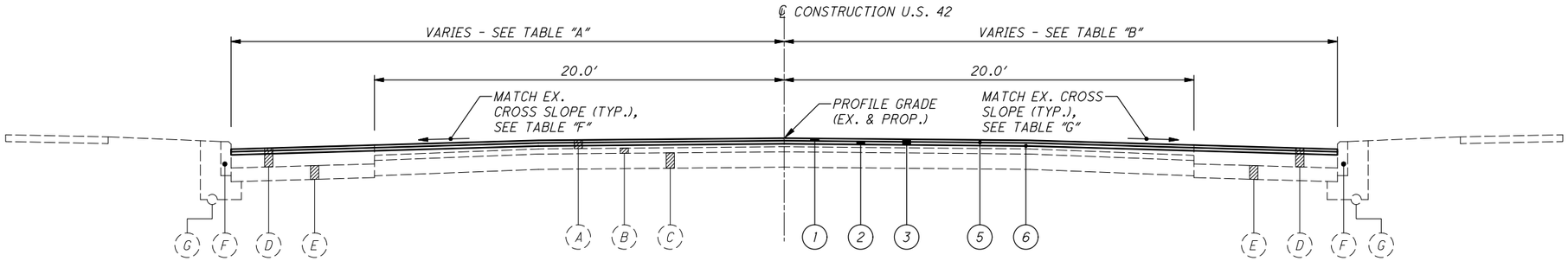


TYPICAL SECTION "1" - U.S. 42

| STATION TO STATION | "A" |
|---|---|
| 242+83.16 TO 246+30 | VARIES: 40' TO 28' |
| 246+30 TO 248+28.47 | 28' |
| 248+28.47 TO 271+42 | 27' |
| 271+42 TO 273+57 | VARIES: 27' TO 28' |
| 307+36 TO 395+17 | 27' |
| 404+18 TO 469+20 | 27' |
| 478+19 TO 512+72 | 27' |

STA. 242+83.16 TO STA. 271+42
STA. 310+16 TO STA. 395+17
STA. 404+18 TO STA. 469+20
STA. 478+19 TO STA. 490+70
STA. 499+68 TO STA. 512+72

| STATION TO STATION | "B" |
|---|---|
| 242+83.16 TO 248+28.47 | 28' |
| 248+28.47 TO 250+73.5 | 27' |
| 250+73.5 TO 251+27 | VARIES: 27' TO 38' |
| 251+27 TO 252+17 | 38' |
| 252+17 TO 252+95.5 | VARIES: 38' TO 41.5' |
| 252+95.5 TO 254+08.5 | 41.5' |
| 254+08.5 TO 254+34.5 | VARIES: 41.5' TO 27' |
| 254+34.5 TO 271+42 | 27' |
| 271+42 TO 273+57 | VARIES: 27' TO 28' |
| 307+36 TO 395+17 | 27' |
| 404+18 TO 469+20 | 27' |
| 478+19 TO 512+72 | 27' |

## NOTES:

1. SEE SHEET 12 OF 127 FOR TABLES "F" AND "G"

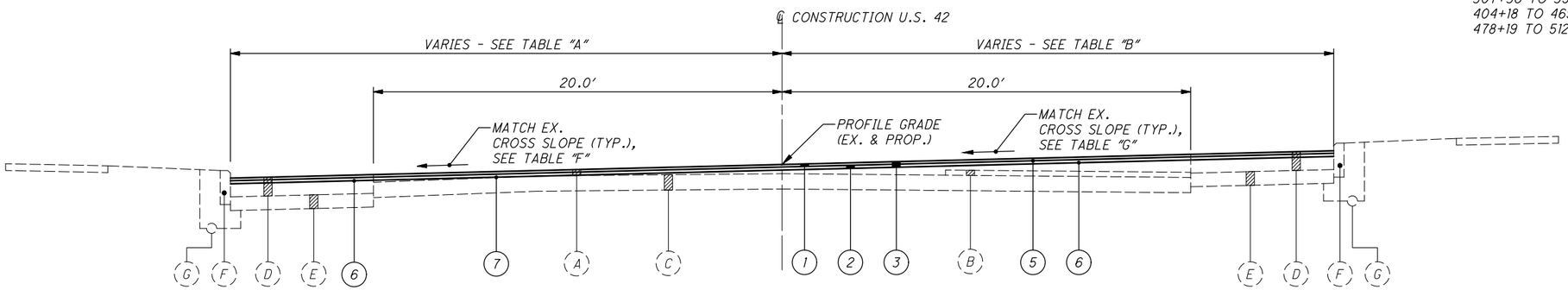


TYPICAL SECTION "2" - U.S. 42

STA. 271+42 TO STA. 273+57
STA. 307+36 TO STA. 310+16
STA. 490+70 To STA. 499+68

## LEGEND

1. ITEM 442 - 1 1/2" ASPHALT CONCRETE SURFACE COURSE, 12.5MM, TYPE A (446), AS PER PLAN, PG70-22M
2. ITEM 442 - 1 3/4" ASPHALT CONCRETE INTERMEDIATE COURSE, 19MM, TYPE A (446)
3. ITEM 254 - 3 1/4" PAVEMENT PLANING, ASPHALT CONCRETE, AS PER PLAN
4. ITEM 202 - WEARING COURSE REMOVED
5. ITEM 407 - NON-TRACKING TACK COAT
6. ITEM 407 - NON-TRACKING TACK COAT

- A 3 ½" TO 6 ½"± ASPHALT
- B 3"± BRICK
- C 9"± REINFORCED CONCRETE BASE
- D 7" TO 11"± ASPHALT
- E 6" TO 8"± GRAVEL BASE
- F 6"x 20" SANDSTONE CURB OR CONCRETE CURB
- G 6" UNDERDRAIN
- H 9" TO 11"± ASPHALT
- I 2" TO 3"± ASPHALT
- J TYPE 2-A INTEGRAL CONCRETE CURB
- K 6" STABILIZED CRUSHED AGGREGATE
- L 4"± CONCRETE BASE
- M 8"± CONCRETE BASE

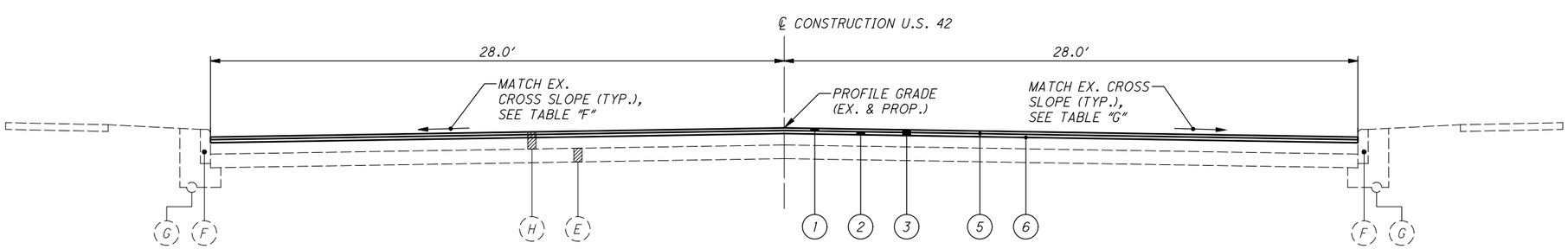


TYPICAL SECTION "3" - U.S. 42

STA. 273+57 TO STA. 275+32

TYPICAL SECTIONS

CUY-US-042-4.29



P:\Middleburg Heights - City of\J20150340.000 Pearl Rd Rehab\Drawings\Trans\105726GY001.dwg 01-Mar-19 2:44 PM

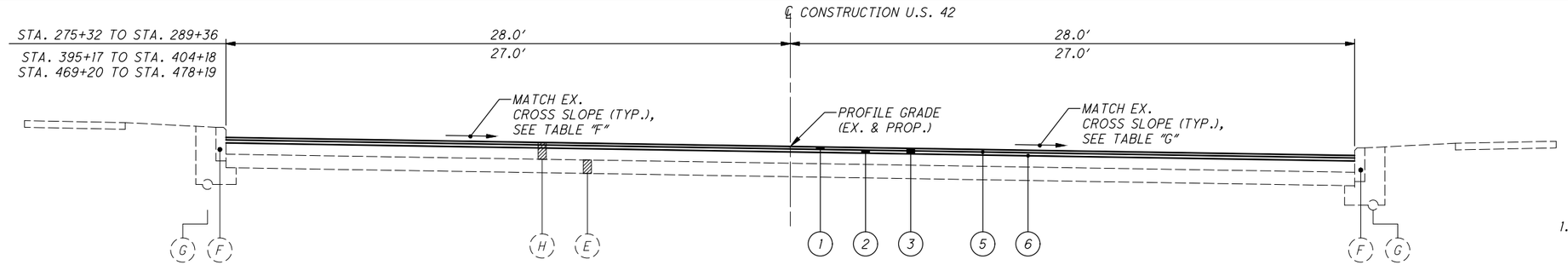


TYPICAL SECTION "4" - U.S. 42

STA. 275+32 TO STA. 289+36
STA. 395+17 TO STA. 404+18
STA. 469+20 TO STA. 478+19

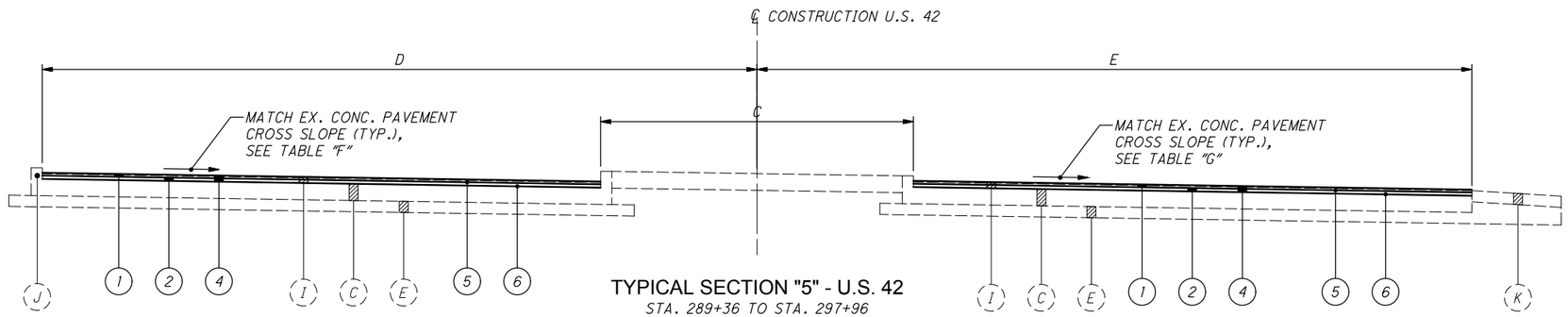


TYPICAL SECTION "5" - U.S. 42

STA. 289+36 TO STA. 297+96
STA. 299+79 TO STA. 307+36

CURBED SECTION STA. 289+36 TO STA. 296+27

SEE SECTION BELOW FOR SECTION W/PAVED BERM

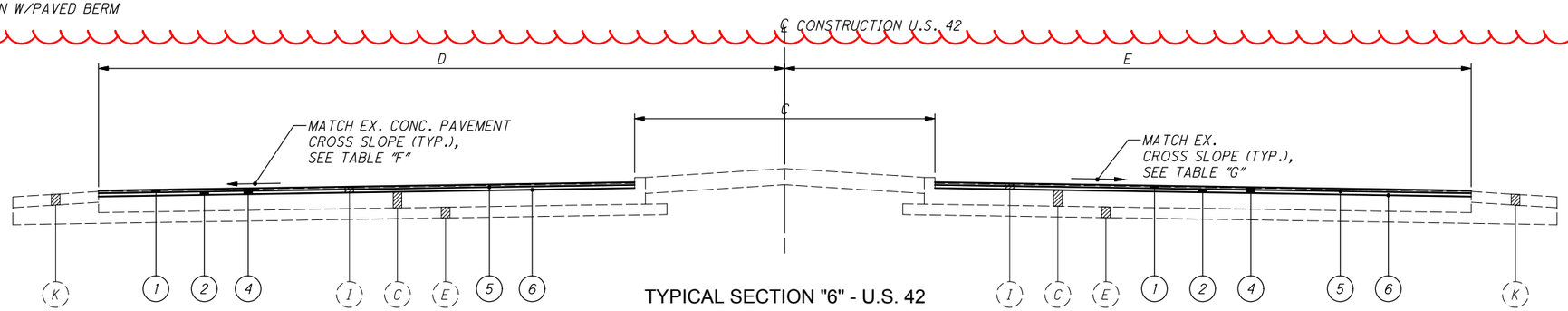


TYPICAL SECTION "6" - U.S. 42

STA. 297+96 TO STA. 299+79

## NOTES:

1. SEE SHEET 12 OF 127 FOR TABLES "F" AND "G"

## LEGEND

1. ITEM 442 - 1 1/2" ASPHALT CONCRETE SURFACE COURSE, 12.5MM, TYPE A (446), AS PER PLAN, PG70-22M
2. ITEM 442 - 1 3/4" ASPHALT CONCRETE INTERMEDIATE COURSE, 19MM, TYPE A (446)
3. ITEM 254 - 3 1/4"PAVEMENT PLANING, ASPHALT CONCRETE, AS PER PLAN
4. ITEM 202 - WEARING COURSE REMOVED
5. ITEM 407 - NON-TRACKING TACK COAT
6. ITEM 407 - NON-TRACKING TACK COAT

- A) 3 ½" TO 6 ½"± ASPHALT
- B) 3"± BRICK
- C) 9"± REINFORCED CONCRETE BASE
- D) 7" TO 11"± ASPHALT
- E) 6" TO 8"± GRAVEL BASE
- F) 6"x 20" SANDSTONE CURB OR CONCRETE CURB
- G) 6" UNDERDRAIN
- H) 9" TO 11"± ASPHALT
- I) 2" TO 3"± ASPHALT
- J) TYPE 2-A INTEGRAL CONCRETE CURB
- K) 6" STABILIZED CRUSHED AGGREGATE
- L) 4"± CONCRETE BASE
- M) 8"± CONCRETE BASE

| STATION TO STATION | "C" |
|---|---|
| 290+24 TO 291+36 | VARIES: 9′ TO 14′ |
| 291+36 TO 292+50 | 14′ |
| 292+50 TO 293+50 | VARIES: 14′ TO 3′ |
| 293+50 TO 294+41 | 3′ |
| 294+41 TO 295+21 | 0′ |
| 295+21 TO 295+63 | VARIES: 0′ TO 14′ |
| 295+63 TO 303+40 | 14′ |
| 303+40 TO 304+66 | 0′ |
| 304+66 TO 394+71 | VARIES: 0′-3′ |
| 304+71 TO 305+61 | 3′ |
| 305+61 TO 306+11 | VARIES: 3′ TO 10′ |
| 306+11 TO 307+36 | VARIES: 10′ TO 3′ |

| STATION TO STATION | "D" |
|---|---|
| 289+36 TO 290+47 | VARIES: 28′ TO 30.2′ |
| 290+47 TO 291+50 | VARIES: 42′ TO 44′ |
| 291+50 TO 291+90 | VARIES: 44′ TO 32′ |
| 291+90 TO 305+36 | 32′ |
| 305+36 TO 307+36 | VARIES: 32′ TO 27′ |

| STATION TO STATION | "E" |
|---|---|
| 289+36 TO 291+36 | VARIES: 28′ TO 32′ |
| 291+36 TO 305+36 | 32′ |
| 305+36 TO 307+36 | VARIES: 32′ TO 27′ |

TYPICAL SECTIONS

CFUY-US-042-4.29



P:\Middleburg Heights - City of\J20150340.000 Pearl Rd Rehab\Drawings\Trans\105726GY002.dwg 01-Mar-19 2:44 PM

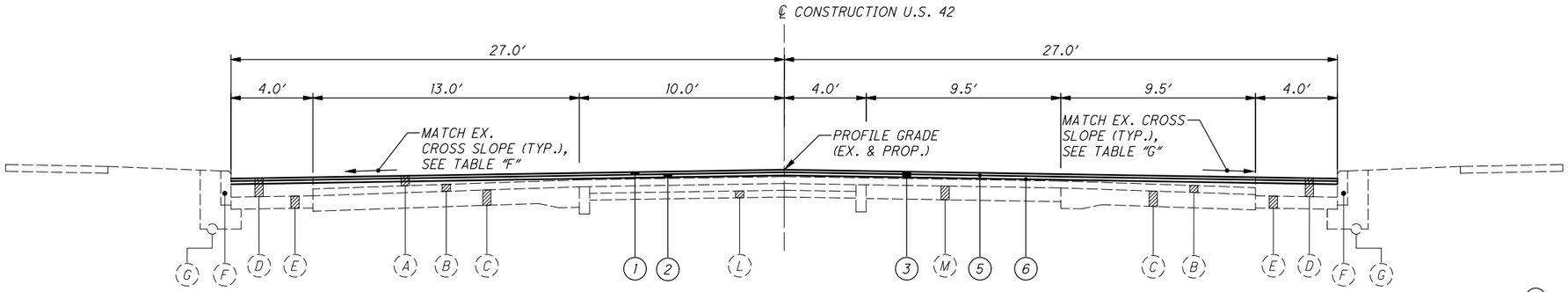


## TYPICAL SECTION "7" - U.S. 42

STA. 512+72 TO STA. 575+27.06

EXISTING CROSS SLOPE LEFT

| STATION | TO | STATION | "F" (- = SLOPE TO EOP) (+ = SLOPE TO CENTER) |
|---|---|---|---|
| 242+83.16 | TO | 259+00 | - 2% |
| 259+00 | TO | 271+42 | - 1% |
| 271+42 | TO | 289+36 | - 4% |
| 289+36 | TO | 297+96 | + 4% |
| 297+96 | TO | 299+79 | - 2% |
| 299+79 | TO | 303+00 | + 1% |
| 303+00 | TO | 307+36 | + 4% |
| 307+36 | TO | 308+50 | + 2% |
| 308+50 | TO | 398+50 | - 1% |
| 398+50 | TO | 404+18 | + 2% |
| 404+18 | TO | 575+27 | - 2% |

EXISTING CROSS SLOPE RIGHT

| STATION | TO | STATION | "G" (- = SLOPE TO EOP) (+ = SLOPE TO CENTER) |
|---|---|---|---|
| 242+83.16 | TO | 271+42 | - 2% |
| 271+42 | TO | 273+57 | + 1% |
| 273+57 | TO | 289+36 | + 4% |
| 289+36 | TO | 297+96 | - 4% |
| 297+96 | TO | 301+00 | - 2% |
| 301+00 | TO | 308+50 | - 4% |
| 308+50 | TO | 398+50 | - 1% |
| 398+50 | TO | 404+18 | - 4% |
| 404+18 | TO | 575+27 | - 2% |

1. ITEM 442 - 1 1/2" ASPHALT CONCRETE SURFACE COURSE, 12.5MM, TYPE A (446), AS PER PLAN, PG70-22M
2. ITEM 442 - 1 3/4" ASPHALT CONCRETE INTERMEDIATE COURSE, 19MM, TYPE A (446)
3. ITEM 254 - 3 1/4" PAVEMENT PLANING, ASPHALT CONCRETE, AS PER PLAN
4. ITEM 202 - WEARING COURSE REMOVED
5. ITEM 407 - NON-TRACKING TACK COAT
6. ITEM 407 - NON-TRACKING TACK COAT
7. ITEM 451 - 9" REINFORCED CONCRETE PAVEMENT, CLASS QC1
8. ITEM 304 - 6" AGGREGATE BASE, AS PER PLAN
9. ITEM 204 - SUBGRADE COMPACTION
10. ITEM 609 - CURB, TYPE 2-A, AS PER PLAN
11. ITEM 659 - SEEDING AND MULCHING
12. ITEM 653 - 2" (MIN.) TOPSOIL FURNISHED AND PLACED

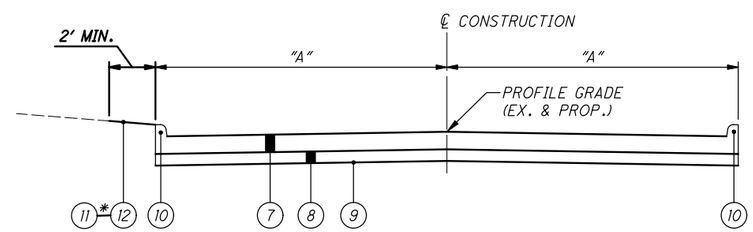


## CONCRETE SIDE STREET REPLACEMENT

SECTION APPLIES:
MAPLEWOOD ROAD ("A"=12.5'±)
MANDALAY DRIVE ("A"=12.5'±)
ORCHARD BOULEVARD ("A"=13.5'±)
COMMONWEALTH BOULEVARD ("A"=13.5'±)
ROCHELLE DRIVE ("A"=12.5'±)

* = ITEM INCLUDED IN THE UNIT PRICE BID FOR ITEM 609-CURB, TYPE 2-A, AS PER PLAN (TO BE PERFORMED WHEN ADJACENT TO GRASSED AREA)

- (A) 3 ½" TO 6 ½"± ASPHALT
- (B) 3"± BRICK
- (C) 9"± REINFORCED CONCRETE BASE
- (D) 7" TO 11"± ASPHALT
- (E) 6" TO 8"± GRAVEL BASE
- (F) 6"x 20" SANDSTONE CURB OR CONCRETE CURB
- (G) 6" UNDERDRAIN
- (H) 9" TO 11"± ASPHALT
- (I) 2" TO 3"± ASPHALT
- (J) TYPE 2-A INTEGRAL CONCRETE CURB
- (K) 6" STABILIZED CRUSHED AGGREGATE
- (L) 4"± CONCRETE BASE
- (M) 8"± CONCRETE BASE

TYPICAL SECTIONS

CUY-US-042-4.29



P:\Middleburg Heights - City of\J20150340.000 Pearl Rd Rehab\Drawings\Trans\105726GY003.dwg 01-Mar-19 2:44 PM

## GENERAL

### SCOPE OF WORK

THE WORK WITHIN THE LIMITS OF THIS PROJECT INCLUDES THE PLANING AND RESURFACING OF PEARL ROAD FROM INTERSTATE 80 TO PAVEMENT CUT SOUTH OF SNOW ROAD APPROXIMATELY 6.3 MILES.

### STATIONING AND LOCATIONS

STATIONING AND LOCATIONS INDICATED ON THESE PLANS ARE APPROXIMATE. ALL LOCATIONS AND ITEMS CALLED OUT BY STATION ARE SUBJECT TO ADJUSTMENT IN THE FIELD "AS DIRECTED BY THE ENGINEER" AT NO ADDITIONAL COST.

### UTILITIES

THERE ARE NO UNDERGROUND UTILITIES SHOWN ON THIS PLAN. THE NATURE OF THE WORK REQUIRED BY THIS PROJECT WILL NOT AFFECT ANY KNOWN UNDERGROUND UTILITIES THAT EXIST UNDER OR ADJACENT TO THE WORK AREA.

LISTED BELOW ARE ALL UTILITIES LOCATED WITHIN THE PROJECT CONSTRUCTION LIMITS TOGETHER WITH THEIR RESPECTIVE OWNERS:

SEWER
NORTHEAST OHIO REGIONAL SEWER
DISTRICT (NEORSD)
ATTN.: MARY MACIEJOWSKI, CDPP MANAGER
3900 EUCLID AVENUE
CLEVELAND, OHIO 44115
PHONE: (216) 881-6600 EXT. 6466
EMAIL: MACIEJOWSKIM@NEORSD.ORG
ATTN.: CHARLES D. COFIELD, TECHNICAL SUPPORT
COORDINATOR
4747 EAST 49TH STREET
CLEVELAND, OHIO 44125
PHONE: (216) 641-6000, EXT. 2415
CELL: (216) 310-6037
EMAIL: COFIELDC@NEORSD.ORG

PUBLIC AGENCIES
GREATER CLEVELAND REGIONAL TRANSIT AUTHORITY (GCRTA)
ATTN.: MICHAEL SCHIPPER
1240 WEST 6TH STREET
CLEVELAND, OHIO 44113-1331
PHONE: (216) 566-5217
FAX: (216) 350-5283
EMAIL: MSHIPPER@GCRTA.ORG
ATTN.: JOEL B. FREILICH, ASSISTANT DIRECTOR
SERVICE MANAGEMENT
PHONE: (216) 356-3018
EMAIL: JFREILICH@GCRTA.ORG

CITY OF MIDDLEBURG HEIGHTS
ATTN.: MICHAEL MACKAY, P.E.,
MACKAY ENGINEERING & SURVEYING CO.
7017 PEARL RD.
CLEVELAND, OH 44130
PHONE: (440) 886-4500
FAX: (440) 886-4590

CITY OF PARMA
ATTN.: PAUL W. DEICHMANN, P.E., BUILDING COMMISSIONER AND
CITY ENGINEER
6611 RIDGE ROAD
PARMA, OHIO 44129
PHONE: (440) 885-8038
FAX: (440) 885-8039
EMAIL: PDEICHMANN@CITYOFPARMA-OH.GOV

CITY OF PARMA HEIGHTS
ATTN.: DANIEL J. NEFF, P.E., PRESIDENT NEFF & ASSOCIATES
6405 YORK ROAD
PARMA HEIGHTS, OHIO 44130
PHONE: (440) 884-3100
FAX: (440) 884-3104
EMAIL: DNEFF@NEFF-ASSOC.COM

CITY OF STRONGSVILLE
ATTN.: KEN MIKULA, CITY ENGINEER
16099 FOLTZ PKWY
STRONGSVILLE, OH 44149
PHONE: (440) 580-3120
FAX: (440) 580-3001
EMAIL: KEN.MIKULA@STRONGSVILLE.COM
ATTN.: JOSEPH WALKER
EMAIL: JOE.WALKER@STRONGSVILLE.COM

GAS
DOMINION EAST OHIO GAS COMPANY
ATTN.: BILL SNYDER
320 SPRINGSIDE DRIVE, SUITE 320
AKRON, OHIO 44333
PHONE: (330) 664-2409
EMAIL: WILLIAM.D.SNYDER@DOMINIONENERGY.COM

DOMINION ENERGY OHIO TRANSMISSION, STORAGE &
GATHERING FACILITIES
ATTN.: MIKE ANTONIUS, PROJ. MGR.-GAS DESIGN
320 SPRINGSIDE DR.
SUITE 320, AKRON, OHIO 44333
PHONE: (330) 664-2488
FAX: (330) 664-2686
RELOCATION
EMAIL: RELOCATION@DOM.COM
ATTN.: KEVIN BIRT
320 SPRINGSIDE DRIVE, SUITE 320
AKRON, OH 44333
PHONE: (330) 664-2409
EMAIL: KEVIN.J.BIRT@DOMINIONENERGY.COM
ATTN.: K. AARON CONANT
320 SPRINGSIDE DRIVE, SUITE 320
AKRON, OH 44333
PHONE: (330) 664-2451
EMAIL: K.AARON.CONANT@DOM.COM

COLUMBIA GAS OF OHIO - NISOURCE
ATTN.: DAN SUREN
7080 FRY ROAD
MIDDLEBURG HEIGHTS, OHIO 44130
PHONE: (440) 891-2428
FAX: (440) 891-2477
E-MAIL: DSUREN@NISOURCE.COM

ELECTRIC
CEI (FIRST ENERGY, THE ILLUMINATING COMPANY)
ATTN.: TED RADER, DESIGN SUPERVISOR
6896 MILLER ROAD
BRECKSVILLE OH 44141
PHONE: (440) 546-8738
EMAIL: RADER@FIRSTENERGYCORP.COM

CEI (FIRST ENERGY SERVICE COMPANY)
ATTN.: BRYAN S. HUNSCHE, TRANSMISSION DESIGN
76 SOUTH MAIN STREET
AKRON, OH 44308
PHONE: (330) 384-5180
EMAIL: BHUNSCHE@FIRSTENERGYCORP.COM

WATER
CITY OF CLEVELAND DIVISION OF WATER (CWD)
ATTN.: FRED ROBERTS
1201 LAKESIDE AVENUE
CLEVELAND, OHIO 44114
PHONE: (216) 664-2444 EXT. 5590
EMAIL: FRED_ROBERTS@CLEVELANDWATER.COM
ATTN.: ANDREW KRAWCZYK, CONSULTING ENG.
1201 LAKESIDE AVENUE
CLEVELAND, OHIO 44114
PHONE: (216) 664-2444 EXT. 5520
FAX: (216) 664-2378
EMAIL: ANDREW_KRAWCZY@CLEVELANDWATER.COM

COMMUNICATIONS
VERIZON (MCI-WORLDCOM)
ATTN.: AL GUEST
120 RAVINE ST.
AKRON, OHIO 44303
PHONE: (330) 253-8267
CELL: (330) 329-5495
E-MAIL: ALLAN.GUEST@VERIZON.COM

AT&T (TCA/LNS/METRO/TCG) THAYER POWER AND
COMMUNICATION LINE CONSTRUCTION CO., LLC
ATTN.: CHRIS McCLOSKEY
950 FREEWAY DRIVE NORTH
COLUMBUS, OHIO 43229
PHONE: (614) 431-9292
CELL: (614) 312-2226
FAX: (614) 431-9595
EMAIL: CHRISMCCLOSKEY@THAYERPC.COM

AT&T (SBC)
ATTN.: JAMES JANIS, DESIGN MGR.
13630 LORAIN AVENUE
2ND FLOOR, ROOM 350
CLEVELAND, OHIO 44111-3436
PHONE: (216) 476-6142
FAX: (216) 476-6013
EMAIL: PJ8191@ATT.COM

AT&T LONG DISTANCE FACILITIES
(METROPOLITAN COMMUNICATIONS GROUP)
ATTN.: BILL HARKNESS
155 COMMERCE CENTER DRIVE, SUITE #1
WESTERVILLE, OHIO 43082
PHONE: (614) 392-2873
CELL: (770) 316-5309
EMAIL: BILL.HARKNESS@MCGFIBER.COM

AT&T LONG LINE
ATTN.: MIKE DIEDERICH
7555 E. PLEASANT VALLEY RD., SUITE 140
INDEPENDENCE, OHIO 44131
PHONE: (216) 750.0135
CELL: (216) 212-8556
EMAIL: MD4145@ATT.COM

REDFLEX TRAFFIC SYSTEMS
441 LEXINGTON AVENUE 3RD FLOOR
NEW YORK, NEW YORK 10017
PHONE: 1 (646) 625-7388
EMAIL: ROADTRAFFICAM@KABLE.CO.UK
EMAIL: USASALES@KABLE.CO.UK

COMMUNICATIONS
CHARTER COMMUNICATIONS (TIME WARNER CABLE, COMCAST)
ATTN.: GARY NAUMANN, SUPERVISOR
8179 DOW CIRCLE
STRONGSVILLE, OHIO 44136
PHONE:(216) 575-8016,EXT. 5033
EMAIL: GARY.NAUMANN!@CHARTER.COM
ATTN.: PAUL SILVESTRO (CLEVELAND WEST)
8179 DOW CIRCLE
STRONGSVILLE, OHIO 44136
PHONE: (216) 575-8016, EXT. 1150
PHONE2: (216) 555-1150
FAX: (440) 826-2940
EMAIL: PAUL.SILVESTRO@CHARTER.COM
ATTN.: MARTIN VANKUREN (NORTH OLMSTED),
CONSTRUCTION SUPERVISOR
578 TERNES LANE
ELYRIA, OHIO 44035
PHONE: (216) 575-8016, EXT. 1150
PHONE2: (216) 555-1150
CELL: (216) 854-0755
EMAIL: MARTY.VANKUREN@CHARTER.COM

COX COMMUNICATIONS
ATTN.: CRAIG J. SMITH, CONSTRUCTION PLANNER II
12221 PLAZA DRIVE
PARMA, OHIO 44130
PHONE: (216) 535-3356
EMAIL: CRAIG.SMITH@COX.COM

EVERSTREAM
ATTN.: CATHY COSTELLO, OSP NETWORK PLANNING ASSOCIATE
1228 EUCLID AVE, SUITE 250
CLEVELAND, OHIO 44115
PHONE: (216) 319-2614
EMAIL: CCOSTELLO@EVERSTREAM.NET

WIDE OPEN WEST (WOW)
ATTN.: BOB HAMMOND, SENIOR NETWORK MANAGER
105 BLAZE INDUSTRIAL PARKWAY
BEREA, OHIO 44017
PHONE: (440) 606-6262
E-MAIL: BOB.HAMMOND@WOWINC.COM

ZAYO FIBER SOLUTIONS (FIRST TELECOM)
ATTN.: SCOTT HEINLEN, OSP MANAGER OHIO
305 E. WIGGIN STREET
GAMBIER, OHIO 43022
CELL: (740) 501-6921
E-MAIL: SCOTT.HEINLEN@ZAYO.COM
ATTN.: JAMES POHLOD
4199 KINROSS LAKES PARKWAY, SUITE 10
RICHFIELD, OHIO 44286
PHONE: (330) 237-6536
CELL: (330) 968-6124
EMAIL: JAMES.POHLOD@ZAYO.COM
ATTN.: DAVE GALUSKA, DIRECTOR OSP-OHIO GROUP & FIRST
TELECOM REPRESENTATIVE
4199 KINROSS LAKES PARKWAY, SUITE 10
RICHFIELD, OHIO 44286
PHONE: (234) 281-0025
E-MAIL: DAVE.GALUSKA@ZAYO.COM

THE LOCATION OF THE UNDERGROUND UTILITIES SHOWN ON THE PLANS ARE AS OBTAINED FROM THE OWNERS AS REQUIRED BY SECTION 153.64 O.R.C. THE STATE/CITIES DO NOT GUARANTEE THE ACCURACY OR COMPLETENESS OF THE UTILITY INFORMATION SHOWN. THE STATE/CITIES ARE NOT LIABLE FOR UTILITIES OR CONNECTIONS NOT SHOWN ON THE PLANS OR ABANDONED UTILITIES OR CONNECTIONS. THE CONTRACTOR SHALL CUT OUT ANY ABANDONED UTILITIES AND ALL COSTS INCURRED FOR THIS WORK SHALL BE INCLUDED IN THE BID ITEM FOR THAT WORK. THE CONTRACTOR SHALL LOCATE ALL UTILITIES PRIOR TO CONSTRUCTION.

### DOMINION GAS NOTE

"IT IS THE CONTRACTOR'S RESPONSIBILITY TO MAINTAIN THE LATERAL AND SUBJACENT SUPPORT OF DOMINION ENERGY'S PIPELINE(S), IN COMPLIANCE TO 29 CFR, PART 1926, SUBPART P, (SAFE EXCAVATION & SHORING). ONE-FOOT MINIMUM VERTICAL AND HORIZONTAL CLEARANCE MUST BE MAINTAINED BETWEEN DOMINION ENERGY OHIO'S (DEO) EXISTING PIPELINE(S) AND ALL OTHER IMPROVEMENTS. EXTREME CARE SHOULD BE TAKEN NOT TO HARM ANY DEO FACILITY (PIPELINES, ETC.) OR APPURTENANCE (PIPE COATING, TRACER WIRE, CATHODIC PROTECTION TEST STATION WIRES & DEVICES, VALVE BOXES, ETC.). DEO FACILITIES MUST BE PROTECTED WITH A TARP DURING BRIDGE CONSTRUCTION. THE CONTRACTOR WILL BE RESPONSIBLE AND LIABLE FOR ENSURING THAT ALL DEO EXISTING FACILITIES, ABOVE AND BELOW GROUND, REMAIN UNDAMAGED, ACCESSIBLE AND IN WORKING ORDER. THE CROSSING OF DEO'S PIPELINE WITH ANOTHER STEEL FACILITY MAY CREATE A POTENTIAL CORROSION ISSUE FOR THE PROPOSED FACILITY AND THE EXISTING DEO FACILITY. PLEASE CONTACT DOMINION ENERGY OHIO'S CORROSION DEPARTMENT: DAVE CUTLIP (330-266-2121), RICK MCDONALD (330-266-2122), OR AL HUMRICHOUSER (330-478-3757)."

CALCULATED TWC
CHECKED BT

GENERAL NOTES

CUY-US-042-4.29



P:\Middleburg Heights - City of\J20150340.000 Pearl Rd Rehab\Drawings\Trans\105726GN001.dwg 01-Mar-19 2:44 PM

## SURVEY PARAMETERS

PRIMARY PROJECT CONTROL MONUMENTS GOVERN ALL POSITIONING ON ODOT PROJECTS. SEE SHEET 16 OF THE PLANS FOR A TABLE CONTAINING PROJECT CONTROL INFORMATION. USE THE FOLLOWING PROJECT CONTROL, VERTICAL POSITIONING, AND HORIZONTAL POSITIONING PARAMETERS FOR ALL SURVEYING:
PROJECT CONTROL
POSITIONING METHOD: ODOT VRS
MONUMENT TYPE: NO MONUMENTS WERE SET

VERTICAL POSITIONING
ORTHOMETRIC HEIGHT DATUM: NAVD 88
GEOID: 12B
HORIZONTAL POSITIONING
REFERENCE FRAME: NAD 83 (2011)
ELLIPSOID: GRS 80
MAP PROJECTION: LAMBERT CONFORMAL CONIC
COORDINATE SYSTEM: OHIO STATE PLANE, NORTH ZONE
COMBINED SCALE FACTOR: 1.0000819470
ORIGIN OF COORDINATE SYSTEM: (0,0)

USE THE POSITIONING METHODS AND MONUMENT TYPE USED IN THE ORIGINAL SURVEY TO RESTORE ALL MONUMENTS RELATED TO PRIMARY PROJECT CONTROL THAT ARE DAMAGED OR DESTROYED BY CONSTRUCTION ACTIVITIES. RESTORE THE DAMAGED OR DESTROYED MONUMENTS IN ACCORDANCE WITH CMS 623.

UNITS ARE IN U.S. SURVEY FEET.

## ROADWAY

## CURB, DRIVEWAY, AND SIDEWALK REPLACEMENT

DURING PREPARATION OF THIS PROJECT, EXISTING CURB, DRIVEWAY, AND SIDEWALK REQUIRING REMOVAL AND REPLACEMENT WERE IDENTIFIED AND THE QUANTITIES INCLUDED IN THE PLANS.

DURING CONSTRUCTION OF THE PROJECT, SHOULD ADDITIONAL LOCATIONS OF CURB, DRIVEWAY, AND/OR SIDEWALK REQUIRE REPLACEMENT, THESE ITEMS SHALL BE REMOVED AND REPLACED, WITH THE APPROVAL OF THE ENGINEER. CONTINGENCY QUANTITIES HAVE BEEN INCLUDED IN THE PROJECT FOR THIS WORK.

AT A MINIMUM, SIDEWALKS AND DRIVEWAYS THAT EXHIBIT THE FOLLOWING CRITERIA SHOULD BE CONSIDERED TO BE REMOVED AND REPLACED:

- ADJACENT CONCRETE SLABS THAT EXCEED ½" IN VERTICAL DIFFERENTIAL.
- CRACKED OR BROKEN SLABS.
- DETERIORATING JOINTS (AT LEAST 4 INCHES LONG BY 1 INCH WIDE AT ANY POINT).
- SPALLED AREAS.
- PITTED AREAS, WITH ANY PIT LARGER THAN 1 ½" AND AT LEAST ½" DEEP.
- SLABS THAT SHOW SIGNS OF PONDING WATER DUE TO SETTLEMENT.

AT A MINIMUM, CURBS THAT EXHIBIT THE FOLLOWING CRITERIA SHOULD BE CONSIDERED TO BE REMOVED AND REPLACED:

- ADJACENT CURB SECTIONS THAT EXCEED 2" IN VERTICAL DIFFERENTIAL.
- CURB HAVING A SLOPE OF MORE THAN 2" PER FOOT FROM THE PAVEMENT GRADE.
- CURB SURFACE HAVING 50% OF ITS SURFACE CONTINUOUSLY SPALLED, DETERIORATED, OR MISSING WITHIN A SECTION.
- CURB SURFACE HAVING 50% OF EXPOSED AGGREGATE WITHIN A SECTION.
- CURB SECTIONS THAT HAVE BEEN PREVIOUSLY PATCHED WITH A MATERIAL OTHER THAN CONCRETE.
- CURB SECTIONS THAT HAVE SETTLED.

THE CONTRACTOR IS RESPONSIBLE TO REMOVE, STORE (IF APPLICABLE), AND RESET OR REPLACE ANY ADJACENT LANDSCAPING ITEMS THAT ARE DISTURBED DURING THE REMOVAL AND REPLACEMENT OF THE CURBS, DRIVEWAYS, AND SIDEWALKS. THIS INCLUDES (BUT ARE NOT LIMITED TO) LANDSCAPING GRAVEL, GRASS, RETAINING WALLS, RAILROAD TIES, AND DECORATIVE SIDEWALK. PAYMENT FOR THIS WORK WILL BE INCIDENTAL TO THE AS PER PLAN BID ITEMS FOR THE VARIOUS CURB, DRIVEWAY, AND SIDEWALK ITEMS.

## ITEM 202, PAVEMENT REMOVED, AS PER PLAN
## ITEM 202, WALK REMOVED, AS PER PLAN

THE PLANS INDICATE LOCATIONS WHERE DRIVEWAYS AND SIDEWALKS ARE BEING REMOVED THAT WILL NOT BE REPLACED. IN THESE LOCATIONS, THE CONTRACTOR SHALL FILL THE VOID WITH TOPSOIL TO THE ADJACENT FINISHED GRADE AND APPLY SEEDING AND MULCHING IN CONFORMANCE WITH ITEM 659. THIS WORK SHALL BE INCLUDED IN THE UNIT PRICE BID FOR THE PERTINENT 202 ITEM FOR PAYMENT.

## INTEGRAL CURB REMOVED AND REPLACED

WHERE SHOWN ON THE DRAWINGS OR DESIGNATED BY THE ENGINEER, DEFECTIVE INTEGRAL CONCRETE CURB SHALL BE REMOVED AND REPLACED IN ACCORDANCE WITH THE FOLLOWING PROCEDURE.

DEFECTIVE CURB SHALL BE REMOVED FLUSH WITH THE TOP OF THE EXISTING CONCRETE PAVEMENT BY GRINDING, PLANING, CHIPPING OR OTHER APPROVED METHODS PROVIDING RESULTS SATISFACTORY TO THE ENGINEER. THE CURB AREA SHALL BE THOROUGHLY CLEANED OF ALL LOOSE MATERIAL, INCLUDING LOOSE SPALLS CAUSED BY THE REMOVAL OPERATION. THE FULL COST OF REMOVAL SHALL BE INCLUDED IN THE UNIT PRICE PER FOOT FOR ITEM 202 -CURB REMOVED, AS PER PLAN. THE NEW CONCRETE CURB SHALL BE CONNECTED TO THE PAVEMENT WITH NO. 5 TIE BARS VERTICALLY PLACED IN GROUTED DOWEL HOLES AT 12" CENTERS, 3" FROM THE PAVEMENT EDGE / BACK OF CURB. INSTALLATION OF THE TIE BARS SHALL BE IN ACCORDANCE WITH ITEM 510 DOWEL HOLES WITH NON-SHRINK, NON-METALLICANCHORING MATERIAL AND PER THE DETAIL SHOWN ON SHEET NO. 70. NON-SHRINK, NON-METALLIC ANCHORING MATERIAL SHALL MEET THE REQUIREMENTS OF 705.20. AFTER THE TIE BARS ARE SET IN PLACE, THE PREPARED SURFACE AREA WHERE THE CONCRETE CURB IS TO BE PLACED SHALL RECEIVE AN APPLICATION OF EPOXY ADHESIVE CONFORMING TO AASHTO DESIGNATION M 235, TYPE V IMMEDIATELY PRIOR TO PLACING THE CURB. EXISTING JOINTS IN THE PAVEMENT SHALL EXTEND THROUGH THE NEW CURB. THE FULL COST OF THE DOWEL HOLES, TIE BARS, NON-SHRINK/NON METALLIC ANCHORING MATERIAL AND EPOXY SHALL BE INCLUDED IN THE CONTRACT UNIT PRICE BID FOR ITEM 609 -CURB, TYPE 2-B, AS PER PLAN (A).

RESTORATION OF GRASSED AREAS ADJACENT TO THE CURB AS INDICATED ON THE DETAIL ON SHEET NO. 70 SHALL ALSO BE INCLUDED IN THE UNIT PRICE BID FOR THIS ITEM.

PAYMENT FOR THIS WORK SHALL BE MADE AT THE CONTRACT UNIT PRICE BID PER FOOT FOR THE ACTUALLY COMPLETED AND ACCEPTED QUANTITIES OF ITEM 202 -CURB REMOVED, AS PER PLAN AND ITEM 609 -CURB, TYPE 2-B, AS PER PLAN (A).

IN ADDITION TO THE QUANTITIES INDICATED ON THE PLANS, THE FOLLOWING CONTINGENCY QUANTITIES HAVE BEEN CARRIED TO THE GENERAL SUMMARY FOR USE AS DIRECTED BY THE ENGINEER:

| | | |
|---|---|---|
| 202, CURB REMOVED, AS PER PLAN | MIDDLEBURG HEIGHTS: | 100 FT |
| 609, CURB, TYPE 2-B. AS PER PLAN (A) | MIDDLEBURG HEIGHTS: | 100 FT |

## NON-INTEGRAL CURB REMOVED AND REPLACED

WHERE SHOWN ON THE DRAWINGS OR DESIGNATED BY THE ENGINEER, DEFECTIVE NON-INTEGRAL CONCRETE CURB SHALL BE REMOVED AND REPLACED IN ACCORDANCE WITH THE DETAIL ON SHEET NO. 70.

RESTORATION OF GRASSED AREAS ADJACENT TO THE CURB AS INDICATED ON THE DETAIL ON SHEET NO. 70 SHALL ALSO BE INCLUDED IN THE UNIT PRICE BID FOR ITEM 609-CURB, TYPE 6, AS PER PLAN.

PAYMENT FOR THIS WORK SHALL BE MADE AT THE CONTRACT UNIT PRICE BID PER FOOT FOR THE ACTUALLY COMPLETED AND ACCEPTED QUANTITIES OF ITEM 202 -CURB REMOVED AND ITEM 609 -CURB, TYPE 6, AS PER PLAN.

IN ADDITION TO THE QUANTITIES INDICATED ON THE PLANS, THE FOLLOWING CONTINGENCY QUANTITIES HAVE BEEN CARRIED TO THE GENERAL SUMMARY FOR USE AS DIRECTED BY THE ENGINEER:

| | | |
|---|---|---|
| 202, CURB REMOVED | STRONGSVILLE: | 100 FT |
| | MIDDLEBURG HEIGHTS: | 250 FT |
| | PARMA HEIGHTS: | 350 FT |
| | TOTAL: | 700 FT |
| 609, CURB, TYPE 6, AS PER PLAN | STRONGSVILLE: | 100 FT |
| | MIDDLEBURG HEIGHTS: | 250 FT |
| | PARMA HEIGHTS: | 350 FT |
| | TOTAL: | 700 FT |

## ITEM 608 - 4" CONCRETE WALK, AS PER PLAN
## ITEM 608 - 6" CONCRETE WALK, AS PER PLAN

WHERE SHOWN ON THE DRAWINGS OR DESIGNATED BY THE ENGINEER, DEFECTIVE CONCRETE SIDEWALK SHALL BE REMOVED AND REPLACED. WALK REMOVAL/ REPLACEMENT LIMITS SHALL TYPICALLY EXTEND TO THE NEAREST EXISTING WALK JOINT/DIVISION LINE UNLESS OTHERWISE DIRECTED BY THE ENGINEER. THE EXACT LOCATIONS AND LIMITS OF EXISTING WALK REMOVAL / REPLACEMENT SHALL BE ESTABLISHED AND DESIGNATED BY THE ENGINEER. AEROSOL SPRAY PAINT FOR OUTLINING SHALL BE PROVIDED BY THE CONTRACTOR.

EXISTING WALK SHALL BE REMOVED AND DISPOSED OF PER 202.05 AND IN A MANNER THAT WILL NOT DISTURB, DAMAGE OR UNDERMINE ADJACENT WALK, CURB, DRIVES OR DRIVE APRONS INTENDED TO REMAIN IN PLACE. ANY ADJACENT FACILITIES DAMAGED AS A RESULT OF THE CONTRACTOR'S NEGLIGENCE, AS DETERMINED BY THE ENGINEER, AND WHICH ARE NOT OTHERWISE DESIGNATED FOR REPLACEMENT, SHALL BE REPLACED AT THE CONTRACTOR'S EXPENSE; ALL AT THE DIRECTION OF THE ENGINEER.

IN ADDITION TO THE REQUIREMENTS OF 608, THE FOLLOWING SHALL APPLY:

ALL CONCRETE WALK SHALL BE EITHER 4" IN FRONT OF RESIDENTIAL PROPERTIES OR 6" IN FRONT OF COMMERCIAL PROPERTIES AND HAVE A 2" COMPACTED SCREENINGS BED WHICH MEETS THE REQUIREMENTS OF 703.10 (LIMITED TO CRUSHED STONE). THE COST FOR FURNISHING AND PLACING THE 2" COMPACTED SCREENINGS BED SHALL BE INCLUDED IN THE CONTRACT UNIT PRICE BID FOR ITEM 608 - 4" OR 6" CONCRETE WALK, AS PER PLAN.

PER 608.03(C), IT IS REQUIRED THAT 1/2 INCH THICK EXPANSION JOINT MATERIAL (705.03) BE INSTALLED BETWEEN THE WALK AND THE BACK OF CURB OR ANY OTHER FIXED OBJECT THAT EXTENDS THE FULL DEPTH OF THE WALK. IN ADDITION TO THE LOCATIONS SPECIFIED UNDER 608.03(C), TRANSVERSE EXPANSION JOINTS SHALL BE CONSTRUCTED AT INTERVALS OF NOT MORE THAN 25 TO 30 FEET UNLESS OTHERWISE DIRECTED BY THE ENGINEER. THE EXPANSION JOINT FILLER (705.03) SHALL BE PLACED AT THE TRANSVERSE EXPANSION JOINTS FOR THE FULL DEPTH/WIDTH OF THE CONCRETE WALK AND SHALL BE TRULY NORMAL TO GRADE. THE TOP 1/2 INCH OF THE EXPANSION JOINT PLACED BETWEEN THE WALK AND BACK OF CURB SHALL BE SEALED WITH (705.04) JOINT SEALER.

UNLESS OTHERWISE REQUIRED BY MUNICIPAL STANDARDS AND/OR ORDINANCES, THE FINAL SURFACE SHALL BE TEXTURED BY USE OF AN ACCEPTED BROOM SO AS TO PRODUCE A UNIFORM, GRITTY, TRANSVERSE TEXTURE, AFTER WHICH, THE CONTRACTOR IS REQUIRED TO RETRACE THE PREVIOUSLY FORMED JOINTS AND OUTSIDE EDGES OF THE WALK.

FINAL FINISH SHALL BE IN ACCORDANCE WITH THE APPLICABLE MUNICIPAL STANDARDS/ORDINANCES.

IN LOCATIONS WHERE NEW WALK IS BEING INSTALLED IN EXISTING AREAS WHERE SIDEWALK DOES NOT PRESENTLY EXIST, OR ADDITIONAL EXCAVATION IS REQUIRED, THE CONTRACTOR SHALL EXCAVATE THE MATERIAL TO THE PROPOSED SIDEWALK SUBGRADE ELEVATION. THIS WORK SHALL BE INCLUDED IN THE UNIT PRICE BID FOR THE PERTINENT 608 ITEM FOR PAYMENT.

GRASSED AREAS ADJACENT TO THE WALK SHALL BE RESTORED WITH A MINIMUM OF 2 INCHES OF ITEM 653-TOPSOIL FURNISHED AND PLACED AND ITEM 659-SEEDING AND MULCHING. RESTORATION WORK SHALL BE INCLUDED IN THE UNIT PRICE BID FOR ITEM 608-CONCRETE WALK, AS PER PLAN.

IN ADDITION TO THE QUANTITIES INDICATED ON THE PLANS, THE FOLLOWING CONTINGENCY QUANTITIES HAVE BEEN CARRIED TO THE GENERAL SUMMARY FOR USE AS DIRECTED BY THE ENGINEER:

| | | |
|---|---|---|
| 202, WALK REMOVED, AS PER PLAN | STRONGSVILLE: | 150 SF |
| | MIDDLEBURG HEIGHTS: | 1000 SF |
| | PARMA HEIGHTS: | 1000 SF |
| | TOTAL: | 2150 SF |
| 608, 4" CONCRETE WALK, AS PER PLAN | STRONGSVILLE: | 0 SF |
| | MIDDLEBURG HEIGHTS: | 250 SF |
| | PARMA HEIGHTS: | 500 SF |
| | TOTAL: | 750 SF |
| 608, 6" CONCRETE WALK, AS PER PLAN | STRONGSVILLE: | 150 SF |
| | MIDDLEBURG HEIGHTS: | 750 SF |
| | PARMA HEIGHTS: | 500 SF |
| | TOTAL: | 1400 SF |



P:\Middleburg Heights - City of\J20150340.000 Pearl Rd Rehab\Drawings\Trans\105726GN002.dwg 01-Mar-19 2:44 PM

## ITEM 608 - CURB RAMP, AS PER PLAN

EXISTING CURB RAMPS THAT ARE NOT AFFECTED BY THE CONSTRUCTION AND ARE CURRENTLY ADA COMPLIANT NEED NOT BE REPLACED. AT THE COMPLETION OF THE PROJECT ALL CURB RAMPS WITHIN THE PROJECT LIMITS SHALL BE ADA COMPLIANT. ALL APPLICABLE PROVISIONS OF ITEM 608 SHALL APPLY EXCEPT AS MODIFIED HEREIN.

THIS WORK SHALL CONSIST OF CONSTRUCTING AMERICANS WITH DISABILITIES ACT (ADA) COMPLIANT CURB RAMPS IN ACCORDANCE WITH ODOT'S STANDARD CONSTRUCTION DRAWING BP-7.1 AT THE LOCATIONS SHOWN ON THE PLANS OR AT LOCATIONS DETERMINED BY THE ENGINEER.

THE CONTRACTOR SHALL CAREFULLY CONSIDER POTENTIAL IMPACTS TO UTILITIES AND ADJACENT PROPERTY OWNERS WHEN DETERMINING THE EXACT CURB RAMP LOCATIONS AND DESIGNS.

THICKNESS OF THE CURB RAMP WALK AND CONCRETE BASE BENEATH THE TRUNCATED DOMES SHALL BE A MINIMUM OF SIX (6) INCHES. IN ADDITION, A TWO (2) INCH COMPACTED SCREENINGS BED, AS SPECIFIED UNDER "ITEM 608 - 4" OR 6" CONCRETE WALK, AS PER PLAN", SHALL BE FURNISHED AND PLACED BENEATH ALL CURB RAMP AREAS. THE UNIT PRICE BID FOR THIS ITEM SHALL INCLUDE THE COST OF THE SCREENINGS BED.

IN LOCATIONS WHERE NEW CURB RAMP IS BEING INSTALLED IN EXISTING AREAS WHERE SIDEWALK DOES NOT PRESENTLY EXIST, OR ADDITIONAL EXCAVATION IS REQUIRED, THE CONTRACTOR SHALL EXCAVATE THE MATERIAL TO THE PROPOSED CURB RAMP SUBGRADE ELEVATION. THIS WORK SHALL BE INCLUDED IN THE UNIT PRICE BID FOR THIS ITEM FOR PAYMENT.

IN ADDITION TO THE QUANTITIES INDICATED ON THE PLANS, THE FOLLOWING CONTINGENCY QUANTITIES HAVE BEEN CARRIED TO THE GENERAL SUMMARY FOR USE AS DIRECTED BY THE ENGINEER:

202, WALK REMOVED, AS PER PLAN

| | |
|---|---|
| STRONGSVILLE: | 100 SF |
| MIDDLEBURG HEIGHTS: | 250 SF |
| PARMA HEIGHTS: | 250 SF |
| TOTAL: | 600 SF |

608, CURB RAMP, AS PER PLAN

| | |
|---|---|
| STRONGSVILLE: | 100 SF |
| MIDDLEBURG HEIGHTS: | 250 SF |
| PARMA HEIGHTS: | 250 SF |
| TOTAL: | 600 SF |

## ITEM SPECIAL-GROUND WATER MONITORING WELL RECONSTRUCTION

WHERE SHOWN ON THE PLANS, ALL MONITORING WELLS LOCATED WITHIN THE PAVEMENT AREA SHALL BE ADJUSTED TO GRADE PER THE OWNER OF THE WELL REQUIREMENTS.

## EXISTING UNDERGROUND SPRINKLER SYSTEMS

THE CONTRACTOR SHALL BE RESPONSIBLE FOR VERIFYING THE EXISTENCE AND EXACT LOCATIONS OF ANY LAWN SPRINKLER SYSTEMS WHICH MAY BE AFFECTED BY THEIR WORK.

NO LESS THAN TWO (2) WEEKS PRIOR TO COMMENCING ANY WORK IN THE VICINITY OF THE UNDERGROUND SPRINKLER SYSTEMS, THE CONTRACTOR SHALL NOTIFY THE AFFECTED OWNERS IN ORDER TO ALLOW THEM SUFFICIENT TIME TO APPROPRIATELY MOVE THEIR SPRINKLER SYSTEMS. AFTER SAID PERIOD, ANY SUCH SPRINKLERS ENCOUNTERED WITHIN THE PROJECT WORK LIMITS SHALL BE REMOVED BY THE CONTRACTOR ID NECESSITATED BY THE PROJECT WORK, AND AS DIRECTED AND APPROVED BY THE ENGINEER.

THE CONTRACTOR SHALL SUBSEQUENTLY NOTIFY AFFECTED OWNERS NO LESS THAN TWO (2) WEEKS PRIOR TO THE FINAL TOPSOIL OR SEED PLACEMENT, SO THAT THE OWNERS MAY RESTORE THE SPRINKLER SYSTEMS TO THEIR DESIRED LOCATIONS.

THE CONTRACTOR SHALL COORDINATE/COOPERATE WITH THE AFFECTED OWNERS DURING THE PROSECUTION OF ALL PROXIMATE CONTRACT WORK TO THE SATISFACTION OF THE ENGINEER.

PAYMENT FOR THE ABOVE WORK SHALL BE CONSIDERED INCIDENTAL TO THE ASSOCIATED CONTRACT WORK ITEMS.

EXISTING SPRINKLER SYSTEMS SHALL BE RESTORED AND/OR REPLACED AT THE CONTRACTOR'S EXPENSE IF, AS DETERMINED BY THE ENGINEER, THEY ARE DAMAGED AS A RESULT OF THE CONTRACTOR'S NEGLIGENCE AND NOT AS A RESULT OF THE REQUIRED PROJECT WORK; ALL AS SPECIFIED AND DIRECTED BY THE ENGINEER.

## ITEM SPECIAL-PRECONSTRUCTION VIDEO

THE CONTRACTOR SHALL PERFORM PRE-CONSTRUCTION AUDIO-VIDEO RECORDING OF THE SITE WORK ZONE AND ALL AREAS POTENTIALLY AFFECTED BY THE CONTRACT WORK PRIOR TO THE DELIVERY OF MATERIALS OR SUPPLIES, OR THE BEGINNING OF ANY CONSTRUCTION WORK. THE WORK SHALL INCLUDE, BUT NOT BE LIMITED TO, RECORDING EXISTING SURFACE CONDITIONS SUCH AS SIDEWALKS, BUILDING FLASH POINTS, UTILITY INFRASTRUCTURE, ADA RAMPS, DRIVEWAYS AND APRONS, AND ALL PROJECT WORK ZONE BOUNDARIES WITH PRIVATE FACILITIES/PROPERTIES. A MINIMUM OF TWO PASSES IN EACH DIRECTION OF THE WORK IS REQUIRED TO COMPLETE THIS WORK, WITH ONE PASS FOCUSING ON EXISTING RIGHT-OF-WAY CONDITIONS AND THE OTHER ON PRIVATE PROPERTY CONDITIONS.

THE PRECONSTRUCTION VIDEO SHALL BE PERFORMED BY AN INDEPENDENT COMPANY EXPERIENCED IN THE WORK, AND THE COMPANY CREDENTIALS SHALL BE SUBMITTED FOR REVIEW AND APPROVAL BY THE ENGINEER PRIOR TO THE WORK BEING PERFORMED.

A DVD DISC SHALL BE USED TO RECORD THE TELEVISED INSPECTION IN EITHER APPLE QUICKTIME OR WINDOWS MEDIA FORMAT. TWO (2) COPIES OF THE DVD TO EACH CITY AND ONE COPY FOR THE CONTRACTOR'S RECORDS ARE REQUIRED. THE DVD SHALL BE CONSIDERED AN INTEGRAL PART OF THE SERVICE AND SHALL NOT BE DELETED FROM THE CONTRACTOR'S RECORD UNTIL PROJECT CLOSE-OUT.

THE COST FOR THIS ITEM SHALL INCLUDE THE FURNISHING OF ALL LABOR, MATERIALS, EQUIPMENT, AND ALL OTHER APPURTENANCES TO PERFORM THE AUDIO-VIDEO RECORDING AS DESCRIBED. PAYMENT SHALL BE MADE AT THE LUMP SUM BID PRICE FOR ITEM SPECIAL, PRECONSTRUCTION VIDEO.

# PAVEMENT

## PROFILE AND ALIGNMENT

THE PROPOSED PAVEMENT IS TO FOLLOW THE ALIGNMENT AND PROFILE OF THE EXISTING PAVEMENT. PLACE THE PROPOSED ASPHALT CONCRETE OVERLAY WITH A UNIFORM THICKNESS OF 3 1/4 INCHES.

## ITEM 442 - ASPHALT CONCRETE SURFACE COURSE, 12.5MM, TYPE A (446), AS PER PLAN, PG70-22M

THE COARSE VIRGIN AGGREGATE FOR THIS ITEM SHALL BE LIMITED TO A BLEND OF AIR COOLED BLAST FURNACE SLAG (ACBFS) OR TRAP ROCK FROM ONTARIO AND LIMESTONE. THE CONTRACTOR SHALL USE A MINIMUM 60% OF ACBFS OR TRAP ROCK FROM ONTARIO WITH LIMESTONE COMPRISING THE REMAINING PERCENTAGE. AT LEAST 50% OF FINE VIRGIN AGGREGATE FOR THIS ITEM SHALL BE LIMITED TO ACBFS OR TRAP ROCK FROM ONTARIO.

TABLE 442.02-2 APPLIES EXCEPT NO.4 SIEVE REQUIREMENTS ARE 52 TO 60 TOTAL PERCENT PASSING. FOR THE NO. 4 SIEVE, DO NOT EXCEED 63 IN PRODUCTION.

WHEN ACBFS IS USED FOR A FRACTION OF THE COARSE AGGREGATE, PROVIDE A TOTAL ASPHALT BINDER CONTENT GREATER THAN OR EQUAL TO 6.2 PERCENT. IF ACBFS MAKES UP 100% OF THE COARSE AGGREGATE, APPLY THE BINDER CONTENT REQUIREMENTS OF CMS 442.

## ITEM 451 - 8" REINFORCED CONCRETE PAVEMENT, CLASS QC1, AS PER PLAN

WHERE SHOWN ON THE DRAWINGS OR DESIGNATED BY THE ENGINEER, DEFECTIVE CONCRETE COMMERCIAL DRIVEWAY APRONS SHALL BE REMOVED AND REPLACED IN ACCORDANCE WITH THE FOLLOWING PROCEDURE. DRIVE REMOVAL/ REPLACEMENT LIMITS SHALL TYPICALLY EXTEND TO THE NEAREST EXISTING JOINT/DIVISION LINE UNLESS OTHERWISE DIRECTED BY THE ENGINEER. THE EXACT LOCATIONS AND LIMITS OF EXISTING DRIVE REMOVAL / REPLACEMENT SHALL BE ESTABLISHED AND DESIGNATED BY THE ENGINEER. AEROSOL SPRAY PAINT FOR OUTLINING SHALL BE PROVIDED BY THE CONTRACTOR.

EXCEPT AS OTHERWISE DIRECTED BY THE ENGINEER, THE CONFIGURATIONS OF COMPLETELY REPLACED DRIVE APRONS SHALL MATCH THE EXISTING DIMENSIONS. EXISTING CURBS SHALL BE REPLACED INTEGRALLY ON THE NEW DRIVEWAY, UNLESS OTHERWISE DIRECTED BY THE ENGINEER.

THE CONTRACTOR SHALL STAGE HIS/HER OPERATIONS SUCH THAT THE MAXIMUM OUT OF SERVICE TIME FOR ANY RESIDENTIAL DRIVE IS SEVEN (7) DAYS. THE CONTRACTOR SHALL NOTIFY EACH RESIDENT OF ANY RESTRICTED ACCESS TO THEIR PROPERTY NO LATER THAN ONE (1) WEEK IN ADVANCE. ACCESS TO COMMERCIAL AND HANDICAP PROPERTY SHALL BE MAINTAINED AT ALL TIMES.

THE FINAL SURFACE SHALL BE TEXTURED TO MATCH THE ADJACENT DRIVEWAY STYLE. THE COST OF THE MATERIAL AND LABOR ASSOCIATED WITH THE ABOVE WORK IS INCLUDED IN THE CONTRACT UNIT PRICE BID FOR ITEM 451 - 8" REINFORCED CONCRETE PAVEMENT, CLASS QC1, AS PER PLAN.

IN LOCATIONS WHERE NEW DRIVEWAY IS BEING INSTALLED IN EXISTING AREAS WHERE DRIVEWAY DOES NOT PRESENTLY EXIST, OR ADDITIONAL EXCAVATION IS REQUIRED, THE CONTRACTOR SHALL EXCAVATE THE MATERIAL TO THE PROPOSED DRIVEWAY SUBGRADE ELEVATION. THIS WORK SHALL BE INCLUDED IN THE UNIT PRICE BID FOR THIS ITEM FOR PAYMENT.

COMPACTION OF THE SUBGRADE AND INSTALLATION OF DRIVEWAY CURBS, WHERE APPLICABLE, SHALL ALSO BE INCLUDED WITH THIS BID ITEM FOR PAYMENT.

GRASSED AREAS ADJACENT TO THE WALK SHALL BE RESTORED WITH A MINIMUM OF 2 INCHES OF ITEM 653-TOPSOIL FURNISHED AND PLACED AND ITEM 659-SEEDING AND MULCHING. RESTORATION WORK SHALL BE INCLUDED IN THE UNIT PRICE BID FOR THIS ITEM.

IN ADDITION TO THE QUANTITIES INDICATED ON THE PLANS, THE FOLLOWING CONTINGENCY QUANTITIES HAVE BEEN CARRIED TO THE GENERAL SUMMARY FOR USE AS DIRECTED BY THE ENGINEER:

202, PAVEMENT REMOVED, AS PER PLAN

| | |
|---|---|
| STRONGSVILLE: | 50 SY |
| MIDDLEBURG HEIGHTS: | 200 SY |
| PARMA HEIGHTS: | 250 SY |
| TOTAL: | 500 SY |

451, 8" REINFORCED CONCRETE PAVEMENT, CLASS QC1, AS PER PLAN

| | |
|---|---|
| STRONGSVILLE: | 50 SY |
| MIDDLEBURG HEIGHTS: | 200 SY |
| PARMA HEIGHTS: | 250 SY |
| TOTAL: | 500 SF |

## ITEM 452 - 6" NON-REINFORCED CONCRETE PAVEMENT, CLASS QC MS, AS PER PLAN

WHERE SHOWN ON THE DRAWINGS OR DESIGNATED BY THE ENGINEER, DEFECTIVE CONCRETE RESIDENTIAL DRIVEWAY APRONS SHALL BE REMOVED AND REPLACED IN ACCORDANCE WITH THE FOLLOWING PROCEDURE. DRIVE REMOVAL / REPLACEMENT LIMITS SHALL TYPICALLY EXTEND TO THE NEAREST EXISTING JOINT/DIVISION LINE UNLESS OTHERWISE DIRECTED BY THE ENGINEER. THE EXACT LOCATIONS AND LIMITS OF EXISTING DRIVE REMOVAL / REPLACEMENT SHALL BE ESTABLISHED AND DESIGNATED BY THE ENGINEER. AEROSOL SPRAY PAINT FOR OUTLINING SHALL BE PROVIDED BY THE CONTRACTOR.

EXCEPT AS OTHERWISE DIRECTED BY THE ENGINEER, THE CONFIGURATIONS OF COMPLETELY REPLACED DRIVE APRONS SHALL MATCH THE EXISTING DIMENSIONS. EXISTING CURBS SHALL BE REPLACED INTEGRALLY ON THE NEW DRIVEWAY, UNLESS OTHERWISE DIRECTED BY THE ENGINEER.

THE CONTRACTOR SHALL STAGE HIS/HER OPERATIONS SUCH THAT THE MAXIMUM OUT OF SERVICE TIME FOR ANY RESIDENTIAL DRIVE IS FIVE (5) DAYS. THE CONTRACTOR SHALL NOTIFY EACH RESIDENT OF ANY RESTRICTED ACCESS TO THEIR PROPERTY NO LATER THAN ONE (1) WEEK IN ADVANCE. ACCESS TO COMMERCIAL AND HANDICAP PROPERTY SHALL BE MAINTAINED AT ALL TIMES.

IN ADDITION TO THE REQUIREMENTS OF 452, THE FOLLOWING SHALL APPLY:

THE FINAL SURFACE SHALL BE TEXTURED TO MATCH THE ADJACENT DRIVEWAY STYLE.

IN LOCATIONS WHERE NEW DRIVEWAY IS BEING INSTALLED IN EXISTING AREAS WHERE DRIVEWAY DOES NOT PRESENTLY EXIST, OR ADDITIONAL EXCAVATION IS REQUIRED, THE CONTRACTOR SHALL EXCAVATE THE MATERIAL TO THE PROPOSED DRIVEWAY SUBGRADE ELEVATION. THIS WORK SHALL BE INCLUDED IN THE UNIT PRICE BID FOR THIS ITEM FOR PAYMENT.

COMPACTION OF THE SUBGRADE AND INSTALLATION OF DRIVEWAY CURBS, WHERE APPLICABLE, SHALL ALSO BE INCLUDED WITH THIS BID ITEM FOR PAYMENT.

THE COST OF THE MATERIAL AND LABOR ASSOCIATED WITH THE ABOVE WORK IS INCLUDED IN THE CONTRACT UNIT PRICE BID FOR ITEM 452- 6" NON-REINFORCED CONCRETE PAVEMENT, CLASS QC MS, AS PER PLAN.

GRASSED AREAS ADJACENT TO THE WALK SHALL BE RESTORED WITH A MINIMUM OF 2 INCHES OF ITEM 653-TOPSOIL FURNISHED AND PLACED AND ITEM 659-SEEDING AND MULCHING. RESTORATION WORK SHALL BE INCLUDED IN THE UNIT PRICE BID FOR ITEM 608-CONCRETE WALK, AS PER PLAN.

IN ADDITION TO THE QUANTITIES INDICATED ON THE PLANS, THE FOLLOWING CONTINGENCY QUANTITIES HAVE BEEN CARRIED TO THE GENERAL SUMMARY FOR USE AS DIRECTED BY THE ENGINEER:

202, PAVEMENT REMOVED, AS PER PLAN

| | |
|---|---|
| MIDDLEBURG HEIGHTS: | 50 SY |
| PARMA HEIGHTS: | 100 SY |
| TOTAL: | 150 SY |

452, 6" NON-REINFORCED CONCRETE PAVEMENT, CLASS QC MS, AS PER PLAN

| | |
|---|---|
| MIDDLEBURG HEIGHTS: | 50 SY |
| PARMA HEIGHTS: | 100 SY |
| TOTAL: | 150 SY |

## ITEM 875 - LONGITUDINAL JOINT ADHESIVE

APPLY ASPHALTIC JOINT MATERIAL ALONG CENTERLINE OF ROAD AND ANY OTHER LONGITUDINAL COLD JOINTS PRODUCED FROM PAVING OPERATIONS, OR AS DIRECTED BY THE ENGINEER. THIS WORK IS TO BE PERFORMED IN ACCORDANCE WITH SUPPLEMENTAL SPECIFICATION 875.

CALCULATED TWC
CHECKED BT

GENERAL NOTES

CUY-US-042-4.29



P:\Middleburg Heights - City of\J20150340.000 Pearl Rd Rehab\Drawings\Trans\105726GN003.dwg 01-Mar-19 2:45 PM

## ITEM 251 - PARTIAL DEPTH PAVEMENT REPAIR (BY TYPE), AS PER PLAN

THE ENGINEER SHALL IDENTIFY AREAS REQUIRING PARTIAL DEPTH REPAIR AFTER THE PLANING OF THE EXISTING ASPHALT IS COMPLETE. IT IS NOT THE INTENT TO REPAIR EVERY DETERIORATED AREA WITHIN THE PROJECT. AT THE TIME OF INSPECTION, THE ENGINEER WILL DETERMINE IF THE EXISTING BRICK BASE SHOULD BE REMOVED AS PART OF THE REPAIR. PARTIAL DEPTH PAVEMENT REPAIRS SHALL BE PERFORMED AS PER THE DETAILS ON SHEET NO. 69 AND THE FOLLOWING:

ITEM 251, PARTIAL DEPTH PAVEMENT REPAIR (441), AS PER PLAN SHALL CONSIST OF REPAIRING UNSOUND OR COLD PATCH AREAS OR POP OUTS. THICKNESS WILL BE 3" OF TYPE 2 INTERMEDIATE COURSE, TO THE DIMENSIONS PROVIDED. AFTER REMOVAL OF THE UNSOUND AREA AND PRIOR TO PLACEMENT OF ASPHALT, THE CONTRACTOR SHALL APPLY TACK COAT TO THE HORIZONTAL AND VERTICAL SURFACES OF THE REPAIR AREA AT A RATE OF 0.1 GALLONS PER SQUARE YARD.

ALL LABOR, EQUIPMENT, AND MATERIALS, INCLUDING TACK COAT, NECESSARY TO PERFORM THIS WORK ACCORDING TO THE CMS AND THE PROVISIONS OF THIS NOTE AND DETAIL SHALL BE INCLUDED IN THE UNIT PRICE BID FOR THIS ITEM.

THE FOLLOWING ESTIMATED QUANTITIES HAVE BEEN CARRIED TO THE GENERAL SUMMARY FOR USE AS DIRECTED BY THE ENGINEER:

251, PARTIAL DEPTH PAVEMENT REPAIR (441), AS PER PLAN

| | |
|---|---|
| STRONGSVILLE: | 100 CY |
| MIDDLEBURG HEIGHTS: | 250 CY |
| PARMA HEIGHTS: | 325 CY |
| TOTAL | 675 CY |

ITEM 251, PARTIAL DEPTH PAVEMENT REPAIR (ASPHALT CONCRETE BASE), AS PER PLAN SHALL INCLUDE THE REMOVAL OF THE EXISTING BRICK BASE ALONG WITH ANY ASPHALT REMAINING AFTER PLANING OPERATIONS. THIS ITEMS SHOULD BE USED WHEN AREAS OF BRICK HAVE BECOME DISLODGED DURING THE PLANING OPERATIONS, THROUGH NO FAULT OF THE CONTRACTOR, OR ANY OTHER AREAS INDICATED BY THE ENGINEER AS NEEDING REPAIR. THE CONTRACTOR SHALL SAW CUT, REMOVE, AND DISPOSE OF THE EXISTING BRICK TO THE LIMITES INDICATED. AFTER REMOVAL, THE REPAIR AREA SHALL BE CLEANED OF SAND, DEBRIS, ETC. AND TACK COAT APPLIED TO THE HORIZONTAL AND VERTICAL SURFACES AT A RATE OF 0.1 GALLONS PER SQUARE YARD.

ALL LABOR, EQUIPMENT, AND MATERIALS, INCLUDING TACK COAT, NECESSARY TO PERFORM THIS WORK ACCORDING TO THE CMS AND THE PROVISIONS OF THIS NOTE AND DETAIL SHALL BE INCLUDED IN THE UNIT PRICE BID FOR THIS ITEM.

THE FOLLOWING ESTIMATED QUANTITIES HAVE BEEN CARRIED TO THE GENERAL SUMMARY FOR USE AS DIRECTED BY THE ENGINEER:

251, PARTIAL DEPTH PAVEMENT REPAIR, (ASPHALT CONCRETE BASE), AS PER PLAN

| | |
|---|---|
| STRONGSVILLE: | 500 SY |
| MIDDLEBURG HEIGHTS: | 1500 SY |
| PARMA HEIGHTS: | 2000 SY |
| TOTAL | 4000 SY |

## ITEM 254 - PAVEMENT PLANING, ASPHALT CONCRETE, AS PER PLAN

WHERE CONCRETE PAVEMENT IS ENCOUNTERED IN AREAS OF UTILITY TRENCHES, REPAIR AREAS, ETC., THE CONTRACTOR SHALL PLANE THE PORTLAND CEMENT CONCRETE ACCORDING TO ODOT ITEM 254, TO MATCH THE EXISTING SURFACE OF THE SURROUNDING ASPHALT CONCRETE PLANED SURFACE.

LOCATIONS FOR THIS WORK ARE NOT SPECIFICALLY IDENTIFIED IN THE PLANS. PLANING OF EXISTING CONCRETE PAVEMENT SHALL BE INCLUDED IN THE UNIT PRICE BID FOR PAVEMENT PLANING, ASPHALT CONCRETE, AS PER PLAN.

## PLANED SURFACES

THE DURATION OF THE TIME BETWEEN MILLING AND PLACEMENT OF THE INTERMEDIATE COURSE SHALL BE NO LONGER THAN FOURTEEN (14) DAYS. THE TIME LIMITS SHALL BEGIN ON THE FIRST DAY OF PLANING AND SHALL CONTINUE BASED ON CALENDAR DAYS, MINUS ANY BAD WEATHER DAYS, UNTIL THE COMPLETION OF THE ASPHALT CONCRETE INTERMEDIATE COURSE.

## ITEM 254 - PATCHING PLANED SURFACE

THE FOLLOWING ESTIMATED QUANTITIES ARE PROVIDED TO BE USED AS DIRECTED BY THE ENGINEER AS DESCRIBED IN CMS 254.04. THE LIMIT OF PATCHING DEPTH IS 0 INCHES TO 2 INCHES.

254, PATCHING PLANED SURFACE

| | |
|---|---|
| STRONGSVILLE: | 2500 SY |
| MIDDLEBURG HEIGHTS: | 8500 SY |
| PARMA HEIGHTS: | 8500 SY |
| PARMA | 100 SY |
| TOTAL | 19600 SY |

## ITEM 255 - FULL DEPTH PAVEMENT REMOVAL AND RIGID REPLACEMENT, CLASS QC1, AS PER PLAN

THIS ITEM SHALL CONSIST OF CUTTING AND REMOVING DETERIORATED BRICK AND CONCRETE BASE AND PLACING ITEM 305, CONCRETE BASE, CLASS QC1, PER ODOT STANDARD CONSTRUCTION DRAWING BP-3.1 AND THE DETAIL ON SHEET NO. 69. THE DETAIL INDICATES THE WORK AND MATERIAL THAT ARE INCLUDED IN THE UNIT PRICE FOR THIS ITEM.

FULL DEPTH SAW CUTS SHALL BE MADE ALONG THE ENTIRE PERIMETER OF THE REMOVAL AREA IN ORDER TO ESTABLISH NEAT VERTICAL FACES. THE SAW CUTTING SHALL BE CONSIDERED INCIDENTAL TO THIS PAY ITEM.

PAVEMENT REMOVAL AND REPLACEMENT UNDER THIS ITEM SHALL BE PERFORMED WITHIN THE SAME WORK DAY. IF THE EXCAVATED AREA CANNOT BE PAVED AT THE END OF THE DAY, THE CONTRACTOR SHALL COVER THE EXCAVATED AREA WITH STEEL PLATES OR TEMPORARILY BACKFILL IT USING AGGREGATE MATERIAL.

PAYMENT SHALL BE BASED ON THE ACTUAL NUMBER OF SQUARE YARDS OF PAVEMENT REMOVED AND REPLACED TO THE LIMITS DESIGNATED BY THE ENGINEER, WITH MINIMUM LENGTH BEING SIX FEET (6') AND FIVE FEET (5') MINIMUM WIDTH.

THE FOLLOWING ESTIMATED QUANTITIES HAVE BEEN CARRIED TO THE GENERAL SUMMARY FOR USE AS DIRECTED BY THE ENGINEER:

255, FULL DEPTH PAVEMENT REMOVAL AND RIGID REPLACEMENT, CLASS QC1, AS PER PLAN

| | |
|---|---|
| STRONGSVILLE: | 500 SY |
| MIDDLEBURG HEIGHTS: | 2000 SY |
| PARMA HEIGHTS: | 2000 SY |
| TOTAL | 4500 SY |

## MISC. - ASPHALT CONCRETE SURFACE COURSE SEALING REQUIREMENTS

IN ADDITION TO THE GUTTER SEALING REQUIREMENTS SPECIFIED ON SCD BP-3.1 AND IN ITEM 401.15, THE CONTRACTOR SHALL SEAL THE FOLLOWING LOCATIONS:

-ALL CASTINGS INCLUDING BUT NOT LIMITED TO MONUMENTS, MANHOLES, WATER VALVES, CATCH BASINS, CURB INLETS.
-BUTT JOINTS AND FEATHER JOINTS INCLUDING BRIDGE APPROACHES.
-BUTT JOINT BETWEEN PAVED SHOULDER AND DRIVEWAY ASPHALT AND TAPERED EDGE WHEN FEATHERING TO AN EXISTING ASPHALT DRIVEWAY.
-PERIMETER OF ALL PAVEMENT REPAIRS OR OTHER ASPHALT INLAYS WHEN PAVEMENT REPAIRS/INLAYS ARE NOT OIERLAID WITH AN ASPHALT CONCRETE SURFACE COURSE.

THE MATERIAL USED ABOVE SHALL BE A CERTIFIED 702.01 PG BINDER. THE WIDTH OF THE SEALER SHALL BE 2-3 INCHES.

-ALL COLD LONGITUDINAL JOINTS BETWEEN PAVED SHOULDERS AND GUARDRAIL ASPHALT.

THE MATERIAL USED ABOVE SHALL BE A CERTIFIED 875.01 BINDER. THE WIDTH OF THE SEALER SHALL BE 2-3 INCHES.

ANY ADDITIONAL COSTS ASSOCIATED WITH THE WORK IDENTIFIED IN THIS NOTE SHALL BE INCLUDED IN THE APPROPRIATE ASPHALT CONCRETE SURFACE COURSE ITEM OF WORK.

## CONSTRUCTION NOTIFICATION

THE CONTRACTOR SHALL ADVISE THE PROJECT ENGINEER A MINIMUM OF FOURTEEN (14) DAYS PRIOR TO THE START OF CONSTRUCTION ACTIVITIES, LANE CLOSURE AND ROAD CLOSURES. THE PROJECT ENGINEER WILL FORWARD THE INFORMATION TO THE CITY AND LOCAL OFFICIALS RESPONSIBLE FOR PUBLIC NOTIFICATION.

## ITEM 832 - TEMPORARY SEDIMENT AND EROSION CONTROL

ALL SOIL EROSION AND SEDIMENT CONTROL MEASURES AS SPECIFIED HEREIN OR DIRECTED BY THE ENGINEER SHALL BE IN PLACE PRIOR TO ANY EXCAVATION, GRADING, OR FILLING OPERATIONS AND INSTALLATION OF PROPOSED STRUCTURES OR UTILITIES. THESE CONTROL MEASURES SHALL REMAIN IN PLACE UNTIL CONSTRUCTION IS COMPLETE AND THE AREA IS STABILIZED AS ACCEPTED BY THE ENGINEER.

CONTRACTOR SHALL PLACE INLET PROTECTION ON ALL EXISTING OR PROPOSED CATCH BASINS DOWNSTREAM FROM UNSTABILIZED AREAS.

THE FOLLOWING ESTIMATED QUANTITIES ARE TO BE USED AS PLACED BY THE CONTRACTOR WITH THE ENGINEER'S CONCURRENCE FOR TEMPORARY SEDIMENT AND EROSION CONTROL MEASURES:

832, EROSION CONTROL

| | |
|---|---|
| STRONGSVILLE: | 250 EA |
| MIDDLEBURG HEIGHTS: | 1250 EA |
| PARMA HEIGHTS: | 1000 EA |
| TOTAL | 2500 EA |

## DRAINAGE

## REVIEW OF DRAINAGE FACILITIES

BEFORE ANY WORK IS STARTED ON THE PROJECT AND AGAIN BEFORE FINAL ACCEPTANCE BY THE STATE, REPRESENTATIVES OF THE STATE AND THE CONTRACTOR, ALONG WITH LOCAL REPRESENTATIVES, SHALL MAKE AN INSPECTION OF ALL EXISTING SEWERS WHICH ARE TO REMAIN IN SERVICE AND WHICH MAY BE AFFECTED BY THE WORK. THE CONDITION OF THE EXISTING CONDUITS AND THEIR APPURTENANCE SHALL BE DETERMINED FROM FIELD OBSERVATIONS. RECORDS OF THE INSPECTION SHALL BE KEPT IN WRITING BY THE STATE. ALL NEW CONDUITS, INLETS, CATCH BASINS, AND MANHOLES CONSTRUCTED AS A PART OF THE PROJECT SHALL BE FREE OF ALL FOREIGN MATTER AND IN A CLEAN CONDITION BEFORE THE PROJECT WILL BE ACCEPTED BY THE STATE.

## ITEM SPECIAL-MISCELLANEOUS METAL

EXISTING CASTINGS MAY PROVE TO BE UNSUITABLE FOR REUSE, AS DETERMINED BY THE ENGINEER. IT IS EXPECTED THAT ALL REPLACED CASTINGS WILL BE HEAVY DUTY, UNLESS OTHERWISE DIRECTED BY THE ENGINEER DURING CONSTRUCTION. ALL MATERIAL SHALL MEET ITEM 611 OF THE SPECIFICATIONS AND SHALL HAVE THE PRIOR APPROVAL OF THE ENGINEER.

THE FOLLOWING ESTIMATED QUANTITIES HAVE BEEN CARRIED TO THE GENERAL SUMMARY FOR USE AS DIRECTED BY THE ENGINEER.

SPECIAL, MISCELLANEOUS METAL

| | |
|---|---|
| STRONGSVILLE: | 17000 LB |
| MIDDLEBURG HEIGHTS: | 5000 LB |
| PARMA HEIGHTS: | 5000 LB |
| TOTAL | 27000 LB |

THE CONTRACTOR IS CAUTIONED TO USE EXTREME CARE IN THE REMOVAL, STORAGE AND REPLACEMENT OF ALL EXISTING CASTINGS. CASTINGS DAMAGED BY THE NEGLIGENCE OF THE CONTRACTOR, AS DETERMINED BY THE ENGINEER, SHALL BE REPLACED WITH THE PROPER NEW CASTINGS AT THE EXPENSE OF THE CONTRACTOR.

## ITEM 605 - 6" BASE PIPE UNDERDRAINS. AS PER PLAN

IT IS INTENDED NOT TO DISTURB THE EXISTING UNDERDRAINS DURING THE CURB AND PAVEMENT REMOVAL AND REPLACEMENT OPERATIONS. ANY EXISTING UNDERDRAIN DAMAGED DURING THE REMOVAL OF EXISTING CURB AND PAVEMENT DUE TO THE CARELESSNESS OF THE CONTRACTOR SHALL BE REMOVED AND REPLACED BY THE CONTRACTOR AT HIS OWN EXPENSE. EXISTING UNDERDRAINS WHICH THE ENGINEER DETERMINES ARE ADVERSELY AFFECTED (THROUGH NO FAULT OF THE CONTRACTOR) BY THE CONSTRUCTION OF THIS IMPROVEMENT OR ARE FOUND TO BE OTHERWISE UNSUITABLE SHALL BE REMOVED AND REPLACED, IN KIND, AT THE SAME TRENCH WIDTH AND DEPTH, UNLESS OTHERWISE SPECIFIED BY THE ENGINEER.

GRANULAR BACKFILL MATERIAL SHALL BE LIMITED TO LIMESTONE.

THE COST FOR REMOVAL AND DISPOSAL OF EXISTING UNDERDRAIN PIPE IS INCLUDED UNDER THIS ITEM AND FOLLOW 605.02 FOR MATERIAL.

THE FOLLOWING ESTIMATED QUANTITY IS CARRIED TO THE GENERAL SUMMARY FOR USE AS DIRECTED BY THE ENGINEER.

605, 6" BASE PIPE UNDERDRAINS, AS PER PLAN

| | |
|---|---|
| STRONGSVILLE: | 300 FT |
| MIDDLEBURG HEIGHTS: | 1200 FT |
| PARMA HEIGHTS: | 1500 FT |
| TOTAL | 3000 FT |

NONE OF THE ABOVE MATERIALS SHALL BE ORDERED BY THE CONTRACTOR UNTIL AUTHORIZED BY THE ENGINEER.

CALCULATED TWC
CHECKED BT

GENERAL NOTES

CUY-US-042-4.29



P:\Middleburg Heights - City of\J20150340.000 Pearl Rd Rehab\Drawings\Trans\105726GN003A.dwg 01-Mar-19 2:45 PM

## ITEM 611 - 12" CONDUIT, TYPE B, AS PER PLAN

IN ADDITION TO THE REQUIREMENTS OF ITEM 611, AS SET FORTH IN THE CONSTRUCTION AND MATERIAL SPECIFICATIONS, THE FOLLOWING ADDITIONAL REQUIREMENTS SHALL BE MET FOR THIS WORK:

611.06: BACKFILL SHALL BE LIMITED TO ODOT ITEM 613, LOW STRENGTH MORTAR BACKFILL (TYPE 1).

THE UNIT PRICE BID FOR THIS ITEM SHALL INCLUDE ALL LABOR, EQUIPMENT, AND MATERIALS NECESSARY TO REMOVE AND REPLACE THE EXISTING PAVEMENT OVER THE TRENCH. THE PAVEMENT SHALL BE REPLACED AS INDICATED ON THE DETAIL ON SHEET NO. 67.

## ITEM 611 - CATCH BASIN ADJUSTED TO GRADE, AS PER PLAN

FOR CURB INLETS THAT ARE MANHOLES LOCATED BEHIND THE CURB WITH A WINDOW OPENING IN THE CURB, THE EXISTING PAVEMENT AT THE OPENING SHALL BE MILLED AND REPLACED TO PROVIDE THE SAME OPEN AREA ALONG THE CURB AS THE EXISTING CONDITION WITH SIX (6) INCHES BEING THE MINIMUM OPENING HEIGHT.

THE COST TO FORM THE ASPHALT IN THIS AREA TO ALLOW FOR POSITIVE DRAINAGE SHALL BE INCLUDED IN BID UNIT COST FOR "CATCH BASIN ADJUSTED TO GRADE, AS PER PLAN".

THE COST OF THE MATERIAL AND LABOR ASSOCIATED WITH THE ABOVE WORK IS INCLUDED IN THE CONTRACT UNIT PRICE BID FOR "ITEM 611 - CATCH BASIN ADJUSTED TO GRADE, AS PER PLAN".

## ITEM 611 - CATCH BASIN RECONSTRUCTED TO GRADE, AS PER PLAN

WHERE SHOWN ON THE PLANS, ALL CURB INLETS THAT ARE TO BE RECONSTRUCTED TO GRADE, AS PER PLAN SHALL INCLUDE ALL MATERIAL AND LABOR REQUIRED TO REPAIR THE INTERIOR WALLS OF THE EXISTING CATCH BASIN INCLUDING TUCK POINTING AND JOINT REPAIR.

THE COST OF THE MATERIAL AND LABOR ASSOCIATED WITH THE ABOVE WORK IS INCLUDED IN THE CONTRACT UNIT PRICE BID FOR "ITEM 611 - CATCH BASIN RECONSTRUCTED TO GRADE", AS PER PLAN.

## ITEM 638 - WATER WORK

ALL WATER WORK CASTING ADJUSTMENT SHALL BE IN ACCORDANCE WITH THE STANDARD SPECIFICATIONS AND DRAWINGS OF THE CITY OF CLEVELAND, DEPARTMENT OF PUBLIC UTILITIES, DIVISION OF WATER (C.W.D.), 1201 LAKESIDE AVENUE, CLEVELAND, OHIO. THE COST OF ALL LABOR, MATERIAL, EQUIPMENT, TOOLS, EXCAVATION, BEDDING AND BACKFILL FOR THE WATER WORK SHALL BE INCLUDED IN THE CONTRACT UNIT PRICE BID FOR EACH WATER WORK ITEM. THE REPLACEMENT OF PAVEMENT, WALKS, DRIVES, LANDSCAPING AND ALL OTHER WORK EXCEPTING THE "WATER WORK" ITSELF, SHALL BE AS STIPULATED IN THE CONTRACT SPECIFICATIONS.

ALL PERMITS, FEES AND C.W.D. CHARGES SHALL BE THE RESPONSIBILITY OF THE CONTRACTOR AND THEIR ASSOCIATED COST SHALL BE INCLUDED IN THE CONTRACT UNIT PRICE BID FOR THE PERTINENT WATER WORK ITEMS. REFER TO THE FOLLOWING WEB SITE FOR CURRENT C.W.D. FEES AND CHARGES:

http://www.clevelandwater.com/construction/construction-fees

### PRIMARY PROJECT CONTROL INFORMATION

| POINT NUMBER | GRID COORDINATES U.S. SURVEY FEET | | SCALED COORDINATES U.S. SURVEY FEET | | ORTHOMETRIC HEIGHT (ELEVATION) | DESCRIPTION |
|---|---|---|---|---|---|---|
| | NORTHING | EASTING | NORTHING | EASTING | | |
| CP1 | 611417.239 | 2153356.981 | 611467.343 | 2153533.442 | 839.96 | 1 1/2" IRON PIN IN MONUMENT BOX |
| CP2 | 613602.528 | 2154705.151 | 613652.811 | 2154722.881 | 813.01 | 1 1/4" IRON PIN IN MONUMENT BOX |
| CP3 | 615632.598 | 2155233.664 | 615683.047 | 2155410.279 | 822.44 | 1" BENT IRON PIN IN MONUMENT BOX |
| CP4 | 616733.503 | 2155865.351 | 616784.042 | 2156042.017 | 839.60 | 1" IRON PIN IN MONUMENT BOX |
| CP5 | 620729.528 | 2159528.855 | 620780.395 | 2159705.822 | 860.41 | 5/8" IRON PIN IN MONUMENT BOX |
| CP6 | 623731.997 | 2162137.398 | 623783.110 | 2162314.579 | 855.05 | 3/4" IRON PIN IN MONUMENT BOX |
| CP7 | 625328.890 | 2165013.053 | 625380.133 | 2165190.469 | 856.73 | 3/4" IRON PIN IN MONUMENT BOX |
| CP8 | 626005.289 | 2166400.048 | 626056.588 | 2166577.578 | 851.83 | 1/2" IRON PIN IN MONUMENT BOX |
| CP9 | 626814.948 | 2168357.496 | 626866.313 | 2168535.187 | 852.64 | 1" IRON PIN IN MONUMENT BOX |
| CP10 | 628219.997 | 2170453.796 | 628271.478 | 2170631.659 | 848.38 | 5/8" IRON PIN IN MONUMENT BOX |
| CP11 | 629523.432 | 2171620.712 | 629575.019 | 2171798.670 | 852.30 | 5/8" IRON PIN IN MONUMENT BOX |
| CP12 | 631247.314 | 2173166.247 | 631299.043 | 2173344.332 | 851.28 | 1/2" IRON PIN IN MONUMENT BOX |
| CP13 | 632097.035 | 2173914.154 | 632148.834 | 2174092.300 | 851.46 | 1/2" IRON PIN IN MONUMENT BOX |
| CP14 | 634173.530 | 2175820.657 | 634225.499 | 2175998.959 | 835.06 | 1/2" IRON PIN IN MONUMENT BOX |

CALCULATED TWC
CHECKED BT

GENERAL NOTES

CUY-US-042-4.29



P:\Middleburg Heights - City of\J20150340.000 Pearl Rd Rehab\Drawings\Trans\105726GN004.dwg 01-Mar-19 2:45 PM

ITEM 614, MAINTAINING TRAFFIC

A MINIMUM OF ONE LANE OF TRAFFIC IN EACH DIRECTION SHALL BE MAINTAINED AT ALL TIMES BY USE OF THE EXISTING PAVEMENT, THE COMPLETED PAVEMENT, AND TEMPORARY SURFACES USING ITEMS 410 AND 614.

THE CONTRACTOR SHALL MAINTAIN SAFE AND SATISFACTORY ACCESS TO ABUTTING PROPERTY. THE CONTRACTOR SHALL MAINTAIN ADEQUATE PEDESTRIAN WALKS AT ALL INTERSECTIONS, INCLUDING ASPHALT CONCRETE WALKS, WHERE INDICATED ON THE DRAWINGS OR DIRECTED BY THE ENGINEER.

THE CONTRACTOR SHALL DIVERT TRAFFIC FROM NORMAL CHANNELS BY PLASTIC DRUMS, TYPE A FLASHING ARROW BOARDS COMPLYING WITH SS821, AND TRAFFIC SIGNS AND WORK ZONE PAVEMENT MARKINGS, AS SHOWN ON THE DRAWINGS OR AS DIRECTED BY THE ENGINEER.

ALL CONSTRUCTION TRAFFIC CONTROL DEVICES USED FOR THIS PROJECT SHALL CONFORM TO THE OHIO MANUAL OF UNIFORM TRAFFIC CONTROL DEVICES FOR STREETS AND HIGHWAYS, AND SHALL BE FURNISHED, ERECTED, MAINTAINED, AND REMOVED BY THE CONTRACTOR, EXCEPT AS NOTED BELOW.

THE CONTRACTOR SHALL FURNISH AND MAINTAIN ALL NECESSARY SAFEGUARDS, SUCH AS TYPE III BARRICADES, LIGHTING, FLAGGERS, AND SUCH OTHER TRAFFIC CONTROL DEVICES AS PROVIDED IN ITEM 614, MAINTAINING TRAFFIC, SO AS TO AVOID DAMAGE AND/OR INJURY TO VEHICLES AND PERSONS USING THE ROADWAY DURING CONSTRUCTION.

EXISTING TRAFFIC CONTROL DEVICES (SIGNS AND/OR TRAFFIC SIGNALS), LOCATED WITHIN THE WORK AREA, WHICH ARE REQUIRED FOR INTERIM OR PERMANENT TRAFFIC CONTROL, SHALL BE RELOCATED TO POINTS APPROVED BY THE ENGINEER. APPROPRIATE TRAFFIC CONTROL DEVICES SHALL BE MAINTAINED, IN COMPLIANCE WITH THE MANUAL, AT ALL TIMES WHILE TRAFFIC IS MAINTAINED. THE COST OF RELOCATION, IF REQUIRED, SHALL BE INCLUDED IN THE LUMP SUM PRICE BID FOR ITEM 614, MAINTAINING TRAFFIC.

THE LENGTH AND DURATION OF LANE CLOSURES AND/OR TRAFFIC RESTRICTIONS SHALL BE AT THE APPROVAL OF THE ENGINEER. THE INTENT IS TO MINIMIZE THE IMPACT TO THE TRAVELING PUBLIC. LANE CLOSURES OR RESTRICTIONS OVER SEGMENTS OF THE PROJECT IN WHICH NO WORK IS ANTICIPATED WITHIN A REASONABLE TIME FRAME, AS DETERMINED BY THE ENGINEER, SHALL NOT BE PERMITTED. THE LEVEL OF UTILIZATION OF MAINTENANCE OF TRAFFIC DEVICES SHALL BE COMMENSURATE WITH THE WORK IN PROGRESS.

ITEM 614, ASPHALT CONCRETE FOR MAINTAINING TRAFFIC, HAS BEEN PROVIDED FOR USE IN MAINTAINING PAVEMENT, RAMPING AT CASTINGS AND VERTICAL SURFACES ALONG THE PLANED SURFACE JOINT, DRIVEWAYS, AND INTERSECTIONS, AND ALL OTHER LOCATIONS AS DIRECTED BY THE ENGINEER. THE FOLLOWING QUANTITIES HAVE BEEN INCLUDED IN THE GENERAL SUMMARY FOR USE AS DETERMINED BY THE ENGINEER:

614, ASPHALT CONCRETE FOR MAINTAINING TRAFFIC

| | |
|---|---|
| STRONGSVILLE | 100 CU YD |
| MIDDLEBURG HTS | 500 CU YD |
| PARMA HTS. | 500 CU YD |
| TOTAL | 1100 CU YD |

ALL WORK AND TRAFFIC CONTROL DEVICES SHALL BE IN ACCORDANCE WITH WITH C&MS 614 AND OTHER APPLICABLE PORTIONS OF THE SPECIFICATIONS, AS WELL AS THE OHIO MANUAL OF UNIFORM TRAFFIC CONTROL DEVICES. PAYMENT FOR ALL LABOR, EQUIPMENT, AND MATERIALS SHALL BE INCLUDED IN THE LUMP SUM CONTRACT PRICE FOR 614, MAINTAINING TRAFFIC, UNLESS SEPARATELY ITEMIZED IN THE PLANS.

CONSTRUCTION SEQUENCE

THE RECONSTRUCTION OF U.S. 42 WITHIN THE LIMITS OF THIS PROJECT SHALL BE ACCOMPLISHED IN FOUR (4) CONSTRUCTION SECTIONS, AS OUTLINED BELOW:

SECTION 1 - FROM THE TURNPIKE BRIDGE TO FOWLES ROAD (SHEET NO. 31 TO 36).
SECTION 2 - FROM FOWLES ROAD TO WEST 130TH STREET (SHEET NO. 37 TO 39).
SECTION 3 - FROM WEST 130TH ST. TO YORK/STUMPH ROAD (SHEET NO. 40 TO 42).
SECTION 4 - FROM YORK/STUMPH ROAD TO SNOW ROAD (SHEET NO. 43 TO 46).

THE CONTRACTOR SHALL COMPLETE ALL WORK, EXCEPT FINAL PAVEMENT MARKING AND SIGNING IN THE TRANSITION ZONE BETWEEN SECTIONS, IN A GIVEN CONSTRUCTION SECTION BEFORE BEGINNING ANY WORK IN A SUBSEQUENT SECTION, SUBJECT TO THE APPROVAL OF THE ENGINEER. NORMAL VEHICULAR TRAFFIC SHALL BE MAINTAINED AT ALL TIMES BEYOND THE WORK LIMITS OF THE SECTION CURRENTLY UNDER CONSTRUCTION.

THE CONTRACTOR MAY, AT THEIR OPTION AND WITH THE APPROVAL OF THE ENGINEER, BEGIN WORK IN ANY SECTION, AND MAY WORK IN SECTIONS CONCURRENTLY, PROVIDED THAT THE SECTIONS ARE NOT ADJACENT TO EACH OTHER.

CONSTRUCTION PHASING

WITHIN EACH CONSTRUCTION SECTION, WORK SHALL BE PERFORMED IN FOUR (4) PHASES.

PRIOR TO PHASE A WORK, THE CONTRACTOR SHALL INSTALL ALL UTILITY IMPROVEMENTS THAT ARE LOCATED WITHIN MULTIPLE PHASES (FOR EXAMPLE, THE STORM SEWER IMPROVEMENTS). DURING THIS WORK, TRAFFIC SHALL BE MAINTAINED ON PEARL ROAD USING STANDARD CONSTRUCTION DRAWINGS MT-95.31 OR MT-95.32. AT THE CONCLUSION OF THE WORK DAY, ANY OPEN TRENCH SHALL BE PLATED OR BACKFILLED WITH GRAVEL TO THE PAVEMENT SURFACE.

PHASE A SHALL CONSIST OF WORK IN THE CENTER OF THE ROAD (APPROXIMATELY 4' LEFT TO 12' RIGHT OF THE ℄ OF US 42), WITH TWO LANES OF TRAFFIC MAINTAINED IN THE SOUTHBOUND DIRECTION AND ONE LANE OF TRAFFIC MAINTAINED IN THE NORTHBOUND DIRECTION.

PHASE B SHALL CONSIST OF WORK IN THE EXISTING NORTHBOUND LANES, WITH TWO WAY TRAFFIC (ONE LANE IN EACH DIRECTION) AND A TWO-WAY LEFT TURN LANE MAINTAINED IN THE SOUTHBOUND LANES.

PHASE C SHALL CONSIST OF WORK IN THE EXISTING SOUTHBOUND LANES, WITH TWO WAY TRAFFIC (ONE LANE IN EACH DIRECTION) AND A TWO-WAY LEFT TURN LANE MAINTAINED IN THE NORTHBOUND LANES

ALL WORK IN PHASES A THROUGH C, INCLUDING SUCH ITEMS AS BASE AND CURB REPAIR, ASPHALT CONCRETE INTERMEDIATE COURSE, ADJUSTMENT OF CASTINGS, DRAINAGE STRUCTURE, SIDEWALK, AND DRIVEWAY REPAIRS, AND TRAFFIC SIGNS SHALL BE COMPLETED PRIOR TO BEGINNING THE NEXT PHASE, WITH THE EXCEPTION OF THE ASPHALT CONCRETE SURFACE COURSE, AND ANY FINAL PAVEMENT MARKINGS AND SIGNS WHICH CONFLICT WITH THE MAINTENANCE OF TRAFFIC PLANS.

AFTER THE EXISTING PAVEMENT HAS BEEN PLANED, THE CONTRACTOR AND ENGINEER SHALL MARK ALL AREAS REQUIRING PARTIAL DEPTH AND FULL DEPTH PAVEMENT REPAIRS. THE CONTRACTOR SHALL PATCH AREAS OF THE PLANED SURFACE AS NECESSARY AND INSTALL THE INTERMEDIATE COURSE NO LATER THAN 14 CALENDAR DAYS AFTER THE PAVEMENT HAS BEEN PLANED. ALL PAVEMENT REPAIR AREAS SHALL BE COMPLETED THROUGH THE INTERMEDIATE COURSE.

AT THE CONCLUSION OF PHASE C, THE FULL WIDTH OF THE PAVEMENT WILL BE OPEN TO VEHICULAR TRAFFIC FOR THE LENGTH OF THE CONSTRUCTION SECTION. THE CONTRACTOR SHALL PLACE CLASS I PAINTED WORK ZONE LANE LINES, DOUBLE SOLD/DASHED CENTER LINES, AND STOP LINES ON THE INTERMEDIATE COURSE AT APPROXIMATELY THE SAME LOCATIONS AS THE FINAL PAVEMENT MARKINGS.

PHASE D WILL OCCUR AFTER THE COMPLETION OF PHASE C (IN ANY CONSTRUCTION SECTION). THE 407 TACK COAT FOR INTERMEDIATE COURSE AND THE SURFACE COURSE SHALL BE INSTALLED ACROSS THE ENTIRE PAVEMENT WIDTH, AND LANDSCAPING, FINAL PAVEMENT MARKINGS, AND THE BALANCE OF SIGNS SHALL BE INSTALLED. DURING THIS PHASE, TRAFFIC SHALL BE MAINTAINED IN ACCORDANCE WITH STANDARD CONSTRUCTION DRAWING MT-95.31, MT-95.32, MT-97.10, OR MT-97.11, AS APPROPRIATE. PLACEMENT OF THE FINAL ASPHALT SURFACE COURSE MAY BE PERFORMED DURING NIGHT TIME HOURS WITH THE APPROVAL OF THE CITY THAT THE WORK IS TAKING PLACE IN.

AFTER THE SURFACE COURSE HAS BEEN INSTALLED, THE CONTRACTOR SHALL PLACE CLASS II WORK ZONE LANE LINES AND CENTER LINES AT APPROXIMATELY THE SAME LOCATIONS AS THE FINAL PAVEMENT MARKINGS.

EACH CONSTRUCTION SECTION MUST BE COMPLETE, INCLUDING THE INSTALLATION OF THE SURFACE COURSE, PAVEMENT MARKINGS, AND ALL CURB, DRIVEWAY, AND SIDEWALK REPAIRS, WITHIN 60 CALENDAR DAYS FROM THE BEGINNING OF PHASE A IN THAT SECTION. THE CONTRACTOR WILL BE ASSESSED A DISINCENTIVE IN THE AMOUNT OF $1000 FOR EACH CALENDAR DAY THAT THE SECTION COMPLETION TIME IS NOT MET.

IF THE CONTRACTOR ELECTS,THEY MAY SUBMIT ALTERNATE PLANS FOR THE MAINTENANCE OF TRAFFIC, PROVIDED THE INTENT OF THESE PROVISIONS ARE FOLLOWED AND NO ADDITIONAL INCONVENIENCE TO THE TRAVELING PUBLIC RESULTS THERE FROM. NO ALTERNATE PLAN SHALL BE PLACED INTO EFFECT UNTIL THE ENGINEER HAS REVIEWED AND APPROVED THE PLANS.

NIGHT TIME WORK

IN ORDER TO MINIMIZE THE IMPACTS TO THE TRAVELING PUBLIC AND REDUCE CONGESTION, THE PLANING AND RESURFACING WORK MAY BE COMPLETED DURING NIGHT TIME HOURS, BEGINNING AT 8:00 PM AND ENDING AT 6:00 AM, SUNDAY THROUGH THURSDAY, WITH THE APPROVAL OF THE MUNICIPALITY THAT THE WORK IS BEING PERFORMED IN, WITH THE FOLLOWING EXCEPTION:

IN THE CITY OF MIDDLEBURG HEIGHTS, NIGHT TIME WORK MAY ONLY BE PERFORMED WITHIN THE FOLLOWING LIMITS:

- SPRAGUE ROAD TO FOWLES ROAD.
- SMITH ROAD TO WEST 130TH STREET.

NOTIFICATION

THE CONTRACTOR SHALL NOTIFY IN WRITING THE FOLLOWING AGENCIES AT LEAST TWO (2) WEEKS PRIOR TO THE START OF CONSTRUCTION, AND AT LEAST ONE (1) WEEK BEFORE IMPLEMENTING ANY SUBSTANTIAL CHANGE IN TRAFFIC PATTERN OR CLOSING ANY STREET TO TRAFFIC:

CONSTRUCTION SECTIONS 1 AND 2:

- PUBLIC WORKS DEPARTMENT, ODOT DISTRICT 12
- PUBLIC INFORMATION OFFICER, CUYAHOGA COUNTY DEPARTMENT OF PUBLIC WORKS.
- THE GREATER CLEVELAND REGIONAL TRANSIT AUTHORITY
- BEREA CITY SCHOOL DISTRICT BOARD OF EDUCATION
- PARMA CITY SCHOOL DISTRICT BOARD OF EDUCATION
- THE CITY OF MIDDLEBURG HEIGHTS POLICE, FIRE, AND SERVICE DEPARTMENTS.
- THE CITY OF PARMA HEIGHTS POLICE, FIRE, AND SERVICE DEPARTMENTS.

ONLY CONSTRUCTION SECTION 1:

- STRONGSVILLE CITY SCHOOL DISTRICT BOARD OF EDUCATION
- THE CITY OF STRONGSVILLE POLICE, FIRE, AND SERVICE DEPARTMENTS.

CONSTRUCTION SECTIONS 3 AND 4:

- PUBLIC WORKS DEPARTMENT, ODOT DISTRICT 12
- PUBLIC INFORMATION OFFICER, CUYAHOGA COUNTY DEPARTMENT OF PUBLIC WORKS.
- THE GREATER CLEVELAND REGIONAL TRANSIT AUTHORITY
- PARMA CITY SCHOOL DISTRICT BOARD OF EDUCATION
- THE CITY OF PARMA HEIGHTS POLICE, FIRE, AND SERVICE DEPARTMENTS.

ONLY CONSTRUCTION SECTION 3:

- BEREA CITY SCHOOL DISTRICT BOARD OF EDUCATION
- THE CITY OF MIDDLEBURG HEIGHTS POLICE, FIRE, AND SERVICE DEPARTMENTS

ONLY CONSTRUCTION SECTION 4:

- THE CITY OF PARMA POLICE, FIRE, AND SERVICE DEPARTMENTS

CONSTRUCTION TRAFFIC

ALL CONSTRUCTION TRAFFIC SHALL USE ACCEPTABLE TRUCK ROUTES TO ACCESS THE CONSTRUCTION AREA. USE OF LOCAL RESIDENTIAL STREETS IS STRICTLY PROHIBITED UNLESS ALLOWED IN WRITING BY THE LOCAL ENFORCEMENT AGENCY.

PEDESTRIAN ACCESS

DURING TEMPORARY CLOSURE OF SIDEWALKS AND CURB RAMPS, THE CONTRACTOR SHALL PROVIDE PEDESTRIAN DETOURS OR BYPASSES ACCORDING TO OMUTCD TYPICAL APPLICATIONS TA-28 AND TA-29 AND ODOT STANDARD CONSTRUCTION DRAWING MT-110.10.

THE MAXIMUM AMOUNT OF TIME THAT A SIDEWALK OR CURB RAMP SHALL BE CLOSED AND DETOURED IS 7 CALENDAR DAYS. AFTER THAT TIME, THE NEW SIDEWALK OR CURB RAMP SHALL BE IN USE, OR THE CONTRACTOR SHALL PROVIDE TEMPORARY ASPHALT SIDEWALK TO PROVIDE ACCESS. THE COST OF FURNISHING, INSTALLING, MAINTAINING, AND SUBSEQUENTLY REMOVING THE TEMPORARY SIDEWALK SHALL BE INCLUDED IN THE LUMP SUM PRICE BID FOR 614, MAINTAINING TRAFFIC.





P:\Middleburg Heights - City of\J20150340.000 Pearl Rd Rehab\Drawings\Trans\105726MN001.dwg 01-Mar-19 2:45 PM

MAINTAINING DRIVEWAY ACCESS

ACCESS TO COMMERCIAL DRIVEWAYS AND OTHER PROPERTIES IDENTIFIED BY THE CITY OR ENGINEER SHALL BE MAINTAINED AT ALL TIMES. AT LOCATIONS WHERE A PROPERTY ACCESS DRIVEWAY IS BEING REPLACED, THE CONTRACTOR MAY CLOSE THAT DRIVEWAY A MAXIMUM OF TWO TIMES, EACH TIME FOR A PERIOD NOT TO EXCEED 24 HOURS. DURING THE TIMES THAT THE DRIVEWAY IS CLOSED, OTHER DRIVEWAYS FOR THAT PROPERTY WITHIN THE PROJECT LIMITS OR ON ADJACENT STREETS SHALL REMAIN OPEN AND UNOBSTRUCTED. FOR COMMERCIAL DRIVES WITH ONLY ONE ACCESS POINT, NEW DRIVEWAY CONSTRUCTION SHALL BE PART WIDTH UNLESS OTHERWISE AGREED TO BY THE OWNER OR TENANT.

IN ADDITION, THE CONTRACTOR SHALL MAKE REASONABLE PROVISIONS TO ALLOW RESIDENTIAL ACCESS AT ALL TIMES OR OTHERWISE ALLOW RESIDENTS TO PARK SAFELY WITHIN THE PROJECT WORK LIMITS OR ALONG ADJACENT SIDE STREETS WHEN ACCESS IS NOT POSSIBLE, ALL AT THE APPROVAL OF THE ENGINEER. THE MAXIMUM OUT OF SERVICE TIME FOR ANY RESIDENTIAL DRIVE SHALL BE SEVEN (7) DAYS, DURING WHICH TIME THE CONTRACTOR SHALL PROVIDE THE RESIDENTS WITH A SAFE PLACE TO PARK AND AN ACCESSIBLE ROUTE FROM THE PARKING AREA TO THE RESIDENCE.

PRIOR TO THE START OF A CONSTRUCTION SECTION, THE CONTRACTOR SHALL SUBMIT A PLAN FOR THE APPROVAL OF THE ENGINEER AND THE APPROPRIATE CITY (OR CITIES) WHICH OUTLINES THEIR STRATEGY FOR THE MAINTENANCE OF SAFE ACCESS TO ALL COMMERCIAL AND RESIDENTIAL PROPERTY AND/OR FOR ALLOWING RESIDENTS TO PARK SAFELY WHEN ACCESS IS NOT POSSIBLE.

LIQUIDATED DAMAGES OF $250 PER DAY SHALL BE ASSESSED FOR EACH CALENDAR DAY THAT THE DRIVEWAY REMAINS CLOSED TO TRAFFIC BEYOND THE SPECIFIED LIMIT.

INTERSECTING STREETS:

TWO-WAY TRAFFIC MUST BE MAINTAINED AT ALL TIMES ON THE FOLLOWING INTERSECTING STREETS:

- WHITNEY ROAD
- SPRAGUE ROAD
- FOWLES ROAD
- BALDWIN COURT (PRIVATE STREET)
- PINE HILL TRAIL (PRIVATE STREET)
- BAGLEY ROAD
- MOHAWK TRAIL
- SMITH ROAD
- WEST 130TH STREET
- YORK ROAD/STUMPH ROAD

OTHER INTERSECTING STREETS MAY BE CLOSED AS FOLLOWS, DURING WHICH TIME TRAFFIC SHALL BE DETOURED:

DURING THE PERIOD WHEN THE EXISTING PAVEMENT IS BEING PLANED, OR WHEN FLEXIBLE BASE REPAIR IS OCCURRING WITHIN THE LIMITS OF THE INTERSECTION, THE STREET MAY BE CLOSED AT U.S. 42 FOR A MAXIMUM OF 24 CONSECUTIVE HOURS.

DURING THE PERIOD THAT ANY RIGID PAVEMENT OR BASE REPLACEMENT OR REPAIR IS OCCURRING WITHIN THE LIMITS OF THE INTERSECTION, THE STREET MAY BE CLOSED AT U.S. 42 FOR A MAXIMUM OF SEVEN (7) CONSECUTIVE CALENDAR DAYS.

NO TWO ADJACENT STREETS SHALL BE CLOSED SIMULTANEOUSLY.

LIQUIDATED DAMAGES SHALL BE ASSESSED IN ACCORDANCE WITH C&MS SECTION 108.07 FOR EACH CALENDAR DAY THAT ANY INTERSECTING STREET REMAINS CLOSED TO TRAFFIC BEYOND THE SPECIFIED LIMIT.

WINTER TIME LIMITATIONS

ALL EXISTING OR PROPOSED LANES SHALL BE OPEN AND AVAILABLE TO TRAFFIC IN THE ORIGINAL OR PROPOSED FINAL ALIGNMENT BETWEEN NOVEMBER 1 AND APRIL 1. SHOULD THE CONTRACTOR FAIL TO MEET THESE REQUIREMENTS, A DISINCENTIVE SHALL BE ASSESSED IN THE AMOUNT OF $1000 PER CALENDAR DAY.

PLACEMENT OF ASPHALT CONCRETE

TWO-WAY TRAFFIC SHALL BE MAINTAINED AT ALL TIMES EXCEPT THAT ONE-WAY TRAFFIC WILL BE PERMITTED FOR MINIMUM PERIODS OF TIME CONSISTENT WITH THE REQUIREMENTS OF THE SPECIFICATIONS FOR PROTECTION OF COMPLETED ASPHALT CONCRETE COURSES.

DUST CONTROL

THE CONTRACTOR SHALL FURNISH AND APPLY WATER FOR DUST CONTROL AS DIRECTED BY THE ENGINEER. THE FOLLOWING ESTIMATED QUANTITY HAS BEEN INCLUDED FOR DUST CONTROL PURPOSES:

616, WATER

| | |
|---|---|
| STRONGSVILLE | 5 M GAL |
| MIDDLEBURG HTS | 10 M GAL |
| PARMA HTS. | 10 M GAL |
| TOTAL | 25 M GAL |

MAINTENANCE OF TRAFFIC SIGNAL INSTALLATION

THE CONTRACTOR SHALL BE RESPONSIBLE FOR MAINTAINING TRAFFIC SIGNAL INSTALLATIONS WITHIN THE PROJECT UNDER THE FOLLOWING CONDITIONS:

1. EXISTING SIGNAL/FLASHER INSTALLATIONS WHICH THE PLANS REQUIRE THE CONTRACTOR TO ADJUST, MODIFY, ADD ONTO OR REMOVE, OR WHICH THE CONTRACTOR ACTUALLY ADJUSTS, MODIFIES OR OTHERWISE DISTURBS. THE CONTRACTOR SHALL BE RESPONSIBLE FOR THE ENTIRE INSTALLATION (AT AN INTERSECTION) FROM THE TIME HIS OPERATIONS FIRST DISTURB THE INSTALLATION UNTIL THE INSTALLATION HAS BEEN SUBSEQUENTLY REMOVED OR MODIFIED AND THE WORK IS ACCEPTED.

2. NEW OR REUSED SIGNAL/FLASHER INSTALLATIONS OR DEVICES, INSTALLED BY THE CONTRACTOR. THE CONTRACTOR SHALL BE RESPONSIBLE FOR MAINTENANCE OF THESE FROM THE TIME OF INSTALLATION UNTIL THE WORK IS ACCEPTED.

THE CONTRACTOR SHALL CORRECT AS QUICKLY AS POSSIBLE ALL OUTAGES OR MALFUNCTIONS. HE SHALL PROVIDE THE MAINTAINING AGENCY AND THE ENGINEER SUCH ADDRESSES AND PHONE NUMBERS WHERE HIS MAINTENANCE FORCES CAN BE CONTACTED. THE CONTRACTOR SHALL PROVIDE ONE OR MORE PERSONS TO RECEIVE ALL CALLS AND DISPATCH THE NECESSARY MAINTENANCE FORCES TO CORRECT OUTAGES. SUCH A PERSON OR PERSONS MAY BE USED TO PERFORM OTHER DUTIES AS LONG AS PROMPT ATTENTION IS GIVEN TO THESE CALLS AND A PERSON IS READILY AVAILABLE CONTINUOUSLY 24 HOURS A DAY, 7 DAYS A WEEK. ALL LAMP OUTAGES, CABLE OUTAGES, ELECTRICAL FAILURES, EQUIPMENT MALFUNCTIONS AND MISALIGNED SIGNAL HEADS SHALL BE CORRECTED TO THE SATISFACTION OF THE ENGINEER WITH THE SIGNAL BACK TO SERVICE WITHIN FOUR HOURS AFTER THE CONTRACTOR HAS BEEN NOTIFIED OF THE OUTAGE.

IF POLES AND/OR CONTROL EQUIPMENT ARE DAMAGED AND MUST BE REPLACED, THE CONTRACTOR SHALL MAKE TEMPORARY REPAIRS AS NECESSARY TO BRING THE SIGNAL BACK INTO FULL OPERATION WITHIN THE ALLOWED 8-HOUR PERIOD, AND SHALL MAKE PERMANENT REPAIRS OR REPLACEMENT AS SOON THEREAFTER AS POSSIBLE.

NONE OF THE ABOVE SHALL BE CONSTRUED AS COLLECTIVE OR CONSECUTIVE OUTAGE TIME PERIODS AT ANY ONE LOCATION. THAT IS, WHERE MORE THAN ONE OUTAGE OCCURS AT ANY ONE LOCATION THEN THE ALLOTTED TIME LIMIT SHALL BE FOR THE WORST SINGLE OUTAGE.

WHERE OUTAGES ARE THE DIRECT RESULT OF A VEHICLE ACCIDENT THE RESPONSE OF THE CONTRACTOR SHALL BE AS OUTLINED ABOVE. THE CONTRACTOR SHALL BE RESPONSIBLE FOR COLLECTION OF ANY COMPENSATION FOR THIS WORK FROM THOSE PARTIES RESPONSIBLE FOR THE DAMAGE.

WHERE THE CONTRACTOR HAS FAILED TO, OR CANNOT RESPOND TO, AN OUTAGE OR SIGNAL EQUIPMENT MALFUNCTION, AT THESE LOCATIONS WITHIN HIS RESPONSIBILITY, WITHIN PERIODS AS SPECIFIED ABOVE, THE ENGINEER MAY INVOKE THE PROVISIONS OF SECTION 105.15 AND ANY SUBSEQUENT BILLINGS TO THE STATE OR THE CITY OF STRONGSVILLE, MIDDLEBURG HEIGHTS, AND/OR PARMA HEIGHTS FOR POLICE SERVICES AND MAINTENANCE SERVICES BY CITY FORCES SHALL BE DEDUCTED FROM MONIES DUE OR TO BECOME DUE THE CONTRACTOR IN ACCORDANCE WITH PROVISIONS OF SECTION 105.15.

THE CONTRACTOR SHALL PROVIDE THE MAINTENANCE SERVICE ENTIRELY WITH HIS FORCES OR HE MAY CHOOSE TO ENTER INTO A COOPERATIVE UNDERSTANDING WITH THE LOCAL MAINTAINING AGENCY TO PROVIDE THE MAINTENANCE. THE CONTRACTOR SHALL INFORM THE ENGINEER, IN WRITING, OF THE MAINTENANCE METHOD SELECTED.

THE CONTRACTOR SHALL BE RESPONSIBLE FOR ANY DAMAGE TO ANY TRAFFIC SIGNAL COMPONENTS REQUIRED TO BE HANDLED DURING THE RELOCATION OF POLES AND REVISIONS TO THE SIGNAL SYSTEM. WHEN A TRAFFIC SIGNAL MUST BE TAKEN OUT OF SERVICE BY THE CONTRACTOR, DUE TO CONSTRUCTION PROCEDURES, THIS OUTAGE SHALL NOT EXCEED 4 HOURS AND SHALL NOT INCLUDE THE HOURS OF 6 AM TO 8 PM. ANY SIGNALIZED INTERSECTION, WHERE THE SIGNAL IS OUT OF SERVICE DUE TO CONSTRUCTION PROCEDURES, OR DUE TO AN OUTAGE OR MALFUNCTION OF EQUIPMENT AS DESCRIBED ABOVE, SHALL BE PROTECTED, BY THE CONTRACTOR, BY THE INSTALLATION OF TEMPORARY "STOP" SIGNS, EXCEPT FOR THE FOLLOWING INTERSECTIONS WHICH SHALL BE PROTECTED BY OFF-DUTY CITY POLICE OFFICER, HIRED BY THE CONTRACTOR:

1. PEARL ROAD AND WHITNEY ROAD.
2. PEARL ROAD AND SPRAGUE ROAD.
3. PEARL ROAD AND I-71 SOUTHBOUND ENTRANCE/EXIT RAMPS.
4. PEARL ROAD AND FOWLES ROAD.
5. PEARL ROAD AND BAGLEY ROAD.
6. PEARL ROAD AND SMITH ROAD.
7. PEARL ROAD AND WEST 130TH STREET.
8. PEARL ROAD AND YORK ROAD/STUMPH ROAD.

ANY VEHICULAR TRAFFIC SIGNAL HEAD, EITHER NEW OR EXISTING WHICH WILL BE OUT OF OPERATION SHALL BE COVERED IN THE MANNER DESCRIBED IN 632.25.

THE CONTRACTOR SHALL MAINTAIN COMPLETE RECORDS OF MALFUNCTIONS INCLUDING:

1. TIME OF NOTIFICATION OF MALFUNCTION;
2. TIME OF WORK CREWS ARRIVAL TO CORRECT THE MALFUNCTION;
3. ACTIONS TAKEN TO CORRECT THE MALFUNCTION, INCLUDING A LIST OF PARTS REPAIRED OR REPLACED;
4. A DIAGNOSIS OF REASON FOR THE MALFUNCTION AND PROBABILITY OF REOCCURRENCE;
5. TIME OF COMPLETION OF THE REPAIR AND SYSTEM RESTORED TO FULL SERVICE.

A COPY OF THESE RECORDS SHALL BE PROVIDED TO THE ENGINEER WITHIN THREE (3) WORKING DAYS FOLLOWING COMPLETION OF EACH REPAIR.

ALL COSTS RESULTING FROM THE ABOVE REQUIREMENTS SHALL BE CONSIDERED TO BE INCLUDED IN THE LUMP SUM PRICE BID FOR ITEM 614, MAINTAINING TRAFFIC.





P:\Middleburg Heights - City of\J20150340.000 Pearl Rd Rehab\Drawings\Trans\105726MN002.dwg 01-Mar-19 2:46 PM

ITEM 614, PORTABLE CHANGEABLE MESSAGE SIGNS, AS PER PLAN

THE CONTRACTOR SHALL FURNISH, INSTALL, MAINTAIN AND REMOVE, WHEN NO LONGER NEEDED, A CHANGEABLE MESSAGE SIGNS. THE SIGN SHALL BE OF A TYPE SHOWN ON A LIST OF APPROVED PCMS UNITS AVAILABLE ON THE OFFICE OF MATERIALS MANAGEMENT WEB PAGE. THE LIST CONTAINS CLASS A AND B UNITS WITH MINIMUM LEGIBILITY DISTANCES OF 800 FEET AND 650 FEET, RESPECTIVELY.

EACH SIGN SHALL BE TRAILER-MOUNTED AND EQUIPPED WITH A FUNCTIONAL DIMMING MECHANISM, TO DIM THE SIGN DURING DARKNESS, AND A TAMPER AND VANDAL PROOF ENCLOSURE. EACH SIGN SHALL BE PROVIDED WITH APPROPRIATE TRAINING AND OPERATION INSTRUCTIONS TO ENABLE ON-SITE PERSONNEL TO OPERATE AND TROUBLESHOOT THE UNIT. THE SIGN SHALL ALSO BE CAPABLE OF BEING POWERED BY AN ELECTRICAL SERVICE DROP FROM A LOCAL UTILITY COMPANY. THE PCMS SHALL BE DELINEATED IN ACCORDANCE WITH C&MS 614.03.

THE CONTRACTOR SHALL LOCATE THE PCMS AT THE DIRECTION OF THE ENGINEER AND/OR CITY REPRESENTATIVE. PLACEMENT, OPERATION, MAINTENANCE AND ALL ACTIVATION OF THE SIGNS BY THE CONTRACTOR SHALL BE AS DIRECTED BY THE ENGINEER. THE PCMS SHALL BE LOCATED IN A HIGHLY VISIBLE POSITION YET PROTECTED FROM TRAFFIC. THE CONTRACTOR SHALL, AT THE DIRECTION OF THE ENGINEER, RELOCATE THE PCMS TO IMPROVE VISIBILITY OR ACCOMMODATE CHANGED CONDITIONS. WHEN NOT IN USE, THE PCMS SHALL BE TURNED OFF. ADDITIONALLY, WHEN NOT IN USE FOR EXTENDED PERIODS OF TIME, THE PCMS SHALL BE TURNED AWAY FROM ALL TRAFFIC.

THE ENGINEER SHALL BE PROVIDED ACCESS TO EACH SIGN UNIT AND SHALL BE PROVIDED WITH APPROPRIATE TRAINING AND OPERATION INSTRUCTIONS TO ENABLE ODOT PERSONNEL TO OPERATE AND TROUBLESHOOT THE UNIT, AND TO REVISE SIGN MESSAGES, IF NECESSARY.

ALL MESSAGES TO BE DISPLAYED ON THE SIGN WILL BE PROVIDED BY THE ENGINEER. A LIST OF ALL REQUIRED PRE-PROGRAMMED MESSAGES WILL BE GIVEN TO THE CONTRACTOR AT THE PROJECT PRECONSTRUCTION CONFERENCE. THE SIGN SHALL HAVE THE CAPABILITY TO STORE UP TO 99 MESSAGES. MESSAGE MEMORY OR PRE-PROGRAMMED DISPLAYS SHALL NOT BE LOST AS A RESULT OF POWER FAILURES TO THE ON-BOARD COMPUTER. THE SIGN LEGEND SHALL BE CAPABLE OF BEING CHANGED IN THE FIELD. THREE-LINE PRESENTATION FORMATS WITH UP TO SIX MESSAGE PHASES SHALL BE SUPPORTED. PCMS FORMAT SHALL PERMIT THE COMPLETE MESSAGE FOR EACH PHASE TO BE READ AT LEAST TWICE.

THE PCMS SHALL CONTAIN AN ACCURATE CLOCK AND PROGRAMMING LOGIC WHICH WILL ALLOW THE SIGN TO BE ACTIVATED, DEACTIVATED OR MESSAGES CHANGED AUTOMATICALLY AT DIFFERENT TIMES OF THE DAY FOR DIFFERENT DAYS OF THE WEEK.

THE CONTRACTOR SHALL BE RESPONSIBLE FOR 24-HOUR-PER-DAY OPERATION AND MAINTENANCE OF THESE SIGNS ON THE PROJECT FOR THE DURATION OF THE PHASES WHEN THE PLAN REQUIRES THEIR USE.

PAYMENT FOR THE ABOVE DESCRIBED ITEM SHALL BE AT THE CONTRACT UNIT PRICE. PAYMENT SHALL INCLUDE ALL LABOR, MATERIALS, EQUIPMENT, FUELS, LUBRICATING OILS, SOFTWARE, HARDWARE AND INCIDENTALS TO PERFORM THE ABOVE DESCRIBED WORK. ASSUMING 2 PCMS SIGNS FOR 20 MONTHS, PROPORTIONALLY SPLIT BETWEEN COMMUNITIES.

614, PORTABLE CHANGEABLE MESSAGE SIGN, AS PER PLAN

| | | |
|---|---|---|
| STRONGSVILLE | 4 | SIGN-MNTH |
| MIDDLEBURG HTS | 18 | SIGN-MNTH |
| PARMA HTS. | 18 | SIGN-MNTH |
| TOTAL | 40 | SIGN-MNTH |

CALCULATED DJP CHECKED BT

MAINTENANCE OF TRAFFIC GENERAL NOTES

CUY-US-042-4.29



P:\Middleburg Heights - City of\J20150340.000 Pearl Rd Rehab\Drawings\Trans\105726MN003.dwg 01-Mar-19 2:46 PM

ITEM 614, BUSINESS ENTRANCE SIGN, AS PER PLAN

THE BUSINESS ENTRANCE (M4-H15) SIGN SHOULD BE PROVIDED AT EACH TEMPORARILY RELOCATED COMMERCIAL DRIVEWAY FOR WHICH THE RELOCATION IS NOT OBVIOUS TO THE MOTORIST. THE PROJECT ENGINEER SHALL DETERMINE WHETHER OR NOT THE DRIVEWAY RELOCATION IS, OR IS NOT, OBVIOUS AND WHETHER OR NOT A SIGN SHOULD BE PROVIDED. ONLY ONE SIGN PER BUSINESS SHALL BE PERMITTED. THE SIGN SHALL BE 36 INCH X 48 INCH IN SIZE WITH TYPE G OR TYPE H ORANGE RETROREFLECTIVE SHEETING. THE SIGN LEGEND SHALL BE PLACED ON BOTH SIDES OF THE SIGN (BACK TO BACK). THE SIGN SHALL HAVE THE STANDARD M4-H15 LEGEND "BUSINESS," UNLESS THE NAME OF THE ACTUAL BUSINESS(ES), PLAZA NAME, ETC. IS REQUESTED THE CITY OR ENGINEER.

THE SIGN SHALL BE MOUNTED ON TWO #3 POSTS OR ON TEMPORARY POSTS IN ACCORDANCE WITH SCD MT- 105.10 AND IN ACCORDANCE WITH THE OHIO MANUAL OF UNIFORM TRAFFIC CONTROL DEVICES, LATEST EDITION. THE SIGN SHALL BE CLEARLY VISIBLE AND SHALL CLEARLY IDENTIFY THE LOCATION OF THE DRIVEWAY. THE SIGN SHOULD BE POSITIONED AT 90° TO THE DIRECTION(S) OF TRAFFIC. THE SIGN MAY NEED TO BE MOVED FOR EACH PHASE OF THE MAINTENANCE OF TRAFFIC OPERATIONS.

PAYMENT FOR ALL COSTS ASSOCIATED WITH MANUFACTURING, MOUNTING, RELOCATING, AND REMOVING THE SIGN, INCLUDING ALL LABOR, MATERIALS AND EQUIPMENT SHALL BE INCLUDED IN THE CONTRACT PRICE PER EACH FOR ITEM 614-BUSINESS ENTRANCE SIGN.

THE FOLLOWING ESTIMATED QUANTITY HAS BEEN CARRIED TO THE GENERAL SUMMARY FOR THIS ITEM.

614, BUSINESS ENTRANCE SIGN

| | |
|---|---|
| STRONGSVILLE | 10 EACH |
| MIDDLEBURG HTS | 50 EACH |
| PARMA HTS. | 60 EACH |
| TOTAL | 120 EACH |

RTA BUS STOP ACCESS

ACCESS TO ALL RTA BUS STOPS SHALL BE MAINTAINED AT ALL TIMES DURING CONSTRUCTION. THE CONTRACTOR SHALL COORDINATE THE LOCATION OF ANY TEMPORARY BUS STOP LOCATIONS WITH THE GREATER CLEVELAND REGIONAL TRANSIT AUTHORITY. THIS WORK SHALL BE INCLUDED IN THE LUMP SUM PRICE BID FOR ITEM 614 - MAINTAINING TRAFFIC. NO ADDITIONAL PAYMENTS WILL BE MADE.

FLOODLIGHTING

FLOODLIGHTING OF THE WORK SITE FOR OPERATIONS CONDUCTED DURING NIGHTTIME PERIODS SHALL BE ACCOMPLISHED SO THAT THE LIGHTS DO NOT CAUSE GLARE TO THE DRIVERS ON THE ROADWAY. TO ENSURE THE ADEQUACY OF THE FLOODLIGHT PLACEMENT, THE CONTRACTOR AND THE ENGINEER SHALL DRIVE THROUGH THE WORK SITE EACH NIGHT WHEN THE LIGHTING IS IN PLACE AND OPERATIVE PRIOR TO COMMENCING ANY WORK. IF GLARE IS DETECTED, THE LIGHT PLACEMENT AND SHIELDING SHALL BE ADJUSTED TO THE SATISFACTION OF THE ENGINEER BEFORE WORK PROCEEDS.

PAYMENT FOR ALL LABOR, EQUIPMENT AND MATERIALS SHALL BE INCLUDED IN THE LUMP SUM CONTRACT PRICE FOR ITEM 614, MAINTAINING TRAFFIC.

MAINTENANCE OF MAIL SERVICE

THE CONTRACTOR SHALL NOTE THAT EXISTING ROADSIDE MAILBOXES EXIST WITHIN PORTIONS OF THE PROJECT LIMITS. DURING THE CONSTRUCTION SECTIONS AND PHASES WHERE THE MAIL DELIVERY CANNOT BE MADE, THE CONTRACTOR SHALL BE RESPONSIBLE TO REMOVE AND REERECT THE EXISTING MAILBOXES, IN A TEMPORARY LOCATION THAT IS ACCESISBLE TO BOTH THE US POSTAL SERVICE AND THE RESIDENTS DURING CONSTRUCTION TO RECEIVE DAILY MAIL SERVICE. WHEN NORMAL MAIL DELIVERY CAN RESUME, THE CONTRACTOR SHALL REERECT THE MAILBOXES IN THEIR PERMANENT LOCATION.

THE CONTRACTOR SHALL BE RESPONSIBLE FOR COORDINATING WITH THE LOCAL POSTMASTER REGARDING THE TIMING OF THE MOVEMENT OF ANY MAILBOX TO A NEW LOCATION.

DUE CARE SHALL BE EXERCISED WHILE PERFORMING THIS OPERATION, AND THE CONTRACTOR SHALL BE BE RESPONSIBLE FOR REPAIRING OR REPLACING ANY EXISTING MAILBOX DAMAGED BY IMPROPER HANDLING ON THEIR PART, AS JUDGED AND DIRECTED BY THE ENGINEER.

IN LIEU OF REMOVING AND REERCTING THE EXISTING MAILBOXES, THE CONTRACTOR MAY FURNISH AND INSTALL NEW MAILBOXES IN THE TEMPORARY LOCATION.

PAYMENT FOR ALL LABOR, EQUIPMENT AND MATERIALS SHALL BE INCLUDED IN THE LUMP SUM CONTRACT PRICE FOR ITEM 614, MAINTAINING TRAFFIC.

ITEM 614, LAW ENFORCEMENT OFFICER WITH PATROL CAR FOR ASSISTANCE DURING CONSTRUCTION OPERATIONS

USE OF LAW ENFORCEMENT OFFICERS (LEOS) BY CONTRACTORS OTHER THAN THE USES SPECIFIED BELOW WILL NOT BE PERMITTED AT PROJECT COST. LEOS SHOULD NOT BE ISED WHERE THE OMUTCD INTENDS THAT FLAGGERS BE USED.

IN ADDITION TO THE REQUIREMENTS OF C&MS 614 AND THE OMUTCD, A UNIFORMED LEO WITH AN OFFICIAL PATROL CAR (CAR WITH TOP-MOUNTED EMERGENCY FLASHING LIGHTS AND COMPLETE MARKINGS OF THE APPROPRIATE LAW ENFORCEMENT AGENCY) SHALL BE PROVIDED FOR THE FOLLOWING TRAFFIC CONTROL TASKS:

- DURING THE ENTIRE ADVANCE PREPARATION AND CLOSURE SEQUENCE WHERE COMPLETE BLOCKAGE OF TRAFFIC IS REQUIRED.
- DURING WORK ON AN EXISTING TRAFFIC SIGNAL INSTALLATION WHEN IMPACTING THE NORMAL FUNCTION OF THE SIGNAL OR THE FLOW OF TRAFFIC, OR WHEN TRAFFIC NEEDS TO BE DIRECTED THROUGH AN ENERGIZED TRAFFIC SIGNAL CONTRARY TO THE SIGNAL DISPLAY (E.G., DIRECTING MOTORISTS THROUGH A RED LIGHT).

IN ADDITION TO THE REQUIREMENT OF C&MS 614 AND THE OMUTCD, A UNIFORMED LEO WITH AN OFFICIAL PATROL CAR (CAR WITH TOP-MOUNTED EMERGENCY FLASHING LIGHTS AND COMPLETE MARKINGS OF THE APPROPRIATE LAW ENFORCEMENT AGENCY) SHOULD BE PROVIDED FOR THE FOLLOWING TRAFFIC CONTROL TASKS AS APPROVED BY THE ENGINEER:

- FOR LANE CLOSURES: DURING INITIAL SET-UP PERIODS, TEAR DOWN PERIODS, SUBSTANTIAL SHIFTS OF A CLOSURE POINT OR WHEN NEW LANE CLOSURE ARRANGEMENTS ARE INITIATED FOR LONG-TERM LANE CLOSURES/SHIFTS (FOR THE FIRST AND LAST DAY OF MAJOR CHANGES IN TRAFFIC CONTROL SETUP).

IN GENERAL, LEOS SHOULD BE POSITIONED IN ADVANCE OF AND ON THE SAME SIDE AS THE LANE RESTRICTION OR AT THE POINT OF ROAD CLOSURE, AND TO MANUALLY CONTROL TRAFFIC MOVEMENTS THROUGH SIGNALIZED INTERSECTIONS IN WORK ZONES.

LEOS SHOULD NOT FORGO THEIR TRAFFIC CONTROL RESPONSIBILITIES TO APPREHEND MOTORISTS FOR ROUTINE TRAFFIC VIOLATIONS. HOWEVER, IF A MOTORIST'S ACTIONS ARE CONSIDERED TO BE RECKLESS, THEN PURSUIT OF THE MOTORIST IS APPROPRIATE.

THE LEOS WORK AT THE DIRECTION OF THE CONTRACTOR. THE CONTRACTOR IS RESPONSIBLE FOR SECURING THE SERVICES OF THE LEOS WITH THE APPROPRIATE AGENCIES AND COMMUNICATING THE INTENTIONS OF THE PLANS WITH RESPECT TO DUTIES OF THE LEOS. THE ENGINEER SHALL HAVE FINAL CONTROL OVER THE LEOS' DUTIES AND PLACEMENT, AND WILL RESOLVE ANY ISSUES THAT MAY ARISE BETWEEN THE TWO PARTIES.

THE LEO SHALL REPORT IN TO THE CONTRACTOR PRIOR TO THE START OF THE SHIFT, IN ORDER TO RECEIVE INSTRUCTIONS REGARDING SPECIFIC WORK ASSIGNMENTS DURING HIS/HER SHIFT. THE LEO IS EXPECTED TO STAY AT THE PROJECT SITE FOR THE ENTIRE DURATION OF HIS/HER SHIFT. THE LEO SHALL REPORT TO THE CONTRACTOR AT THE END OF HIS/HER SHIFT. SHOULD IT BE NECESSARY TO LEAVE THE PROJECT SITE, THE LEO SHALL NOTIFY THE ENGINEER. THE CONTRACTOR SHALL PROVIDE THE LEO WITH A TWO-WAY COMMUNICATION DEVICE WHICH SHALL BE RETURNED TO THE CONTRACTOR AT THE END OF HIS/HER SHIFT.

LEOS WITH PATROL CAR REQUIRED BY THE TRAFFIC MAINTENANCE TASKS ABOVE SHALL BE PAID FOR ON A UNIT PRICE (HOURLY) BASIS UNDER ITEM 614, LAW ENFORCEMENT OFFICER WITH PATROL CAR FOR ASSISTANCE. THE FOLLOWING ESTIMATED QUANTITY HAS BEEN CARRIED TO THE GENERAL SUMMARY.

614, LAW ENFORCEMENT OFFICER WITH PATROL CAR FOR ASSISTANCE

| | |
|---|---|
| STRONGSVILLE | 100 HOURS |
| MIDDLEBURG HTS. | 200 HOURS |
| PARMA HTS. | 200 HOURS |
| TOTAL | 500 HOURS |

THE HOURS PAID SHALL INCLUDE ANY MINIMUM SHOW-UP TIME REQUIRED BY THE LAW ENFORCEMENT AGENCY INVOLVED.

ANY ADDITIONAL COSTS (ADMINISTRATIVE OR OTHERWISE) INCURRED BY THE CONTRACTOR TO OBTAIN THE SERVICES OF AN LEO ARE INCLUDED WITH THE BID UNIT PRICE FOR ITEM 614, LAW ENFORCEMENT OFFICER WITH PATROL CAR FOR ASSISTANCE.

## MAINTENANCE OF TRAFFIC LEGEND

| | |
|---|---|
| CLP-# | CENTER LINE (SOLID, DOUBLE OR BROKEN AND SOLID, DOUBLE), PAINT |
| CLT-# | CENTER LINE (SOLID, DOUBLE OR BROKEN AND SOLID, DOUBLE), TAPE |
| EYP-# | EDGE LINE, PAINT (YELLOW) |
| EWP-# | EDGE LINE, PAINT (WHITE) |
| EYT-# | EDGE LINE, TAPE (YELLOW) |
| EWT-# | EDGE LINE, TAPE (YELLOW) |
| CHP-# | CHANNELIZING LINE, PAINT |
| CHT-# | CHANNELIZING LINE, TAPE |
| DLT-# | DOTTED LINE, TAPE |
| SLP-# | STOP LINE, PAINT |
| SLT-# | STOP LINE, TAPE |
| LAP-# | LANE ARROW, PAINT |
| LAT-# | LANE ARROW, TAPE |
| | WORK AREA |
| | INTERMEDIATE COURSE (INSTALLED UNDER PREVIOUS PHASE) |

CALCULATED DP CHECKED BT

MAINTENANCE OF TRAFFIC GENERAL NOTES

CUY-US-042-4.29



P:\Middleburg Heights - City of\J20150340.000 Pearl Rd Rehab\Drawings\Trans\105726MN004.dwg 01-Mar-19 2:46 PM

| SHEET NUMBER | | | | | | | | | | | PARTICIPATION 01/MPO/PV | | | ITEM | ITEM EXT. | GRAND TOTAL | UNIT | DESCRIPTION | SEE SHEET NO. |
|---|---|---|---|---|---|---|---|---|---|---|---|---|---|---|---|---|---|---|---|
| 18 | 19 | 20 | 21 | 23 | 24 | 25 | 26 | 27 | 28 | 29 | STRONGSVILLE | MIDDLEBURG HEIGHTS | PARMA HEIGHTS | | | | | | |
| | | | | | | | | | | | | | | | | | | **MAINTENANCE OF TRAFFIC** | |
| | | | 500 | | | | | | | | 100 | 200 | 200 | 614 | 11110 | 500 | HOUR | LAW ENFORCEMENT OFFICER WITH PATROL CAR FOR ASSISTANCE | |
| 1100 | | | | | | | | | | | 100 | 500 | 500 | 614 | 13000 | 1100 | CU YD | ASPHALT CONCRETE FOR MAINTAINING TRAFFIC | |
| | | 40 | | | | | | | | | 4 | 18 | 18 | 614 | 18601 | 40 | SNMT | PORTABLE CHANGEABLE MESSAGE SIGN, AS PER PLAN | 20 |
| | | | | 1.46 | | 5.67 | | 2.39 | 2.94 | | 1.46 | 5.67 | 5.33 | 614 | 20110 | 12.46 | MILE | WORK ZONE LANE LINE, CLASS I, 6", 642 PAINT | |
| | | | | 1.46 | | 5.67 | | 2.39 | 2.94 | | 1.46 | 5.67 | 5.33 | 614 | 20410 | 12.46 | MILE | WORK ZONE LANE LINE, CLASS II, 6" | |
| | | | | 2.18 | 0.25 | 7.11 | | 4.36 | 3.59 | | 2.18 | 7.36 | 7.95 | 614 | 21100 | 17.49 | MILE | WORK ZONE CENTER LINE, CLASS I, 642 PAINT | |
| | | | | 2.20 | 0.98 | 6.62 | 0.08 | 4.50 | 3.27 | 0.08 | 2.20 | 7.61 | 7.92 | 614 | 21200 | 17.73 | MILE | WORK ZONE CENTER LINE, CLASS I, 740.06, TYPE I | |
| | | | | 1.46 | | 4.91 | | 2.39 | 2.94 | | 1.46 | 4.91 | 5.33 | 614 | 21400 | 11.70 | MILE | WORK ZONE CENTER LINE, CLASS II | |
| | | | | 0.73 | 1.02 | 2.20 | 1.20 | 1.56 | 0.05 | | 0.73 | 3.22 | 2.81 | 614 | 22110 | 6.76 | MILE | WORK ZONE EDGE LINE, CLASS I, 6", 642 PAINT | |
| | | | | 2.50 | 2.03 | 6.77 | 1.42 | 5.57 | 2.05 | 0.67 | 2.50 | 8.97 | 9.54 | 614 | 22210 | 21.01 | MILE | WORK ZONE EDGE LINE, CLASS I, 6", 740.06, TYPE I | |
| | | | | 400 | 400 | 800 | 700 | 302 | | | 400 | 1200 | 1002 | 614 | 23210 | 2602 | FT | WORK ZONE CHANNELIZING LINE, CLASS I, 12", 642 PAINT | |
| | | | | | 300 | 356 | 766 | 460 | 600 | | | 1122 | 1360 | 614 | 23410 | 2482 | FT | WORK ZONE CHANNELIZING LINE, CLASS I, 12", 740.06, TYPE I | |
| | | | | | 300 | 100 | 300 | 200 | 380 | | | 500 | 780 | 614 | 24400 | 1280 | FT | WORK ZONE DOTTED LINE, CLASS I, 740.06, TYPE I | |
| | | | | 303 | 137 | 511 | 106 | 370 | 524 | | 303 | 648 | 1000 | 614 | 26200 | 1951 | FT | WORK ZONE STOP LINE, CLASS I, 642 PAINT | |
| | | | | 182 | 67 | 349 | 10 | 314 | 268 | 23 | 182 | 416 | 615 | 614 | 26400 | 1213 | FT | WORK ZONE STOP LINE, CLASS I, 12", 740.06, TYPE I | |
| | | | | | 8 | 16 | 14 | 4 | | | | 24 | 18 | 614 | 30200 | 42 | EACH | WORK ZONE ARROW, CLASS I, 642 PAINT | |
| | | | | 8 | 6 | 6 | 12 | 8 | 10 | | 8 | 18 | 24 | 614 | 30400 | 50 | EACH | WORK ZONE ARROW, CLASS I, 740.06, TYPE I | |
| | | | 120 | | | | | | | | 10 | 50 | 60 | 614 | 40051 | 120 | EACH | BUSINESS ENTRANCE SIGN, AS PER PLAN | 21 |
| | 25 | | | | | | | | | | 5 | 10 | 10 | 616 | 10000 | 25 | M GAL | WATER | |
| | | | | 1153 | 900 | 764 | 1357 | 1210 | 746 | 1740 | 1153 | 2411 | 4306 | 642 | 30000 | 7870 | FT | REMOVAL OF PAVEMENT MARKING | |
| | | | | | 1 | 3 | 3 | 2 | 6 | | | 7 | 8 | 642 | 30020 | 15 | EACH | REMOVAL OF PAVEMENT MARKING | |

CALCULATED DP
CHECKED BT

MAINTENANCE OF TRAFFIC GENERAL SUMMARY

CUY-US-042-4.29



P:\Middleburg Heights - City of\J20150340.000 Pearl Rd Rehab\Drawings\Trans\105726MG001.dwg 01-Mar-19 2:46 PM

| SHEET NO. | SECTION & PHASE | REFERENCE NO. | STATION FROM | STATION TO | 614 WORK ZONE LANE LINE, CLASS I, 6", 642 PAINT | 614 WORK ZONE LANE LINE, CLASS II, 6" | 614 WORK ZONE CENTER LINE, CLASS I, 642 PAINT (BROKEN AND SOLID, DOUBLE) | 614 WORK ZONE CENTER LINE, CLASS I, 642 PAINT (DOUBLE SOLID) | 614 WORK ZONE CENTER LINE, CLASS I, 740.06, TYPE I (BROKEN AND SOLID, DOUBLE) | 614 WORK ZONE CENTER LINE, CLASS I, 740.06, TYPE I (DOUBLE SOLID) | 614 WORK ZONE CENTER LINE, CLASS II | 614 WORK ZONE EDGE LINE, CLASS I, 6", 642 PAINT (YELLOW) | 614 WORK ZONE EDGE LINE, CLASS I, 6", 642 PAINT (WHITE) | 614 WORK ZONE EDGE LINE, CLASS I, 6", 740.06, TYPE I (YELLOW) | 614 WORK ZONE EDGE LINE, CLASS I, 6", 740.06, TYPE I (WHITE) | 614 WORK ZONE CHANNELIZING LINE, CLASS I, 12", 642 PAINT | 614 WORK ZONE CHANNELIZING LINE, CLASS I, 12", 740.06, TYPE I | 614 WORK ZONE DOTTED LINE, CLASS I 740.06, TYPE I | 614 WORK ZONE STOP LINE, CLASS I, 642 PAINT | 614 WORK ZONE STOP LINE, CLASS I, 740.06, TYPE I | 614 WORK ZONE ARROW, CLASS I, 740.06, TYPE I | 614 WORK ZONE ARROW, CLASS I, 642 PAINT | 642 REMOVAL OF PAVEMENT MARKING | |
|---|---|---|---|---|---|---|---|---|---|---|---|---|---|---|---|---|---|---|---|---|---|---|---|---|
| | | | | | MILE | MILE | MILE | MILE | MILE | MILE | MILE | MILE | MILE | MILE | MILE | FT | FT | FT | FT | FT | EACH | EACH | FT | EACH |
| | | | | | | | | | | | | | | CITY OF STRONGSVILLE | | | | | | | | | | |
| 31 | 1-A | X-1 | 239+23 | 242+83 | | | | | | | | | | | | | | | | | | | 360 | |
| | | EYT-1 | 239+23 | 242+83 | | | | | | | | | | 0.068 | | | | | | | | | | |
| | | EYT-2 | 242+83 | 281+15 | | | | | | | | | | 0.726 | | | | | | | | | | |
| | | EYP-1 | 242+83 | 281+15 | | | | | | | | 0.726 | | | | | | | | | | | | |
| 32 | | (4) NORTHBOUND LT LANES | | | | | | | | | | | | | | 400 | | | 64 | | | 8 | | |
| 33 | 1-B | X-2 | 237+73 | 239+23 | | | | | | | | | | | | | | | | | | | 150 | |
| | | X-3 | 241+33 | 243+83 | | | | | | | | | | | | | | | | | | | 358 | |
| | | EWT-1 | 237+73 | 242+83 | | | | | | | | | | | 0.097 | | | | | | | | | |
| | | EWT-2 | 242+83 | 281+15 | | | | | | | | | | | 0.726 | | | | | | | | | |
| | | EYT-3 | 242+33 | 242+83 | | | | | | | | | | 0.010 | | | | | | | | | | |
| | | CLP-1 | 242+83 | 281+15 | | | 0.726 | | | | | | | | | | | | | | | | | |
| | | CLT-1 | 242+83 | 281+15 | | | | | 0.726 | | | | | | | | | | | | | | | |
| 34 | | SIGNALIZED INTERSECTIONS | | | | | | | | | | | | | | | | | | 110 | | | | |
| 35 | 1-C | X-4 | 240+73 | 242+83 | | | | | | | | | | | | | | | | | | | 285 | |
| | | EYT-4 | 239+83 | 242+33 | | | | | | | | | | 0.059 | | | | | | | | | | |
| | | EYT-5 | 240+23 | 242+33 | | | | | | | | | | 0.040 | | | | | | | | | | |
| | | EWT-3 | 240+23 | 281+15 | | | | | | | | | | | 0.775 | | | | | | | | | |
| | | CLT-2 | 242+33 | 242+83 | | | | | | 0.009 | | | | | | | | | | | | | | |
| | | CLT-3 | 242+33 | 242+83 | | | | | | 0.009 | | | | | | | | | | | | | | |
| | | CLT-4 | 242+83 | 281+15 | | | | | 0.726 | | | | | | | | | | | | | | | |
| | | CLT-5 | 242+83 | 281+15 | | | | | 0.726 | | | | | | | | | | | | | | | |
| 36 | | SIGNALIZED INTERSECTIONS | | | | | | | | | | | | | | | | | 95 | 72 | | | | |
| 18 | | | 242+83 | 281+15 | 1.452 | | 1.452 | | | | | | | | | | | | 144 | | | | | |
| 18 | 1-D | | 242+83 | 281+15 | | 1.452 | | | | | 1.452 | | | | | | | | | | | | | |
| SUBTOTALS | | | | | 1.452 | 1.452 | 2.178 | 0 | 2.178 | 0.018 | 1.452 | 0.726 | 0 | 0.903 | 1.598 | 400 | 0 | 0 | 303 | 182 | 0 | 8 | 1153 | 0 |
| TOTALS CARRIED TO GENERAL SUMMARY (SHEET NO. 22) | | | | | 1.46 | 1.46 | 2.18 | | 2.20 | | 1.46 | 0.73 | | 2.50 | | 400 | 0 | 0 | 303 | 182 | 0 | 8 | 1153 | 0 |

CALCULATED DP
CHECKED BT

# MAINTENANCE OF TRAFFIC SUBSUMMARY - 1 OF 7

CUY-US-042-4.29



P:\Middleburg Heights - City of\J20150340.000 Pearl Rd Rehab\Drawings\Trans\105726MS001.dwg 01-Mar-19 2:47 PM

# MAINTENANCE OF TRAFFIC SUBSUMMARY - 2 OF 7

CALCULATED DP
CHECKED BT

| SHEET NO. | SECTION & PHASE | REFERENCE NO. | STATION FROM | STATION TO | 614 WORK ZONE LANE LINE, CLASS I, 6", 642 PAINT | 614 WORK ZONE LANE LINE, CLASS II, 6" | 614 WORK ZONE CENTER LINE, CLASS I, 642 PAINT (BROKEN AND SOLID, DOUBLE) | 614 WORK ZONE CENTER LINE, CLASS I, 642 PAINT (DOUBLE SOLID) | 614 WORK ZONE CENTER LINE, CLASS I, 740.06, TYPE I (BROKEN AND SOLID, DOUBLE) | 614 WORK ZONE CENTER LINE, CLASS I, 740.06, TYPE I (DOUBLE SOLID) | 614 WORK ZONE CENTER LINE, CLASS II | 614 WORK ZONE EDGE LINE, CLASS I, 6", 642 PAINT (YELLOW) | 614 WORK ZONE EDGE LINE, CLASS I, 6", 642 PAINT (WHITE) | 614 WORK ZONE EDGE LINE, CLASS I, 6", 740.06, TYPE I (YELLOW) | 614 WORK ZONE EDGE LINE, CLASS I, 6", 740.06, TYPE I (WHITE) | 614 WORK ZONE CHANNELIZING LINE, CLASS I, 12", 642 PAINT | 614 WORK ZONE CHANNELIZING LINE, CLASS I, 12", 740.06, TYPE I | 614 WORK ZONE DOTTED LINE, CLASS I 740.06, TYPE I | 614 WORK ZONE STOP LINE, CLASS I, 642 PAINT | 614 WORK ZONE STOP LINE, CLASS I, 740.06, TYPE I | 614 WORK ZONE ARROW, CLASS I, 642 PAINT | 614 WORK ZONE ARROW, CLASS I, 740.06, TYPE I | 642 REMOVAL OF PAVEMENT MARKING | |
|---|---|---|---|---|---|---|---|---|---|---|---|---|---|---|---|---|---|---|---|---|---|---|---|---|
| | | | | | MILE | MILE | MILE | MILE | MILE | MILE | MILE | MILE | MILE | MILE | MILE | FT | FT | FT | FT | FT | EACH | EACH | FT | EACH |
| | | | | | CITY OF MIDDLEBURG HEIGHTS | | | | | | | | | | | | | | | | | | | |
| 31-32 | 1-A | EYP-10 | 288+90 | 308+20 | | | | | | | | 0.366 | | | | | | | | | | | | |
| | | EYP-11 | 281+15 | 315+68 | | | | | | | | 0.654 | | | | | | | | | | | | |
| | | EYT-10 | 281+15 | 288+90 | | | | | | | | | | 0.147 | | | | | | | | | | |
| | | EYT-11 | 308+20 | 315+68 | | | | | | | | | | 0.142 | | | | | | | | | | |
| | | CHP-10 | 288+74 | 289+74 | | | | | | | | | | | | 100 | | | | | | | | |
| | | CHP-11 | 293+33 | 294+33 | | | | | | | | | | | | 100 | | | | | | | | |
| | | CHP-12 | 305+86 | 306+86 | | | | | | | | | | | | 100 | | | | | | | | |
| | | CHP-13 | 313+76 | 314+76 | | | | | | | | | | | | 100 | | | | | | | | |
| | | CHT-10 | 309+70 | 310+70 | | | | | | | | | | | | | 100 | | | | | | | |
| | | DLT-10 | 310+70 | 311+70 | | | | | | | | | | | | | | 100 | | | | | | |
| | | SLP-10 | 289+74 | | | | | | | | | | | | | | | | 10 | | | | | |
| | | SLP-11 | 294+33 | | | | | | | | | | | | | | | | 10 | | | | | |
| | | SLP-12 | 306+86 | | | | | | | | | | | | | | | | 10 | | | | | |
| | | SLP-13 | 314+76 | | | | | | | | | | | | | | | | 10 | | | | | |
| | | LAP-10 | 288+74 | 289+64 | | | | | | | | | | | | | | | | | 2 | | | |
| | | LAP-11 | 293+53 | 294+23 | | | | | | | | | | | | | | | | | 2 | | | |
| | | LAP-12 | 306+06 | 306+76 | | | | | | | | | | | | | | | | | 2 | | | |
| | | LAP-13 | 313+96 | 314+66 | | | | | | | | | | | | | | | | | 2 | | | |
| | | LAT-10 | 310+00 | 310+60 | | | | | | | | | | | | | | | | | | 2 | | |
| | | X-10 | 309+70 | 311+70 | | | | | | | | | | | | | | | | | | | 200 | |
| | | CLP-10 | 281+15 | 289+40 | | | 0.156 | | | | | | | | | | | | | | | | | |
| 31-32 | 1-B | | | | | | | | | | | | | | | | | | | | | | | |
| | | CLP-11 | 309+80 | 314+76 | | | 0.094 | | | | | | | | | | | | | | | | | |
| | | CLT-10 | 281+15 | 289+40 | | | | | 0.156 | | | | | | | | | | | | | | | |
| | | CLT-11 | 309+80 | 314+76 | | | | | 0.094 | | | | | | | | | | | | | | | |
| | | CLT-12 | 315+80 | 316+80 | | | | | 0.019 | | | | | | | | | | | | | | | |
| | | EWT-10 | 281+15 | 316+80 | | | | | | | | | | | 0.675 | | | | | | | | | |
| | | EYT-12 | 307+32 | 308+84 | | | | | | | | | | 0.029 | | | | | | | | | | |
| | | CHT-11 | 315+80 | 316+80 | | | | | | | | | | | | | 100 | | | | | | | |
| | | DLT-11 | 316+80 | 317+80 | | | | | | | | | | | | | | 100 | | | | | | |
| | | SLT-10 | 308+84 | | | | | | | | | | | | | | | | | 10 | | | | |
| | | SLT-11 | 314+76 | | | | | | | | | | | | | | | | | 21 | | | | |
| | | LAT-11 | 316+00 | 316+60 | | | | | | | | | | | | | | | | | | 2 | | |
| | | X-11 | 315+80 | 317+80 | | | | | | | | | | | | | | | | | | | 200 | |
| | | X-12 | 315+80 | 316+80 | | | | | | | | | | | | | | | | | | | 200 | 1 |
| | | | | | | | | | | | | | | | | | | | | | | | | |
| 35-36 | 1-C | CLT-13 | 281+15 | 289+40 | | | | | 0.156 | | | | | | | | | | | | | | | |
| | | CLT-14 | 281+15 | 289+40 | | | | | 0.156 | | | | | | | | | | | | | | | |
| | | CLT-15 | 307+30 | 317+80 | | | | | 0.199 | | | | | | | | | | | | | | | |
| | | CLT-16 | 307+30 | 317+80 | | | | | 0.199 | | | | | | | | | | | | | | | |
| | | EWT-11 | 281+15 | 317+80 | | | | | | | | | | | 0.694 | | | | | | | | | |
| | | EYT-13 | 289+40 | 290+28 | | | | | | | | | | 0.017 | | | | | | | | | | |
| | | EYT-14 | 290+28 | 307+30 | | | | | | | | | | 0.322 | | | | | | | | | | |
| | | CHT-12 | 316+80 | 317+80 | | | | | | | | | | | | | 100 | | | | | | | |
| | | DLT-12 | 317+80 | 318+80 | | | | | | | | | | | | | | 100 | | | | | | |
| | | SLP-14 | 289+40 | | | | | | | | | | | | | | | | 24 | | | | | |
| | | SLP-15 | 290+28 | | | | | | | | | | | | | | | | 10 | | | | | |
| | | SLP-16 | 294+32 | | | | | | | | | | | | | | | | 12 | | | | | |
| | | SLP-17 | 295+27 | | | | | | | | | | | | | | | | 13 | | | | | |
| | | SLP-18 | 308+84 | | | | | | | | | | | | | | | | 19 | | | | | |
| | | SLP-19 | 314+84 | | | | | | | | | | | | | | | | 19 | | | | | |
| | | SLT-12 | 315+80 | | | | | | | | | | | | | | | | | 18 | | | | |
| | | LAT-12 | 315+95 | 316+95 | | | | | | | | | | | | | | | | | | 2 | | |
| | | X-13 | 317+80 | 318+80 | | | | | | | | | | | | | | | | | | | 100 | |
| | | X-14 | 316+80 | 317+80 | | | | | | | | | | | | | | | | | | | 200 | |
| | | | | | | | | | | | | | | | | | | | | | | | | |
| 36 | | SIGNALIZED INTERSECTION | | | | | | | | | | | | | | | | | | 18 | | | | |
| SUBTOTALS | | | | | 0 | 0 | 0.250 | 0 | 0.979 | 0 | 0 | 1.020 | 0 | 0.657 | 1.369 | 400 | 300 | 300 | 137 | 67 | 8 | 6 | 900 | 1 |
| TOTALS CARRIED TO GENERAL SUMMARY (SHEET NO. 22) | | | | | 0 | 0 | 0.25 | | 0.98 | | 0 | 1.02 | | 2.03 | | 400 | 300 | 300 | 137 | 67 | 8 | 6 | 900 | 1 |

CUY-US-042-4.29



P:\Middleburg Heights - City of\J20150340.000 Pearl Rd Rehab\Drawings\Trans\105726MS002.dwg 01-Mar-19 2:47 PM

| SHEET NO. | SECTION & PHASE | REFERENCE NO. | STATION FROM | STATION TO | 614 WORK ZONE LANE LINE, CLASS I, 6", 642 PAINT | 614 WORK ZONE LANE LINE, CLASS II, 6" | 614 WORK ZONE CENTER LINE, CLASS I, 642 PAINT (BROKEN AND SOLID, DOUBLE) | 614 WORK ZONE CENTER LINE, CLASS I, 642 PAINT (DOUBLE SOLID) | 614 WORK ZONE CENTER LINE, CLASS I, 740.06, TYPE I (BROKEN AND SOLID, DOUBLE) | 614 WORK ZONE CENTER LINE, CLASS I, 740.06, TYPE I (DOUBLE SOLID) | 614 WORK ZONE CENTER LINE, CLASS II | 614 WORK ZONE EDGE LINE, CLASS I, 6", 642 PAINT (YELLOW) | 614 WORK ZONE EDGE LINE, CLASS I, 6", 642 PAINT (WHITE) | 614 WORK ZONE EDGE LINE, CLASS I, 6", 740.06, TYPE I (YELLOW) | 614 WORK ZONE EDGE LINE, CLASS I, 6", 740.06, TYPE I (WHITE) | 614 WORK ZONE CHANNELIZING LINE, CLASS I, 12", 642 PAINT | 614 WORK ZONE CHANNELIZING LINE, CLASS I, 12", 740.06, TYPE I | 614 WORK ZONE DOTTED LINE, CLASS I 740.06, TYPE I | 614 WORK ZONE STOP LINE, CLASS I, 642 PAINT | 614 WORK ZONE STOP LINE, CLASS I, 740.06, TYPE I | 614 WORK ZONE ARROW, CLASS I, 642 PAINT | 614 WORK ZONE ARROW, CLASS I, 740.06, TYPE I | 642 REMOVAL OF PAVEMENT MARKING | |
|---|---|---|---|---|---|---|---|---|---|---|---|---|---|---|---|---|---|---|---|---|---|---|---|---|
| | | | | | MILE | MILE | MILE | MILE | MILE | MILE | MILE | MILE | MILE | MILE | MILE | FT | FT | FT | FT | FT | EACH | EACH | FT | EACH |
| | | | | | CITY OF MIDDLEBURG HEIGHTS | | | | | | | | | | | | | | | | | | | |
| 18 | 1-C | | 281+15 | 289+75 | | | 0.326 | | | | | | | | | | | | | | | | | |
| | | | 309+80 | 314+84 | | | 0.191 | | | | | | | | | | | | | | | | | |
| | | | 281+15 | 314+84 | 1.276 | | | | | | | | | | | | | | | | | | | |
| 18 | 1-D | | 281+15 | 289+75 | | | | | | | 0.326 | | | | | | | | | | | | | |
| | | | 309+80 | 314+84 | | | | | | | 0.191 | | | | | | | | | | | | | |
| | | | 281+15 | 314+84 | | 1.276 | | | | | | | | | | | | | | | | | | |
| 37 | 2-A | EYP-20 | 315+68 | 431+67 | | | | | | | | 2.197 | | | | | | | | | | | | |
| | | EYT-20 | 311+98 | 314+76 | | | | | | | | | | 0.053 | | | | | | | | | | |
| | | EYT-21 | 315+68 | 431+67 | | | | | | | | | | 2.197 | | | | | | | | | | |
| | | CHP-20 | 430+47 | 431+47 | | | | | | | | | | | | 100 | | | | | | | | |
| | | SLP-20 | 431+47 | | | | | | | | | | | | | | | | 10 | | | | | |
| | | LAP-20 | 430+67 | 431+27 | | | | | | | | | | | | | | | | | 2 | | | |
| | | X-20 | 311+98 | 314+76 | | | | | | | | | | | | | | | | | | | 278 | |
| | | SIGNALIZED INTERSECTIONS | | | | | | | | | | | | | | 700 | | | 112 | | 14 | | | |
| 38 | 2-B | CLP-20 | 315+68 | 431+60 | | | 2.195 | | | | | | | | | | | | | | | | | |
| | | CLT-20 | 312+98 | 314+76 | | | | | | 0.034 | | | | | | | | | | | | | | |
| | | CLT-21 | 315+81 | 431+60 | | | | | 2.195 | | | | | | | | | | | | | | | |
| | | EWT-20 | 310+78 | 314+76 | | | | | | | | | | | 0.075 | | | | | | | | | |
| | | EWT-21 | 315+81 | 431+60 | | | | | | | | | | | 2.195 | | | | | | | | | |
| | | CHT-20 | 312+98 | 314+76 | | | | | | | | | | | | | 178 | | | | | | | |
| | | SLT-20 | 314+76 | | | | | | | | | | | | | | | | | 10 | | | | |
| | | SLT-21 | 431+60 | | | | | | | | | | | | | | | | | 22 | | | | |
| | | LAT-20 | 313+70 | 314+60 | | | | | | | | | | | | | | | | | | 3 | | |
| | | X-21 | 310+78 | 311+98 | | | | | | | | | | | | | | | | | | | 120 | |
| | | X-22 | 312+98 | 314+76 | | | | | | | | | | | | | | | | | | | 356 | 3 |
| | | SIGNALIZED INTERSECTIONS | | | | | | | | | | | | | | | | | | 154 | | | | |
| 39 | 2-C | CLT-24 | 314+26 | 314+76 | | | | 0.009 | | | | | | | | | | | | | | | | |
| | | CLT-25 | 315+81 | 431+57 | | | | | 2.192 | | | | | | | | | | | | | | | |
| | | CLT-26 | 315+81 | 431+57 | | | | | 2.192 | | | | | | | | | | | | | | | |
| | | EYT-22 | 312+98 | 314+26 | | | | | | | | | | 0.024 | | | | | | | | | | |
| | | EYT-23 | 312+98 | 314+26 | | | | | | | | | | 0.024 | | | | | | | | | | |
| | | EWT-23 | 314+26 | 314+76 | | | | | | | | | | | 0.009 | | | | | | | | | |
| | | EWT-24 | 315+81 | 431+57 | | | | | | | | | | | 2.192 | | | | | | | | | |
| | | CHT-22 | 312+98 | 314+76 | | | | | | | | | | | | | 178 | | | | | | | |
| | | DLT-21 | 311+98 | 312+98 | | | | | | | | | | | | | | 100 | | | | | | |
| | | SLT-22 | 315+81 | | | | | | | | | | | | | | | | | 18 | | | | |
| | | SLT-23 | 431+57 | | | | | | | | | | | | | | | | | 19 | | | | |
| | | LAT-22 | 313+30 | 314+60 | | | | | | | | | | | | | | | | | | 3 | | |
| | | X-26 | 314+76 | | | | | | | | | | | | | | | | | | | | 10 | |
| | | SIGNALIZED INTERSECTIONS | | | | | | | | | | | | | | | | | 133 | 126 | | | | |
| 18 | | | 315+81 | 431+60 | 4.386 | | 4.386 | | | | | | | | | | | | 256 | | | | | |
| 18 | 2-D | | 315+81 | 431+60 | | 4.386 | | | | | 4.386 | | | | | | | | | | | | | |
| SUBTOTALS | | | | | 5.662 | 5.662 | 7.098 | 0.009 | 6.579 | 0.034 | 4.903 | 2.197 | 0 | 2.298 | 4.471 | 800 | 356 | 100 | 511 | 349 | 16 | 6 | 764 | 3 |
| TOTALS CARRIED TO GENERAL SUMMARY (SHEET NO. 22) | | | | | 5.67 | 5.67 | 7.11 | | 6.62 | | 4.91 | 2.20 | | 6.77 | | 800 | 356 | 100 | 511 | 349 | 16 | 6 | 764 | 3 |

CALCULATED DP
CHECKED BT

# MAINTENANCE OF TRAFFIC SUBSUMMARY - 3 OF 7

CUY-US-042-4.29



P:\Middleburg Heights - City of\J20150340.000 Pearl Rd Rehab\Drawings\Trans\105726MS003.dwg 01-Mar-19 2:48 PM

# MAINTENANCE OF TRAFFIC SUBSUMMARY - 4 OF 7

CALCULATED DP
CHECKED BT

| SHEET NO. | SECTION & PHASE | REFERENCE NO. | STATION FROM | STATION TO | 614 WORK ZONE LANE LINE, CLASS I, 6", 642 PAINT | 614 WORK ZONE LANE LINE, CLASS II, 6" | 614 WORK ZONE CENTER LINE, CLASS I, 642 PAINT (BROKEN AND SOLID, DOUBLE) | 614 WORK ZONE CENTER LINE, CLASS I, 642 PAINT (DOUBLE SOLID) | 614 WORK ZONE CENTER LINE, CLASS I, 740.06, TYPE I (BROKEN AND SOLID, DOUBLE) | 614 WORK ZONE CENTER LINE, CLASS I, 740.06, TYPE I (DOUBLE SOLID) | 614 WORK ZONE CENTER LINE, CLASS II | 614 WORK ZONE EDGE LINE, CLASS I, 6", 642 PAINT (YELLOW) | 614 WORK ZONE EDGE LINE, CLASS I, 6", 642 PAINT (WHITE) | 614 WORK ZONE EDGE LINE, CLASS I, 6", 740.06, TYPE I (YELLOW) | 614 WORK ZONE EDGE LINE, CLASS I, 6", 740.06, TYPE I (WHITE) | 614 WORK ZONE CHANNELIZING LINE, CLASS I, 12", 642 PAINT | 614 WORK ZONE CHANNELIZING LINE, CLASS I, 12", 740.06, TYPE I | 614 WORK ZONE DOTTED LINE, CLASS I 740.06, TYPE I | 614 WORK ZONE STOP LINE, CLASS I, 642 PAINT | 614 WORK ZONE STOP LINE, CLASS I, 740.06, TYPE I | 614 WORK ZONE ARROW, CLASS I, 642 PAINT | 614 WORK ZONE ARROW, CLASS I, 740.06, TYPE I | 642 REMOVAL OF PAVEMENT MARKING | 642 REMOVAL OF PAVEMENT MARKING |
|---|---|---|---|---|---|---|---|---|---|---|---|---|---|---|---|---|---|---|---|---|---|---|---|---|
| | | | | | MILE | MILE | MILE | MILE | MILE | MILE | MILE | MILE | MILE | MILE | MILE | FT | FT | FT | FT | FT | EACH | EACH | FT | EACH |
| | | | | | **CITY OF MIDDLEBURG HEIGHTS** | | | | | | | | | | | | | | | | | | | |
| 40 | 3-A | X-30 | 429+80 | 431+47 | | | | | | | | | | | | | | | | | | | 167 | |
| | | EYT-30 | 429+80 | 431+47 | | | | | | | | | | 0.032 | | | | | | | | | | |
| 41 | 3-B | X-31 | 427+56 | 429+79 | | | | | | | | | | | | | | | | | | | 220 | |
| | | X-32 | 427+59 | 431+57 | | | | | | | | | | | | | | | | | | | 350 | 3 |
| | | EWT-30 | 429+80 | 431+47 | | | | | | | | | | | 0.075 | | | | | | | | | |
| | | CHT-30 | 429+79 | 431+57 | | | | | | | | | | | | | 178 | | | | | | | |
| | | LAT-30 | 430+10 | 431+44 | | | | | | | | | | | | | | | | | | 3 | | |
| 42 | 3-C | X-36 | 431+50 | | | | | | | | | | | | | | | | | | | | 10 | |
| | | CLT-34 | 431+00 | 431+50 | | | | | | 0.009 | | | | | | | | | | | | | | |
| | | EYT-32 | 429+74 | 431+00 | | | | | | | | | | 0.024 | | | | | | | | | | |
| | | EYT-33 | 429+74 | 431+00 | | | | | | | | | | 0.024 | | | | | | | | | | |
| | | EWT-33 | 431+00 | 431+50 | | | | | | | | | | | 0.009 | | | | | | | | | |
| | | CHT-32 | 428+59 | 431+47 | | | | | | | | | | | | | 288 | | | | | | | |
| | | DLT-31 | 427+59 | 428+59 | | | | | | | | | | | | | | 100 | | | | | | |
| | | LAT-32 | 430+10 | 431+40 | | | | | | | | | | | | | | | | | | 3 | | |
| **SUBTOTALS - MIDDLEBURG HEIGHTS** | | | | | | | 0 | 0 | 0 | 0.009 | | 0 | 0 | 0.080 | 0.084 | | | | | | | | | |
| | | | | | 0 | 0 | 0 | | 0.01 | | 0 | 0 | | 0.17 | | 0 | 466 | 100 | 0 | 0 | 0 | 6 | 747 | 3 |
| | | | | | **CITY OF PARMA HEIGHTS** | | | | | | | | | | | | | | | | | | | |
| 38 | 2-B | X-23 | 433+17 | 435+17 | | | | | | | | | | | | | | | | | | | 200 | |
| | | X-24 | 433+17 | 434+17 | | | | | | | | | | | | | | | | | | | 200 | |
| | | X-25 | 433+17 | | | | | | | | | | | | | | | | | | | | 10 | |
| | | CLT-22 | 433+17 | 434+17 | | | | | | 0.019 | | | | | | | | | | | | | | |
| | | CLT-23 | 433+67 | 434+17 | | | | | | 0.010 | | | | | | | | | | | | | | |
| | | EWT-22 | 433+17 | 434+17 | | | | | | | | | | | 0.019 | | | | | | | | | |
| | | CHT-21 | 433+17 | 434+17 | | | | | | | | | | | | | 100 | | | | | | | |
| | | DLT-20 | 434+17 | 435+17 | | | | | | | | | | | | | | 100 | | | | | | |
| | | LAT-21 | 433+37 | 434+07 | | | | | | | | | | | | | | | | | | 2 | | |
| 39 | 2-C | X-27 | 435+17 | 436+17 | | | | | | | | | | | | | | | | | | | 100 | |
| | | X-28 | 434+16 | 435+16 | | | | | | | | | | | | | | | | | | | 100 | |
| | | CLT-27 | 433+16 | 435+16 | | | | | | 0.038 | | | | | | | | | | | | | | |
| | | EYT-24 | 433+16 | 435+16 | | | | | | | | | | 0.038 | | | | | | | | | | |
| | | CHT-23 | 433+16 | 435+16 | | | | | | | | | | | | | 200 | | | | | | | |
| | | DLT-22 | 435+16 | 436+16 | | | | | | | | | | | | | | 100 | | | | | | |
| | | SLT-24 | 435+16 | | | | | | | | | | | | | | | | | 10 | | | | |
| | | LAT-23 | 433+36 | 434+26 | | | | | | | | | | | | | | | | | | 2 | | |
| | | LAT-24 | 433+36 | 434+26 | | | | | | | | | | | | | | | | | | 2 | | |
| 40 | 3-A | EYP-30 | 433+17 | 496+16 | | | | | | | | 1.193 | | | | | | | | | | | | |
| | | EYT-31 | 433+17 | 496+16 | | | | | | | | | | 1.193 | | | | | | | | | | |
| | | CHP-30 | 495+16 | 496+16 | | | | | | | | | | | | 100 | | | | | | | | |
| | | SLP-30 | 496+16 | | | | | | | | | | | | | | | | 10 | | | | | |
| | | LAP-30 | 495+36 | 495+96 | | | | | | | | | | | | | | | | | 2 | | | |
| | | (6) INTERSECTIONS - NB | | | | | | | | | | | | | | 600 | | | 96 | | 12 | | | |
| **SUBTOTALS - PARMA HEIGHTS** | | | | | | | 0 | 0 | 0 | 0.067 | | 1.193 | 0 | 1.231 | 0.019 | | | | | | | | | |
| | | | | | 0 | 0 | 0 | | 0.07 | | 0 | 1.20 | | 1.25 | | 700 | 300 | 200 | 106 | 10 | 14 | 6 | 610 | 0 |
| **TOTALS CARRIED TO GENERAL SUMMARY (SHEET NO. 22)** | | | | | 0 | 0 | 0 | | 0.08 | | 0 | 1.20 | | 1.42 | | 700 | 766 | 300 | 106 | 10 | 14 | 12 | 1357 | 3 |

CUY-US-042-4.29



P:\Middleburg Heights - City of\J20150340.000 Pearl Rd Rehab\Drawings\Trans\105726MS004.dwg 01-Mar-19 2:55 PM

# MAINTENANCE OF TRAFFIC SUBSUMMARY - 5 OF 7

CALCULATED DP
CHECKED BT

| SHEET NO. | SECTION & PHASE | REFERENCE NO. | STATION FROM | STATION TO | 614 WORK ZONE LANE LINE, CLASS I, 6", 642 PAINT | 614 WORK ZONE LANE LINE, CLASS II, 6" | 614 WORK ZONE CENTER LINE, CLASS I, 642 PAINT (BROKEN AND SOLID, DOUBLE) | 614 WORK ZONE CENTER LINE, CLASS I, 642 PAINT (DOUBLE SOLID) | 614 WORK ZONE CENTER LINE, CLASS I, 740.06, TYPE I (BROKEN AND SOLID, DOUBLE) | 614 WORK ZONE CENTER LINE, CLASS I, 740.06, TYPE I (DOUBLE SOLID) | 614 WORK ZONE CENTER LINE, CLASS II | 614 WORK ZONE EDGE LINE, CLASS I, 6", 642 PAINT (YELLOW) | 614 WORK ZONE EDGE LINE, CLASS I, 6", 642 PAINT (WHITE) | 614 WORK ZONE EDGE LINE, CLASS I, 6", 740.06, TYPE I (YELLOW) | 614 WORK ZONE EDGE LINE, CLASS I, 6", 740.06, TYPE I (WHITE) | 614 WORK ZONE CHANNELIZING LINE, CLASS I, 12", 642 PAINT | 614 WORK ZONE CHANNELIZING LINE, CLASS I, 12", 740.06, TYPE I | 614 WORK ZONE DOTTED LINE, CLASS I 740.06, TYPE I | 614 WORK ZONE STOP LINE, CLASS I, 642 PAINT | 614 WORK ZONE STOP LINE, CLASS I, 740.06, TYPE I | 614 WORK ZONE ARROW, CLASS I, 642 PAINT | 614 WORK ZONE ARROW, CLASS I, 740.06, TYPE I | 642 REMOVAL OF PAVEMENT MARKING | |
|---|---|---|---|---|---|---|---|---|---|---|---|---|---|---|---|---|---|---|---|---|---|---|---|---|---|
| | | | | | MILE | MILE | MILE | MILE | MILE | MILE | MILE | MILE | MILE | MILE | MILE | FT | FT | FT | FT | FT | EACH | EACH | FT | EACH |
| | | | | | CITY OF PARMA HEIGHTS | | | | | | | | | | | | | | | | | | | |
| 41 | 3-B | X-33 | 497+31 | | | | | | | | | | | | | | | | | | | | 10 | |
| | | X-34 | 497+31 | 499+31 | | | | | | | | | | | | | | | | | | | 200 | |
| | | X-35 | 497+31 | 498+31 | | | | | | | | | | | | | | | | | | | 100 | |
| | | CLP-30 | 433+17 | 496+16 | | | 1.193 | | | | | | | | | | | | | | | | | |
| | | CLT-31 | 433+17 | 496+16 | | | | | 1.193 | | | | | | | | | | | | | | | |
| | | CLT-32 | 497+31 | 500+72 | | | | | | 0.065 | | | | | | | | | | | | | | |
| | | CLT-33 | 497+81 | 498+31 | | | | | | 0.010 | | | | | | | | | | | | | | |
| | | EWT-31 | 433+17 | 496+16 | | | | | | | | | | | 1.193 | | | | | | | | | |
| | | EWT-32 | 497+81 | 498+31 | | | | | | | | | | | 0.019 | | | | | | | | | |
| | | CHT-31 | 497+31 | 498+31 | | | | | | | | | | | | | 100 | | | | | | | |
| | | DLT-30 | 498+31 | 499+31 | | | | | | | | | | | | | | 100 | | | | | | |
| | | SLT-30 | 496+16 | | | | | | | | | | | | | | | | | 22 | | | | |
| | | LAT-31 | 497+51 | 498+21 | | | | | | | | | | | | | | | | | | 2 | | |
| | | (6) INTERSECTIONS | | | | | | | | | | | | | | | | | | 132 | | | | |
| 42 | 3-C | X-37 | 499+31 | 500+31 | | | | | | | | | | | | | | | | | | | 100 | |
| | | X-38 | 498+31 | 499+31 | | | | | | | | | | | | | | | | | | | 100 | |
| | | CLT-35 | 433+17 | 496+16 | | | | | 1.193 | | | | | | | | | | | | | | | |
| | | CLT-36 | 433+17 | 496+16 | | | | | 1.193 | | | | | | | | | | | | | | | |
| | | CLT-37 | 497+31 | 499+31 | | | | | | 0.038 | | | | | | | | | | | | | | |
| | | EWT-34 | 433+17 | 496+16 | | | | | | | | | | | 1.193 | | | | | | | | | |
| | | EWT-35 | 497+31 | 499+31 | | | | | | | | | | | 0.038 | | | | | | | | | |
| | | CHT-33 | 498+31 | 499+31 | | | | | | | | | | | | | 100 | | | | | | | |
| | | CHT-34 | 497+31 | 498+31 | | | | | | | | | | | | | 100 | | | | | | | |
| | | DLT-32 | 499+31 | 500+31 | | | | | | | | | | | | | | 100 | | | | | | |
| | | SLT-31 | 433+17 | | | | | | | | | | | | | | | | | 18 | | | | |
| | | SLT-32 | 496+16 | | | | | | | | | | | | | | | | | 19 | | | | |
| | | SLT-33 | 497+31 | | | | | | | | | | | | | | | | | 10 | | | | |
| | | LAT-33 | 497+41 | 498+41 | | | | | | | | | | | | | | | | | | 2 | | |
| | | LAT-34 | 497+41 | 498+41 | | | | | | | | | | | | | | | | | | 2 | | |
| | | (6) INTERSECTIONS | | | | | | | | | | | | | | | | | 114 | 102 | | | | |
| 18 | | | 433+17 | 496+16 | 2.386 | | 2.386 | | | | | | | | | | | | 224 | | | | | |
| 18 | 3-D | | 433+17 | 496+16 | | 2.386 | | | | | 2.386 | | | | | | | | | | | | | |
| 43 | 4-A | X-40 | 493+23 | 496+16 | | | | | | | | | | | | | | | | | | | 293 | |
| | | EYP-40 | 497+31 | 576+35 | | | | | | | | 1.497 | | | | | | | | | | | | |
| | | EYT-40 | 493+23 | 496+16 | | | | | | | | | | 0.056 | | | | | | | | | | |
| | | EYT-41 | 497+31 | 576+35 | | | | | | | | | | 1.497 | | | | | | | | | | |
| | | CHP-40 | 574+25 | 575+27 | | | | | | | | | | | | 102 | | | | | | | | |
| | | (2) INTERSECTIONS - NB | | | | | | | | | | | | | | 200 | | | 32 | | 4 | | | |
| 44 | 4-B | X-41 | 492+36 | 493+23 | | | | | | | | | | | | | | | | | | | 87 | |
| | | X-42 | 494+56 | 496+16 | | | | | | | | | | | | | | | | | | | 320 | 2 |
| | | CLP-40 | 497+31 | 538+20 | | | 0.774 | | | | | | | | | | | | | | | | | |
| | | CLT-40 | 494+56 | 496+16 | | | | | | 0.030 | | | | | | | | | | | | | | |
| | | CLT-41 | 497+31 | 538+20 | | | | | 0.774 | | | | | | | | | | | | | | | |
| | | EYP-41 | 538+89 | 540+34 | | | | | | | | 0.028 | | | | | | | | | | | | |
| | | EYP-42 | 538+89 | 540+34 | | | | | | | | 0.028 | | | | | | | | | | | | |
| | | EWT-40 | 492+36 | 496+16 | | | | | | | | | | | 0.072 | | | | | | | | | |
| | | EWT-41 | 497+31 | 576+35 | | | | | | | | | | | 1.497 | | | | | | | | | |
| | | CHT-40 | 494+56 | 496+16 | | | | | | | | | | | | | 160 | | | | | | | |
| | | SLT-40 | 496+16 | | | | | | | | | | | | | | | | | 11 | | | | |
| | | LAT-40 | 495+36 | 495+96 | | | | | | | | | | | | | | | | | | 2 | | |
| SUBTOTALS | | | | | 2.386 | 2.386 | 4.353 | 0 | 4.353 | 0.143 | 2.386 | 1.553 | 0 | 1.553 | 4.012 | 302 | 460 | 200 | 370 | 314 | 4 | 8 | 1210 | 2 |
| TOTALS CARRIED TO GENERAL SUMMARY (SHEET NO. 22) | | | | | 2.39 | 2.39 | 4.36 | | 4.50 | | 2.39 | 1.56 | | 5.57 | | 302 | 460 | 200 | 370 | 314 | 4 | 8 | 1210 | 2 |

CUY-US-042-4.29



P:\Middleburg Heights - City of\J20150340.000 Pearl Rd Rehab\Drawings\Trans\105726MS005.dwg 01-Mar-19 2:55 PM

# MAINTENANCE OF TRAFFIC SUBSUMMARY - 6 OF 7

CALCULATED DP
CHECKED BT

| SHEET NO. | SECTION & PHASE | REFERENCE NO. | STATION FROM | STATION TO | 614 WORK ZONE LANE LINE, CLASS I, 6", 642 PAINT | 614 WORK ZONE LANE LINE, CLASS II, 6" | 614 WORK ZONE CENTER LINE, CLASS I, 642 PAINT (BROKEN AND SOLID, DOUBLE) | 614 WORK ZONE CENTER LINE, CLASS I, 642 PAINT (DOUBLE SOLID) | 614 WORK ZONE CENTER LINE, CLASS I, 740.06, TYPE I (BROKEN AND SOLID, DOUBLE) | 614 WORK ZONE CENTER LINE, CLASS I, 740.06, TYPE I (DOUBLE SOLID) | 614 WORK ZONE CENTER LINE, CLASS II | 614 WORK ZONE EDGE LINE, CLASS I, 6", 642 PAINT (YELLOW) | 614 WORK ZONE EDGE LINE, CLASS I, 6", 642 PAINT (WHITE) | 614 WORK ZONE EDGE LINE, CLASS I, 6", 740.06, TYPE I (YELLOW) | 614 WORK ZONE EDGE LINE, CLASS I, 6", 740.06, TYPE I (WHITE) | 614 WORK ZONE CHANNELIZING LINE, CLASS I, 12", 642 PAINT | 614 WORK ZONE CHANNELIZING LINE, CLASS I, 12", 740.06, TYPE I | 614 WORK ZONE DOTTED LINE, CLASS I 740.06, TYPE I | 614 WORK ZONE STOP LINE, CLASS I, 642 PAINT | 614 WORK ZONE STOP LINE, CLASS I, 740.06, TYPE I | 614 WORK ZONE ARROW, CLASS I, 642 PAINT | 614 WORK ZONE ARROW, CLASS I, 740.06, TYPE I | 642 REMOVAL OF PAVEMENT MARKING | |
|---|---|---|---|---|---|---|---|---|---|---|---|---|---|---|---|---|---|---|---|---|---|---|---|---|---|
| | | | | | MILE | MILE | MILE | MILE | MILE | MILE | MILE | MILE | MILE | MILE | MILE | FT | FT | FT | FT | FT | EACH | EACH | FT | EACH |
| | | | | | CITY OF PARMA HEIGHTS | | | | | | | | | | | | | | | | | | | |
| 44-45 | 4-B | CLP-41 | 541+08 | 549+24 | | | | 0.155 | | | | | | | | | | | | | | | | |
| | | | | | | | | | | | | | | | | | | | | | | | | |
| 45 | 4-B | X-43 | 575+27 | 576+35 | | | | | | | | | | | | | | | | | | | 216 | 2 |
| | | X-44 | 577+67 | 579+67 | | | | | | | | | | | | | | | | | | | 200 | |
| | | X-45 | 577+67 | 579+17 | | | | | | | | | | | | | | | | | | | 150 | |
| | | X-46 | 577+76 | 579+27 | | | | | | | | | | | | | | | | | | | | 4 |
| | | X-47 | 577+67 | | | | | | | | | | | | | | | | | | | | 10 | |
| | | CLP-42 | 551+13 | 576+35 | | | 0.478 | | | | | | | | | | | | | | | | | |
| | | CLT-42 | 551+13 | 576+35 | | | | | 0.478 | | | | | | | | | | | | | | | |
| | | CLT-43 | 577+67 | 580+12 | | | | | | 0.046 | | | | | | | | | | | | | | |
| | | CLT-44 | 578+17 | 579+17 | | | | | | 0.019 | | | | | | | | | | | | | | |
| | | EYP-43 | 549+88 | 551+13 | | | | | | | | 0.024 | | | | | | | | | | | | |
| | | EYP-44 | 549+88 | 551+13 | | | | | | | | 0.024 | | | | | | | | | | | | |
| | | EYT-42 | 577+87 | 579+17 | | | | | | | | | | 0.025 | | | | | | | | | | |
| | | EWT-42 | 549+88 | 576+35 | | | | | | | | | | | 0.501 | | | | | | | | | |
| | | EWT-43 | 577+67 | 579+17 | | | | | | | | | | | 0.028 | | | | | | | | | |
| | | CHT-41 | 577+67 | 578+67 | | | | | | | | | | | | | 100 | | | | | | | |
| | | DLT-40 | 578+67 | 579+67 | | | | | | | | | | | | | | 100 | | | | | | |
| | | SLT-41 | 576+17 | | | | | | | | | | | | | | | | | 12 | | | | |
| | | LAT-41 | 577+87 | 578+57 | | | | | | | | | | | | | | | | | | 2 | | |
| | | (6) INTERSECTIONS - NB | | | | | | | | | | | | | | | | | | 132 | | | | |
| | | | | | | | | | | | | | | | | | | | | | | | | |
| 46 | 4-C | X-48 | 496+16 | | | | | | | | | | | | | | | | | | | | 10 | |
| | | CLT-45 | 495+66 | 496+16 | | | | | | 0.009 | | | | | | | | | | | | | | |
| | | CLT-46 | 497+31 | 538+15 | | | | | 0.774 | | | | | | | | | | | | | | | |
| | | CLT-47 | 497+31 | 538+15 | | | | | 0.774 | | | | | | | | | | | | | | | |
| | | EYT-43 | 494+56 | 495+66 | | | | | | | | | | 0.021 | | | | | | | | | | |
| | | EYT-45 | 538+84 | 540+34 | | | | | | | | | | 0.028 | | | | | | | | | | |
| | | EYT-46 | 538+84 | 540+34 | | | | | | | | | | 0.028 | | | | | | | | | | |
| | | EWT-44 | 495+66 | 496+16 | | | | | | | | | | | 0.009 | | | | | | | | | |
| | | EWT-45 | 497+31 | 540+34 | | | | | | | | | | | 0.815 | | | | | | | | | |
| | | CHT-42 | 494+16 | 496+16 | | | | | | | | | | | | | 200 | | | | | | | |
| | | DLT-41 | 492+36 | 494+16 | | | | | | | | | | | | | | 180 | | | | | | |
| | | LAT-42 | 494+35 | 495+95 | | | | | | | | | | | | | | | | | | 3 | | |
| | | | | | | | | | | | | | | | | | | | | | | | | |
| 46-47 | 4-C | CLT-48 | 540+34 | 549+25 | | | | | | 0.169 | | | | | | | | | | | | | | |
| | | | | | | | | | | | | | | | | | | | | | | | | |
| 47 | 4-C | X-49 | 576+35 | | | | | | | | | | | | | | | | | | | | 10 | |
| | | X-50 | 579+67 | 580+67 | | | | | | | | | | | | | | | | | | | 100 | |
| | | X-51 | 579+17 | 579+67 | | | | | | | | | | | | | | | | | | | 50 | |
| | | CLT-49 | 551+13 | 576+35 | | | | | 0.478 | | | | | | | | | | | | | | | |
| | | CLT-50 | 551+13 | 576+35 | | | | | 0.478 | | | | | | | | | | | | | | | |
| | | CLT-51 | 577+67 | 579+67 | | | | | | 0.038 | | | | | | | | | | | | | | |
| | | EYT-47 | 549+88 | 551+13 | | | | | | | | | | 0.024 | | | | | | | | | | |
| | | EYT-48 | 549+88 | 551+13 | | | | | | | | | | 0.024 | | | | | | | | | | |
| | | EYT-49 | 577+67 | 579+67 | | | | | | | | | | 0.038 | | | | | | | | | | |
| | | EWT-46 | 549+88 | 576+35 | | | | | | | | | | | 0.501 | | | | | | | | | |
| | | CHT-43 | 578+67 | 579+67 | | | | | | | | | | | | | 100 | | | | | | | |
| | | CHT-44 | 577+67 | 579+67 | | | | | | | | | | | | | 200 | | | | | | | |
| | | DLT-42 | 579+67 | 580+67 | | | | | | | | | | | | | | 100 | | | | | | |
| | | SLT-42 | 577+57 | | | | | | | | | | | | | | | | | 10 | | | | |
| | | LAT-43 | 577+80 | 579+10 | | | | | | | | | | | | | | | | | | 3 | | |
| | | LAT-44 | 577+80 | 578+45 | | | | | | | | | | | | | | | | | | 2 | | |
| | | (6) SIGNALIZED INTERSECTIONS | | | | | | | | | | | | | | | | | 108 | 114 | | | | |
| | | | | | | | | | | | | | | | | | | | | | | | | |
| 18 | | | 497+31 | 575+27 | 2.953 | | | 2.953 | | | | | | | | | | | 416 | | | | | |
| 18 | 4-D | | 497+31 | 575+27 | | 2.953 | | | | | 2.953 | | | | | | | | | | | | | |
| SUBTOTALS | | | | | 2.953 | 2.953 | 0.478 | 3.108 | 2.982 | 0.281 | 2.953 | 0.048 | 0 | 0.188 | 1.854 | 0 | 600 | 380 | 524 | 268 | 0 | 10 | 746 | 6 |
| TOTALS CARRIED TO GENERAL SUMMARY (SHEET NO. 22) | | | | | 2.94 | 2.94 | 3.59 | | 3.27 | | 2.94 | 0.05 | | 2.05 | | 0 | 600 | 380 | 524 | 268 | 0 | 10 | 746 | 6 |

CUY-US-042-4.29



P:\Middleburg Heights - City of\J20150340.000 Pearl Rd Rehab\Drawings\Trans\105726MS006.dwg 01-Mar-19 2:56 PM

# MAINTENANCE OF TRAFFIC SUBSUMMARY - 7 OF 7

CALCULATED DP
CHECKED BT

| SHEET NO. | SECTION & PHASE | REFERENCE NO. | STATION FROM | STATION TO | 614 WORK ZONE LANE LINE, CLASS I, 6", 642 PAINT | 614 WORK ZONE LANE LINE, CLASS II, 6" | 614 WORK ZONE CENTER LINE, CLASS I, 642 PAINT (BROKEN AND SOLID, DOUBLE) | 614 WORK ZONE CENTER LINE, CLASS I, 642 PAINT (DOUBLE SOLID) | 614 WORK ZONE CENTER LINE, CLASS I, 740.06, TYPE I (BROKEN AND SOLID, DOUBLE) | 614 WORK ZONE CENTER LINE, CLASS I, 740.06, TYPE I (DOUBLE SOLID) | 614 WORK ZONE CENTER LINE, CLASS II | 614 WORK ZONE EDGE LINE, CLASS I, 6", 642 PAINT (YELLOW) | 614 WORK ZONE EDGE LINE, CLASS I, 6", 642 PAINT (WHITE) | 614 WORK ZONE EDGE LINE, CLASS I, 6", 740.06, TYPE I (YELLOW) | 614 WORK ZONE EDGE LINE, CLASS I, 6", 740.06, TYPE I (WHITE) | 614 WORK ZONE CHANNELIZING LINE, CLASS I, 12", 642 PAINT | 614 WORK ZONE CHANNELIZING LINE, CLASS I, 12", 740.06, TYPE I | 614 WORK ZONE DOTTED LINE, CLASS I 740.06, TYPE I | 614 WORK ZONE STOP LINE, CLASS I, 642 PAINT | 614 WORK ZONE STOP LINE, CLASS I, 740.06, TYPE I | 614 WORK ZONE ARROW, CLASS I, 642 PAINT | 614 WORK ZONE ARROW, CLASS I, 740.06, TYPE I | 642 REMOVAL OF PAVEMENT MARKING | |
|---|---|---|---|---|---|---|---|---|---|---|---|---|---|---|---|---|---|---|---|---|---|---|---|---|
| | | | | | MILE | MILE | MILE | MILE | MILE | MILE | MILE | MILE | MILE | MILE | MILE | FT | FT | FT | FT | FT | EACH | EACH | FT | EACH |
| | | | | | CITY OF PARMA HEIGHTS | | | | | | | | | | | | | | | | | | | |
| 48 | STUMPH ROAD | X-52 | | | | | | | | | | | | | | | | | | | | | 750 | |
| | STAGE A | X-53 | | | | | | | | | | | | | | | | | | | | | 105 | |
| | | X-54 | | | | | | | | | | | | | | | | | | | | | 220 | |
| | | CLT-52 | | | | | | | | 0.019 | | | | | | | | | | | | | | |
| | | EYT-50 | | | | | | | | | | | | 0.062 | | | | | | | | | | |
| | | EYT-51 | | | | | | | | | | | | 0.042 | | | | | | | | | | |
| | | EWT-46 | | | | | | | | | | | | | 0.142 | | | | | | | | | |
| | | SLT-43 | | | | | | | | | | | | | | | | | 11 | | | | | |
| | YORK ROAD | X-55 | | | | | | | | | | | | | | | | | | | | | 225 | |
| | STAGE A | X-56 | | | | | | | | | | | | | | | | | | | | | 230 | |
| | | X-57 | | | | | | | | | | | | | | | | | | | | | 125 | |
| | | CLT-53 | | | | | | | | 0.019 | | | | | | | | | | | | | | |
| | | EYT-52 | | | | | | | | | | | | 0.056 | | | | | | | | | | |
| | | EYT-53 | | | | | | | | | | | | 0.024 | | | | | | | | | | |
| | | EWT-47 | | | | | | | | | | | | | 0.033 | | | | | | | | | |
| 49 | STUMPH ROAD | CLT-54 | | | | | | | | 0.019 | | | | | | | | | | | | | | |
| | STAGE B | EYT-54 | | | | | | | | | | | | 0.062 | | | | | | | | | | |
| | | EYT-55 | | | | | | | | | | | | 0.041 | | | | | | | | | | |
| | | EWT-48 | | | | | | | | | | | | | 0.050 | | | | | | | | | |
| | YORK ROAD | X-58 | | | | | | | | | | | | | | | | | | | | | 85 | |
| | STAGE B | CLT-55 | | | | | | | | 0.019 | | | | | | | | | | | | | | |
| | | EYT-56 | | | | | | | | | | | | 0.043 | | | | | | | | | | |
| | | EYT-57 | | | | | | | | | | | | 0.024 | | | | | | | | | | |
| | | EWT-49 | | | | | | | | | | | | | 0.090 | | | | | | | | | |
| | | SLT-44 | | | | | | | | | | | | | | | | | 12 | | | | | |
| SUBTOTALS | | | | | 0 | 0 | 0 | 0 | 0 | 0.076 | 0 | 0 | 0 | 0.354 | 0.315 | 0 | 0 | 0 | 0 | 23 | 0 | 0 | 1740 | 0 |
| TOTALS CARRIED TO GENERAL SUMMARY (SHEET NO. 22) | | | | | 0 | 0 | 0 | | 0.08 | | 0 | 0 | | 0.67 | | 0 | 0 | 0 | 0 | 23 | 0 | 0 | 1740 | 0 |

CUY-US-042-4.29



P:\Middleburg Heights - City of\J20150340.000 Pearl Rd Rehab\Drawings\Trans\105726MS007.dwg 01-Mar-19 2:56 PM

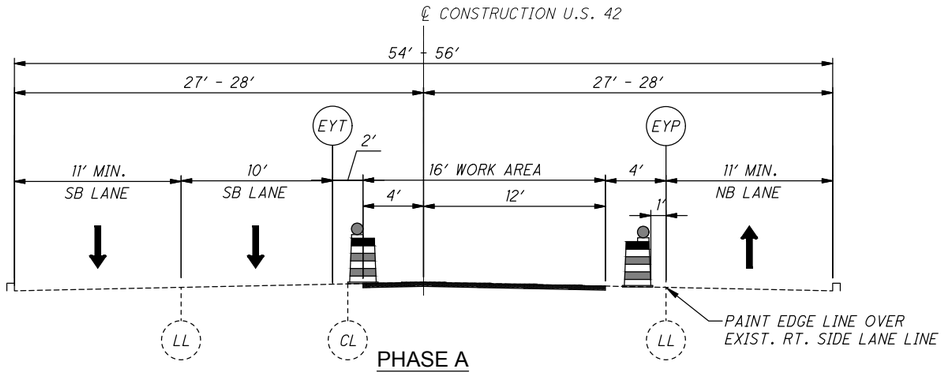


PHASE A

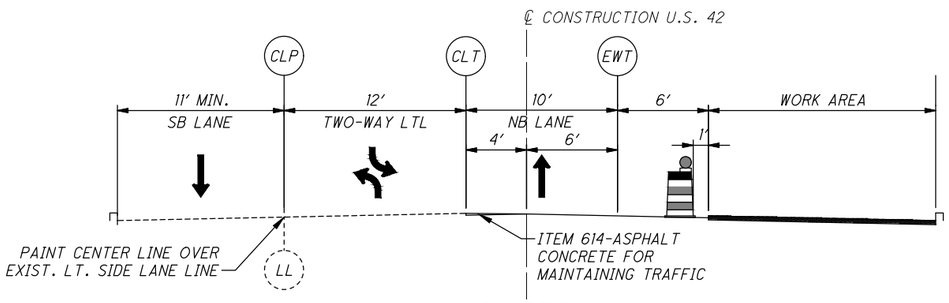


PHASE B

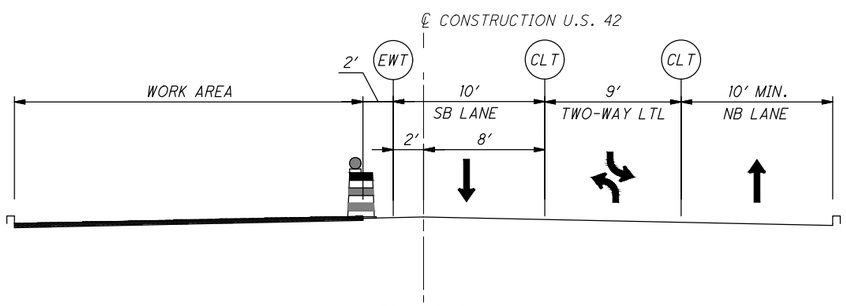


PHASE C

## NORMAL PHASE SECTIONS

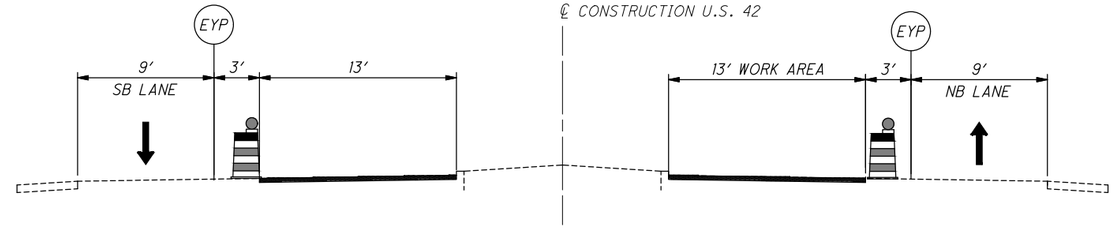


PHASE A

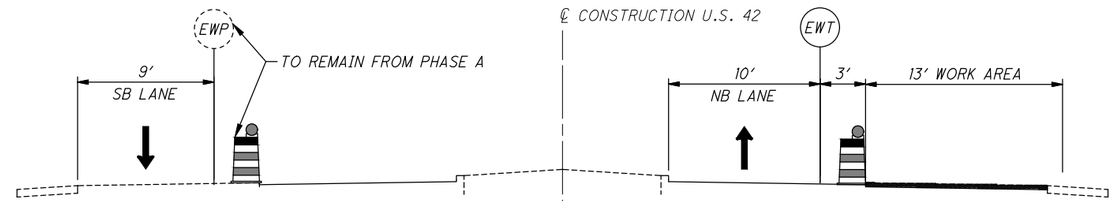


PHASE B

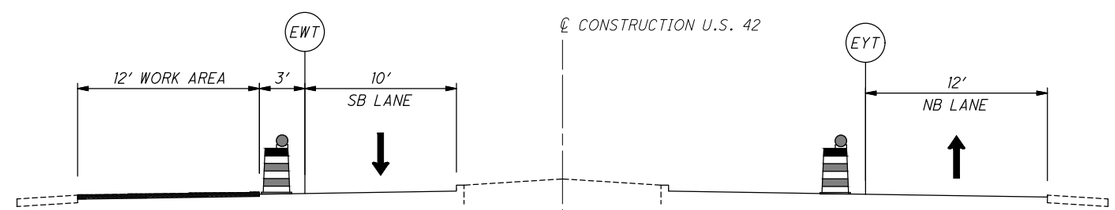


PHASE C

## MOT PHASE SECTIONS AT I-71

### LEGEND

- (LL) EXISTING LANE LINE (TO REMAIN DURING PHASE)
- (CL) EXISTING CENTER LINE OR CHANNELIZING LINE (TO REMAIN DURING PHASE)
- (EYP) WORK ZONE EDGE LINE, CLASS I, 642 PAINT, YELLOW
- (EYT) WORK ZONE EDGE LINE, CLASS I, 740.06, TYPE I, YELLOW
- (EWT) WORK ZONE EDGE LINE, CLASS I, 740.06, TYPE I, WHITE
- (CLP) WORK ZONE CENTER LINE, SOLID AND DASHED, CLASS I, 642 PAINT
- (CLT) WORK ZONE CENTER LINE, SOLID AND DASHED, 740.06, TYPE I

MAINTENANCE OF TRAFFIC TYPICAL SECTIONS

CUY-US-042-4.29



P:\Middleburg Heights - City of\J20150340.000 Pearl Rd Rehab\Drawings\Trans\105726MY001.dwg 01-Mar-19 2:56 PM

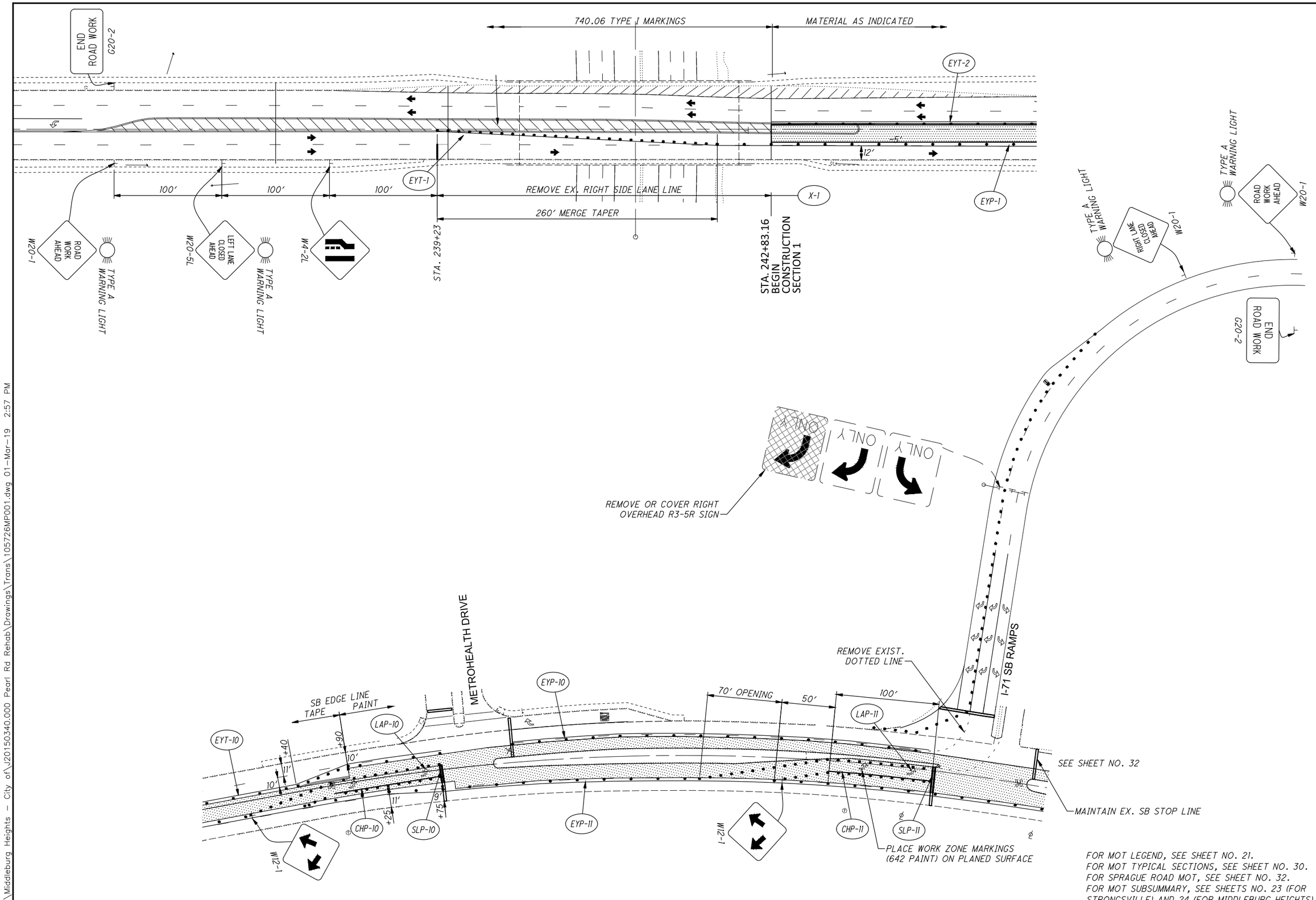


# MAINTENANCE OF TRAFFIC CONSTRUCTION SECTION 1 PHASE A (1 OF 2)

CUY-US-042-4.29



P:\Middleburg Heights – City of\J20150340.000 Pearl Rd Rehab\Drawings\Trans\105726MP001.dwg 01-Mar-19 2:57 PM

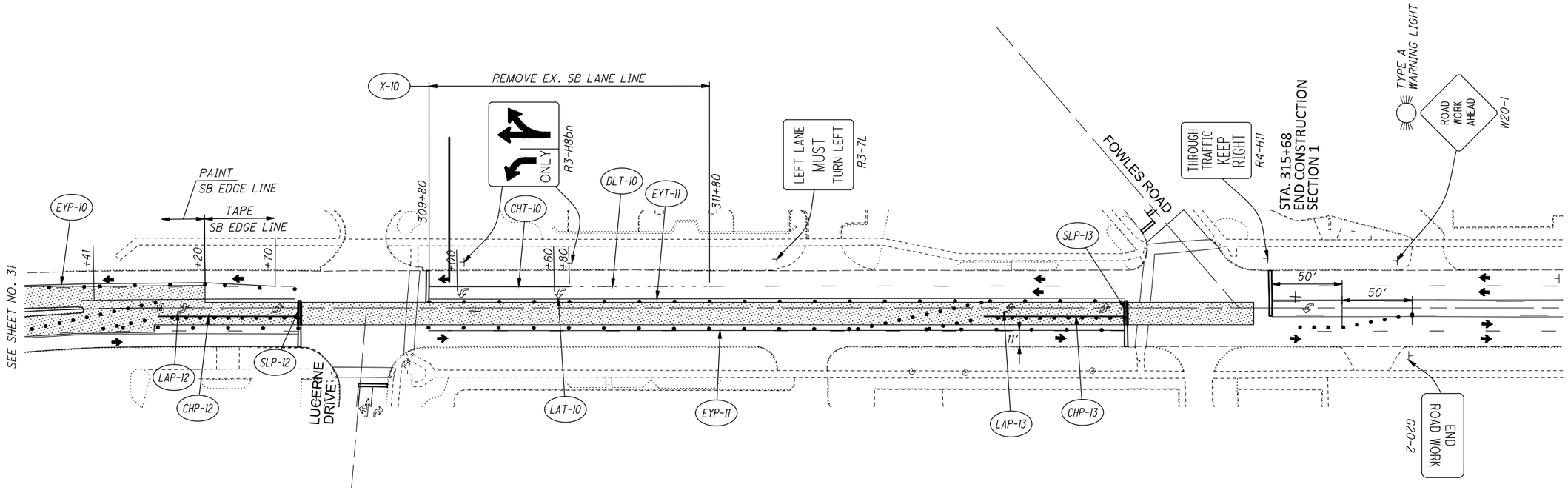


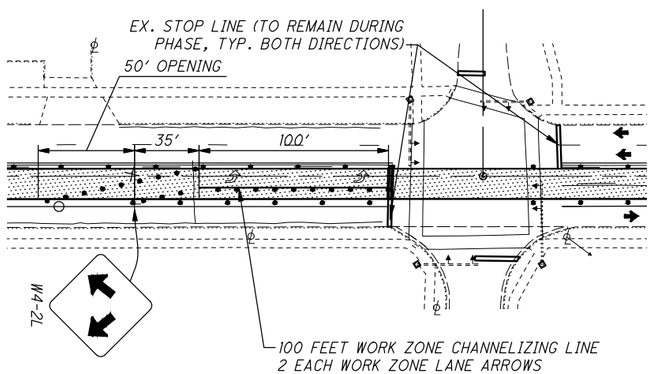


TYPICIAL SIGNALIZED INTERSECTION DETAIL-PHASE A

*DETAIL APPLIES DURING CONSTRUCTION SECTION 1 AT:*
*(CITY OF STRONGSVILLE - 4 INTERSECTIONS)*
*WHITNEY ROAD*
*BROXTON DRIVE*
*STRONGSVILLE BOULEVARD*
*SPRAGUE ROAD*

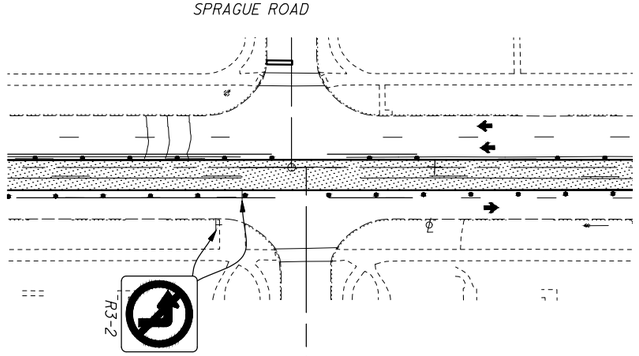


TYPICAL NON-SIGNALIZED INTERSECTION DETAIL - PHASE A

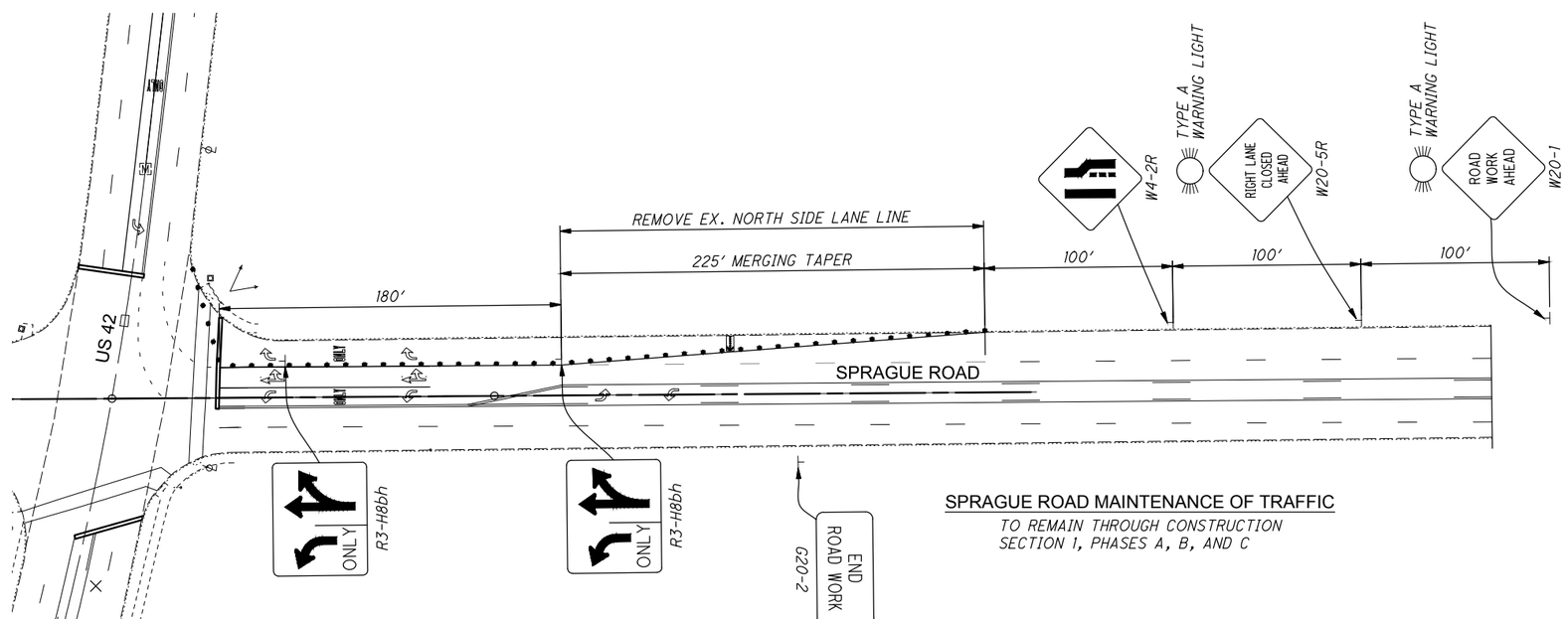


SPRAGUE ROAD MAINTENANCE OF TRAFFIC

*TO REMAIN THROUGH CONSTRUCTION*
*SECTION 1, PHASES A, B, AND C*

*FOR MOT LEGEND, SEE SHEET NO. 21.*
*FOR MOT TYPICAL SECTIONS, SEE SHEET NO. 30.*
*FOR MOT SUBSUMMARY, SEE SHEETS NO. 23 (FOR STRONGSVILLE) AND 24 (FOR MIDDLEBURG HEIGHTS)*

HORIZONTAL SCALE IN FEET
0 20 40 80

CALCULATED DP
CHECKED BT

**MAINTENANCE OF TRAFFIC**
**CONSTRUCTION SECTION 1 PHASE A (2 OF 2)**

**CUY-US-042-4.29**



P:\Middleburg Heights - City of\J20150340.000 Pearl Rd Rehab\Drawings\Trans\105726MP002.dwg 01-Mar-19 2:57 PM

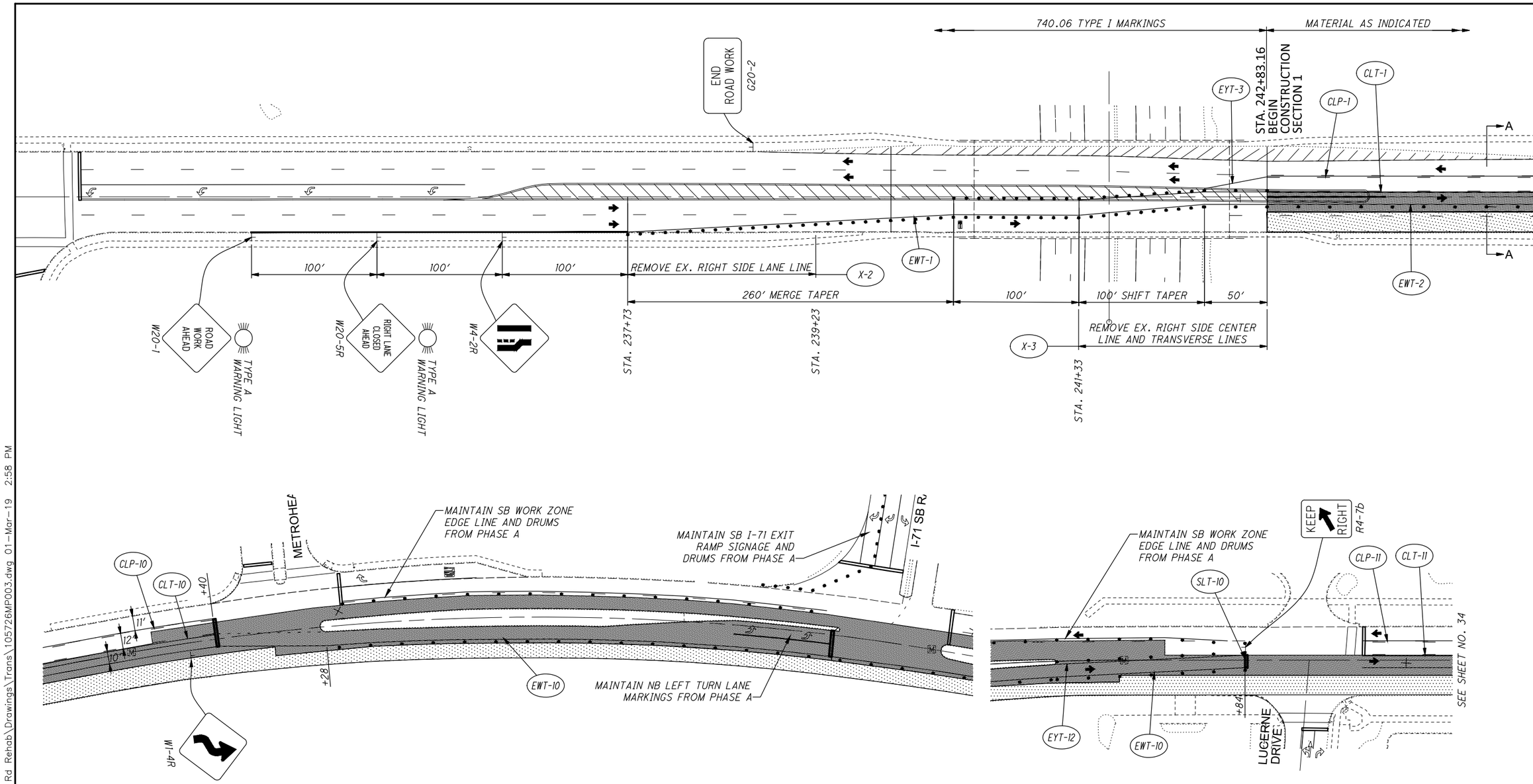


NOTE:

MAINTENANCE OF TRAFFIC FOR LANE CLOSURES ON INTERSTATE 71 SOUTHBOUND EXIT RAMP (SEE SHEET NO. 31) AND SPRAGUE ROAD (SEE SHEET NO. 32) SHALL REMAIN IN PLACE FOR THIS PHASE.

FOR MOT LEGEND, SEE SHEET NO. 21.
FOR MOT TYPICAL SECTIONS, SEE SHEET NO. 30.
FOR MOT SUBSUMMARY, SEE SHEETS NO. 23 (FOR STRONGSVILLE) AND 24 (FOR MIDDLEBURG HEIGHTS)

0 20 40 80
HORIZONTAL SCALE IN FEET

CALCULATED DP
CHECKED BT

# MAINTENANCE OF TRAFFIC CONSTRUCTION SECTION 1 PHASE B (1 OF 2)

CUY-US-042-4.29



P:\Middleburg Heights - City of\J20150340.000 Pearl Rd Rehab\Drawings\Trans\105726MP003.dwg 01-Mar-19 2:58 PM

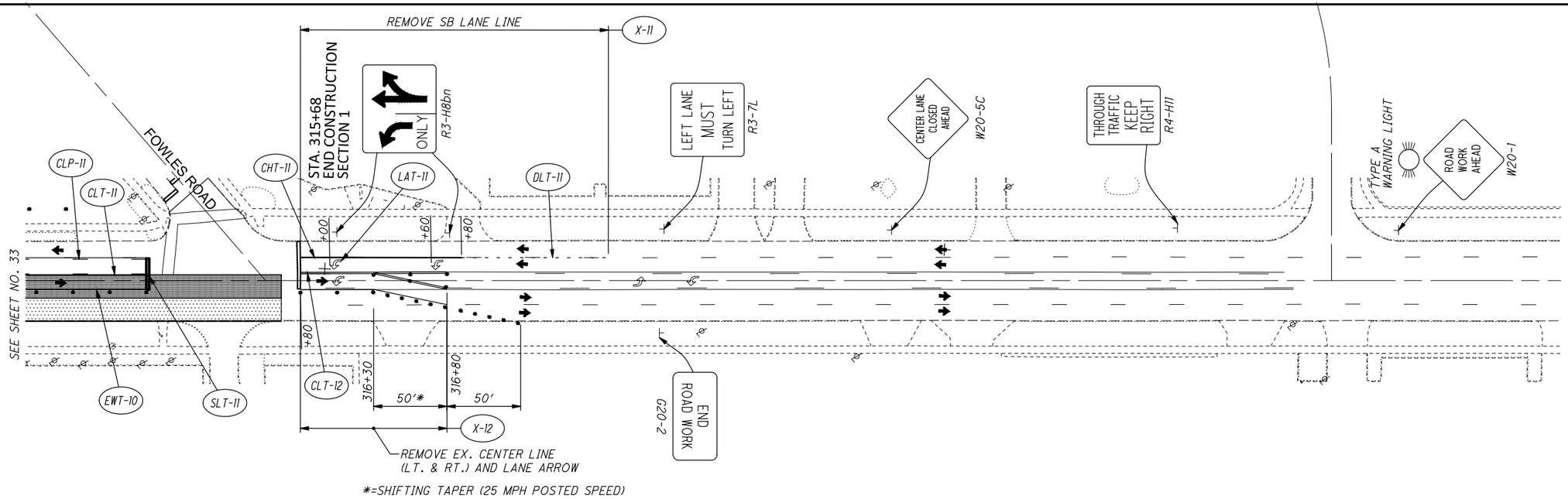


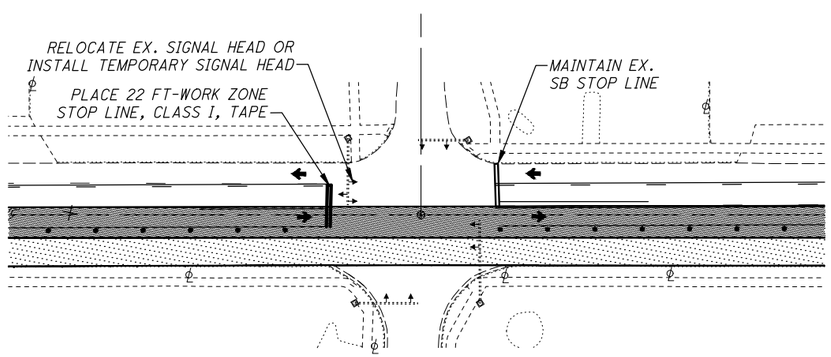


TYPICIAL SIGNALIZED INTERSECTION DETAIL - PHASE B

*INSTALL 22 FEET OF WORK ZONE STOP LINE (TAPE) AT 5 SIGNALIZED INTERSECTIONS LOCATED IN STRONGSVILLE IN CONSTRUCTION SECTION 1.*

*A QUANTITY OF 110 FEET OF WORK ZONE STOP LINE, CLASS I, 740.06, TYPE 1 HAS BEEN INCLUDED IN THE MOT SUBSUMMARY.*

*FOR MOT LEGEND, SEE SHEET NO. 21.*
*FOR MOT TYPICAL SECTIONS, SEE SHEET NO. 30.*
*FOR MOT SUBSUMMARY, SEE SHEETS NO. 23 (FOR STRONGSVILLE) AND 24 (FOR MIDDLEBURG HEIGHTS)*

0 20 40 80
HORIZONTAL SCALE IN FEET

CALCULATED DP
CHECKED BT

**MAINTENANCE OF TRAFFIC**
**CONSTRUCTION SECTION 1 PHASE B (2 OF 2)**

**CUY-US-042-4.29**



P:\Middleburg Heights - City of\J20150340.000 Pearl Rd Rehab\Drawings\Trans\105726MP004.dwg 01-Mar-19 2:58 PM

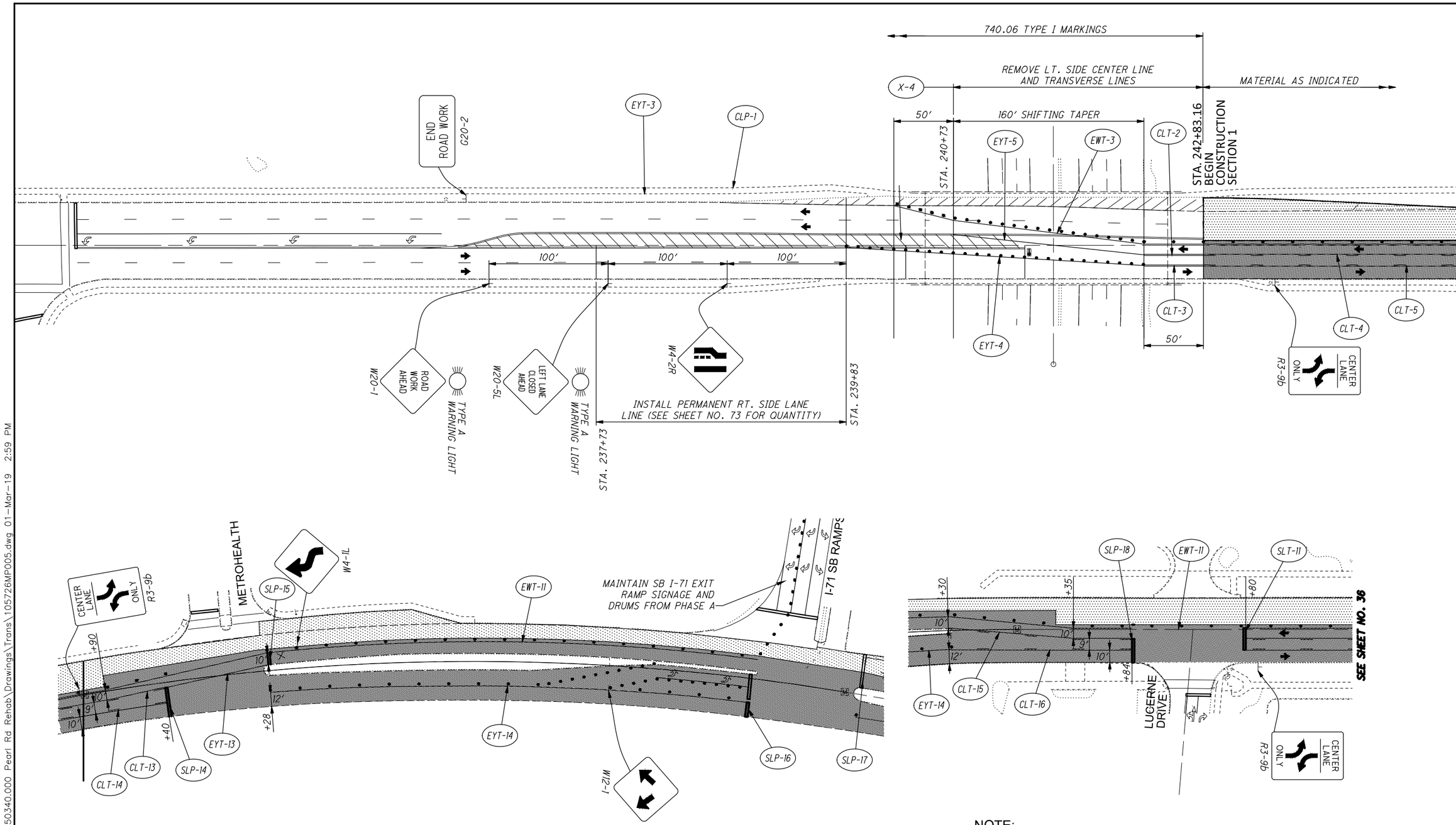








NOTE:

MAINTENANCE OF TRAFFIC FOR LANE CLOSURES ON INTERSTATE 71 SOUTHBOUND EXIT RAMP (SEE SHEET NO. 31) AND SPRAGUE ROAD (SEE SHEET NO. 32) SHALL REMAIN IN PLACE FOR THIS PHASE.

FOR MOT LEGEND, SEE SHEET NO. 21.
FOR MOT TYPICAL SECTIONS, SEE SHEET NO. 30.
FOR MOT SUBSUMMARY, SEE SHEETS NO. 23 (FOR STRONGSVILLE) AND 24 (FOR MIDDLEBURG HEIGHTS)

HORIZONTAL SCALE IN FEET 0 20 40 80

CALCULATED DP
CHECKED BT

# MAINTENANCE OF TRAFFIC CONSTRUCTION SECTION 1 PHASE C (1 OF 2)

CUY-US-042-4.29



P:\Middleburg Heights - City of\J20150340.000 Pearl Rd Rehab\Drawings\Trans\105726MP005.dwg 01-Mar-19 2:59 PM

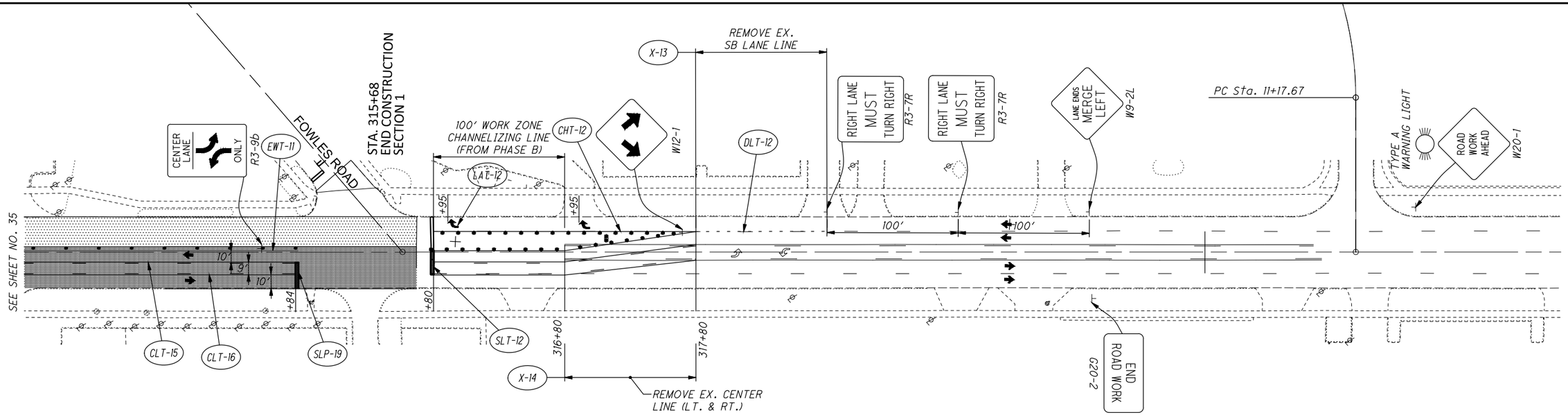


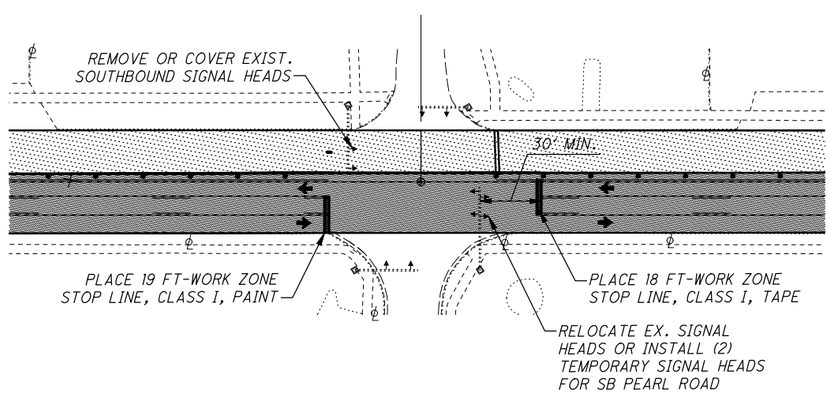


TYPICIAL SIGNALIZED INTERSECTION DETAIL-PHASE C

INSTALL 19 FEET OF WORK ZONE STOP LINE (PAINT) AT 5 NORTHBOUND SIGNALIZED INTERSECTIONS IN STRONGSVILLE AND 18 FEET OF WORK ZONE STOP LINE (TAPE) AT 4 SOUTHBOUND SIGNALIZED INTERSECTIONS IN STRONGSVILLE AND 1 SOUTHBOUND SIGNALIZED INTERSECTION IN MIDDLEBURG HEIGHTS IN CONSTRUCTION SECTION 1.

THE FOLLOWING QUANTITIES HAVE BEEN INCLUDED IN THE MOT SUBSUMMARY FOR THIS WORK:

CITY OF STONGSVILLE:
95 FEET OF WORK ZONE STOP LINE, CLASS I, PAINT.
72 FEET OF WORK ZONE STOP LINE, CLASS I, 740.06, TYPE I.
CITY OF MIDDLEBURG HEIGHTS:
18 FEET OF WORK ZONE STOP LINE, CLASS I, 740.06, TYPE I.

FOR MOT LEGEND, SEE SHEET NO. 21.
FOR MOT TYPICAL SECTIONS, SEE SHEET NO. 30.
FOR MOT SUBSUMMARY, SEE SHEETS NO. 23 (FOR STRONGSVILLE) AND 24 (FOR MIDDLEBURG HEIGHTS)

0 20 40 80
HORIZONTAL SCALE IN FEET

CALCULATED DP
CHECKED BT

MAINTENANCE OF TRAFFIC
CONSTRUCTION SECTION 1 PHASE C (2 OF 2)

CUY-US-042-4.29



P:\Middleburg Heights - City of\J20150340.000 Pearl Rd Rehab\Drawings\Trans\105726MP006.dwg 01-Mar-19 3:00 PM

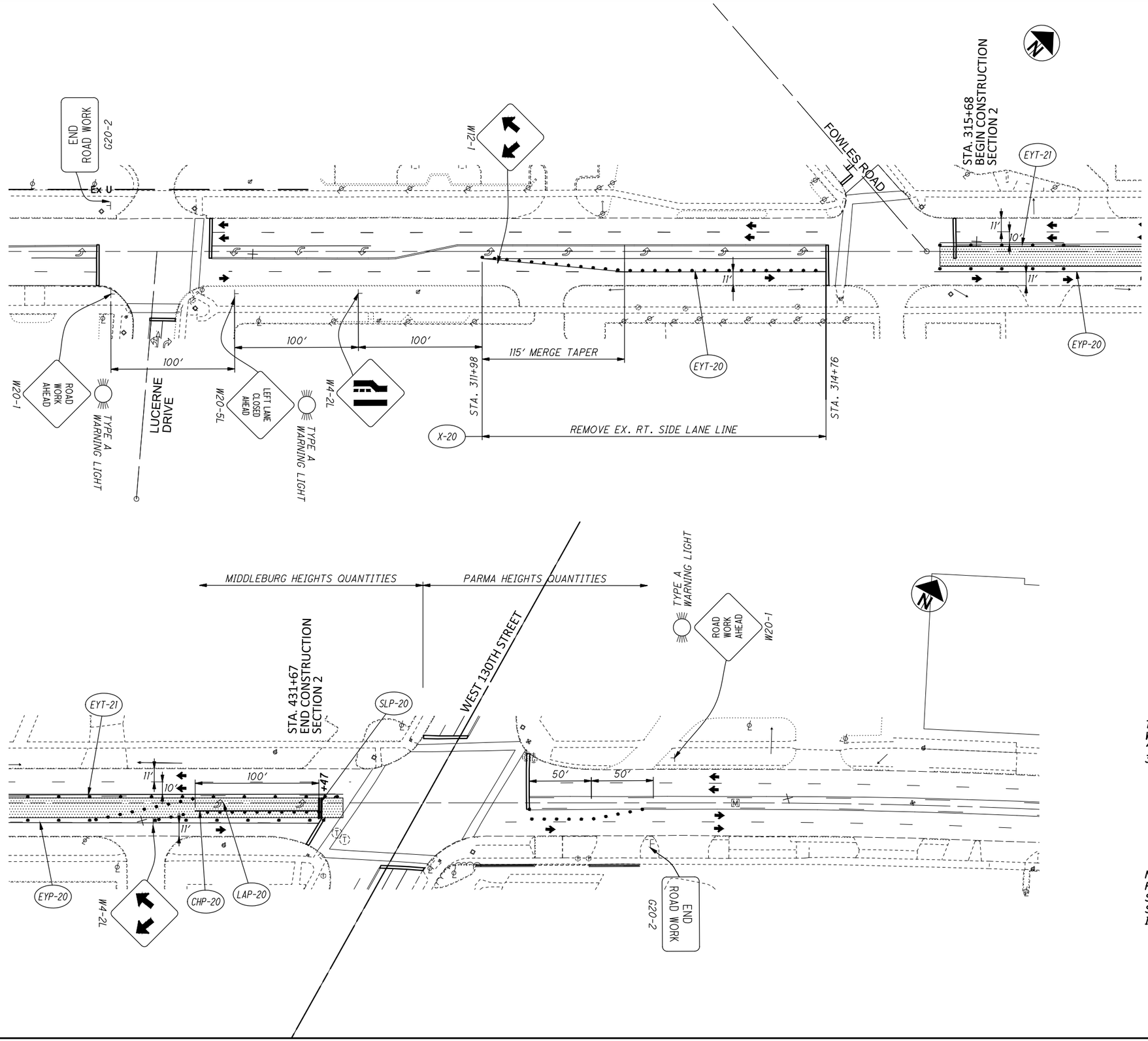


THE FOLLOWING SIGNALIZED INTERSECTIONS SHALL BE MARKED WITH A NORTHBOUND LEFT TURN LANE AS SHOWN ON THE "TYPICAL SIGNALIZED INTERSECTION DETAIL" ON SHEET NO. 32:

WEBSTER ROAD
BAGLEY ROAD
MIDDLEBURG PLAZA
SMITH ROAD
COMMERCIAL DRIVEWAY AT STATION 415+50(±)
COMMERCIAL DRIVEWAY AT STATION 420+00(±)
COMMERCIAL DRIVEWAY AT STATION 422+75(±)

NORTHBOUND LEFT TURNS SHALL BE PROHIBITED AT THE REMAINING INTERSECTIONS WITHIN THE CONSTRUCTION SECTION DURING PHASE A. THESE INTERSECTIONS SHALL BE SIGNED AS SHOWN ON THE "TYPICAL NON-SIGNALIZED INTERSECTION DETAIL" ON SHEET NO. 32.

FOR MOT LEGEND, SEE SHEET NO. 21.
FOR MOT TYPICAL SECTIONS, SEE SHEET NO. 30.
FOR MOT SUBSUMMARY, SEE SHEETS NO. 25.

0 20 40 80
HORIZONTAL SCALE IN FEET

CALCULATED DP
CHECKED BT

# MAINTENANCE OF TRAFFIC
# CONSTRUCTION SECTION 2 PHASE A

CUY-US-042-4.29



P:\Middleburg Heights - City of\J20150340.000 Pearl Rd Rehab\Drawings\Trans\105726MP007.dwg 01-Mar-19 3:00 PM

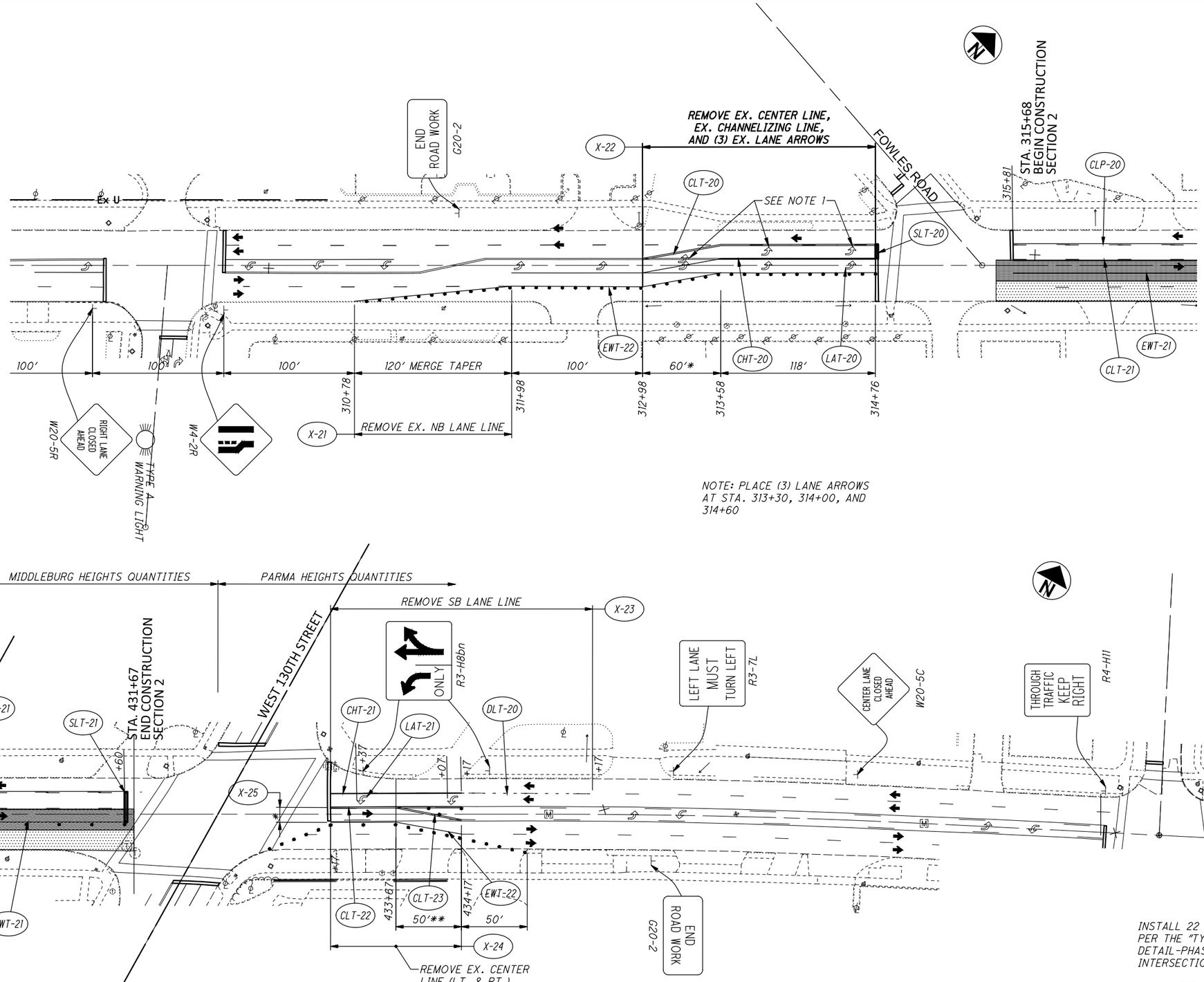


INSTALL 22 FEET OF WORK ZONE STOP LINE (TAPE) AS PER THE "TYPICAL SIGNALIZED INTERSECTION DETAIL-PHASE B" ON SHEET NO. 34 AT 7 SIGNALIZED INTERSECTIONS IN CONSTRUCTION SECTION 2.

A QUANTITY OF 154 FEET OF WORK ZONE STOP LINE, CLASS I, 740.06, TYPE I HAS BEEN INCLUDED IN THE MOT SUBSUMMARY.

FOR MOT LEGEND, SEE SHEET NO. 21.
FOR MOT TYPICAL SECTIONS, SEE SHEET NO. 30.
FOR MOT SUBSUMMARY, SEE SHEETS NO. 25 (FOR MIDDLEBURG HEIGHTS) AND 26 (FOR PARMA HEIGHTS).

HORIZONTAL SCALE IN FEET 0 20 40 80

CALCULATED DP
CHECKED BT

# MAINTENANCE OF TRAFFIC
# CONSTRUCTION SECTION 2 PHASE B

CUY-US-042-4.29



P:\Middleburg Heights - City of\J20150340.000 Pearl Rd Rehab\Drawings\Trans\105726MP008.dwg 01-Mar-19 3:01 PM

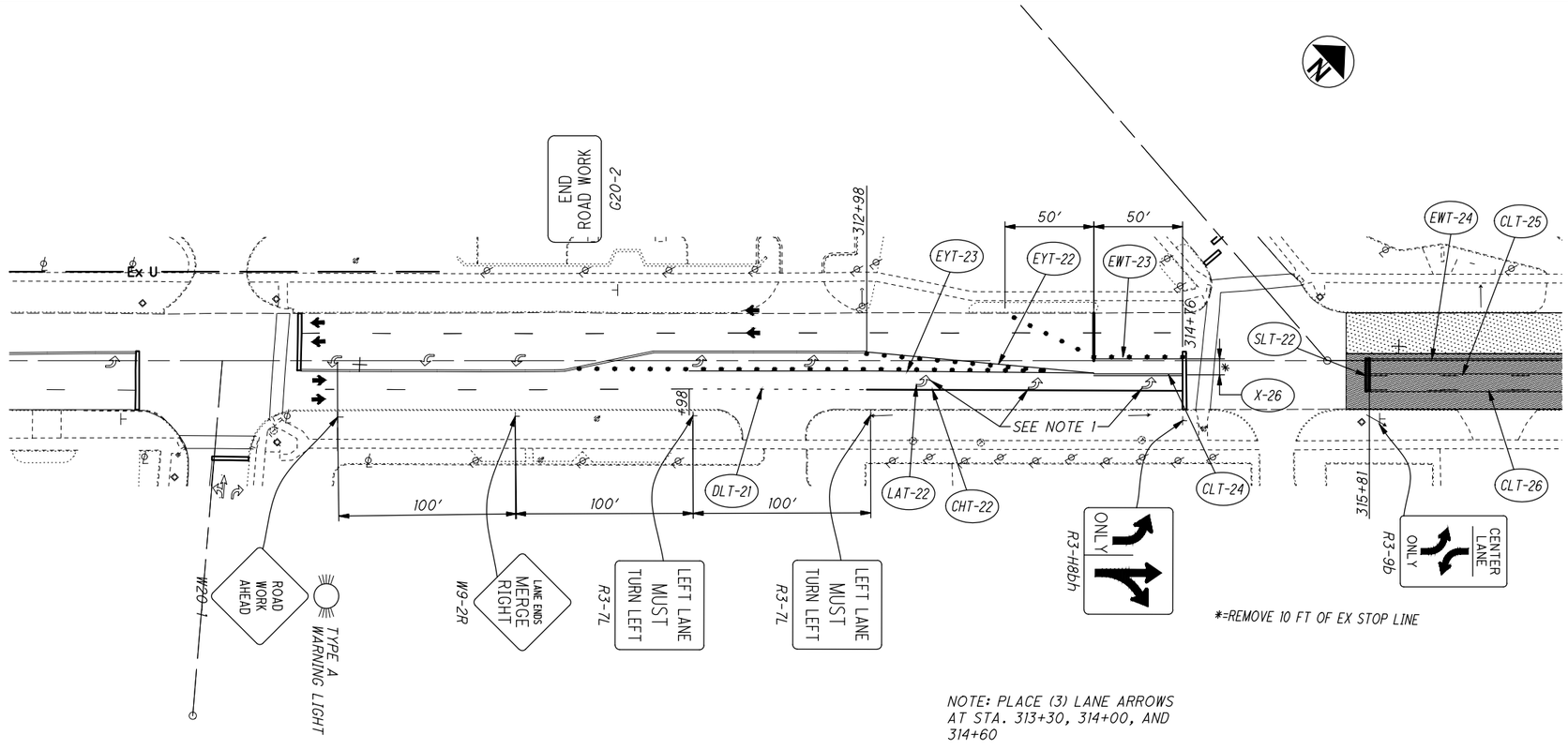


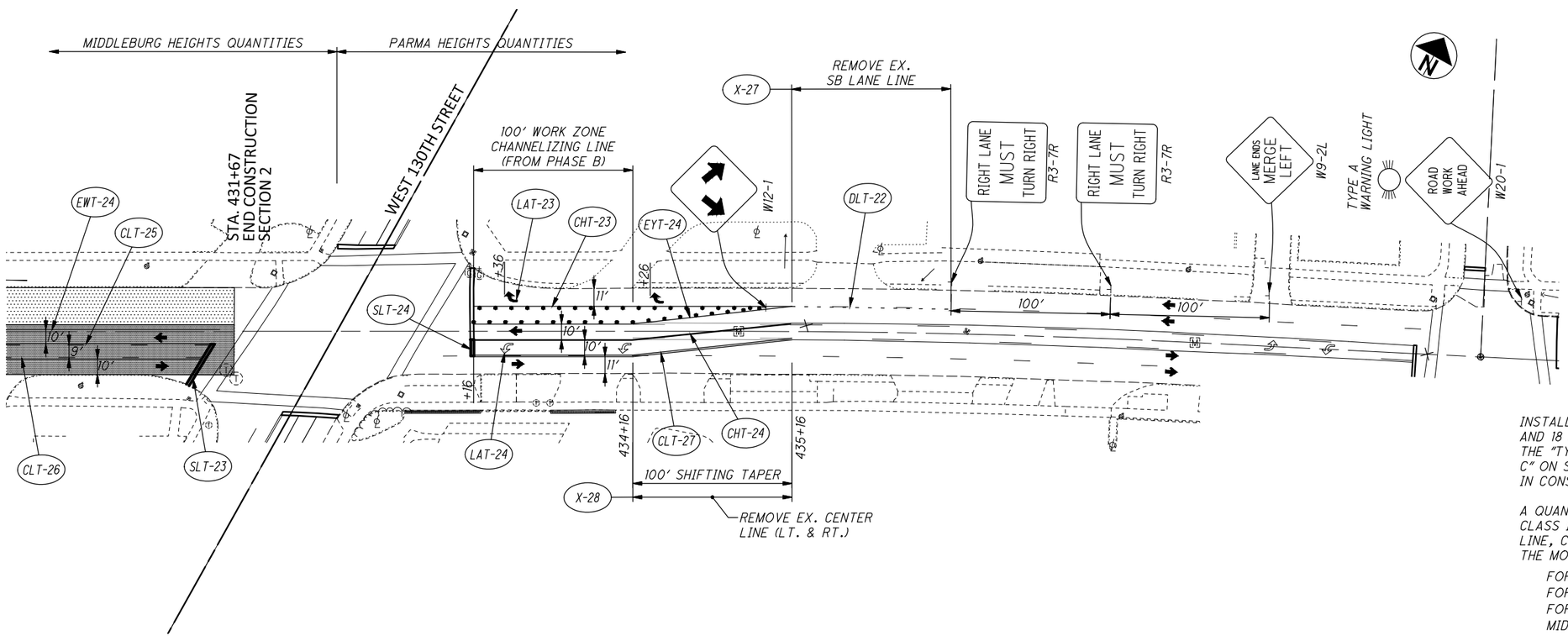


INSTALL 19 FEET OF WORK ZONE STOP LINE (PAINT) AND 18 FEET OF WORK ZONE STOP LINE (TAPE) AS PER THE "TYPICAL SIGNALIZED INTERSECTION DETAIL-PHASE C" ON SHEET NO. 36 AT 7 SIGNALIZED INTERSECTIONS IN CONSTRUCTION SECTION 2.

A QUANTITY OF 133 FEET OF WORK ZONE STOP LINE, CLASS I, PAINT AND 126 FEET OF WORK ZONE STOP LINE, CLASS I, 740.06, TYPE 1 HAVE BEEN INCLUDED IN THE MOT SUBSUMMARY.

FOR MOT LEGEND, SEE SHEET NO. 21.
FOR MOT TYPICAL SECTIONS, SEE SHEET NO. 30.
FOR MOT SUBSUMMARY, SEE SHEETS NO. 25 (FOR MIDDLEBURG HEIGHTS) AND 26 (FOR PARMA HEIGHTS).

0 20 40 80
HORIZONTAL SCALE IN FEET

CALCULATED DP
CHECKED BT

# MAINTENANCE OF TRAFFIC
# CONSTRUCTION SECTION 2 PHASE C

CUY-US-042-4.29



P:\Middleburg Heights - City of\J20150340.000 Pearl Rd Rehab\Drawings\Trans\105726MP009.dwg 01-Mar-19 3:01 PM

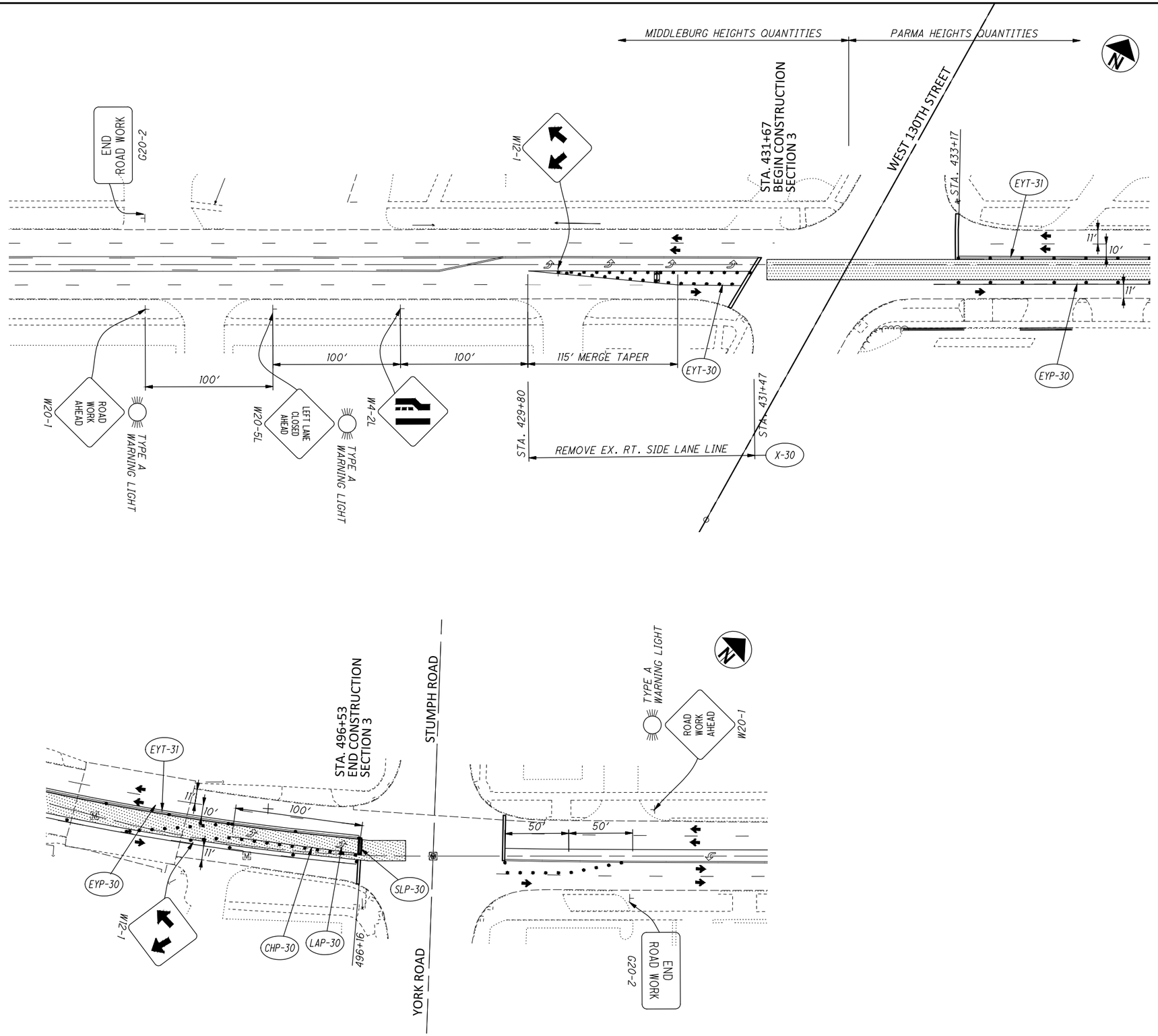


THE FOLLOWING SIGNALIZED INTERSECTIONS SHALL BE MARKED WITH A NORTHBOUND LEFT TURN LANE AS SHOWN ON THE "TYPICAL SIGNALIZED INTERSECTION DETAIL-PHASE A" ON SHEET NO. 32:

LAWNWOOD AVENUE
FERNWOOD AVENUE
GREENLEAF AVENUE
MANDALAY DRIVE
ROCHELLE BOULEVARD
KINGSDALE BOULEVARD

NORTHBOUND LEFT TURNS SHALL BE PROHIBITED AT THE REMAINING INTERSECTIONS WITHIN THE CONSTRUCTION SECTION DURING PHASE A. THESE INTERSECTIONS SHALL BE SIGNED AS SHOWN ON THE "TYPICAL NON-SIGNALIZED INTERSECTION DETAIL" ON SHEET NO. 32.

FOR MOT LEGEND, SEE SHEET NO. 21.
FOR MOT TYPICAL SECTIONS, SEE SHEET NO. 30.
FOR MOT SUBSUMMARY, SEE SHEET NO. 26.

0 20 40 80
HORIZONTAL SCALE IN FEET

CALCULATED DP
CHECKED BT

# MAINTENANCE OF TRAFFIC
# CONSTRUCTION SECTION 3 PHASE A

CUY-US-042-4.29



P:\Middleburg Heights - City of\J20150340.000 Pearl Rd Rehab\Drawings\Trans\105726MP010.dwg 01-Mar-19 3:02 PM

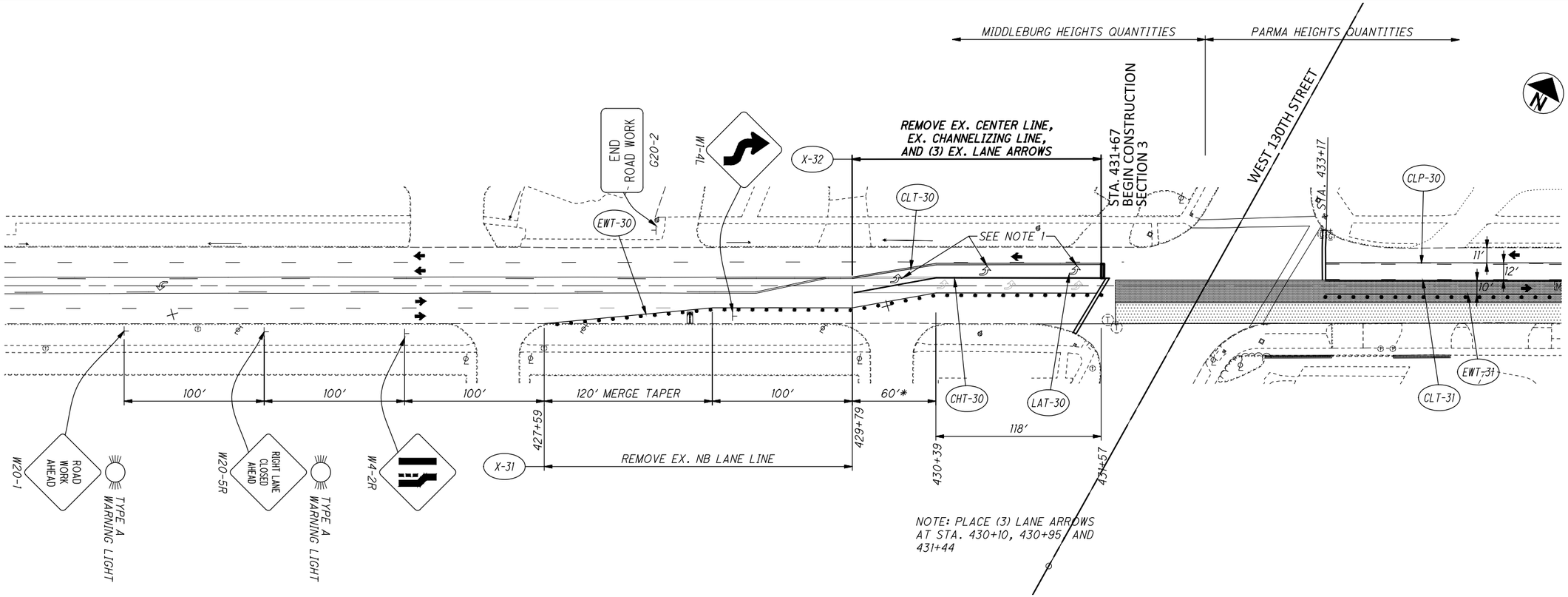


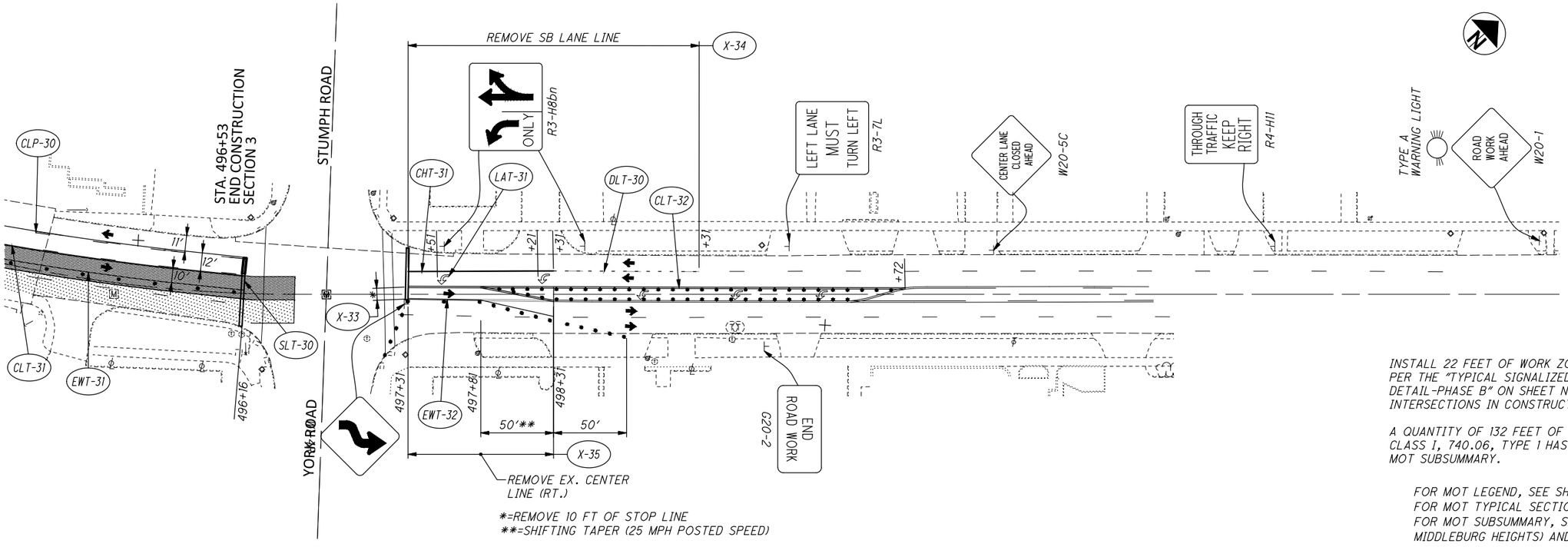


INSTALL 22 FEET OF WORK ZONE STOP LINE (TAPE) AS PER THE "TYPICAL SIGNALIZED INTERSECTION DETAIL-PHASE B" ON SHEET NO. 34 AT 6 SIGNALIZED INTERSECTIONS IN CONSTRUCTION SECTION 3.

A QUANTITY OF 132 FEET OF WORK ZONE STOP LINE, CLASS I, 740.06, TYPE I HAS BEEN INCLUDED IN THE MOT SUBSUMMARY.

FOR MOT LEGEND, SEE SHEET NO. 21.
FOR MOT TYPICAL SECTIONS, SEE SHEET NO. 30.
FOR MOT SUBSUMMARY, SEE SHEETS NO. 26 (FOR MIDDLEBURG HEIGHTS) AND 27 (FOR PARMA HEIGHTS)

0 20 40 80
HORIZONTAL SCALE IN FEET

CALCULATED DP
CHECKED BT

# MAINTENANCE OF TRAFFIC
## CONSTRUCTION SECTION 3 PHASE B

CUY-US-042-4.29



P:\Middleburg Heights - City of\J20150340.000 Pearl Rd Rehab\Drawings\Trans\105726MP011.dwg 01-Mar-19 3:02 PM

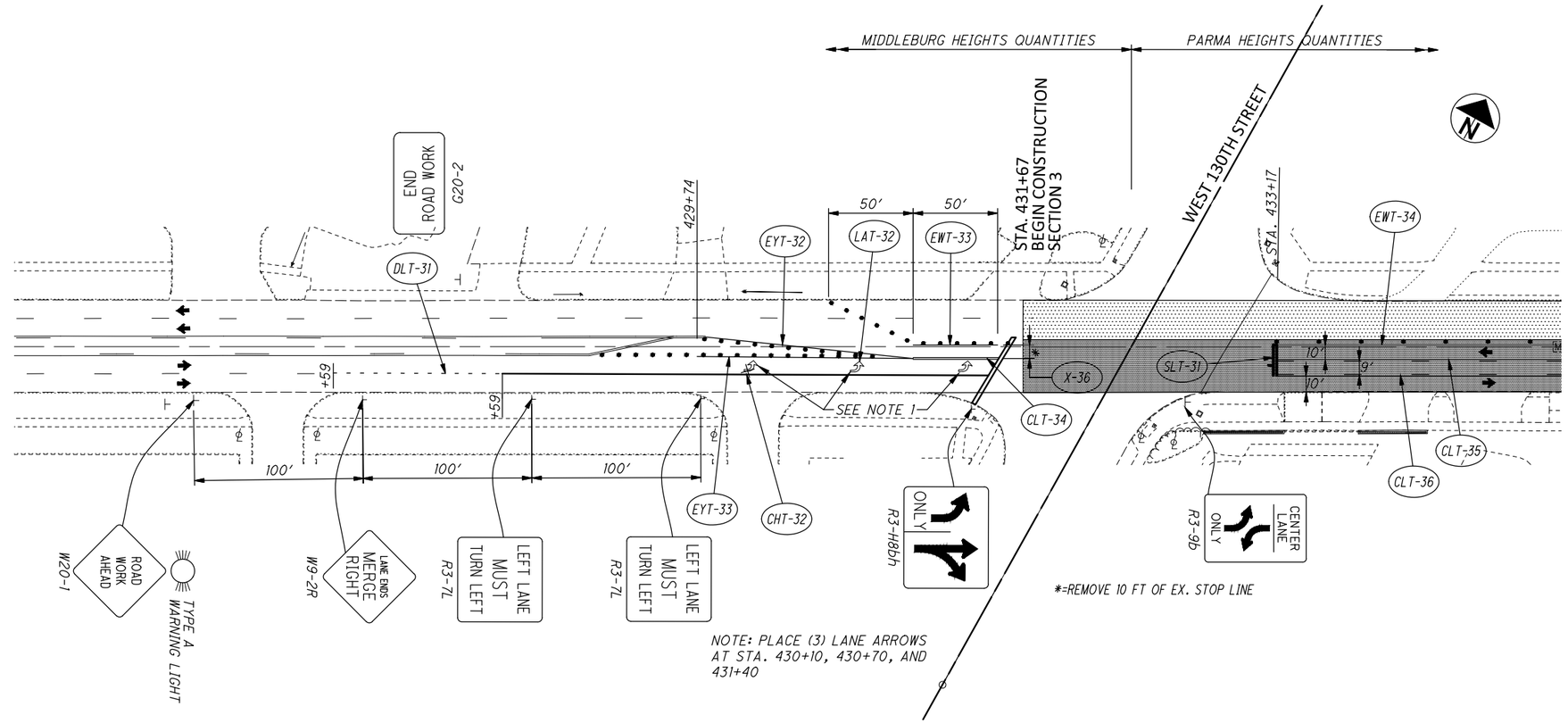


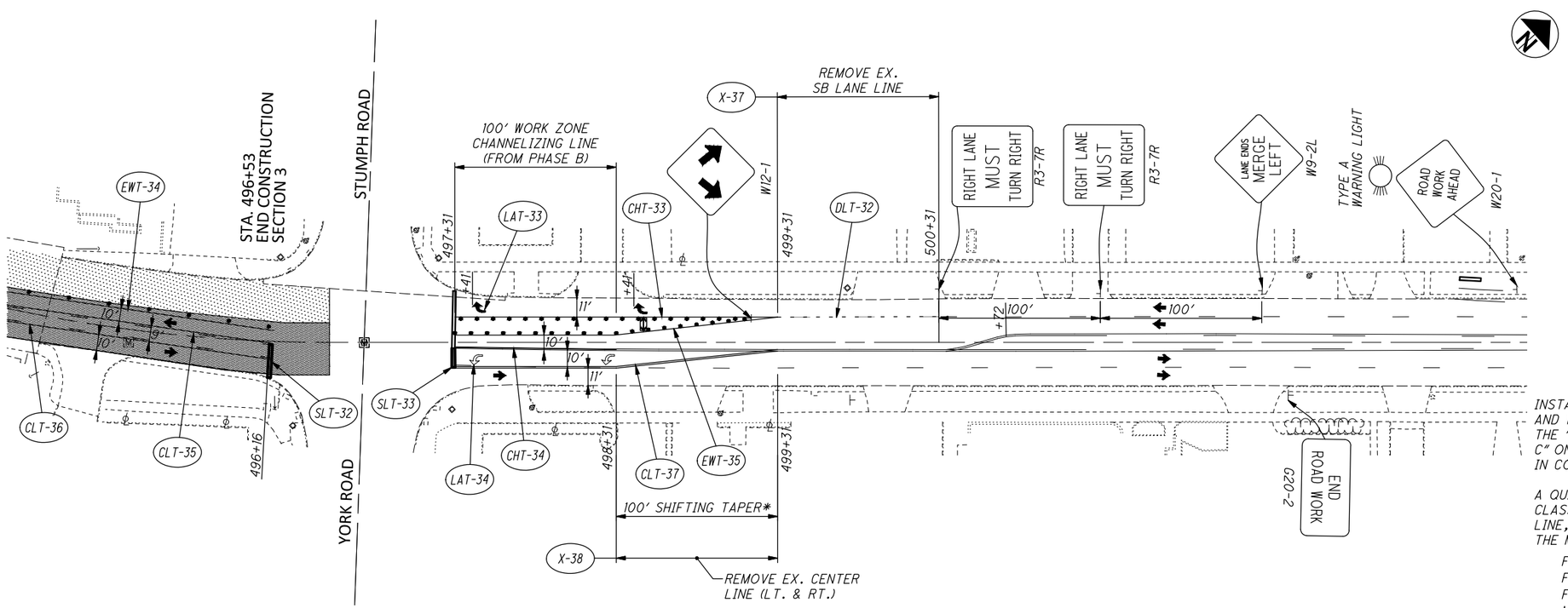


INSTALL 19 FEET OF WORK ZONE STOP LINE (PAINT) AND 18 FEET OF WORK ZONE STOP LINE (TAPE) AS PER THE "TYPICAL SIGNALIZED INTERSECTION DETAIL-PHASE C" ON SHEET NO. 36 AT 6 SIGNALIZED INTERSECTIONS IN CONSTRUCTION SECTION 3.

A QUANTITY OF 114 FEET OF WORK ZONE STOP LINE, CLASS I, PAINT AND 108 FEET OF WORK ZONE STOP LINE, CLASS I, 740.06, TYPE 1 HAVE BEEN INCLUDED IN THE MOT SUBSUMMARY.

FOR MOT LEGEND, SEE SHEET NO. 21.
FOR MOT TYPICAL SECTIONS, SEE SHEET NO. 30.
FOR MOT SUBSUMMARY, SEE SHEETS NO. 26 (FOR MIDDLEBURG HEIGHTS) AND 27 (FOR PARMA HEIGHTS)

0 20 40 80
HORIZONTAL SCALE IN FEET

CALCULATED DP
CHECKED BT

# MAINTENANCE OF TRAFFIC
## CONSTRUCTION SECTION 3 PHASE C

CUY-US-042-4.29



P:\Middleburg Heights - City of\J20150340.000 Pearl Rd Rehab\Drawings\Trans\105726MP012.dwg 01-Mar-19 3:03 PM

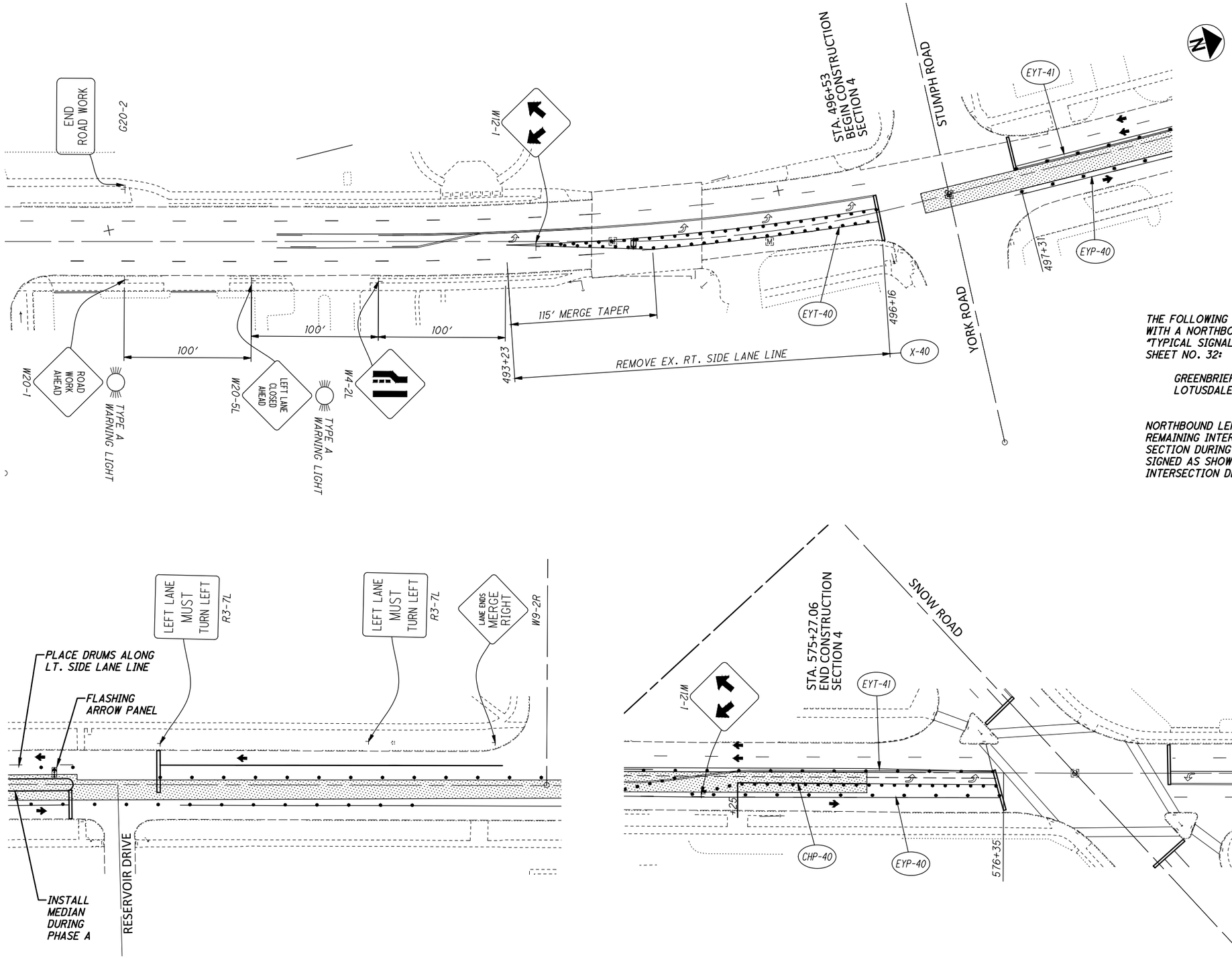


THE FOLLOWING SIGNALIZED INTERSECTIONS SHALL BE MARKED WITH A NORTHBOUND LEFT TURN LANE AS SHOWN ON THE "TYPICAL SIGNALIZED INTERSECTION DETAIL-PHASE A" ON SHEET NO. 32:

GREENBRIER PLAZA DRIVE
LOTUSDALE DRIVE

NORTHBOUND LEFT TURNS SHALL BE PROHIBITED AT THE REMAINING INTERSECTIONS WITHIN THE CONSTRUCTION SECTION DURING PHASE A. THESE INTERSECTIONS SHALL BE SIGNED AS SHOWN ON THE "TYPICAL NON-SIGNALIZED INTERSECTION DETAIL" ON SHEET NO. 32.

FOR MOT LEGEND, SEE SHEET NO. 21.
FOR MOT TYPICAL SECTIONS, SEE SHEET NO. 30.
FOR MOT SUBSUMMARY, SEE SHEET NO. 27.

0 20 40 80
HORIZONTAL SCALE IN FEET

CALCULATED DP
CHECKED BT

# MAINTENANCE OF TRAFFIC CONSTRUCTION SECTION 4 PHASE A

CUY-US-042-4.29



P:\Middleburg Heights - City of\J20150340.000 Pearl Rd Rehab\Drawings\Trans\105726MP013.dwg 01-Mar-19 3:03 PM

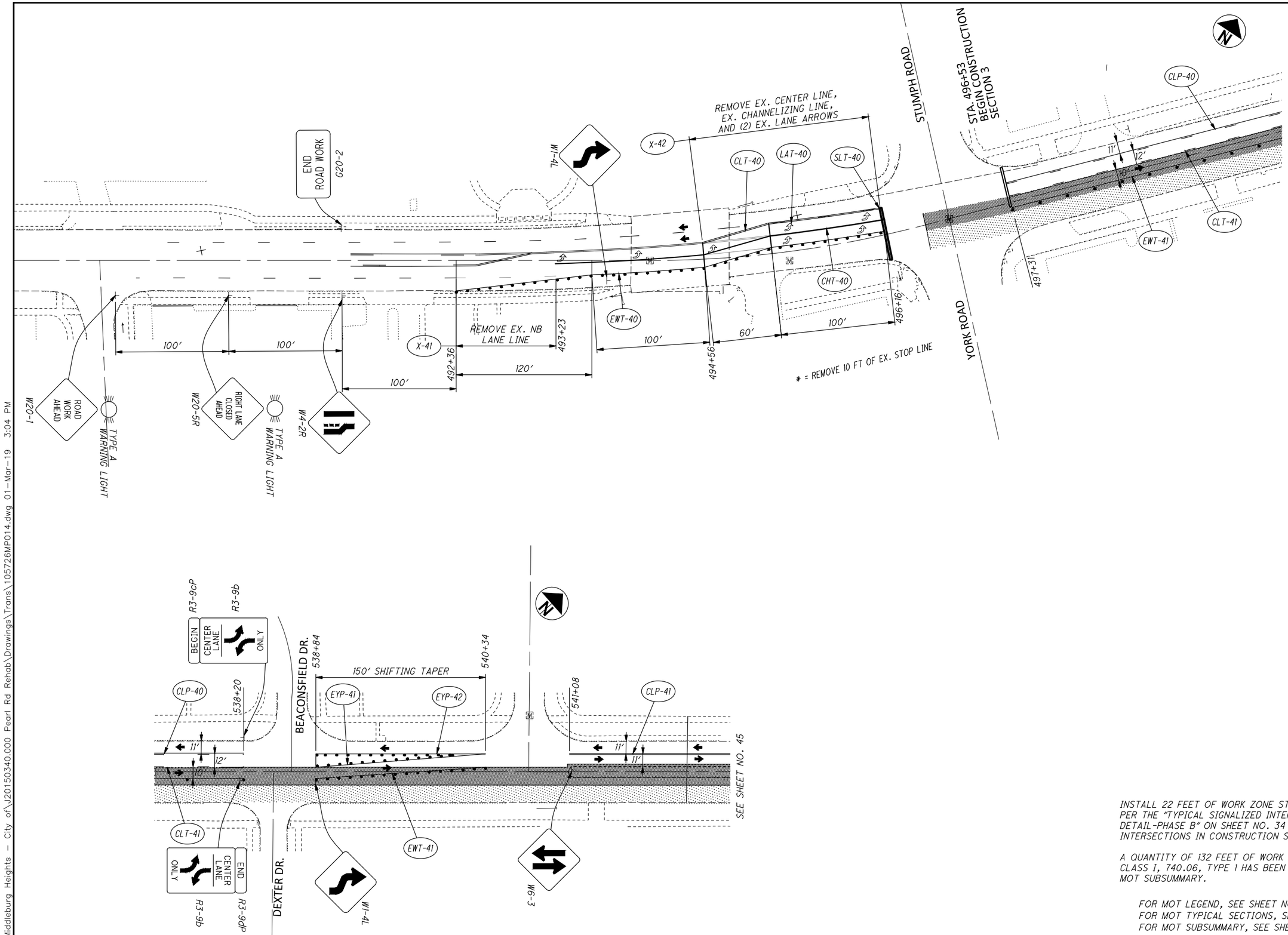


INSTALL 22 FEET OF WORK ZONE STOP LINE (TAPE) AS PER THE "TYPICAL SIGNALIZED INTERSECTION DETAIL-PHASE B" ON SHEET NO. 34 AT 6 SIGNALIZED INTERSECTIONS IN CONSTRUCTION SECTION 4.

A QUANTITY OF 132 FEET OF WORK ZONE STOP LINE, CLASS I, 740.06, TYPE 1 HAS BEEN INCLUDED IN THE MOT SUBSUMMARY.

FOR MOT LEGEND, SEE SHEET NO. 21.
FOR MOT TYPICAL SECTIONS, SEE SHEET NO. 30.
FOR MOT SUBSUMMARY, SEE SHEET NO. 27 AND 28.

0 20 40 80
HORIZONTAL SCALE IN FEET

CALCULATED DP
CHECKED BT

# MAINTENANCE OF TRAFFIC
## CONSTRUCTION SECTION 4 PHASE B (1 OF 2)

CUY-US-042-4.29



P:\Middleburg Heights - City of\J20150340.000 Pearl Rd Rehab\Drawings\Trans\105726MP014.dwg 01-Mar-19 3:04 PM

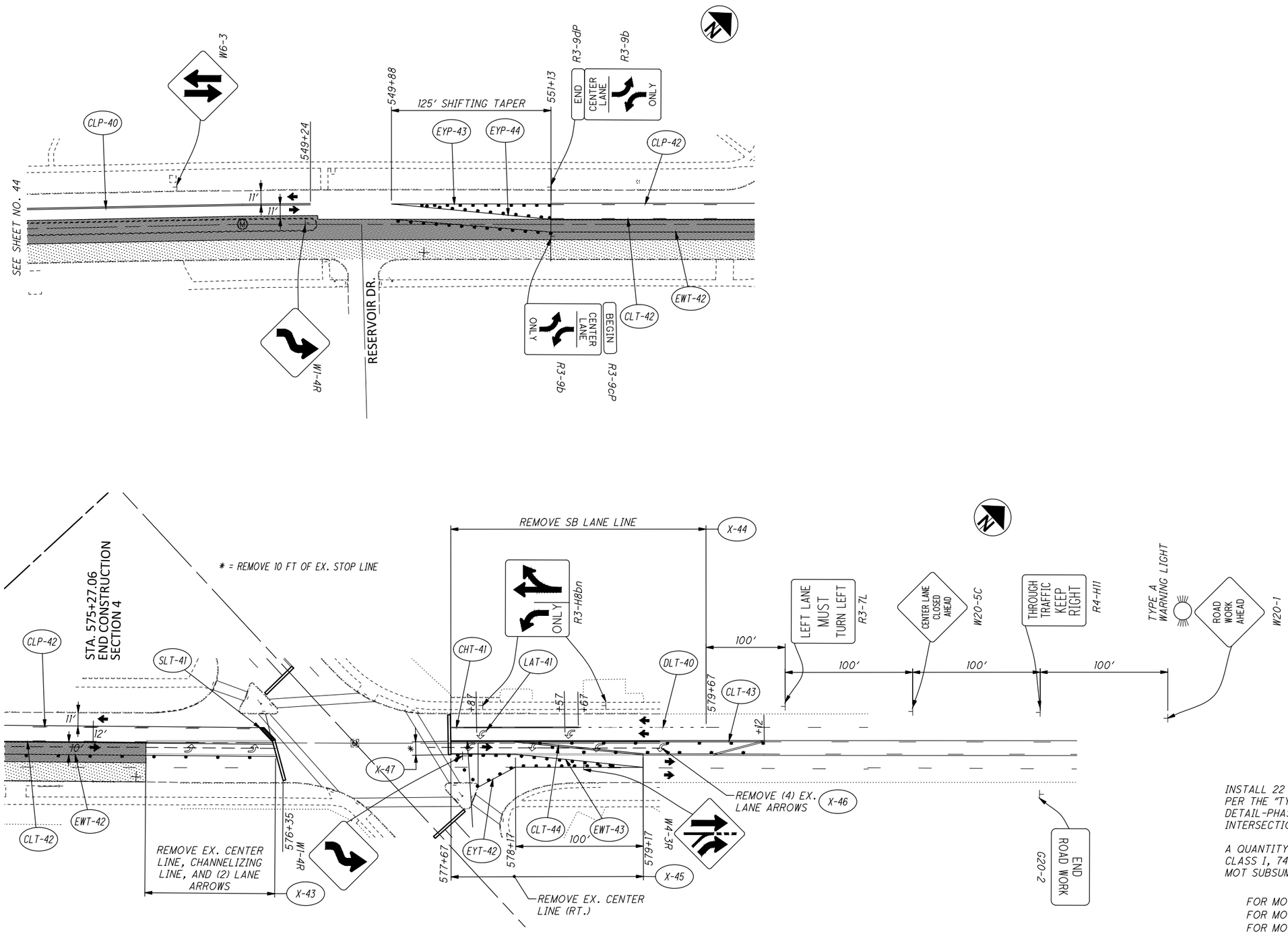


INSTALL 22 FEET OF WORK ZONE STOP LINE (TAPE) AS PER THE "TYPICAL SIGNALIZED INTERSECTION DETAIL-PHASE B" ON SHEET NO. 34 AT 6 SIGNALIZED INTERSECTIONS IN CONSTRUCTION SECTION 4.

A QUANTITY OF 132 FEET OF WORK ZONE STOP LINE, CLASS I, 740.06, TYPE I HAS BEEN INCLUDED IN THE MOT SUBSUMMARY.

FOR MOT LEGEND, SEE SHEET NO. 21.
FOR MOT TYPICAL SECTIONS, SEE SHEET NO. 30.
FOR MOT SUBSUMMARY, SEE SHEET NO. 28.

0 20 40 80
HORIZONTAL SCALE IN FEET

CALCULATED DP
CHECKED BT

# MAINTENANCE OF TRAFFIC
## CONSTRUCTION SECTION 4 PHASE B (2 OF 2)

CUY-US-042-4.29



P:\Middleburg Heights - City of\J20150340.000 Pearl Rd Rehab\Drawings\Trans\105726MP014A.dwg 01-Mar-19 3:04 PM

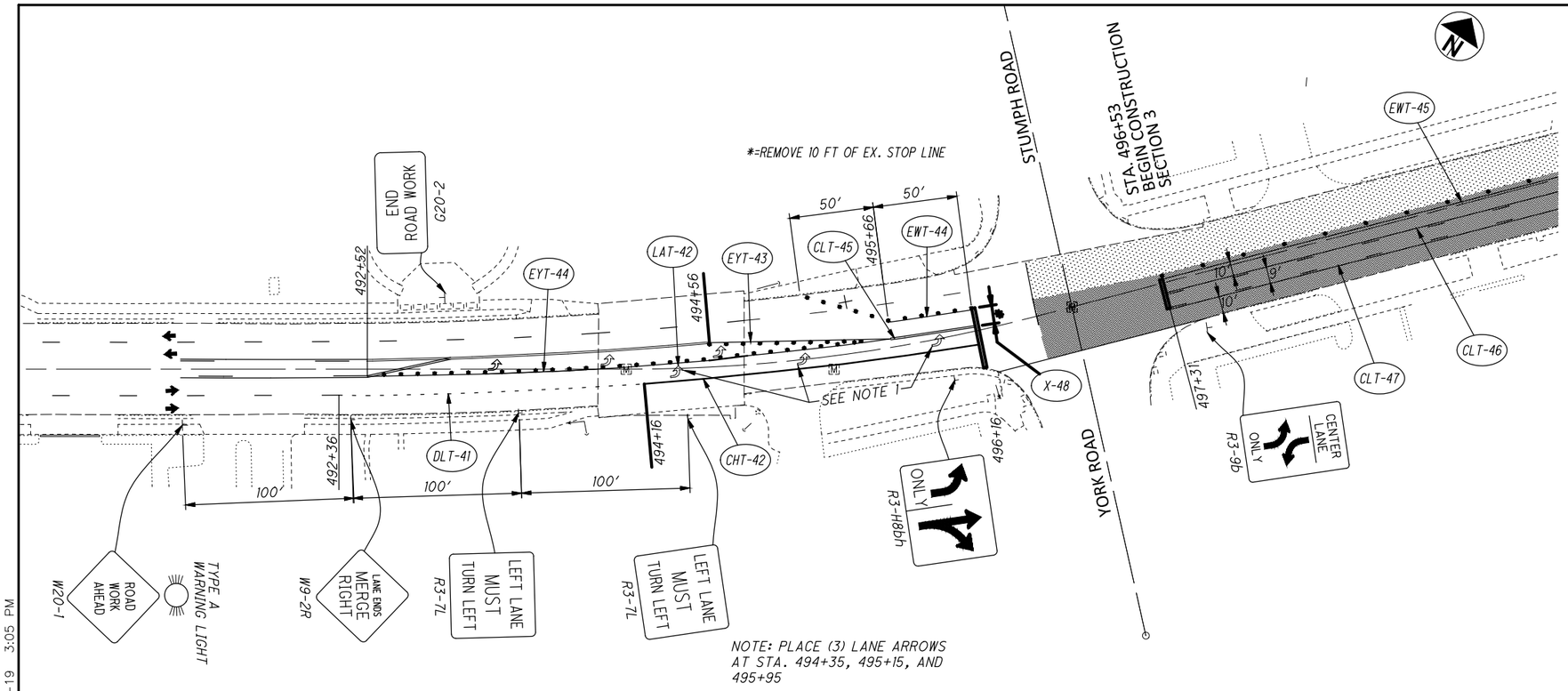


INSTALL 19 FEET OF WORK ZONE STOP LINE (PAINT) AND 18 FEET OF WORK ZONE STOP LINE (TAPE) AS PER THE "TYPICAL SIGNALIZED INTERSECTION DETAIL-PHASE C" ON SHEET NO. 36 AT 6 SIGNALIZED INTERSECTIONS IN CONSTRUCTION SECTION 4.

A QUANTITY OF 114 FEET OF WORK ZONE STOP LINE, CLASS I, PAINT AND 108 FEET OF WORK ZONE STOP LINE, CLASS I, 740.06, TYPE I HAVE BEEN INCLUDED IN THE MOT SUBSUMMARY.

FOR MOT LEGEND, SEE SHEET NO. 21.
FOR MOT TYPICAL SECTIONS, SEE SHEET NO. 30.
FOR MOT SUBSUMMARY, SEE SHEET NO. 28.

0 20 40 80
HORIZONTAL SCALE IN FEET

CALCULATED DP
CHECKED BT

# MAINTENANCE OF TRAFFIC
## CONSTRUCTION SECTION 4 PHASE C (1 OF 2)

CUY-US-042-4.29



P:\Middleburg Heights - City of\J20150340.000 Pearl Rd Rehab\Drawings\Trans\105726MP015.dwg 01-Mar-19 3:05 PM

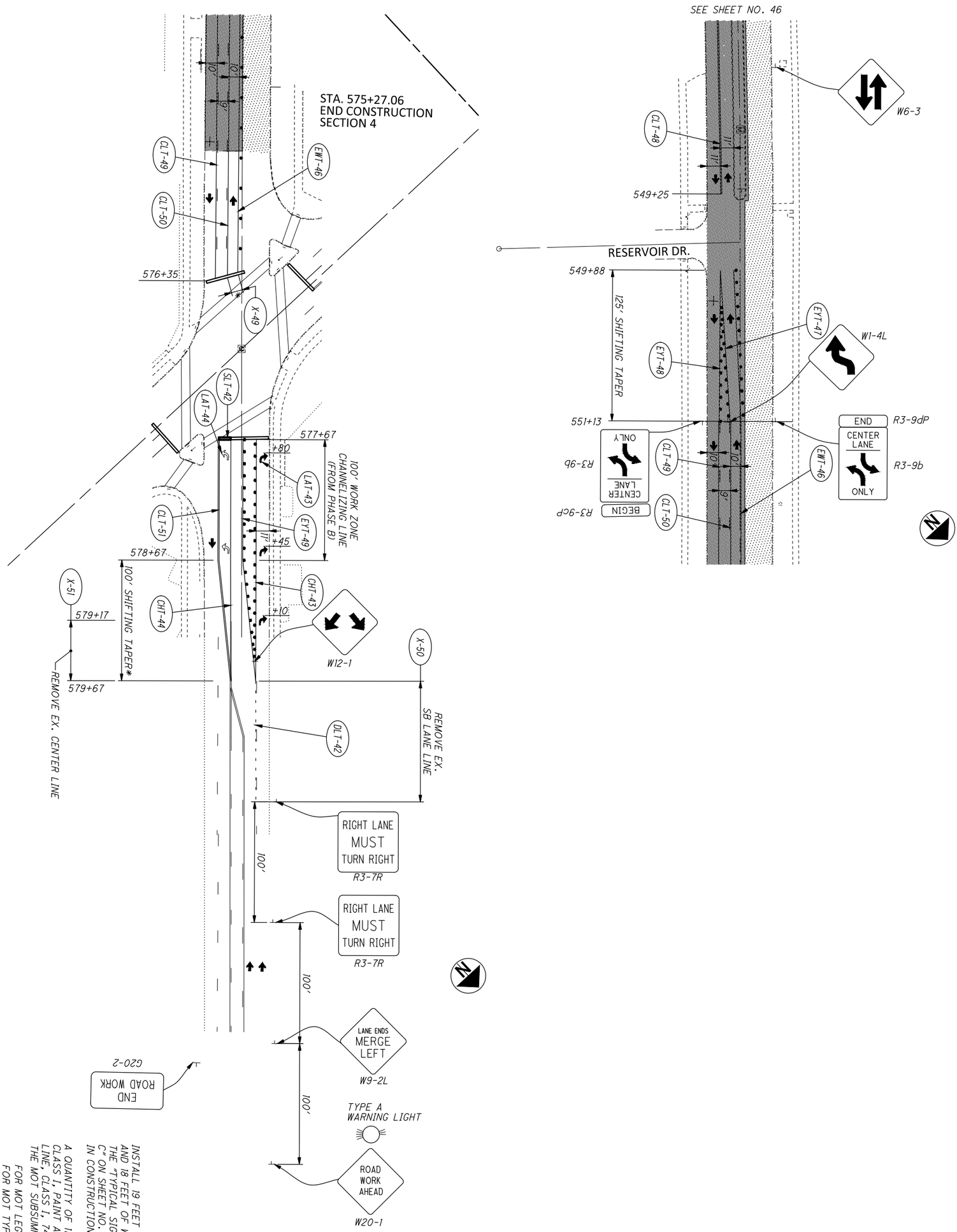


INSTALL 19 FEET OF WORK ZONE STOP LINE (PAINT) AND 18 FEET OF WORK ZONE STOP LINE (TAPE) AS PER THE "TYPICAL SIGNALIZED INTERSECTION DETAIL-PHASE C" ON SHEET NO. 36 AT 6 SIGNALIZED INTERSECTIONS IN CONSTRUCTION SECTION 4.

A QUANTITY OF 114 FEET OF WORK ZONE STOP LINE, CLASS I, PAINT AND 108 FEET OF WORK ZONE STOP LINE, CLASS I, 740.06, TYPE I HAVE BEEN INCLUDED IN THE MOT SUBSUMMARY.

FOR MOT LEGEND, SEE SHEET NO. 21.
FOR MOT TYPICAL SECTIONS, SEE SHEET NO. 30.
FOR MOT SUBSUMMARY, SEE SHEET NO. 28.



CUY-US-042-4.29

MAINTENANCE OF TRAFFIC
CONSTRUCTION SECTION 4 PHASE C (2 OF 2)

CALCULATED DP
CHECKED BT

0 20 40 80
HORIZONTAL SCALE IN FEET

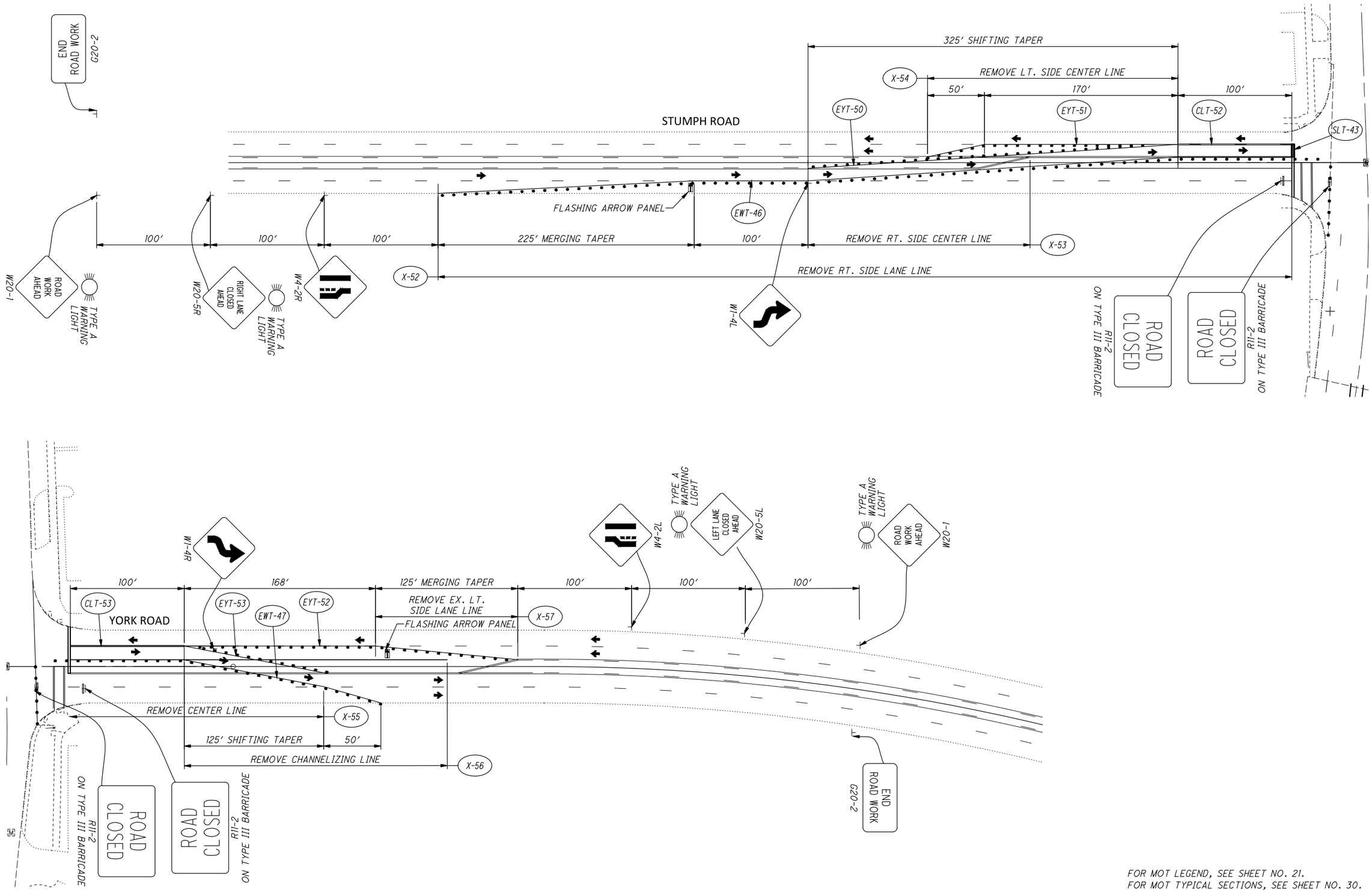


FOR MOT LEGEND, SEE SHEET NO. 21.
FOR MOT TYPICAL SECTIONS, SEE SHEET NO. 30.
FOR MOT SUBSUMMARY, SEE SHEET NO. 29.

# MAINTENANCE OF TRAFFIC
# YORK ROAD AND STUMPH ROAD STAGE A

CUY-US-042-4.29



P:\Middleburg Heights - City of\J20150340.000 Pearl Rd Rehab\Drawings\Trans\105726MP016.dwg 01-Mar-19 3:06 PM

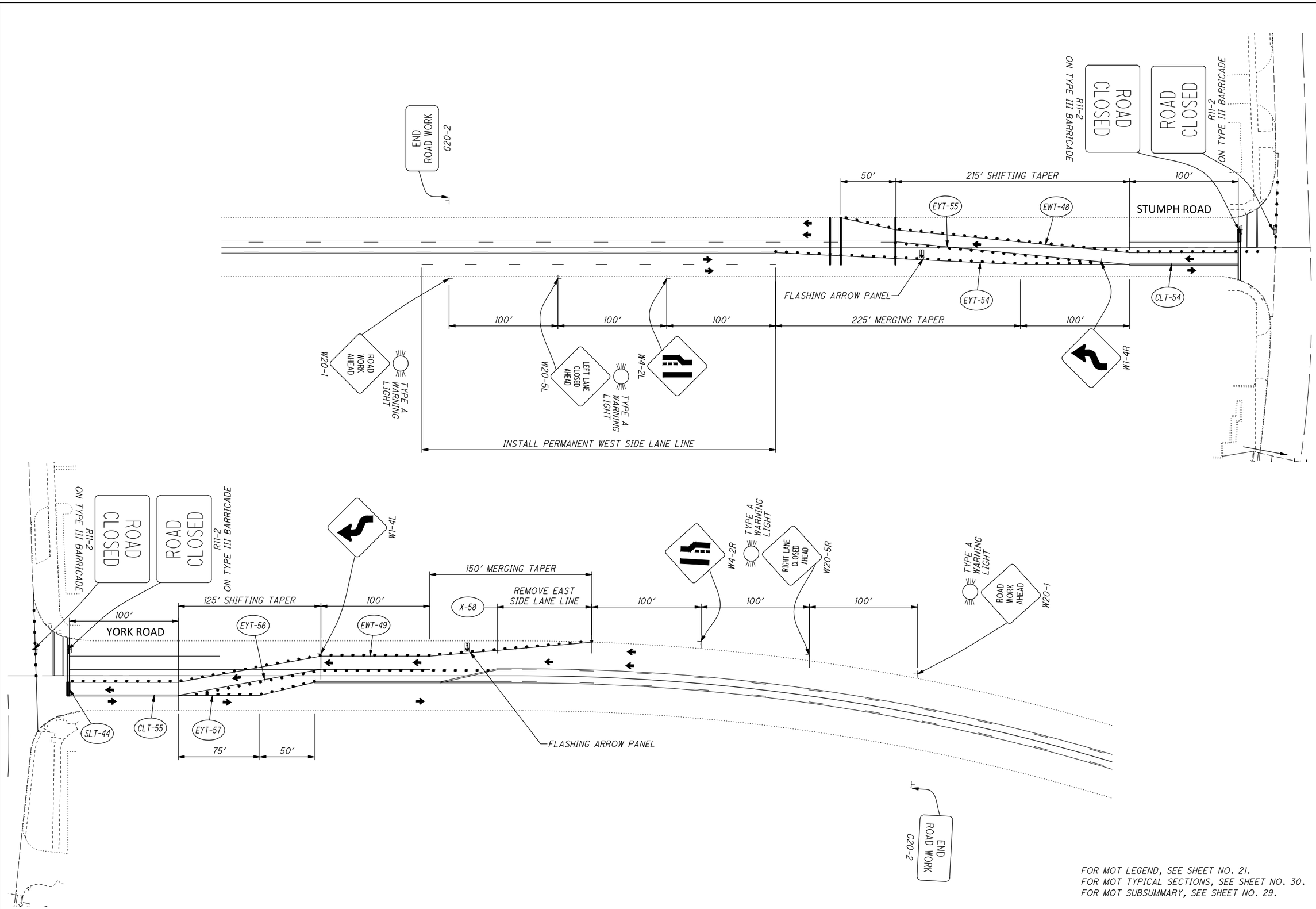


FOR MOT LEGEND, SEE SHEET NO. 21.
FOR MOT TYPICAL SECTIONS, SEE SHEET NO. 30.
FOR MOT SUBSUMMARY, SEE SHEET NO. 29.

0 20 40 80
HORIZONTAL SCALE IN FEET

CALCULATED DP
CHECKED BT

**MAINTENANCE OF TRAFFIC**
**YORK ROAD AND STUMPH ROAD STAGE B**

**CUY-US-042-4.29**



P:\Middleburg Heights - City of\J20150340.000 Pearl Rd Rehab\Drawings\Trans\105726MP017.dwg 01-Mar-19 3:06 PM

| SHEET NUMBER | | | | | | | | | | | | | | | | | | PARTICIPATION | | | | | ITEM | ITEM EXT. | GRAND TOTAL | UNIT | DESCRIPTION | SEE SHEET NO. |
|---|---|---|---|---|---|---|---|---|---|---|---|---|---|---|---|---|---|---|---|---|---|---|---|---|---|---|---|---|
| | | | | | | | | | | | | | | | | | | 01/MPO/PV | | | | 02/MPO/OT | | | | | | |
| OFFICE CALCS | 13-17 | 52 | 53 | 54 | 55 | 56 | 57 | 58 | 59 | 60 | 61 | 62 | 63 | 64 | 65 | 66 | 117 | STRONGS-VILLE | MIDDLEBURG HEIGHTS | PARMA HEIGHTS | PARMA | TLCI | | | | | | |
| | | | | | | | | | | | | | | | | | | | | | | | | | | | **ROADWAY** | |
| | | | | | | | | | | | | | | | | | | 0.12 | 0.46 | 0.41 | 0.01 | | 201 | 11000 | LS | | CLEARING AND GRUBBING | |
| 668 | | | | | | | | | | | | | | | | | 2692 | | | 668 | | 2692 | 202 | 23000 | 3360 | SY | PAVEMENT REMOVED | |
| | 650 | 184 | 412 | | 55 | 335 | 1109 | 583 | 752 | 323 | 1088 | 997 | 1125 | 1013 | 582 | 919 | | 646 | 3407 | 5832 | 242 | | 202 | 23001 | 10127 | SY | PAVEMENT REMOVED, AS PER PLAN | 14 |
| 12172 | | | | | | | | | | | | | | | | | | | 12172 | | | | 202 | 23500 | 12172 | SY | WEARING COURSE REMOVED | |
| | 2750 | 1946 | 3595 | 36 | 1614 | 2720 | 2609 | 3245 | 1542 | 3753 | 3711 | 3517 | 3574 | 4822 | 6503 | 4131 | 500 | 5791 | 16769 | 27218 | 290 | 500 | 202 | 30001 | 50568 | SF | WALK REMOVED, AS PER PLAN | 14 |
| | 700 | 495 | 877 | 25 | 151 | 492 | 1008 | 642 | 858 | 1092 | 1339 | 986 | 1137 | 1019 | 1241 | 1307 | | 1472 | 4518 | 7288 | 91 | | 202 | 32000 | 13369 | FT | CURB REMOVED | |
| | 100 | | 15 | | 692 | | | | | | | | | | 33 | | | 15 | 792 | 33 | | | 202 | 32001 | 840 | FT | CURB REMOVED, AS PER PLAN | 14 |
| | | | | | | | | | | | | | | | | | 408 | | | | | 408 | 203 | 22000 | 408 | CY | EMBANKMENT, USING NATURAL SOILS, 703.16.A | |
| 668 | | | | | | | | | | | | | | | | | 999 | | | 668 | | 999 | 204 | 10000 | 1667 | SY | SUBGRADE COMPACTION | |
| | 750 | | | | | | 964 | 26 | 3434 | | | | | 427 | 5416 | 2520 | | | 4674 | 8863 | | | 608 | 10001 | 13537 | SF | 4" CONCRETE WALK, AS PER PLAN | 14 |
| | 1400 | 1475 | 2771 | | 1183 | 2396 | 2886 | 4318 | 1461 | 2951 | 2612 | 2943 | 3144 | 2971 | 229 | 693 | 1044 | 4396 | 15945 | 12893 | 199 | 1044 | 608 | 13001 | 34477 | SF | 6" CONCRETE WALK, AS PER PLAN | 14 |
| | 600 | 286 | 610 | 59 | 200 | 296 | 212 | 383 | 105 | 954 | 978 | 255 | 377 | 984 | 840 | 981 | 276 | 996 | 2459 | 4585 | 80 | 276 | 608 | 52001 | 8396 | SF | CURB RAMP, AS PER PLAN | 15 |
| | | 3 | 3 | 1 | 5 | 6 | 6 | 2 | 4 | 1 | 8 | 5 | 5 | 1 | 4 | 2 | | 6 | 25 | 25 | | | 623 | 39500 | 56 | EACH | MONUMENT BOX ADJUSTED TO GRADE | |
| | | | | | | | | 1 | | | 1 | | | | | | | | 1 | 1 | | | SPECIAL | 69065310 | 2 | EACH | SPECIAL - GROUND WATER MONITORING WELL RECONSTRUCTION | 15 |
| | | | | | | | | | | | | | | | | | | 0.12 | 0.46 | 0.41 | 0.01 | | SPECIAL | 69098400 | LS | | SPECIAL - PRECONSTRUCTION VIDEO | 15 |
| | | | | | | | | | | | | | | | | | | | | | | | | | | | **EROSION CONTROL** | |
| | | | | | | | | | | | | | | | | | 87 | | | | | 87 | 653 | 10000 | 87 | CY | TOPSOIL FURNISHED AND PLACED | |
| | 2500 | | | | | | | | | | | | | | | | | 250 | 1250 | 1000 | | | 832 | 30000 | 2500 | EACH | EROSION CONTROL | |
| | | | | | | | | | | | | | | | | | | | | | | | | | | | **DRAINAGE** | |
| | | | | | | | | | | | | | | | | | 1626 | | | | | 1626 | 605 | 06020 | 1626 | FT | 4" BASE PIPE UNDERDRAINS WITH GEOTEXTILE FABRIC | |
| | 3000 | | | | | | | | | | | | | | | | | 300 | 1200 | 1500 | | | 605 | 14001 | 3000 | FT | 6" BASE PIPE UNDERDRAINS, AS PER PLAN | 16 |
| | | | | | | | | | | | | | | | | | 16 | | | | | 16 | 611 | 00411 | 16 | FT | 4" CONDUIT, TYPE F FOR UNDERDRAIN OUTLET, AS PER PLAN | 121 |
| | | | | | | 82 | 88 | | | | | | | | | | | | 170 | | | | 611 | 04401 | 170 | FT | 12" CONDUIT, TYPE B, AS PER PLAN | 17 |
| | | | | | | 1 | 1 | | | | | | | | | | | | 2 | | | | 611 | 98180 | 2 | EACH | CATCH BASIN, NO. 3A | |
| | | 4 | 2 | 3 | 6 | 1 | | 1 | 3 | 1 | 1 | 2 | 3 | 9 | 11 | 6 | | 6 | 15 | 32 | | | 611 | 98630 | 53 | EACH | CATCH BASIN ADJUSTED TO GRADE | 17 |
| | | 12 | 10 | 1 | | 1 | 1 | 2 | 3 | 1 | 9 | 17 | 15 | 12 | 5 | 4 | | 22 | 9 | 62 | | | 611 | 98631 | 93 | EACH | CATCH BASIN ADJUSTED TO GRADE, AS PER PLAN | 17 |
| | | | | 2 | 5 | 13 | 21 | 14 | 15 | 18 | | | | | | | | | 88 | | | | 611 | 98635 | 88 | EACH | CATCH BASIN RECONSTRUCTED TO GRADE, AS PER PLAN | 17 |
| | | 17 | 20 | 1 | 7 | 15 | 17 | 13 | 11 | 9 | 26 | 24 | 31 | 13 | 9 | 11 | | 37 | 73 | 111 | 3 | | 611 | 99654 | 224 | EACH | MANHOLE ADJUSTED TO GRADE | |
| | 27000 | | | | | | | | | | | | | | | | | 17000 | 5000 | 5000 | | | SPECIAL | 61199820 | 27000 | LB | SPECIAL - MISCELLANEOUS METAL | 16 |
| | | | | | | | | | | | | | | | | | | | | | | | | | | | **PAVEMENT** | |
| | 4000 | | | | | | | | | | | | | | | | | 500 | 1500 | 2000 | | | 251 | 01011 | 4000 | CY | PARTIAL DEPTH REPAIR (441), AS PER PLAN | 16 |
| | 675 | | | | | | | | | | | | | | | | | 100 | 250 | 325 | | | 251 | 01043 | 675 | CY | PARTIAL DEPTH REPAIR (ASPHALT CONCRETE BASE), AS PER PLAN | 16 |
| 195356 | | | | | | | | | | | | | | | | | | 25039 | 82448 | 86332 | 1537 | | 254 | 01001 | 195356 | SY | PAVEMENT PLANING, ASPHALT CONCRETE, AS PER PLAN (3 1/4") | 16 |
| | 19600 | | | | | | | | | | | | | | | | | 2500 | 8500 | 8500 | 100 | | 254 | 01600 | 19600 | SY | PATCHING PLANED SURFACE | |
| | 4500 | | | | | | | | | | | | | | | | | 500 | 2000 | 2000 | | | 255 | 10011 | 4500 | SY | FULL DEPTH PAVEMENT REMOVAL AND RIGID REPLACEMENT, CLASS QC1, AS PER PLAN | 16 |
| | | | | | | | | | | | | | | | | | 7 | | | | | 7 | 301 | 46000 | 7 | CY | ASPHALT CONCRETE BASE, PG64-22 | |
| 112 | | | | | | | | | | | | | | | | | 167 | | | 112 | | 167 | 304 | 20001 | 279 | CY | AGGREGATE BASE, AS PER PLAN | 116 |
| | | | | | | | | | | | | | | | | | 499 | | | | | 499 | 305 | 17500 | 499 | SY | CONCRETE BASE, MISC.: VARIABLE THICKNESS, CLASS QC1 | |
| 30825 | | | | | | | | | | | | | | | | | | 3756 | 14072 | 12766 | 231 | | 407 | 20000 | 30825 | GAL | NON-TRACKING TACK COAT | |
| 8599 | | | | | | | | | | | | | | | | | | 1044 | 3943 | 3547 | 65 | | 442 | 10001 | 8599 | CY | ASPHALT CONCRETE SURFACE COURSE, 12.5 MM, TYPE A (446), AS PER PLAN (PG70-22M) | 15 |
| 10031 | | | | | | | | | | | | | | | | | | 1218 | 4600 | 4138 | 75 | | 442 | 10100 | 10031 | CY | ASPHALT CONCRETE INTERMEDIATE COURSE, 19 MM, TYPE A (446) | |

CALCULATED DRP
CHECKED BT

# GENERAL SUMMARY

CUY-US-042-4.29



P:\Middleburg Heights - City of\J20150340.000 Pearl Rd Rehab\Drawings\Trans\105726GG001.dwg 18-May-19 5:16 PM

| SHEET NUMBER | | | | | | | | | | | | | | | | | | PARTICIPATION | | | | | ITEM | ITEM EXT. | GRAND TOTAL | UNIT | DESCRIPTION | SEE SHEET NO. |
|---|---|---|---|---|---|---|---|---|---|---|---|---|---|---|---|---|---|---|---|---|---|---|---|---|---|---|---|---|
| | | | | | | | | | | | | | | | | | | 01/MPO/PV | | | | 02/MPO/OT | | | | | | |
| OFFICE CALCS | 13-17 | 52 | 53 | 54 | 55 | 56 | 57 | 58 | 59 | 60 | 61 | 62 | 63 | 64 | 65 | 66 | 117 | STRONGS-VILLE | MIDDLEBURG HEIGHTS | PARMA HEIGHTS | PARMA | TLCI | | | | | | |
| | | | | | | | | | | | | | | | | | | | | | | | | | | | **PAVEMENT (CONT.)** | |
| | 500 | 166 | 412 | | 55 | 335 | 896 | 516 | 478 | 456 | 1088 | 997 | 1036 | 974 | 59 | 347 | | 628 | 2936 | 4509 | 242 | | 451 | 13011 | 8315 | SY | 8" REINFORCED CONCRETE PAVEMENT, CLASS QC1, AS PER PLAN | 15 |
| 668 | | | | | | | | | | | | | | | | | 283 | | | 668 | | 283 | 451 | 14010 | 951 | SY | 9" REINFORCED CONCRETE PAVEMENT, CLASS QC1 | |
| | | | | | | | | | | | | | | | | | 1463 | | | | | 1463 | 451 | 98000 | 1463 | SY | REINFORCED CONCRETE PAVEMENT, MISC.: DECORATIVE | 116 |
| | | | | | | | | | | | | | | | | | | | | | | | | | | | CONCRETE SIDEWALK | |
| | 150 | | | | | | 56 | 4 | 260 | | | | | 39 | 524 | 533 | | | 370 | 1196 | | | 452 | 10051 | 1566 | SY | 6" NON-REINFORCED CONCRETE PAVEMENT, | 15 |
| | | | | | | | | | | | | | | | | | | | | | | | | | | | CLASS QC MS, AS PER PLAN | |
| 310 | | | | | | | | | | | | | | | | | 102 | | | 310 | | 102 | 609 | 14001 | 412 | FT | CURB, TYPE 2-A, AS PER PLAN | 12 |
| | 100 | | | | 668 | | | | | | | | | | | | | | 768 | | | | 609 | 16001 | 768 | FT | CURB, TYPE 2-B, AS PER PLAN (A) | 14 |
| | | | | | | | | | | | | | | | | | 1657 | | | | | 1657 | 609 | 16001 | 1657 | FT | CURB, TYPE 2-B, AS PER PLAN (B) | 127 |
| | 700 | 443 | 824 | 25 | 137 | 443 | 983 | 585 | 845 | 992 | 1230 | 966 | 1090 | 933 | 1156 | 1188 | 96 | 1367 | 4260 | 6832 | 81 | 96 | 609 | 26001 | 12636 | FT | CURB, TYPE 6, AS PER PLAN | 14 |
| 7863 | | | | | | | | | | | | | | | | | | 959 | 3329 | 3514 | 61 | | 875 | 10000 | 7863 | LB | LONGITUDINAL JOINT ADHESIVE | |
| | | | | | | | | | | | | | | | | | | | | | | | | | | | **WATER WORK** | |
| | | 22 | 15 | 3 | 19 | 26 | 23 | 24 | 18 | 30 | 18 | 24 | 27 | 34 | 33 | 30 | | 37 | 143 | 163 | 3 | | SPECIAL | 63820500 | 346 | EACH | SPECIAL-VALVE BOX ADJUSTED TO GRADE (CLEVELAND) | 17 |
| | | 2 | 1 | | | | 4 | | | | 2 | 6 | 1 | 2 | 2 | | | 3 | 4 | 13 | | | SPECIAL | 63820902 | 20 | EACH | SPECIAL-SERVICE BOX ADJUSTED TO GRADE (CLEVELAND) | 17 |
| | | | 3 | | 3 | 7 | 4 | 2 | 2 | 1 | 2 | | 3 | 11 | 6 | 11 | | 3 | 19 | 33 | | | 638 | 98000 | 55 | EACH | WATER WORK, MISC.: WATER MANHOLE ADJUSTED TO GRADE | 17 |
| | | | | | | | | | | | | | | | | | | | | | | | | | | | **TRAFFIC CONTROL** | |
| | | | | | | | | | | | | | | | | | | | | | | | | | | | TRAFFIC CONTROL GENERAL SUMMARY | 71 |
| | | | | | | | | | | | | | | | | | | | | | | | | | | | **TRAFFIC SIGNAL** | |
| | | | | | | | | | | | | | | | | | | | | | | | | | | | TRAFFIC SIGNAL GENERAL SUMMARY | 72 |
| | | | | | | | | | | | | | | | | | | | | | | | | | | | **LANDSCAPING** | |
| | | | | | | | | | | | | | | | | | 6 | | | | | 6 | 630 | 97700 | 6 | EACH | SIGNING, MISC.: WAYFARING SIGN (VEHICULAR DIRECTIONAL) | 116 |
| | | | | | | | | | | | | | | | | | 2 | | | | | 2 | 630 | 97700 | 2 | EACH | SIGNING, MISC.: WAYFARING SIGN (AMENITIES | 116 |
| | | | | | | | | | | | | | | | | | | | | | | | | | | | VEHICULAR DIRECTIONAL) | |
| | | | | | | | | | | | | | | | | | 6432 | | | | | 6432 | 661 | 12000 | 6432 | EACH | GROUNDCOVER AND VINES, 1 YEAR, POTTED, THYMUS PRAECOX | |
| | | | | | | | | | | | | | | | | | | | | | | | | | | | ARCITUS 'COCCINEUS'-RED CREEPING THYME | |
| | | | | | | | | | | | | | | | | | 18 | | | | | 18 | 661 | 40080 | 18 | EACH | DECIDUOUS TREE, 2" CALIPER (ZELKOVA SERRATA 'MUSHASHINO') | |
| | | | | | | | | | | | | | | | | | 6 | | | | | 6 | 690 | 50560 | 6 | EACH | SPECIAL-BICYCLE RACK | 116 |
| | | | | | | | | | | | | | | | | | | | | | | | | | | | **MAINTENANCE OF TRAFFIC** | |
| | | | | | | | | | | | | | | | | | | | | | | | | | | | MAINTENANCE OF TRAFFIC GENERAL SUMMARY | 22 |
| | | | | | | | | | | | | | | | | | | | | | | | | | | | **INCIDENTALS** | |
| | | | | | | | | | | | | | | | | | | 0.12 | 0.46 | 0.41 | 0.01 | | 614 | 11000 | LS | | MAINTAINING TRAFFIC | |
| | | | | | | | | | | | | | | | | | | 2 | 9 | 9 | | | 619 | 16010 | 20 | MNTH | FIELD OFFICE, TYPE B | |
| | | | | | | | | | | | | | | | | | | 0.12 | 0.46 | 0.41 | 0.01 | | 623 | 10000 | LS | | CONSTRUCTION LAYOUT STAKES AND STAKING | |
| | | | | | | | | | | | | | | | | | | 0.12 | 0.46 | 0.41 | 0.01 | | 624 | 10000 | LS | | MOBILIZATION | |

CALCULATED DRP
CHECKED BT

# GENERAL SUMMARY

CUY-US-042-4.29



P:\Middleburg Heights - City of\J20150340.000 Pearl Rd Rehab\Drawings\Trans\105726GG002.dwg 18-May-19 5:17 PM

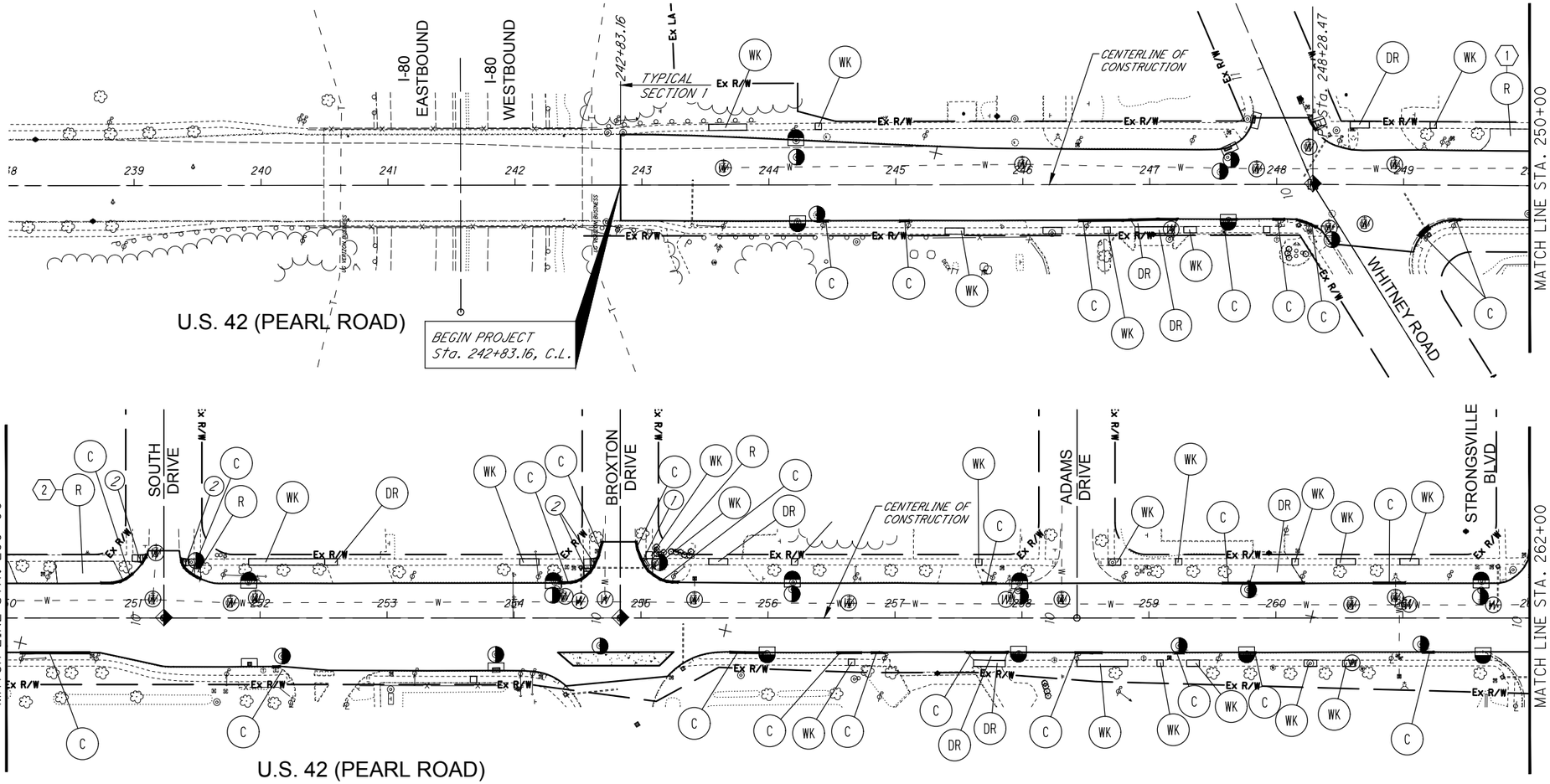


| LOCATION | 202 PAVEMENT REMOVED, AS PER PLAN | 202 WALK REMOVED, AS PER PLAN | 202 CURB REMOVED | | 451 8" REINFORCED CONCRETE PAVEMENT, CLASS QC1, AS PER PLAN | 452 6" NON-REINFORCED CONCRETE PAVEMENT, CLASS QC MS, AS PER PLAN | 608 4" CONCRETE WALK, AS PER PLAN | 608 6" CONCRETE WALK, AS PER PLAN | 608 CURB RAMP, AS PER PLAN | | 609 CURB, TYPE 6, AS PER PLAN | 611 12" CONDUIT, TYPE B, AS PER PLAN | 611 CATCH BASIN, NO. 3A | 611 CATCH BASIN ADJUSTED TO GRADE | 611 CATCH BASIN ADJUSTED TO GRADE, AS PER PLAN | 611 CATCH BASIN RECONSTRUCTED TO GRADE, AS PER PLAN | 611 MANHOLE ADJUSTED TO GRADE | 623 MONUMENT BOX ADJUSTED TO GRADE | 638 SPECIAL-VALVE BOX ADJUSTED TO GRADE (CLEVELAND STANDARD) | 638 SPECIAL-SERVICE BOX ADJUSTED TO GRADE (CLEVELAND STANDARD) | 638 WATER WORK, MISC.: WATER MANHOLE ADJUSTED TO GRADE (CLEVELAND STANDARD) | 690 SPECIAL - GROUND WATER MONITORING WELL RECONSTRUCTION |
|---|---|---|---|---|---|---|---|---|---|---|---|---|---|---|---|---|---|---|---|---|---|---|
| | SY | SF | FT | | SY | SY | SF | SF | SF | | FT | FT | EACH | EACH | EACH | EACH | EACH | EACH | EACH | EACH | EACH | EACH |
| 242+83.16 TO 250+00.00 | 55 | 459 | 149 | | 55 | | | 375 | 49 | | 140 | | | 2 | 3 | | 5 | 1 | 7 | 1 | | |
| 250+00.00 TO 262+00.00 | 129 | 1,487 | 346 | | 111 | | | 1,100 | 237 | | 303 | | | 2 | 9 | | 12 | 2 | 15 | 1 | | |
| TOTALS TO GEN. SUMM. | 184 | 1,946 | 495 | 0 | 166 | 0 | 0 | 1,475 | 286 | 0 | 443 | 0 | 0 | 4 | 12 | 0 | 17 | 3 | 22 | 2 | 0 | 0 |

## CURB RAMP LEGEND

REFER TO ODOT STANDARD CONSTRUCTION DRAWING BP-7.1.

1. TYPE A1 CURB RAMP
2. TYPE A2 CURB RAMP
3. TYPE B1 CURB RAMP
4. TYPE B2 CURB RAMP
5. TYPE B3 CURB RAMP
6. TYPE C1 CURB RAMP
7. TYPE C2 CURB RAMP

## LEGEND

- MONUMENT BOX ADJUSTED TO GRADE
- SEWER MANHOLE ADJUSTED TO GRADE
- (W) VALVE BOX / SERVICE BOX ADJUSTED TO GRADE CLEVELAND WATER DEPT.
- CWD MANHOLE/VAULT ADJUSTED TO GRADE
- INSTALL CATCH BASIN 3A
- CATCH BASIN ADJUSTED TO GRADE
- CATCH BASIN ADJUSTED TO GRADE, AS PER PLAN
- CATCH BASIN/MANHOLE RECONSTRUCTED TO GRADE, AS PER PLAN
- ELECTRIC VAULT ADJUSTED TO GRADE (BY OTHERS)
- TELEPHONE MANHOLE ADJUSTED TO GRADE (BY OTHERS)
- (R) REMOVAL OF STRUCTURES AND OBSTRUCTIONS
- (DR) CONCRETE DRIVE
- (WK) CONCRETE WALK
- (C) CURB, TYPE 6 OR COMBINATION CURB AND GUTTER, TYPE 3
- (D) 12" CONDUIT, TYPE B
- (D) CATCH BASIN, TYPE 3A

## NOTES

1. REMOVE ABANDONED LT. SIDE DRIVEWAY APRON FROM STA. 249+60 TO STA. 250+09.
2. REMOVE ABANDONED LT. SIDE DRIVEWAY APRON FROM STA. 250+38 TO STA. 250+92.

HORIZONTAL SCALE IN FEET 0 25 50 100

CALCULATED TWC
CHECKED BT

# PLAN SHEET
## STA. 238+00 TO STA. 262+00

CUY-US-042-4.29



P:\Middleburg Heights - City of\J20150340.000 Pearl Rd Rehab\Drawings\Trans\105726GP001.dwg 01-Mar-19 3:09 PM

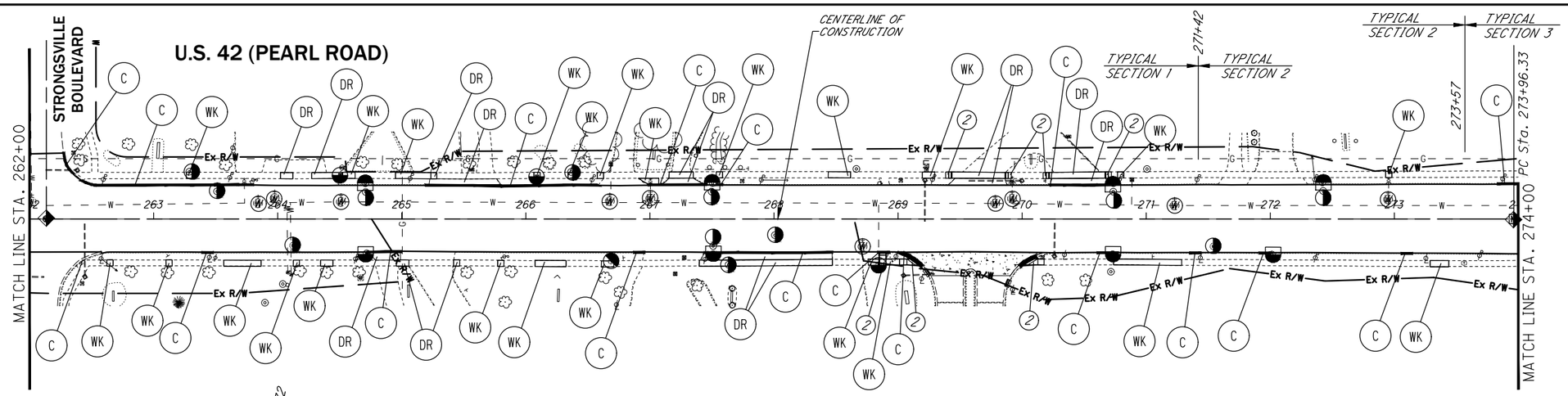


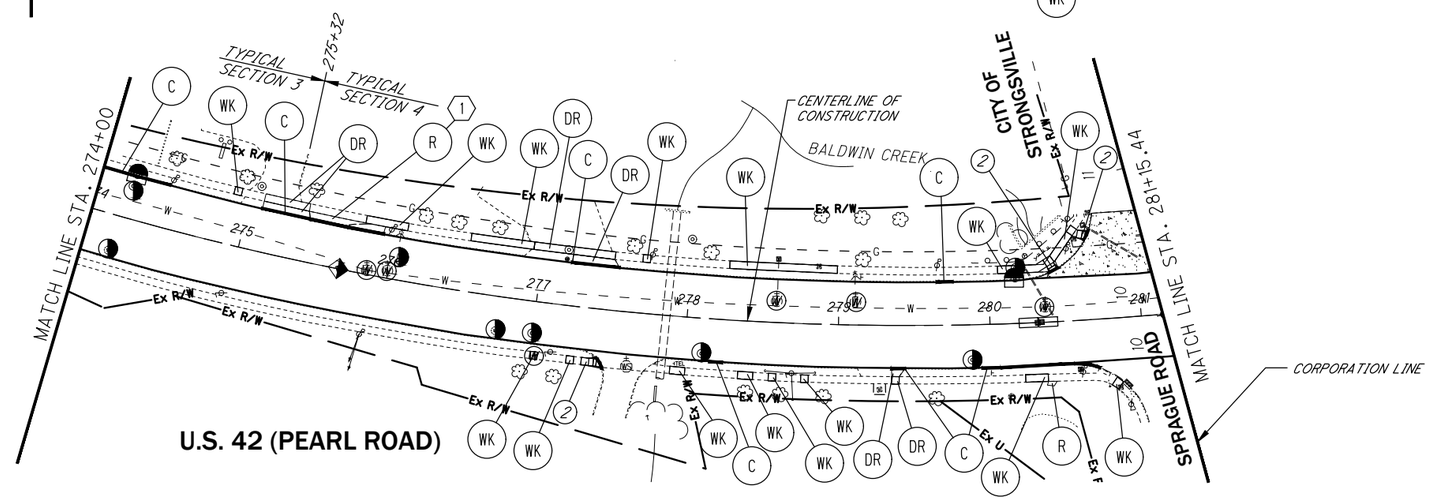


| LOCATION | 202 PAVEMENT REMOVED, AS PER PLAN | 202 WALK REMOVED, AS PER PLAN | 202 CURB REMOVED | 202 CURB REMOVED, AS PER PLAN | 451 8" REINFORCED CONCRETE PAVEMENT, CLASS QC1, AS PER PLAN | 452 6" NON-REINFORCED CONCRETE PAVEMENT, CLASS QC MS, AS PER PLAN | 608 4" CONCRETE WALK, AS PER PLAN | 608 6" CONCRETE WALK, AS PER PLAN | 608 CURB RAMP, AS PER PLAN | | 609 CURB, TYPE 6, AS PER PLAN | 611 12" CONDUIT, TYPE B, AS PER PLAN | 611 CATCH BASIN, NO. 3A | 611 CATCH BASIN ADJUSTED TO GRADE | 611 CATCH BASIN ADJUSTED TO GRADE, AS PER PLAN | 611 CATCH BASIN RECONSTRUCTED TO GRADE, AS PER PLAN | 611 MANHOLE ADJUSTED TO GRADE | 623 MONUMENT BOX ADJUSTED TO GRADE | 638 SPECIAL-VALVE BOX ADJUSTED TO GRADE (CLEVELAND STANDARD) | 638 SPECIAL-SERVICE BOX ADJUSTED TO GRADE (CLEVELAND STANDARD) | 638 WATER WORK, MISC.: WATER MANHOLE ADJUSTED TO GRADE (CLEVELAND STANDARD) | 690 SPECIAL - GROUND WATER MONITORING WELL RECONSTRUCTION |
|---|---|---|---|---|---|---|---|---|---|---|---|---|---|---|---|---|---|---|---|---|---|---|
| | SY | SF | FT | FT | SY | SY | SF | SF | SF | | FT | FT | EACH | EACH | EACH | EACH | EACH | EACH | EACH | EACH | EACH | EACH |
| 262+00.00 TO 274+00.00 | 328 | 1,816 | 601 | | 328 | | | 1,459 | 365 | | 567 | | | | 8 | | 12 | 2 | 10 | | 3 | |
| 274+00.00 TO 281+15.44 | 84 | 1,779 | 276 | 15 | 84 | | | 1,312 | 245 | | 257 | | | 2 | 2 | | 8 | 1 | 5 | 1 | | |
| TOTALS TO GEN. SUMM. | 412 | 3,595 | 877 | 15 | 412 | 0 | 0 | 2,771 | 610 | 0 | 824 | 0 | 0 | 2 | 10 | 0 | 20 | 3 | 15 | 1 | 3 | 0 |

## CURB RAMP LEGEND

REFER TO ODOT STANDARD CONSTRUCTION DRAWING BP-7.1.

1. TYPE A1 CURB RAMP
2. TYPE A2 CURB RAMP
3. TYPE B1 CURB RAMP
4. TYPE B2 CURB RAMP
5. TYPE B3 CURB RAMP
6. TYPE C1 CURB RAMP
7. TYPE C2 CURB RAMP

## LEGEND

- MONUMENT BOX ADJUSTED TO GRADE
- SEWER MANHOLE ADJUSTED TO GRADE
- (W) VALVE BOX / SERVICE BOX ADJUSTED TO GRADE-CLEVE WATER DEPT.
- WATER MANHOLE/VAULT/METER ADJUSTED TO GRADE-CLEVE WATER DEPT.
- INSTALL CATCH BASIN 3A
- CATCH BASIN ADJUSTED TO GRADE
- CATCH BASIN ADJUSTED TO GRADE, AS PER PLAN
- CATCH BASIN/MANHOLE RECONSTRUCTED TO GRADE, AS PER PLAN
- ELECTRIC VAULT ADJUSTED TO GRADE (BY OTHERS)
- TELEPHONE MANHOLE ADJUSTED TO GRADE (BY OTHERS)
- (R) REMOVAL OF STRUCTURES AND OBSTRUCTIONS
- (DR) CONCRETE DRIVE
- (WK) CONCRETE WALK
- (C) CURB, TYPE 6 OR COMBINATION CURB AND GUTTER, TYPE 3
- (D) 12" CONDUIT, TYPE B
- (D) CATCH BASIN, TYPE 3A

## NOTES

(1) REMOVE EXISTING LT. SIDE PAVED TREE LAWN FROM STA. 275+41 TO STA 275+92.

N

0 25 50 100 HORIZONTAL SCALE IN FEET

CALCULATED TWC CHECKED BT

# PLAN SHEET
## STA 262+00 TO STA. 281+15.44

CUY-US-042-4.29



P:\Middleburg Heights - City of\J20150340.000 Pearl Rd Rehab\Drawings\Trans\105726GP002.dwg 01-Mar-19 3:10 PM

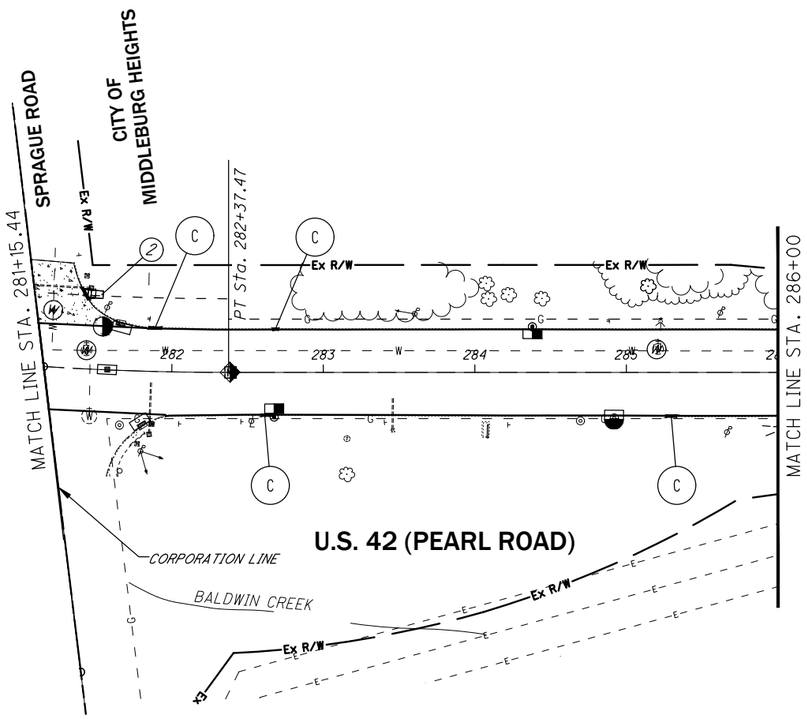


## CURB RAMP LEGEND

REFER TO ODOT STANDARD CONSTRUCTION DRAWING BP-7.1.

1. TYPE A1 CURB RAMP
2. TYPE A2 CURB RAMP
3. TYPE B1 CURB RAMP
4. TYPE B2 CURB RAMP
5. TYPE B3 CURB RAMP
6. TYPE C1 CURB RAMP
7. TYPE C2 CURB RAMP

## LEGEND

- MONUMENT BOX ADJUSTED TO GRADE
- SEWER MANHOLE ADJUSTED TO GRADE
- (W) VALVE BOX / SERVICE BOX ADJUSTED TO GRADE-CLEVE WATER DEPT.
- WATER MANHOLE/VAULT/METER ADJUSTED TO GRADE-CLEVE WATER DEPT.
- INSTALL CATCH BASIN 3A
- CATCH BASIN ADJUSTED TO GRADE
- CATCH BASIN ADJUSTED TO GRADE, AS PER PLAN
- CATCH BASIN/MANHOLE RECONSTRUCTED TO GRADE, AS PER PLAN
- ELECTRIC VAULT ADJUSTED TO GRADE (BY OTHERS)
- TELEPHONE MANHOLE ADJUSTED TO GRADE (BY OTHERS)
- (R) REMOVAL OF STRUCTURES AND OBSTRUCTIONS
- (DR) CONCRETE DRIVE
- (WK) CONCRETE WALK
- (C) CURB, TYPE 6 OR COMBINATION CURB AND GUTTER, TYPE 3
- (D) 12" CONDUIT, TYPE B
- (D) CATCH BASIN, TYPE 3A

| LOCATION | 202 PAVEMENT REMOVED, AS PER PLAN | 202 WALK REMOVED, AS PER PLAN | 202 CURB REMOVED | | 451 8" REINFORCED CONCRETE PAVEMENT, CLASS QC1, AS PER PLAN | 452 6" NON-REINFORCED CONCRETE PAVEMENT, CLASS QC MS, AS PER PLAN | 608 4" CONCRETE WALK, AS PER PLAN | 608 6" CONCRETE WALK, AS PER PLAN | 608 CURB RAMP, AS PER PLAN | | 609 CURB, TYPE 6, AS PER PLAN | 611 12" CONDUIT, TYPE B, AS PER PLAN | 611 CATCH BASIN, NO. 3A | 611 CATCH BASIN ADJUSTED TO GRADE | 611 CATCH BASIN ADJUSTED TO GRADE, AS PER PLAN | 611 CATCH BASIN RECONSTRUCTED TO GRADE, AS PER PLAN | 611 MANHOLE ADJUSTED TO GRADE | 623 MONUMENT BOX ADJUSTED TO GRADE | 638 SPECIAL-VALVE BOX ADJUSTED TO GRADE (CLEVELAND STANDARD) | 638 SPECIAL-SERVICE BOX ADJUSTED TO GRADE (CLEVELAND STANDARD) | 638 WATER WORK, MISC.: WATER MANHOLE ADJUSTED TO GRADE (CLEVELAND STANDARD) | 690 SPECIAL - GROUND WATER MONITORING WELL RECONSTRUCTION |
|---|---|---|---|---|---|---|---|---|---|---|---|---|---|---|---|---|---|---|---|---|---|---|
| | SY | SF | FT | | SY | SY | SF | SF | SF | | FT | FT | EACH | EACH | EACH | EACH | EACH | EACH | EACH | EACH | EACH | EACH |
| 281+15.44 TO 286+00.00 | | 36 | 25 | | | | | | 59 | | 25 | | | 3 | 1 | 2 | 1 | 1 | 3 | | | |
| TOTALS TO GEN. SUMM. | 0 | 36 | 25 | | 0 | 0 | 0 | 0 | 59 | | 25 | 0 | 0 | 3 | 1 | 2 | 1 | 1 | 3 | 0 | 0 | 0 |

N

HORIZONTAL SCALE IN FEET 0 25 50 100

CALCULATED TWC
CHECKED DP

# PLAN SHEET
## STA. 281+15.44 TO STA. 286+00

CUY-US-042-4.29



P:\Middleburg Heights - City of\J20150340.000 Pearl Rd Rehab\Drawings\Trans\105726GP003.dwg 01-Mar-19 3:10 PM

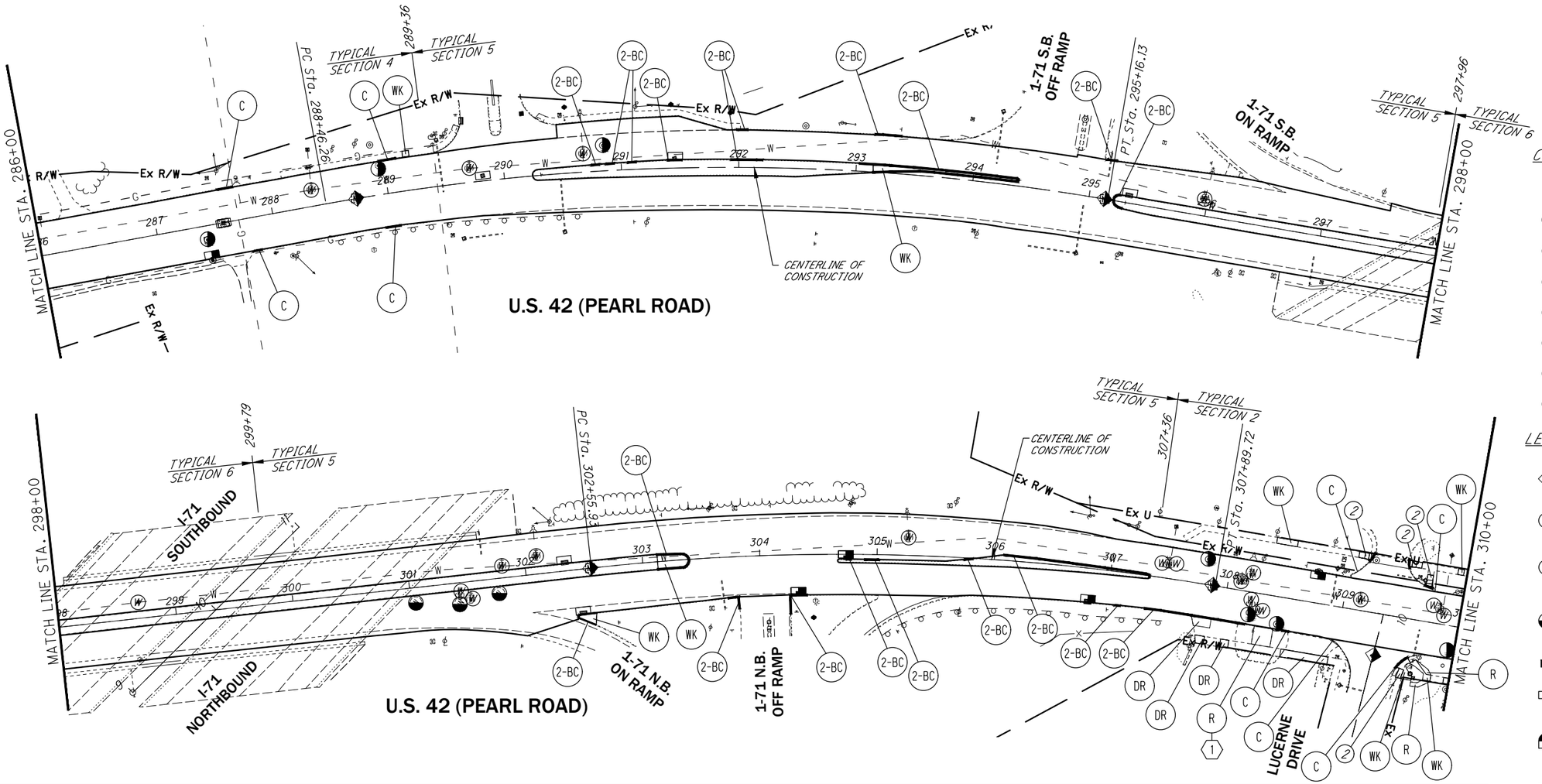


| LOCATION | 202 PAVEMENT REMOVED, AS PER PLAN | 202 WALK REMOVED, AS PER PLAN | 202 CURB REMOVED | 202 CURB REMOVED, AS PER PLAN | 451 8" REINFORCED CONCRETE PAVEMENT, CLASS QC1, AS PER PLAN | 452 6" NON-REINFORCED CONCRETE PAVEMENT, CLASS QC MS, AS PER PLAN | 608 4" CONCRETE WALK, AS PER PLAN | 608 6" CONCRETE WALK, AS PER PLAN | 608 CURB RAMP, AS PER PLAN | 609 CURB, TYPE 2-B, AS PER PLAN "A" | 609 CURB, TYPE 6, AS PER PLAN | 611 12" CONDUIT, TYPE B, AS PER PLAN | 611 CATCH BASIN, NO. 3A | 611 CATCH BASIN ADJUSTED TO GRADE | 611 CATCH BASIN ADJUSTED TO GRADE, AS PER PLAN | 611 CATCH BASIN RECONSTRUCTED TO GRADE, AS PER PLAN | 611 MANHOLE ADJUSTED TO GRADE | 623 MONUMENT BOX ADJUSTED TO GRADE | 638 SPECIAL-VALVE BOX ADJUSTED TO GRADE (CLEVELAND STANDARD) | 638 SPECIAL-SERVICE BOX ADJUSTED TO GRADE (CLEVELAND STANDARD) | 638 WATER WORK, MISC.: WATER MANHOLE ADJUSTED TO GRADE (CLEVELAND STANDARD) | 690 SPECIAL - GROUND WATER MONITORING WELL RECONSTRUCTION |
|---|---|---|---|---|---|---|---|---|---|---|---|---|---|---|---|---|---|---|---|---|---|---|
| | SY | SF | FT | FT | SY | SY | SF | SF | SF | FT | FT | FT | EACH | EACH | EACH | EACH | EACH | EACH | EACH | EACH | EACH | EACH |
| 286+00.00 TO 298+00.00 | | 357 | 45 | 374 | | | | 357 | | 374 | 45 | | | 4 | | 1 | 3 | 2 | 4 | | | |
| 298+00.00 TO 310+00.00 | 55 | 1,257 | 106 | 318 | 55 | | | 826 | 200 | 294 | 92 | | | 2 | | 4 | 4 | 3 | 15 | | 3 | |
| TOTALS TO GEN. SUMM. | 55 | 1,614 | 151 | 692 | 55 | 0 | 0 | 1,183 | 200 | 668 | 137 | 0 | 0 | 6 | 0 | 5 | 7 | 5 | 19 | 0 | 3 | 0 |

## CURB RAMP LEGEND

REFER TO ODOT STANDARD CONSTRUCTION DRAWING BP-7.1.

- (C) TYPE A1 CURB RAMP
- (2) TYPE A2 CURB RAMP
- (3) TYPE B1 CURB RAMP
- (4) TYPE B2 CURB RAMP
- (5) TYPE B3 CURB RAMP
- (6) TYPE C1 CURB RAMP
- (7) TYPE C2 CURB RAMP

## LEGEND

- MONUMENT BOX ADJUSTED TO GRADE
- SEWER MANHOLE ADJUSTED TO GRADE
- (W) VALVE BOX / SERVICE BOX ADJUSTED TO GRADE-CLEVE WATER DEPT.
- WATER MANHOLE/VAULT/METER ADJUSTED TO GRADE-CLEVE WATER DEPT.
- INSTALL CATCH BASIN 3A
- CATCH BASIN ADJUSTED TO GRADE
- CATCH BASIN ADJUSTED TO GRADE, AS PER PLAN
- CATCH BASIN/MANHOLE RECONSTRUCTED TO GRADE, AS PER PLAN
- ELECTRIC VAULT ADJUSTED TO GRADE (BY OTHERS)
- TELEPHONE MANHOLE ADJUSTED TO GRADE (BY OTHERS)
- (R) REMOVAL OF STRUCTURES AND OBSTRUCTIONS
- (DR) CONCRETE DRIVE
- (WK) CONCRETE WALK
- (C) CURB, TYPE 6
- (2-BC) CURB, TYPE 2-B, AS PER PLAN
- (D) 12" CONDUIT, TYPE B
- (D) CATCH BASIN, TYPE 3A

## NOTES

(1) REMOVE EXISTING RT. SIDE PAVED TREE LAWN FROM STA. 308+28 TO STA 308+44.

N

HORIZONTAL SCALE IN FEET 0 25 50 100

CALCULATED TWC
CHECKED BT

# PLAN SHEET
## STA. 286+00 TO STA. 310+00

CUY-US-042-4.29



P:\Middleburg Heights - City of\J20150340.000 Pearl Rd Rehab\Drawings\Trans\105726GP004.dwg 01-Mar-19 3:11 PM

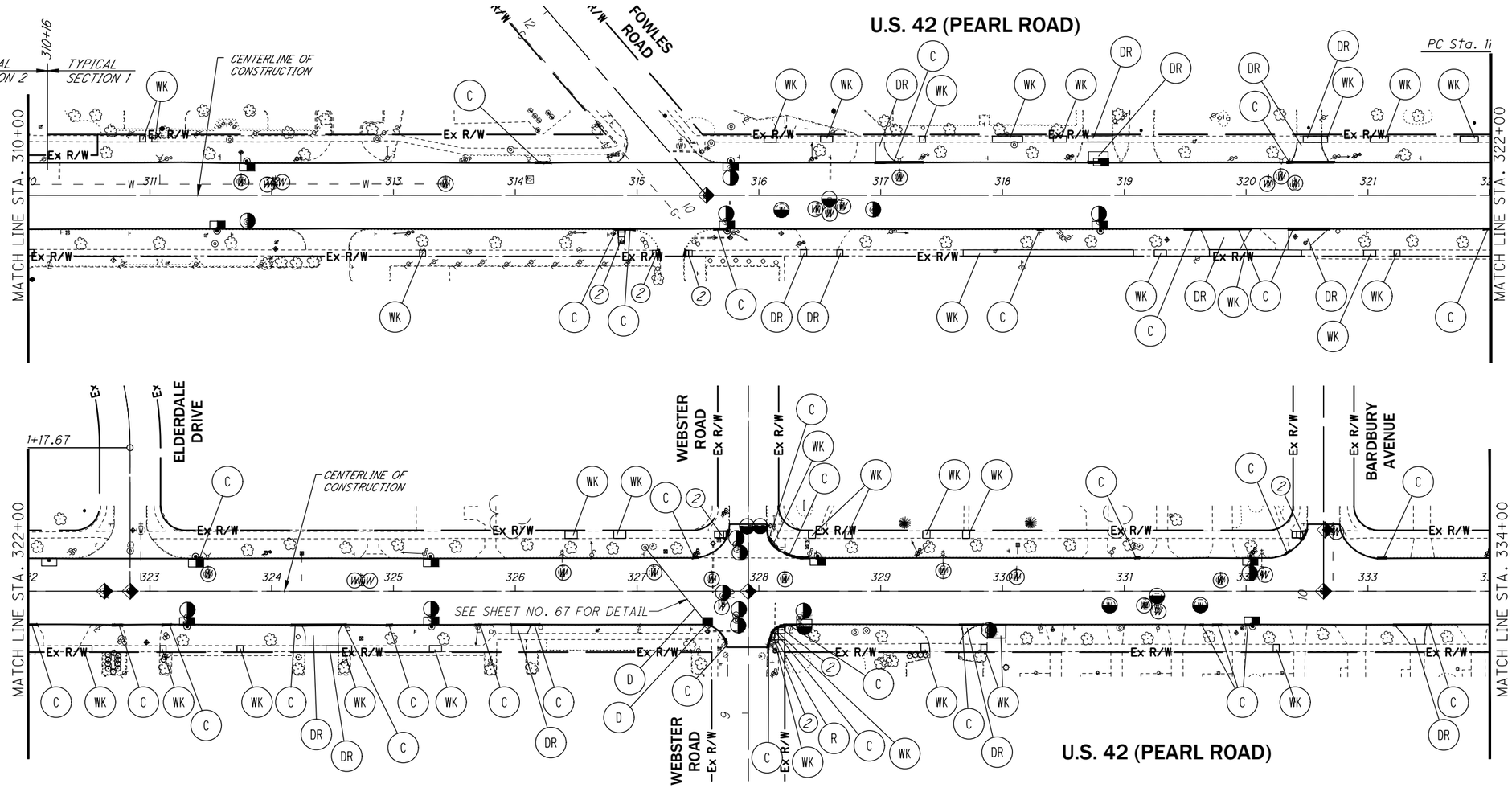


## CURB RAMP LEGEND

REFER TO ODOT STANDARD CONSTRUCTION DRAWING BP-7.1.

1. TYPE A1 CURB RAMP
2. TYPE A2 CURB RAMP
3. TYPE B1 CURB RAMP
4. TYPE B2 CURB RAMP
5. TYPE B3 CURB RAMP
6. TYPE C1 CURB RAMP
7. TYPE C2 CURB RAMP

## LEGEND

- MONUMENT BOX ADJUSTED TO GRADE
- SEWER MANHOLE ADJUSTED TO GRADE
- (W) VALVE BOX / SERVICE BOX ADJUSTED TO GRADE-CLEVE WATER DEPT.
- WATER MANHOLE/VAULT/METER ADJUSTED TO GRADE-CLEVE WATER DEPT.
- INSTALL CATCH BASIN 3A
- CATCH BASIN ADJUSTED TO GRADE
- CATCH BASIN ADJUSTED TO GRADE, AS PER PLAN
- CATCH BASIN/MANHOLE RECONSTRUCTED TO GRADE, AS PER PLAN
- ELECTRIC VAULT ADJUSTED TO GRADE (BY OTHERS)
- TELEPHONE MANHOLE ADJUSTED TO GRADE (BY OTHERS)
- (R) REMOVAL OF STRUCTURES AND OBSTRUCTIONS
- (DR) CONCRETE DRIVE
- (WK) CONCRETE WALK
- (C) CURB, TYPE 6
- (D) 12" CONDUIT, TYPE B, AS PER PLAN
- (D) CATCH BASIN, TYPE 3A

| LOCATION | 202 PAVEMENT REMOVED, AS PER PLAN | 202 WALK REMOVED, AS PER PLAN | 202 CURB REMOVED | | 451 8" REINFORCED CONCRETE PAVEMENT, CLASS QC1, AS PER PLAN | 452 6" NON-REINFORCED CONCRETE PAVEMENT, CLASS QC MS, AS PER PLAN | 608 4" CONCRETE WALK, AS PER PLAN | 608 6" CONCRETE WALK, AS PER PLAN | 608 CURB RAMP, AS PER PLAN | | 609 CURB, TYPE 6, AS PER PLAN | 611 12" CONDUIT, TYPE B, AS PER PLAN | 611 CATCH BASIN, NO. 3A | 611 CATCH BASIN ADJUSTED TO GRADE | 611 CATCH BASIN ADJUSTED TO GRADE, AS PER PLAN | 611 CATCH BASIN RECONSTRUCTED TO GRADE, AS PER PLAN | 611 MANHOLE ADJUSTED TO GRADE | 623 MONUMENT BOX ADJUSTED TO GRADE | 638 SPECIAL-VALVE BOX ADJUSTED TO GRADE (CLEVELAND STANDARD) | 638 SPECIAL-SERVICE BOX ADJUSTED TO GRADE (CLEVELAND STANDARD) | 638 WATER WORK, MISC.: WATER MANHOLE ADJUSTED TO GRADE (CLEVELAND STANDARD) | 690 SPECIAL - GROUND WATER MONITORING WELL RECONSTRUCTION |
|---|---|---|---|---|---|---|---|---|---|---|---|---|---|---|---|---|---|---|---|---|---|---|
| | SY | SF | FT | | SY | SY | SF | SF | SF | | FT | FOOT | | EACH | EACH | EACH | EACH | EACH | EACH | EACH | EACH | EACH |
| 310+00.00 TO 322+00.00 | 224 | 1,706 | 235 | | 224 | | | 1,610 | 96 | | 216 | | | | | 6 | 5 | 1 | 11 | | 2 | |
| 322+00.00 TO 334+00.00 | 111 | 1,014 | 257 | | 111 | | | 786 | 200 | | 227 | 82 | 1 | 1 | 1 | 7 | 10 | 5 | 15 | | 5 | |
| TOTALS TO GEN. SUMM. | 335 | 2,720 | 492 | 0 | 335 | 0 | 0 | 2,396 | 296 | 0 | 443 | 82 | 1 | 1 | 1 | 13 | 15 | 6 | 26 | 0 | 7 | 0 |

HORIZONTAL SCALE IN FEET 0 25 50 100

CALCULATED TWC
CHECKED BT

# PLAN SHEET
## STA. 310+00 TO STA. 334+00

CUY-US-042-4.29



P:\Middleburg Heights - City of\J20150340.000 Pearl Rd Rehab\Drawings\Trans\105726GP005.dwg 01-Mar-19 3:11 PM

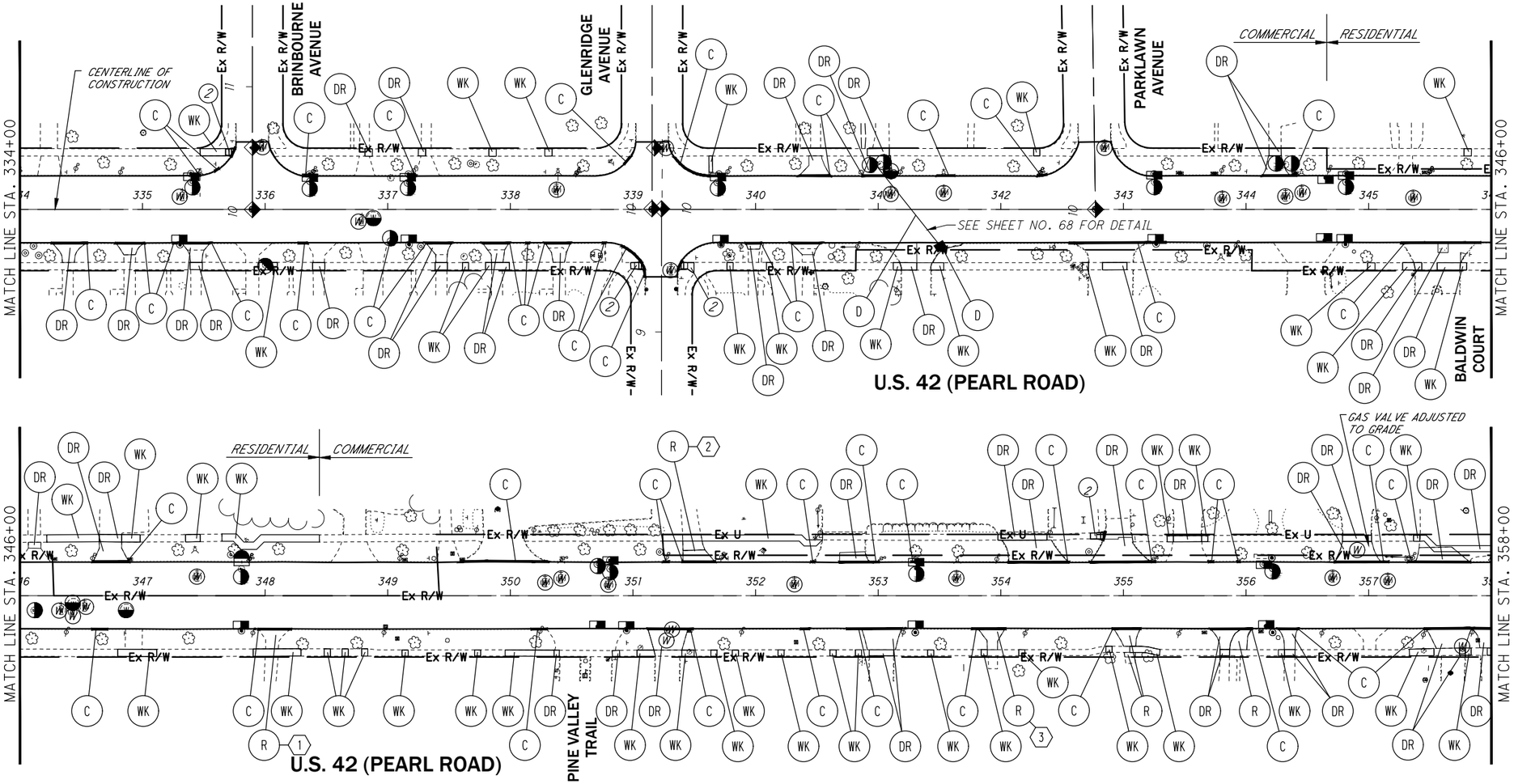


| LOCATION | 202 PAVEMENT REMOVED, AS PER PLAN | 202 WALK REMOVED, AS PER PLAN | 202 CURB REMOVED | | 451 8" REINFORCED CONCRETE PAVEMENT, CLASS QC1, AS PER PLAN | 452 6" NON-REINFORCED CONCRETE PAVEMENT, CLASS QC MS, AS PER PLAN | 608 4" CONCRETE WALK, AS PER PLAN | 608 6" CONCRETE WALK, AS PER PLAN | 608 CURB RAMP, AS PER PLAN | | 609 CURB, TYPE 6, AS PER PLAN | 611 12" CONDUIT, TYPE B, AS PER PLAN | 611 CATCH BASIN, NO. 3A | 611 CATCH BASIN ADJUSTED TO GRADE | 611 CATCH BASIN ADJUSTED TO GRADE, AS PER PLAN | 611 CATCH BASIN RECONSTRUCTED TO GRADE, AS PER PLAN | 611 MANHOLE ADJUSTED TO GRADE | 623 MONUMENT BOX ADJUSTED TO GRADE | 638 SPECIAL-VALVE BOX ADJUSTED TO GRADE (CLEVELAND STANDARD) | 638 SPECIAL-SERVICE BOX ADJUSTED TO GRADE (CLEVELAND STANDARD) | 638 WATER WORK, MISC.: WATER MANHOLE ADJUSTED TO GRADE (CLEVELAND STANDARD) | 690 SPECIAL - GROUND WATER MONITORING WELL RECONSTRUCTION |
|---|---|---|---|---|---|---|---|---|---|---|---|---|---|---|---|---|---|---|---|---|---|---|
| | SY | SF | FT | | SY | SY | SF | SF | SF | | FT | FT | EACH | EACH | EACH | EACH | EACH | EACH | EACH | EACH | EACH | EACH |
| 334+00.00 TO 346+00.00 | 346 | 947 | 414 | | 346 | | 36 | 733 | 156 | | 389 | 88 | 1 | | | 13 | 11 | 6 | 12 | | 2 | |
| 346+00.00 TO 358+00.00 | 763 | 1,662 | 594 | | 550 | 56 | 928 | 2,153 | 56 | | 594 | | | | 1 | 8 | 6 | | 11 | 4 | 2 | |
| TOTALS TO GEN. SUMM. | 1,109 | 2,609 | 1,008 | 0 | 896 | 56 | 964 | 2,886 | 212 | 0 | 983 | 88 | 1 | 0 | 1 | 21 | 17 | 6 | 23 | 4 | 4 | 0 |

## CURB RAMP LEGEND

REFER TO ODOT STANDARD CONSTRUCTION DRAWING BP-7.1.

1. TYPE A1 CURB RAMP
2. TYPE A2 CURB RAMP
3. TYPE B1 CURB RAMP
4. TYPE B2 CURB RAMP
5. TYPE B3 CURB RAMP
6. TYPE C1 CURB RAMP
7. TYPE C2 CURB RAMP

## LEGEND

- MONUMENT BOX ADJUSTED TO GRADE
- SEWER MANHOLE ADJUSTED TO GRADE
- VALVE BOX / SERVICE BOX ADJUSTED TO GRADE-CLEVE WATER DEPT.
- WATER MANHOLE/VAULT/METER ADJUSTED TO GRADE-CLEVE WATER DEPT.
- INSTALL CATCH BASIN 3A
- CATCH BASIN ADJUSTED TO GRADE
- CATCH BASIN ADJUSTED TO GRADE, AS PER PLAN
- CATCH BASIN/MANHOLE RECONSTRUCTED TO GRADE, AS PER PLAN
- ELECTRIC VAULT ADJUSTED TO GRADE (BY OTHERS)
- TELEPHONE MANHOLE ADJUSTED TO GRADE (BY OTHERS)
- R — REMOVAL OF STRUCTURES AND OBSTRUCTIONS
- DR — CONCRETE DRIVE
- WK — CONCRETE WALK
- C — CURB, TYPE 6
- D — 12" CONDUIT, TYPE B, AS PER PLAN
- D — CATCH BASIN, TYPE 3A

## NOTES

1. REMOVE ABANDONED RT. SIDE DRIVEWAY APRON FROM STA. 347+95 TO STA. 348+21
2. REMOVE ABANDONED LT. SIDE DRIVEWAY FROM STA. 351+41 TO STA. 351+67
3. REMOVE ABANDONED RT. SIDE DRIVEWAY APRON FROM STA. 354+92 TO STA. 355+14

HORIZONTAL SCALE IN FEET 0 25 50 100

CALCULATED TWC
CHECKED BT

# PLAN SHEET
## STA. 334+00 TO STA. 358+00

CUY-US-042-4.29



P:\Middleburg Heights - City of\J20150340.000 Pearl Rd Rehab\Drawings\Trans\105726GP006.dwg 01-Mar-19 3:12 PM

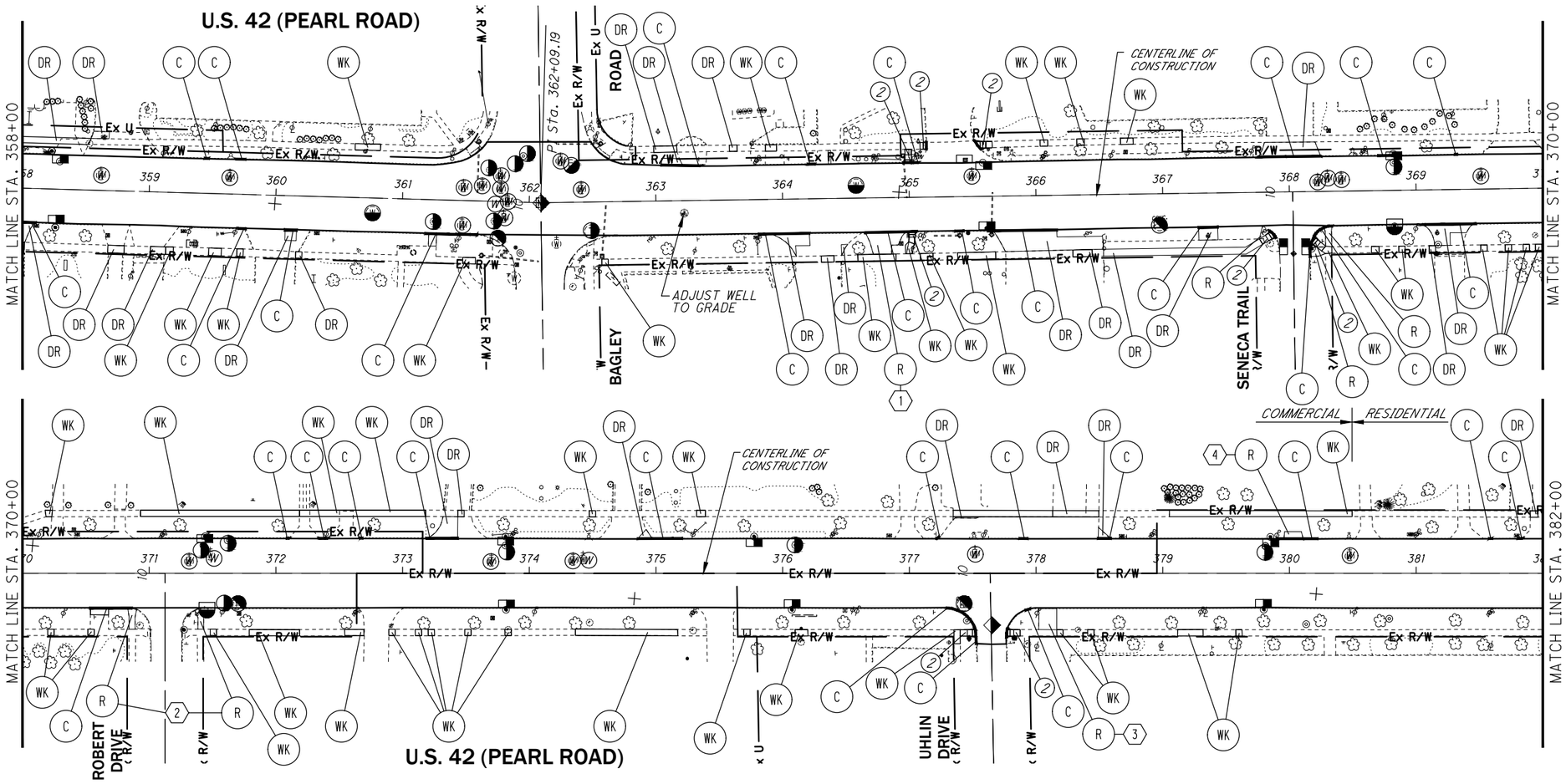


## CURB RAMP LEGEND

REFER TO ODOT STANDARD CONSTRUCTION DRAWING BP-7.1.

1. TYPE A1 CURB RAMP
2. TYPE A2 CURB RAMP
3. TYPE B1 CURB RAMP
4. TYPE B2 CURB RAMP
5. TYPE B3 CURB RAMP
6. TYPE C1 CURB RAMP
7. TYPE C2 CURB RAMP

## LEGEND

- MONUMENT BOX ADJUSTED TO GRADE
- SEWER MANHOLE ADJUSTED TO GRADE
- (W) VALVE BOX / SERVICE BOX ADJUSTED TO GRADE-CLEVE WATER DEPT.
- WATER MANHOLE/VAULT/METER ADJUSTED TO GRADE-CLEVE WATER DEPT.
- INSTALL CATCH BASIN 3A
- CATCH BASIN ADJUSTED TO GRADE
- CATCH BASIN ADJUSTED TO GRADE, AS PER PLAN
- CATCH BASIN/MANHOLE RECONSTRUCTED TO GRADE, AS PER PLAN
- ELECTRIC VAULT ADJUSTED TO GRADE (BY OTHERS)
- TELEPHONE MANHOLE ADJUSTED TO GRADE (BY OTHERS)
- (R) REMOVAL OF STRUCTURES AND OBSTRUCTIONS
- (DR) CONCRETE DRIVE
- (WK) CONCRETE WALK
- (C) CURB, TYPE 6 OR COMBINATION CURB AND GUTTER, TYPE 3
- (D) 12" CONDUIT, TYPE B
- (D) CATCH BASIN, TYPE 3A

| LOCATION | 202 PAVEMENT REMOVED, AS PER PLAN | 202 WALK REMOVED, AS PER PLAN | 202 CURB REMOVED | | 451 8" REINFORCED CONCRETE PAVEMENT, CLASS QC1, AS PER PLAN | 452 6" NON-REINFORCED CONCRETE PAVEMENT, CLASS QC MS, AS PER PLAN | 608 4" CONCRETE WALK, AS PER PLAN | 608 6" CONCRETE WALK, AS PER PLAN | 608 CURB RAMP, AS PER PLAN | | 609 CURB, TYPE 6, AS PER PLAN | 611 12" CONDUIT, TYPE B, AS PER PLAN | 611 CATCH BASIN, NO. 3A | 611 CATCH BASIN ADJUSTED TO GRADE | 611 CATCH BASIN ADJUSTED TO GRADE, AS PER PLAN | 611 CATCH BASIN RECONSTRUCTED TO GRADE, AS PER PLAN | 611 MANHOLE ADJUSTED TO GRADE | 623 MONUMENT BOX ADJUSTED TO GRADE | 638 SPECIAL-VALVE BOX ADJUSTED TO GRADE (CLEVELAND STANDARD) | 638 SPECIAL-SERVICE BOX ADJUSTED TO GRADE (CLEVELAND STANDARD) | 638 WATER WORK, MISC.: WATER MANHOLE ADJUSTED TO GRADE (CLEVELAND STANDARD) | 690 SPECIAL - GROUND WATER MONITORING WELL RECONSTRUCTION |
|---|---|---|---|---|---|---|---|---|---|---|---|---|---|---|---|---|---|---|---|---|---|---|---|
| | SY | SF | FT | | SY | SY | SF | SF | SF | | FT | FT | EACH | EACH | EACH | EACH | EACH | EACH | EACH | EACH | EACH | EACH | EACH |
| 358+00.00 TO 370+00.00 | 509 | 1,420 | 438 | | 455 | | | 1,202 | 274 | | 396 | | | 1 | 1 | 7 | 7 | 1 | 17 | | 2 | 1 |
| 370+00.00 TO 382+00.00 | 74 | 1,825 | 204 | | 61 | 4 | 26 | 3,116 | 109 | | 189 | | | | 1 | 7 | 6 | 1 | 7 | | | |
| TOTALS TO GEN. SUMM. | 583 | 3,245 | 642 | 0 | 516 | 4 | 26 | 4,318 | 383 | 0 | 585 | 0 | 0 | 1 | 2 | 14 | 13 | 2 | 24 | 0 | 2 | 1 |

## NOTES

1. REMOVE ABANDONED RT. SIDE DRIVEWAY APRON FROM STA. 364+72 TO STA. 364+96
2. REMOVE EXIST. WALK AND CURB RAMPS TO PEARL ROAD AT ROBERT DRIVE
3. REMOVE EXISTING RT. SIDE PAVED TREE LAWN AREA FROM STA. 378+02 TO STA. 378+16
4. REMOVE ABANDONED LT. SIDE DRIVEWAY APRON FROM STA. 379+95 TO STA. 380+11

HORIZONTAL SCALE IN FEET 0 25 50 100

CALCULATED TWC
CHECKED BT

# PLAN SHEET
## STA. 358+00 TO STA. 382+00

CUY-US-042-4.29



P:\Middleburg Heights - City of\J20150340.000 Pearl Rd Rehab\Drawings\Trans\1057266P007.dwg 01-Mar-19 3:12 PM

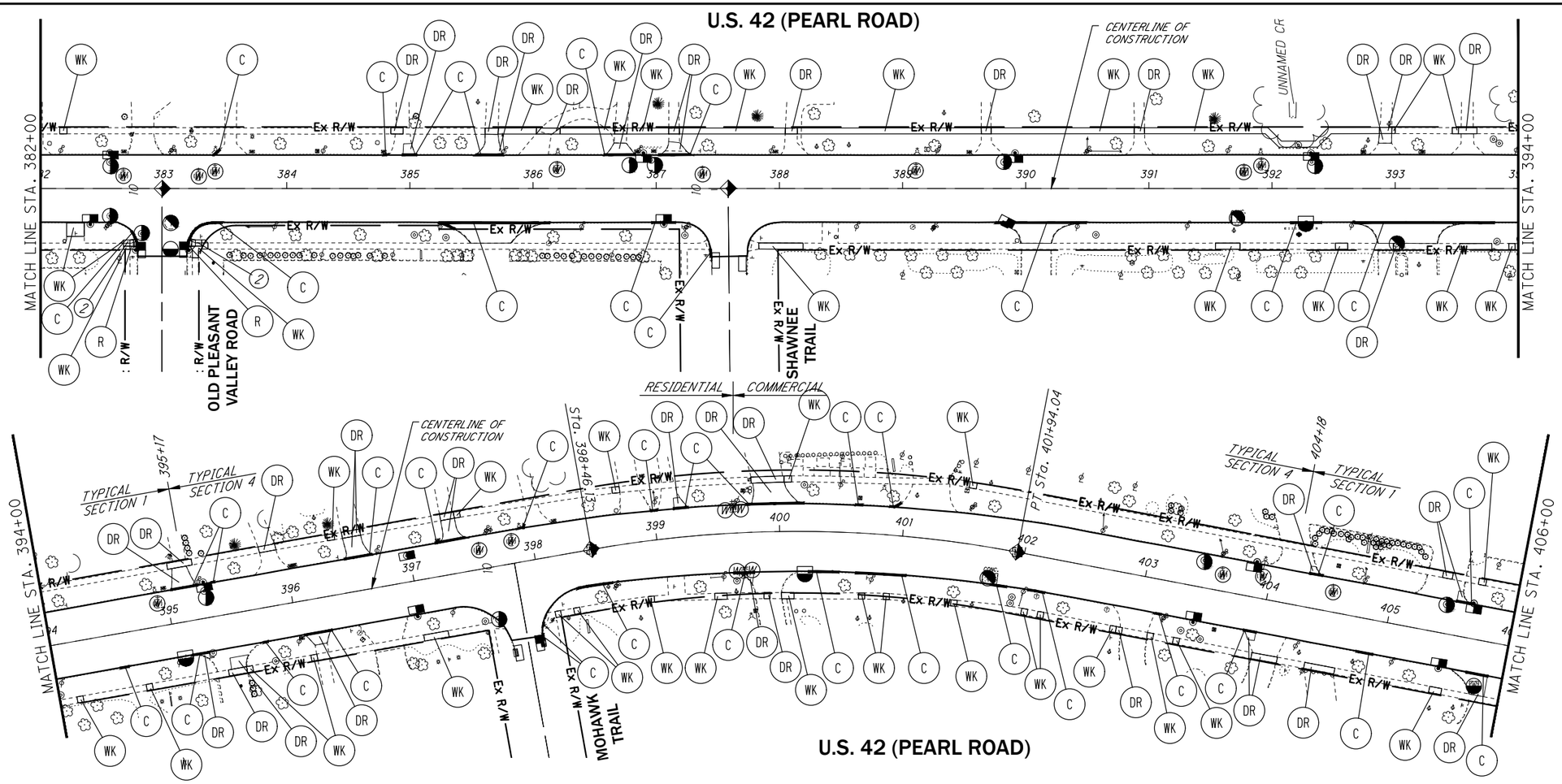


## CURB RAMP LEGEND

REFER TO ODOT STANDARD CONSTRUCTION DRAWING BP-7.1.

- (1) TYPE A1 CURB RAMP
- (2) TYPE A2 CURB RAMP
- (3) TYPE B1 CURB RAMP
- (4) TYPE B2 CURB RAMP
- (5) TYPE B3 CURB RAMP
- (6) TYPE C1 CURB RAMP
- (7) TYPE C2 CURB RAMP

## LEGEND

- MONUMENT BOX ADJUSTED TO GRADE
- SEWER MANHOLE ADJUSTED TO GRADE
- (W) VALVE BOX / SERVICE BOX ADJUSTED TO GRADE-CLEVE WATER DEPT.
- WATER MANHOLE/VAULT/METER ADJUSTED TO GRADE-CLEVE WATER DEPT.
- INSTALL CATCH BASIN 3A
- CATCH BASIN ADJUSTED TO GRADE
- CATCH BASIN ADJUSTED TO GRADE, AS PER PLAN
- CATCH BASIN/MANHOLE RECONSTRUCTEDTO GRADE, AS PER PLAN
- ELECTRIC VAULT ADJUSTED TO GRADE (BY OTHERS)
- TELEPHONE MANHOLE ADJUSTED TO GRADE (BY OTHERS)
- (R) REMOVAL OF STRUCTURES AND OBSTRUCTIONS
- (DR) CONCRETE DRIVE
- (WK) CONCRETE WALK
- (C) CURB, TYPE 6 OR COMBINATION CURB AND GUTTER, TYPE 3
- (D) 12" CONDUIT, TYPE B
- (D) CATCH BASIN, TYPE 3A

| LOCATION | 202 PAVEMENT REMOVED, AS PER PLAN | 202 WALK REMOVED, AS PER PLAN | 202 CURB REMOVED | | 451 8" REINFORCED CONCRETE PAVEMENT, CLASS QC1, AS PER PLAN | 452 6" NON-REINFORCED CONCRETE PAVEMENT, CLASS QC MS, AS PER PLAN | 608 4" CONCRETE WALK, AS PER PLAN | 608 6" CONCRETE WALK, AS PER PLAN | 608 CURB RAMP, AS PER PLAN | | 609 CURB, TYPE 6, AS PER PLAN | 611 12" CONDUIT, TYPE B, AS PER PLAN | 611 CATCH BASIN, NO. 3A | 611 CATCH BASIN ADJUSTED TO GRADE | 611 CATCH BASIN ADJUSTED TO GRADE, AS PER PLAN | 611 CATCH BASIN RECONSTRUCTED TO GRADE, AS PER PLAN | 611 MANHOLE ADJUSTED TO GRADE | 623 MONUMENT BOX ADJUSTED TO GRADE | 638 SPECIAL-VALVE BOX ADJUSTED TO GRADE (CLEVELAND STANDARD) | 638 SPECIAL-SERVICE BOX ADJUSTED TO GRADE (CLEVELAND STANDARD) | 638 WATER WORK, MISC.: WATER MANHOLE ADJUSTED TO GRADE (CLEVELAND STANDARD) | 690 SPECIAL - GROUND WATER MONITORING WELL RECONSTRUCTION |
|---|---|---|---|---|---|---|---|---|---|---|---|---|---|---|---|---|---|---|---|---|---|---|---|
| | SY | SF | FT | | SY | SY | SF | SF | SF | | FT | FT | EACH | EACH | EACH | EACH | EACH | EACH | EACH | EACH | EACH | EACH |
| 382+00.00 TO 394+00.00 | 422 | 743 | 463 | | 272 | 136 | 3,348 | 748 | 105 | | 450 | | | 2 | 1 | 8 | 7 | 2 | 8 | | 1 | |
| 394+00.00 TO 406+00.00 | 330 | 799 | 395 | | 206 | 124 | 86 | 713 | | | 395 | | | 1 | 2 | 7 | 4 | 2 | 10 | | 1 | |
| TOTALS TO GEN. SUMM. | 752 | 1,542 | 858 | 0 | 478 | 260 | 3,434 | 1,461 | 105 | 0 | 845 | 0 | 0 | 3 | 3 | 15 | 11 | 4 | 18 | 0 | 2 | 0 |

HORIZONTAL SCALE IN FEET 0 25 50 100

CALCULATED TWC
CHECKED BT

# PLAN SHEET
## STA. 382+00 TO STA. 406+00

CUY-US-042-4.29



P:\Middleburg Heights - City of\J20150340.000 Pearl Rd Rehab\Drawings\Trans\1057266P008.dwg 01-Mar-19 3:13 PM

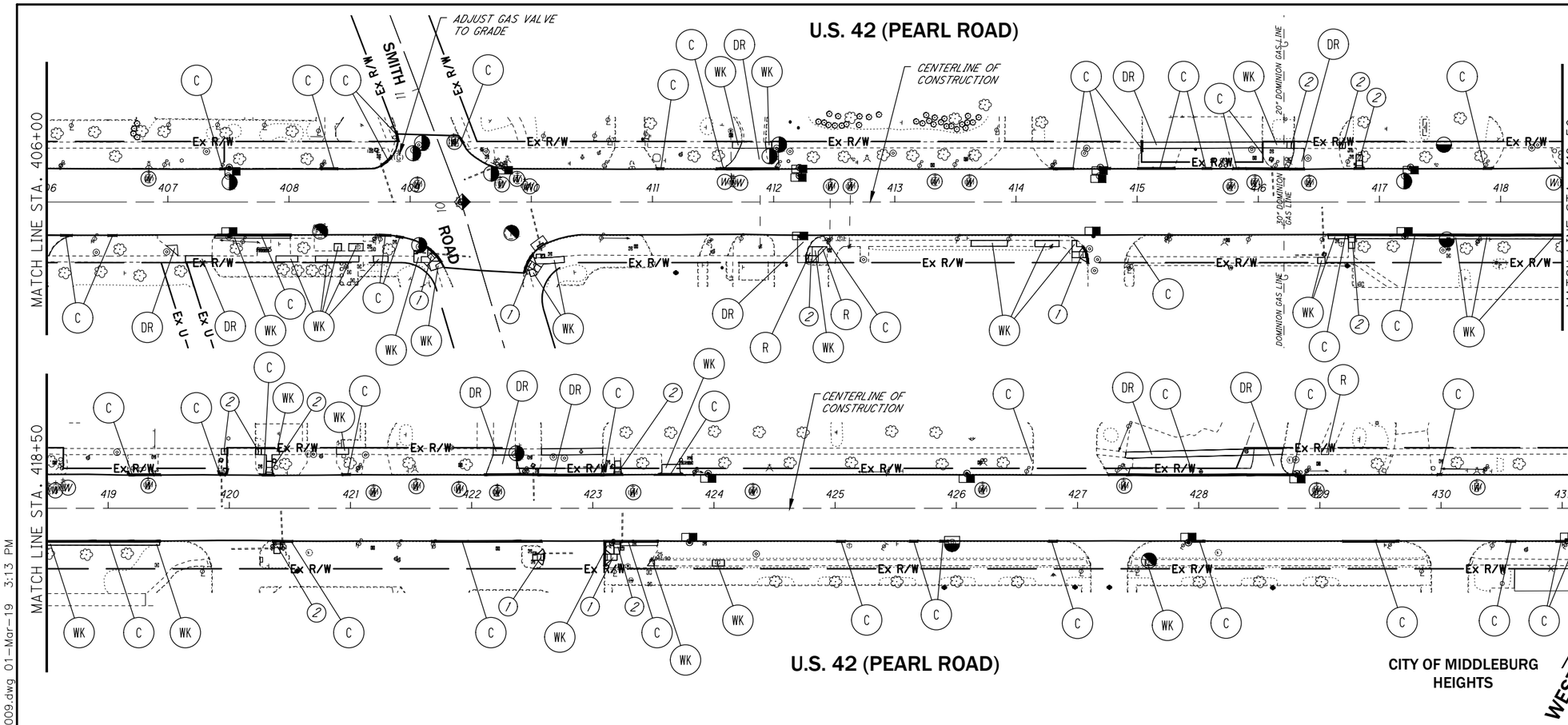


## CURB RAMP LEGEND

REFER TO ODOT STANDARD CONSTRUCTION DRAWING BP-7.1.

1. TYPE A1 CURB RAMP
2. TYPE A2 CURB RAMP
3. TYPE B1 CURB RAMP
4. TYPE B2 CURB RAMP
5. TYPE B3 CURB RAMP
6. TYPE C1 CURB RAMP
7. TYPE C2 CURB RAMP

## LEGEND

- MONUMENT BOX ADJUSTED TO GRADE
- SEWER MANHOLE ADJUSTED TO GRADE
- (W) VALVE BOX/SERVICE BOX ADJUSTED TO GRADE-CLEVE WATER DEPT.
- WATER MANHOLE/VAULT/METER ADJUSTED TO GRADE-CLEVE WATER DEPT.
- INSTALL CATCH BASIN 3A
- CATCH BASIN ADJUSTED TO GRADE
- CATCH BASIN ADJUSTED TO GRADE, AS PER PLAN
- CATCH BASIN/MANHOLE RECONSTRUCTED TO GRADE, AS PER PLAN
- ELECTRIC VAULT ADJUSTED TO GRADE (BY OTHERS)
- TELEPHONE MANHOLE ADJUSTED TO GRADE (BY OTHERS)
- (R) REMOVAL OF STRUCTURES AND OBSTRUCTIONS
- (DR) CONCRETE DRIVE
- (WK) CONCRETE WALK
- (C) CURB, TYPE 6 OR COMBINATION CURB AND GUTTER, TYPE 3
- (D) 12" CONDUIT, TYPE B
- (D) CATCH BASIN, TYPE 3A

| LOCATION | 202 PAVEMENT REMOVED, AS PER PLAN | 202 WALK REMOVED, AS PER PLAN | 202 CURB REMOVED | | 451 8" REINFORCED CONCRETE PAVEMENT, CLASS QC1, AS PER PLAN | 452 6" NON-REINFORCED CONCRETE PAVEMENT, CLASS QC MS, AS PER PLAN | 608 4" CONCRETE WALK, AS PER PLAN | 608 6" CONCRETE WALK, AS PER PLAN | 608 CURB RAMP, AS PER PLAN | | 609 CURB, TYPE 6, AS PER PLAN | 611 12" CONDUIT, TYPE B, AS PER PLAN | 611 CATCH BASIN, NO. 3A | 611 CATCH BASIN ADJUSTED TO GRADE | 611 CATCH BASIN ADJUSTED TO GRADE, AS PER PLAN | 611 CATCH BASIN RECONSTRUCTED TO GRADE, AS PER PLAN | 611 MANHOLE ADJUSTED TO GRADE | 623 MONUMENT BOX ADJUSTED TO GRADE | 638 SPECIAL-VALVE BOX ADJUSTED TO GRADE (CLEVELAND STANDARD) | 638 SPECIAL-SERVICE BOX ADJUSTED TO GRADE (CLEVELAND STANDARD) | 638 WATER WORK, MISC.: WATER MANHOLE ADJUSTED TO GRADE (CLEVELAND STANDARD) | 690 SPECIAL - GROUND WATER MONITORING WELL RECONSTRUCTION | |
|---|---|---|---|---|---|---|---|---|---|---|---|---|---|---|---|---|---|---|---|---|---|---|---|---|
| | SY | SF | FT | | SY | SY | SF | SF | SF | | FT | FT | EACH | EACH | EACH | EACH | EACH | EACH | EACH | EACH | EACH | EACH | | |
| 406+00.00 TO 418+50.00 | 146 | 2,501 | 544 | | 191 | | | 2,140 | 509 | | 484 | | | 1 | | 11 | 7 | 1 | 16 | | 1 | | | |
| 418+50.00 TO 432+31.11 | 177 | 1,252 | 548 | | 265 | | | 811 | 445 | | 508 | | | | 1 | 7 | 2 | | 14 | | | | | |
| TOTALS TO GEN. SUMM. | 323 | 3,753 | 1,092 | 0 | 456 | 0 | 0 | 2,951 | 954 | 0 | 992 | 0 | 0 | 1 | 1 | 18 | 9 | 1 | 30 | 0 | 1 | 0 | 0 | |

HORIZONTAL SCALE IN FEET 0 25 50 100

CALCULATED TWC
CHECKED BT

# PLAN SHEET
## STA. 406+00 TO STA. 432+31.11

CUY-US-042-4.29



P:\Middleburg Heights - City of\J20150340.000 Pearl Rd Rehab\Drawings\Trans\105726GP009.dwg 01-Mar-19 3:13 PM

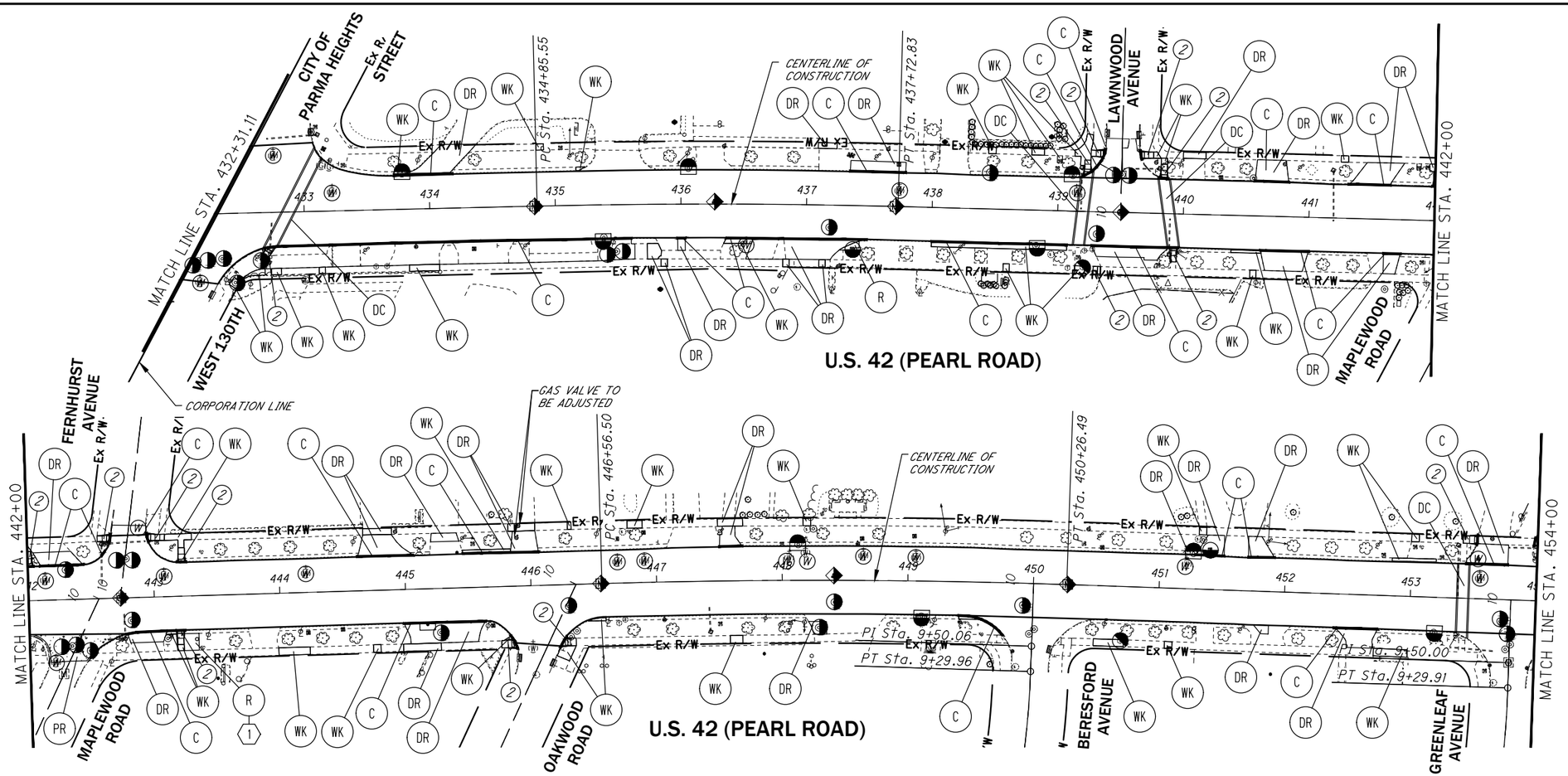


| LOCATION | 202 PAVEMENT REMOVED, AS PER PLAN | 202 WALK REMOVED, AS PER PLAN | 202 CURB REMOVED | | 451 8" REINFORCED CONCRETE PAVEMENT, CLASS QC1, AS PER PLAN | 452 6" NON-REINFORCED CONCRETE PAVEMENT, CLASS QC MS, AS PER PLAN | 608 4" CONCRETE WALK, AS PER PLAN | 608 6" CONCRETE WALK, AS PER PLAN | 608 CURB RAMP, AS PER PLAN | | 609 CURB, TYPE 6, AS PER PLAN | 611 12" CONDUIT, TYPE B, AS PER PLAN | 611 CATCH BASIN, NO. 3A | 611 CATCH BASIN ADJUSTED TO GRADE | 611 CATCH BASIN ADJUSTED TO GRADE, AS PER PLAN | 611 CATCH BASIN RECONSTRUCTED TO GRADE, AS PER PLAN | 611 MANHOLE ADJUSTED TO GRADE | 623 MONUMENT BOX ADJUSTED TO GRADE | 638 SPECIAL-VALVE BOX ADJUSTED TO GRADE (CLEVELAND STANDARD) | 638 SPECIAL-SERVICE BOX ADJUSTED TO GRADE (CLEVELAND STANDARD) | 638 WATER WORK, MISC.: WATER MANHOLE ADJUSTED TO GRADE (CLEVELAND STANDARD) | 690 SPECIAL - GROUND WATER MONITORING WELL RECONSTRUCTION |
|---|---|---|---|---|---|---|---|---|---|---|---|---|---|---|---|---|---|---|---|---|---|---|
| | SY | SF | FT | | SY | SY | SF | SF | SF | | FT | FT | EACH | EACH | EACH | EACH | EACH | EACH | EACH | EACH | EACH | EACH |
| 432+31.11 TO 442+00.00 | 540 | 1,840 | 854 | | 540 | | | 1,407 | 446 | | 803 | | | | 5 | | 12 | 4 | 5 | 1 | 1 | 1 |
| 442+00.00 TO 454+00.00 | 548 | 1,871 | 485 | | 548 | | | 1,205 | 532 | | 427 | | | 1 | 4 | | 14 | 4 | 13 | 1 | 1 | |
| TOTALS TO GEN. SUMM. | 1,088 | 3,711 | 1,339 | 0 | 1,088 | 0 | 0 | 2,612 | 978 | 0 | 1,230 | 0 | 0 | 1 | 9 | 0 | 26 | 8 | 18 | 2 | 2 | 1 |

## CURB RAMP LEGEND

REFER TO ODOT STANDARD CONSTRUCTION DRAWING BP-7.1.

1. TYPE A1 CURB RAMP
2. TYPE A2 CURB RAMP
3. TYPE B1 CURB RAMP
4. TYPE B2 CURB RAMP
5. TYPE B3 CURB RAMP
6. TYPE C1 CURB RAMP
7. TYPE C2 CURB RAMP

## LEGEND

- MONUMENT BOX ADJUSTED TO GRADE
- SEWER MANHOLE ADJUSTED TO GRADE
- VALVE BOX / SERVICE BOX ADJUSTED TO GRADE-CLEVE WATER DEPT.
- WATER MANHOLE/VAULT/METER ADJUSTED TO GRADE-CLEVE WATER DEPT.
- INSTALL CATCH BASIN 3A
- CATCH BASIN ADJUSTED TO GRADE
- CATCH BASIN ADJUSTED TO GRADE, AS PER PLAN
- CATCH BASIN/MANHOLE RECONSTRUCTED TO GRADE, AS PER PLAN
- ELECTRIC VAULT ADJUSTED TO GRADE (BY OTHERS)
- TELEPHONE MANHOLE ADJUSTED TO GRADE (BY OTHERS)
- R — REMOVAL OF STRUCTURES AND OBSTRUCTIONS
- DR — CONCRETE DRIVE
- WK — CONCRETE WALK
- C — CURB, TYPE 6 OR COMBINATION CURB AND GUTTER, TYPE 3
- D — 12" CONDUIT, TYPE B
- D — CATCH BASIN, TYPE 3A
- PR — CONCRETE PAVEMENT REMOVAL AND REPLACEMENT
- DC — DECORATIVE CROSSWALK (SEE SHEET NO. 118 FOR PLAN)

## NOTES

1. REMOVE RT. SIDE ABANDONED RTA CONCRETE SHELTER PAD FROM STA. 468+33 TO STA. 468+49.

N

HORIZONTAL SCALE IN FEET 0 25 50 100

CALCULATED TWC
CHECKED BT

PLAN SHEET
STA. 432+31.11 TO STA. 454+00

CUY-US-042-4.29



P:\Middleburg Heights - City of\J20150340.000 Pearl Rd Rehab\Drawings\Trans\105726GP010.dwg 01-Mar-19 3:17 PM

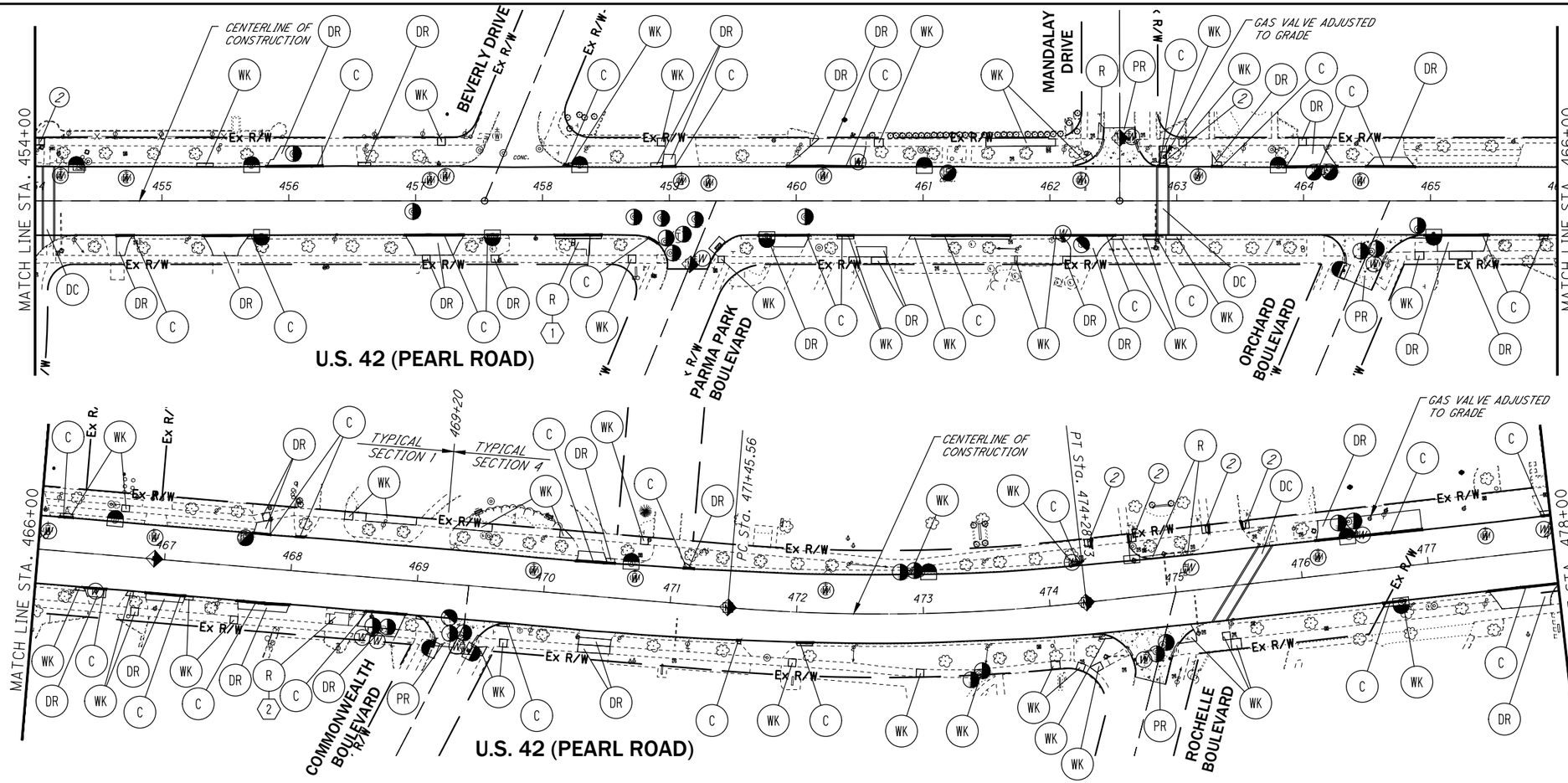


## CURB RAMP LEGEND

REFER TO ODOT STANDARD CONSTRUCTION DRAWING BP-7.1.

1. TYPE A1 CURB RAMP
2. TYPE A2 CURB RAMP
3. TYPE B1 CURB RAMP
4. TYPE B2 CURB RAMP
5. TYPE B3 CURB RAMP
6. TYPE C1 CURB RAMP
7. TYPE C2 CURB RAMP

## LEGEND

- MONUMENT BOX ADJUSTED TO GRADE
- SEWER MANHOLE ADJUSTED TO GRADE
- VALVE BOX / SERVICE BOX ADJUSTED TO GRADE-CLEVE WATER DEPT.
- WATER MANHOLE/VAULT/METER ADJUSTED TO GRADE-CLEVE WATER DEPT.
- INSTALL CATCH BASIN 3A
- CATCH BASIN ADJUSTED TO GRADE
- CATCH BASIN ADJUSTED TO GRADE, AS PER PLAN
- CATCH BASIN/MANHOLE RECONSTRUCTED TO GRADE, AS PER PLAN
- ELECTRIC VAULT ADJUSTED TO GRADE (BY OTHERS)
- TELEPHONE MANHOLE ADJUSTED TO GRADE (BY OTHERS)
- (R) REMOVAL OF STRUCTURES AND OBSTRUCTIONS
- (DR) CONCRETE DRIVE
- (WK) CONCRETE WALK
- (C) CURB, TYPE 6 OR COMBINATION CURB AND GUTTER, TYPE 3
- (D) 12" CONDUIT, TYPE B
- (D) CATCH BASIN, TYPE 3A
- (PR) CONCRETE PAVEMENT REMOVAL AND REPLACEMENT
- (DC) DECORATIVE CROSSWALK (SEE SHEET NO. 118 AND 119 FOR PLAN)

| LOCATION | 202 PAVEMENT REMOVED, AS PER PLAN | 202 WALK REMOVED, AS PER PLAN | 202 CURB REMOVED | | 451 8" REINFORCED CONCRETE PAVEMENT, CLASS QC1, AS PER PLAN | 452 6" NON-REINFORCED CONCRETE PAVEMENT, CLASS QC MS, AS PER PLAN | 608 4" CONCRETE WALK, AS PER PLAN | 608 6" CONCRETE WALK, AS PER PLAN | 608 CURB RAMP, AS PER PLAN | | 609 CURB, TYPE 6, AS PER PLAN | 611 12" CONDUIT, TYPE B, AS PER PLAN | 611 CATCH BASIN, NO. 3A | 611 CATCH BASIN ADJUSTED TO GRADE | 611 CATCH BASIN ADJUSTED TO GRADE, AS PER PLAN | 611 CATCH BASIN RECONSTRUCTED TO GRADE, AS PER PLAN | 611 MANHOLE ADJUSTED TO GRADE | 623 MONUMENT BOX ADJUSTED TO GRADE | 638 SPECIAL-VALVE BOX ADJUSTED TO GRADE (CLEVELAND STANDARD) | 638 SPECIAL-SERVICE BOX ADJUSTED TO GRADE (CLEVELAND STANDARD) | 638 WATER WORK, MISC.: WATER MANHOLE ADJUSTED TO GRADE (CLEVELAND STANDARD) | 690 SPECIAL - GROUND WATER MONITORING WELL RECONSTRUCTION |
|---|---|---|---|---|---|---|---|---|---|---|---|---|---|---|---|---|---|---|---|---|---|---|---|
| | SY | SF | FT | | SY | SY | SF | SF | SF | | FT | FT | EACH | EACH | EACH | EACH | EACH | EACH | EACH | EACH | EACH | EACH | EACH |
| 454+00.00 TO 466+00.00 | 580 | 1,723 | 595 | | 580 | | | 1,419 | 122 | | 588 | | | 1 | 10 | | 12 | 2 | 13 | 2 | | |
| 466+00.00 TO 478+00.00 | 417 | 1,794 | 391 | | 417 | | | 1,524 | 133 | | 378 | | | 1 | 7 | | 12 | 3 | 11 | 4 | | |
| TOTALS TO GEN. SUMM. | 997 | 3,517 | 986 | 0 | 997 | 0 | 0 | 2,943 | 255 | 0 | 966 | 0 | 0 | 2 | 17 | 0 | 24 | 5 | 24 | 6 | 0 | 0 |

## NOTES

1. REMOVE RT. SIDE ABANDONED RTA CONCRETE SHELTER PAD FROM STA. 458+26 TO STA. 458+37.
2. REMOVE RT. SIDE ABANDONED RTA CONCRETE SHELTER PAD FROM STA. 468+33 TO STA. 468+49.

HORIZONTAL SCALE IN FEET 0 25 50 100

CALCULATED TWC
CHECKED BT

# PLAN SHEET
STA. 454+00 TO STA. 478+00

CUY-US-042-4.29



P:\Middleburg Heights - City of\J20150340.000 Pearl Rd Rehab\Drawings\Trans\105726GP011.dwg 01-Mar-19 3:18 PM

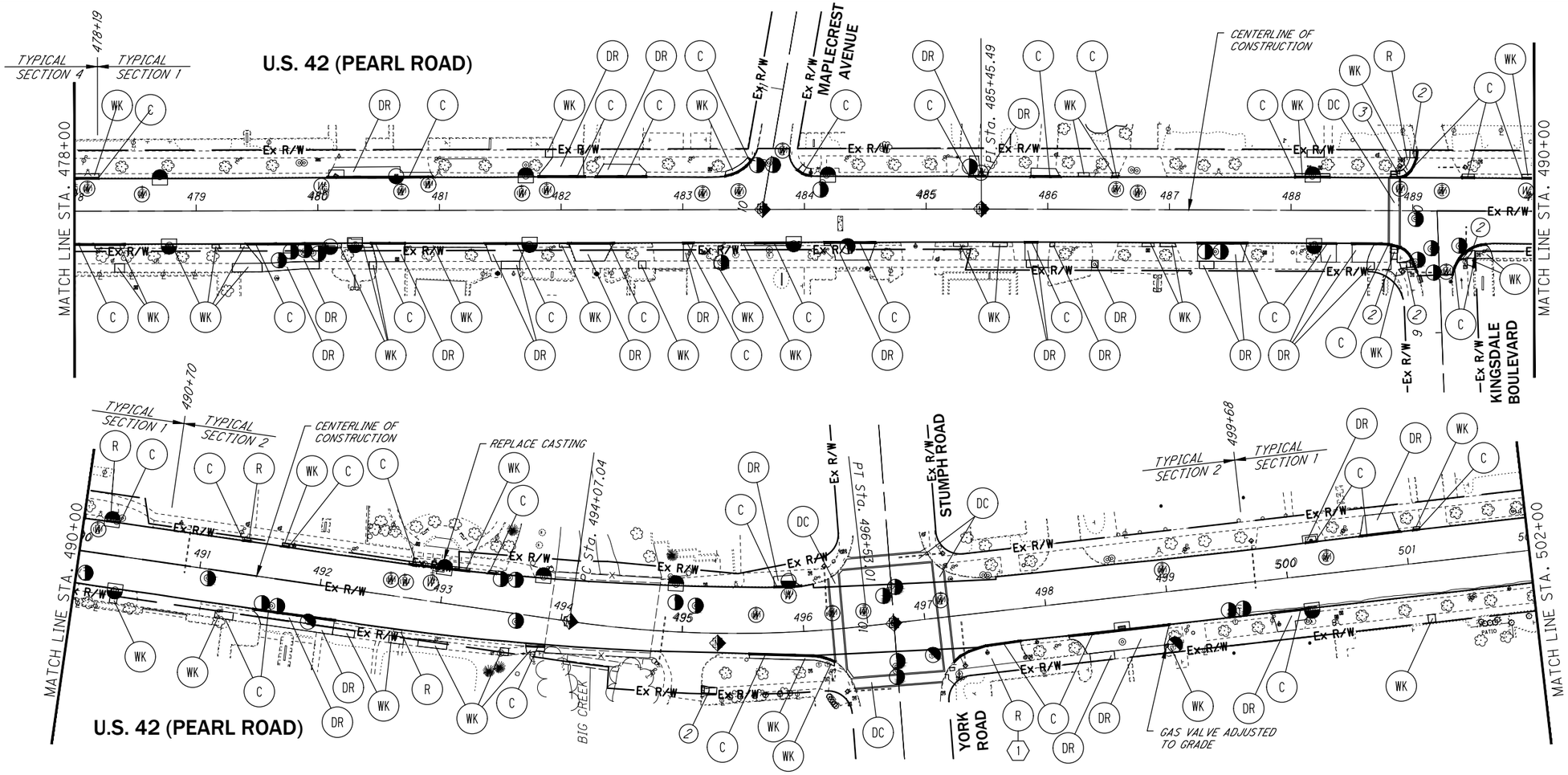


| LOCATION | 202 PAVEMENT REMOVED, AS PER PLAN | 202 WALK REMOVED, AS PER PLAN | 202 CURB REMOVED | | 451 8" REINFORCED CONCRETE PAVEMENT, CLASS QC1, AS PER PLAN | 452 6" NON-REINFORCED CONCRETE PAVEMENT, CLASS QC MS, AS PER PLAN | 608 4" CONCRETE WALK, AS PER PLAN | 608 6" CONCRETE WALK, AS PER PLAN | 608 CURB RAMP, AS PER PLAN | | 609 CURB, TYPE 6, AS PER PLAN | 611 12" CONDUIT, TYPE B, AS PER PLAN | 611 CATCH BASIN, NO. 3A | 611 CATCH BASIN ADJUSTED TO GRADE | 611 CATCH BASIN ADJUSTED TO GRADE, AS PER PLAN | 611 CATCH BASIN RECONSTRUCTED TO GRADE, AS PER PLAN | 611 MANHOLE ADJUSTED TO GRADE | 623 MONUMENT BOX ADJUSTED TO GRADE | 638 SPECIAL-VALVE BOX ADJUSTED TO GRADE (CLEVELAND STANDARD) | 638 SPECIAL-SERVICE BOX ADJUSTED TO GRADE (CLEVELAND STANDARD) | 638 WATER WORK, MISC.: WATER MANHOLE ADJUSTED TO GRADE (CLEVELAND STANDARD) | 690 SPECIAL - GROUND WATER MONITORING WELL RECONSTRUCTION |
|---|---|---|---|---|---|---|---|---|---|---|---|---|---|---|---|---|---|---|---|---|---|---|
| | SY | SF | FT | | SY | SY | SF | SF | SF | | FT | FT | EACH | EACH | EACH | EACH | EACH | EACH | EACH | EACH | EACH | EACH |
| 478+00.00 TO 490+00.00 | 698 | 2,342 | 818 | | 698 | | | 1,991 | 306 | | 771 | | | 1 | 9 | | 16 | 2 | 16 | 1 | 2 | |
| 490+00.00 TO 502+00.00 | 427 | 1,232 | 319 | | 338 | | | 1,153 | 71 | | 319 | | | 2 | 6 | | 15 | 3 | 11 | | 1 | |
| TOTALS TO GEN. SUMM. | 1,125 | 3,574 | 1,137 | 0 | 1,036 | 0 | 0 | 3,144 | 377 | 0 | 1,090 | 0 | 0 | 3 | 15 | 0 | 31 | 5 | 27 | 1 | 3 | 0 |

## CURB RAMP LEGEND

REFER TO ODOT STANDARD CONSTRUCTION DRAWING BP-7.1.

1. TYPE A1 CURB RAMP
2. TYPE A2 CURB RAMP
3. TYPE B1 CURB RAMP
4. TYPE B2 CURB RAMP
5. TYPE B3 CURB RAMP
6. TYPE C1 CURB RAMP
7. TYPE C2 CURB RAMP

## LEGEND

- MONUMENT BOX ADJUSTED TO GRADE
- SEWER MANHOLE ADJUSTED TO GRADE
- (W) VALVE BOX / SERVICE BOX ADJUSTED TO GRADE-CLEVE WATER DEPT.
- WATER MANHOLE/VAULT/METER ADJUSTED TO GRADE-CLEVE WATER DEPT.
- INSTALL CATCH BASIN 3A
- CATCH BASIN ADJUSTED TO GRADE
- CATCH BASIN ADJUSTED TO GRADE, AS PER PLAN
- CATCH BASIN/MANHOLE RECONSTRUCTED TO GRADE, AS PER PLAN
- ELECTRIC VAULT ADJUSTED TO GRADE (BY OTHERS)
- TELEPHONE MANHOLE ADJUSTED TO GRADE (BY OTHERS)
- (R) REMOVAL OF STRUCTURES AND OBSTRUCTIONS
- (DR) CONCRETE DRIVE
- (WK) CONCRETE WALK
- (C) CURB, TYPE 6 OR COMBINATION CURB AND GUTTER, TYPE 3
- (D) 12" CONDUIT, TYPE B
- (D) CATCH BASIN, TYPE 3A
- (DC) DECORATIVE CROSSWALK (SEE SHEET NO. 119 FOR PLAN)

## NOTES

1. REMOVE EXISTING RT. SIDE ABANDONED DRIVE APRON FROM STA. 497+25 TO STA 497+77.

HORIZONTAL SCALE IN FEET 0 25 50 100

CALCULATED TWC
CHECKED BT

# PLAN SHEET
STA. 478+00 TO STA. 502+00

CUY-US-042-4.29



P:\Middleburg Heights - City of\J20150340.000 Pearl Rd Rehab\Drawings\Trans\105726GP012.dwg 01-Mar-19 3:18 PM

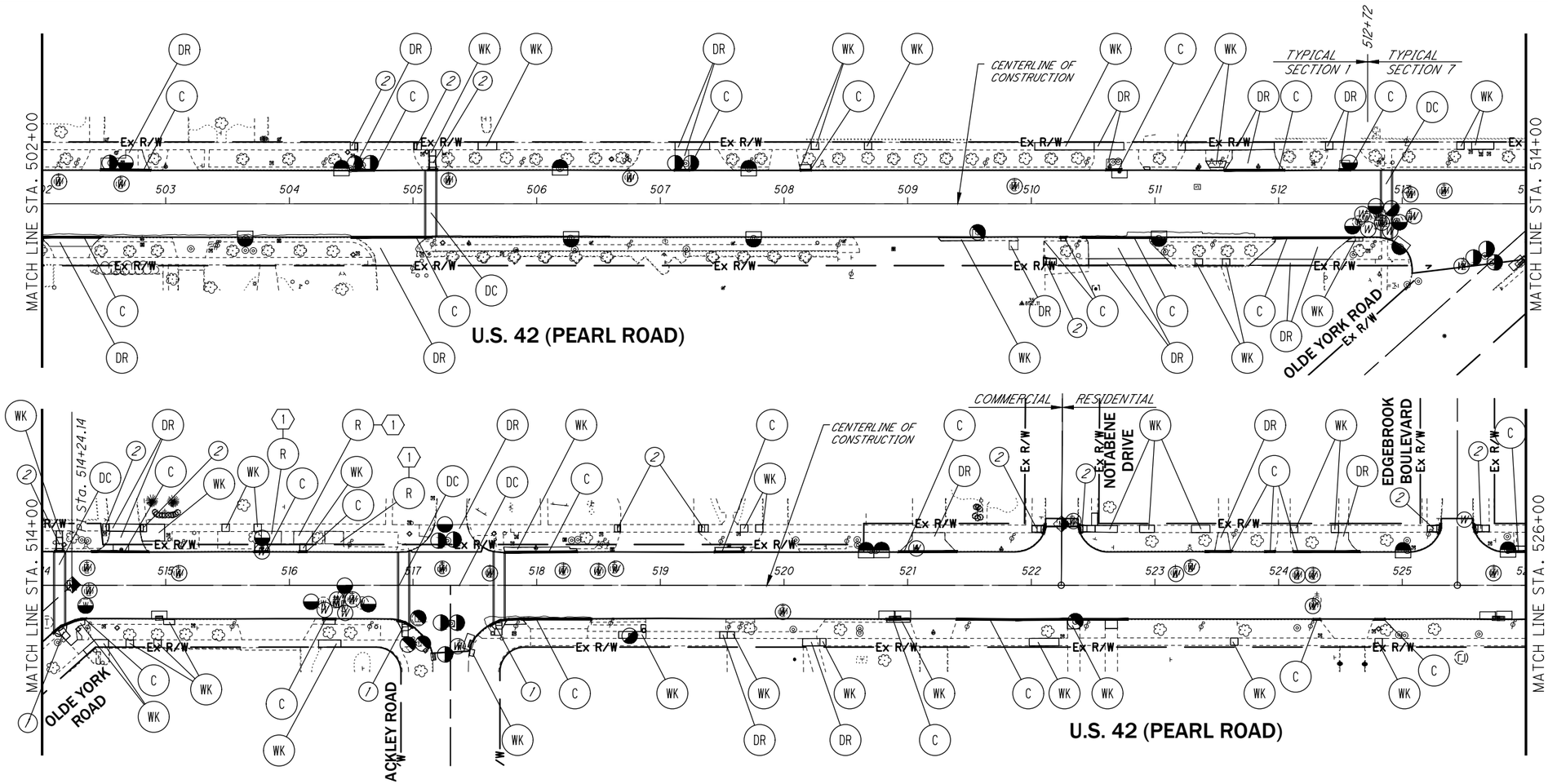


| LOCATION | 202 PAVEMENT REMOVED, AS PER PLAN | 202 WALK REMOVED, AS PER PLAN | 202 CURB REMOVED | | 451 8" REINFORCED CONCRETE PAVEMENT, CLASS QC1, AS PER PLAN | 452 6" NON-REINFORCED CONCRETE PAVEMENT, CLASS QC MS, AS PER PLAN | 608 4" CONCRETE WALK, AS PER PLAN | 608 6" CONCRETE WALK, AS PER PLAN | 608 CURB RAMP, AS PER PLAN | | 609 CURB, TYPE 6, AS PER PLAN | 611 12" CONDUIT, TYPE B, AS PER PLAN | 611 CATCH BASIN, NO. 3A | 611 CATCH BASIN ADJUSTED TO GRADE | 611 CATCH BASIN ADJUSTED TO GRADE, AS PER PLAN | 611 CATCH BASIN RECONSTRUCTED TO GRADE, AS PER PLAN | 611 MANHOLE ADJUSTED TO GRADE | 623 MONUMENT BOX ADJUSTED TO GRADE | 638 SPECIAL-VALVE BOX ADJUSTED TO GRADE (CLEVELAND STANDARD) | 638 SPECIAL-SERVICE BOX ADJUSTED TO GRADE (CLEVELAND STANDARD) | 638 WATER WORK, MISC.: WATER MANHOLE ADJUSTED TO GRADE (CLEVELAND STANDARD) | 690 SPECIAL - GROUND WATER MONITORING WELL RECONSTRUCTION |
|---|---|---|---|---|---|---|---|---|---|---|---|---|---|---|---|---|---|---|---|---|---|---|
| | SY | SF | FT | | SY | SY | SF | SF | SF | | FT | FT | EACH | EACH | EACH | EACH | EACH | EACH | EACH | EACH | EACH | EACH |
| 502+00.00 TO 514+00.00 | 693 | 1,163 | 392 | | 693 | | | 971 | 188 | | 384 | | | 2 | 8 | | 8 | | 13 | | 5 | |
| 514+00.00 TO 526+00.00 | 320 | 3,659 | 627 | | 281 | 39 | 427 | 2,000 | 796 | | 549 | | | 7 | 4 | | 5 | 1 | 21 | 2 | 6 | |
| TOTALS TO GEN. SUMM. | 1,013 | 4,822 | 1,019 | 0 | 974 | 39 | 427 | 2,971 | 984 | 0 | 933 | 0 | 0 | 9 | 12 | 0 | 13 | 1 | 34 | 2 | 11 | 0 |

## CURB RAMP LEGEND

REFER TO ODOT STANDARD CONSTRUCTION DRAWING BP-7.1.

1. TYPE A1 CURB RAMP
2. TYPE A2 CURB RAMP
3. TYPE B1 CURB RAMP
4. TYPE B2 CURB RAMP
5. TYPE B3 CURB RAMP
6. TYPE C1 CURB RAMP
7. TYPE C2 CURB RAMP

## LEGEND

- MONUMENT BOX ADJUSTED TO GRADE
- SEWER MANHOLE ADJUSTED TO GRADE
- VALVE BOX / SERVICE BOX ADJUSTED TO GRADE-CLEVE WATER DEPT.
- WATER MANHOLE/VAULT/METER ADJUSTED TO GRADE-CLEVE WATER DEPT.
- INSTALL CATCH BASIN 3A
- CATCH BASIN ADJUSTED TO GRADE
- CATCH BASIN ADJUSTED TO GRADE, AS PER PLAN
- CATCH BASIN/MANHOLE RECONSTRUCTED TO GRADE, AS PER PLAN
- ELECTRIC VAULT ADJUSTED TO GRADE (BY OTHERS)
- TELEPHONE MANHOLE ADJUSTED TO GRADE (BY OTHERS)
- R — REMOVAL OF STRUCTURES AND OBSTRUCTIONS
- DR — CONCRETE DRIVE
- WK — CONCRETE WALK
- C — CURB, TYPE 6 OR COMBINATION CURB AND GUTTER, TYPE 3
- D — 12" CONDUIT, TYPE B
- D — CATCH BASIN, TYPE 3A
- DC — DECORATIVE CROSSWALK (SEE SHEET NO. 120 FOR PLAN VIEW)

## NOTES

1. REMOVE (3) EXISTING LT. SIDE WALK AREAS BETWEEN GRASSED AREAS
   STA. 515+77 TO STA. 515+94
   STA. 516+04 TO STA. 516+19
   STA. 516+29 TO STA. 516+44

HORIZONTAL SCALE IN FEET 0 25 50 100

CALCULATED TWC
CHECKED BT

# PLAN SHEET
## STA. 502+00 TO STA. 526+00

CUY-US-042-4.29



P:\Middleburg Heights - City of\J201503340.000 Pearl Rd Rehab\Drawings\Trans\105726GP013.dwg 01-Mar-19 3:19 PM

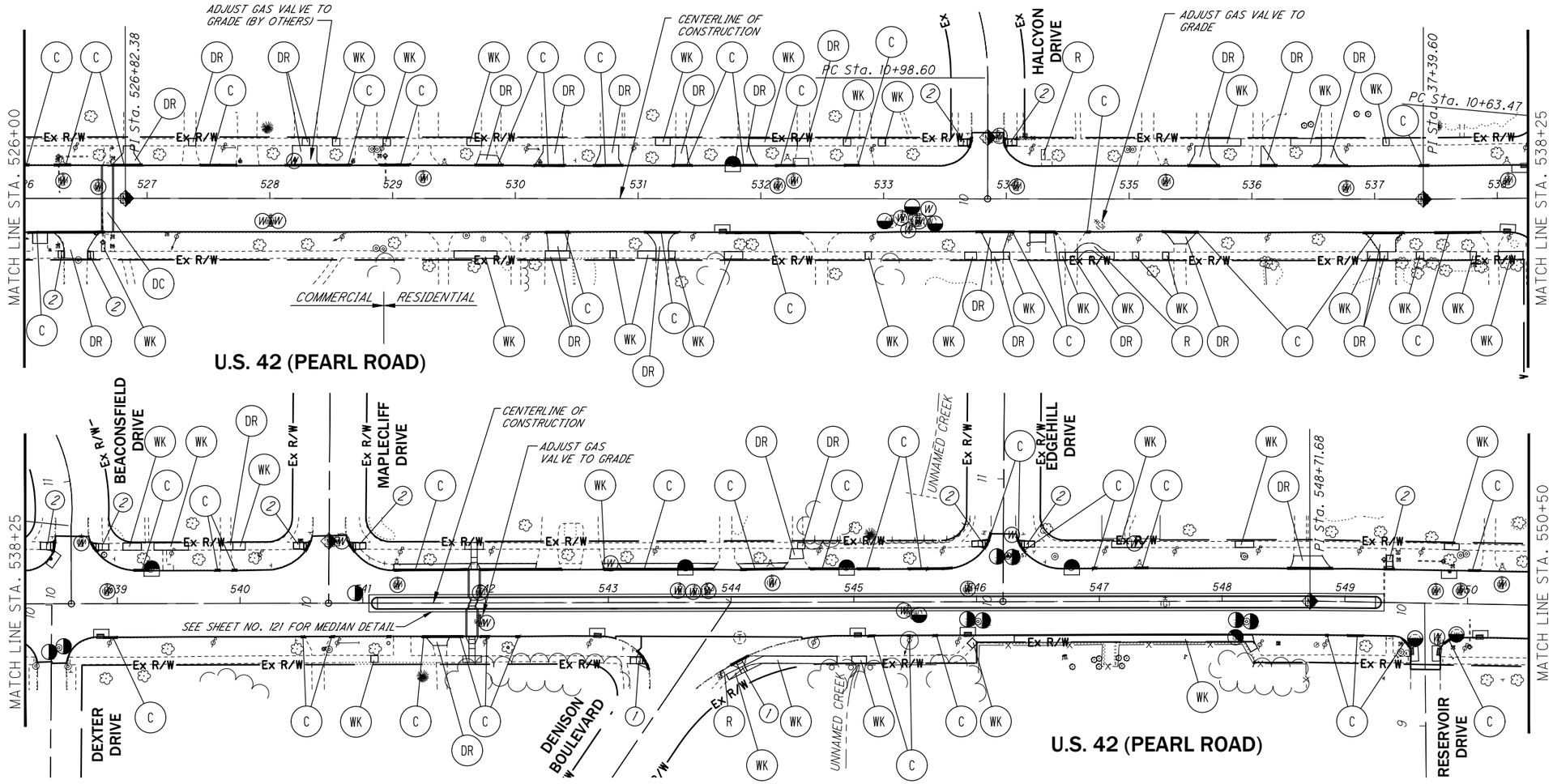


| LOCATION | 202 PAVEMENT REMOVED, AS PER PLAN | 202 WALK REMOVED, AS PER PLAN | 202 CURB REMOVED | 202 CURB REMOVED, AS PER PLAN | 451 8" REINFORCED CONCRETE PAVEMENT, CLASS QC MS, AS PER PLAN | 452 6" NON-REINFORCED CONCRETE PAVEMENT, CLASS QC MS, AS PER PLAN | 608 4" CONCRETE WALK, AS PER PLAN | 608 6" CONCRETE WALK, AS PER PLAN | 608 CURB RAMP, AS PER PLAN | | 609 CURB, TYPE 6, AS PER PLAN | 611 12" CONDUIT, TYPE B, AS PER PLAN | 611 CATCH BASIN, NO. 3A | 611 CATCH BASIN ADJUSTED TO GRADE | 611 CATCH BASIN ADJUSTED TO GRADE, AS PER PLAN | 611 CATCH BASIN RECONSTRUCTED TO GRADE, AS PER PLAN | 611 MANHOLE ADJUSTED TO GRADE | 623 MONUMENT BOX ADJUSTED TO GRADE | 638 SPECIAL-VALVE BOX ADJUSTED TO GRADE (CLEVELAND STANDARD) | 638 SPECIAL-SERVICE BOX ADJUSTED TO GRADE (CLEVELAND STANDARD) | 638 WATER WORK, MISC.: WATER MANHOLE ADJUSTED TO GRADE (CLEVELAND STANDARD) | 690 SPECIAL - GROUND WATER MONITORING WELL RECONSTRUCTION |
|---|---|---|---|---|---|---|---|---|---|---|---|---|---|---|---|---|---|---|---|---|---|---|
| | SY | SF | FT | FT | SY | SY | SF | SF | SF | | FT | FT | EACH | EACH | EACH | EACH | EACH | EACH | EACH | EACH | EACH | EACH |
| 526+00.00 TO 538+25.00 | 501 | 2,403 | 679 | | 59 | 443 | 1,987 | 229 | 178 | | 663 | | | 3 | 1 | | | 2 | 16 | | 3 | |
| 538+25.00 TO 550+50.00 | 81 | 4,100 | 562 | 33 | | 81 | 3,429 | | 662 | | 493 | | | 8 | 4 | | 9 | 2 | 17 | 2 | 3 | |
| TOTALS TO GEN. SUMM. | 582 | 6,503 | 1,241 | 33 | 59 | 524 | 5,416 | 229 | 840 | 0 | 1,156 | 0 | 0 | 11 | 5 | 0 | 9 | 4 | 33 | 2 | 6 | 0 |

## CURB RAMP LEGEND

REFER TO ODOT STANDARD CONSTRUCTION DRAWING BP-7.1.

1. TYPE A1 CURB RAMP
2. TYPE A2 CURB RAMP
3. TYPE B1 CURB RAMP
4. TYPE B2 CURB RAMP
5. TYPE B3 CURB RAMP
6. TYPE C1 CURB RAMP
7. TYPE C2 CURB RAMP

## LEGEND

- MONUMENT BOX ADJUSTED TO GRADE
- SEWER MANHOLE ADJUSTED TO GRADE
- (W) VALVE BOX / SERVICE BOX ADJUSTED TO GRADE-CLEVE WATER DEPT.
- WATER MANHOLE/VAULT/METER ADJUSTED TO GRADE-CLEVE WATER DEPT.
- INSTALL CATCH BASIN 3A
- CATCH BASIN ADJUSTED TO GRADE
- CATCH BASIN ADJUSTED TO GRADE, AS PER PLAN
- CATCH BASIN/MANHOLE RECONSTRUCTED TO GRADE, AS PER PLAN
- ELECTRIC VAULT ADJUSTED TO GRADE (BY OTHERS)
- TELEPHONE MANHOLE ADJUSTED TO GRADE (BY OTHERS)
- (R) REMOVAL OF STRUCTURES AND OBSTRUCTIONS
- (DR) CONCRETE DRIVE
- (WK) CONCRETE WALK
- (C) CURB, TYPE 6 OR COMBINATION CURB AND GUTTER, TYPE 3
- (D) 12" CONDUIT, TYPE B
- (D) CATCH BASIN, TYPE 3A
- (DC) DECORATIVE CROSSWALK (SEE SHEET NO. 120 FOR PLAN)

HORIZONTAL SCALE IN FEET 0 25 50 100

CALCULATED TWC
CHECKED BT

# PLAN SHEET
## STA. 526+00 TO STA. 550+50

CUY-US-042-4.29



P:\Middleburg Heights - City of\J20150340.000 Pearl Rd Rehab\Drawings\Trans\105726GP014.dwg 18-May-19 5:18 PM

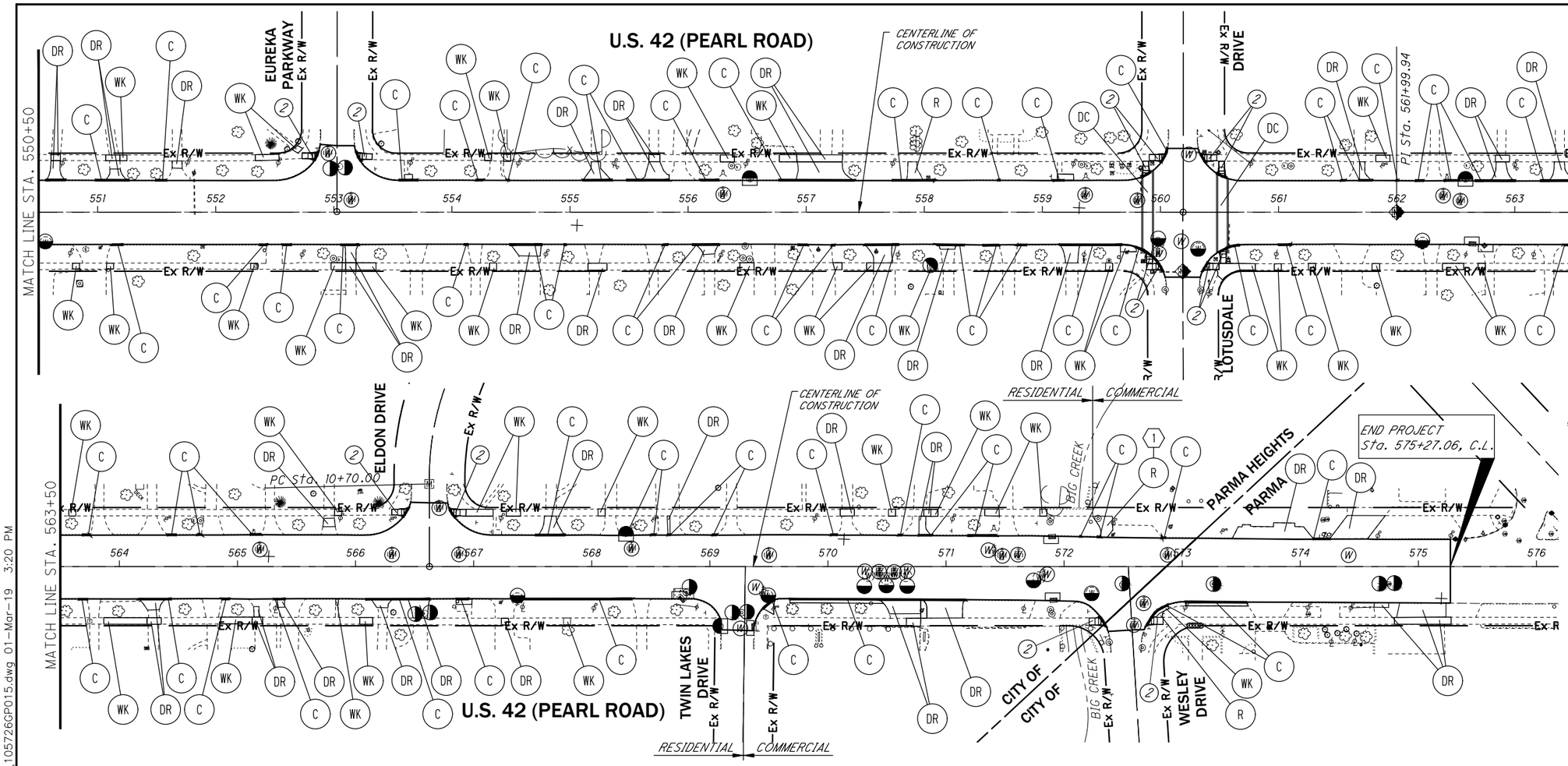


## CURB RAMP LEGEND

REFER TO ODOT STANDARD CONSTRUCTION DRAWING BP-7.1.

1. TYPE A1 CURB RAMP
2. TYPE A2 CURB RAMP
3. TYPE B1 CURB RAMP
4. TYPE B2 CURB RAMP
5. TYPE B3 CURB RAMP
6. TYPE C1 CURB RAMP
7. TYPE C2 CURB RAMP

## LEGEND

- MONUMENT BOX ADJUSTED TO GRADE
- SEWER MANHOLE ADJUSTED TO GRADE
- (W) VALVE BOX / SERVICE BOX ADJUSTED TO GRADE-CLEVE WATER DEPT.
- WATER MANHOLE/VAULT/METER ADJUSTED TO GRADE-CLEVE WATER DEPT.
- INSTALL CATCH BASIN 3A
- CATCH BASIN ADJUSTED TO GRADE
- CATCH BASIN ADJUSTED TO GRADE, AS PER PLAN
- CATCH BASIN/MANHOLE RECONSTRUCTED TO GRADE, AS PER PLAN
- ELECTRIC VAULT ADJUSTED TO GRADE (BY OTHERS)
- TELEPHONE MANHOLE ADJUSTED TO GRADE (BY OTHERS)
- (R) REMOVAL OF STRUCTURES AND OBSTRUCTIONS
- (DR) CONCRETE DRIVE
- (WK) CONCRETE WALK
- (C) CURB, TYPE 6 OR COMBINATION CURB AND GUTTER, TYPE 3
- (D) 12" CONDUIT, TYPE B
- (D) CATCH BASIN, TYPE 3A
- (DC) DECORATIVE CROSSWALK (SEE SHEET NO. 120 FOR PLAN VIEW)

## NOTES

1. REMOVE ABANDONED LT. SIDE DRIVEWAY APRON FROM STA 572+24 TO STA. 572+41.

| LOCATION | 202 PAVEMENT REMOVED, AS PER PLAN | 202 WALK REMOVED, AS PER PLAN | 202 CURB REMOVED | | 451 8" REINFORCED CONCRETE PAVEMENT, CLASS QC MS, AS PER PLAN | 452 6" NON-REINFORCED CONCRETE PAVEMENT, CLASS QC MS, AS PER PLAN | 608 4" CONCRETE WALK, AS PER PLAN | 608 6" CONCRETE WALK, AS PER PLAN | 608 CURB RAMP, AS PER PLAN | | 609 CURB, TYPE 6, AS PER PLAN | 611 12" CONDUIT, TYPE B, AS PER PLAN | 611 CATCH BASIN, NO. 3A | 611 CATCH BASIN ADJUSTED TO GRADE | 611 CATCH BASIN ADJUSTED TO GRADE, AS PER PLAN | 611 CATCH BASIN RECONSTRUCTED TO GRADE, AS PER PLAN | 611 MANHOLE ADJUSTED TO GRADE | 623 MONUMENT BOX ADJUSTED TO GRADE | 638 SPECIAL-VALVE BOX ADJUSTED TO GRADE (CLEVELAND STANDARD) | 638 SPECIAL-SERVICE BOX ADJUSTED TO GRADE (CLEVELAND STANDARD) | 638 WATER WORK, MISC.: WATER MANHOLE ADJUSTED TO GRADE (CLEVELAND STANDARD) | 690 SPECIAL - GROUND WATER MONITORING WELL RECONSTRUCTION |
|---|---|---|---|---|---|---|---|---|---|---|---|---|---|---|---|---|---|---|---|---|---|---|
| | SY | SF | FT | | SY | SY | SF | SF | SF | | FT | FT | EACH | EACH | EACH | EACH | EACH | EACH | EACH | EACH | EACH | EACH |
| 550+50.00 TO 563+50.00 | 410 | 2,110 | 701 | | | 392 | 1,428 | 69 | 678 | | 619 | | | 2 | 2 | | 2 | 2 | 10 | | 4 | |
| 563+50.00 TO 572+86.42 | 267 | 1,731 | 515 | | 105 | 141 | 1,092 | 425 | 223 | | 488 | | | 4 | 2 | | 6 | | 17 | | 7 | |
| SUBTOTAL – PARMA HEIGHTS | 677 | 3,841 | 1,216 | 0 | 105 | 533 | 2,520 | 494 | 901 | 0 | 1,107 | 0 | 0 | 6 | 4 | 0 | 8 | 2 | 27 | 0 | 11 | 0 |
| 575+86.42 TO 575+27.06 (SUBTOTAL – PARMA) | 242 | 290 | 91 | | 242 | | | 199 | 80 | | 81 | | | | | | 3 | | 3 | | | |
| TOTALS TO GEN. SUMM. | 919 | 4,131 | 1,307 | 0 | 347 | 533 | 2,520 | 693 | 981 | 0 | 1,188 | 0 | 0 | 6 | 4 | 0 | 11 | 2 | 30 | 0 | 11 | 0 |

HORIZONTAL SCALE IN FEET 0 25 50 100

CALCULATED TWC
CHECKED BT

# PLAN SHEET
## STA. 550+50 TO STA. 575+27.06

CUY-US-042-4.29



P:\Middleburg Heights – City of\J20150340.000 Pearl Rd Rehab\Drawings\Trans\105726GP015.dwg 01-Mar-19 3:20 PM

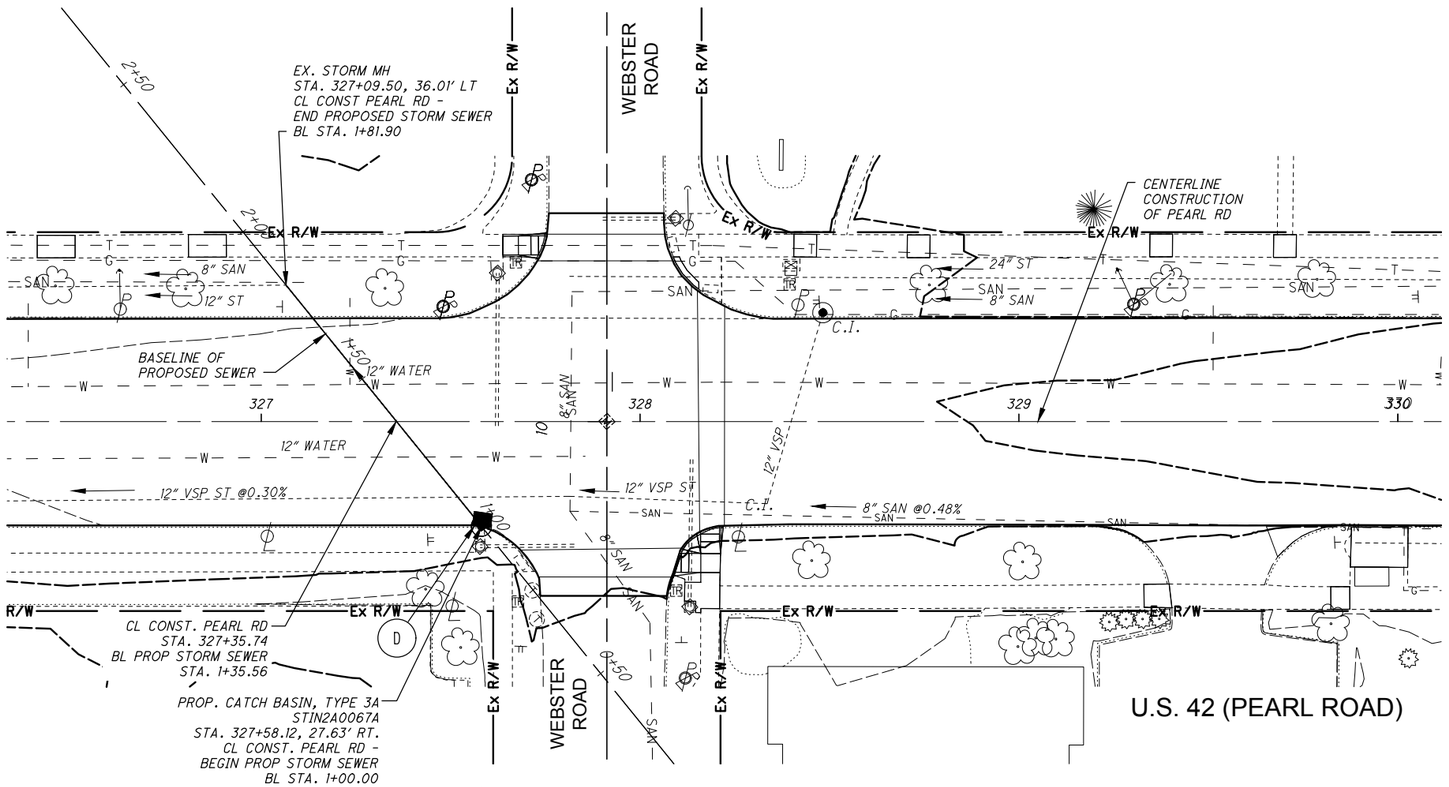


SEE SHEET NO. 56 FOR QUANTITIES.

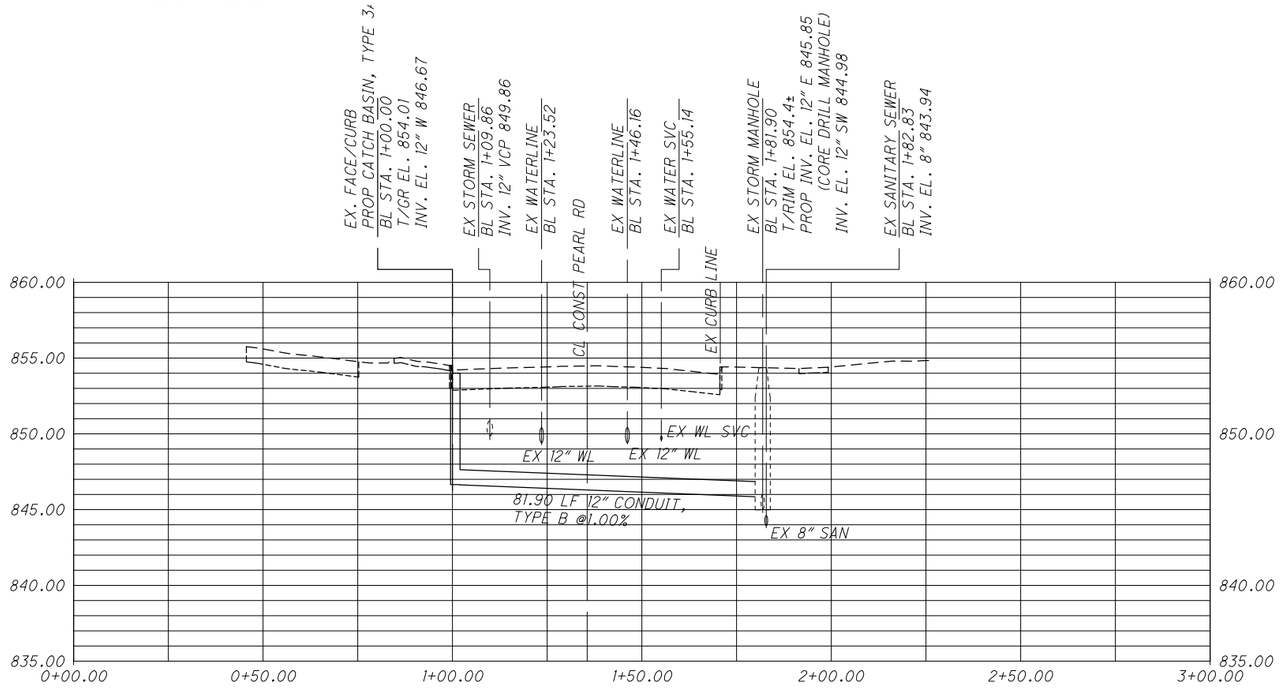


**NEW CATCH BASIN STIN2A0067A SEWER PROFILE**

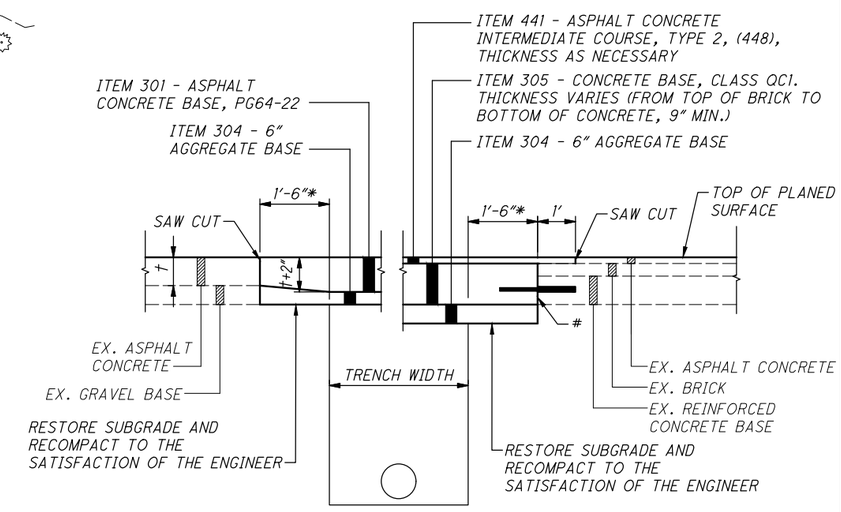


EXISTING FULL DEPTH ASPHALT PAVEMENT

EXISTING BRICK OVER CONCRETE PAVEMENT

* = UNDISTURBED BEARING
\# = SAW CUT EXIST. CONCRETE AND BRICK. TYPE Y CONTRACTION JOINT AS PER ODOT SCD BP-2.5
† = THICKNESS OF EXIST. ASPHALT AFTER PLANING

PAVEMENT REPAIR OVER NEW UTILITY TRENCH

NOT TO SCALE

HORIZONTAL SCALE IN FEET 0 10 20 40

CALCULATED TWC
CHECKED BT

STORM SEWER PLAN AND PROFILE
NEW STORM CATCH BASIN STIN2A0067A

CUY-US-042-4.29



P:\Middleburg Heights - City of\J20150340.000 Pearl Rd Rehab\Drawings\Trans\105726DP001.dwg 01-Mar-19 3:20 PM

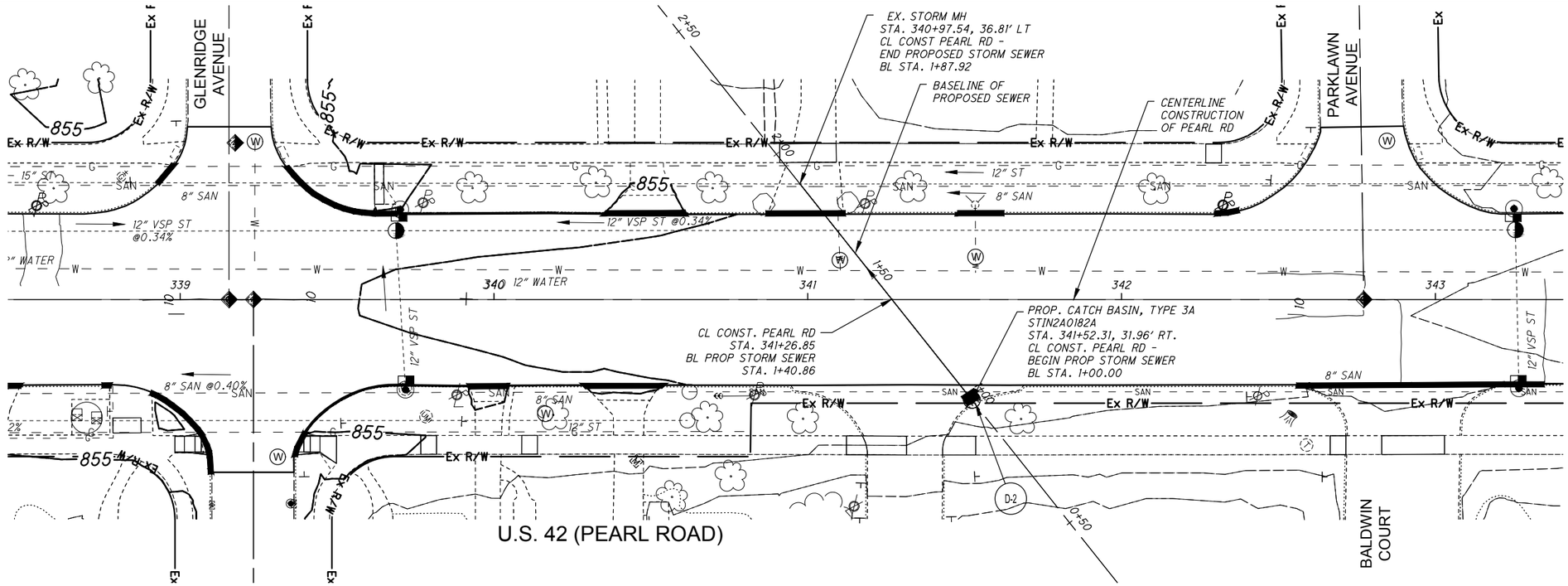


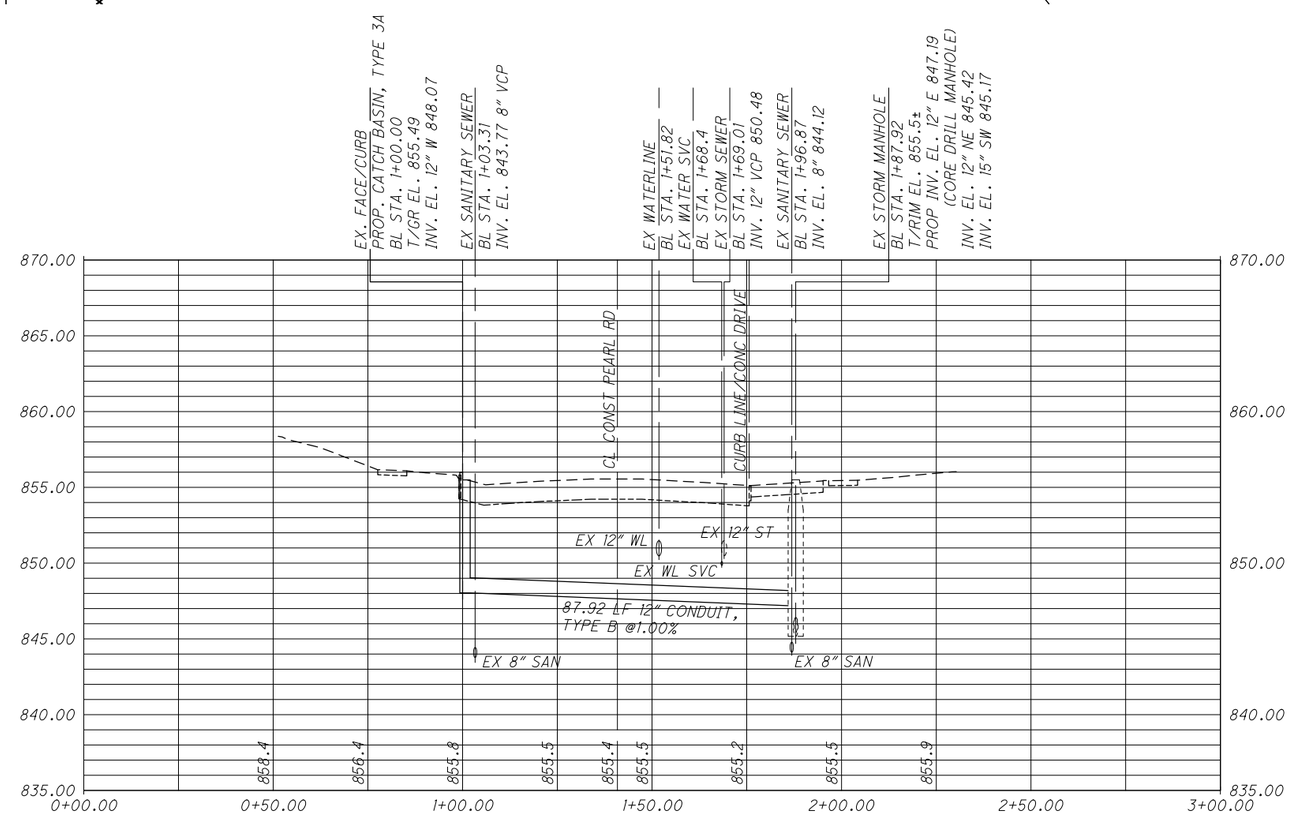


**NEW CATCH BASIN STIN2A0182A SEWER PROFILE**

SEE SHEET NO. 57 FOR QUANTITIES.

SEE SHEET NO. 67 FOR PAVEMENT REPLACEMENT DETAIL.

HORIZONTAL SCALE IN FEET 0 10 20 40

CALCULATED TWC
CHECKED DP

# STORM SEWER PLAN AND PROFILE
# NEW STORM CATCH BASIN STIN2A0182A

CUY-US-042-4.29



P:\Middleburg Heights - City of\J20150340.000 Pearl Rd Rehab\Drawings\Trans\105726DP002.dwg 01-Mar-19 3:21 PM

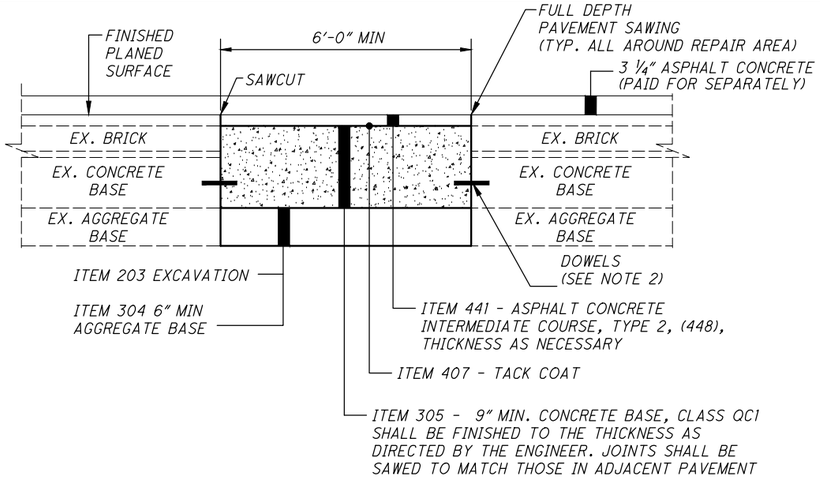


NOTE:

1.) SEE "ITEM 255 - FULL DEPTH PAVEMENT REMOVAL AND RIGID REPLACEMENT, CLASS QC1, AS PER PLAN" NOTE IN GENERAL NOTES FOR BASIS OF PAYMENT.

2.) SEE OHIO DOT STANDARD CONSTRUCTION DRAWING BP-2.5 FOR JOINT AND DOWEL DETAILS.

ITEM 255, FULL DEPTH PAVEMENT REMOVAL AND RIGID REPLACEMENT, CLASS QC1, AS PER PLAN

NOT TO SCALE

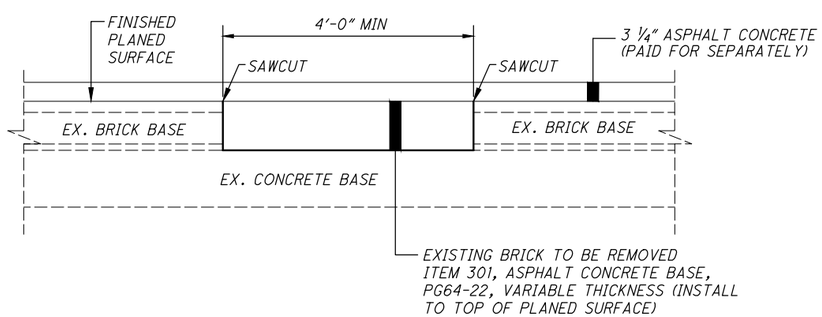


ITEM 251, PARTIAL DEPTH PAVEMENT REPAIR (ASPHALT CONCRETE BASE), AS PER PLAN

NOT TO SCALE

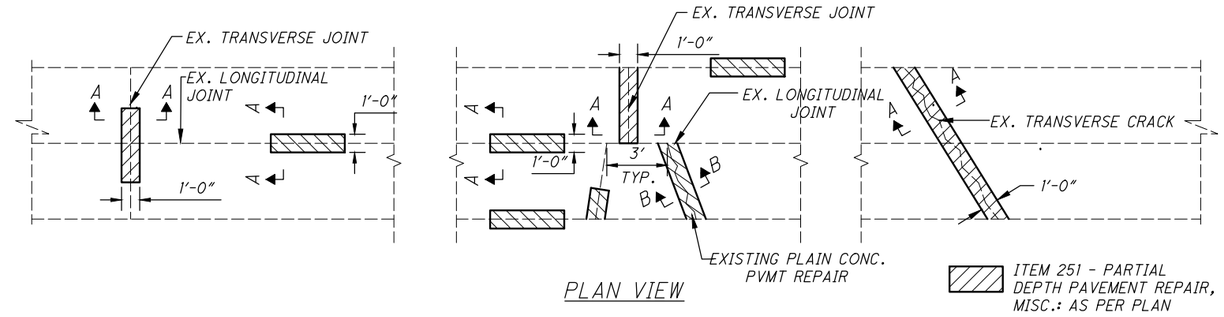


PLAN VIEW

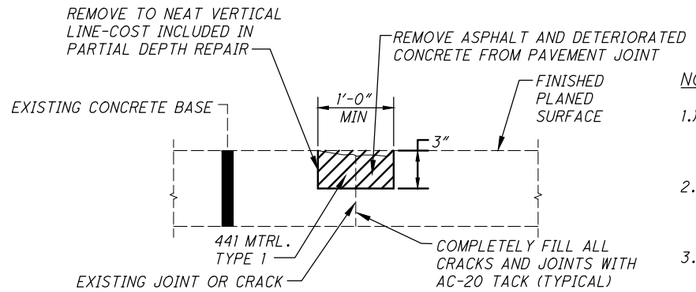


SECTION A-A

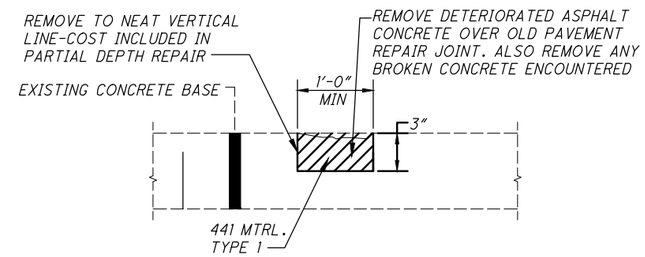


ITEM 251, PARTIAL DEPTH PAVEMENT REPAIR (441), AS PER PLAN

NOTE:

1.) REMOVE REMAINING ASPHALT WITH ITEM 254- PAVEMENT PLANING, ASPHALT CONCRETE, AS PER PLAN.

2.) FOR REPLACEMENT DEPTHS IN EXCESS OF 3" USE ITEM 301 - ASPHALT CONCRETE BASE, PG 64-22

3.) FOR REPLACEMENT DEPTHS RANGING FROM 1/2" TO 3", USE ITEM 442 - ASPHALT CONCRETE, INTERMEDIATE COURSE, 19 MM, TYPE A, (446)

4.) PLACE AND COMPACT THE ABOVE ASPHALT CONCRETE REPLACEMENT MATERIALS (301 AND 441) IN ONE OR MORE LIFTS IN ACCORDANCE WITH 252.04 OF THE SPECIFICATIONS.

CALCULATED TWC CHECKED BT

PAVEMENT DETAILS

CUY-US-042-4.29



P:\Middleburg Heights - City of\J20150340.000 Pearl Rd Rehab\Drawings\Trans\1057260A001.dwg 01-Mar-19 3:21 PM

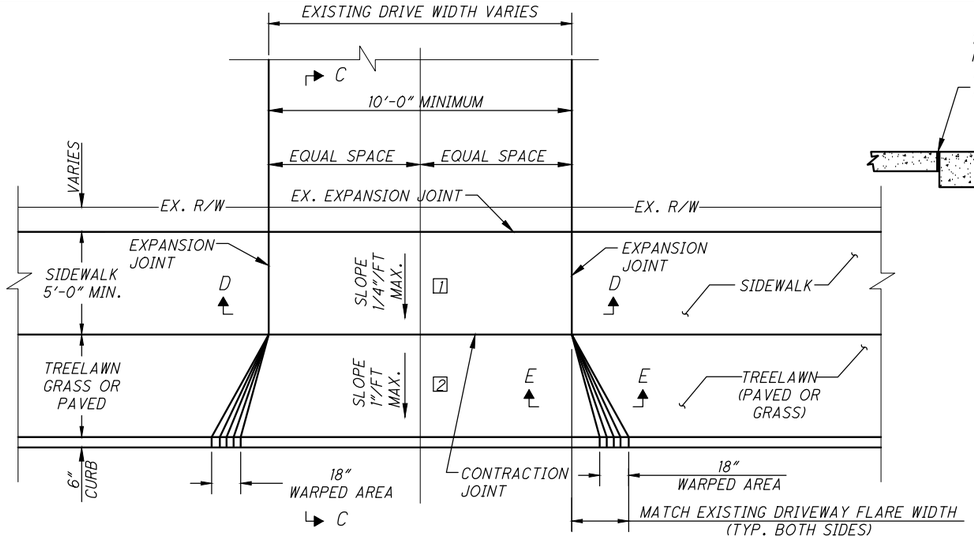


## DRIVE DETAIL

NO SCALE

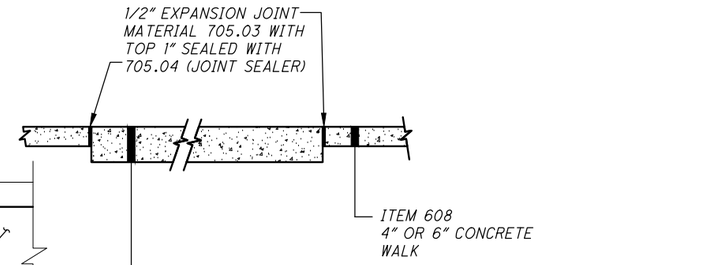


ITEM 452 -6" NON-REINFORCED CONCRETE PAVEMENT, CLASS QC MS, AS PER PLAN (RESIDENTIAL)

ITEM 451 - 8" REINFORCED CONCRETE PAVEMENT, CLASS QC1, AS PER PLAN (COMMERCIAL / INSTITUTIONAL)

ITEM 304 - 2" LIMESTONE SCREENINGS WITH ITEM 204 SUBGRADE COMPACTION INCLUDED WITH PAVEMENT FOR PAYMENT

## SECTION D-D

NO SCALE

| JOINTING: CONCRETE PAVEMENT | | |
|---|---|---|
| 1. UNTIED - NONREINFORCED P.C. CONCRETE PAVEMENT SLABS | | |
| 2. SPACING FOR SAWED OR IMPRESSED CONTRACTION AND/OR CONSTRUCTION JOINTS | | |
| CONCRETE THICKNESS | RECOMMENDED SLAB SIZE | MAXIMUM SLAB SIZE |
| 4" | 5' x 5' | 6' x 6' |
| 6" | 8' x 8' | 9' x 9' |
| 8" | 10' x 10' | 12' x 12' |
| JOINTS SHALL BE 1/4 THE DEPTH OF THE SLAB | | |

NOTES:

1. NEW SIDEWALKS AT DRIVE APRONS SLOPE AT 1/8" PER FOOT MINIMUM TO 1/4" PER FOOT MAXIMUM.
2. DRIVEWAY APRONS SLOPE AT 1.0% MINIMUM TO 14.17% MAXIMUM FROM BACK OF CURB TO JOINT OR FACE OF SIDEWALK.
3. WHERE SLOPE IS LESS THAN 1.0% CURB CUT CAN BE REDUCED TO TO LESS THAN 1-1/2" AS REQUIRED TO PROVIDE FOR POSITIVE DRAINAGE TO THE STREET GUTTER (SEE DRIVE PROFILES AND PAVEMENT TABLES FOR LOCATIONS)

SIDEWALK, DRIVEWAY AND APRON SHALL BE PLACED ON COMPACTED 2" THICK BASE OF GRAVEL. COST IS INCLUDED IN THE UNIT PRICE BID FOR ITEM 451 OR ITEM 452, AS PER PLAN.

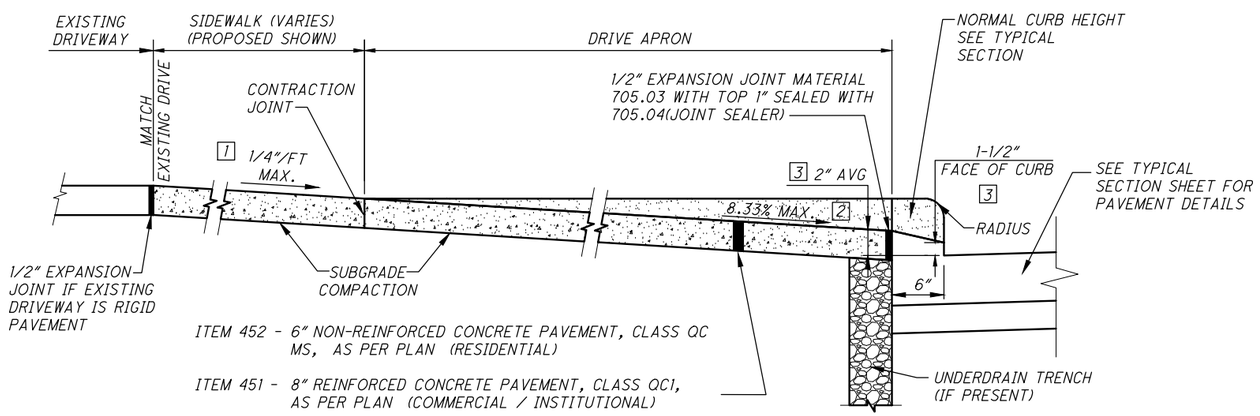


ITEM 452 - 6" NON-REINFORCED CONCRETE PAVEMENT, CLASS QC MS, AS PER PLAN (RESIDENTIAL)

ITEM 451 - 8" REINFORCED CONCRETE PAVEMENT, CLASS QC1, AS PER PLAN (COMMERCIAL / INSTITUTIONAL)

ITEM 304 - 2" LIMESTONE SCREENINGS WITH ITEM 204 SUBGRADE COMPACTION (INCLUDED WITH ITEM 451 OR ITEM 452, AS PER PLAN FOR PAYMENT)

## SECTION C-C

NO SCALE

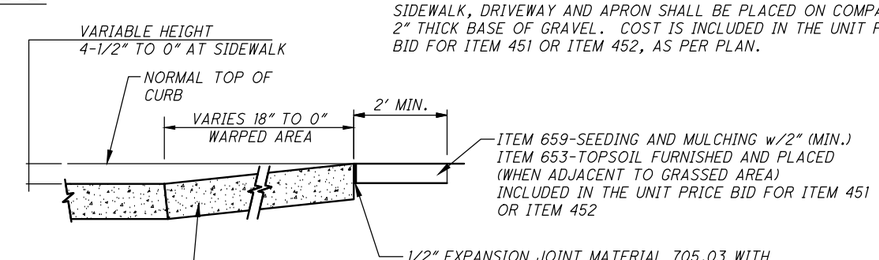


ITEM 452 - 6" NON-REINFORCED CONCRETE PAVEMENT, CLASS QC MS, AS PER PLAN (RESIDENTIAL)

ITEM 451 - 8" REINFORCED CONCRETE PAVEMENT, CLASS QC1, AS PER PLAN (COMMERCIAL / INSTITUTIONAL)

ITEM 304 - 2" LIMESTONE SCREENINGS WITH ITEM 204 SUBGRADE COMPACTION (INCLUDED WITH ITEM 451 OR ITEM 452, AS PER PLAN FOR PAYMENT)

## SECTION E-E

NO SCALE

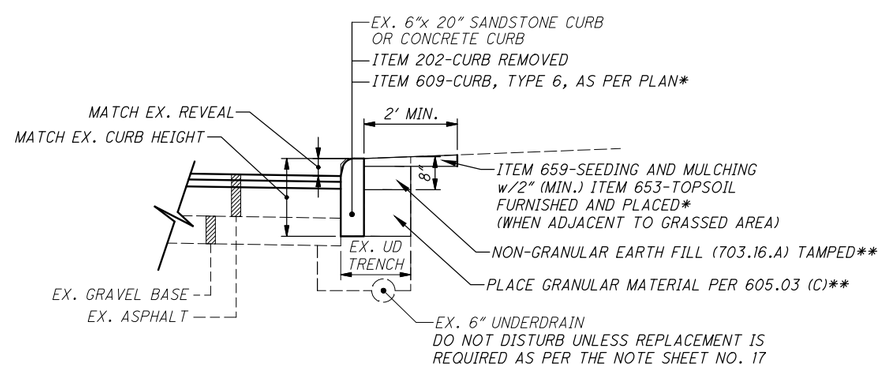


* = ITEM INCLUDED IN THE UNIT PRICE BID FOR ITEM 609-CURB, TYPE 6, AS PER PLAN

** = ITEM INCLUDED IN THE UNIT PRICE BID FOR ITEM 609-CURB, TYPE 6, AS PER PLAN, UNLESS UNDERDRAIN IS REPLACED

NON-INTEGRAL CURB REMOVED AND REPLACED DETAIL

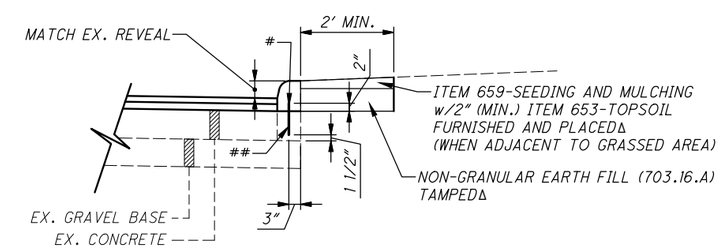


Δ = ITEM INCLUDED IN THE UNIT PRICE BID FOR ITEM 609-CURB, TYPE 2-B, AS PER PLAN

\# = NO. 5 TIE BARS AT 12" c/c SPACING. LENGTH OF BARS REQUIRED = EX. CONC. PAVEMENT THICKNESS + ½"

\#\# = ¾" DIAMETER DRILLED HOLE PER ODOT C&MS 510 W/705.20 ANCHORING MATERIAL

INTEGRAL CURB REMOVED AND REPLACED DETAIL

SEE GENERAL NOTES FOR FURTHER INFORMATION

CALCULATED TWC CHECKED BT

# PAVEMENT DETAILS

CUY-US-042-4.29



P:\Middleburg Heights - City of\J20150340.000 Pearl Rd Rehab\Drawings\Trans\105726GA002.dwg 01-Mar-19 3:21 PM

| SHEET NUMBER | | | | | | | | | | | | | | | PARTICIPATION | | | | | ITEM | ITEM EXT. | GRAND TOTAL | UNIT | DESCRIPTION | SEE SHEET NO. |
|---|---|---|---|---|---|---|---|---|---|---|---|---|---|---|---|---|---|---|---|---|---|---|---|---|---|
| | | | | | | | | | | | | | | | 01/MPO/PV | | | | 02/MPO/OT | | | | | | |
| 73 | 74 | 75 | 76 | 77 | 78 | 79 | 80 | 81 | 82 | 83 | 84 | 85 | 86 | 115 | STRONGS-VILLE | MIDDLEBURG HEIGHTS | PARMA HEIGHTS | PARMA | TLCI | | | | | | |
| | | | | | | | | | | | | | | | | | | | | | | | | **TRAFFIC CONTROL** | |
| | | | | | | | | | | | | 301.8 | | | | | | | 301.8 | 630 | 02100 | 301.8 | FT | GROUND MOUNTED SUPPORT, NO. 2 POST | |
| | | | | | | | | | | | | 220.0 | | | | | | | 220.0 | 630 | 03100 | 220.0 | FT | GROUND MOUNTED SUPPORT, NO. 3 POST | |
| | | | | | | | | | | | | | | 4 | | | | | 4 | 630 | 79200 | 4 | EACH | SIGN ATTACHMENT ASSEMBLY, MAST ARM | |
| | | | | | | | | | | | | 208.9 | | 22.5 | | | | | 231.4 | 630 | 80100 | 231.4 | SF | SIGN, FLAT SHEET | |
| | | | | | | | | | | | | 4 | | | | | | | 4 | 630 | 85000 | 4 | EACH | REMOVAL OF GROUND MOUNTED SIGN AND STORAGE | |
| | | | | | | | | | | | | 3 | | | | | | | 3 | 630 | 86002 | 3 | EACH | REMOVAL OF GROUND MOUNTED POST SUPPORT AND DISPOSAL | |
| | | | | | | | | | | | | 2 | | | | | | | 2 | 630 | 87510 | 2 | EACH | REMOVAL OF POLE MOUNTED SIGN AND STORAGE | |
| | | | | | | | | | | 0.43 | 0.84 | | | | | | | | 1.27 | 644 | 00104 | 1.27 | MILE | EDGE LINE, 4" | |
| 0.05 | | 0.50 | | | | | | | | 0.43 | 0.90 | | | | 0.05 | 0.50 | | | 1.33 | 644 | 00104 | 1.88 | MILE | EDGE LINE, 6" | |
| 1.46 | | 5.73 | | | | 3.30 | | | 0.25 | | | | | | 1.46 | 5.73 | 3.30 | 0.25 | | 644 | 00204 | 10.74 | MILE | LANE LINE, 6" | |
| 0.72 | 0.37 | 0.29 | 1.55 | 1.64 | 0.79 | 2.04 | 1.67 | 0.81 | 0.11 | | | | | | 1.09 | 4.27 | 4.52 | 0.11 | | 644 | 00300 | 9.99 | MILE | CENTER LINE | |
| 574 | 317 | 1492 | 326 | 256 | 519 | 173 | 893 | 145 | 442 | 190 | | | | | 891 | 2593 | 1211 | 442 | 190 | 644 | 00404 | 5327 | FT | CHANNELIZING LINE, 12" | |
| 118 | 349 | 230 | 226 | 153 | 384 | 461 | 205 | 259 | 265 | 44 | | | | | 467 | 993 | 1111 | 79 | 44 | 644 | 00500 | 2694 | FT | STOP LINE | |
| 608 | 1323 | 115 | 821 | 825 | 1233 | 1276 | 496 | 1425 | 1084 | 88 | | | | | 1931 | 2994 | 4202 | 79 | 88 | 644 | 00600 | 9294 | FT | CROSSWALK LINE | |
| 260 | | 86 | | | | | | | 66 | 539 | 1128 | | | | 260 | 86 | 66 | | 1667 | 644 | 00700 | 2079 | FT | TRANSVERSE/DIAGONAL LINE | |
| | | | | | | | | | | 32 | | | | | | | | | 32 | 644 | 00800 | 32 | FT | CURB MARKING | |
| 78 | | | | | | | | 40 | | 28 | 8 | | | | 78 | | 40 | | 36 | 644 | 00900 | 154 | SF | ISLAND MARKING | |
| | | | | | | | | 4 | | | | | | | | | 4 | | | 644 | 01100 | 4 | EACH | SCHOOL MARKING, 72" | |
| 14 | 21 | 29 | 23 | 31 | 26 | 18 | 22 | 36 | 26 | 7 | 17 | | | | 35 | 109 | 92 | 10 | 24 | 644 | 01300 | 270 | EACH | LANE ARROW | |
| | | | | | | | | | | 1 | | | | | | | | | 1 | 644 | 01400 | 1 | EACH | WORD ON PAVEMENT, 72" | |
| | | | | | | | | | | 392 | 1235 | | | | | | | | 1627 | 644 | 01510 | 1627 | FT | DOTTED LINE, 6" | |
| | 97 | 346 | | | | | | | | 470 | | | | | 97 | 346 | | | 470 | 644 | 01520 | 913 | FT | DOTTED LINE, 12" | |
| | | | | | | | | | | 5 | 17 | | | | | | | | 22 | 644 | 01630 | 22 | EACH | BIKE LANE SYMBOL MARKING | |
| | | | | | | | | | | 82 | | | | | | | | | 82 | 644 | 19000 | 82 | EACH | SHARED LANE MARKING | |
| 0.10 | | 0.06 | | | | | | | 0.19 | | | | | | 0.10 | 0.06 | 0.19 | | | 646 | 10110 | 0.35 | MILE | LANE LINE, 6" | |
| 0.09 | | | | | | | | | 0.13 | | | | | | 0.09 | | 0.13 | | | 646 | 10200 | 0.22 | MILE | CENTER LINE | |
| | | 111 | | | | | | | 230 | | | | | | | 111 | 230 | | | 646 | 10310 | 341 | FT | CHANNELIZING LINE, 12" | |
| | | | | | | 53 | | | 76 | | | | | | | | 129 | | | 646 | 10400 | 129 | FT | STOP LINE | |
| | | | | | | 70 | 259 | | | 293 | | | | | | | 329 | | 293 | 646 | 10500 | 622 | FT | CROSSWALK LINE | |
| 386 | | | | | | | | | | | | | | | 386 | | | | | 646 | 10600 | 386 | FT | TRANSVERSE/DIAGONAL LINE | |

CALCULATED DRP
CHECKED BT

TRAFFIC CONTROL GENERAL SUMMARY

CUY-US-042-4.29



P:\Middleburg Heights - City of\J20150340.000 Pearl Rd Rehab\Drawings\Trans\105726TG001.dwg 18-May-19 5:18 PM

| SHEET NUMBER | | | | | | | | | | | | | | | PARTICIPATION | | | | ITEM | ITEM EXT. | GRAND TOTAL | UNIT | DESCRIPTION | SEE SHEET NO. |
|---|---|---|---|---|---|---|---|---|---|---|---|---|---|---|---|---|---|---|---|---|---|---|---|---|
| | | | | | | | | | | | | | | | 01/MPO/PV | | | 02/MPO/OT | | | | | | |
| 73 | 74 | 75 | 76 | 77 | 78 | 79 | 80 | 81 | 82 | 83 | 84 | 85 | 86 | 115 | STRONGS-VILLE | MIDDLEBURG HEIGHTS | PARMA HEIGHTS | TLCI | | | | | | |
| | | | | | | | | | | | | | | | | | | | | | | | **TRAFFIC SIGNAL** | |
| | | | | | | | | | | | | | 125 | 55 | 25 | 50 | 50 | 55 | 625 | 25400 | 180 | FT | CONDUIT, 2", 725.04 | |
| | | | | | | | | | | | | | | 27 | | | | 27 | 625 | 25500 | 27 | FT | CONDUIT, 3", 725.04 | |
| | | | | | | | | | | | | | | 141 | | | | 141 | 625 | 25900 | 141 | FT | CONDUIT, JACKED OR DRILLED: 3" | |
| | | | | | | | | | | | | | | 82 | | | | 82 | 625 | 29000 | 82 | FT | TRENCH | |
| | | | | | | | | | | | | | 10 | 5 | 2 | 4 | 4 | 5 | 625 | 30700 | 15 | EACH | PULL BOX, 725.08, 18" | |
| | | | | | | | | | | | | | | 6 | | | | 6 | 625 | 32000 | 6 | EACH | GROUND ROD | |
| | | | | | | | | | | | | | | 82 | | | | 82 | 625 | 36000 | 82 | FT | PLASTIC CAUTION TAPE | |
| | | | | | | | | | | | | | | 4 | | | | 4 | 632 | 05007 | 4 | EACH | VEHICULAR SIGNAL HEAD, (LED), 3-SECTION, 12" LENS, 1-WAY, | |
| | | | | | | | | | | | | | | | | | | | | | | | POLYCARBONATE, AS PER PLAN | 112 |
| | | | | | | | | | | | | | | 4 | | | | 4 | 632 | 20731 | 4 | EACH | PEDESTRIAN SIGNAL HEAD (LED), TYPE D2, COUNTDOWN, AS PER PLAN | 112 |
| | | | | | | | | | | | | | | 4 | | | | 4 | 632 | 25000 | 4 | EACH | COVERING OF VEHICULAR SIGNAL HEAD | |
| | | | | | | | | | | | | | | 4 | | | | 4 | 632 | 25010 | 4 | EACH | COVERING OF PEDESTRIAN SIGNAL HEAD | |
| | | | | | | | | | | | | | | 4 | | | | 4 | 632 | 25400 | 4 | EACH | PEDESTRIAN PUSHBUTTON | |
| | | | | | | | | | | | | | 164 | | 35 | 56 | 73 | | 632 | 26501 | 164 | EACH | DETECTOR LOOP, AS PER PLAN | 86 |
| | | | | | | | | | | | | | | 355 | | | | 355 | 632 | 40200 | 355 | FT | SIGNAL CABLE, 2 CONDUCTOR, NO. 14 AWG | |
| | | | | | | | | | | | | | | 375 | | | | 375 | 632 | 40500 | 375 | FT | SIGNAL CABLE, 5 CONDUCTOR, NO. 14 AWG | |
| | | | | | | | | | | | | | | 267 | | | | 267 | 632 | 40700 | 267 | FT | SIGNAL CABLE, 7 CONDUCTOR, NO. 14 AWG | |
| | | | | | | | | | | | | | | 59 | | | | 59 | 632 | 62810 | 59 | FT | INTERCONNECT CABLE, MISC.: 6 PAIR, NO. 19 AWG, SOLID, REA (PE-39) | |
| | | | | | | | | | | | | | | 2 | | | | 2 | 632 | 64010 | 2 | EACH | SIGNAL SUPPORT FOUNDATION | |
| | | | | | | | | | | | | | | 3 | | | | 3 | 632 | 64020 | 3 | EACH | PEDESTAL FOUNDATION | |
| | | | | | | | | | | | | | 125 | | 25 | 50 | 50 | | 632 | 65200 | 125 | FT | LOOP DETECTOR LEAD-IN CABLE | |
| | | | | | | | | | | | | | | 130 | | | | 130 | 632 | 68200 | 130 | FT | POWER CABLE, 2 CONDUCTOR, NO. 6 AWG | |
| | | | | | | | | | | | | | | 25 | | | | 25 | 632 | 68300 | 25 | FT | POWER CABLE, 3 CONDUCTOR, NO. 6 AWG | |
| | | | | | | | | | | | | | | 1 | | | | 1 | 632 | 70000 | 1 | EACH | POWER SERVICE | |
| | | | | | | | | | | | | | | 1 | | | | 1 | 632 | 70400 | 1 | EACH | CONDUIT RISER, 2" DIAMETER | |
| | | | | | | | | | | | | | | 1 | | | | 1 | 632 | 70600 | 1 | EACH | CONDUIT RISER, 3" DIAMETER | |
| | | | | | | | | | | | | | | 1 | | | | 1 | 632 | 80202 | 1 | EACH | SIGNAL SUPPORT, TYPE TC-81.21, DESIGN 2 | |
| | | | | | | | | | | | | | | 1 | | | | 1 | 632 | 80502 | 1 | EACH | SIGNAL SUPPORT, TYPE TC-81.21, DESIGN 11 | |
| | | | | | | | | | | | | | | 3 | | | | 3 | 632 | 89900 | 3 | EACH | PEDESTAL, 8', TRANSFORMER BASE | |
| | | | | | | | | | | | | | | 1 | | | | 1 | 633 | 01581 | 1 | EACH | CONTROLLER UNIT, TYPE TS2/A2, WITH CABINET, TYPE TS1, AS PER PLAN | 112 |
| | | | | | | | | | | | | | | 1 | | | | 1 | 633 | 67100 | 1 | EACH | CABINET FOUNDATION | |
| | | | | | | | | | | | | | | 1 | | | | 1 | 633 | 67200 | 1 | EACH | CONTROLLER WORK PAD | |

CALCULATED DRP
CHECKED BT

TRAFFIC SIGNAL GENERAL SUMMARY

CUY-US-042-4.29



P:\Middleburg Heights - City of\J20150340.000 Pearl Rd Rehab\Drawings\Trans\105726TG002.dwg 18-May-19 5:19 PM

| SHEET NO. | REFERENCE NO. | LOCATION | STATION FROM | STATION TO | SIDE | 644 EDGE LINE, 6" (WHITE) | 644 LANE LINE, 6" | 644 CENTER LINE: SOLID, DOUBLE | 644 CENTER LINE: BROKEN AND SOLID, DOUBLE | 644 CHANNELIZING LINE, 12" | 644 STOP LINE | 644 CROSSWALK LINE | 644 TRANSVERSE/DIAGONAL LINE (WHITE) | 644 TRANSVERSE/DIAGONAL LINE (YELLOW) | 644 ISLAND MARKING (YELLOW) | 644 SCHOOL SYMBOL MARKING, 72" | 644 LANE ARROW | 644 DOTTED LINE, 12" | | 646 LANE LINE, 6" | 646 CENTER LINE: SOLID, DOUBLE | 646 TRANSVERSE/DIAGONAL LINE (YELLOW) |
|---|---|---|---|---|---|---|---|---|---|---|---|---|---|---|---|---|---|---|---|---|---|---|
| | | | | | | MILE | MILE | MILE | MILE | FT | FT | FT | FT | FT | EACH | EACH | EACH | FT | | MILE | MILE | FT |
| | | | | | | | | | | **CITY OF STRONGSVILLE** | | | | | | | | | | | | |
| 87 | LL-1 | US 42 | 237+73 | 242+83.18 | LT | | | | | | | | | | | | | | | 0.097 | | |
| | CL-1 | US 42 | 239+83 | 242+83.18 | LT | | | | | | | | | | | | | | | | 0.057 | |
| | CL-2 | US 42 | 241+33 | 242+83.18 | LT | | | | | | | | | | | | | | | | 0.028 | |
| | TY-1 | US 42 | 239+83 | 242+83.18 | LT/RT | | | | | | | | | | | | | | | | | 386 |
| | EW-1 | US 42 | 242+83.18 | 245+33 | LT | 0.047 | | | | | | | | | | | | | | | | |
| | LL-3 | US 42 | 242+83.18 | 281+15.43 | LT | | 0.726 | | | | | | | | | | | | | | | |
| | LL-4 | US 42 | 242+83.18 | 281+15.43 | RT | | 0.726 | | | | | | | | | | | | | | | |
| | CL-3 | US 42 | 242+83.18 | 243+60 | LT | | | 0.015 | | | | | | | | | | | | | | |
| | CL-4 | US 42 | 242+83.18 | 243+60 | RT | | | 0.015 | | | | | | | | | | | | | | |
| | CL-5 | US 42 | 243+60 | 245+68 | LT | | | | 0.039 | | | | | | | | | | | | | |
| | CL-6 | US 42 | 243+60 | 245+68 | RT | | | | 0.039 | | | | | | | | | | | | | |
| | CL-7 | US 42 | 245+68 | 247+83 | LT | | | 0.041 | | | | | | | | | | | | | | |
| | CL-8 | US 42 | 245+68 | 246+18 | RT/LT | | | 0.010 | | | | | | | | | | | | | | |
| | CL-9 | US 42 | 248+94 | 250+99 | RT | | | 0.039 | | | | | | | | | | | | | | |
| | CL-10 | US 42 | 250+49 | 250+99 | LT/RT | | | 0.010 | | | | | | | | | | | | | | |
| | CL-11 | US 42 | 251+53 | 252+91 | LT | | | | 0.026 | | | | | | | | | | | | | |
| | CL-12 | US 42 | 251+53 | 252+91 | RT | | | | 0.026 | | | | | | | | | | | | | |
| | CH-1 | US 42 | 246+38 | 247+88 | RT | | | | | 150 | | | | | | | | | | | | |
| | CH-2 | US 42 | 248+86 | 250+29 | LT | | | | | 143 | | | | | | | | | | | | |
| | CH-3 | US 42 | 251+37 | 254+18 | RT | | | | | 281 | | | | | | | | | | | | |
| | SL-1 | US 42 | 247+83 | 247+99 | LT/RT | | | | | | 35 | | | | | | | | | | | |
| | SL-2 | US 42 | 248+68 | 248+94 | LT/RT | | | | | | 41 | | | | | | | | | | | |
| | SL-3 | WHITNEY ROAD (RT) | | | | | | | | | 42 | | | | | | | | | | | |
| | XW-1 | US 42 | 247+75 | 248+14 | LT/RT | | | | | | | 143 | | | | | | | | | | |
| | XW-2 | US 42 | 248+48 | 249+13 | LT/RT | | | | | | | 175 | | | | | | | | | | |
| | XW-3 | WHITNEY ROAD (LT) | | | | | | | | | | 94 | | | | | | | | | | |
| | XW-4 | WHITNEY ROAD (RT) | | | | | | | | | | 138 | | | | | | | | | | |
| | XW-5 | SOUTH DRIVE | | | | | | | | | | 58 | | | | | | | | | | |
| | TW-1 | US 42 | 242+83.18 | 245+33 | LT | | | | | | | | 161 | | | | | | | | | |
| | TY-2 | US 42 | 242+83.18 | 243+60 | LT/RT | | | | | | | | | 99 | | | | | | | | |
| | IM-1 | US 42 | 243+60 | 243+65 | LT/RT | | | | | | | | | | 39 | | | | | | | |
| | IM-2 | US 42 | 250+99 | 251+04 | LT/RT | | | | | | | | | | 39 | | | | | | | |
| | LA-1 | US 42 | 244+84 | | LT/RT | | | | | | | | | | | | 2 | | | | | |
| | LA-2 | US 42 | 246+48 | 247+68 | LT/RT | | | | | | | | | | | | 3 | | | | | |
| | LA-3 | US 42 | 249+08 | 250+19 | LT/RT | | | | | | | | | | | | 3 | | | | | |
| | LA-4 | US 42 | 251+56 | 254+12 | RT | | | | | | | | | | | | 6 | | | | | |
| 88 | CL-13 | US 42 | 252+91 | 254+18 | LT | | | 0.024 | | | | | | | | | | | | | | |
| | CL-14 | US 42 | 252+91 | 253+41 | RT/LT | | | 0.010 | | | | | | | | | | | | | | |
| | CL-15 | US 42 | 255+48 | 256+81 | RT | | | 0.025 | | | | | | | | | | | | | | |
| | CL-16 | US 42 | 256+31 | 256+81 | LT/RT | | | 0.010 | | | | | | | | | | | | | | |
| | CL-17 | US 42 | 256+81 | 261+63 | LT | | | | 0.091 | | | | | | | | | | | | | |
| | CL-18 | US 42 | 256+81 | 261+63 | RT | | | | 0.091 | | | | | | | | | | | | | |
| | CL-19 | US 42 | 262+55 | 264+15 | LT | | | 0.030 | | | | | | | | | | | | | | |
| | CL-20 | US 42 | 263+65 | 264+15 | RT/LT | | | 0.010 | | | | | | | | | | | | | | |
| | CL-21 | US 42 | 264+15 | 267+66 | LT | | | | 0.067 | | | | | | | | | | | | | |
| | CL-22 | US 42 | 264+15 | 267+66 | RT | | | | 0.067 | | | | | | | | | | | | | |
| | CL-23 | US 42 | 267+66 | 268+77 | LT | | | 0.021 | | | | | | | | | | | | | | |
| | CL-24 | US 42 | 267+66 | 268+16 | LT/RT | | | 0.010 | | | | | | | | | | | | | | |
| **SUBTOTALS** | | | | | | 0.047 | 1.452 | 0.270 | 0.446 | 574 | 118 | 608 | 161 | 99 | 78 | 0 | 14 | 0 | | 0.097 | 0.085 | 386 |
| **TOTALS CARRIED TO GENERAL SUMMARY (SHEET NO. 71)** | | | | | | 0.05 | 1.46 | 0.72 | | 574 | 118 | 608 | 260 | | 78 | 0 | 14 | 0 | | 0.10 | 0.09 | 386 |

CALCULATED DRP
CHECKED BT

# PAVEMENT MARKING SUBSUMMARY - 1 OF 10

CUY-US-042-4.29



P:\Middleburg Heights - City of\J20150340.000 Pearl Rd Rehab\Drawings\Trans\105726TS001.dwg 01-Mar-19 3:23 PM

| SHEET NO. | REFERENCE NO. | LOCATION | STATION FROM | STATION TO | SIDE | EDGE LINE, 6" (WHITE) MILE | LANE LINE, 6" MILE | CENTER LINE: SOLID, DOUBLE MILE | CENTER LINE: BROKEN AND SOLID, DOUBLE MILE | CHANNELIZING LINE, 12" FT | STOP LINE FT | CROSSWALK LINE FT | TRANSVERSE/DIAGONAL LINE (WHITE) FT | TRANSVERSE/DIAGONAL LINE (YELLOW) FT | ISLAND MARKING (YELLOW) EACH | SCHOOL SYMBOL MARKING, 72" EACH | LANE ARROW EACH | DOTTED LINE, 12" FT |
|---|---|---|---|---|---|---|---|---|---|---|---|---|---|---|---|---|---|---|
| | | | | | | 644 | | | | | | | | | | | | |
| | | | | | | **CITY OF STRONGSVILLE** | | | | | | | | | | | | |
| 88 | CH-4 | US 42 | 253+61 | 254+18 | RT | | | | | 57 | | | | | | | | |
| (CONT) | CH-5 | US 42 | 255+48 | 256+11 | LT | | | | | 63 | | | | | | | | |
| | CH-6 | US 42 | 262+55 | 263+45 | LT | | | | | 90 | | | | | | | | |
| | SL-4 | US 42 | 254+18 | | LT/RT | | | | | | 48 | | | | | | | |
| | SL-5 | US 42 | 255+48 | | LT/RT | | | | | | 32 | | | | | | | |
| | SL-6 | US 42 | 261+63 | | LT/RT | | | | | | 32 | | | | | | | |
| | SL-7 | US 42 | 262+55 | | LT/RT | | | | | | 32 | | | | | | | |
| | SL-8 | BROXTON DRIVE | | | | | | | | | 13 | | | | | | | |
| | SL-9 | PRIVATE COMM DRIVE | | | | | | | | | 43 | | | | | | | |
| | SL-10 | ADAMS DRIVE | | | | | | | | | 12 | | | | | | | |
| | SL-11 | STRONGSVILLE BLVD | | | | | | | | | 14 | | | | | | | |
| | SL-12 | PRIVATE COMM DRIVE | | | | | | | | | 22 | | | | | | | |
| | XW-6 | US 42 | 254+29 | 254+53 | RT/LT | | | | | | | 169 | | | | | | |
| | XW-7 | US 42 | 255+00 | 255+43 | LT/RT | | | | | | | 145 | | | | | | |
| | XW-8 | US 42 | 261+74 | 261+82 | RT/LT | | | | | | | 121 | | | | | | |
| | XW-9 | US 42 | 262+38 | 262+45 | LT/RT | | | | | | | 124 | | | | | | |
| | XW-10 | BROXTON DRIVE | | | | | | | | | | 64 | | | | | | |
| | XW-11 | PRIVATE COMM DRIVE | | | | | | | | | | 185 | | | | | | |
| | XW-12 | ADAMS DRIVE | | | | | | | | | | 65 | | | | | | |
| | XW-13 | STRONGSVILLE BLVD | | | | | | | | | | 75 | | | | | | |
| | XW-14 | PRIVATE COMM DRIVE | | | | | | | | | | 111 | | | | | | |
| | LA-5 | US 42 | 252+22 | | LT/RT | | | | | | | | | | | | 2 | |
| | LA-6 | US 42 | 253+71 | 254+03 | LT/RT | | | | | | | | | | | | 2 | |
| | LA-7 | US 42 | 255+63 | 256+01 | LT/RT | | | | | | | | | | | | 2 | |
| | LA-8 | US 42 | 257+46 | | LT/RT | | | | | | | | | | | | 2 | |
| | LA-9 | US 42 | 260+18 | | LT/RT | | | | | | | | | | | | 2 | |
| | LA-10 | US 42 | 262+70 | 263+35 | LT/RT | | | | | | | | | | | | 2 | |
| | LA-11 | US 42 | 265+91 | | LT/RT | | | | | | | | | | | | 2 | |
| | DLT-1 | US 42 | 254+31 | 254+85 | LT/RT | | | | | | | | | | | | | 97 |
| 89 | CL-25 | US 42 | 270+36 | 271+72 | RT | | | 0.026 | | | | | | | | | | |
| | CL-26 | US 42 | 271+22 | 271+72 | RT/LT | | | 0.010 | | | | | | | | | | |
| | CL-27 | US 42 | 271+72 | 280+38 | LT | | | | 0.164 | | | | | | | | | |
| | CL-28 | US 42 | 271+72 | 280+43 | RT | | | | 0.165 | | | | | | | | | |
| | CH-7 | US 42 | 268+36 | 268+77 | RT | | | | | 41 | | | | | | | | |
| | CH-8 | US 42 | 270+36 | 271+02 | LT | | | | | 66 | | | | | | | | |
| | SL-13 | US 42 | 268+77 | 262+55 | LT/RT | | | | | | 32 | | | | | | | |
| | SL-14 | US 42 | 270+36 | 262+55 | LT/RT | | | | | | 32 | | | | | | | |
| | SL-15 | US 42 | 280+38 | 280+56 | LT/RT | | | | | | 37 | | | | | | | |
| | XW-15 | US 42 | 268+83 | 268+90 | LT/RT | | | | | | | 108 | | | | | | |
| | XW-16 | US 42 | 280+41 | 280+83 | LT/RT | | | | | | | 156 | | | | | | |
| | LA-12 | US 42 | 268+62 | | LT/RT | | | | | | | | | | | | 1 | |
| | LA-13 | US 42 | 270+51 | 270+92 | LT/RT | | | | | | | | | | | | 2 | |
| | LA-14 | US 42 | 272+72 | | LT/RT | | | | | | | | | | | | 2 | |
| | LA-15 | US 42 | 279+41 | | LT/RT | | | | | | | | | | | | 2 | |
| **SUBTOTALS** | | | | | | 0 | 0 | 0.036 | 0.329 | 317 | 349 | 1323 | 0 | 0 | 0 | 0 | 21 | 97 |
| **TOTALS CARRIED TO GENERAL SUMMARY (SHEET NO. 71)** | | | | | | 0 | 0 | 0.37 | | 317 | 349 | 1323 | 0 | | 0 | 0 | 21 | 97 |

CALCULATED DRP
CHECKED BT

**PAVEMENT MARKING SUBSUMMARY - 2 OF 10**

**CUY-US-042-4.29**



P:\Middleburg Heights - City of\J20150340.000 Pearl Rd Rehab\Drawings\Trans\105726TS002.dwg 01-Mar-19 3:24 PM

| SHEET NO. | REFERENCE NO. | LOCATION | STATION FROM | STATION TO | SIDE | 644 EDGE LINE, 6" (WHITE) MILE | 644 LANE LINE, 6" MILE | 644 CENTER LINE: SOLID, DOUBLE MILE | 644 CENTER LINE: BROKEN AND SOLID, DOUBLE MILE | 644 CHANNELIZING LINE, 12" FT | 644 STOP LINE FT | 644 CROSSWALK LINE FT | 644 TRANSVERSE/DIAGONAL LINE (WHITE) FT | 644 TRANSVERSE/DIAGONAL LINE (YELLOW) FT | 644 ISLAND MARKING (YELLOW) EACH | 644 SCHOOL SYMBOL MARKING, 72" EACH | 644 LANE ARROW EACH | 644 DOTTED LINE, 12" FT | | 646 LANE LINE, 6" MILE | 646 CHANNELIZING LINE, 12" FT | |
|---|---|---|---|---|---|---|---|---|---|---|---|---|---|---|---|---|---|---|---|---|---|---|
| | | | | | | **CITY OF MIDDLEBURG HEIGHTS** | | | | | | | | | | | | | | | | |
| 90 | LL-101 | US 42 | 281+15.43 | 432+31.11 | LT | | 2.863 | | | | | | | | | | | | | | | |
| | LL-102 | US 42 | 281+15.43 | 432+31.11 | RT | | 2.863 | | | | | | | | | | | | | | | |
| | CL-101 | US 42 | 281+83 | 289+75 | RT/LT | | | 0.150 | | | | | | | | | | | | | | |
| | CH-101 | US 42 | 281+83 | 287+83 | LT | | | | | 600 | | | | | | | | | | | | |
| | | | | | | | | | | | | | | | | | | | | | | |
| | SL-101 | US 42 | 281+83 | | LT/RT | | | | | | 33 | | | | | | | | | | | |
| | LA-101 | US 42 | 281+98 | 287+73 | CL | | | | | | | | | | | | 10 | | | | | |
| | DLT-101 | US 42 | 281+22 | 281+83 | RT | | | | | | | | | | | | | 67 | | | | |
| | DLT-102 | US 42 | 281+41 | 281+83 | RT | | | | | | | | | | | | | 54 | | | | |
| | | | | | | | | | | | | | | | | | | | | | | |
| | LL-103 | SPRAGUE ROAD | | | | | | | | | | | | | | | | | | 0.056 | | |
| | CH-117 | SPRAGUE ROAD | | | | | | | | | | | | | | | | | | | 111 | |
| | | | | | | | | | | | | | | | | | | | | | | |
| 91 | EW-101 | US 42 | 289+32 | 302+02 | RT | 0.241 | | | | | | | | | | | | | | | | |
| | EW-102 | US 42 | 295+26 | 296+65 | LT | 0.026 | | | | | | | | | | | | | | | | |
| | EW-103 | US 42 | 296+35 | 296+65 | LT | 0.006 | | | | | | | | | | | | | | | | |
| | EW-104 | US 42 | 297+55 | 307+22 | LT | 0.183 | | | | | | | | | | | | | | | | |
| | CH-102 | US 42 | 288+73 | 289+75 | RT | | | | | 102 | | | | | | | | | | | | |
| | CH-103 | US 42 | 290+43 | 291+50 | LT | | | | | 107 | | | | | | | | | | | | |
| | CH-104 | US 42 | 293+37 | 294+33 | RT | | | | | 96 | | | | | | | | | | | | |
| | | | | | | | | | | | | | | | | | | | | | | |
| | SL-102 | US 42 | 289+75 | | LT/RT | | | | | | 33 | | | | | | | | | | | |
| | SL-103 | US 42 | 290+43 | | LT | | | | | | 36 | | | | | | | | | | | |
| | SL-104 | US 42 | 294+33 | | LT/RT | | | | | | 38 | | | | | | | | | | | |
| | SL-105 | US 42 | 295+26 | | LT | | | | | | 26 | | | | | | | | | | | |
| | TW-101 | US 42 | 296+35 | 296+65 | LT | | | | | | | | 22 | | | | | | | | | |
| | LA-102 | US 42 | 288+83 | 289+66 | CL | | | | | | | | | | | | 2 | | | | | |
| | LA-103 | US 42 | 290+56 | 291+25 | LT | | | | | | | | | | | | 2 | | | | | |
| | LA-104 | US 42 | 293+55 | 294+18 | RT | | | | | | | | | | | | 2 | | | | | |
| | DLT-103 | US 42 | 294+25 | 294+59 | LT | | | | | | | | | | | | | 54 | | | | |
| | DLT-104 | US 42 | 294+38 | 294+90 | LT | | | | | | | | | | | | | 76 | | | | |
| | | | | | | | | | | | | | | | | | | | | | | |
| | | | | | | | | | | | | | | | | | | | | | | |
| 92 | EW-105 | US 42 | 302+02 | 302+36 | RT | 0.007 | | | | | | | | | | | | | | | | |
| | EW-106 | US 42 | 302+02 | 303+84 | RT | 0.034 | | | | | | | | | | | | | | | | |
| | CL-102 | US 42 | 307+32 | 308+87 | LT | | | 0.029 | | | | | | | | | | | | | | |
| | CL-103 | US 42 | 302+32 | 308+14 | LT/RT | | | 0.016 | | | | | | | | | | | | | | |
| | CL-104 | US 42 | 309+79 | 314+76 | RT/LT | | | 0.094 | | | | | | | | | | | | | | |
| | CH-105 | US 42 | 304+28 | 305+53 | LT | | | | | 127 | | | | | | | | | | | | |
| | CH-106 | US 42 | 308+34 | 308+87 | RT | | | | | 53 | | | | | | | | | | | | |
| | CH-107 | US 42 | 309+79 | 311+08 | LT | | | | | 129 | | | | | | | | | | | | |
| | CH-108 | US 42 | 311+98 | 314+76 | RT | | | | | 278 | | | | | | | | | | | | |
| | | | | | | | | | | | | | | | | | | | | | | |
| | | | | | | | | | | | | | | | | | | | | | | |
| | SL-106 | US 42 | 308+87 | | LT/RT | | | | | | 32 | | | | | | | | | | | |
| | SL-107 | US 42 | 309+79 | | LT/RT | | | | | | 32 | | | | | | | | | | | |
| | XW-101 | US 42 | 309+66 | 309+69 | LT/RT | | | | | | | 115 | | | | | | | | | | |
| | TW-102 | US 42 | 302+14 | 302+38 | RT | | | | | | | | 22 | | | | | | | | | |
| | TY-101 | US 42 | 307+42 | 308+04 | LT/RT | | | | | | | | | 42 | | | | | | | | |
| | LA-105 | US 42 | 304+48 | 305+45 | LT | | | | | | | | | | | | 3 | | | | | |
| | LA-106 | US 42 | 308+44 | 308+77 | CL | | | | | | | | | | | | 2 | | | | | |
| | LA-107 | US 42 | 309+94 | 311+08 | CL | | | | | | | | | | | | 3 | | | | | |
| | LA-108 | US 42 | 312+08 | 314+61 | CL | | | | | | | | | | | | 5 | | | | | |
| | DLT-105 | US 42 | 304+01 | 304+67 | RT | | | | | | | | | | | | | 95 | | | | |
| | | | | | | | | | | | | | | | | | | | | | | |
| | | | | | | | | | | | | | | | | | | | | | | |
| | | | | | | | | | | | | | | | | | | | | | | |
| **SUBTOTALS** | | | | | | 0.497 | 5.726 | 0.289 | 0 | 1492 | 230 | 115 | 44 | 42 | 0 | 0 | 29 | 346 | | 0.056 | 111 | |
| **TOTALS CARRIED TO GENERAL SUMMARY (SHEET NO. 71)** | | | | | | 0.50 | 5.73 | 0.29 | | 1492 | 230 | 115 | 86 | | 0 | 0 | 29 | 346 | | 0.06 | 111 | |

CALCULATED DRP
CHECKED BT

# PAVEMENT MARKING SUBSUMMARY - 3 OF 10

CUY-US-042-4.29



P:\Middleburg Heights - City of\J20150340.000 Pearl Rd Rehab\Drawings\Trans\105726TS003.dwg 01-Mar-19 3:24 PM

| SHEET NO. | REFERENCE NO. | LOCATION | STATION FROM | STATION TO | SIDE | EDGE LINE, 6" (WHITE) MILE | LANE LINE, 6" MILE | CENTER LINE: SOLID, DOUBLE MILE | CENTER LINE: BROKEN AND SOLID, DOUBLE MILE | CHANNELIZING LINE, 12" FT | STOP LINE FT | CROSSWALK LINE FT | TRANSVERSE/DIAGONAL LINE (WHITE) FT | TRANSVERSE/DIAGONAL LINE (YELLOW) FT | ISLAND MARKING (YELLOW) EACH | SCHOOL SYMBOL MARKING, 72" EACH | LANE ARROW EACH | DOTTED LINE, 12" FT |
|---|---|---|---|---|---|---|---|---|---|---|---|---|---|---|---|---|---|---|
| | | | | | | 644 | | | | | | | | | | | | |
| | | | | | | **CITY OF MIDDLEBURG HEIGHTS** | | | | | | | | | | | | |
| 93 | CL-105 | US 42 | 315+79 | 324+60 | LT | | | | 0.167 | | | | | | | | | |
| | CL-106 | US 42 | 315+79 | 324+60 | RT | | | | 0.167 | | | | | | | | | |
| | CL-107 | US 42 | 324+60 | 327+43 | LT | | | 0.054 | | | | | | | | | | |
| | CL-108 | US 42 | 324+60 | 325+28 | RT/LT | | | 0.010 | | | | | | | | | | |
| | CL-109 | US 42 | 328+44 | 330+45 | RT | | | 0.038 | | | | | | | | | | |
| | CL-110 | US 42 | 329+95 | 330+45 | RT/LT | | | 0.010 | | | | | | | | | | |
| | CH-109 | US 42 | 325+48 | 327+43 | RT | | | | | 195 | | | | | | | | |
| | CH-110 | US 42 | 328+44 | 329+75 | LT | | | | | 131 | | | | | | | | |
| | | | | | | | | | | | | | | | | | | |
| | SL-108 | US 42 | 314+76 | | LT/RT | | | | | | 32 | | | | | | | |
| | SL-109 | US 42 | 315+79 | | LT/RT | | | | | | 32 | | | | | | | |
| | SL-110 | US 42 | 327+43 | | LT/RT | | | | | | 32 | | | | | | | |
| | SL-111 | US 42 | 328+44 | | LT/RT | | | | | | 32 | | | | | | | |
| | SL-112 | ELDERDALE DRIVE | | | | | | | | | 14 | | | | | | | |
| | SL-113 | WEBSTER ROAD (LT) | | | | | | | | | 15 | | | | | | | |
| | XW-102 | US 42 | 314+83 | 314+93 | LT/RT | | | | | | | 122 | | | | | | |
| | XW-103 | US 42 | 328+15 | 328+22 | LT/RT | | | | | | | 122 | | | | | | |
| | XW-104 | FOWLES ROAD | | | | | | | | | | 53 | | | | | | |
| | XW-105 | ELDERDALE ROAD | | | | | | | | | | 65 | | | | | | |
| | XW-106 | WEBSTER ROAD (LT) | | | | | | | | | | 67 | | | | | | |
| | XW-107 | WEBSTER ROAD (RT) | | | | | | | | | | 78 | | | | | | |
| | | | | | | | | | | | | | | | | | | |
| | LA-109 | US 42 | 316+84 | | CL | | | | | | | | | | | | 2 | |
| | LA-110 | US 42 | 321+58 | | CL | | | | | | | | | | | | 2 | |
| | LA-111 | US 42 | 323+87 | | CL | | | | | | | | | | | | 2 | |
| | LA-112 | US 42 | 325+58 | 327+23 | CL | | | | | | | | | | | | 4 | |
| | LA-113 | US 42 | 328+59 | 329+65 | CL | | | | | | | | | | | | 3 | |
| | | | | | | | | | | | | | | | | | | |
| 94 | CL-111 | US 42 | 330+45 | 359+41 | LT | | | | 0.549 | | | | | | | | | |
| | CL-112 | US 42 | 330+45 | 359+41 | RT | | | | 0.549 | | | | | | | | | |
| | | | | | | | | | | | | | | | | | | |
| | SL-114 | BARDBURY AVENUE | | | | | | | | | 14 | | | | | | | |
| | SL-115 | BRINBOURNE AVENUE | | | | | | | | | 14 | | | | | | | |
| | SL-116 | GLENRIDGE AVENUE (LT) | | | | | | | | | 14 | | | | | | | |
| | SL-117 | GLENRIDGE AVENUE (RT) | | | | | | | | | 14 | | | | | | | |
| | SL-118 | PARKLAWN AVENUE | | | | | | | | | 13 | | | | | | | |
| | XW-108 | BARDBURY AVENUE | | | | | | | | | | 62 | | | | | | |
| | XW-109 | BRINBOURNE AVENUE | | | | | | | | | | 63 | | | | | | |
| | XW-110 | GLENRIDGE AVENUE (LT) | | | | | | | | | | 63 | | | | | | |
| | XW-111 | GLENRIDGE AVENUE (RT) | | | | | | | | | | 60 | | | | | | |
| | XW-112 | PARKLAWN AVENUE | | | | | | | | | | 66 | | | | | | |
| | | | | | | | | | | | | | | | | | | |
| | LA-114 | US 42 | 331+39 | | CL | | | | | | | | | | | | 2 | |
| | LA-115 | US 42 | 334+28 | | CL | | | | | | | | | | | | 2 | |
| | LA-116 | US 42 | 337+53 | | CL | | | | | | | | | | | | 2 | |
| | LA-117 | US 42 | 340+99 | | CL | | | | | | | | | | | | 2 | |
| | LA-118 | US 42 | 344+23 | | CL | | | | | | | | | | | | 2 | |
| | | **SUBTOTALS** | | | | 0 | 0 | 0.112 | 1.432 | 326 | 226 | 821 | 0 | 0 | 0 | 0 | 23 | 0 |
| | | **TOTALS CARRIED TO GENERAL SUMMARY (SHEET NO. 71)** | | | | 0 | 0 | 1.55 | | 326 | 226 | 821 | 0 | | 0 | 0 | 23 | 0 |

CALCULATED DRP
CHECKED BT

# PAVEMENT MARKING SUBSUMMARY - 4 OF 10

CUY-US-042-4.29



P:\Middleburg Heights - City of\J20150340.000 Pearl Rd Rehab\Drawings\Trans\105726TS004.dwg 01-Mar-19 3:24 PM

| SHEET NO. | REFERENCE NO. | LOCATION | STATION FROM | STATION TO | SIDE | EDGE LINE, 6" (WHITE) MILE | LANE LINE, 6" MILE | CENTER LINE: SOLID, DOUBLE MILE | CENTER LINE: BROKEN AND SOLID, DOUBLE MILE | CHANNELIZING LINE, 12" FT | STOP LINE FT | CROSSWALK LINE FT | TRANSVERSE/DIAGONAL LINE (WHITE) FT | TRANSVERSE/DIAGONAL LINE (YELLOW) FT | ISLAND MARKING (YELLOW) EACH | SCHOOL SYMBOL MARKING, 72" EACH | LANE ARROW EACH | DOTTED LINE, 12" FT | | | | |
|---|---|---|---|---|---|---|---|---|---|---|---|---|---|---|---|---|---|---|---|---|---|---|
| | | | | | | 644 | | | | | | | | | | | | | | | | |
| | | | | | | **CITY OF MIDDLEBURG HEIGHTS** | | | | | | | | | | | | | | | | |
| 95 | CL-113 | US 42 | 359+41 | 361+42 | LT | | | 0.038 | | | | | | | | | | | | | | |
| | CL-114 | US 42 | 359+41 | 359+91 | RT/LT | | | 0.010 | | | | | | | | | | | | | | |
| | CH-111 | US 42 | 360+11 | 361+42 | RT | | | | | 131 | | | | | | | | | | | | |
| | | | | | | | | | | | | | | | | | | | | | | |
| | LA-119 | US 42 | 346+81 | | CL | | | | | | | | | | | | 2 | | | | | |
| | LA-120 | US 42 | 349+34 | | CL | | | | | | | | | | | | 2 | | | | | |
| | LA-121 | US 42 | 351+89 | | CL | | | | | | | | | | | | 2 | | | | | |
| | LA-122 | US 42 | 358+41 | | CL | | | | | | | | | | | | 2 | | | | | |
| | LA-123 | US 42 | 360+21 | 361+27 | CL | | | | | | | | | | | | 2 | | | | | |
| | | | | | | | | | | | | | | | | | | | | | | |
| | | | | | | | | | | | | | | | | | | | | | | |
| 96 | CL-115 | US 42 | 362+75 | 364+90 | RT/LT | | | 0.041 | | | | | | | | | | | | | | |
| | CL-116 | US 42 | 365+67 | 406+57 | LT | | | | 0.775 | | | | | | | | | | | | | |
| | CL-117 | US 42 | 365+67 | 406+57 | RT | | | | 0.775 | | | | | | | | | | | | | |
| | CH-112 | US 42 | 362+75 | 363+59 | LT | | | | | 84 | | | | | | | | | | | | |
| | CH-113 | US 42 | 364+49 | 364+90 | RT | | | | | 41 | | | | | | | | | | | | |
| | | | | | | | | | | | | | | | | | | | | | | |
| | SL-119 | US 42 | 361+42 | | LT/RT | | | | | | 32 | | | | | | | | | | | |
| | SL-120 | US 42 | 362+75 | | LT/RT | | | | | | 32 | | | | | | | | | | | |
| | SL-121 | US 42 | 364+90 | | LT/RT | | | | | | 32 | | | | | | | | | | | |
| | SL-122 | US 42 | 365+67 | | LT/RT | | | | | | 32 | | | | | | | | | | | |
| | SL-123 | SENECA TRAIL | | | | | | | | | 13 | | | | | | | | | | | |
| | XW-113 | US 42 | 361+42 | 361+42 | LT/RT | | | | | | | 137 | | | | | | | | | | |
| | XW-114 | US 42 | 362+75 | 362+75 | LT/RT | | | | | | | 135 | | | | | | | | | | |
| | XW-115 | US 42 | 364+90 | 364+90 | LT/RT | | | | | | | 109 | | | | | | | | | | |
| | XW-116 | BAGLEY ROAD (LT) | | | | | | | | | | 181 | | | | | | | | | | |
| | XW-117 | SENECA TRAIL | | | | | | | | | | 67 | | | | | | | | | | |
| | | | | | | | | | | | | | | | | | | | | | | |
| | LA-124 | US 42 | 362+90 | 363+49 | CL | | | | | | | | | | | | 2 | | | | | |
| | LA-125 | US 42 | 364+75 | | CL | | | | | | | | | | | | 1 | | | | | |
| | LA-126 | US 42 | 366+76 | | CL | | | | | | | | | | | | 2 | | | | | |
| | LA-127 | US 42 | 369+59 | | CL | | | | | | | | | | | | 2 | | | | | |
| | LA-128 | US 42 | 372+33 | | CL | | | | | | | | | | | | 2 | | | | | |
| | LA-129 | US 42 | 376+37 | | CL | | | | | | | | | | | | 2 | | | | | |
| | | | | | | | | | | | | | | | | | | | | | | |
| | | | | | | | | | | | | | | | | | | | | | | |
| 97 | SL-124 | UHLIN DRIVE | | | | | | | | | 12 | | | | | | | | | | | |
| | XW-118 | UHLIN DRIVE | | | | | | | | | | 50 | | | | | | | | | | |
| | XW-119 | OLD PLEASANT VALLEY RD. | | | | | | | | | | 82 | | | | | | | | | | |
| | XW-120 | SHAWNEE TRAIL | | | | | | | | | | 64 | | | | | | | | | | |
| | | | | | | | | | | | | | | | | | | | | | | |
| | LA-130 | US 42 | 378+87 | | CL | | | | | | | | | | | | 2 | | | | | |
| | LA-131 | US 42 | 381+72 | | CL | | | | | | | | | | | | 2 | | | | | |
| | LA-132 | US 42 | 384+26 | | CL | | | | | | | | | | | | 2 | | | | | |
| | LA-133 | US 42 | 386+25 | | CL | | | | | | | | | | | | 2 | | | | | |
| | LA-134 | US 42 | 388+85 | | CL | | | | | | | | | | | | 2 | | | | | |
| **SUBTOTALS** | | | | | | 0 | 0 | 0.089 | 1.550 | 256 | 153 | 825 | 0 | 0 | 0 | 0 | 31 | 0 | | | | |
| **TOTALS CARRIED TO GENERAL SUMMARY (SHEET NO. 71)** | | | | | | 0 | 0 | 1.64 | | 256 | 153 | 825 | 0 | | 0 | 0 | 31 | 0 | | | | |

CALCULATED DRP
CHECKED BT

# PAVEMENT MARKING SUBSUMMARY - 5 OF 10

CUY-US-042-4.29



P:\Middleburg Heights - City of\J20150340.000 Pearl Rd Rehab\Drawings\Trans\105726TS005.dwg 01-Mar-19 3:25 PM

| SHEET NO. | REFERENCE NO. | LOCATION | STATION FROM | STATION TO | SIDE | EDGE LINE, 6" (WHITE) MILE | LANE LINE, 6" MILE | CENTER LINE: SOLID, DOUBLE MILE | CENTER LINE: BROKEN AND SOLID, DOUBLE MILE | CHANNELIZING LINE, 12" FT | STOP LINE FT | CROSSWALK LINE FT | TRANSVERSE/DIAGONAL LINE (WHITE) FT | TRANSVERSE/DIAGONAL LINE (YELLOW) FT | ISLAND MARKING (YELLOW) EACH | SCHOOL SYMBOL MARKING, 72" EACH | LANE ARROW EACH | DOTTED LINE, 12" FT | | | | |
|---|---|---|---|---|---|---|---|---|---|---|---|---|---|---|---|---|---|---|---|---|---|---|
| | | | | | | 644 | | | | | | | | | | | | | | | | |
| | | | | | | **CITY OF MIDDLEBURG HEIGHTS** | | | | | | | | | | | | | | | | |
| 98 | CL-118 | US 42 | 406+57 | 408+72 | LT | | | 0.041 | | | | | | | | | | | | | | |
| | CL-119 | US 42 | 406+57 | 407+07 | RT/LT | | | 0.010 | | | | | | | | | | | | | | |
| | CH-114 | US 42 | 407+27 | 408+72 | RT | | | | | 145 | | | | | | | | | | | | |
| | SL-125 | MOHAWK TRAIL | | | | | | | | | 12 | | | | | | | | | | | |
| | XW-121 | MOHAWK TRAIL | | | | | | | | | | 72 | | | | | | | | | | |
| | LA-135 | US 42 | 396+50 | | CL | | | | | | | | | | | | 2 | | | | | |
| | LA-136 | US 42 | 399+17 | | CL | | | | | | | | | | | | 2 | | | | | |
| | LA-137 | US 42 | 405+57 | | CL | | | | | | | | | | | | 2 | | | | | |
| | LA-138 | US 42 | 407+37 | 408+58 | CL | | | | | | | | | | | | 2 | | | | | |
| 99 | CL-120 | US 42 | 410+15 | 412+86 | RT | | | 0.051 | | | | | | | | | | | | | | |
| | CL-121 | US 42 | 412+36 | 412+86 | RT/LT | | | 0.010 | | | | | | | | | | | | | | |
| | CL-122 | US 42 | 412+86 | 429+10 | LT | | | | 0.308 | | | | | | | | | | | | | |
| | CL-123 | US 42 | 412+86 | 429+10 | RT | | | | 0.308 | | | | | | | | | | | | | |
| | CH-115 | US 42 | 410+15 | 412+16 | LT | | | | | 201 | | | | | | | | | | | | |
| | SL-126 | US 42 | 408+72 | | LT/RT | | | | | | 32 | | | | | | | | | | | |
| | SL-127 | US 42 | 410+15 | | LT/RT | | | | | | 32 | | | | | | | | | | | |
| | SL-128 | US 42 | 415+78 | | LT/RT | | | | | | 32 | | | | | | | | | | | |
| | SL-129 | US 42 | 416+94 | | LT/RT | | | | | | 32 | | | | | | | | | | | |
| | SL-130 | US 42 | 419+27 | | LT/RT | | | | | | 32 | | | | | | | | | | | |
| | SL-131 | US 42 | 420+61 | | LT/RT | | | | | | 32 | | | | | | | | | | | |
| | SL-132 | SMITH ROAD (LT) | | | | | | | | | 35 | | | | | | | | | | | |
| | XW-122 | US 42 | 408+85 | 409+20 | LT/RT | | | | | | | 138 | | | | | | | | | | |
| | XW-123 | US 42 | 409+63 | 409+99 | LT/RT | | | | | | | 164 | | | | | | | | | | |
| | XW-124 | US 42 | 416+73 | 416+87 | LT/RT | | | | | | | 110 | | | | | | | | | | |
| | XW-125 | US 42 | 420+29 | 420+44 | LT/RT | | | | | | | 109 | | | | | | | | | | |
| | XW-126 | SMITH ROAD (LT) | | | | | | | | | | 112 | | | | | | | | | | |
| | XW-127 | SMITH ROAD (RT) | | | | | | | | | | 143 | | | | | | | | | | |
| | LA-139 | US 42 | 410+30 | 412+06 | CL | | | | | | | | | | | | 4 | | | | | |
| | LA-140 | US 42 | 414+32 | | CL | | | | | | | | | | | | 2 | | | | | |
| | LA-141 | US 42 | 418+11 | | CL | | | | | | | | | | | | 2 | | | | | |
| | LA-142 | US 42 | 421+53 | | CL | | | | | | | | | | | | 2 | | | | | |
| 100 | CL-124 | US 42 | 429+10 | 431+60 | LT | | | 0.047 | | | | | | | | | | | | | | |
| | CL-125 | US 42 | 429+10 | 429+60 | RT/LT | | | 0.010 | | | | | | | | | | | | | | |
| | CH-116 | US 42 | 429+80 | 431+53 | RT | | | | | 173 | | | | | | | | | | | | |
| | SL-133 | US 42 | 422+46 | | LT/RT | | | | | | 32 | | | | | | | | | | | |
| | SL-134 | US 42 | 423+31 | | LT/RT | | | | | | 32 | | | | | | | | | | | |
| | SL-135 | US 42 | 431+37 | 431+60 | RT/LT | | | | | | 46 | | | | | | | | | | | |
| | SL-136 | WEST 130TH STREET (LT) | | | | | | | | | 35 | | | | | | | | | | | |
| | XW-128 | US 42 | 423+19 | 423+27 | LT/RT | | | | | | | 54 | | | | | | | | | | |
| | XW-129 | US 42 | 431+46 | 432+01 | LT/RT | | | | | | | 161 | | | | | | | | | | |
| | XW-130 | WEST 130TH STREET (LT) | | | | | | | | | | 64 | | | | | | | | | | |
| | XW-131 | WEST 130TH STREET (RT) | | | | | | | | | | 106 | | | | | | | | | | |
| | LA-143 | US 42 | 424+31 | | CL | | | | | | | | | | | | 2 | | | | | |
| | LA-144 | US 42 | 428+10 | | CL | | | | | | | | | | | | 2 | | | | | |
| | LA-145 | US 42 | 430+00 | 431+49 | CL | | | | | | | | | | | | 4 | | | | | |
| **SUBTOTALS** | | | | | | 0 | 0 | 0.169 | 0.616 | 519 | 384 | 1233 | 0 | 0 | 0 | 0 | 26 | 0 | | | | |
| **TOTALS CARRIED TO GENERAL SUMMARY (SHEET NO. 71)** | | | | | | 0 | 0 | 0.79 | | 519 | 384 | 1233 | 0 | | 0 | 0 | 26 | 0 | | | | |

CALCULATED DRP
CHECKED BT

**PAVEMENT MARKING SUBSUMMARY - 6 OF 10**

**CUY-US-042-4.29**



P:\Middleburg Heights - City of\J20150340.000 Pearl Rd Rehab\Drawings\Trans\105726TS006.dwg 01-Mar-19 3:25 PM

| SHEET NO. | REFERENCE NO. | LOCATION | STATION FROM | STATION TO | SIDE | 644 EDGE LINE, 6" (WHITE) MILE | 644 LANE LINE, 6" MILE | 644 CENTER LINE: SOLID, DOUBLE MILE | 644 CENTER LINE: BROKEN AND SOLID, DOUBLE MILE | 644 CHANNELIZING LINE, 12" FT | 644 STOP LINE FT | 644 CROSSWALK LINE FT | 644 TRANSVERSE/DIAGONAL LINE (WHITE) FT | 644 TRANSVERSE/DIAGONAL LINE (YELLOW) FT | 644 ISLAND MARKING (YELLOW) EACH | 644 SCHOOL SYMBOL MARKING, 72" EACH | 644 LANE ARROW EACH | 644 DOTTED LINE, 12" FT | | 646 STOP LINE FT | 646 CROSSWALK LINE FT | |
|---|---|---|---|---|---|---|---|---|---|---|---|---|---|---|---|---|---|---|---|---|---|---|
| | | | | | | **CITY OF PARMA HEIGHTS** | | | | | | | | | | | | | | | | |
| 101 | LL-201 | US 42 | 432+31 | 521+94 | LT | | 1.698 | | | | | | | | | | | | | | | |
| | LL-202 | US 42 | 432+31 | 516+80 | RT | | 1.600 | | | | | | | | | | | | | | | |
| | CL-201 | US 42 | 433+17 | 435+08 | RT | | | 0.036 | | | | | | | | | | | | | | |
| | CL-202 | US 42 | 434+58 | 435+08 | RT/LT | | | 0.010 | | | | | | | | | | | | | | |
| | CL-203 | US 42 | 435+08 | 439+08 | LT | | | | 0.076 | | | | | | | | | | | | | |
| | CL-204 | US 42 | 435+08 | 439+08 | RT | | | | 0.076 | | | | | | | | | | | | | |
| | CL-205 | US 42 | 440+00 | 441+21 | RT | | | 0.023 | | | | | | | | | | | | | | |
| | CL-206 | US 42 | 440+71 | 441+21 | RT/LT | | | 0.010 | | | | | | | | | | | | | | |
| | CL-207 | US 42 | 441+21 | 488+75 | LT | | | | 0.900 | | | | | | | | | | | | | |
| | CL-208 | US 42 | 441+21 | 488+75 | RT | | | | 0.900 | | | | | | | | | | | | | |
| | | | | | | | | | | | | | | | | | | | | | | |
| | CH-201 | US 42 | 433+17 | 434+38 | LT | | | | | 121 | | | | | | | | | | | | |
| | CH-202 | US 42 | 440+00 | 440+52 | LT | | | | | 52 | | | | | | | | | | | | |
| | SL-201 | US 42 | 433+17 | | LT/RT | | | | | | 45 | | | | | | | | | | | |
| | SL-202 | US 42 | 439+08 | | LT/RT | | | | | | 32 | | | | | | | | | | | |
| | SL-203 | US 42 | 440+00 | | LT/RT | | | | | | 32 | | | | | | | | | | | |
| | SL-204 | US 42 | 441+91 | | LT/RT | | | | | | 32 | | | | | | | | | | | |
| | SL-205 | US 42 | 443+31 | | LT/RT | | | | | | 32 | | | | | | | | | | | |
| | SL-206 | WEST 130TH STREET (RT) | | | | | | | | | 38 | | | | | | | | | | | |
| | SL-207 | LAWNWOOD AVENUE | | | | | | | | | 26 | | | | | | | | | | | |
| | XW-201 | US 42 | 432+61 | 433+16 | LT/RT | | | | | | | 159 | | | | | | | | | | |
| | XW-202 | US 42 | 439+12 | 439+29 | LT/RT | | | | | | | 113 | | | | | | | | | | |
| | XW-203 | US 42 | 439+78 | 439+98 | LT/RT | | | | | | | 112 | | | | | | | | | | |
| | XW-204 | US 42 | 441+97 | 442+05 | LT/RT | | | | | | | 112 | | | | | | | | | | |
| | XW-205 | US 42 | 443+17 | 443+25 | LT/RT | | | | | | | 108 | | | | | | | | | | |
| | XW-206 | WEST 130TH STREET (LT) | | | | | | | | | | 103 | | | | | | | | | | |
| | XW-207 | WEST 130TH STREET (RT) | | | | | | | | | | 63 | | | | | | | | | | |
| | XW-208 | LAWNWOOD AVENUE | | | | | | | | | | 59 | | | | | | | | | | |
| | XW-209 | FERNHURST AVENUE | | | | | | | | | | 60 | | | | | | | | | | |
| | XW-210 | MAPLEWOOD DRIVE | | | | | | | | | | | | | | | | | | | 70 | |
| | | | | | | | | | | | | | | | | | | | | | | |
| | LA-201 | US 42 | 433+32 | 434+28 | CL | | | | | | | | | | | | 3 | | | | | |
| | LA-202 | US 42 | 436+08 | | CL | | | | | | | | | | | | 2 | | | | | |
| | LA-203 | US 42 | 438+08 | | CL | | | | | | | | | | | | 2 | | | | | |
| | LA-204 | US 42 | 440+15 | | CL | | | | | | | | | | | | 1 | | | | | |
| | LA-205 | US 42 | 444+55 | | CL | | | | | | | | | | | | 2 | | | | | |
| | | | | | | | | | | | | | | | | | | | | | | |
| 102 | SL-208 | US 42 | 453+30 | | LT/RT | | | | | | 32 | | | | | | | | | | | |
| | SL-209 | US 42 | 454+23 | | LT/RT | | | | | | 32 | | | | | | | | | | | |
| | XW-211 | US 42 | 453+36 | 453+47 | LT/RT | | | | | | | 115 | | | | | | | | | | |
| | XW-212 | US 42 | 454+05 | 454+16 | LT/RT | | | | | | | 123 | | | | | | | | | | |
| | XW-213 | OAKWOOD ROAD | | | | | | | | | | 77 | | | | | | | | | | |
| | XW-214 | PARMA PARK BOULEVARD | | | | | | | | | | 72 | | | | | | | | | | |
| | LA-206 | US 42 | 448+02 | | CL | | | | | | | | | | | | 2 | | | | | |
| | LA-207 | US 42 | 451+80 | | CL | | | | | | | | | | | | 2 | | | | | |
| | LA-208 | US 42 | 455+84 | | CL | | | | | | | | | | | | 2 | | | | | |
| | LA-209 | US 42 | 458+49 | | CL | | | | | | | | | | | | 2 | | | | | |
| | | | | | | | | | | | | | | | | | | | | | | |
| 103 | SL-210 | US 42 | 462+21 | | LT/RT | | | | | | 32 | | | | | | | | | | | |
| | SL-211 | US 42 | 463+51 | | LT/RT | | | | | | 32 | | | | | | | | | | | |
| | SL-212 | US 42 | 464+92 | | LT/RT | | | | | | 32 | | | | | | | | | | | |
| | SL-213 | US 42 | 474+36 | | LT/RT | | | | | | 32 | | | | | | | | | | | |
| | SL-214 | US 42 | 475+85 | | LT/RT | | | | | | 32 | | | | | | | | | | | |
| | SL-215 | MANDALAY DRIVE | | | | | | | | | | | | | | | | | | 12 | | |
| | SL-216 | ORCHARD DRIVE | | | | | | | | | | | | | | | | | | 14 | | |
| | SL-217 | COMMONWEALTH BOULEVARD | | | | | | | | | | | | | | | | | | 14 | | |
| | SL-218 | ROCHELLE DRIVE | | | | | | | | | | | | | | | | | | 13 | | |
| **SUBTOTALS** | | | | | | 0 | 3.298 | 0.079 | 1.952 | 173 | 461 | 1276 | 0 | 0 | 0 | 0 | 18 | 0 | 0 | 53 | 70 | |
| **TOTALS CARRIED TO GENERAL SUMMARY (SHEET NO. 71)** | | | | | | 0 | 3.30 | 2.04 | | 173 | 461 | 1276 | 0 | | 0 | 0 | 18 | 0 | 0 | 53 | 70 | |

CALCULATED DRP
CHECKED BT

**PAVEMENT MARKING SUBSUMMARY - 7 OF 10**

**CUY-US-042-4.29**



P:\Middleburg Heights - City of\J20150340.000 Pearl Rd Rehab\Drawings\Trans\105726TS007.dwg 01-Mar-19 3:25 PM

| SHEET NO. | REFERENCE NO. | LOCATION | STATION FROM | STATION TO | SIDE | 644 EDGE LINE, 6" (WHITE) MILE | 644 LANE LINE, 6" MILE | 644 CENTER LINE: SOLID, DOUBLE MILE | 644 CENTER LINE: BROKEN AND SOLID, DOUBLE MILE | 644 CHANNELIZING LINE, 12" FT | 644 STOP LINE FT | 644 CROSSWALK LINE FT | 644 TRANSVERSE/DIAGONAL LINE (WHITE) FT | 644 TRANSVERSE/DIAGONAL LINE (YELLOW) FT | 644 ISLAND MARKING (YELLOW) EACH | 644 SCHOOL SYMBOL MARKING, 72" EACH | 644 LANE ARROW EACH | 644 DOTTED LINE, 12" FT | | 646 | 646 CROSSWALK LINE FT | |
|---|---|---|---|---|---|---|---|---|---|---|---|---|---|---|---|---|---|---|---|---|---|---|
| | | | | | | **CITY OF PARMA HEIGHTS** | | | | | | | | | | | | | | | | |
| 103 | XW-215 | US 42 | 462+83 | 462+94 | LT/RT | | | | | | | 108 | | | | | | | | | | |
| CONT. | XW-216 | US 42 | 475+25 | 475+81 | RT/LT | | | | | | | 142 | | | | | | | | | | |
| | XW-217 | MANDALAY DRIVE | | | | | | | | | | | | | | | | | | | 55 | |
| | XW-218 | ORCHARD AVENUE | | | | | | | | | | | | | | | | | | | 65 | |
| | XW-219 | COMMONWEALTH BOULEVARD | | | | | | | | | | | | | | | | | | | 67 | |
| | XW-220 | ROCHELLE AVENUE | | | | | | | | | | | | | | | | | | | 72 | |
| | | | | | | | | | | | | | | | | | | | | | | |
| | LA-210 | US 42 | 460+85 | | CL | | | | | | | | | | | | 2 | | | | | |
| | LA-211 | US 42 | 465+92 | | CL | | | | | | | | | | | | 2 | | | | | |
| | LA-212 | US 42 | 468+11 | | CL | | | | | | | | | | | | 2 | | | | | |
| | LA-213 | US 42 | 470+62 | | CL | | | | | | | | | | | | 2 | | | | | |
| | LA-214 | US 42 | 473+36 | | CL | | | | | | | | | | | | 2 | | | | | |
| | | | | | | | | | | | | | | | | | | | | | | |
| | | | | | | | | | | | | | | | | | | | | | | |
| 104 | CL-209 | US 42 | 489+52 | 491+42 | RT | | | 0.036 | | | | | | | | | | | | | | |
| | CL-210 | US 42 | 490+42 | 491+42 | RT/LT | | | 0.010 | | | | | | | | | | | | | | |
| | CL-211 | US 42 | 491+42 | 492+53 | LT | | | | 0.021 | | | | | | | | | | | | | |
| | CL-212 | US 42 | 491+42 | 492+53 | RT | | | | 0.021 | | | | | | | | | | | | | |
| | CH-203 | US 42 | 489+52 | 490+72 | LT | | | | | 120 | | | | | | | | | | | | |
| | | | | | | | | | | | | | | | | | | | | | | |
| | SL-219 | US 42 | 488+75 | | LT/RT | | | | | | 32 | | | | | | | | | | | |
| | SL-220 | US 42 | 489+12 | | LT/RT | | | | | | 32 | | | | | | | | | | | |
| | SL-221 | KINGSDALE BOULEVARD | | | | | | | | | 13 | | | | | | | | | | | |
| | XW-221 | US 42 | 488+79 | 488+90 | LT/RT | | | | | | | 112 | | | | | | | | | | |
| | XW-222 | MAPLECREST AVENUE | | | | | | | | | | 56 | | | | | | | | | | |
| | XW-223 | KINGSDALE BOULEVARD | | | | | | | | | | 78 | | | | | | | | | | |
| | | | | | | | | | | | | | | | | | | | | | | |
| | LA-215 | US 42 | 476+85 | | CL | | | | | | | | | | | | 2 | | | | | |
| | LA-216 | US 42 | 482+42 | | CL | | | | | | | | | | | | 2 | | | | | |
| | LA-217 | US 42 | 484+99 | | CL | | | | | | | | | | | | 2 | | | | | |
| | LA-218 | US 42 | 487+75 | | CL | | | | | | | | | | | | 2 | | | | | |
| | LA-219 | US 42 | 489+67 | 490+52 | CL | | | | | | | | | | | | 2 | | | | | |
| | LA-220 | US 42 | 491+98 | | CL | | | | | | | | | | | | 2 | | | | | |
| | | | | | | | | | | | | | | | | | | | | | | |
| 105 | CL-213 | US 42 | 492+53 | 496+16 | LT | | | 0.069 | | | | | | | | | | | | | | |
| | CL-214 | US 42 | 492+53 | 493+03 | RT/LT | | | 0.010 | | | | | | | | | | | | | | |
| | CL-215 | US 42 | 497+31 | 500+91 | RT | | | 0.068 | | | | | | | | | | | | | | |
| | CL-216 | US 42 | 500+41 | 500+91 | RT/LT | | | 0.010 | | | | | | | | | | | | | | |
| | CL-217 | US 42 | 500+91 | 502+80 | LT | | | | 0.036 | | | | | | | | | | | | | |
| | CL-218 | US 42 | 500+91 | 502+80 | RT | | | | 0.036 | | | | | | | | | | | | | |
| | CL-219 | US 42 | 502+80 | 504+44 | LT | | | 0.031 | | | | | | | | | | | | | | |
| | CL-220 | US 42 | 502+80 | 503+30 | RT/LT | | | 0.010 | | | | | | | | | | | | | | |
| | CL-221 | US 42 | 505+26 | 506+92 | RT | | | 0.031 | | | | | | | | | | | | | | |
| | CL-222 | US 42 | 506+42 | 506+92 | RT/LT | | | 0.010 | | | | | | | | | | | | | | |
| | CL-223 | US 42 | 506+92 | 540+41 | LT | | | | 0.634 | | | | | | | | | | | | | |
| | CL-224 | US 42 | 506+92 | 540+41 | RT | | | | 0.634 | | | | | | | | | | | | | |
| | CH-204 | US 42 | 493+23 | 496+16 | RT | | | | | 293 | | | | | | | | | | | | |
| | CH-205 | US 42 | 497+31 | 500+21 | LT | | | | | 290 | | | | | | | | | | | | |
| | CH-206 | US 42 | 503+50 | 504+44 | RT | | | | | 94 | | | | | | | | | | | | |
| | CH-207 | US 42 | 505+26 | 506+22 | LT | | | | | 96 | | | | | | | | | | | | |
| | | | | | | | | | | | | | | | | | | | | | | |
| | SL-222 | US 42 | 496+16 | | LT/RT | | | | | | 32 | | | | | | | | | | | |
| | SL-223 | US 42 | 497+31 | | LT/RT | | | | | | 32 | | | | | | | | | | | |
| | SL-224 | US 42 | 504+44 | | LT/RT | | | | | | 32 | | | | | | | | | | | |
| | SL-225 | US 42 | 505+26 | | LT/RT | | | | | | 32 | | | | | | | | | | | |
| | | | | | | | | | | | | | | | | | | | | | | |
| | | | | | | | | | | | | | | | | | | | | | | |
| | | **SUBTOTALS** | | | | 0 | 0 | 0.285 | 1.382 | 893 | 205 | 496 | 0 | 0 | 0 | 0 | 22 | 0 | | | 259 | |
| | | **TOTALS CARRIED TO GENERAL SUMMARY (SHEET NO. 71)** | | | | 0 | 0 | 1.67 | | 893 | 205 | 496 | 0 | | 0 | 0 | 22 | 0 | | | 259 | |

CALCULATED DRP
CHECKED BT

**PAVEMENT MARKING SUBSUMMARY - 8 OF 10**

**CUY-US-042-4.29**



P:\Middleburg Heights - City of\J201503 40.000 Pearl Rd Rehab\Drawings\Trans\105726TS008.dwg 01-Mar-19 3:26 PM

| SHEET NO. | REFERENCE NO. | LOCATION | STATION FROM | STATION TO | SIDE | EDGE LINE, 6" (WHITE) | LANE LINE, 6" | CENTER LINE: SOLID, DOUBLE | CENTER LINE: BROKEN AND SOLID, DOUBLE | CHANNELIZING LINE, 12" | STOP LINE | CROSSWALK LINE | TRANSVERSE/DIAGONAL LINE (WHITE) | TRANSVERSE/DIAGONAL LINE (YELLOW) | ISLAND MARKING (YELLOW) | SCHOOL SYMBOL MARKING, 72" | LANE ARROW | DOTTED LINE, 12" |
|---|---|---|---|---|---|---|---|---|---|---|---|---|---|---|---|---|---|---|
| | | | | | | MILE | MILE | MILE | MILE | FT | FT | FT | FT | FT | EACH | EACH | EACH | FT |
| | | | | | | | | | | | | 644 | | | | | | |
| | | **CITY OF PARMA HEIGHTS** | | | | | | | | | | | | | | | | |
| 105 | XW-224 | US 42 | 496+23 | 496+34 | LT/RT | | | | | | | 146 | | | | | | |
| | XW-225 | US 42 | 497+10 | 497+22 | RT/LT | | | | | | | 162 | | | | | | |
| | XW-226 | US 42 | 505+09 | 505+20 | LT/RT | | | | | | | 108 | | | | | | |
| | LA-221 | US 42 | 493+33 | 496+01 | CL | | | | | | | | | | | | 5 | |
| | LA-222 | US 42 | 497+46 | 500+11 | CL | | | | | | | | | | | | 5 | |
| | LA-223 | US 42 | 501+86 | | CL | | | | | | | | | | | | 2 | |
| | LA-224 | US 42 | 503+60 | 504+29 | CL | | | | | | | | | | | | 2 | |
| | LA-225 | US 42 | 505+41 | 506+07 | CL | | | | | | | | | | | | 2 | |
| | LA-226 | US 42 | 507+92 | | CL | | | | | | | | | | | | 2 | |
| 106 | SL-226 | US 42 | 512+76 | | LT/RT | | | | | | 32 | | | | | | | |
| | SL-227 | US 42 | 515+16 | | LT/RT | | | | | | 32 | | | | | | | |
| | SL-228 | US 42 | 516+80 | | LT/RT | | | | | | 32 | | | | | | | |
| | SL-229 | US 42 | 517+82 | | LT/RT | | | | | | 32 | | | | | | | |
| | SL-230 | US 42 | 520+34 | | LT/RT | | | | | | 32 | | | | | | | |
| | SL-231 | OLDE YORK ROAD | | | | | | | | | 22 | | | | | | | |
| | XW-227 | US 42 | 512+82 | 512+93 | LT/RT | | | | | | | 111 | | | | | | |
| | XW-228 | US 42 | 514+09 | 514+20 | LT/RT | | | | | | | 117 | | | | | | |
| | XW-229 | US 42 | 516+87 | 516+98 | LT/RT | | | | | | | 115 | | | | | | |
| | XW-230 | US 42 | 517+64 | 517+75 | LT/RT | | | | | | | 117 | | | | | | |
| | XW-231 | OLDE YORK ROAD | | | | | | | | | | 206 | | | | | | |
| | XW-232 | ACKLEY ROAD | | | | | | | | | | 72 | | | | | | |
| | XW-233 | NOTABENE ROAD | | | | | | | | | | 53 | | | | | | |
| | SC-201 | US 42 | 511+76 | | RT | | | | | | | | | | | 2 | | |
| | LA-227 | US 42 | 515+99 | | CL | | | | | | | | | | | | 2 | |
| | LA-228 | US 42 | 518+79 | | CL | | | | | | | | | | | | 2 | |
| | LA-229 | US 42 | 520+94 | | CL | | | | | | | | | | | | 2 | |
| | LA-230 | US 42 | 523+85 | | CL | | | | | | | | | | | | 2 | |
| | LA-231 | US 42 | 523+85 | | CL | | | | | | | | | | | | 2 | |
| 107 | SL-232 | US 42 | 525+85 | | LT/RT | | | | | | 32 | | | | | | | |
| | SL-233 | US 42 | 526+78 | | LT/RT | | | | | | 32 | | | | | | | |
| | SL-234 | HALCYON ROAD | | | | | | | | | 13 | | | | | | | |
| | XW-234 | US 42 | 526+62 | 526+73 | LT/RT | | | | | | | 108 | | | | | | |
| | XW-235 | EDGEBROOK BOULEVARD | | | | | | | | | | 55 | | | | | | |
| | XW-236 | HALCYON ROAD | | | | | | | | | | 55 | | | | | | |
| | IY-201 | US 42 | 525+66 | 525+71 | CL | | | | | | | | | | 40 | | | |
| | SC-202 | US 42 | 530+49 | | LT | | | | | | | | | | | 2 | | |
| | LA-232 | US 42 | 527+78 | | CL | | | | | | | | | | | | 2 | |
| | LA-233 | US 42 | 532+57 | | CL | | | | | | | | | | | | 2 | |
| | LA-234 | US 42 | 535+11 | | CL | | | | | | | | | | | | 2 | |
| | LA-235 | US 42 | 537+15 | | CL | | | | | | | | | | | | 2 | |
| 108 | CL-225 | US 42 | 549+98 | 552+13 | RT | | | 0.041 | | | | | | | | | | |
| | CL-226 | US 42 | 551+63 | 552+13 | LT/RT | | | 0.010 | | | | | | | | | | |
| | CL-227 | US 42 | 552+13 | 572+14 | LT | | | | 0.379 | | | | | | | | | |
| | CL-228 | US 42 | 552+13 | 572+14 | RT | | | | 0.379 | | | | | | | | | |
| | CH-208 | US 42 | 549+98 | 551+43 | RT | | | | | 145 | | | | | | | | |
| **SUBTOTALS** | | | | | | 0 | 0 | 0.051 | 0.758 | 145 | 259 | 1425 | 0 | 0 | 40 | 4 | 36 | 0 |
| **TOTALS CARRIED TO GENERAL SUMMARY (SHEET NO. 71)** | | | | | | 0 | 0 | 0.81 | | 145 | 259 | 1425 | 0 | | 40 | 4 | 36 | 0 |

CALCULATED DRP
CHECKED BT

# PAVEMENT MARKING SUBSUMMARY - 9 OF 10

CUY-US-042-4.29



P:\Middleburg Heights - City of\J20150340.000 Pearl Rd Rehab\Drawings\Trans\105726TS009.dwg 01-Mar-19 3:26 PM

| SHEET NO. | REFERENCE NO. | LOCATION | STATION FROM | STATION TO | SIDE | 644 EDGE LINE, 6" (WHITE) | 644 LANE LINE, 6" | 644 CENTER LINE: SOLID, DOUBLE | 644 CENTER LINE: BROKEN AND SOLID, DOUBLE | 644 CHANNELIZING LINE, 12" | 644 STOP LINE | 644 CROSSWALK LINE | 644 TRANSVERSE/DIAGONAL LINE (WHITE) | 644 TRANSVERSE/DIAGONAL LINE (YELLOW) | 644 ISLAND MARKING (YELLOW) | 644 SCHOOL SYMBOL MARKING, 72" | 644 LANE ARROW | 644 DOTTED LINE, 12" | 646 LANE LINE, 6" | 646 CENTER LINE | 646 CHANNELIZING LINE, 12" | 646 STOP LINE |
|---|---|---|---|---|---|---|---|---|---|---|---|---|---|---|---|---|---|---|---|---|---|---|
| | | | | | | MILE | MILE | MILE | MILE | FT | FT | FT | FT | FT | EACH | EACH | EACH | FT | MILE | MILE | FT | FT |
| | | **CITY OF PARMA HEIGHTS** | | | | | | | | | | | | | | | | | | | | |
| 108 | SL-235 | US 42 | 549+25 | | RT | | | | | | 22 | | | | | | | | | | | |
| CONT | SL-236 | US 42 | 549+98 | | LT/RT | | | | | | 32 | | | | | | | | | | | |
| | SL-237 | BEACONSFIELD DRIVE | | | | | | | | | 14 | | | | | | | | | | | |
| | SL-238 | EUREKA PARKWAY | | | | | | | | | 14 | | | | | | | | | | | |
| | XW-237 | US 42 | 549+31 | 549+39 | LT/RT | | | | | | | 108 | 66 | | | | | | | | | |
| | XW-238 | BEACONSFIELD DRIVE | | | | | | | | | | 63 | | | | | | | | | | |
| | XW-239 | MAPLECLIFF DRIVE | | | | | | | | | | 69 | | | | | | | | | | |
| | XW-240 | EDGEHILL DRIVE | | | | | | | | | | 52 | | | | | | | | | | |
| | XW-241 | DEXTER DRIVE | | | | | | | | | | 51 | | | | | | | | | | |
| | XW-242 | RESERVOIR DRIVE | | | | | | | | | | 48 | | | | | | | | | | |
| | XW-243 | EUREKA PARKWAY | | | | | | | | | | 70 | | | | | | | | | | |
| | LA-236 | US 42 | 539+68 | | CL | | | | | | | | | | | | 2 | | | | | |
| | LA-237 | US 42 | 550+12 | 551+18 | CL | | | | | | | | | | | | 2 | | | | | |
| | | | | | | | | | | | | | | | | | | | | | | |
| 109 | SL-239 | US 42 | 559+79 | | LT/RT | | | | | | 32 | | | | | | | | | | | |
| | SL-240 | US 42 | 560+63 | | LT/RT | | | | | | 32 | | | | | | | | | | | |
| | SL-241 | LOTUSDALE DRIVE | | | | | | | | | 12 | | | | | | | | | | | |
| | SL-242 | ELDON DRIVE | | | | | | | | | 14 | | | | | | | | | | | |
| | XW-244 | US 42 | 559+85 | 559+93 | LT/RT | | | | | | | 134 | | | | | | | | | | |
| | XW-245 | US 42 | 560+49 | 560+57 | LT/RT | | | | | | | 124 | | | | | | | | | | |
| | XW-246 | LOTUSDALE DRIVE (LT) | | | | | | | | | | 66 | | | | | | | | | | |
| | XW-247 | LOTUSDALE DRIVE (RT) | | | | | | | | | | 76 | | | | | | | | | | |
| | XW-248 | ELDON DRIVE | | | | | | | | | | 77 | | | | | | | | | | |
| | LA-238 | US 42 | 554+33 | | CL | | | | | | | | | | | | 2 | | | | | |
| | LA-239 | US 42 | 558+79 | | CL | | | | | | | | | | | | 2 | | | | | |
| | LA-240 | US 42 | 561+63 | | CL | | | | | | | | | | | | 2 | | | | | |
| | LA-241 | US 42 | 565+24 | | CL | | | | | | | | | | | | 2 | | | | | |
| | LA-242 | US 42 | 567+98 | | CL | | | | | | | | | | | | 2 | | | | | |
| 110 | SL-243 | TWIN LAKES DRIVE | | | | | | | | | 14 | | | | | | | | | | | |
| | XW-249 | TWIN LAKES DRIVE | | | | | | | | | | 67 | | | | | | | | | | |
| | LA-245 | US 42 | 570+86 | | CL | | | | | | | | | | | | 2 | | | | | |
| | | | | | | | | | | | | | | | | | | | | | | |
| 111 | LL-205 | STUMPH ROAD | | | | | | | | | | | | | | | | | 0.142 | | | |
| | LL-206 | YORK ROAD | | | | | | | | | | | | | | | | | 0.039 | | | |
| | CL-231 | STUMPH ROAD | | | | | | | | | | | | | | | | | | 0.042 | | |
| | CL-232 | STUMPH ROAD | | | | | | | | | | | | | | | | | | 0.037 | | |
| | CL-233 | YORK ROAD | | | | | | | | | | | | | | | | | | 0.043 | | |
| | CH-211 | YORK ROAD | | | | | | | | | | | | | | | | | | | 230 | |
| | SL-243 | STUMPH ROAD | | | | | | | | | | | | | | | | | | | | 35 |
| | SL-244 | YORK ROAD | | | | | | | | | | | | | | | | | | | | 41 |
| | **SUBTOTALS - CITY OF PARMA HEIGHTS** | | | | | 0 | 0 | 0 | 0 | 0 | 186 | 1005 | 66 | | 0 | 0 | 16 | 0 | 0.19 | 0.13 | 230 | 76 |
| | | **CITY OF PARMA** | | | | | | | | | | | | | | | | | | | | |
| 110 | LL-401 | US 42 | 572+72 | 579+40 | RT | | 0.127 | | | | | | | | | | | | | | | |
| | LL-402 | US 42 | 574+58 | 580+66 | LT | | 0.115 | | | | | | | | | | | | | | | |
| | CL-401 | US 42 | 572+72 | 576+26 | RT/LT | | | 0.067 | | | | | | | | | | | | | | |
| | CL-402 | US 42 | 577+66 | 579+66 | RT | | | 0.038 | | | | | | | | | | | | | | |
| | CH-401 | US 42 | 572+72 | 573+39 | LT | | | | | 67 | | | | | | | | | | | | |
| | CH-402 | US 42 | 574+29 | 576+30 | LT | | | | | 201 | | | | | | | | | | | | |
| | CH-403 | US 42 | 577+66 | 579+40 | LT | | | | | 174 | | | | | | | | | | | | |
| | SL-401 | WESLEY ROAD | | | | | | | | | 14 | | | | | | | | | | | |
| | SL-402 | US 42 | 576+26 | 576+37 | LT/RT | | | | | | 33 | | | | | | | | | | | |
| | SL-403 | US 42 | 577+66 | | LT/RT | | | | | | 32 | | | | | | | | | | | |
| | XW-401 | WESLEY ROAD | | | | | | | | | | 79 | | | | | | | | | | |
| | LA-401 | US 42 | 572+84 | 573+23 | CL | | | | | | | | | | | | 2 | | | | | |
| | LA-402 | US 42 | 574+39 | 576+15 | CL | | | | | | | | | | | | 4 | | | | | |
| | LA-403 | US 42 | 577+77 | 579+27 | CL | | | | | | | | | | | | 4 | | | | | |
| | **SUBTOTALS - CITY OF PARMA** | | | | | 0 | 0.25 | 0.11 | | 442 | 79 | 79 | 0 | 0 | 0 | 0 | 10 | 0 | 0 | 0 | 0 | 0 |
| | **TOTALS CARRIED TO GENERAL SUMMARY (SHEET NO. 71)** | | | | | 0 | 0.25 | 0.11 | | 442 | 265 | 1084 | 66 | | 0 | 0 | 26 | 0 | 0.19 | 0.13 | 230 | 76 |

CALCULATED DRP
CHECKED BT

# PAVEMENT MARKING SUBSUMMARY - 10 OF 10

CUY-US-042-4.29



P:\Middleburg Heights - City of\J20150340.000 Pearl Rd Rehab\Drawings\Trans\105726TS010.dwg 01-Mar-19 3:26 PM

| SHEET NO. | REFERENCE NO. | LOCATION | STATION FROM | STATION TO | SIDE | EDGE LINE, 4" (WHITE) | EDGE LINE, 6" (WHITE) | STOP LINE | CHANNELIZING LINE, 12" | CROSSWALK LINE | TRANSVERSE/DIAGONAL LINE (WHITE) | CURB MARKING (YELLOW) | ISLAND MARKING (WHITE) | LANE ARROW | WORD ON PAVEMENT, 72" | DOTTED LINE, 6" | DOTTED LINE, 12" | BIKE LANE SYMBOL MARKING | SHARED LANE MARKING | | CROSSWALK LINE | |
|---|---|---|---|---|---|---|---|---|---|---|---|---|---|---|---|---|---|---|---|---|---|---|
| | | | | | | 644 | | | | | | | | | | | | | | | 646 | |
| | | | | | | MILE | MILE | FT | FT | FT | FT | FT | SQ FT | EACH | EACH | FT | FT | EACH | EACH | | FT | |
| | | | | | | **TLCI ITEMS** | | | | | | | | | | | | | | | | |
| 101 | SH-301 | US 42 | 433+85 | 443+42 | LT | | | | | | | | | | | | | | 5 | | | |
| | SH-302 | US 42 | 433+42 | 443+56 | RT | | | | | | | | | | | | | | 6 | | | |
| 102 | SH-303 | US 42 | 445+70 | 459+52 | LT | | | | | | | | | | | | | | 7 | | | |
| | SH-304 | US 42 | 446+59 | 459+76 | RT | | | | | | | | | | | | | | 8 | | | |
| 103 | SH-305 | US 42 | 461+96 | 476+35 | LT | | | | | | | | | | | | | | 6 | | | |
| | SH-306 | US 42 | 461+56 | 475+75 | RT | | | | | | | | | | | | | | 8 | | | |
| 104 | SH-307 | US 42 | 478+59 | 490+83 | LT | | | | | | | | | | | | | | 7 | | | |
| | SH-308 | US 42 | 478+09 | 492+27 | RT | | | | | | | | | | | | | | 7 | | | |
| 105 | SH-309 | US 42 | 493+22 | 508+35 | LT | | | | | | | | | | | | | | 8 | | | |
| | SH-310 | US 42 | 494+78 | 507+81 | RT | | | | | | | | | | | | | | 7 | | | |
| | XW-301 | STUMPH ROAD | | | | | | | | | | | | | | | | | | | 140 | |
| | XW-302 | YORK ROAD | | | | | | | | | | | | | | | | | | | 153 | |
| 106 | SH-311 | US 42 | 510+43 | 521+62 | LT | | | | | | | | | | | | | | 5 | | | |
| | SH-312 | US 42 | 510+10 | 522+77 | RT | | | | | | | | | | | | | | 7 | | | |
| | CH-301 | US 42 | 522+52 | 524+42 | RT | | | | 190 | | | | | | | | | | | | | |
| | LA-301 | US 42 | 522+92 | | RT | | | | | | | | | 1 | | | | | | | | |
| | WP-301 | US 42 | 523+60 | | RT | | | | | | | | | | 1 | | | | | | | |
| | DLT-301 | US 42 | 517+82 | 522+52 | RT | | | | | | | | | | | | 470 | | | | | |
| | DLS-301 | US 42 | 522+52 | 523+02 | LT | | | | | | | | | | | 50 | | | | | | |
| | BL-301 | US 42 | 523+02 | 525+18 | LT | 0.041 | 0.041 | | | | 56 | | | | | | | | | | | |
| 107 | SH-313 | US 42 | 524+04 | | RT | | | | | | | | | | | | | | 1 | | | |
| | IW-301 | US 42 | 524+42 | 524+58 | RT | | | | | | | | 28 | | | | | | | | | |
| | LA-302 | US 42 | 524+23 | | RT | | | | | | | | | 1 | | | | | | | | |
| | DLS-302 | US 42 | 525+39 | 525+85 | RT | | | | | | | | | | | 46 | | | | | | |
| | DLS-303 | US 42 | 525+71 | 526+64 | RT | | | | | | | | | | | 93 | | | | | | |
| | DLS-304 | US 42 | 533+52 | 534+57 | RT | | | | | | | | | | | 105 | | | | | | |
| | DLS-305 | US 42 | 534+11 | 535+09 | LT | | | | | | | | | | | 98 | | | | | | |
| | BL-302 | US 42 | 524+78 | 525+39 | RT | 0.012 | 0.012 | | | | 14 | | | | | | | | | | | |
| | BL-303 | US 42 | 526+78 | 533+57 | LT | 0.129 | 0.129 | | | | 161 | | | | | | | | | | | |
| | BL-304 | US 42 | 526+78 | 533+52 | RT | 0.128 | 0.128 | | | | 161 | | | | | | | | | | | |
| | BL-305 | US 42 | 534+57 | 537+58 | RT | 0.057 | 0.057 | | | | 70 | | | | | | | | | | | |
| | BL-306 | US 42 | 535+09 | 538+34 | RT | 0.062 | 0.062 | | | | 77 | | | | | | | | | | | |
| | BS-301 | US 42 | 524+93 | | LT | | | | | | | | | 1 | | | | 1 | | | | |
| | BS-302 | US 42 | 525+03 | | RT | | | | | | | | | 1 | | | | 1 | | | | |
| | BS-303 | US 42 | 527+03 | | RT | | | | | | | | | 1 | | | | 1 | | | | |
| | BS-304 | US 42 | 533+32 | | LT | | | | | | | | | 1 | | | | 1 | | | | |
| | BS-305 | US 42 | 534+82 | | RT | | | | | | | | | 1 | | | | 1 | | | | |
| 108 | SL-301 | US 42 | 541+54 | | RT | | | 22 | | | | | | | | | | | | | | |
| | SL-302 | US 42 | 542+27 | | LT | | | 22 | | | | | | | | | | | | | | |
| | XW-303 | US 42 | 541+84 | 541+95 | RT | | | | | 44 | | | | | | | | | | | | |
| | XW-304 | US 42 | 541+86 | 541+97 | LT | | | | | 44 | | | | | | | | | | | | |
| | CM-301 | US 42 | 541+07 | 541+12 | LT/RT | | | | | | | 16 | | | | | | | | | | |
| | CM-302 | US 42 | 549+25 | 549+30 | LT/RT | | | | | | | 16 | | | | | | | | | | |
| **SUBTOTALS** | | | | | | 0.429 | 0.429 | 44 | 190 | 88 | 539 | 32 | 28 | 7 | 1 | 392 | 470 | 5 | 82 | | 293 | |
| **TOTALS CARRIED TO GENERAL SUMMARY (SHEET NO. 71)** | | | | | | 0.43 | 0.43 | 44 | 190 | 88 | 539 | 32 | 28 | 7 | 1 | 392 | 470 | 5 | 82 | | 293 | |

CALCULATED DRP
CHECKED BT

# PAVEMENT MARKING SUBSUMMARY - TLCI ITEMS - 1 OF 2

CUY-US-042-4.29



P:\Middleburg Heights - City of\J20150340.000 Pearl Rd Rehab\Drawings\Trans\105726TS012.dwg 18-May-19 5:20 PM

| SHEET NO. | REFERENCE NO. | LOCATION | STATION FROM | STATION TO | SIDE | EDGE LINE, 4" (WHITE) MILE | EDGE LINE, 6" (WHITE) MILE | STOP LINE FT | CHANNELIZING LINE, 12" FT | CROSSWALK LINE MILE | TRANSVERSE/DIAGONAL LINE (WHITE) FT | CURB MARKING (YELLOW) FT | ISLAND MARKING (WHITE) SQ FT | LANE ARROW EACH | DOTTED LINE, 6" FT | DOTTED LINE, 12" FT | BIKE LANE SYMBOL MARKING EACH | SHARED LANE MARKING EACH | | | | |
|---|---|---|---|---|---|---|---|---|---|---|---|---|---|---|---|---|---|---|---|---|---|---|
| | | | | | | 644 | | | | | | | | | | | | | | | | |
| | | | | | | **TLCI ITEMS** | | | | | | | | | | | | | | | | |
| 108 | DLS-306 | US 42 | 537+58 | 538+08 | RT | | | | | | | | | | 50 | | | | | | | |
| (CONT) | DLS-307 | US 42 | 538+95 | 539+45 | LT | | | | | | | | | | 50 | | | | | | | |
| | DLS-308 | US 42 | 540+59 | 541+54 | RT | | | | | | | | | | 95 | | | | | | | |
| | DLS-309 | US 42 | 541+18 | 541+86 | LT | | | | | | | | | | 68 | | | | | | | |
| | DLS-310 | US 42 | 542+50 | 543+00 | RT | | | | | | | | | | 50 | | | | | | | |
| | DLS-311 | US 42 | 546+52 | 547+02 | LT | | | | | | | | | | 50 | | | | | | | |
| | DLS-312 | US 42 | 548+75 | 549+25 | RT | | | | | | | | | | 50 | | | | | | | |
| | DLS-313 | US 42 | 551+77 | 552+82 | RT | | | | | | | | | | 105 | | | | | | | |
| | DLS-314 | US 42 | 553+33 | 554+40 | LT | | | | | | | | | | 107 | | | | | | | |
| | | | | | | | | | | | | | | | | | | | | | | |
| | BL-307 | US 42 | 538+75 | 540+59 | RT | 0.035 | 0.035 | | | | 49 | | | | | | | | | | | |
| | BL-308 | US 42 | 539+45 | 540+41 | LT | 0.018 | 0.018 | | | | 28 | | | | | | | | | | | |
| | BL-309 | US 42 | 541+95 | 542+50 | RT | 0.011 | 0.011 | | | | 14 | | | | | | | | | | | |
| | BL-310 | US 42 | 542+27 | 545+88 | LT | 0.079 | 0.079 | | | | 84 | | | | | | | | | | | |
| | BL-311 | US 42 | 544+62 | 548+75 | RT | 0.069 | 0.069 | | | | 98 | | | | | | | | | | | |
| | BL-312 | US 42 | 547+02 | 549+32 | LT | 0.044 | 0.044 | | | | 56 | | | | | | | | | | | |
| | BL-313 | US 42 | 549+98 | 552+59 | RT | 0.049 | 0.049 | | | | 63 | | | | | | | | | | | |
| | BL-314 | US 42 | 549+98 | 551+77 | RT | 0.034 | 0.034 | | | | 42 | | | | | | | | | | | |
| | BL-315 | US 42 | 552+82 | 558+99 | RT | 0.117 | 0.117 | | | | 147 | | | | | | | | | | | |
| | BS-306 | US 42 | 538+09 | | LT | | | | | | | | | 1 | | | 1 | | | | | |
| | BS-307 | US 42 | 539+00 | | RT | | | | | | | | | 1 | | | 1 | | | | | |
| | BS-308 | US 42 | 540+16 | | LT | | | | | | | | | 1 | | | 1 | | | | | |
| | BS-309 | US 42 | 542+19 | | RT | | | | | | | | | 1 | | | 1 | | | | | |
| | BS-310 | US 42 | 543+59 | | LT | | | | | | | | | 1 | | | 1 | | | | | |
| | BS-311 | US 42 | 544+94 | | RT | | | | | | | | | 1 | | | 1 | | | | | |
| | BS-312 | US 42 | 545+63 | | LT | | | | | | | | | 1 | | | 1 | | | | | |
| | BS-313 | US 42 | 549+07 | | LT | | | | | | | | | 1 | | | 1 | | | | | |
| | BS-314 | US 42 | 550+17 | | RT | | | | | | | | | 1 | | | 1 | | | | | |
| | BS-315 | US 42 | 552+34 | | LT | | | | | | | | | 1 | | | 1 | | | | | |
| | BS-316 | US 42 | 553+47 | | RT | | | | | | | | | 1 | | | 1 | | | | | |
| | | | | | | | | | | | | | | | | | | | | | | |
| 109 | DLS-315 | US 42 | 558+88 | 561+13 | RT | | | | | | | | | | 225 | | | | | | | |
| | DLS-316 | US 42 | 558+99 | 559+79 | LT | | | | | | | | | | 80 | | | | | | | |
| | DLS-317 | US 42 | 560+63 | 561+13 | LT | | | | | | | | | | 50 | | | | | | | |
| | DLS-318 | US 42 | 566+19 | 567+24 | RT | | | | | | | | | | 105 | | | | | | | |
| | DLS-319 | US 42 | 566+99 | 567+49 | LT | | | | | | | | | | 50 | | | | | | | |
| | DLS-320 | US 42 | 568+46 | 568+96 | RT | | | | | | | | | | 50 | | | | | | | |
| | BL-316 | US 42 | 554+40 | 558+88 | LT | 0.085 | 0.085 | | | | 105 | | | | | | | | | | | |
| | BL-317 | US 42 | 560+63 | 566+19 | RT | 0.106 | 0.106 | | | | 133 | | | | | | | | | | | |
| | BL-318 | US 42 | 561+13 | 566+24 | LT | 0.097 | 0.097 | | | | 119 | | | | | | | | | | | |
| | BL-319 | US 42 | 567+24 | 568+46 | RT | 0.023 | 0.023 | | | | 28 | | | | | | | | | | | |
| | BL-320 | US 42 | 567+49 | 568+89 | LT | 0.027 | 0.027 | | | | 35 | | | | | | | | | | | |
| | BS-317 | US 42 | 558+63 | | LT | | | | | | | | | 1 | | | 1 | | | | | |
| | BS-318 | US 42 | 560+88 | | RT | | | | | | | | | 1 | | | 1 | | | | | |
| | BS-319 | US 42 | 565+99 | | LT | | | | | | | | | 1 | | | 1 | | | | | |
| | BS-320 | US 42 | 567+49 | | RT | | | | | | | | | 1 | | | 1 | | | | | |
| | | | | | | | | | | | | | | | | | | | | | | |
| 110 | EW-301 | US 42 | 568+89 | 572+14 | LT | | 0.062 | | | | | | | | | | | | | | | |
| | TW-301 | US 42 | 568+89 | 572+14 | LT | | | | | | 78 | | | | | | | | | | | |
| | IW-302 | US 42 | 568+89 | 568+93 | LT | | | | | | | | 8 | | | | | | | | | |
| | DLS-321 | US 42 | 571+64 | 572+14 | RT | | | | | | | | | | 50 | | | | | | | |
| | | | | | | | | | | | | | | | | | | | | | | |
| | BL-321 | US 42 | 569+57 | 571+64 | RT | 0.039 | 0.039 | | | | 49 | | | | | | | | | | | |
| | BS-321 | US 42 | 568+64 | | LT | | | | | | | | | 1 | | | 1 | | | | | |
| | BS-322 | US 42 | 569+82 | | RT | | | | | | | | | 1 | | | 1 | | | | | |
| **SUBTOTALS** | | | | | | 0.833 | 0.895 | 0 | 0 | 0 | 1128 | 0 | 8 | 17 | 1235 | 0 | 17 | 0 | 0 | | | |
| **TOTALS CARRIED TO GENERAL SUMMARY (SHEET NO. 71)** | | | | | | 0.84 | 0.90 | 0 | 0 | 0 | 1128 | 0 | 8 | 17 | 1235 | 0 | 17 | 0 | 0 | | | |

CALCULATED DRP
CHECKED BT

# PAVEMENT MARKING SUBSUMMARY - TLCI ITEMS - 2 OF 2

CUY-US-042-4.29



P:\Middleburg Heights - City of\J20150340.000 Pearl Rd Rehab\Drawings\Trans\105726TS012A.dwg 18-May-19 5:20 PM

| SHEET NO. | REFERENCE NO. | LOCATION | STATION | SIDE | CODE | SIZE (INCHES) | 630 GROUND MOUNTED SUPPORT, NO. 2 POST (FT) | 630 GROUND MOUNTED SUPPORT, NO. 3 POST (FT) | 630 SIGN, FLAT SHEET (SQ FT) |
|---|---|---|---|---|---|---|---|---|---|
| | | | | | TLCI PARTICIPATION | | | | |
| 101 | S-1 | U.S. 42 | 433+42 | RT | R3-9cP-30 | 30" x 12" | | 14.0 | 2.50 |
| | | | | | R4-11-30 | 30" x 30" | | | 6.25 |
| | | | | | | | | | |
| 103 | S-2 | U.S. 42 | 461+96 | LT | R4-11-30 | 30" x 30" | | 13.0 | 6.25 |
| | S-3 | U.S. 42 | 465+77 | RT | R4-11-30 | 30" x 30" | | 13.0 | 6.25 |
| | | | | | | | | | |
| 105 | S-4 | U.S. 42 | 495+26 | LT | R4-11-30 | 30" x 30" | | 13.0 | 6.25 |
| | S-5 | U.S. 42 | 497+56 | RT | R4-11-30 | 30" x 30" | | 13.0 | 6.25 |
| | | | | | | | | | |
| 106 | S-6 | U.S. 42 | 518+55 | RT | R4-H3a(L)-24 | 24" x 30" | | 14.5 | 5.00 |
| | | | | | R-SPECIAL | 24" x 18" | | | 3.00 |
| | S-7 | U.S. 42 | 520+53 | RT | R3-17-24 | 24" x 18" | 12.7 | | 3.00 |
| | | | | | R3-17aP-24 | 24" x 8" | | | 1.33 |
| | S-8 | U.S. 42 | 521+62 | LT | R3-9cP-30 | 30" x 12" | | 14.0 | 2.50 |
| | | | | | R4-11-30 | 30" x 30" | | | 6.25 |
| | S-9 | U.S. 42 | 522+52 | RT | R3-7R-30 | 30" x 30" | | 14.5 | 6.25 |
| | | | | | R-SPECIAL | 24" x 18" | | | 3.00 |
| | | | | | | | | | |
| 107 | S-10 | U.S. 42 | 524+23 | RT | R3-7R-30 | 30" x 30" | | 14.5 | 6.25 |
| | | | | | R-SPECIAL | 24" x 18" | | | 3.00 |
| | S-11 | U.S. 42 | 524+92 | LT | R3-17-24 | 24" x 18" | 12.7 | | 3.00 |
| | | | | | R3-17bP-24 | 24" x 8" | | | 1.33 |
| | S-12 | U.S. 42 | 525+03 | RT | R3-17-24 | 24" x 18" | 12.0 | | 3.00 |
| | S-13 | U.S. 42 | 527+03 | RT | R3-17-24 | 24" x 18" | 12.0 | | 3.00 |
| | S-14 | U.S. 42 | 533+32 | LT | R3-17-24 | 24" x 18" | 12.0 | | 3.00 |
| | S-15 | U.S. 42 | 534+82 | RT | R3-17-24 | 24" x 18" | 12.0 | | 3.00 |
| | | | | | | | | | |
| 108 | S-16 | U.S. 42 | 538+09 | LT | R3-17-24 | 24" x 18" | 12.0 | | 3.00 |
| | S-17 | U.S. 42 | 539+00 | RT | R3-17-24 | 24" x 18" | 12.0 | | 3.00 |
| | S-18 | U.S. 42 | 540+12 | RT | W6-1-36 | 36" x 36" | | 13.5 | 9.00 |
| | S-19 | U.S. 42 | 540+16 | LT | R3-17-24 | 24" x 18" | 12.0 | | 3.00 |
| | S-20 | U.S. 42 | 541+12 | CL | R4-7-24 | 24" x 30" | | 14.5 | 5.00 |
| | | | | | OM1-3-18 | 18" x 18" | | | 2.25 |
| | S-21 | U.S. 42 | 542+19 | RT | R3-17-24 | 24" x 18" | 12.0 | | 3.00 |
| | S-22 | U.S. 42 | 542+07 | LT | W6-2-36 | 36" x 36" | | 13.5 | 9.00 |
| | S-23 | U.S. 42 | 544+10 | RT | R6-1R-36 | 36" x 12" | 11.5 | | 3.00 |
| | S-24 | U.S. 42 | 544+94 | RT | R3-17-24 | 24" x 18" | 12.0 | | 3.00 |
| | S-25 | U.S. 42 | 545+63 | LT | R3-17-24 | 24" x 18" | 12.0 | | 3.00 |
| | S-26 | U.S. 42 | 546+17 | LT | R6-1R-36 | 36" x 12" | 11.5 | | 3.00 |
| | S-27 | U.S. 42 | 548+33 | RT | W6-2-36 | 36" x 36" | | 13.5 | 9.00 |
| | S-28 | U.S. 42 | 549+07 | LT | R3-17-24 | 24" x 18" | 12.0 | | 3.00 |
| | S-29 | U.S. 42 | 549+25 | CL | R4-7-24 | 24" x 30" | | 14.5 | 5.00 |
| | | | | | OM1-3-18 | 18" x 18" | | | 2.25 |
| | S-30 | U.S. 42 | 550+17 | RT | R3-17-24 | 24" x 18" | 12.0 | | 3.00 |
| | S-31 | U.S. 42 | 551+01 | LT | W6-1-36 | 36" x 36" | | 13.5 | 9.00 |
| | S-32 | U.S. 42 | 552+34 | LT | R3-17-24 | 24" x 18" | 12.0 | | 3.00 |
| | S-33 | U.S. 42 | 553+07 | RT | R3-17-24 | 24" x 18" | 12.0 | | 3.00 |
| | | | | | | | | | |
| 109 | S-34 | U.S. 42 | 558+63 | LT | R3-17-24 | 24" x 18" | 12.0 | | 3.00 |
| | S-35 | U.S. 42 | 560+88 | RT | R3-17-24 | 24" x 18" | 12.0 | | 3.00 |
| | S-36 | U.S. 42 | 565+99 | LT | R3-17-24 | 24" x 18" | 12.0 | | 3.00 |
| | S-37 | U.S. 42 | 567+49 | RT | R3-17-24 | 24" x 18" | 12.0 | | 3.00 |
| | | | | | | | | | |
| 110 | S-38 | U.S. 42 | 568+89 | LT | R3-17-24 | 24" x 18" | 12.0 | | 3.00 |
| | S-39 | U.S. 42 | 569+82 | RT | R3-17-24 | 24" x 18" | 12.7 | | 3.00 |
| | | | | | R3-17bP-24 | 24" x 8" | | | 1.33 |
| | S-40 | U.S. 42 | 574+14 | LT | R3-17-24 | 24" x 18" | 12.7 | | 3.00 |
| | | | | | R3-17aP-24 | 24" x 8" | | | 1.33 |
| | S-41 | U.S. 42 | 575+24 | LT | W4-2R-36 | 36" x 36" | | 13.5 | 9.00 |
| TOTALS CARRIED TO GENERAL SUMMARY (SHEET NO. 71) | | | | | | | 301.8 | 220.0 | 208.9 |

| SHEET NO. | REFERENCE NO. | LOCATION | STATION | SIDE | CODE | SIZE (INCHES) | 630 REMOVAL OF GROUND MOUNTED SIGN AND STORAGE (EACH) | 630 REMOVAL OF POLE MOUNTED SIGN AND STORAGE (EACH) | 630 REMOVAL OF GROUND MOUNTED POST SUPPORT AND DISPOSAL (EACH) |
|---|---|---|---|---|---|---|---|---|---|
| | | | | | TLCI PARTICIPATION | | | | |
| 108 | SR-1 | U.S. 42 | 543+20 | RT | | | 2 | | 1 |
| | SR-2 | U.S. 42 | 544+67 | RT | | | | 1 | |
| | SR-3 | U.S. 42 | 545+45 | RT | | | | 2 | |
| | SR-4 | U.S. 42 | 546+56 | LT | | | 2 | | 1 |
| TOTALS CARRIED TO GENERAL SUMMARY (SHEET NO. 71) | | | | | | | 4 | 3 | 2 |

CALCULATED DRP
CHECKED BT

# SIGNING SUBSUMMARY

CUY-US-042-4.29



P:\Middleburg Heights - City of\J20150340.000 Pearl Rd Rehab\Drawings\Trans\105726TS013.dwg 18-May-19 5:20 PM

| SHEET NO. | REFERENCE NO. | LOCATION | 632 DETECTOR LOOP, AS PER PLAN: STOP LINE DETECTOR LOOP (6'x 30' POWERHEAD LOOP) | STOP LINE DETECTOR LOOP (RECTANGULAR LOOP, SIZE AS NOTED) | ADVANCE DETECTOR LOOP (6'x 10' RECTANGULAR LOOP) | SYSTEM DETECTOR LOOP (6'x 6' RECTANGULAR LOOP) |
|---|---|---|---|---|---|---|
| | | | EACH | EACH | EACH | EACH |
| **CITY OF STRONGSVILLE** | | | | | | |
| 87 | L-1 | STA. 246+44 (SB) | | | | 2 |
| | L-2 | NB LT LANE @ WHITNEY ROAD | 1 | | | |
| | L-3 | EB WHITNEY ROAD | 2 | | | |
| | L-4 | WB WHITNEY ROAD | 2 | 1* | | |
| | L-5 | SB LT LANE @ WHITNEY ROAD | 1 | | | |
| | L-6 | STA. 250+67 (NB) | | | | 2 |
| | | | | | | |
| 88 | L-7 | STA. 252+11 (NB) | | | 2 | |
| | L-8 | NB LANES @ BROXTON DRIVE | 2 | 1** | | |
| | L-9 | EB BROXTON DRIVE | 1 | | | |
| | L-10 | SB LT LANE @ BROXTON DRIVE | 1 | | | |
| | L-11 | STA. 257+85 (SB) | | | 2 | |
| | L-12 | EB STRONGSVILLE BOULEVARD | 1 | | | |
| | L-13 | SB LT LANE @ STRONGSVILLE BLVD | 1 | | | |
| | L-14 | STA. 267+75 (SB) | | | | 2 |
| | | | | | | |
| 89 | L-15 | NB LT LN @ HOME DEPOT/WALMART | 1 | | | |
| | L-16 | SB LT LN @ HOME DEPOT/WALMART | 1 | | | |
| | L-17 | STA. 271+55 (NB) | | | | 2 |
| | L-18 | STA. 278+87 (SB) | | | | 2 |
| | | | | | | |
| **SUBTOTALS - STRONGSVILLE** | | | 14 | 2 | 4 | 10 |
| | | | CONTINGENCY = 5 EACH | | | |
| | | | 35 | | | |

*=6'x 15' LOOP
**=18'x 7' LOOP
#=8'x 23' LOOP

| SHEET NO. | REFERENCE NO. | LOCATION | 632 DETECTOR LOOP, AS PER PLAN: STOP LINE DETECTOR LOOP (6'x 30' POWERHEAD LOOP) | STOP LINE DETECTOR LOOP (RECTANGULAR LOOP, SIZE AS NOTED) | ADVANCE DETECTOR LOOP (6'x 10' RECTANGULAR LOOP) | SYSTEM DETECTOR LOOP (6'x 6' RECTANGULAR LOOP) |
|---|---|---|---|---|---|---|
| | | | EACH | EACH | EACH | EACH |
| **CITY OF MIDDLEBURG HEIGHTS** | | | | | | |
| 90 | L-101 | SB LT LANE @ SPRAGUE ROAD | 1 | | | |
| | L-102 | STA. 287+42 (SB) | | | | 2 |
| | | | | | | |
| 91 | L-103 | NB LT LANE @ METROHEALTH | 1 | | | |
| | L-104 | STA. 292+49 (NB) | | | | 2 |
| | L-105 | NB LT LANE @ I-71 SB RAMPS | 1 | | | |
| | | | | | | |
| 92 | L-106 | SB LT LANE @ LUCERNE DRIVE | 1 | | | |
| | L-107 | STA. 310+39 (NB) | | | | 2 |
| | | | | | | |
| 93 | L-108 | STA. 314+23 (SB) | | | | 2 |
| | L-109 | NB LT LANE @ FOWLES ROAD | 1 | | | |
| | L-110 | STA. 316+25 (NB) | | | | 2 |
| | L-111 | STA. 326+82 (SB) | | | | 2 |
| | L-112 | NB LT LANE @ WEBSTER ROAD | 1 | | | |
| | L-113 | EB WEBSTER ROAD | 1 | | | |
| | L-114 | WB WEBSTER ROAD | 2 | | | |
| | L-115 | SB LT LANE @ WEBSTER ROAD | 1 | | | |
| | | | | | | |
| 96 | L-116 | NB LANES @ BAGLEY ROAD | 3 | | | |
| | L-117 | SB LANES @ BAGLEY ROAD | 3 | | | |
| | L-118 | NB LT LANE @ MIDDLEBURG PLAZA | 1 | | | |
| | | | | | | |
| 98 | L-119 | STA. 407+42 (SB) | | | | 2 |
| | | | | | | |
| 99 | L-120 | NB LANES @SMITH ROAD | 1 | | | |
| | L-121 | SB SMITH ROAD | 3 | | | |
| | L-122 | NB SMITH ROAD | 3 | | | |
| | L-123 | SB LANES @ SMITH ROAD | 1 | | | |
| | L-124 | STA. 410+89 (NB) | | | | 2 |
| | L-125 | STA. 415+61 (SB) | | | | 2 |
| | | | | | | |
| 100 | L-126 | STA. 423+99 (NB) | | | | 2 |
| | L-127 | STA. 431+24 (SB) | | | | 2 |
| | L-128 | NB LANES @ WEST 130TH STREET | 3 | | | |
| | L-129 | SB WEST 130TH STREET | 1 | | | |
| | | | | | | |
| | | | | | | |
| | | | 29 | 0 | 0 | 22 |
| **SUBTOTALS - MIDDLEBURG HTS.** | | | CONTINGENCY = 5 EACH | | | |
| | | | 56 | | | |

| SHEET NO. | REFERENCE NO. | LOCATION | 632 DETECTOR LOOP, AS PER PLAN: STOP LINE DETECTOR LOOP (6'x 30' POWERHEAD LOOP) | STOP LINE DETECTOR LOOP (RECTANGULAR LOOP, SIZE AS NOTED) | ADVANCE DETECTOR LOOP (6'x 10' RECTANGULAR LOOP) | SYSTEM DETECTOR LOOP (6'x 6' RECTANGULAR LOOP) |
|---|---|---|---|---|---|---|
| | | | EACH | EACH | EACH | EACH |
| **CITY OF PARMA HEIGHTS** | | | | | | |
| 101 | L-201 | NB WEST 130TH STREET | 1 | | | |
| | L-202 | SB LANES @ WEST 130TH STREET | 1 | 1# | | |
| | L-203 | STA. 435+06 (SB) | | | 2 | |
| | L-204 | STA. 438+87 (SB) | | | | 2 |
| | L-205 | SB LAWNWOOD AVENUE | 1 | | | |
| | L-206 | SB LT LANE @ LAWNWOOD AVENUE | 1 | | | |
| | L-207 | STA. 441+76 (SB) | | | | 2 |
| | L-208 | SB FERNHURST AVENUE | 1 | | | |
| | L-209 | STA. 443+37 (NB) | | | | 2 |
| | L-210 | NB MAPLEWOOD DRIVE | 1 | | | |
| | | | | | | |
| 102 | L-211 | STA. 452+69 (SB) | | | | 2 |
| | L-212 | STA. 454+90 (NB) | | | | 2 |
| | | | | | | |
| 103 | L-213 | STA. 461+59 (SB) | | | | 2 |
| | L-214 | STA. 463+92 (NB) | | | | 2 |
| | L-215 | SB MANDALAY DRIVE | 1 | | | |
| | | | | | | |
| 104 | L-216 | STA. 474+06 (SB) | | | | 2 |
| | L-217 | STA. 475+68 (NB) | | | | 2 |
| | L-218 | STA. 488+01 (SB) | | | | 2 |
| | L-219 | NB KINGSDALE BOULEVARD | 1 | | | |
| | L-220 | SB LT LANE @ KINGSDALE BOULEVARD | 1 | | | |
| | L-221 | STA. 490+25 (NB) | | | | 2 |
| | L-222 | NB ROCHELLE AVENUE | 1 | | | |
| | | | | | | |
| 105 | L-223 | STA. 493+14 (SB) | | | | 2 |
| | L-224 | NB LT LANE @ STUMPH/YORK | 1 | | | |
| | L-225 | NB YORK ROAD | 3 | | | |
| | L-226 | SB LT LANE @ STUMPH/YORK | 1 | | | |
| | L-227 | STA. 497+94 (NB) | | | | 2 |
| | L-228 | STA. 503+72 (SB) | | | | 2 |
| | L-229 | NB LT LANE @ GREENBRIER CENTER | 1 | | | |
| | L-230 | SB LT LANE @ GREENBRIER CENTER | 1 | | | |
| | L-231 | STA. 505+81 (NB) | | | | 2 |
| | | | | | | |
| 106 | L-232 | STA. 512+30 (SB) | | | | 2 |
| | L-233 | NB OLDE YORK ROAD | 1 | | | |
| | L-234 | STA. 515+32 (NB) | | | | 2 |
| | L-235 | NB ACKLEY ROAD | 1 | | | |
| | L-236 | STA. 518+44 (NB) | | | | 2 |
| | | | | | | |
| 107 | L-237 | STA. 525+00 (SB) | | | | 1 |
| | L-238 | STA. 527+28 (NB) | | | | 1 |
| | | | | | | |
| 108 | L-239 | STA. 547+18 (SB) | | | | 1 |
| | L-240 | NB RESERVOIR DRIVE | 1 | | | |
| | L-241 | SB LT LANE @ RESERVOIR DRIVE | 1 | | | |
| | L-242 | STA. 552+01 (NB) | | | | 1 |
| | | | | | | |
| 109 | L-243 | STA. 557+90 (SB) | | | | 1 |
| | L-244 | SB LOTUSDALE DRIVE | 1 | | | |
| | L-245 | NB LOTUSDALE DRIVE | 1 | | | |
| | L-246 | STA. 562+29 (SB) | | | | 1 |
| | | | | | | |
| **SUBTOTALS - PARMA HTS.** | | | 23 | 1 | 2 | 42 |
| | | | CONTINGENCY = 5 EACH | | | |
| | | | 73 | | | |
| **TOTAL TO GENERAL SUMMARY** | | | 164 | | | |

CALCULATED DP
CHECKED BT

# DETECTOR LOOP SUBSUMMARY

CUY-US-042-4.29



LOOP DETECTOR LEAD-IN CABLE CONTINGENCY ITEMS

THE FOLLOWING CONTINGENCY QUANTITIES HAVE BEEN CARRIED TO THE GENERAL SUMMARY TO REPLACE LOOP DETECTOR LEAD-IN CABLES THAT ARE FOUND TO BE DETERIORATED OR CANNOT BE SPLICED TO THE NEW DETECTOR LOOP WIRES.

625, CONDUIT, 2", 725.04

| | |
|---|---|
| STRONGSVILLE | 25 FT |
| MIDDLEBURG HTS | 50 FT |
| PARMA HTS. | 50 FT |
| TOTAL | 125 FT |

625, PULL BOX, 725.08, 18"

| | |
|---|---|
| STRONGSVILLE | 2 EACH |
| MIDDLEBURG HTS | 4 EACH |
| PARMA HTS. | 4 EACH |
| TOTAL | 10 EACH |

632, LOOP DETECTOR LEAD-IN CABLE

| | |
|---|---|
| STRONGSVILLE | 25 FT |
| MIDDLEBURG HTS | 50 FT |
| PARMA HTS. | 50 FT |
| TOTAL | 125 FT |

ITEM 632, DETECTOR LOOP, AS PER PLAN

ALL STOP LINE DETECTION SHALL BE TESTED FOR A BICYCLE TARGET, AND ALL ADVANCE DETECTION SHALL BE TESTED FOR A MOTORCYCLE TARGET.

VEHICLE LOOP DETECTORS SHALL BE INSTALLED IN THE INTERMEDIATE COURSE BEFORE THE SURFACE COURSE IS PLACED.

WHEN REPLACING THE LOOP DETECTORS, THE LOOP DETECTOR WIRE SHALL BE REPLACED TO THE PULL BOX, UNDER ITEM 632 AND STANDARD CONSTRUCTION DRAWING TC-82.10. THE INSTALLATION OF POURED EPOXY INSULATED SPLICES BETWEEN THE NEW DETECTOR LOOP WIRES AND THE EXISTING LOOP DETECTOR LEAD IN CABLE SHALL BE CONSIDERED AS INCIDENTAL TO THIS ITEM OF WORK. NO SEPARATE PAYMENT FOR THESE SPLICES SHALL BE MADE.

P:\Middleburg Heights - City of\J20150340.000 Pearl Rd Rehab\Drawings\Trans\105726TS011.dwg 01-Mar-19 3:28 PM

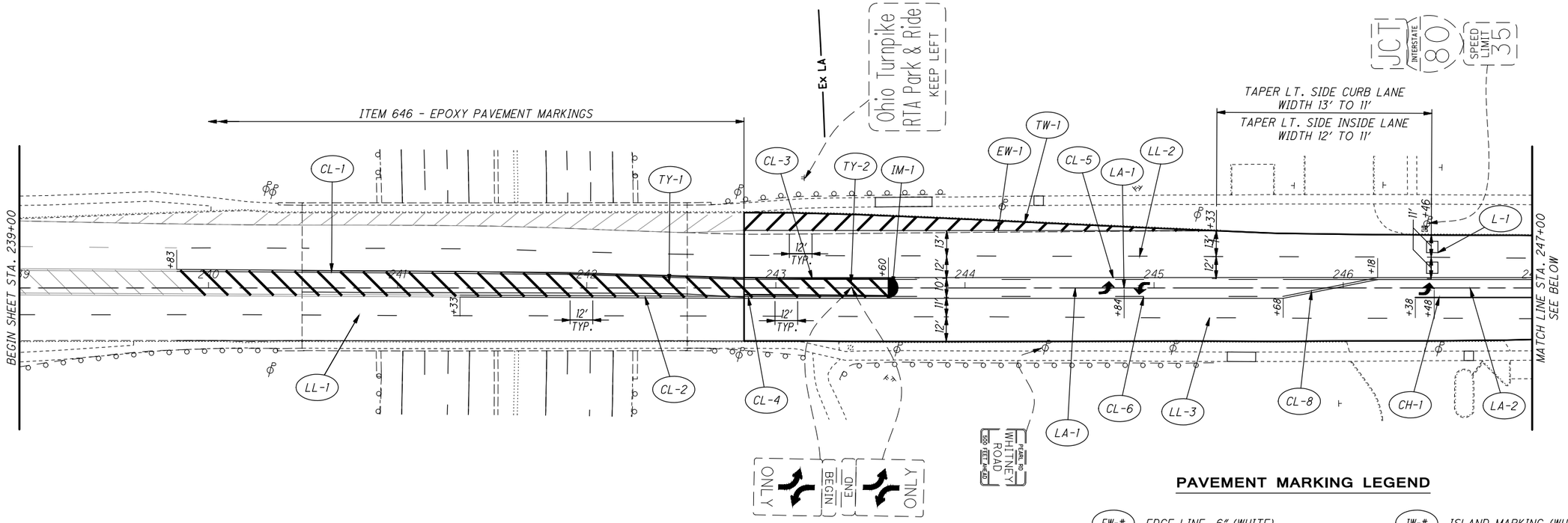


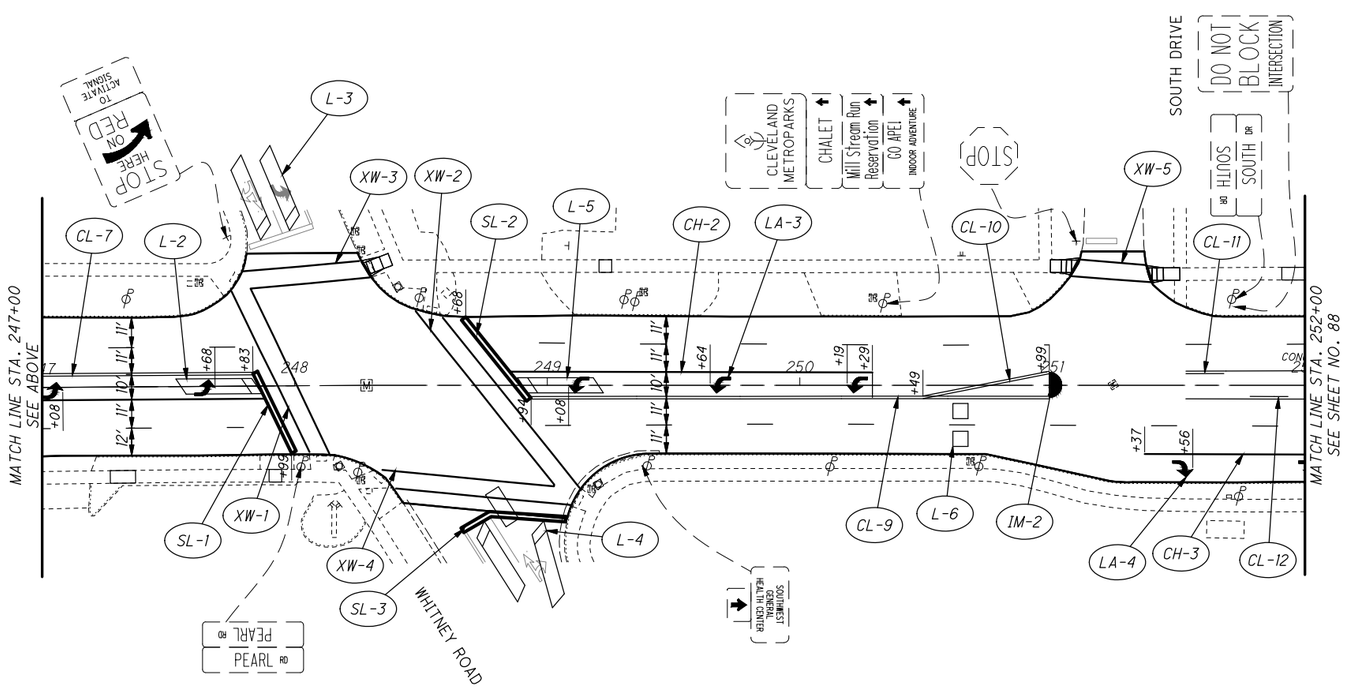


## PAVEMENT MARKING LEGEND

| | | | |
|---|---|---|---|
| EW-# | EDGE LINE, 6" (WHITE) | IW-# | ISLAND MARKING (WHITE) |
| LL-# | LANE LINE, 6" | SC-# | SCHOOL SYMBOL MARKING, 72" |
| CL-# | CENTER LINE (SOLID, DOUBLE OR BROKEN AND SOLID, DOUBLE) | LA-# | LANE ARROW |
| CH-# | CHANNELIZING LINE, 12" | WP-# | WORD ON PAVEMENT, 72" |
| SL-# | STOP LINE | DLS-# | DOTTED LINE, 6" |
| XW-# | CROSSWALK LINE | DLT-# | DOTTED LINE, 12" |
| TW-# | TRANSVERSE/DIAGONAL LINE (WHITE) | BS-# | BIKE SYMBOL AND ARROW (SEE DETAIL, SHEET NO. 110) |
| TY-# | TRANSVERSE/DIAGONAL LINE (YELLOW) | BL-# | BUFFERED BIKE LANE (SEE DETAIL, SHEET NO. 110) |
| CM-# | CURB MARKING (YELLOW) | SH-# | SHARED LANE MARKING (SEE DETAIL, ODOT SCD TC-71.10) |
| IY-# | ISLAND MARKING (YELLOW) | L-# | LOOP DETECTOR |

#0 TO #99 = QUANTITIES IN STRONGSVILLE
#100 TO #199 = QUANTITIES IN MIDDLEBURG HEIGHTS
#200 TO #299 = QUANTITIES IN PARMA HEIGHTS
#300 TO #399 = TLCI PARTICIPATION QUANTITIES
#400 TO #499 = QUANTITIES IN PARMA

## SIGNING LEGEND

S-# PROPOSED SIGN

SR-# EXISTING SIGN TO BE REMOVED

EXISTING SIGN TO REMAIN

ITEM PAID FOR UNDER TLCI PARTICIPATION

### SHEET REFERENCES

| DESCRIPTION | SHEET NO. |
|---|---|
| PAVEMENT MARKING SUBSUMMARY | 73 |
| DETECTOR LOOP SUBSUMMARY | 86 |

HORIZONTAL SCALE IN FEET 0 15 30 60

CALCULATED DP CHECKED BT

# SIGNING AND PAVEMENT MARKING PLAN
## STA. 236+00 TO STA. 252+00

CUY-US-042-4.29



P:\Middleburg Heights - City of\J20150340.000 Pearl Rd Rehab\Drawings\Trans\105726TP001.dwg 01-Mar-19 3:29 PM

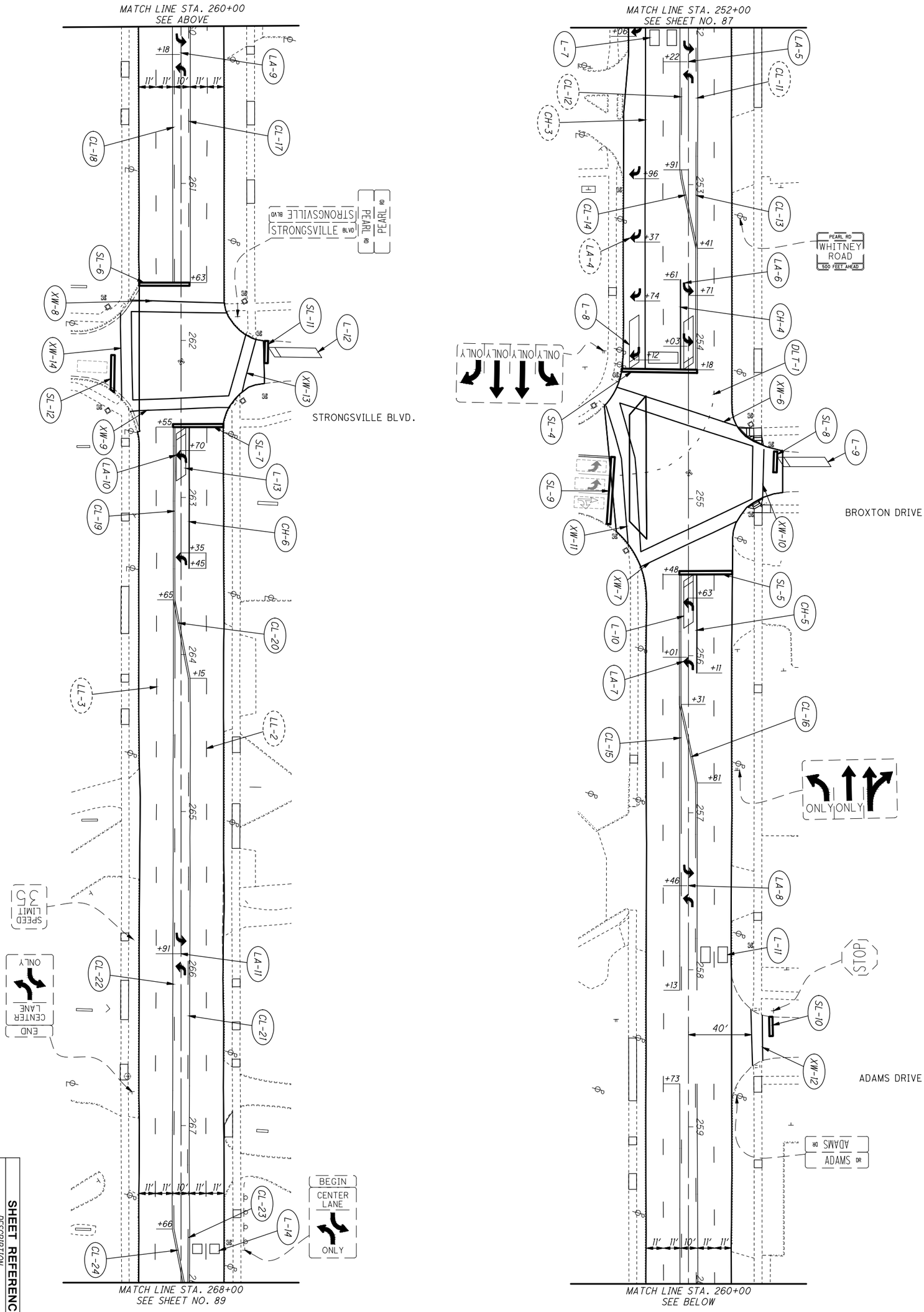


## SHEET REFERENCES

| DESCRIPTION | SHEET NO. |
|---|---|
| PAVEMENT MARKING LEGEND | 87 |
| PAVEMENT MARKING SUBSUMMARY | 73-74 |
| DETECTOR LOOP SUBSUMMARY | 86 |

88 / 127

**CUY-US-042-4.29**

# SIGNING AND PAVEMENT MARKING PLAN
## STA. 252+00 TO STA. 268+00

CALCULATED DP
CHECKED BT

0 15 30 60
HORIZONTAL SCALE IN FEET

P:\Middleburg Heights – City of\J20150340.000 Pearl Rd Rehab\Drawings\Trans\105726TP003.dwg 01–Mar–19 3:31 PM

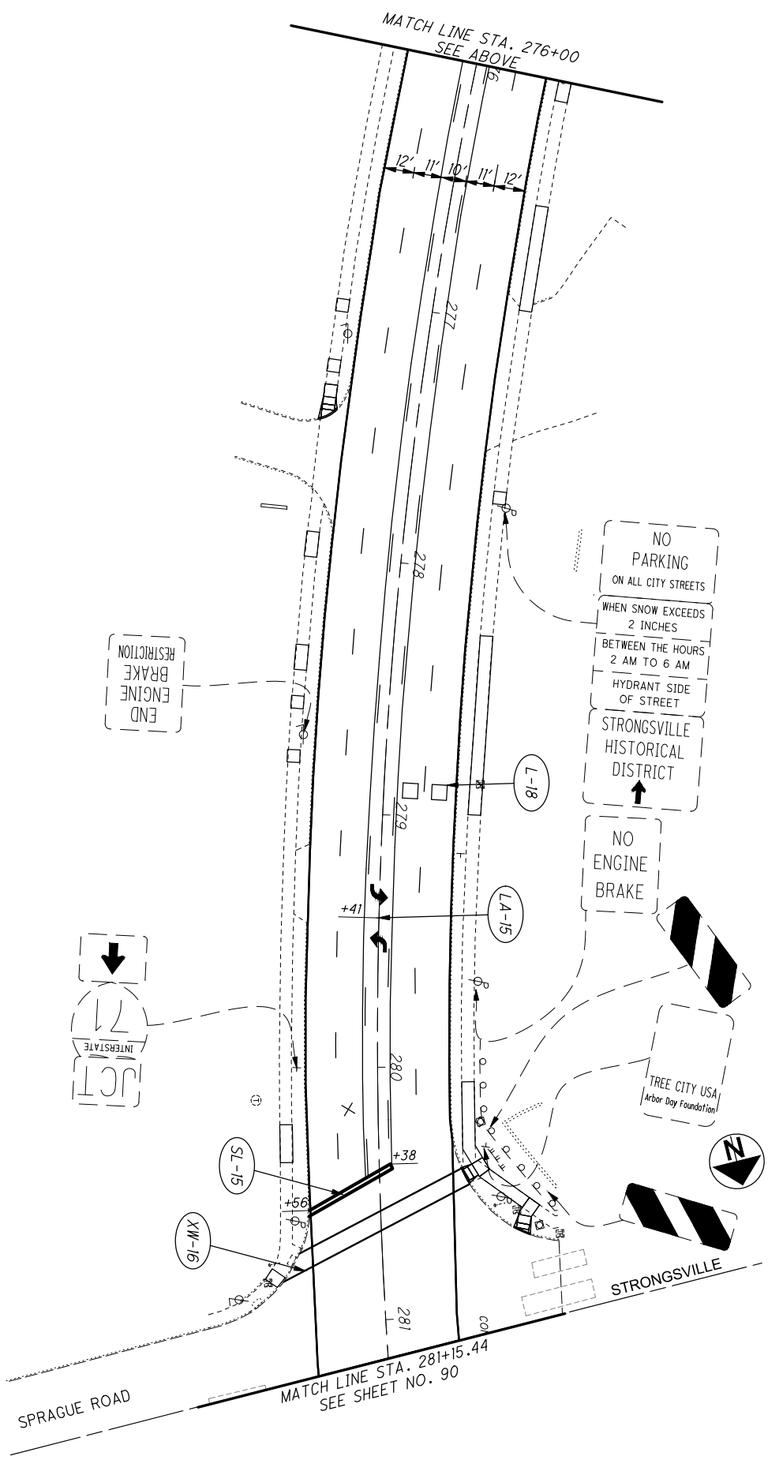


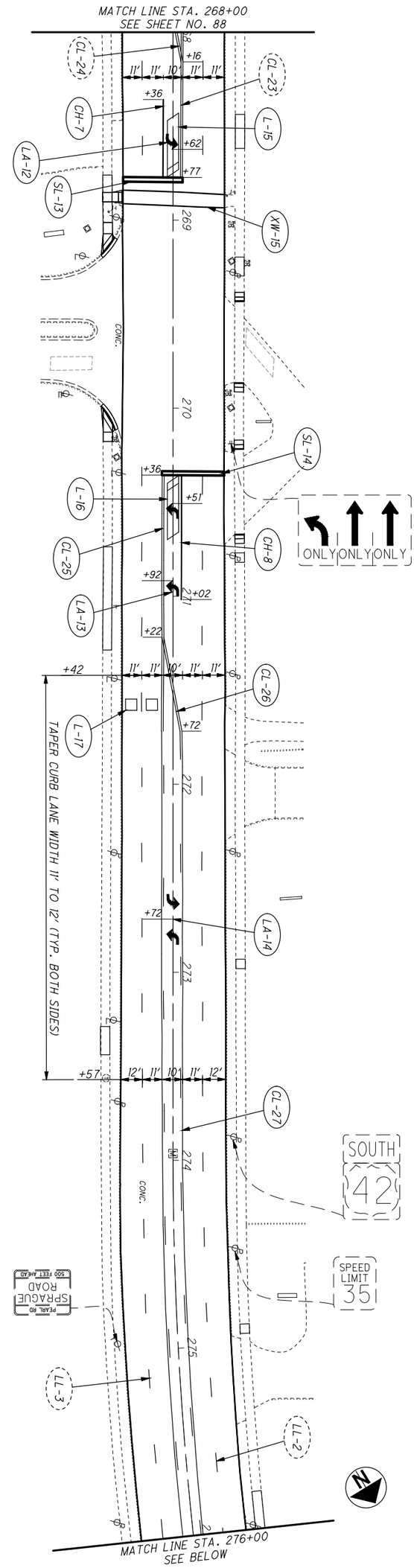


**SHEET REFERENCES**

| DESCRIPTION | SHEET NO. |
|---|---|
| PAVEMENT MARKING LEGEND | 87 |
| PAVEMENT MARKING SUBSUMMARY | 74 |
| DETECTOR LOOP SUBSUMMARY | 86 |

89 / 127

**CUY-US-042-4.29**

**SIGNING AND PAVEMENT MARKING PLAN**
**STA. 268+00 TO STA. 281+15.44**

CALCULATED DP
CHECKED BT

0 15 30 60
HORIZONTAL SCALE IN FEET

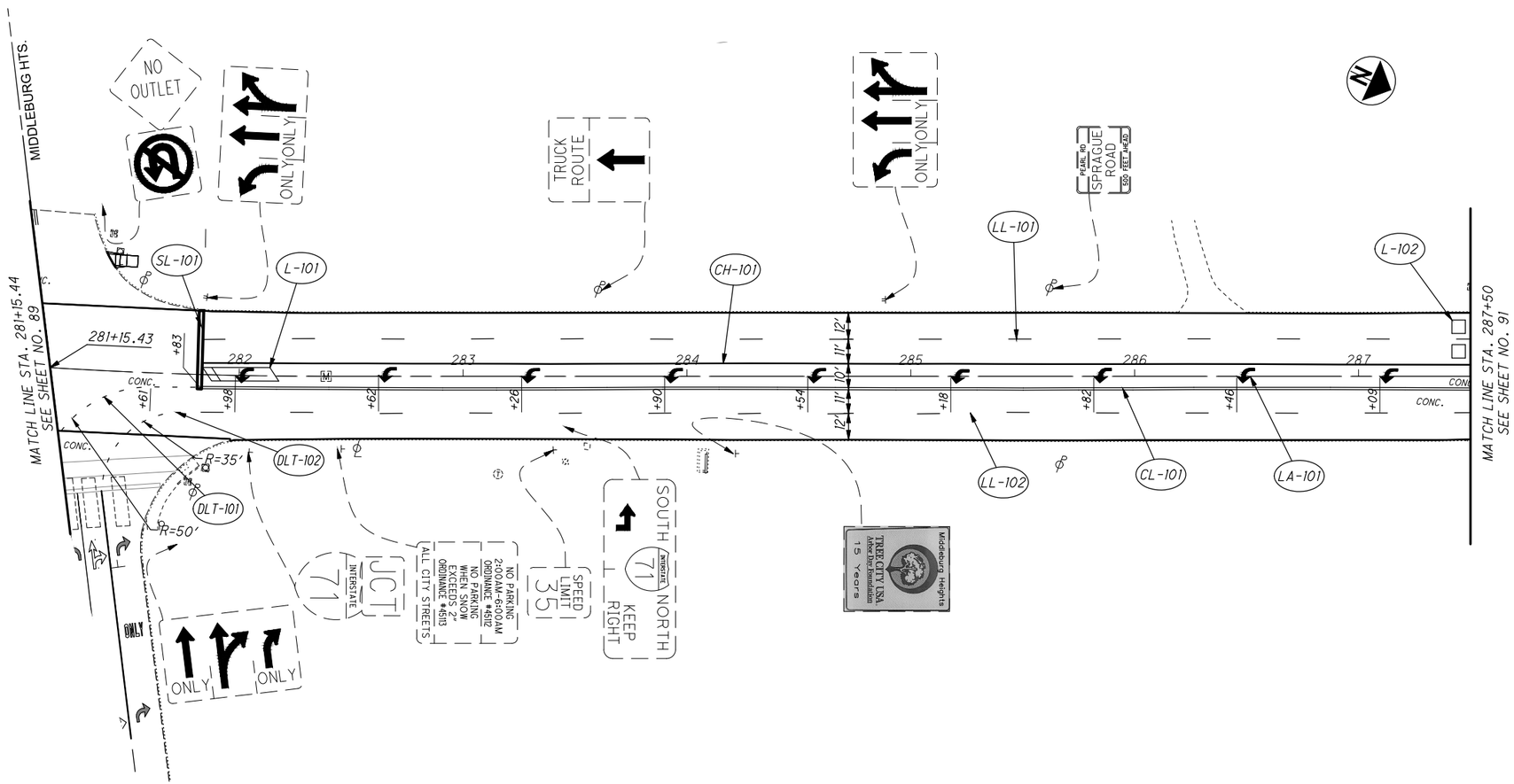


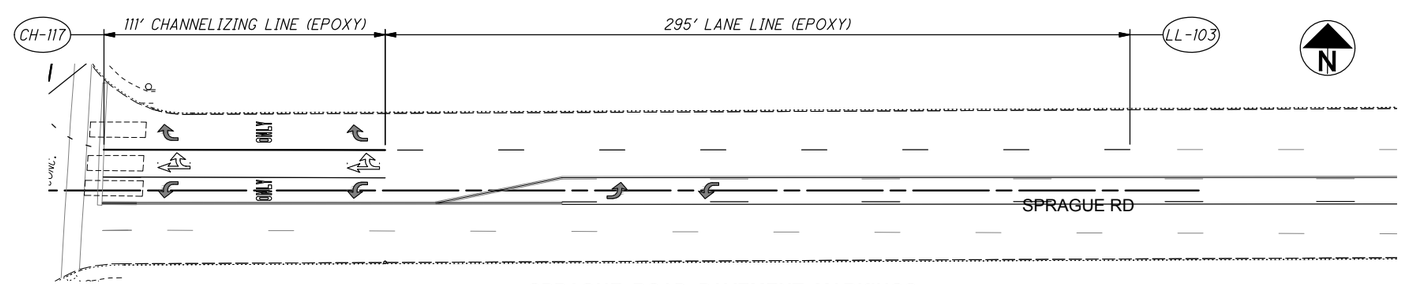


**SPRAGUE ROAD PAVEMENT MARKINGS**

| SHEET REFERENCES | |
|---|---|
| DESCRIPTION | SHEET NO. |
| PAVEMENT MARKING LEGEND | 87 |
| PAVEMENT MARKING SUBSUMMARY | 75 |
| DETECTOR LOOP SUBSUMMARY | 86 |

HORIZONTAL SCALE IN FEET 0 15 30 60

CALCULATED DP
CHECKED BT

# SIGNING AND PAVEMENT MARKING PLAN
## STA. 281+15.44 TO STA. 287+50

CUY-US-042-4.29



P:\Middleburg Heights - City of\J20150340.000 Pearl Rd Rehab\Drawings\Trans\105726TP004.dwg 01-Mar-19 3:32 PM

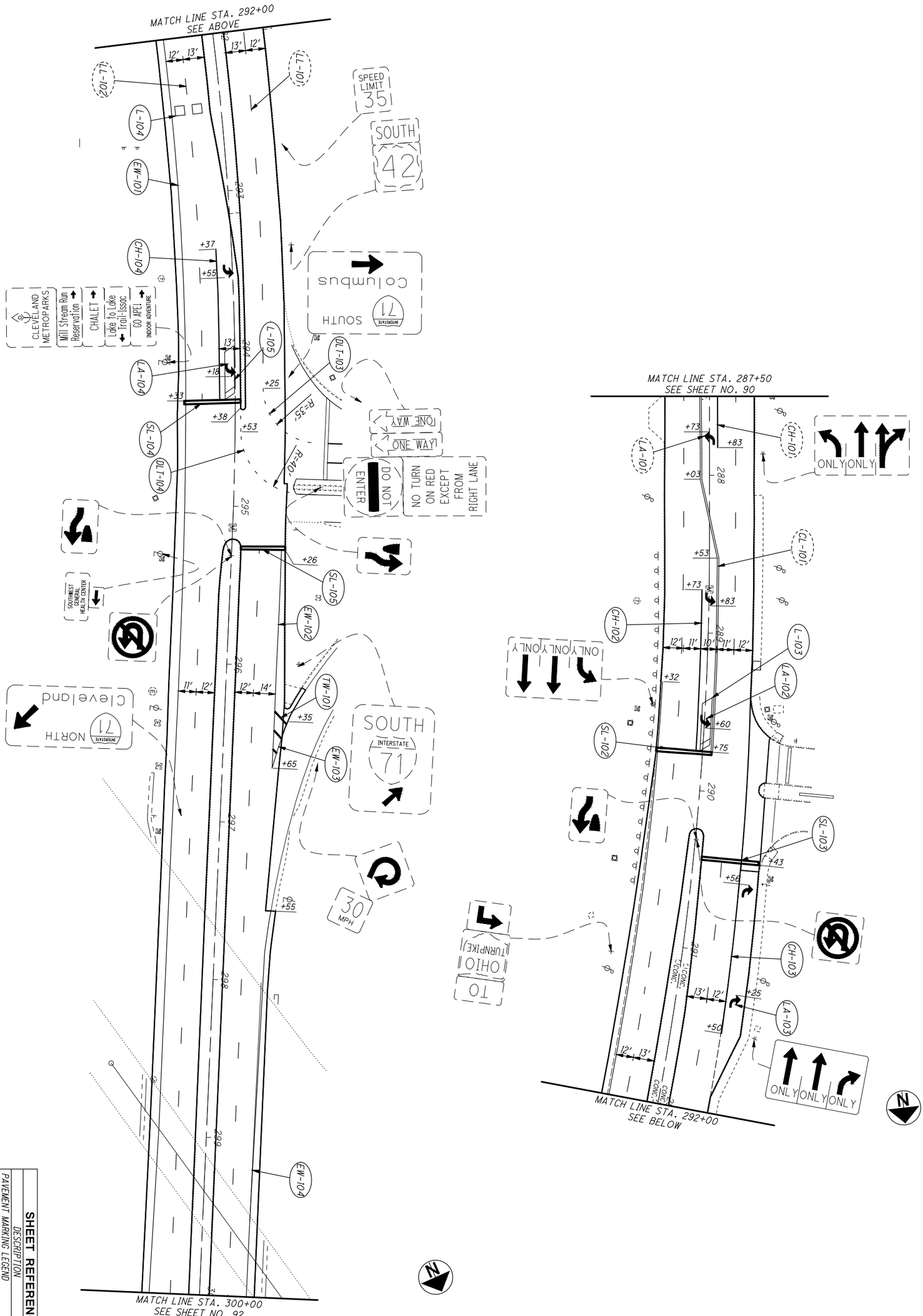


## SHEET REFERENCES

| DESCRIPTION | SHEET NO. |
|---|---|
| PAVEMENT MARKING LEGEND | 87 |
| PAVEMENT MARKING SUBSUMMARY | 75 |
| DETECTOR LOOP SUBSUMMARY | 86 |



**CUY-US-042-4.29**

**SIGNING AND PAVEMENT MARKING PLAN**
**STA. 287+50 TO STA. 300+00**

CALCULATED DP
CHECKED BT

0 30 15 60
HORIZONTAL SCALE IN FEET

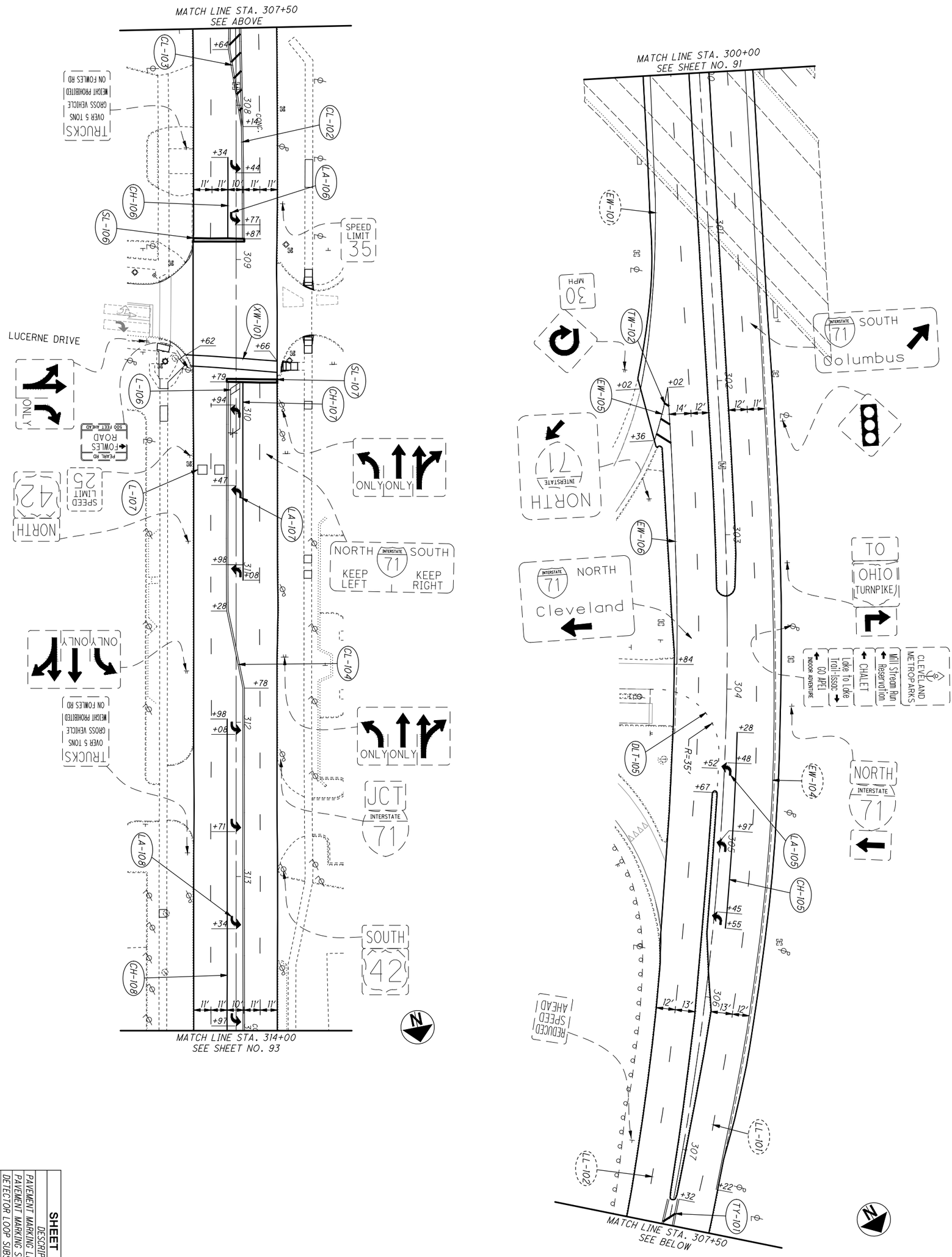


## SHEET REFERENCES

| DESCRIPTION | SHEET NO. |
|---|---|
| PAVEMENT MARKING LEGEND | 87 |
| PAVEMENT MARKING SUBSUMMARY | 75 |
| DETECTOR LOOP SUBSUMMARY | 86 |

| | | | | |
|---|---|---|---|---|
| 92 / 127 | CUY-US-042-4.29 | SIGNING AND PAVEMENT MARKING PLAN STA. 300+00 TO STA. 314+00 | CALCULATED DP / CHECKED BT | 0 15 30 60 HORIZONTAL SCALE IN FEET |

P:\Middleburg Heights – City of\J20150340.000 Pearl Rd Rehab\Drawings\Trans\105726TP007.dwg 01–Mar–19 3:39 PM

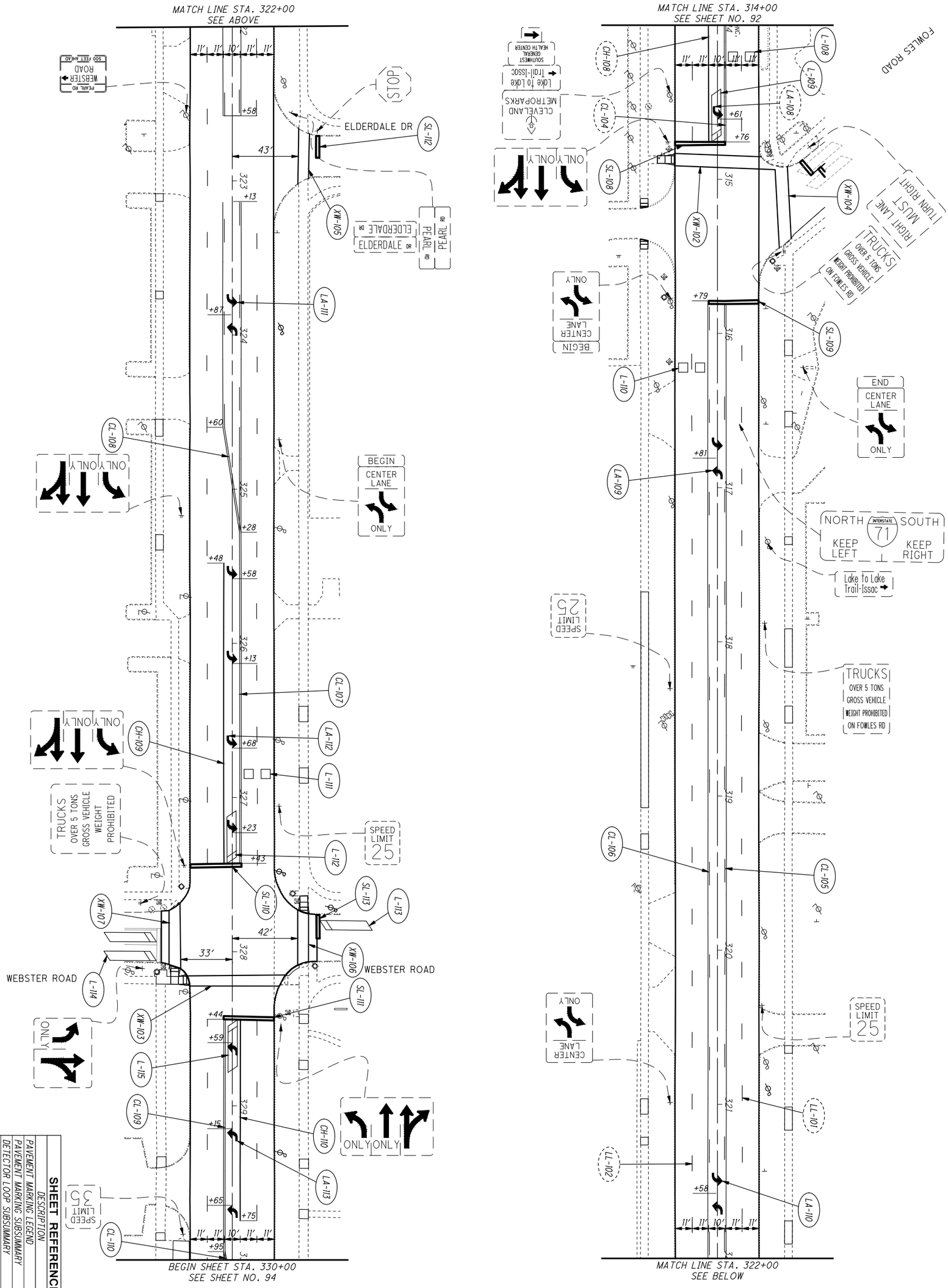


## SHEET REFERENCES

| DESCRIPTION | SHEET NO. |
|---|---|
| PAVEMENT MARKING LEGEND | 87 |
| PAVEMENT MARKING SUBSUMMARY | 76 |
| DETECTOR LOOP SUBSUMMARY | 86 |

| | | | | |
|---|---|---|---|---|
| 93 / 127 | CUY-US-042-4.29 | SIGNING AND PAVEMENT MARKING PLAN<br>STA. 314+00 TO STA. 330+00 | CALCULATED DP<br>CHECKED BT | 0 15 30 60<br>HORIZONTAL SCALE IN FEET |

P:\Middleburg Heights – City of\J20150340.000 Pearl Rd Rehab\Drawings\Trans\105726TP008.dwg 01–Mar–19 3:40 PM

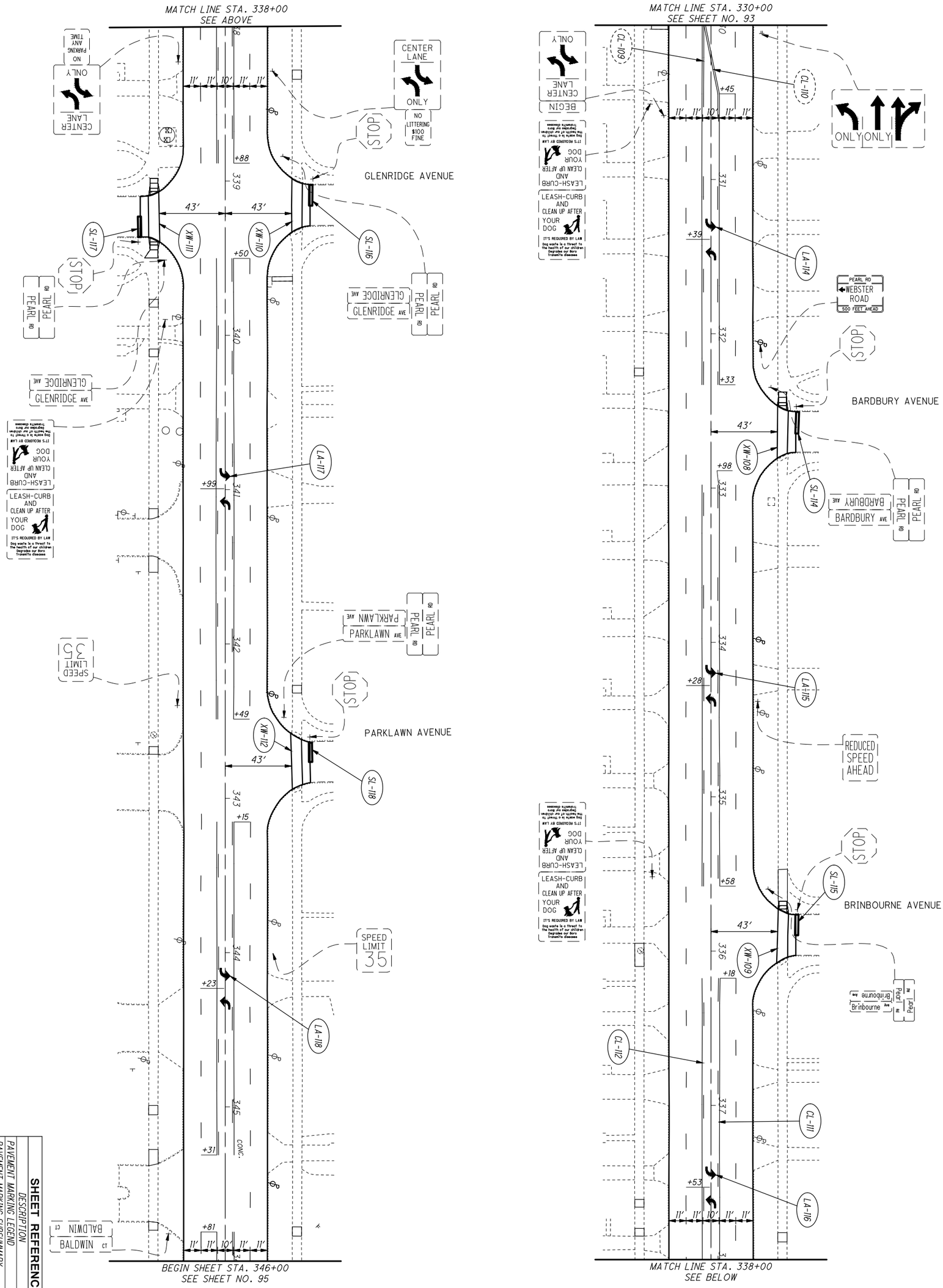


| SHEET REFERENCES | | |
|---|---|---|
| DESCRIPTION | SHEET NO. | |
| PAVEMENT MARKING LEGEND | 87 | |
| PAVEMENT MARKING SUBSUMMARY | 76 | |

94 / 127

**CUY-US-042-4.29**

**SIGNING AND PAVEMENT MARKING PLAN**
**STA. 330+00 TO STA. 346+00**

CALCULATED DP
CHECKED BT

0 15 30 60
HORIZONTAL SCALE IN FEET

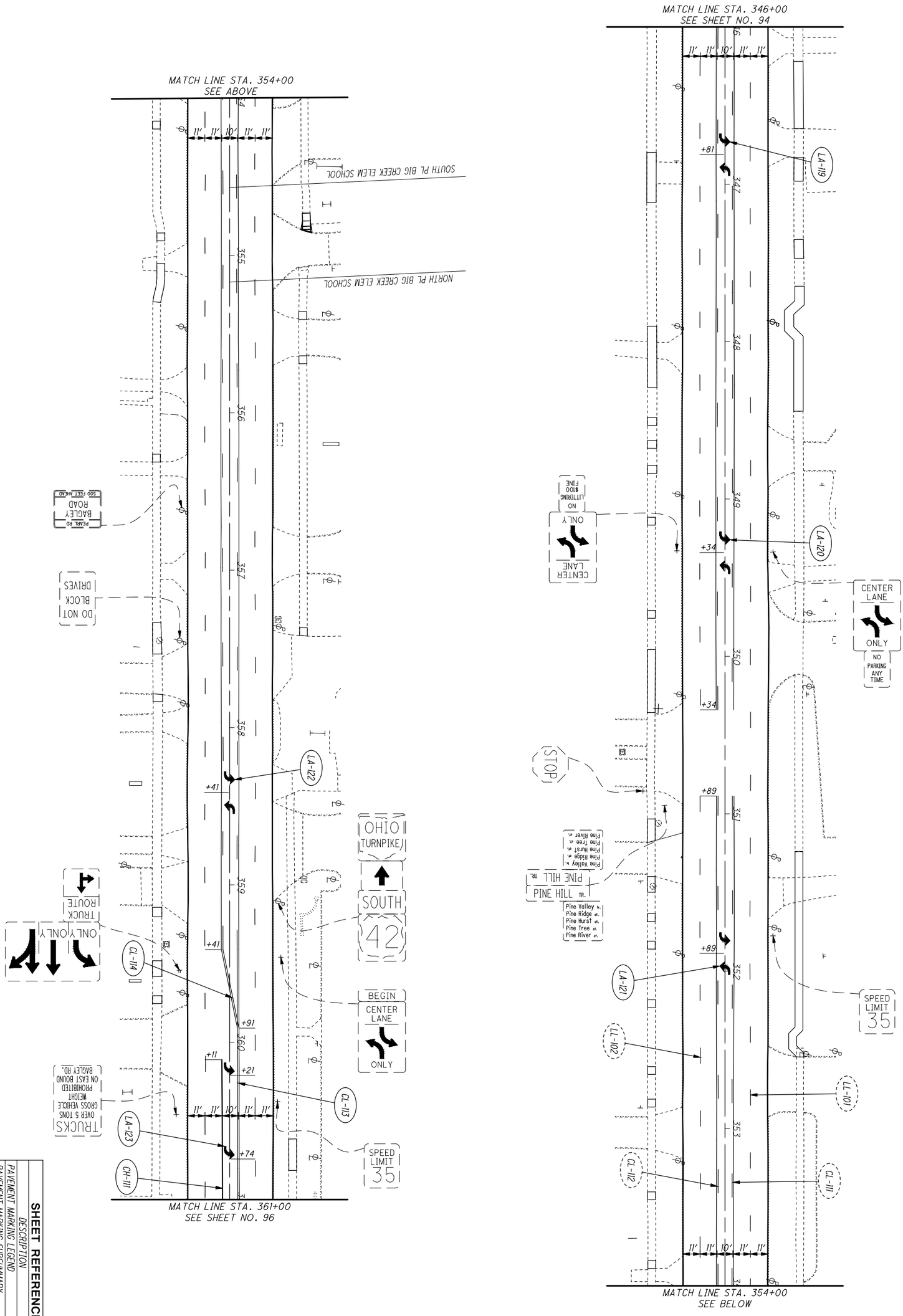


**SHEET REFERENCES**

| DESCRIPTION | SHEET NO. |
|---|---|
| PAVEMENT MARKING LEGEND | 87 |
| PAVEMENT MARKING SUBSUMMARY | 77 |

95 / 127

**CUY-US-042-4.29**

**SIGNING AND PAVEMENT MARKING PLAN**
**STA. 346+00 TO STA. 361+00**

CALCULATED DP
CHECKED BT

0 15 30 60
HORIZONTAL SCALE IN FEET

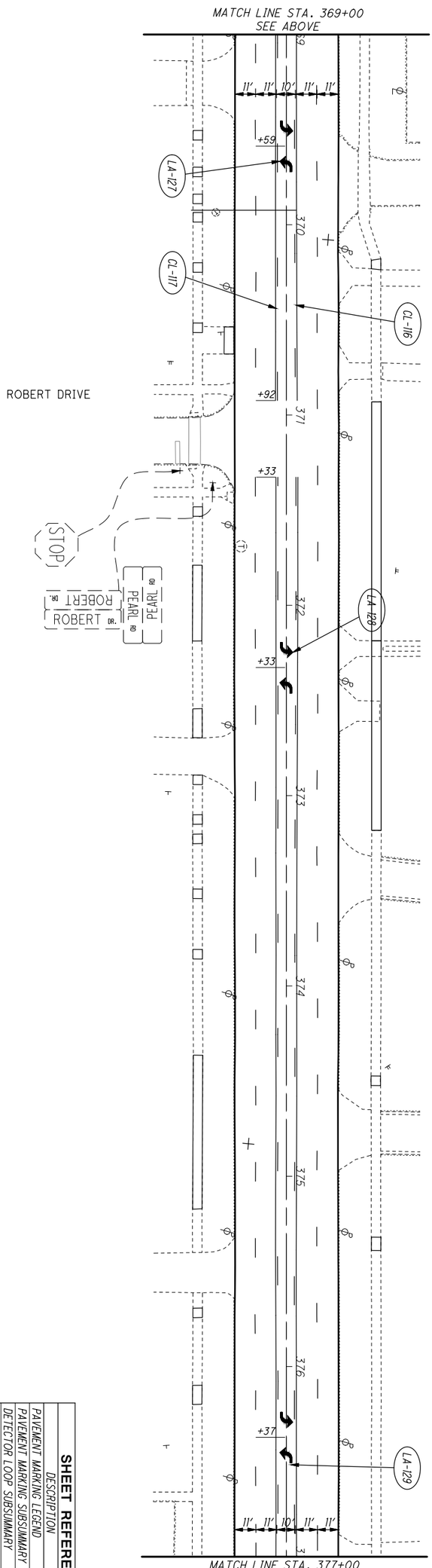


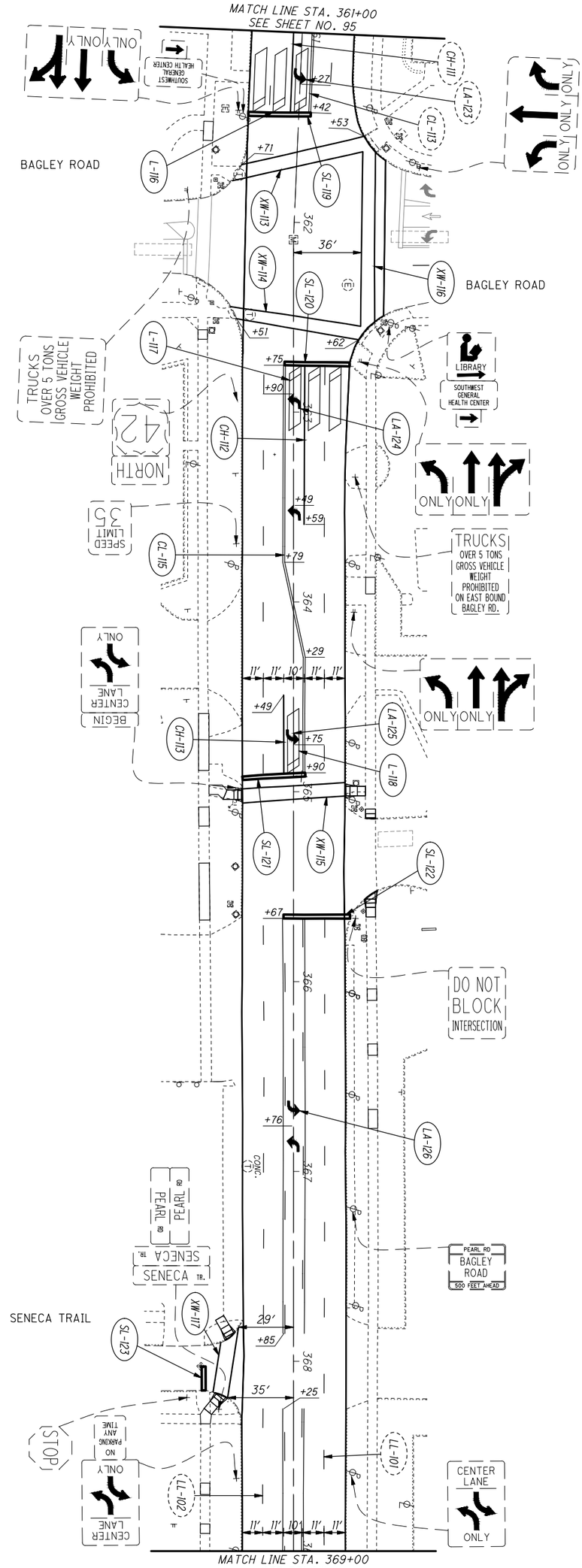


## SHEET REFERENCES

| DESCRIPTION | SHEET NO. |
|---|---|
| PAVEMENT MARKING LEGEND | 87 |
| PAVEMENT MARKING SUBSUMMARY | 77 |
| DETECTOR LOOP SUBSUMMARY | 86 |

96
127

**CUY-US-042-4.29**

# SIGNING AND PAVEMENT MARKING PLAN
## STA. 361+00 TO STA. 377+00

CALCULATED DP
CHECKED BT

0 15 30 60
HORIZONTAL SCALE IN FEET

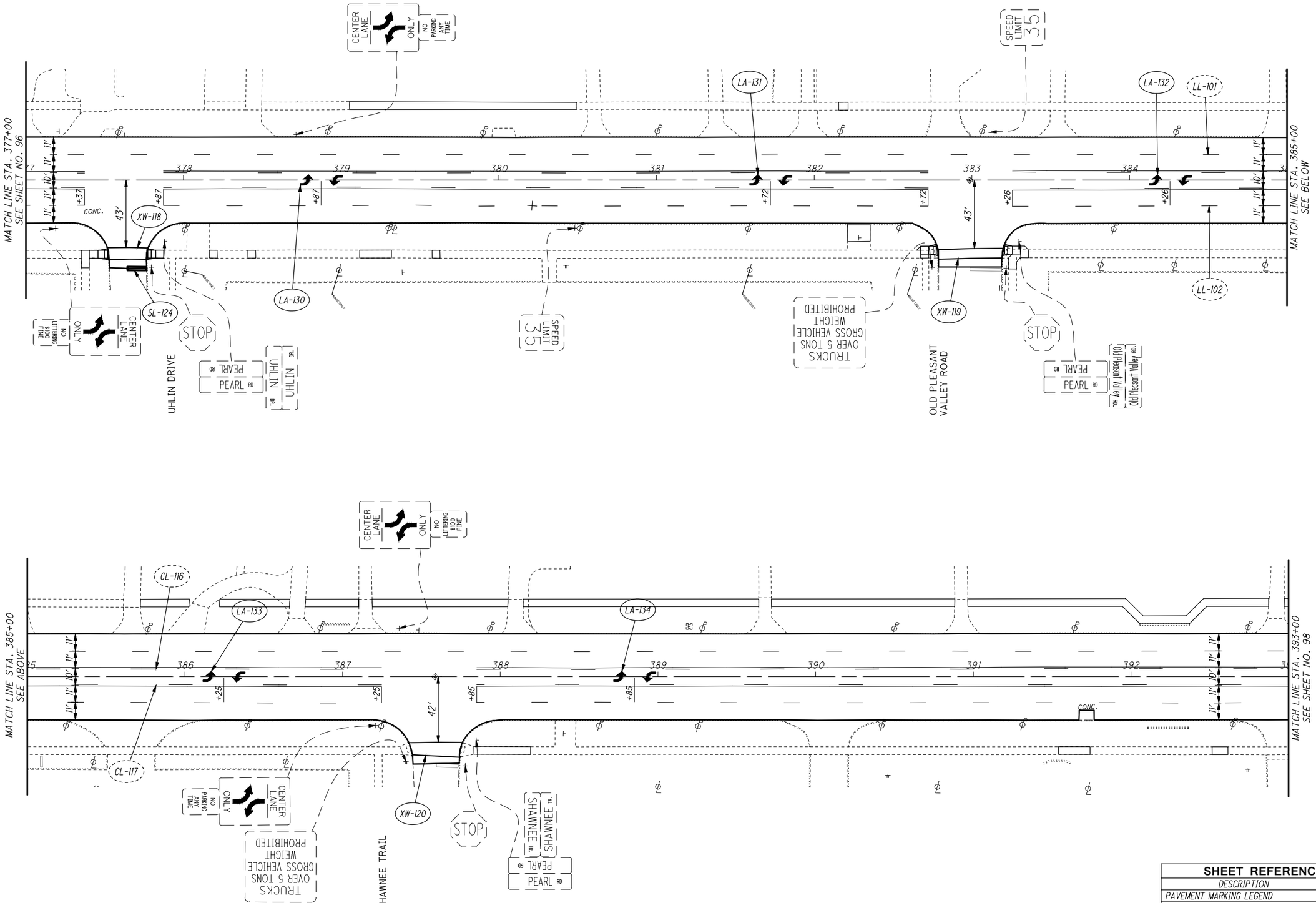


| SHEET REFERENCES | |
|---|---|
| DESCRIPTION | SHEET NO. |
| PAVEMENT MARKING LEGEND | 87 |
| PAVEMENT MARKING SUBSUMMARY | 77 |

HORIZONTAL SCALE IN FEET
0 15 30 60

CALCULATED DP
CHECKED BT

# SIGNING AND PAVEMENT MARKING PLAN
## STA. 377+00 TO STA. 393+00

CUY-US-042-4.29



P:\Middleburg Heights - City of\20150340.000 Pearl Rd Rehab\Drawings\Trans\105726TP011.dwg 01-Mar-19 3:42 PM

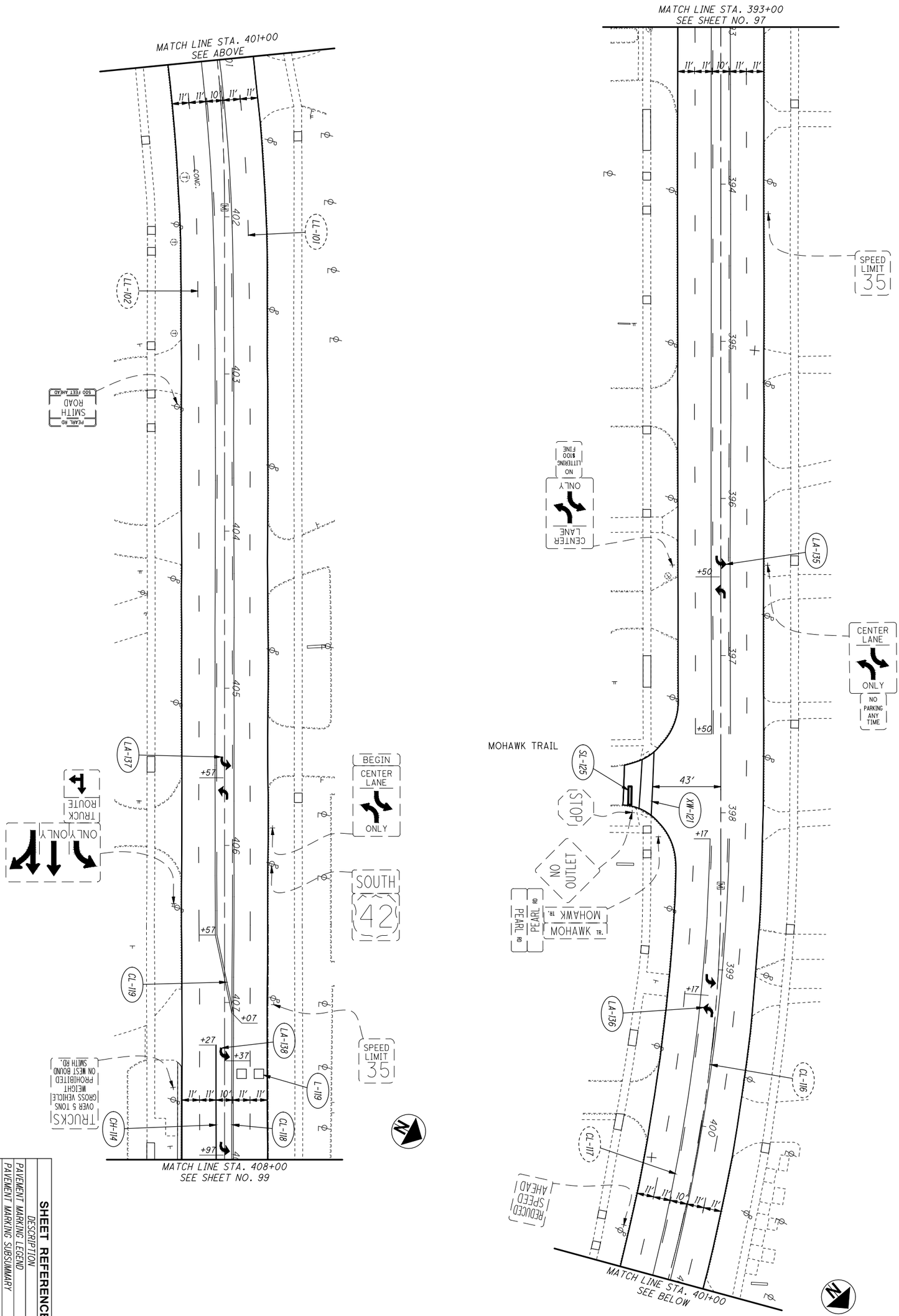


## SHEET REFERENCES

| DESCRIPTION | SHEET NO. |
|---|---|
| PAVEMENT MARKING LEGEND | 87 |
| PAVEMENT MARKING SUBSUMMARY | 78 |
| DETECTOR LOOP SUBSUMMARY | 86 |

98 / 127

**CUY-US-042-4.29**

# SIGNING AND PAVEMENT MARKING PLAN
## STA. 393+00 TO STA. 408+00

CALCULATED DP
CHECKED BT

0 15 30 60
HORIZONTAL SCALE IN FEET

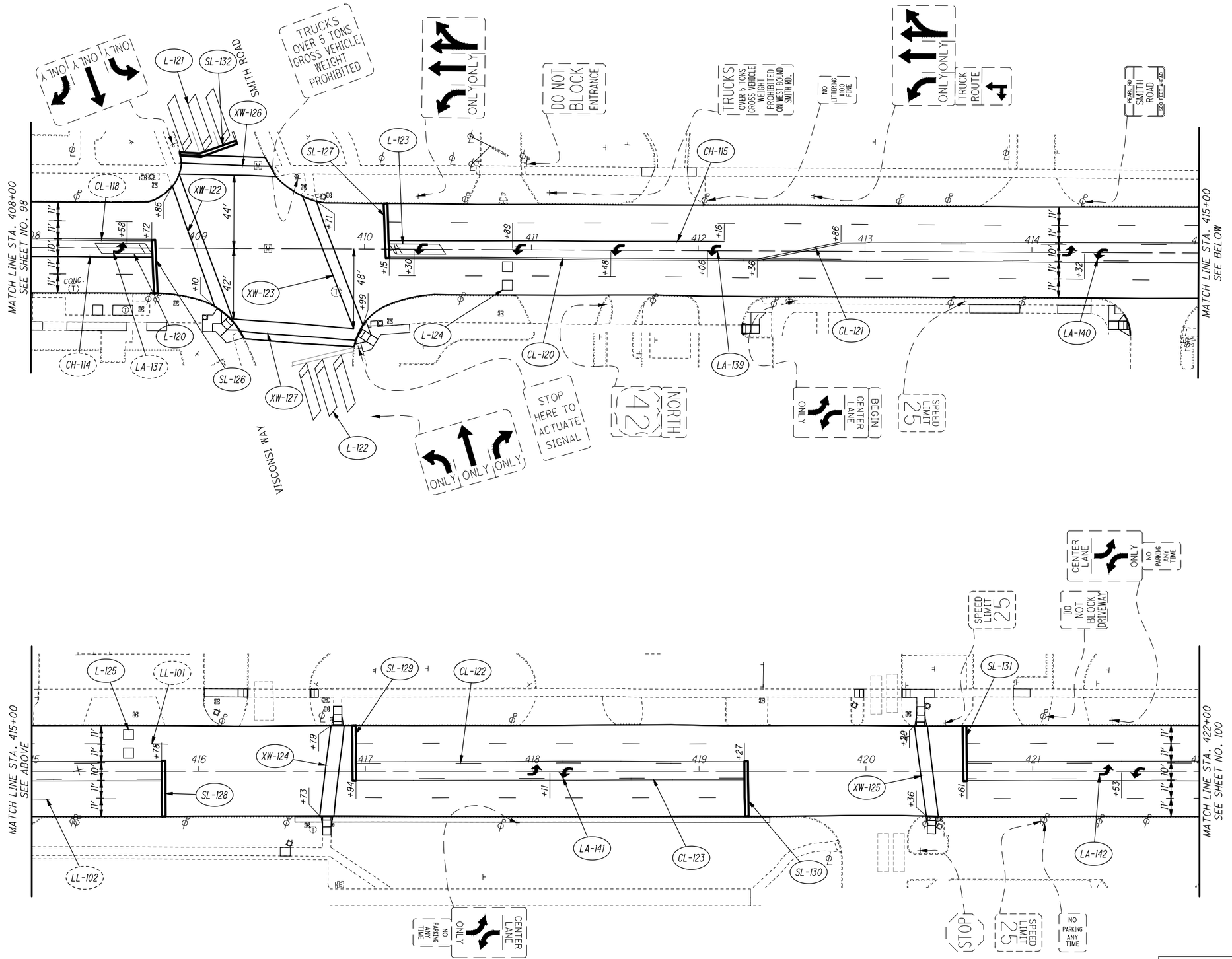


| SHEET REFERENCES | |
|---|---|
| DESCRIPTION | SHEET NO. |
| PAVEMENT MARKING LEGEND | 87 |
| PAVEMENT MARKING SUBSUMMARY | 78 |
| DETECTOR LOOP SUBSUMMARY | 86 |

0 15 30 60
HORIZONTAL SCALE IN FEET

CALCULATED DP
CHECKED BT

# SIGNING AND PAVEMENT PARKING PLAN
## STA. 408+00 TO STA. 422+00

CUY-US-042-4.29



P:\Middleburg Heights - City of\J20150340.000 Pearl Rd Rehab\Drawings\Trans\105726TP013.dwg 01-Mar-19 3:44 PM

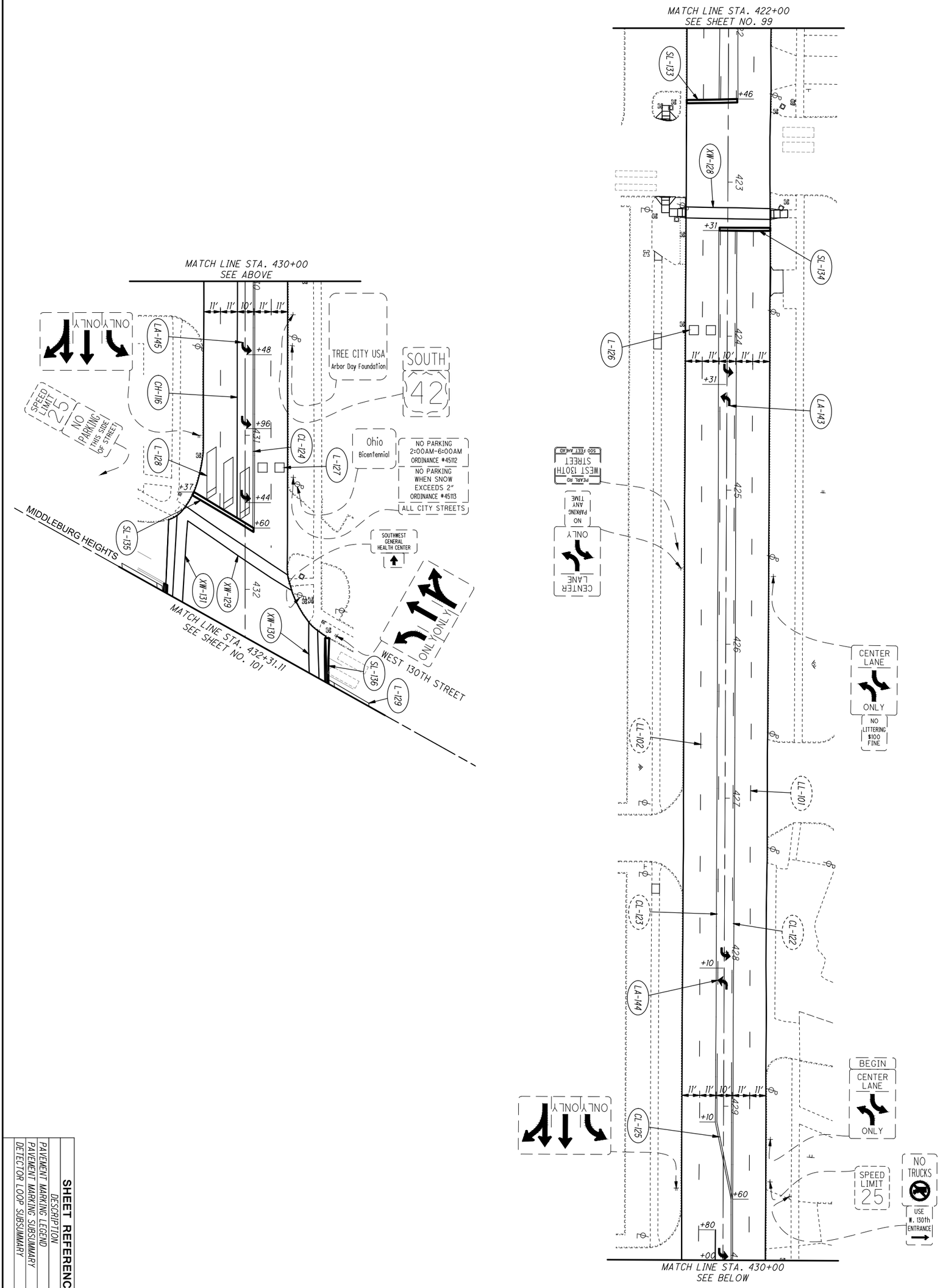


## SHEET REFERENCES

| DESCRIPTION | SHEET NO. |
|---|---|
| PAVEMENT MARKING LEGEND | 87 |
| PAVEMENT MARKING SUBSUMMARY | 78 |
| DETECTOR LOOP SUBSUMMARY | 86 |

100
127

**CUY-US-042-4.29**

**SIGNING AND PAVEMENT MARKING PLAN**
**STA. 422+00 TO STA. 432+31.11**

CALCULATED DP
CHECKED DP

0 15 30 60
HORIZONTAL SCALE IN FEET

P:\Middleburg Heights – City of\J20150340.000 Pearl Rd Rehab\Drawings\Trans\105726TP015.dwg 01–Mar–19 3:45 PM

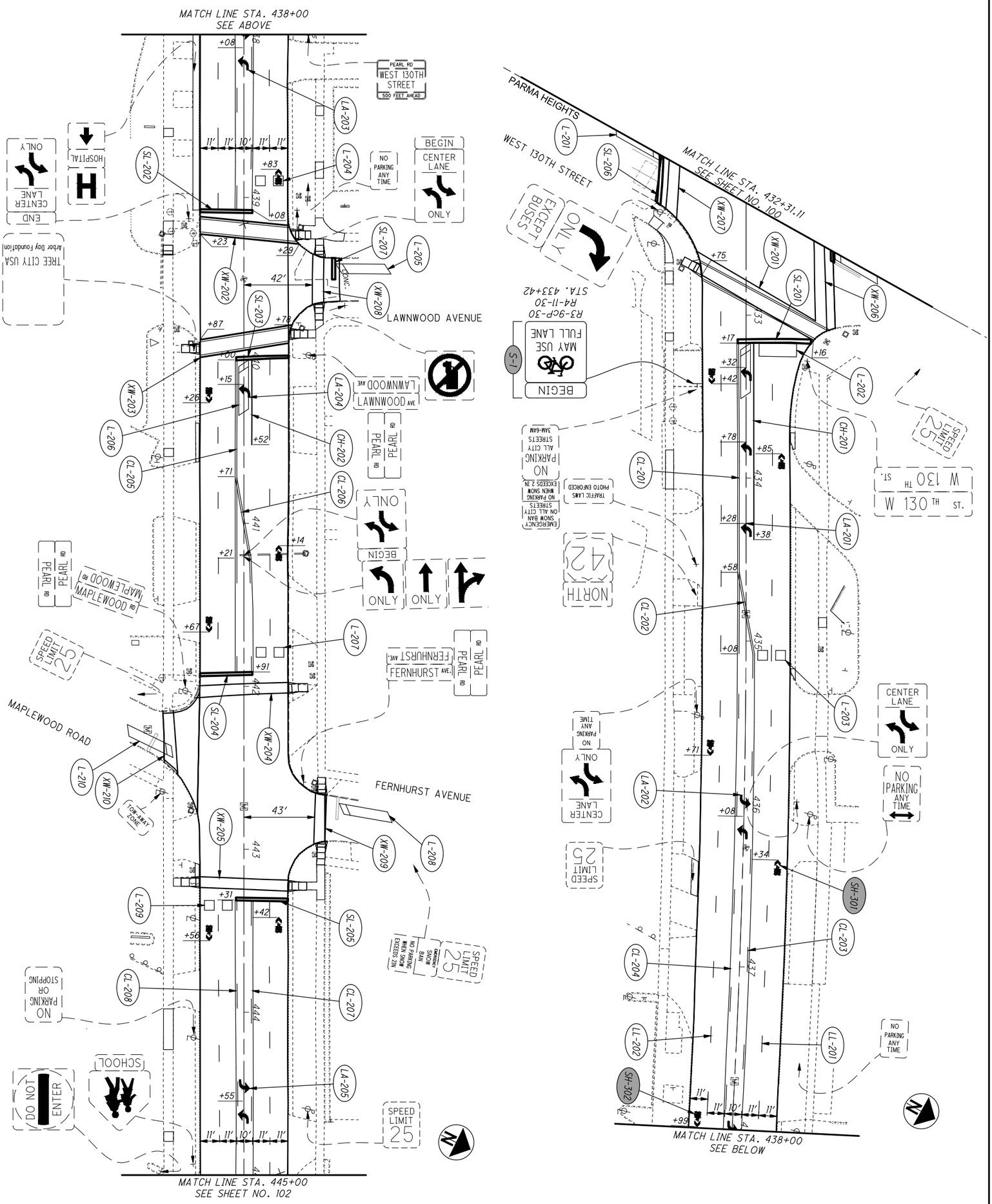


## SHEET REFERENCES

| SHEET NO. | DESCRIPTION |
|---|---|
| 87 | PAVEMENT MARKING AND SIGNING LEGEND |
| 79 | PAVEMENT MARKING SUBSUMMARY |
| 83 | PAVEMENT MARKING (TLCI) SUBSUMMARY |
| 85 | SIGNING SUBSUMMARY |
| 86 | DETECTOR LOOP SUBSUMMARY |

101
127

**CUY-US-042-4.29**

**SIGNING AND PAVEMENT MARKING PLAN**
**STA. 432+31.11 TO STA. 445+00**

CALCULATED DP
CHECKED BT

0 30 15 60
HORIZONTAL SCALE IN FEET

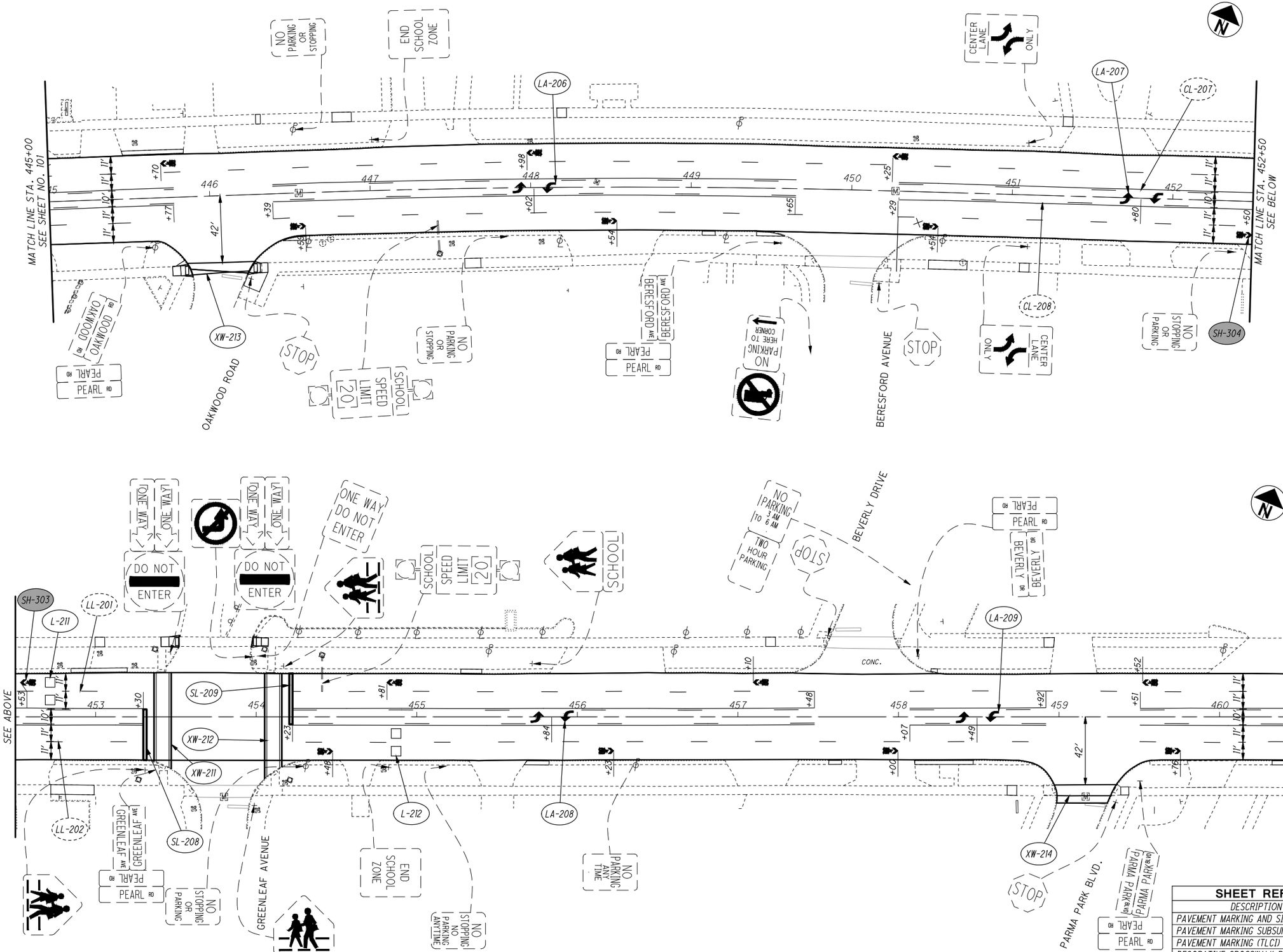


| SHEET REFERENCES | |
|---|---|
| DESCRIPTION | SHEET NO. |
| PAVEMENT MARKING AND SIGNING LEGEND | 87 |
| PAVEMENT MARKING SUBSUMMARY | 79 |
| PAVEMENT MARKING (TLCI) SUBSUMMARY | 83 |
| DECORATIVE CROSSWALK PAVEMENT MARKING DETAIL | 110 |

HORIZONTAL SCALE IN FEET 0 15 30 60

CALCULATED DP
CHECKED BT

# SIGNING AND PAVEMENT MARKING PLAN
## STA. 445+00 TO STA. 460+50

CUY-US-042-4.29



P:\Middleburg Heights - City of\J20150340.000 Pearl Rd Rehab\Drawings\Trans\105726TP016.dwg 01-Mar-19 3:46 PM

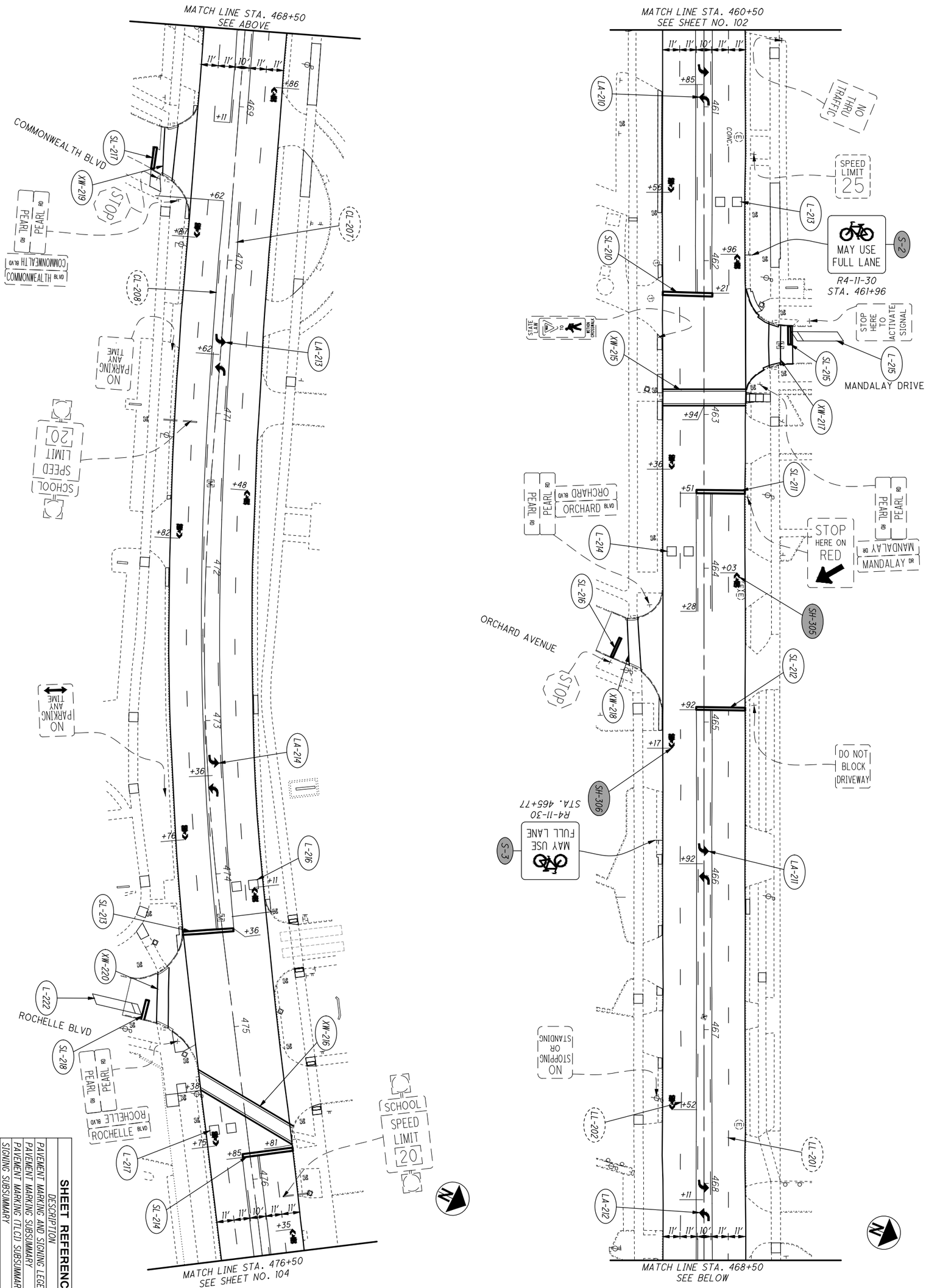


## SHEET REFERENCES

| DESCRIPTION | SHEET NO. |
|---|---|
| PAVEMENT MARKING AND SIGNING LEGEND | 87 |
| PAVEMENT MARKING SUBSUMMARY | 79-80 |
| PAVEMENT MARKING (TLCI) SUBSUMMARY | 83 |
| SIGNING SUBSUMMARY | 85 |

| | | | | |
|---|---|---|---|---|
| 103 / 127 | CUY-US-042-4.29 | SIGNING AND PAVEMENT MARKING PLAN<br>STA. 460+50 TO STA. 476+50 | CALCULATED DP<br>CHECKED BT | 0 15 30 60<br>HORIZONTAL SCALE IN FEET |

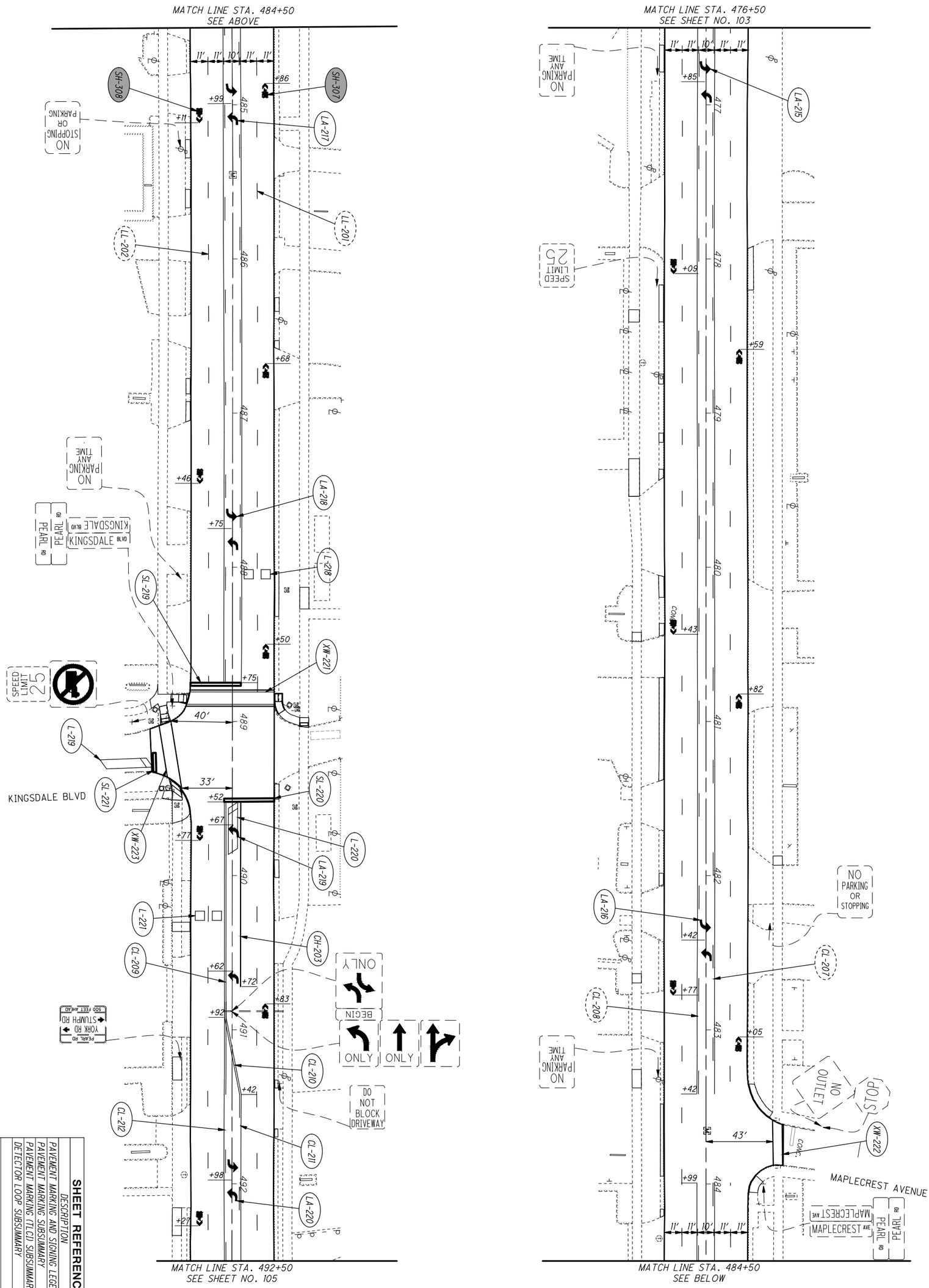


## SHEET REFERENCES

| DESCRIPTION | SHEET NO. |
|---|---|
| PAVEMENT MARKING AND SIGNING LEGEND | 87 |
| PAVEMENT MARKING SUBSUMMARY | 80 |
| PAVEMENT MARKING (TLCI) SUBSUMMARY | 83 |
| DETECTOR LOOP SUBSUMMARY | 86 |

104
127

**CUY-US-042-4.29**

**SIGNING AND PAVEMENT MARKING PLAN**
**STA. 476+50 TO STA. 492+50**

CALCULATED DP
CHECKED BT

0 15 30 60
HORIZONTAL SCALE IN FEET

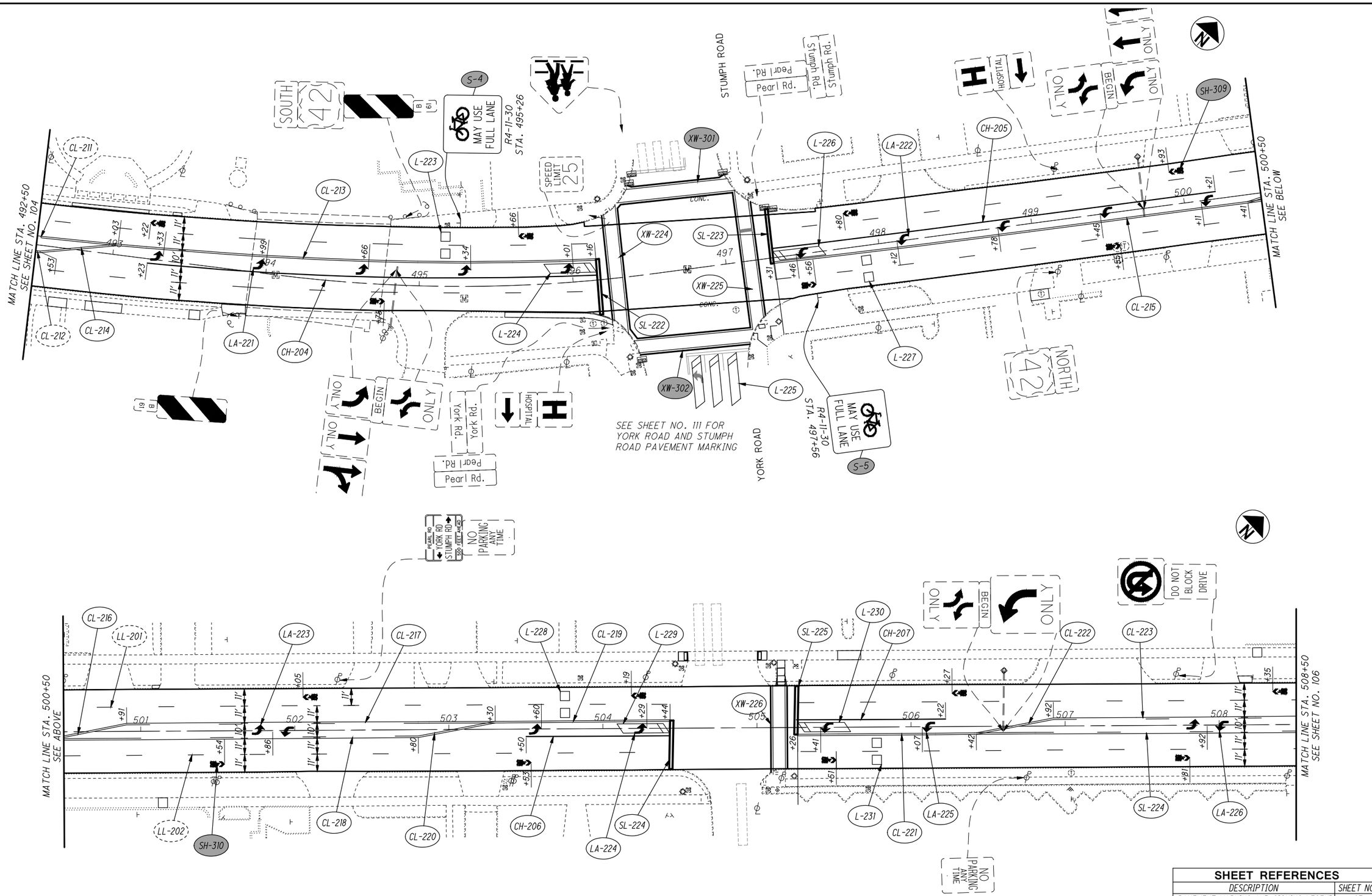


| SHEET REFERENCES | |
|---|---|
| DESCRIPTION | SHEET NO. |
| PAVEMENT MARKING AND SIGNING LEGEND | 87 |
| PAVEMENT MARKING SUBSUMMARY | 80-81 |
| PAVEMENT MARKING (TLCI) SUBSUMMARY | 83 |
| SIGNING SUBSUMMARY | 85 |
| DETECTOR LOOP SUBSUMMARY | 86 |
| DECORATIVE CROSSWALK PAVEMENT MARKING DETAIL | 110 |

HORIZONTAL SCALE IN FEET 0 15 30 60

CALCULATED DP
CHECKED DP

# SIGNING AND PAVEMENT MARKING PLAN
## STA. 492+50 TO STA. 508+50

CUY-US-042-4.29



P:\Middleburg Heights - City of\J20150340.000 Pearl Rd Rehab\Drawings\Trans\105726TP019.dwg 01-Mar-19 3:49 PM

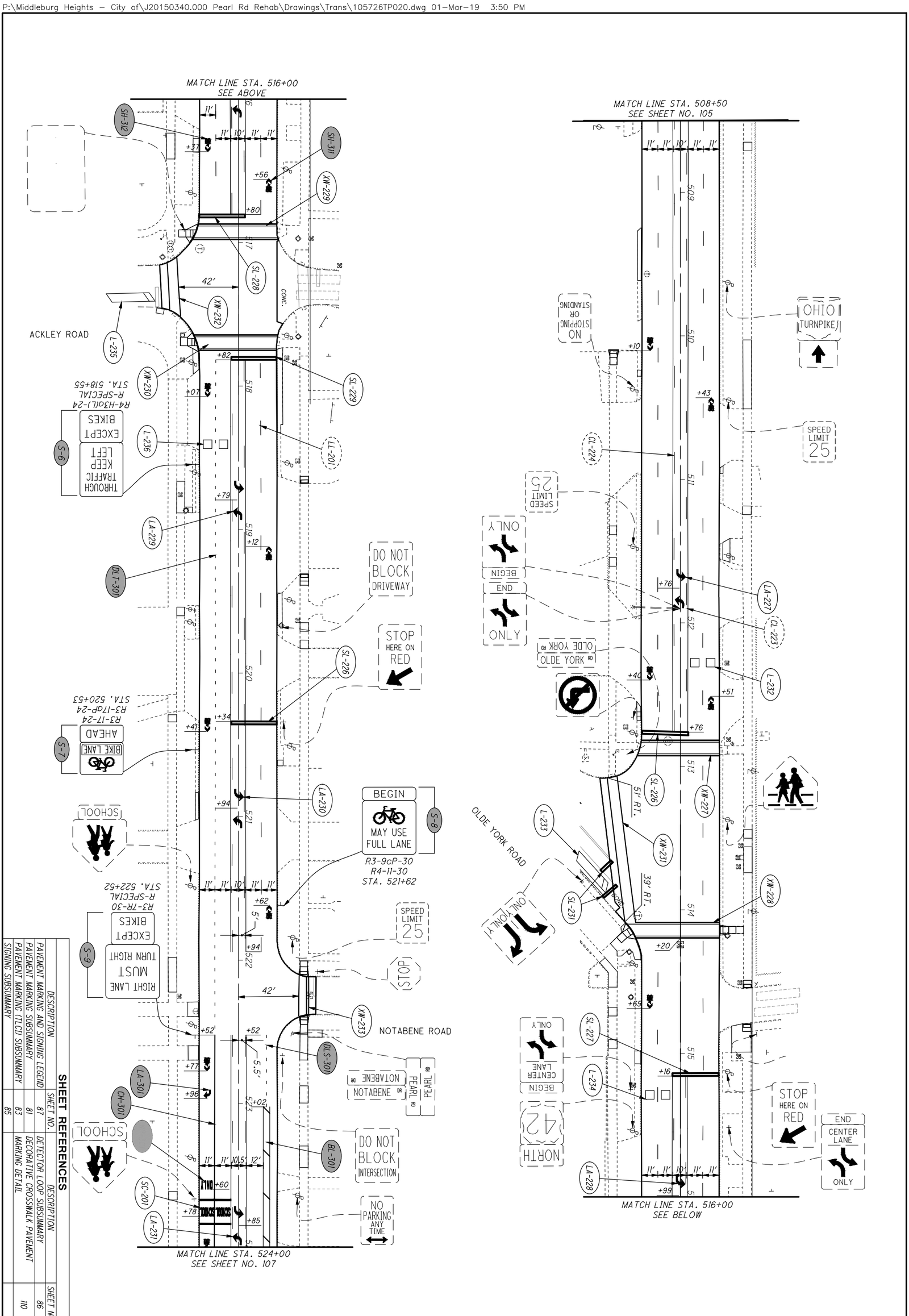


## SHEET REFERENCES

| SHEET NO. | DESCRIPTION | SHEET NO. | DESCRIPTION |
|---|---|---|---|
| 87 | PAVEMENT MARKING AND SIGNING LEGEND | 86 | DETECTOR LOOP SUBSUMMARY |
| 81 | PAVEMENT MARKING SUBSUMMARY | | DECORATIVE CROSSWALK PAVEMENT MARKING DETAIL |
| 83 | PAVEMENT MARKING (TLCI) SUBSUMMARY | | |
| 85 | SIGNING SUBSUMMARY | | |

106 / 127

**CUY-US-042-4.29**

**SIGNING AND PAVEMENT MARKING PLAN**
**STA. 508+50 TO STA. 524+00**

CALCULATED DP
CHECKED BT

0 15 30 60
HORIZONTAL SCALE IN FEET

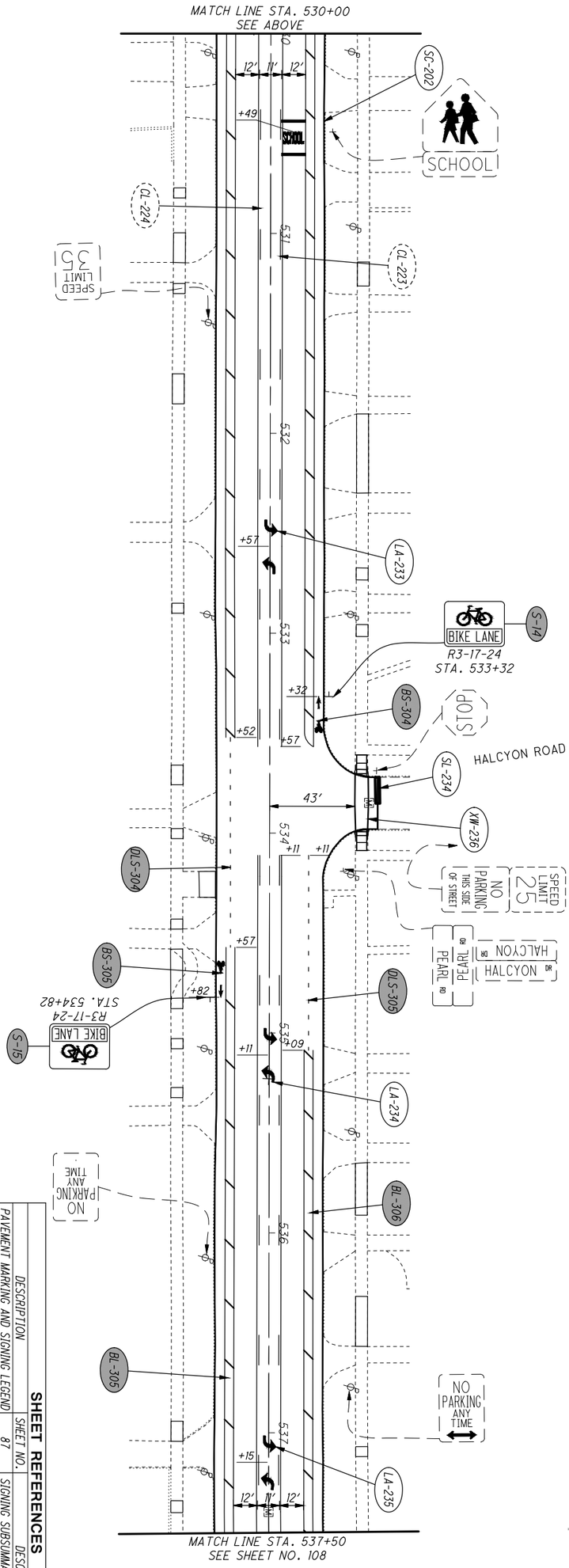


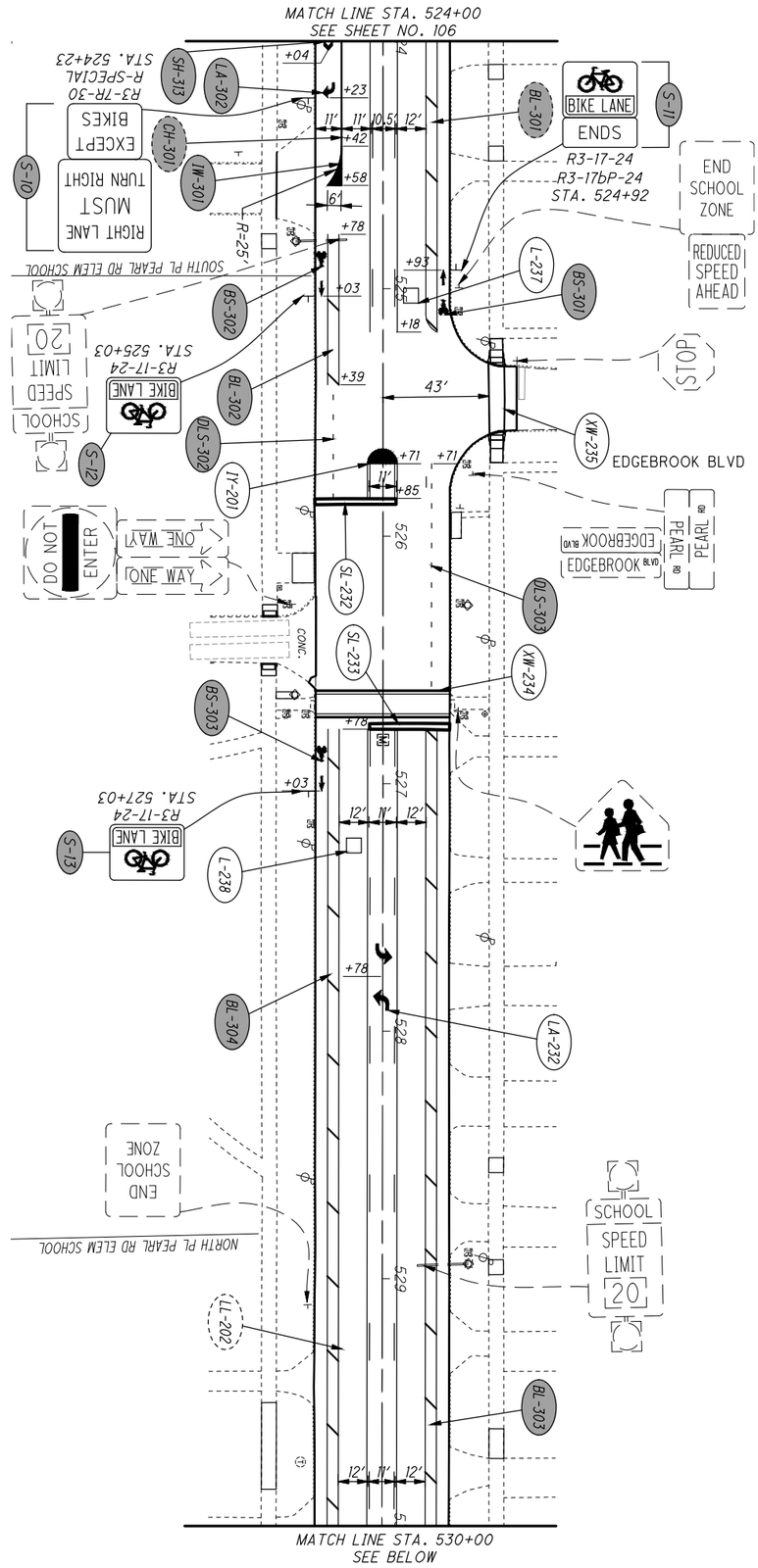


## SHEET REFERENCES

| SHEET NO. | DESCRIPTION | SHEET NO. | DESCRIPTION |
|---|---|---|---|
| 87 | PAVEMENT MARKING AND SIGNING LEGEND | 85 | SIGNING SUBSUMMARY |
| 81 | PAVEMENT MARKING SUBSUMMARY | 110 | BUFFERED BIKE LANE DETAIL |
| 83 | PAVEMENT MARKING (TLCI) SUBSUMMARY | | |



**CUY-US-042-4.29**

**SIGNING AND PAVEMENT MARKING PLAN**
**STA. 524+00 TO STA. 537+50**

CALCULATED DP
CHECKED BT
HORIZONTAL SCALE IN FEET 0 15 30 60

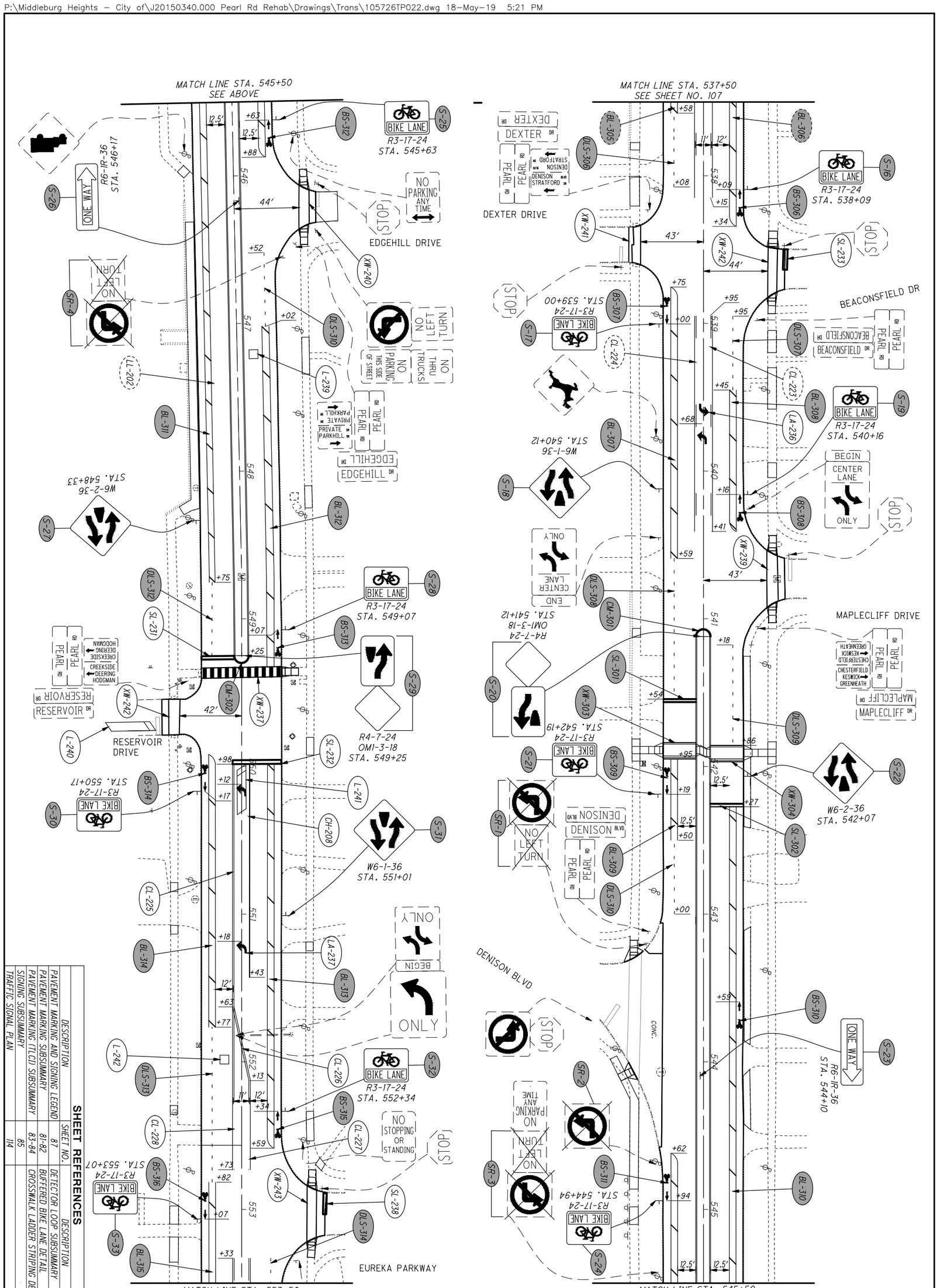


## SHEET REFERENCES

| DESCRIPTION | SHEET NO. | DESCRIPTION | SHEET NO. |
|---|---|---|---|
| PAVEMENT MARKING AND SIGNING LEGEND | 87 | DETECTOR LOOP SUBSUMMARY | 81 |
| PAVEMENT MARKING SUBSUMMARY | 81-82 | BUFFERED BIKE LANE DETAIL | 110 |
| PAVEMENT MARKING (TLCI) SUBSUMMARY | 83-84 | CROSSWALK LADDER STRIPING DETAIL | 110 |
| SIGNING SUBSUMMARY | 85 | | |
| TRAFFIC SIGNAL PLAN | 114 | | |

| | | | | |
|---|---|---|---|---|
| 108 / 127 | CUY-US-042-4.29 | SIGNING AND PAVEMENT MARKING PLAN<br>STA. 537+50 TO STA. 553+50 | CALCULATED DP<br>CHECKED BT | 0 15 30 60<br>HORIZONTAL SCALE IN FEET |

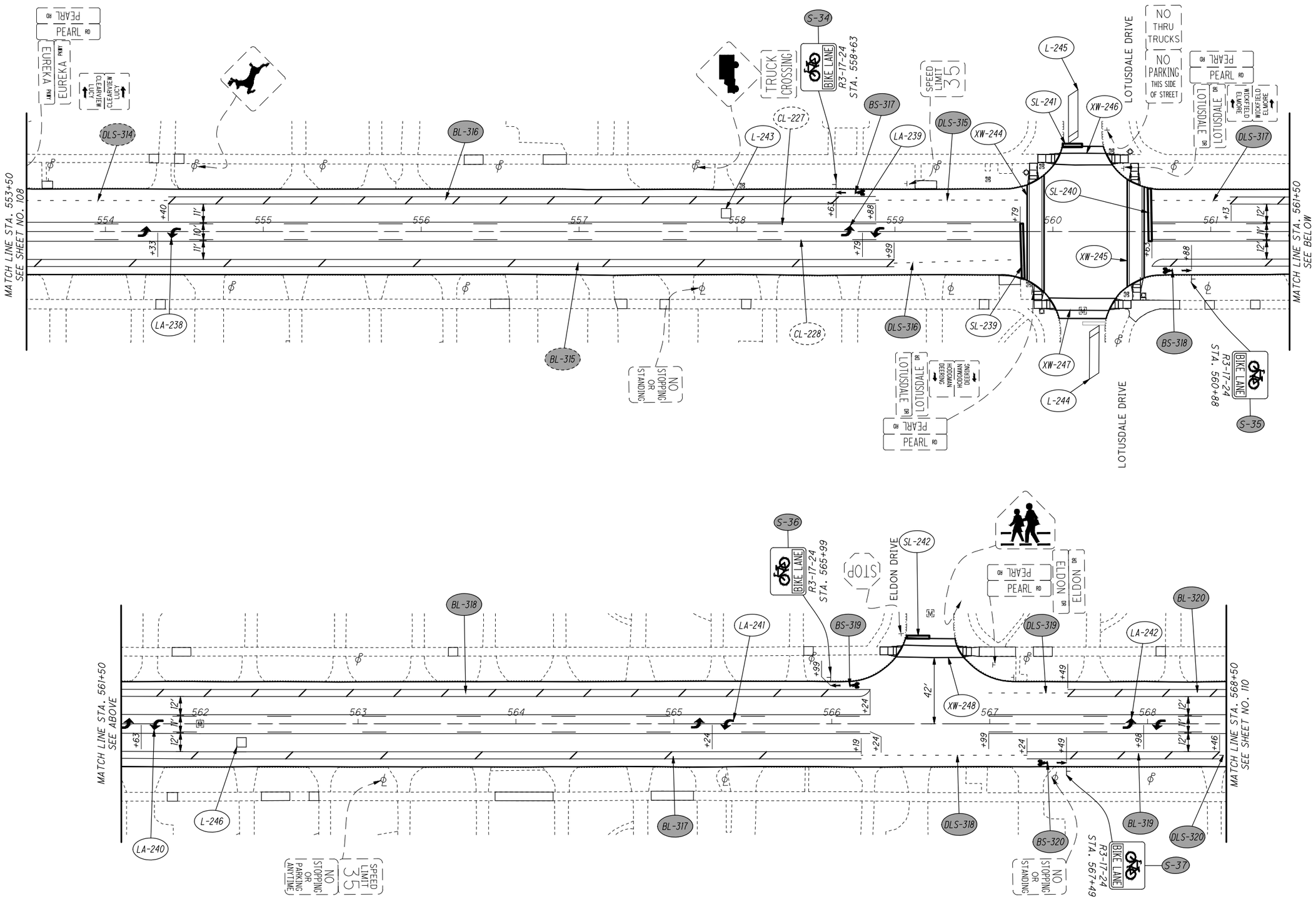


## SHEET REFERENCES

| DESCRIPTION | SHEET NO. | DESCRIPTION | SHEET NO. |
|---|---|---|---|
| PAVEMENT MARKING AND SIGNING LEGEND | 87 | SIGNING SUBSUMMARY | 85 |
| PAVEMENT MARKING SUBSUMMARY | 82 | DETECTOR LOOP SUBSUMMARY | 81 |
| PAVEMENT MARKING (TLCI) SUBSUMMARY | 84 | BUFFERED BIKE LANE DETAIL | 110 |

HORIZONTAL SCALE IN FEET
0 15 30 60

CALCULATED DP
CHECKED BT

# SIGNING AND PAVEMENT MARKING PLAN
## STA. 553+50 TO STA. 568+50

CUY-US-042-4.29



P:\Middleburg Heights - City of\J20150340.000 Pearl Rd Rehab\Drawings\Trans\105726TP023.dwg 18-May-19 5:22 PM

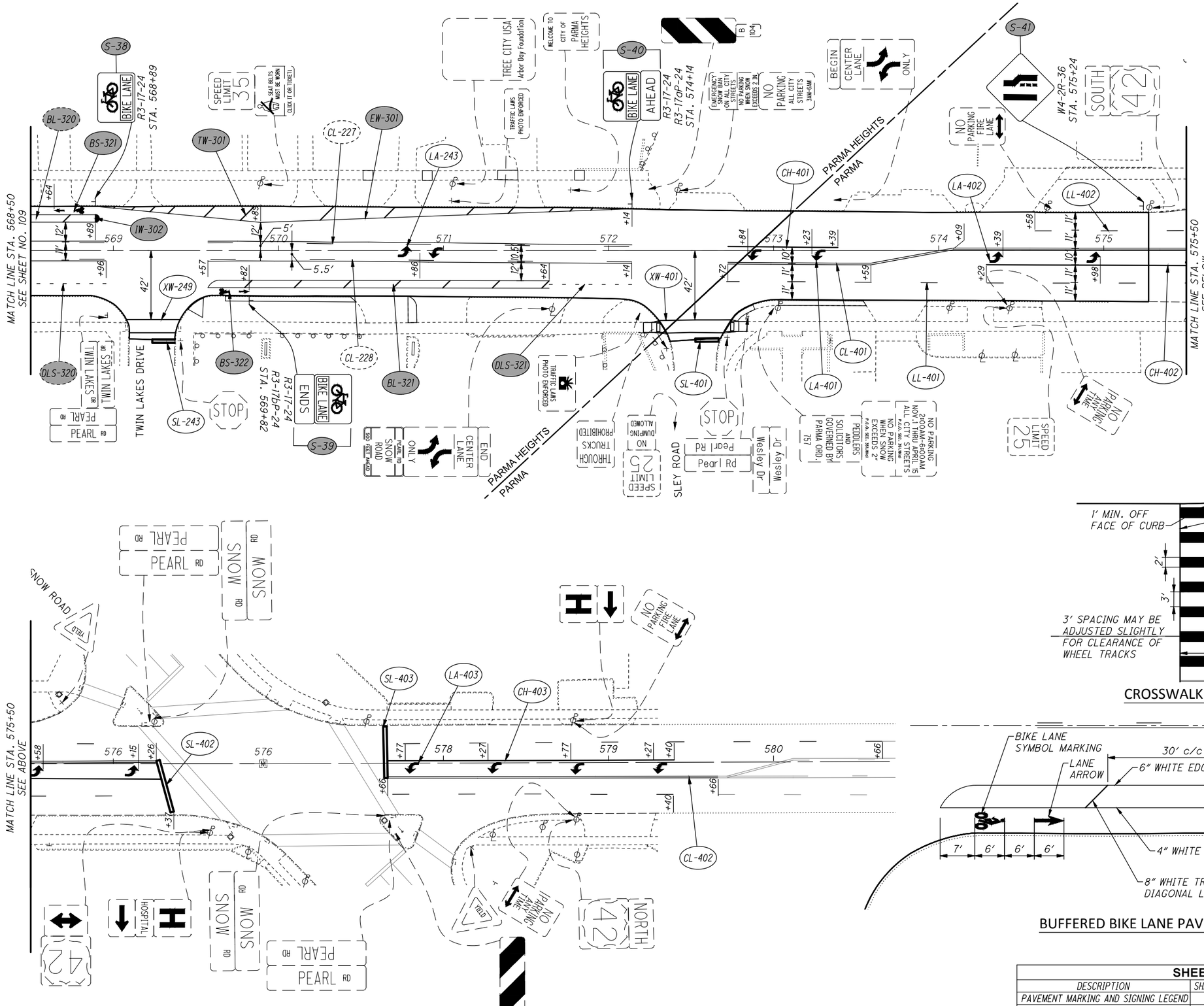


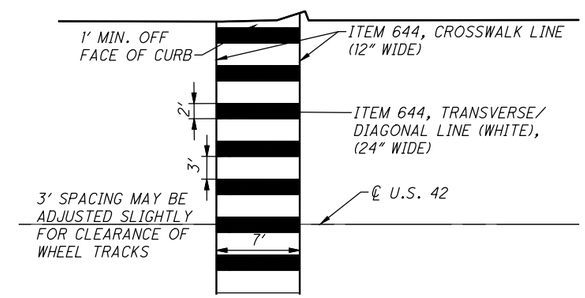


CROSSWALK LADDER MARKING DETAIL

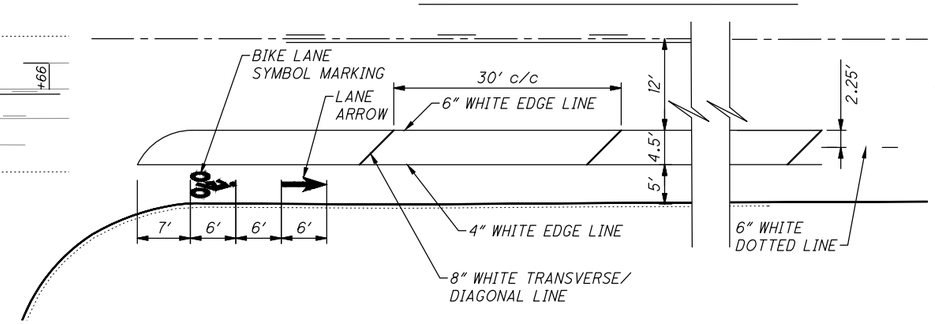


BUFFERED BIKE LANE PAVEMENT MARKING DETAILS

**SHEET REFERENCES**

| DESCRIPTION | SHEET NO. | DESCRIPTION | SHEET NO. |
|---|---|---|---|
| PAVEMENT MARKING AND SIGNING LEGEND | 87 | PAVEMENT MARKING (TLCI) SUBSUMMARY | 84 |
| PAVEMENT MARKING SUBSUMMARY | 82 | SIGNING SUBSUMMARY | 85 |

HORIZONTAL SCALE IN FEET: 0, 15, 30, 60

CALCULATED DP
CHECKED BT

# SIGNING AND PAVEMENT MARKING PLAN
## STA. 568+50 TO STA. 575+27.06

CUY-US-042-4.29



P:\Middleburg Heights - City of\20150340.000 Pearl Rd Rehab\Drawings\Trans\105726TP024.dwg 18-May-19 5:23 PM

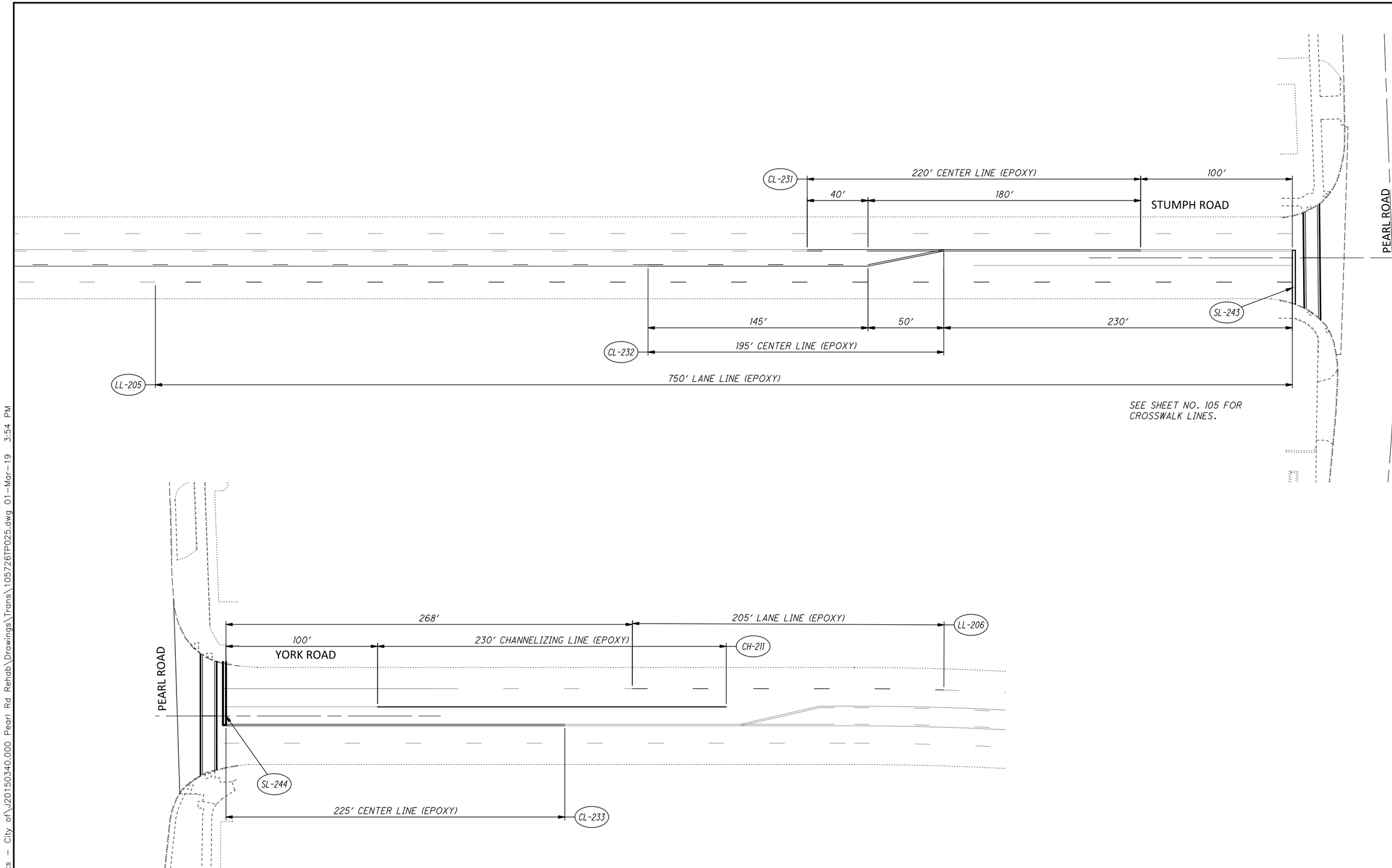


| SHEET REFERENCES | |
|---|---|
| DESCRIPTION | SHEET NO. |
| PAVEMENT MARKING AND SIGNING LEGEND | 87 |
| PAVEMENT MARKING SUBSUMMARY | 82 |
| | |
| | |

HORIZONTAL SCALE IN FEET
0 20 40 80

CALCULATED DP
CHECKED BT

# SIGNING AND PAVEMENT MARKING PLAN
# YORK ROAD AND STUMPH ROAD

CUY-US-042-4.29



P:\Middleburg Heights - City of\J20150340.000 Pearl Rd Rehab\Drawings\Trans\105726TP025.dwg 01-Mar-19 3:54 PM

POWER SUPPLY FOR TRAFFIC SIGNALS

ELECTRIC POWER SHALL BE OBTAINED FROM FIRST ENERGY AT THE LOCATION INDICATED ON THE PLANS. POWER SUPPLIED SHALL BE 120 VOLTS.

WORK INSPECTION

THE CONTRACTOR SHALL PROVIDE THE PROJECT ENGINEER AND DISTRICT TRAFFIC ENGINEER WITH 72 HOUR NOTICE OF ANY SIGNAL WORK TO BE PERFORMED SO THAT INSPECTION SERVICES CAN BE SUPPLIED.

ITEM 632, VEHICULAR SIGNAL HEAD (LED), BY TYPE, AS PER PLAN

IN ADDITION TO THE REQUIREMENTS OF C&MS 632 AND 732, THE FOLLOWING REQUIREMENTS SHALL APPLY:

1. SIGNAL HEADS AND VISORS SHALL BE CONSTRUCTED OF BLACK POLYCARBONATE PLASTIC WITH VISORS AS SPECIFIED AND MEET ITE SPECIFICATIONS.

2. PROPER EXTERIOR COLORS SHALL BE OBTAINED BY USE OF COLORED PLASTIC MATERIAL RATHER THAN PAINTING.

3. THE ENTRANCE FITTING SHALL BE OF THE TRI-STUD DESIGN WITH SERRATED RINGS IN ORDER TO ACHIEVE POSITIVE LOCKING.

4. ALL SIGNAL HEADS SHALL BE RIGIDLY MOUNTED TO THE MAST ARM WITH THE RED MODULE LOCATED IN FRONT OF THE MAST ARM.

5. ALUMINUM BACKPLATES SHALL BE IN ACCORDANCE WITH THE C&MS AND INCLUDE A FLUORESCENT YELLOW REFLECTIVE BORDER.

6. THE LIGHT EMITTING DIODE (LED) MODULES SHALL MEET THE REQUIREMENTS OF C&MS 732.04-C. THE CONTRACTOR SHALL PROVIDE ODOT, IN WRITING, WITH THE LED MANUFACTURER NAME, SERIAL NUMBER, PART NUMBER, DESCRIPTION OF LAMP, AND DATE OF MANUFACTURE FOR ALL LED UNITS THAT ARE TO BE USED IN THE SIGNAL HEAD PRIOR TO INSTALLATION, FOR ACCEPTANCE AND WARRANTY PURPOSES.

7. SIGNAL HEADS SHALL HAVE A MINIMUM WALL THICKNESS OF 0.117 INCHES.

8. SIGNAL HEADS SHALL INCLUDE CUTAWAY TYPE VISORS.

9. APPLY A BEAD OF SILICONE TO THE SIGNAL HEAD, WASHER, AND ENTRANCE ADAPTER SERRATIONS TO PREVENT WATER INTRUSION. ALSO, FILL THE SPACE BETWEEN CONCENTRIC SERRATION RINGS ON THE TOP OF THE SIGNAL HEAD TO COMPLETELY EXCLUDE WATER FROM THE SPACE BETWEEN THE CONCENTRIC RINGS.

10. BALANCE ADJUSTERS SHALL NOT BE USED ON ONE-WAY HEADS.

PAYMENT FOR ITEM 632 VEHICULAR SIGNAL HEAD, LED, BY TYPE, AS PER PLAN, SHALL BE MADE FOR COMPLETE SIGNAL HEAD FURNISHED AND INSTALLED, INCLUDING LABOR, EQUIPMENT, MATERIALS, AND NEW ATTACHMENT HARDWARE.

ITEM 632, COVERING OF VEHICULAR SIGNAL HEAD

COVER VEHICULAR SIGNAL HEADS BEFORE ENERGIZING THE SIGNALS. USE A STEADY OPAQUE COVERING MATERIAL SPECIFICALLY MADE FOR USE WITH TRAFFIC SIGNALS, AND ENSURE THAT THE COLOR OF THE COVER IS DIFFERENT THAT THE SIGNAL HEAD, TAN OR BEIGE, SO THAT IT IS CLEAR TO DRIVERS THE HEADS ARE COVERED, NOT DARK. USE A METHOD OF COVERING TO COVER ATTACHMENT AND MATERIALS, INCLUDING BACKPLATES, AS APPROVED BY THE ENGINEER. COVERS ARE TO BE FREE OF TEXT, PICTURES, OR ANY TYPE ADVERTISING. MAINTAIN COVERS, AND REMOVE THEM WHEN DIRECTED BY THE ENGINEER.

632 PEDESTRIAN SIGNAL HEAD (LED), COUNTDOWN, TYPE D2, AS PER PLAN

IN ADDITION TO THE REQUIREMENTS OF C&MS 632 AND 732, THE FOLLOWING SHALL APPLY:

1. SIGNAL HEADS AND VISORS SHALL BE CONSTRUCTED OF BLACK POLYCARBONATE PLASTIC AND MEET ITE SPECIFICATIONS.

2. PROPER EXTERIOR COLORS SHALL BE OBTAINED BY USE OF COLORED PLASTIC MATERIAL RATHER THAN PAINTING.

3. PIPE, SPACERS, AND FITTINGS CONSTRUCTED OF POLYCARBONATE PLASTIC MAY BE USED IN LIEU OF GALVANIZED STEEL OR ALUMINUM.

4. THE PEDESTRIAN SIGNAL HEAD SHALL BE OF THE LED COUNTDOWN TYPE.

5. NEW ATTACHMENT HARDWARE AND FITTINGS SHALL BE USED.

6. THE LIGHT EMITTING DIODE (LED) MODULES SHALL MEET THE REQUIREMENTS OF C&MS 732.04-C. THE CONTRACTOR SHALL PROVIDE ODOT, IN WRITING, WITH THE LED MANUFACTURER NAME, SERIAL NUMBER, PART NUMBER, DESCRIPTION OF LAMP, AND DATE OF MANUFACTURE FOR ALL LED UNITS THAT ARE TO BE USED IN THE SIGNAL HEAD PRIOR TO INSTALLATION, FOR ACCEPTANCE AND WARRANTY PURPOSES.

PAYMENT FOR ITEM 632 PEDESTRIAN SIGNAL HEAD, LED, COUNTDOWN, TYPE D2, AS PER PLAN, SHALL BE MADE FOR THE NUMBER OF COMPLETE SIGNAL HEAD FURNISHED AND INSTALLED, INCLUDING ALL LABOR, EQUIPMENT, MATERIALS, AND NEW ATTACHMENT HARDWARE.

GROUNDING AND BONDING

THE REQUIREMENTS OF THE CONSTRUCTION AND MATERIAL SPECIFICATIONS (C&MS) AND THE TC SERIES OF STANDARD CONSTRUCTION DRAWINGS ARE MODIFIED AS FOLLOWS:

1. ALL METALLIC PARTS CONTAINING ELECTRICAL CONDUCTORS SHALL BE PERMANENTLY JOINED TO FORM AN EFFECTIVE GROUND FAULT CURRENT PATH BACK TO THE GROUNDED CONDUCTOR IN THE POWER SERVICE DISCONNECT SWITCH.

   a. PROVIDE AN EQUIPMENT GROUNDING CONDUCTOR IN METALLIC CONDUITS (725.04) IN ADDITION TO THE CONDUCTORS SPECIFIED AND BOND THE CONDUIT TO THIS GROUNDING CONDUCTOR.
   b. WHEN AN EQUIPMENT GROUNDING CONDUCTOR IS REQUIRED IN PLASTIC CONDUIT (725.05), THE INSTALLATION SHALL INCLUDE A SEPARATE EQUIPMENT GROUNDING CONDUCTOR IN ADDITION TO THE CONDUCTORS SPECIFIED.
   c. METALLIC CONDUIT CARRYING THE LOOP WIRES FROM IN THE PAVEMENT TO THE PULL BOX SPLICE LOCATION WILL ONLY BE BONDED AT THE PULL BOX END, AND WILL NOT CONTAIN AN EQUIPMENT GROUNDING CONDUCTOR.
   d. IF MULTIPLE CONDUIT RUNS BEGIN AND END AT THE SAME POINTS, ONLY ONE EQUIPMENT GROUNDING CONDUCTOR IS REQUIRED.
   e. IF AN EQUIPMENT GROUNDING CONDUCTOR IS NEEDED IN CONDUIT BETWEEN SIGNALIZED INTERSECTIONS FOR UNDERGROUND INTERCONNECT CABLE, THE GROUNDING SYSTEM FOR EACH SIGNALIZED INTERSECTION WILL BE SEPARATED ABOUT MIDWAY BETWEEN THE INTERSECTIONS.
   f. THE MESSENGER WIRE AT SIGNALIZED INTERSECTIONS WILL BE USED AS THE CONDUCTIVE PATH FROM CORNER TO CORNER IF CONDUIT IS NOT PROVIDED UNDER THE ROADWAY. WHEN CONDUIT CONNECTS THE CORNERS OF AN INTERSECTION, AN EQUIPMENT GROUNDING CONDUCTOR SHALL BE USED IN THE CONDUIT.

2. CONDUITS.

   a. THE 725.04 CONDUIT SHALL HAVE GROUNDING BUSHINGS INSTALLED AT ALL TERMINATION POINTS. THE BUSHING MATERIAL SHALL BE COMPATIBLE WITH GALVANIZED STEEL CONDUIT AND THE GROUNDING LUG MATERIAL SHALL BE COMPATIBLE FOR USE WITH COPPER WIRE. THREADED OR COMPRESSION TYPE BUSHINGS MAY BE USED.
   b. THE 725.05 CONDUIT SHALL HAVE THE INSIDE AND OUTSIDE DIAMETERS OF THE CONDUIT DEBURRED AT ALL TERMINATION POINTS.
   c. BOTH ENDS OF METALLIC CONDUIT SHALL BE BONDED TO THE EQUIPMENT GROUNDING CONDUCTOR.
   d. METALLIC CONDUIT MAY BE BONDED TO METALLIC BOXES THROUGH THE USE OF CONDUIT FITTINGS UL APPROVED FOR THIS TYPE OF CONNECTION, WITH THE BOX BONDED TO THE EQUIPMENT GROUNDING CONDUCTOR.

3. WIRE FOR GROUNDING AND BONDING.

   a. USE INSULATED, COPPER WIRE FOR THE EQUIPMENT GROUNDING CONDUCTOR. BONDING JUMPERS IN BOXES AND ENCLOSURES MAY BE BARE OR INSULATED COPPER WIRE. WIRE SIZE SHALL BE AS FOLLOWS:
      I. USE 4 AWG BETWEEN THE POWER SERVICE AND SUPPORTS, POLES, PEDESTALS, CONTROLLER OR FLASHER CABINETS.
      II. THE INSULATION SHALL BE GREEN OR GREEN WITH YELLOW STRIPE(S). FOR 4 AWG OR LARGER, INSULATION MAY ALSO BE BLACK WITH GREEN TAPE/LABELS INSTALLED AT ALL ACCESS POINTS.

4. GROUND ROD.

   a. A 3/4 INCH SCHEDULE 40 PVC CONDUIT WILL BE USED IN FOUNDATIONS AND CONCRETE WALLS FOR THE GROUNDING CONDUCTOR (GROUND WIRE) RACEWAY TO THE GROUND ROD. SHOULD METALLIC CONDUIT BE USED, BOTH ENDS OF THE CONDUIT SHALL BE BONDED TO THE GROUNDING CONDUCTOR.
   b. THE TYPICAL GROUNDING CONDUCTOR (GROUND WIRE) SHALL BE 4 AWG INSULATED, COPPER.

5. THE GREEN CONDUCTOR IN SIGNAL CABLES (CONDUCTOR #4) SHALL NOT BE USED TO SUPPLY POWER TO A SIGNAL INDICATION. IT WILL BE CONNECTED TO THE SIGNAL BODY AS AN EQUIPMENT GROUND IN ALUMINUM HEADS AND IT WILL BE UNUSED IN PLASTIC HEADS. UNUSED CONDUCTORS SHALL BE GROUNDED IN THE CABINET. TYPICAL USE OF CONDUCTORS IS AS FOLLOWS:

| COND. NO. | VEHICLE COLOR | PEDESTRIAN SIGNAL | SIGNAL |
|---|---|---|---|
| 1 | BLACK | GREEN BALL | #1 WALK |
| 2 | WHITE | AC NEUTRAL | AC NEUTRAL |
| 3 | RED | RED BALL | #1 DW/FDW |
| 4 | GREEN | EQUIPMENT GROUND | EQUIPMENT GROUND |
| 5 | ORANGE | YELLOW BALL | #2 DW/FDW |
| 6 | BLUE | GREEN ARROW | #2 WALK |
| 7 | WHITE/ BLACK STRIPE | YELLOW ARROW | NOT USED |

6. POWER SERVICE AND DISCONNECT SWITCH.

   a. AT THE POWER SERVICE LOCATION, THE GROUNDING CONDUCTOR (GROUND WIRE) FROM THE DISCONNECT SWITCH NEUTRAL (AC-) BAR TO THE GROUND ROD SHALL BE A CONTINUOUS, UNSPLICED CONDUCTOR. IF SPLICED, IT SHALL BE AN EXOTHERMIC WELD BUTT SPLICE.
   b. THE SERVICE NEUTRAL (AC-) SHALL ONLY BE CONNECTED TO GROUND AT THE PRIMARY POWER SERVICE DISCONNECT SWITCH.

   i. NEMA CONTROLLER CABINETS: IF A POWER SERVICE DISCONNECT SWITCH IS LOCATED BEFORE THE CONTROLLER CABINET, THE NEUTRAL (AC-) AND THE GROUNDING BARS IN THE CONTROLLER CABINET SHALL NOT BE CONNECTED TOGETHER AS SHOWN IN NEMA TS-2, FIGURE 5-4.
   ii. IF SECONDARY DISCONNECT SWITCHES ARE CONNECTED AFTER THE PRIMARY DISCONNECT SWITCH, THE NEUTRAL (AC-) SHALL ONLY BE GROUNDED AT THE PRIMARY SWITCH. EQUIPMENT GROUNDING CONDUCTORS SHALL BE BROUGHT TO THE PRIMARY SWITCH, BUT SHALL BE GROUNDED AT BOTH SECONDARY AND PRIMARY SWITCHES.

7. PAYMENT - ALL MATERIALS AND WORK REQUIRED TO COMPLETE THE EFFECTIVE GROUND FAULT CURRENT PATH SYSTEM ARE INCIDENTAL TO THE CONDUCTORS INSTALLED BY CONTRACT.

ITEM 632, SIGNAL SUPPORT FOUNDATIONS

PRIOR TO ORDERING SIGNAL SUPPORTS, THE CONTRCATOR SHALL CONTACT OUPS TO HAVE ALL UTILITIES LOCATED IN THE FIELD THE MEET WITH THE PROJECT ENGINEER TO LOCATE THE PROPOSED SUPPORT LOCATIONS TO INSURE THERE ARE NO CONFLICTS WITH UTILITIES. IF THERE ARE ISSUES, THE PROJECT ENGINEER SHALL PROVIDE GUIDANCE AS TO THE RELOCATION OF THE SUPPORT POLES.

PAYMENT WILL BE AT THE CONTRACT UNIT PRICE AND WILL BE FULL COMPENSATION FOR ALL LABOR, MATERIALS, TOOLS, EQUIPMENT, AND OTHER INCIDENTALS NECESSARY FOR EACH SUPPORT FURNISHED, IN PLACE, COMPLETE AND ACCEPTED.

ITEM 633, CONTROLLER UNIT, TYPE TS2/A2, WITH CABINET, TYPE TS2, AS PER PLAN

IN ADDITION TO THE REQUIREMENTS OF ODOT C&MS 633, THE UNIT PRICE BID FOR THIS ITEM SHALL INCLUDE ALL LABOR, MATERIAL, AND OTHER COSTS NECESSARY TO COORDINATE THE NEW CONTROLLER WITH THE EXISTING COORDINATION TIMING ALONG U.S. 42. ALL COORDINATION FOR THIS WORK SHALL BE MADE WITH THE CITY OF PARMA HEIGHTS SERVICE DEPARTMENT.

GUARANTEE

*THE CONTRACTOR SHALL GUARANTEE THAT THE TRAFFIC CONTROL SYSTEM INSTALLED AS PART OF THIS CONTRACT SHALL OPERATE SATISFACTORILY FOR A PERIOD OF 90 DAYS FOLLOWING COMPLETION OF THE 10-DAY PERFORMANCE TEST. IN THE EVENT OF UNSATISFACTORY OPERATION, THE CONTRACTOR SHALL CORRECT FAULTY INSTALLATIONS, MAKE REPAIRS, AND REPLACE DEFECTIVE PARTS WITH NEW PARTS OF EQUAL OR BETTER QUALITY.*

*EQUIPMENT, MATERIAL, AND LABOR COSTS INCURRED IN CORRECTING AN UNSATISFACTORY OPERATION SHALL BE BORNE BY THE CONTRACTOR.*

*THE GUARANTEE SHALL COVER THE FOLLOWING ITEMS OF THE TRAFFIC CONTROL SYSTEM: CONTROLLER, CABINET, LED LAMP UNITS, AND COMMUNICATION/INTERCONNECT EQUIPMENT.*

*CUSTOMARY MANUFACTURER'S GUARANTEES FOR THE FOREGOING ITEMS SHALL BE TURNED OVER TO THE CITY OF PARMA HEIGHTS FOLLOWING ACCEPTANCE OF THE EQUIPMENT.*

*THE COST OF GUARANTEEING THE TRAFFIC CONTROL SYSTEM WILL BE INCIDENTAL TO AND INCLUDED IN THE CONTRACT UNIT PRICE OF THE VARIOUS ITEMS MAKING UP THE SYSTEM.*

ITEM 632, INTERCONNECT CABLE, MISC.: 6 PAIR, NO. 19 AWG, SOLID, REA (PE-39)

*SPLICES SHALL OCCUR ONLY AT THE TERMINAL END OF THE HARDWARE INTERFACE PANEL OR WITHIN WEATHERTIGHT SPLICE ENCLOSURE. NO OTHER SPLICES SHALL BE PERMITTED.*



CALCULATED DP
CHECKED BT

TRAFFIC SIGNAL GENERAL NOTES

CUY-US-042-4.29

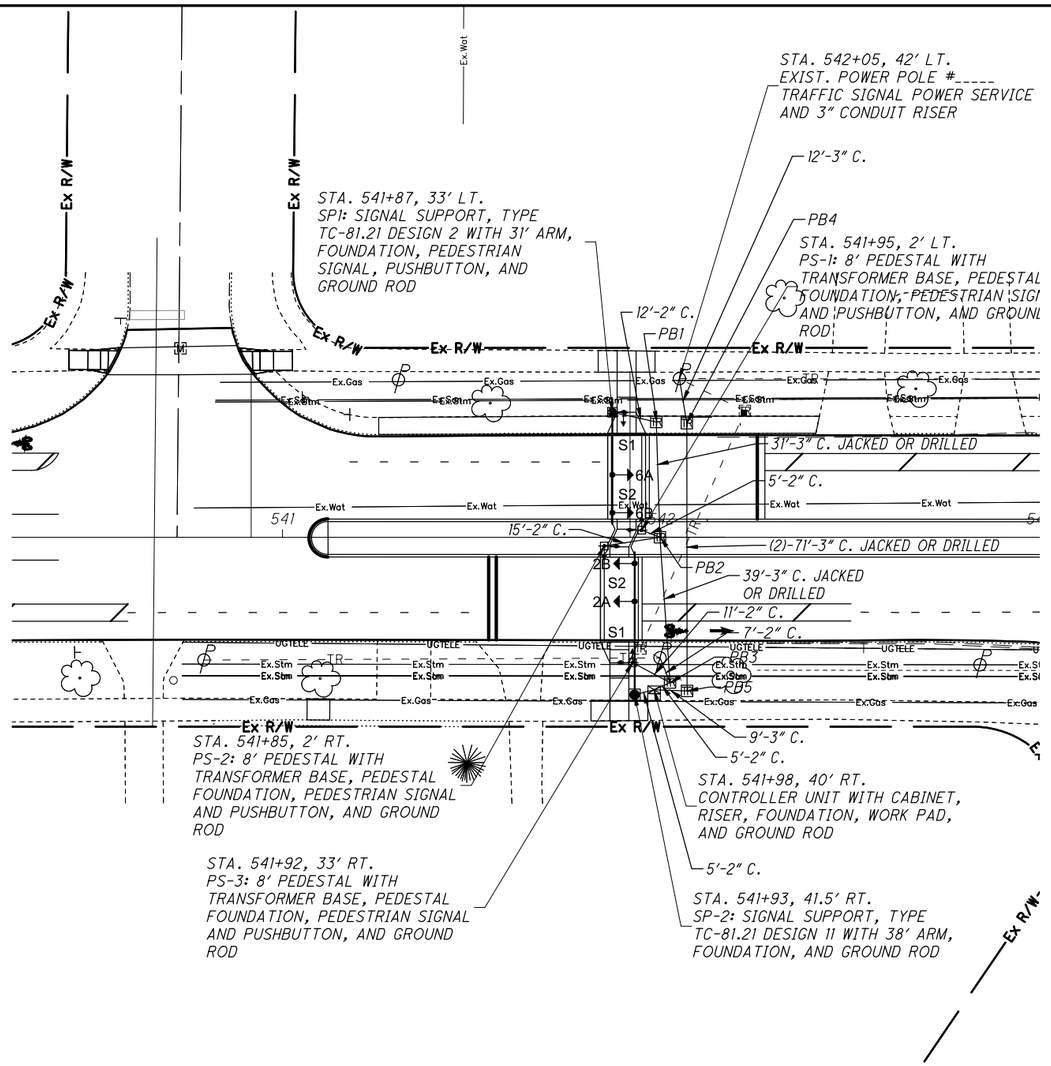


## SB PHASING DIAGRAM

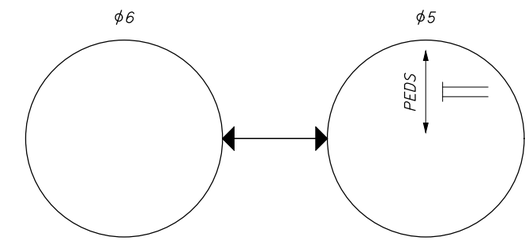


## NB PHASING DIAGRAM

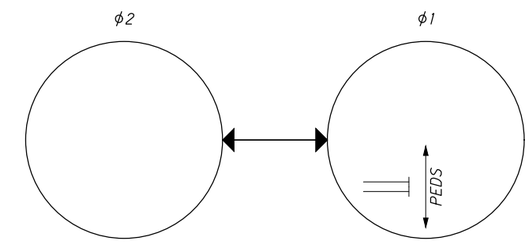


## OPERATIONAL DIAGRAM & TIMING CHART

PED ACTUATION →

| TRAFFIC SIGNAL HEAD | PEDESTRIAN SIGNAL HEAD | SIGNAL TIME (S) |
|---|---|---|
| DARK | DON'T WALK | - |
| FLASHING YELLOW | DON'T WALK | 7 |
| STEADY YELLOW | DON'T WALK | 3.5 |
| STEADY RED | DON'T WALK | 1 |
| STEADY RED | WALK | 7 |
| ALTERNATING RED | FLASHING HAND COUNTDOWN TIMER | 6 |
| DARK | DON'T WALK | 20 (MIN.) |

## PULL BOX TABLE

| PULL BOX # | STATION | SIDE | OFFSET | SIZE (IN.) |
|---|---|---|---|---|
| PB1 | 543+14 | LT | 30' | 18" |
| PB2 | 543+15 | CL | -- | 18" |
| PB3 | 543+13 | RT | 36' | 18" |
| PB4 | 543+33 | LT | 30' | 18" |
| PB5 | 543+18 | RT | 39' | 18" |
| PB6 | 543+36 | LT | 30' | 18" |
| PB7 | 543+21 | RT | 40' | 18" |

SEE SHEET NO. 115 FOR SIGNAL ELEVATION VIEWS AND SUBSUMMARY.

## PROPOSED SIGNS

S1

W11-2
(30"x 30")

S2

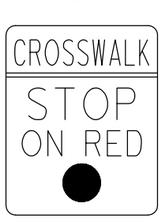


R10-23
(24"x 30")

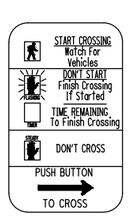


R10-3E-9
4 - LEFT ARROWS

## PROPOSED SIGNAL HEADS

POLYCARBONATE, 12" LED LENSES WITH CUTAWAY TYPE VISORS AND LOUVERED REFLECTIVE BACKPLATE

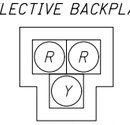


4A, 4B, 8A, 8B

PEDESTRIAN HEADS (LED, COUNTDOWN, TYPE D2)

X-X, Y-Y

## LEGEND

| | PROP |
|---|---|
| TRAFFIC SIGNAL, 3 UNIT HEAD, 12" | |
| SIGNAL SUPPORT POLE | |
| PEDESTRIAN SIGNAL | |
| PEDESTRIAN PUSH BUTTON | |
| CONTROLLER CABINET AND WORK PAD (TS-1) | |
| TRAFFIC PULL BOX | TR |

HORIZONTAL SCALE IN FEET 0 10 20 40

CALCULATED DP
CHECKED BT

# PEDESTRIAN HYBRID BEACON PLAN
# US 42 AT DENISON BOULEVARD

CUY-US-042-4.29



P:\Middleburg Heights - City of\J20150340.000 Pearl Rd Rehab\Drawings\Trans\105726CP001.dwg 18-May-19 5:24 PM

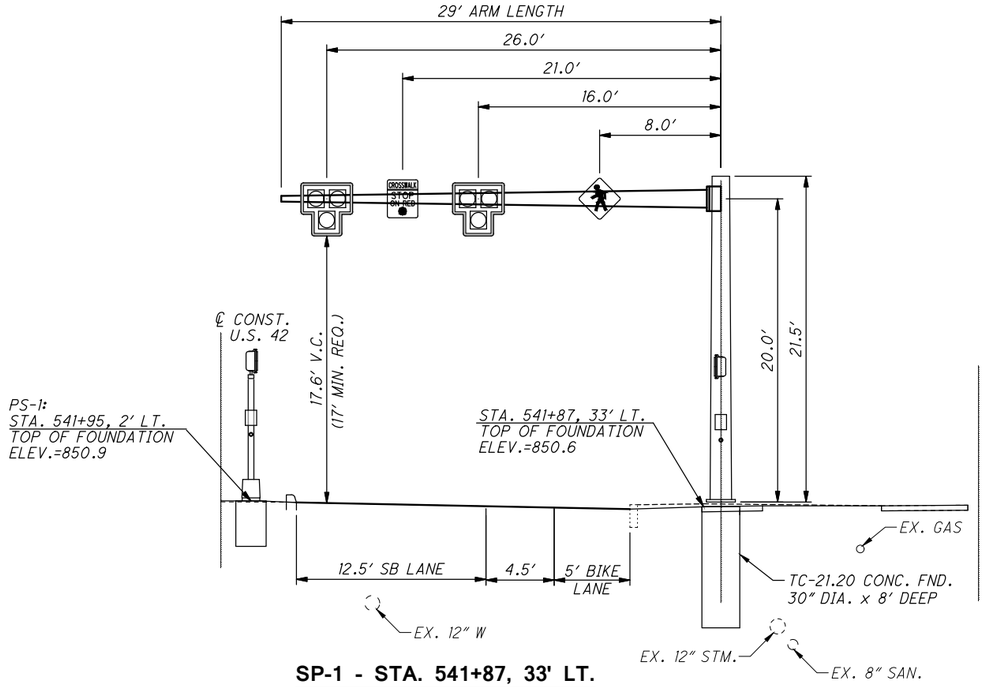


**SP-1 - STA. 541+87, 33' LT.**

SIGNAL SUPPORT
TYPE TC-81.21, DESIGN 2
WITH 29' ARM
LOOKING SOUTHWEST

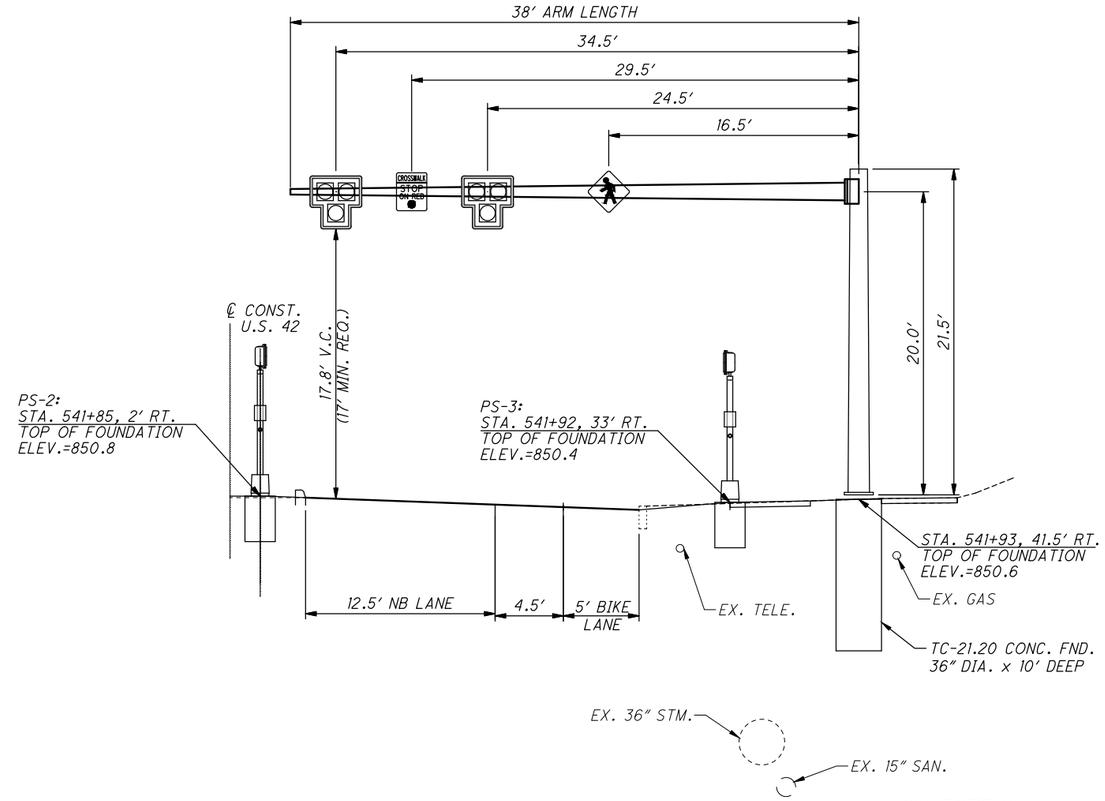


**SP-2 - STA. 541+93, 41.5' RT.**

SIGNAL SUPPORT
TYPE TC-81.21, DESIGN 11
WITH 38' ARM
LOOKING NORTHEAST

## TRAFFIC SIGNAL SUBSUMMARY (TLCI PARTICIPATION)
## (QUANTITIES CARRIED TO SHEETS NO. 71 AND 72)

| ITEM | TOTAL | QUAN | DESCRIPTION |
|---|---|---|---|
| 625 | 55 | FT | CONDUIT, 2", 725.04 |
| 625 | 27 | FT | CONDUIT, 3", 725.04 |
| 625 | 141 | FT | CONDUIT, JACKED OR DRILLED: 3" |
| 625 | 82 | FT | TRENCH |
| 625 | 5 | EACH | PULL BOX, 725.08, 18" |
| 625 | 6 | EACH | GROUND ROD |
| 625 | 82 | FT | PLASTIC CAUTION TAPE |
| 630 | 4 | EACH | SIGN ATTACHMENT ASSEMBLY, MAST ARM |
| 630 | 22.5 | SQ FT | SIGN, FLAT SHEET |
| 632 | 4 | EACH | VEHICULAR SIGNAL HEAD, (LED), 3-SECTION, 12" LENS, 1-WAY, POLYCARBONATE, AS PER PLAN |
| 632 | 4 | EACH | PEDESTRIAN SIGNAL HEAD (LED), TYPE D2, COUNTDOWN, AS PER PLAN |
| 632 | 4 | EACH | COVERING OF VEHICULAR SIGNAL HEAD |
| 632 | 4 | EACH | COVERING OF PEDESTRIAN SIGNAL HEAD |
| 632 | 4 | EACH | PEDESTRIAN PUSHBUTTON |
| 632 | 355 | FT | SIGNAL CABLE, 2 CONDUCTOR, NO. 14 AWG |
| 632 | 375 | FT | SIGNAL CABLE, 5 CONDUCTOR, NO. 14 AWG |
| 632 | 267 | FT | SIGNAL CABLE, 7 CONDUCTOR, NO. 14 AWG |
| 632 | 59 | FT | INTERCONNECT CABLE, MISC.: 6 PAIR, NO. 19 AWG, SOLID, REA (PE-39) |
| 632 | 2 | EACH | SIGNAL SUPPORT FOUNDATION |
| 632 | 3 | EACH | PEDESTAL FOUNDATION |
| 632 | 130 | FT | POWER CABLE, 2 CONDUCTOR, NO. 6 AWG |
| 632 | 25 | FT | POWER CABLE, 3 CONDUCTOR, NO. 6 AWG |
| 632 | 1 | EACH | POWER SERVICE |
| 632 | 1 | EACH | CONDUIT RISER, 2" DIAMETER |
| 632 | 1 | EACH | CONDUIT RISER, 3" DIAMETER |
| 632 | 1 | EACH | SIGNAL SUPPORT, TYPE TC-81.21, DESIGN 2 |
| 632 | 1 | EACH | SIGNAL SUPPORT, TYPE TC-81.21, DESIGN 11 |
| 632 | 3 | EACH | PEDESTAL, 8', TRANSFORMER BASE |
| 633 | 1 | EACH | CONTROLLER UNIT, TYPE TS2/A2, WITH CABINET, TYPE TS1, AS PER PLAN |
| 633 | 1 | EACH | CABINET FOUNDATION |
| 633 | 1 | EACH | CONTROLLER WORK PAD |

## WIRING DIAGRAM

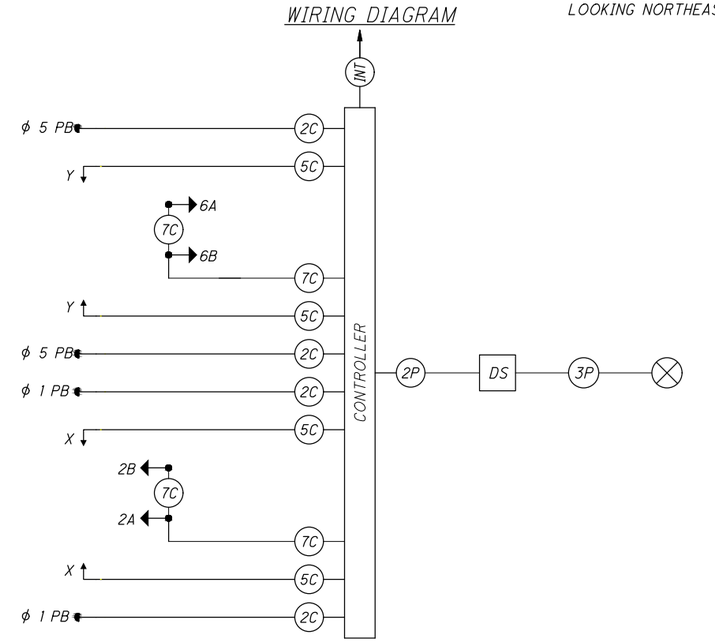


## LEGEND

- 3 SECTION VEHICULAR SIGNAL HEAD, 1-WAY
- PEDESTRIAN SIGNAL
- PEDESTRIAN PUSH BUTTON
- 2C — SIGNAL CABLE, 2 CONDUCTOR, NO. 14 AWG
- 5C — SIGNAL CABLE, 5 CONDUCTOR, NO. 14 AWG
- 7C — SIGNAL CABLE, 7 CONDUCTOR, NO. 14 AWG
- 3P — POWER CABLE, 3 CONDUCTOR, NO. 6 AWG
- 2P — POWER CABLE, 2 CONDUCTOR, NO. 6 AWG
- INT — INTERCONNECT CABLE
- DS — SIGNAL DISCONNECT SWITCH
- POWER SERVICE

HORIZONTAL SCALE IN FEET 0 5 10

CALCULATED DRP
CHECKED BT

**PEDESTRIAN HYBRID BEACON ELEVATIONS & DETAILS**
**US 42 AT DENISON BOULVARD**

**CUY-US-042-4.29**



P:\Middleburg Heights - City of\J20150340.000 Pearl Rd Rehab\Drawings\Trans\105726CP002.dwg 18-May-19 5:24 PM

ITEM 451, REINFORCED CONCRETE PAVEMENT, MISC.: DECORATIVE CONCRETE CROSSWALK

IN ADDITION TO THE REQUIREMENTS OF ODOT ITEM 451, THIS ITEM SHALL BE CONSTRUCTED IN ACCORDANCE WITH THE FOLLOWING SPECIFICATION AND AS SHOWN IN THE DETAIL ON SHEET NO. 127.

PART 1 - GENERAL

1.1 SUBMITTALS

A. QUALITY ASSURANCE/CONTROL SUBMITTALS:
   1. PRODUCT DATA: FOR EACH TYPE OF PRODUCT INDICATED.
   2. DESIGN ADMIXTURES: FOR EACH DECORATIVE CEMENT CONCRETE PAVEMENT MIXTURE. INCLUDE ALTERNATE MIXTURE DESIGNS WHEN CHARACTERISTICS OF MATERIALS, PROJECT CONDITIONS, WEATHER, TEST RESULTS, OR OTHER CIRCUMSTANCES WARRANT ADJUSTMENT.
   3. SAMPLES: COLOR SAMPLE.

PART 2 - PRODUCTS:

2.1 COLOR MATERIALS:

A. COLOR PIGMENT: ASTM C979, SYNTHETIC MINERAL-OXIDE PIGMENTS OR COLORED WATER-REDUCING ADMIXTURES; COLOR STABLE, NONFADING, AND RESISTANT TO LIME AND OTHER ALKALIS.
   1. MANUFACTURERS:
      a. SIKA SCOFIELD, (800) 800-9900.
      b. BRICKFORM, (800) 624-0261.
      c. OR APPROVED EQUAL.

B. LIQUID RELEASE AGENT: MANUFACTURER'S STANDARD CLEAR, EVAPORATING FORMULATION THAT FACILITATES RELEASE OF STAMP MATS AND TEXTURE ROLLERS.

2.2 IMPRINTING TOOLS:

A. STAMP MATS: SEMIRIGID POLYURETHANE MATS WITH PROJECTING TEXTURED AND RIDGED UNDERSIDE CAPABLE OF IMPRINTING TEXTURE AND JOINT PATTERNS ON PLASTIC CONCRETE.

2.3 CONCRETE MIXTURES:

A. COLOR PIGMENT: ADD COLOR PIGMENT TO CONCRETE MIXTURE ACCORDING TO MANUFACTURER'S WRITTEN INSTRUCTIONS AND TO RESULT IN HARDENED CONCRETE COLOR CONSISTENT WITH APPROVED MOCK-UP.

PART 3 - EXECUTION:

3.1 INTEGRALLY COLORED CONCRETE FINISH:

A. AFTER FINAL FLOATING, APPLY A HAND-TROWEL FINISH FOLLOWED BY A BROOM FINISH TO CONCRETE.
   1. MEDIUM-TO-FINE-TEXTURED BROOM FINISH: DRAW A SOFT BRISTLE BROOM ACROSS FLOAT-FINISHED CONCRETE SURFACE, PERPENDICULAR TO LINE OF TRAFFIC, TO PROVIDE A UNIFORM, FINE-LINE TEXTURE.

3.2 MAT STAMPING:

A. WHEN INITIALLY FINISHED CONCRETE IS PLASTIC, ACCURATELY ALIGN AND PLACE STAMP MATS IN SEQUENCE. UNIFORMLY LOAD MATS AND PRESS INTO CONCRETE TO PRODUCE REQUIRED IMPRINT PATTERN AND DEPTH OF IMPRINT ON CONCRETE SURFACE. REMOVE STAMP MATS IMMEDIATELY. HAND STAMP EDGES AND SURFACES UNABLE TO BE IMPRINTED BY STAMP MATS.
   1. REMOVE UNEMBEDDED RELEASE AGENT NO FEWER THEN THREE DAYS AFTER STAMPING CONCRETE. HIGH PRESSURE WASH SURFACE AND JOINT PATTERNS, TAKING CARE NOT TO DAMAGE STAMPED CONCRETE. CONTROL, COLLECT, AND LEGALLY DISPOSE OF RUNOFF.

3.3 CLEAR ACRYLIC SEALER:

A. APPLY UNIFORMLY IN TWO COATS IN CONTINUOUS OPERATIONS ACCORDING TO MANUFACTURER'S WRITTEN INSTRUCTIONS. ALLOW FIRST COAT TO DRY BEFORE APPLYING SECOND COAT, AT 90-DEGREES TO THE DIRECTION OF THE FIRST COAT USING SAME APPLICATION METHODS AND RATES.
   1. BEGIN SEALING DRY SURFACE NO SOONER THAN 38 DAYS AFTER CONCRETE PLACEMENT.
   2. ALLOW STAINED CONCRETE SURFACES TO DRY BEFORE APPLYING SEALER.

3.4 DECORATIVE CONCRETE CROSSWALK SCHEDULE:

A. COLORING METHOD: INTEGRALLY COLORED, AS FOLLOWS:.
   1. SIKA SCOFIELD: SORRENTO RED.
   2. BRICKFORM: CLARET RED.
   3. OR APPROVED EQUAL.
B. IMPRINTING METHOD: STAMPED, AS FOLLOWS:.
   1. SIKA SCOFIELD: EUROPEAN FAN RANDOM INTERLOCKING PATTERN.
   2. BRICKFORM: EUROPEAN FAN PATTERN.
   3. OR APPROVED EQUAL.

3.5 DECORATIVE CONCRETE CROSSWALK MOCK-UP:

A. AFTER RECEIVING THE CITY'S APPROVAL FOR THE DECORATIVE CONCRETE INTEGRAL IMPRINTING TEXTURE, THE CONTRACTOR SHALL CONSTRUCT A MOCK-UP OF THE DECORATIVE CONCRETE CROSSWALK FOR APPROVAL BY THE CITY, AS FOLLOWS:
   1. CAST MOCK-UP OF SECTION APPROXIMATELY 36 INCHES BY 36 INCHES TO DEMONSTRATE TYPICAL PATTERN, TEXTURE, SURFACE FINISH, COLOR, JOINTS, AND STANDARD OF WORKMANSHIP.
   2. BUILD MOCK-UP IN A LOCATION DIRECTED BY THE CITY.
   3. DAMAGE PART OF THE EXPOSED SURFACE OF THE PAVEMENT AND DEMONSTRATE MATERIALS AND TECHNIQUES PROPOSED FOR REPAIR TO MATCH UNDAMAGED SURFACES.
B. IF DIRECTED BY THE CITY, CONSTRUCT AN ADDITIONAL MOCK-UP TO ACHIEVE THE DESIRED RESULTS.
C. APPROVED MOCK-UP IS TO BE RETAINED DURING CONSTRUCTION IN AN UNDISTURBED CONDITION AS A CRITERION FOR JUDGING THE ACCEPTANCE OF THE WORK BEING PERFORMED.

PART 4 - BASIS OF PAYMENT:

ALL LABOR, EQUIPMENT, AND MATERIAL ASSOCIATED WITH THE CONSTRUCTION OF THE DECORATIVE CONCRETE WALK, INCLUDING THE CONSTRUCTION OF THE MOCK-UP(S) AND REMOVAL AND DISPOSAL OF THE EXISTING FLEXIBLE PAVEMENT AND SUBGRADE AS NECESSARY, AS REQUIRED IN THIS SPECIFICATION AND SHOWN IN THE PLAN DETAILS, SHALL BE PAID FOR UNDER THE CONTRACTOR'S UNIT PRICE BID FOR ITEM 451, REINFORCED CONCRETE, MISC.: DECORATIVE CONCRETE WALK.

THE COST TO SAW CUT, REMOVE, AND DISPOSE OF EXISTING CONCRETE AND/OR BRICK PAVEMENT IN ORDER TO INSTALL THIS ITEM SHALL BE PAID FOR UNDER ITEM 202, PAVEMENT REMOVED.

ITEM SPECIAL, SPECIAL-BICYCLE RACK

BICYCLE RACKS SHALL BE ATTACHED TO THE CONCRETE BIKE PAD PER THE MANUFACTURER'S SPECIFICATIONS. THE LOCATIONS OF THE BICYCLE RACKS AND PADS ARE INDICATED ON THE DRAWINGS. THE RACK SHALL BE CONSTRUCTED TO RESIST BEING CUT OR DETACHED FROM THE CONCRETE PAD USING HAND TOOLS.

BICYCLE RACK SUPPLIED FOR THIS PROJECT SHALL BE ONE OF THE FOLLOWING:

A. ARC RACK, MANUFACTURED BY DERO BIKE RACK COMPANY, (888) 337-6729.
   1. COLOR: BLACK POWERED-COATED FINISH.
   2. INSTALLATION: SURFACE MOUNTED, TWO ANCHORS PER BRACKET.

B. ARC RACK, MANUFACTURED BY GREENSPOKE, (844) 888-9999.
   1. COLOR: BLACK POWERED-COATED FINISH.
   2. INSTALLATION: SURFACE MOUNTED, TWO ANCHORS PER BRACKET.

C. OR APPROVED EQUAL.

PAYMENT SHALL BE AT THE UNIT PRICE BID PER EACH FOR ITEM SPECIAL, SPECIAL-BICYCLE RACK, INCLUDING ALL MATERIALS AND LABOR. ANY ADDITIONAL CONCRETE THICKNESS BEYOND 6" REQUIRED FOR THE BICYCLE RACK SHALL ALSO BE INCLUDED WITH THE UNIT PRICE BID FOR THIS ITEM.

THE PRICE FOR THE FURNISHING AND INSTALLATION OF THE 6" CONCRETE WALK IS INCLUDED UNDER SEPARATE BID ITEM FOR PAYMENT.

ITEM 304, AGGREGATE BASE, AS PER PLAN

IN ADDITION TO THE REQUIREMENTS OF ODOT ITEM 304, THE UNIT PRICE BID FOR THIS ITEM SHALL ALSO INCLUDE ALL LABOR, EQUIPMENT, AND MATERIAL REQUIRED TO EXCAVATE AND DISPOSE ALL EXISTING MATERIAL REQUIRED TO PLACE THE NEW AGGREGATE BASE.

ITEM 630, SIGNING, MISC.: WAYFINDING SIGN (VEHICULAR DIRECTIONAL)
ITEM 630, SIGNING, MISC.: WAYFARING SIGN (AMENITIES VEHICULAR DIRECTIONAL)

IN ADDITION TO THE REQUIREMENTS OF ODOT ITEM 630, THESE ITEMS SHALL BE CONSTRUCTED IN ACCORDANCE WITH THE SPECIFICATIONS AND DETAILS SHOWN ON SHEETS 122 TO 124, AND AS FOLLOWS:

PRIOR TO FABRICATION AND INSTALLATION, THE CONTRACTOR SHALL FIELD VERIFY ALL PROPOSED SIGN LOCATIONS AND CONDUCT A WALK-THRU WITH THE ENGINEER AND REPRESENTATIVES OF THE CITY OF PARMA HEIGHTS FOR APPROVAL OF THE PROPOSED LOCATIONS.

THE CONTRACTOR SHALL SUBMIT TO THE ENGINEER AND THE CITY OF PARMA HEIGHTS ONE (1) COPY OF ELECTRONIC SHOP DRAWINGS IN 11"x 17" FORMAT FOR THE MANUFACTURING, FABRICATION, AND ERECTION OF SIGNS AND GRAPHIC WORK AT LARGE SCALE, WHICH SHALL SHOW JOINTS, ANCHORAGE, FOUNDATION, ACCESSORY ITEMS, AND FINISHES. ALL SHOP DRAWINGS MUST BE SIGNED AND SEALED BY A PROFESSIONAL ENGINEER LICENSED IN THE STATE OF OHIO.

THE CONTRACTOR SHALL PRODUCE ALL ARTWORK FOR ALL SYMBOLS AND LETTERING, AND SUBMIT TO THE ENGINEER AND THE CITY OF PARMA HEIGHTS PRIOR TO FABRICATION. ARTWORK FOR SPECIFIC ITEMS AND LOGOS, AS NOTED IN THE DRAWINGS, SHALL BE ELECTRONICALLY PROVIDED TO THE ENGINEER AND THE CITY OF PARMA HEIGHTS.

TEST EXCAVATIONS REQUIRED BY THE CONTRACTOR TO DETERMINE ANY UNDERGROUND CONFLICTS WITH THE SIGN FOUNDATION SHALL ALSO BE INCLUDED WITH THIS ITEM. ANY TEST EXCAVATIONS REMAINING OPEN SHALL BE COVERED WITH A STEEL PLATE UNTIL THE EXCAVATION IS FILLED.

THE SIGNS SHALL BE ERECTED SO THAT ALL WORDING IS UNOBSTRUCTED FOR A MINIMUM OF 150 FEET FOR VEHICLES IN ALL POST-CONSTRUCTION LANES OF TRAFFIC. ANY PRUNING OF EXISTING TREES IN ORDER TO ACHIEVE THIS DISTANCE SHALL BE PERFORMED IN CONFORMANCE WITH ODOT ITEM 666 AND SHALL BE INCIDENTAL TO THE UNIT PRICE BID FOR THIS ITEM.

ALL DETAILS AND NOTES SHOWN IN THESE PLANS ARE FOR THE SOLE PURPOSE OF EXPRESSING VISUAL DESIGN AND ARE NOT INTENDED FOR ACTUAL FABRICATION PURPOSES. THE CONTRACTOR ACCEPTS TOTAL RESPONSIBILITY FOR FINAL MATERIAL SELECTION, FABRICATION, FOUNDATION DESIGN, AND INSTALLATION METHODS.

PAYMENT FOR ALL MATERIALS, EQUIPMENT, AND LABOR NECESSARY TO INSTALL THIS ITEM, INCLUDING BUT NOT LIMITED TO PANELS, VINYL, LETTERING, POST, CONNECTIONS, BRACKETS, HARDWARE, FOUNDATIONS, DESIGN, ENGINEERING, AND SUBMITTALS, AND OTHER INCIDENTALS SHALL BE INCLUDED IN THE UNIT PRICE BID FOR ITEM 630, SIGNING, MISC.: WAYFARING SIGN (BY TYPE).

CALCULATED DRP
CHECKED BT

STREETSCAPE GENERAL NOTES

CUY-US-042-4.29



P:\Middleburg Heights - City of\J20150340.000 Pearl Rd Rehab\Drawings\Trans\105726PN001.dwg 04-Mar-19 5:42 PM

| SHEET NO. | LOCATION | 202 PAVEMENT REMOVED | 202 WALK REMOVED, AS PER PLAN | 203 EMBANKMENT, USING NATURAL SOILS, 703.16A | 204 SUBGRADE COMPACTION | 301 ASPHALT CONCRETE BASE, PG64-22 | 304 AGGREGATE BASE, AS PER PLAN | 305 CONCRETE BASE, MISC.: VARIABLE THICKNESS, CLASS QC1 | 451 9" REINFORCED CONCRETE PAVEMENT, CLASS QC1 | 451 REINFORCED CONCRETE, MISC.: DECORATIVE CONCRETE CROSSWALK | 605 4" BASE PIPE UNDERDRAINS WITH GEOTEXTILE FABRIC | 608 6" CONCRETE WALK, AS PER PLAN | 608 CURB RAMP, AS PER PLAN | 609 CURB, TYPE 2-A, AS PER PLAN | 609 CURB, TYPE 2-B, AS PER PLAN (B) | 609 CURB, TYPE 6, AS PER PLAN | 611 4" CONDUIT, TYPE F FOR UNDERDRAIN OUTLETS, AS PER PLAN | 630 SIGNING, MISC.: WAYFINDING SIGN (VEHICULAR DIRECTIONAL) | 630 SIGNING, MISC.: WAYFINDING SIGN (AMENITIES VEHICULAR DIRECTIONAL) | 653 TOPSOIL FURNISHED AND PLACED | 661 GROUND COVER AND VINES, 1 YEAR, POTTED: THYMUS PRAECOX ARTICUS 'COCCINEUS' - RED CREEPING THYME | 661 DECIDUOUS TREE, 2" CALIPER (ZELKOVA SERRATE "MUSHASHINO") | SPECIAL SPECIAL-BICYCLE RACK |
|---|---|---|---|---|---|---|---|---|---|---|---|---|---|---|---|---|---|---|---|---|---|---|---|
| | | SQ YD | SQ FT | CU YD | SQ YD | CU YD | CU YD | SQ YD | SQ YD | SQ YD | FT | SQ FT | SQ FT | FT | FT | FT | FT | EACH | EACH | EACH | EACH | EACH | EACH |
| 118 | WEST 130TH ST. INTERSECTION | 51 | | | | | | | | 93 | | | | | | | | | | | | | |
| | LAWNWOOD AVE. INTERSECTION | | | | | | | | | | | | | | | | | | | | | | |
| | PEARL RD.-SOUTH SIDE | 45 | | | | | | | | 64 | | | | | | | | | | | | | |
| | PEARL RD.-NORTH SIDE | 45 | | | | | | | | 62 | | | | | | | | | | | | | |
| | GREENLEAF AVE. INTERSECTION | | | | | | | | | | | 108 | | | | | | | | | | | 1 |
| | PEARL RD.-SOUTH SIDE | 45 | | | | | | | | 64 | | | | | | | | | | | | | |
| | PEARL RD.-NORTH SIDE | 45 | | | | | | | | 69 | | | | | | | | | | | | | |
| | MANDALAY DRIVE | 45 | | | | | | | | 60 | | | | | | | | | | | | | |
| 119 | ROCHELLE BOULEVARD | | | | | | | | | 78 | | | | | | | | | | | | | |
| | KINGSDALE BOULEVARD | 45 | | | | | | | | 62 | | 108 | | | | | | | | | | | 1 |
| | COLOMBO PARK | | | | | | | | | | | 108 | | | | | | | | | | | 1 |
| | YORK/STUMPH INTERSECTION | | | | | | | | | | | 108 | | | | | | | | | | | 1 |
| | PEARL RD.-SOUTH SIDE | 45 | | | | | | | | 85 | | | | | | | | | | | | | |
| | PEARL RD.-NORTH SIDE | 45 | | | | | | | | 93 | | | | | | | | | | | | | |
| | STUMPH ROAD (LT. SIDE) | 256 | | | 146 | 4 | 25 | | 123 | 80 | | | | 51 | | 56 | | | | | | | |
| | YORK ROAD (RT. SIDE) | 293 | 181 | | 173 | 3 | 29 | | 160 | 84 | | | 181 | 51 | | 40 | | | | | | | |
| 120 | CITY HALL | 45 | | | | | | | | 60 | | | | | | | | | | | | | |
| | 6240 PEARL ROAD | | | | | | | | | | | 108 | | | | | | | | | | | 1 |
| | OLDE YORK RD. INTERSECTION | | | | | | | | | | | | | | | | | | | | | | |
| | PEARL RD.-SOUTH SIDE | 52 | | | | | | | | 62 | | | | | | | | | | | | | |
| | PEARL RD.-NORTH SIDE | 52 | | | | | | | | 68 | | | | | | | | | | | | | |
| | ACKLEY RD. INTERSECTION | | | | | | | | | | | 108 | | | | | | | | | | | 1 |
| | PEARL RD.-SOUTH SIDE | 52 | | | | | | | | 63 | | | | | | | | | | | | | |
| | PEARL RD.-NORTH SIDE | 52 | | | | | | | | 62 | | | | | | | | | | | | | |
| | PEARL RD. ELEMENTARY | 52 | | | | | | | | 60 | | | | | | | | | | | | | |
| | LOTUSDALE DR. INTERSECTION | | | | | | | | | | | | | | | | | | | | | | |
| | PEARL RD.-SOUTH SIDE | 52 | | | | | | | | 74 | | | | | | | | | | | | | |
| | PEARL RD.-NORTH SIDE | 52 | | | | | | | | 70 | | | | | | | | | | | | | |
| 121 | MEDIAN | 1287 | | 408 | 680 | | 113 | 499 | | | 1626 | 89 | 28 | | 1657 | | 16 | | | 87 | 6432 | 18 | |
| | CROSSWALK-WEST SIDE | 18 | 197 | | | | | | | 25 | | 136 | 32 | | | | | | | | | | |
| | CROSSWALK-EAST SIDE | 18 | 122 | | | | | | | 25 | | 171 | 35 | | | | | | | | | | |
| 125 | 6677 PEARL ROAD | | | | | | | | | | | | | | | | | 1 | | | | | |
| | STUMPH ROAD/YORK ROAD | | | | | | | | | | | | | | | | | 4 | | | | | |
| 126 | ACKLEY ROAD | | | | | | | | | | | | | | | | | | 2 | | | | |
| | LOTUSDALE POCKET PARK | | | | | | | | | | | | | | | | | 1 | | | | | |
| TOTALS TO GEN. SUMM. | | 2692 | 500 | 408 | 999 | 7 | 167 | 499 | 283 | 1463 | 1626 | 1044 | 276 | 102 | 1657 | 96 | 16 | 6 | 2 | 87 | 6432 | 18 | 6 |

CALCULATED DRP
CHECKED BT

# STREETSCAPING SUB SUMMARY

CUY-US-042-4.29



P:\Middleburg Heights - City of\J20150340.000 Pearl Rd Rehab\Drawings\Trans\105726PG001.dwg 18-May-19 5:25 PM

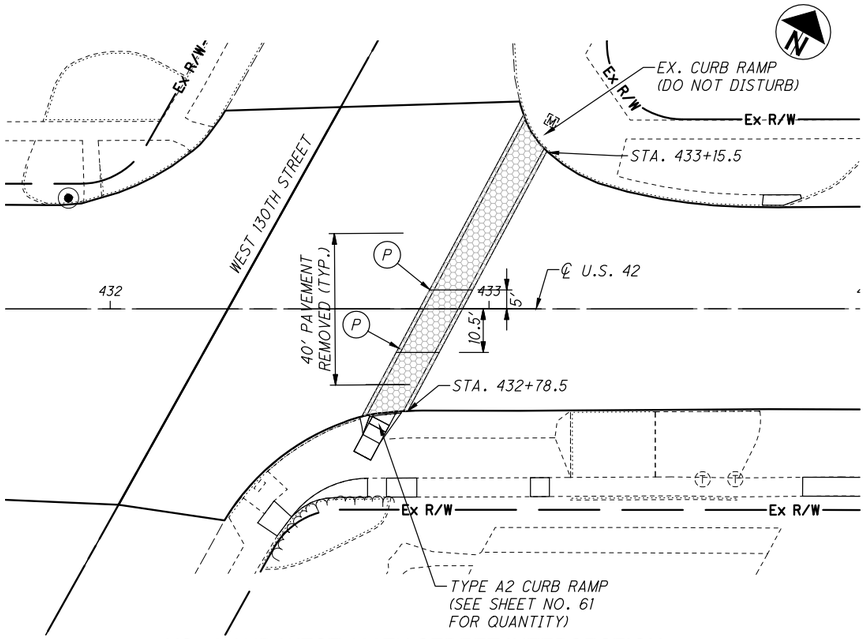


US 42 AND WEST 130TH STREET INTERSECTION

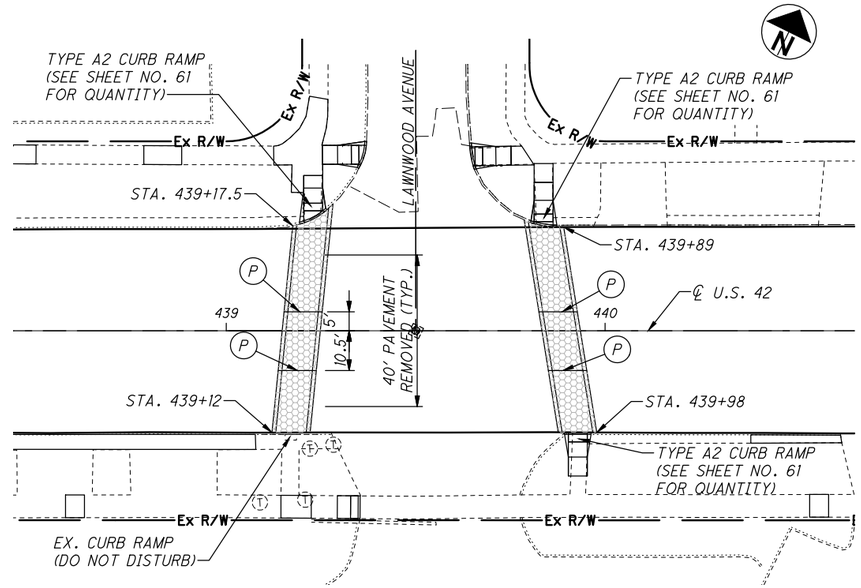


US 42 AND LAWNWOOD AVENUE INTERSECTION

ITEM 451 - REINFORCED CONCRETE PAVEMENT, MISC.: DECORATIVE CONCRETE CROSSWALK (SEE DETAIL SHEET NO. 127)

BICYCLE RACK AND 6" CONCRETE WALK, AS PER PLAN

QUANTITIES CARRIED TO STREETSCAPING SUBSUMMARY SHEET NO. 117.

(P) PHASE JOINT (LAP #5 LONG. BARS = 1'-3")

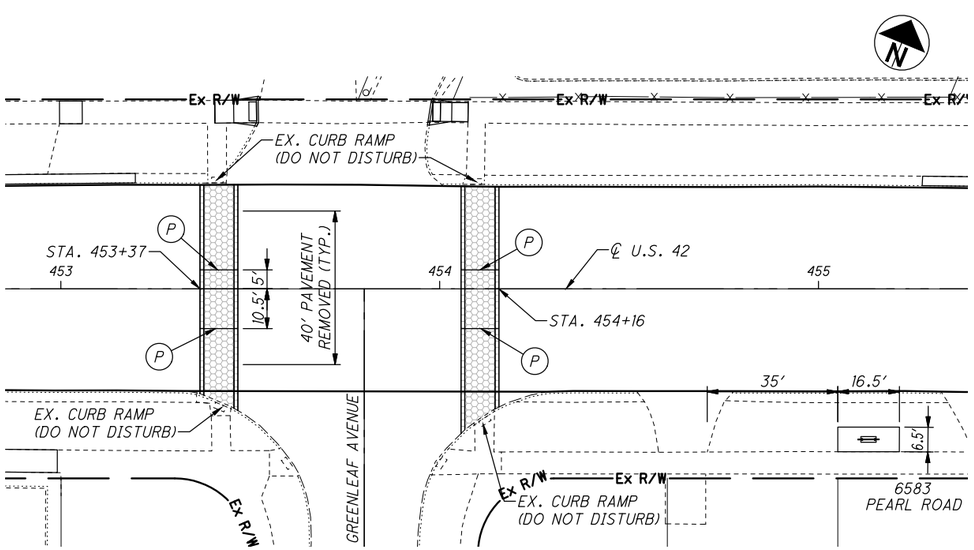


US 42 AND GREENLEAF AVENUE INTERSECTION

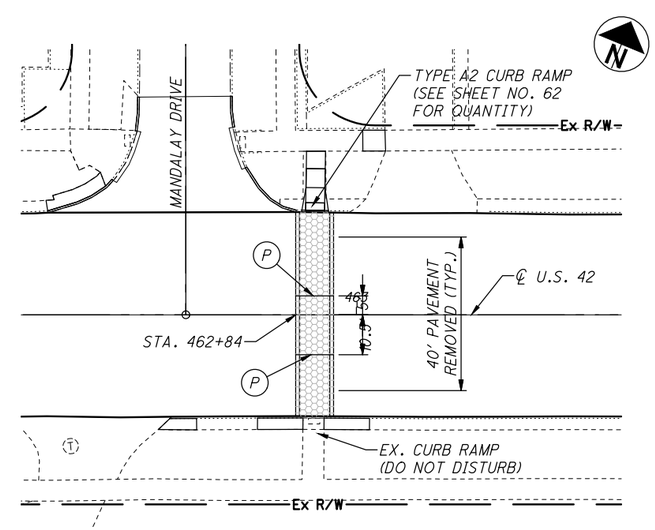


US 42 AND MANDALAY DRIVE INTERSECTION

HORIZONTAL SCALE IN FEET 0 10 20 40

CALCULATED DRP
CHECKED BT

STREETSCAPING PLAN
DECORATIVE CROSSWALKS AND BICYCLE RACKS

CUY-US-042-4.29



P:\Middleburg Heights - City of\J20150340.000 Pearl Rd Rehab\Drawings\Trans\105726PP000.dwg 01-Mar-19 3:57 PM

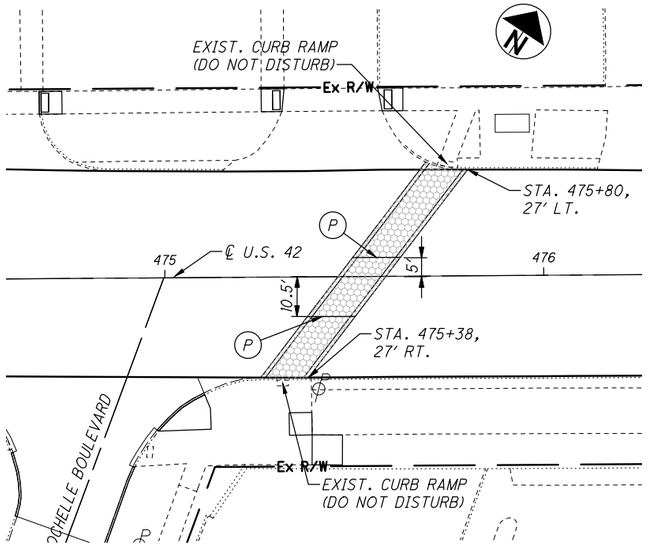


US 42 AND ROCHELLE BOULEVARD INTERSECTION

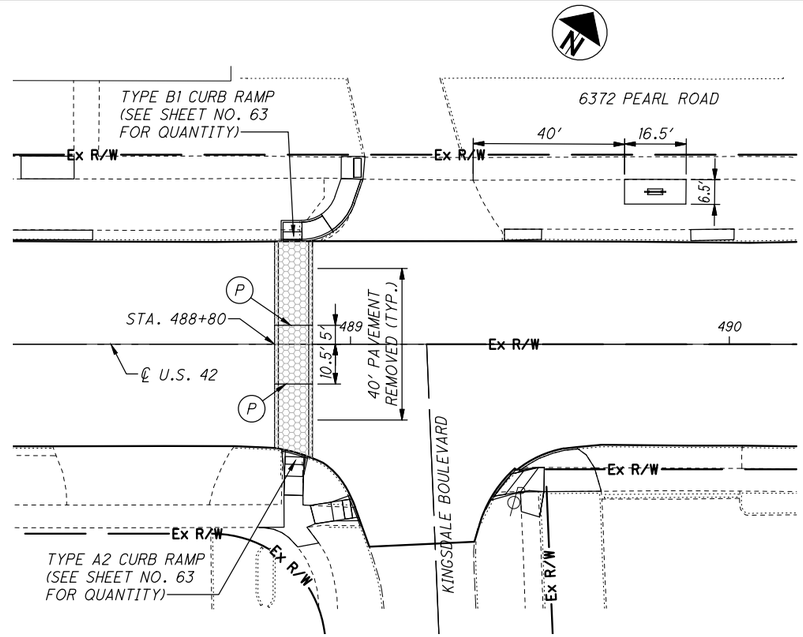


US 42 AND KINGSDALE BOULEVARD INTERSECTION

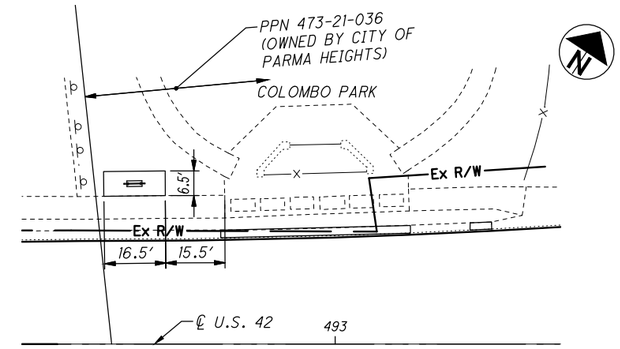


COLOMBO PARK

ITEM 451 - REINFORCED CONCRETE PAVEMENT, MISC.: DECORATIVE CONCRETE CROSSWALK (SEE DETAIL SHEET NO. 127)

REINFORCED CONCRETE PAVEMENT (SEE SECTION A-A BELOW)

BICYCLE RACK AND 6" CONCRETE WALK, AS PER PLAN

QUANTITIES CARRIED TO STREETSCAPING SUBSUMMARY SHEET NO. 117.

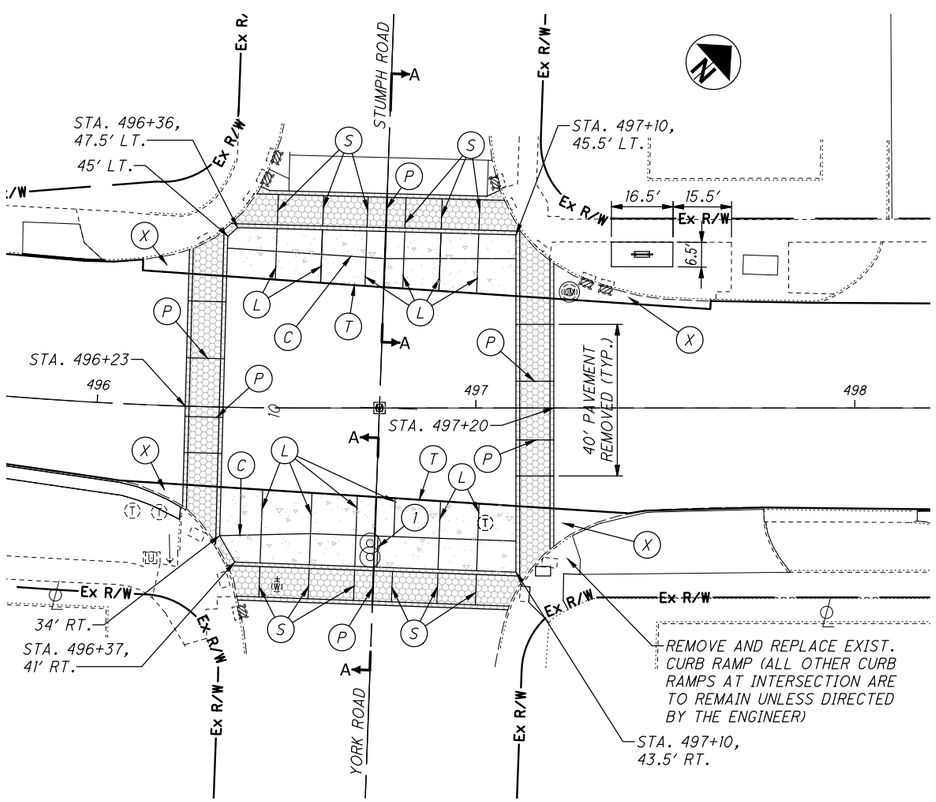


US 42 AND YORK ROAD/STUMPH ROAD INTERSECTION

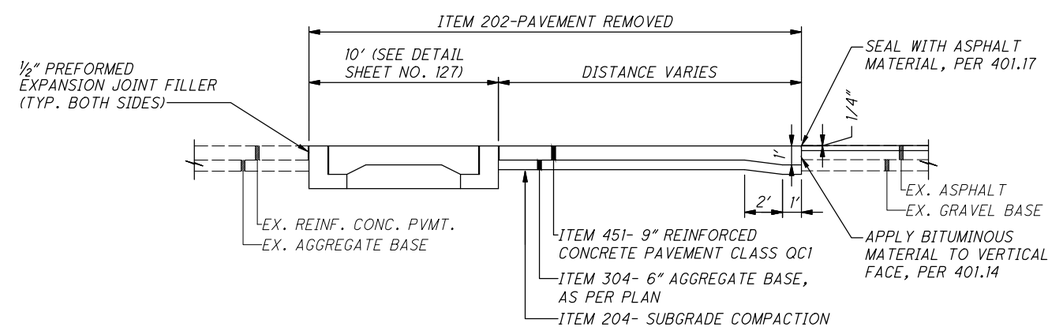


SECTION A-A

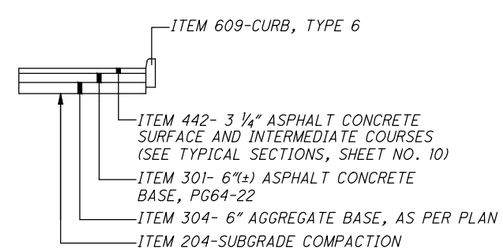


FULL DEPTH ASPHALT PAVEMENT SECTION

(E) EXPANSION JOINT PER ODOT SCD BP-2.2

(L) LONGITUDINAL JOINT PER ODOT SCD BP-2.1

(C) CONTRACTION JOINT PER ODOT SCD BP-2.2

(P) PHASE JOINT (LAP #5 LONG. BARS = 1'-3")

(T) THICKENED EDGE JOINT AS PER SECTION A-A THIS SHEET

(S) SAWED JOINT AS PER CMS 451.09A

(I) LONGITUDINAL CONSTRUCTION JOINT USING #5x 24" TIE BAR TYPICALLY SPACED AT 24" CENTERS. ACTUAL BAR PLACEMENTS SHALL PROVIDE A 12" MINIMUM CLEAR DISTANCE FROM INTERSECTING PAVEMENT AND/OR BLOCKOUT JOINTS

(X) REMOVE EXISTING CONCRETE PAVEMENT WITH INTEGRAL CURB AND REPLACE WITH FULL DEPTH ASPHALT PAVEMENT SECTION WITH TYPE 6 CURB AS PER THE SECTION SHOWN ON THIS SHEET

HORIZONTAL SCALE IN FEET 0 10 20 40

CALCULATED DRP CHECKED BT

# STREETSCAPING PLAN
# DECORATIVE CROSSWALKS AND BICYCLE RACKS

CUY-US-042-4.29



P:\Middleburg Heights - City of\J20150340.000 Pearl Rd Rehab\Drawings\Trans\105726PP001.dwg 01-Mar-19 3:58 PM

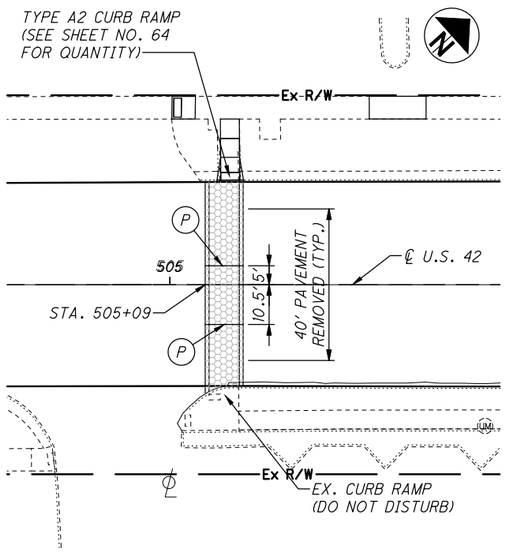


US 42 AND CITY HALL

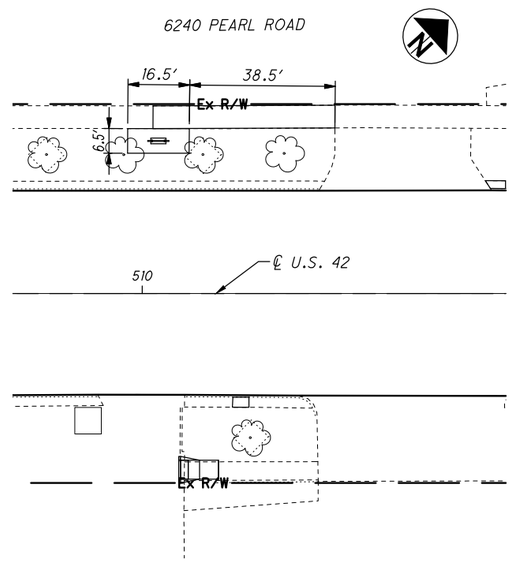


6240 PEARL ROAD

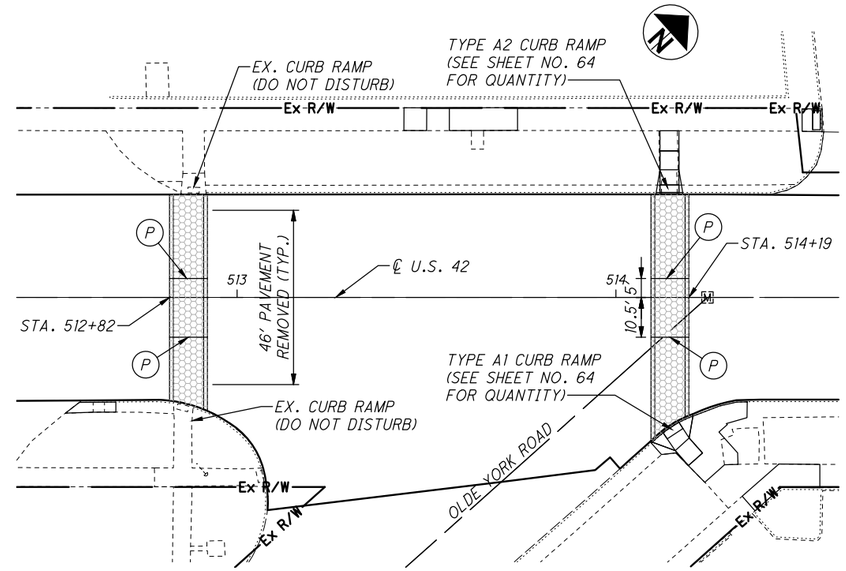


US 42 AND OLDE YORK ROAD

ITEM 451 - REINFORCED CONCRETE PAVEMENT, MISC.: DECORATIVE CONCRETE CROSSWALK (SEE DETAIL SHEET NO. 127)

REINFORCED CONCRETE PAVEMENT (SEE SECTION A-A THIS SHEET)

BICYCLE RACK AND 6" CONCRETE WALK, AS PER PLAN

QUANTITIES CARRIED TO STREETSCAPING SUBSUMMARY SHEET NO. 117.

(P) PHASE JOINT (LAP #5 LONG. BARS = 1'-3")

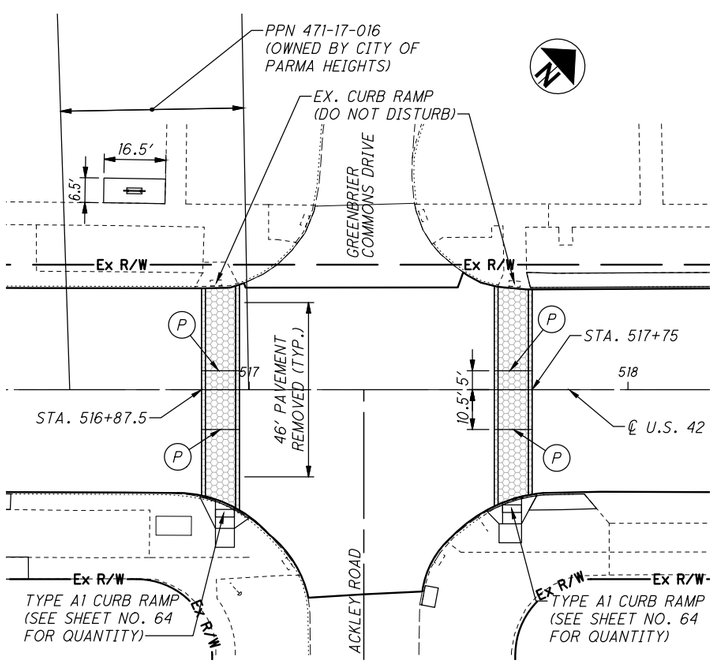


US 42 AND ACKLEY ROAD INTERSECTION

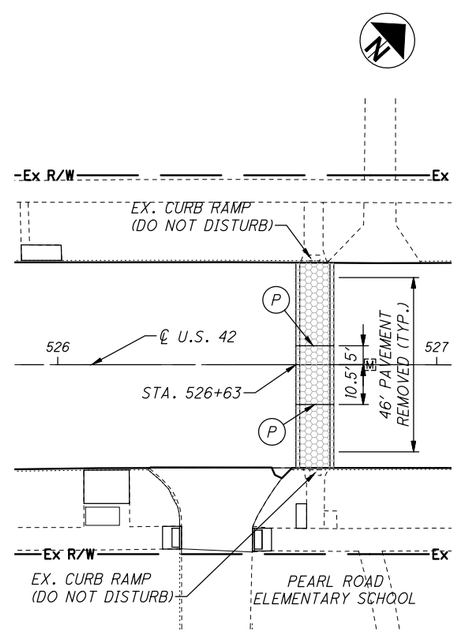


US 42 AND PEARL ROAD ELEMENTARY SCHOOL EXIT DRIVE

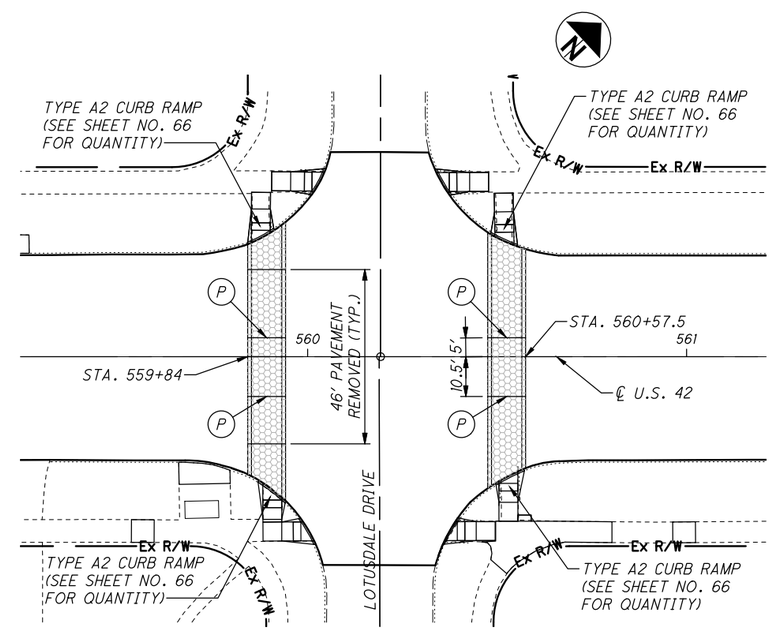


US 42 AND LOTUSDALE DRIVE INTERSECTION

0 10 20 40
HORIZONTAL SCALE IN FEET

CALCULATED DRP
CHECKED BT

# STREETSCAPING PLAN
# DECORATIVE CROSSWALKS AND BICYCLE RACKS

CUY-US-042-4.29



P:\Middleburg Heights - City of\J20150340.000 Pearl Rd Rehab\Drawings\Trans\105726PP001A.dwg 01-Mar-19 3:59 PM

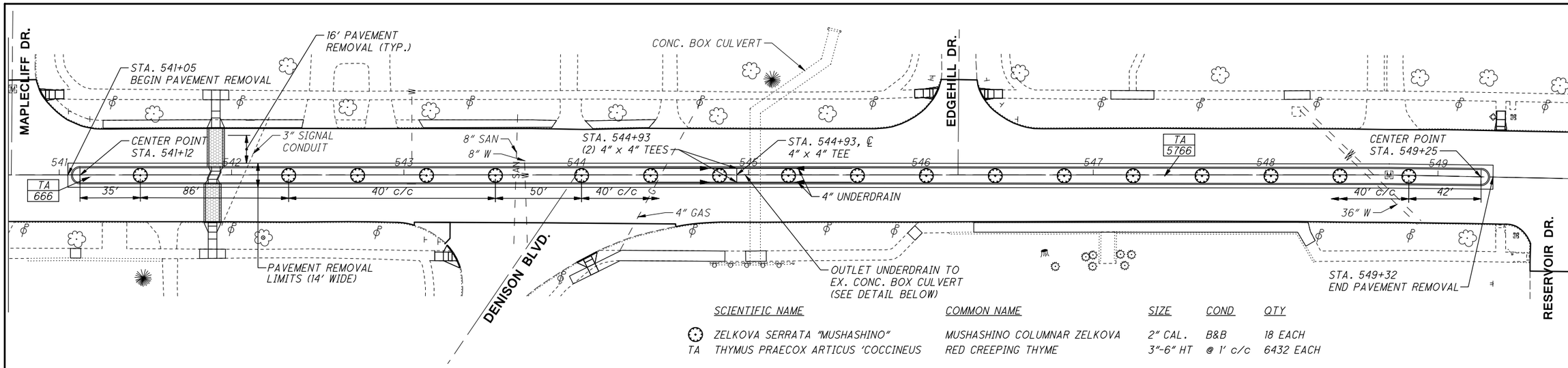


| | SCIENTIFIC NAME | COMMON NAME | SIZE | COND | QTY |
|---|---|---|---|---|---|
| | ZELKOVA SERRATA "MUSHASHINO" | MUSHASHINO COLUMNAR ZELKOVA | 2" CAL. | B&B | 18 EACH |
| TA | THYMUS PRAECOX ARTICUS 'COCCINEUS | RED CREEPING THYME | 3"-6" HT | @ 1' c/c | 6432 EACH |

ITEM 451 - REINFORCED CONCRETE PAVEMENT, MISC.: DECORATIVE CONCRETE CROSSWALK (SEE DETAIL SHEET NO. 127)

SEE SHEET NO. 117 FOR STREETSCAPING SUBSUMMARY

SEE SHEET NO. 127 FOR MEDIAN INSTALLATION DETAILS

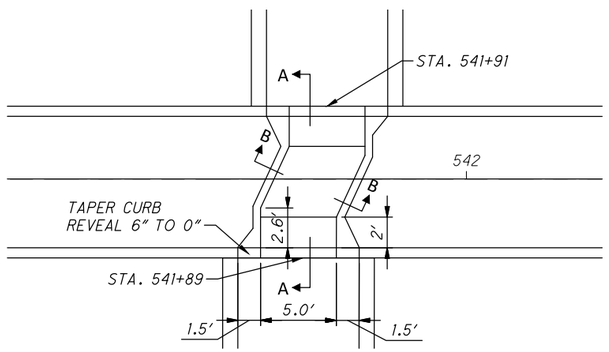


**PLAN VIEW**

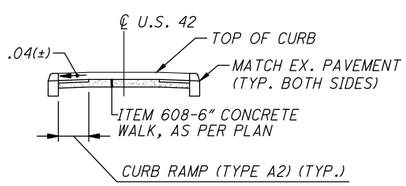


REFER TO ODOT STANDARD CONSTRUCTION DRAWING BP-7.1 FOR ADDITIONAL CURB RAMP DETAIL (JOINTS, DETECTABLE WARNINGS, ETC.).

**SECTION A-A**

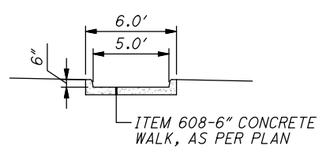


**SECTION B-B**

## MEDIAN WALK DETAIL

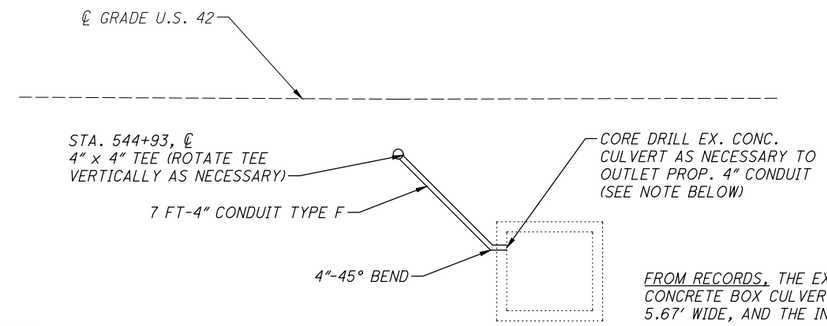


NOTE:
COST TO EXPOSE AND CORE DRILL THE EXISTING BOX CULVERT SHALL BE INCLUDED WITH THE UNIT PRICE BID FOR ITEM 611, 4" CONDUIT, TYPE F FOR UNDERDRAIN OUTLETS, AS PER PLAN

FROM RECORDS, THE EXISTING CONCRETE BOX CULVERT IS 5.2' HIGH X 5.67' WIDE, AND THE INVERT IS APPROXIMATELY 14' BELOW THE ℄ GRADE OF U.S. 42. CONTRACTOR IS TO EXCAVATE, AND CONFIRM THE CULVERT LOCATION PRIOR TO INSTALLING THE PROPOSED MEDIAN UNDERDRAIN.

## UNDERDRAIN OUTLET DETAIL

HORIZONTAL SCALE IN FEET 0 15 30 60

CALCULATED DP
CHECKED BT

# MEDIAN LAYOUT AND LANDSCAPING PLAN

CUY-US-042-4.29



P:\Middleburg Heights - City of\J20150340.000 Pearl Rd Rehab\Drawings\Trans\105726PP002.dwg 18-May-19 5:26 PM

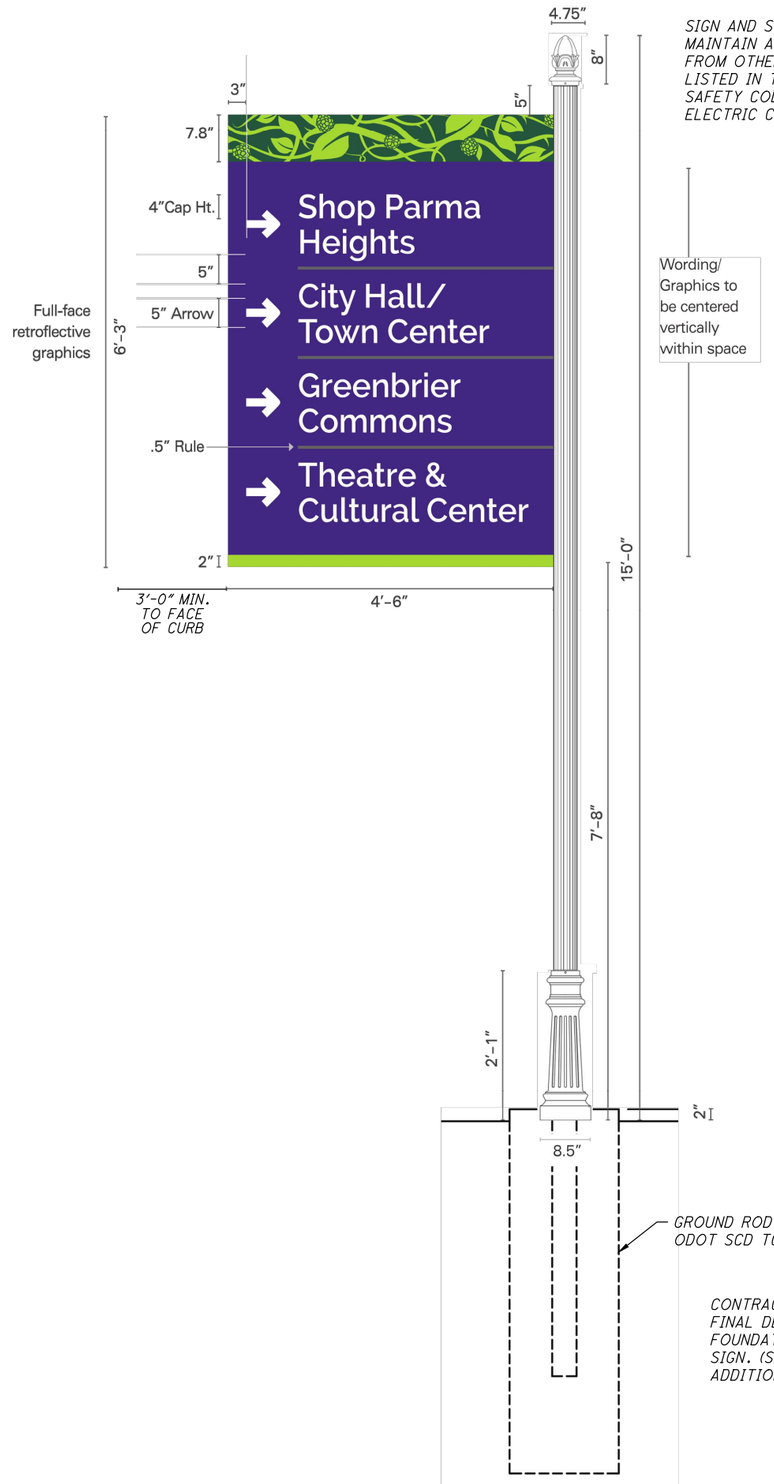


SIGN AND SUPPORT POLE SHALL MAINTAIN APPLICABLE CLEARANCES FROM OTHER OVERHEAD UTILITIES AS LISTED IN THE NATIONAL ELECTRICAL SAFETY CODE AND THE NATIONAL ELECTRIC CODE.

Wording/ Graphics to be centered vertically within space

CONTRACTOR IS RESPONSIBLE FOR THE FINAL DESIGN AND INSTALLATION OF FOUNDATIONS NECESSARY FOR THE SIGN. (SEE SHEET NO. 124 FOR ADDITIONAL STRUCTURAL NOTES).

Vehicular Directional Wayfinding

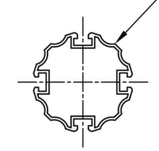


CP4X CHANNEL POLE

SCALE: 3" = 1'-0"

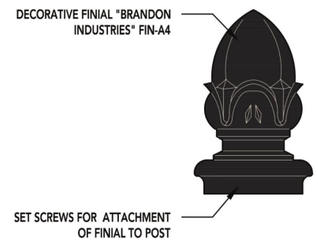


FIN-A4 FINIAL

SCALE: 3" = 1'-0"

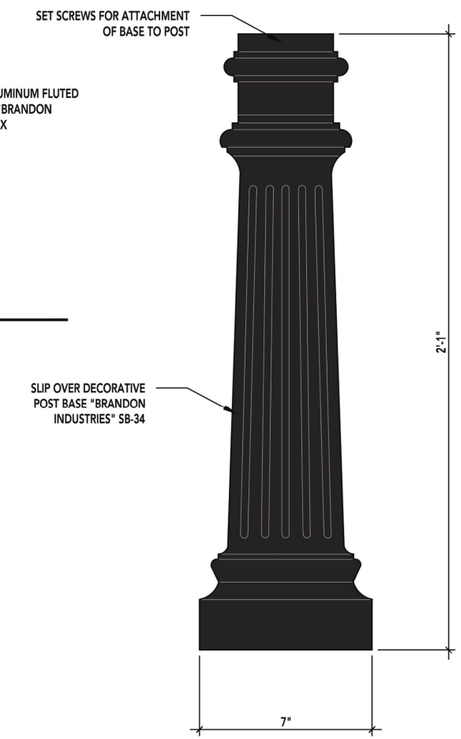


SB-34 SIGN BASE

SCALE: 3" = 1'-0"

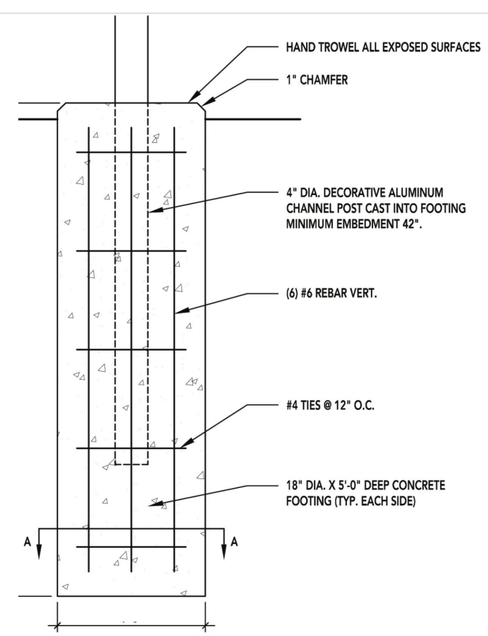


CONCRETE FOOTING DETAIL (Reference Only)

SCALE: 1" = 1'-0"

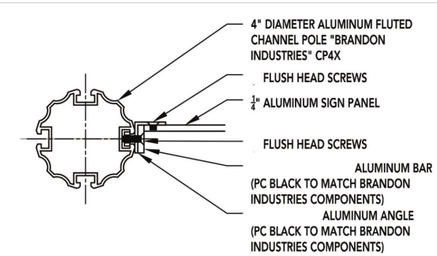


PANEL ATTACHMENT DETAIL (Reference Only)

SCALE: 3" = 1'-0"

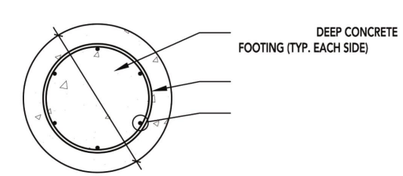


CONCRETE FOOTING DETAIL A-A (Reference Only)

SCALE: 1" = 1'-0"

CALCULATED DRP
CHECKED BT

WAYFINDING SIGNS DETAILS

CUY-US-042-4.29



P:\Middleburg Heights - City of\J20150340.000 Pearl Rd Rehab\Drawings\Trans\PP003.dwg 01-Mar-19 4:00 PM

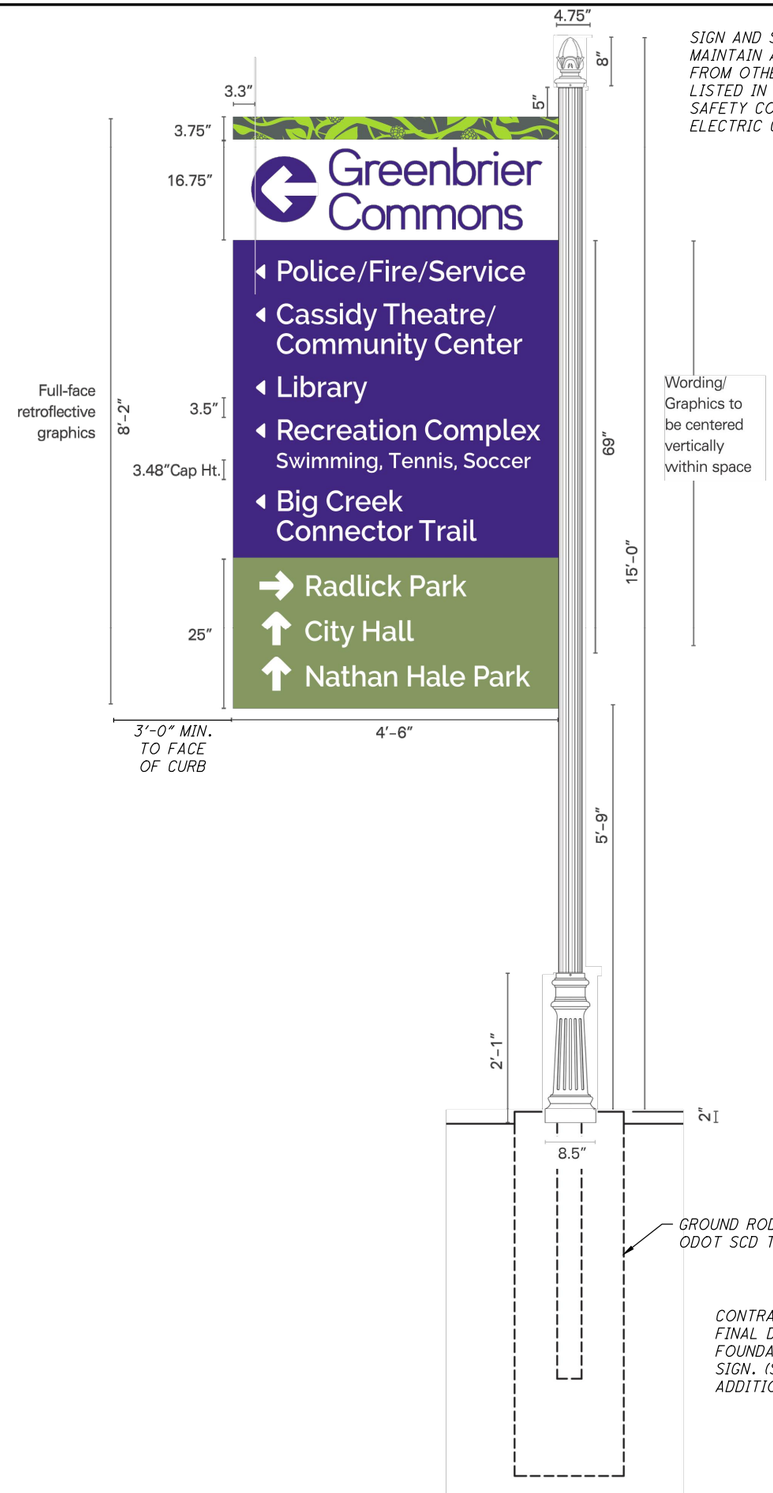


*SIGN AND SUPPORT POLE SHALL MAINTAIN APPLICABLE CLEARANCES FROM OTHER OVERHEAD UTILITIES AS LISTED IN THE NATIONAL ELECTRICAL SAFETY CODE AND THE NATIONAL ELECTRIC CODE.*

*CONTRACTOR IS RESPONSIBLE FOR THE FINAL DESIGN AND INSTALLATION OF FOUNDATIONS NECESSARY FOR THE SIGN. (SEE SHEET NO. 124 FOR ADDITIONAL STRUCTURAL NOTES).*

Greenbrier Commons Amenities–
Vehicular Directional Wayfinding

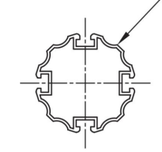


CP4X CHANNEL POLE
SCALE: 3" = 1'-0"

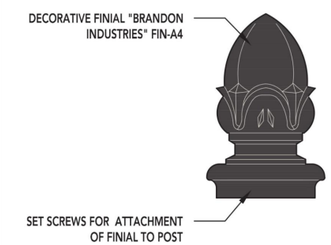


FIN-A4 FINIAL
SCALE: 3" = 1'-0"

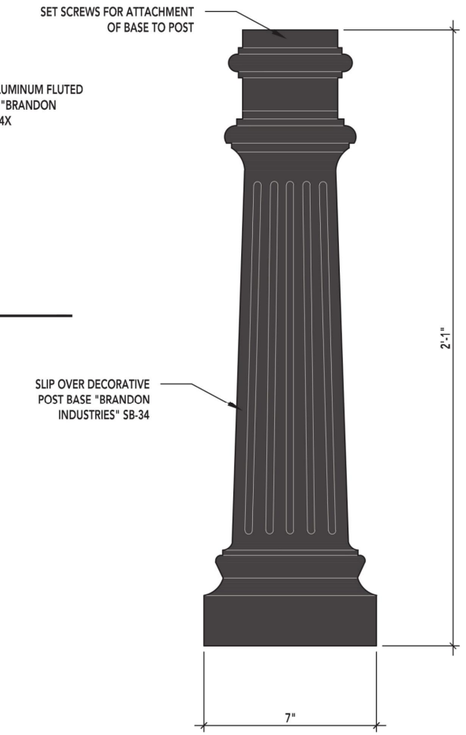


SB-34 SIGN BASE
SCALE: 3" = 1'-0"

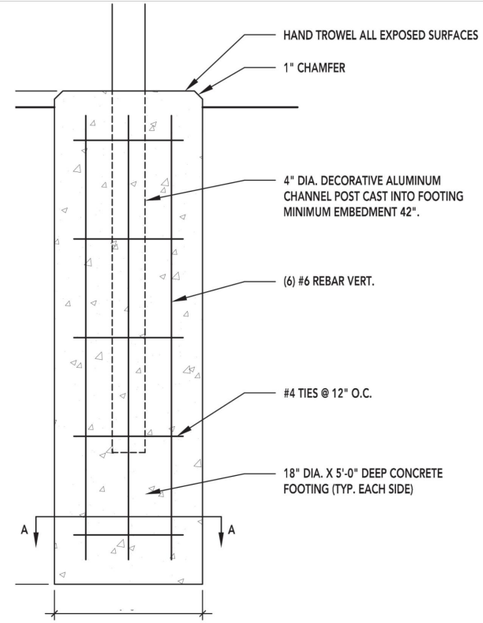


CONCRETE FOOTING DETAIL (Reference Only)
SCALE: 1" = 1'-0"

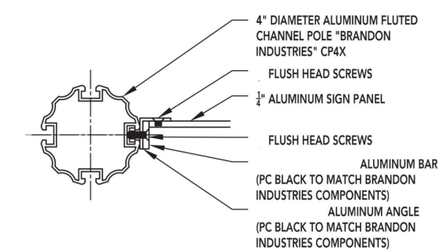


PANEL ATTACHMENT DETAIL (Reference Only)
SCALE: 3" = 1'-0"

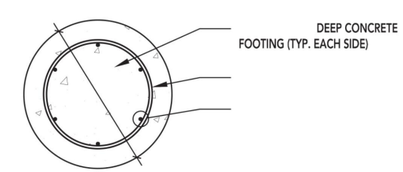


CONCRETE FOOTING DETAIL A-A (Reference Only)
SCALE: 1" = 1'-0"

CALCULATED DRP
CHECKED BT

WAYFINDING SIGNS DETAILS

CUY-US-042-4.29



P:\Middleburg Heights – City of\J20150340.000 Pearl Rd Rehab\Drawings\Trans\105726PP003A.dwg 01-Mar-19 4:01 PM

## SIGN NOTES

Vehicular Directional Wayfinding Signs

1. NOT FOR CONSTRUCTION. These drawings and notes are for the sole purpose of expressing design intent and are not intended for actual fabrication purposes. Engineer or sign contractor accepts total responsibility for final material selection, fabrication and installation methods. To scale electronic files are not construction documents and cannot be relied upon as identical to construction documents because of changes or errors induced by translation, transmission, or alterations while under the control of others. Use of information contained in the electronic files is at the user's sole risk and without liability to design consultants.
2. Vehicular Directional wayfinding signage shall be cantilevered single-post mounted, non-illuminated signage system
3. Sign details within this drawing set are based on products manufactured by "Brandon Industries". Other acceptable manufactures include "The Sign Store", Cason Bradley", and "Hooks and Lattice".
4. Lettering and direction arrow to be applied using retroreflective vinyl lettering equal to 'Scotchlite' as manufactured by Gregory Inc.
5. All vehicular wayfinding signs are to be 1-sided, 1/4" thick aluminum panel.
6. Provide color samples of all paint and lettering for owner's approval prior to fabrication. Refer to Parma Heights Wayfinding Guidelines Guide for formulated colors.
7. Font to meet Parma Heights Wayfinding Guidelines Raleway Semi-Bold at 95% set width.
8. All Galvanized Steel in contact with aluminum shall be abrasive blasted per SSPC-SP16 and coated with 1.5 Mil profile N69F Epoxy @ 4 to 6 Mils as manufactured by TNEMEC or approved equal.
9. PC = Powder Coat Finish
10. All exposed aluminum to be powdered coated.
11. FABRICATOR NOTE: Verify site conditions and measurements prior to sign fabrication.
12. Sign contractor shall be responsible for design and engineering of posts, foundations, supports, anchors and miscellaneous steel or metal required for installation.
13. The sign contractor's structural engineer shall be licensed in the State of Ohio and certify all connections and support details.
14. Isolate dissimilar materials as required.
15. Field dimensions shall be taken by the sign contractor with City personnel prior to preparation of shop drawings and fabrication where possible. It is the responsibility of the sign contractor to site verify all sign locations for accuracy, fit, and potential obstacles. Sign contractor shall notify appropriate person(s) of any issues, discrepancies and potential obstacles per the attached Performance Specifications, contract or specified communication process.
16. Sign contractor must obtain all permits and field inspection approvals necessary to complete work per City requirements. All sign locations need to be located and staked by sign contractor and approved by City prior to installation.
17. Masonry dimensions are noted; sign contractor to verify and adjust as needed. Final dimensions must appear on shop drawings for review and approval.
18. Sign contractor must clean and seal masonry to prevent moisture, discoloration and other defects due to weather and environmental conditions.
19. Sign contractor shall follow any additional requirements presented in the attached Performance Specifications and Design Intent Documents.

## STRUCTURAL NOTES

### General

1. The structure is to be designed to be self-supporting and stable when completed it is the responsibility of the contractor to determine procedures for erection and construction sequences.
2. Shop drawings reviewed by the contractor and stamped indicating approval shall be submitted to the A/E for review prior to fabrication detailing all necessary components.

### Foundations and Earthwork

3. Foundation design is the responsibility of the contractor.
4. Foundations shall bear on undisturbed soil or engineered fill providing a safe bearing capacity of 2000 PSF (min.). Material at bearing elevations which does not conform with these requirements shall be brought to the attention of the A/E for review and determination.
5. Unless otherwise noted in the contract documents foundations shall extend below local frost depths.

### Concrete

6. Design, furnish, and place concrete in accordance with the latest specifications of the ACI.
7. Unless noted or specified otherwise, concrete shall be controlled stone or gravel concrete. Concrete shall have the following minimum 28 day compressive strengths: All concrete work: 4000 PSI
8. Exterior concrete or concrete subject to freeze-thaw cycling shall be air-entrained (6%+/-1%).

CITY OF Parma Heights COMMUNITY GROWS HERE

**TYPOGRAPHY COLORS:**
PANTONE: 554 Dark Green
CMYK: 85/0/9/35
RGB: 32/90/65

**TAGLINE & BERRY COLOR:**
PANTONE: 3542 Eggplant
CMYK: 86/100/2/9
RGB: 74/41/132

**VINE COLORS:**
PANTONE: 7737 Green
CMYK: 64/15/100/2
RGB: 106/164/66

PANTONE: 3507 Lime Green
CMYK: 28/0/100/9
RGB: 179/199/42

CITY OF Parma Heights COMMUNITY GROWS HERE

**TYPOGRAPHY, BERRY & TAGLINE COLOR:**
Black

**VINE BACKGROUND:**
72% Gray
35% Gray

CITY OF Parma Heights COMMUNITY GROWS HERE

**TYPOGRAPHY & TAGLINE COLOR:**
White

**BERRIES COLOR:**
Black

## LOGO TYPOGRAPHY

**Headline Copy**

For any main headline or message, Hasta Grotesk Medium with type set at 115% horizontal width must be used.

Aa Bb Cc Dd Ee Ff Gg Hh Ii Jj
0 1 2 3 4 5 6 7 8 9

**Headline/Subhead Copy**

Any headline of lesser importance or subhead should be in Zurich Ex BT at 95% width.

**Aa Bb Cc Dd Ee Ff Gg Hh Ii Jj**
**0 1 2 3 4 5 6 7 8 9**

## WAYFINDING SIGNAGE TYPOGRAPHY

**Signage Copy**

For all City signage copy, Raleway Semi-Bold at 95% horizontal set width will be used.

Aa Bb Cc Dd Ee Ff Gg Hh Ii Jj
0 1 2 3 4 5 6 7 8 9

**Sample Headline Copy:**
City of Parma Heights

CITY OF Parma Heights COMMUNITY GROWS HERE

### THE CITY LOGO COLORS

Primary Color Palette

PANTONE: 554 Dark Green

Secondary Color Palette

PANTONE: 3542 Eggplant

PANTONE: 7737 Green

PANTONE: 3507 Lime Green

CALCULATED DRP
CHECKED BT

WAYFINDING SIGNS NOTES, COLORS, AND TYPOGRAPHY

CUY-US-042-4.29



P:\Middleburg Heights - City of\J20150340.000 Pearl Rd Rehab\Drawings\Trans\PP004.dwg 01-Mar-19 4:01 PM

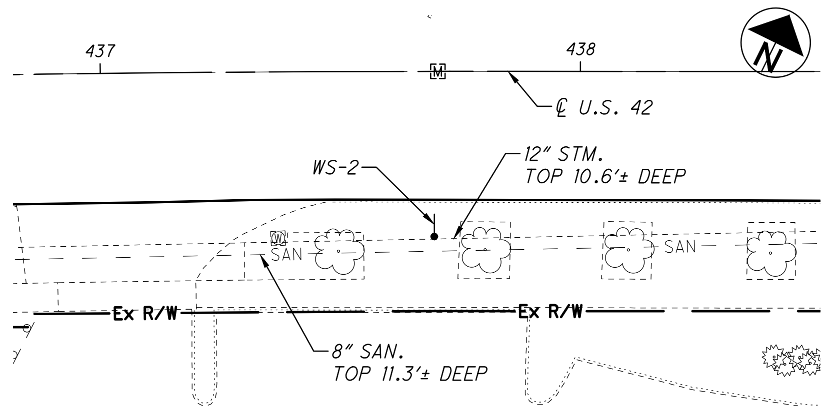


6677 PEARL ROAD

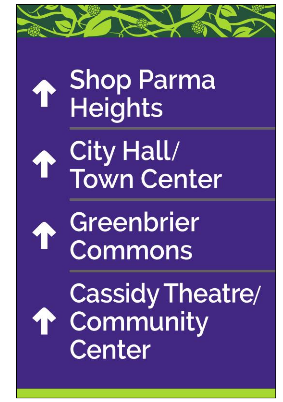


WS-2
(VEHICULAR DIRECTIONAL)

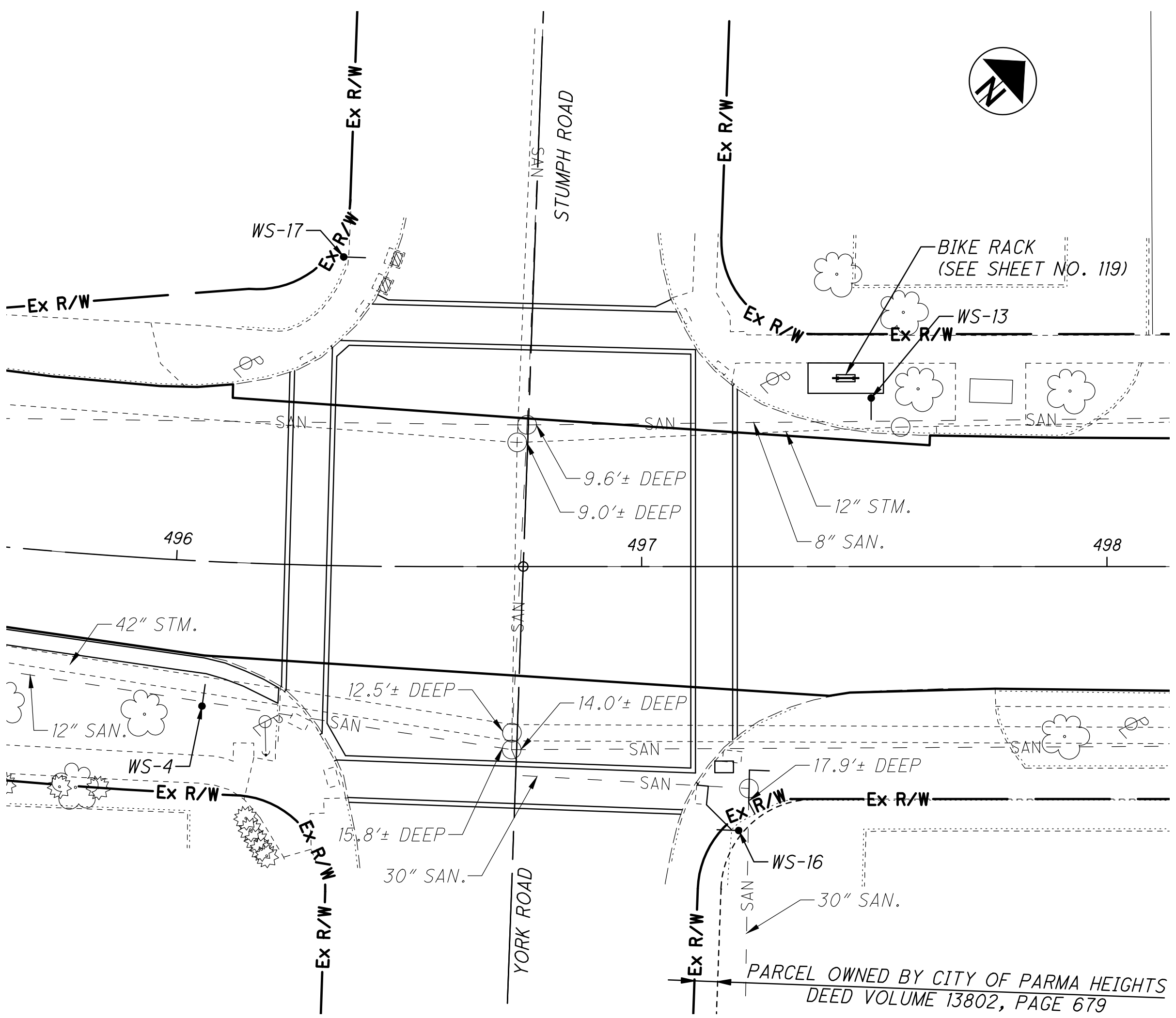


US 42 AND YORK ROAD/STUMPH ROAD INTERSECTION

SEE SHEET NO. 119 FOR INTERSECTION
DECORATIVE CROSSWALK AND BIKE RACK DETAIL

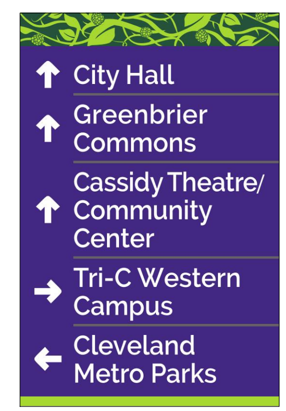


WS-4
(VEHICULAR DIRECTIONAL)

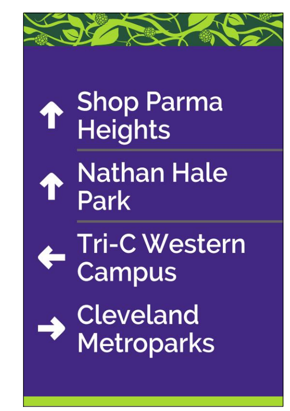


WS-13
(VEHICULAR DIRECTIONAL)

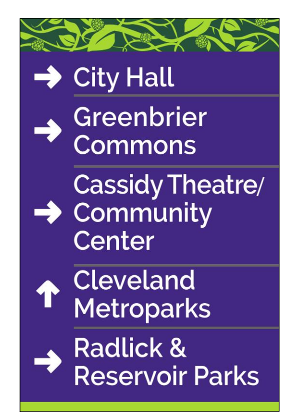


WS-16
(VEHICULAR DIRECTIONAL)

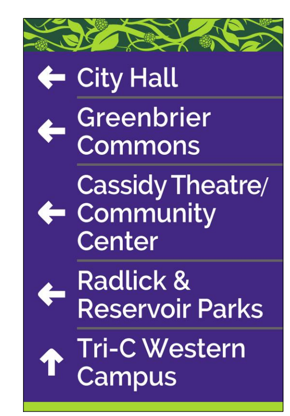


WS-17
(VEHICULAR DIRECTIONAL)

EXISTING SANITARY AND STORM SEWER INFORMATION ARE FROM RECORD DRAWINGS AND ARE FOR INFORMATION ONLY. THE CONTRACTOR SHALL BE RESPONSIBLE FOR VERIFYING THE LOCATION AND DEPTH OF THE SEWERS, AS WELL AS THE LOCATION OF ALL OTHER UNDERGROUND UTILITIES, PRIOR TO INSTALLATION OF THE SIGNS.

SIGN LOCATIONS SHOWN ARE FOR VISUAL REPRESENTATION ONLY. ALL LOCATIONS AND EXACT PLACEMENT OF SIGNAGE SHALL BE FIELD VERIFIED ON SITE PRIOR TO FABRICATION AND INSTALLATION TO CONFIRM PROPER CLEARANCE FROM THE STREET AS REQUIRED.

QUANTITIES CARRIED TO STREETSCAPING SUBSUMMARY SHEET NO. 117.

0 10 20 40
HORIZONTAL
SCALE IN FEET

CALCULATED DRP
CHECKED BT

# WAYFINDING SIGNS
# LOCATION PLANS AND DETAILS

CUY-US-042-4.29



P:\Middleburg Heights - City of\J20150340.000 Pearl Rd Rehab\Drawings\Trans\PP005.dwg 01-Mar-19 4:02 PM

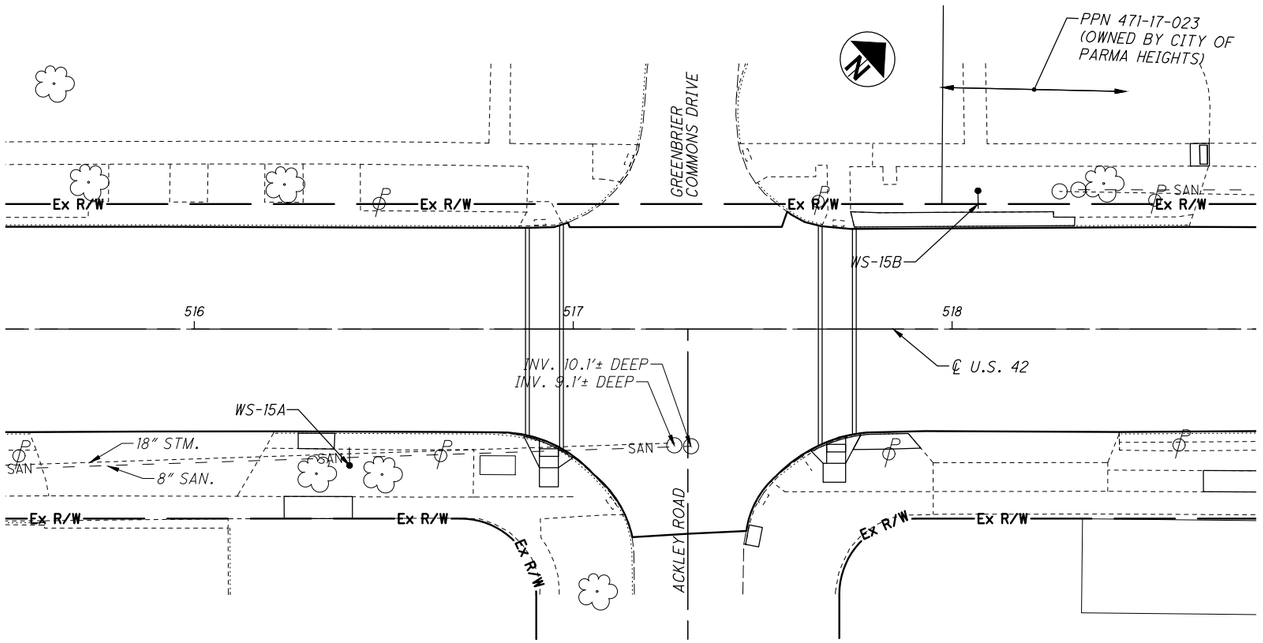


US 42 AND ACKLEY ROAD INTERSECTION

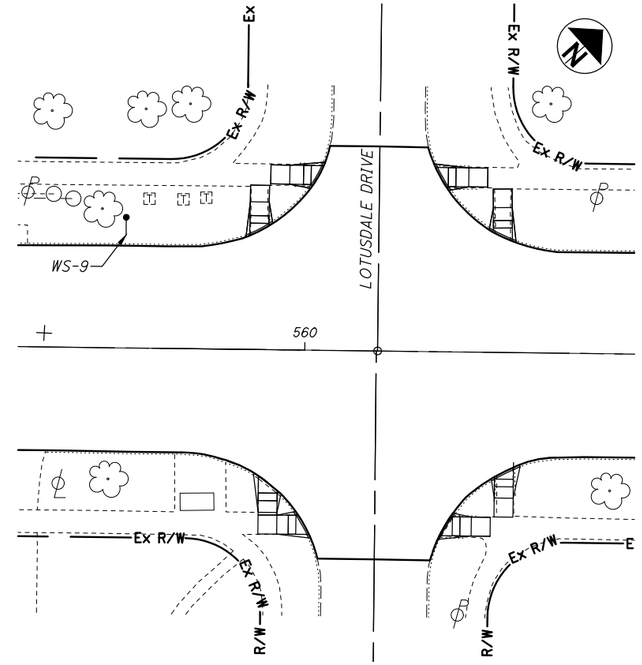


US 42 AND LOTUSDALE POCKET PARK

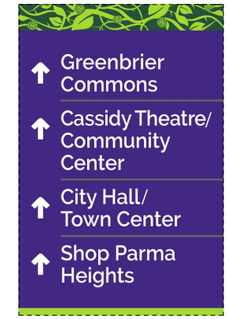


WS-9
(VEHICULAR DIRECTIONAL)

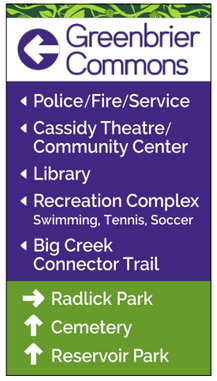


WS-15A
(AMENITIES VEHICULAR DIRECTIONAL)

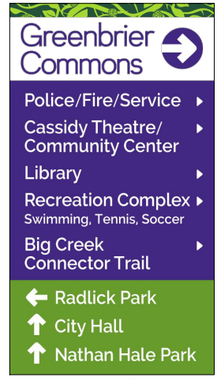


WS-15B
(AMENITIES VEHICULAR DIRECTIONAL)

*EXISTING SANITARY AND STORM SEWER INFORMATION ARE FROM RECORD DRAWINGS AND ARE FOR INFORMATION ONLY. THE CONTRACTOR SHALL BE RESPONSIBLE FOR VERIFYING THE LOCATION AND DEPTH OF THE SEWERS, AS WELL AS THE LOCATION OF ALL OTHER UNDERGROUND UTILITIES, PRIOR TO INSTALLATION OF THE SIGNS.*

*SIGN LOCATIONS SHOWN ARE FOR VISUAL REPRESENTATION ONLY. ALL LOCATIONS AND EXACT PLACEMENT OF SIGNAGE SHALL BE FIELD VERIFIED ON SITE PRIOR TO FABRICATION AND INSTALLATION TO CONFIRM PROPER CLEARANCE FROM THE STREET AS REQUIRED.*

*QUANTITIES CARRIED TO STREETSCAPING SUBSUMMARY SHEET NO. 117.*

HORIZONTAL SCALE IN FEET 0 10 20 40

CALCULATED DRP
CHECKED BT

**WAYFINDING SIGNS LOCATION PLANS AND DETAILS**

**CUY-US-042-4.29**



P:\Middleburg Heights - City of\J20150340.000 Pearl Rd Rehab\Drawings\Trans\PP006.dwg 01-Mar-19 4:02 PM

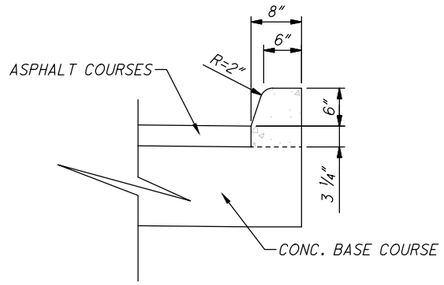


## ITEM 609 - CURB, TYPE 2-B, AS PER PLAN (B)

REFER TO ODOT STANDARD CONSTRUCTION DRAWING BP-5.1 FOR ADDITIONAL CURB CONSTRUCTION INFORMATION (JOINTS, SEALER, ETC.).

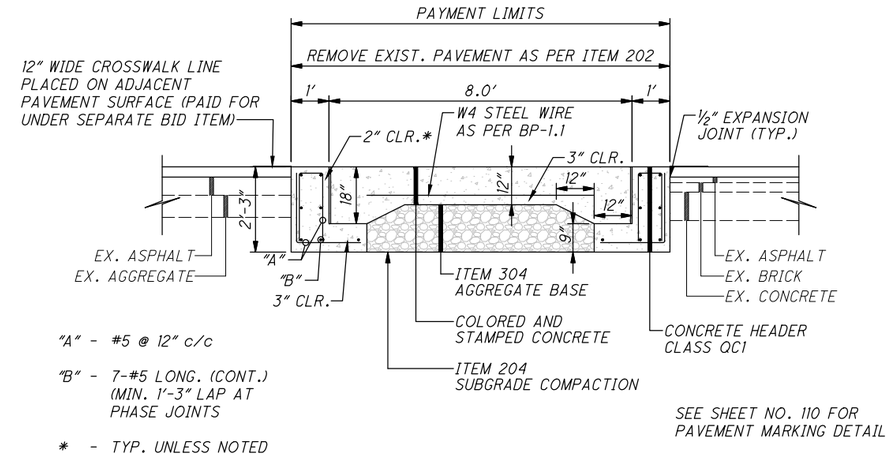


## ITEM 451 - REINFORCED CONCRETE, MISC.: DECORATIVE CONCRETE CROSSWALK

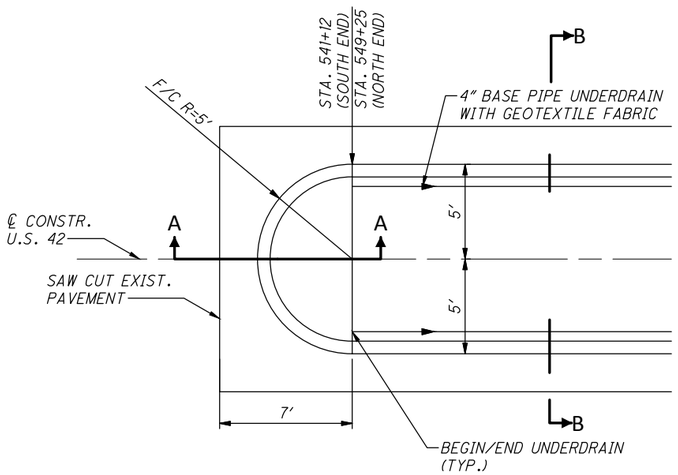


## BEGIN/END MEDIAN DETAIL

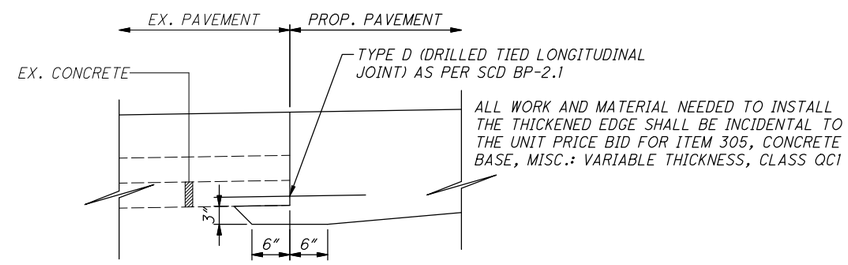


## THICKENED EDGE DETAIL

USE WHEN THE EXISTING CONCRETE THICKNESS IS LESS THAN 6 INCHES

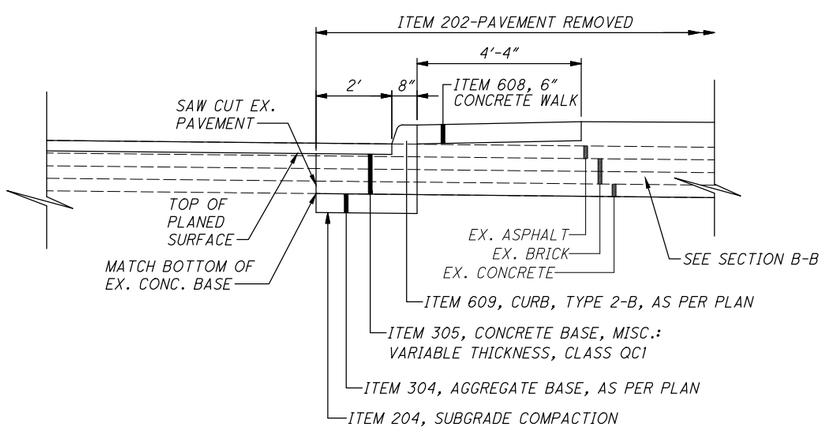


## SECTION A-A

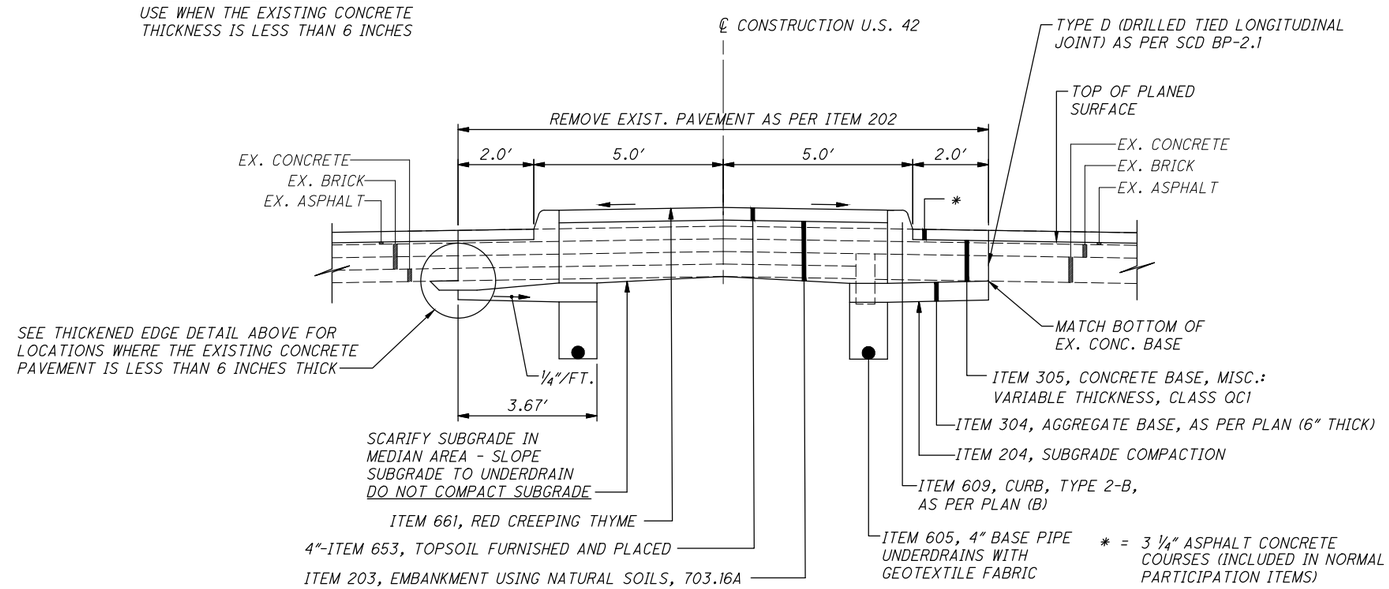


## SECTION B-B

CALCULATED DRP
CHECKED BT

STREETSCAPING DETAILS

CUY-US-042-4.29



P:\Middleburg Heights - City of\J20150340.000 Pearl Rd Rehab\Drawings\Trans\PD001.dwg 01-Mar-19 4:03 PM