STATE OF OHIO
DEPARTMENT OF TRANSPORTATION
CUY-71-0.00
CITIES OF BRUNSWICK, STRONGSVILLE AND MIDDLEBURG HEIGHTS
MEDINA COUNTY
CUYAHOGA COUNTY

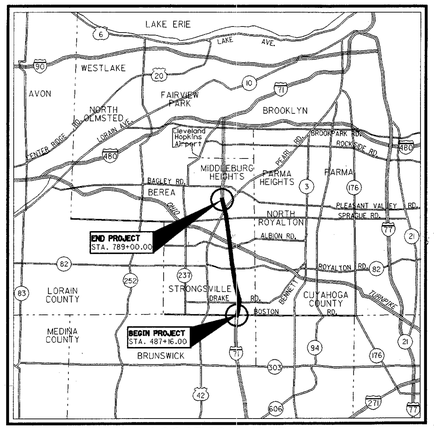

LOCATION MAP

LATITUDE: N41°18'30" LONGITUDE: W81°48'00"

SCALE IN MILES 2 0 2 4 6

N

PORTION TO BE IMPROVED
U.S. ROUTES
INTERSTATE ROUTES
STATE ROADS
OTHER ROADS

DESIGN DESIGNATION

CURRENT ADT (1995)	76,410
DESIGN YEAR ADT (2020)	105,570
DESIGN HOURLY VOLUME (2020)	10,557
DIRECTIONAL DISTRIBUTION	60%
TRUCKS (24 HOUR B&C)	6%
DESIGN SPEED	65 MPH
LEGAL SPEED	60 MPH

DESIGN FUNCTIONAL CLASSIFICATION - INTERSTATE (URBAN)

DESIGN EXCEPTIONS:

VERTICAL CLEARANCE
APPROVAL DATE: JANUARY 7, 1994

INDEX OF SHEETS:

TITLE SHEET	1
SCHEMATIC PLAN	2-4
TYPICAL SECTIONS	5-6, 6A, 6B, 7-12
GENERAL NOTES	13-17
MAINTENANCE OF TRAFFIC NOTES	18-22, 22A-22G
MAINTENANCE OF TRAFFIC PLANS	23, 23A-23B, 24-56
	56A-56H, 57, 57A-57H
GENERAL SUMMARY	58-61
QUANTITY CALCS / SUB-SUMMARY	62-73
STORM WATER POLLUTION PREVENTION PLAN	74-79
I-71 PLAN & PROFILE AND QUANTITIES	80, 80A, 80B, 81-121
S.R. 82 INTERCHANGE PLAN	122, 122A-122B
U.S. 42 INTERCHANGE PLAN	123, 123A-123I
I-71 CROSS SECTIONS	124-188
CROSS ROAD PLAN & PROFILES	189-192
CROSS ROAD CROSS SECTIONS	193-198
STORM SEWER PROFILES	199
MISCELLANEOUS DETAILS	200-207
DRAINAGE DETAILS	208-211, 211A-211C
TRAFFIC CONTROL PLANS	212-214, 214A-214F
	215-221, 221A
	222-253, 253A-253F
LIGHTING PLANS	254-256, 256A
	257-281, 283-286
STRUCTURES OVER 20' PLANS	287-289, 289A-289H
BR. NO. CUY-71-0000	290-292
BR. NO. CUY-71-0100L&R	293-297, 297A, 298-304
BR. NO. CUY-71-0332L&R	304A-304X
BR. NO. CUY-71-0384L&R	305-309, 309A, 310-316
BR. NO. CUY-71-0395L&R	317-331, 331A-331E
BR. NO. CUY-71-0521L&R	332-343, 343A-343B
BR. NO. CUY-71-0553L&R	344-359, 359A-359E
RIGHT OF WAY	360-361

SHEETS NOT USED.... 282

PROJECT DESCRIPTION:

THIS PROJECT INVOLVES THE WIDENING AND UPGRADING OF IR-71 FROM THE MEDINA COUNTY LINE NORTH TO ONE QUARTER MILE NORTH OF PEARL ROAD (US-42). MAJOR WORK ITEMS INCLUDE PAVEMENT REPLACEMENT, DRAINAGE UPGRADING, ASPHALT CONCRETE OVERLAY(RAMPS), STRUCTURE REHABILITATION, SIGNING AND PAVEMENT MARKINGS.

LIMITED ACCESS

THIS IMPROVEMENT IS ESPECIALLY DESIGNED FOR THROUGH TRAFFIC AND HAS BEEN DECLARED A LIMITED ACCESS HIGHWAY OR FREEWAY BY ACTION OF THE DIRECTOR IN ACCORDANCE WITH THE PROVISIONS OF SECTION 5511.02 OF THE REVISED CODE OF OHIO.

1997 SPECIFICATIONS

THE STANDARD SPECIFICATIONS OF THE STATE OF OHIO, DEPARTMENT OF TRANSPORTATION, INCLUDING CHANGES AND SUPPLEMENTAL SPECIFICATIONS LISTED IN THE PROPOSAL SHALL GOVERN THIS IMPROVEMENT.

I HEREBY APPROVE THESE PLANS AND DECLARE THAT THE MAKING OF THIS IMPROVEMENT WILL NOT REQUIRE THE CLOSING TO TRAFFIC OF THE HIGHWAY AND THAT PROVISIONS FOR THE MAINTENANCE AND SAFETY OF TRAFFIC WILL BE AS SET FORTH IN THE PLANS AND ESTIMATES.

UNDER AUTHORITY OF SECTION 4511.21, DIVISION (I) OF THE REVISED CODE OF OHIO, THE REVISED PRIMA FACIE SPEED LIMITS AS INDICATED HEREIN ARE DETERMINED TO BE REASONABLE AND SAFE, AND ARE HEREBY ESTABLISHED FOR THE DURATION OF THIS PROJECT. THE PRIMA FACIE SPEED LIMIT OR LIMITS HEREBY ESTABLISHED SHALL BECOME EFFECTIVE WHEN APPROPRIATE SIGNS GIVING NOTICE THEREOF ARE ERECTED.

PREPARED AND RECOMMENDED BY

EUTHENICS INC.
CONSULTING ENGINEERS
CLEVELAND, OHIO

STATE OF OHIO — DONALD W. KAMINSKI 27899 — REGISTERED PROFESSIONAL ENGINEER

D.W. KAMINSKI

UNDERGROUND UTILITIES
TWO WORKING DAYS BEFORE YOU DIG
CALL 1-800-362-2764 (TOLL FREE)
OHIO UTILITIES PROTECTION SERVICE
NON-MEMBERS
MUST BE CALLED DIRECTLY

ROADWAY PLANS PREPARED BY:
OHIO DEPARTMENT OF TRANSPORTATION
DISTRICT 12
LOCATION & DESIGN

STATE OF OHIO — ERIC N. FORSBERG 41317 — REGISTERED PROFESSIONAL ENGINEER

SUPPLEMENTAL PRINTS OF STANDARD CONSTRUCTION DRAWINGS

AS-1-81	9-15-94	DM-1.1M	6-30-95	GR-5.1M	4-21-95	I-1.1M	9-6-95	MT-98.14	6-24-93	TC-7.65	3-1-79	TC-52.10	4-3-79	806	9-9-97
		DM-4.3M	6-30-95	GR-5.3	10-30-92	I-2.1M	4-8-97	MT-98.15	6-24-93	TC-12.30	1-20-84	TC-52.20	4-3-79	814	6-2-98
BP 1.1	2-21-92	DM-4.4M	6-30-95	GR-6.1M	1-3-96			MT-98.16	6-24-93	TC-16.20	1-20-84	TC-65.10	2-1-90	815	5-30-96
BP-2.1M	4-8-97					MC-5	6-12-75	MT-98.17	4-25-94	TC-21.10	9-1-92	TC-65.11	2-1-90	825	10-2-89
BP-2.2M	10-21-97	EXJ-4-87	2-14-97	GSD-1-96	2-12-97	MC-9.4	10-30-92	MT-98.18	4-25-94	TC-21.20	9-1-92	TC-71.10	9-10-91	838	5-6-97
BP-2.3M	10-28-94					MC-10	5-1-76	MT-98.19M	3-1-96	TC-22.10	9-1-92	TC-72.20	2-26-82	843	5-5-98
BP-3.1	2-21-92	F-1.1M	4-8-97	HL-10.12	5-1-87			MT-99.20	4-29-88	TC-22.20	9-1-92	TC-82.10	8-29-84	844	5-5-98
BP-5.1	10-28-94	F-3	5-1-76	HL-10.31	5-1-87	MH-1	12-18-84	MT-101.60	7-1-92	TC-31.21	9-1-92	TC-83.20	1-20-84	846	9-9-97
BP-8.1M	4-8-97	F-3.2M	4-8-97	HL-20.11	5-1-87	MH-1.2M	9-6-95	MT-102.10	8-25-89	TC-32.10	9-1-92			863	9-9-97
BP-9.1M	12-18-96	F-3.4M	4-8-97	HL-20.13	5-1-87	MH-5	6-12-75	MT-105.10	7-1-92	TC-35.10	8-29-84			855	6-30-98
BP-9.2M	12-18-96	F-5	5-1-76	HL-20.21	5-1-87			MT-105.11	7-1-92	TC-41.10	8-29-84			904	5-5-98
				HL-20.22	5-1-87	MT-95.30	10-10-88			TC-41.20	6-21-94			905	4-1-98
BR-1	12-15-94	FB-1-82	5-10-82	HL-20.23	5-1-87	MT-95.31	10-10-88	PCB-91	4-24-92	TC-41.41	8-2-79			906	5-5-98
				HL-20.31	5-1-87	MT-95.32	8-25-89			TC-41.50	6-21-94			910	4-21-97
CB-1.1M	7-12-95	GR-1.1M	10-21-97	HL-30.11	5-1-87	MT-95.40	10-1-92	RM-1.1M	4-8-97	TC-42.10	8-19-77			911	7-10-97
CB-1.2M	7-12-95	GR-1.2M	1-3-96	HL-30.21	5-1-87	MT-96.10	9-9-88	RM-3.1M	10-21-97	TC-42.20	3-26-79			954	9-9-97
CB-2.2M	7-12-95	GR-1.3	2-21-92	HL-30.33	5-1-87	MT-96.20	9-9-88	RM-4.1M	10-21-97	TC-51.10	1-20-84				
CB-3.1M	7-12-95	GR-2.1M	10-21-97	HL-40.10	5-1-87	MT-96.25	9-9-88	RM-4.2M	10-21-97	TC-51.11	9-30-94				
CB-3.2M	7-12-95	GR-3.1M	10-21-97	HL-50.11	5-1-87	MT-97.10	4-29-88	RM-4.3M	10-21-97						
CB-3.4M	7-12-95	GR-3.2M	10-21-97	HL-50.21	5-1-87	MT-97.11	10-4-89	RM-4.5M	10-21-97						
CB-6	5-1-79	GR-3.5M	10-21-97	HL-60.21	5-1-87	MT-98.12	6-24-93								
		GR-4.2M	10-21-97	HL-60.31M	3-31-95	MT-98.13	6-24-93	SD-1-69	6-12-69						

SUPPLEMENTAL SPECIFICATIONS

SPECIAL PROVISIONS
WATERWAY PERMIT 4-23-98

APPROVED
DATE 6 AUG 98 DISTRICT DEPUTY DIRECTOR

APPROVED
DATE 8-27-98 DIRECTOR, DEPARTMENT OF TRANSPORTATION

1 / 361

FEDERAL PROJECT NO. 100% STATE

PID NO.s 55751(PE), 84591(PE) 15717(CONSTR)

CONSTRUCTION PROJECT NO.

RAILROAD INVOLVEMENT NONE

CUYAHOGA COUNTY CUY-71-0.00

PLOTTED BY: fkonopka
PLOTTED FROM: i:\users\eforsber\pid08459\dgn\08459gta.dgn
PLOT SUBMITTED: 06-AUG-1998 05:43
CUY-71-0.00 980748 361PGS
PID# 15717 12-02-98 DIST. 12

SCHEMATIC PLAN

CALC. BY: MEX DATE: 2-1-94	CUY-71-0.00	OHIO
CHKD. BY: RSW DATE: 3-1-94		FHWA REGION 5
		FEDERAL PROJECT

2 / 361

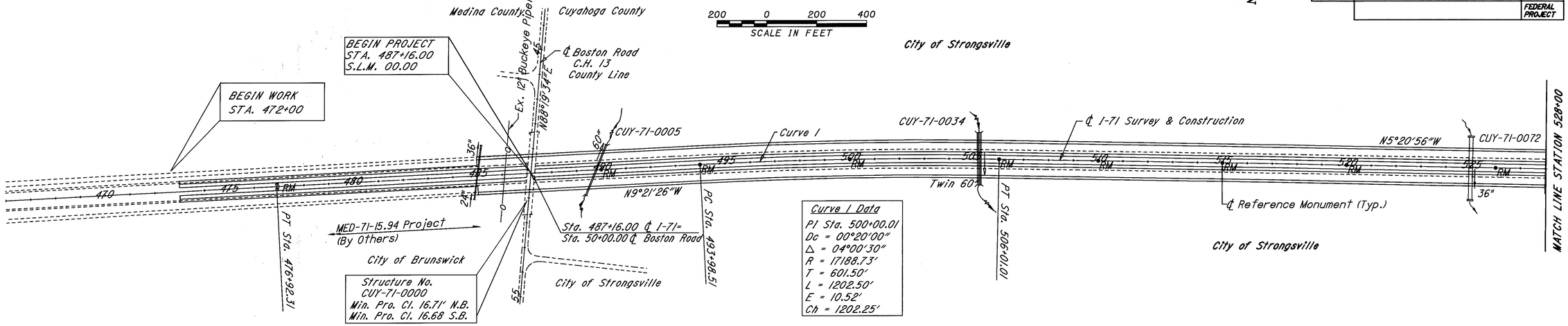

Curve 1 Data
PI Sta. 500+00.01
Dc = 00°20'00"
Δ = 04°00'30"
R = 17188.73'
T = 601.50'
L = 1202.50'
E = 10.52'
Ch = 1202.25'

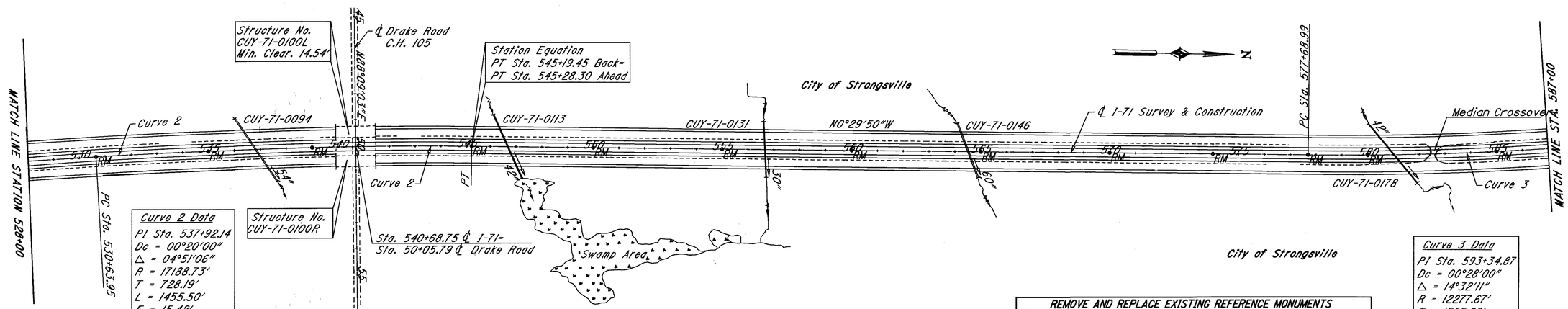

Curve 2 Data
PI Sta. 537+92.14
Dc = 00°20'00"
Δ = 04°51'06"
R = 17188.73'
T = 728.19'
L = 1455.50'
E = 15.42'
Ch = 1455.07'

Curve 3 Data
PI Sta. 593+34.87
Dc = 00°28'00"
Δ = 14°32'11"
R = 12277.67'
T = 1565.88'
L = 3114.94'
E = 99.45'
Ch = 3106.59'

REMOVE AND REPLACE EXISTING REFERENCE MONUMENTS		
STATION		LOCATION
476+92.31	P.T.	10' Lt. of ℄ Survey
476+92.31	P.T.	10' Rt. of ℄ Survey
490+00		℄ Survey
493+98.51	P.C.	"
500+00		"
506+01.01	P.T.	"
510+00		"
515+00		"
520+00		"
526+00		"
530+63.95	P.C.	"
535+00		"
539+00		"
545+19.45 Bk.=545+28.30 Ahd. PT		"
550+00		"
555+00		"
560+00		"
565+00		"
570+00		"
574+00		"
577+68.99	P.C.	"
580+00		"
585+00		℄ Survey
Total Pay Item 202-Monument Assembly Removed		= 23 Each
Total Pay Item 604-Reference Monument		= 23 Each

CONVENTIONAL SIGNS

RIGHT OF WAY LINE — R/W
LIMITED ACCESS LINE — L/A
CORPORATION LINE
CONSTRUCTION LIMITS
CENTERLINE WITH STATION INDICATION — 10
FENCE LINE (EXISTING) — x x x
GUARDRAIL (EXISTING)
GUARDRAIL (PROPOSED)
TELEPHONE, LIGHT, AND POWER POLES
TREE, WOODS, ORCHARD, STUMPS
WATERLINE — W EX. — W PROP.
GASLINE — G EX. — G PROP.
UNDERGROUND TELEPHONE — T EX. — T PROP.
UNDERGROUND ELECTRIC — E EX. — E PROP.
AERIAL ELECTRIC — AE EX.

STORM SEWER — S EX. — S PROP.
SANITARY SEWER — San EX. — San PROP.
FIRE HYDRANT — EX. — W — PROP.
MANHOLE — EX. — TO BE RESET — PROP.
CATCH BASIN OR INLET — EX. — TO BE RESET — PROP.
PAVED SHOULDER INLET MANHOLE — EX. — PROP.
VALVE — GV — WV
WATER METER — WM EX. — WM TO BE RESET — WM PROP.
TRAFFIC SIGNS — ONE SUPPORT — TWO SUPPORTS — OVERHEAD
DELINEATOR — EX.
PAVEMENT, DRIVES, WALKS (EXISTING)
PULL BOX — EX. — PROP.
REFERENCE MONUMENT — EX. RM — REMOVE & REPLACE RM — PROP. RM
TOWER LIGHT — EX. — PROP.
STREAMS & DITCHES — EX. DITCH — EX. STREAM
CULVERTS — HEADWALLS

EUTHENICS INC.
CONSULTING ENGINEERS
CLEVELAND, OHIO

DESIGNED: MEX	CHECKED: RSW	DRAWN: MEX
DATE: 11-4-92	DATE: 3-1-94	SCALE: AS SHOWN

PLOTTED BY: fkonopka
PLOTTED: Friday, July 29, 1998 12:14
PLOT SUBMITTED: 29-JUL-1998 12:14
307SCMI.DGN
PLOTTED: Friday, July 29, 1998 12:14 PLOT SUBMITTED: 29-JUL-1998 12:14 307SCMI.dgn

SCHEMATIC PLAN

CALC. BY MEK DATE 1-30-92	CUY-71-0.00	OHIO
CHKD. BY RSW DATE 3-1-94		FHWA REGION 5
		FEDERAL PROJECT

3/361

200 0 200 400
SCALE IN FEET

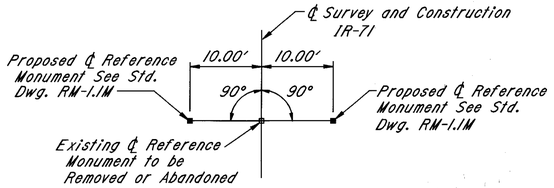

PROPOSED AND EXISTING ℄ REFERENCE MONUMENT DETAIL
No Scale

Curve 3 Data
PI Sta. 593+34.87
Dc = 0°28'00"
△ = 14°32'11"
R = 12277.67'
T = 1565.88'
L = 3114.94'
E = 99.45'
Ch = 3106.59'

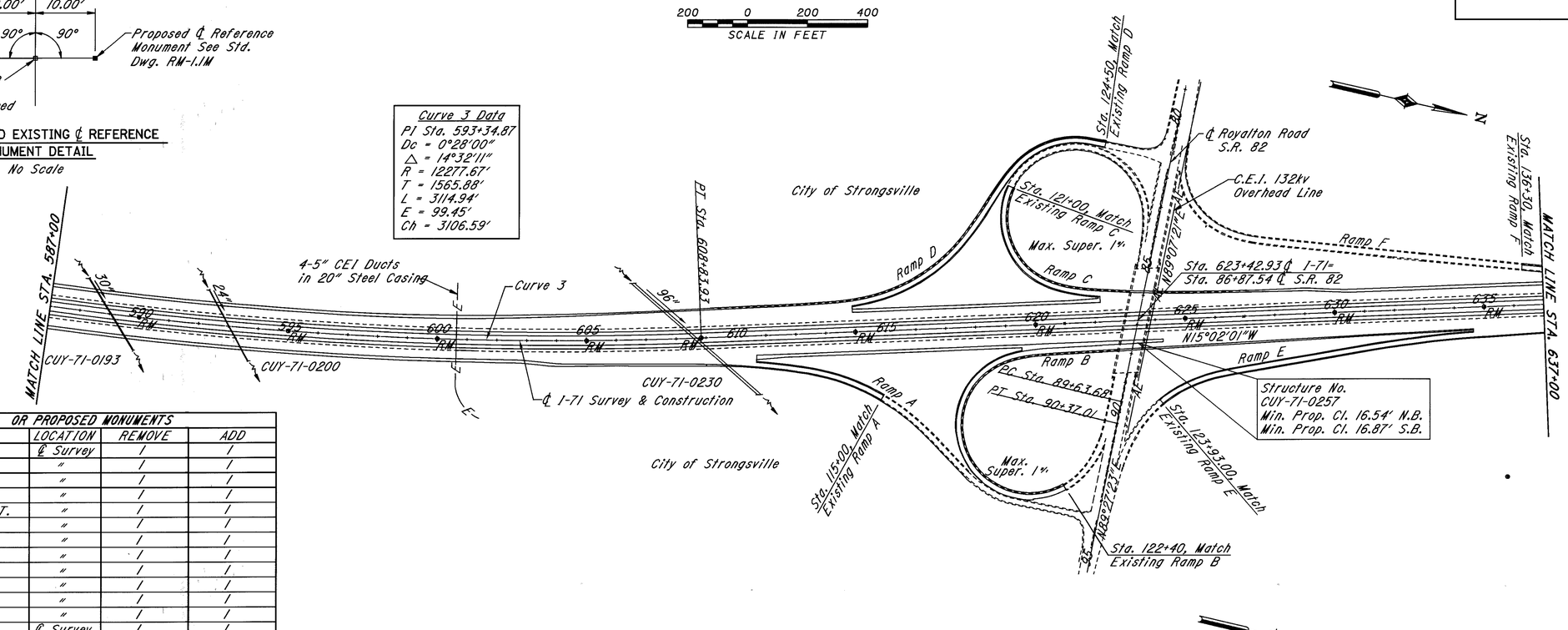

LOCATION OF EXISTING OR PROPOSED MONUMENTS			
STATION	LOCATION	REMOVE	ADD
590+00	℄ Survey	/	/
595+00	"	/	/
600+00	"	/	/
605+00	"	/	/
608+83.93 P.T.	"	/	/
614+00	"	/	/
620+00	"	/	/
625+00	"	/	/
630+00	"	/	/
635+00	"	/	/
640+00	"	/	/
645+00	"	/	/
650+00	℄ Survey	/	/
655+00	10' LT. ℄		/
655+00	10' RT. ℄		/
655+00	℄ Survey	ABAN.	
661+00	℄ Survey	/	/
668+99.38 P.C.	10' LT. ℄	ABAN.	
668+99.38 P.C.	10' RT. ℄	ABAN.	
668+99.38 P.C.	℄ Survey		/
675+50	"	/	/
682+00	"	/	/
688+00	℄ Survey	/	/
Total Pay Item 202-Monument Assembly Removed =17 Each			
Total Pay Item 604-Reference Monument			20 Each

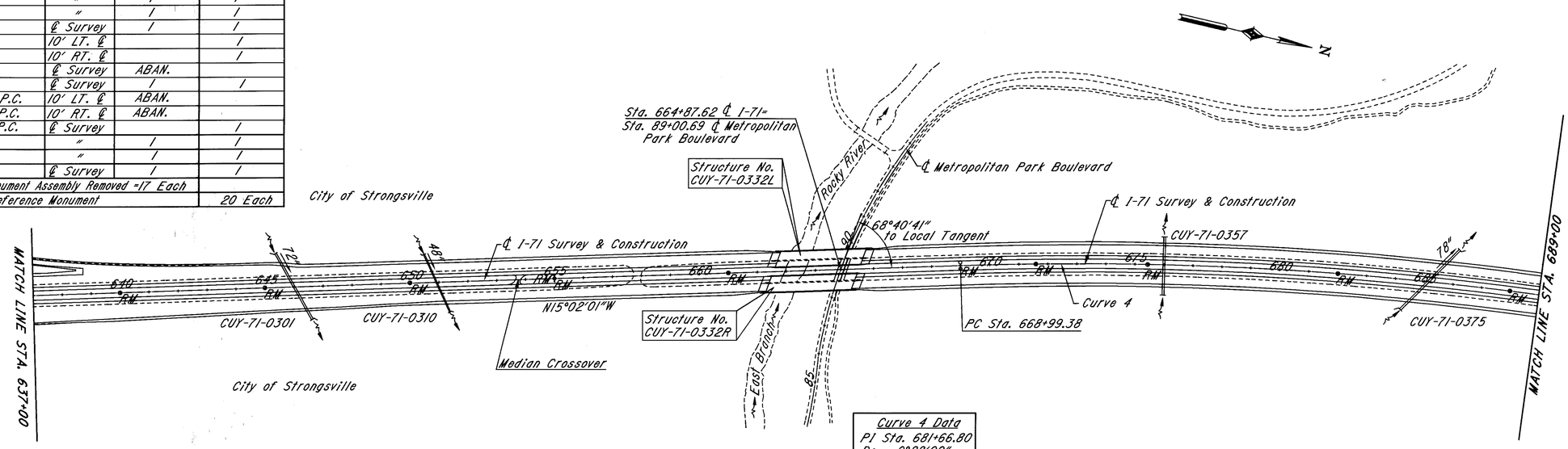

Curve 4 Data
PI Sta. 681+66.80
Dc = 0°28'00"
△ = 11°47'15"
R = 12277.67'
T = 1267.42'
L = 2525.89'
E = 65.24'
Ch = 2521.44'

EUTHENICS INC.
CONSULTING ENGINEERS
CLEVELAND, OHIO

DESIGNED MEK	CHECKED RSW	DRAWN MEK
DATE 11-30-92	DATE 3-1-94	SCALE AS SHOWN

PLOTTED BY: fkonopka
PLOTTED: Friday, July 10, 1998 12:15
PLOT SUBMITTED: 29-JUL-1998 12:15
307SCM2.DGN
Reforsber Rpid08459Rdgn B307scm2.dgn

SCHEMATIC PLAN

CALC. BY MEK DAT	CUY-71-0.00	OHIO
CHKD. BY RSW DAT		FHWA REGION 5
		FEDERAL PROJECT

4 / 361

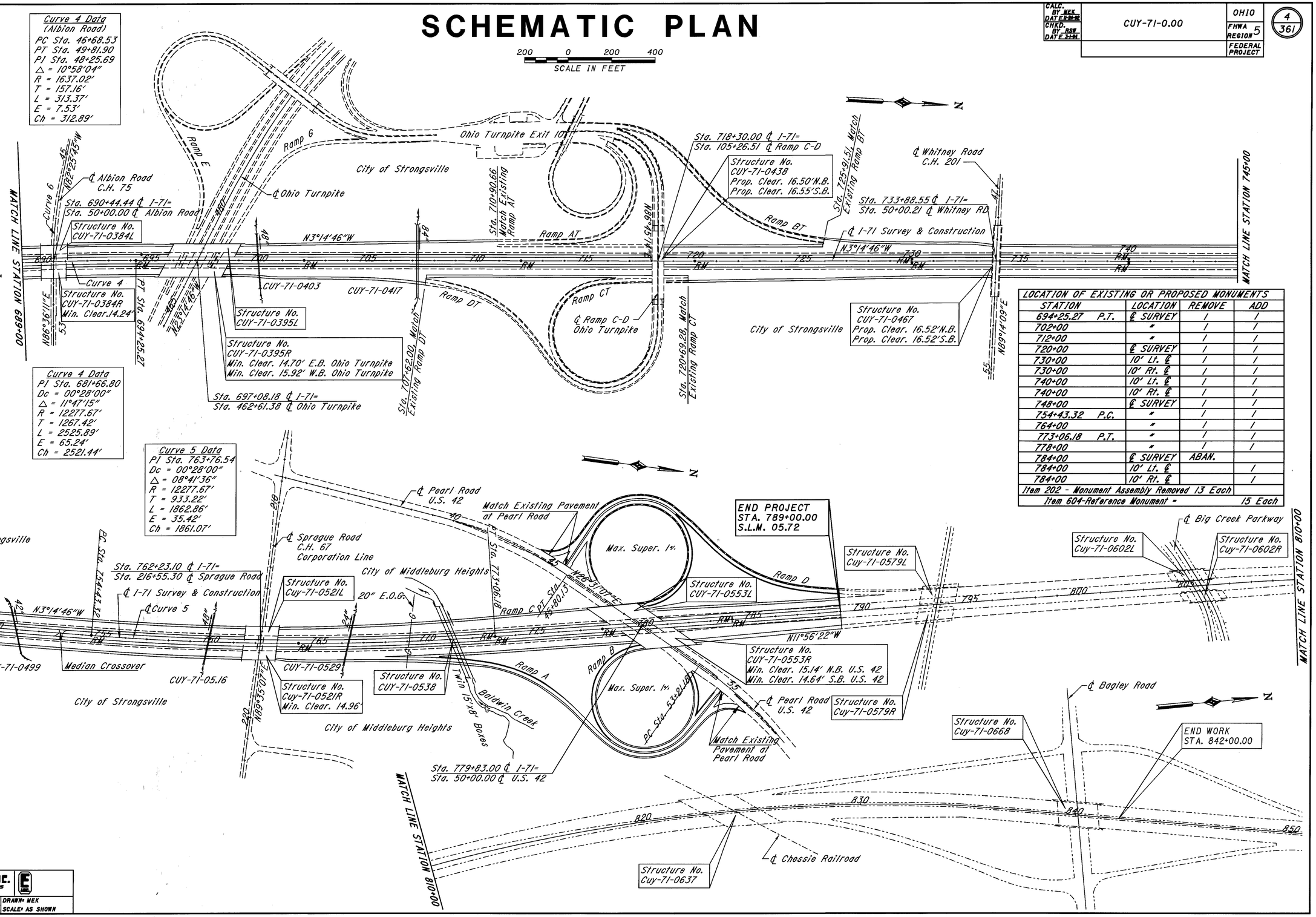

LOCATION OF EXISTING OR PROPOSED MONUMENTS			
STATION	LOCATION	REMOVE	ADD
694+25.27 P.T.	℄ SURVEY	/	/
702+00	"	/	/
712+00	"	/	/
720+00	℄ SURVEY	/	/
730+00	10' Lt. ℄	/	/
730+00	10' Rt. ℄	/	/
740+00	10' Lt. ℄	/	/
740+00	10' Rt. ℄	/	/
748+00	℄ SURVEY	/	/
754+43.32 P.C.	"	/	/
764+00	"	/	/
773+06.18 P.T.	"	/	/
778+00	"	/	/
784+00	℄ SURVEY	ABAN.	
784+00	10' Lt. ℄		/
784+00	10' Rt. ℄		/
Item 202 - Monument Assembly Removed 13 Each			
Item 604-Reference Monument -			15 Each

EUTHENICS INC.
CONSULTING ENGINEERS
CLEVELAND, OHIO

DESIGNED: MEK	CHECKED: RSW	DRAWN: MEK
DATE: 11-24-92	DATE: 3-2-94	SCALE: AS SHOWN

PLOTTED BY: fkonopka
PLOTTED: 12:17 PLOT SUBMITTED:29-JUL-1998
307SCM3.DGN
307scm3.dgn
Bpid08459Bdgn
Bforsber

SCHEMATIC PLAN

TYPICAL SECTIONS
TYPE 446

CUY-71-0.00	OHIO
	FHWA REGION 5
	FEDERAL PROJECT

5/361

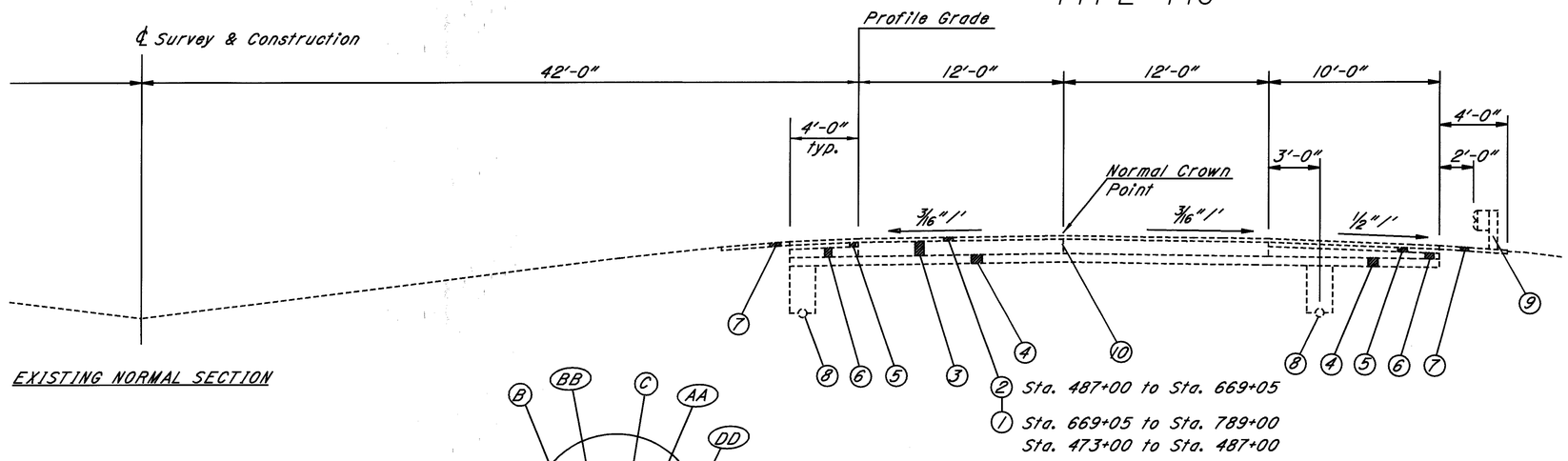

EXISTING NORMAL SECTION

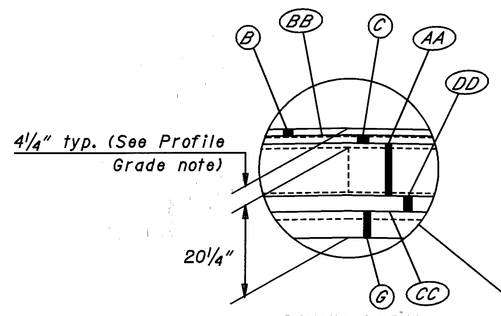

PAVING DETAIL

4 1/4"± above ex. conc. pavt. (1 1/2" above ex. 2 3/4" asphalt surface or 1 3/4" above ex. 2 1/2" asphalt surface.) Typical except under overhead bridges and 100 ft. adjacent to each bridge. (See Plan & Profile sheets)

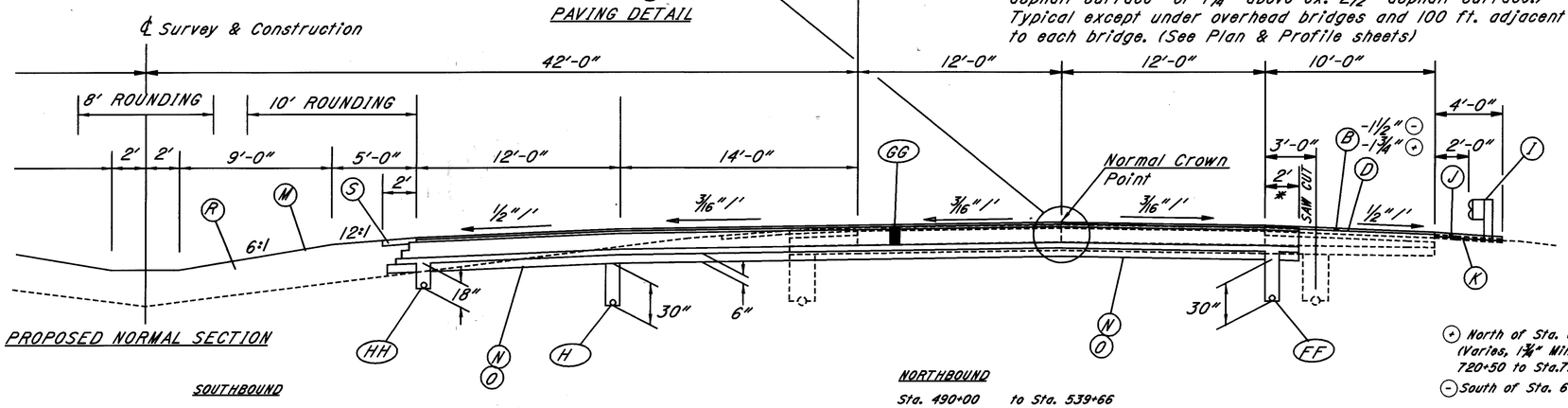

PROPOSED NORMAL SECTION

(+) North of Sta. 669+05 (Varies, 1 3/4" Min. Sta. 720+50 to Sta.723+00)

(-) South of Sta. 669+05

SOUTHBOUND

Sta. 490+00 to Sta. 539+66
Sta. 541+71.50 to Sta. 545+19.45 (Back)
Sta. 545+28.30 (Ahead) to Sta. 597+46.65
Sta. 613+98 to Sta. 621+09.41
Sta. 630+09.41 to Sta. 637+45.27
Sta. 646+45.27 to Sta. 661+28.57
Sta. 666+75.93 to Sta. 689+58.43
Sta. 691+33.93 to Sta. 695+35.11
Sta. 714+97 to Sta. 716+50
Sta. 720+50 to Sta. 724+90.01
Sta. 737+50 to Sta. 761+19.62
Sta. 763+26.63 to Sta 763+97.86

*-Existing S.B. outside shoulder is 10"± concrete between the following stations:
Sta. 646+45.27 to Sta. 655+50
(REMOVE 2'-0" AS SHOWN)

NORTHBOUND

Sta. 490+00 to Sta. 539+66
Sta. 541+71.50 to Sta 545+19.45(Back)
Sta. 545+28.30(Ahead) to Sta. 602+71.33
Sta. 611+71.33 to Sta 619+53.50
Sta. 651+00 to Sta. 661+28.57
Sta. 666+75.93 to Sta. 689+61.19
Sta. 691+27.69 to Sta. 695+41.08
Sta. 698+84.62 to Sta. 699+62.97
Sta. 708+62.97 to Sta 715+61
Sta. 731+69.18 to Sta. 761+19.62
Sta. 772+02.95 to Sta. 778+35.38

EXISTING

1. 2 1/2" Asphalt Concrete
2. 2 3/4" Asphalt Concrete
3. 10" Reinforced Portland Cement Concrete Pavement
4. 6" Subbase
5. Waterproofed Aggregate Base (3" Mainline, 6" Ramps)
6. Porous Base Course
7. 3" Compacted Aggregate
8. 6" Underdrain
9. Guardrail, Type 5
10. Standard Longitudinal Joint
11. 9" Reinforced Portland Cement Concrete Pavement
12. Aggregate Base Course
13. 13" Reinforced Concrete Approach Slab
14. Concrete Walk (Variable Height)
15. Curb, Type 6

LEGEND — **PROPOSED**

- (A) Item 202 - Wearing Course Removed
- (B) Item 446 - 1 1/2" Asphalt Concrete Surface Course, Type 1H, As Per Plan
- (C) Item 446 - 1 3/4" Asphalt Concrete Intermediate Course, Type 2, PG 64-28
- (D) Item 407 - Tack Coat
- (E) Standard Longitudinal Joint BP 2.1M without tie bars
- (F) Item 305 - 10" Concrete Base, As Per Plan
- (G) Item 304 - Aggregate Base, As Per Plan
- (H) Item 605 - 6" Shallow Pipe Underdrain
- (I) Item 606 - Guardrail, Type 5
- (J) Item 448 - 3" Asphalt Conc., Int. Course, Type 1, Under Guardrail, PG 64-22
- (K) Item 203 - Linear Grading, as per plan
- (L) Type D Joint, as per BP-2.1M
- (M) Item 203 - Embankment, As Per Plan
- (N) Item 203 - Excavation not including embankment construction
- (O) Item 203 - Subgrade Compaction and Proof Rolling
- (P) Item 611 - Reinforced Concrete Approach Slab, (T=15"), As Per Plan
- (Q) Item 611 - Reinforced Concrete Approach Slab, (T=12"), As Per Plan
- (R) Item 659 - Seeding and Mulching
- (S) Item 617 - Compacted Aggregate, As Per Plan (3"-Phase 1, 1"-Phase 2)
- (T) Item 609 - Curb, Type 6
- (U) Item 608 - 4" Concrete Walk
- (V) Item 254 - Pavement Planing, Bituminous
- (W) Item 608 - 8" Concrete Walk
- (X) Item 622 - Concrete Barrier, Type B-50, As Per Plan
- (Y) Item 605 - 4" Shallow Pipe Underdrain 707.15, As Per Plan
- (AA) Item 302 - 11 1/4" Bituminous Aggregate Base
- (BB) Item 407 - Tack Coat for Intermediate Course
- (CC) Item 408 - Bituminous Prime Coat
- (DD) Item 855 - 4" Asphalt Treated Free Draining Base
- (EE) Standard Longitudinal Joint BP-2.1M with Tie Bars
- (FF) Item 605 - 6" Shallow Pipe Underdrain with Fabric Wrap (30" DEEP)
- (GG) Item 202 - Pavement Removed
- (HH) Item 605 - 6" Shallow Pipe Underdrain with Fabric Wrap (18" DEEP)
- (JJ) Item 305 - 9" Concrete Base, As Per Plan
- (KK) Item 451 - 11" Reinforced Concrete Pavement
- (LL) Item 612 - Concrete Median

Typical Sections are intended only to show the general roadway and pavement features. For details see Plan & Profile, Detail, and Cross Section Sheets.

EXISTING AND PROPOSED MAINLINE TYPICAL SECTIONS

PLOTTED BY: jgrmovse
PLOTTED FROM: 08459gya.dgn
PLOT SUBMITTED: 03-AUG-1998 17:15

TYPICAL SECTIONS
TYPE 446

CUY-71-0.00	OHIO	6 / 361
	FHWA REGION 5	
	FEDERAL PROJECT	

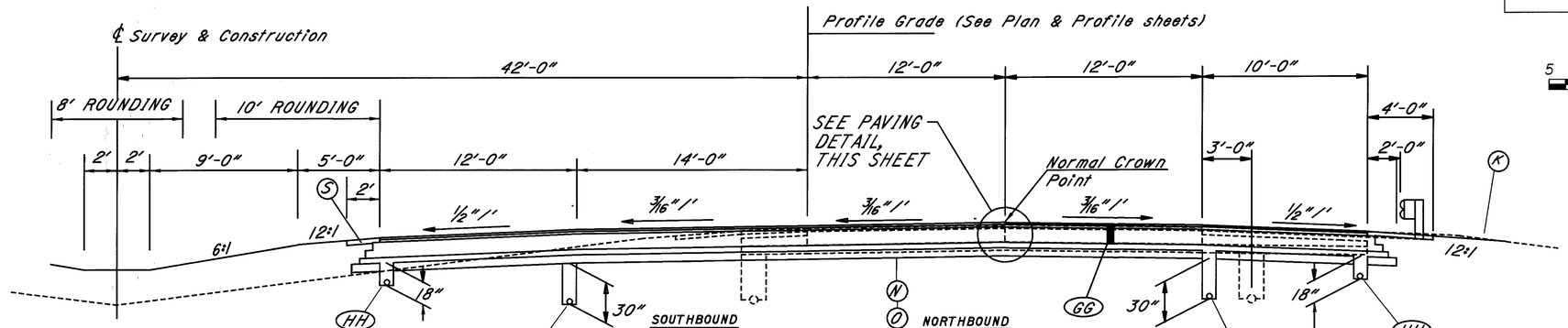

SCALE IN FEET (5 0 5 10)

See Sheet 5 for Legend

SOUTHBOUND
STA 485+00 TO STA 490+00
STA 661+28.57 TO STA 662+28.57
STA 665+75.93 TO STA 666+75.93
STA 716+50 TO STA 720+50
STA 733+90.01 TO STA 737+50

NORTHBOUND
STA 485+00 TO STA 490+00
STA 661+28.57 TO STA 662+28.57
STA 665+75.93 TO STA 666+75.93

NORMAL SECTION - FULL REPLACEMENT
(Typically used for Roadway Lowering)

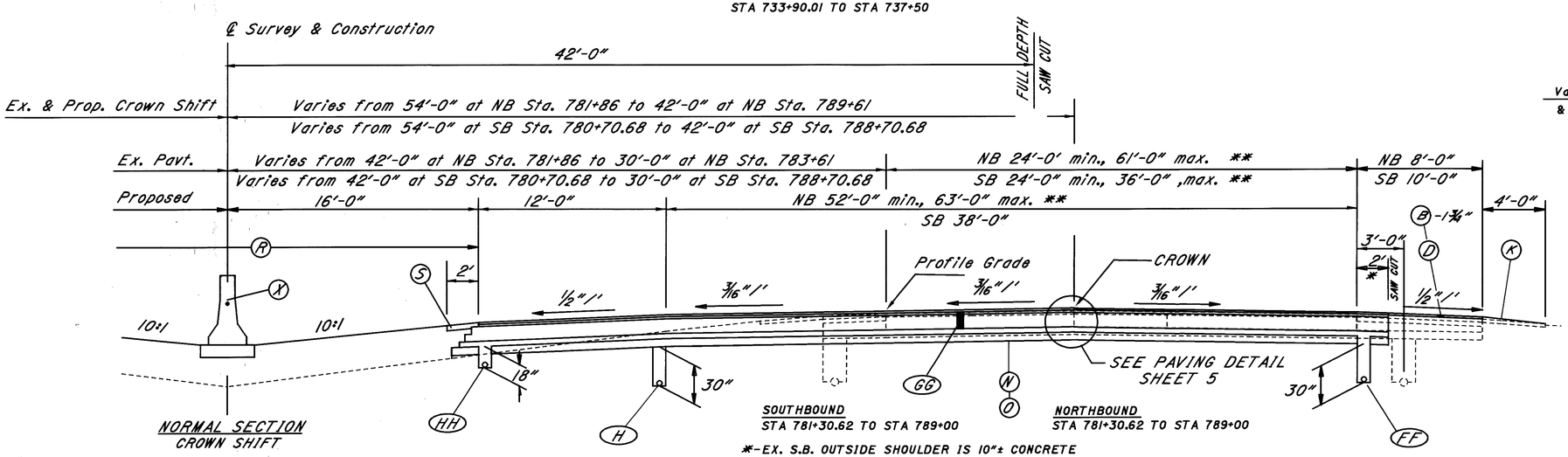

NORMAL SECTION
CROWN SHIFT

SOUTHBOUND
STA 781+30.62 TO STA 789+00

NORTHBOUND
STA 781+30.62 TO STA 789+00

*-EX. S.B. OUTSIDE SHOULDER IS 10"± CONCRETE
STA 787+70.68 TO STA 789+00
(REMOVE 2'-0" AS SHOWN)

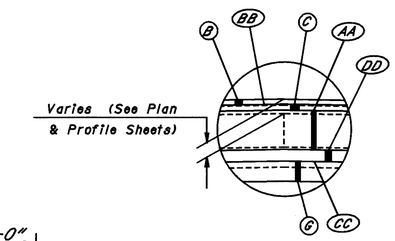

PAVING DETAIL

** See Plan and Profile Sheets for Pavement and Shoulder Widths

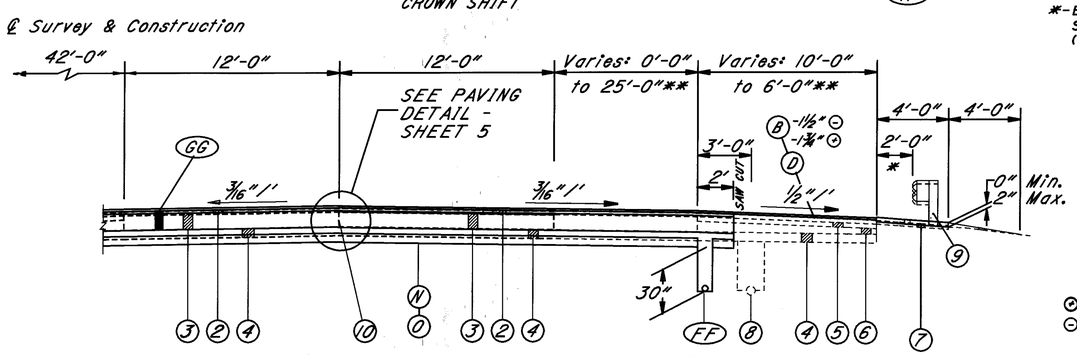

*-EX. S.B. OUTSIDE SHOULDER IS 10"± CONCRETE
STA 645+45.27 TO STA 646+45.27
(REMOVE 2'-0" AS SHOWN)

SOUTHBOUND
STA 597+46.65 TO STA 609+46.65
STA 624+50± TO STA 630+09.41
STA 640+85± TO STA 646+45.27
STA 698+97.65 TO STA 710+89.05
STA 728+30± TO STA 730+50
STA 763+97.86 TO STA 775+97.86

NORTHBOUND
STA 602+71.33 TO STA 608+45±
STA 626+00 TO STA 633+32
STA 639+00 TO STA 651+00
STA 699+62.97 TO STA 705+22±
STA 719+69.18 TO STA 731+69.18
STA 763+26.63 TO STA 768+85±

⊕ - North of Sta. 669+05
⊖ - South of Sta. 669+05

SPEED CHANGE LANES

** See Plan and Profile Sheets for Pavement and Shoulder Widths

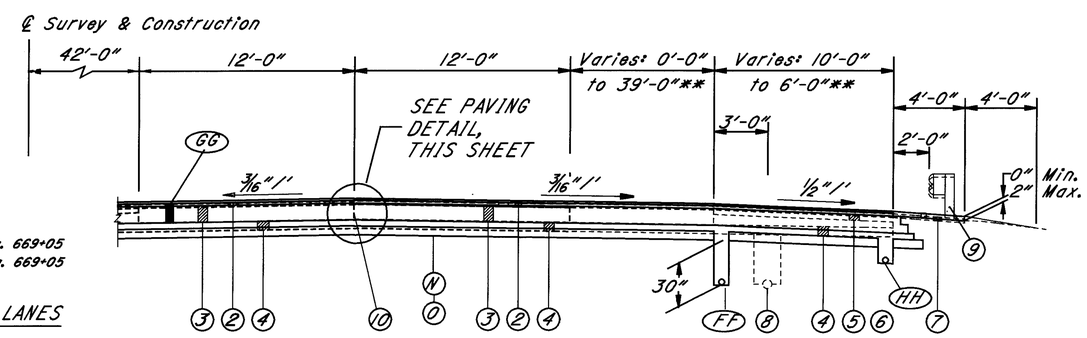

SOUTHBOUND
STA 730+50 TO STA 733+90.01

NORTHBOUND
STA 621+00 TO STA 626+00
STA 717+00 TO STA 719+69.18

ROADWAY LOWERING

PROPOSED MAINLINE TYPICAL SECTIONS

PLOT SUBMITTED:04-AUG-1998 07:03
PLOTTED BY:jgrmovse
PLOTTED FROM:C:\Projects\08459gyb.dgn
08459GYB.DGN

TYPICAL SECTIONS
TYPE 446

CUY-71-0.00	OHIO FHWA REGION 5 FEDERAL PROJECT	6A 361

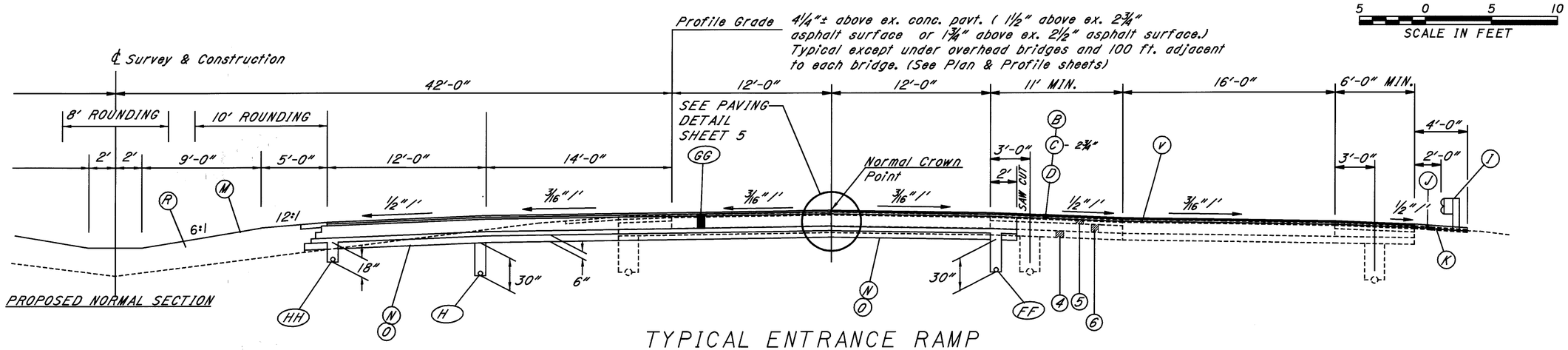

TYPICAL ENTRANCE RAMP

SOUTHBOUND
Sta. 710+89.05 to Sta. 714+97

NORTHBOUND
Sta. 715+61 to Sta 717+00

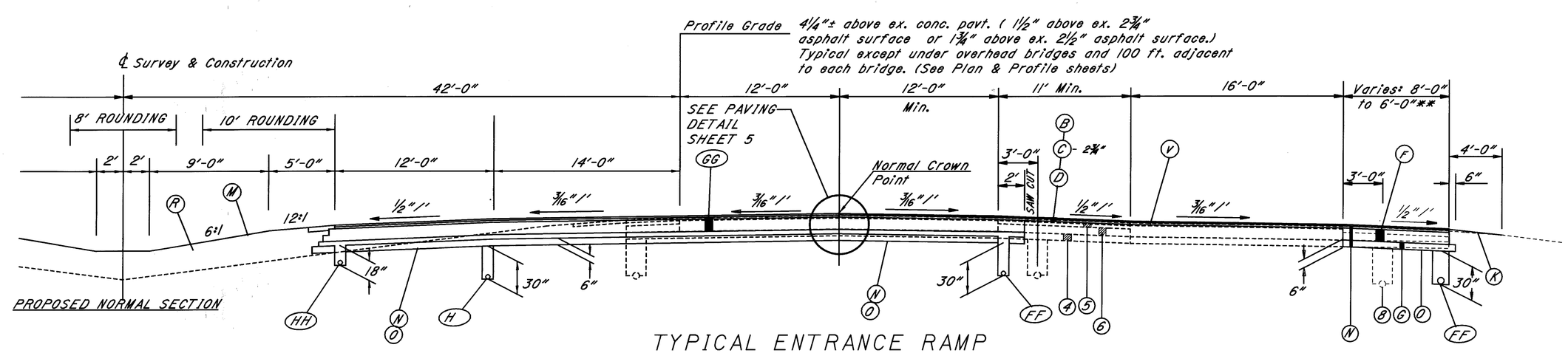

TYPICAL ENTRANCE RAMP

SOUTHBOUND
Sta. 609+46.65 to Sta. 613+98
Sta. 775+97.86 to Sta. 778+35.38

NORTHBOUND
Sta. 619+53.50 to Sta 621+00
Sta. 633+32 to Sta 639+00

Typical Sections are intended only to show the general roadway and pavement features. For details see Plan & Profile, Detail, and Cross Section Sheets.

**-See Plans

EXISTING AND PROPOSED SPEED CHANGE LANE TYPICAL SECTIONS

PLOTTED BY: jgrmovse
PLOTTED: 04-AUG-1998 14:59
PLOT SUBMITTED: 04-AUG-1998 14:59
08459GYM.DGN

TYPICAL SECTIONS
TYPE 446

CUY-71-0.00	OHIO	6B
	FHWA REGION 5	361
	FEDERAL PROJECT	

5 0 5 10
SCALE IN FEET

For Legend See Sheet No. 5

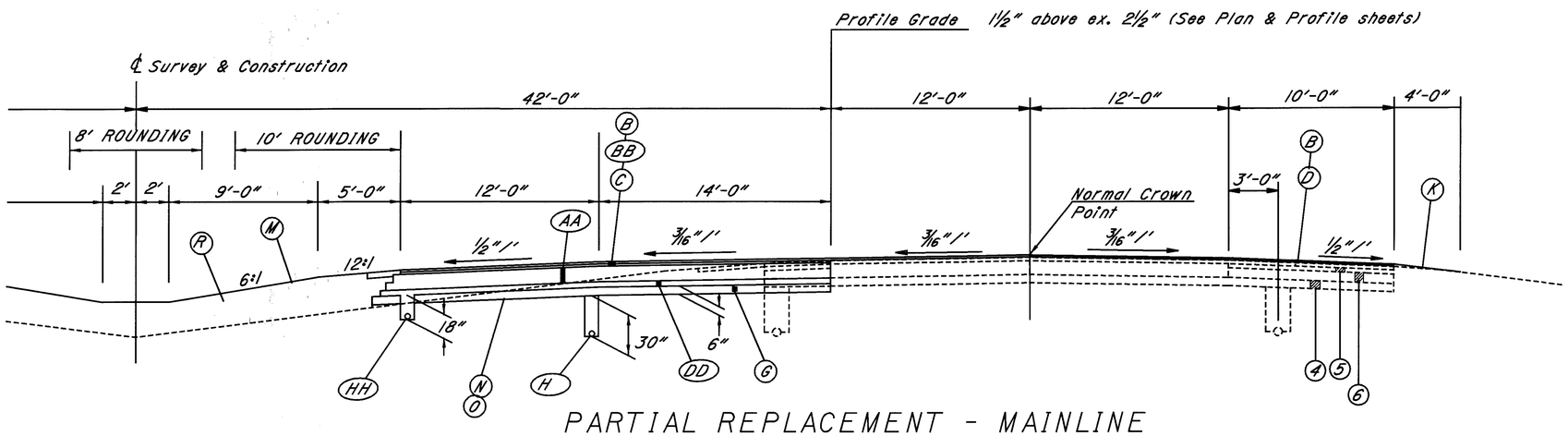

PARTIAL REPLACEMENT - MAINLINE

SOUTHBOUND
Sta. 473+00 to Sta. 485+00

NORTHBOUND
Sta. 473+00 to Sta. 485+00

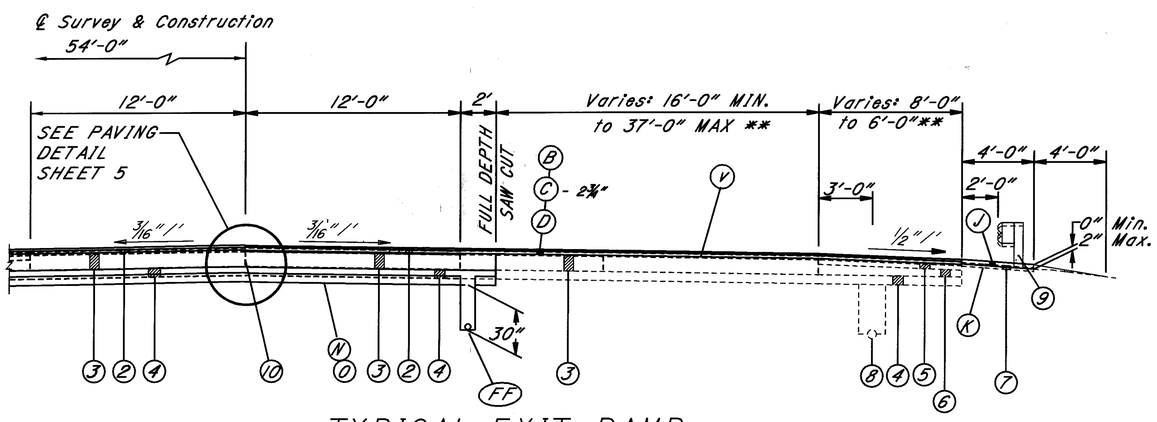

TYPICAL EXIT RAMP

SOUTHBOUND
STA 621+09.41 TO STA 622+09.41
STA 637+45.27 TO STA 638+45.27
STA 724+90.01 TO STA 728+30±

NORTHBOUND
STA 610+71.33 TO STA 611+71.33
STA 705+22± TO STA 708+62.97
STA 771+02.95 TO STA 772+02.95

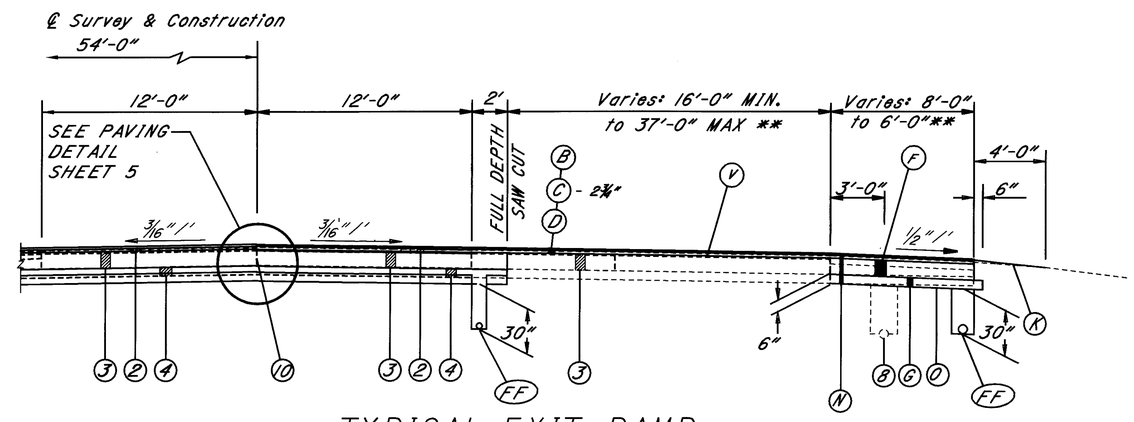

TYPICAL EXIT RAMP

SOUTHBOUND
STA 622+09.41 TO STA 624+50±
STA 638+45.27 TO STA 640+85±

NORTHBOUND
STA 608+45± TO STA 610+71.33
STA 768+85± TO STA 771+02.95

Typical Sections are intended only to show the general roadway and pavement features. For details see Plan & Profile, Detail, and Cross Section Sheets.

** - SEE PLANS

EXISTING AND PROPOSED TYPICAL SECTIONS

PLOTTED BY: jgrmoyse
PLOTTED ON: Friday, August 14, 1998 at 8:15 AM
PLOT SUBMITTED: 04-AUG-1998 15:00
08459GYN.DGN
08459gyn.dgn
08459gyn.dgn
08459gyn.dgn
08459gyn.dgn

TYPICAL SECTIONS

TYPE 446

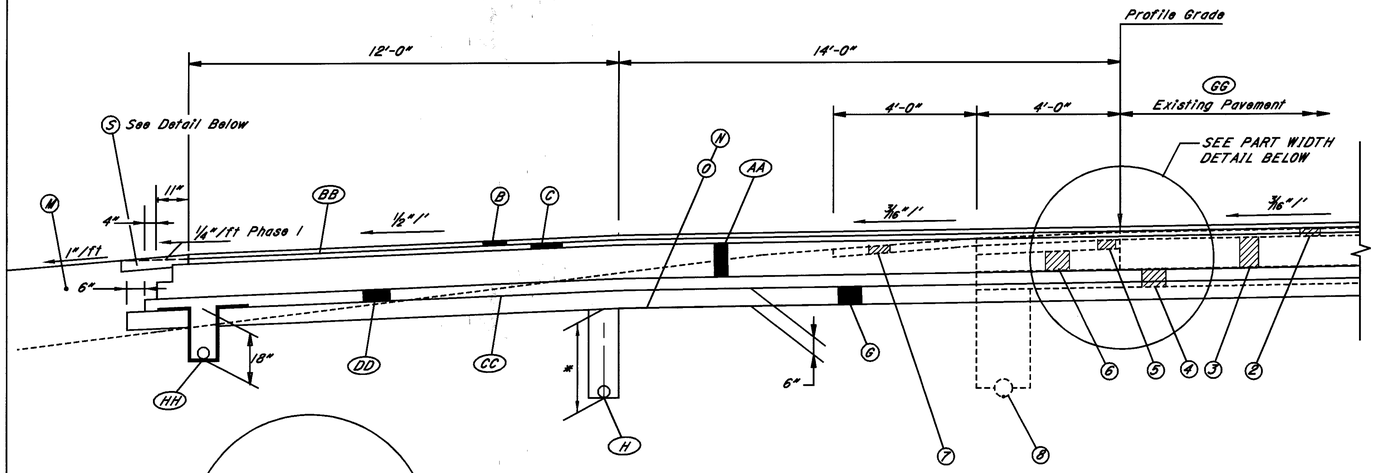

INSIDE SHOULDER AND PAVEMENT WIDENING SECTION

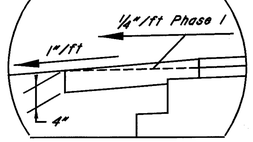

Phased Constr. of Compacted Aggregate

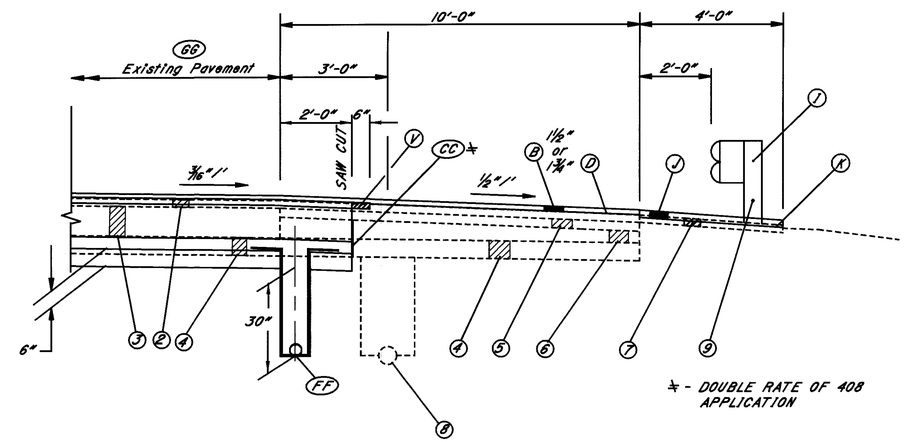

* - DOUBLE RATE OF 408 APPLICATION

SALVAGED OUTSIDE SHOULDER SECTION

I-71 NORMAL SECTION

2 0 2 4
SCALE IN FEET

* Depth of Item 605 Underdrain varies. See Plan and Profile Sheets for Location and Depths.

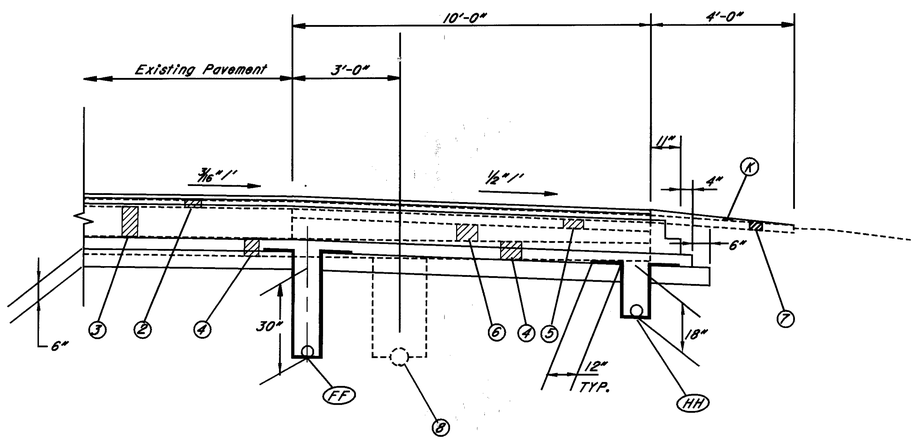

REPLACED OUTSIDE SHOULDER SECTION

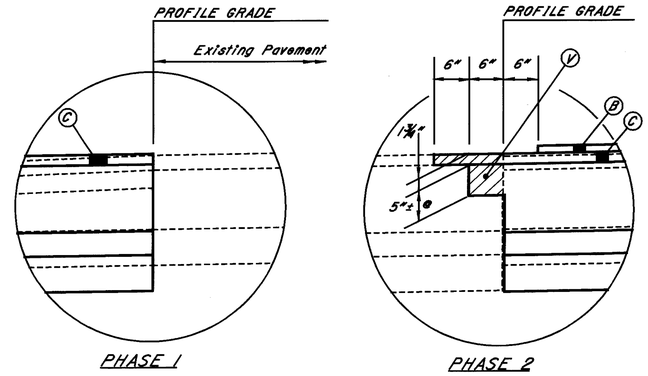

PHASE 1 PHASE 2

PART WIDTH CONSTRUCTION

REMOVE P.C.B. PRIOR TO PLACING PHASE 2 INTERMEDIATE COURSE

@ - MATCH THICKNESS OF TOP 302 COURSE

EXISTING

(2) 2 1/2" OR 2 3/4" Asphalt Concrete
(3) 10" Reinforced Portland Cement Concrete Pavement
(4) 6" Subbase
(5) 3" Waterproofed Aggregate Base
(6) Porous Base Course
(7) 3" Compacted Aggregate
(8) 6" Underdrain
(9) Guardrail, Type 5

FOR PROPOSED LEGEND SEE SHEET NO. 5

PLOTTED BY: jgrmovse
PLOTTED: 04-AUG-1998 08:42
PLOT SUBMITTED: 04-AUG-1998 08:42
08459GYC.DGN
pid08459Bdgn08459gyc.dgn
Before sber

PHASED CONSTRUCTION

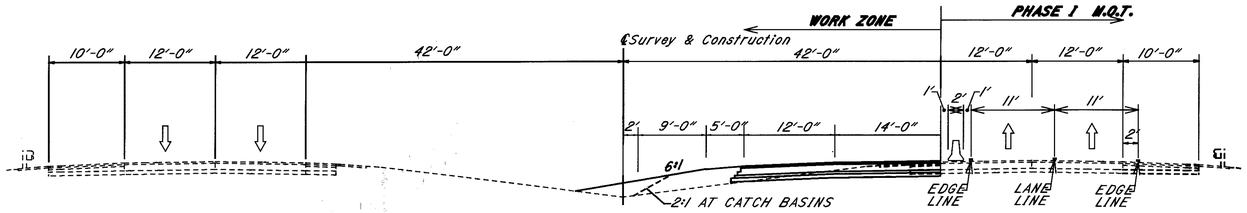

PHASE 1 NB - CONSTRUCT N.B. INSIDE LANES

(DO NOT PLACE SURFACE COURSE)

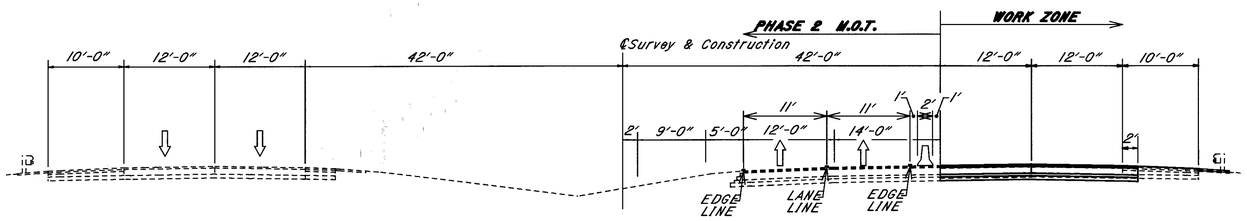

PHASE 2 NB - CONSTRUCT N.B. - OUTSIDE LANES

(PLACE SURFACE COURSE)

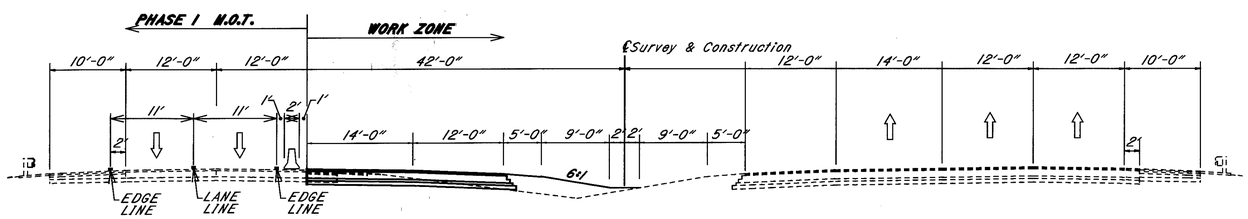

PHASE 1 SB - CONSTRUCT S.B. INSIDE LANES

(DO NOT PLACE SURFACE COURSE)

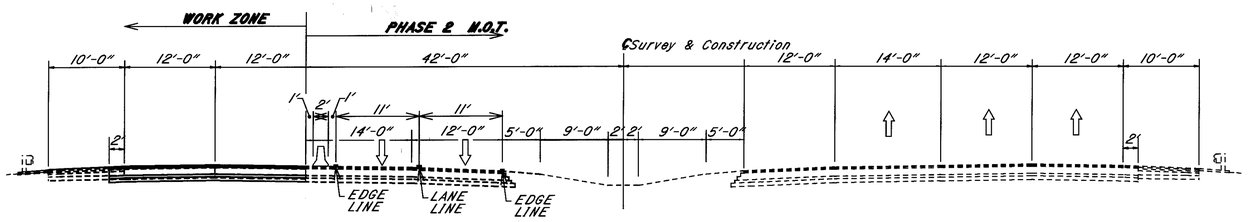

PHASE 2 SB - CONSTRUCT S.B. OUTSIDE LANES

(PLACE SURFACE COURSE)

MEDIAN GRADING

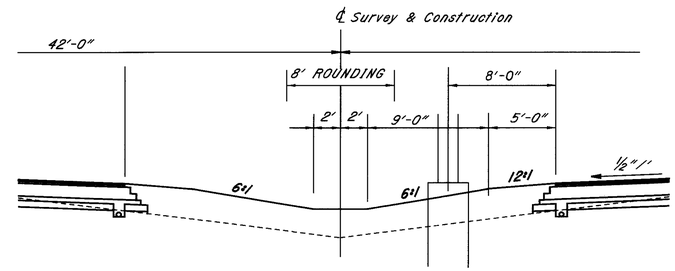

MEDIAN GRADING (TOWER LIGHT POLES & SIGN SUPPORTS)

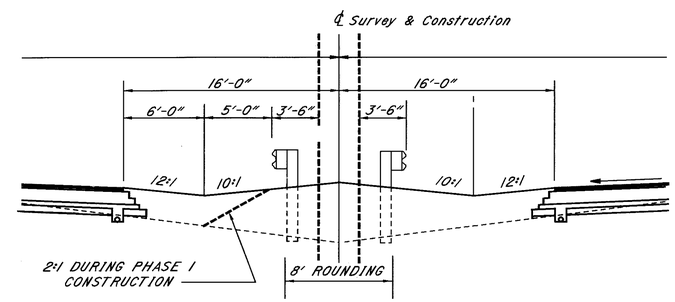

MEDIAN GRADING (AT OVERHEAD BRIDGE PIERS)

PLOTTED BY: jgrmovse
PLOTTED: 10/08/98 PLOT SUBMITTED:03-AUG-1998 17:18
08459GYG.DGN
PLOT SCALE: 1:1 ... d08459gyg.dgn

TYPICAL SECTIONS

TYPE 446

* - 30" Typ.

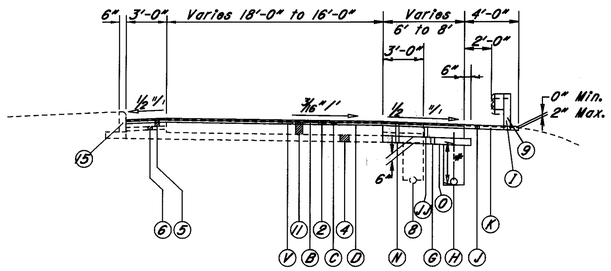

RAMP SECTION WITH TYPE 6 CURB

S.R. 82 Interchange
Ramp A Sta. 110+71.06 to Sta. 111+71.06
Ramp C Sta. 115+59.44 to Sta. 116+59.44
Ramp F Sta. 137+46.93 to Sta. 138+46.93

U.S. 42 Interchange
Ramp A Sta. 71+04.59 to Sta. 72+04.59
Ramp D Sta. 87+72.34 to Sta. 88+72.34

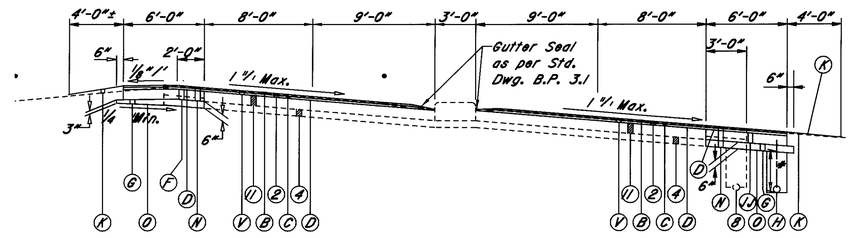

SUPERELEVATED RAMP SECTION WITH CONCRETE MEDIAN OR INTEGRAL CONCRETE CURB

U.S. 42 Interchange
Ramp A Sta. 79+45.5 to Sta. 84+29
Ramp B Sta. 79+55.5 to Sta. 84+25
Ramp C Sta. 75+17 to Sta. 80+16

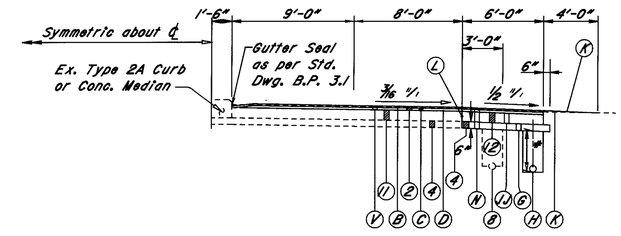

NORMAL RAMP SECTION WITH CONCRETE MEDIAN OR INTEGRAL CONCRETE CURB

S.R. 82 Interchange
Ramp B Sta. 118+00 to Sta. 120+85
Ramp D Sta. 119+60 to Sta. 124+30

U.S. 42 Interchange
Ramp B Sta. 78+26 to Sta. 79+55.5
Ramp C Sta. 80+16 to Sta. 81+50

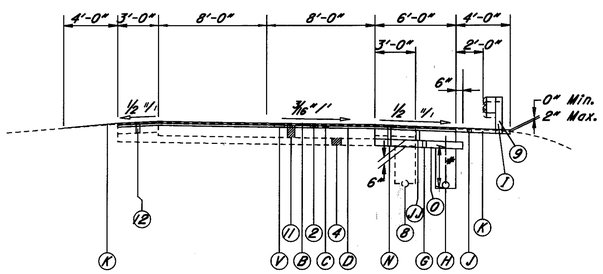

NORMAL RAMP SECTION

S.R. 82 Interchange
Ramp D Sta. 124+30 to Sta. 124+50
Ramp E Sta. 127+04.29 to Sta. 133+32
Ramp F Sta. 136+30 to Sta. 137+46.93

U.S. 42 Interchange
Ramp C Sta. 81+50 to Sta. 85+50

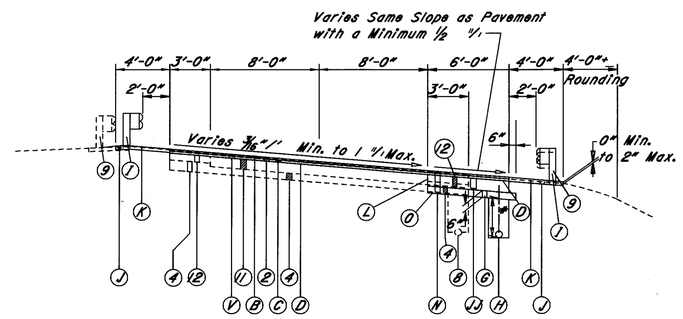

SUPERELEVATED RAMP SECTION

U.S. 42 Interchange
Ramp A Sta. 72+04.59 to Sta. 79+45.5
Ramp A Sta. 84+29 to Sta. 86+10.20
Ramp B Sta. 74+12 to Sta. 78+26
Ramp B Sta. 84+25 to Sta. 85+88.15
Ramp C Sta. 73+62.47 to Sta. 75+17
Ramp D Sta. 83+55.24 to Sta. 87+72.34

S.R. 82 Interchange
Ramp A Sta. 111+71.06 to Sta. 115+00
Ramp B Sta. 114+18.20 to Sta. 118+00
Ramp B Sta. 120+85 to Sta. 122+40
Ramp C Sta. 116+59.44 to Sta. 121+00
Ramp D Sta. 113+96.65 to Sta. 119+60
Ramp E Sta. 123+93 to Sta. 127+04.29

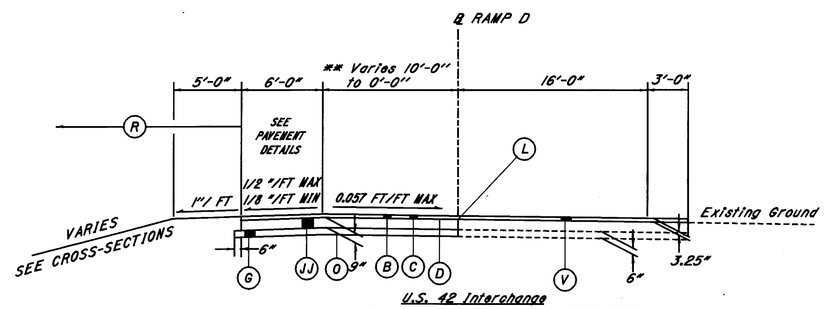

U.S. 42 Interchange
Ramp D Sta. 80+25.00 to Sta. 83+55.24

** Sta. 80+55.24 to Sta. 83+55.24

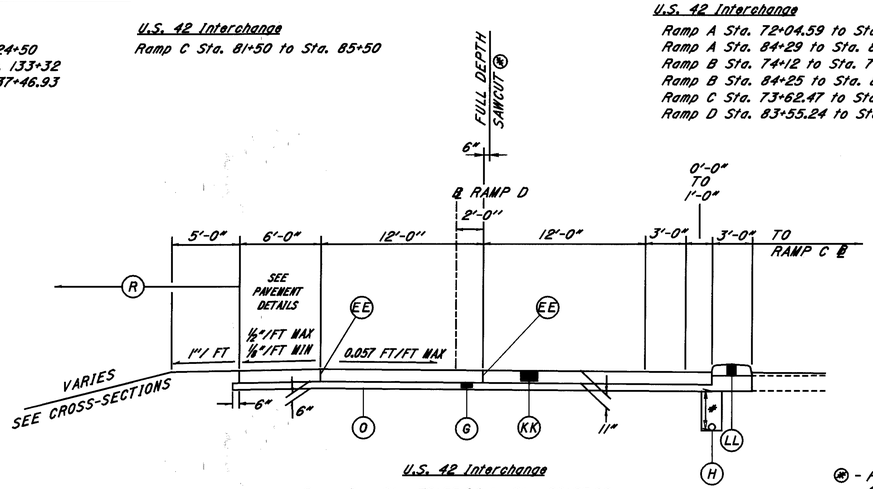

U.S. 42 Interchange
Ramp D Sta. 79+55.24 to Sta. 80+25.00

(*) - FULL DEPTH SAWCUT EXISTING CONCRETE PAVEMENT AS PER 202.05 FOR PHASED CONSTRUCTION REQUIREMENTS.

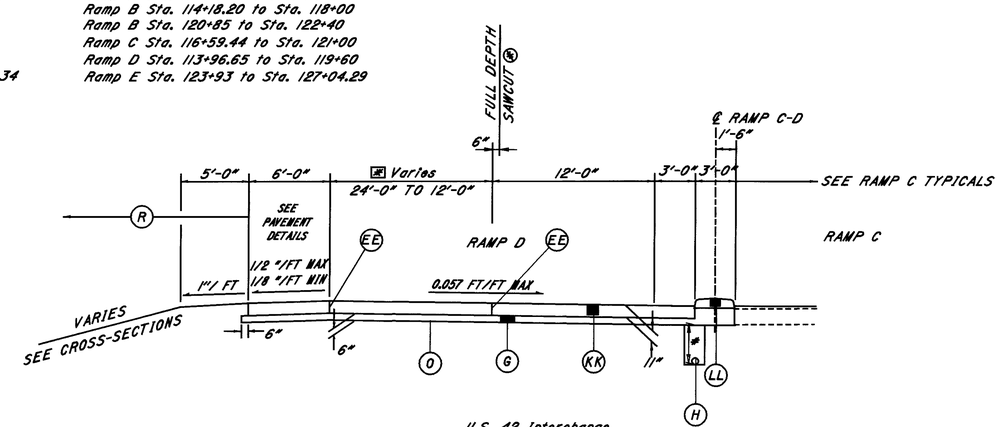

U.S. 42 Interchange
Ramp "C-D" Sta. 73+72.65 to Sta. 79+55.24

(#) Sta. 77+25.00 to Sta. 77+75.00

See Sheet 5 for Legend

5 0 5 10
SCALE IN FEET

EXISTING AND PROPOSED RAMP TYPICAL SECTIONS

PLOTTED BY: fkonopka
PLOTTED: 08:00 PM
PLOTTED FROM: c:\pwworking\cuy\d0845\9\pid08459gyd.dgn
PLOT SUBMITTED: 29-JUL-1998 12:28
08459gyd.dgn

TYPICAL SECTIONS

CUY-71-0.00	OHIO	10
	FHWA REGION 5	361
	FEDERAL PROJECT	

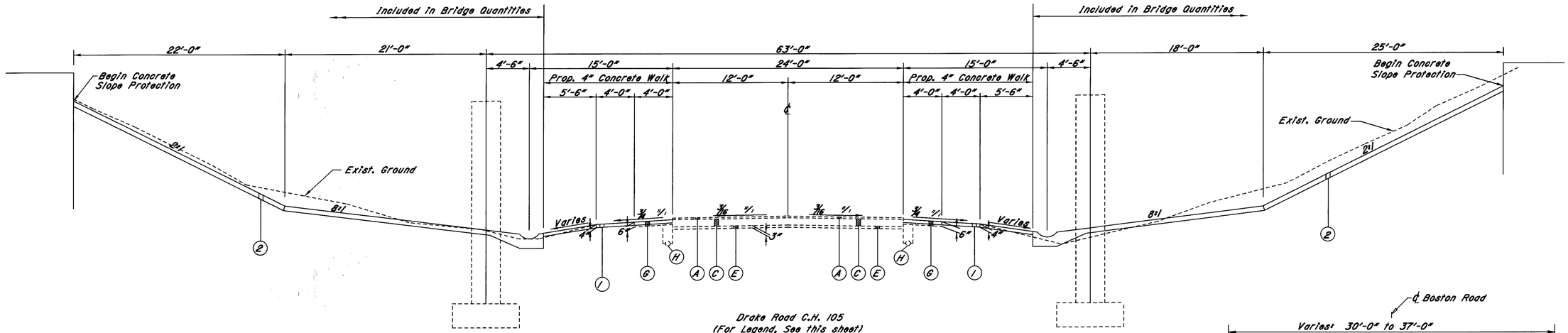

Drake Road C.H. 105
(For Legend, See this sheet)

Sta. 49+23.26 to Sta. 50+88.67

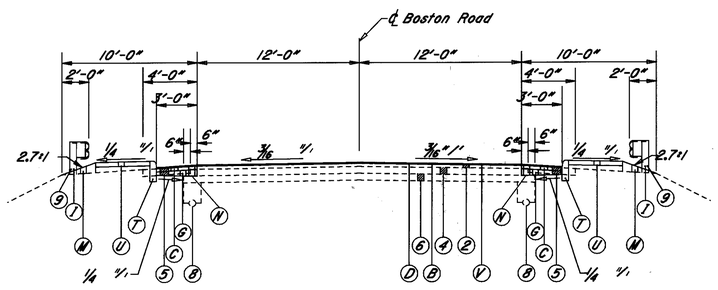

BOSTON ROAD NORMAL ROADWAY SECTION
(For Legend, See Sheet 5)

Sta. 48+14.98 to Sta. 48+32.98
Sta. 51+67.02 to Sta. 51+85.02

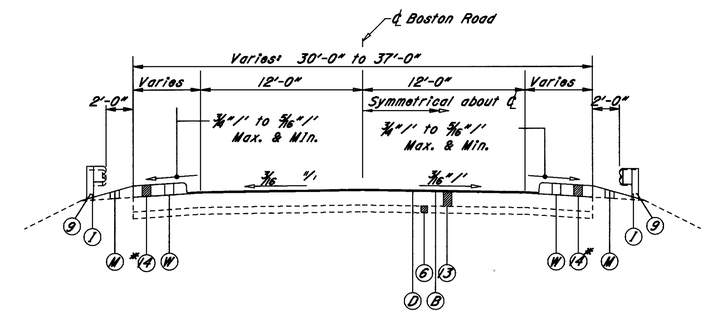

BOSTON ROAD APPROACH SLAB SECTION
(For Legend, See Sheet 5)

Sta. 48+32.98 to Sta. 48+57.98
Sta. 51+42.02 to Sta. 51+67.02

*Existing Walk on Boston Road Approach Slab Varies in Height From 10" to 3 1/2"

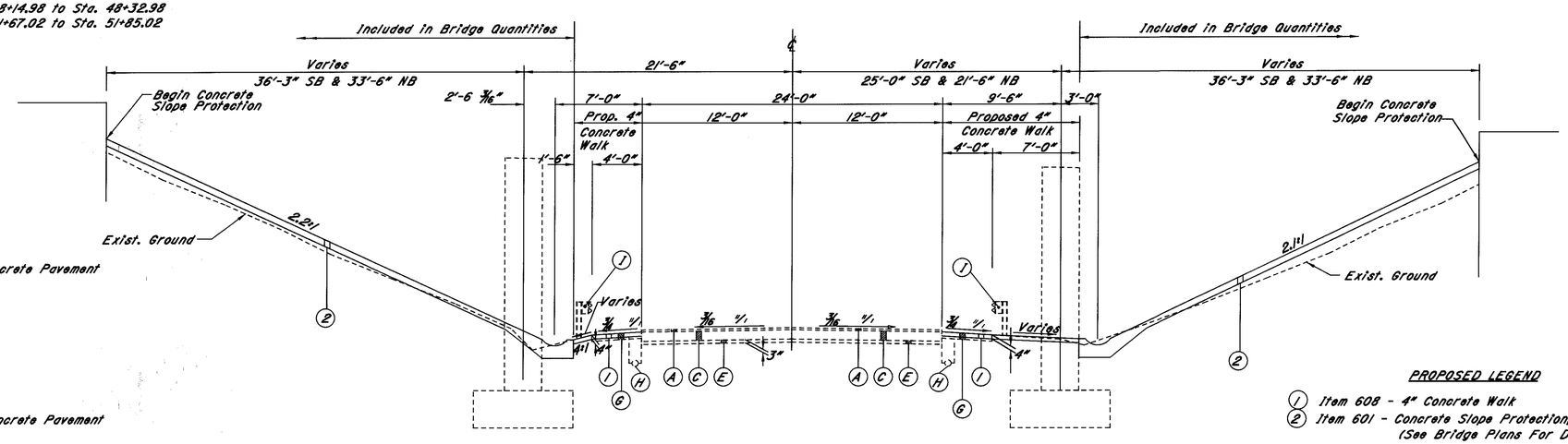

Albion Road C.H. 75
(For Legend, See this sheet)

Sta. 49+13.35 to Sta. 50+85.01

EXISTING LEGEND

- (A) Asphalt Concrete Surface Course
- (B) Asphalt Concrete Leveling Course
- (C) 9" Reinforced Portland Cement Concrete Pavement
- (D) 8 1/2" Asphalt Concrete Shoulder with Surface Treatment
- (E) Subbase
- (F) Type 2A Curb
- (G) 6" Compacted Aggregate
- (H) 6" Underdrain
- (I) Guardrail
- (J) Concrete Curb
- (K) 10" Reinforced Portland Cement Concrete Pavement
- (L) Aggregate Drain

PROPOSED LEGEND

- (1) Item 608 - 4" Concrete Walk
- (2) Item 601 - Concrete Slope Protection, As Per Plan (See Bridge Plans For Details and Quantities)

Note: Concrete Slope Protection, As Per Plan will be Paid for Under the Bridge Quantities & the 4" Concrete Walk will be Paid for Under the Roadway Quantities.

EUTHENICS INC. CONSULTING ENGINEERS CLEVELAND, OHIO		
DESIGNED: DTB	CHECKED: DTB	DRAWN: DTB
DATE: 4/19/94	DATE: 10-28-94	SCALE: 1"=1'

CROSSROAD TYPICAL SECTIONS

PLOTTED BY: jgrmovse
PLOTTED: 10/28/94
PLOT SUBMITTED: 03-AUG-1998 17:19
08459GYE.DGN
PLOT SCALE: 1:1
PLOT DATE: 10/28/94
PLOT TIME: 17:19
PLOT FILE: d08459gye.dgn

TYPICAL SECTIONS

CUY-71-0.00	OHIO
	FHWA REGION 5
	FEDERAL PROJECT

11
361

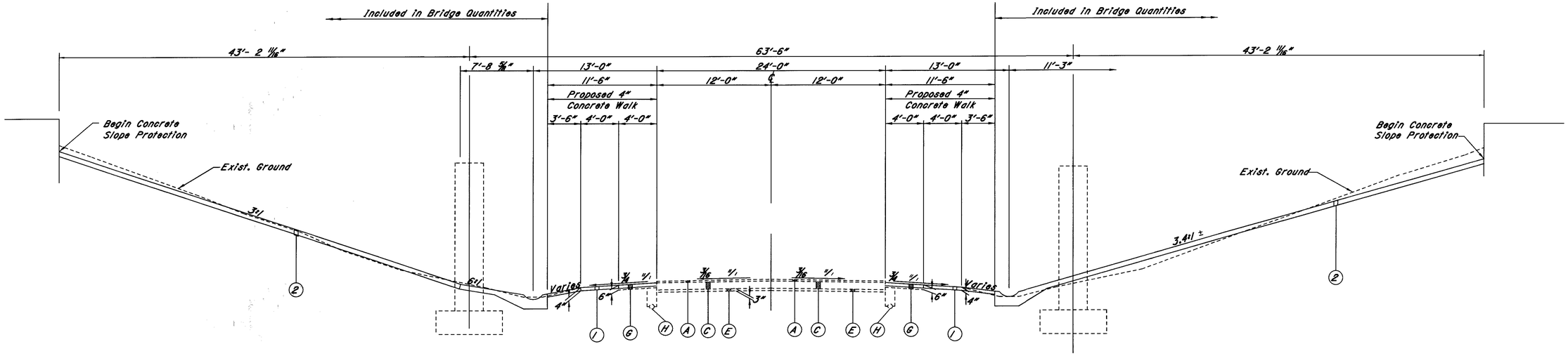

Sprague Road C.H. 67
Sta. 215+65 to Sta. 217+33.43

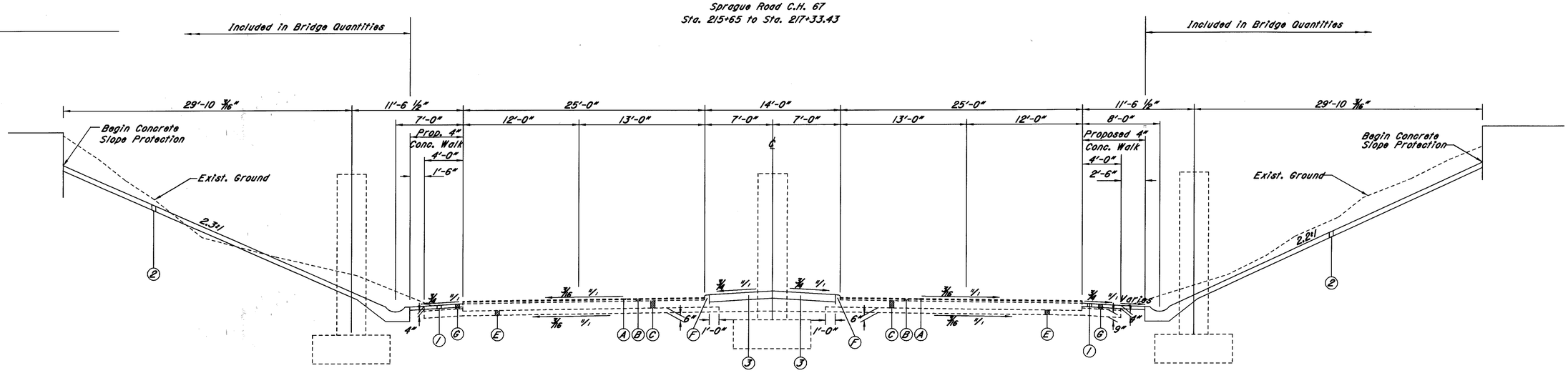

Pearl Road U.S. 42
Sta. 47+38.53 to Sta. 52+65.83

EXISTING LEGEND

- (A) Asphalt Concrete Surface Course
- (B) Asphalt Concrete Leveling Course
- (C) 9" Reinforced Portland Cement Concrete Pavement
- (D) 8 1/2" Asphalt Concrete Shoulder with Surface Treatment
- (E) Subbase
- (F) Type 2A Curb
- (G) 6" Compacted Aggregate
- (H) 6" Underdrain
- (I) Guardrail
- (J) Concrete Curb
- (K) 10" Reinforced Portland Cement Concrete Pavement
- (L) Aggregate Drain

PROPOSED LEGEND

- (1) Item 608 - 4" Concrete Walk
- (2) Item 601 - Concrete Slope Protection, As Per Plan (See Bridge Plans For Details and Quantities)
- (3) Item 612 - 9" Concrete Traffic Island

Note: Concrete Slope Protection, As Per Plan will be Paid for Under the Bridge Quantities & the 4" Concrete Walk will be Paid for Under the Roadway Quantities.

EUTHENICS INC.
CONSULTING ENGINEERS
CLEVELAND, OHIO

DESIGNED: DTB	CHECKED: ARP	DRAWN: DTB
DATE: 4/19/94	DATE: 5-25-94	SCALE: 6"=1'

CROSSROAD TYPICAL SECTIONS

08459GYF.DGN
E30TTS03.DWG WAB 11/18/94

TYPICAL SECTIONS

CUY-71-0.00	OHIO	12 / 361
	FHWA REGION 5	
	FEDERAL PROJECT	

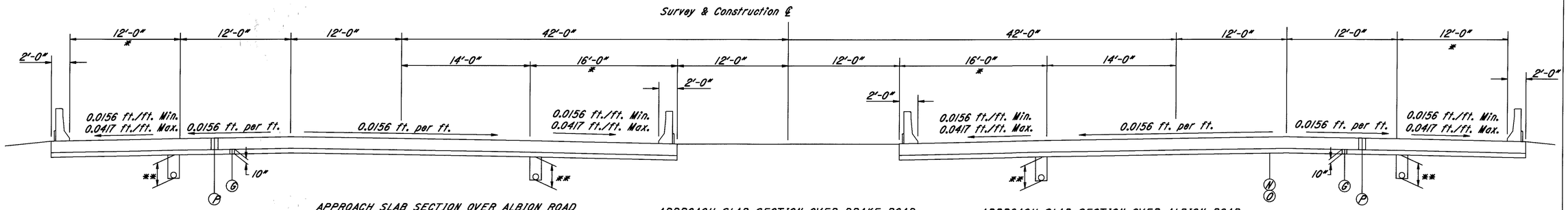

APPROACH SLAB SECTION OVER ALBION ROAD
Sta. 689+58.43 to Sta. 689+83.43 Southbound
Sta. 691+08.93 to Sta. 691+33.93 Southbound
APPROACH SLAB SECTION OVER OHIO TURNPIKE ROAD
Sta. 695+35.11 to Sta. 695+60.11 Southbound
Sta. 698+72.65 to Sta. 698+97.65 Southbound

APPROACH SLAB SECTION OVER DRAKE ROAD
Sta. 539+66.00 to Sta. 539+91.00
Sta. 541+46.50 to Sta. 541+71.50
APPROACH SLAB SECTION OVER EAST BRANCH ROCKY RIVER
Sta. 662+28.57 to Sta. 662+53.57
Sta. 665+50.93 to Sta. 665+75.93
APPROACH SLAB SECTION OVER SPRAGUE ROAD
Sta. 761+19.62 to Sta. 761+44.62
Sta. 763+01.63 to Sta. 763+26.63

APPROACH SLAB SECTION OVER ALBION ROAD
Sta. 689+61.19 to Sta. 689+86.19 Northbound
Sta. 691+02.69 to Sta. 691+27.69 Northbound
APPROACH SLAB SECTION OVER OHIO TURNPIKE ROAD
Sta. 695+41.08 to Sta. 695+66.08 Northbound
Sta. 698+59.62 to Sta. 698+84.62 Northbound

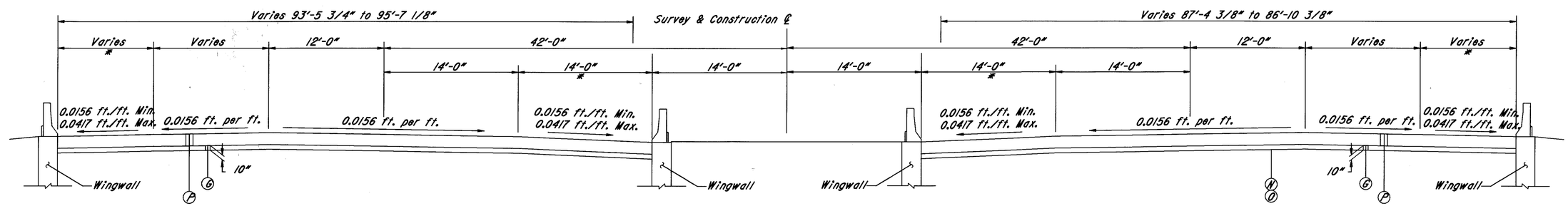

APPROACH SLAB SECTION OVER PEARL ROAD
Sta. 781+05.62 to Sta. 781+30.62

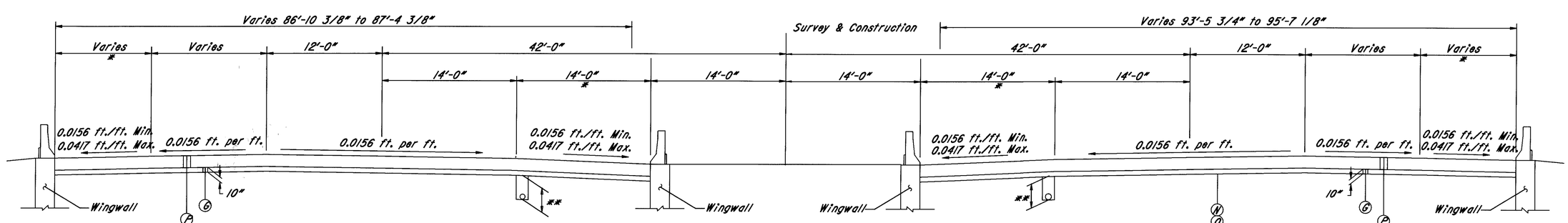

APPROACH SLAB SECTION OVER PEARL ROAD
Sta. 778+35.38 to Sta. 778+60.38

5 0 5 10
SCALE IN FEET

* Transition shoulder cross-slopes within limits of Approach Slab.

Note: For exact locations of Guardrail and Underdrains, See Plan & Profile Sheets.

** - 30" unless unclassified, See Roadway Typical Sections and Plan Views

For Legend See Sheet No. 5

APPROACH SLAB TYPICAL SECTIONS

PLOTTED BY: fkonopka
PLOTTED: Thursday, July 29, 1998 12:36
PLOT SUBMITTED: 29-JUL-1998 12:36
307TS06.DGN
307ts06.dgn
pid08459

GENERAL NOTES

GENERAL

UNDERGROUND UTILITIES

THE LOCATIONS OF THE UNDERGROUND UTILITIES SHOWN ON THE PLANS ARE AS OBTAINED FROM THE OWNERS OF THE UTILITY AS REQUIRED BY SECTION 153.64 OF THE OHIO REVISED CODE.

UTILITY OWNERSHIP

THE FOLLOWING UTILITIES AND OWNERS ARE LOCATED WITHIN THE WORK LIMITS OF THIS PROJECT:

COLUMBIA GAS COMPANY
7080 FRY ROAD
MIDDLEBURG HTS., OHIO. 44130
(216) 243-1000

CLEVELAND ELECTRIC
ILLUMINATING COMPANY
3601 RIDGE ROAD
CLEVELAND, OHIO 44102
(216) 634-7303

CITY OF CLEVELAND
DEPARTMENT OF PUBLIC UTILITIES
1201 LAKESIDE AVENUE
CLEVELAND, OHIO 44114
(216) 271-4264

CITY OF MIDDLEBURG HEIGHTS
15700 EAST BAGLEY ROAD
MIDDLEBURG HTS., OHIO 44130
(216) 234-8811

OHIO TURNPIKE COMMISSION
ADMINISTRATION BUILDING
682 PROSPECT ROAD
BEREA, OHIO 44017
(216) 234-2081

CITY OF STRONGSVILLE
18688 ROYALTON ROAD
STRONGSVILLE, OHIO 44136
(216) 238-5720

AMERITECH
13630 LORAIN AVENUE
CLEVELAND, OHIO 44111
(216) 476-6142

MCI TELECOMMUNICATIONS CORP.
12300 RIDGE ROAD
NORTH ROYALTON, OHIO 44133
(216) 237-8117

LITEL TELECOMMUNICATIONS CORP.
4650 LAKEHURST COURT
DUBLIN, OHIO 43017
(614) 785-6277

OHIO DEPARTMENT OF TRANSPORTATION
DISTRICT 12
P. O. BOX 258003
CLEVELAND, OHIO 44125
(216) 581-2100

CABLEVISION
14300 SOUTH INDUSTRIAL
MAPLE HTS., OHIO 44137
(216) 663-4003

BUCKEYE PIPE LINE
4911 EAST HIGH STREET
MANTUA, OHIO 44255
(216) 274-2234

CITY OF BRUNSWICK
4095 CENTER ROAD
BRUNSWICK, OHIO 44146
(216) 225-9144

CALL OHIO UTILITIES PROTECTION SERVICE TWO (2) WORKING DAYS BEFORE YOU DIG. TOLL FREE TELEPHONE: 1-800-362-2764.

ANY AND ALL WORK REQUIRED FOR REMOVING, RELOCATING AND CONSTRUCTION OF NEW FACILITIES FOR PRIVATE OR PUBLIC UTILITIES WILL BE DONE BY AND AT THE EXPENSE OF THE RESPECTIVE OWNERS UNLESS OTHERWISE NOTED ON THE PLANS. THE CONTRACTOR SHALL COORDINATE HIS OPERATIONS WITH THE WORK OF THE UTILITY OWNERS OR OTHERS WHO MAY BE MAKING THE RELOCATIONS.

ROUNDING

THE ROUNDING AT SLOPE BREAKPOINTS SHOWN ON THE TYPICAL SECTIONS APPLY TO ALL CROSS-SECTIONS EVEN THOUGH OTHERWISE SHOWN.

TYPICAL SECTIONS

EXISTING TYPICAL SECTIONS AND UNDERDRAIN LOCATIONS HAVE BEEN TAKEN FROM THE RECORDS AND ARE BELIEVED TO REPRESENT THE EXISTING PAVEMENT, BUT THE STATE OF OHIO DOES NOT GUARANTEE THE ACCURACY OF THE SAME.

FOR FURTHER INFORMATION IN REGARD TO THE EXISTING TYPICAL SECTIONS AND UNDERDRAIN LOCATIONS THE CONTRACTOR SHALL REFER TO THE PREVIOUS CONSTRUCTION PLANS. THESE PLANS MAY BE REVIEWED AT THE OHIO DEPARTMENT OF TRANSPORTATION, DISTRICT TWELVE OFFICES, 5500 TRANSPORTATION BOULEVARD, GARFIELD HEIGHTS, OHIO 44125-8003.

COOPERATION BETWEEN CONTRACTORS

THE CONTRACTOR SHALL COOPERATE AND COORDINATE HIS OPERATIONS WITH THE CONTRACTOR'S OPERATIONS ON OTHER PROJECTS THAT MAY BE IN FORCE DURING THE LIFE OF THIS CONTRACT. NO WAIVER OF ANY PROVISIONS OF 105.07 OF THE CONSTRUCTION AND MATERIAL SPECIFICATIONS IS INTENDED.

CONTINGENCY QUANTITIES

THE CONTRACTOR SHALL NOT ORDER MATERIALS OR PERFORM WORK FOR ITEMS DESIGNATED BY PLAN NOTE TO BE USED"AS DIRECTED BY THE ENGINEER" UNLESS AUTHORIZED BY THE ENGINEER. THE ACTUAL WORK LOCATIONS AND QUANTITIES USED FOR SUCH ITEMS SHALL BE INCORPORATED INTO THE FINAL CHANGE ORDER GOVERNING COMPLETION OF THIS PROJECT.

WORK LIMITS

THE WORK LIMITS SHOWN ON THESE PLANS ARE FOR PHYSICAL CONSTRUCTION ONLY. THE INSTALLATION AND OPERATION OF ALL TEMPORARY TRAFFIC CONTROL AND TEMPORARY TRAFFIC CONTROL DEVICES REQUIRED BY THESE PLANS SHALL BE PROVIDED BY THE CONTRACTOR WHETHER INSIDE OR OUTSIDE THESE WORK LIMITS.

MATERIAL STORAGE OR BATCH PLANTS

THE CONTRACTOR MAY USE THE INFIELD OF LOOP RAMP C AT USR 42 AND IR 71 AND/OR THE INFIELD OF RAMP B AT SR 82 AND IR 71 FOR MATERIAL STORAGE OR FOR A TEMPORARY BATCH PLANT OR MATERIAL PROCESSING PLANT. ANY USAGE SHALL BE IN ACCORDANCE WITH 614.03 AND 107.21. LOCATIONS FOR INGRESS AND EGRESS SHALL BE APPROVED BY THE ENGINEER.

ACCESS TO CUY-71-0332L&R

CONSTRUCTION ACCESS TO THE TEMPORARY RIGHT OF WAY PROVIDED SHALL BE VIA THE MEDIAN OF IR 71. IF THE CONTRACTOR DESIRES ACCESS VIA THE VALLEY PARKWAY HE SHALL ARRANGE FOR ALL NECESSARY PERMITS OR AGREEMENTS WITH THE PARK. ALL COSTS OF REGRADING AND RESTORATION TO PROVIDE ACCESS SHALL BE AT THE CONTRACTORS EXPENSE.

STREAM CHANNEL EXCAVATION

THE CONTRACTOR SHALL TAKE ALL PRECAUTIONS NECESSARY TO PREVENT ANY INCIDENTAL DISCHARGES ASSOCIATED WITH THE EXCAVATION AND HAULING OF MATERIAL FROM THE STREAM CHANNEL. THIS PERTAINS TO ANY EXCAVATION OPERATIONS SUCH AS, FOUNDATION PIER OR ABUTMENT EXCAVATION, CHANNEL CLEAN OUT, EXCAVATION FOR ROCK CHANNEL PROTECTION AND REMOVAL OF ANY TEMPORARY FILL ASSOCIATED WITH CONSTRUCTION OPERATIONS.

DEMOLITION DEBRIS

THE CONTRACTOR SHALL TAKE PRECAUTIONS TO AVOID AND/OR LIMIT DEMOLITION DEBRIS FROM ENTERING THE STREAM. ANY MATERIAL THAT DOES FALL INTO THE STREAM SHALL BE REMOVED AS SOON AS POSSIBLE.

ITEM 806 - FIELD OFFICE, TYPE C, AS PER PLAN

THREE (3) OUTSIDE TELEPHONE LINES SHALL BE PROVIDED AND ASSIGNED AS LISTED BELOW:

LINE 1 FACSIMILE MACHINE & ONE PHONE
LINE 2 COMPUTER MODEM
LINE 3 RECORDED ANSWERING DEVICE & PHONES(3)

IN ADDITION TO THE REQUIREMENTS STATED IN THE SPECIFICATIONS, THE FOLLOWING EQUIPMENT SHALL BE INCLUDED FOR PAYMENT UNDER THIS ITEM: A. THREE (3) CELLULAR PHONES (WITH SEPARATE LINE FOR EACH PHONE) FOR USE AS DIRECTED BY THE ENGINEER. PLEASE NOTE THAT THIS IS IN ADDITION TO THE REQUIREMENS OF 806.02.

CONVERSION OF METRIC STANDARD DRAWINGS

THE METRIC STANDARD DRAWINGS REFERENCED IN THIS PLAN SHALL BE CONVERTED TO ENGLISH UNITS USING THE SI (METRIC) TO ENGLISH CONVERSION FACTORS PROVIDED IN SECTION 109.011 OF THE 1997 CONSTRUCTION AND MATERIALS SPECIFICATIONS. THE APPENDIX OF ASTM E 380 SHALL BE UTILIZED FOR ANY ADDITIONAL CONVERSION FACTORS REQUIRED. CONVERSIONS SHALL BE APPROPRIATELY PRECISE AND SHALL REFLECT STANDARD INDUSTRY ENGLISH VALUES WHERE SUITABLE.

ALTERNATE METHODS

IF THE CONTRACTOR SO ELECTS, HE MAY SUBMIT ALTERNATE METHODS FOR THE MAINTENANCE OF TRAFFIC, PROVIDED THE INTENT OF THE PROVISIONS IS FOLLOWED AND NO ADDITIONAL INCONVENIENCE TO THE TRAVELING PUBLIC RESULTS THERE FROM. NO ALTERNATE PLAN SHALL BE PLACED INTO EFFECT UNTIL APPROVAL HAS BEEN GRANTED IN WRITING, BY THE DIRECTOR.

EQUIPMENT AND MATERIAL STORAGE

IN ORDER TO PROVIDE FOR THE SAFETY OF THE TRAVELING PUBLIC THE CONTRACTOR'S ATTENTION IS DIRECTED TO 614.03. IN ADDITION, THE FOLLOWING PROVISIONS SHALL APPLY:

1) ANY REMOVED ITEMS SHALL NOT BE STORED ON THE RIGHT OF WAY FOR MORE THAN THIRTY DAYS.

2) THE STORAGE OF EQUIPMENT, MATERIALS AND VEHICLES WITHIN THE HIGHWAY RIGHT OF WAY WILL BE PERMITTED. THE NUMBER OF AREAS AND EXACT LOCATIONS SHALL BE APPROVED BY THE ENGINEER.

3) ALL DISTURBED AREAS SHALL BE RETURNED TO THEIR ORIGINAL CONDITION AT NO EXPENSE TO THE STATE.

CONTRACTOR'S EQUIPMENT AND OPERATION

ALL VEHICLES AND EQUIPMENT MUST BE EQUIPPED WITH AT LEAST ONE FLASHING, ROTATING, OR OSCILLATING AMBER LIGHT THAT IS VISIBLE IN ALL DIRECTIONS OF TRAFFIC FOR AT LEAST ONE QUARTER MILE, DAY OR NIGHT. THIS INCLUDES TRUCKS HAULING ASPHALT.

UNLESS BEHIND CONCRETE BARRIER, THE CONTRACTOR'S EQUIPMENT SHALL BE OPERATED IN THE DIRECTION OF TRAFFIC ONLY.

PROGRESS SCHEDULE (CRITICAL PATH METHOD)

THE PRE-CONSTRUCTION MEETING SHALL BE HELD NO LATER THAN 30 CALENDAR DAYS AFTER THE CONTRACT IS SIGNED. THE CONTRACTOR SHALL SUBMIT THEIR PROPOSED CPM SCHEDULE AT THE PRE-CONSTRUCTION MEETING FOR REVIEW BY THE CONSTRUCTION ENGINEER. WRITTEN COMMENTS REGARDING THE CPM SCHEDULE WILL BE FORWARDED TO THE CONTRACTOR BY THE CONSTRUCTION ENGINEER WITHIN 14 CALENDAR DAYS AFTER THE PRE-CONSTRUCTION MEETING.

A FINAL CPM SCHEDULE SHALL BE SUBMITTED TO THE CONSTRUCTION ENGINEER WITHIN 30 CALENDAR DAYS FROM THE DATE OF THE PRE-CONSTRUCTION MEETING BUT AT LEAST SEVEN (7) CALENDAR DAYS PRIOR TO THE DATE DESIGNATED AS THE STARTING DATE IN THE CPM SCHEDULE. THE SCHEDULE SHALL BE SIGNED AND DATED BY THE PRIME CONTRACTOR AND NAMED SUBCONTRACTORS.

ADJUSTMENTS IN CONTRACT TIME

TIME EXTENSIONS WILL ONLY BE CONSIDERED WHEN CONTROLLING ITEMS OF WORK ON THE APPROVED CPM SCHEDULE ARE AFFECTED DUE TO NO FAULT OF THE CONTRACTOR.

WHEN ADDITIONAL WORK IS REQUIRED, TIME EXTENSIONS WILL ONLY BE GRANTED FOR CONTROLLING ITEMS ON THE CPM SCHEDULE.

PROJECT PROGRESS MEETINGS

PROGRESS MEETINGS WILL BE HELD EVERY FOUR (4) WEEKS AT THE PROJECT OFFICE, OR OTHER LOCATION DESIGNATED BY THE CONSTRUCTION ENGINEER AND ATTENDED BY O.D.O.T. AND CONTRACTOR DECISION-MAKING PERSONNEL.

THE PURPOSE OF THESE MEETINGS WILL BE TO DISCUSS CRITICAL OPERATIONS AND POTENTIAL PROBLEMS. THE CONTRACTOR WILL CONFIRM THE NUMBER AND DURATION OF WORK SHIFTS, NUMBER OF WORK CREWS, AND SPECIFIC PORTIONS OF THE WORK TO BE PERFORMED DURING THE FOLLOWING WEEKS.

THESE MEETINGS CAN ONLY BE WAIVED BY THE CONSTRUCTION ENGINEER.

PLOTTED BY: jgrmovse
PLOTTED FROM: 307GN13.DGN
PLOT SUBMITTED: 03-AUG-1998 12:32
Folders: Bforsber Bpid08459 Bdgn Bdgn 307gn13.dgn

GENERAL NOTES

GENERAL

ELEVATION DATUM

ALL ELEVATIONS ARE BASED ON U.S.G.S. DATUM AND OM-1546 NEAR THE BOSTON ROAD BRIDGE OVER I-71. TEMPORARY BENCH MARKS WERE ESTABLISHED FOR THIS PROJECT IN THE AREAS OF THE BRIDGES AT DRAKE ROAD, OHIO TURNPIKE, ALBION ROAD, SPRAGUE ROAD AND PEARL ROAD (U.S. 42). THE CONTRACTOR SHALL USE THE BENCH MARK CLOSEST TO EACH BRIDGE TO CONSTRUCT ONLY THAT BRIDGE.
BETWEEN BRIDGES THE BENCH CIRCUIT DID NOT TIE INTO THE EXISTING PERMANENT MONUMENTATION OR ORIGINAL CUY-42-0.00 PROJECT PLAN ELEVATIONS.

MORTARS FOR GROUT ANCHORING

ALL REFERENCE TO SUPPLEMENTAL SPECIFICATION 952 APPEARING ON STANDARD DRAWINGS OR THROUGHOUT THESE PLANS SHALL BE CONSIDERED TO READ 705.20.

JOINT SEALER

ALL REFERENCES TO 705.01 OR 705.02, APPEARING ON STANDARD DRAWINGS OR ON THE PLANS SHALL BE CONSIDERED TO READ 705.04.

ADDITIONAL SOIL INFORMATION

NO SOIL PROFILES OR STRUCTURE FOUNDATION INVESTIGATIONS HAVE BEEN DONE FOR THIS PROJECT. INFORMATION ON SOILS INVESTIGATIONS DONE FOR THE PREVIOUS CUY-42-0.00 PROJECT AND CUY-42-3.38 PROJECT ARE AVAILABLE FOR INSPECTION AT THE DISTRICT 12 OFFICE, OR IN CENTRAL OFFICE AT THE OFFICE OF MATERIALS MANAGEMENT OR THE OFFICE OF STRUCTURAL ENGINEERING.

RIGHT OF WAY

ALL WORK SHALL BE PERFORMED WITHIN THE EXISTING RIGHT OF WAY, TEMPORARY RIGHT OF WAY OR EASEMENTS.

CONSTRUCTION NOISE

ACTIVITIES AND LAND USE ADJACENT TO THIS PROJECT MAY BE AFFECTED BY CONSTRUCTION NOISE. IN ORDER TO MINIMIZE ANY ADVERSE CONSTRUCTION NOISE IMPACTS; JACK HAMMERS, HOE RAMS, PILE DRIVERS AND PAVEMENT BREAKERS SHALL NOT BE OPERATED BETWEEN THE HOURS OF 9:00 PM AND 6:00 AM. IN ADDITION, ANY SUCH DEVICE SHALL NOT BE OPERATED AT ANY TIME IN SUCH A MANNER THAT THE NOISE CREATED SUBSTANTIALLY EXCEEDS THE NOISE CUSTOMARILY AND NECESSARILY ATTENDANT TO THE REASONABLE AND EFFICIENT PERFORMANCE OF SUCH EQUIPMENT.

CITY NOISE ORDINANCE VARIATIONS FOR NIGHTTIME WORK HAVE BEEN GRANTED TO ODOT AND ITS CONTRACTOR AS FOLLOWS:

MIDDLEBURGH HTS., 6/10/98

THE ABOVE WAIVERS DO NOT CHANGE THE PROVISIONS REQUIRED BY THE FIRST PARAGRAPH ABOVE.

INDIANA BAT

THE PROJECT IS WITHIN THE RANGE OF THE FEDERALLY ENDANGERED INDIANA BAT (MYOTIS SODALIS). THE PROJECT MAY IMPACT SUMMER AND BROOD REARING HABITATS FOR THIS SPECIES (TREES OVER NINE INCHES DIAMETER BREAST HEIGHT WITH LOOSE OR PEELING BARK AND/OR CAVITIES GREATER THAN 3-4 INCHES IN SIZE). TO PREVENT HARM TO THESE BATS, THE REMOVAL OF ANY POTENTIAL ROOST TREES MUST BE COMPLETED BETWEEN SEPTEMBER 15 AND APRIL 15.
THE TREES WITHIN THE PROJECT AREA SHOULD BE MARKED AND CUT THE WINTER BEFORE THE CONSTRUCTION ACTIVITIES START. ALL BAT TREE CUTTING MUST BE COMPLETED BEFOR THE APRIL 15 DEADLINE.

THE DISTRICT 12 ENVIRONMENTAL ENGINEER MUST BE NOTIFIED WHEN THE TREE CUTTING IS COMPLETED AND HOW MANY ROOST TREE AREAS ARE REMOVED.

ROADWAY

ITEM 201 - CLEARING AND GRUBBING

ALTHOUGH THERE ARE NO TREES AND/OR STUMPS SPECIFICALLY MARKED FOR REMOVAL WITHIN THE LIMITS OF THIS PROJECT, A LUMP SUM QUANTITY HAS BEEN INCLUDED IN THE GENERAL SUMMARY FOR ITEM 201, CLEARING AND GRUBBING. TREES OR OTHER VEGETATION WHICH BLOCK THE VIEW OF EXISTING OR PROPOSED SIGNS SHALL BE REMOVED AT THE BEGINNING OF THE CONTRACT WORK. ALL TREES AND/OR STUMPS INTERFERING WITH THE INSTALLATION OF THE REPLACEMENT FENCING SHALL BE REMOVED AND INCLUDED IN ITEM 201, CLEARING AND GRUBBING. ALL PROVISIONS SET FORTH IN THE SPECIFICATIONS UNDER THIS ITEM SHALL BE INCLUDED IN THE LUMP SUM PRICE BID FOR ITEM 201 - CLEARING AND GRUBBING.

EXISTING FENCE REPAIR

WHERE SHOWN ON THE PLANS OR DESIGNATED BY THE ENGINEER, DEFECTIVE FENCE SHALL BE REMOVED AND REPLACED.

QUANTITIES FOR REMOVAL OF EXISTING FENCE AND PLACEMENT OF THE NEW FENCE ARE SHOWN ON THE PLANS AND CARRIED TO THE GENERAL SUMMARY. IN ADDITION, THE FOLLOWING CONTINGENCY QUANTITIES ARE PROVIDED FOR THE ABOVE WORK IN THE GENERAL SUMMARY:

ITEM 202 - FENCE REMOVED	2000 LIN. FT.
ITEM 607 - FENCE, TYPE CLT	2000 LIN. FT.

ITEM 202 - GUARDRAIL REMOVED

THIS ITEM SHALL INCLUDE BOTH STANDARD AND BARRIER TYPE RAILS INCLUDING ANCHOR ASSEMBLIES AND TERMINAL ASSEMBLIES.

ITEM 202 - RAISED PAVEMENT MARKERS REMOVED FOR STORAGE, AS PER PLAN

RAISED PAVEMENT MARKERS SHALL BE REMOVED FROM THE ROADWAY IN A MANNER THAT PREVENTS DAMAGE TO THE CASTINGS. REMOVED MARKERS SHALL BE COLLECTED, STORED IN 55 GALLON DRUMS (WITH AMOUNT CLEARLY MARKED) AND THEN DELIVERED TO THE ODOT WARRENSVILLE YARD, 25609 EMERY RD., WARRENSVILLE HTS., OHIO 44128 (SR 175 AT INTERSECTION OF I-271 AND EMERY RD.), BY THE CONTRACTOR, AS DIRECTED BY THE ENGINEER. THE PROJECT ENGINEER SHALL GIVE THE WARRENSVILLE TRAFFIC DEPARTMENT (292-5801) 48 HOUR NOTICE PRIOR TO ANY DELIVERIES. THE PROJECT ENGINEER SHALL BE RESPONSIBLE FOR FURNISHING ALL NECESSARY TRANSFER/RECEIVING DOCUMENTATION TO THE YARD. ALL COSTS ASSOCIATED WITH THE REMOVAL, STORAGE AND DELIVERY OF THESE MARKERS SHALL BE INCLUDED IN THE UNIT BID PRICE FOR ITEM 202 - RAISED PAVEMENT MARKERS REMOVED FOR STORAGE, AS PER PLAN.

THE FOLLOWING ESTIMATED QUANTITY HAS BEEN INCLUDED IN THE GENERAL SUMMARY TO BE USED THROUGHOUT THIS PROJECT:

ITEM 202-RAISED PAVEMENT MARKERS REMOVED FOR STORAGE, AS PER PLAN..... 2100 EA.

PAVEMENT REMOVAL

REMOVAL OF RIGID CONCRETE PAVEMENT INCLUDES THE PAVEMENT AND ALL ASPHALT COURSES ON TOP OF IT. NO SEPARATE MEASUREMENT OR PAYMENT SHALL BE MADE FOR REMOVING THE ASPHALT COURSES ON TOP OF THE CONCRETE BASE.

SAW CUTS

THE REMOVAL OF ALL PAVEMENT ADJACENT TO A PORTION OF PAVEMENT TO PERMANENTLY REMAIN SHALL REQUIRE A FULL DEPTH SAW CUT. A FULL DEPTH DIAMOND SAW CUT IS REQUIRED FOR RIGID PAVEMENT. NO SEPARATE PAYMENT SHALL BE MADE FOR THIS WORK. PAYMENT IS INCLUDED UNDER THE APPROPRIATE 202 OR 203 PAY ITEM.

ITEM 203 - PROOF ROLLING

THE FOLLOWING ESTIMATED QUANTITY FOR THIS ITEM HAS BEEN PROVIDED IN THE GENERAL SUMMARY FOR USE AS DIRECTED BY THE ENGINEER:

ITEM 203 - PROOF ROLLING 60 HOURS

ITEM 203 - DITCH CLEANOUT

THIS WORK SHALL CONSIST OF RE-ESTABLISHING THE CROSS SECTION OF AN EXISTING DITCH IN ACCORDANCE WITH THE ORIGINAL DITCH CONSTRUCTION. PLANS FOR THE ORIGINAL DITCH CONSTRUCTION ARE ON FILE AT THE DISTRICT 12 OFFICE. SURPLUS OR UNSUITABLE MATERIAL, AS DETERMINED BY THE ENGINEER, SHALL BE DISPOSED OF AS PER 203.05 AND TO THE SATISFACTION OF THE ENGINEER. EMBANKMENT REQUIRED FOR ERODED CONDITIONS SHALL MEET THE REQUIREMENTS OF 203.07, EXCEPT THAT THE COMPACTION REQUIREMENTS ARE WAIVED.

APPROXIMATE DITCH CLEANOUT WORK LIMITS ARE SHOWN IN THE PLANS. IN ADDITION TO THE WORK LIMITS SHOWN IN THE PLANS, THE FOLLOWING CONTINGENCY QUANTITY HAS BEEN PROVIDED IN THE GENERAL SUMMARY FOR USE AS DIRECTED BY THE ENGINEER. ALL DITCH WORK INCLUDING WORK SHOWN IN THE PLANS OR OF A CONTINGENCY NATURE WILL BE PERFORMED ONLY AS DIRECTED BY THE ENGINEER.

ITEM 203 - DITCH CLEANOUT 1,000 L.F.

MEASUREMENT OF THE DITCH CLEANOUT SHALL BE THE ACTUAL LINEAR FEET MEASURED ALONG THE CENTERLINE OF THE DITCH.

PAYMENT FOR ALL THE ABOVE SHALL BE INCLUDED IN THE UNIT PRICE BID PER LINEAR FEET OF ITEM 203 - DITCH CLEANOUT.

AFTER CLEANING, THE DITCH AREA SHALL BE SEEDED AND MULCHED IN ACCORDANCE WITH ITEM 659 - SEEDING AND MULCHING. PAYMENT FOR SEEDING AND MULCHING SHALL BE INCLUDED UNDER ITEM 203 - DITCH CLEANOUT.

ITEM 203 - EMBANKMENT, AS PER PLAN

THE TOP 3 INCHES OF EMBANKMENT SHALL CONSIST OF LOOSE, FRIABLE, LOAMY SOIL WITHOUT THE ADMIXTURE OF REFUSE OR STONE GREATER THAN 1 INCH. THE SOIL SHALL BE CAPABLE OF SUPPORTING VEGETATION.

REMOVAL AND REPLACEMENT OF UNSUITABLE MATERIAL

THE FOLLOWING ESTIMATED QUANTITIES ARE INCLUDED TO REPLACE SOFT SUBGRADE AREAS AS DEFINED IN 203.13(c).

ITEM 203 - EXCAVATION, NOT INCLUDING EMB. CONST.....	1000 C.Y.
ITEM 203 - EMBANKMENT USING GRANULAR MATERIAL	1000 C.Y.

ITEM 203 LINEAR GRADING, AS PER PLAN

THIS ITEM SHALL BE USED ALONG SHOULDERS AS SHOWN ON THE TYPICALS. WHERE GUARDRAIL IS PROPOSED IT SHALL INCLUDE THE EXCAVATION AND REGRADING NECESSARY TO PLACE ITEM 448 UNDER GUARDRAIL. ALONG ALL NON GUARDRAIL AREAS IT SHALL CONSIST OF EXCAVATION OF SUFFICIENT SOIL TO PROVIDE POSITIVE DRAINAGE AWAY FROM THE SHOULDER, IF NEEDED, IT SHALL ALSO INCLUDE PROVIDING EMBANKMENT MATERIAL TO FILL ANY LOW AREAS ALONG THE SHOULDER. THE MATERIAL PROVIDED FOR EMBANKMENT PURPOSES MAY BE SOIL OR GRANULAR MATERIAL AS PER ITEM 617 - COMPACTED AGGREGATE, TYPE A, AS PER PLAN. THIS SHALL BE CONSTRUCTED TO PROVIDE POSITIVE DRAINAGE AWAY FROM THE PAVEMENT. MEASUREMENT SHALL BE MADE SEPARATELY FOR EACH SIDE OF THE ROADWAY. IF BOTH SIDES ARE TO BE GRADED THEN PAYMENT WILL BE MADE FOR EACH. MEDIAN GUARDRAIL WHICH REQUIRES ITEM 448 UNDER GUARDRAIL SHALL ALSO USE THIS ITEM TO PREPARE THE AREA FOR PAVING. THE MEDIAN GUARDRAIL APPLICATION IS THE ONLY LOCATION WHERE THIS ITEM SHALL BE PAID FOR IN THE MEDIAN AREA.

PLOTTED BY:fkonopka
PLOTTED FROM:/home/rsberforsberg/pid08459/dgn/307gnl4.dgn
PLOT SUBMITTED:05-AUG-1998 12:13
307GN14.DGN

GENERAL NOTES

ROADWAY

MONUMENTS

MONUMENTS SHALL BE CONSTRUCTED IN ACCORDANCE WITH DETAILS AND LOCATIONS SHOWN ON STANDARD CONSTRUCTION DRAWING RM-1.1M AND AT THE LOCATIONS SHOWN ON SHEETS NO. 2, 3 AND 4.

PAVING UNDER GUARDRAIL

THIS OPERATION SHALL INCLUDE PREPARATION OF THE GRADED SHOULDER USING 203, LINEAR GRADING, AND PAVING UNDER THE GUARDRAIL USING 448 ASPHALT CONCRETE INTERMEDIATE COURSE, TYPE 1, UNDER GUARDRAIL, PG 64-22. PAVING UNDER GUARDRAIL SHALL CONSIST OF PLACING ITEM 448 TO THE DEPTH SPECIFIED USING ONE OF THE FOLLOWING METHODS:

METHOD A:
1) SET GUARDRAIL POSTS
2) PLACE ITEM 448

METHOD B:
1) PLACE ITEM 448
2) BORE ASPHALT AT POST LOCATIONS (MAY BE OMITTED IF STEEL POSTS ARE USED)
3) SET GUARDRAIL POSTS
4) PATCH AROUND POSTS. THE MATERIALS USED FOR PATCHING SHALL BE A BITUMINOUS CONCRETE APPROVED BY THE ENGINEER. PATCHED AREAS SHALL BE COMPACTED USING EITHER HAND OR MECHANICAL METHODS. FINISHED SURFACES SHALL BE SMOOTH AND SLOPED TO DRAIN AWAY FROM THE POSTS.

ALL EQUIPMENT, MATERIALS AND LABOR REQUIRED TO PERFORM THE WORK OUTLINED ABOVE, WITH THE EXCEPTION OF SETTING GUARDRAIL POSTS, SHALL BE INCLUDED FOR PAYMENT UNDER ITEM 448, ASPHALT CONCRETE, INTERMEDIATE COURSE, TYPE 1, UNDER GUARDRAIL, PG 64-22.

GUARDRAIL PROTECTION

NO SIGN SUPPORTS SHALL BE ERECTED BEFORE THE NECESSARY GUARDRAIL PROTECTION IS IN PLACE. SIMILARILY EXISTING GUARDRAIL WHICH PROTECTS AN OBSTRUCTION OR SLOPE WHICH IS TO BE UPGRADED TO ELIMINATE GUARDRAIL, SHALL NOT BE REMOVED UNTIL THAT WORK HAS BEEN COMPLETED. EXISTING GUARDRAIL WHICH IS SCHEDULED TO BE REPLACED WITH TYPE 5 GUARDRAIL, SHALL NOT BE REMOVED UNTIL THE NEW GUARDRAIL IS READY TO BE INSTALLED, UNDER NO CIRCUMSTANCES SHALL ANY HAZARD BE WITHOUT GUARDRAIL PROTECTION FOR MORE THAN 24 HOURS. (SEE PUBLIC SAFETY NOTE SHEET NO. 21)

CONNECTIONS BETWEEN EXISTING AND PROPOSED GUARDRAIL

WHEN IT IS NECESSARY TO SPLICE PROPOSED GUARDRAIL TO EXISTING GUARDRAIL, ONLY THE EXISTING GUARDRAIL SHALL BE CUT, DRILLED, OR PUNCHED. THE CONNECTION SHALL BE MADE USING A"W-BEAM RAIL SPLICE" AS SHOWN IN AASHTO M180. PAYMENT SHALL BE INCLUDED IN THE UNIT PRICE BID FOR THE RESPECTIVE GUARDRAIL ITEMS.

LOCATION OF GUARDRAIL

THE LOCATIONS OF GUARDRAIL RUNS, AS SHOWN IN THESE PLANS, ARE SUBJECT TO ADJUSTMENT PRIOR TO FINAL ACCEPTANCE. THE ENGINEER SHALL BE SATISFIED THAT ALL INSTALLATIONS WILL AFFORD MAXIMUM PROTECTION FOR TRAFFIC.

TYPE 5 GUARDRAIL POST SPACING

WHEN THE OFFSET BETWEEN THE FACE OF THE GUARDRAIL AND BRIDGE PIERS, MAJOR SIGNS, SIGN SUPPORTS, OR OTHER FIXED OBSTACLES IS LESS THAN 5 FEET 6 INCHES THE GUARDRAIL SHALL BE STIFFENED BY PROVIDING 3 FEET 1.5 INCH POST SPACING FROM 12.5 FEET IN ADVANCE OF THE OBSTRUCTION TO ITS END, AS PER STANDARD DRAWING GR-2.1. COST SHALL BE INCLUDED IN THE TYPE 5A UNIT PRICE BID.
THE FOLLOWING ESTIMATED QUANTITY HAS BEEN INCLUDED IN THE GENERAL SUMMARY TO BE USED, AS DIRECTED BY THE ENGINEER, IN PLACE OF TYPE 5 GUARDRAIL AS OUTLINED ABOVE:

ITEM 606-GUARDRAIL, TYPE 5A	100 LIN.FT.

ITEM 606 - ANCHOR ASSEMBLY, TYPE E-98

FOR NOTES AND DETAILS SEE SHEET 202 .

ITEM 606 - IMPACT ATTENUATOR, TYPE 1-98

FOR NOTES AND DETAILS SEE SHEET 203.

FENCE AT BRIDGES

THE MEDIAN FENCE LOCATIONS AS SHOWN IN THE PLANS SHALL BE FIELD ADJUSTED TO APPROXIMATELY LEVEL LOCATIONS BETWEEN THE WINGWALL PARAPETS. THE GATES SHALL BE 4 FT. WIDE AS SHOWN ON STANDARD CONSTRUCTION DRAWING F-3.2M. PADLOCKS FURNISHED SHALL BE EITHER BRASS OR BRONZE PADLOCKS EQUAL TO MASTER NO. 4 BKA OR WILSON BOHANNAN 660 OR EQUAL AS APPROVED BY THE ENGINEER, AND SHALL BE KEYED IN ACCORDANCE WITH SPECIFICATION 631.08, PARAGRAPH 3. ALL COSTS SHALL BE INCLUDED UNDER ITEM 607 - GATE, TYPE CL, AS PER PLAN.

ITEM 622 - CONCRETE BARRIER, TYPE B-50, AS PER PLAN

ALL CONCRETE BARRIERS SHALL HAVE THE STATION NUMBERS STENCILED INTO THE NEW BARRIER BEFORE IT TAKES ITS FINAL SET. THE NUMERALS SHALL BE 3 TO 4 INCHES IN HEIGHT AND 0.25 INCH IN DEPTH. THE STATION NUMBERS SHALL BE PLACED PARALLEL WITH THE PAVEMENT EDGE AND CENTERED ON THE TOP OF THE CONCRETE BARRIER OR INLET. PAYMENT SHALL BE INCLUDED IN THE CONTRACT UNIT PRICE BID PER ITEM 622 - CONCRETE BARRIER, TYPE B-50, AS PER PLAN. SEE NOTE ON SHEET 205 FOR ADDITIONAL INFORMATION.

ITEM 622 - CONCRETE BARRIER, TYPE D, AS PER PLAN A

THIS ITEM SHALL BE USED TO CONSTRUCT A 42 INCH TALL, TYPE D BARRIER. THE TOP WIDTH SHALL BE 8 INCHES, ALL OTHER DETAILS SHALL BE AS PER GR-8.1 EXCEPT THAT THE HEIGHT SHALL TRANSITION FROM 32 INCHES TO 42 INCHES BETWEEN SECTION D-D AND SECTION C-C.

ITEM SPECIAL - PIPE CLEANOUT

THE CONTRACTOR SHALL CLEAN EXISTING STORM SEWERS AS SHOWN IN THE PLANS WITH HIGH PRESSURE WATER JETS OR ANY OTHER METHODS APPROVED BY THE ENGINEER. ALL SILT AND DEBRIS SHALL BE COMPLETELY REMOVED FROM THE PIPE. ALL REMOVED MATERIAL SHALL BE DISPOSED OF AS PER 203.05 AND TO THE SATISFACTION OF THE ENGINEER.

MEASUREMENTS OF THE PIPE CLEANOUT SHALL BE THE ACTUAL LINEAR FEET MEASURED ALONG THE CENTERLINE OF THE PIPE.

PAYMENT FOR ALL THE ABOVE WORK SHALL BE INCLUDED IN THE UNIT PRICE BID PER LINEAR FEET OF ITEM SPECIAL - PIPE CLEANOUT. IN ADDITION TO THE WORK LIMITS SHOWN IN THE PLANS, THE FOLLOWING CONTINGENCY QUANTITY HAS BEEN PROVIDED IN THE GENERAL SUMMARY FOR USE AS DIRECTED BY THE ENGINEER.

ITEM SPECIAL - PIPE CLEANOUT	3000 L.F.

PAVEMENT

PROFILE GRADE

THE PROFILE GRADE FOR THIS PROJECT SHALL BE 1 1/2" ABOVE THE EXISTING 2 3/4 " ASPHALT OVERLAY OR 1 3/4 " ABOVE THE EXISTING 2 1/2" ASPHALT OVERLAY AS APPLICABLE. THE ONLY EXCEPTIONS TO THIS OCCUR AT THE MAINLINE BRIDGES AND UNDERNEATH THE OVERHEAD BRIDGES. THE ADJUSTMENTS FOR THOSE AREAS ARE AS FOLLOWS:

MAINLINE BRIDGES;
THE APPROACH SLAB SHALL BE CONSTRUCTED TO A GRADE ESTABLISHED BY EXTENDING THE BRIDGE GRADE BACK ACROSS THE APPROACH SLAB, WITH NO CHANGE IN GRADE OCCURRING AT THE BRIDGE JOINT. THE PROFILE GRADE FROM THE END OF THE APPROACH SLAB TO A POINT 75 FEET AWAY SHALL BE SET BY USING A STRAIGHT GRADE. (THE POINT 75 FEET AWAY SHALL BE BASED UPON THE EXISTING PROFILE GRADE PLUS 1 1/2 " OR 1 3/4 " AS APPROPRIATE)

OVERHEAD BRIDGES:
A REVISED PROFILE GRADE SHALL BE ESTABLISHED AT THE OVERHEAD BRIDGES WHERE NEEDED TO PROVIDE A 16'-6" VERTICAL CLEARANCE. THE LIMITS OF THESE REVISIONS ARE SHOWN ON THE PLAN AND PROFILE SHEETS. THE REVISED PROFILE HAS BEEN ESTABLISHED BY USING GRADE BREAKS IN THE PROFILE GRADE. THE PROFILE BREAKS AS SHOWN SHOULD BE USED TO ESTABLISH SUBGRADE AND THE SURFACE OF THE SUBBASE. ALL ASPHALTIC COURSES ABOVE SHOULD BE PAVED AT UNIFORM THICKNESS WITHOUT CONCERN FOR MEETING THESE GRADE BREAKS . THIS WILL RESULT IN A ROUNDING AT EACH GRADE BREAK INSTEAD OF A QUICK BREAK.

PLOTTED BY: fkonopka
PLOTTED FROM: forsberg@pid08459@dgn@307gn15.dgn
PLOT SUBMITTED: 05-AUG-1998 11:28
307GN15.DGN

GENERAL NOTES

PAVEMENT

PHASED CONSTRUCTION - MAINLINE LONGITUDINAL JOINT

THE CONSTRUCTION JOINT BETWEEN PHASE 1 AND PHASE 2 IS DETAILED ON SHEET 7. THE JOINTS SHALL BE LAPPED AS PER THE DETAIL IN LIEU OF THE REQUIREMENTS OF BP-3.1. IF TYPICAL EQUIPMENT CAN NOT COMPACT TO THE EDGE OF THE PART WIDTH JOINT, ADDITIONAL COMPACTION SHALL BE REQUIRED. THE TYPE AND METHOD SHALL BE AS APPROVED BY THE ENGINEER. AT THE PART WIDTH CONSTRUCTION JOINT THE CONTRACTOR SHALL VERTICALLY PROTECT THE ASPHALT TREATED FREE DRAINING BASE FROM CONTAMINATION FROM CLAY BENEATH THE EXISTING SUBBASE OR CLAY WITHIN THE EXISTING SUBBASE. (THIS IS MOST LIKELY AT ROADWAY LOWERING AREAS.) TO DO THIS HE SHALL INSTALL A GEOTEXTILE FABRIC AGAINST THE VERTICAL FACE PRIOR TO PLACING THE ASPHALT TREATED FREE DRAINING BASE. WHEN USED THIS FABRIC SHALL BE REMOVED OR LAID FLAT PRIOR TO PHASE 2 CONSTRUCTION. ALL COSTS FOR THIS WORK SHALL BE CONSIDERED INCIDENTAL TO THE ASPHALT TREATED FREE DRAINING BASE ITEM. ANY DAMAGE DONE DURING PHASE 2 CONSTRUCTION TO THE PART WIDTH CONSTRUCTION JOINT SHALL BE REPAIRED BY THE CONTRACTOR AT NO COST TO THE STATE. IF THE 304 BASE SLOUGHS IN ANY WAY IT SHALL BE RECOMPACTED UNDER THE PHASE 1 CONSTRUCTION AREA USING HAND TAMPING METHODS.

REPAIR OF CONCRETE PAVEMENT (TYPICALLY RAMPS)

EXISTING CONCRETE WHICH IS TO REMAIN SHALL BE REPAIRED USING EITHER PARTIAL DEPTH PAVEMENT REPAIR OR FULL DEPTH RIGID PAVEMENT REMOVAL AND FLEXIBLE REPLACEMENT. THE ENGINEER SHALL DETERMINE THE LOCATIONS AND TYPE OF REPAIR TO BE USED. PRIOR TO REMOVING THE EXISTING OVERLAY UNUSUALLY SEVERE PAVEMENT DISTRESS SHALL BE LOCATED AND REFERENCED BY THE CONTRACTOR. THIS WILL BE USED TO PREDICT WHERE FULL DEPTH REPAIRS MAY BE NECESSARY.

THE FOLLOWING ESTIMATED QUANTITIES HAVE BEEN INCLUDED IN THE GENERAL SUMMARY TO BE USED AS DIRECTED BY THE ENGINEER:

ITEM 251 - PARTIAL DEPTH PAVEMENT REPAIR ..... 150 S.Y.
ITEM 252 - FULL DEPTH RIGID PAVEMENT REMOVAL AND FLEXIBLE REPLACEMENT ..... 100 S.Y.
ITEM 252 - FULL DEPTH PAVEMENT SAWING ..... 300 L.F.

PHASED CONSTRUCTION - BUTT JOINTS

THE RESURFACING (INTERMEDIATE COURSE) FOR PHASE 1 CONSTRUCTION SHALL BE FEATHERED (THICKENED) TO MEET THE APPROACH SLABS OR PROJECT TERMINI. THIS SHALL BE DONE IN 40 FEET. WHEN PLACING THE SURFACE COURSE IN THESE AREAS THE INTERMEDIATE COURSE SHALL BE REMOVED TO PLACE A CONSTANT 1 1/2 INCH SURFACE COURSE. RAMP BUTT JOINTS SHALL BE MADE BY FIRST TAPERING THE PAVEMENT PLANING TO PROVIDE A SMOOTH TRANSITION AT THE WORK LIMIT, THE INTERMEDIATE COURSE SHALL BE FEATHERED TO MEET THE EXISTING RAMP. WHEN THE SURFACE COURSE IS TO BE PLACED, A BUTT JOINT SHALL BE CREATED IN THE PREVIOUSLY RAMPED ASPHALT. PAYMENT FOR THE REMOVAL SHALL BE MADE UNDER THE FOLLOWING ITEM

ITEM 254-PAVEMENT PLANING, BITUMINOUS ..... 5100 SQ. YDS.

LONGITUDINAL JOINTS (INTERMEDIATE AND SURFACE COURSES)

LONGITUDINAL JOINTS BETWEEN A PAVEMENT LANE AND ADJOINING BERM OR SPEED CHANGE LANE, AND BETWEEN A SPEED CHANGE LANE AND THE ADJOINING BERM SHALL BE MADE THE SAME DAY. ALL LONGITUDINAL JOINTS SHALL BE HOT WITH THE EXCEPTION OF ONE COLD JOINT PER ROADWAY. LONGITUDINAL JOINT LOCATIONS SHALL BE AS APPROVED BY THE ENGINEER. EACH RAMP SHALL HAVE ONLY ONE LONGITUDINAL COLD JOINT LOCATED APPROXIMATELY HALFWAY ACROSS THE RAMP.

ITEM 304 - AGGREGATE BASE, AS PER PLAN

THIS ITEM CONSISTS OF A BASE COURSE COMPOSED OF CRUSHED AGGREGATES AS PER ITEM 304 OR USING CRUSHED CONCRETE MEETING THE REQUIREMENTS OF ITEM 304 AND THE SPECIFICATIONS BELOW:
AGGREGATES SHALL CONSIST OF CLEAN, SOUND, DURABLE PARTICLES OF CRUSHED CONCRETE AND SHALL BE FREE FROM COATINGS OF CLAY, SILT, VEGETABLE MATTER, AND OTHER OBJECTIONABLE MATERIALS AND SHALL CONTAIN NO CLAY BALLS. FINE AGGREGATE PASSING THE NO. 4 (4.75 mm) SIEVE SHALL CONSIST OF FINES FROM THE OPERATION OF CRUSHING THE COARSE AGGREGATE. IF NECESSARY, FINE AGGREGATE MAY BE ADDED TO PRODUCE THE CORRECT GRADATION. THE FINE AGGREGATE SHALL BE PRODUCED BY CRUSHING STONE, GRAVEL, OR CRUSHED CONCRETE THAT MEET THE REQUIREMENTS FOR WEAR AND SOUNDNESS SPECIFIED FOR COARSE AGGREGATE.
THE CRUSHED AGGREGATE PORTION WHICH IS RETAINED ON THE NO. 4 (4.75 mm) SIEVE SHALL CONTAIN NOT MORE THAN 15 PERCENT, BY WEIGHT, OF FLAT OR ELONGATED PIECES AS DEFINED IN ASTM D 693 AND SHALL HAVE AT LEAST 90 PERCENT BY WEIGHT OF PARTICLES WITH AT LEAST TWO FRACTURED FACES AND 100 PERCENT WITH AT LEAST ONE FRACTURED FACE. THE AREA OF EACH FACE SHALL BE EQUAL TO AT LEAST 75 PERCENT OF THE SMALLEST MIDSECTIONAL AREA OF THE PIECE. WHEN TWO FRACTURED FACES ARE CONTIGUOUS, THE ANGLE BETWEEN THE PLANES OF FRACTURES SHALL BE AT LEAST 30 TO COUNT AS TWO FRACTURED FACES.

THE AGGREGATE SHALL BE UNIFORMLY BLENDED DURING CRUSHING OPERATIONS OR MIXED IN A PLANT. THE PLANT SHALL BLEND AND MIX THE MATERIALS TO MEET THE SPECIFICATIONS AND TO SECURE THE PROPER MOISTURE CONTENT FOR COMPACTION.

ITEM 305 - CONCRETE BASE, AS PER PLAN

WHERE NEW CONCRETE IS PLACED ADJACENT TO EXISTING CONCRETE, CONTRACTION JOINTS SHALL BE PROVIDED IN THE NEW CONCRETE SO AS TO FORM CONTINUOUS JOINTS WITH THOSE IN THE EXISTING CONCRETE.
THE MAXIMUM DISTANCE BETWEEN THE JOINTS IN THE NEW CONCRETE SHALL BE IN ACCORDANCE WITH STANDARD CONSTRUCTION DRAWING BP-2.2W, IF NECESSARY, ADDITIONAL JOINTS SHALL BE PROVIDED IN THE NEW CONCRETE AT APPROXIMATELY EQUAL INTERVALS BETWEEN EXISTING JOINTS THAT EXCEED THE MAXIMUM SPACING.

ITEM 407, TACK COAT

THE RATE OF APPLICATION OF THE 407 TACK COAT SHALL BE SUBJECT TO ADJUSTMENT AS DIRECTED BY THE ENGINEER. PLAN QUANTITIES INDICATE AN AVERAGE APPLICATION RATE OF 0.1 GALLONS PER SQUARE YARD OF TACK COAT FOR ESTIMATING PURPOSES ONLY.

ITEM 407 - TACK COAT FOR INTERMEDIATE COURSE

THE RATE OF APPLICATION OF THE 407 TACK COAT FOR INTERMEDIATE COURSE SHALL BE SUBJECT TO ADJUSTMENT AS DIRECTED BY THE ENGINEER. PLAN QUANTITIES INDICATE AN AVERAGE APPLICATION RATE OF 0.05 GALLONS PER SQUARE YARD OF TACK COAT FOR INTERMEDIATE COURSE FOR ESTIMATING PURPOSES ONLY.

ITEM 446 ASPHALT CONCRETE SURFACE COURSE, TYPE 1, PG 64-28, AS PER PLAN

THIS ITEM SHALL ONLY BE USED FOR END OF SEASON PAVING WHEN THE TEMPERATURE REQUIREMENTS OF ITEM 446 - ASPHALT CONCRETE SURFACE COURSE, TYPE 1H, AS PER PLAN CAN NOT BE MET. THIS ENTIRE ITEM IS SUBJECT TO NON-PERFORMANCE WITH NO PENALTY TO THE STATE. NO RAP WILL BE PERMITTED IN THIS MIX. COARSE AGGREGATE FOR THIS MIX SHALL BE LIMITED TO SLAG OR LIMESTONE.

THE FOLLOWING ESTIMATED QUANTITY TO BE USED AS DIRECTED BY THE ENGINEER IS INCLUDED IN THE GENERAL SUMMARY TO BE USED AS OUTLINED ABOVE:

ITEM 446 - ASPHALT CONCRETE SURFACE COURSE TYPE 1, PG 64-28, AS PER PLAN ..... 1800 CU. YDS.

ITEM 446-ASPHALT CONCRETE SURFACE COURSE, TYPE 1H, AS PER PLAN

THE GRADATION FOR THIS ITEM SHALL BE AS PER 441.02, TABLE A, TYPE 1 SURFACE, MEDIUM. ALL OTHER SPECIFICATIONS SHALL BE AS PER TYPE 1H. COARSE AGGREGATE FOR THIS ITEM SHALL BE LIMITED TO SLAG OR LIMESTONE.

ITEM 611 - REINFORCED CONCRETE APPROACH SLAB (T=15"), AS PER PLAN

THIS ITEM SHALL BE CONSTRUCTED IN ACCORDANCE WITH ITEM 611 AND THE DETAILS ON SHEETS 206 & 207 WITH THE FOLLOWING ADDITIONS:

1. THERE SHALL BE NO DOWELS AT THE END OF APPROACH SLABS EXCEPT FOR CUY-71-0553R AND CUY-71-0553L BRIDGES.
2. THERE SHALL BE TWO (2) SHEETS OF CLEAR OR OPAQUE POLYETHYLENE FILM PLACED, AS PER CMS 705.06, BETWEEN THE BOTTOM OF THE APPROACH SLAB AND THE AGGREGATE BASE FOR ALL APPROACH SLABS EXCEPT FOR THE CUY-71-0553R AND CUY-71-0553L BRIDGES. THE POLYETHYLENE FILMS SHALL COMPLETELY COVER THE FULL LENGTH AND WIDTH OF THE SUBBASE BETWEEN THE SIDEWALL FORMS FOR THE APPROACH SLAB.
3. CONCRETE BARRIER WITHIN THE APPROACH SLAB LIMITS SHALL BE PAID FOR SEPARATELY AS ITEM 622 - CONCRETE BARRIER, TYPE D, AS PER PLAN B.
4. ALL MATERIALS, LABOR AND INSTALLATION SHALL BE INCLUDED FOR PAYMENT IN ITEM 611 - REINFORCED CONCRETE APPROACH SLAB (T=15"), AS PER PLAN.

ITEM 617 - COMPACTED AGGREGATE,TYPE A, AS PER PLAN

THIS ITEM SHALL BE USED ALONG ALL SHOULDERS WHEN SHOWN ON THE TYPICAL SECTIONS. MATERIAL FOR THIS ITEM SHALL BE LIMITED TO CRUSHED SLAG, CRUSHED LIMESTONE OR ASPHALT GRINDINGS. IF ASPHALT GRINDINGS ARE USED THE ONLY MATERIAL REQUIREMENT IS THAT 100% SHALL PASS A 1 INCH SIEVE. ALL COSTS OF EXCAVATION OR EMBANKMENT NECESSARY TO CONSTRUCT THIS ITEM AND PROVIDE POSITIVE DRAINAGE ARE INCLUDED IN THIS ITEM.

THIS ITEM SHALL BE PLACED PRIOR TO SHIFTING TRAFFIC NEXT TO THE EARTH SHOULDER, AND AGAIN AFTER THE FINAL RESURFACING HAS BEEN PLACED. (SEE DETAIL ON SHEET 7.)

THE FOLLOWING ESTIMATED QUANTITY HAS BEEN INCLUDED IN THE GENERAL SUMMARY TO BE USED AS OUTLINED ABOVE:

ITEM 617-COMPACTED AGGREGATE, TYPE A, AS PER PLAN..... 1500 C.Y.

ITEM 618 - RUMBLE STRIPS

THIS ITEM OF WORK SHALL NOT BE INSTALLED UNTIL AFTER ALL TRAFFIC SHIFTS UTILIZING THE SHOULDER HAVE BEEN COMPLETED. THE OFFSET FROM THE EDGE LINE SHALL BE 2 FEET IN LIEU OF THE OFFSETS SHOWN ON BP-9.2W. THIS ITEM SHALL BE USED ON ASPHALT SHOULDERS ONLY, RUMBLE STRIPS SHALL NOT BE INSTALLED ON BRIDGE DECKS OR APPROACH SLABS.

ITEM 623 - CONSTRUCTION LAYOUT STAKES, AS PER PLAN

IN ADDITION TO THE REQUIREMENTS OF ITEM 623, THE CONTRACTOR SHALL PROVIDE FIELD SURVEY FOR ALL BRIDGE TRANSITIONS.

PLOTTED BY: fkonopka
PLOTTED FROM: /Users/fkonopka/Epid08459/Edgn/B307gn16.dgn
PLOT SUBMITTED: 05-AUG-1998 11:30
307GN16.DGN

GENERAL NOTES

DRAINAGE

REVIEW OF DRAINAGE FACILITIES

Before any work is started on the project, and again before final acceptance by the State, representatives of the State and the Contractor, along with local representatives, shall make a visual inspection of the existing sewers within the work limits which are to remain in service and which may be affected by the work. The condition of the existing conduits and their appurtenances shall be determined from field observations. Records of the inspections shall be kept in writing by the State.

All new conduits, inlets, catch basins, and manholes constructed as a part of the project shall be free of all foreign matter and in a clean condition before the project will be accepted by the State.

All existing sewers inspected initially by the above mentioned parties shall be maintained and left in a condition reasonably comparable to that determined by the original inspection. Any change in the condition resulting from the Contractor's operations shall be corrected by the Contractor to the satisfaction of the Engineer.

Payment for all operations described above shall be included in the unit prices bid for the pertinent 603 conduit items of the contract.

CROSSINGS AND CONNECTIONS TO EXISTING PIPES AND UTILITIES

Where plans provide for a proposed conduit to be connected to, or cross over or under an existing sewer or underground utility, the Contractor shall locate the existing pipes or utilities both as to line and grade before starting to lay the proposed conduit.

If it is determined that the elevation of the existing conduit, or existing appurtenances to be connected, differs from the plan elevation or results in a change in the plan conduit slope, the Engineer shall be notified before starting construction of any portion of the proposed conduit which will be affected by the variance in the existing elevations.

If it is determined that the proposed conduit will intersect an existing sewer or underground utility if constructed as shown on the plan, the Engineer shall be notified before starting construction of any portion of the proposed conduit which would be affected by the interference with an existing facility.

Payment for all the operations described above shall be included in the contract price for the pertinent 603 conduit item.

REPLACEMENT INLETS AND CATCH BASINS

Before ordering any replacement inlets or catch basins the Contractor shall survey the locations and flow lines of all existing sewers and underdrains entering the inlets or catch basins. Elevations shown on the plans shall be adjusted to reflect the field survey data.

Payment for all of the operations described above shall be included in the pertinent Item 604, item.

UNTREATED SEPTIC CONNECTIONS

This plan makes no provision for connecting, nor shall the Engineer or Contractor connect, any untreated septic drainage into the highway drainage system. Any pipe carrying untreated septic flow shall be plugged with Class C concrete at the right of way line. Payment for plugging shall be included in the contract price for Item 203 - Excavation, not including Embankment Construction.

ITEM 604 - JUNCTION CHAMBER, AS PER PLAN, ALL TYPES

All junction chambers shall be constructed in accordance with ODOT CMS Item 706.05 and as per details shown on the plans.

Removal of existing manholes, catch basins, or combinations thereof shall be included in the unit price bid for Item 604 - Junction Chamber, As Per Plan, All Types.

ITEM 604 - CATCH BASIN NO. 4 WITH E-GRATE, AS PER PLAN

This item shall conform to Standard Drawing CB-3.1M except as noted on sheet 211.

ITEM 605 - 6" PIPE UNDERDRAIN

All existing underdrain are to be kept in service and shall be outletted, as directed by the Engineer, into the new drainage structures or new underdrain outlets. Existing clogged or non-functioning underdrain outlets shall be removed and replaced.

Quantities for placement of new underdrains are shown on the plans and carried to the General Summary. In Addition, the following contingency quantities are provided for the above work in the General Summary as directed by the Engineer:

Item 603 - 6" Conduit, Type F, 707.41 Non-perforated ASTM 3034 SDR 35, 707.42 or 707.33	750 Lin. Ft.
Item 604 - Precast Renforced Concrete Outlets	10 Each
Item 605 - 6" Unclassified Pipe Underdrain	500 Lin. Ft.
Item 605 - 6" Unclassified Pipe Underdrain with Fabric Wrap	500 Lin. Ft.
Item 605 - 6" Shallow Pipe Underdrain (30" Deep)	500 Lin. Ft.
Item 605 - 6" Shallow Pipe Underdrain with Fabric Wrap (18" Deep)	500 Lin. Ft.
Item 605 - 6" Shallow Pipe Underdrain with Fabric Wrap (30" Deep)	500 Lin. Ft.

DRAINAGE

UNDERDRAIN OUTLETS

All 18 inch deep underdrains shall be connected to the outlets for the 30 inch deep underdrains wherever they cross.

All proposed underdrain outlets are shown separately from the existing underdrain outlets for clarity only. All proposed underdrain outlets shall replace the existing underdrain outlets and connect to both the proposed and existing underdrain runs.

ITEM 605 - INTERCEPTOR DRAIN

The following estimated quantities have been included in the general summary for use as interceptor drains. These drains shall be installed to collect slope seepage encountered during construction. The location(s) shall be as directed by the engineer. The following quantities shall be considered contingency quantities and materials shall not be ordered until authorized by the engineer.

Item 605 - 6" Unclassified Pipe Underdrain, 707.41, ASTM D-3034 SDR 35, 707.33 or 707.42 Perforated per 707.31	500 L.F.
Item 605 - 6" Unclassified Pipe Underdrain, 707.41, ASTM D-3034 SDR 35, 707.33 or 707.42 Perforated per 707.31, Fabric Wrapped	500 L.F.
Item 603 - 6" Conduit, Type F, 707.41 (Nonperforated ASTM D-3034 SDR 35), 707.33 or 707.42	200 L.F.

ITEM SPECIAL, MISCELLANEOUS METAL

Existing castings may prove to be unsuitable for reuse, as determined by the Engineer. It shall be the Contractor's responsibility to provide the casting of the required type, size and strength (heavy or light duty) for the particular structure in question. All materials shall meet Item 604 of the specifications and shall have the prior approval of the Engineer.

The following estimated quantity has been carried to the General Summary for use as directed by the Engineer.

Item Special, Miscellaneous Metal 5,000 Lbs.

The Contractor is cautioned to use extreme care in the removal, storage and replacement of all existing castings. Castings damaged by the negligence of the Contractor, as determined by the Engineer, shall be replaced with the proper new casting at the expense of the Contractor.

ITEM 601 - ROCK CHANNEL PROTECTION, TYPE A, WITH FABRIC FILTER, AS PER PLAN

In addition to the requirements of item 601, this work shall include the construction of key trenches (as indicated on the plan), the grouting of all rock channel protection above the normal water surface elevation, and all necessary rock excavation & cofferdam work.

FABRIC FILTER

The contractor is cautioned that any fabric filter damaged, torn or punctured by construction Work shall be replaced, in its entirety, by the contractor at no expense to the state.

ITEM 604 - INLET, NO. 2-6, AS PER PLAN
ITEM 604 - MANHOLE, NO. 3, AS PER PLAN
ITEM 604 - MANHOLE, NO. 5, AS PER PLAN
ITEM 604 - CATCH BASIN, NO. 3A, AS PER PLAN
ITEM 604 - CATCH BASIN, NO. 2-3, AS PER PLAN

The unit price for each drainage structure shall include any conduit necessary to properly tie into the existing storm sewer system. The new pipe(s) shall match the material type of the existing sewer and shall meet the requirements of Item 603.

EROSION CONTROL

ITEM 659 - SEEDING AND MULCHING

Seeding and mulching shall be applied to the median area of I-71. In addition, all areas disturbed to install light poles and signs, including conduit runs, and all ditch areas that have been cleaned will be seeded and mulched.

In addition to the seeding and mulching areas calculated on the cross section sheets, the following contingency quantity has been included in the General Summary for use as directed by the Engineer for repairing areas disturbed by signing and lighting installations and ditch cleaning areas not shown on the plans.

Item 605 - Seeding and Mulching 12,000 S.Y.

ITEM 659 - AGRICULTURAL LIMING, AS PER PLAN

The location and need for agricultural liming will be determined by laboratory tests after rough grading operations have been performed. Quantities of agricultural liming, as shown on the plans are sufficient for the entire project, but will be non-performed for the areas where tests show that liming is not required.

WATERING AND MOWING PERMANENT SEEDED AND SODDED AREAS

The following estimated quantities are to be used as directed by the Engineer to promote growth and to care for permanent seeded and sodded areas, as per 659.09:

Item 659 - Water	210 M. Gal.
Item 659 - Mowing	225 M. Sq. Ft.

TEMPORARY SOIL EROSION AND SEDIMENT CONTROL

The following estimated quantities are to be used as directed by the Engineer for temporary soil erosion and sediment control measures:

Item 207 - Temporary Seeding and Mulching	97,000 Sq.Yd.
Item 207 - Straw or Hay Bales	1,000 Each
Item 207 - Filter Fabric Fence	5,000 L.F.
Item 207 - Temporary Ditch Protection	500 Sq.Yd.
Item 207 - Temporary Slope Drains	300 L.F.
Item 207 - Temporary Dikes	200 L.F.
Item 601 - Rock Channel Protection, Type C, w/o filter	100 Cu. Yd.
Item 601 - Rock Channel Protection, Type C with Filter	100 Cu.Yd.
Item 659 - Mowing	220 M Sq.Ft.
Item 659 - Commercial Fertilizer	7.64 Tons
Item 659 - Repair Seeding and Mulching	5,000 Sq.Yd.
Item 659 - Water	210 M Gal.

EROSION CONTROL

Items 601, 660, and 668 are provided in the plans for erosion control. Rock of a stable nature will not be removed in order to place any of these items, and turf of a stable nature will not be removed in order to place 660, or 668. The Engineer shall check and non-perform quantities or adjust locations and quantities for these items where indicated by field conditions during construction. In addition these items shall meet the requirements of 108.04.

PLOTTED BY: fkonopka
PLOTTED FROM: users\beforsber\pid08459\dgn\307gn03.dgn
307GN03.DGN
PLOT SUBMITTED:05-AUG-1998 11:31

GENERAL NOTES

MAINTENANCE OF TRAFFIC

GENERAL

IT IS THE RESPONSIBILITY OF THE CONTRACTOR TO PROVIDE THRU VEHICULAR ACCESS IN BOTH DIRECTIONS AT ALL TIMES THROUGHOUT THE PROJECT AREA. THE PROJECT SHALL BE CONSTRUCTED IN FOUR MAJOR PHASES IN ORDER TO MINIMIZE TRAFFIC DISRUPTION AND INCONVENIENCE TO THE GENERAL PUBLIC. THE CONTRACTOR SHALL BE RESPONSIBLE FOR PROVIDING ALL EQUIPMENT, MATERIALS AND MANPOWER NEEDED TO ADEQUATELY MAINTAIN TRAFFIC AS PROVIDED FOR IN THE PLANS AND SPECIFICATIONS.

THE CONTRACTOR IS REMINDED THAT, IN THE CONDUCT OF THIS PROJECT, HIS SEQUENCE OF OPERATIONS SHALL BE PLANNED IN SUCH A WAY AS TO MINIMIZE THE NUMBER OF LANE REDUCTIONS AND/OR LANE WIDTH REDUCTIONS REQUIRED TO MAINTAIN TRAFFIC THROUGH THE PROJECT.

IT IS THE INTENT OF THIS PROJECT TO MAINTAIN A MINIMUM OF TWO LANE TRAFFIC IN EACH DIRECTION ON THE MAINLINE PAVEMENT DURING ALL PHASES OF THE PROJECT, EXCEPT FOR CLOSURES AS PERMITTED BY THE "SCHEDULE OF THRU LANES TO BE MAINTAINED NOTE"

NO TRAFFIC SHIFTS WILL BE PERMITTED BETWEEN NOVEMBER 15TH AND MARCH 15TH (EXCEPT AS PERMITTED TO BEGIN TURNPIKE WORK). NO LANE RESTRICTIONS, INCLUDING RAMPS, WILL BE ALLOWED DURING THIS TIME. THE CONTRACTOR IS CAUTIONED TO SCHEDULE HIS WORK, ESPECIALLY ASPHALT OVERLAYS, TO MEET THIS REQUIREMENT.

NOVEMBER 15TH SHALL BE CONSIDERED TO CONSTITUTE AN INTERIM COMPLETION DATE AND LIQUIDATED DAMAGES SHALL BE ASSESSED IN ACCORDANCE WITH 108.07 FOR EACH CALENDAR DAY THAT ALL LANES HAVE NOT BEEN RETURNED TO THEIR NORMAL POSITION.

NO EXTENSIONS OF TIME SHALL BE GRANTED FOR DELAYS IN MATERIAL DELIVERIES, UNLESS SUCH DELAYS ARE INDUSTRY-WIDE, OR FOR LABOR STRIKES, UNLESS SUCH STRIKES ARE AREA-WIDE.

SHOULD THE CONTRACTOR FAIL TO MEET THIS REQUIREMENT THE CONTRACTOR SHALL BE ASSESSED LIQUIDATED DAMAGES IN ACCORDANCE WITH 108.07 OF THE CONSTRUCTION AND MATERIAL SPECIFICATIONS.

OVERHEAD SIGNS AND SUPPORTS THAT ARE BEING MODIFIED SHALL NOT BE REMOVED UNTIL THE NEW FOUNDATION IS CONSTRUCTED AND ANY REQUIRED SUPPORT MODIFICATIONS ARE AT THE SITE.

MAJOR WORK ITEMS

THE FOLLOWING MAJOR WORK ITEMS WILL REQUIRE TRAFFIC MAINTENANCE PROCEDURES WHICH SHALL BE INCORPORATED INTO THE CONTRACTOR'S SEQUENCE OF OPERATIONS:

A. MEDIAN PAVEMENT LANE AND SHOULDER CONSTRUCTION AND MEDIAN REGRADING
B. BRIDGE WIDENING AND BRIDGE DECK REPLACEMENT AND/OR REPAIR
C. INSTALLATION AND/OR REPAIR OF CONCRETE BARRIER AND GUARDRAIL
D. INSTALLATION AND/OR REPLACEMENT OF HIGHWAY TOWER LIGHT POLES
E. I-71 OUTSIDE PAVEMENT REPLACEMENT AND RAMP SHOULDER REPLACEMENT
F. ASPHALT SURFACE REMOVAL AND EXISTING CONCRETE PAVEMENT REPAIRS
G. ASPHALT CONCRETE OVERLAYS
H. PAVEMENT MARKINGS
I. INSTALLATION OF NEW OVERHEAD SIGNS

MAJOR CONSTRUCTION PHASES

PRELIMINARY - NORTHBOUND

1. CONSTRUCT PAVEMENT SURFACE REPAIRS PRIOR TO IMPLEMENTING TRAFFIC SHIFTS
2. BEGIN BRIDGE PIER AND ABUTMENT WIDENINGS, ETC.

PHASE 1 NB - CONSTRUCT NORTHBOUND INSIDE LANES

THE MAJOR WORK ITEMS DURING THIS PHASE INCLUDE THE FOLLOWING:

1. DRAINAGE - COMPLETE ALL NEW UNDERDRAINS, AND OUTLETS, ETC. (ITEM NOS. 603, 604 AND 605)
2. LIGHTING - INSTALL CONDUITS UNDER PAVEMENT.
3. SIGNING - COMPLETE ALL FOUNDATION WORK.
4. PAVEMENT - COMPLETE ALL PAVEMENT WORK NEEDED FOR NEW LANE AND NEW MEDIAN SHOULDER, INCLUDING GUARD RAILS OR BARRIER MEDIAN (GUARDRAILS AT FUTURE TOWER LIGHT POLE LOCATIONS SHALL NOT BE BE INSTALLED UNTIL PHASE 1 SB). A TWO STEP OPERATION SHALL BE DONE TO CONSTRUCT THE MEDIAN EARTHWORK, SEE SHEET 8 FOR DETAILS.
5. BRIDGES - COMPLETE ALL WORK REQUIRED FOR EXTENSION OF PIERS AND ABUTMENTS, REMOVE PART OF EXISTING DECKS AND BUILD NEW DECKS (PART WIDTH) AS SHOWN ON STRUCTURE DRAWINGS UNDER STAGE 1 CONSTRUCTION.

PHASE 2 NB - REPLACE NORTHBOUND OUTSIDE LANES

THE MAJOR WORK ITEMS DURING THIS PHASE INCLUDE THE FOLLOWING:

1. DRAINAGE - INSTALL UNDERDRAINS AND OUTLETS.
   INSTALL NON-MEDIAN DRAINAGE STRUCTURES
2. LIGHTING - INSTALL CONDUITS UNDER PAVEMENT.
3. PAVEMENT - REPLACE MAINLINE PAVEMENT.
   COMPLETE ALL CONCRETE REPAIR WORK ON EXISTING RAMPS.
   REBUILD RAMP SHOULDERS.
   CONSTRUCT GUARD RAIL AND BARRIERS.
4. SIGNING - COMPLETE ALL SIGNING WORK INCLUDING INSTALLATION OF OVERHEAD SIGNS.
5. BRIDGES - REMOVE EXISTING DECKS UNDER STAGE II CONSTRUCTION AND BUILD NEW DECKS AS SHOWN ON STRUCTURAL DRAWINGS UNDER STAGE 2 AND/OR STAGE 3 CONSTRUCTION.

PHASE 2A, 2B AND 2C AT RAMPS

THESE ARE SUB-PHASES TO PHASE 2 AND ARE DETAILED TO PROVIDE ACCESS TO THE WORK AREAS AT RAMPS. PHASE 2A SHALL BE IMPLEMENTED CONCURRENTLY WITH PHASE 2. SEE THE MAINTENANCE OF TRAFFIC PLANS FOR ADDITIONAL DETAILS. PAVEMENT PLANING OF THE RAMP AND CONCRETE PAVEMENT TO REMAIN SHALL BE PERFORMED DURING THE SWITCH FROM PHASE 2A TO PHASE 2B AND WILL REQUIRE A COMPLETE RAMP CLOSURE.

AT THE END OF PHASE 2

PLACE SURFACE COURSE, REPLACE PCB WITH DRUMS, RETURN TRAFFIC TO OUTSIDE LANES, PLACE SURFACE COURSE ON INSIDE LANES, INSTALL PERMANENT PAVEMENT MARKINGS AND OPEN TO TRAFFIC.

MAJOR CONSTRUCTION PHASES (CONTINUED)

PRELIMINARY - SOUTHBOUND

1. CONSTRUCT PAVEMENT SURFACE REPAIRS PRIOR TO IMPLEMENTING TRAFFIC SHIFTS.
2. BEGIN BRIDGE PIER AND ABUTMENT WIDENINGS.

PHASE 1 SB - CONSTRUCT SOUTHBOUND INSIDE LANES

THE MAJOR WORK ITEMS DURING THIS PHASE INCLUDE THE FOLLOWING:

1. DRAINAGE - COMPLETE ALL NEW UNDERDRAINS, AND OUTLETS, ETC. (ITEM NOS. 603, 604 AND 605)
   CONSTRUCT MEDIAN DRAINAGE STRUCTURES
2. LIGHTING - INSTALL CONDUITS UNDER PAVEMENT. INSTALL GUARDRAIL TO PROTECT TOWERS ALONG NB IR-71. INSTALL TOWERS.
   LIGHTING MUST BE OPERATING PRIOR TO IMPLEMENTING PHASE 2 NB
3. SIGNING - COMPLETE ALL FOUNDATION WORK.
4. PAVEMENT - COMPLETE ALL PAVEMENT WORK NEEDED FOR NEW LANE AND NEW MEDIAN SHOULDER, INCLUDING GUARD RAILS OR BARRIER MEDIAN. COMPLETE MEDIAN GRADING, SEEDING AND MULCHING, ETC.
5. BRIDGES - COMPLETE ALL WORK REQUIRED FOR EXTENSION OF PIERS AND ABUTMENTS, REMOVE PART OF EXISTING DECKS AND BUILD NEW DECKS (PART WIDTH) AS SHOWN ON STRUCTURE DRAWINGS UNDER STAGE 1 CONSTRUCTION.

PHASE 2 SB - REPLACE SOUTHBOUND OUTSIDE LANES

THE MAJOR WORK ITEMS DURING THIS PHASE INCLUDE THE FOLLOWING:

1. DRAINAGE - INSTALL UNDERDRAINS AND OUTLETS.
   CONSTRUCT NON-MEDIAN DRAINAGE STRUCTURES
2. LIGHTING - COMPLETE ANY REMAINING LIGHTING WORK
3. PAVEMENT - REPLACE MAINLINE PAVEMENT.
   COMPLETE ALL CONCRETE REPAIR WORK ON EXISTING RAMPS.
   REBUILD RAMP SHOULDERS.
   CONSTRUCT GUARD RAIL AND BARRIERS.
   COMPLETE GRADING
4. SIGNING - COMPLETE ALL SIGNING WORK INCLUDING INSTALLATION OF OVERHEAD SIGNS.
5. BRIDGES - REMOVE EXISTING DECKS UNDER STAGE II CONSTRUCTION AND BUILD NEW DECKS AS SHOWN ON STRUCTURAL DRAWINGS UNDER STAGE 2 AND/OR STAGE 3 CONSTRUCTION.

PHASE 2A , 2B AND 2C AT RAMPS

THESE ARE SUB-PHASES TO PHASE 2 AND ARE DETAILED TO PROVIDE ACCESS TO THE WORK AREAS AT RAMPS. PHASE 2A SHALL BE IMPLEMENTED CONCURRENTLY WITH PHASE 2. SEE THE MAINTENANCE OF TRAFFIC PLANS FOR ADDITIONAL DETAILS. PAVEMENT PLANING OF THE RAMP AND CONCRETE PAVEMENT TO REMAIN SHALL BE PERFORMED DURING THE SWITCH FROM PHASE 2A TO PHASE 2B AND WILL REQUIRE A COMPLETE RAMP CLOSURE.

AT THE END OF PHASE 2

PLACE SURFACE COURSE, REPLACE PCB WITH DRUMS, RETURN TRAFFIC TO OUTSIDE LANES, PLACE SURFACE COURSE ON INSIDE LANES, INSTALL PERMANENT PAVEMENT MARKINGS AND OPEN TO TRAFFIC.

PLOTTED BY: jgrmovse
PLOTTED: 10/07/98
PLOT SUBMITTED: 03-AUG-1998 12:40
307GN05.DGN
307gn05.dgn
307gn05.dgn
Bpid08459
Bpid08459
forsber

GENERAL NOTES

MAINTENANCE OF TRAFFIC

TRUCKS AND EQUIPMENT INGRESS AND EGRESS

OPENINGS IN THE PORTABLE CONCRETE BARRIER MAY BE ALLOWED AT THE ENGINEERS DISCRETION. THESE OPENINGS OR BEGINNING SECTIONS THAT ARE CLOSER THAN 15 FEET TO THE TRAVELED WAY ON FREEWAY MAINLINES MUST BE PROTECTED BY A TEMPORARY IMPACT ATTENUATOR. THE TEMPORARY IMPACT ATTENUATOR MUST MEET THE REQUIREMENTS OF NCHRP (NATIONAL COOPERATIVE HIGHWAY RESEARCH PROGRAM) 350 FOR 100 KPH. WHEN USED THE TEMPORARY IMPACT ATTENUATOR SHALL NOT BE LOCATED ANY CLOSER TO THE TRAFFIC THAN THE NORMAL CONCRETE BARRIER OFFSET, AND PREFERABLY AT LEAST 2 FEET FARTHER AWAY. ALL COSTS FOR THE TEMPORARY IMPACT ATTENUATORS SHALL BE INCLUDED UNDER ITEM 614, MAINTAINING TRAFFIC.

RAMP CLOSURES FOR RESURFACING

THE CONTRACTOR MAY CLOSE ONE RAMP AT A TIME FOR PAVEMENT PLANING, PAVEMENT REPAIRS OR RESURFACING. THE CLOSURES SHALL BE LIMITED TO BETWEEN 10:00 P.M. AND 5:30 A.M.. THE MOTORING PUBLIC SHALL BE GIVEN ADVANCE WARNING OF RAMP CLOSURES AT LEAST 72 HOURS IN ADVANCE THROUGH THE USE OF EITHER A GROUND MOUNTED FLAT SHEET SIGN OR A PORTABLE CHANGEABLE MESSAGE SIGN. AN LEO WITH PATROL CAR (PAID FOR BY THE CONTRACTOR) SHALL BE USED FOR EACH RAMP CLOSURE AND BE PRESENT FOR THE ENTIRE CLOSURE TIME.

FREEWAY ENTRANCE RAMPS SHALL BE CLOSED WITH A PCMS SUGGESTING A RECOMMENDED DETOUR.

FREEWAY EXIT RAMPS SHALL BE CLOSED WITH A PCMS ROUTING TRAFFIC TO THE NEXT EXIT AND A SECOND PCMS INDICATING A U-TURN AT THAT EXIT (UNLESS DIRECTED DIFFERENTLY BY THE ENGINEER).

FOR RAMP CLOSURES ONE OR TWO ADDITIONAL PCMS UNITS WILL BE NEEDED AS DESCRIBED ABOVE. THESE WILL BE IN ADDITION TO THE PCMS UNITS SPECIFIED IN THE PLANS AND SHALL BE PAID FOR BY THE CONTRACTOR.

CONSTRUCTION VEHICLE ACCESS TO WORK AREAS

WARNING SIGNS SHALL BE POSTED WHEN TRUCKS ARE ENTERING OR EXITING THE ROADWAY. NO SIGNIFICANT NUMBER OF CONSTRUCTION VEHICLES SHALL ENTER OR EXIT THE WORK ZONE DURING PEAK HOUR TRAFFIC FLOWS. (NORTHBOUND 6:00 A.M. TO 9:00 A.M. AND SOUTHBOUND 3:00 P.M. TO 7:00 P.M.) WHENEVER A SIGNIFICANT NUMBER OF TRUCKS ARE ACCESSING THE WORK AREA THE CONTRACTOR SHALL IMPLEMENT ONE LANE CLOSURES TO PROVIDE FOR THE SAFE INGRESS AND EGRESS OF HIS VEHICLES. THIS WORK SHALL ONLY BE SCHEDULED WHEN SAFE INGRESS AND EGRESS CONDITIONS CAN BE OBTAINED AND SHALL BE LIMITED TO THE TIMES ALLOWED UNDER THE SHORT TERM CLOSURE TABLE. LANE CLOSURES FOR TRUCKS EXITING THE HIGHWAY MAY BE WAIVED BY THE ENGINEER PROVIDING THAT A DECELERATION AREA LOCATED OUTSIDE THE THRU TRAFFIC LANES IS AVAILABLE FOR THE CONSTRUCTION VEHICLES. ALL COSTS OF SHORT TERM LANE CLOSURES AND/OR MODIFICATIONS TO THE PORTABLE CONCRETE BARRIER SHALL BE INCLUDED UNDER ITEM 614 - MAINTAINING TRAFFIC.

SUSPENSION OF WORK

IF THE CONTRACTOR FAILS TO COMPLY WITH THE PROVISIONS FOR TRAFFIC CONTROL AS SET FORTH IN THESE PLANS OR WITH PROVISIONS OF THE OHIO MANUAL OF UNIFORM TRAFFIC CONTROL DEVICES, THE ENGINEER SHALL SUSPEND WORK UNTIL THE CONTRACTOR COMPLIES WITH THE NECESSARY REQUIREMENTS.

CONSTRUCTION CLEARANCES

EXISTING VERTICAL CLEARANCES SHALL BE MAINTAINED UNDER CUY-71-0100 L&R, 0332 L&R, 0384 L&R, 0395 L&R, 0512 L&R, 0553 L&R EXCEPT FOR SHORT PERIODS WHERE TRAFFIC CONTROL IS APPROVED BY THE ENGINEER AND PROVIDED BY THE CONTRACTOR. THE FULL EXISTING ROADWAY WIDTH SHALL BE MAINTAINED CLEAR AT ALL TIMES, EXCEPT AS PROVIDED FOR ON THE MAINTENANCE OF TRAFFIC PLANS.

TEMPORARY MEDIAN CROSSOVERS

THE CONTRACTOR MAY CONSTRUCT ADDITIONAL MEDIAN CROSSOVERS FOR USE BY HIS FORCES AT LOCATIONS AS APPROVED BY THE ENGINEER. CROSSOVERS CONSTRUCTED FOR USE DURING PHASE 1 NB CONSTRUCTION SHALL REQUIRE A 300 FT LONG DECELERATION LANE WHICH WIDENS THE SHOULDER FROM 4' TO 12'. ANY ADDITIONAL MEDIAN CROSSOVER CONSTRUCTED SHALL INCLUDE A PAVED WEARING SURFACE. FOR ACCESS TO PHASE 1 SB TEMPORARY MEDIAN CROSSOVERS SHALL NOT REQUIRE A DECELERATION OR DECELERATION LANE. (12' SHOULDER WILL BE AVAILABLE.) AT THE COMPLETION OF ALL CONSTRUCTION ALL TEMPORARY MEDIAN CROSSOVERS SHALL BE REMOVED AND THE AREA GRADED AS PER THE CROSS SECTIONS.

ACCESS TO OHIO TURNPIKE CENTERLINE PIER

THE CONSTRUCTION OF THE NEW OHIO TURNPIKE CENTERLINE PIER CANNOT BE COMPLETED UNTIL AFTER THE INSIDE TWO GIRDERS HAVE BEEN REMOVED. DUE TO THIS CONDITION THE TRAFFIC SHIFT AT BR. NO. CUY-71-0395 L&R MAY BE IMPLEMENTED AS EARLY AS MARCH 1. IF THE CONTRACTOR CHOOSES TO DO THIS, ANY ADDITIONAL TEMPORARY PAVEMENT MARKINGS OR TEMPORARY CONCRETE BARRIER SHALL BE PAID FOR SEPARATELY AT THE UNIT COSTS BID FOR THE CORRESPONDING ITEMS.

BRIDGE STAGE CONSTRUCTION

THE CONTRACTOR SHALL REFER TO THE TYPICAL CROSS SECTIONS AND TRANSVERSE SECTIONS IN THE STRUCTURE PLANS FOR DETAILS ON THE STAGE CONSTRUCTION OF EACH BRIDGE.

TRAFFIC CONTROL FOR ASPHALT CONCRETE OPERATIONS (ITEM 446 COURSES)

ALL ASPHALT CONCRETE OPERATIONS SHALL BE CONDUCTED IN A MANNER THAT WILL ASSURE MINIMUM DANGER AND INCONVENIENCE TO THE HIGHWAY USERS. UNLESS WORKING BEHIND PCB, ASPHALT WORK SHALL BE PERFORMED DURING THE TIMES PERMITTED FOR LANE CLOSURES. (SEE NOTE). THE PROCEDURE FOR INSTALLATION OF ANY ASPHALT LAYER SHALL BE SUCH THAT NO DISCONTINUITY IN THE ELEVATION OF THE TRAVELED SURFACE SHALL EXIST AT ANY TIME OTHER OTHER THAN DURING THE PERMITTED WORKING HOURS AND THEN ONLY WHEN SUCH PROPER TRAFFIC CONTROL DEVICES ARE IN PLACE AS WILL PREVENT SUCH A DISCONTINUITY BEING A DANGER TO HIGHWAY USERS.

TRAFFIC MUST BE MAINTAINED AT ALL TIMES IN BOTH DIRECTIONS IN ACCORDANCE WITH THE "SCHEDULE OF THRU LANES TO BE MAINTAINED".

WHENEVER ANY PART OF THE TRAVELED SURFACE IS CLOSED, THE MOTORIST SHALL BE WARNED AND DIVERTED BY THE CONTRACTOR THROUGH THE USE OF A FLASHING ARROW, IN ADDITION TO THOSE PROVISIONS SET FORTH IN THE OHIO MANUAL OF UNIFORM TRAFFIC CONTROL DEVICES FOR STREETS AND HIGHWAYS.

PRIOR TO OPENING THE ROADWAY TO NORMAL TRAFFIC DURING WINTER MONTHS, ALL ASPHALT WORK MUST BE COMPLETED AN EQUAL FULL WIDTH DISTANCE.

TRAFFIC SHALL NOT BE PERMITTED TO CROSS ANY PART-WIDTH RESURFACING JOINTS EXCEPT AS IS NECESSARY DURING THE ACTUAL RESURFACING OPERATION. ANY PART WIDTH RESURFACING JOINTS WHICH MUST BE EXPOSED TO TRAFFIC SHALL BE RAMPED USING ITEM 404 - BITUMINOUS CONCRETE FOR MAINTAINING TRAFFIC, AT A RATE NOT TO EXCEED 1 INCH IN 1 FOOT (LONGITUDINAL JOINTS).

TEMPORARY TRANSVERSE RESURFACING JOINTS WHICH MUST BE EXPOSED TO TRAFFIC SHALL BE RAMPED USING ITEM 404 - BITUMINOUS CONCRETE FOR MAINTAINING TRAFFIC, AT A RATE NOT TO EXCEED 1 INCH IN 4 FEET.

WHENEVER TRAFFIC IS SUBJECTED TO HALF-WIDTH OVERLAYS PRIOR TO COMPLETING THE ASPHALT COURSE, THE CONTRACTOR SHALL PROVIDE OW- 171-48 AND OW-P-171-24 SIGNS (DUAL SIGN INSTALLATION). PLACEMENT SHALL BE AS DIRECTED BY THE ENGINEER AND INCLUDED IN THE LUMP SUM BID FOR ITEM 614-MAINTAINING TRAFFIC.

MAINTENANCE OF I-71 TRAFFIC ON HOLIDAYS AND SPECIAL EVENTS

NO SHORT TERM CLOSURES OR RAMP CLOSURES SHALL BE IMPLEMENTED ON ALL PUBLIC HOLIDAYS OR EVENTS SUCH AS NEW YEAR'S DAY, MARTIN LUTHER KING JR. DAY, GOOD FRIDAY, EASTER SUNDAY, MEMORIAL DAY, INDEPENDENCE DAY, LABOR DAY, COLUMBUS DAY, THANKSGIVING DAY AND CHRISTMAS DAY.

THE PERIOD OF TIME THAT THE LANES ARE TO BE OPEN DEPENDS ON THE DAY OF THE WEEK ON WHICH THE HOLIDAY OR EVENT FALLS. THE FOLLOWING SCHEDULE SHALL BE USED TO DETERMINE THIS PERIOD:

DAYS OF THE WEEK	TIME ALL LANES MUST BE OPEN TO TRAFFIC
SUNDAY	12:00 NOON FRIDAY THROUGH 12:00 NOON MONDAY
MONDAY	12:00 NOON FRIDAY THROUGH 12:00 NOON TUESDAY
TUESDAY	12:00 NOON MONDAY THROUGH 12:00 NOON WEDNESDAY
WEDNESDAY	12:00 NOON TUESDAY THROUGH 12:00 NOON THURSDAY
THURSDAY	12:00 NOON WEDNESDAY THROUGH 12:00 NOON MONDAY
FRIDAY	12:00 NOON THURSDAY THROUGH 12:00 NOON MONDAY
SATURDAY	12:00 NOON FRIDAY THROUGH 12:00 NOON MONDAY

SHOULD THE CONTRACTOR FAIL TO MEET THESE REQUIREMENTS THE CONTRACTOR SHALL BE ASSESSED LIQUIDATED DAMAGES IN ACCORDANCE WITH 108.07 OF THE CONSTRUCTION AND MATERIAL SPECIFICATIONS.

SHORT TERM ONE LANE CLOSURE ON DRAKE ROAD, ALBION ROAD, SPRAGUE ROAD AND U.S. 42 (PEARL ROAD)

IN ORDER TO CONSTRUCT THE CONCRETE SLOPE PROTECTION, PAVED GUTTER AND CONCRETE WALK IN THE AREAS UNDER THE BRIDGES THE CONTRACTOR SHALL BE PERMITTED TO TEMPORARILY CLOSE ONE LANE OF THE PAVEMENT DURING THE TIME CONSTRUCTION IS BEING DONE IN THAT AREA. AT THE END OF EACH WORK DAY ALL LANES MUST BE OPEN TO TRAFFIC.

THE CONTRACTOR MAY ALSO IMPLEMENT A ONE LANE CLOSURE TO FACILITATE REMOVAL OR PLACEMENT OF THE BRIDGE DECKS. (THIS IS OPTIONAL TO TOTALLY CLOSING THE ROAD - SEE DECK REMOVAL NOTE)

THESE CLOSURES SHALL ONLY BE IMPLEMENTED DURING NON-RUSH HOURS AS DETERMINED BY THE ENGINEER

THE CONTRACTOR SHALL MAINTAIN TRAFFIC AT ALL TIMES IN ACCORDANCE WITH THE REQUIREMENTS OF ITEM 614. THE LENGTH OF TWO WAY ALTERNATING TRAFFIC ZONES USING ONE LANE SHALL BE KEPT TO A MINIMUM CONSISTENT WITH THE REQUIREMENTS OF THE WORK.

ALL SIGNS, DRUMS, BARRICADES AND FLAGGERS SHALL BE UTILIZED IN CONFORMANCE WITH THE OHIO MANUAL OF UNIFORM TRAFFIC CONTROL DEVICES FOR STREETS AND HIGHWAYS, CURRENT EDITION, LATEST REVISIONS AND PER STANDARD CONSTRUCTION DRAWINGS MT-95.31, MT-95.32 MT-97.10.

SHORT TERM COMPLETE CLOSURE ON DRAKE ROAD, ALBION ROAD, SPRAGUE ROAD AND U.S. 42 (PEARL ROAD)

TEMPORARY COMPLETE CLOSURES OF THE FOUR CROSS ROADS ARE PERMITTED IN ORDER TO ERECT THE BEAMS NEEDED FOR WIDENING THE I-71 BRIDGES OVER THE FOUR CROSS ROADS. TEMPORARY CLOSURES SHALL BE KEPT TO AN ABSOLUTE MINIMUM TIME. TWO LAW ENFORCEMENT OFFICERS WITH PATROL CARS SHALL BE PRESENT AT EACH CLOSURE. CLOSURES SHALL BE ONLY PERMITTED BETWEEN 9:00 AM AND 3:00 PM OR 12:01 AM AND 5:00 AM. THE AFFECTED CITY POLICE AND FIRE DEPARTMENTS SHALL BE NOTIFIED A MINIMUM OF 48 HOURS IN ADVANCE OF ANY CLOSURES.

CONCRETE DECK REMOVAL ON DRAKE ROAD, ALBION ROAD, SPRAGUE ROAD AND U.S. 42 (PEARL ROAD)

THE CONTRACTOR MAY, WITH THE APPROVAL OF THE ENGINEER AND AFFECTED CITY, CLOSE THE ROAD TO ALL TRAFFIC DURING THE HOURS OF 9:00 PM AND 6:00 AM IN ORDER TO REMOVE THE EXISTING BRIDGE DECK. THE CONTRACTOR SHALL PROVIDE A DETOUR PLAN FOR APPROVAL BY THE ENGINEER AND SHALL PROVIDE, ERECT AND SUBSEQUENTLY REMOVE ALL DETOUR SIGNING AND BARRICADES. THE CONTRACTOR SHALL REFER TO STANDARD DRAWING MT-101.60.

PLOTTED BY: jgrmovse
PLOTTED: 03-AUG-1998 12:42
PLOT SUBMITTED: 03-AUG-1998 12:42
307GN07.DGN

GENERAL NOTES

MAINTAINING TRAFFIC

REPLACEMENT DRUMS

DRUMS FURNISHED BY THE CONTRACTOR IN ACCORDANCE WITH THE REQUIREMENT OF THE PLANS, SPECIFICATIONS AND PROPOSAL WHICH BECOME DAMAGED BY TRAFFIC FOR REASONS BEYOND THE CONTROL OF THE CONTRACTOR SHALL BE REPLACED AS DIRECTED BY THE ENGINEER.

PAYMENT FOR THE REPLACEMENT DRUMS SHALL BE INCLUDED IN THE LUMP SUM BID PRICE FOR ITEM 614 - MAINTAINING TRAFFIC, AND SHALL INCLUDE THE COST OF REMOVING AND DISPOSING OF THE DAMAGED DRUM AND PROVIDING AND MAINTAINING THE REPLACEMENT DRUMS IN ACCORDANCE WITH THE CONTRACT REQUIREMENTS FOR THE ORIGINAL DRUM.

CURE WATER

THE CONTRACTOR IS RESPONSIBLE TO CONTROL ANY WATER THAT FLOWS ONTO THE ROADWAY. DURING TIMES WHEN THE WATER MAY FREEZE. IT IS THE CONTRACTORS RESPONSIBILITY TO MAKE SURE THE ROADWAY DOES NOT BECOME ICY.

NIGHT VESTS

ALL OF THE CONTRACTORS AND SUB CONTRACTORS PERSONNEL WORKING DURING THE HOURS OF DARKNESS SHALL WEAR A 100% SILVER REFLECTIVE SAFETY VEST. THE SAFETY VEST SHALL BE PROVIDED BY THE CONTRACTOR. THE VEST MAY HAVE SEVERAL LIME OR ORANGE STRIPES ON IT.

FLASHING LIGHTS

ALL WORK VEHICLES AND EQUIPMENT THAT ENTER THE WORK ZONE MORE THAN ONCE A DAY MUST BE EQUIPPED WITH AT LEAST ONE FLASHING, ROTATING , OR OSCILLATING AMBER LIGHT THAT IS VISIBLE IN ALL DIRECTIONS OF TRAFFIC FOR AT LEAST ONE QUARTER OF A MILE, DAY OR NIGHT.

GUARDRAIL REPLACEMENT

NO HAZARD SHALL BE LEFT UNPROTECTED EXCEPT FOR THE ACTUAL TIME NECESSARY TO REMOVE, GRADE, AND REINSTALL GUARDRAIL IN A CONTINUOUS OPERATION. THE REMOVAL OF ALL GUARDRAIL SHALL AT ALL TIMES BE AS DIRECTED BY THE ENGINEER. NO GUARDRAIL SHALL BE REMOVED UNTIL THE REPLACEMENT MATERIAL IS ON SITE AND READY FOR INSTALLATION. FAILURE TO COMPLY WITH THIS REQUIREMENT SHALL BE DEEMED SUFFICIENT CAUSE TO ORDER WORK SUSPENDED ON THIS PROJECT UNTIL SUCH TIME THAT THE ENGINEER IS ASSURED OF SAID COMPLIANCE.

PLACING PORTABLE CONCRETE BARRIER

WHEN PLACING OR REMOVING PORTABLE CONCRETE BARRIER THE ADJACENT LANE SHALL BE CLOSED WHEN POSSIBLE.

TEMPORARY CONCRETE BARRIER (PUBLIC SAFETY)

TEMPORARY CONCRETE BARRIER SECTIONS (10 FT. LONG) AS REQUIRED BY THE PUBLIC SAFETY NOTE SHALL BE SUPPLIED BY THE CONTRACTOR. THE CONTRACTOR SHALL BE RESPONSIBLE FOR ALL LOADING, UNLOADING AND TRANSPORTATION OF THE BARRIER.

THE BARRIER SECTIONS SHALL BE BOLTED TOGETHER WITH STEEL CONNECTIONS AS PER STANDARD CONSTRUCTION DRAWING RM-4.2M.

PORTABLE CONCRETE BARRIER

THE BARRIER SECTIONS SHALL BE BOLTED TOGETHER WITH STEEL CONNECTIONS AS PER STANDARD CONSTRUCTION DRAWING RM-4.2M.

IT IS ANTICIPATED THAT THE SAME BARRIER WILL BE USED IN VARIOUS PHASES OF CONSTRUCTION. MOVEMENT OF THE CONCRETE BARRIER BETWEEN PHASES SHALL BE ACCOMPLISHED IN ONE WORKING DAY WHENEVER POSSIBLE.

ALL COSTS FOR FURNISHING, INSTALLING, REINSTALLING AND SUBSEQUENT REMOVING TEMPORARY CONCRETE BARRIER AS DESCRIBED WILL BE PAID FOR IN THE CONTRACT PRICE FOR ITEM 622 - PORTABLE CONCRETE BARRIER.

PROTECTIVE CLOSURES AT BRIDGES

DURING THE CONSTRUCTION OF THE BRIDGE DECKS OR THE APPROACH SLABS TYPE III BARRICADES MUST BE ERECTED AT THE APPROACH ENDS OF THE PCB. DURING NON WORKING HOURS THE BARRICADES MUST EXTEND TOTALLY ACROSS THE ROADWAY AND BERM SO THAT A VEHICLE CAN NOT ENTER THE BRIDGE WORK AREA. THE PURPOSE OF THESE BARRICADES IS TO STOP MOTORIST FROM DRIVING BEHIND THE PCB AND INTO THE BRIDGE WORK AREA.

PORTABLE CONCRETE BARRIER, 32", BRIDGE MOUNTED

THIS ITEM HAS BEEN PROVIDED FOR USE DURING CONSTRUCTION OF THE I-71 BRIDGES OVER DRAKE ROAD, ALBION ROAD, METROPOLITAN PARK BOULEVARD, OHIO TURNPIKE, SPRAGUE ROAD AND U.S. 42. THE CONTRACTOR MAY USE THE SAME BARRIER FOR PHASE I AND PHASE II CONSTRUCTION PROVIDING THE FOLLOWING CONDITIONS ARE MET DURING MOVEMENT:

THE ADJACENT PHASE I LANE IS CLOSED TO TRAFFIC
THE GAP IN THE BRIDGE DECK IS LESS THAN 3 FEET WIDE
THE CLOSED LANE FROM PHASE I WILL NOT RE-OPEN TO TRAFFIC AND
TRAFFIC WILL BE SHIFTED TO PHASE 2 (WITHIN THE ALLOWABLE TIMES).

IF THE ABOVE PROVISIONS CAN NOT BE MET A SEPARATE CONCRETE BARRIER SHALL BE INSTALLED BEFORE REMOVING THE EXISTING BARRIER. FLAGGERS SHALL BE UTILIZED FOR PROTECTION OF VEHICULAR TRAFFIC UNTIL MOVEMENT OF THE BARRIER IS COMPLETE. THE BARRIER SECTIONS (10 FEET LONG) SHALL BE FURNISHED, INSTALLED MAINTAINED, RELOCATED AND REINSTALLED, AND SUBSEQUENTLY REMOVED BY THE CONTRACTOR AT LOCATIONS SHOWN ON THE PLANS. THE CONTRACTOR SHALL BE RESPONSIBLE FOR ALL LOADING, UNLOADING AND TRANSPORTATION OF THE BARRIER. THE BARRIER SECTIONS SHALL BE AS PER PCB-91. THE BARRIER ANCHORS AND BLOCKING SHALL NOT PROTRUDE MORE THAN 1 INCH BEYOND THE TRAFFIC SIDE OF THE BARRIER. ALL COSTS INVOLVED IN REMOVING THE BARRIER AND ANCHORS AND REINSTALLING THE CONCRETE BARRIER BETWEEN PHASES ON THE BRIDGES AND REPAIR OF THE BRIDGE DECKS TO THE SATISFACTION OF THE ENGINEER WILL BE INCLUDED IN THE CONTRACT BID PRICE FOR ITEM 622 - PORTABLE CONCRETE BARRIER, 32", BRIDGE MOUNTED.

TRAFFIC CONTROL MATERIALS

A. SIGNS

SIGN DIMENSIONS AND SPECIFICATIONS, INCLUDING LETTER SIZES, SHALL BE AS PROVIDED IN THE "MANUAL", OR IN SIGN DESIGN DRAWINGS PROVIDED BY THE DEPARTMENT OF TRANSPORTATION. THE SIGNS SHALL BE SUBJECT TO APPROVAL OF THE ENGINEER PRIOR TO THE START OF THE PROJECT.

ALL SIGNS SHALL HAVE A REFLECTORIZED BACKGROUND OF REFLECTIVE MATERIALS AS DESCRIBED IN THE "MANUAL".

B. SIGN SUPPORTS

TEMPORARY SIGN SUPPORTS SHALL BE AS SHOWN ON MT-105.10 AND MT-105.11

C. DRUMS

DRUMS SHALL BE IN ACCORDANCE WITH PERTINENT SECTIONS OF THE OHIO MANUAL OF UNIFORM TRAFFIC CONTROL DEVICES. ALL PERMANENT LANE CLOSURES SHALL BE DELINEATED WITH DRUMS SPACED AT 50 FEET CENTER TO CENTER. ALL COSTS FOR INSTALLING, MAINTAINING AND SUBSEQUENT REMOVAL OF SAID DRUMS SHALL BE INCLUDED IN THE LUMP SUM BID PRICE FOR ITEM 614 - MAINTAINING TRAFFIC.

D. SMALL BARRICADES

TYPE II BARRICADES MAY BE USED INSTEAD OF DRUMS TO CLOSE LANES WHERE REQUIRED FOR RESURFACING. THESE SHALL BE AT LEAST 36" HIGH AND 12" WIDE. NEAR THE TOP OF THE BARRICADE THERE SHALL BE A PANEL WITH ALTERNATE ORANGE AND REFLECTORIZED WHITE 6" WIDE STRIPS. THIS PANEL SHALL BE AT LEAST 12" WIDE AND 24" HIGH. THE BARRICADE SHALL BE OF SUFFICIENT STABILITY SO THAT WIND OR TRAFFIC AIR TURBULENCE WILL NOT UPSET THEM. BARRICADES SHALL BE IN ACCORDANCE WITH PERTINENT SECTIONS OF THE OHIO MANUAL OF UNIFORM TRAFFIC CONTROL DEVICES. BARRICADES SHALL BE USED DURING NIGHT TIME HOURS ONLY.

E. LIGHTING DEVICES

FLASHERS SHALL BE 12 VOLT BATTERY OPERATED MODELS WITH 7 INCH DIAMETER YELLOW LENSES ILLUMINATED BY RAPID INTERMITTENT FLASHES OF SHORT DURATION AND SHALL BE PLACED ON ALL SIGNS AT ALL TIMES.

CONTINUOUS BURN LIGHTS SHALL BE 12 VOLT BATTERY OPERATED MODELS WITH MINIMUM 7 INCH DIAMETER YELLOW LENSES.

F. FLASHING ARROW BARRICADE

WHENEVER ANY PART OF THE TRAVELED SURFACE IS CLOSED. THE MOTORIST SHALL BE WARNED AND DIVERTED BY THE CONTRACTOR THROUGH THE USE OF ONE FLASHING ARROW BARRICADE FOR EACH LANE CLOSED. THE CONTRACTOR SHALL REFER TO STD. DRWG. TC-35.10 AND THE PROVISION SET FORTH IN OHIO MANUAL OF UNIFORM TRAFFIC CONTROL DEVICES FOR STREETS AND HIGHWAYS FOR ALL INFORMATION REGARDING FURNISHING, MAINTAINING. AND USE OF FLASHING ARROW BARRICADES. IF THE FLASHING ARROW BARRICADE IS WITHIN 300 FT OF A RESIDENCE OR ON A SURFACE STREET, A SOLAR POWERED FLASHING ARROW BARRICADE SHALL BE USED. PAYMENT FOR THE ABOVE SHALL BE INCLUDED IN THE LUMP SUM BID FOR ITEM 614 - MAINTAINING TRAFFIC.

PLOTTED BY: jgrmovse
PLOTTED: 03-AUG-1998 12:43
PLOT SUBMITTED: 03-AUG-1998 12:43
307GNOT.DGN
307gn07.dgn

GENERAL NOTES

MAINTAINING TRAFFIC

PUBLIC SAFETY

THE FOLLOWING PROVISIONS "A", "B",AND "C" SHALL APPLY WHEN THE LANE ADJACENT TO THE GUARDRAIL IS OPEN TO TRAFFIC:

THE PERIOD OF TIME THAT A HAZARD IS LEFT UNPROTECTED BY THE REMOVAL OF GUARDRAIL SHALL BE HELD TO AN ABSOLUTE MINIMUM AND IN NO CASE SHALL SUCH A PERIOD BE LONGER THAN ONE WORKING DAY. IF, AFTER ONE DAY, THE ENTIRE RUN OF GUARDRAIL CONSTRUCTION IS NOT COMPLETE THE FOLLOWING SHALL APPLY:

A. IN AREAS WHERE EXISTING GUARDRAIL HAS BEEN REMOVED OR THE GUARDRAIL IS IN A PARTIAL STAGE OF COMPLETION. THE CONTRACTOR SHALL PROVIDE AND MAINTAIN TYPE II BARRICADES WITH TYPE C (STEADY BURNING) WARNING LIGHTS WITHIN THE LIMITS OF THE UNPROTECTED AREA. THE BARRICADES SHALL BE PLACED AT 50' INTERVALS AND OFFSET AT LEAST TWO FEET FROM THE EDGE OF THE TRAVELED ROADWAY AND IN CLOSE PROXIMITY TO THE CONSTRUCTION. THE APPROACH END OF A PARTIALLY COMPLETED RUN OF GUARDRAIL SHALL BE FASTENED AT GROUND LEVEL TO A STEEL DRUM.

B. DURING THE REPAIR OF WINGWALL PARAPETS OR IF THE EXISTING GUARDRAIL IS FOR THE PROTECTION OF AN OBSTACLE (I.E. SIGN SUPPORT, BRIDGE PARAPET, ETC.) THE CONTRACTOR SHALL ERECT PORTABLE CONCRETE BARRIER, AS DETAILED ON THIS SHEET, IN THE DIRECTION OF TRAFFIC. THE REQUIREMENTS OF PARAGRAPH "A" SHALL APPLY TO THE REMAINING GUARDRAIL WITHIN THE RUN. TEMPORARY BARRIER SHALL BE FLARED AT A 17:1 (MINIMUM) TAPER RATE AND SHALL INCLUDE A TEMPORARY END TERMINAL AS PER RM-4.2M.

C. THE REQUIREMENTS STATED IN "A" SHALL APPLY FOR A PERIOD NOT TO EXCEED ONE WEEK. WHERE THE REBUILDING OR CONSTRUCTION OF ANY RUN OF GUARDRAIL CANNOT BE ACCOMPLISHED WITHIN ONE WEEK. THE CONTRACTOR SHALL PROVIDE AND MAINTAIN TEMPORARY CONCRETE BARRIER IN THE INTERIM TIME IT TAKES TO COMPLETE THE WORK (SEE DETAIL ON THIS SHEET). THE APPROACH END OF THE PORTABLE CONCRETE BARRIER SHALL BE FLARED TO THE OUTER EDGE OF THE PAVED SHOULDER AND SHALL INCLUDE A TEMPORARY END TERMINAL AS PER RM-4.2M. IN ADDITION, A TYPE II BARRICADE WITH TYPE B (HIGH INTENSITY FLASHER) WARNING LIGHT SHALL BE PLACED IN FRONT OF THIS INITIAL SECTION OF TEMPORARY BARRIERS TO PROVIDE FOREWARNING TO THE APPROACHING TRAFFIC.

WHEN THE LANE ADJACENT TO THE GUARDRAIL IS CLOSED TO TRAFFIC THE PROVISIONS OF PARAGRAPH "A" ABOVE SHALL APPLY AFTER 1 DAY. THE PROVISIONS OF PARAGRAPH "B" ABOVE SHALL APPLY AFTER 10 DAYS AND THE PROVISIONS OF PARAGRAPH "C" ABOVE SHALL APPLY AFTER 15 DAYS.

THE TERM "GUARDRAIL" AS USED HEREIN SHALL BE UNDERSTOOD TO COVER ALL TYPES OF GUARDRAIL, EXISTING OR PROPOSED FOR THE PROJECT, INCLUDING BARRIER DESIGN GUARDRAIL, BRIDGE WINGWALL PARAPETS. AND CONCRETE BARRIER.

THE COST OF COMPLYING WITH THESE SAFETY PROCEDURES SHALL BE INCLUDED IN THE LUMP SUM BID PRICE FOR ITEM 614 - MAINTAINING TRAFFIC.

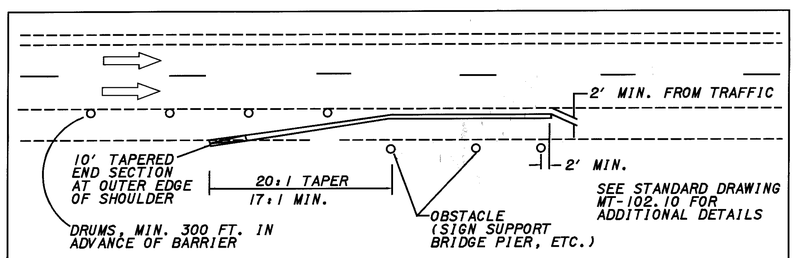

PORTABLE CONCRETE BARRIER AT HAZARDS

SEE PUBLIC SAFETY NOTE FOR REQUIRED USE

MAINTAINING VEHICULAR TRAFFIC

GENERAL PROVISIONS

1. TRAFFIC SHALL BE MAINTAINED IN ACCORDANCE WITH THE "SCHEDULE OF THRU LANES TO BE MAINTAINED" DESCRIBED ON SHEET NO. 22A. THE CONTRACTOR SHALL SET UP AND OPERATE HIS EQUIPMENT IN SUCH A MANNER AS TO MINIMIZE ENCROACHMENT UPON THE TRAVELED WIDTH OF PAVEMENT.

2. THE CONTRACTOR SHALL NOTIFY THE ENGINEER, THE RESPONSIBLE LAW ENFORCEMENT AGENCY AND THE OHIO DEPARTMENT OF TRANSPORTATION, DISTRICT 12 PUBLIC INFORMATION OFFICER ((216) 581-2333, EXT. 244) NOT LESS THAN FORTY-EIGHT (48) HOURS PRIOR TO A SCHEDULED DISRUPTION OF TRAFFIC.

3. DURING OVERHEAD CONSTRUCTION THE CONTRACTOR SHALL PROVIDE, IF DEEMED NECESSARY BY THE ENGINEER, SAFETY NETS AND OR OTHER SAFETY DEVICES UNDER THE STRUCTURES TO PROTECT TRAFFIC IN THE AREA OF CONSTRUCTION.

4. DURING NON-WORKING PERIODS, OPEN EXCAVATIONS SHALL BE DELINEATED WITH WARNING FLASHERS AND/OR OTHER APPROVED DEVICES AS DEEMED APPROPRIATE BY THE ENGINEER.

5. EXISTING SIGNS LOCATED WITHIN THE ROAD WORK AREAS WHICH ARE NECESSARY FOR INTERIM OR PERMANENT TRAFFIC CONTROL SHALL BE REMOVED AND REERECTED IN LOCATIONS AS APPROVED BY THE ENGINEER.

6. THE CONTRACTOR SHALL FURNISH, ERECT AND MAINTAIN ALL NEW WARNING AND INFORMATION SIGNS NECESSARY FOR MAINTAINING TRAFFIC. THE CONTRACTOR SHALL DETERMINE WHAT SIGNS ARE NEEDED AND ADVISE THE ENGINEER TWO (2) WEEKS IN ADVANCE OF HIS DETAILED PLANS. SEE THE TRAFFIC MAINTENANCE DETAILS FOR THE MINIMUM SIGNAGE REQUIRED.

7. TRAFFIC CONTROL DEVICES SHALL BE SET UP PRIOR TO THE START OF CONSTRUCTION, AND SHALL BE PROPERLY MAINTAINED DURING THE TIME SPECIAL CONDITIONS EXIST. THEY SHALL REMAIN IN PLACE ONLY AS LONG AS THEY ARE NEEDED AND SHALL BE IMMEDIATELY

REMOVED THEREAFTER. WHERE OPERATIONS ARE PERFORMED IN STAGES, THERE SHALL BE IN PLACE ONLY THOSE DEVICES THAT APPLY TO THE CONDITION PRESENT DURING STAGE IN PROGRESS. ALL SIGNS WITH MESSAGES WHICH DO NOT APPLY DURING A CERTAIN PERIOD SHALL BE COVERED OR SET ASIDE OUT OF THE VIEW OF TRAFFIC.

8. PLACEMENT OF FINAL ROADWAY PAVEMENT MARKINGS AND RAISED PAVEMENT MARKERS SHALL BE ACCOMPLISHED IN ACCORDANCE WITH THE "SCHEDULE OF THRU LANES TO BE MAINTAINED" DESCRIBED ON SHEET NO. 22A.

THE CONTRACTOR SHALL PROVIDE TWO (2) TRAILING VEHICLES AS PER MT-99.20 FOLLOWING THE PAVEMENT MARKING EQUIPMENT. THE TWO (2) TRAILING VEHICLES SHALL TRAVEL 500 FEET APART WITH THE REMOTE VEHICLE TRAVELING ON THE SHOULDER (LEFT OR RIGHT AS APPLICABLE) WHERE USABLE SHOULDER IS AVAILABLE. THE FIRST TRAIL VEHICLE IN A TRAFFIC LANE SHALL BE EQUIPPED WITH A TRUCK MOUNTED ATTENUATOR MEETING NCHRP 350 REQUIREMENTS. THE INTERMEDIATE TRAILING VEHICLE SHALL TRAVEL IN THE CLOSED LANE 500 FEET BEHIND THE PAVEMENT MARKING EQUIPMENT. THE POLICE CRUISER SHALL TRAVEL 500 TO 1000 FEET BEHIND THE REMOTE TRAILING VEHICLE. EACH TRAILING VEHICLE SHALL HAVE A YELLOW FLASHING BEACON PLUS 48" MIN. ORANGE AND BLACK CONSTUCTION WARNING SIGNS MOUNTED ON THE BACK FACING TRAFFIC WITH STANDARD TYPE MESSAGES ADVISING MOTORISTS OF THE WORK AHEAD, ADVISORY WARNING SPEED AND WHICH LANE IS CLOSED.

9. ANY TIME TRAFFIC MUST BE COMPLETELY STOPPED ON A FREEWAY, OR INTERSTATE IT SHALL BE DONE IN THE FOLLOWING MANNER: (THIS INCLUDES THE ERECTION OF OVERHEAD SUPPORTS.) THE COMPLETE TRAFFIC STOPPAGE ON ALL LANES OF ANY DIRECTIONAL ROADWAY SHALL BE NO MORE THAN 10 MINUTES IN ANY ONE CONSECUTIVE 30 MINUTE PERIOD

A MINIMUM OF TWO (2) LAW ENFORCEMENT OFFICERS (L.E.O.) WITH PATROL VEHICLES SHALL BE USED TO PACE MOTORISTS TO A STOP. THERE SHALL BE ONE L.E.O. FOR EACH LANE ON THE FREEWAY.

AFTER TRAFFIC HAS BEEN SLOWED, ONE (1) PATROL VEHICLE SHALL TRAVEL ALONG THE ROADWAY SHOULDER 500 FEET BEHIND THE BACK UP OF STOPPED VEHICLES. WHERE STOPPAGE OCCURS IN THE VICINITY OF FREEWAY ENTRANCES, THE CONTRACTOR SHALL PLACE FLAGMEN ON THE RAMPS TO STOP TRAFFIC. PATROL VEHICLES SHALL HAVE FLASHING BEACONS.

TO PROVIDED ADEQUATE VISIBILITY TO APPROACHING MOTORIST THE CONTRACTOR SHALL ERECT AND MAINTAIN "ROADWORK AHEAD","PREPARE TO STOP", AND "STOP AHEAD" SIGNS WITH TWO FLASHING TWELVE INCH (12) TRAFFIC SIGNAL HEADS IN ACCORDANCE WITH 632.05. THESE SIGNS SHALL BE ILLUMINATED DURING NIGHT OPERATIONS AND SHALL BE 48 INCH BY 48 INCH SIGNS. PATROL VEHICLES AND SIGNS SHALL BE LOCATED IN ACCORDANCE WITH THE SKETCH BELOW.

STOPPING TRAFFIC SHALL BE DONE WHEN THE GREATEST NUMBER OF LANES IS PERMITTED TO BE CLOSED BY THE PLANS OR BY DISTRICT 12'S PERMITTED LANE CLOSURES REFERENCE MAP. A PORTABLE CHANGEABLE MESSAGE SIGN, TYPE TO BE ON ODOTS PRE- APPROVED LIST, SHALL BE PLACED 1.5 MILES TO 2 MILES IN ADVANCE OF THE CLOSURE OR AS DIRECTED BY THE ENGINEER.

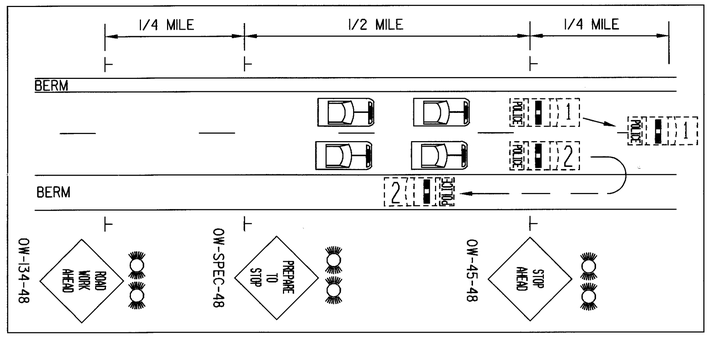

10. A 50 MPH REGULATORY SPEED LIMIT ZONE WILL BE ESTABLISHED FOR THIS PROJECT AS INDICATED ON THE MAINTENANCE OF TRAFFIC SHEETS. THIS WILL REQUIRE NEW TEMPORARY R-10-48 SPEED LIMIT SIGNS TO BE FURNISHED, ERECTED, AND MAINTAINED BY THE CONTRACTOR, PER THE MAINTENANCE OF TRAFFIC PLANS. IN ADDITION, THE EXISTING SPEED LIMIT SIGNS ARE TO BE MODIFIED BY THE CONTRACTOR TO INCLUDE ALUMINUM SIGN OVERLAYS, AND RELOCATION ON TEMPORARY SIGN SUPPORTS.

11. CONTRACTOR SHALL BE REQUIRED TO PROVIDE SUFFICIENT CREWS TO IMPLEMENT ALL OR A SUB-PHASE OF THE TRAFFIC CONTROL IN THE MAINTENANCE OF TRAFFIC PLANS WITHIN THE SAME WORK DAY. THIS WILL PREVENT ANY CONFUSION BETWEEN THE CONSTRUCTION PHASE TRAFFIC PATTERN AND THE EXISTING TRAFFIC PATTERN. THE MAINTENANCE OF TRAFFIC PLANS CAN BE SUB-PHASED BY CONCENTRATING ON ONE DIRECTION OR A LENGTH WITHIN THAT DIRECTION. HOWEVER, IN EACH SUB-PHASE THE MAINTENANCE OF TRAFFIC PLAN SHALL BE COMPLETELY IMPLEMENTED WITHIN THE SAME WORK DAY.

12. FOR ANY OPERATION NOT SPECIFICALLY MENTIONED IN THESE PLANS, THE TRAFFIC SHALL BE MAINTAINED IN ACCORDANCE WITH THE "OHIO MANUAL OF UNIFORM TRAFFIC CONTROL DEVICES".

13. NO STOPPAGE OF TRAFFIC OR ESTABLISHMENT OF PERMANENT LANE SHIFTS SHALL OCCUR WITHOUT LAW ENFORCEMENT PERSONEL AT EACH LOCATION TO DIRECT TRAFFIC.

14. ALL LABOR, MATERIALS, EQUIPMENT AND ANY INCIDENTALS REQUIRED TO COMPLETE THE WORK AS DESCRIBED ABOVE SHALL BE INCLUDED IN THE LUMP SUM BID FOR ITEM 614 - MAINTAINING TRAFFIC.

PLOTTED BY: jgrmovse
PLOTTED in Powersbeforsber Bpid08459Bdgn B307gn07.dgn
PLOT SUBMITTED:03-AUG-1998 12:43
307GN07.DGN

GENERAL NOTES

MAINTENANCE OF TRAFFIC

TEMPORARY TRAFFIC SIGNAL (BOSTON ROAD BRIDGE CONSTRUCTION)

THE CONTRACTOR SHALL MAINTAIN TRAFFIC AT ALL TIMES IN ACCORDANCE WITH THE REQUIREMENTS OF ITEM 614. THE LENGTH OF TWO WAY ALTERNATING TRAFFIC ZONES USING ONE LANE SHALL BE KEPT TO A MINIMUM CONSISTENT WITH THE REQUIREMENTS OF THE WORK.

A SIGNALIZED CLOSING OF ONE LANE OF THE TWO LANE BOSTON ROAD SHALL BE MADE WHEN CONSTRUCTING EACH LANE OF THE CONCRETE DECK OVERLAY.

ALL SIGNS, DRUMS, BARRICADES, TEMPORARY TRAFFIC SIGNALS, SUPPORT POLES, LUMINARIES, WIRING, CONTROLLER, AND MISCELLANEOUS EQUIPMENT SHALL BE UTILIZED IN ACCORDANCE WITH CMS SECTION 614.09, THE OHIO MANUAL OF UNIFORM TRAFFIC CONTROL DEVICES FOR STREETS AND HIGHWAYS CURRENT EDITION, LATEST REVISIONS AND PER STANDARD CONSTRUCTION DRAWINGS MT-96.10, MT-96.20 AND MT-96.25.

PAYMENT FOR THE CONSTRUCTION AND SUBSEQUENT REMOVAL OF THE TEMPORARY TRAFFIC SIGNAL SYSTEM, INCLUDING SIGNALS AT BOTH APPROACHES, SHALL BE INCLUDED IN ITEM 614 - MAINTAINING TRAFFIC.

MAINTENANCE OF TRAFFIC SIGNAL/FLASHER INSTALLATIONS

THE CONTRACTOR SHALL BE RESPONSIBLE FOR MAINTAINING TRAFFIC SIGNAL/FLASHER INSTALLATIONS WITHIN THE PROJECT UNDER THE FOLLOWING CONDITIONS:

A.) EXISTING SIGNAL/FLASHER INSTALLATIONS WHICH THE PLANS REQUIRE THE CONTRACTOR TO ADJUST, MODIFY, ADD ONTO OR REMOVE, OR WHICH THE CONTRACTOR ACTUALLY ADJUSTS, MODIFIES OR OTHER- WISE DISTURBS. THE CONTRACTOR SHALL BE RESPONSIBLE FOR THE ENTIRE INSTALLATION (AT AN INTERSECTION) FROM THE TIME HIS OPERATIONS FIRST DISTURB THE INSTALLATION UNTIL THE INSTALLATION HAS BEEN SUBSEQUENTLY REMOVED OR MODIFIED AND THE WORK IS ACCEPTED.

B.) NEW OR REUSED SIGNAL/FLASHER INSTALLATIONS OR DEVICES, INSTALLED BY THE CONTRACTOR. THE CONTRACTOR SHALL BE RESPONSIBLE FOR MAINTENANCE OF THESE FROM THE TIME OF INSTALLATION UNTIL THE WORK IS ACCEPTED.

THE CONTRACTOR SHALL CORRECT AS QUICKLY AS POSSIBLE ALL OUTAGES OR MALFUNCTIONS. HE SHALL PROVIDE THE CITY OF STRONGSVILLE, CITY OF BRUNSWICK, AND THE ENGINEER SUCH ADDRESSES AND PHONE NUMBERS WHERE HIS MAINTENANCE FORCES CAN BE CONTACTED. THE CONTRACTOR SHALL PROVIDE ONE OR MORE PERSONS TO RECEIVE ALL CALLS AND DISPATCH THE NECESSARY MAINTENANCE FORCES TO CORRECT OUTAGES. SUCH A PERSON OR PERSONS MAY BE USED TO PERFORM OTHER DUTIES AS LONG AS PROMPT ATTENTION IS GIVEN TO THESE CALLS AND A PERSON IS READILY AVAILABLE CONTINUOUSLY 24 HOURS A DAY, 7 DAYS A WEEK. ALL LAMP OUTAGES, CABLE OUTAGES, ELECTRICAL FAILURES, EQUIPMENT MALFUNCTIONS AND MISALIGNED SIGNAL HEADS SHALL BE CORRECTED TO THE SATISFACTION OF THE ENGINEER WITH THE SIGNAL BACK TO SERVICE WITHIN FOUR HOURS AFTER THE CONTRACTOR HAS BEEN NOTIFIED OF THE OUTAGE.

IN THE EVENT NEW SIGNALS ARE DAMAGED PRIOR TO ACCEPTANCE ALL DAMAGED EQUIPMENT EXCEPT POLES AND CONTROL EQUIPMENT SHALL BE REPLACED BY THE CONTRACTOR TO THE SATISFACTION OF THE ENGINEER WITH THE SIGNAL BACK IN SERVICE WITHIN 8 HOURS AFTER THE CONTRACTOR'S NO- TIFICATION OF THE OUTAGE.

IF POLES AND/OR CONTROL EQUIPMENT ARE DAMAGED AND MUST BE REPLACED, THE CONTRACTOR SHALL MAKE TEMPORARY REPAIRS AS NECESSARY TO BRING THE SIGNAL BACK INTO FULL OPERATION WITHIN THE ALLOWED 8-HOUR PERIOD, AND SHALL MAKE PERMANENT REPAIRS OR REPLACEMENT AS SOON THEREAFTER AS POSSIBLE.

NONE OF THE ABOVE SHALL BE CONSTRUED AS COLLECTIVE OR CONSECUTIVE OUTAGE TIME PERIODS AT ANY ONE LOCATION. THAT IS, WHERE MORE THAN ONE OUTAGE OCCURS AT ANY ONE LOCATION, THEN THE ALLOTTED TIME LIMIT SHALL BE FOR WORST SINGLE OUTAGE.

WHERE OUTAGES ARE THE DIRECT RESULT OF A VEHICLE ACCIDENT THE RESPONSE OF THE CONTRACTOR SHALL BE AS OUTLINED ABOVE. THE CONTRACTOR SHALL BE RESPONSIBLE FOR COLLECTION OF ANY COMPENSATION FOR THIS WORK FROM THOSE PARTIES RESPONSIBLE FOR THE DAMAGE.

WHERE THE CONTRACTOR HAS FAILED TO OR CANNOT RESPOND TO AN OUTAGE OR SIGNAL EQUIPMENT MALFUNCTION, AT THESE LOCATIONS WITHIN HIS RESPONSIBILITY, WITHIN PERIODS AS SPECIFIED ABOVE, THE ENGINEER MAY INVOKE THE PROVISIONS OF SECTION 105.15 AND ANY SUBSEQUENT BILLINGS TO THE STATE OR THE CITIES OF STRONGSVILLE OR BRUNSWICK FOR POLICE SERVICES AND MAINTENANCE SERVICES BY CITY FORCES SHALL BE DEDUCTED FROM MONIES DUE OR TO BECOME DUE THE CONTRACTOR IN ACCORDANCE WITH PROVISIONS OF SECTION 105.15.

THE CONTRACTOR SHALL PROVIDE THE MAINTENANCE SERVICE ENTIRELY WITH HIS FORCES OR HE MAY CHOOSE TO ENTER INTO A COOPERATIVE UNDERSTANDING WITH THE LOCAL MAINTAINING AGENCY TO PROVIDE THE MAINTENANCE. THE CONTRACTOR SHALL INFORM THE ENGINEER, IN WRITING, OF THE MAINTENANCE METHOD SELECTED.

THE CONTRACTOR SHALL BE RESPONSIBLE FOR ANY DAMAGE TO ANY TRAFFIC SIGNAL COMPONENTS REQUIRED TO BE HANDLED DURING THE RELOCATION OF POLES AND REVISIONS TO THE SIGNAL SYSTEM.

WHEN A TRAFFIC SIGNAL MUST BE TAKEN OUT OF SERVICE BY THE CONTRACTOR, DUE TO CONSTRUCTION PROCEDURES, THIS OUTAGE SHALL NOT EXCEED 6 HOURS AND SHALL NOT INCLUDE THE HOURS OF 6:00 A.M. TO 9:00 A.M. AND 3:00 P.M. TO 6:00 P.M. ANY SIGNALIZED INTERSECTION, WHERE THE SIGNAL IS OUT OF SERVICE DUE TO CONSTRUCTION PROCEDURES, OR DUE TO AN OUTAGE OR MALFUNCTION OF EQUIPMENT AS DESCRIBED ABOVE, SHALL BE PROTECTED, BY THE CONTRACTOR, BY THE INSTALLATION OF TEMPORARY "STOP" SIGNS, EXCEPT FOR THE FOLLOWING INTERSECTIONS WHICH SHALL BE PROTECTED BY OFF-DUTY CITY OF POLICE, HIRED BY THE CONTRACTOR:

1. BOSTON RD & BENBOW RD.
2. BOSTON RD & CARPENTER RD.

ANY VEHICULAR TRAFFIC SIGNAL HEAD, EITHER NEW OR EXISTING WHICH WILL BE OUT OF OPERATION SHALL BE COVERED IN THE MANNER DESCRIBED IN 632.24.

ITEM 614 - TEMPORARY MARKINGS (INITIAL SHIFTS, RESURFACING OR LANE SHIFT REMOVALS)

TEMPORARY MARKINGS SHALL BE PLACED AT THE LOCATIONS SHOWN IN THE MAINTENANCE OF TRAFFIC PLANS.

AT THE COMPLETION OF PHASE 2 TEMPORARY MARKINGS SHALL BE PLACED AT THE LOCATIONS OF THE PERMANENT PAVEMENT MARKINGS.

ITEM 614 - TEMPORARY PAVEMENT MARKINGS (TRAFFIC SHIFTS)

LANE SHIFTS OR LANE CLOSURES SHALL BE IMPLEMENTED USING 60:1 MAXIMUM TAPER RATES ON MAINLINE PAVEMENT AND DIRECTIONAL ROADWAYS AND 25:1 MAXIMUM TAPER RATES ON RAMPS. (SEE TRAFFIC MAINTENANCE DETAIL SHEETS)

TYPICAL LOCATIONS INCLUDE:

A) LANE CLOSURES
B) LANE SHIFTS
C) ENTRANCE/EXIT RAMP EXTENSIONS ACROSS CLOSED OUTSIDE LANES.

ALL CONFLICTING PAVEMENT MARKINGS (INCLUDING THE LANE LINE ADJACENT TO THE LANE CLOSURE TAPER) SHALL BE REMOVED PRIOR TO PLACING THESE PAVEMENT MARKINGS.

ALL TEMPORARY PAVEMENT MARKINGS WHICH ARE INSTALLED BEYOND THE PROPOSED RESURFACING LIMITS SHALL BE 740.06, TYPE 1. (THIS ALSO INCLUDES RECONSTRUCTED BRIDGE DECKS)

THE ESTIMATED QUANTITIES FOR THIS WORK ARE TABULATED ON SHEET 23.

PERMANENT PAVEMENT MARKINGS

AFTER PLACING THE SURFACE COURSE, THE CONTRACTOR MAY PLACE PERMANENT PAVEMENT MARKINGS AT LOCATIONS SHOWN IN THE TYPICALS AND THE TRAFFIC CONTROL SHEETS INSTEAD OF PLACING TEMPORARY PAVEMENT MARKINGS, WHICH SHALL BE NON-PERFORMED AT THESE LOCATIONS.

PLOTTED BY: fkonopka
PLOTTED: 05-AUG-1998 11:40
PLOT SUBMITTED: 05-AUG-1998 11:40
307GN07.DGN
PLOTTED: fkonopka
PLOTTED: 05-AUG-1998 11:40
PLOT SUBMITTED: 05-AUG-1998 11:40
307GN07.dgn

GENERAL CONSTRUCTION SEQUENCE

THE CONTRACTOR IS REMINDED THAT, IN THE CONDUCT OF THIS PROJECT, HIS SEQUENCE OF OPERATIONS SHALL BE PLANNED AND EXECUTED IN SUCH A WAY AS TO MINIMIZE THE NUMBER OF LANE REDUCTIONS AND/OR LANE WIDTH RESTRICTIONS REQUIRED TO MAINTAIN TRAFFIC THROUGH THE PROJECT.

BOTH SHORT TERM CLOSURES AND LONG TERM TRAFFIC SHIFTS WILL BE UTILIZED TO PERFORM THE WORK. TRAFFIC SHALL BE MAINTAINED IN ACCORDANCE WITH THE "SCHEDULE OF THRU LANES TO BE MAINTAINED" TABLE LOCATED ON THIS SHEET. TWO LANES EACH DIRECTION ARE TO BE MAINTAINED EXCEPT WHEN AN ADDITIONAL LANE MAY BE CLOSED AS LISTED IN THE TABLE BELOW. THE TIME LIMITS SHOWN IN THIS TABLE SHALL BE ADHERED TO OR LIQUIDATED DAMAGES WILL BE ASSESSED (SEE SHEET 22B). NO LONG TERM CLOSURES WILL BE PERMITTED ON THE 2 LANE SECTIONS OF IR-71.

THE CONTRACTOR SHALL HAVE ALL NORMAL LANES OF TRAFFIC OPENED BETWEEN NOVEMBER 15 AND MARCH 15. NO TRAFFIC SHIFTS ON MAINLINE OR RAMPS, SHALL BE ALLOWED DURING THIS TIME. THE CONTRACTOR IS CAUTIONED TO SCHEDULE HIS WORK, ESPECIALLY ASPHALT OVERLAYS, TO MEET THIS REQUIREMENT. SHORT TERM LANE CLOSURES MAY BE PERMITTED BETWEEN NOVEMBER 15 AND MARCH 15, AS APPROVED BY THE PROJECT ENGINEER AND ACCORDING TO THE "SCHEDULE OF THRU LANES TO BE MAINTAINED" DESCRIBED ON THIS SHEET.

THE GENERAL CONSTRUCTION SEQUENCE SHALL BE PERFORMED AS INDICATED IN THE TRAFFIC MAINTENANCE PHASING PLANS BEGINNING ON SHEET NO 26.

THE SCHEDULED DATE FOR COMPLETION OF ALL PHASES REQUIRING TRAFFIC SHIFTS SHALL BE NO LATER THAN OCTOBER 15TH. APPROVED TIME EXTENSIONS DUE TO WEATHER OR OTHER REASONS SHALL EXTEND THE OCTOBER 15TH DATE IN THE YEAR WHICH THEY OCCUR. ANY EXTENSIONS GRANTED DURING THE FIRST YEAR OF THE CONTRACT SHALL NOT EXTEND THE OVERALL COMPLETION DATE UNLESS THOSE TIME EXTENSIONS EXTEND BEYOND NOVEMBER 30TH.

THE TIME BETWEEN DECEMBER 1 AND MARCH 31 IS CONSIDERED WINTER MONTHS AND NO EXTENSIONS WILL BE GRANTED FOR THIS TIME.

CONSTRUCTION PHASING IR-71(2 LANE SECTION)

PRELIMINARY

- -CONSTRUCT TEMPORARY PAVEMENT AT USR 42 RAMP. REPAIR EDGE OF SHOULDER PRIOR TO TRAFFIC SHIFT.

PHASE 1

- -IMPLEMENT PHASE 1 MAINTENANCE OF TRAFFIC ZONE
- -CONSTRUCT PHASE 1 WIDENING ON INSIDE (SEE SHEET 8) ROADWAY, DRAINAGE AND BRIDGE WORK
- -FINAL PAVEMENT MARKINGS

PHASE 1 SHALL BE COMPLETED IN 100 DAYS

PHASE 2

ONCE PHASE 1 IS COMPLETED THE CONTRACTOR SHALL:

- -ESTABLISH A PERMANENT TRAFFIC CONTROL ZONE TO CLOSE THE OUTSIDE LANE(S) AND SHOULDER
- -REPLACE OUTSIDE LANES AND SHOULDER AS SHOWN ON SHEET 8.
- -ROADWAY, DRAINAGE AND BRIDGE WORK
- -IMPLEMENT PHASE 2A AND 2B TO CONSTRUCT RAMP AREAS
- -REMOVE PORTABLE CONCRETE BARRIER, RE-OPEN OUTER 2 LANES IN FINAL POSITION, PLACE OVERLAY ON INSIDE LANES.
- -FINAL PAVEMENT MARKINGS

PHASE 2 SHALL BE COMPLETED IN 85 DAYS

INTERIM COMPLETION DATES

THE NUMBER OF DAYS TO COMPLETE EACH PHASE OF WORK (OR PHASES OF WORK) AS SHOWN ON THIS SHEET ARE CONSIDERED INTERIM COMPLETION DATES AND SUBJECT TO LIQUIDATED DAMAGES (SEE "LIQUIDATED DAMAGES / INTERIM COMPLETION REQUIREMENTS" NOTE ON SHEET 22B).

SCHEDULE OF THRU LANES TO BE MAINTAINED

ROAD	1 LANE REDUCTION			RAMP CLOSED		
	YEAR	SHORT TERM CLOSURE		YEAR	SHORT TERM CLOSURE ⊕	
		WEEKDAYS	WEEKENDS		WEEKDAYS	WEEKENDS
IR-71 S. OF SR 82 (2 LANES)	CONSTRUCTION YEAR 1999	9:00 AM-2:00 PM 7:00 PM-7:00 AM	12:01AM SAT&SUN-11:59AM SAT&SUN	N/A	N/A	N/A
IR-71 N. OF SR 82 (2 LANES)	CONSTRUCTION YEAR 1999	SOUTHBOUND 8:00 PM-7:00 AM NORTHBOUND 7:00 PM-6:00 AM	12:01AM SAT&SUN-11:59AM SAT&SUN	N/A	N/A	N/A
IR-71 N.B. (3 LANES) (BUILT 1999)	CONSTRUCTION YEAR 2000	9:00 AM-3:00 PM 7:00 PM-7:00 AM	7:00 PM FRI.-7:00 AM MON.	N/A	N/A	N/A
IR-71 S.B. S. OF SR 82 (2 LANES)	CONSTRUCTION YEAR 2000	9:00 AM-2:00 PM 7:00 PM-7:00 AM	12:01AM SAT&SUN-11:59AM SAT&SUN	N/A	N/A	N/A
IR-71 S.B. N. OF SR 82 (2 LANES)	CONSTRUCTION YEAR 2000	8:00 PM-7:00 AM	12:01AM SAT&SUN-11:59AM SAT&SUN	N/A	N/A	N/A
SR 82 RAMPS	N/A	N/A	N/A	A, B &E (1999) C, D & F (2000)	10:00 PM-5:30 AM	2:00 AM SAT&SUN-6:00 AM SAT&SUN
TURNPIKE RAMPS	N/A	N/A	N/A	CT & DT (1999) AT & BT (2000)	10:00 PM-5:30 AM	2:00 AM SAT&SUN-6:00 AM SAT&SUN
USR 42 RAMPS	N/A	N/A	N/A	A, B & D (1999) C & D (2000)	10:00 PM-5:30 AM	2:00 AM SAT&SUN-6:00 AM SAT&SUN

⊕ - PERFORM WORK USING FLAGMEN, SHIFTING TRAFFIC ONTO THE SHOULDERS EXCEPT WHEN CLOSING THE RAMP ENTIRELY. RAMPS MAY BE CLOSED A MAXIMUM OF 5 TIMES EACH PER YEAR. SEE "RAMP CLOSURES FOR RESURFACING" GENERAL NOTE.

CONSTRUCTION PHASING

PHASE NO.	IR-71 N.B. (2 LANES)	IR-71 S.B. (2 LANES)
PRELIM. NB	1999	
PHASE 1 NB		
PHASE 2 NB		
PRELIM. SB		2000
PHASE 1 SB		
PHASE 2 SB		

RAMP D (US42 / PEARL ROAD) RECONSTRUCTION

THE CONTRACTOR SHALL SCHEDULE HIS OPERATION TO RECONSTRUCT RAMP D FROM STA. 73+72.65 TO APPROXIMATELY STA. 84+00 PRIOR TO JULY 31, 1999. THE RECONSTRUCTION OF RAMP D SHALL BE STAGED SUCH THAT TWO LANES CAN BE MAINTAINED BETWEEN STA. 73+72 AND STA. 75+50 EXCEPT FOR A PERIOD NOT TO EXCEED 7 DAYS WHEN ONLY ONE LANE SHALL BE OPEN. THE INSTALLATION OF THE NEW SIGNAL SYSTEM SHALL BE COORDINATED WITH THE PAVEMENT WIDENING SUCH THAT IT WILL BE FUNCTIONING WHEN THE RAMP IS OPEN TO THREE LANE TRAFFIC. IF THIS PROVISION CANNOT BE MET THEN THE CONTRACTOR SHALL HAVE UNTIL AUGUST 31, 1999 TO COMPLETE THE SIGNAL SYSTEM. THESE COMPLETION DATES AND CLOSURE LIMITATIONS ARE SUBJECT TO LIQUIDATED DAMAGES (SEE "LIQUIDATED DAMAGES / INTERIM COMPLETION REQUIREMENTS" NOTE ON SHEET 22B.

IF THE NEW SIGNAL SYSTEM IS NOT FUNCTIONING WHEN THE RAMP OPENS TO THREE LANE TRAFFIC THE CONTRACTOR SHALL INSTALL A THIRD HEAD FACING THE RAMP AND CHANGE THE "ARROW" LENSES TO SOLID GREEN LENSES, THE COSTS FOR THESE SIGNAL MODIFICATIONS SHALL BE INCLUDED UNDER ITEM 614 - MAINTAINING TRAFFIC.

PLOTTED BY: jgrmovse
PLOTTED ON: Thursday, August 13, 1998 12:47
PLOT SUBMITTED: 03-AUG-1998 12:47
08459MNG.DGN
FROM: C:\Pwrsb\Bpid08459\Bdgn\B08459mng.dgn

GENERAL NOTES

MAINTAINING TRAFFIC

WORKSITE TRAFFIC SUPERVISOR

THE CONTRACTOR SHALL EMPLOY (OTHER THAN THE SUPERINTENDENT) AND SUBJECT TO THE APPROVAL OF THE ENGINEER A CERTIFIED WORKSITE TRAFFIC SUPERVISOR (WTS). THE WTS MAY BE CERTIFIED FROM ONE OF THE FOLLOWING ORGANIZATIONS 1) AMERICAN TRAFFIC SAFETY SERVICE ASSOCIATION (A.T.S.S.A., PHONE NO. 1-800-272-8772) CERTIFIED WORKSITE TRAFFIC SUPERVISOR (WTS), 2) THE NATIONAL SAFETY COUNCIL, TRAFFIC CONTROL ZONES SUPERVISORS COURSE, PHONE NO. 1-800-441-5103, OR TAKE THE FOLLOWING COURSE BY THE THE NATIONAL HIGHWAY INSTITUTE, DESIGN AND OPERATION OF WORK ZONE TRAFFIC CONTROL PH. NO. 1-(703) 235-0528 .THE WTS POSITION IS ESTABLISHED FOR THE PURPOSE OF MONITORING AND CORRECTING ANY TRAFFIC CONTROL DEFICIENCIES IN THE WORK ZONE. THE WTS SHALL OVERSEE ALL OPERATIONS THAT AFFECT THE MOVEMENT OF VEHICULAR AND PEDESTRIAN TRAFFIC THROUGH THE WORK ZONE.

THE WTS SHALL BE PRESENT WHEN THE CONTRACTOR OR SUBCONTRACTOR INSTALLS A TRAFFIC RESTRICTION, LANE CLOSURE ETC. IN LIEU OF THE WTS BEING PRESENT WHEN A SUBCONTRACTOR HAS A TRAFFIC CONTROL ZONE IN PLACE THE SUBCONTRACTOR MAY USE HIS OWN PERSONNEL THAT IS A CERTIFIED WTS. THE SUBCONTRACTOR MUST PRESENT A COPY OF HIS WTS CERTIFICATE TO THE PROJECT ENGINEER. A WTS MUST BE PRESENT WHEN THE WORK ZONE IS BEING SET UP. HE MUST APPROVE THE WORK ZONE BEFORE HE LEAVES OR PERFORMS OTHER DUTIES.

IF THE RESTRICTIONS ARE SHORT TERM, THE WTS SHALL MONITOR THE ZONE FOR COMPLIANCE. DURING THE LANE CLOSURE HE SHALL MAKE SURE ALL TRAFFIC CONTROL ITEMS ARE FUNCTIONING PROPERLY. TRAFFIC CONTROL WILL BE THE WTS MAIN DUTY DURING IMPLEMENTATION OF ZONES OR SHORT TERM ZONES. THE WTS SHALL HAVE THE AUTHORITY TO HAVE DEFICIENCIES CORRECTED AS SOON AS POSSIBLE. THE WTS SHALL PROVIDE THE PROJECT ENGINEER A SKETCH OF THE (TCP) TRAFFIC CONTROL PLAN EVERY DAY THERE IS TO BE A SHORT TERM TRAFFIC RESTRICTION, LANE CLOSURE ETC. THIS TCP SHALL SHOW HOW THE WORK ZONES ARE TO BE IMPLEMENTED.

DAILY, INCLUDING ONE DAY DURING THE WEEKEND AND HOLIDAYS THE WTS SHALL SPEND A MINIMUM OF ONE HOUR REVIEWING AND MAINTAINING THE WORK ZONE. THESE HOURS MAY BE ADJUSTED BY THE ENGINEER. THE HOURS MAY BE REDUCED DURING THE WINTER CONSTRUCTION SEASON IF DIRECTED BY THE ENGINEER. THE WTS SHALL INSPECT THE WORK ZONE AT THE BEGINNING AND END OF EACH WORK DAY AND ONE TIME PER WEEK DURING THE HOURS OF DARKNESS AND ONCE DURING A WEEKEND.

A RECORD OF EACH DAY'S REVIEW SHALL BE GIVEN TO THE PROJECT ENGINEER THE FOLLOWING WORKDAY, IN WRITING AND SHALL INCLUDE: TRAFFIC CONTROL DEVICE CONDITION, PLACEMENT, VISIBILITY, TRAFFIC FLOW CONDITIONS, INCIDENTS, CONGESTION POINTS, ADEQUACY OF ADVANCED WARNING SIGNS BEYOND THE PROJECT LIMITS, INTERACTION OF WORK VEHICLES WITH TRAFFIC, PROPER STORAGE OF MATERIALS AND EQUIPMENT, ACCIDENTS ETC. THE RECORD OF REVIEW SHALL BE GIVEN TO THE PROJECT ENGINEER DAILY IN WRITING AND SHALL INCLUDE A RECORD OF DEFICIENCIES AND RESOLUTIONS OF THE DEFICIENCIES.

THE WTS SHALL BE AVAILABLE ON A 24-HOUR BASIS TO REPAIR AND/OR REPLACE DAMAGED OR MISSING TRAFFIC CONTROL DEVICES. A 24-HOUR PHONE NUMBER SHALL BE MADE AVAILABLE TO THE PROJECT ENGINEER IN ORDER TO CONTACT THE WTS. THE WTS SHALL HAVE A PAGER AND THE PHONE NUMBER PROVIDED TO THE PROJECT ENGINEER.

FAILURE OF THE CONTRACTOR TO COMPLY WITH ANY OF THE ABOVE ,SHALL CONSTITUTE CAUSE FOR THE PROJECT ENGINEER TO DEDUCT $500.00 PER DAY FROM MONEY DUE THE CONTRACTOR NOT AS A PENALTY BUT AS A LIQUIDATED DAMAGE.

PAYMENT FOR THE WTS SHALL BE INCLUDED UNDER THE LUMP SUM ITEM 614 MAINTAINING TRAFFIC.

LIQUIDATED DAMAGES / INTERIM COMPLETION REQUIREMENTS

THE CONTRACTOR SHALL SCHEDULE HIS OPERATIONS AND INCREASE HIS WORK FORCE AS NECESSARY SO AS TO COMPLETE ALL WORK ITEMS LISTED FOR EACH PHASE FOR THE IDENTIFIED WORK ZONES (SEE "CONSTRUCTION PHASING" NOTES), WITHIN THE TIME LIMITS ALLOCATED.

NON-RUSH HOUR CLOSURES, AS PERMITTED BY THE "SCHEDULE OF THRU LANES TO BE MAINTAINED" TABLE ON SHEET 22A, ARE NOT CONSIDERED WITHIN TIME LIMITS ABOVE. (THOSE CLOSURES ARE DISCUSSED IN THE "LIQUIDATED DAMAGES/SHORT TERM LANE CLOSURES" NOTE).

THE COMPLETION OF A PHASE REQUIRES THAT ALL WORK FOR THAT PHASE IS COMPLETED AND TRAFFIC IS RETURNED TO NORMAL OR THE SUBSEQUENT PHASE IS IMPLEMENTED.

THE TIME LIMIT SHOWN SHALL BEGIN ON THE FIRST DAY THAT THE LANE SHIFTS ARE IMPLEMENTED AND SHALL CONTINUE COUNTING BASED UPON CALENDAR DAYS UNTIL COMPLETION AS DEFINED ABOVE.

LIQUIDATED DAMAGES AS DETERMINED FROM THE TABLE IN SECTION 108.07 OF THE SPECIFICATIONS SHALL BE ASSESSED FOR EACH DAY (OR PORTION THEREOF) FOR WHICH THESE TIME LIMITS ARE NOT MET. IF MORE THAN ONE PHASE OF THIS WORK IS IN VIOLATION OF THE STATED TIME LIMITS THEN LIQUIDATED DAMAGES IN THE AMOUNT NOTED ABOVE SHALL BE ASSESSED FOR EACH PHASE AND WILL BE CUMULATIVE. LIQUIDATED DAMAGES SHALL ALSO BE ASSESSED WHEN A CITY STREET OR RAMP CLOSURE IS VIOLATED.

LIQUIDATED DAMAGES/SHORT TERM LANE CLOSURES

SHORT TERM LANE CLOSURES ARE THOSE WHICH ARE PERMITTED BY THE PLANS ON SHEET 22A. SHORT TERM CLOSURES CAN BE IMPLEMENTED DURING LONG TERM MAINTENANCE OF TRAFFIC PHASES FOR THE TIMES GIVEN.

THESE TIMES SHALL NOT BE REVISED WITHOUT PRIOR APPROVAL FROM THE DISTRICT 12 WORK ZONE TRAFFIC CONTROL ENGINEER.

IF SHORT TERM LANE CLOSURES ARE IN PLACE OUTSIDE THE SPECIFIED TIMES, LIQUIDATED DAMAGES IN THE AMOUNT OF $ 100.00 PER MINUTE SHALL BE ACCESSED THE CONTRACTOR FOR EACH MINUTE THE LANE REMAINS CLOSED.

SHORT TERM LANE CLOSURES SHALL ONLY BE IMPLEMENTED WHEN WORK IS BEING CONTINUOUSLY PERFORMED. THE CLOSURE SHALL BE REMOVED AS SOON AS POSSIBLE AFTER WORK HAS STOPPED.

SPEED LIMIT REDUCTION

A 50 MPH REGULATORY SPEED LIMIT ZONE WILL BE ESTABLISHED FOR THIS PROJECT. SEE "WORK ZONE SPEED LIMIT" NOTE ON SHEET 22D.

ADDITIONAL SIGNAGE

EXTRA ADVANCE WARNING SIGN GROUPS AS PER STANDARD DRAWINGS MT-95.30, MT-96.10, MT-97.10, MT-98.12, MT-98.15, MT-98.16, MT-98.17, MT-98.18 AND MT-102.10 SHALL ALSO BE INSTALLED, PAYMENT THESE SIGNS SHALL BE UNDER ITEM 614 - MAINTAININGTRAFFIC.

"ALL TRUCKS USE LEFT LANES" SIGNS SHALL NOT BE INSTALLED INITIALLY. IF DETERMINED TO BE NEEDED BY THE ENGINEER THEY SHALL BE PAID FOR SEPARATELY AS "ADDITIONAL SIGNS".

MAINTENANCE OF TRAFFIC CONTROL ZONES

THE CONTRACTOR SHALL BE RESPONSIBLE TO MAINTAIN THE SIGNS, DRUMS AND TEMPORARY PAVEMENT MARKINGS AT THE LOCATIONS DETAILED IN THE PLANS OR SPECIFIED IN THE STANDARD DRAWINGS. WHEN THE CONTRACTOR IS NOTIFIED OF DEFICIENCIES HE SHALL CORRECT THE DEFICIENCIES AS SOON AS POSSIBLE, PREFERRABLY WITHIN 12 HOURS AND NO LATER THAN 24 HOURS. IF ANY NOTED DEFICIENCIES ARE NOT CORRECTED WITHIN 24 HOURS THE ENGINEER SHALL DEDUCT ONE DAY PAY FOR ITEM 614 - MAINTAINING TRAFFIC, NOT AS A PENALTY BUT AS LIQUIDATED DAMAGES. THE CONTRACTOR SHALL BE SUBJECT TO THESE LIQUIDATED DAMAGES FOR EACH AND EVERY DAY THAT THESE PROVISIONS ARE NOT MET. ALL COSTS FOR MAINTAINING THE WORK ZONES AS DESCRIBED ABOVE SHALL BE INCLUDED UNDER ITEM 614 - MAINTAINING TRAFFIC.

ADVANCE WARNING SIGNS

		DISTANCE (1)	SIGN	SIZE	DISCRIPTION	
	LEFT LANE CLOSED	500'	OW-60D	48"X48"	WIDTH TRANSITION (SYMBOLIC)	DUAL SIGN INSTALLATION
		1000'	OW-143	24"X24"	45 MPH	
			OW-123 MOD	48"X48"	LEFT LANE CLOSED 1000 FT.	
		2000'	OW-123 MOD	48"X48"	LEFT LANE CLOSED 2000 FT.	
		3000'	OW-134	48"X48"	ROAD WORK AHEAD	
		5200'	OW-134	48"X48"	ROAD WORK AHEAD	
	RIGHT LANE CLOSED	500'	OW-60C	48"X48"	WIDTH TRANSITION (SYMBOLIC)	
		1000'	OW-143	24"X24"	45 MPH	
			OW-122 MOD	48"X48"	RIGHT LANE CLOSED 1000 FT.	
		2000'	OW-122 MOD	48"X48"	RIGHT LANE CLOSED 2000 FT.	
		3000'	OW-134	48"X48"	ROAD WORK AHEAD	
		5200'	OW-134	48"X48"	ROAD WORK AHEAD	
	LEFT 2 LANES CLOSED	500'	OW-60C	48"X48"	WIDTH TRANSITION (SYMBOLIC)	
		1000'	OW-143	24"X24"	45 MPH	
			OW-123 MOD	48"X48"	LEFT 2 LANES CLOSED 1000 FT.	
		2000'	OW-123 MOD	48"X48"	LEFT 2 LANES CLOSED 2000 FT.	
		3000'	OW-134	48"X48"	ROAD WORK AHEAD	
		5200'	OW-134	48"X48"	ROAD WORK AHEAD	
	RIGHT 2 LANES CLOSED	500'	OW-60C	48"X48"	WIDTH TRANSITION (SYMBOLIC)	
		1000'	OW-143	24"X24"	45 MPH	
			OW-122 MOD	48"X48"	RIGHT 2 LANES CLOSED 1000 FT.	
		2000'	OW-122 MOD	48"X48"	RIGHT 2 LANES CLOSED 2000 FT.	
		3000'	OW-134	48"X48"	ROAD WORK AHEAD	
		5200'	OW-134	48"X48"	ROAD WORK AHEAD	
REVERSE FOR LEFT LANE SHIFT	LANE SHIFT (ADVANCE)	500'	OW-5,5A OR 5B	48"X48"	LANE SHIFT (SYMBOLIC)	
			OW-143	24"X24"	45 MPH	
		1000'	OC-53	36"X36"	MAINTAIN PRESENT LANE	
		2000'	OC-49R	48"X48"	RIGHT LANE MUST USE SHOULDER	
			OW-145A	30"X16"	2000 FT.	
		3000'	OC-39AL	48"X48"	ALL TRUCKS LEFT 2 LANES	
	LANE SHIFT (END)	500'	OC-49R	48"X48"	RIGHT LANE MUST USE SHOULDER	SINGLE
		1500' c/c	OC-49R	48"X48"	RIGHT LANE MUST USE SHOULDER	
	LANE SHIFT THRU	0'	OC-6,6A OR 6B	48"X48"	LANE SHIFT (SYMBOLIC)	DUAL
			OW-143	24"X24"	45 MPH	
	EXIT RAMP ACROSS CLSD LANE	GORE	OW-SPEC	48"X48"	EXIT RAMP ⇗	SINGLE INSTALLATION
		500'	OW-SPEC	48"X48"	EXIT RAMP 500 FT.	
		1000'	OW-SPEC	48"X48"	EXIT RAMP 1000 FT.	
	EXIT ONLY LANE	500'	OW-SPEC	48"X48"	RIGHT LANE MUST EXIT	
		1000'	OW-SPEC	48"X48"	RIGHT LANE MUST EXIT	
		2000'	OW-SPEC	48"X48"	RIGHT LANE MUST EXIT	

(1) DISTANCES ARE MEASURED FROM BEGINNING OF LANE CLOSURE, LANE SHIFT OR PAINTED GORE.

PLOT SUBMITTED:03-AUG-1998 12:48
307GN07.DGN
PLOTTED BY: jgrmovse

GENERAL NOTES

MAINTENANCE OF TRAFFIC

TRAFFIC SHIFTS ONTO SHOULDER

THE COMPOSITION OF THE EXISTING SHOULDER IS SUFFICIENT TO WITHSTAND THE 2 FOOT TRAFFIC SHIFT WHICH IS TYPICAL THROUGHOUT THE PHASE 1 CONSTRUCTION. IN AREAS WHERE SIGNIFICANT LONGITUDINAL DISTRESS EXISTS ALONG THE SHOULDER JOINT THIS AREA SHALL BE MILLED AND FILLED PRIOR TO SHIFTING TRAFFIC. THE LOCATIONS SHALL BE AS DIRECTED BY THE ENGINEER AND SHALL TYPICALLY CONSIST OF A STRIP 3 FOOT WIDE AND 1 1/2 INCHES DEEP. THIS STRIP SHALL EXTEND 1 FOOT ONTO THE RIGHT LANE AND 2 FEET ONTO THE SHOULDER. THIS ITEM SHALL ALSO BE USED TO REPAIR THE WEARING SURFACE OF BR. NOS. CUY-71-0332L&R. THE FOLLOWING ESTIMATED QUANTITIES HAVE BEEN INCLUDED TO PERFORM THE WORK AS OUTLINED ABOVE:

ITEM 254 - PAVEMENT PLANING, BITUMINOUS..... 8400 S.Y.
ITEM 407 - TACK COAT ..... 840 GAL
ITEM 446 - ASPHALT CONCRETE SURFACE COURSE,
TYPE 1, PG 64-22 ..... 350 C.Y.

REPAIR OF SHOULDER USED FOR MAINTAINING TRAFFIC

THE FOLLOWING ESTIMATED QUANTITY IS PROVIDED FOR REPAIRING STRUCTURAL FAILURES IN THE SHOULDERS USED FOR MAINTAINING TRAFFIC. IT SHALL ALSO BE USED TO CONSTRUCT A SHOULDER FOR MAINTAINING TRAFFIC WHEN SPECIFIED IN THE PLANS OR IN ADVANCE OF MAINTENANCE OF TRAFFIC SHIFTS IN AREAS AS DIRECTED BY THE ENGINEER. PAYMENT FOR THIS ITEM SHALL INCLUDE ALL COSTS OF EXCAVATION AND TRAFFIC CONTROL. REPAIR LOCATIONS SHALL BE AS DIRECTED BY THE ENGINEER. WHEN USED FOR REPAIRS, THIS ITEM SHALL BE PLACED WITHIN 12 HOURS OF NOTIFICATION BY THE ENGINEER, AT TIMES DIRECTED BY THE ENGINEER.

ITEM 301 - BITUMINOUS AGGREGATE BASE, PG64-22, AS PER PLAN ..... 100 C.Y.

ITEM 630 - SIGNING MISC.: ADDITIONAL SIGNS, GROUND MOUNTED, AS DIRECTED BY THE ENGINEER

WHEN ADDITIONAL SIGNING IS NEEDED TO MAINTAIN TRAFFIC, THE CONTRACTOR SHALL FURNISH THE SIGN OR SIGNS AS DIRECTED BY THE ENGINEER. THESE SIGNS SHALL BE GROUND MOUNTED AND MEET ALL THE SPECIFICATIONS OF THE PLAN, PROPOSAL AND CURRENT YEAR CMS.

PAYMENT FOR THIS ITEM SHALL INCLUDE BUT NOT BE LIMITED TO THE COST TO FURNISH AND ERECT THE SIGN, INCLUDING DRIVE POSTS OR OTHER APPROVED METHODS OF SUPPORT, MAINTAINING THE SIGN AND REMOVAL OF THE SIGN.

THE FOLLOWING QUANTITY SHALL BE CARRIED TO THE GENERAL SUMMARY:

ITEM 630 - SIGNING MISC.: ADDITIONAL SIGNS, GROUND MOUNTED, AS DIRECTED BY THE ENGINEER..... 1000 SQ. FT.

ITEM 614 - TEMPORARY IMPACT ATTENUATOR, AS PER PLAN

THE TEMPORARY IMPACT ATTENUATOR SHALL BE A QUADGUARD CZ UNIT AND MUST MEET THE REQUIREMENTS OF NCHRP (NATIONAL COOPERATIVE HIGHWAY RESEARCH PROGRAM) TEST 350 FOR 100 KPH. THIS ITEM INCLUDES ALL LABOR AND MATERIALS REQUIRED TO FURNISH, INSTALL, REMOVE, MAINTAIN, REPAIR IF HIT AND MOVE TO DIFFERENT LOCATIONS.

FOUR TEMPORARY IMPACT ATTENUATORS WILL BE REQUIRED SIMULTANEOUSLY IN THIS PROJECT. MOVEMENT OF THE UNITS TO ANOTHER LOCATION OR ANOTHER PHASE WILL BE INCLUDED IN THE UNIT BID PRICE FOR THIS ITEM. THESE UNITS ARE TO BE PLACED AT THE LOCATIONS SHOWN IN THE MAINTENANCE OF TRAFFIC DETAIL SHEETS. PAYMENT FOR THIS ITEM DOES NOT INCLUDE THOSE IMPACT ATTENUATORS REQUIRED BY THE "TRUCKS AND EQUIPMENT INGRESS AND EGRESS" NOTE.

THE ANCHORING AND PLACEMENT REQUIREMENTS MUST BE AS PER THE MANUFACTURERS RECOMMENDATIONS.

THE FOLLOWING ESTIMATED QUANTITY HAS BEEN CARRIED TO THE GENERAL SUMMARY:

ITEM 614 - TEMPORARY IMPACT ATTENUATOR, AS PER PLAN .....4 EACH

COVERING OF SIGNS

WHERE DIRECTED BY THE ENGINNER OR WHERE THE PLANS CALL FOR AN OVERHEAD SIGN TO BE COVERED, THE CONTRACTOR SHALL DO SO IN SUCH A MANNER AS TO AVOID DAMAGING THE PERMANENT SIGN WHEN THE COVER IS REMOVED. THE COVER SHALL BE TOTALLY OPAQUE. THE USE OF ADHESIVE TAPE APPLIED DIRECTLY TO A SIGN FACE IS STRICTLY PROHIBITED. THE FOLLOWING CONTINGENCY QUANTITY TO BE USED AS DIRECTED BY THE ENGINEER HAS BEEN INCLUDED IN THE GENERAL SUMMARY

ITEM 630 - SIGN, TEMP. OVERLAY 400 S.F.
ITEM 630 - REMOVAL OF OVERLAY SIGN 400 S.F.

THE REMOVAL OR COVERING OF GROUND MOUNTED SIGNS IS INCLUDED UNDER ITEM 614 - MAINTAINING TRAFFIC

ITEM 614 - BARRIER REFLECTOR, TYPE A
ITEM 614 - BARRIER REFLECTOR, TYPE B
ITEM 614 - OBJECT MARKER

BARRIER REFLECTORS, OBJECT MARKERS AND THEIR MOUNTINGS SHALL CONFORM TO ITEM 626 EXCEPT THAT SPACING OF THE REFLECTORS SHALL BE HALF THE DISTANCE SPECIFIED IN ITEM 626. BARRIER REFLECTORS AND OBJECT MARKERS SHALL BE PLACED ON EXISTING GUARDRAIL AND BRIDGE PARAPETS ADJACENT TO TRAFFIC LANES WHICH HAVE BEEN SHIFTED GREATER THAN 2 FEET FROM THE NORMAL DRIVING LANE. THEY SHALL ALSO BE PLACED ON ALL PORTABLE CONCRETE BARRIERS. REFLECTOR COLOR SHALL MATCH THE COLOR OF THE EDGE LINE. IN ADDITION TO THE QUANTITIES AND LOCATIONS INDICATED ON THE MAINTENANCE OF TRAFFIC DETAIL SHEET THE FOLLOWING ESTIMATED CONTINGENCY QUANTITIES HAVE BEEN INCLUDED IN THE GENERAL SUMMARY TO BE USED AS DIRECTED BY THE ENGINEER, PRIOR TO SHIFTING TRAFFIC:

ITEM 614 - BARRIER REFLECTOR, TYPE A 100 EACH
ITEM 614 - BARRIER REFLECTOR, TYPE B 200 EACH
ITEM 614 - OBJECT MARKER 200 EACH

DUST CONTROL

THE CONTRACTOR SHALL FURNISH AND APPLY WATER AND CALCIUM CHLORIDE FOR DUST CONTROL AS DIRECTED BY THE ENGINEER. THE FOLLOWING CONTINGENCY QUANTITIES HAVE BEEN INCLUDED FOR DUST CONTROL PURPOSES:

ITEM 616 - WATER 1500 M.GAL.
ITEM 616 - CALCIUM CHLORIDE 150 TONS

ITEM 642 - REMOVAL OF PAVEMENT MARKING
ITEM 644 - REMOVAL OF PAVEMENT MARKING

THIS ITEM SHALL BE USED TO REMOVE EXISTING PERMANENT PAVEMENT MARKINGS WHICH ARE IN CONFLICT WITH THE TEMPORARY MARKINGS AS SHOWN ON THE MAINTENANCE OF TRAFFIC PLANS. ITEM 642 QUANTITIES ARE INCLUDED FOR THE REMOVAL OF PAINT PAVEMENT MARKINGS. ITEM 644 QUANTITIES SHALL BE USED WHEN THE EXISTING MARKINGS ARE FOUND TO BE THERMOPLASTIC INSTEAD OF PAINT. IN THOSE AREAS THE 642 REMOVALS SHALL BE NON-PERFORMED. THE FOLLOWING ESTIMATED QUANTITIES HAVE BEEN INCLUDED IN THE GENERAL SUMMARY TO BE USED AS OUTLINED ABOVE:

ITEM 642 - REMOVAL OF PAVEMENT MARKING 80,000 L.F.
ITEM 644 - REMOVAL OF PAVEMENT MARKING 10,000 L.F.

ITEM SPECIAL - REPLACEMENT SIGN

FLAT SHEET SIGNS FURNISHED BY THE CONTRACTOR IN ACCORDANCE WITH THE REQUIREMENT OF THE PLANS, SPECIFICATIONS AND PROPOSAL WHICH BECOME DAMAGED BY TRAFFIC FOR REASONS BEYOND THE CONTROL OF THE CONTRACTOR SHALL BE REPLACED IN KIND WHEN ORDERED BY THE ENGINEER. REPLACEMENT SIGNS SHALL BE NEW. OTHER MATERIALS MAY BE USED BUT MUST BE IN GOOD CONDITION AND SUBJECT TO APPROVAL BY THE ENGINEER.

PAYMENT FOR THE NEW SIGNS SHALL BE MADE AT THE CONTRACT PRICE PER SQUARE FOOT FOR ITEM SPECIAL - REPLACEMENT SIGN AND SHALL INCLUDE THE COST OF REMOVING AND DISPOSING OF THE DAMAGED SIGNS, HARDWARE AND SUPPORTS AND PROVIDING NECESSARY REPLACE- MENT HARDWARE, SUPPORTS, ETC.

AN ESTIMATED QUANTITY OF ITEM SPECIAL - REPLACEMENT SIGN HAS BEEN CARRIED TO THE GENERAL SUMMARY:

ITEM SPECIAL - REPLACEMENT SIGN 1,500 SQ. FT.

DOUBLE THE FINES SIGNS

THE CONTRACTOR SHALL FURNISH , INSTALL, MAINTAIN, COVER WHEN DIRECTED BY THE ENGINEER AND REMOVE R-180-48 SIGNS. THE SIGNS SHALL BE DUAL MOUNTED APPROXIMATELY 500 FT AFTER THE ROAD WORK AHEAD SIGNS. THE SIGNS SHALL BE INSTALLED ON ALL FREEWAYS LEADING INTO THE PROJECT. SIGNS SHALL BE POSTED ON ALL ENTRANCE RAMPS ENTERING THE PROJECT ON THE RIGHT SIDE ONLY. THE SIGNS SHALL BE DUAL MOUNTED EVERY 2 MILES. THE SIGNS MAY HAVE TO BE ADJUSTED WHEN TRAFFIC IS SWITCHED EITHER NORTHBOUND OR SOUTHBOUND. PAYMENT FOR THE ADJUSTMENT OF THE SIGNS WILL BE INCLUDED IN THE PAYMENT FOR EACH SIGN.

THE FOLLOWING QUANTITY HAS BEEN CARRIED TO THE GENERAL SUMMARY.

ITEM 614- DOUBLE FINES IN WORK ZONE SIGN, R-180-48..... 32 EACH

PLOTTED BY: jgrmovse
PLOTTED: 03-AUG-1998 12:48
PLOT SUBMITTED:03-AUG-1998 12:48
307GN07.DGN
PLOTTED FROM: C:\pwworkingbefore\sber\pid08459\dgn\307gn07.dgn

GENERAL NOTES

MAINTAINING TRAFFIC

ITEM 614 - PORTABLE CHANGEABLE MESSAGE SIGN, AS PER PLAN

THE CONTRACTOR SHALL FURNISH, INSTALL, MAINTAIN, AND REMOVE WHEN NO LONGER NEEDED A PORTABLE CHANGEABLE MESSAGE SIGN (S). THE PCMS SHALL BE OF THE TYPE SHOWN ON THE LIST OF APPROVED PCMS MAINTAINED BY THE DIRECTOR. THE PCMS SHALL BE A CLASS I OR II TYPE UNIT.

THE PORTABLE CHANGEABLE MESSAGE SIGN SHALL BE MOUNTED ON A TRAILER. THE LOCATION OF THE PCMS SHALL BE AS DIRECTED BY THE ENGINEER. THE ENGINEER SHALL BE PROVIDED ACCESS TO EACH SIGN UNIT AND SHALL BE PROVIDED WITH APPROPRIATE TRAINING AND OPERATION INSTRUCTIONS.

THE PCMS SHALL CONTAIN A CELLULAR TELEPHONE LINK WHICH WILL ALLOW REMOTE SIGN ACTIVATION, DEACTIVATION, MESSAGE CHANGES, MESSAGE ADDITIONS AND REVISIONS TO TIME OF DAY PROGRAMS. THE SYSTEM SHALL ALSO PERMIT VERIFICATION OF CURRENT AND PROGRAMMED MESSAGES.

THE CONTRACTOR SHALL PROVIDE TO THE ENGINEER THE SOFTWARE NECESSARY TO CONTROL THE PCMS REMOTELY.

THE PCMS SHALL BE EQUIPPED WITH A MYRIAD SAFETY BEAM OR AN APPROVED EQUAL AS DETERMINED BY THE ENGINEER. THE MYRIAD SAFETY BEAM SENDS OUT A SIGNAL THAT ACTIVATES RADAR DETECTORS. THE BEAM IS APPROVED BY THE F.C.C. THE MYRIAD SAFETY BEAM SHALL USE THE SAME POWER SUPPLY AS THE PCMS. THE MYRIAD SAFETY BEAM SHALL BE ABLE TO BE ACTIVATED WITH THE PCMS RUNNING OR NOT. THE MYRIAD SAFETY BEAM IS DISTRIBUTED BY THE TRIPLEX GROUP. INC. P.O. BOX 428. NEW HOPE, PA. 18938. PHONE (215) 862-5077.

AT THE DIRECTION OF THE ENGINEER THE PCMS MAY BE REMOVED FOR PERIODS OR TIMES WHEN NOT IN USE. NO PAYMENT WILL BE MADE FOR THESE TIMES (EX. WINTER MONTHS).

THERE SHALL BE TWO CLASS I OR II CHANGEABLE MESSAGE SIGNS AT 20 MONTHS EACH.

ITEM 614 - PORTABLE CHANGEABLE MESSAGE SIGN,
AS PER PLAN .....40 SIGN-MONTHS

ITEM 614-BITUMINOUS CONCRETE FOR MAINTAINING TRAFFIC, AS PER PLAN

THIS ITEM SHALL BE USED TO REPAIR HOLES IN BRIDGE DECKS, ROADWAY SURFACE AND BERMS. IT SHALL BE THE CONTRACTORS RESPONSIBILITY TO MONITOR THE ROADWAY TO DETERMINE WHEN THE HOLES SHALL BE PATCHED. THE CONTRACTOR MUST NOTIFY THE ENGINEER FOR HIS APPROVAL.

THE CONTRACTOR WILL BE RESPONSIBLE FOR DAMAGES TO MOTORIST VEHICLES IF THE HOLES ARE NOT FILLED IN A REASONABLE AMOUNT OF TIME.

THE CONTRACTOR IS RESPONSIBLE FOR MAINTAINING THE ROADWAY, BRIDGE DECKS AND BERMS (IN THE DIRECTION WORK IS BEING PERFORMED) THE FIRST DAY OF WORK UNTIL CONSTRUCTION IS COMPLETE. THIS INCLUDES PERIODS WHEN WORK IS SUSPENDED.

THE PROCEDURE FOR PATCHING A HOLE IS: REMOVE ALL LOOSE AND DISINTEGRATED ASPHALT OR CONCRETE TO AN EXTENT TO EXPOSE SOUND CONCRETE OR ASPHALT. THE PERIMETER OF ALL REMOVAL AREAS SHALL BE VERTICAL.

CARE SHALL BE TAKEN ON BRIDGE DECKS NOT TO PUNCTURE THE DECK OR DAMAGE THE REINFORCING STEEL. THE CONTRACTOR SHALL TAKE WHAT EVER STEPS NECESSARY TO MAKE THE BRIDGE DECK PASSABLE.

THE SURFACE TO BE PATCHED MUST BE CLEANED AND DRIED.

THE ENTIRE SURFACE SHALL BE TACK COATED, INCLUDING THE VERTICAL FACES.

ASPHALT CONCRETE SHALL BE IN ACCORDANCE TO ITEM 404 OR 402 AS DETERMINED BY THE ENGINEER. IT SHALL BE PLACED IN 2 INCH LIFTS AND COMPACTED TO THE LEVEL OF THE WEARING SURFACE.

ITEM 614-BITUMINOUS CONCRETE FOR MAINTAINING TRAFFIC, AS PER PLAN (CONT.)

DURING WINTER MONTHS ONLY WHEN ASPHALT IS NOT AVAILABLE OR AT THE DIRECTION OF THE ENGINEER COLD MIX MAY BE USED. COMPACTION EQUIPMENT MUST BE APPROVED BY THE ENGINEER.

ALL TRAFFIC CONTROL NEEDED FOR THIS ITEM OF WORK SHALL BE INCLUDED IN THIS ITEM OF WORK.

ITEM 614 - BITUMINOUS CONCRETE FOR MAINTAINING
TRAFFIC, AS PER PLAN . . . . . 100 CU. YD.

ITEM 614 - BITUMINOUS CONCRETE FOR MAINTAINING TRAFFIC

THIS ITEM SHALL BE USED TO PROVIDED TEMPORARY ASPHALTS RAMPS. TEMPORARY ASPHALT RAMPS SHALL BE REMOVED AS PART OF THIS ITEM.

ITEM 614 - BITUMINOUS CONCRETE FOR MAINTAINING
TRAFFIC . . . . . .100 CU. YD.

ITEM 614 - LAW ENFORCEMENT OFFICER WITH PATROL CAR

IN ADDITION TO THE REQUIREMENTS OF 614 AND THE LATEST EDITION OF THE OHIO MANUAL OF UNIFORM TRAFFIC CONTROL DEVICES (OMUTCD), A UNIFORMED LAW ENFORCEMENT OFFICER AND OFFICIAL PATROL CAR WITH WORKING TOP MOUNTED EMERGENCY FLASHING LIGHTS SHALL BE PROVIDED FOR CONTROLLING TRAFFIC FOR THE FOLLOWING TASKS:

A. FOR INITIAL SET-UP AND TEAR DOWN OF LANE SHIFTS, SUBSTANTIAL CHANGES TO A MAINTENANCE OF TRAFFIC SCHEME OR WHEN NEW LANE SHIFT ARRANGEMENTS ARE INITIATED.

B. DURING THE ENTIRE ADVANCE PREPARATION AND CLOSURE SEQUENCE WHERE COMPLETE BLOCKAGE OF TRAFFIC IS REQUIRED.

C. DURING A TRAFFIC SIGNAL INSTALLATION.

D. WHEN DIRECTED BY THE ENGINEER

LAW ENFORCEMENT OFFICERS (L.E.O.'S) SHOULD NOT BE USED WHERE THE OMUTCD INTENDS THAT FLAGGERS BE USED. THE LEO'S ARE CONSIDERED TO BE EMPLOYED BY THE CONTRACTOR AND THE CONTRACTOR SHALL BE RESPONSIBLE FOR THEIR ACTIONS. ALTHOUGH THEY ARE EMPLOYED BY THE CONTRACTOR, THE PROJECT ENGINEER SHALL HAVE CONTROL OVER THEIR PLACEMENT. THE OFFICIAL PATROL CAR SHALL BE A PUBLIC SAFETY VEHICLE AS REQUIRED BY THE OHIO REVISED CODE.

THE CONTRACTOR SHALL MAKE ARRANGEMENTS FOR THESE SERVICES WITH:

A. CITY OF STRONGSVILLE POLICE DEPARTMENT 18688 ROYALTON ROAD STRONGSVILLE, OHIO 44136 (216) 238-1048

B. CITY OF MIDDLEBURG HEIGHTS POLICE DEPARTMENT 15700 EAST BAGLEY ROAD MIDDLEBURG HEIGHTS, OHIO 44130 (216) 234-1234

C. STATE OF OHIO HIGHWAY PATROL TURNPIKE DISTRICT HEADQUARTERS 682 PROSPECT ROAD BEREA, OHIO 44017 (216) 234-2096

THE HOURS PAID SHALL INCLUDE MINIMUM SHOW-UP TIME REQUIRED BY THE LAW ENFORCEMENT AGENCY INVOLVED.

IF THE CONTRACTOR WISHES TO UTILIZE LEO'S FOR FLAGGING AND TRAFFIC CONTROL OTHER THAN FOR THAT REQUIRED IN THESE PLANS, HE MAY DO SO AT HIS OWN EXPENSE.

LAW ENFORCEMENT OFFICERS WITH PATROL CAR REQUIRED BY THE TRAFFIC MAINTENANCE TASKS ABOVE SHALL BE PAID FOR ON A UNIT PRICE (HOURLY) BASIS UNDER ITEM SPECIAL - LAW ENFORCEMENT OFFICER WITH PATROL CAR. THESE HOURS SHALL ALSO BE USED FOR SPEED ENFORCEMENT. THE FOLLOWING ESTIMATED QUANTITIES HAVE BEEN CARRIED TO THE GENERAL SUMMARY:

ITEM 614 - LAW ENFORCEMENT OFFICER WITH PATROL CAR.....2,000 HOURS

ITEM 615 - TEMPORARY PAVEMENT, CLASS A

THE FOLLOWING QUANTITY HAS BEEN CARRIED TO THE GENERAL SUMMARY FOR USE AT THE I-71 NORTHBOUND AND SOUTHBOUND ON-RAMPS AT THE U.S. 42 INTERCHANGE AS SHOWN ON SHEETS 39 AND 40 :

ITEM 615 - TEMPORARY PAVEMENT, CLASS A	1,400 SQ. YD.
ITEM 615 - TEMPORARY ROAD	LUMP

ITEM 614 - WORK ZONE SPEED LIMIT SIGN

THE CONTRACTOR SHALL FURNISH, INSTALL, MAINTAIN, COVER DURING SUSPENSION OF WORK, AND REMOVE WORK ZONE SPEED LIMIT SIGNS AND SUPPORTS (R-10-48) (50 MPH) WITHIN THE WORK LIMITS IN ACCORDANCE WITH THE FOLLOWING REQUIREMENTS.

THE CONTRACTOR SHALL COVER OR REMOVE ANY EXISTING SPEED LIMIT OR MINIMUM SPEED SIGNS WITHIN THE REDUCED SPEED ZONE. THESE SIGNS SHALL BE RESTORED DURING SUSPENSION OR TERMINATION OF THE REDUCED SPEED LIMIT. THE EXPENSE OF COVERING OR REMOVAL AND RESTORATION OF EXISTING SPEED LIMIT OR MINIMUM SPEED SIGNS IS INCIDENTAL TO THE PAY ITEM FOR THE WORK ZONE SPEED LIMIT SIGNS.

THE WORK ZONE SPEED LIMIT SIGNS MAY BE ERECTED AND COVERED PRIOR TO STARTING WORK OR MAY BE ERECTED UNCOVERED NO MORE THAN 4 HOURS BEFORE THE ACTUAL START OF WORK. THE SIGNS SHALL BE REMOVED OR COVERED NO LATER THAN 4 HOURS FOLLOWING RESTORATION OF ALL LANES TO TRAFFIC WITH NO RESTRICTIONS OR SOONER AS DIRECTED BY THE ENGINEER.

THE CONTRACTOR SHALL ERECT A WORK ZONE SPEED LIMIT SIGN IN ADVANCE OF ANY LANE RESTRICTION EXPECTED TO LAST AT LEAST 30 DAYS OR AS DIRECTED BY THE ENGINEER. THE SIGN SHALL BE MOUNTED ON BOTH SIDES OF DIVIDED HIGHWAYS, 500 FEET IN ADVANCE OF THE LANE REDUCTION TAPER. THE SIGN SHALL BE MOUNTED ON THE RIGHT SIDE, 250 FEET IN ADVANCE OF THE LANE REDUCTION TAPER ON UNDIVIDED HIGHWAYS. THE SIGN SHALL BE REPEATED, ON THE SIDE NEAREST TRAFFIC, EVERY 1 MILE FOR 55MPH ZONES AND EVERY 1/2 MILE FOR 50 MPH ZONES. THESE SIGNS SHALL ALSO BE ERECTED IMMEDIATELY AFTER EACH ENTRANCE RAMP WITHIN THE ZONE. A SIGN TO INDICATE THE RESUMPTION OF THE STATUTORY SPEED LIMIT SHALL BE ERECTED AT THE END OF ANY REDUCED SPEED ZONE. THIS SIGN SHALL BE A R-8A.

THE CONTRACTOR MAY USE SIGNS AND SUPPORTS IN USED BUT GOOD CONDITION PROVIDED THE SIGNS MEET CURRENT ODOT SPECIFICATIONS. SIGN FACES SHALL BE REFLECTORIZED WITH TYPE G SHEETING COMPLYING WITH THE REQUIREMENTS OF 730.19 AND U.S. DEPARTMENT OF TRANSPORTATION SUPPLEMENTAL SPECIFICATION FOR TYPE III SHEETING, FP-85. WORK ZONE SPEED LIMIT SIGN SHALL BE MOUNTED ON TWO (2) ITEM 630 - GROUND MOUNTED SUPPORTS, NO. 4 POST IF PROTECTED, ELSE ITEM 630 - GROUND MOUNTED SUPPORTS, NO. 3 POST.

WORK ZONE SPEED LIMIT SIGN AND SUPPORTS WILL BE MEASURED AS THE NUMBER OF SIGN INSTALLATIONS, INCLUDING THE SIGN AND NECESSARY SUPPORTS. IF A SIGN AND SUPPORT COMBINATION IS REMOVED AND REERECTED AT ANOTHER LOCATION WITHIN THE PROJECT DUE TO CHANGES IN THE SPEED ZONE DIRECTED BY THE ENGINEER, IT SHALL BE CONSIDERED ANOTHER UNIT.

PAYMENT FOR ACCEPTED QUANTITIES, COMPLETE, IN PLACE WILL BE MADE AT THE CONTRACT UNIT PRICE. PAYMENT SHALL BE FULL COMPENSATION FOR ALL MATERIALS, LABOR, INCIDENTALS AND EQUIPMENT FOR FURNISHING, ERECTION, MAINTENANCE, COVERING DURING SUSPENSION OF WORK, AND REMOVAL OF THE SIGNS AND SUPPORTS.

THE FOLLOWING ESTIMATED QUANTITY HAS BEEN INCLUDED IN THE GENERAL SUMMARY TO BE USED AS OUTLINED ABOVE:

ITEM 614 - WORK ZONE SPEED LIMIT SIGN . . . . . 54 EACH

PLOTTED BY:jgrmovse
PLOTTED:FROM:Betorsber Bpid08459Bdgn307gn07.dgn
PLOT SUBMITTED:03-AUG-1998 12:49
307GN07.DGN

GENERAL NOTES

MAINTAINING TRAFFIC

MAINTENANCE OF TRAFFIC ON THE OHIO TURNPIKE

A. DESCRIPTION

ALL APPLICABLE PROVISIONS OF ITEM 614 AS SET FORTH IN THE SPECIFICATIONS SHALL APPLY AND THE FOLLOWING SHALL BE CONSIDERED AS SUPPLEMENTAL TO THE PROVISIONS SET FORTH THEREIN.

TEMPORARY LANE CLOSURE: TO PROVIDE FOR THE MAINTENANCE OF TRAFFIC WHILE THE CONTRACTOR IS PERFORMING WORK OVER OR ADJACENT TO THE TURNPIKE TRAVELED LANES OR PAVED SHOULDER, THE OHIO TURNPIKE COMMISSION (OTC) WILL PERMIT THE PERIODIC CLOSURE OF ONE DIRECTIONAL LANE OF TRAFFIC DURING DAYLIGHT HOURS ON THE EASTBOUND AND/OR WESTBOUND ROADWAY. THE LANE CLOSURES WILL BE REQUIRED FOR SUCH CONTRACT ITEMS AS CONSTRUCTION OF TEMPORARY PROTECTIVE FALSEWORK; SAWCUTTING AND REMOVAL OF THE BRIDGE DECKS AND PARAPETS; DECK AND PARAPET POURS; INSTALLATION OF FENCE POSTS, RAILS AND FABRIC; INSTALLATION OF CONCRETE BARRIER PIER PROTECTION; REMOVAL OF TEMPORARY FALSEWORK AND FORMS; AND BRIDGE PAINTING.

ANY WORK THAT AFFECTS TRAFFIC ON THE TURNPIKE SHALL BE COORDINATED WITH AND APPROVED IN ADVANCE BY THE CHIEF ENGINEER OF THE OHIO TURNPIKE COMMISSION (440-234-2081). ALL NECESSARY TRAFFIC CONTROL SIGNS REQUIRED TO MAINTAIN TRAFFIC ON THE TURNPIKE WILL BE FURNISHED AND INSTALLED BY THE OTC AT NO COST TO THE CONTRACTOR. THE CONTRACTOR IS TO FURNISH ALL OTHER TRAFFIC CONTROL DEVICES, CONES, ETC. TEMPORARY TRAFFIC CONES SHALL BE NEW AS SHOWN ON OTC STANDARD DRAWING TCR-2. ANYTIME WORKERS OR EQUIPMENT OCCUPY THE CLOSED LANE OR PAVED SHOULDER, OR WHEN WORK IS BEING PERFORMED OVER A CLOSED LANE OR SHOULDER, FLAGPERSONS FURNISHED BY THE CONTRACTOR WILL BE REQUIRED.

FULL ROADWAY CLOSURE: THE ENTIRE EASTBOUND OR WESTBOUND DIRECTIONAL ROADWAY MAY BE CLOSED FOR SHORT DURATION FOR THE REMOVAL OF EXISTING STRUCTURAL STEEL BEAMS AND ALSO FOR THE ERECTION OF THE NEW STRUCTURAL STEEL BEAMS FOR THE I-71 BRIDGES. THE CLOSURES ARE SUBJECT TO THE FOLLOWING CONTROLS:

1. FULL CLOSURES MUST BE MADE BETWEEN 12:00 MIDNIGHT AND 5:00 AM.
2. THE DURATION OF THE CLOSURE SHALL NOT EXCEED 10 MINUTES IN LENGTH.
3. ALL LANES OF TRAFFIC SHALL BE AVAILABLE TO TRAFFIC UPON COMPLETION OF THE FULL LANE CLOSURE.
4. REQUESTS FOR FULL LANE CLOSURES MUST BE TO THE CHIEF ENGINEER A MINIMUM OF FORTY-EIGHT (48) HOURS IN ADVANCE.

ALL TRAFFIC CONTROL, INCLUDING OSHP PATROL VEHICLES, WILL BE PROVIDED BY THE OTC AT NO COST TO THE CONTRACTOR.

SHOULDER CLOSURES: TEMPORARY CONCRETE BARRIERS, ON THE TURNPIKE SHOULDERS, UNDER THE I-71 STRUCTURES, ARE TO BE FURNISHED AND PLACED BY THE CONTRACTOR IN ACCORDANCE WITH OTC STANDARD DRAWING "SC-1".

CONSTRUCTION ZONE VEHICLE: THE CONTRACTOR SHALL PROVIDE, DURING WORKING HOURS, A PICK-UP TRUCK (OR SIMILAR TRUCK TYPE VEHICLE) MOUNTED WITH AMBER FLASHING DOME LIGHT(S), WHICH SHALL BE USED FOR THE MAINTENANCE OF TRAFFIC ON THE TURNPIKE. THE TRAFFIC CONTROL ZONE VEHICLE SHALL BE MANNED BY PERSONS OTHER THAN THE SUPERINTENDENT. THE DESIGNATED ZONE PERSON SHALL HAVE A FULL WORKING KNOWLEDGE OF THE MAINTENANCE OF TRAFFIC PLANS AND IS TO SUPERVISE THE CORRECT SET-UP OF THE MAINTENANCE OF TRAFFIC ZONE, REMOVAL OF THE ZONE AND CONTINUALLY MONITOR THE ZONE TO INSURE THAT IT IS IN ACCORDANCE WITH TURNPIKE STANDARDS.

THE OTC WILL FURNISH, INSTALL AND MAINTAIN A COMMISSION RADIO IN THE CONTRACTOR'S ZONE VEHICLE. THIS VEHICLE SHALL BE AT ALL TIMES IN THE IMMEDIATE VICINITY OF THE WORK PROJECT WITH THE RADIO TURNED ON. IT IS THE RESPONSIBILITY OF THE ZONE PERSON TO INFORM THE COMMISSION WHEN A ZONE IS SET-UP OR REMOVED ON THE TURNPIKE. THE ZONE PERSON SHALL ALSO NOTIFY THE COMMISSION OF ANY TRAFFIC PROBLEMS WITHIN OR ADJACENT TO THE ZONE. THE CONTRACTOR WILL BE RESPONSIBLE FOR RETURNING THE RADIO TO THE COMMISSION IN GOOD WORKING ORDER AT THE COMPLETION OF THE CONTRACT.

ACCESS AND RESTRICTIONS TO THE OHIO TURNPIKE

THE CONTRACTOR WILL BE PROVIDED ACCESS AND USE OF THE TURNPIKE ROADWAYS DURING THE PROGRESS OF THE WORK UNDER THIS CONTRACT AS FOLLOWS:

A. ALL FOUR LANES OF TRAFFIC WILL BE MAINTAINED ON THE TURNPIKE ROADWAYS, EXCEPT AS NOTED IN THE FOLLOWING PARAGRAPH.

B. THE COMMISSION WILL PERMIT THE PERIODIC CLOSURE OF ONE DIRECTIONAL LANE ON THE WESTBOUND AND/OR EASTBOUND ROADWAYS FOR THE CONTRACTOR'S USE. THE CHIEF ENGINEER MAY RESTRICT THE CONTRACTOR'S ACTIVITIES AND/OR REQUIRE BOTH ROADWAYS BE OPEN TO TRAFFIC IF WEATHER OR TRAFFIC CONDITIONS SHOULD SO DICTATE. DELAYS CAUSED BY THESE RESTRICTIONS AND/OR SUSPENSIONS ARE NOT SUBJECT TO "CLAIM" AGAINST THE COMMISSION. THE COMMISSION IS TO BE NOTIFIED AT LEAST FORTY- EIGHT (48) HOURS IN ADVANCE OF ANY REQUESTED USE OF THE ROADWAYS.

LANE CLOSURES ARE TO BE LIMITED TO DAYLIGHT HOURS ONLY. THE CONTRACTOR SHALL TAKE EXTREME CARE NOT TO DAMAGE THE TURNPIKE ROADWAYS DURING THESE PERIODS. THE DURATION AND FREQUENCY OF THE PERIODS WILL BE STRICTLY CONTROLLED BY THE COMMISSION AND WILL BE SUBJECT TO SUCH RESTRICTIONS AS THE COMMISSION MAY DETERMINE TO BE NECESSARY TO AVOID UNDUE INCONVENIENCE OR HAZARD TO TURNPIKE TRAVELERS.

NO LANE CLOSURES WILL BE PERMITTED ON THE OHIO TURNPIKE DURING THE FOLLOWING PERIODS:

ALL WEEKENDS	BEGINNING AT NOON ON FRIDAY, THRU SUNRISE MONDAY, UNLESS OTHERWISE APPROVED BY THE CHIEF ENGINEER.
EASTER	BEGINNING AT SUNSET ON THE THURSDAY BEFORE EASTER THRU SUNRISE THE TUESDAY AFTER EASTER.
MEMORIAL DAY	BEGINNING AT SUNSET ON THE THURSDAY BEFORE MEMORIAL DAY THRU SUNRISE THE WEDNESDAY AFTER MEMORIAL DAY.
INDEPENDENCE DAY HOLIDAY	BEGINNING AT SUNSET TWO (2) DAYS BEFORE INDEPENDENCE DAY THRU SUNRISE THE SECOND DAY FOLLOWING INDEPENDENCE DAY.
LABOR DAY HOLIDAY	BEGINNING AT SUNSET ON THE THURSDAY BEFORE LABOR DAY THRU SUNRISE THE WEDNESDAY AFTER LABOR DAY.
THANKSGIVING	BEGINNING AT SUNSET ON THE TUESDAY BEFORE THANKSGIVING DAY THRU SUNRISE DAY HOLIDAY ON THE MONDAY AFTER THANKSGIVING DAY.

C. ALL CROSSOVER MOVEMENTS SHALL BE IN STRICT ACCORDANCE WITH THE REQUIREMENTS CONTAINED IN "STANDARD PROCEDURES FOR MAINTENANCE AND CONTRACTOR'S OPERATIONS UNDER TRAFFIC ON THE OHIO TURNPIKE", REVISED JULY, 1994. INTERRUPTING THE FLOW OF TURNPIKE TRAFFIC WILL NOT BE PERMITTED. THE CONTRACTOR WILL BE PERMITTED TO USE THE EXISTING CROSSOVERS, ON A LIMITED BASIS, AND ONLY AT LOCATIONS APPROVED BY THE CHIEF ENGINEER. WEATHER AND/OR UNFORSEEN CIRCUMSTANCES MAY OCCUR MAKING IT NECESSARY TO RESTRICT CROSSOVER TRAFFIC AS DEEMED NECESSARY BY THE CHIEF ENGINEER.

D. PRIVATE AUTOMOBILES OF WORKERS WILL NOT BE PERMITTED ON THE OHIO TURNPIKE.

PLOTTED BY: jgrmovse
PLOTTED: 03-AUG-1998 12:50
PLOT SUBMITTED: 03-AUG-1998 12:50
307GN05A.DGN
307gn05a.dgn

GENERAL NOTES

PAYMENT FOR ALL WORK ON THIS SHEET TO BE INCLUDED IN THE LUMP SUM BID FOR ITEM 614 - MAINTAINING TRAFFIC

CUY-71-0.00	OHIO FHWA REGION 5 FEDERAL PROJECT	22F 361

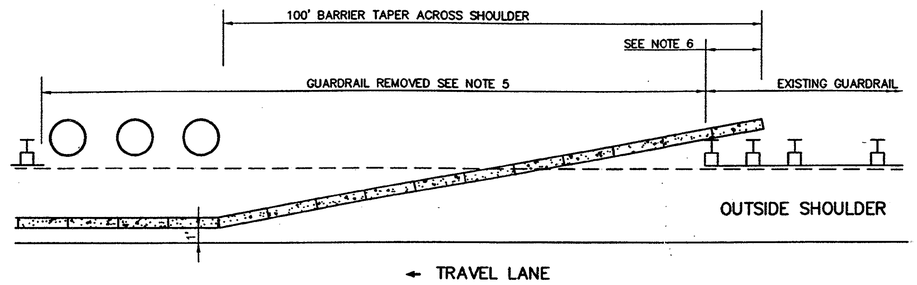

TURNPIKE MAINLINE PLAN NOTES

1. ACCESS (INGRESS AND EGRESS) TO THE MEDIAN PIER AREA SHALL BE ALONG THE MEDIAN AND SHOULDER.
2. CROSSING BACK AND FORTH ACROSS ACTIVE TURNPIKE LANE(S) FOR WORKERS, VEHICLES, EQUIPMENT AND SUPPLIES WILL NOT BE PERMITTED.
3. FOR PARTIAL CLOSURE, SEE GENERAL NOTES – MAINTAINING TRAFFIC ON THE OHIO TURNPIKE
4. FOR FULL CLOSURE OF DIRECTIONAL ROADWAY, SEE GENERAL NOTES – MAINTAINING TRAFFIC ON THE OHIO TURNPIKE
5. REMOVE GUARDRAIL PANELS FROM PIER PROTECTION LOCATION TO LEADING EDGE OF BARRIER LOCATION, ITEM 202. PLACE APPROACH END OF BARRIER BEHIND REMAINING EXISTING GUARDRAIL. INSTALL TYPE T ANCHOR ASSEMBLY, AS PER PLAN.
6. ITEM 606, EACH ANCHOR ASSEMBLY, TYPE T, AS PER PLAN SHALL INCLUDE ALL COSTS ASSOCIATED WITH FURNISHING, INSTALLING, MAINTAINING, AND SUBSEQUENTLY THE REMOVAL OF THE ANCHOR ASSEMBLY.
7. EXISTING SPEED LIMITS SIGNS WITHIN THE LIMITS OF SIGNS SHALL HAVE BLANK OVERLAYS INSTALLED.
8. LENGTH OF MEDIAN BARRIER MUST EXTEND TO LIMITS OF CONTRACTOR EQUIPMENT PLACEMENT FOR MEDIAN CONSTRUCTION WORK.
9. SIGNS FURNISHED BY OHIO TURNPIKE COMMISSION (*)

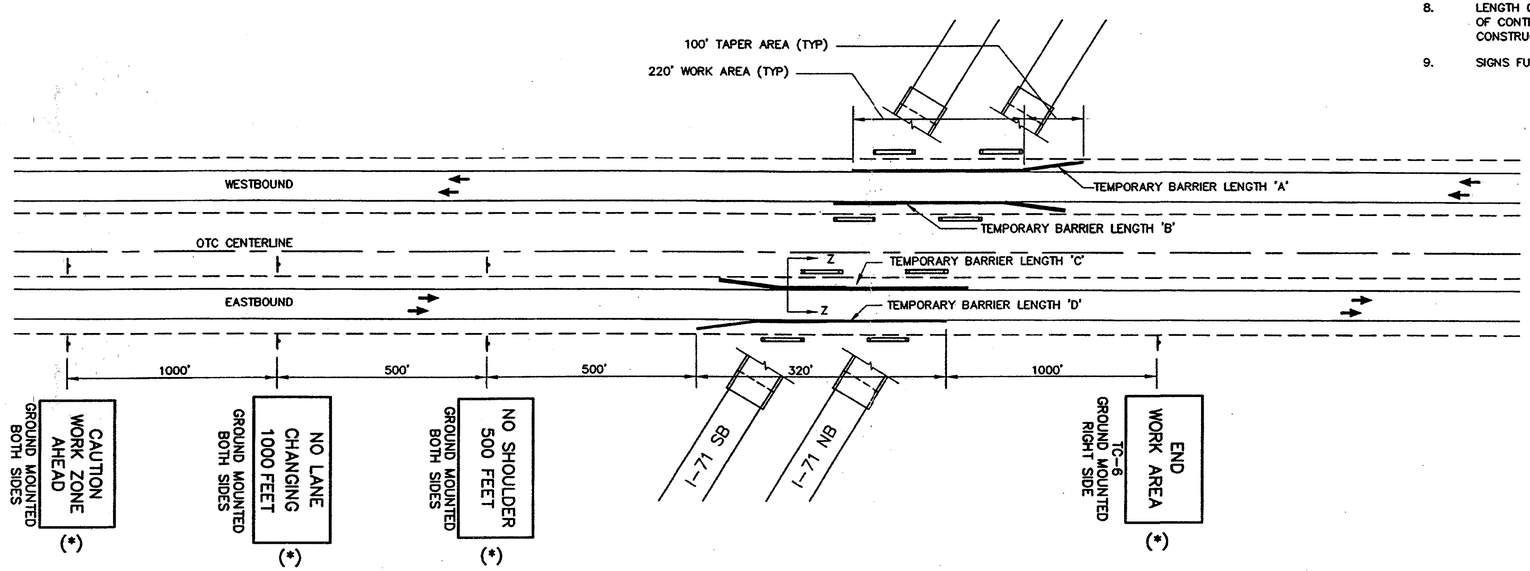

LOCATION			A	B	C	D	TOTAL
ITEM SP 622	TEMPORARY CONCRETE BARRIER	FEET	320	320	320	320	0.24 MI
ITEM 202	GUARDRAIL REMOVED FOR REUSE	FEET	150	150	150	150	600
ITEM SP 606	GUARDRAIL REBUILT, TYPE 5	FEET	150	150	150	150	600
ITEM 606	ANCHOR ASSEMBLY, TYPE T, AS PER PLAN	EACH	1	1	1	1	4

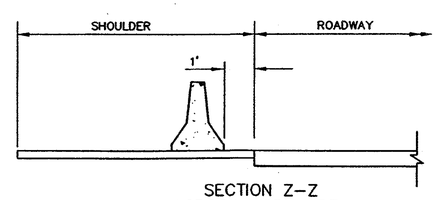

SECTION Z–Z
ACROSS WORK AREA

NO.	REVISION	BY	DATE

OHIO TURNPIKE COMMISSION

TEMPORARY CONCRETE BARRIER PLACEMENT ALONG MAINLINE SHOULDER SC–1

DATE: JUNE 1998 | SCALE: N.T.S.
CONTRACT: | SHEET OF

DESIGNED BY: DCD | CHECKED BY: EJW
DATE: JUNE 1998 | DATE: JUNE 1998
DRAWN BY: JJS | REVISED BY:
DATE: JUNE 1998 | DATE:
CAD FILE NAME: K:\72616\0-71-25-1

PLOTTED BY: fkonopka
PLOTTED: FROM: rsberber
PLOT SUBMITTED: 05-AUG-1998 12:22
307GN11.DGN

GENERAL NOTES

PAYMENT FOR ALL WORK ON THIS SHEET TO BE INCLUDED IN THE LUMP SUM BID FOR ITEM 614 - MAINTAINING TRAFFIC

TRAFFIC CONTROL DRAWINGS – LEGEND AND DETAILS

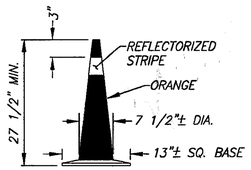

TRAFFIC CONE:

TRAFFIC CONES SHALL BE THE SLIMLINE OR TRIMLINE STYLE WITH THE BODY OF THE TRAFFIC CONE CONSTRUCTED OF POLYVINYL CHLORIDE MATERIAL. THE BASE OF THE TRAFFIC CONE SHALL BE CONSTRUCTED OF POLYVINYL CHLORIDE OR MOLDED RUBBER MATERIAL. THE CONE SHALL BE HOLLOW. THE NET WEIGHT OF THE CONE SHALL NOT BE LESS THAN 5 1/2 POUNDS.

THE EXTERIOR OF THE CONE SHALL BE HIGH VISIBILITY, FADE RESISTANT, IMPREGNATED FLUORESCENT ORANGE. THE GUIDE SHALL HAVE ONE HIGHLY REFLECTIVE WHITE OR SILVER STRIPE ENCIRCLING THE CONE AND BE NOT LESS THAN 4" IN WIDTH. THE STRIPE SHALL BE PERMANENTLY APPLIED SO THAT THE TOP EDGE IS APPROXIMATELY 3" FROM THE CONE APEX.

EACH CONE IS TO HAVE A SLIP-OVER COLLAR BASE. THE SLIP-OVER COLLAR BASE SHALL BE BLACK IN COLOR AND SHALL BE CONSTRUCTED OF A RUBBER MATERIAL AND SHALL WEIGH NOT LESS THAN 5 POUNDS. THE SLIP-OVER COLLAR BASE SHALL BE FULLY COMPATIBLE WITH THE PHYSICAL PROPERTIES OF THE CONE.

A ONE-PIECE TRAFFIC CONE MEETING THE ABOVE MATERIAL REQUIREMENTS AND HAVING A NET WEIGHT OF APPROXIMATELY 10 1/2 POUNDS, WITH THE WEIGHT DISTRIBUTED TO ENSURE MAXIMUM STABILITY, MAY BE USED.

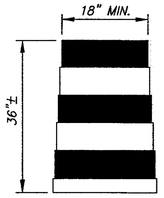

TRAFFIC DRUM:

THE TRAFFIC DRUM SHALL BE A TWO PIECE, BREAKAWAY STYLE, DESIGNED THAT DAMAGE AFTER IMPACT WILL BE MINIMAL THROUGH A TEMPERATURE OF -15F TO +125F. THE DRUM SHALL BE CONSTRUCTED OF NOT LESS THAN 1/8 INCH THICK, IMPACT RESISTANT, POLYETHELENE, FORMULATED TO ALLOW THE DRUM TO RETURN TO THE ORIGINAL DESIGN AFTER IMPACT.

THE DRUM SHALL BE APPROXIMATELY 36" IN HEIGHT AND A MINIMUM OF 18" IN DIAMETER. THE DRUM SHALL CONTAIN 5 RECESSED BANDS WHICH SHALL ACCEPT REFLECTIVE SHEETING BANDS OF 6" WIDTH. THE DRUM SHALL BE DESIGNED WITH ONE OR MORE FLAT SIDES OR WITH AN ANTI-ROLL DEVICE, TO MINIMIZE ROLLING, SHOULD THE UNIT BE KNOCKED OVER. TOTAL WEIGHT OF THE DRUM SHALL BE NOT LESS THAN 12 LBS.

COLOR OF THE DRUM SHALL BE COLOR STABILIZED, SAFETY ORANGE. TO PROVIDE STABILITY OF THE DRUM THE WEIGHTED BASE PORTION SHALL BE EITHER THE DETACHABLE SAND WEIGHTED TRAY TYPE OR RUBBER COLLAR WEIGHTING TYPE WITH COMPATIBLE DRUM AS MANUFACTURED BY PLASTIC SAFETY SYSTEMS OR APPROVED EQUAL. DOUBLE WEIGHTING OF DRUMS MAY BE NECESSARY TO PREVENT MOVEMENT.

THE TRAFFIC DRUM SHALL HAVE A MINIMUM OF 4 EACH, NOMINAL 6" WIDE, REFLECTIVE STRIPES APPLIED TO THE DRUM RECESSED BANDS, STARTING FROM THE TOP, IN ORANGE, WHITE, ORANGE, WHITE SEQUENCE. THE STRIPES SHALL BE FABRICATED OF ENCAPSULATED LENS, HIGH INTENSITY REFLECTIVE SHEETING. THE REFLECTIVE SHEETING SHALL BE No. 3810 WHITE (SILVER) AND No. 3814 ORANGE AS MANUFACTURED BY THE 3M COMPANY OR EQUAL, AS APPROVED BY THE CHIEF ENGINEER, CONSIDERING REFLECTIVITY, DURABILITY, PLIABILITY AND ADHESION QUALITIES.

LEGEND

- TYPE III PORTABLE BARRICADE WITH APPROPRIATE SIGN (PLATE C-5 IN THE O.M.U.T.C.D.)
- CONSTRUCTION WARNING SIGNS (SEE NOTES 4 & 5)
- REFLECTORIZED TRAFFIC DRUMS
- REFLECTORIZED TRAFFIC CONES
- LOCALIZED WORK AREAS
- WORK ZONE – ROADWAY CLOSED TO TRAFFIC
- FLAGGER LOCATION (ALL WORKING HOURS)
- FLASHING ARROW PANEL TYPE C PER STANDARD CONSTRUCTION DRAWING TC-35.10
- BARRIER VEHICLE

GENERAL NOTES

1. TRAFFIC DRUMS ARE TO BE UTILIZED IN ALL OVERNIGHT ZONES. TRAFFIC CONES MAY BE USED FOR DAYLIGHT ZONES ONLY.
2. TYPICAL DRUM/CONE SPACING IS 50' ON-CENTER IN TAPERS, CROSSOVERS AND RAMPS; 100' ON-CENTER IN TANGENTS UNLESS OTHERWISE NOTED.
3. FINAL LOCATION OF ARROW PANELS MAY HAVE TO BE ADJUSTED TO PROVIDE MAXIMUM VISIBILITY.
4. WHEN LONG TERM (OVERNIGHT) CONSTRUCTION WARNING SIGNS ARE LOCATED ON THE LEFT SIDE IN A 3-LANE SECTION OF ROADWAY WHERE THE LEFT LANE IS OPEN TO TRAFFIC, THE SIGNS ARE TO BE MOUNTED ON STANDARDS AND SHOULD STRADDLE THE PERMANENT MEDIAN BARRIER WALL WHENEVER POSSIBLE.
5. FOR SHORT TERM AND DAYTIME ZONES, SIGNS MAY BE MOUNTED IN WOOD BLOCKS. FOR BIDIRECTIONAL AND LONG TERM STATIONARY ZONES, SIGNS ARE TO BE MOUNTED ON BREAKAWAY POSTS OR STANDARDS.
6. "END WORK AREA" SIGN (TC-6) SHALL BE OMITTED IF ANOTHER ACTIVE WORK ZONE IS LOCATED LESS THAN 3 MILES FROM THE INTENDED LOCATION OF THE "END WORK AREA" SIGN.
7. REMOVE REFLECTORS FROM ALL EXISTING RAISED PAVEMENT MARKERS (RPM'S) THAT ARE IN CONFLICT WITH TEMPORARY TRAVEL LANES AND PAVEMENT MARKINGS. WHEN EXISTING PAVEMENT MARKINGS CONFLICT WITH TEMPORARY TRAVEL LANES, THEY ARE TO BE COVERED WITH NON-REFLECTIVE BLACK PAVEMENT TAPE.
8. ALL MAINTENANCE OF TRAFFIC DEVICES AND ZONES SHALL FOLLOW THESE STANDARDS. IF SITE SPECIFIC TRAFFIC CONDITIONS EXIST, THE MAINTENANCE OF TRAFFIC PLANS MAY BE MODIFIED TO SUIT THESE CONDITIONS. NO MODIFICATIONS TO THE MAINTENANCE OF TRAFFIC PLANS SHALL BE MADE UNLESS APPROVED BY THE CHIEF ENGINEER.

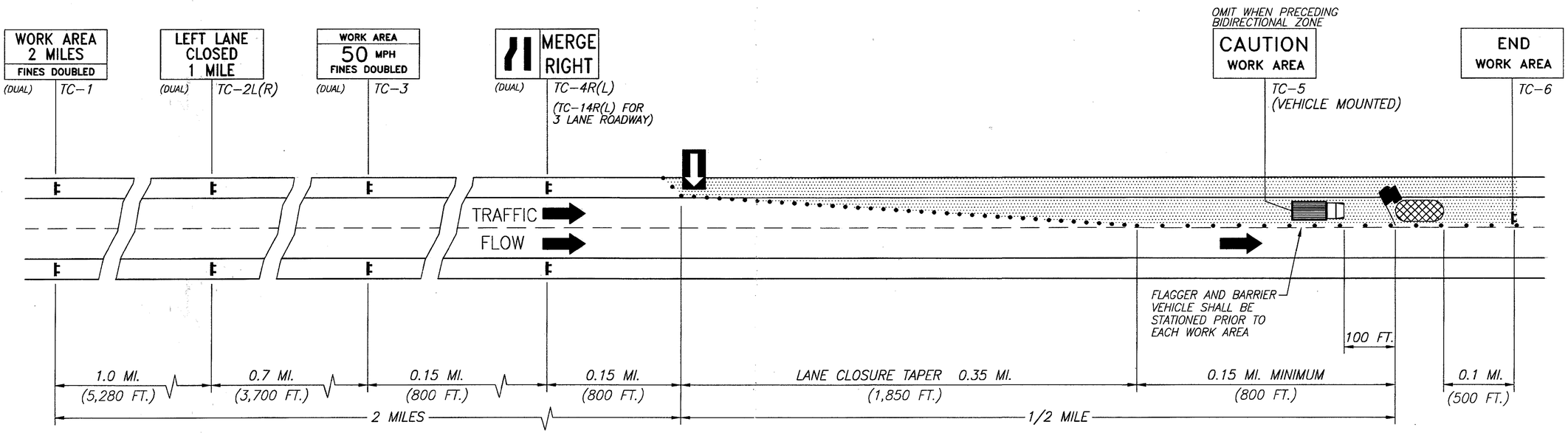

STANDARD SINGLE LANE ZONE

TWO & THREE-LANE ROADWAY

OHIO TURNPIKE COMMISSION

TRAFFIC CONTROL LEGEND & STANDARD SINGLE LANE ZONE

DATE: APRIL 28, 1998 | SCALE: NONE

OTC STANDARD DRAWING TCR-2

PLOTTED BY: fkonopka
PLOTTED: 12:24
PLOT SUBMITTED: 05-AUG-1998
307GN10.DGN
J:\OTC-STD\TCR-2.DWG WTK 04/28/98

ESTIMATED QUANTITIES

PHASE	LOCATION	STATION FROM	STATION TO	DIRECTION	TRAFFIC SHIFTS 614 TEMPORARY LANE LINE, CLASS 1, 642 PAINT LIN FT	614 TEMPORARY EDGE LINE, CLASS 1, 642 PAINT (WHITE) LIN FT	614 TEMPORARY EDGE LINE, CLASS 1, 642 PAINT (YELLOW) LIN FT	614 TEMPORARY CHANNELIZING LINE, CLASS 1, 642 PAINT LIN FT	614 TEMPORARY DOTTED LINE, CLASS 1, 642 PAINT LIN FT	614 TEMPORARY LANE LINE, CLASS 1, 740.06, TYPE 1 LIN FT	614 TEMPORARY EDGE LINE, CLASS 1, 740.06, TYPE 1 (WHITE) LIN FT	614 TEMPORARY EDGE LINE, CLASS 1, 740.06, TYPE 1 (YELLOW) LIN FT	614 TEMPORARY CHANNELIZING LINE, CLASS 1, 740.06, TYPE 1 LIN FT
1	171	470+60	473+00	NB							240	240	240
1	171	473+00	537+00	NB	6400	6400	6400						
1	171	537+00	544+40	NB		740	740	740					
1	171	544+40	604+19	NB	5978.5	5978.5	5978.5						
1	171	604+19	606+97	NB	278.5		278.5		278.5				
1	171	606+97	610+68	NB	371		371	371					
1	171	610+68	628+88	NB	1820	1820	1820						
1	171	628+88	634+67	NB	578.73		578.73						
1	171	634+67	641+32	NB	665.27	665.27	665.27						
1	171	641+32	650+04	NB	872		872						
1	171	650+04	687+70	NB	3766	3766	3766						
1	171	687+70	702+60	NB		1490	1490	1490					
1	171	702+60	704+30	NB	170	170	170						
1	171	704+30	705+99	NB	169		169						
1	171	705+99	707+64	NB	165		165	165					
1	171	707+64	722+58	NB	1494	1494	1494						
1	171	722+58	725+38	NB	560		280						
1	171	725+38	730+40	NB	502		502						
1	171	730+40	759+20	NB	2880	2880	2880						
1	171	759+20	765+10	NB		590	590	590					
1	171	765+10	766+60	NB	150	150	150						
1	171	766+60	769+27	NB	267		267						
1	171	769+27	770+50	NB			123	246					
1	171	770+50	779+16	NB	865.79	865.79	865.79						
1	171	779+16	782+00	NB	284.21	284.21	284.21	284.21					
1	171	782+00	789+00	NB	700	700	700						
1	171	789+00	791+40	NB							240	240	240
1	171	470+60	473+00	SB							240	240	240
1	171	473+00	537+00	SB	6400	6400	6400						
1	171	537+00	544+40	SB		740	740	740					
1	171	544+40	599+68	SB	5528	5528	5528						
1	171	599+68	606+30	SB	662		662						
1	171	606+30	622+18	SB	1588	1588	1588						
1	171	622+18	624+76	SB	258		258	258					
1	171	624+76	627+32	SB	255.5		255.5		255.5				
1	171	627+32	630+24	SB	292.5		292.5						
1	171	630+24	638+73	SB	848.5	848.5	848.5						
1	171	638+73	642+94	SB	421.5		421.5	421.5					
1	171	642+94	644+99	SB	204.5		204.5		204.5				
1	171	644+99	646+45	SB	146.5		146.5						
1	171	646+45	687+70	SB	4125	4125	4125						
1	171	687+70	701+82	SB		1411.5	1411.5	1411.5					
1	171	701+82	703+10	SB			128.5	128.5					
1	171	703+10	710+00	SB	690		690						
1	171	710+00	725+90	SB	1590	1590	1590						
1	171	725+90	726+66	SB	76		76	76					
1	171	726+66	733+58	SB	692		692						
1	171	733+58	759+20	SB	2562	2562	2562						
1	171	759+20	763+40	SB		420	420	420					
1	171	763+40	771+50	SB	810		810						
1	171	771+50	774+00	SB	500		250						
1	171	774+00	780+49	SB	648.6	648.6	648.6	648.6					
1	171	780+49	789+00	SB	851.4	851.4	851.4						
1	171	789+00	792+78	SB							378	378	378
1	171	792+78	798+60	SB							582	582	1164
1	171	798+60	799+10	SB								50	
1	RAMP B	74+16	77+50			334	334						
1	RAMP C	82+00	85+61			361	361						
	TOTALS				58087	55401.8	63895	7990	739		1680	1730	2262
					11.00 MI.	119297 L.F. = 22.59 MI.					3410 L.F. = 0.65 MI.		

ESTIMATED QUANTITIES

PHASE	LOCATION	STATION FROM	STATION TO	DIRECTION	LENGTH	614 BARRIER REFLECTOR, TYPE B EACH	614 OBJECT MARKER EACH	622 PORTABLE CONCRETE BARRIER, 32" LIN FT	622 PORTABLE CONCRETE BARRIER, 32", BRIDGE MOUNTED LIN FT
1	171	470+28	539+91	NB	6963	280	280	6970	
1	171	539+91	541+47	NB	155.5	8	8		160
1	171	541+47	662+54	NB	12107	486	486	12110	
1	171	662+54	665+51	NB	297.4	13	13		300
1	171	665+51	689+86	NB	2435.1	99	99	2440	
1	171	689+86	691+03	NB	117	6	6		120
1	171	691+03	695+66	NB	463	20	20	470	
1	171	695+66	698+60	NB	294	13	13		300
1	171	698+60	761+45	NB	6285	253	253	6290	
1	171	761+45	763+02	NB	157	8	8		160
1	171	763+02	778+60	NB	1558	64	64	1560	
1	171	778+60	781+06	NB	246	11	11		250
1	171	781+06	789+00	NB	294	13	13	300	
1	171	473+00	539+91	SB	6691	269	269	6700	
1	171	539+91	541+47	SB	155.5	8	8		160
1	171	541+47	662+54	SB	12107	486	486	12110	
1	171	662+54	665+51	SB	297.4	13	13		300
1	171	665+51	689+83	SB	2432.1	99	99	2440	
1	171	689+83	691+09	SB	126	7	7		130
1	171	691+09	695+60	SB	451	20	20	460	
1	171	695+60	698+73	SB	313	14	14		320
1	171	698+73	761+45	SB	6272	253	253	6280	
1	171	761+45	763+02	SB	157	8	8		160
1	171	763+02	778+60	SB	1558	64	64	1560	
1	171	778+60	781+06	SB	246	11	11		250
1	171	781+06	789+50	SB	313	14	14	320	
1	RAMP B	74+16	75+16		100	5	5	100	
1		779+16	781+06		190	9	9		190
1		781+06	782+42		136	7	7	140	
1	RAMP C	83+84	85+61		177	9	9	180	
1		778+60	780+49		189	9	9		190
1		774+00	778+60		460	20	20	460	
TOTALS						2599	2599	60890	2990

MAINTENANCE OF TRAFFIC SIGN SUB-SUMMARY

PLOT SUBMITTED:05-AUG-1998 11:55
307MTQU3.DGN
PLOTTED BY:tkonopka
PLOTTED FROM:b307mtqu3.dgn

ESTIMATED QUANTITIES

TRAFFIC SHIFTS

PHASE	LOCATION	STATION FROM	STATION TO	DIRECTION		614 TEMPORARY LANE LINE, CLASS I, 642 PAINT (LIN FT)	614 TEMPORARY EDGE LINE, CLASS I, 642 PAINT (WHITE) (LIN FT)	614 TEMPORARY EDGE LINE, CLASS I, 642 PAINT (YELLOW) (LIN FT)	614 TEMPORARY CHANNELIZING LINE, CLASS I, 642 PAINT (LIN FT)			614 TEMPORARY LANE LINE, CLASS I, 740.06, TYPE I (LIN FT)	614 TEMPORARY EDGE LINE, CLASS I, 740.06, TYPE I (WHITE) (LIN FT)	614 TEMPORARY EDGE LINE, CLASS I, 740.06, TYPE I (YELLOW) (LIN FT)	614 TEMPORARY CHANNELIZING LINE, CLASS I, 740.06, TYPE I (LIN FT)		
2 & 2A	I71	473+00	485+00	NB			1200	1200	1200								
2 & 2A	I71	485+00	539+66	NB		5466	5466	5466									
2 & 2A	I71	539+66	541+72	NB								205.5	205.5	205.5			
2 & 2A	I71	541+72	662+29	NB		12056.57	12056.57	12056.57									
2 & 2A	I71	599+80	608+45	NB			865	865									
2 & 2A	I71	608+45	610+66	NB				221									
2 & 2A	I71	618+30	634+60	NB			1630	1630									
2 & 2A	I71	634+60	641+57	NB				697									
2 & 2A	I71	641+57	649+26	NB			769	769									
2 & 2A	I71	662+29	665+76	NB								346.93	346.93	346.93			
2 & 2A	I71	665+76	689+61	NB		2385.26	2385.26	2385.26									
2 & 2A	I71	684+50	689+61	NB			511.19	511.19									
2 & 2A	I71	689+61	691+28	NB								166.5	166.5	166.5			
2 & 2A	I71	689+61	691+28	NB									166.5	166.5			
2 & 2A	I71	691+28	695+66	NB		438.39	438.39	438.39									
2 & 2A	I71	691+28	695+66	NB			438.39	438.39									
2 & 2A	I71	695+66	698+85	NB								318.54	318.54	318.54			
2 & 2A	I71	695+66	698+85	NB		318.54		318.54					318.54	318.54			
2 & 2A	I71	698+85	705+34	NB			649.38	649.38									
2 & 2A	I71	705+34	706+20	NB				86									
2 & 2A	I71	698+85	761+45	NB		6260	6260	6260									
2 & 2A	I71	716+83	732+40	NB			1557	1557									
2 & 2A	I71	756+00	761+45	NB			544.62	544.62									
2 & 2A	I71	761+45	763+27	NB								182.01	182.01	182.01			
2 & 2A	I71	761+45	763+27	NB									182.01	182.01			
2 & 2A	I71	763+27	769+29	NB			602.37	602.37									
2 & 2A	I71	769+29	770+46	NB				117									
2 & 2A	I71	763+27	778+75	NB		1548.37	1548.37	1548.37									
2 & 2A	I71	778+70	781+70	NB								300	300	300			
2 & 2A	I71	781+70	789+00	NB		730	730	730									
2 & 2A	I71	789+00	790+00	NB								100	100	100			
2 & 2A	I71	790+00	798+60	NB									860	860	2580		
2 & 2A	I71	778+85	779+45	NB				60									
2 & 2A	I71	779+45	782+35	NB										290			
2 & 2A	I71	782+35	789+00	NB		665		665									
2 & 2A	I71	789+00	790+00	NB				100									
2 & 2A	I71	779+65	782+40	NB									275				
2 & 2A	I71	782+40	789+00	NB			660										
2 & 2A	I71	789+00	790+00	NB									100				
2 & 2A	I71	473+00	485+00	SB			1200	1200	1200								
2 & 2A	I71	485+00	539+66	SB		5466	5466	5466									
2 & 2A	I71	539+66	541+72	SB								206	206	206			
2 & 2A	I71	541+72	662+60	SB		12088	12088	12088									
2 & 2A	I71	592+90	613+97	SB			2107	2107									
2 & 2A	I71	622+20	625+40	SB			320	320									
2 & 2A	I71	640+85	649+00	SB			815	815									
2 & 2A	I71	662+60	665+54	SB								294	294	294			
2 & 2A	I71	665+54	689+86	SB		2432.19	2432.19	2432.19									
2 & 2A	I71	689+86	691+28	SB								141.5	141.5	141.5			
2 & 2A	I71	691+28	695+63	SB		435.31	435.31	435.31									
2 & 2A	I71	695+63	698+72	SB								309	309	309			
2 & 2A	I71	698+72	761+45	SB		6273	6273	6273									
2 & 2A	I71	685+10	689+86	SB			476	476									
2 & 2A	I71	689+86	691+28	SB									141.69	141.69			
2 & 2A	I71	691+28	695+72	SB			444.31	444.31									
2 & 2A	I71	695+72	699+00	SB									328	328			
2 & 2A	I71	699+00	710+89	SB			1189.05	1189.05									
2 & 2A																	
2 & 2A	I71	726+44	726+70	SB				26									
2 & 2A	I71	726+70	738+00	SB			1130	1130									
2 & 2A	I71	768+00	777+18	SB			918	918									
2 & 2A	I71	777+18	780+18	SB									300	300			
2 & 2A	I71	780+18	780+50	SB			32	32									
2 & 2A	I71	780+50	780+78	SB				28									
2 & 2A	I71	788+28	789+00	SB				72									
2 & 2A	I71	789+00	790+00	SB										100			
2 & 2A	I71	790+00	792+10	SB										420	420		
2 & 2A	I71	792+10	798+60	SB										650	1950		
	TOTALS					56562.6	73637.4	75367.9	2400			2570	5241.7	6326.7	4950		
						10.70 MI	149005.3 L.F.= 28.22 MI					0.49 MI	11568.4 L.F.= 2.19 MI				

ESTIMATED QUANTITIES

PHASE	LOCATION	STATION FROM	STATION TO	DIRECTION	LENGTH		614 BARRIER REFLECTOR, TYPE B (EACH)	614 OBJECT MARKER (EACH)		622 PORTABLE CONCRETE BARRIER, 32" (LIN FT)	622 PORTABLE CONCRETE BARRIER, 32", BRIDGE MOUNTED (LIN FT)
2 & 2A	I71	482+28	539+91	NB	5763		232	232		5770	
2 & 2A	I71	539+91	541+47	NB	155.5		8	8			160
2 & 2A	I71	541+47	602+00	NB	6053.5		244	244		6060	
2 & 2A	I71	602+30	646+00	NB	4370		176	176		4370	
2 & 2A	I71	602+60	610+66	NB	806		34	34		810	
2 & 2A	I71	617+80	646+00	NB	2820		114	114		2820	
2 & 2A	I71	645+00	662+54	NB	1754		72	72		1760	
2 & 2A	I71	662+54	665+51	NB	297		13	13			300
2 & 2A	I71	665+51	684+70	NB	1919		78	78		1920	
2 & 2A	I71	688+08	689+86	NB	178		9	9		180	
2 & 2A	I71	689+86	691+02	NB	116		6	6			120
2 & 2A	I71	691+02	695+66	NB	464		20	20		470	
2 & 2A	I71	695+66	698+60	NB	294		13	13			300
2 & 2A	I71	698+60	729+40	NB	3080		125	125		3080	
2 & 2A	I71	688+42	689+86	NB	144		7	7		150	
2 & 2A	I71	689+86	691+02	NB	116		6	6			120
2 & 2A	I71	691+02	695+66	NB	464		20	20		470	
2 & 2A	I71	695+66	698+60	NB	294		13	13			300
2 & 2A	I71	698+60	708+50	NB	990		41	41		990	
2 & 2A	I71	715+25	729+40	NB	1415		58	58		1420	
2 & 2A	I71	729+68	756+00	NB	2632		107	107		2640	
2 & 2A	I71	760+06	761+45	NB	139		7	7		140	
2 & 2A	I71	761+45	763+02	NB	157		8	8			160
2 & 2A	I71	763+02	778+60	NB	1558		64	64		1560	
2 & 2A	I71	778+60	781+06	NB	246		11	11			250
2 & 2A	I71	781+06	789+00	NB	794		33	33		800	
2 & 2A	I71	760+22	761+45	NB	123		7	7		130	
2 & 2A	I71	761+45	763+02	NB	157		8	8			160
2 & 2A	I71	763+02	770+66	NB	764		32	32		770	
2 & 2A	I71	778+70	789+00	NB	1030		43	43		1030	
2 & 2A	I71	485+00	539+91	SB	5491		221	221		5500	
2 & 2A	I71	539+91	541+47	SB	155.5		8	8			160
2 & 2A	I71	541+47	584+50	SB	4303.5		174	174		4310	
2 & 2A	I71	599+20	624+80	SB	2560		104	104		2560	
2 & 2A	I71	599+20	614+70	SB	1550		63	63		1550	
2 & 2A	I71	622+20	624+70	SB	250		11	11		250	
2 & 2A	I71	624+50	646+80	SB	2230		91	91		2230	
2 & 2A	I71	640+85	646+50	SB	565		24	24		570	
2 & 2A	I71	649+86	662+54	SB	1268		52	52		1270	
2 & 2A	I71	662+54	665+51	SB	297		13	13			300
2 & 2A	I71	665+51	687+85	SB	2234		91	91		2240	
2 & 2A	I71	689+50	689+86	SB	36		3	3		40	
2 & 2A	I71	689+86	691+03	SB	117		6	6			120
2 & 2A	I71	691+03	695+66	SB	463		20	20		470	
2 & 2A	I71	695+66	698+60	SB	294		13	13			300
2 & 2A	I71	698+60	733+14	SB	3454		140	140		3460	
2 & 2A	I71	689+50	689+86	SB	36		3	3		40	
2 & 2A	I71	689+86	691+03	SB	117		6	6			120
2 & 2A	I71	691+03	695+66	SB	463		20	20		470	
2 & 2A	I71	695+66	698+60	SB	294		13	13			300
2 & 2A	I71	698+60	715+25	SB	1665		68	68		1670	
2 & 2A	I71	725+00	733+04	SB	804		34	34		810	
2 & 2A	I71	738+90	761+45	SB	2255		92	92		2260	
2 & 2A	I71	761+45	763+02	SB	157		8	8			160
2 & 2A	I71	763+02	770+36	SB	734		31	31		740	
2 & 2A	I71	770+20	778+60	SB	840		35	35		840	
2 & 2A	I71	778+60	781+06	SB	246		11	11			250
2 & 2A	I71	781+06	791+00	SB	994		41	41		1000	
2 & 2A	I71	770+20	778+20	SB	800		33	33		800	
2 & 2A	I71	778+20	779+90	SB	170		8	8			170
2 & 2A	I71	779+90	781+00	SB	110		6	6		110	
TOTALS							3052	3052		70530	3750

PLOT SUBMITTED:05-AUG-1998 11:55
307MTQU3.DGN
I307MTQU3.DWG] VNB 12/20/94
PLOTTED BY:fkonopka
PLOTTED FROM: ...307mtqu3.dgn

ESTIMATED QUANTITIES

PHASE	LOCATION	STATION FROM	STATION TO	DIRECTION	TRAFFIC SHIFTS 614 TEMPORARY LANE LINE, CLASS 1, 642 PAINT LIN FT	614 TEMPORARY EDGE LINE, CLASS 1, 642 PAINT (WHITE) LIN FT	614 TEMPORARY EDGE LINE, CLASS 1, 642 PAINT (YELLOW) LIN FT	614 TEMPORARY LANE LINE, CLASS 1, 740.06, TYPE 1 LIN FT	614 TEMPORARY EDGE LINE, CLASS 1, 740.06, TYPE 1 (WHITE) LIN FT	614 TEMPORARY EDGE LINE, CLASS 1, 740.06, TYPE 1 (YELLOW) LIN FT	614 TEMPORARY CHANNELIZING LINE, CLASS 1, 740.06, TYPE 1 LIN FT
2B	171	596+60	599+80	NB		320					
2B	171	604+30	607+50	NB		320					
2B	171	607+50	610+70	NB		320	320				
2B	171	619+78	623+44	NB		366	366				
2B	171	623+44	630+64	NB		720					
2B	171	633+30	646+00	NB			1270				
2B	171	680+00	684+50	NB		450					
2B	171	700+40	704+70	NB		430					
2B	171	704+70	707+64	NB		294	294				
2B	171	715+16	720+20	NB		504	504				
2B	171	720+20	727+40	NB		720					
2B	171	732+40	739+60	NB		720					
2B	171	752+80	756+00	NB		320					
2B	171	765+05	768+25	NB		320					
2B	171	768+25	770+46	NB		221	221				
2B	171	770+46	770+76	NB		30					
2B	171	779+15	779+27	NB		12	12				
2B	171	779+27	782+00	NB					273	273	
2B	171	782+00	784+00	NB		200	200				
2B	171	784+00	789+00	NB	500	500					
2B	171	789+00	790+00	NB				100	100		
2B	TEMP RAMP B	74+15	77+50			335	335				
2B	171	790+00	798+60	NB							860
2B	171	584+50	592+90	SB		840					
2B	171	599+20	606+40	SB		720					
2B	171	606+40	613+97	SB		756.7	756.7				
2B	171	637+80	642+16	SB		436	436				
2B	171	642+16	645+36	SB		320					
2B	171	649+00	652+20	SB		320					
2B	171	678+50	685+10	SB		660					
2B	171	702+82	710+02	SB		720					
2B	171	710+02	714+78	SB		476	476				
2B	171	714+78	714+97	SB		19					
2B	171	725+83	729+00	SB		317	317				
2B	171	729+00	732+20	SB		320					
2B	171	738+00	741+20	SB		320					
2B	171	763+20	768+00	SB		480					
2B	171	770+20	775+00	SB		480					
2B	171	775+00	777+70	SB		270	270				
2B	171	777+70	780+49	SB					278.62	278.62	
2B	171	82+00	85+61	SB		361.3	361.3				
2C	171	631+50	638+80	NB		730	730				
2C	171	638+80	646+00	NB		720					
2C	171	622+20	629+09	SB			689.4				
2C	171	629+09	632+29	SB		320	320				
2C	171	625+40	628+60	SB		320					
2C	171	632+29	635+49	SB		320					
	TOTALS				500	17328	7878.4	100	651.6	551.6	4950
					0.10 MI	25206.4 L.F. = 4.77 MI.		0.02 MI	1203.2 L.F. = 0.23 MI.		

ESTIMATED QUANTITIES

PHASE	LOCATION	STATION FROM	STATION TO	DIRECTION	LENGTH	614 BARRIER REFLECTOR, TYPE B EACH	614 OBJECT MARKER EACH	622 PORTABLE CONCRETE BARRIER, 32" LIN FT	622 PORTABLE CONCRETE BARRIER, 32" BRIDGE MOUNTED LIN FT
2B	171	596+60	604+30	NB	770	32	32	770	
2B	171	604+30	608+73	NB	443	19	19	450	
2B	171	611+71	614+43	NB	272	13	13	280	
2B	171	618+70	620+71	NB	201.3	10	10	210	
2B	171	618+80	630+64	NB	1184	49	49	1190	
2B	171	632+50	646+00	NB	1350	55	55	1350	
2B	171	680+00	689+50	NB	950	39	39	950	
2B	171	700+40	707+64	NB	724	31	31	730	
2B	171	707+30	710+00	NB	270	12	12	270	
2B	171	715+00	717+00	NB	200	9	9	200	
2B	171	715+80	727+40	NB	1160	48	48	1160	
2B	171	729+40	739+60	NB	1020	42	42	1020	
2B	171	752+80	761+00	NB	820	34	34	820	
2B	171	765+05	770+76	NB	571	25	25	580	
2B	171	770+00	772+72	NB	272	13	13	280	
2B	RAMP B	74+16	75+16		100	5	5	100	
2B	171	779+16	779+45	NB	29	3	3	30	
2B	171	779+45	781+80	NB	235	11	11		240
2B	171	781+80	789+00	NB	720	30	30	720	
2B	171	776+40	779+30	NB	290	13	13	290	
2B	171	779+30	781+00	NB	170	8	8		170
2B	171	581+70	611+37	SB	2967	120	120	2970	
2B	171	641+86	642+20	SB	34	3	3	40	
2B	171	637+80	641+10	SB	330	15	15	330	
2B	171	640+85	645+36	SB	451	20	20	460	
2B	171	646+80	652+20	SB	540	23	23	540	
2B	171	678+50	689+50	SB	1100	45	45	1100	
2B	171	702+82	713+10	SB	1028	43	43	1030	
2B	171	713+32	715+84	SB	252	12	12	260	
2B	171	722+18	724+90	SB	272	13	13	280	
2B	171	727+00	741+20	SB	1420	58	58	1420	
2B	171	763+20	780+49	SB	1729	71	71	1730	
2B	RAMP C	83+84	85+61		177	9	9	180	
2B	171	777+70	782+20	SB	460	20	20	460	
2C	171	631+50	635+80	NB	430	19	19	430	
2C	171	632+36	656+46	NB	2410	98	98	2410	
2C	171	622+20	629+70	SB	750	31	31	750	
2C	171	624+80	629+85	SB	505	22	22	510	
TOTALS						1123	1123	26300	410

PLOT SUBMITTED:05-AUG-1998 11:56
307MTQU3.DGN
PLOTTED BY:TKonopka
PLOTTED FROM:pid08459B307mtqu3.dgn
PLOTTED ON:Wed Aug 05 11:56:04 1998

CUY-71-0.00	OHIO	24 / 361
	FHWA REGION 5	
	FEDERAL PROJECT	

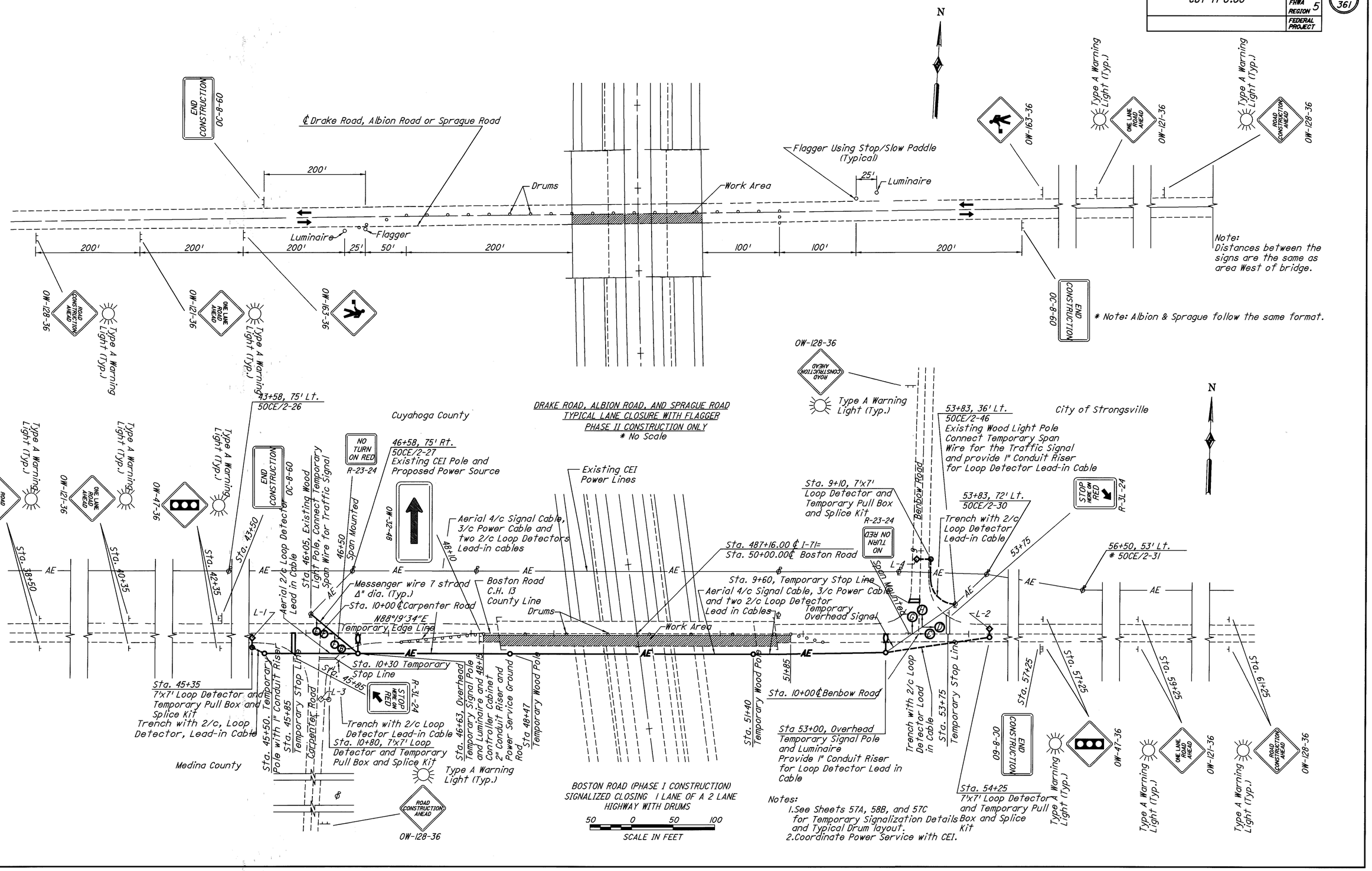

MAINTENANCE OF TRAFFIC PLAN - CROSSROADS

PLOT SUBMITTED:03-AUG-1998 07:28
307MTD01.DGN
PLOTTED BY: jgrmovse
PLOTTED FROM: /users/sberber/pid08459/dgn/307mtd01.dgn

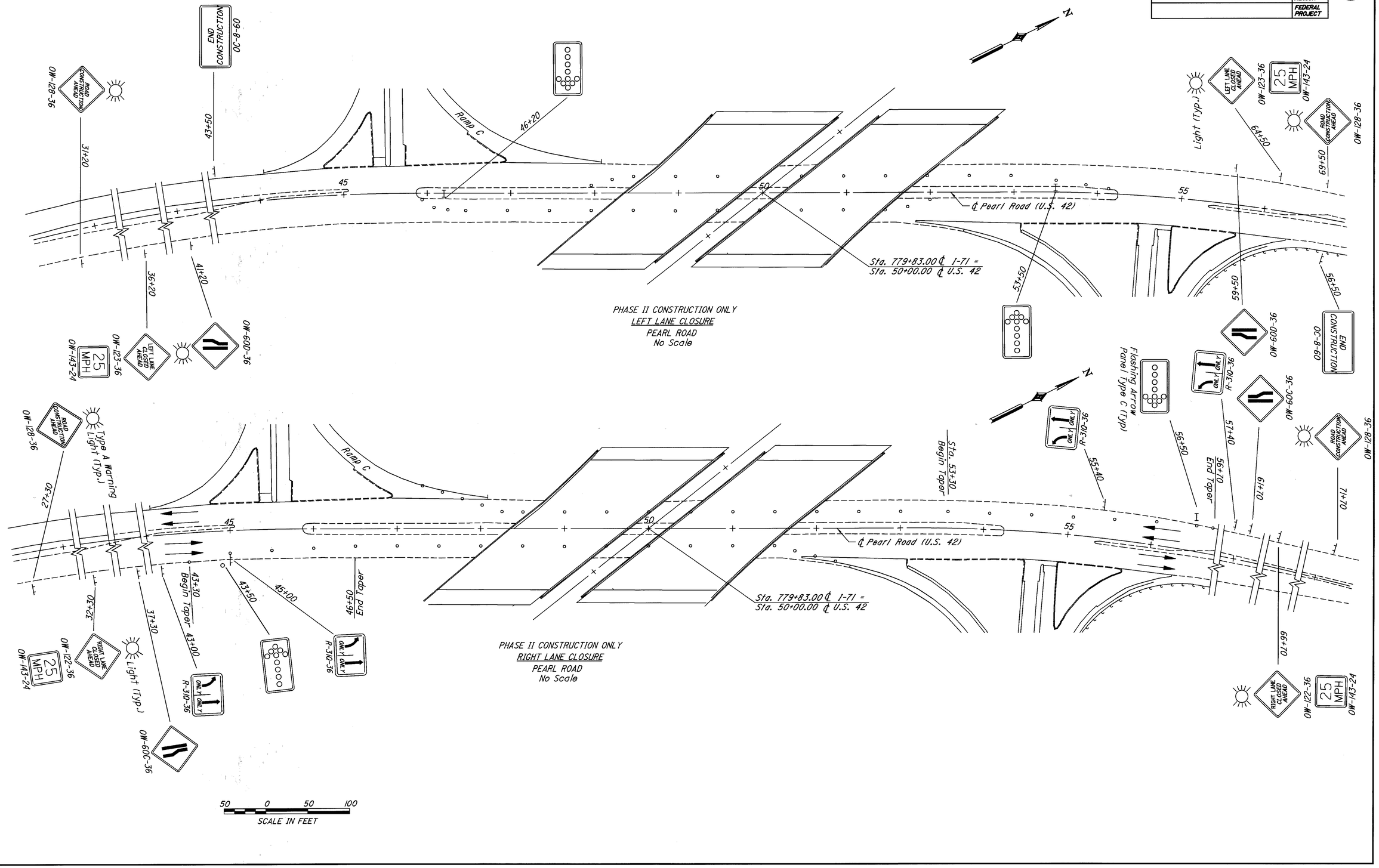

MAINTENANCE OF TRAFFIC PLAN - CROSSROADS

PLOT SUBMITTED:03-AUG-1998 07:30
307MTD02.DGN
PLOTTED BY: jgrmovse
PLOTTED FROM: C:\Bforsber\pid08459\dgn\307mtd02.dgn

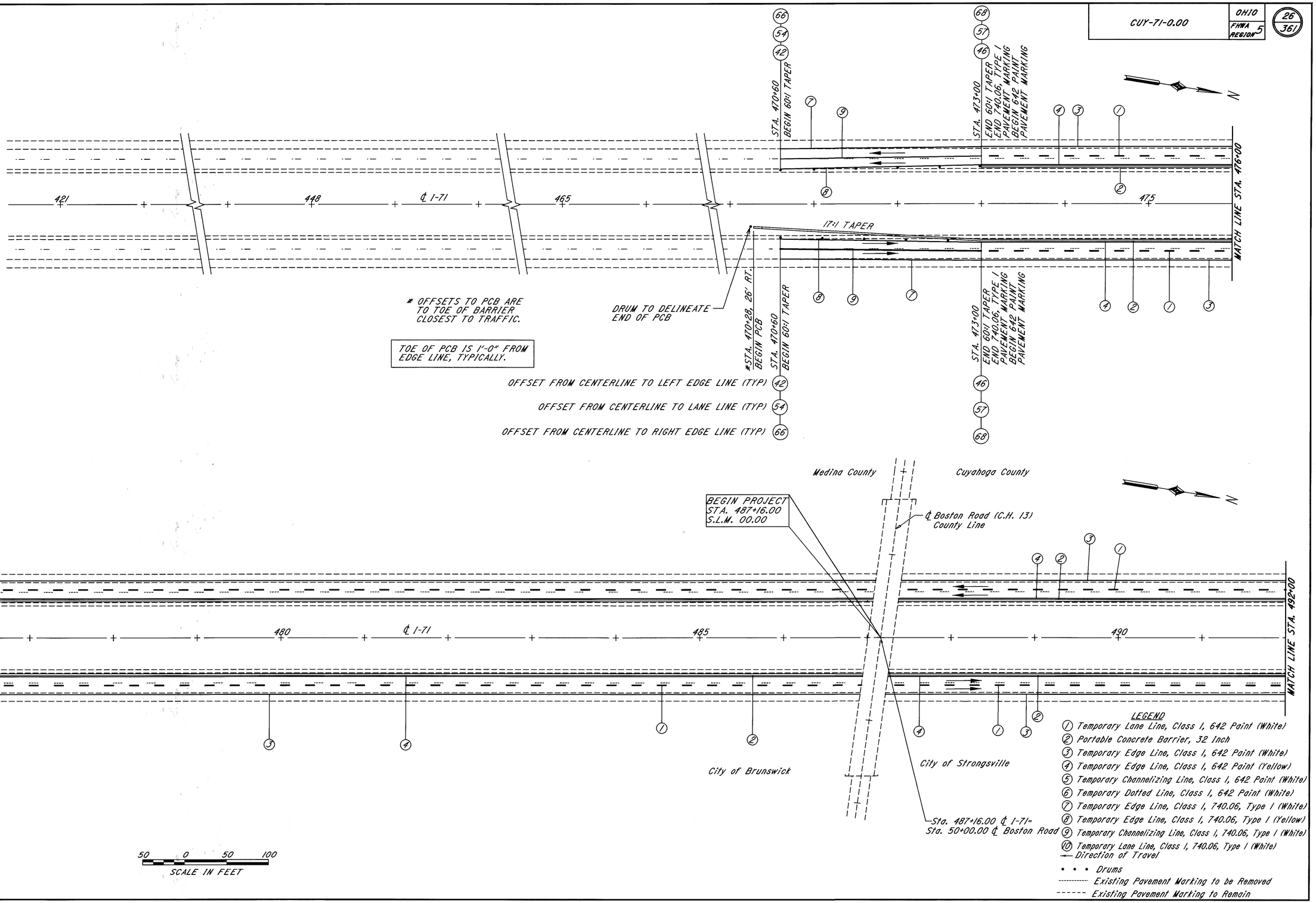

MAINTENANCE OF TRAFFIC PLAN STA. 470+28 TO STA. 492+00 - PHASE I

PLOT SUBMITTED:03-AUG-1998 07:31
307MT01.DGN
PLOTTED BY:jgrmovse
PLOTTED in FLOW:
PLOTTED:Wed Aug 12 07:31:24 1998

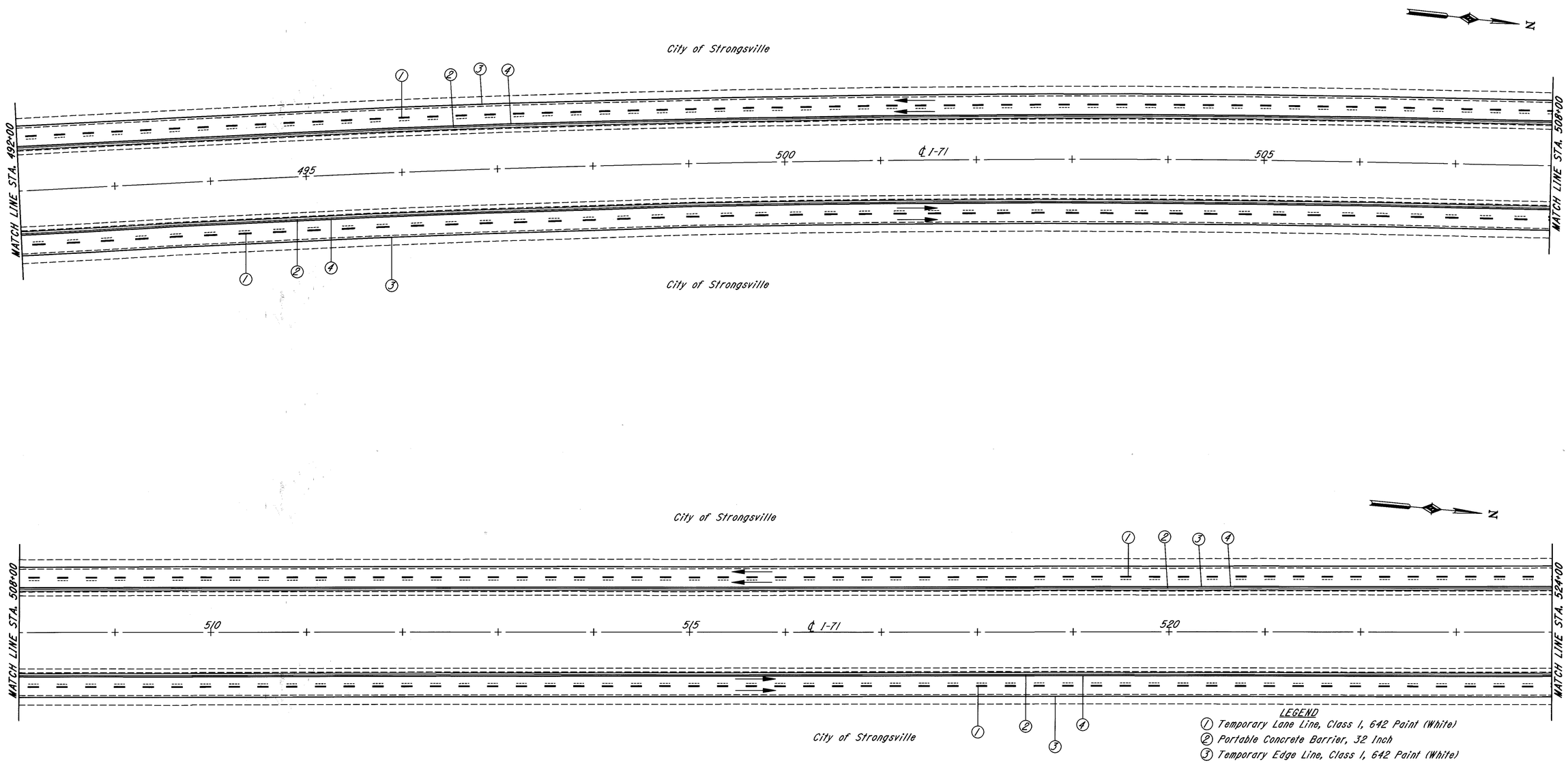

LEGEND

1. Temporary Lane Line, Class I, 642 Paint (White)
2. Portable Concrete Barrier, 32 Inch
3. Temporary Edge Line, Class I, 642 Paint (White)
4. Temporary Edge Line, Class I, 642 Paint (Yellow)
5. Temporary Channelizing Line, Class I, 642 Paint (White)
6. Temporary Dotted Line, Class I, 642 Paint (White)
7. Temporary Edge Line, Class I, 740.06, Type I (White)
8. Temporary Edge Line, Class I, 740.06, Type I (Yellow)
9. Temporary Channelizing Line, Class I, 740.06, Type I (White)
10. Temporary Lane Line, Class I, 740.06, Type I (White)

— Direction of Travel
• • • Drums
---------- Existing Pavement Marking to be Removed
------ Existing Pavement Marking to Remain

50 0 50 100
SCALE IN FEET

MAINTENANCE OF TRAFFIC PLAN STA. 492+00 TO STA. 524+00 - PHASE I

PLOT SUBMITTED:03-AUG-1998 09:46
307MT02.DGN
PLOTTED BY:jgrmovse
PLOTTED:from Beforsber pid08459 dgn 307mt02.dgn

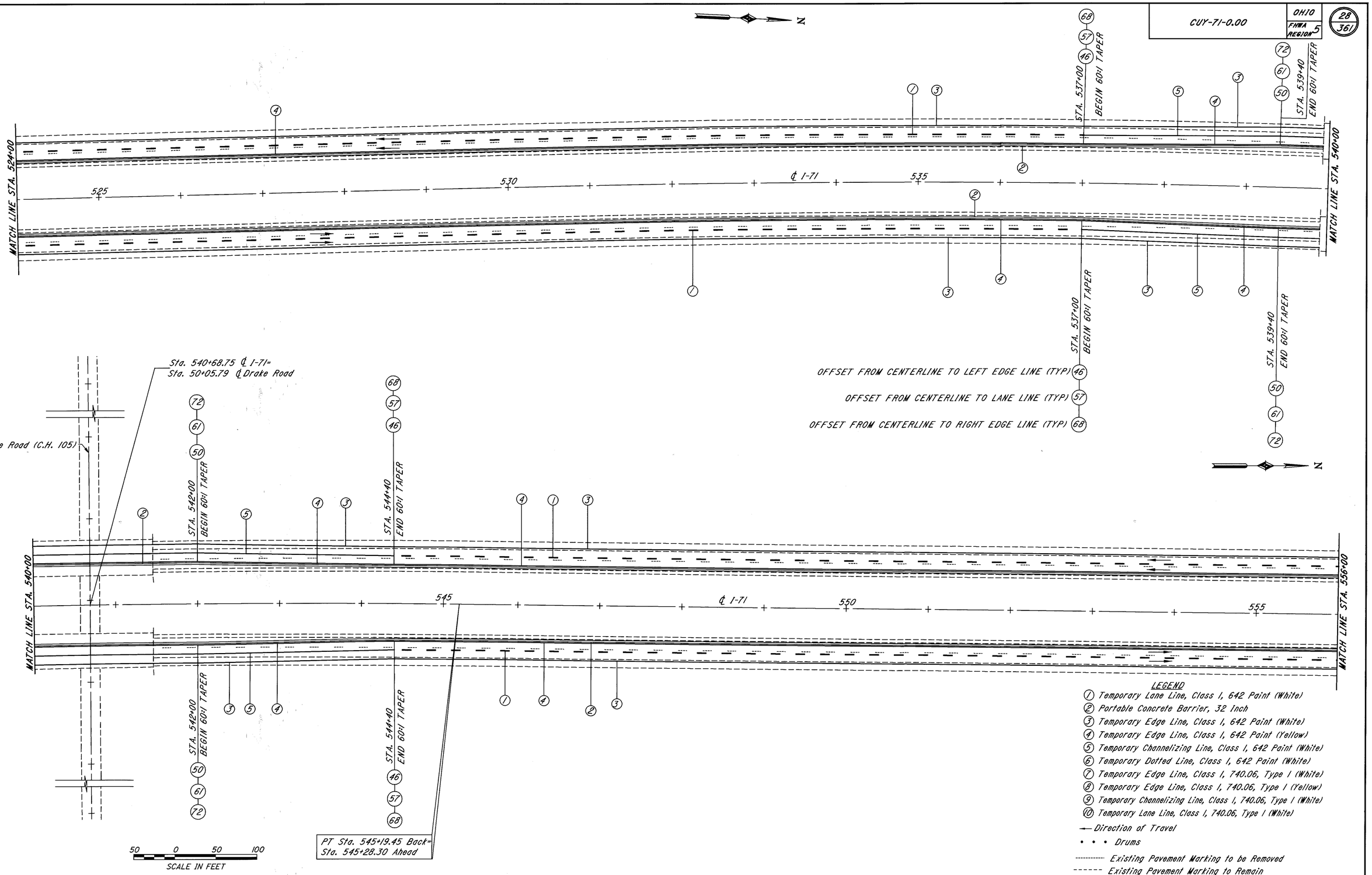

MAINTENANCE OF TRAFFIC PLAN STA. 524+00 TO STA. 556+00 - PHASE I

PLOT SUBMITTED:03-AUG-1998 07:33
307MT03.DGN
PLOTTED BY:jgrmoyse
PLOTTED in Rover:sbeforsber:pid08459:dgn:B307mt03.dgn

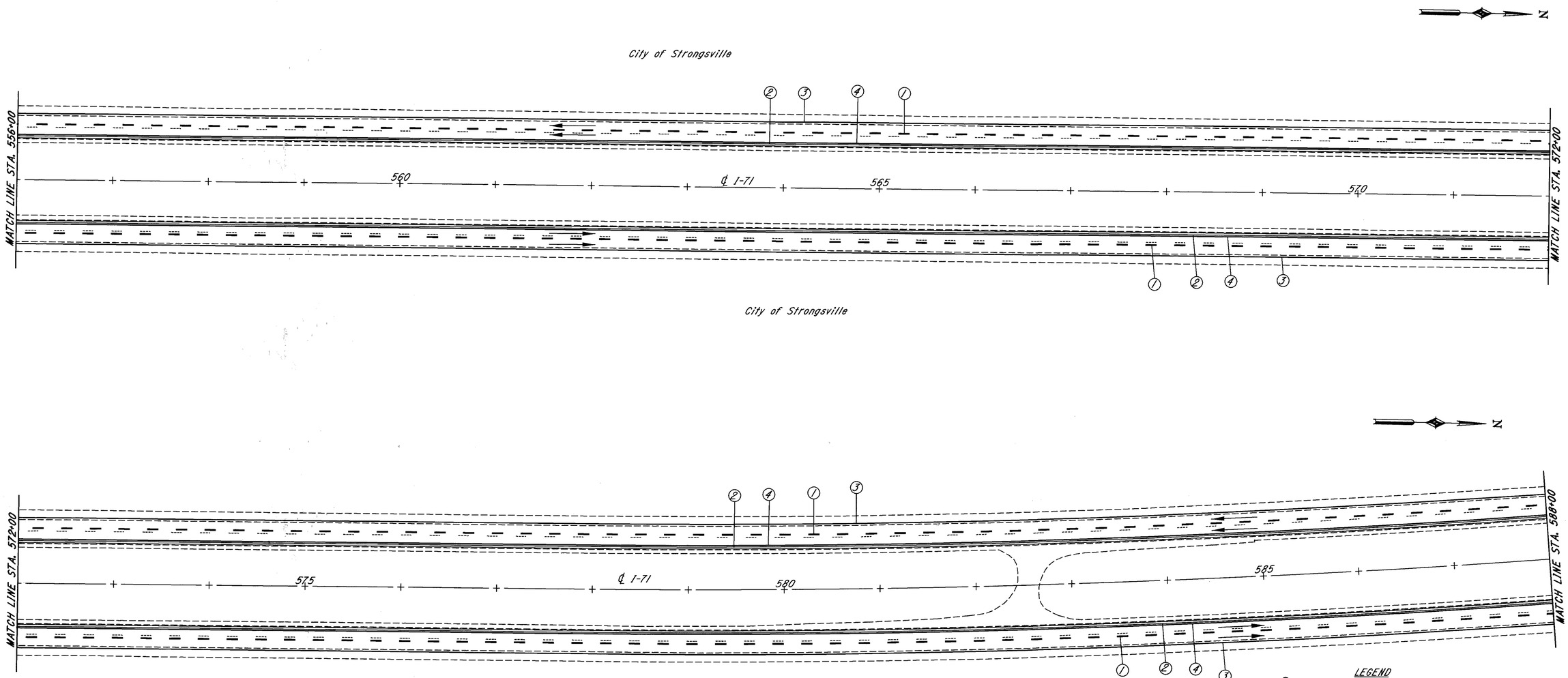

LEGEND

1. Temporary Lane Line, Class I, 642 Paint (White)
2. Portable Concrete Barrier, 32 Inch
3. Temporary Edge Line, Class I, 642 Paint (White)
4. Temporary Edge Line, Class I, 642 Paint (Yellow)
5. Temporary Channelizing Line, Class I, 642 Paint (White)
6. Temporary Dotted Line, Class I, 642 Paint (White)
7. Temporary Edge Line, Class I, 740.06, Type I (White)
8. Temporary Edge Line, Class I, 740.06, Type I (Yellow)
9. Temporary Channelizing Line, Class I, 740.06, Type I (White)
10. Temporary Lane Line, Class I, 740.06, Type I (White)

→ Direction of Travel
• • • Drums
--------- Existing Pavement Marking to be Removed
------- Existing Pavement Marking to Remain

50 0 50 100
SCALE IN FEET

MAINTENANCE OF TRAFFIC PLAN STA. 556+00 TO STA. 588+00 - PHASE I

PLOT SUBMITTED:03-AUG-1998 07:34
307MT04.DGN
PLOTTED BY:jgrmovse
PLOTTED:

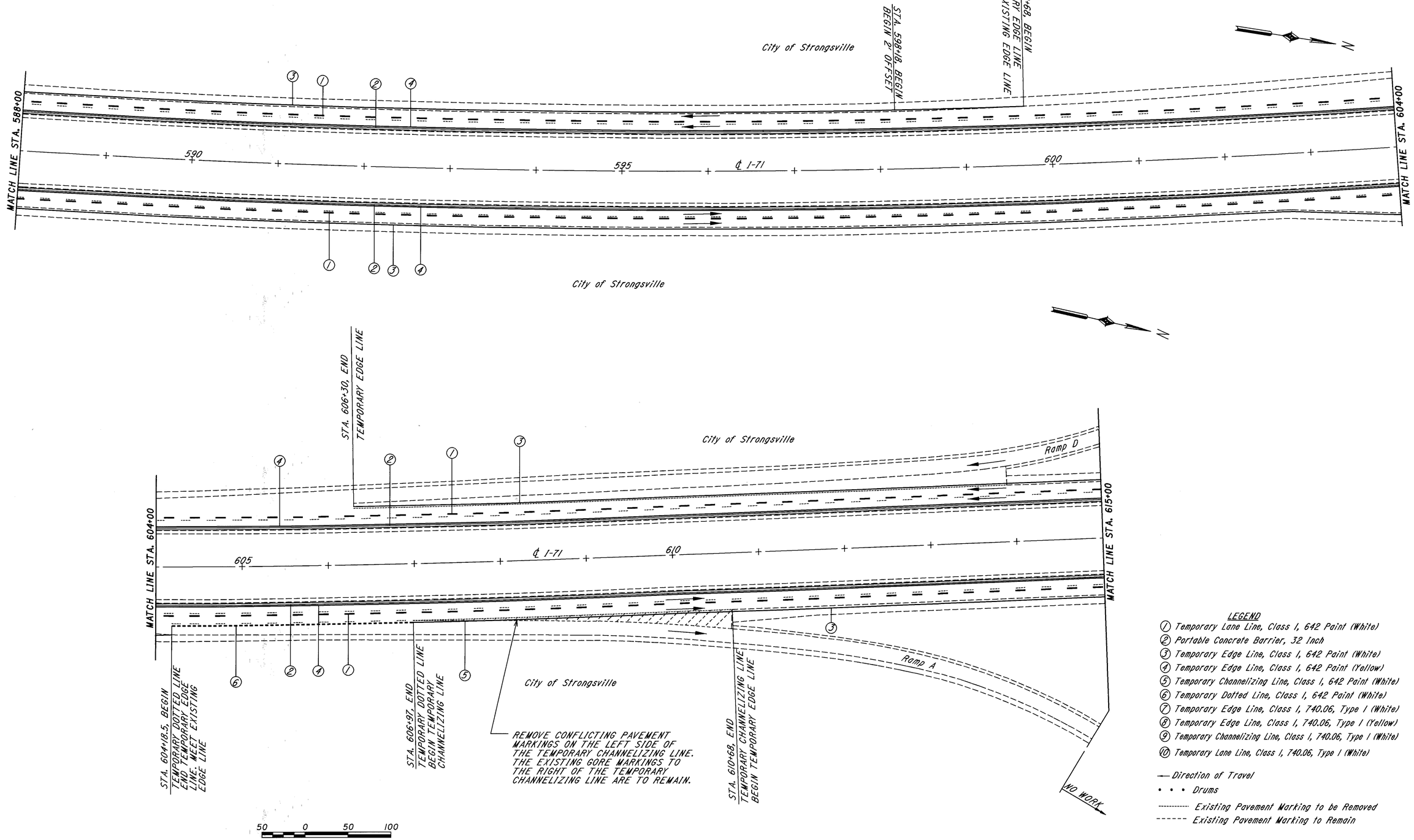

LEGEND

1. Temporary Lane Line, Class I, 642 Paint (White)
2. Portable Concrete Barrier, 32 Inch
3. Temporary Edge Line, Class I, 642 Paint (White)
4. Temporary Edge Line, Class I, 642 Paint (Yellow)
5. Temporary Channelizing Line, Class I, 642 Paint (White)
6. Temporary Dotted Line, Class I, 642 Paint (White)
7. Temporary Edge Line, Class I, 740.06, Type I (White)
8. Temporary Edge Line, Class I, 740.06, Type I (Yellow)
9. Temporary Channelizing Line, Class I, 740.06, Type I (White)
10. Temporary Lane Line, Class I, 740.06, Type I (White)

— Direction of Travel
• • • Drums
---------- Existing Pavement Marking to be Removed
------ Existing Pavement Marking to Remain

MAINTENANCE OF TRAFFIC PLAN STA. 588+00 TO STA. 615+00 - PHASE I

PLOT SUBMITTED:03-AUG-1998 07:35
307MT05.DGN
PLOTTED BY: jgrmovse
PLOTTED: 08/03/98 07:35
PLOTTED FROM: /users/pid08459/dgn/307mt05.dgn
307MT05.DW01 VWB 12/15/94

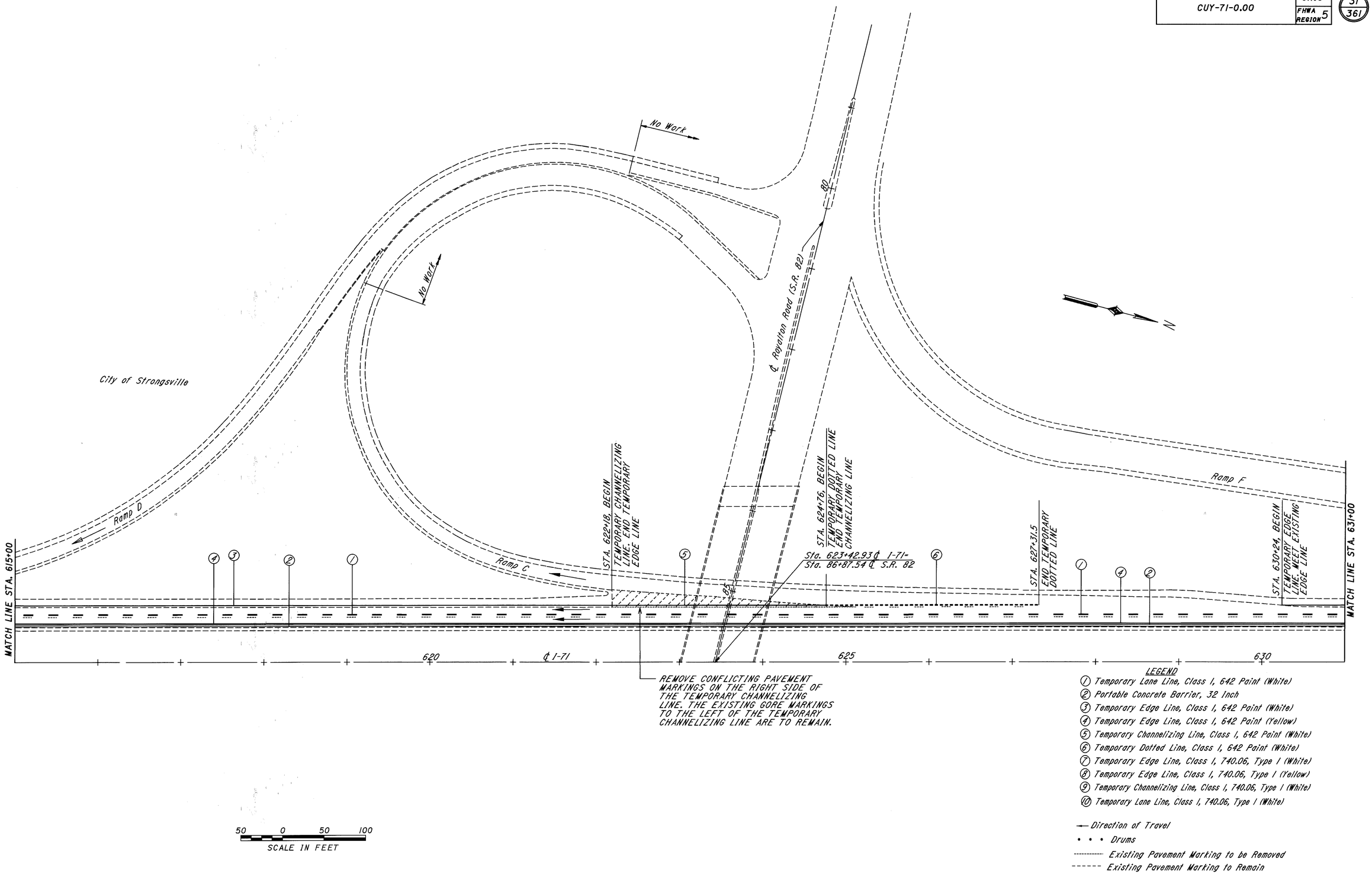

LEGEND

1. Temporary Lane Line, Class I, 642 Paint (White)
2. Portable Concrete Barrier, 32 Inch
3. Temporary Edge Line, Class I, 642 Paint (White)
4. Temporary Edge Line, Class I, 642 Paint (Yellow)
5. Temporary Channelizing Line, Class I, 642 Paint (White)
6. Temporary Dotted Line, Class I, 642 Paint (White)
7. Temporary Edge Line, Class I, 740.06, Type I (White)
8. Temporary Edge Line, Class I, 740.06, Type I (Yellow)
9. Temporary Channelizing Line, Class I, 740.06, Type I (White)
10. Temporary Lane Line, Class I, 740.06, Type I (White)

— Direction of Travel
• • • Drums
---------- Existing Pavement Marking to be Removed
------ Existing Pavement Marking to Remain

MAINTENANCE OF TRAFFIC PLAN STA. 615+00 TO STA. 631+00 - PHASE I

PLOT SUBMITTED:03-AUG-1998 07:36
307MT06.DGN
307mt06.dgn
PLOTTED BY:jgrmoyse
PLOTTED:12/15/94
L307MT06.DWG1 VNB 12/15/94

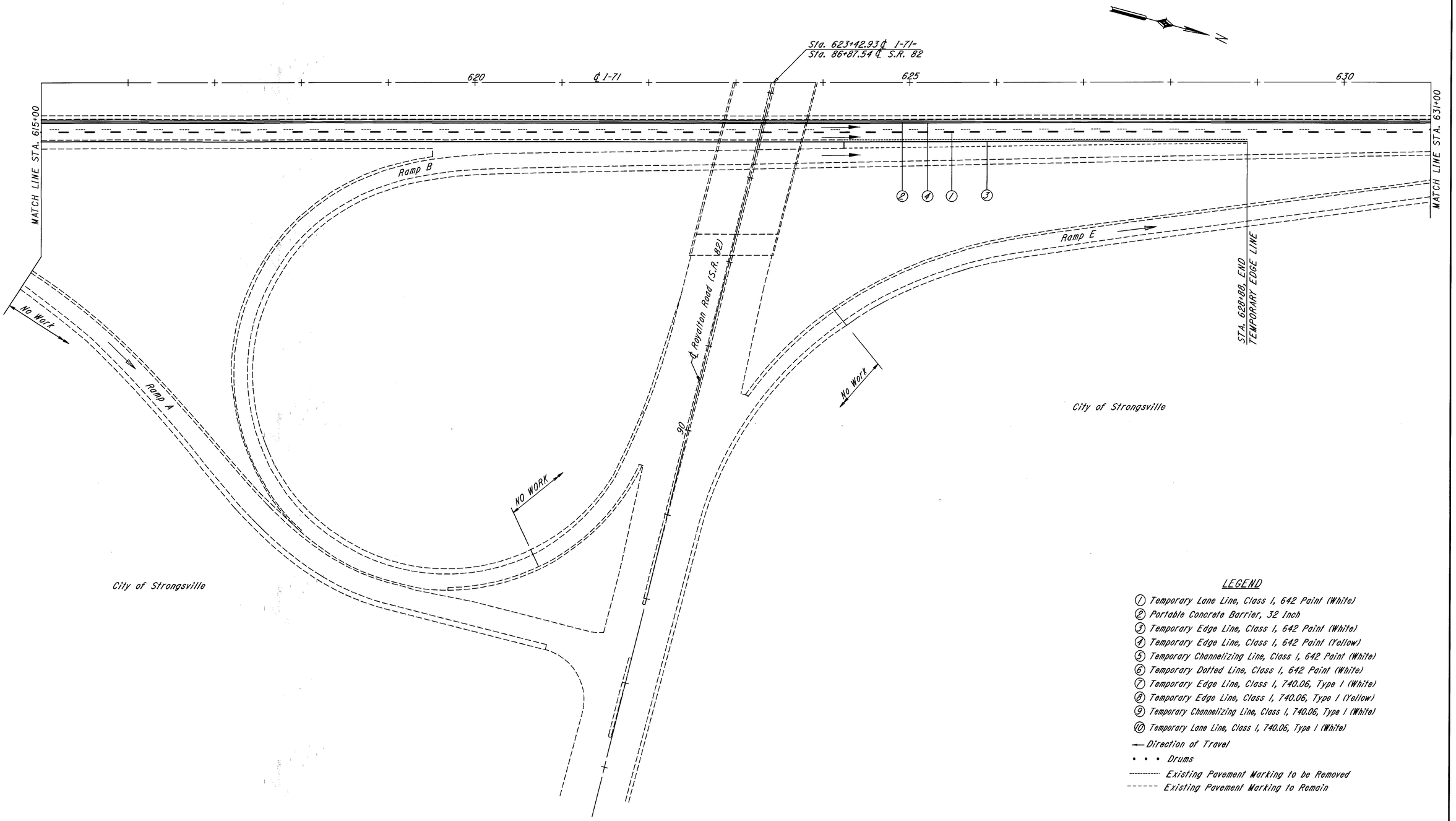

LEGEND

1. Temporary Lane Line, Class I, 642 Paint (White)
2. Portable Concrete Barrier, 32 Inch
3. Temporary Edge Line, Class I, 642 Paint (White)
4. Temporary Edge Line, Class I, 642 Paint (Yellow)
5. Temporary Channelizing Line, Class I, 642 Paint (White)
6. Temporary Dotted Line, Class I, 642 Paint (White)
7. Temporary Edge Line, Class I, 740.06, Type I (White)
8. Temporary Edge Line, Class I, 740.06, Type I (Yellow)
9. Temporary Channelizing Line, Class I, 740.06, Type I (White)
10. Temporary Lane Line, Class I, 740.06, Type I (White)

—→ Direction of Travel

• • • Drums

---------- Existing Pavement Marking to be Removed

------ Existing Pavement Marking to Remain

MAINTENANCE OF TRAFFIC PLAN STA. 615+00 TO STA. 631+00 - PHASE I

PLOTTED BY:jgrmovse
PLOTTED:03-AUG-1998 07:37
307MT07.DGN
PLOTTED FROM:pid08459b.dgn
307MT07.DWG VAB 12/15/94

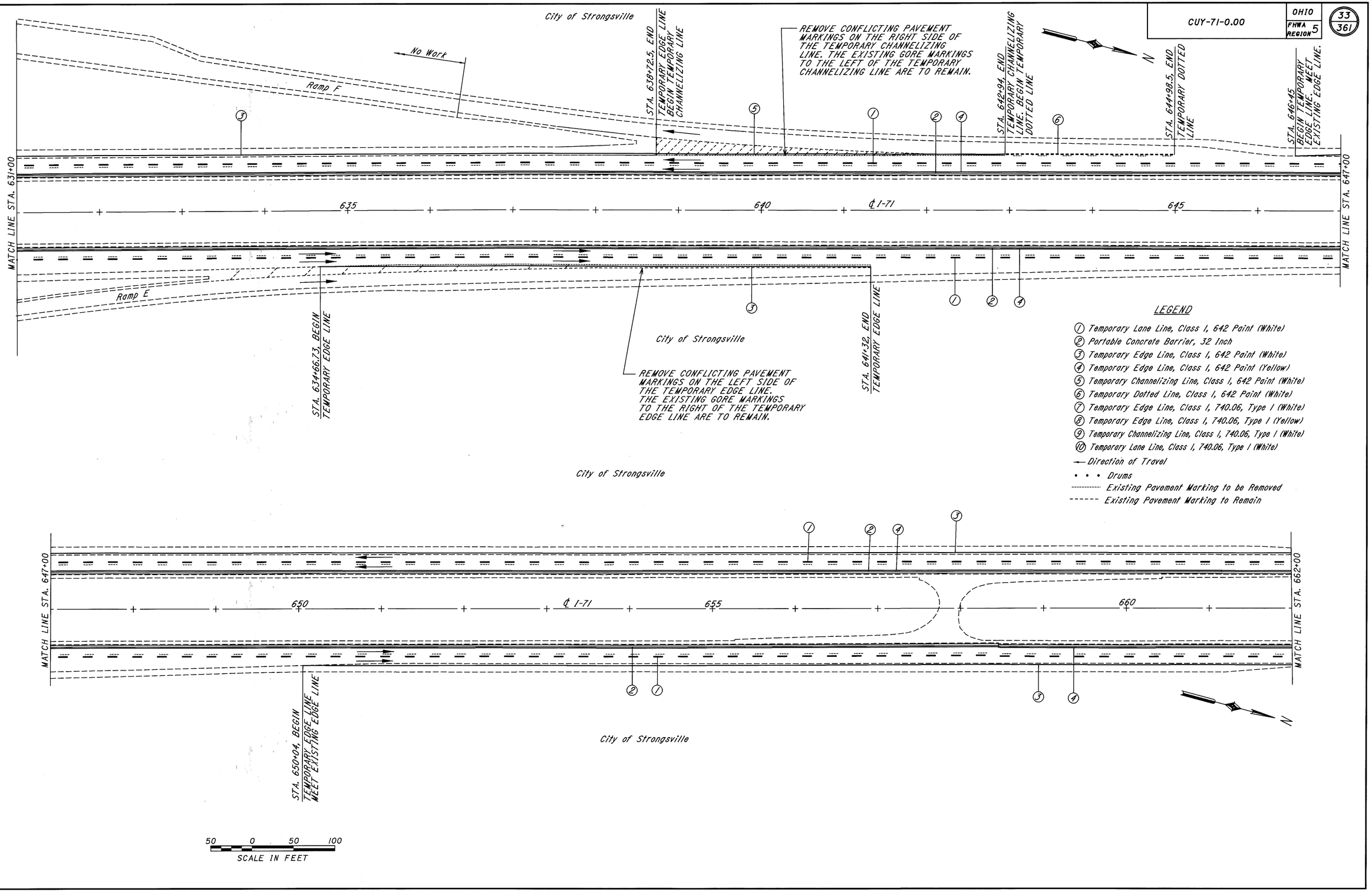

MAINTENANCE OF TRAFFIC PLAN STA. 631+00 TO STA. 662+00 - PHASE I

PLOT SUBMITTED:03-AUG-1998 07:38
307MT08.DGN
PLOTTED BY: jgrmovse
PLOTTED FROM: d08459bpid08459bdgnB307mt08.dgn
PLOTTED ON: Mon Aug 03 07:38:55 1998
PLOTTED BY: jgrmovse
PLOTTED FROM: d08459bpid08459bdgnB307mt08.dgn
PLOTTED ON: Mon Aug 03 07:38:55 1998
I:\307MT08.DWG VMB 10/15/94

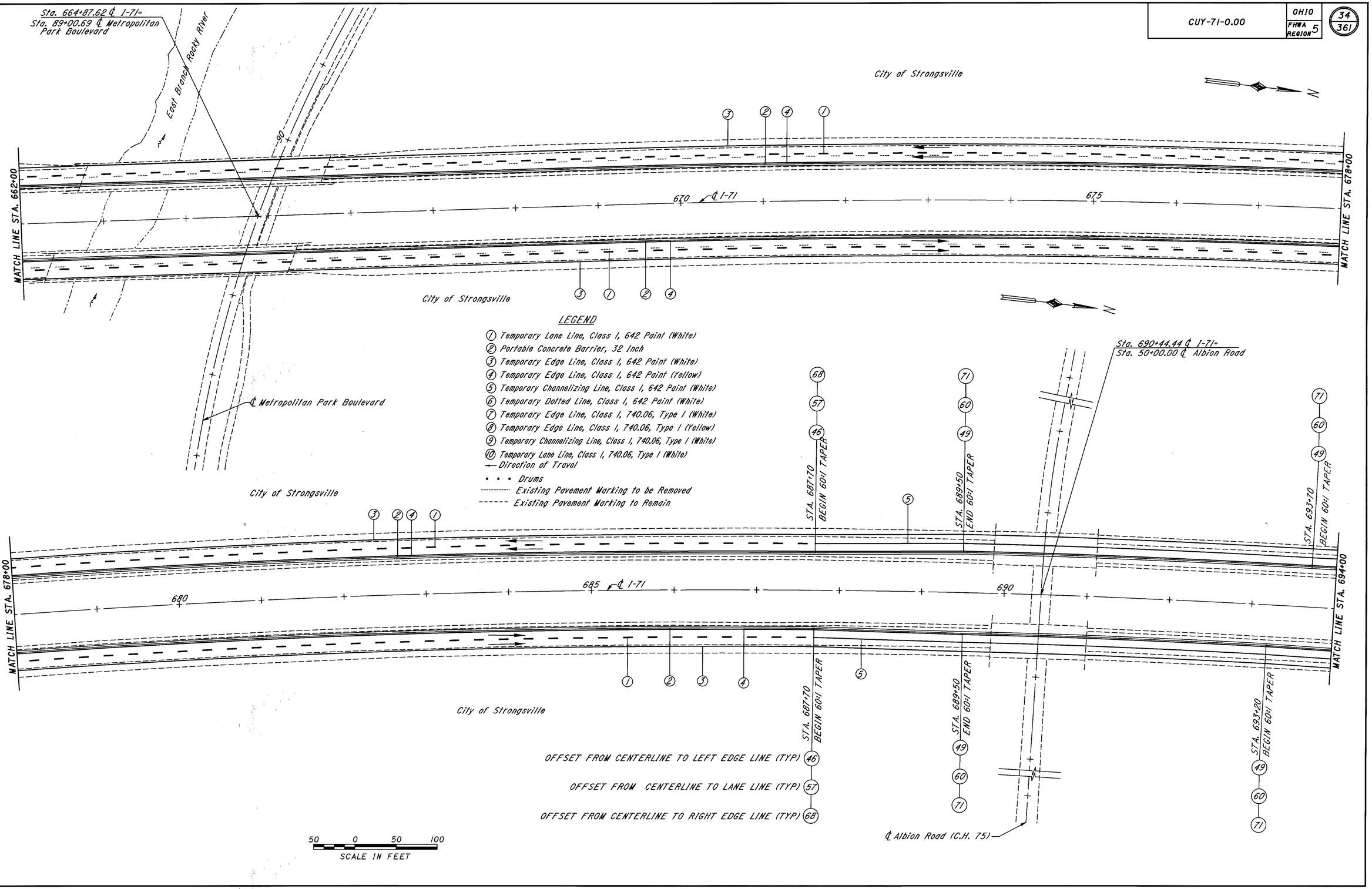

MAINTENANCE OF TRAFFIC PLAN STA. 662+00 TO STA. 694+00 - PHASE I

PLOT SUBMITTED:03-AUG-1998 07:39
307MT09.DGN
PLOTTED BY:jgrmovse
PLOTTED:Rover:sbefore:sberpid08459@dgn@307mt09.dgn
E307MT09.DWG1 VWB 12/15/94

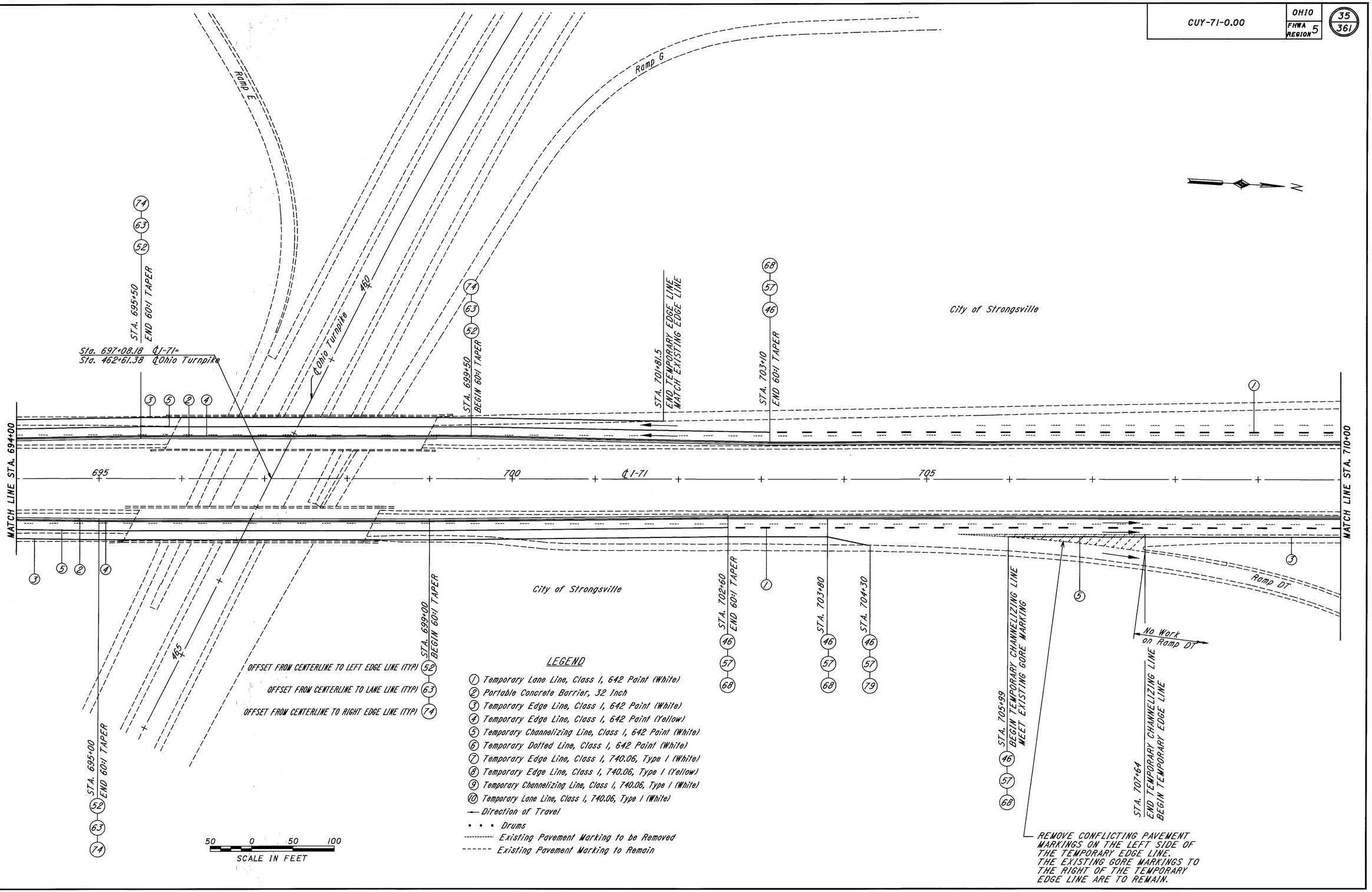

MAINTENANCE OF TRAFFIC PLAN STA. 694+00 TO STA. 710+00 - PHASE I

PLOT SUBMITTED:03-AUG-1998 07:40
307MT10.DGN
PLOTTED BY:jgrmoyse
PLOTTED:Fri Aug 08 1998 07:40 jgrmoyse
307mt10.dgn

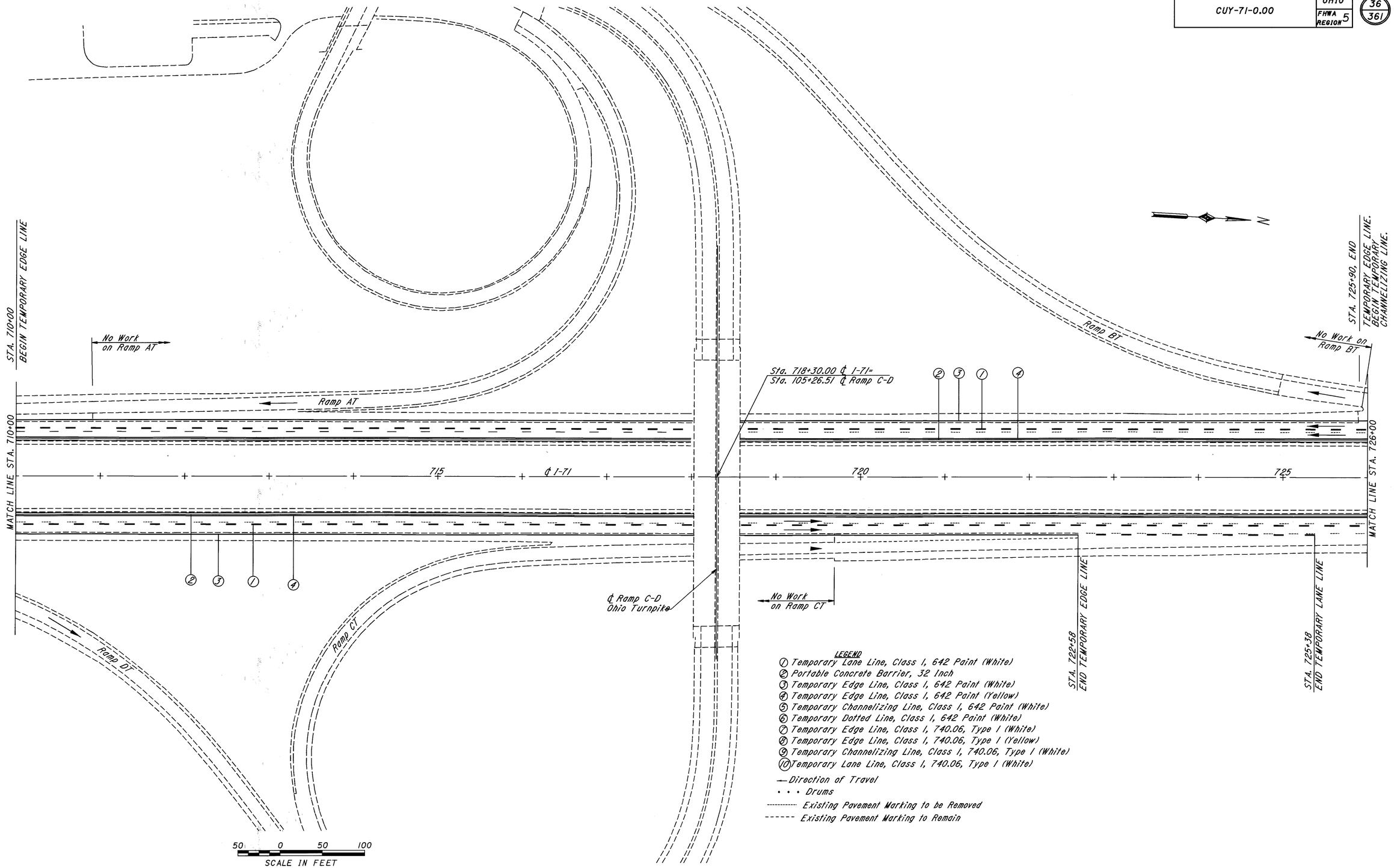

LEGEND

1. Temporary Lane Line, Class I, 642 Paint (White)
2. Portable Concrete Barrier, 32 Inch
3. Temporary Edge Line, Class I, 642 Paint (White)
4. Temporary Edge Line, Class I, 642 Paint (Yellow)
5. Temporary Channelizing Line, Class I, 642 Paint (White)
6. Temporary Dotted Line, Class I, 642 Paint (White)
7. Temporary Edge Line, Class I, 740.06, Type I (White)
8. Temporary Edge Line, Class I, 740.06, Type I (Yellow)
9. Temporary Channelizing Line, Class I, 740.06, Type I (White)
10. Temporary Lane Line, Class I, 740.06, Type I (White)

— Direction of Travel
• • • Drums
---------- Existing Pavement Marking to be Removed
------ Existing Pavement Marking to Remain

MAINTENANCE OF TRAFFIC PLAN STA. 710+00 TO STA. 726+00 - PHASE I

PLOT SUBMITTED:03-AUG-1998 07:41
307MT11.DGN
PLOTTED BY:jgrmovse
PLOTTED:Fri Aug 07 08:45:58 1998
I:\307MT11.DWG\ VMB 12/15/94

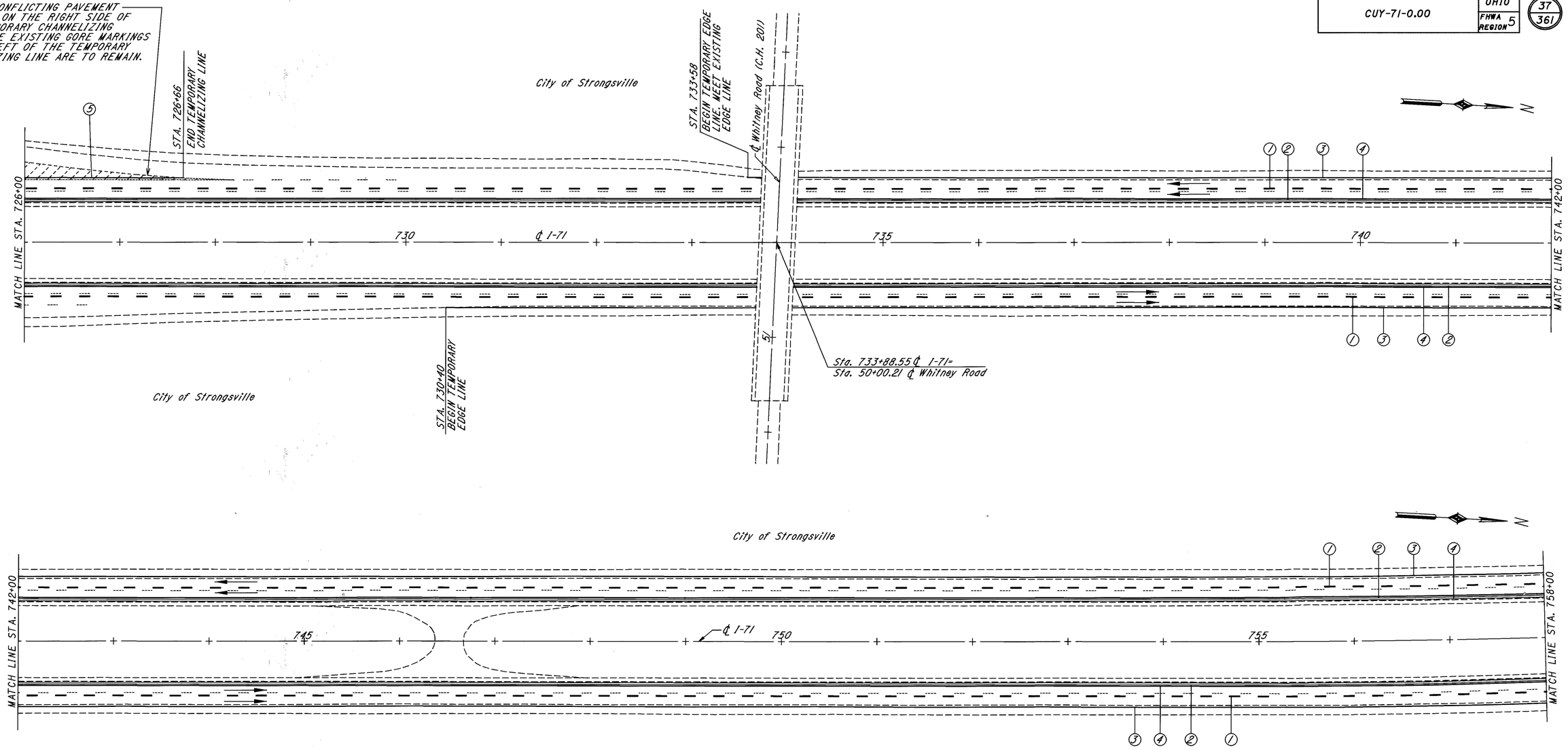

City of Strongsville

50 0 50 100
SCALE IN FEET

LEGEND

1. Temporary Lane Line, Class I, 642 Paint (White)
2. Portable Concrete Barrier, 32 Inch
3. Temporary Edge Line, Class I, 642 Paint (White)
4. Temporary Edge Line, Class I, 642 Paint (Yellow)
5. Temporary Channelizing Line, Class I, 642 Paint (White)
6. Temporary Dotted Line, Class I, 642 Paint (White)
7. Temporary Edge Line, Class I, 740.06, Type I (White)
8. Temporary Edge Line, Class I, 740.06, Type I (Yellow)
9. Temporary Channelizing Line, Class I, 740.06, Type I (White)
10. Temporary Lane Line, Class I, 740.06, Type I (White)

→ Direction of Travel
• • • Drums
---------- Existing Pavement Marking to be Removed
------ Existing Pavement Marking to Remain

MAINTENANCE OF TRAFFIC PLAN STA. 726+00 TO STA. 758+00 - PHASE I

PLOT SUBMITTED:03-AUG-1998 07:45
307MT12.DGN
PLOTTED BY: jgrmoyse
PLOTTED IN: Beforsber
I:\307MT12.DWG VMB 12/15/94

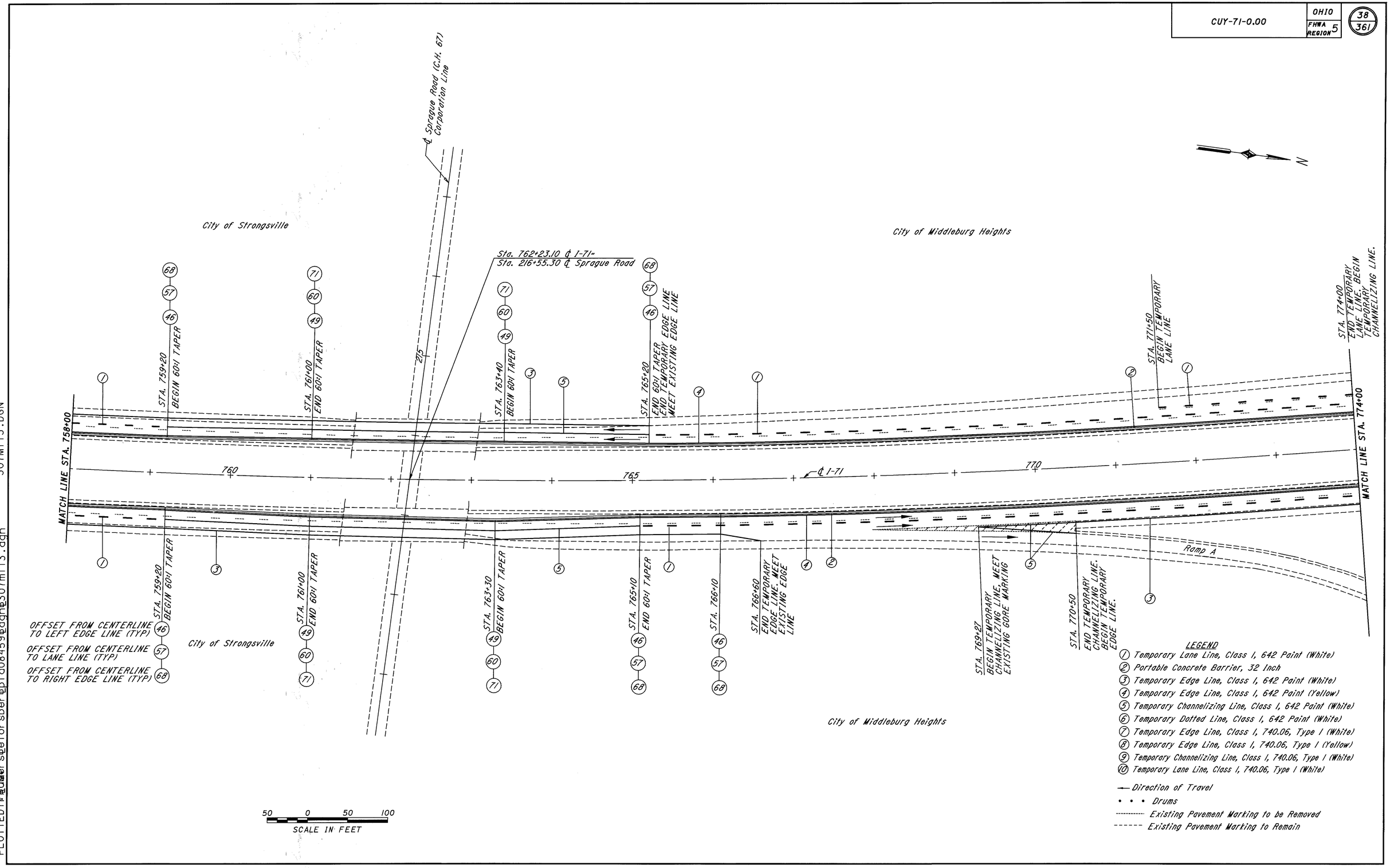

MAINTENANCE OF TRAFFIC PLAN STA. 758+00 TO STA. 774+00 - PHASE I

PLOT SUBMITTED:03-AUG-1998 07:46
307MT13.DGN
PLOTTED BY: jgrmovse
PLOTTED: FROM: rsberpid08459dgn307mt13.dgn
L307MT13.DWG VNB 12/15/94

PLOT SUBMITTED:03-AUG-1998 07:47
307MT14.DGN
L307MT14.DWG VMB 10/15/94
PLOTTED BY: jgrmovse
PLOTTED: Friday, August 7, 1998 at 3:08pm
PLOTTED FROM: c:\projects\ohio\cuy71\307mt14.dgn

CALCULATION FOR ITEM 615 - TEMPORARY PAVEMENT, CLASS A

STA. 85+81.32 - STA. 82+83.43 = 297.89 LIN.FT.
WIDTH OF TEMPORARY PAVEMENT AREA = 21.0 LIN.FT.
AREA OF TEMPORARY PAVEMENT
= (297.89'*21.0')/9 = 695 SQ.YD. USE 700 SQ. YD.
QUANTITY CARRIED TO GENERAL NOTE SHEET 22D.

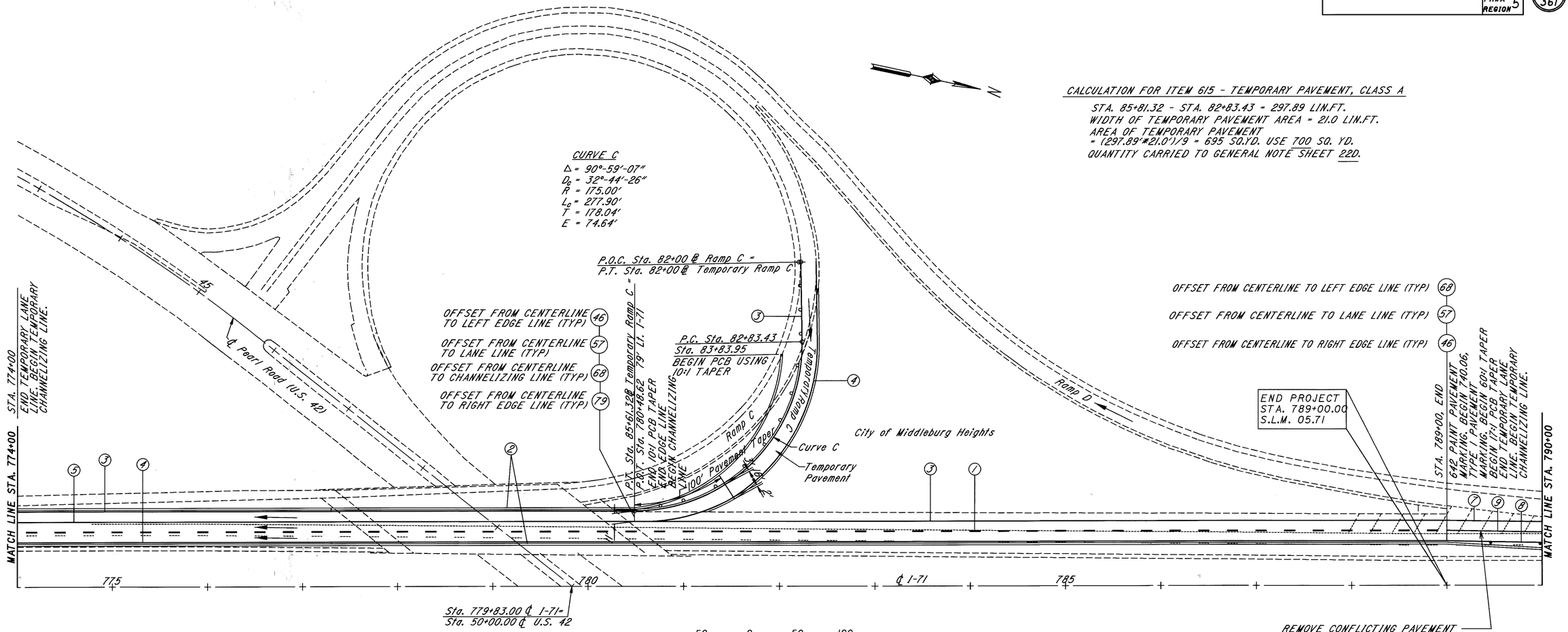

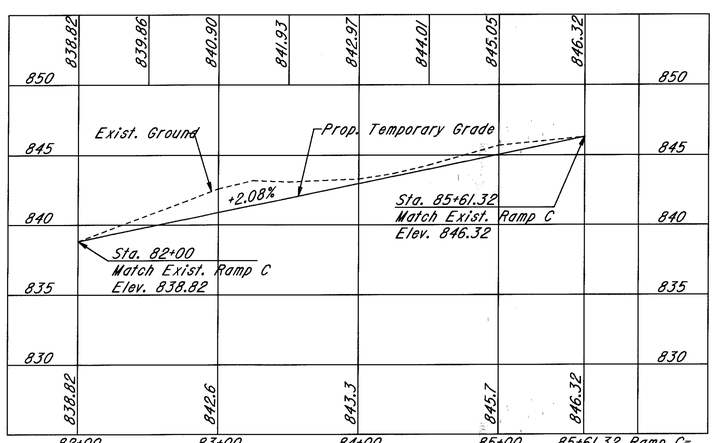

PROFILE: TEMPORARY RAMP C

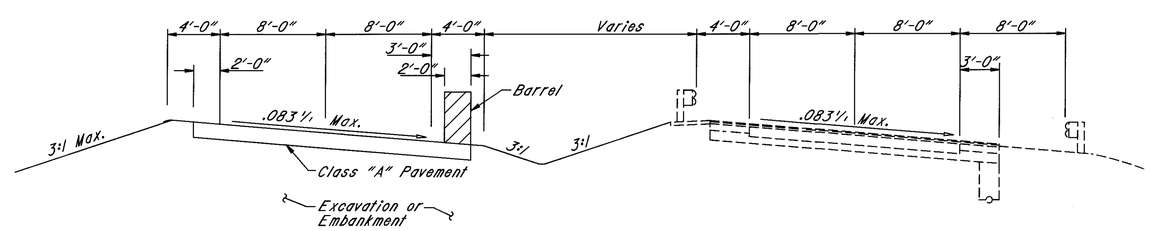

TEMPORARY PAVEMENT
TYPICAL SECTION
No Scale

LEGEND

1. Temporary Lane Line, Class I, 642 Paint (White)
2. Portable Concrete Barrier, 32 Inch
3. Temporary Edge Line, Class I, 642 Paint (White)
4. Temporary Edge Line, Class I, 642 Paint (Yellow)
5. Temporary Channelizing Line, Class I, 642 Paint (White)
6. Temporary Dotted Line, Class I, 642 Paint (White)
7. Temporary Edge Line, Class I, 740.06, Type I (White)
8. Temporary Edge Line, Class I, 740.06, Type I (Yellow)
9. Temporary Channelizing Line, Class I, 740.06, Type I (White)
10. Temporary Lane Line, Class I, 740.06, Type I (White)

→ Direction of Travel
• • • Drums
---------- Existing Pavement Marking to be Removed
------ Existing Pavement Marking to Remain

MAINTENANCE OF TRAFFIC PLAN STA. 774+00 TO STA. 790+00 WEST - PHASE I

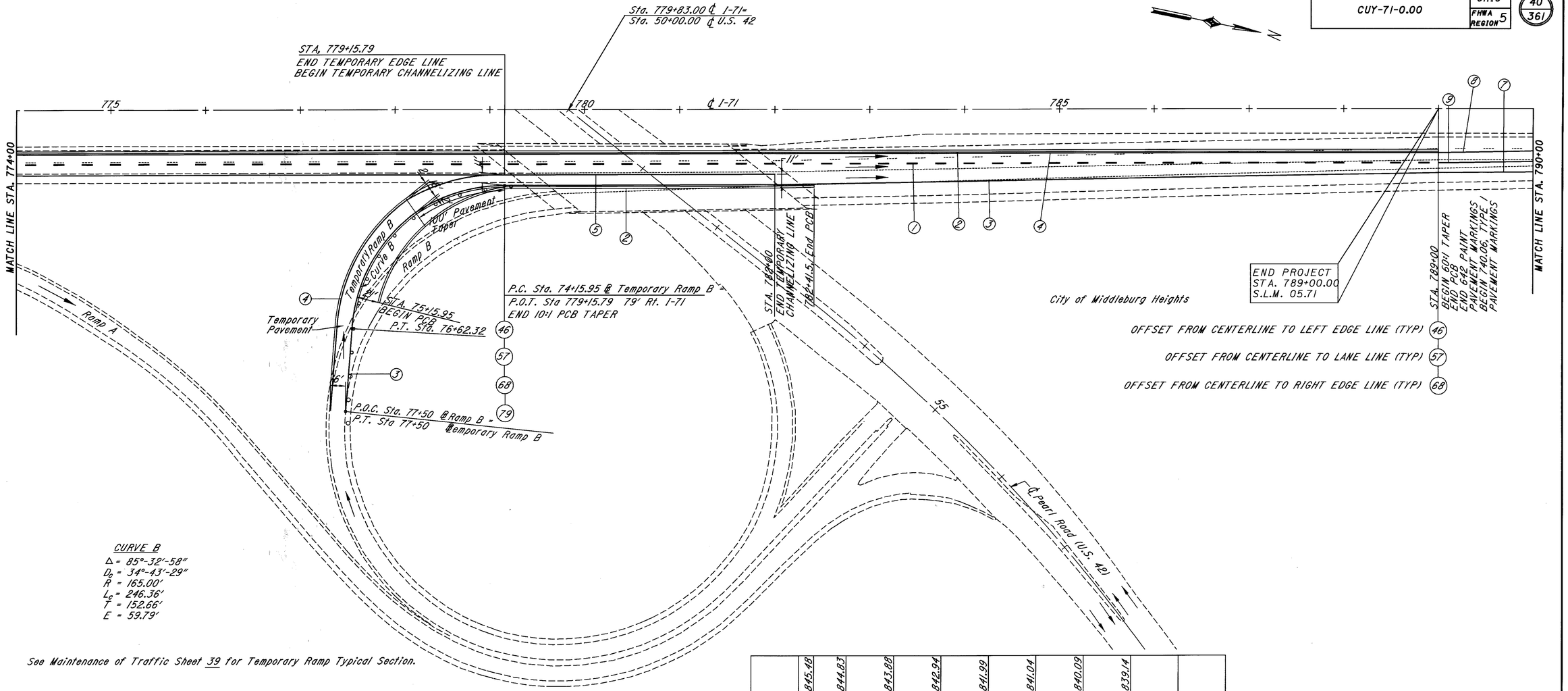

CURVE B
Δ = 85°-32'-58"
D_c = 34°-43'-29"
R = 165.00'
L_c = 246.36'
T = 152.66'
E = 59.79'

See Maintenance of Traffic Sheet 39 for Temporary Ramp Typical Section.

CALCULATION FOR ITEM 615 - TEMPORARY PAVEMENT, CLASS A
STA. 74+35.95 - STA. 77+00 = 264.05 LIN.FT.
WIDTH OF TEMPORARY PAVEMENT AREA = 21.0 LIN.FT.
AREA OF TEMPORARY PAVEMENT
= (264.05'*21.0')/9 = 616 SQ.YD. USE 700 SQ. YD.
QUANTITY CARRIED TO GENERAL NOTE SHEET 22D.

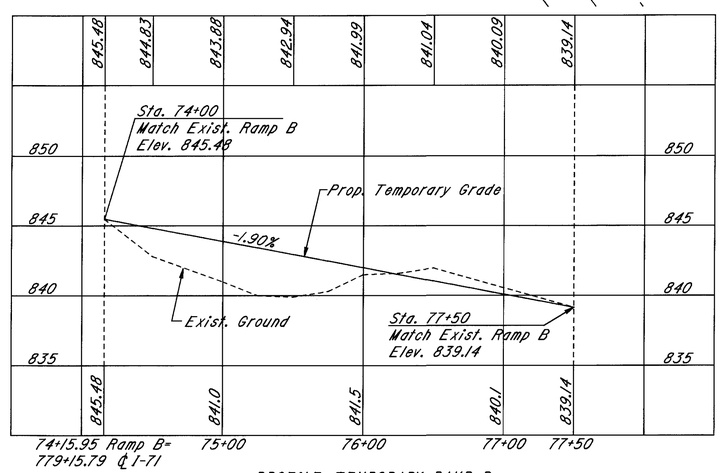

PROFILE: TEMPORARY RAMP B

LEGEND
1. Temporary Lane Line, Class I, 642 Paint (White)
2. Portable Concrete Barrier, 32 Inch
3. Temporary Edge Line, Class I, 642 Paint (White)
4. Temporary Edge Line, Class I, 642 Paint (Yellow)
5. Temporary Channelizing Line, Class I, 642 Paint (White)
6. Temporary Dotted Line, Class I, 642 Paint (White)
7. Temporary Edge Line, Class I, 740.06, Type I (White)
8. Temporary Edge Line, Class I, 740.06, Type I (Yellow)
9. Temporary Channelizing Line, Class I, 740.06, Type I (White)
10. Temporary Lane Line, Class I, 740.06, Type I (White)

→ Direction of Travel
• • • Drums
---------- Existing Pavement Marking to be Removed
------ Existing Pavement Marking to Remain

50 0 50 100
SCALE IN FEET

MAINTENANCE OF TRAFFIC PLAN STA. 774+00 TO STA. 790+00 EAST - PHASE I

PLOTTED BY: jgrmovse
PLOTTED: 03-AUG-1998 07:48
307MT15.DGN
PLOT SUBMITTED

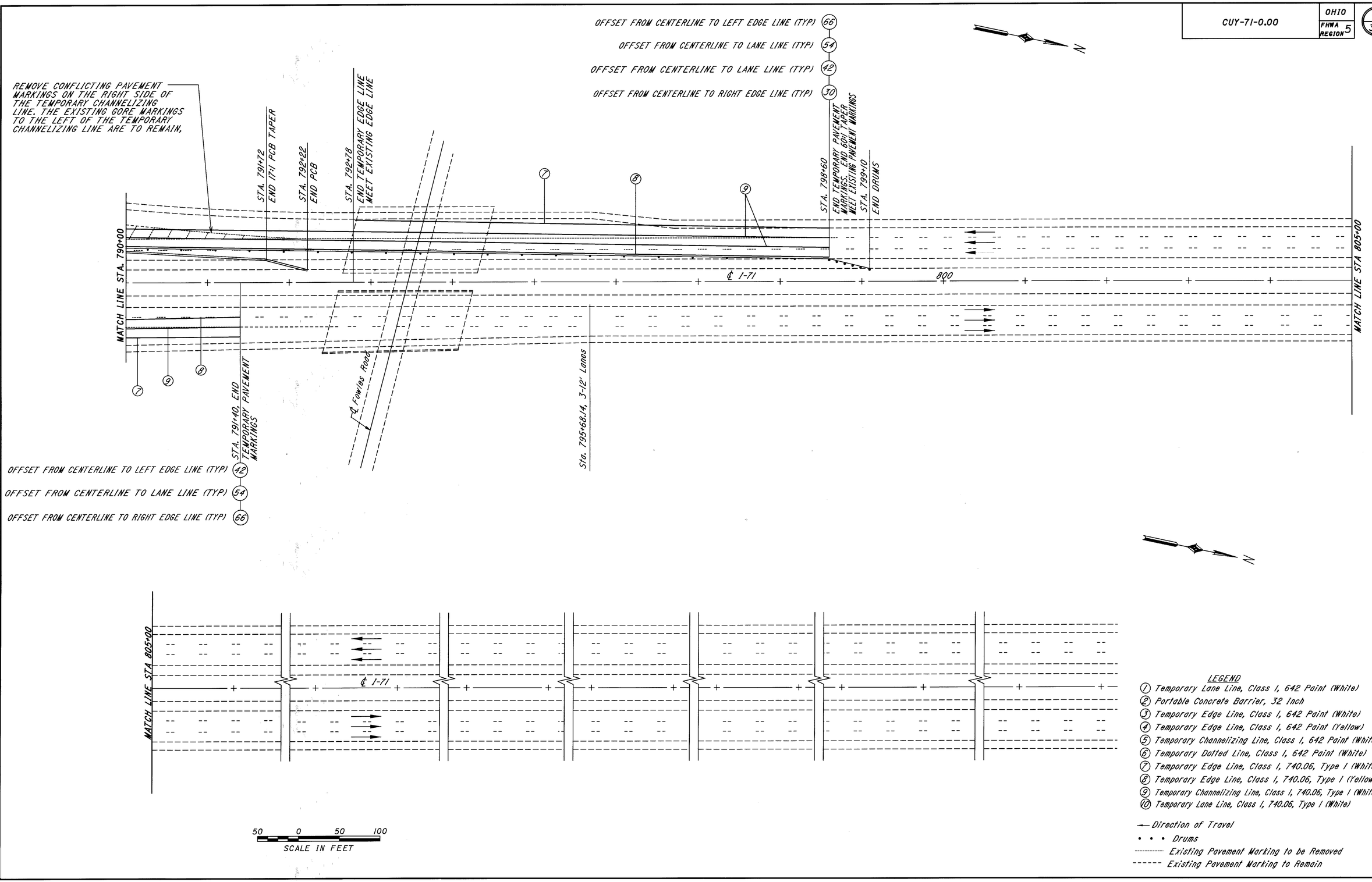

LEGEND

1. Temporary Lane Line, Class I, 642 Paint (White)
2. Portable Concrete Barrier, 32 Inch
3. Temporary Edge Line, Class I, 642 Paint (White)
4. Temporary Edge Line, Class I, 642 Paint (Yellow)
5. Temporary Channelizing Line, Class I, 642 Paint (White)
6. Temporary Dotted Line, Class I, 642 Paint (White)
7. Temporary Edge Line, Class I, 740.06, Type I (White)
8. Temporary Edge Line, Class I, 740.06, Type I (Yellow)
9. Temporary Channelizing Line, Class I, 740.06, Type I (White)
10. Temporary Lane Line, Class I, 740.06, Type I (White)

—— Direction of Travel
• • • Drums
---------- Existing Pavement Marking to be Removed
------ Existing Pavement Marking to Remain

MAINTENANCE OF TRAFFIC PLAN STA. 790+00 TO STA. 831+30 - PHASE I

PLOT SUBMITTED:03-AUG-1998 07:50
307MT16.DGN
PLOTTED BY:jgrmovse
PLOTTED:Mon,Aug,03,1998,07:50:45,jgrmovse,bpid08459,bdgnb307mt16.dgn

PLOT SUBMITTED:03-AUG-1998 07:51
307MT01.DGN
PLOTTED BY:jgrmovse
PLOTTED:Friday, December 18, 1998 07:51:58 AM
PLOTTED FROM:/usr/users/jgrmovse/307mt01.dgn
PLOTTED BY:jgrmovse
PLOTTED:Friday, December 18, 1998 07:51:58 AM
PLOTTED FROM:/usr/users/jgrmovse/307mt01.dgn
307MT01.DWG1 VAB 12/15/94

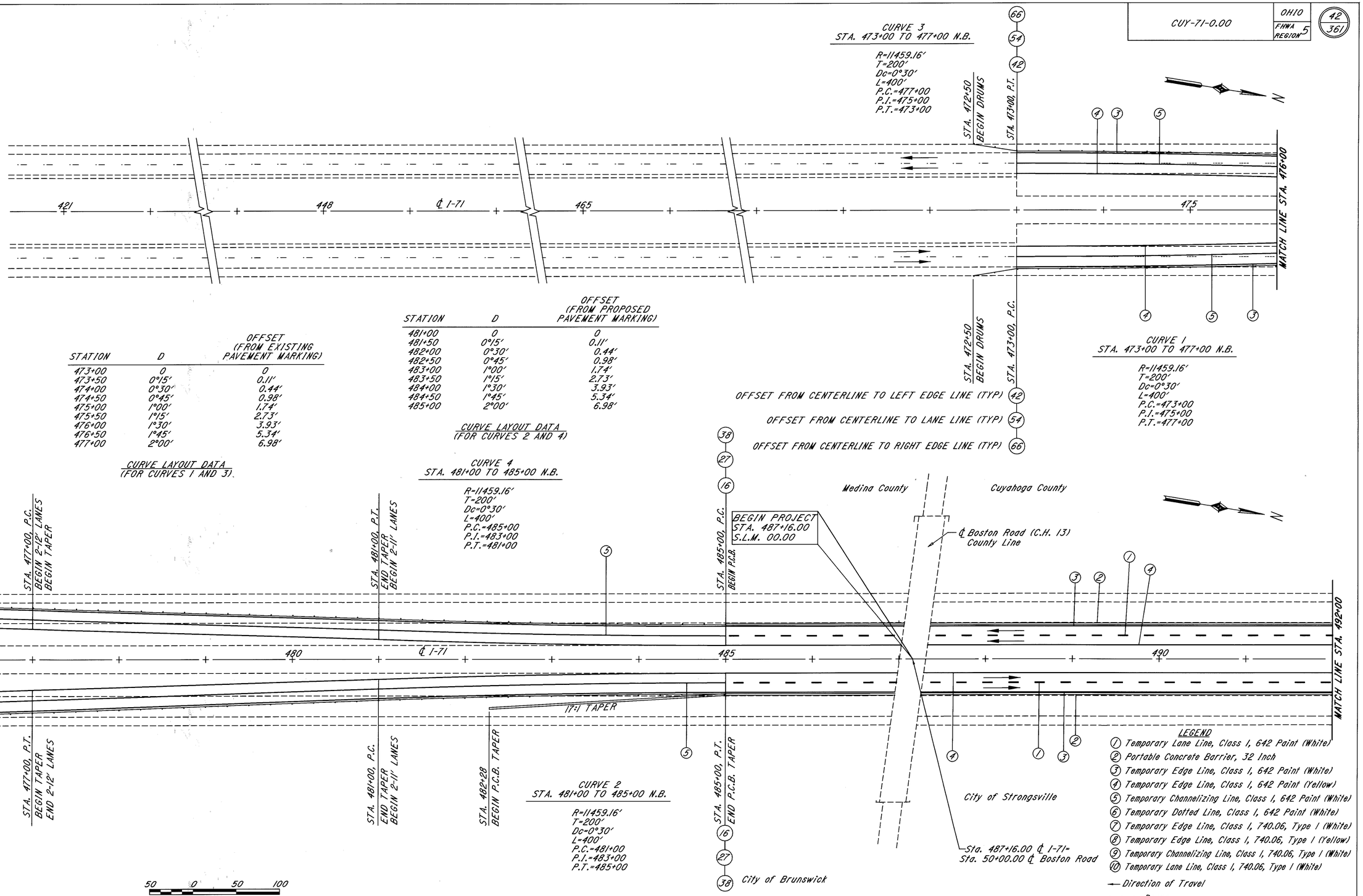

STATION	D	OFFSET (FROM EXISTING PAVEMENT MARKING)
473+00	0	0
473+50	0°15'	0.11'
474+00	0°30'	0.44'
474+50	0°45'	0.98'
475+00	1°00'	1.74'
475+50	1°15'	2.73'
476+00	1°30'	3.93'
476+50	1°45'	5.34'
477+00	2°00'	6.98'

CURVE LAYOUT DATA
(FOR CURVES 1 AND 3)

STATION	D	OFFSET (FROM PROPOSED PAVEMENT MARKING)
481+00	0	0
481+50	0°15'	0.11'
482+00	0°30'	0.44'
482+50	0°45'	0.98'
483+00	1°00'	1.74'
483+50	1°15'	2.73'
484+00	1°30'	3.93'
484+50	1°45'	5.34'
485+00	2°00'	6.98'

CURVE LAYOUT DATA
(FOR CURVES 2 AND 4)

CURVE 4
STA. 481+00 TO 485+00 N.B.
R=11459.16'
T=200'
Dc=0°30'
L=400'
P.C.=485+00
P.I.=483+00
P.T.=481+00

CURVE 2
STA. 481+00 TO 485+00 N.B.
R=11459.16'
T=200'
Dc=0°30'
L=400'
P.C.=481+00
P.I.=483+00
P.T.=485+00

MAINTENANCE OF TRAFFIC PLAN STA. 431+00 TO STA. 492+00 - PHASE 2

CUY-71-0.00	OHIO FHWA REGION 5	43/361

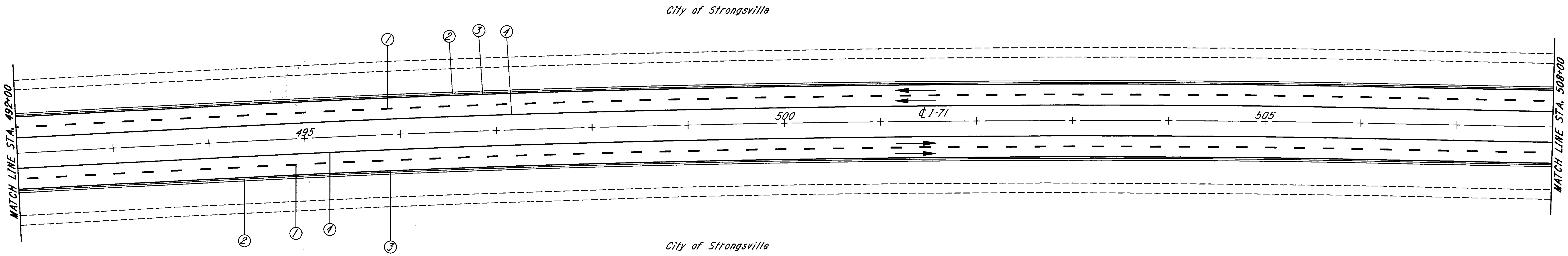

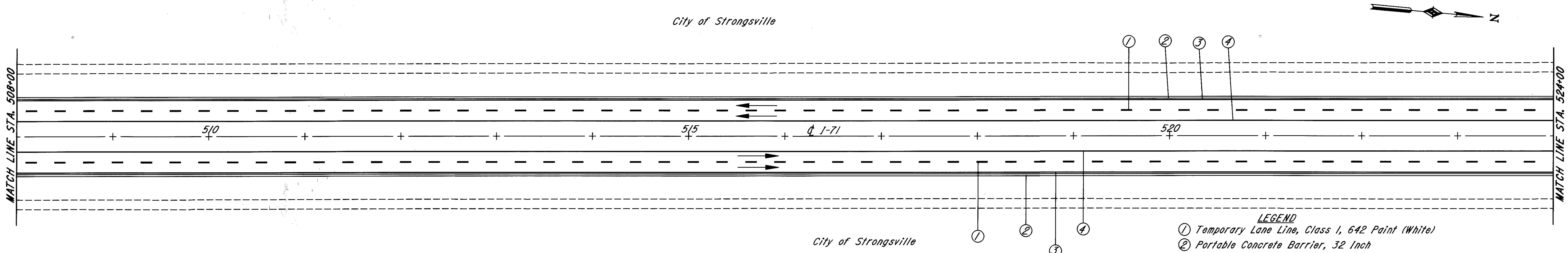

50 0 50 100
SCALE IN FEET

LEGEND

(1) Temporary Lane Line, Class I, 642 Paint (White)
(2) Portable Concrete Barrier, 32 Inch
(3) Temporary Edge Line, Class I, 642 Paint (White)
(4) Temporary Edge Line, Class I, 642 Paint (Yellow)
(5) Temporary Channelizing Line, Class I, 642 Paint (White)
(6) Temporary Dotted Line, Class I, 642 Paint (White)
(7) Temporary Edge Line, Class I, 740.06, Type I (White)
(8) Temporary Edge Line, Class I, 740.06, Type I (Yellow)
(9) Temporary Channelizing Line, Class I, 740.06, Type I (White)
(10) Temporary Channelizing Line, Class I, 740.06, Type I (White)

← Direction of Travel
• • • Drums
---------- Existing Pavement Marking to be Removed
------ Existing Pavement Marking to Remain

MAINTENANCE OF TRAFFIC PLAN STA. 492+00 TO STA. 524+00 - PHASE 2

PLOT SUBMITTED:03-AUG-1998 07:52
307MT02.DGN
PLOTTED BY: jgrmovse
[307MT02.DWG] VMB 12/15/94

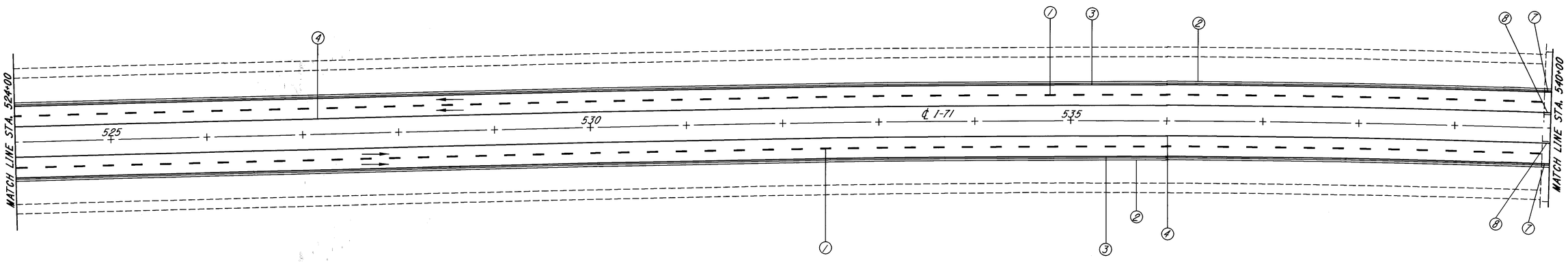

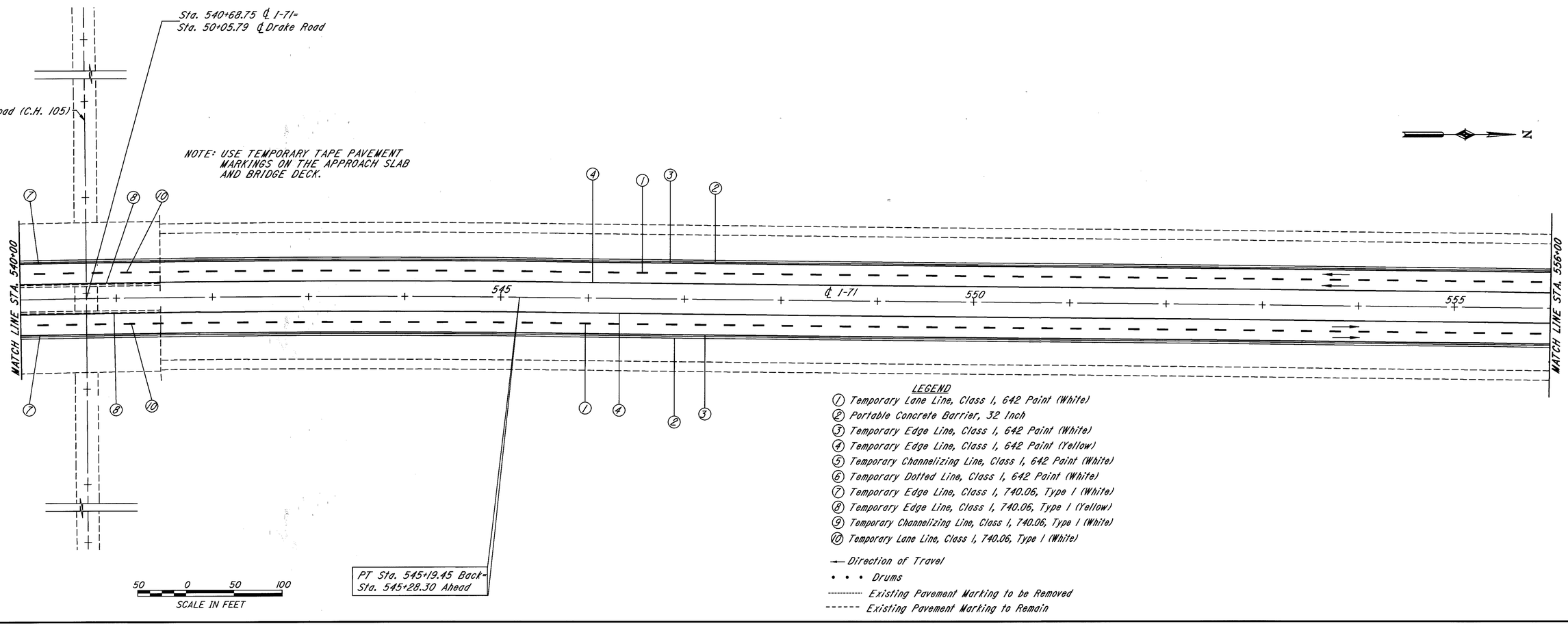

LEGEND

1. Temporary Lane Line, Class I, 642 Paint (White)
2. Portable Concrete Barrier, 32 Inch
3. Temporary Edge Line, Class I, 642 Paint (White)
4. Temporary Edge Line, Class I, 642 Paint (Yellow)
5. Temporary Channelizing Line, Class I, 642 Paint (White)
6. Temporary Dotted Line, Class I, 642 Paint (White)
7. Temporary Edge Line, Class I, 740.06, Type I (White)
8. Temporary Edge Line, Class I, 740.06, Type I (Yellow)
9. Temporary Channelizing Line, Class I, 740.06, Type I (White)
10. Temporary Lane Line, Class I, 740.06, Type I (White)

→ Direction of Travel
• • • Drums
---------- Existing Pavement Marking to be Removed
------ Existing Pavement Marking to Remain

MAINTENANCE OF TRAFFIC PLAN STA. 524+00 TO STA. 556+00 - PHASE 2

PLOT SUBMITTED:03-AUG-1998 07:53
307MT03.DGN
PLOTTED BY:jgrmovse
PLOTTED:Fri Aug 07 07:53:41 1998
C:\DATA\JGRMOV\ VER 10/15/94

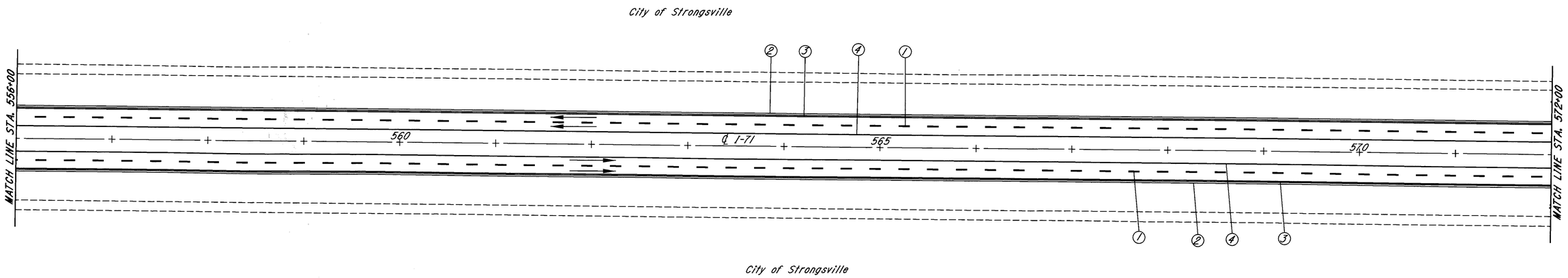

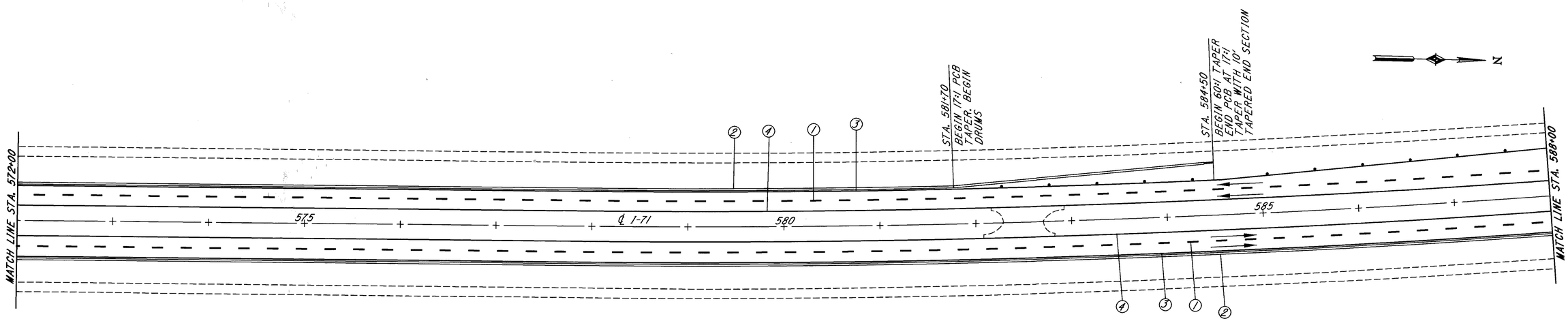

50 0 50 100
SCALE IN FEET

LEGEND

1. Temporary Lane Line, Class I, 642 Paint (White)
2. Portable Concrete Barrier, 32 Inch
3. Temporary Edge Line, Class I, 642 Paint (White)
4. Temporary Edge Line, Class I, 642 Paint (Yellow)
5. Temporary Channelizing Line, Class I, 642 Paint (White)
6. Temporary Dotted Line, Class I, 642 Paint (White)
7. Temporary Edge Line, Class I, 740.06, Type I (White)
8. Temporary Edge Line, Class I, 740.06, Type I (Yellow)
9. Temporary Channelizing Line, Class I, 740.06, Type I (White)
10. Temporary Lane Line, Class I, 740.06, Type I (White)

— Direction of Travel
• • • Drums
--------- Existing Pavement Marking to be Removed
------ Existing Pavement Marking to Remain

MAINTENANCE OF TRAFFIC PLAN STA. 556+00 TO STA. 588+00 - PHASE 2A

PLOTTED BY:jgrmovse
PLOTTED:Fri Oct 23 08:16
PLOTTED:03-AUG-1998 08:16
307MT04.DGN
PLOT SUBMITTED:03-AUG-1998 08:16

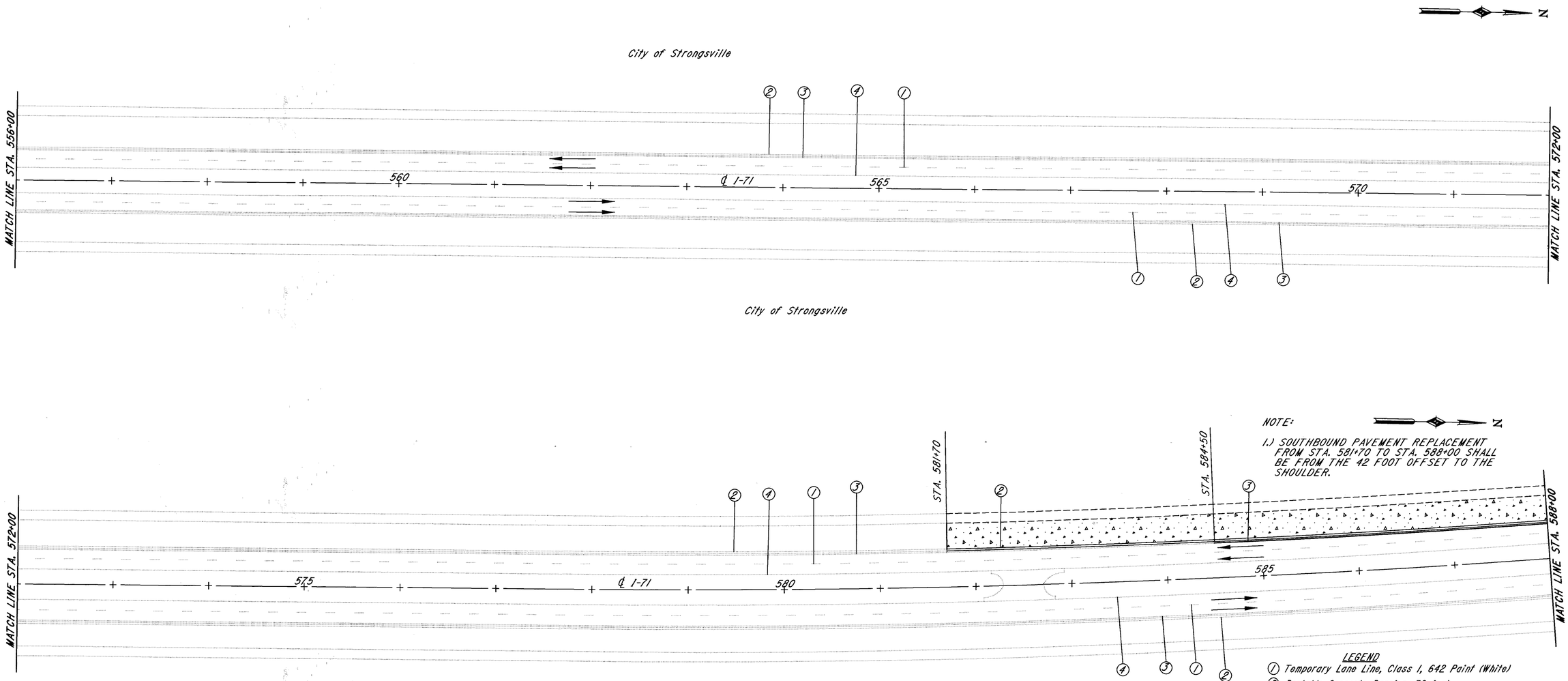

NOTE:

1.) SOUTHBOUND PAVEMENT REPLACEMENT FROM STA. 581+70 TO STA. 588+00 SHALL BE FROM THE 42 FOOT OFFSET TO THE SHOULDER.

LEGEND

1. Temporary Lane Line, Class I, 642 Paint (White)
2. Portable Concrete Barrier, 32 Inch
3. Temporary Edge Line, Class I, 642 Paint (White)
4. Temporary Edge Line, Class I, 642 Paint (Yellow)
5. Temporary Channelizing Line, Class I, 642 Paint (White)
6. Temporary Dotted Line, Class I, 642 Paint (White)
7. Temporary Edge Line, Class I, 740.06, Type I (White)
8. Temporary Edge Line, Class I, 740.06, Type I (Yellow)
9. Temporary Channelizing Line, Class I, 740.06, Type I (White)
10. Temporary Lane Line, Class I, 740.06, Type I (White)

→ Direction of Travel

• • • Drums

--------- Existing Pavement Marking to be Removed

------ Existing Pavement Marking to Remain

Temporary Pavement Marking Placed Under Phase 2 & 2A, to Remain

50 0 50 100
SCALE IN FEET

-AREA OF REPLACEMENT THAT MUST BE PERFORMED UNDER THIS MOT PHASE

MAINTENANCE OF TRAFFIC PLAN STA. 556+00 TO STA. 588+00 - PHASE 2B

PLOT SUBMITTED:03-AUG-1998 08:18
307MT04.DGN
PLOTTED BY:jgrmovse
PLOTTED:

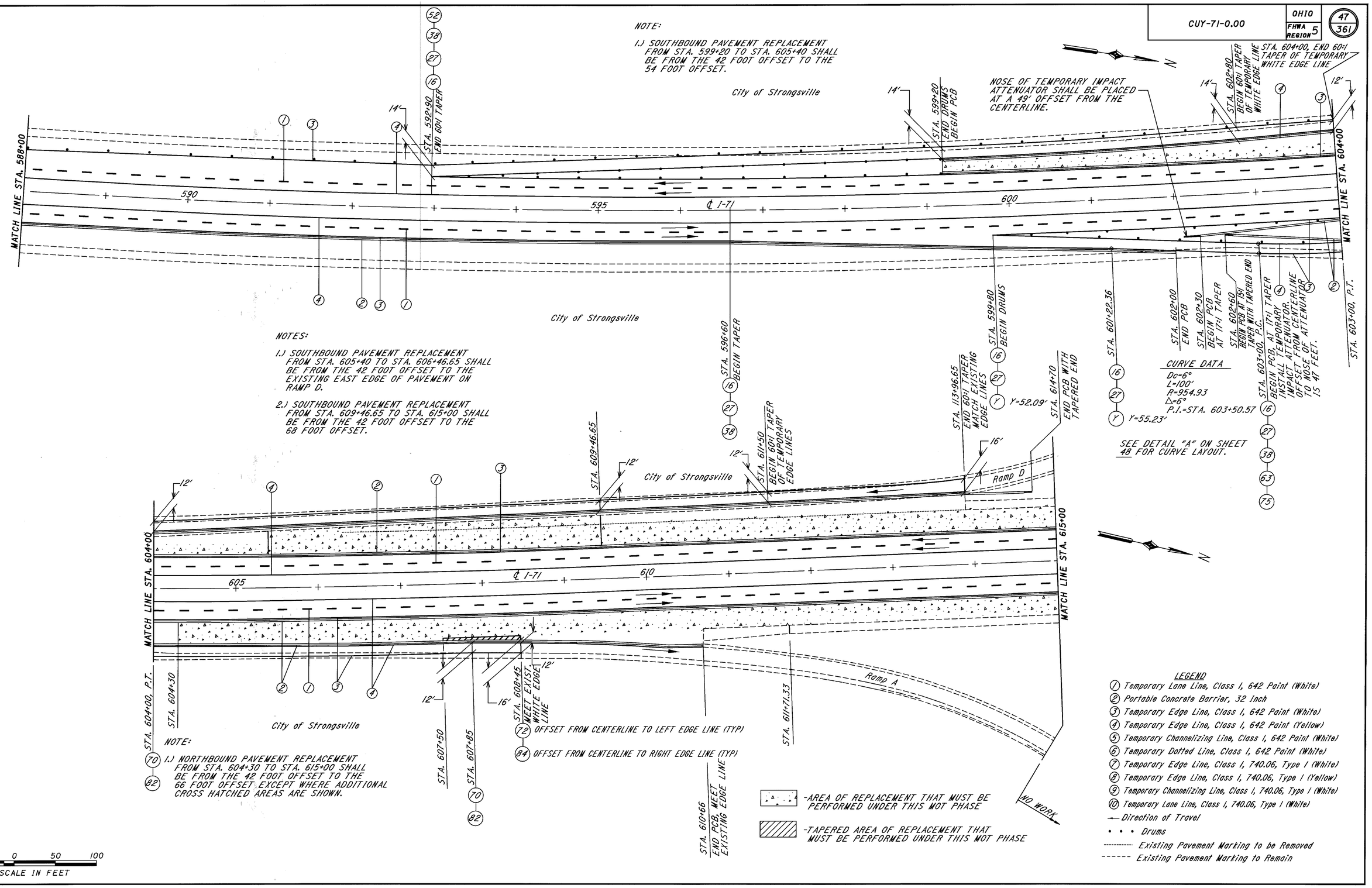

MAINTENANCE OF TRAFFIC PLAN STA. 588+00 TO STA. 615+00 - PHASE 2A

PLOT SUBMITTED:03-AUG-1998 08:19
307MT05.DGN
PLOTTED BY: jgrmovse
PLOTTED: 12/15/94
I307MT05.DWG1 VWB 12/15/94

NOTES:

1.) SOUTHBOUND PAVEMENT REPLACEMENT FROM STA. 588+00 TO STA. 599+20 SHALL BE FROM THE 42 FOOT OFFSET TO THE SHOULDER.
2.) SOUTHBOUND PAVEMENT REPLACEMENT FROM STA. 599+20 TO STA. 605+40 SHALL BE FROM THE 54 FOOT OFFSET TO THE SHOULDER.

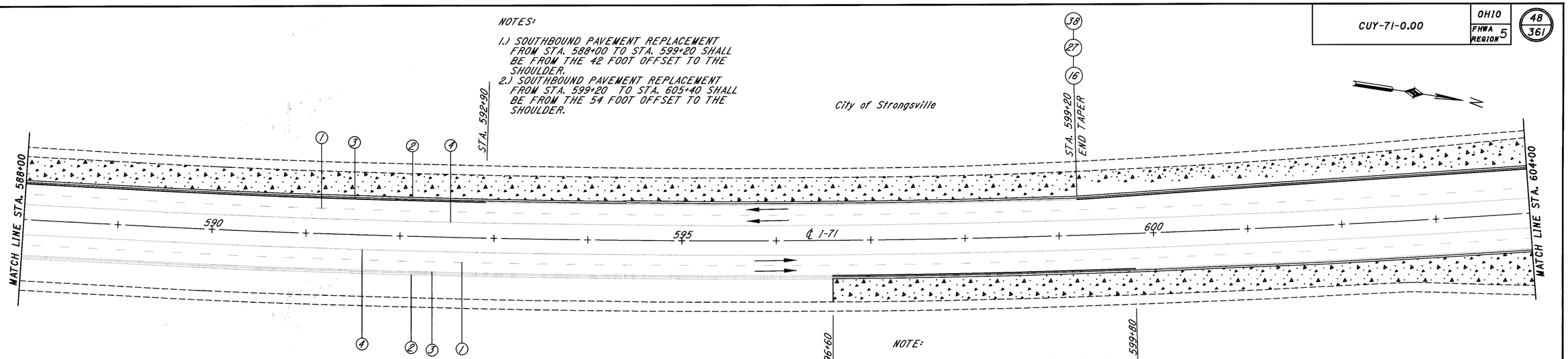

NOTE:

1.) NORTHBOUND PAVEMENT REPLACEMENT FROM STA. 596+60 TO STA. 604+30 SHALL BE FROM THE 42 FOOT OFFSET TO THE SHOULDER.

OFFSET FROM CENTERLINE TO RIGHT RAMP EDGE LINE (TYP) (50)
OFFSET FROM CENTERLINE TO RIGHT EDGE LINE (TYP) AND LEFT RAMP EDGE LINE (38)
OFFSET FROM CENTERLINE TO LANE LINE (TYP) (27)
OFFSET FROM CENTERLINE TO LEFT EDGE LINE (TYP) (16)

NOTE:

1.) SOUTHBOUND PAVEMENT REPLACEMENT FROM STA. 605+40 TO STA. 609+46.65 SHALL BE FROM THE EXISTING EAST EDGE LINE OF RAMP D TO THE SHOULDER.

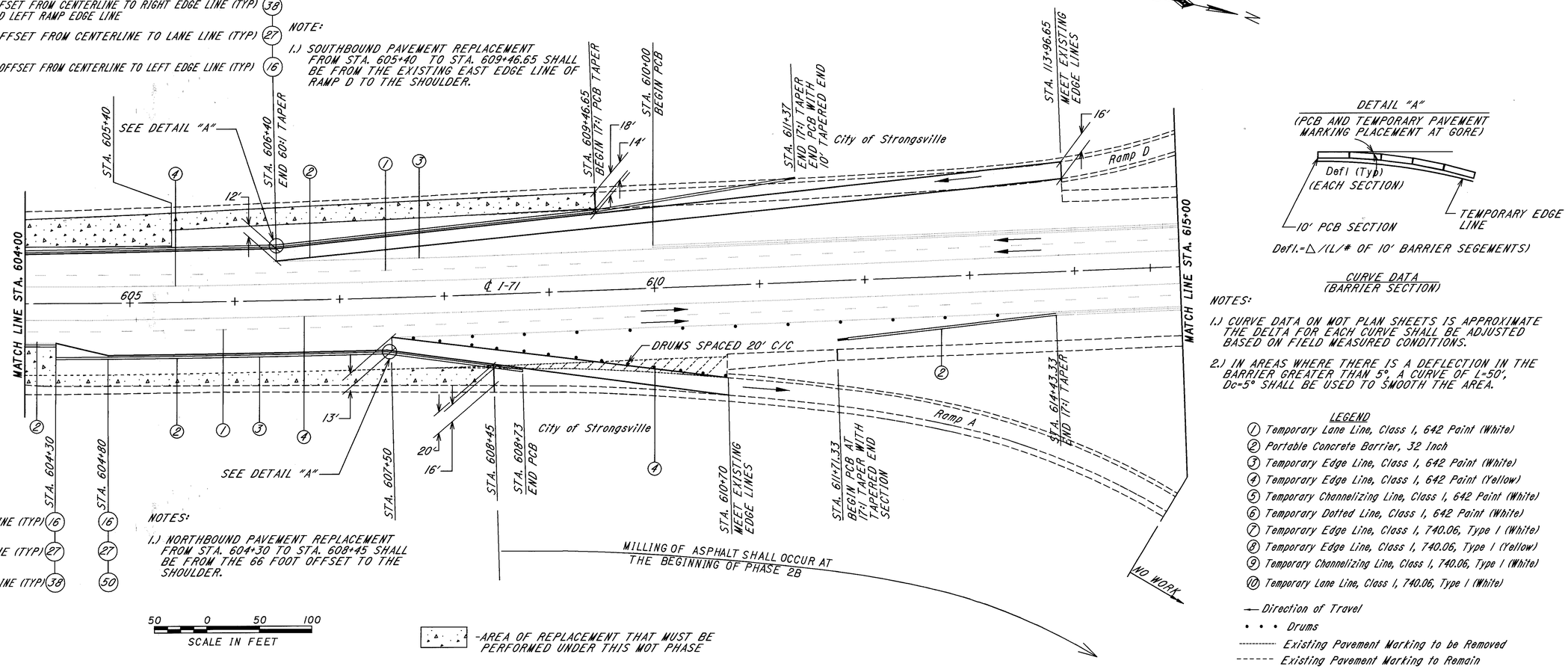

NOTES:

1.) NORTHBOUND PAVEMENT REPLACEMENT FROM STA. 604+30 TO STA. 608+45 SHALL BE FROM THE 66 FOOT OFFSET TO THE SHOULDER.

50 0 50 100
SCALE IN FEET

-AREA OF REPLACEMENT THAT MUST BE PERFORMED UNDER THIS MOT PHASE

DETAIL "A"
(PCB AND TEMPORARY PAVEMENT MARKING PLACEMENT AT GORE)

Defl.=Δ/(L/#) OF 10' BARRIER SEGEMENTS)

CURVE DATA
(BARRIER SECTION)

NOTES:

1.) CURVE DATA ON MOT PLAN SHEETS IS APPROXIMATE THE DELTA FOR EACH CURVE SHALL BE ADJUSTED BASED ON FIELD MEASURED CONDITIONS.

2.) IN AREAS WHERE THERE IS A DEFLECTION IN THE BARRIER GREATER THAN 5°, A CURVE OF L=50', Dc=5° SHALL BE USED TO SMOOTH THE AREA.

LEGEND

1. Temporary Lane Line, Class I, 642 Paint (White)
2. Portable Concrete Barrier, 32 inch
3. Temporary Edge Line, Class I, 642 Paint (White)
4. Temporary Edge Line, Class I, 642 Paint (Yellow)
5. Temporary Channelizing Line, Class I, 642 Paint (White)
6. Temporary Dotted Line, Class I, 642 Paint (White)
7. Temporary Edge Line, Class I, 740.06, Type I (White)
8. Temporary Edge Line, Class I, 740.06, Type I (Yellow)
9. Temporary Channelizing Line, Class I, 740.06, Type I (White)
10. Temporary Lane Line, Class I, 740.06, Type I (White)

→ Direction of Travel
• • • Drums
---------- Existing Pavement Marking to be Removed
------ Existing Pavement Marking to Remain

MAINTENANCE OF TRAFFIC PLAN STA. 588+00 TO STA. 615+00 - PHASE 2B

PLOT SUBMITTED:03-AUG-1998 08:30
307MT05.DGN
I307MT05.DWG 12/15/94
PLOTTED BY: jgrmove
PLOTTED in Bowersber-Bpid08459 Bowersber-B307mt05.dgn

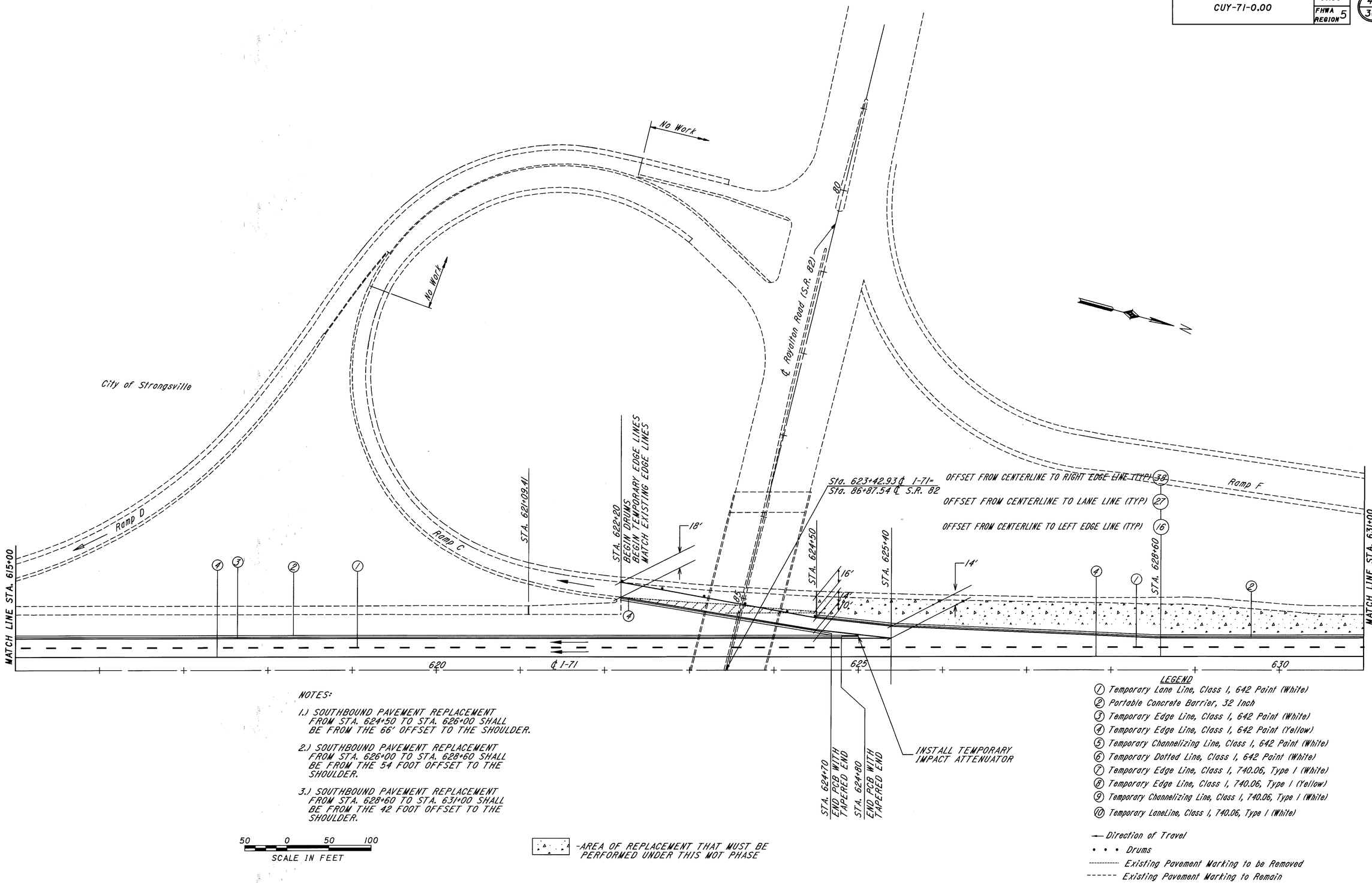

NOTES:

1.) SOUTHBOUND PAVEMENT REPLACEMENT FROM STA. 624+50 TO STA. 626+00 SHALL BE FROM THE 66' OFFSET TO THE SHOULDER.

2.) SOUTHBOUND PAVEMENT REPLACEMENT FROM STA. 626+00 TO STA. 628+60 SHALL BE FROM THE 54 FOOT OFFSET TO THE SHOULDER.

3.) SOUTHBOUND PAVEMENT REPLACEMENT FROM STA. 628+60 TO STA. 631+00 SHALL BE FROM THE 42 FOOT OFFSET TO THE SHOULDER.

50 0 50 100
SCALE IN FEET

-AREA OF REPLACEMENT THAT MUST BE PERFORMED UNDER THIS MOT PHASE

LEGEND

1. Temporary Lane Line, Class I, 642 Paint (White)
2. Portable Concrete Barrier, 32 Inch
3. Temporary Edge Line, Class I, 642 Paint (White)
4. Temporary Edge Line, Class I, 642 Paint (Yellow)
5. Temporary Channelizing Line, Class I, 642 Paint (White)
6. Temporary Dotted Line, Class I, 642 Paint (White)
7. Temporary Edge Line, Class I, 740.06, Type I (White)
8. Temporary Edge Line, Class I, 740.06, Type I (Yellow)
9. Temporary Channelizing Line, Class I, 740.06, Type I (White)
10. Temporary LaneLine, Class I, 740.06, Type I (White)

→ Direction of Travel
• • • Drums
---------- Existing Pavement Marking to be Removed
------ Existing Pavement Marking to Remain

MAINTENANCE OF TRAFFIC PLAN STA. 615+00 TO STA. 631+00 - PHASE 2A & 2B

PLOT SUBMITTED:03-AUG-1998 08:31
307MT06.DGN
307mt06.dgn
307mt06.dgn
PLOTTED BY:jgrmovse
PLOTTED:
PLOTTED:
PLOTTED:
307MT06.DWG VNB 12/15/94

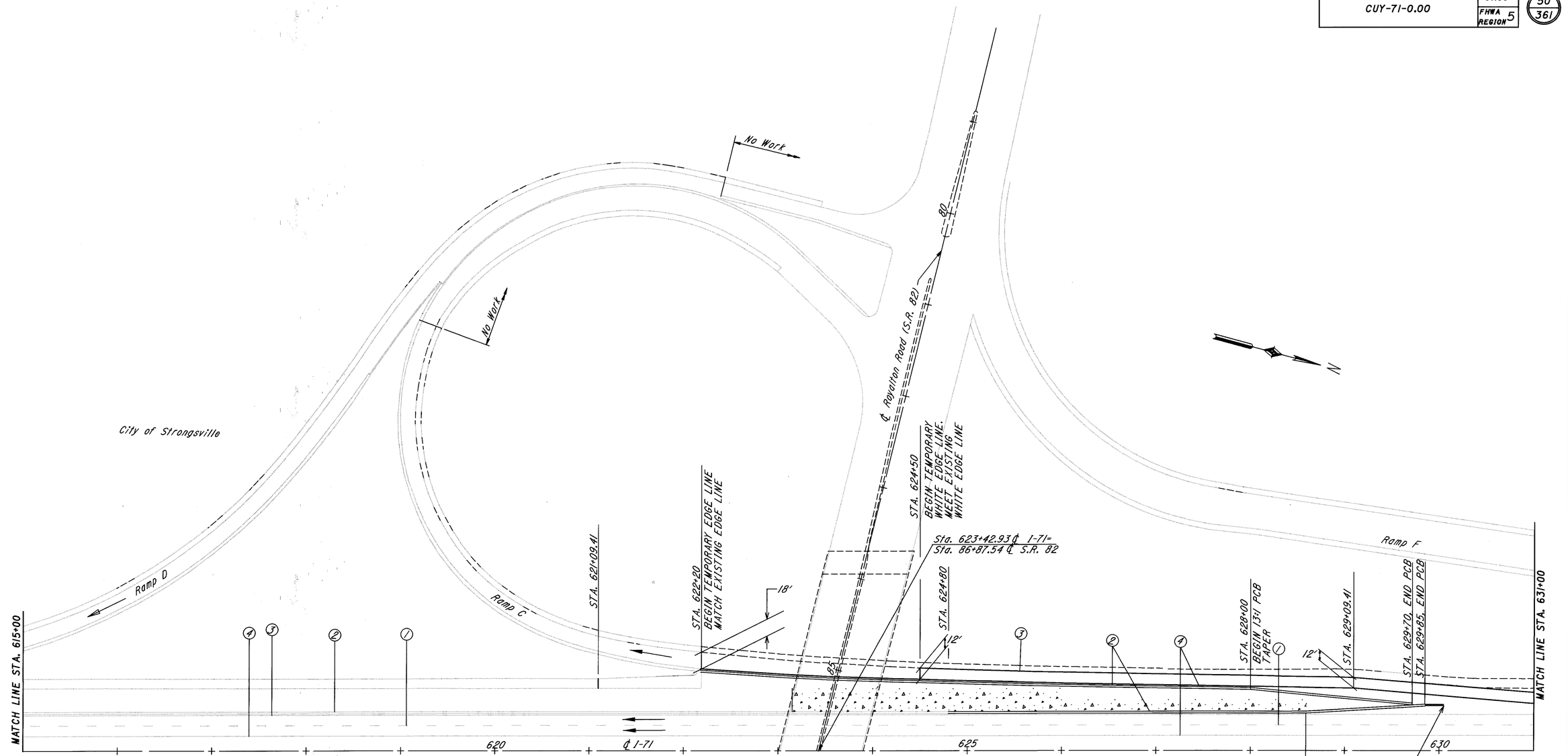

LEGEND

1. Temporary Lane Line, Class I, 642 Paint (White)
2. Portable Concrete Barrier, 32 Inch
3. Temporary Edge Line, Class I, 642 Paint (White)
4. Temporary Edge Line, Class I, 642 Paint (Yellow)
5. Temporary Channelizing Line, Class I, 642 Paint (White)
6. Temporary Dotted Line, Class I, 642 Paint (White)
7. Temporary Edge Line, Class I, 740.06, Type I (White)
8. Temporary Edge Line, Class I, 740.06, Type I (Yellow)
9. Temporary Channelizing Line, Class I, 740.06, Type I (White)
10. Temporary Lane Line, Class I, 740.06, Type I (White)

— Direction of Travel
• • • Drums
--------- Existing Pavement Marking to be Removed
------ Existing Pavement Marking to Remain

50 0 50 100
SCALE IN FEET

NOTES:

1.) SOUTHBOUND PAVEMENT REPLACEMENT FROM STA. 623+15 TO STA. 626+00 SHALL BE FROM THE 42 FOOT OFFSET TO THE 66 FOOT OFFSET.

2.) SOUTHBOUND PAVEMENT REPLACEMENT FROM STA. 626+00 TO STA. 628+60 SHALL BE FROM THE 42 FOOT OFFSET TO THE 54 FOOT OFFSET.

-AREA OF REPLACEMENT THAT MUST BE PERFORMED UNDER THIS MOT PHASE

MAINTENANCE OF TRAFFIC PLAN STA. 615+00 TO STA. 631+00 - PHASE 2C

PLOT SUBMITTED:03-AUG-1998 08:32
307MT06.DGN
PLOTTED BY:jgrmovse
PLOTTED:Fri Aug 07 08:32:59 1998
PLOTTED FROM:pid08459B.dgn
PLOTTED FROM:307mt06.dgn
L307MT06.DWG1 VWB 12/15/94

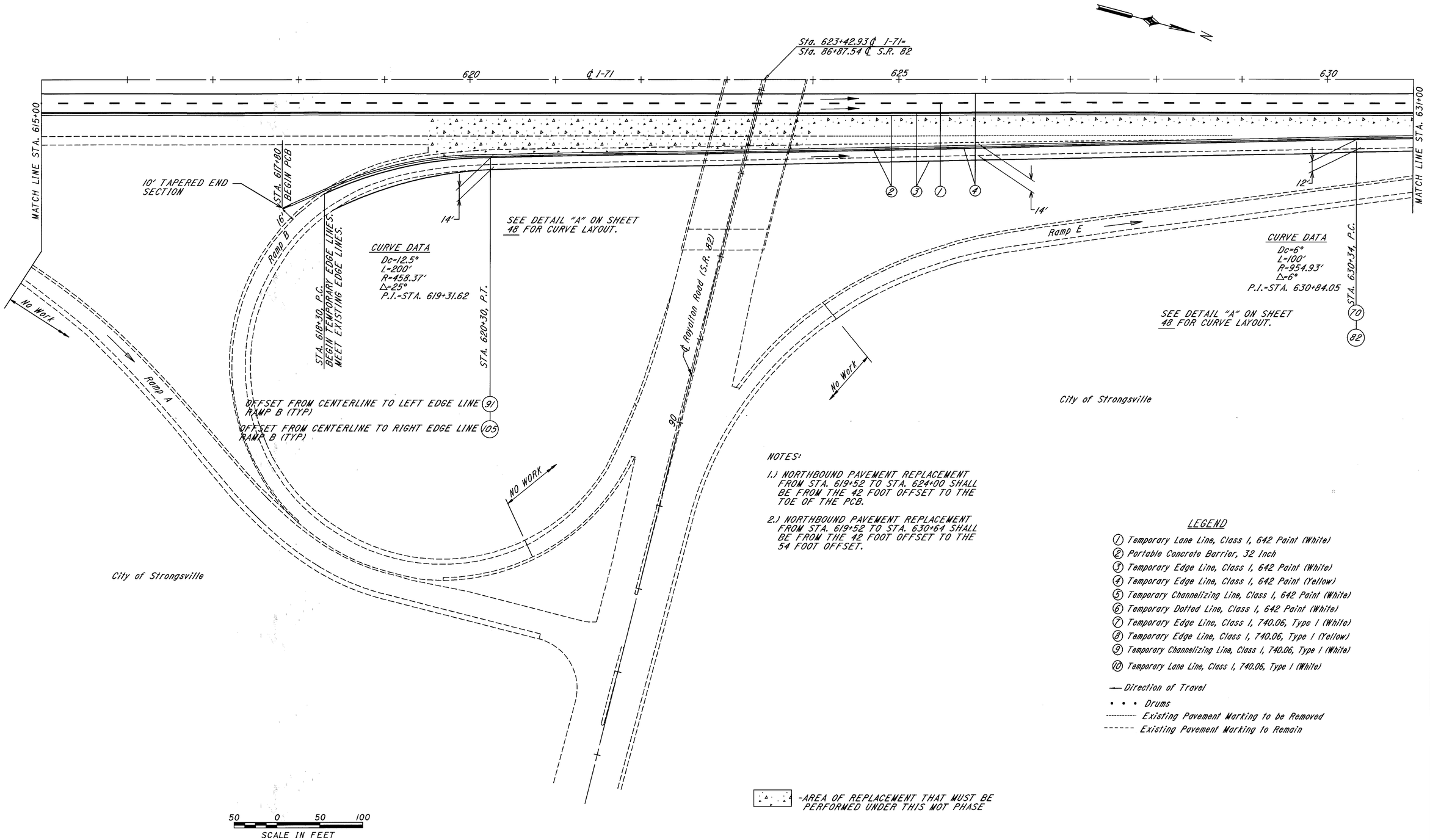

NOTES:

1.) NORTHBOUND PAVEMENT REPLACEMENT FROM STA. 619+52 TO STA. 624+00 SHALL BE FROM THE 42 FOOT OFFSET TO THE TOE OF THE PCB.

2.) NORTHBOUND PAVEMENT REPLACEMENT FROM STA. 619+52 TO STA. 630+64 SHALL BE FROM THE 42 FOOT OFFSET TO THE 54 FOOT OFFSET.

-AREA OF REPLACEMENT THAT MUST BE PERFORMED UNDER THIS MOT PHASE

LEGEND

1. Temporary Lane Line, Class I, 642 Paint (White)
2. Portable Concrete Barrier, 32 Inch
3. Temporary Edge Line, Class I, 642 Paint (White)
4. Temporary Edge Line, Class I, 642 Paint (Yellow)
5. Temporary Channelizing Line, Class I, 642 Paint (White)
6. Temporary Dotted Line, Class I, 642 Paint (White)
7. Temporary Edge Line, Class I, 740.06, Type I (White)
8. Temporary Edge Line, Class I, 740.06, Type I (Yellow)
9. Temporary Channelizing Line, Class I, 740.06, Type I (White)
10. Temporary Lane Line, Class I, 740.06, Type I (White)

—— Direction of Travel
• • • Drums
---------- Existing Pavement Marking to be Removed
------ Existing Pavement Marking to Remain

MAINTENANCE OF TRAFFIC PLAN STA. 615+00 TO STA. 631+00 - PHASE 2A

PLOT SUBMITTED:03-AUG-1998 08:33
307MT07.DGN
PLOTTED BY:jgrmovse
PLOTTED:FROM:sbefor-sber-pid08459b.dgn
307mt07.dgn
L307MT07.DWG1 VWB 12/15/94

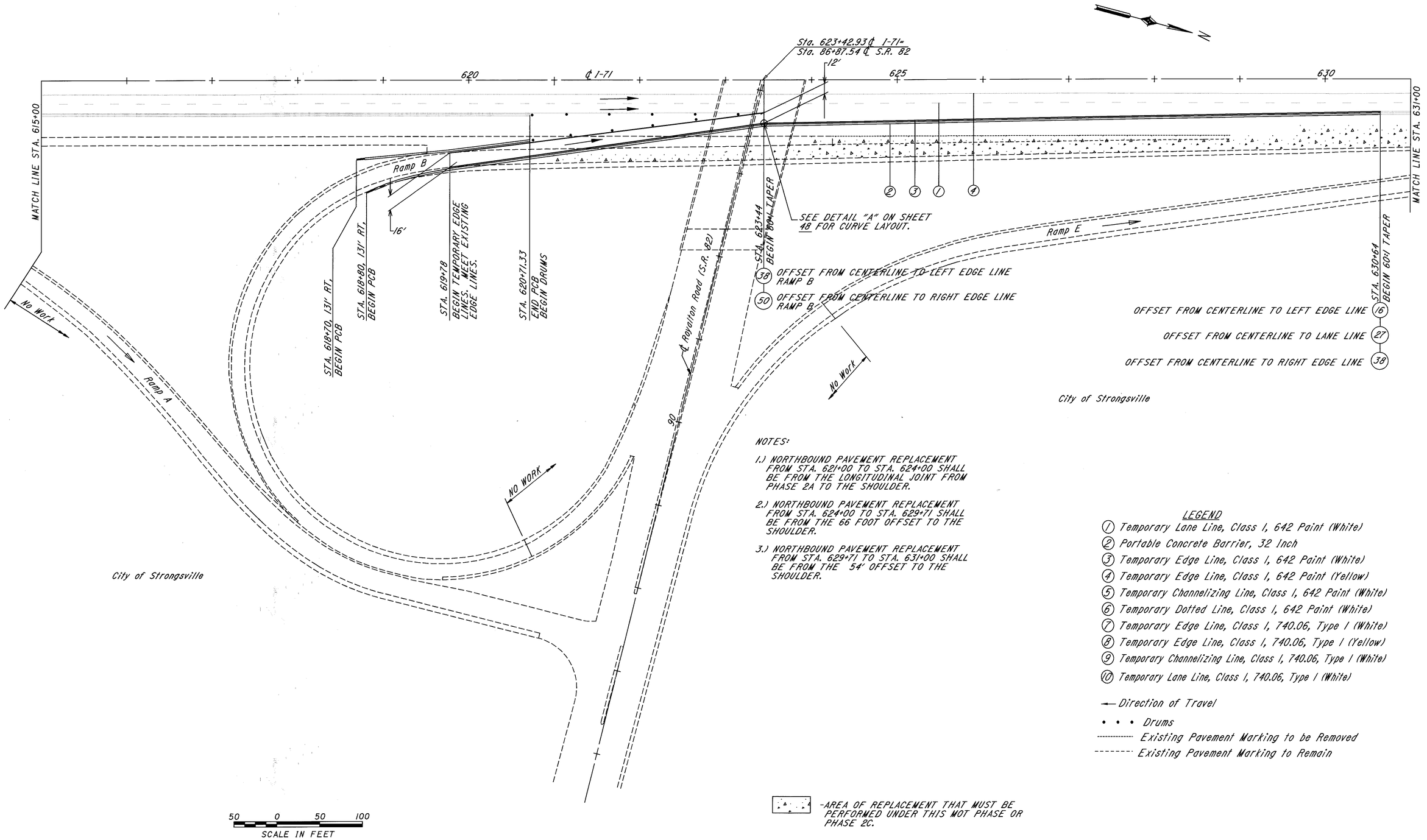

NOTES:

1.) NORTHBOUND PAVEMENT REPLACEMENT FROM STA. 621+00 TO STA. 624+00 SHALL BE FROM THE LONGITUDINAL JOINT FROM PHASE 2A TO THE SHOULDER.

2.) NORTHBOUND PAVEMENT REPLACEMENT FROM STA. 624+00 TO STA. 629+71 SHALL BE FROM THE 66 FOOT OFFSET TO THE SHOULDER.

3.) NORTHBOUND PAVEMENT REPLACEMENT FROM STA. 629+71 TO STA. 631+00 SHALL BE FROM THE 54' OFFSET TO THE SHOULDER.

-AREA OF REPLACEMENT THAT MUST BE PERFORMED UNDER THIS MOT PHASE OR PHASE 2C.

LEGEND

1. Temporary Lane Line, Class I, 642 Paint (White)
2. Portable Concrete Barrier, 32 Inch
3. Temporary Edge Line, Class I, 642 Paint (White)
4. Temporary Edge Line, Class I, 642 Paint (Yellow)
5. Temporary Channelizing Line, Class I, 642 Paint (White)
6. Temporary Dotted Line, Class I, 642 Paint (White)
7. Temporary Edge Line, Class I, 740.06, Type I (White)
8. Temporary Edge Line, Class I, 740.06, Type I (Yellow)
9. Temporary Channelizing Line, Class I, 740.06, Type I (White)
10. Temporary Lane Line, Class I, 740.06, Type I (White)

→ Direction of Travel

• • • Drums

---------- Existing Pavement Marking to be Removed

-------- Existing Pavement Marking to Remain

MAINTENANCE OF TRAFFIC PLAN STA. 615+00 TO STA. 631+00 - PHASE 2B

PLOT SUBMITTED:03-AUG-1998 08:34
307MT07.DGN
PLOTTED BY:jgrmovse
PLOTTED:Fri Aug 14 08:34:59 1998
PLOT SCALE:1:1
I307MT07.DWG 1 VAB 12/15/94

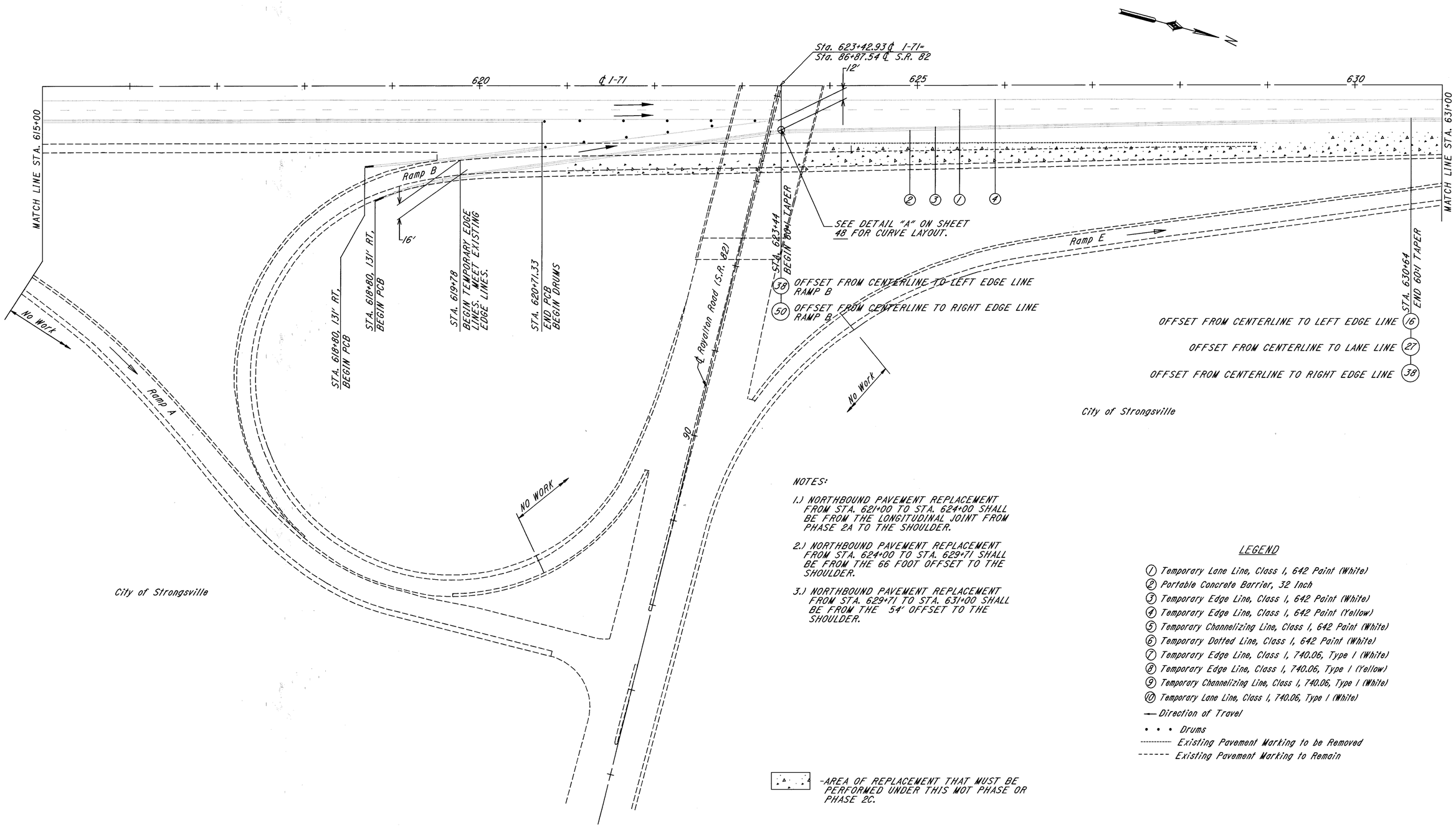

NOTES:

1.) NORTHBOUND PAVEMENT REPLACEMENT FROM STA. 621+00 TO STA. 624+00 SHALL BE FROM THE LONGITUDINAL JOINT FROM PHASE 2A TO THE SHOULDER.

2.) NORTHBOUND PAVEMENT REPLACEMENT FROM STA. 624+00 TO STA. 629+71 SHALL BE FROM THE 66 FOOT OFFSET TO THE SHOULDER.

3.) NORTHBOUND PAVEMENT REPLACEMENT FROM STA. 629+71 TO STA. 631+00 SHALL BE FROM THE 54' OFFSET TO THE SHOULDER.

-AREA OF REPLACEMENT THAT MUST BE PERFORMED UNDER THIS MOT PHASE OR PHASE 2C.

LEGEND

1. Temporary Lane Line, Class I, 642 Paint (White)
2. Portable Concrete Barrier, 32 Inch
3. Temporary Edge Line, Class I, 642 Paint (White)
4. Temporary Edge Line, Class I, 642 Paint (Yellow)
5. Temporary Channelizing Line, Class I, 642 Paint (White)
6. Temporary Dotted Line, Class I, 642 Paint (White)
7. Temporary Edge Line, Class I, 740.06, Type I (White)
8. Temporary Edge Line, Class I, 740.06, Type I (Yellow)
9. Temporary Channelizing Line, Class I, 740.06, Type I (White)
10. Temporary Lane Line, Class I, 740.06, Type I (White)

— Direction of Travel
• • • Drums
---------- Existing Pavement Marking to be Removed
------ Existing Pavement Marking to Remain

MAINTENANCE OF TRAFFIC PLAN STA. 615+00 TO STA. 631+00 - PHASE 2C

PLOTTED BY: jgrmovse
PLOTTED: 12/15/94
PLOTTED: 03-AUG-1998 08:35
PLOT SUBMITTED: 307MT07.DGN
c307MT07.DWG1 VNB 12/15/94

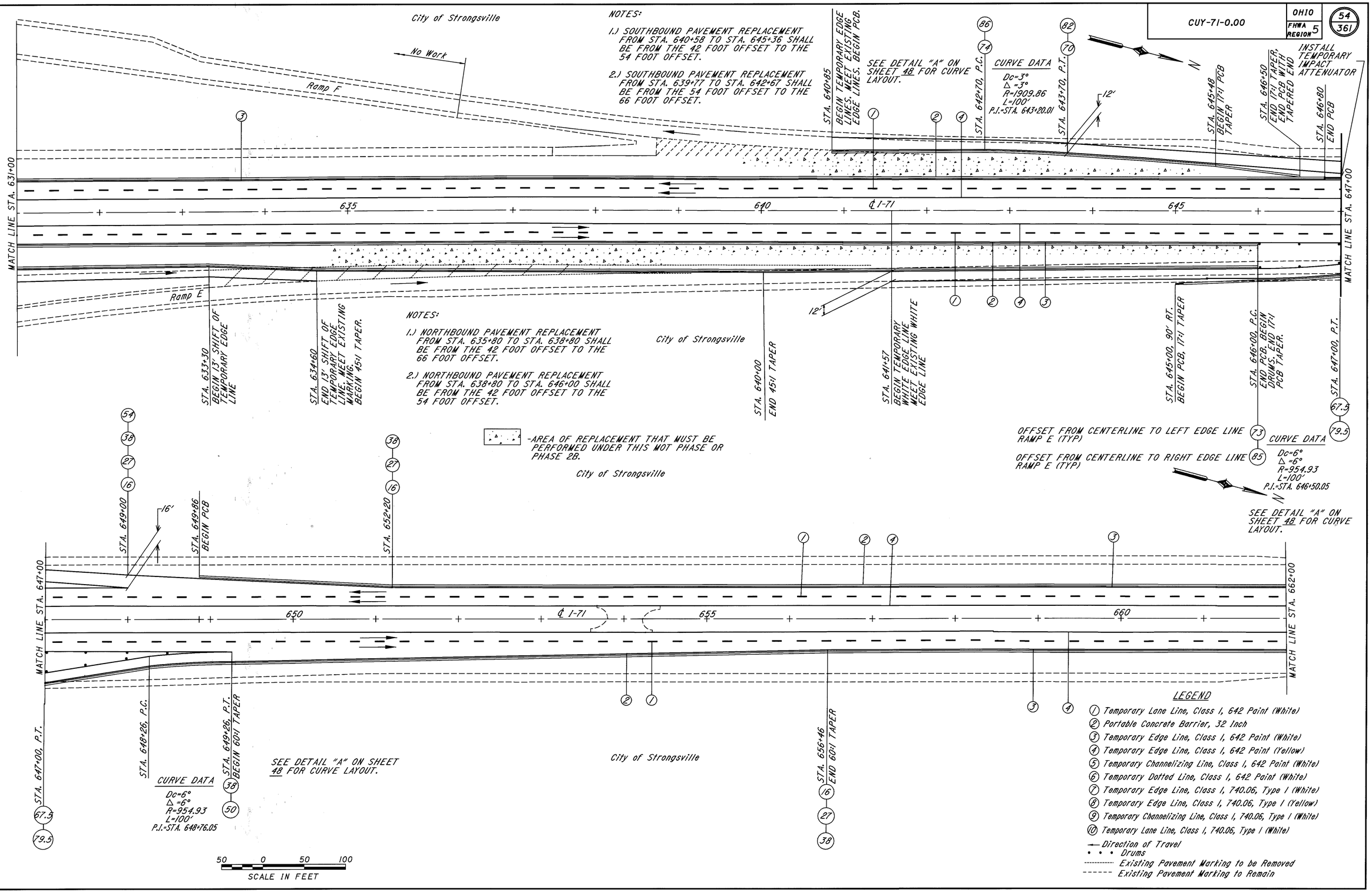

MAINTENANCE OF TRAFFIC PLAN STA. 631+00 TO STA. 662+00 - PHASE 2A

PLOTTED BY: jgrmovse
PLOTTED ON: Wed Oct 08 1998 08:36
PLOT SUBMITTED: 03-AUG-1998 08:36
307MT08.DGN
C:\307MT08.DGN\307mt08.dgn

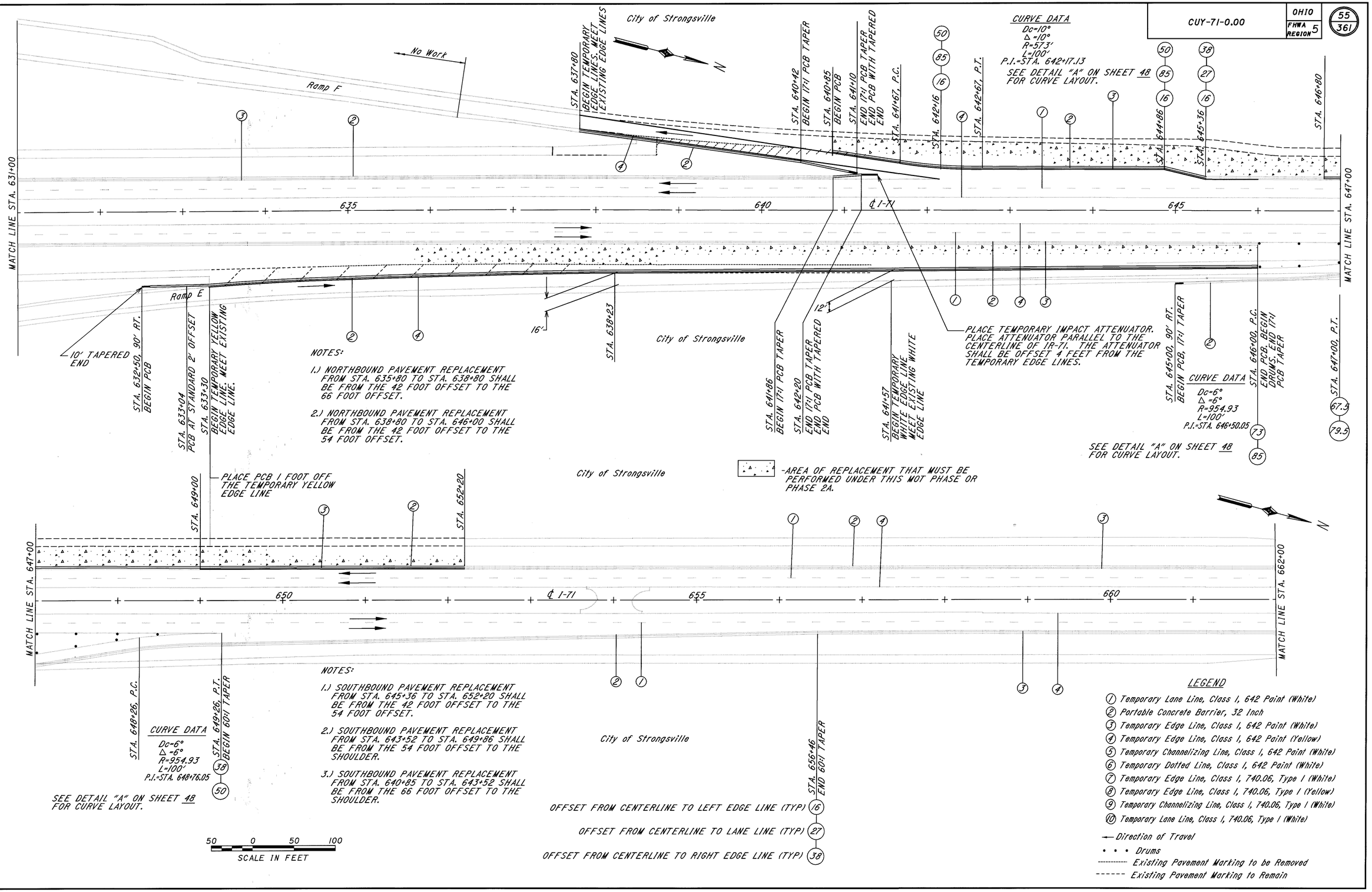

MAINTENANCE OF TRAFFIC PLAN STA. 631+00 TO STA. 662+00 - PHASE 2B

PLOT SUBMITTED:03-AUG-1998 08:37
PLOTTED BY: jgrmovse
PLOTTED in Power Users before sbert pid08459 dgn 307mt08.dgn
307MT08.DGN

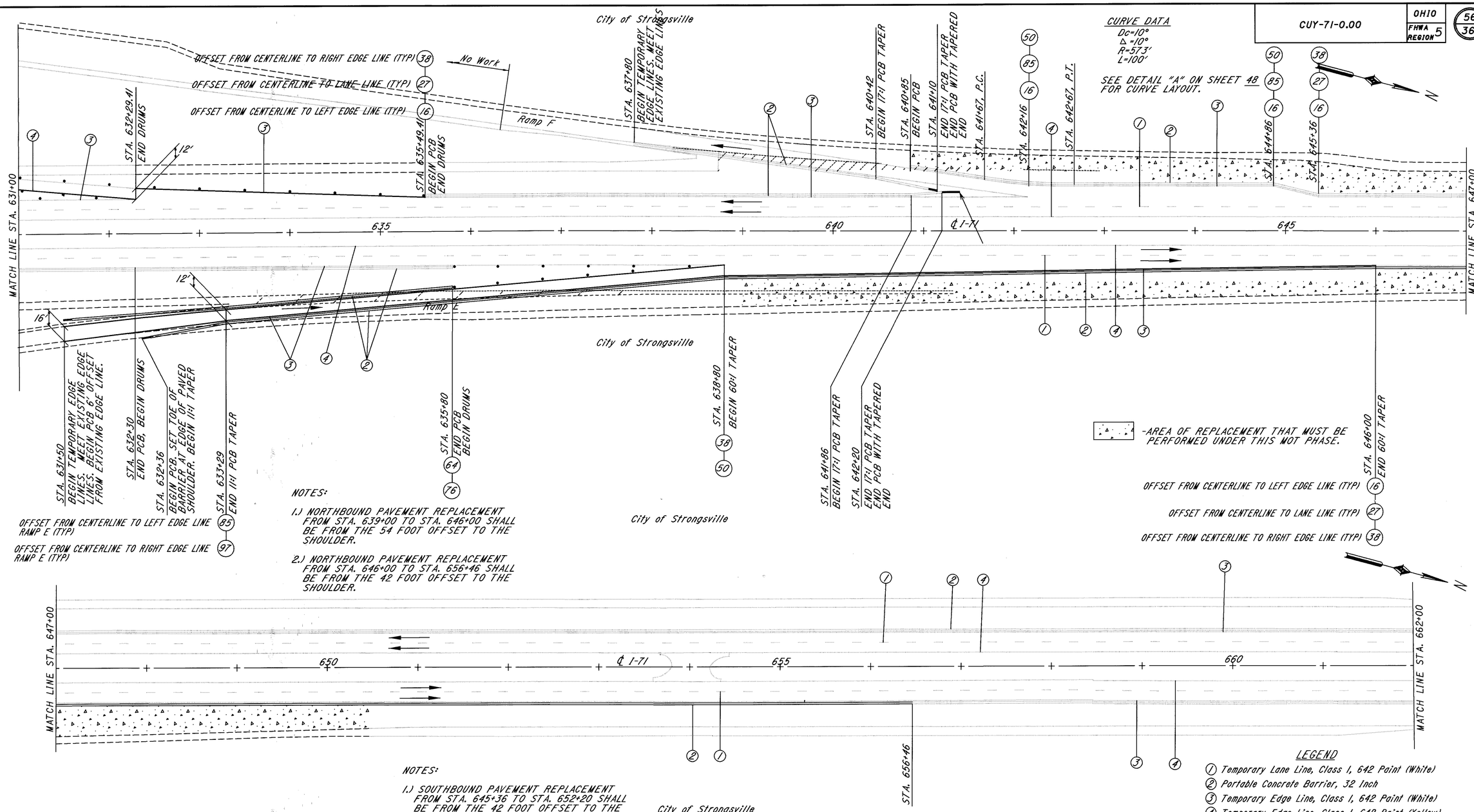

NOTES:

1.) NORTHBOUND PAVEMENT REPLACEMENT FROM STA. 639+00 TO STA. 646+00 SHALL BE FROM THE 54 FOOT OFFSET TO THE SHOULDER.

2.) NORTHBOUND PAVEMENT REPLACEMENT FROM STA. 646+00 TO STA. 656+46 SHALL BE FROM THE 42 FOOT OFFSET TO THE SHOULDER.

NOTES:

1.) SOUTHBOUND PAVEMENT REPLACEMENT FROM STA. 645+36 TO STA. 652+20 SHALL BE FROM THE 42 FOOT OFFSET TO THE 54 FOOT OFFSET.

2.) SOUTHBOUND PAVEMENT REPLACEMENT FROM STA. 643+52 TO STA. 649+86 SHALL BE FROM THE 54 FOOT OFFSET TO THE SHOULDER.

3.) SOUTHBOUND PAVEMENT REPLACEMENT FROM STA. 640+85 TO STA. 643+52 SHALL BE FROM THE 66 FOOT OFFSET TO THE SHOULDER.

50 0 50 100
SCALE IN FEET

LEGEND

1. Temporary Lane Line, Class I, 642 Paint (White)
2. Portable Concrete Barrier, 32 Inch
3. Temporary Edge Line, Class I, 642 Paint (White)
4. Temporary Edge Line, Class I, 642 Paint (Yellow)
5. Temporary Channelizing Line, Class I, 642 Paint (White)
6. Temporary Dotted Line, Class I, 642 Paint (White)
7. Temporary Edge Line, Class I, 740.06, Type I (White)
8. Temporary Edge Line, Class I, 740.06, Type I (Yellow)
9. Temporary Channelizing Line, Class I, 740.06, Type I (White)
10. Temporary Lane Line, Class I, 740.06, Type I (White)

→ Direction of Travel
• • • Drums
---------- Existing Pavement Marking to be Removed
------ Existing Pavement Marking to Remain

MAINTENANCE OF TRAFFIC PLAN STA. 631+00 TO STA. 662+00 - PHASE 2C

PLOTTED BY: jgrmovse
PLOTTED ON: Wed Oct 08 08:38 1998
PLOTTED FROM: c:\307mt08.dgn
PLOTTED BY: jgrmovse
PLOTTED ON: Wed Oct 08 08:38 1998
PLOTTED FROM: c:\307mt08.dgn
PLOT SUBMITTED:03-AUG-1998 08:38
307MT08.DGN

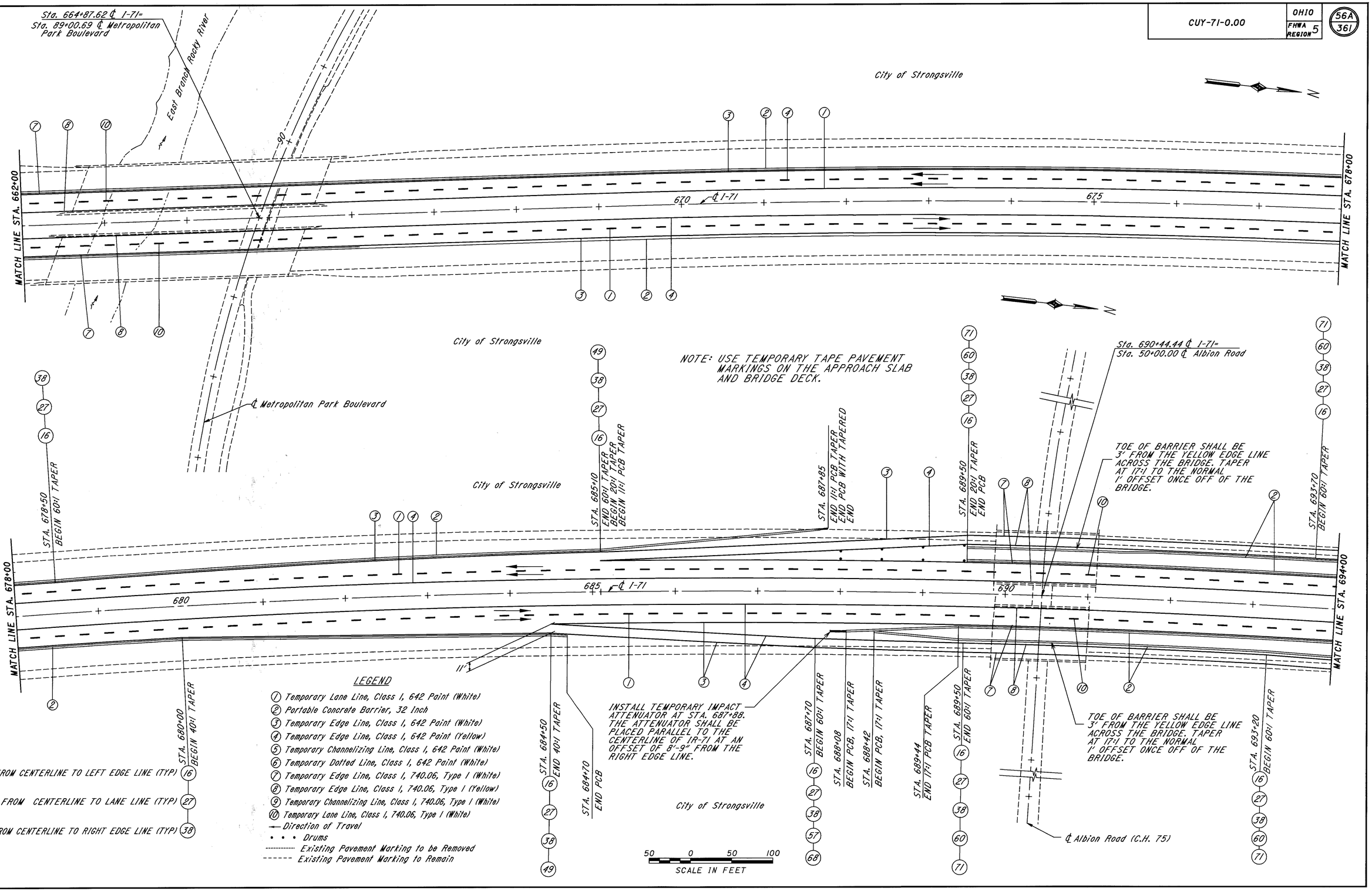

MAINTENANCE OF TRAFFIC PLAN STA. 662+00 TO STA. 694+00 - PHASE 2A

PLOT SUBMITTED:03-AUG-1998 08:39
307MT09.DGN
PLOTTED BY:jgrmovse
PLOTTED:Rowersberpid08459Bdgn307mt09.dgn
307MT09.DWG VWB 12/15/94

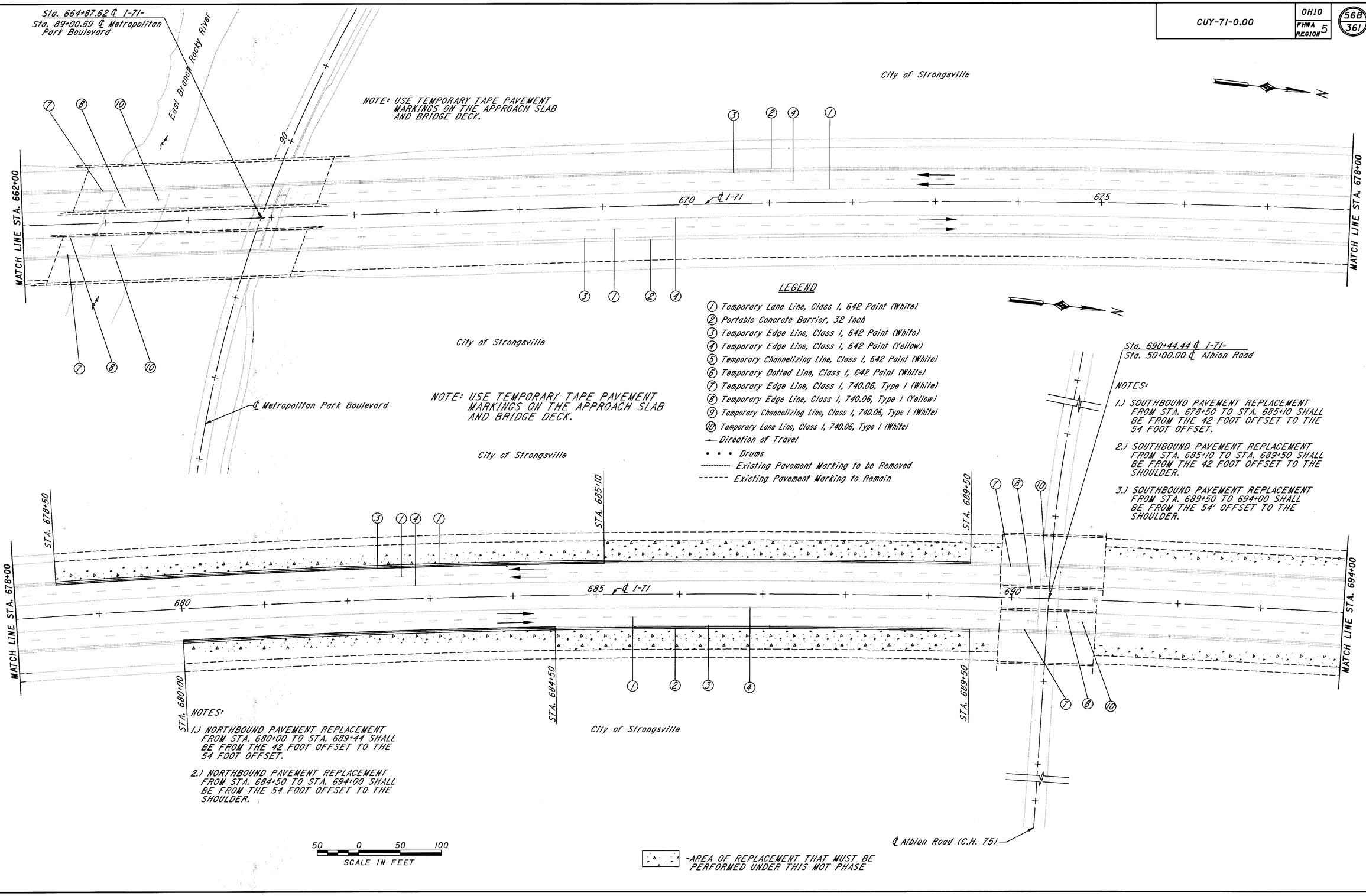

LEGEND

1. Temporary Lane Line, Class I, 642 Paint (White)
2. Portable Concrete Barrier, 32 Inch
3. Temporary Edge Line, Class I, 642 Paint (White)
4. Temporary Edge Line, Class I, 642 Paint (Yellow)
5. Temporary Channelizing Line, Class I, 642 Paint (White)
6. Temporary Dotted Line, Class I, 642 Paint (White)
7. Temporary Edge Line, Class I, 740.06, Type I (White)
8. Temporary Edge Line, Class I, 740.06, Type I (Yellow)
9. Temporary Channelizing Line, Class I, 740.06, Type I (White)
10. Temporary Lane Line, Class I, 740.06, Type I (White)

— Direction of Travel
• • • Drums
---------- Existing Pavement Marking to be Removed
------ Existing Pavement Marking to Remain

NOTES:

1.) SOUTHBOUND PAVEMENT REPLACEMENT FROM STA. 678+50 TO STA. 685+10 SHALL BE FROM THE 42 FOOT OFFSET TO THE 54 FOOT OFFSET.

2.) SOUTHBOUND PAVEMENT REPLACEMENT FROM STA. 685+10 TO STA. 689+50 SHALL BE FROM THE 42 FOOT OFFSET TO THE SHOULDER.

3.) SOUTHBOUND PAVEMENT REPLACEMENT FROM STA. 689+50 TO 694+00 SHALL BE FROM THE 54' OFFSET TO THE SHOULDER.

NOTES:

1.) NORTHBOUND PAVEMENT REPLACEMENT FROM STA. 680+00 TO STA. 689+44 SHALL BE FROM THE 42 FOOT OFFSET TO THE 54 FOOT OFFSET.

2.) NORTHBOUND PAVEMENT REPLACEMENT FROM STA. 684+50 TO STA. 694+00 SHALL BE FROM THE 54 FOOT OFFSET TO THE SHOULDER.

MAINTENANCE OF TRAFFIC PLAN STA. 662+00 TO STA. 694+00 - PHASE 2B

PLOT SUBMITTED:03-AUG-1998 08:39
307MT09.DGN
PLOTTED BY: jgrmovse
PLOTTED FROM: pid08459 307mt09.dgn

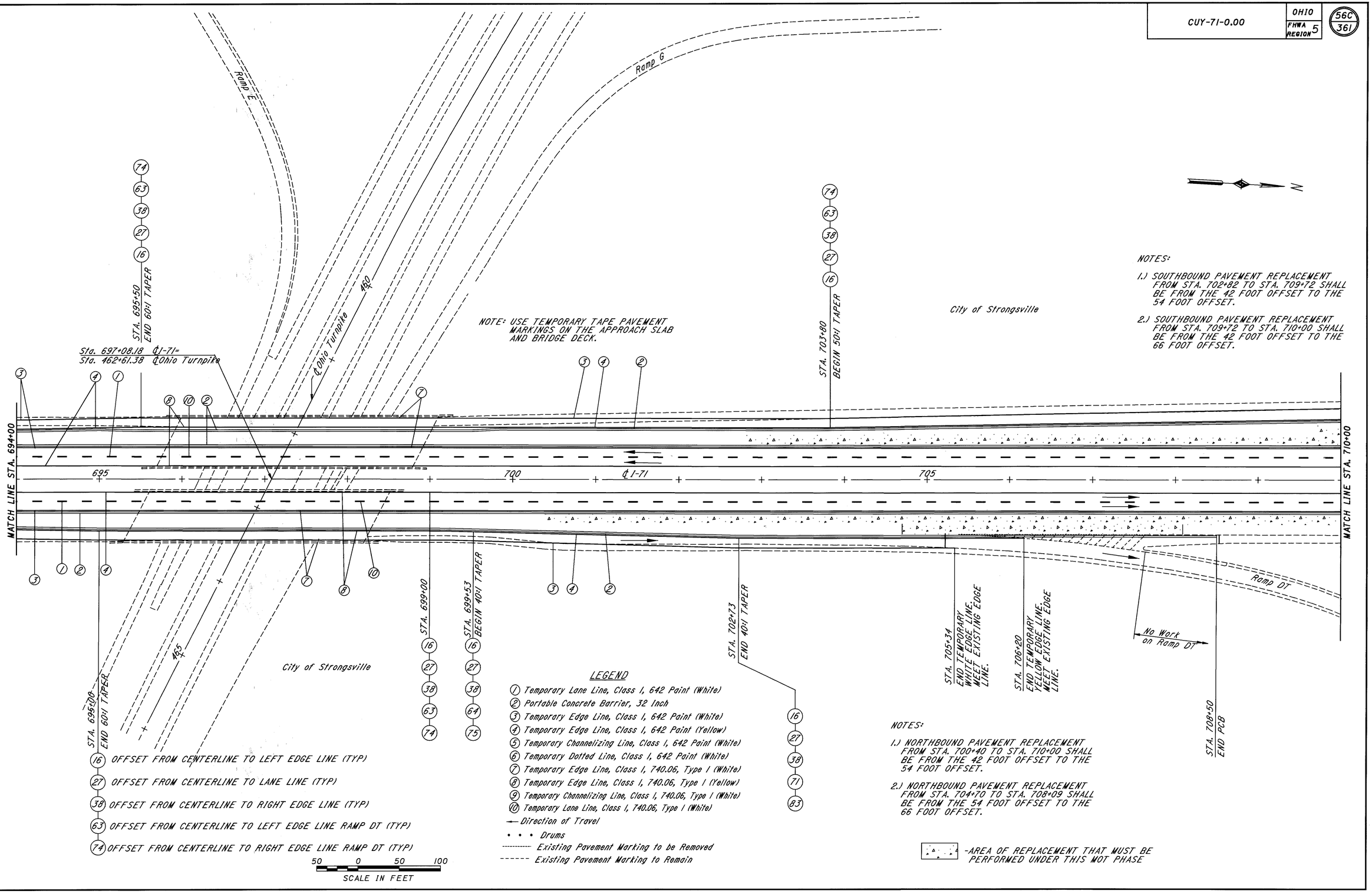

NOTES:

1.) SOUTHBOUND PAVEMENT REPLACEMENT FROM STA. 702+82 TO STA. 709+72 SHALL BE FROM THE 42 FOOT OFFSET TO THE 54 FOOT OFFSET.

2.) SOUTHBOUND PAVEMENT REPLACEMENT FROM STA. 709+72 TO STA. 710+00 SHALL BE FROM THE 42 FOOT OFFSET TO THE 66 FOOT OFFSET.

NOTES:

1.) NORTHBOUND PAVEMENT REPLACEMENT FROM STA. 700+40 TO STA. 710+00 SHALL BE FROM THE 42 FOOT OFFSET TO THE 54 FOOT OFFSET.

2.) NORTHBOUND PAVEMENT REPLACEMENT FROM STA. 704+70 TO STA. 708+09 SHALL BE FROM THE 54 FOOT OFFSET TO THE 66 FOOT OFFSET.

-AREA OF REPLACEMENT THAT MUST BE PERFORMED UNDER THIS MOT PHASE

(16) OFFSET FROM CENTERLINE TO LEFT EDGE LINE (TYP)

(27) OFFSET FROM CENTERLINE TO LANE LINE (TYP)

(38) OFFSET FROM CENTERLINE TO RIGHT EDGE LINE (TYP)

(63) OFFSET FROM CENTERLINE TO LEFT EDGE LINE RAMP DT (TYP)

(74) OFFSET FROM CENTERLINE TO RIGHT EDGE LINE RAMP DT (TYP)

50 0 50 100
SCALE IN FEET

LEGEND

1. Temporary Lane Line, Class I, 642 Paint (White)
2. Portable Concrete Barrier, 32 Inch
3. Temporary Edge Line, Class I, 642 Paint (White)
4. Temporary Edge Line, Class I, 642 Paint (Yellow)
5. Temporary Channelizing Line, Class I, 642 Paint (White)
6. Temporary Dotted Line, Class I, 642 Paint (White)
7. Temporary Edge Line, Class I, 740.06, Type I (White)
8. Temporary Edge Line, Class I, 740.06, Type I (Yellow)
9. Temporary Channelizing Line, Class I, 740.06, Type I (White)
10. Temporary Lane Line, Class I, 740.06, Type I (White)

— Direction of Travel

• • • Drums

---------- Existing Pavement Marking to be Removed

------ Existing Pavement Marking to Remain

MAINTENANCE OF TRAFFIC PLAN STA. 694+00 TO STA. 710+00 - PHASE 2A

PLOT SUBMITTED:03-AUG-1998 08:40
307MT10.DGN
PLOTTED BY:jgrmoyse
PLOTTED in Bpid08459Bdgn\307mt10.dgn
L307MT10.DWG1 VNB 12/15/94

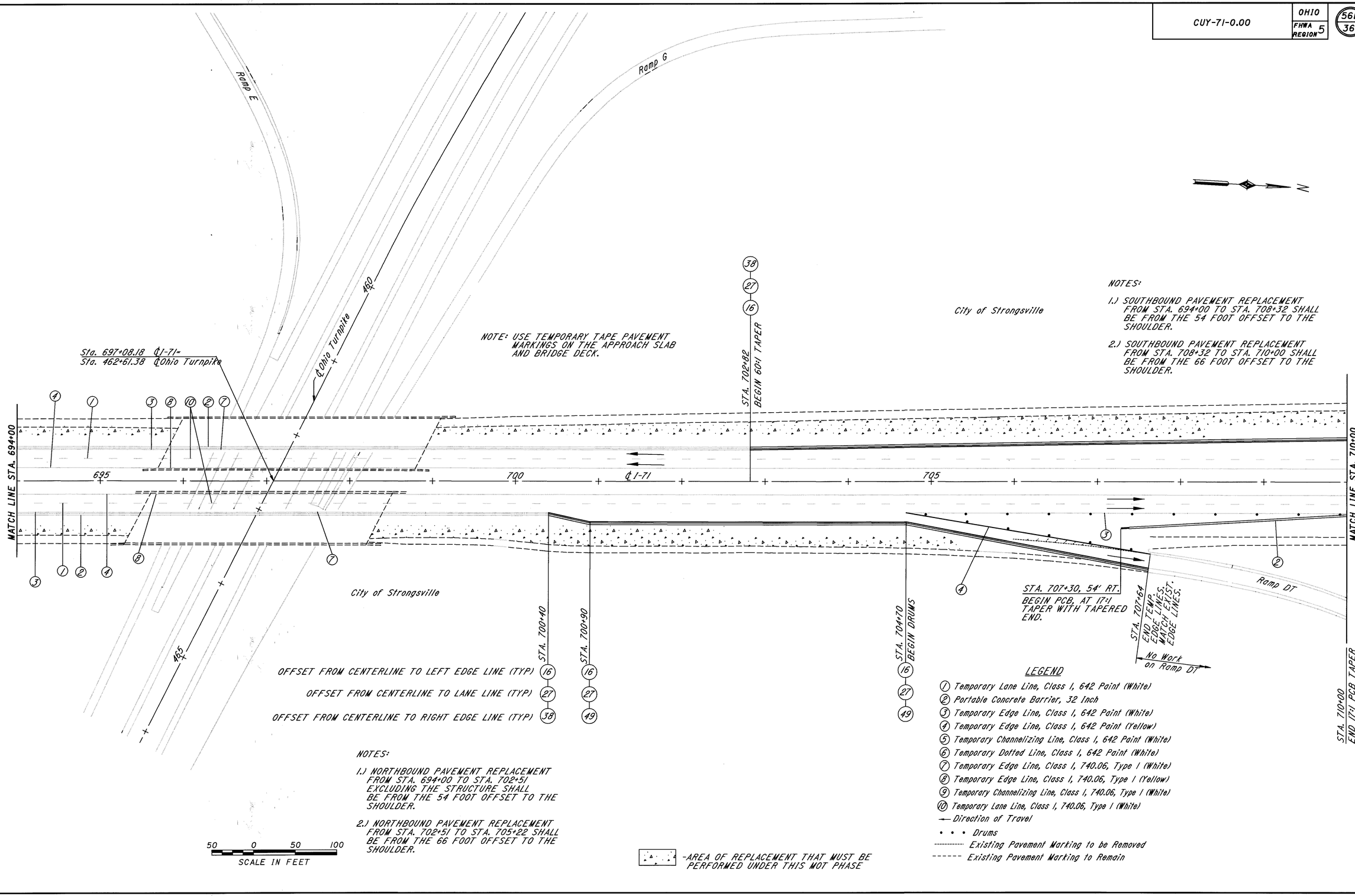

MAINTENANCE OF TRAFFIC PLAN STA. 694+00 TO STA. 710+00 - PHASE 2B

PLOT SUBMITTED:03-AUG-1998 08:41
307MT10.DGN
E307MT10.DWG1 VER 12/15/94
PLOTTED BY:jgrmovse
PLOTTED:Fri Aug 07 08:59:59 1998

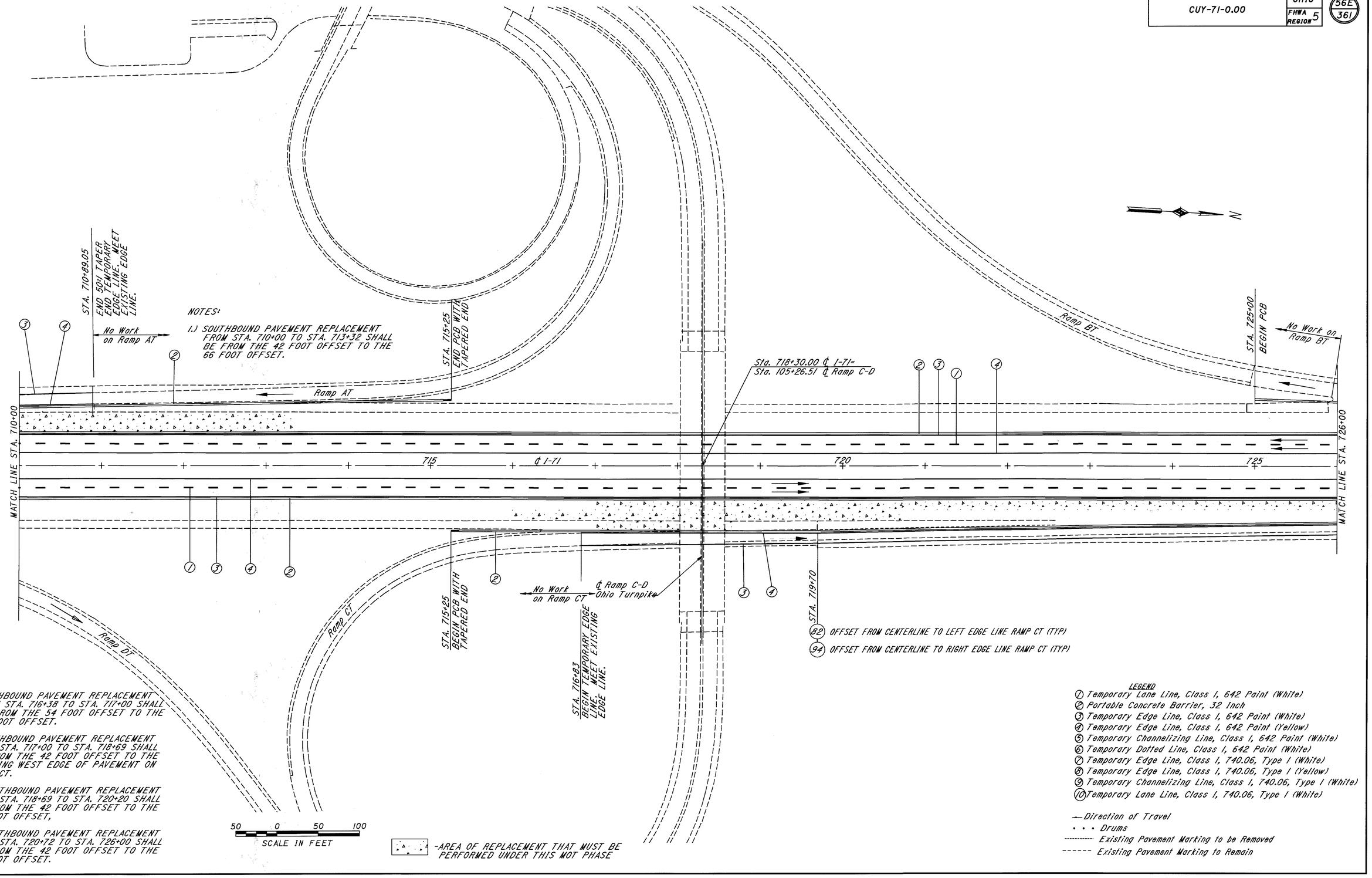

NOTES:

1.) SOUTHBOUND PAVEMENT REPLACEMENT FROM STA. 710+00 TO STA. 713+32 SHALL BE FROM THE 42 FOOT OFFSET TO THE 66 FOOT OFFSET.

NOTES:

1.) NORTHBOUND PAVEMENT REPLACEMENT FROM STA. 716+38 TO STA. 717+00 SHALL BE FROM THE 54 FOOT OFFSET TO THE 66 FOOT OFFSET.

2.) NORTHBOUND PAVEMENT REPLACEMENT FROM STA. 717+00 TO STA. 718+69 SHALL BE FROM THE 42 FOOT OFFSET TO THE EXISTING WEST EDGE OF PAVEMENT ON RAMP CT.

3.) NORTHBOUND PAVEMENT REPLACEMENT FROM STA. 718+69 TO STA. 720+20 SHALL BE FROM THE 42 FOOT OFFSET TO THE 66 FOOT OFFSET,

4.) NORTHBOUND PAVEMENT REPLACEMENT FROM STA. 720+72 TO STA. 726+00 SHALL BE FROM THE 42 FOOT OFFSET TO THE 66 FOOT OFFSET.

LEGEND

1. Temporary Lane Line, Class I, 642 Paint (White)
2. Portable Concrete Barrier, 32 Inch
3. Temporary Edge Line, Class I, 642 Paint (White)
4. Temporary Edge Line, Class I, 642 Paint (Yellow)
5. Temporary Channelizing Line, Class I, 642 Paint (White)
6. Temporary Dotted Line, Class I, 642 Paint (White)
7. Temporary Edge Line, Class I, 740.06, Type I (White)
8. Temporary Edge Line, Class I, 740.06, Type I (Yellow)
9. Temporary Channelizing Line, Class I, 740.06, Type I (White)
10. Temporary Lane Line, Class I, 740.06, Type I (White)

→ Direction of Travel
• • • Drums
---------- Existing Pavement Marking to be Removed
------ Existing Pavement Marking to Remain

MAINTENANCE OF TRAFFIC PLAN STA. 710+00 TO STA. 726+00 - PHASE 2A

PLOT SUBMITTED:03-AUG-1998 08:42
307MT11.DGN
PLOTTED BY:jgrmoyse
PLOTTED:Fri Aug 14 08:42:59 1998
PLOTTED FROM:/users/bforsber/pid08459/dgn/307mt11.dgn
I307MT11.DWG VAB 12/15/94

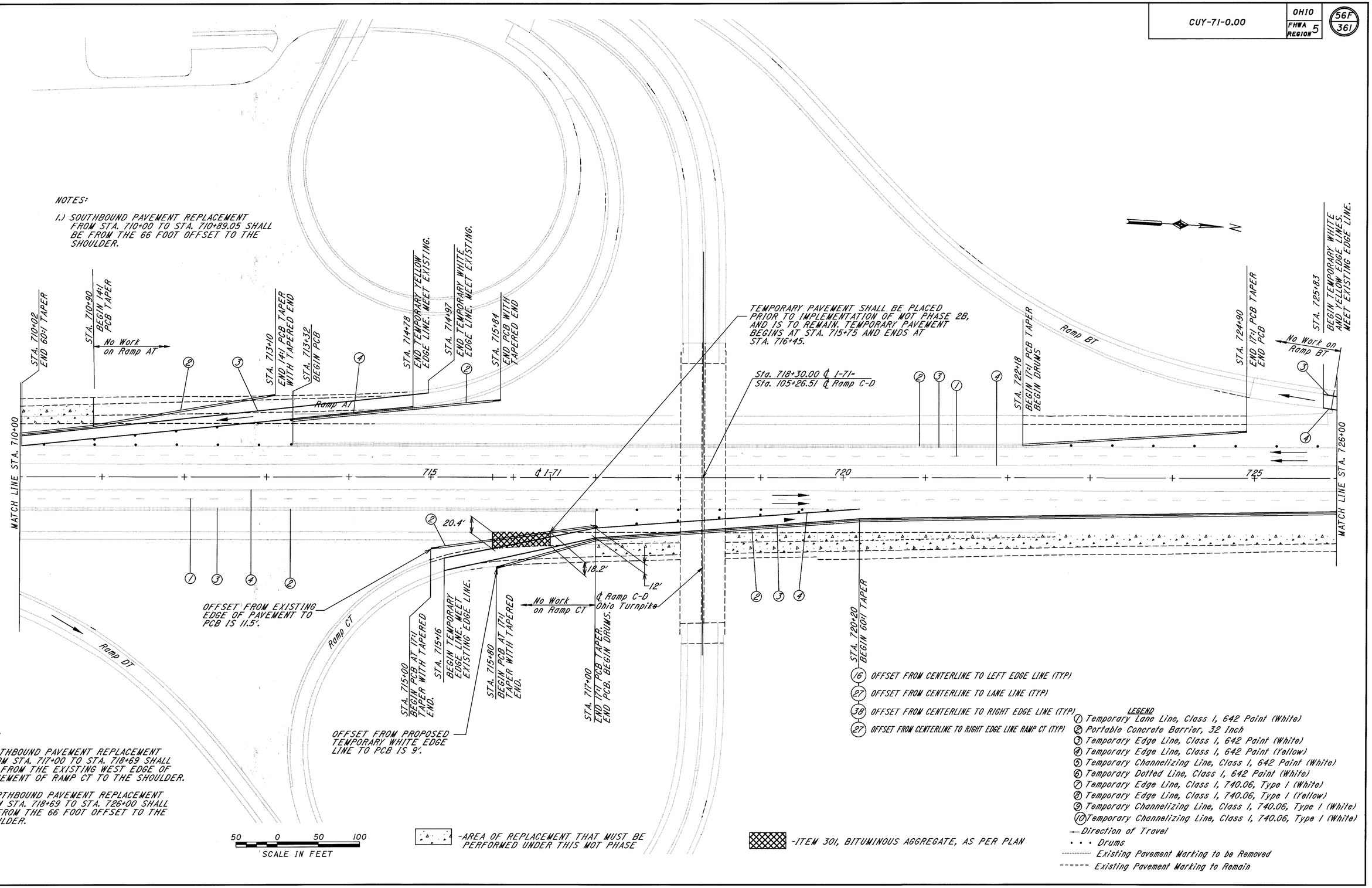

MAINTENANCE OF TRAFFIC PLAN STA. 710+00 TO STA. 726+00 - PHASE 2B

PLOT SUBMITTED:03-AUG-1998 08:42
307MT11.DGN
PLOTTED BY: jgrmovse
PLOTTED FROM: pid08459b307mt11.dgn
PLOTTER: sbefor
L307MT11.DWG1 VMB 12/15/94

CUY-71-0.00

OHIO FHWA REGION 5

566/361

NOTES:

1.) SOUTHBOUND PAVEMENT REPLACEMENT FROM STA. 726+00 TO STA. 729+00 SHALL BE FROM THE 42 FOOT OFFSET TO THE 66 FOOT OFFSET.

2.) SOUTHBOUND PAVEMENT REPLACEMENT FROM STA. 729+00 TO STA. 732+20 SHALL BE FROM THE 42 FOOT OFFSET TO THE 54 FOOT OFFSET.

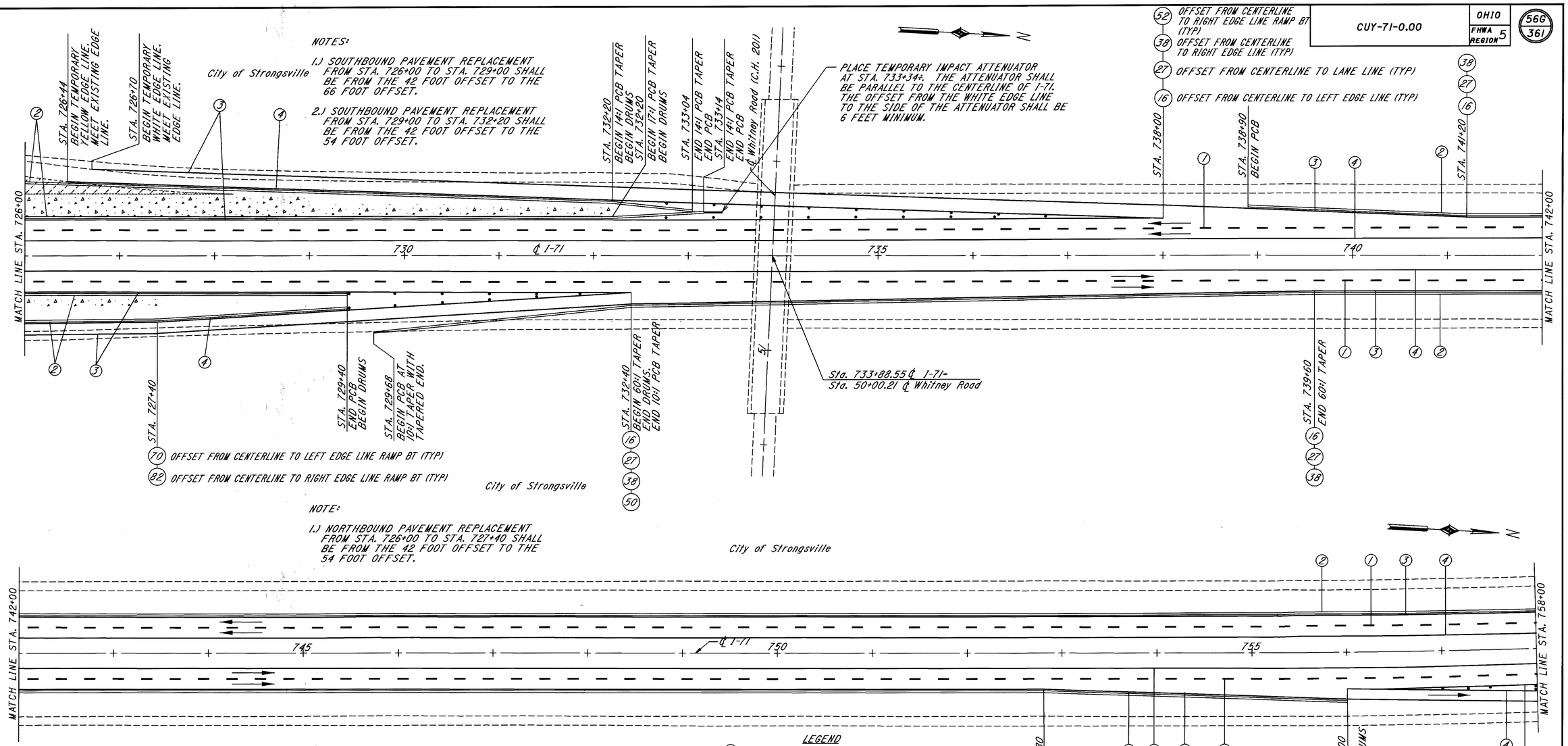

NOTE:

1.) NORTHBOUND PAVEMENT REPLACEMENT FROM STA. 726+00 TO STA. 727+40 SHALL BE FROM THE 42 FOOT OFFSET TO THE 54 FOOT OFFSET.

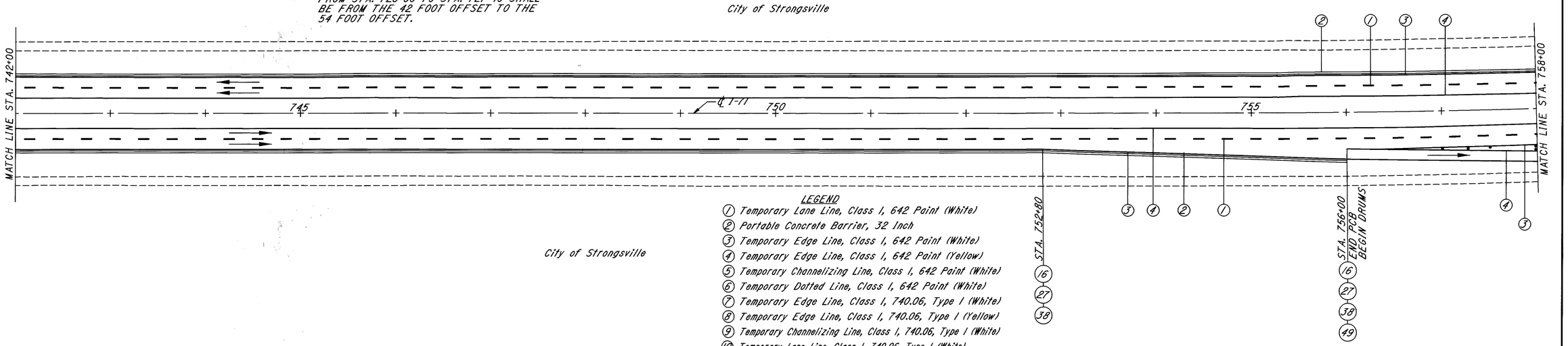

LEGEND

1. Temporary Lane Line, Class I, 642 Paint (White)
2. Portable Concrete Barrier, 32 Inch
3. Temporary Edge Line, Class I, 642 Paint (White)
4. Temporary Edge Line, Class I, 642 Paint (Yellow)
5. Temporary Channelizing Line, Class I, 642 Paint (White)
6. Temporary Dotted Line, Class I, 642 Paint (White)
7. Temporary Edge Line, Class I, 740.06, Type I (White)
8. Temporary Edge Line, Class I, 740.06, Type I (Yellow)
9. Temporary Channelizing Line, Class I, 740.06, Type I (White)
10. Temporary Lane Line, Class I, 740.06, Type I (White)

→ Direction of Travel

• • • Drums

---------- Existing Pavement Marking to be Removed

------ Existing Pavement Marking to Remain

-AREA OF REPLACEMENT THAT MUST BE PERFORMED UNDER THIS MOT PHASE

50 0 50 100

SCALE IN FEET

MAINTENANCE OF TRAFFIC PLAN STA. 726+00 TO STA. 758+00 - PHASE 2A

PLOT SUBMITTED:03-AUG-1998 08:43
307MT12.DGN
PLOTTED BY: jgrmovse
PLOTTED FROM: Bforsber Rpid08459B.dgn B307mt12.dgn
E307MT12.DWG VAB 12/15/94

CUY-71-0.00	OHIO FHWA REGION 5	56H 361

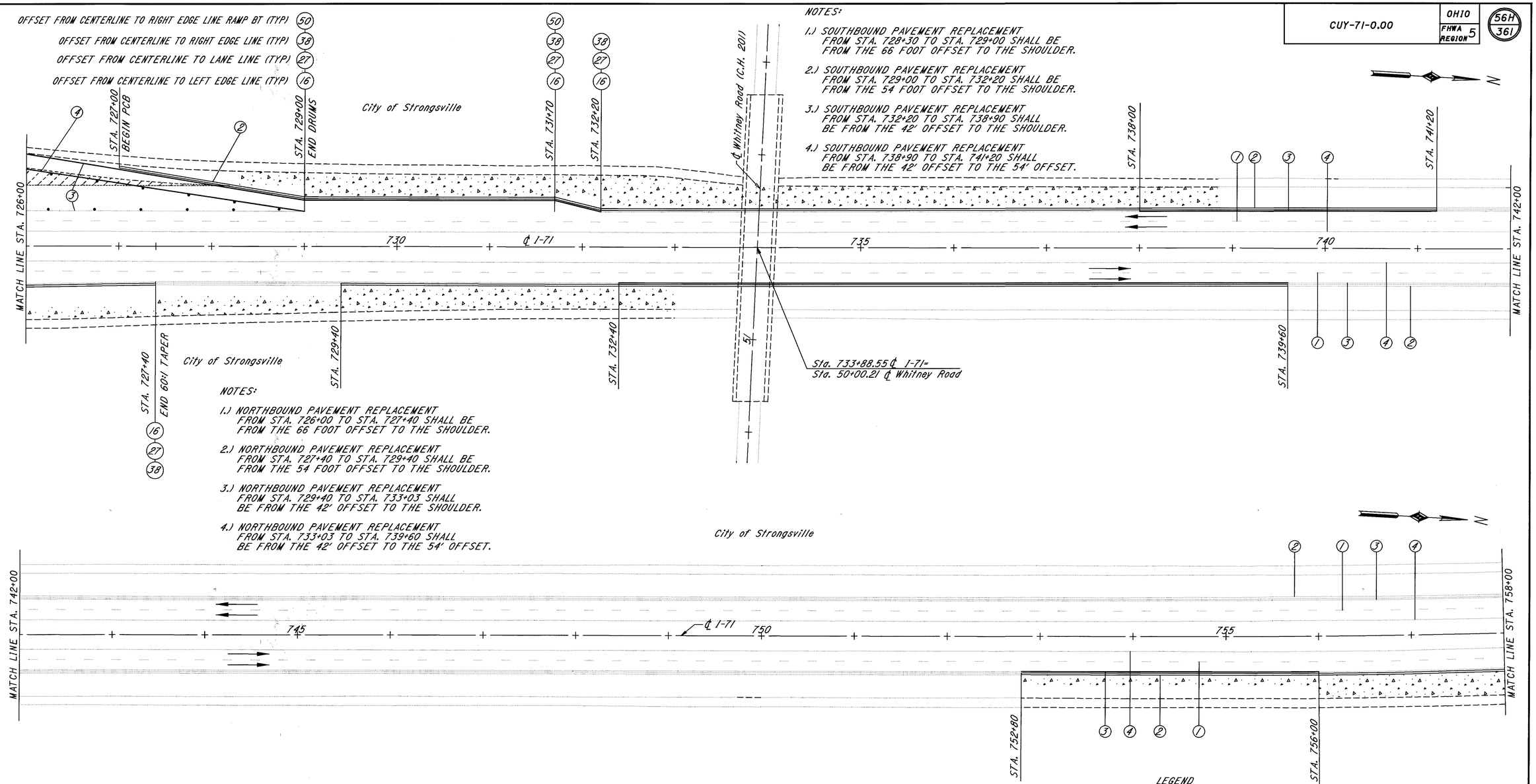

NOTES:

1.) SOUTHBOUND PAVEMENT REPLACEMENT FROM STA. 728+30 TO STA. 729+00 SHALL BE FROM THE 66 FOOT OFFSET TO THE SHOULDER.

2.) SOUTHBOUND PAVEMENT REPLACEMENT FROM STA. 729+00 TO STA. 732+20 SHALL BE FROM THE 54 FOOT OFFSET TO THE SHOULDER.

3.) SOUTHBOUND PAVEMENT REPLACEMENT FROM STA. 732+20 TO STA. 738+90 SHALL BE FROM THE 42' OFFSET TO THE SHOULDER.

4.) SOUTHBOUND PAVEMENT REPLACEMENT FROM STA. 738+90 TO STA. 741+20 SHALL BE FROM THE 42' OFFSET TO THE 54' OFFSET.

NOTES:

1.) NORTHBOUND PAVEMENT REPLACEMENT FROM STA. 726+00 TO STA. 727+40 SHALL BE FROM THE 66 FOOT OFFSET TO THE SHOULDER.

2.) NORTHBOUND PAVEMENT REPLACEMENT FROM STA. 727+40 TO STA. 729+40 SHALL BE FROM THE 54 FOOT OFFSET TO THE SHOULDER.

3.) NORTHBOUND PAVEMENT REPLACEMENT FROM STA. 729+40 TO STA. 733+03 SHALL BE FROM THE 42' OFFSET TO THE SHOULDER.

4.) NORTHBOUND PAVEMENT REPLACEMENT FROM STA. 733+03 TO STA. 739+60 SHALL BE FROM THE 42' OFFSET TO THE 54' OFFSET.

NOTES:

1.) NORTHBOUND PAVEMENT REPLACEMENT FROM STA. 752+80 TO STA. 756+00 SHALL BE FROM THE 42 FOOT OFFSET TO THE 54 FOOT OFFSET.

2.) NORTHBOUND PAVEMENT REPLACEMENT FROM STA. 756+00 TO STA. 758+00 SHALL BE FROM THE 42 FOOT OFFSET TO THE SHOULDER.

LEGEND

1. Temporary Lane Line, Class I, 642 Paint (White)
2. Portable Concrete Barrier, 32 Inch
3. Temporary Edge Line, Class I, 642 Paint (White)
4. Temporary Edge Line, Class I, 642 Paint (Yellow)
5. Temporary Channelizing Line, Class I, 642 Paint (White)
6. Temporary Dotted Line, Class I, 642 Paint (White)
7. Temporary Edge Line, Class I, 740.06, Type I (White)
8. Temporary Edge Line, Class I, 740.06, Type I (Yellow)
9. Temporary Channelizing Line, Class I, 740.06, Type I (White)
10. Temporary Lane Line, Class I, 740.06, Type I (White)

→ Direction of Travel

• • • Drums

---------- Existing Pavement Marking to be Removed

------ Existing Pavement Marking to Remain

50 0 50 100
SCALE IN FEET

-AREA OF REPLACEMENT THAT MUST BE PERFORMED UNDER THIS MOT PHASE

MAINTENANCE OF TRAFFIC PLAN STA. 726+00 TO STA. 758+00 - PHASE 2B

PLOT SUBMITTED:03-AUG-1998 08:44
307MT12.DGN
PLOTTED BY: jgrmovse
PLOTTED FROM: pidf08459B307mt12.dgn

PLOT SUBMITTED:03-AUG-1998 08:45
307MT13.DGN
PLOTTED BY: jgrmovse
PLOTTED FROM: 307mt13.dgn

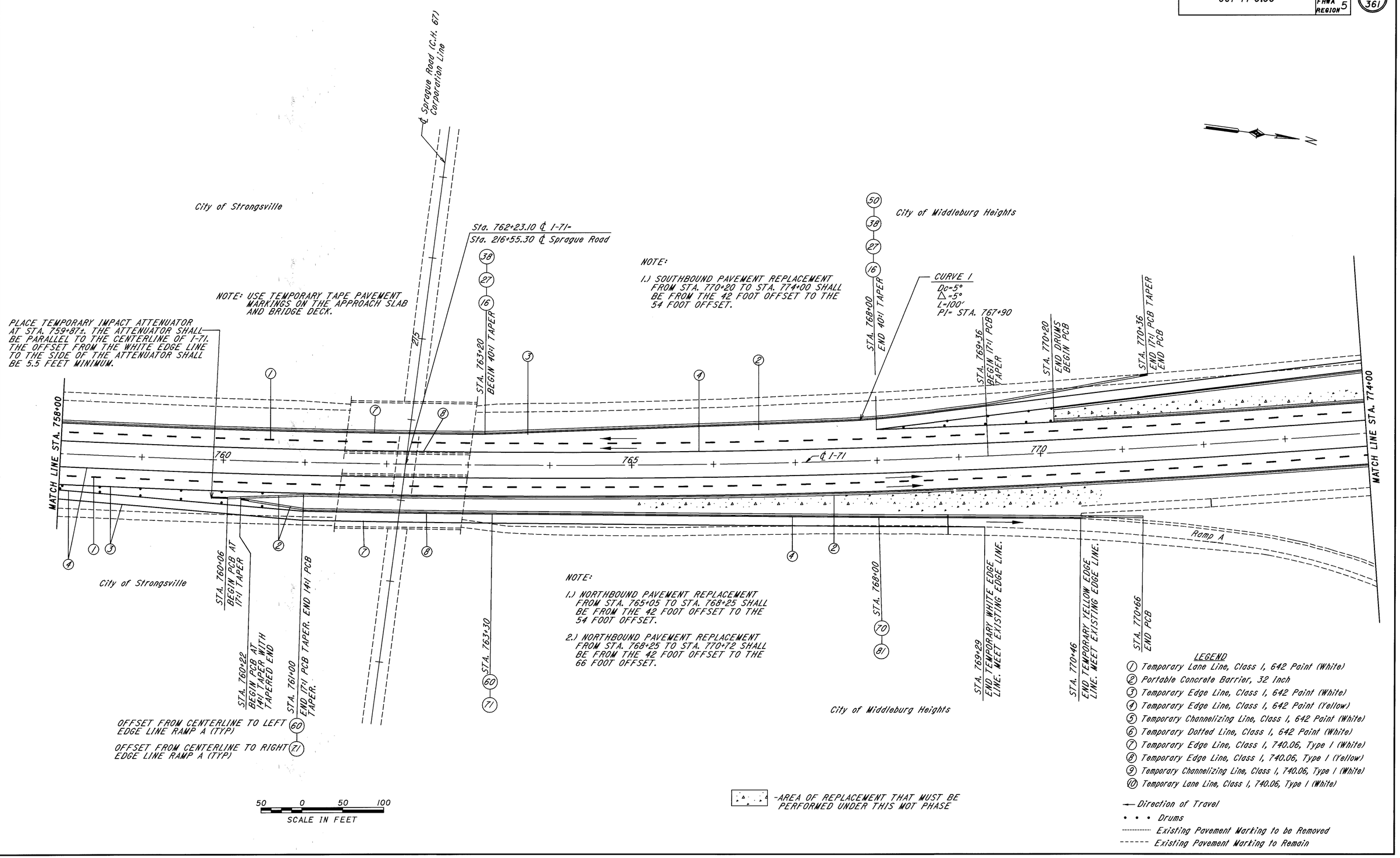

MAINTENANCE OF TRAFFIC PLAN STA. 758+00 TO STA. 774+00 - PHASE 2A

NOTE:

1.) SOUTHBOUND PAVEMENT REPLACEMENT FROM STA. 763+20 TO STA. 770+20 SHALL BE FROM THE 42 FOOT OFFSET TO THE 54' OFFSET.

2.) SOUTHBOUND PAVEMENT REPLACEMENT FROM STA. 767+53 TO STA. 772+50 SHALL BE FROM THE 54 FOOT OFFSET TO THE SHOULDER.

3.) SOUTHBOUND PAVEMENT REPLACEMENT FROM STA. 772+50 TO STA. 774+00 SHALL BE FROM THE 66 FOOT OFFSET TO THE SHOULDER.

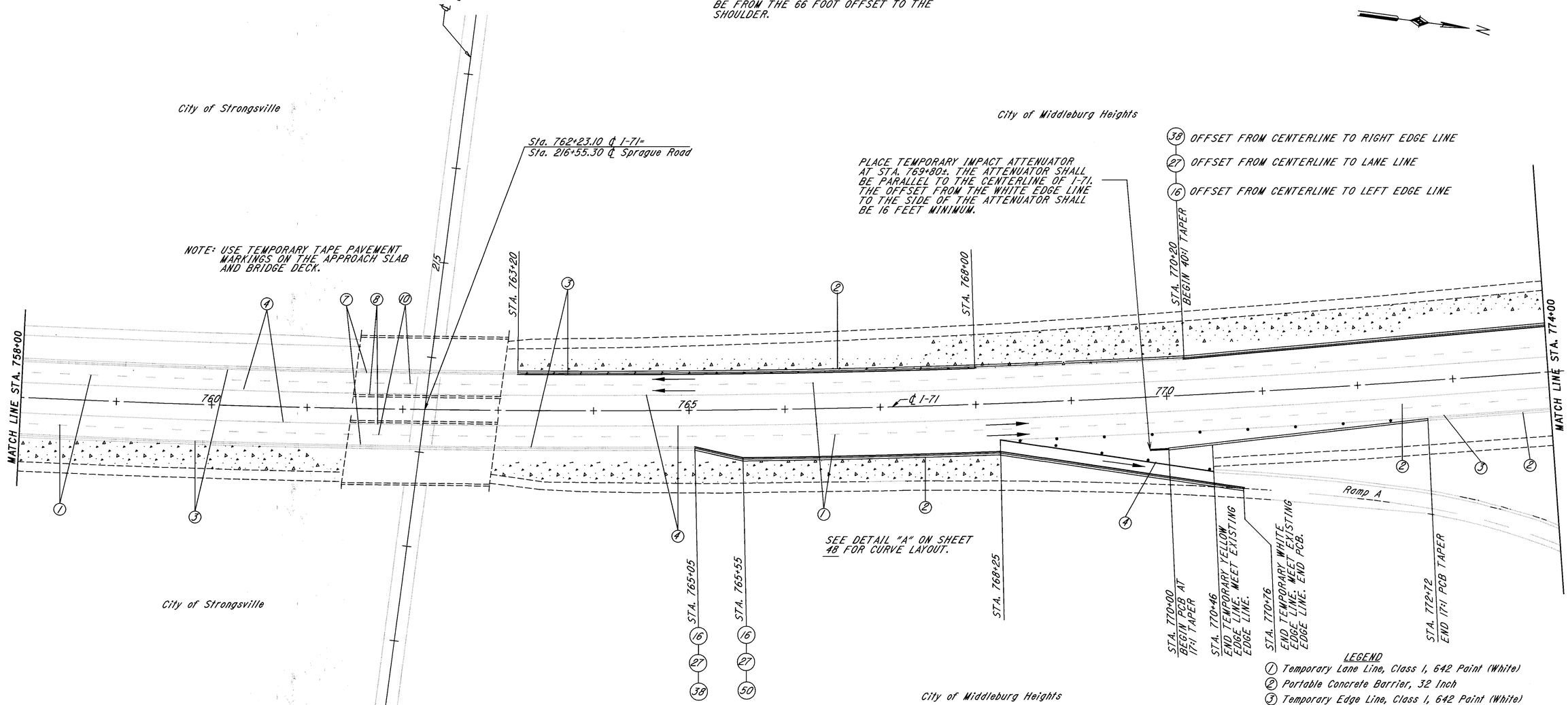

MAINTENANCE OF TRAFFIC PLAN STA. 758+00 TO STA. 774+00 - PHASE 2B

PLOT SUBMITTED:03-AUG-1998 08:46
307MT13.DGN
PLOTTED BY: jgrmovse
PLOTTED FROM: ...forsberbpid08459Bdgnb307mt13.dgn
I307MT13.DWG VMB 10/15/94

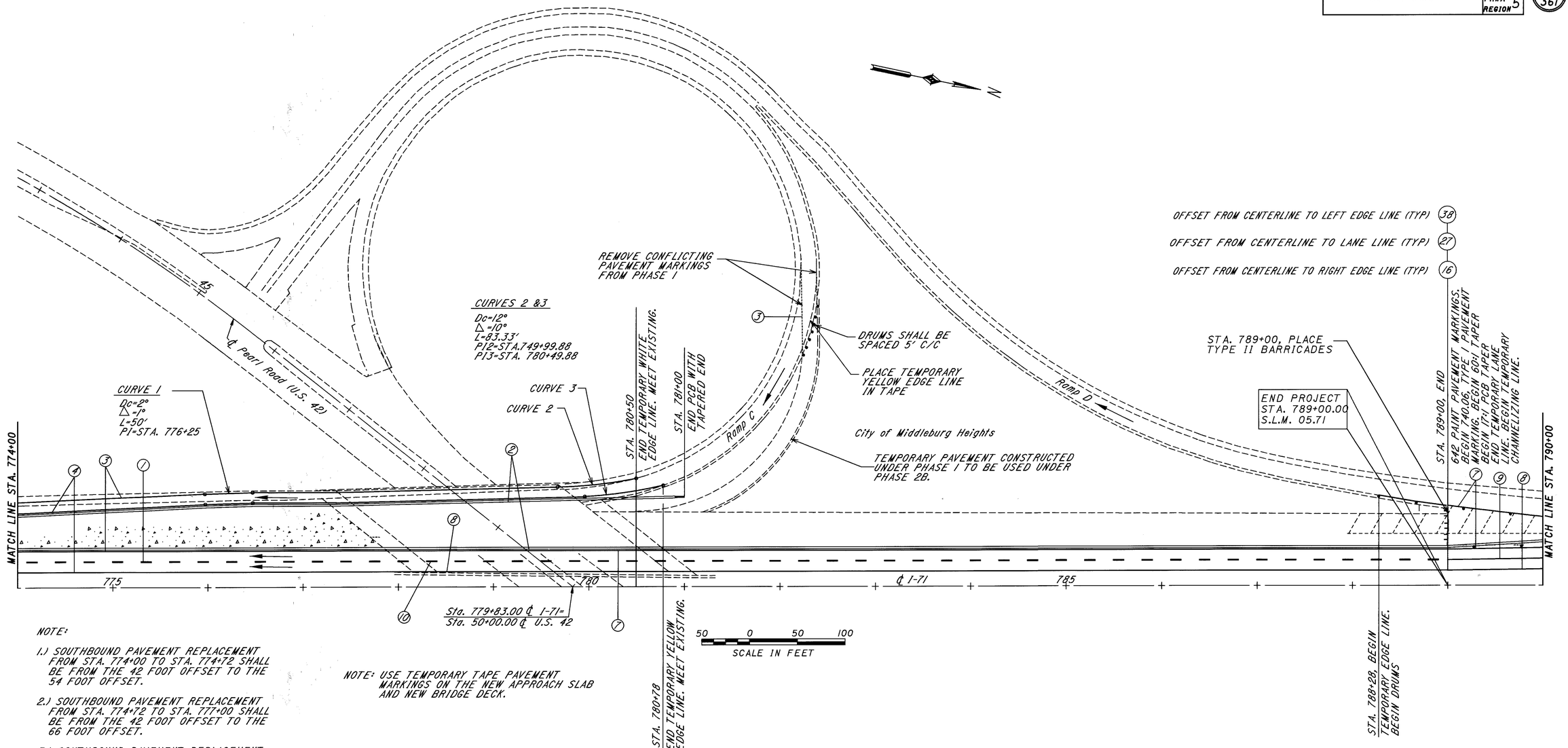

NOTE:

1.) SOUTHBOUND PAVEMENT REPLACEMENT FROM STA. 774+00 TO STA. 774+72 SHALL BE FROM THE 42 FOOT OFFSET TO THE 54 FOOT OFFSET.

2.) SOUTHBOUND PAVEMENT REPLACEMENT FROM STA. 774+72 TO STA. 777+00 SHALL BE FROM THE 42 FOOT OFFSET TO THE 66 FOOT OFFSET.

3.) SOUTHBOUND PAVEMENT REPLACEMENT FROM 777+00 TO 777+80 SHALL BE FROM THE 42' OFFSET TO THE 78 FOOT OFFSET.

NOTE: USE TEMPORARY TAPE PAVEMENT MARKINGS ON THE NEW APPROACH SLAB AND NEW BRIDGE DECK.

LEGEND

1. Temporary Lane Line, Class I, 642 Paint (White)
2. Portable Concrete Barrier, 32 Inch
3. Temporary Edge Line, Class I, 642 Paint (White)
4. Temporary Edge Line, Class I, 642 Paint (Yellow)
5. Temporary Channelizing Line, Class I, 642 Paint (White)
6. Temporary Dotted Line, Class I, 642 Paint (White)
7. Temporary Edge Line, Class I, 740.06, Type I (White)
8. Temporary Edge Line, Class I, 740.06, Type I (Yellow)
9. Temporary Channelizing Line, Class I, 740.06, Type I (White)
10. Temporary Lane Line, Class I, 740.06, Type I (White)

→ Direction of Travel
• • • Drums
---------- Existing Pavement Marking to be Removed
------ Existing Pavement Marking to Remain

-AREA OF REPLACEMENT THAT MUST BE PERFORMED UNDER THIS MOT PHASE

MAINTENANCE OF TRAFFIC PLAN STA. 774+00 TO STA. 790+00 WEST - PHASE 2A

PLOT SUBMITTED:03-AUG-1998 08:47
307MT14.DGN
PLOTTED BY: jgrmovse
PLOTTED in: Power

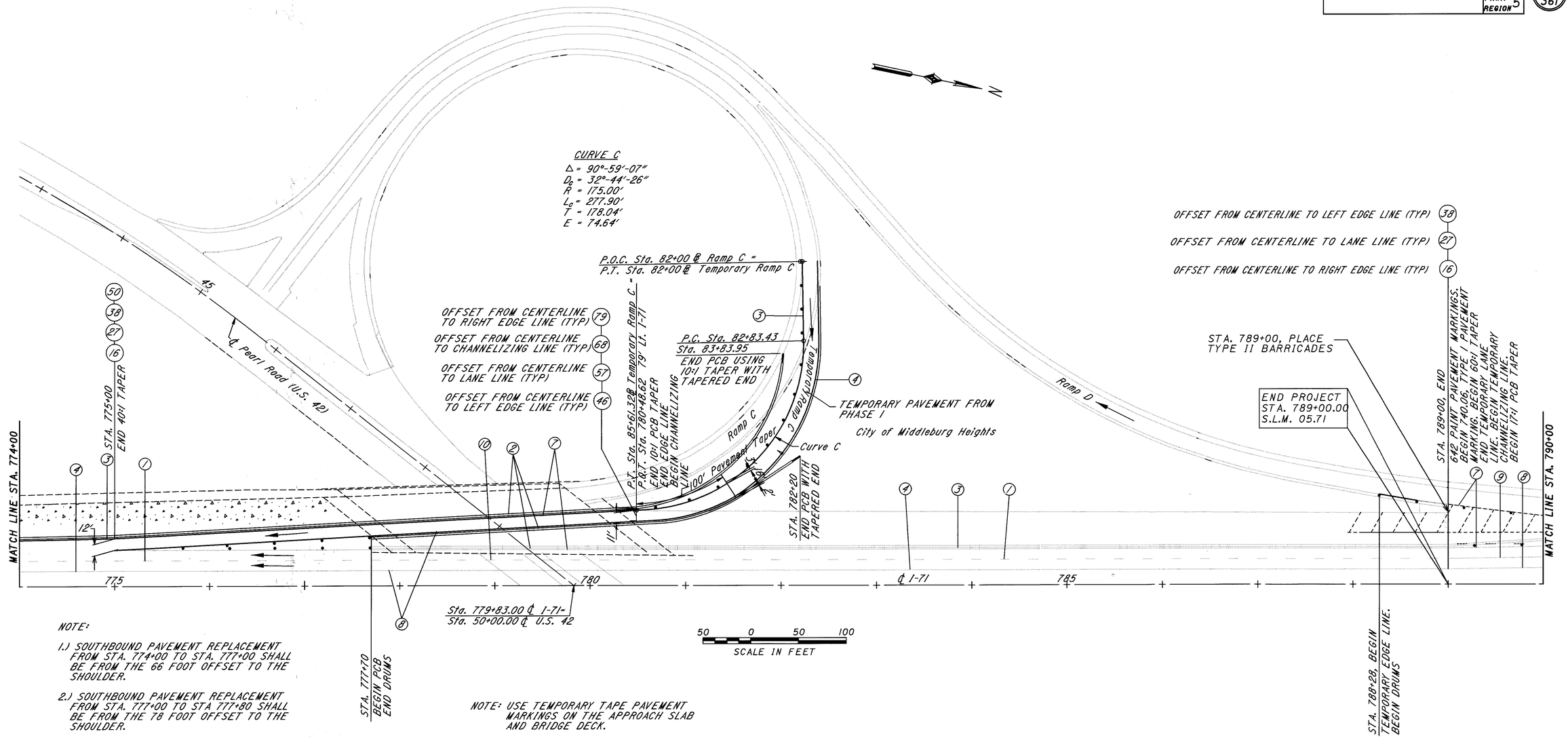

NOTE:

1.) SOUTHBOUND PAVEMENT REPLACEMENT FROM STA. 774+00 TO STA. 777+00 SHALL BE FROM THE 66 FOOT OFFSET TO THE SHOULDER.

2.) SOUTHBOUND PAVEMENT REPLACEMENT FROM STA. 777+00 TO STA 777+80 SHALL BE FROM THE 78 FOOT OFFSET TO THE SHOULDER.

NOTE: USE TEMPORARY TAPE PAVEMENT MARKINGS ON THE APPROACH SLAB AND BRIDGE DECK.

LEGEND

1. Temporary Lane Line, Class I, 642 Paint (White)
2. Portable Concrete Barrier, 32 Inch
3. Temporary Edge Line, Class I, 642 Paint (White)
4. Temporary Edge Line, Class I, 642 Paint (Yellow)
5. Temporary Channelizing Line, Class I, 642 Paint (White)
6. Temporary Dotted Line, Class I, 642 Paint (White)
7. Temporary Edge Line, Class I, 740.06, Type I (White)
8. Temporary Edge Line, Class I, 740.06, Type I (Yellow)
9. Temporary Channelizing Line, Class I, 740.06, Type I (White)
10. Temporary Lane Line, Class I, 740.06, Type I (White)

→ Direction of Travel
• • • Drums
---------- Existing Pavement Marking to be Removed
------ Existing Pavement Marking to Remain

-AREA OF REPLACEMENT THAT MUST BE PERFORMED UNDER THIS MOT PHASE

MAINTENANCE OF TRAFFIC PLAN STA. 774+00 TO STA. 790+00 WEST - PHASE 2B

PLOT SUBMITTED:03-AUG-1998 08:47
307MT14.DGN
PLOTTED BY:jgrmovse
PLOTTED:Fri Aug 03 08:47:59 1998
PLOTTED:/users/beforsber/pid08459/dgn/307mt14.dgn

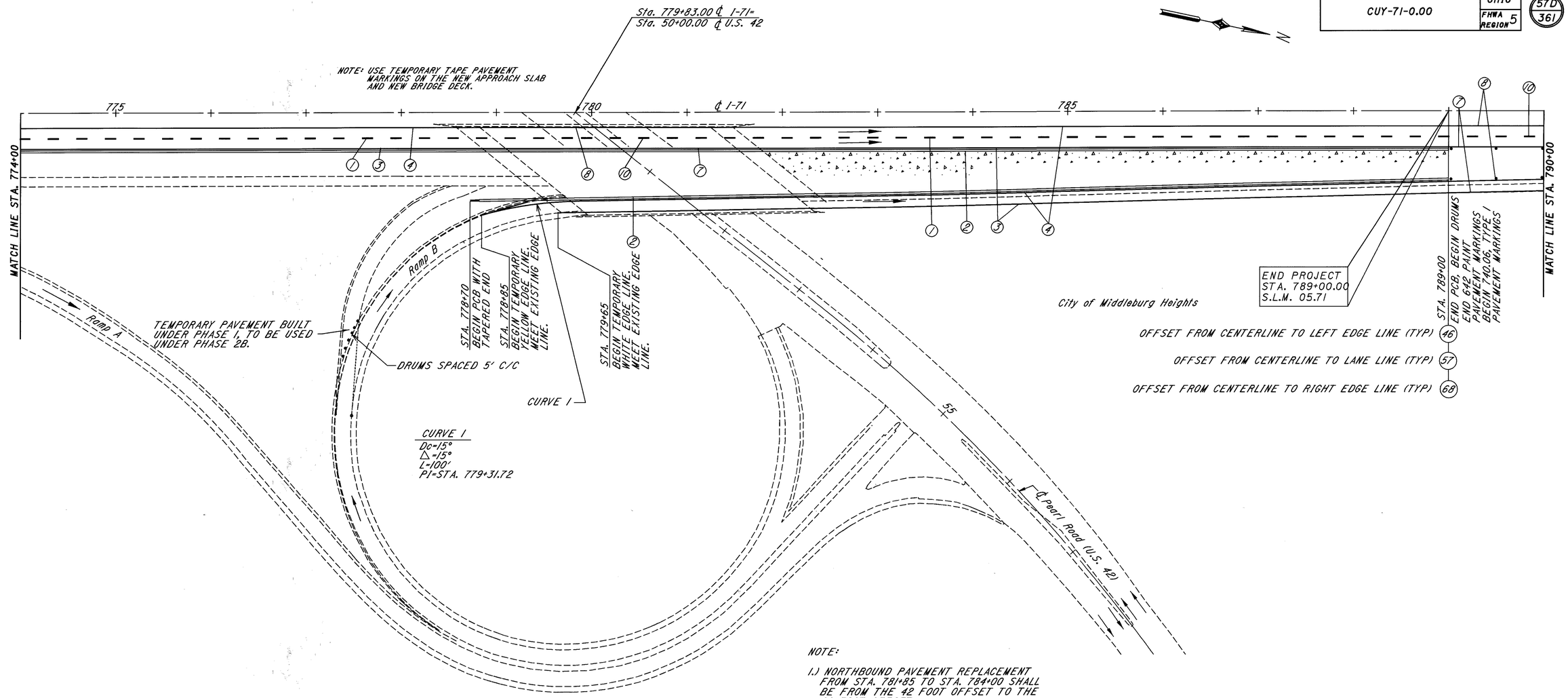

NOTE:

1.) NORTHBOUND PAVEMENT REPLACEMENT FROM STA. 781+85 TO STA. 784+00 SHALL BE FROM THE 42 FOOT OFFSET TO THE 66 FOOT OFFSET.

2.) NORTHBOUND PAVEMENT REPLACEMENT FROM STA. 784+00 TO STA. 789+00 SHALL BE FROM THE 42 FOOT OFFSET TO THE 54 FOOT OFFSET.

LEGEND

1. Temporary Lane Line, Class I, 642 Paint (White)
2. Portable Concrete Barrier, 32 Inch
3. Temporary Edge Line, Class I, 642 Paint (White)
4. Temporary Edge Line, Class I, 642 Paint (Yellow)
5. Temporary Channelizing Line, Class I, 642 Paint (White)
6. Temporary Dotted Line, Class I, 642 Paint (White)
7. Temporary Edge Line, Class I, 740.06, Type I (White)
8. Temporary Edge Line, Class I, 740.06, Type I (Yellow)
9. Temporary Channelizing Line, Class I, 740.06, Type I (White)
10. Temporary Lane Line, Class I, 740.06, Type I (White)

—— Direction of Travel

• • • Drums

---------- Existing Pavement Marking to be Removed

------ Existing Pavement Marking to Remain

-AREA OF REPLACEMENT THAT MUST BE PERFORMED UNDER THIS MOT PHASE

50 0 50 100
SCALE IN FEET

MAINTENANCE OF TRAFFIC PLAN STA. 774+00 TO STA. 790+00 EAST - PHASE 2A

PLOT SUBMITTED:03-AUG-1998 08:48
307MT15.DGN
PLOTTED BY:jgrmovse
PLOTTED:FROM:sberpid08459@dgn@307mt15.dgn
PLOTTED:TO:sberpid08459@dgn@307mt15.dgn
L307MT15.DWG1 VAR 12/15/94

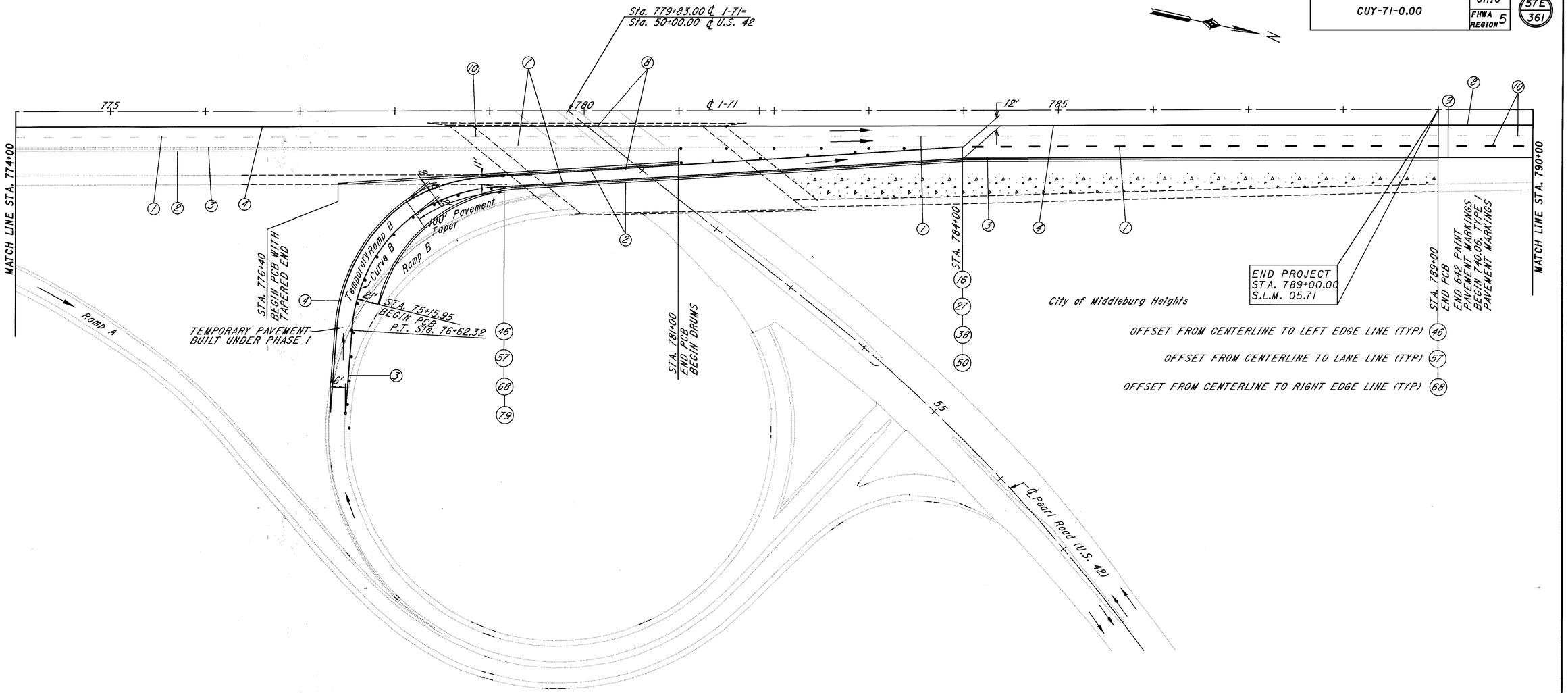

NOTE:

1.) NORTHBOUND PAVEMENT REPLACEMENT FROM STA. 782+00 TO STA. 789+00 SHALL BE FROM THE 66 FOOT OFFSET TO THE SHOULDER.

50 0 50 100
SCALE IN FEET

-AREA OF REPLACEMENT THAT MUST BE PERFORMED UNDER THIS MOT PHASE

LEGEND

1. Temporary Lane Line, Class I, 642 Paint (White)
2. Portable Concrete Barrier, 32 Inch
3. Temporary Edge Line, Class I, 642 Paint (White)
4. Temporary Edge Line, Class I, 642 Paint (Yellow)
5. Temporary Channelizing Line, Class I, 642 Paint (White)
6. Temporary Dotted Line, Class I, 642 Paint (White)
7. Temporary Edge Line, Class I, 740.06, Type I (White)
8. Temporary Edge Line, Class I, 740.06, Type I (Yellow)
9. Temporary Channelizing Line, Class I, 740.06, Type I (White)
10. Temporary Lane Line, Class I, 740.06, Type I (White)

— Direction of Travel
• • • Drums
---------- Existing Pavement Marking to be Removed
------ Existing Pavement Marking to Remain

MAINTENANCE OF TRAFFIC PLAN STA. 774+00 TO STA. 790+00 EAST - PHASE 2B

PLOTTED BY: jgrmoyse
PLOTTED: 08-03-98 08:49
PLOTTED FROM: b307mt15.dgn
307MT15.DGN

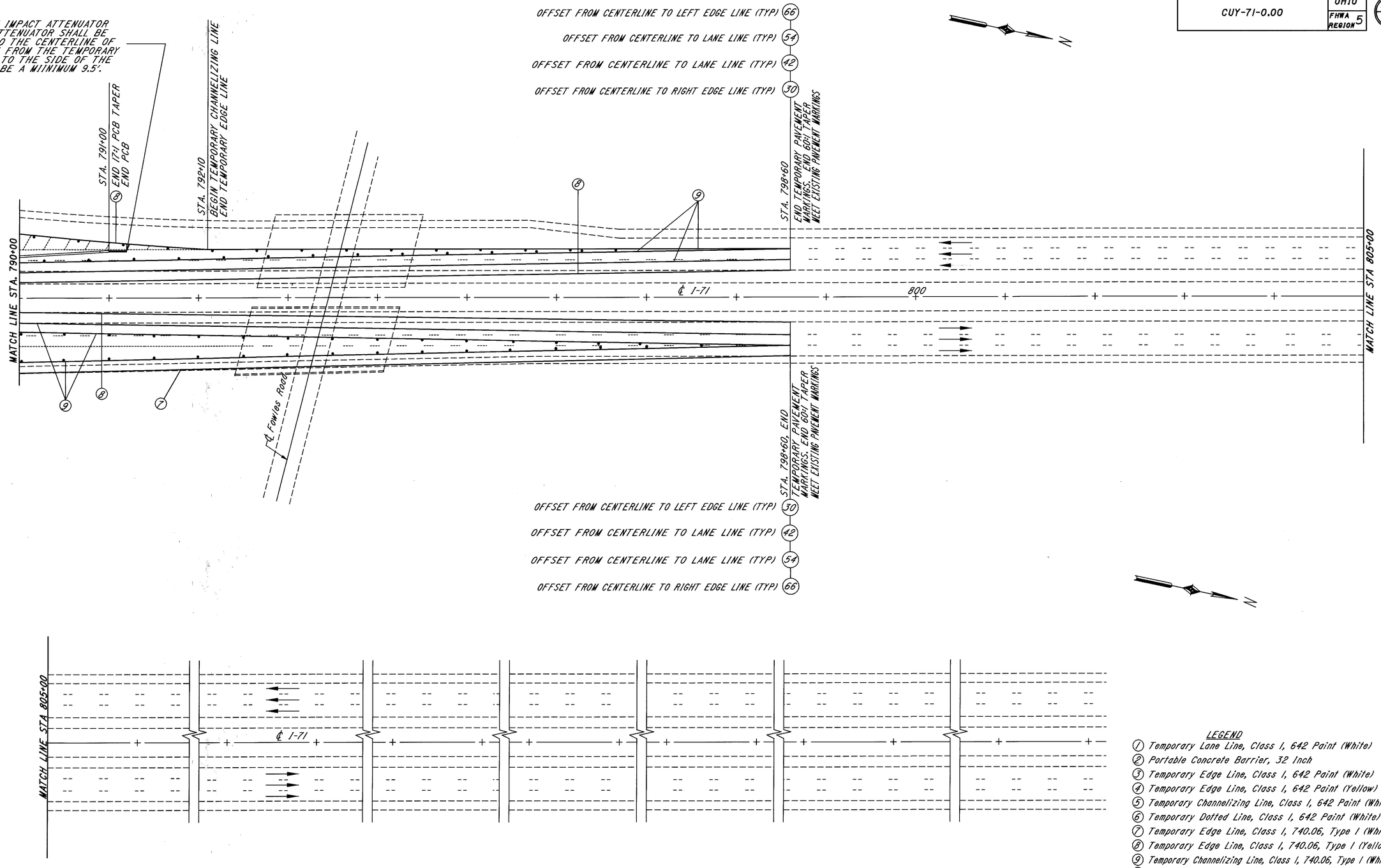

50 0 50 100
SCALE IN FEET

LEGEND

1. Temporary Lane Line, Class I, 642 Paint (White)
2. Portable Concrete Barrier, 32 Inch
3. Temporary Edge Line, Class I, 642 Paint (White)
4. Temporary Edge Line, Class I, 642 Paint (Yellow)
5. Temporary Channelizing Line, Class I, 642 Paint (White)
6. Temporary Dotted Line, Class I, 642 Paint (White)
7. Temporary Edge Line, Class I, 740.06, Type I (White)
8. Temporary Edge Line, Class I, 740.06, Type I (Yellow)
9. Temporary Channelizing Line, Class I, 740.06, Type I (White)
10. Temporary Lane Line, Class I, 740.06, Type I (White)

→ Direction of Travel
• • • Drums
---------- Existing Pavement Marking to be Removed
------ Existing Pavement Marking to Remain

MAINTENANCE OF TRAFFIC PLAN STA. 790+00 TO STA. 831+30 - PHASE 2A

PLOTTED BY: jgrmovse
PLOTTED: 03-AUG-1998 08:50
PLOT SUBMITTED: 03-AUG-1998 08:50
307MT16.DGN
307mt16.dgn

INSTALL TEMPORARY IMPACT ATTENUATOR AT STA. 791+20±. ATTENUATOR SHALL BE PLACED PARALLEL TO THE CENTERLINE OF IR-71. THE OFFSET FROM THE TEMPORARY CHANNELIZING LINE TO THE SIDE OF THE ATTENUATOR SHALL BE A MIINIMUM 9.5'.

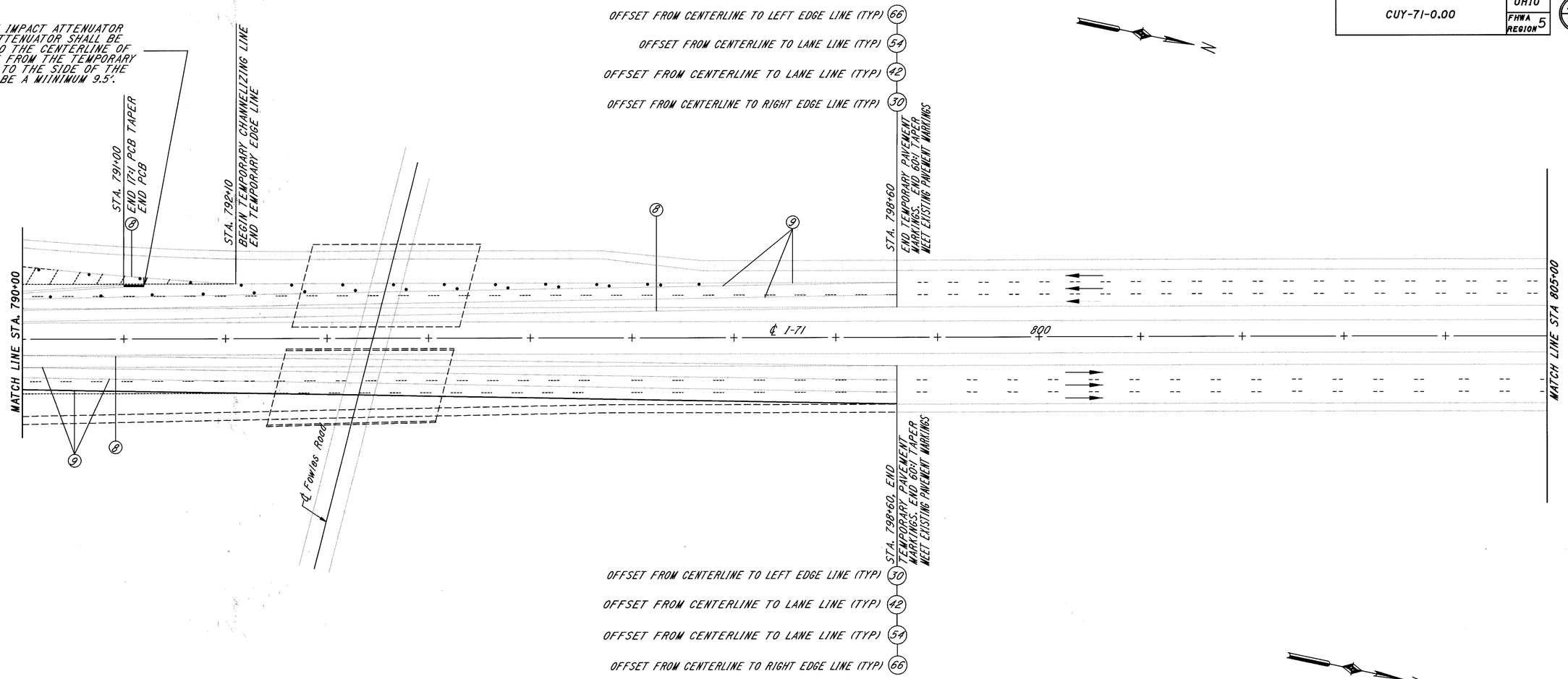

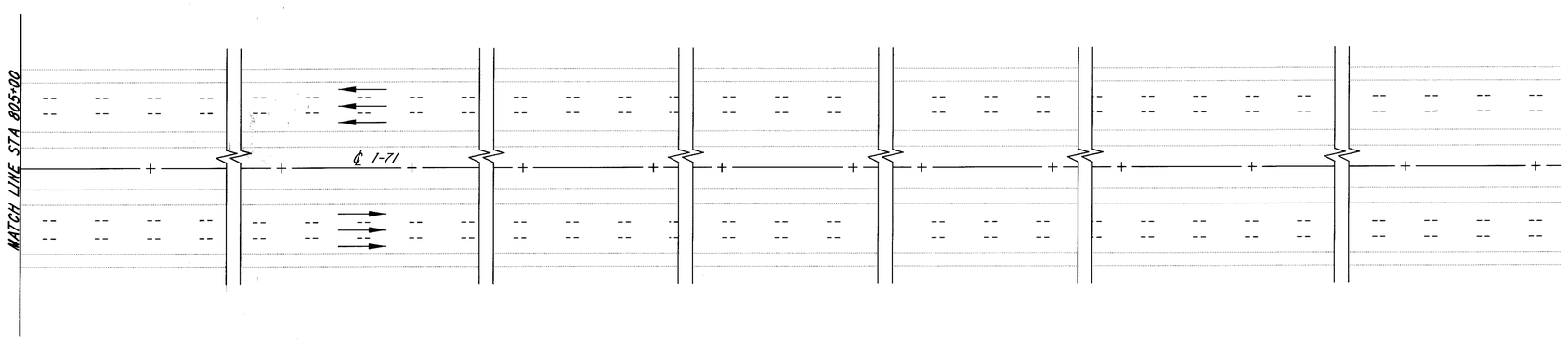

50 0 50 100
SCALE IN FEET

LEGEND

1. Temporary Lane Line, Class I, 642 Paint (White)
2. Portable Concrete Barrier, 32 Inch
3. Temporary Edge Line, Class I, 642 Paint (White)
4. Temporary Edge Line, Class I, 642 Paint (Yellow)
5. Temporary Channelizing Line, Class I, 642 Paint (White)
6. Temporary Dotted Line, Class I, 642 Paint (White)
7. Temporary Edge Line, Class I, 740.06, Type I (White)
8. Temporary Edge Line, Class I, 740.06, Type I (Yellow)
9. Temporary Channelizing Line, Class I, 740.06, Type I (White)
10. Temporary Lane Line, Class I, 740.06, Type I (White)

→ Direction of Travel
• • • Drums
---------- Existing Pavement Marking to be Removed
------ Existing Pavement Marking to Remain

MAINTENANCE OF TRAFFIC PLAN STA. 790+00 TO STA. 831+30 - PHASE 2B

PLOTTED BY: jgrmovse
PLOTTED: 03-AUG-1998 08:51
PLOT SUBMITTED: 03-AUG-1998 08:51
307MT16.DGN
pid08459 307mt16.dgn

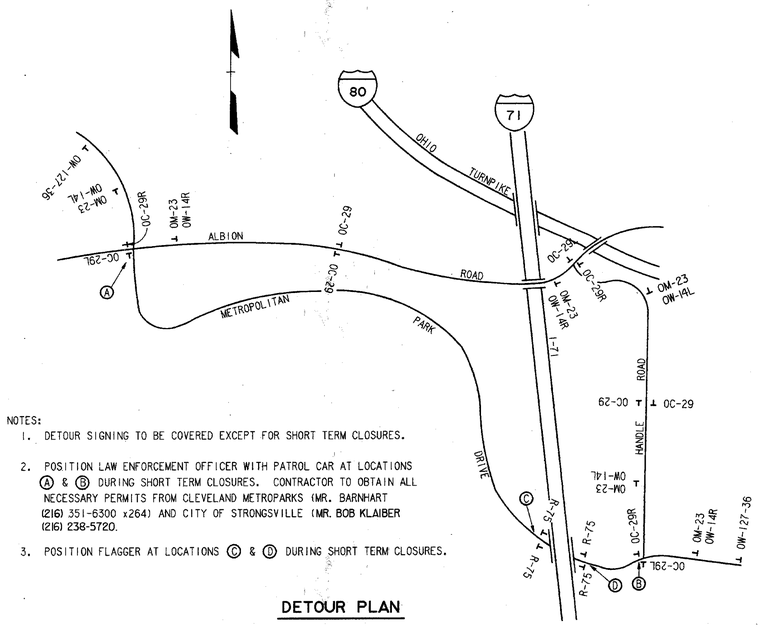

NOTES:

1. DETOUR SIGNING TO BE COVERED EXCEPT FOR SHORT TERM CLOSURES.
2. POSITION LAW ENFORCEMENT OFFICER WITH PATROL CAR AT LOCATIONS (A) & (B) DURING SHORT TERM CLOSURES. CONTRACTOR TO OBTAIN ALL NECESSARY PERMITS FROM CLEVELAND METROPARKS (MR. BARNHART (216) 351-6300 x264) AND CITY OF STRONGSVILLE (MR. BOB KLAIBER (216) 238-5720.
3. POSITION FLAGGER AT LOCATIONS (C) & (D) DURING SHORT TERM CLOSURES.

DETOUR PLAN

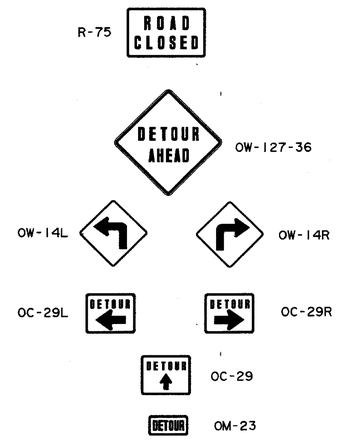

PLOTTED FROM: i:\users\eforsber\pid08459\dgn\dtour-57h.dgn
PLOT SUBMITTED: 05-AUG-1998 13:43
DTOUR57H.DGN

SHEET NUMBER 2	3	4	14	15	62	67	68	71	73	123E	124	189	190	191	192	204	ITEM	ITEM EXTENSION	GRAND TOTAL	UNIT	DESCRIPTION	SEE SHEET NO.
																					ROADWAY	
			LUMP														201	11000	LUMP		CLEARING AND GRUBBING	
						1781											202	22900	1781	SQ YD	APPROACH SLAB REMOVED	
					173362				178	1720							202	23000	175260	SQ YD	PAVEMENT REMOVED	
									192								202	30000	192	SQ FT	WALK REMOVED	
										225							202	30600	225	SQ YD	CONCRETE MEDIAN REMOVED	
									528								202	35100	528	LIN FT	PIPE REMOVED, 24" AND UNDER	
									36805								202	38000	36805	LIN FT	GUARDRAIL REMOVED	
			2100														202	54101	2100	EACH	RAISED PAVEMENT MARKER REMOVED FOR STORAGE, AS PER PLAN	14
									14								202	58300	14	EACH	CATCH BASIN OR INLET REMOVED	
									3								202	58500	3	EACH	CATCH BASIN ABANDONED	
23	17	13															202	60010	53	EACH	MONUMENT ASSEMBLY REMOVED	
				3000					2019								SPEC	20270100	5019	LIN FT	PIPE CLEANOUT	
			2000						59010								202	75000	61010	LIN FT	FENCE REMOVED	
									1								202	75250	1	EACH	GATE REMOVED	
			1000				3137	5			124939						203	12000	129081	CU YD	EXCAVATION NOT INCLUDING EMBANKMENT CONSTRUCTION	
								4			52843						203	20000	52847	CU YD	EMBANKMENT	
			1000														203	21000	1000	CU YD	EMBANKMENT USING GRANULAR MATERIAL	
			60														203	45000	60	HOUR	PROOF ROLLING	
					362378	4781	5920			3754						752	203	50000	377585	SQ YD	SUBGRADE COMPACTION	
			1000						4344					262			203	55000	5606	LIN FT	DITCH CLEANOUT	
					600		150		96								203	60001	846	STATION	LINEAR GRADING, AS PER PLAN	14
23	20	15															604	40500	58	EACH	REFERENCE MONUMENT	
									34214								606	13000	34214	LIN FT	GUARDRAIL, TYPE 5	
				100					263								606	13050	363	LIN FT	GUARDRAIL, TYPE 5A	
									175								606	15500	175	LIN FT	GUARDRAIL, BARRIER DESIGN, TYPE 5	
									60								606	26100	60	EACH	ANCHOR ASSEMBLY, TYPE E	
									47								606	26500	47	EACH	ANCHOR ASSEMBLY, TYPE T	
									30								606	35000	30	EACH	BRIDGE TERMINAL ASSEMBLY, TYPE 1	
									11								606	35100	11	EACH	BRIDGE TERMINAL ASSEMBLY, TYPE 2	
									5								606	60010	5	EACH	IMPACT ATTENUATOR, TYPE 1-98 (BIDIRECTIONAL)	
			2000						58526								607	23000	60526	LIN FT	FENCE, TYPE CLT	
									11								607	50901	11	EACH	GATE, TYPE CL, AS PER PLAN	15
									2230			4456	2785	3869	4706		608	10000	18046	SQ FT	4" CONCRETE WALK	
									192								608	15000	192	SQ FT	8" CONCRETE WALK	
								736									622	23405	736	LIN FT	CONCRETE BARRIER, TYPE B-50, AS PER PLAN	15
									513								622	24001	513	LIN FT	CONCRETE BARRIER, TYPE D, AS PER PLAN A	15
						1000											622	24001	1000	LIN FT	CONCRETE BARRIER, TYPE D, AS PER PLAN B	207
									12								625	32000	12	EACH	GROUND ROD	

PLOTTED BY: fkonopka
PLOTTED FROM: sbeforsberbpid08459bdgn
PLOT SUBMITTED: 07-AUG-1998 09:30
08459gga.dgn
08459gga.dgn

SHEET NUMBER 17	71	73	74	75	76	77	78	79	124	189	190	191	192	204	211A	ITEM	ITEM EXTENSION	GRAND TOTAL	UNIT	DESCRIPTION	SEE SHEET NO.
																				EROSION CONTROL	
97000																207	10000	97000	SQ YD	TEMPORARY SEEDING AND MULCHING	
5000				80		116	139	151								207	30000	5486	LIN FT	FILTER FABRIC FENCE	
300																207	40000	300	LIN FT	TEMPORARY SLOPE DRAIN	
200																207	55000	200	LIN FT	TEMPORARY DIKES	
500																207	55500	500	SQ YD	TEMPORARY DITCH PROTECTION	
1000			127	141	107	141	248	282								207	70000	2046	EACH	STRAW OR HAY BALES	
		42														838	20750	42	CU YD	GABIONS WITH ADDITIONAL COATING	
		12														601	27000	12	CU YD	DUMPED ROCK FILL, TYPE C	
	1045															601	32005	1045	CU YD	ROCK CHANNEL PROTECTION, TYPE A WITH FABRIC FILTER, AS PER PLAN	17
100		4														601	32200	104	CU YD	ROCK CHANNEL PROTECTION, TYPE C WITH FILTER	
		24														601	34100	24	CU YD	ROCK CHANNEL PROTECTION, TYPE B WITHOUT FILTER	
100																601	34200	100	CU YD	ROCK CHANNEL PROTECTION, TYPE C WITHOUT FILTER	
12000									137668							659	10000	149668	SQ YD	SEEDING AND MULCHING	
5000																659	14000	5000	SQ YD	REPAIR SEEDING AND MULCHING	
7.64									13.47							659	20000	21.11	TON	COMMERCIAL FERTILIZER	
									31.0							659	30001	31	TON	AGRICULTURAL LIMING, AS PER PLAN	17
420																659	35000	420	M GAL	WATER	
445																659	40000	445	M SQ FT	MOWING	
		387														660	20000	387	SQ YD	SODDING REINFORCED	
		11817								40	39	44	44			670	40000	11984	SQ YD	DITCH EROSION PROTECTION	
																				DRAINAGE	
															1.9	602	20000	1.9	CU YD	CONCRETE MASONRY	
950		3726												130		603	01500	4806	LIN FT	6" CONDUIT, TYPE F **	
		161														603	04400	161	LIN FT	12" CONDUIT, TYPE B	
		100														603	05900	100	LIN FT	15" CONDUIT, TYPE B	
		875														603	06100	875	LIN FT	15" CONDUIT, TYPE C	
		130														603	07400	130	LIN FT	18" CONDUIT, TYPE B	
		55														603	08900	55	LIN FT	21" CONDUIT, TYPE B	
															110	603	10200	110	LIN FT	24" CONDUIT, TYPE A	
		4														604	00800	4	EACH	CATCH BASIN, NO. 3A WITH V GRATE	
		1														604	00801	1	EACH	CATCH BASIN, NO. 3A, AS PER PLAN	17
		27														604	01303	27	EACH	CATCH BASIN, NO. 4 WITH E GRATE, AS PER PLAN	211
		6														604	01403	6	EACH	CATCH BASIN, NO. 4A WITH E GRATE, AS PER PLAN	211
		3														604	01601	3	EACH	CATCH BASIN, NO. 5, AS PER PLAN	211
		1														604	01701	1	EACH	CATCH BASIN, NO. 5 WITH B GRATE, AS PER PLAN	211
		3														604	02000	3	EACH	CATCH BASIN, NO. 6	
		3														604	04500	3	EACH	CATCH BASIN, NO. 2-2B	
		2														604	04501	2	EACH	CATCH BASIN, NO. 2-2B, AS PER PLAN	211
		1														604	04901	1	EACH	CATCH BASIN, NO. 2-3, AS PER PLAN	17
		6														604	09500	6	EACH	CATCH BASIN RECONSTRUCTED TO GRADE	
		1														604	10901	1	EACH	INLET, NO. 2-6, AS PER PLAN	17
		1														604	11700	1	EACH	INLET, NO. 2-10	
		1														604	14602	1	EACH	INLET, NO. 3B50	

** - 707.41 NON-PERFORATED ASTM 3034 SDR 35, 707.42 OR 707.33.

PLOTTED BY: fkonopka
PLOTTED FROM: Bpid08459bdgn
PLOT SUBMITTED: 07-AUG-1998 09:31
08459gga.dgn

SHEET NUMBER 16	17	22C	62	63	64	65	66	67	69	70	71	73	123E	192	204	205	ITEM	ITEM EXTENSION	GRAND TOTAL	UNIT	DESCRIPTION	SEE SHEET NO.
																					DRAINAGE (CONTINUED)	
												1					604	31500	1	EACH	MANHOLE, NO. 3	
												1					604	31501	1	EACH	MANHOLE, NO. 3, AS PER PLAN	17
												2					604	32101	2	EACH	MANHOLE, NO. 5, AS PER PLAN	17
												1					604	37501	1	EACH	JUNCTION CHAMBER, TYPE 1, AS PER PLAN	17
												1					604	37501	1	EACH	JUNCTION CHAMBER, TYPE 2, AS PER PLAN	17
	10											115					604	36600	125	EACH	PRECAST REINFORCED CONCRETE OUTLET	
	5000																SPEC	60450000	5000	POUND	MISCELLANEOUS METAL	
	500											57082					605	11100	57582	LIN FT	6" SHALLOW PIPE UNDERDRAIN (30" DEEP)	
	500											62397					605	11110	62897	LIN FT	6" SHALLOW PIPE UNDERDRAIN WITH FABRIC WRAP (18" DEEP)	
	500											65174					605	11110	65674	LIN FT	6" SHALLOW PIPE UNDERDRAIN WITH FABRIC WRAP (30" DEEP)	
	500											2225			184		605	13300	2909	LIN FT	6" UNCLASSIFIED PIPE UNDERDRAIN	
	500																605	13300	500	LIN FT	6" UNCLASSIFIED PIPE UNDERDRAIN*	
	500											4190					605	13410	4690	LIN FT	6" UNCLASSIFIED PIPE UNDERDRAIN WITH FABRIC WRAP	
	500																605	13410	500	LIN FT	6" UNCLASSIFIED PIPE UNDERDRAIN WITH FABRIC WRAP*	
												4303					605	13500	4303	LIN FT	6" ROCK CUT UNDERDRAIN	
																					PAVEMENT	
150																	251	01000	150	SQ YD	PARTIAL DEPTH PAVEMENT REPAIR	
100																	252	01000	100	SQ YD	FULL DEPTH RIGID PAVEMENT REMOVAL AND FLEXIBLE REPLACEMENT	
300																	252	01500	300	LIN FT	FULL DEPTH PAVEMENT SAWING	
5100		8400						18787	18872		115		697				254	01000	51971	SQ YD	PAVEMENT PLANING, BITUMINOUS	
		100															301	46001	100	CU YD	BITUMINOUS AGGREGATE BASE, PG64-22, AS PER PLAN	22C
						114637									236	3	302	46000	114876	CU YD	BITUMINOUS AGGREGATE BASE, PG64-22	
							62469	1328	1069		67		676		124	5	304	20001	65738	CU YD	AGGREGATE BASE, AS PER PLAN	16
							1858										305	14001	1858	SQ YD	10" CONCRETE BASE, AS PER PLAN	16
									5920			178	454				305	13001	6552	SQ YD	9" CONCRETE BASE, AS PER PLAN	16
		840		6636						2478	29		83				407	10000	10066	GALLON	TACK COAT	
				21344						1239	14		55		340	14	407	14000	23006	GALLON	TACK COAT FOR INTERMEDIATE COURSE	
							149131										408	10000	149131	GALLON	BITUMINOUS PRIME COAT	
					18917					1260	3		53		36	2	446	46040	20271	CU YD	ASPHALT CONCRETE INTERMEDIATE COURSE, TYPE 2, PG64-28	
1800																	446	47011	1800	CU YD	ASPHALT CONCRETE SURFACE COURSE, TYPE 1, PG64-28, AS PER PLAN	16
		350															446	47020	350	CU YD	ASPHALT CONCRETE SURFACE COURSE, TYPE 1, PG64-22	
				17897						1033	12		46		32	1	446	50001	19021	CU YD	ASPHALT CONCRETE SURFACE COURSE, TYPE 1H, AS PER PLAN	16
												1474					448	46060	1474	CU YD	ASPHALT CONCRETE INTEREMEDIATE COURSE, TYPE 1, PG64-22 (UNDER GUARDRAIL)	
												44					SPEC	45130000	44	LIN FT	PRESSURE RELIEF JOINT, TYPE A	
													3026				451	15500	3026	SQ YD	11" REINFORCED CONCRETE PAVEMENT	
													113				609	14000	113	LIN FT	CURB, TYPE 2-A	
											372		45				609	26000	417	LIN FT	CURB, TYPE 6	
								4781									611	25001	4781	SQ YD	REINFORCED CONCRETE APPROACH SLAB (T=15"), AS PER PLAN	16,206
														295			612	20000	295	CU YD	9" CONCRETE TRAFFIC ISLAND	
													225				612	42000	225	SQ YD	CONCRETE MEDIAN	
1500					1482												617	10101	2982	CU YD	COMPACTED AGGREGATE, TYPE A, AS PER PLAN	16
			21.71														618	40600	21.71	MILE	RUMBLE STRIPS, TYPE 2 (ASPHALT)	
						41035											855	10000	41035	SQ YD	4" ASPHALT TREATED FREE DRAINING BASE	

* - 707.41, ASTM D-3034 SDR 35, 707.33 OR 707.42 PERFORATED PER 707.31.

PLOTTED BY: fkonopka
PLOTTED: 08-07-1998 09:31
PLOT SUBMITTED: 07-AUG-1998 09:31
08459gga.dgn

SHEET NUMBER 22C	22D	23	23A	23B	ITEM	ITEM EXTENSION	GRAND TOTAL	UNIT	DESCRIPTION	SEE SHEET NO.
									MAINTENANCE OF TRAFFIC	
	100				614	13000	100	CU YD	BITUMINOUS CONCRETE FOR MAINTAINING TRAFFIC	
	100				614	13001	100	CU YD	BITUMINOUS CONCRETE FOR MAINTAINING TRAFFIC, AS PER PLAN	22D
	2000				614	11100	2000	HOUR	LAW ENFORCEMENT OFFICER WITH PATROL CAR	
4					614	12351	4	EACH	TEMPORARY IMPACT ATTENUATOR, AS PER PLAN	22C
1500					SPEC	61412500	1500	SQ FT	REPLACEMENT SIGN	
	54				614	12470	54	EACH	WORK ZONE SPEED LIMIT SIGN	
32					614	12480	32	EACH	DOUBLED FINES IN WORK ZONE SIGN, R-180-48	
100					614	13200	100	EACH	BARRIER REFLECTOR, TYPE A	
200		2599	3052	1123	614	13300	6974	EACH	BARRIER REFLECTOR, TYPE B	
200		2599	3052	1123	614	13350	6974	EACH	OBJECT MARKER	
	40				614	18601	40	SIGN MNTH	PORTABLE CHANGEABLE MESSAGE SIGN, AS PER PLAN	22D
		11.00	10.70	0.10	614	20100	21.80	MILE	TEMPORARY LANE LINE, CLASS I, 642 PAINT	
			0.49	0.02	614	20200	0.51	MILE	TEMPORARY LANE LINE, CLASS I, 740.06, TYPE I	
		22.59	28.22	4.77	614	22100	55.58	MILE	TEMPORARY EDGE LINE, CLASS I, 642 PAINT	
		0.65	2.19	0.23	614	22200	3.07	MILE	TEMPORARY EDGE LINE, CLASS I, 740.06, TYPE I	
		7990	2400		614	23200	10390	LIN FT	TEMPORARY CHANNELIZING LINE, CLASS I, 642 PAINT	
		2262	4950	4950	614	23400	12162	LIN FT	TEMPORARY CHANNELIZING LINE, CLASS I, 740.06, TYPE I	
		739			614	24200	739	LIN FT	TEMPORARY DOTTED LINE, CLASS I, 642 PAINT	
	LUMP				615	10000	LUMP		TEMPORARY ROAD	
	1400				615	20000	1400	SQ YD	TEMPORARY PAVEMENT, CLASS A	
1500					616	10000	1500	M GAL	WATER	
150					616	20000	150	TON	CALCIUM CHLORIDE	
		60890	70530	26300	622	40020	157720	LIN FT	PORTABLE CONCRETE BARRIER, 32"	
		2990	3750	410	622	40040	7150	LIN FT	PORTABLE CONCRETE BARRIER, 32", BRIDGE MOUNTED	
400					630	80300	400	SQ FT	SIGN, TEMPORARY OVERLAY	
400					630	89900	400	EACH	REMOVAL OF OVERLAY SIGN	
1000					630	97800	1000	SQ FT	SIGNING, MISC.: ADDITIONAL SIGNS, GROUND MOUNTED, AS DIRECTED BY THE ENGINEER	
80000					642	30000	80000	LIN FT	REMOVAL OF PAVEMENT MARKING	
10000					644	30000	10000	LIN FT	REMOVAL OF PAVEMENT MARKING	
									SEE SHEETS 220 & 221 FOR TRAFFIC CONTROL GENERAL SUMMARY	
									SEE SHEET 257 FOR LIGHTING GENERAL SUMMARY	
									SEE SHEET 291 FOR BRIDGE CUY-71-0000 GENERAL SUMMARY	
									SEE SHEET 295 FOR BRIDGE CUY-71-0100 L&R GENERAL SUMMARY	
									SEE SHEET 304C FOR BRIDGE CUY-71-0332 L&R GENERAL SUMMARY	
									SEE SHEET 307 FOR BRIDGE CUY-71-0384 L&R GENERAL SUMMARY	
									SEE SHEET 319 FOR BRIDGE CUY-71-0395 L&R GENERAL SUMMARY	
									SEE SHEET 334 FOR BRIDGE CUY-71-0521 L&R GENERAL SUMMARY	
									SEE SHEET 346 FOR BRIDGE CUY-71-0553 L&R GENERAL SUMMARY	
									SEE SHEET 291 FOR BRIDGE CUY-71-0000 GENERAL SUMMARY	
					614	11000	LUMP		MAINTAINING TRAFFIC	
					806	16021	30	MONTH	FIELD OFFICE, TYPE C, AS PER PLAN	13
					806	26000	30	MONTH	COMPUTER EQUIPMENT FOR FIELD OFFICE	
					623	10000	LUMP		CONSTRUCTION LAYOUT STAKES	
					624	10000	LUMP		MOBILIZATION	

PLOTTED BY: fkonopka
PLOTTED: 08-07-1998 08:53
PLOT SUBMITTED: 07-AUG-1998 08:53
08459gga.dgn

MAINLINE QUANTITIES

ITEM 202 - PAVEMENT REMOVED

FROM NORTHBOUND	TO	LENGTH	WIDTH	AREA (SQ. YDS.)	FROM SOUTHBOUND	TO	LENGTH	WIDTH	AREA (SQ. YDS.)
473+00.	485+00.	1200.00	0.00	0.0	473+00.	485+00.	1200.00	0.00	0.0
485+00.	490+00.	500.00	24.00	1333.3	485+00.	490+00.	500.00	24.00	1333.3
490+00.	539+66.	4966.00	24.00	13242.7	490+00.	539+66.	4966.00	24.00	13242.7
541+71.5	545+19.45	347.95	24.00	927.9	541+71.5	545+19.45	347.95	24.00	927.9
545+28.3	602+71.33	5743.03	24.00	15314.7	545+28.3	597+46.65	5218.35	24.00	13915.6
602+71.33	608+45.	573.67	35.90	2288.3	597+46.65	609+46.65	1200.00	36.50	4866.7
608+45.	610+71.33	226.33	26.00	653.8	609+46.65	613+98.	451.35	24.00	1203.6
610+71.33	611+71.33	100.00	26.00	288.9	613+98.	621+09.41	711.41	24.00	1897.1
611+71.33	619+53.5	782.17	24.00	2085.8	621+09.41	622+09.41	100.00	26.00	288.9
619+53.5	621+00.	146.50	24.00	390.7	622+09.41	624+50.	240.59	26.00	695.0
621+00.	626+00.	500.00	49.27	2737.2	624+50.	630+09.41	559.41	36.08	2242.6
626+00.	633+32.	732.00	36.44	2963.8	630+09.41	637+45.27	735.86	24.00	1962.3
633+32.	635+62.73	230.73	26.41	677.1	637+45.27	638+45.27	100.00	26.00	288.9
635+62.73	639+00.	337.27	24.00	899.4	638+45.27	640+85.	239.73	26.00	692.6
639+00.	651+00.	1200.00	36.50	4866.7	640+85.	645+45.27	460.27	37.40	1912.7
651+00.	661+28.57	1028.57	24.00	2742.9	645+45.27	646+45.27	100.00	32.00	355.6
661+28.57	662+28.57	100.00	24.00	266.7	646+45.27	655+50.	904.73	26.00	2613.7
665+75.93	666+75.93	100.00	24.00	266.7	655+50.	661+28.57	578.57	24.00	1542.9
666+75.93	669+05.	229.07	24.00	610.9	661+28.57	662+28.57	100.00	24.00	266.7
669+05.	689+61.19	2056.19	24.00	5483.2	665+75.93	666+75.93	100.00	24.00	266.7
691+27.69	695+41.08	413.39	24.00	1102.4	666+75.93	689+58.43	2282.50	24.00	6086.7
698+84.62	699+62.97	78.35	24.00	208.9	691+33.93	695+35.11	401.18	24.00	1069.8
699+62.97	705+22.	559.03	36.08	2241.1	698+97.65	710+89.05	1191.40	36.59	4843.7
705+22.	708+62.97	340.97	26.00	985.0	710+89.05	714+97.	407.95	24.00	1087.9
708+62.97	715+61.	698.03	24.00	1861.4	714+97.	716+50.	153.00	24.00	408.0
715+61.	717+00.	139.00	24.00	370.7	716+50.	720+50.	400.00	24.00	1066.7
717+00.	719+69.18	269.18	51.80	1549.3	720+50.	724+90.01	440.01	24.00	1173.4
719+69.18	731+69.18	1200.00	36.50	4866.7	724+90.01	725+90.01	100.00	26.00	288.9
731+69.18	761+19.62	2950.44	24.00	7867.8	725+90.01	728+30.	239.99	26.00	693.3
763+26.63	768+85.	558.37	37.29	2313.5	728+30.	730+50.	220.00	39.00	953.3
768+85.	771+02.95	217.95	26.00	629.6	730+50.	733+90.01	340.01	34.24	1293.5
771+02.95	772+02.95	100.00	26.00	288.9	733+90.01	737+50.	359.99	24.00	960.0
772+02.95	778+35.38	632.43	24.00	1686.5	737+50.	761+19.62	2369.62	24.00	6319.0
781+30.62	789+00.	769.38	47.46	4056.9	763+26.63	763+97.86	71.23	24.00	189.9
		0.00	0.00	0.0	763+97.86	775+97.86	1200.00	36.50	4866.7
		0.00	0.00	0.0	775+97.86	778+35.38	237.52	24.00	633.4
		0.00	0.00	0.0	781+30.62	787+70.68	640.06	32.45	2307.5
		0.00	0.00	0.0	787+70.68	789+00.	129.32	37.33	536.4
				88069.1					85293.2

TOTAL = 88069.1 + 85293.2 = 173,362 S.Y.

ITEM 203 - SUBGRADE COMPACTION

FROM NORTHBOUND	TO	LENGTH	WIDTH	AREA (SQ. YDS.)	FROM SOUTHBOUND	TO	LENGTH	WIDTH	AREA (SQ. YDS.)
473+00.	485+00.	1200.00	26.00	3,466.7	473+00.	485+00.	1200.00	26.00	3,466.7
485+00.	490+00.	500.00	60.00	3,333.3	485+00.	490+00.	500.00	60.00	3,333.3
490+00.	539+66.	4966.00	52.00	28,692.4	490+00.	539+66.	4966.00	52.00	28,692.4
541+71.5	545+19.45	347.95	52.00	2,010.4	541+71.5	545+19.45	347.95	52.00	2,010.4
545+28.3	602+71.33	5743.03	52.00	33,182.0	545+28.3	597+46.65	5218.35	52.00	30,150.5
602+71.33	608+45.	573.67	63.90	4,073.1	597+46.65	609+46.65	1200.00	64.50	8,600.0
608+45.	610+71.33	226.33	60.00	1,508.9	609+46.65	613+98.	451.35	58.11	2,914.2
610+71.33	611+71.33	100.00	52.00	577.8	613+98.	621+09.41	711.41	52.00	4,110.4
611+71.33	619+53.5	782.17	52.00	4,519.2	621+09.41	622+09.41	100.00	52.00	577.8
619+53.5	621+00.	146.50	58.00	944.1	622+09.41	624+50.	240.59	59.00	1,577.2
621+00.	626+00.	500.00	82.24	4,568.9	624+50.	630+09.41	559.41	64.08	3,983.0
626+00.	633+32.	732.00	64.44	5,241.1	630+09.41	637+45.27	735.86	52.00	4,251.6
633+32.	635+62.73	230.73	60.41	1,548.7	637+45.27	638+45.27	100.00	52.00	577.8
635+62.73	639+00.	337.27	59.85	2,242.8	638+45.27	640+85.	239.73	60.00	1,598.2
639+00.	651+00.	1200.00	64.50	8,600.0	640+85.	645+45.27	460.27	65.40	3,344.6
651+00.	661+28.57	1028.57	52.00	5,942.8	645+45.27	646+45.27	100.00	58.00	644.4
661+28.57	662+28.57	100.00	60.00	666.7	646+45.27	655+50.	904.73	52.00	5,227.3
665+75.93	666+75.93	100.00	60.00	666.7	655+50.	661+28.57	578.57	52.00	3,342.8
666+75.93	669+05.	229.07	52.00	1,323.5	661+28.57	662+28.57	100.00	60.00	666.7
669+05.	689+61.19	2056.19	52.00	11,880.2	665+75.93	666+75.93	100.00	60.00	666.7
691+27.69	695+41.08	413.39	52.00	2,388.5	666+75.93	689+58.43	2282.50	52.00	13,187.8
698+84.62	699+62.97	78.35	52.00	452.7	691+33.93	695+35.11	401.18	52.00	2,317.9
699+62.97	705+22.	559.03	64.08	3,980.3	698+97.65	710+89.05	1191.40	64.59	8,550.3
705+22.	708+62.97	340.97	52.00	1,970.0	710+89.05	714+97.	407.95	52.00	2,357.0
708+62.97	715+61.	698.03	52.00	4,033.1	714+97.	716+50.	153.00	52.00	884.0
715+61.	717+00.	139.00	52.00	803.1	716+50.	720+50.	400.00	60.00	2,666.7
717+00.	719+69.18	269.18	83.80	2,506.4	720+50.	724+90.01	440.01	52.00	2,542.3
719+69.18	731+69.18	1200.00	64.50	8,600.0	724+90.01	725+90.01	100.00	52.00	577.8
731+69.18	761+19.62	2950.44	52.00	17,047.0	725+90.01	728+30.	239.99	52.00	1,386.6
763+26.63	768+85.	558.37	65.29	4,050.7	728+30.	730+50.	220.00	67.00	1,637.8
768+85.	771+02.95	217.95	60.00	1,453.0	730+50.	733+90.01	340.01	68.53	2,589.0
771+02.95	772+02.95	100.00	52.00	577.8	733+90.01	737+50.	359.99	60.00	2,399.9
772+02.95	778+35.38	632.43	52.00	3,654.0	737+50.	761+19.62	2369.62	52.00	13,691.1
781+30.62	789+00.	769.38	73.79	6,308.1	763+26.63	763+97.86	71.23	52.00	411.6
		0.00	0.00	0.0	763+97.86	775+97.86	1200.00	64.50	8,600.0
		0.00	0.00	0.0	775+97.86	778+35.38	237.52	60.00	1,583.5
		0.00	0.00	0.0	781+30.62	787+70.68	640.06	52.00	3,698.1
		0.00	0.00	0.0	787+70.68	789+00.	129.32	52.00	747.2
		30026.0		182,813.8			29998.0		179,564.6

TOTAL = 182,813.8 + 179,564.6 = 362,378 S.Y.

ITEM 203 - LINEAR GRADING, AS PER PLAN

OUTSIDE SHOULDERS

30026′ N.B. + 29998′ S.B. = 60024′ = 600 STA.

ITEM 618 - RUMBLE STRIPS, TYPE 2

SHOULDER LENGTH FROM ABOVE = 60024′

600024′ x 2 SIDES = 120,048′

MEDIAN SHOULDER - OMIT STA. 473+00 TO STA. 497+00 = -2400′ x 2 SIDES = -4800′

OUTISIDE SHOULDER - OMIT STA. 473+00 TO STA. 476+00 = -300′ x 2 SIDES = -600′

TOTAL = 114,648′ = 21.71 MILES

307q001.dgn

MAINLINE QUANTITIES

ITEM 446 - ASPHALT CONCRETE, SURFACE COURSE, TYPE IH, AS PER PLAN

FROM NORTHBOUND	TO	LENGTH	WIDTH	AREA (SQ. YDS.)	VOLUME (CU. YDS.)	MILLED AREAS, OR EX. SHOULDER, OR NEW 305 SHOULDER LENGTH	WIDTH	AREA (SQ. YDS.)	THICKNESS (INCHES)	VOLUME (CU. YDS.)
472+00.	473+00.	100.00	0.00			100.00	34.00	377.8	1.5	15.7
473+00.	485+00.	1200.00	26.00	3,466.7	144.4	1200.00	34.00	4533.3	1.5	188.9
485+00.	490+00.	500.00	60.00	3,333.3	138.9	0.00	0.00	0.0	1.5	0.0
490+00.	539+66.	4966.00	52.00	28,692.4	1195.5	4966.00	8.00	4414.2	1.5	183.9
541+71.5	545+19.45	347.95	52.00	2,010.4	83.8	347.95	8.00	309.3	1.5	12.9
545+28.3	602+71.33	5743.03	52.00	33,182.0	1382.6	5743.03	8.00	5104.9	1.5	212.7
602+71.33	608+45.	573.67	63.90	4,073.1	169.7	573.67	6.17	393.3	1.5	16.4
608+45.	610+71.33	226.33	52.00	1,307.7	54.5	226.33	34.50	867.6	1.5	36.1
610+71.33	611+71.33	100.00	52.00	577.8	24.1	100.00	10.00	111.1	1.5	4.6
611+71.33	619+53.5	782.17	52.00	4,519.2	188.3	782.17	8.00	695.3	1.5	29.0
619+53.5	621+00.	146.50	52.00	846.4	35.3	146.50	38.24	622.5	1.5	25.9
621+00.	626+00.	500.00	82.24	4,568.9	190.4	0.00	0.00	0.0	1.5	0.0
626+00.	633+32.	732.00	64.44	5,241.1	218.4	732.00	6.00	488.0	1.5	20.3
633+32.	635+62.73	230.73	54.41	1,394.9	58.1	230.73	39.60	1015.2	1.5	42.3
635+62.73	639+00.	337.27	52.00	1,948.7	81.2	337.27	34.68	1299.6	1.5	54.2
639+00.	651+00.	1200.00	64.50	8,600.0	358.3	1200.00	6.08	810.7	1.5	33.8
651+00.	661+28.57	1028.57	52.00	5,942.8	247.6	1028.57	8.00	914.3	1.5	38.1
661+28.57	662+28.57	100.00	60.00	666.7	27.8	0.00	0.00	0.0	0	0.0
665+75.93	666+75.93	100.00	60.00	666.7	27.8	0.00	0.00	0.0	0	0.0
666+75.93	669+05.	229.07	52.00	1,323.5	55.1	229.07	8.00	203.6	1.75	9.9
669+05.	689+61.19	2056.19	52.00	11,880.2	495.0	2056.19	8.00	1827.7	1.75	88.8
691+27.69	695+41.08	413.39	52.00	2,388.5	99.5	413.39	8.00	367.5	1.75	17.9
698+84.62	699+62.97	78.35	52.00	452.7	18.9	78.35	8.00	69.6	1.75	3.4
699+62.97	705+22.	559.03	64.08	3,980.3	165.8	559.03	6.18	383.9	1.75	18.7
705+22.	708+62.97	340.97	52.00	1,970.0	82.1	340.97	32.75	1240.8	1.5	51.7
708+62.97	715+61.	698.03	52.00	4,033.1	168.0	698.03	8.00	620.5	1.75	30.2
715+61.	717+00.	139.00	52.00	803.1	33.5	139.00	36.81	568.5	1.5	23.7
717+00.	719+69.18	269.18	83.80	2,506.4	104.4	0.00	0.00	0.0	1.75	0.0
719+69.18	731+69.18	1200.00	64.50	8,600.0	358.3	1200.00	6.08	810.7	1.75	39.4
731+69.18	761+19.62	2950.44	52.00	17,047.0	710.3	2950.44	8.00	2622.6	1.75	127.5
763+26.63	768+85.	558.37	65.29	4,050.7	168.8	558.37	6.00	372.2	1.75	18.1
768+85.	771+02.95	217.95	52.00	1,259.3	52.5	217.95	34.50	835.5	1.5	34.8
771+02.95	772+02.95	100.00	52.00	577.8	24.1	100.00	10.00	111.1	1.5	4.6
772+02.95	778+35.38	632.43	52.00	3,654.0	152.3	632.43	8.00	562.2	1.75	27.3
781+30.62	789+00.	769.38	73.79	6,308.1	262.8	769.38	6.00	512.9	1.75	24.9
		0.00	0.00	0.0	0.0	0.00	0.00	0.0	0	0.0
		0.00	0.00	0.0	0.0	0.00	0.00	0.0	0	0.0
		0.00	0.00	0.0	0.0	0.00	0.00	0.0	0	0.0
		0.00	0.00	0.0	0.0	0.00	0.00	0.0	0	0.0
				181873.3	7578.1			33,066.3		1435.7

FROM SOUTHBOUND	TO	LENGTH	WIDTH	AREA (SQ. YDS.)	VOLUME (CU. YDS.)	MILLED AREAS, OR EX. SHOULDER, OR NEW 305 SHOULDER LENGTH	WIDTH	AREA (SQ. YDS.)	THICKNESS (INCHES)	VOLUME (CU. YDS.)
472+00.	473+00.	100.00	0.00			100.00	34.00	377.8	1.5	15.7
473+00.	485+00.	1200.00	26.00	3,466.7	144.4	1200.00	34.00	4533.3	1.5	188.9
485+00.	490+00.	500.00	60.00	3,333.3	138.9	0.00	0.00	0.0	1.5	0.0
490+00.	539+66.	4966.00	52.00	28,692.4	1195.5	4966.00	8.00	4414.2	1.5	183.9
541+71.5	545+19.45	347.95	52.00	2,010.4	83.8	347.95	8.00	309.3	1.5	12.9
545+28.3	597+46.65	5218.35	52.00	30,150.5	1256.3	5218.35	8.00	4638.5	1.5	193.3
597+46.65	609+46.65	1200.00	64.50	8,600.0	358.3	1200.00	6.08	810.7	1.5	33.8
609+46.65	613+98.	451.35	52.00	2,607.8	108.7	451.35	36.61	1836.0	1.5	76.5
613+98.	621+09.41	711.41	52.00	4,110.4	171.3	711.41	8.00	632.4	1.5	26.3
621+09.41	622+09.41	100.00	52.00	577.8	24.1	100.00	10.00	111.1	1.5	4.6
622+09.41	624+50.	240.59	52.00	1,390.1	57.9	240.59	33.50	895.5	1.5	37.3
624+50.	630+09.41	559.41	64.08	3,983.0	166.0	559.41	6.18	384.1	1.5	16.0
630+09.41	637+45.27	735.86	52.00	4,251.6	177.2	735.86	8.00	654.1	1.5	27.3
637+45.27	638+45.27	100.00	52.00	577.8	24.1	100.00	10.00	111.1	1.5	4.6
638+45.27	640+85.	239.73	52.00	1,385.1	57.7	239.73	34.50	919.0	1.5	38.3
640+85.	645+45.27	460.27	65.40	3,344.6	139.4	460.27	6.00	306.8	1.5	12.8
645+45.27	646+45.27	100.00	58.00	644.4	26.9	100.00	7.00	77.8	1.5	3.2
646+45.27	655+50.	904.73	52.00	5,227.3	217.8	904.73	8.00	804.2	1.5	33.5
655+50.	661+28.57	578.57	52.00	3,342.8	139.3	578.57	8.00	514.3	1.5	21.4
661+28.57	662+28.57	100.00	60.00	666.7	27.8	0.00	0.00	0.0	0	0.0
665+75.93	666+75.93	100.00	60.00	666.7	27.8	0.00	0.00	0.0	0	0.0
666+75.93	689+58.43	2282.50	52.00	13,187.8	549.5	2282.50	8.00	2028.9	1.75	98.6
691+33.93	695+35.11	401.18	52.00	2,317.9	96.6	401.18	8.00	356.6	1.75	17.3
698+97.65	710+89.05	1191.40	64.59	8,550.3	356.3	1191.40	6.07	803.5	1.75	39.1
710+89.05	714+97.	407.95	52.00	2,357.0	98.2	407.95	34.50	1563.8	1.5	65.2
714+97.	716+50.	153.00	52.00	884.0	36.8	153.00	8.00	136.0	1.75	6.6
716+50.	720+50.	400.00	60.00	2,666.7	111.1	0.00	0.00	0.0	0	0.0
720+50.	724+90.01	440.01	52.00	2,542.3	105.9	440.01	8.00	391.1	1.75	19.0
724+90.01	725+90.01	100.00	52.00	577.8	24.1	100.00	10.00	111.1	1.5	4.6
725+90.01	728+30.	239.99	52.00	1,386.6	57.8	239.99	32.75	873.3	1.5	36.4
728+30.	730+50.	220.00	67.00	1,637.8	68.2	220.00	6.00	146.7	1.75	7.1
730+50.	733+90.01	340.01	68.53	2,589.0	107.9	0.00	0.00	0.0	0	0.0
733+90.01	737+50.	359.99	60.00	2,399.9	100.0	0.00	0.00	0.0	0	0.0
737+50.	761+19.62	2369.62	52.00	13,691.1	570.5	2369.62	8.00	2106.3	1.75	102.4
763+26.63	763+97.86	71.23	52.00	411.6	17.1	71.23	8.00	63.3	1.75	3.1
763+97.86	775+97.86	1200.00	64.50	8,600.0	358.3	1200.00	6.08	810.7	1.75	39.4
775+97.86	778+35.38	237.52	52.00	1,372.3	57.2	237.52	33.48	883.6	1.5	36.8
781+30.62	787+70.68	640.06	52.00	3,698.1	154.1	640.06	8.00	568.9	1.75	27.7
787+70.68	789+00.	129.32	52.00	747.2	31.1	129.32	8.00	115.0	1.75	5.6
				178646.8	7443.6			33,289.1		1439.3

TOTAL ITEM 446 = 7578.1 + 1435.7 + 7443.6 + 1439.3 = 17,897 C.Y.

ITEM 407 - TACK COAT

(33,066.3 S.Y. + 33,289.1 S.Y. 0 x 0.1 GAL/S.Y. = 6636GAL.

ITEM 407 - TACK COAT FOR INTERMEDIATE COURSE

(181,873.3 + 33,066.3 + 178,646.8 + 33,289.1) x 0.05 GAL/S.Y. = 21,344 GAL.

307qc02.dgn

MAINLINE QUANTITIES

ITEM 446 - ASPHALT CONCRETE, INTERMEDIATE COURSE , TYPE 2

FROM NORTHBOUND	TO	LENGTH	WIDTH	AREA (SQ. YDS.)	VOLUME (CU. YDS.)	MILLED AREAS, OR NEW 305 SHOULDER LENGTH	WIDTH	AREA (SQ. YDS.)	THICKNESS (INCHES)	VOLUME (CU. YDS.)
473+00.	485+00.	1200.00	26.00	3,466.7	168.5	0.00	0.00	0.0	0.00	0.0
485+00.	490+00.	500.00	60.00	3,333.3	162.0					
490+00.	539+66.	4966.00	52.00	28,692.4	1394.8					
541+71.5	545+19.45	347.95	52.00	2,010.4	97.7					
545+28.3	602+71.33	5743.03	52.00	33,182.0	1613.0					
602+71.33	608+45.	573.67	63.90	4,073.1	198.0					
608+45.	610+71.33	226.33	52.00	1,307.7	63.6	226.33	34.50	867.6	2.75	66.3
610+71.33	611+71.33	100.00	52.00	577.8	28.1	100.00	10.00	111.1	2.75	8.5
611+71.33	619+53.5	782.17	52.00	4,519.2	219.7					
619+53.5	621+00.	146.50	52.00	846.4	41.1	146.50	38.24	622.5	2.75	47.5
621+00.	626+00.	500.00	82.24	4,568.9	222.1					
626+00.	633+32.	732.00	64.44	5,241.1	254.8					
633+32.	635+62.73	230.73	54.41	1,394.9	67.8	230.73	39.60	1015.2	2.75	77.6
635+62.73	639+00.	337.27	52.00	1,948.7	94.7	337.27	34.68	1299.6	2.75	99.3
639+00.	651+00.	1200.00	64.50	8,600.0	418.1					
651+00.	661+28.57	1028.57	52.00	5,942.8	288.9					
661+28.57	662+28.57	100.00	60.00	666.7	32.4					
665+75.93	666+75.93	100.00	60.00	666.7	32.4					
666+75.93	669+05.	229.07	52.00	1,323.5	64.3					
669+05.	689+61.19	2056.19	52.00	11,880.2	577.5					
691+27.69	695+41.08	413.39	52.00	2,388.5	116.1					
698+84.62	699+62.97	78.35	52.00	452.7	22.0					
699+62.97	705+22.	559.03	64.08	3,980.3	193.5					
705+22.	708+62.97	340.97	52.00	1,970.0	95.8	340.97	32.75	1240.8	2.75	94.8
708+62.97	715+61.	698.03	52.00	4,033.1	196.1					
715+61.	717+00.	139.00	52.00	803.1	39.0	139.00	36.81	568.5	2.75	43.4
717+00.	719+69.18	269.18	83.80	2,506.4	121.8					
719+69.18	731+69.18	1200.00	64.50	8,600.0	418.1					
731+69.18	761+19.62	2950.44	52.00	17,047.0	828.7					
763+26.63	768+85.	558.37	65.29	4,050.7	196.9					
768+85.	771+02.95	217.95	52.00	1,259.3	61.2	217.95	34.50	835.5	2.75	63.8
771+02.95	772+02.95	100.00	52.00	577.8	28.1	100.00	10.00	111.1	2.75	8.5
772+02.95	778+35.38	632.43	52.00	3,654.0	177.6					
781+30.62	789+00.	769.38	73.79	6,308.1	306.6					
		0.00	0.00	0.0	0.0					
		0.00	0.00	0.0	0.0					
		0.00	0.00	0.0	0.0					
		0.00	0.00	0.0	0.0					
		30026.0			8841.1					509.7

ADDITIONAL FOR 12" LAP JOINT NORTHBOUND

30026' x 1'/9 x 1.75"/36 = 162.2 C.Y.

FROM SOUTHBOUND	TO	LENGTH	WIDTH	AREA (SQ. YDS.)	VOLUME (CU. YDS.)	MILLED AREAS, OR NEW 305 SHOULDER LENGTH	WIDTH	AREA (SQ. YDS.)	THICKNESS (INCHES)	VOLUME (CU. YDS.)
473+00.	485+00.	1200.00	26.00	3,466.7	168.5	0.00	0.00	0.0	0.00	0.0
485+00.	490+00.	500.00	60.00	3,333.3	162.0					
490+00.	539+66.	4966.00	52.00	28,692.4	1394.8					
541+71.5	545+19.45	347.95	52.00	2,010.4	97.7					
545+28.3	597+46.65	5218.35	52.00	30,150.5	1465.6					
597+46.65	609+46.65	1200.00	64.50	8,600.0	418.1					
609+46.65	613+98.	451.35	52.00	2,607.8	126.8	451.35	36.61	1836.0	2.75	140.2
613+98.	621+09.41	711.41	52.00	4,110.4	199.8					
621+09.41	622+09.41	100.00	52.00	577.8	28.1	100.00	10.00	111.1	2.75	8.5
622+09.41	624+50.	240.59	52.00	1,390.1	67.6	240.59	33.50	895.5	2.75	68.4
624+50.	630+09.41	559.41	64.08	3,983.0	193.6					
630+09.41	637+45.27	735.86	52.00	4,251.6	206.7					
637+45.27	638+45.27	100.00	52.00	577.8	28.1	100.00	10.00	111.1	2.75	8.5
638+45.27	640+85.	239.73	52.00	1,385.1	67.3	239.73	34.50	919.0	2.75	70.2
640+85.	645+45.27	460.27	65.40	3,344.6	162.6					
645+45.27	646+45.27	100.00	58.00	644.4	31.3					
646+45.27	655+50.	904.73	52.00	5,227.3	254.1					
655+50.	661+28.57	578.57	52.00	3,342.8	162.5					
661+28.57	662+28.57	100.00	60.00	666.7	32.4					
665+75.93	666+75.93	100.00	60.00	666.7	32.4					
666+75.93	689+58.43	2282.50	52.00	13,187.8	641.1					
691+33.93	695+35.11	401.18	52.00	2,317.9	112.7					
698+97.65	710+89.05	1191.40	64.59	8,550.3	415.6					
710+89.05	714+97.	407.95	52.00	2,357.0	114.6	407.95	34.50	1563.8	2.75	119.5
714+97.	716+50.	153.00	52.00	884.0	43.0					
716+50.	720+50.	400.00	60.00	2,666.7	129.6					
720+50.	724+90.01	440.01	52.00	2,542.3	123.6					
724+90.01	725+90.01	100.00	52.00	577.8	28.1	100.00	10.00	111.1	2.75	8.5
725+90.01	728+30.	239.99	52.00	1,386.6	67.4	239.99	32.75	873.3	2.75	66.7
728+30.	730+50.	220.00	67.00	1,637.8	79.6					
730+50.	733+90.01	340.01	68.53	2,589.0	125.9					
733+90.01	737+50.	359.99	60.00	2,399.9	116.7					
737+50.	761+19.62	2369.62	52.00	13,691.1	665.5					
763+26.63	763+97.86	71.23	52.00	411.6	20.0					
763+97.86	775+97.86	1200.00	64.50	8,600.0	418.1					
775+97.86	778+35.38	237.52	52.00	1,372.3	66.7	237.52	33.48	883.6	2.75	67.5
781+30.62	787+70.68	640.06	52.00	3,698.1	179.8					
787+70.68	789+00.	129.32	52.00	747.2	36.3					
		29998.0			8684.2					558.0

ADDITIONAL FOR 12" LAP JOINT SOUTHBOUND

29998' x 1'/9 x 1.75"/36 = 162.0 C.Y.

TOTAL ITEM 446 = 8841.1 + 509.7 + 162.2 + 8684.2 + 558.0 + 162.0 = 18917 C.Y.

ITEM 617 - COMPACTED AGGREGATE, TYPE A, AS PER PLAN

MEDIAN SHOULDERS

(30026' + 29998') x 2' x 4"/12 / 27 = 1482 C.Y.

307qc03.dgn

MAINLINE QUANTITIES

ITEM 302 - 11.25" BITUMINOUS AGGREGATE BASE

FROM NORTHBOUND	TO	LENGTH	WIDTH	AREA (SQ. YDS.)	VOLUME (CU. YDS.)
473+00.	485+00.	1200.00	26.69	3558.3	1112.0
485+00.	490+00.	500.00	61.38	3409.7	1065.5
490+00.	539+66.	4966.00	52.69	29071.8	9084.9
541+71.5	545+19.45	347.95	52.69	2037.0	636.5
545+28.3	602+71.33	5743.03	52.69	33620.7	10506.5
602+71.33	608+45.	573.67	64.59	4116.9	1286.5
608+45.	610+71.33	226.33	52.69	1325.0	414.1
610+71.33	611+71.33	100.00	52.69	585.4	182.9
611+71.33	619+53.5	782.17	52.69	4579.0	1430.9
619+53.5	621+00.	146.50	52.69	857.6	268.0
621+00.	626+00.	500.00	83.62	4645.3	1451.6
626+00.	633+32.	732.00	65.13	5297.0	1655.3
633+32.	635+62.73	230.73	55.10	1412.5	441.4
635+62.73	639+00.	337.27	52.69	1974.4	617.0
639+00.	651+00.	1200.00	65.19	8691.7	2716.1
651+00.	661+28.57	1028.57	52.69	6021.4	1881.7
661+28.57	662+28.57	100.00	61.38	681.9	213.1
665+75.93	666+75.93	100.00	61.38	681.9	213.1
666+75.93	669+05.	229.07	52.69	1341.0	419.1
669+05.	689+61.19	2056.19	52.69	12037.3	3761.6
691+27.69	695+41.08	413.39	52.69	2420.1	756.3
698+84.62	699+62.97	78.35	52.69	458.7	143.3
699+62.97	705+22.	559.03	64.77	4023.0	1257.2
705+22.	708+62.97	340.97	52.69	1996.1	623.8
708+62.97	715+61.	698.03	52.69	4086.4	1277.0
715+61.	717+00.	139.00	52.69	813.7	254.3
717+00.	719+69.18	269.18	85.18	2547.5	796.1
719+69.18	731+69.18	1200.00	65.19	8691.7	2716.1
731+69.18	761+19.62	2950.44	52.69	17272.4	5397.6
763+26.63	768+85.	558.37	65.98	4093.3	1279.2
768+85.	771+02.95	217.95	52.69	1275.9	398.7
771+02.95	772+02.95	100.00	52.69	585.4	182.9
772+02.95	778+35.38	632.43	52.69	3702.4	1157.0
781+30.62	789+00.	769.38	74.48	6366.8	1989.6
		0.00		0.0	0.0
		0.00		0.0	0.0
		0.00		0.0	0.0
		0.00		0.0	0.0
		30026.0			57587.2

FROM SOUTHBOUND	TO	LENGTH	WIDTH	AREA (SQ. YDS.)	VOLUME (CU. YDS.)
473+00.	485+00.	1200.00	26.69	3558.3	1112.0
485+00.	490+00.	500.00	61.38	3409.7	1065.5
490+00.	539+66.	4966.00	52.69	29071.8	9084.9
541+71.5	545+19.45	347.95	52.69	2037.0	636.5
545+28.3	597+46.65	5218.35	52.69	30549.1	9546.6
597+46.65	609+46.65	1200.00	65.19	8691.7	2716.1
609+46.65	613+98.	451.35	52.69	2642.3	825.7
613+98.	621+09.41	711.41	52.69	4164.7	1301.5
621+09.41	622+09.41	100.00	52.69	585.4	182.9
622+09.41	624+50.	240.59	52.69	1408.5	440.1
624+50.	630+09.41	559.41	64.77	4025.7	1258.0
630+09.41	637+45.27	735.86	52.69	4307.8	1346.2
637+45.27	638+45.27	100.00	52.69	585.4	182.9
638+45.27	640+85.	239.73	52.69	1403.4	438.6
640+85.	645+45.27	460.27	66.09	3379.8	1056.2
645+45.27	646+45.27	100.00	58.69	652.1	203.8
646+45.27	655+50.	904.73	52.69	5296.4	1655.1
655+50.	661+28.57	578.57	52.69	3387.0	1058.5
661+28.57	662+28.57	100.00	61.38	681.9	213.1
665+75.93	666+75.93	100.00	61.38	681.9	213.1
666+75.93	689+58.43	2282.50	52.69	13362.1	4175.7
691+33.93	695+35.11	401.18	52.69	2348.6	733.9
698+97.65	710+89.05	1191.40	65.28	8641.3	2700.4
710+89.05	714+97.	407.95	52.69	2388.2	746.3
714+97.	716+50.	153.00	52.69	895.7	279.9
716+50.	720+50.	400.00	61.38	2727.8	852.4
720+50.	724+90.01	440.01	52.69	2575.9	805.0
724+90.01	725+90.01	100.00	52.69	585.4	182.9
725+90.01	728+30.	239.99	52.69	1404.9	439.0
728+30.	730+50.	220.00	67.69	1654.6	517.1
730+50.	733+90.01	340.01	69.91	2640.9	825.3
733+90.01	737+50.	359.99	61.38	2454.9	767.2
737+50.	761+19.62	2369.62	52.69	13872.2	4335.0
763+26.63	763+97.86	71.23	52.69	417.0	130.3
763+97.86	775+97.86	1200.00	65.19	8691.7	2716.1
775+97.86	778+35.38	237.52	52.69	1390.5	434.5
781+30.62	787+70.68	640.06	52.69	3747.0	1170.9
787+70.68	789+00.	129.32	52.69	757.1	236.6
		29998.0			56586.2

ITEM 855 - 4" ASPHALT TREATED FREE DRAINING BASE

FROM NORTHBOUND	TO	LENGTH	WIDTH	VOLUME (CU. YDS.)
473+00.	485+00.	1200.00	27.25	403.7
485+00.	490+00.	500.00	62.50	385.8
490+00.	539+66.	4966.00	53.25	3264.7
541+71.5	545+19.45	347.95	53.25	228.7
545+28.3	602+71.33	5743.03	53.25	3775.5
602+71.33	608+45.	573.67	65.15	461.4
608+45.	610+71.33	226.33	53.25	148.8
610+71.33	611+71.33	100.00	53.25	65.7
611+71.33	619+53.5	782.17	53.25	514.2
619+53.5	621+00.	146.50	53.25	96.3
621+00.	626+00.	500.00	84.74	523.1
626+00.	633+32.	732.00	65.69	593.6
633+32.	635+62.73	230.73	55.66	158.5
635+62.73	639+00.	337.27	53.25	221.7
639+00.	651+00.	1200.00	65.75	974.1
651+00.	661+28.57	1028.57	53.25	676.2
661+28.57	662+28.57	100.00	62.50	77.2
665+75.93	666+75.93	100.00	62.50	77.2
666+75.93	669+05.	229.07	53.25	150.6
669+05.	689+61.19	2056.19	53.25	1351.8
691+27.69	695+41.08	413.39	53.25	271.8
698+84.62	699+62.97	78.35	53.25	51.5
699+62.97	705+22.	559.03	65.33	450.9
705+22.	708+62.97	340.97	53.25	224.2
708+62.97	715+61.	698.03	53.25	458.9
715+61.	717+00.	139.00	53.25	91.4
717+00.	719+69.18	269.18	86.30	286.8
719+69.18	731+69.18	1200.00	65.75	974.1
731+69.18	761+19.62	2950.44	53.25	1939.6
763+26.63	768+85.	558.37	66.54	458.7
768+85.	771+02.95	217.95	53.25	143.3
771+02.95	772+02.95	100.00	53.25	65.7
772+02.95	778+35.38	632.43	53.25	415.8
781+30.62	789+00.	769.38	75.04	712.8
		0.00	0.00	0.0
		0.00	0.00	0.0
		0.00	0.00	0.0
		0.00	0.00	0.0
				20694.2

FROM SOUTHBOUND	TO	LENGTH	WIDTH	VOLUME (CU. YDS.)
473+00.	485+00.	1200.00	27.25	403.7
485+00.	490+00.	500.00	62.50	385.8
490+00.	539+66.	4966.00	53.25	3264.7
541+71.5	545+19.45	347.95	53.25	228.7
545+28.3	597+46.65	5218.35	53.25	3430.6
597+46.65	609+46.65	1200.00	65.75	974.1
609+46.65	613+98.	451.35	53.25	296.7
613+98.	621+09.41	711.41	53.25	467.7
621+09.41	622+09.41	100.00	53.25	65.7
622+09.41	624+50.	240.59	53.25	158.2
624+50.	630+09.41	559.41	65.33	451.2
630+09.41	637+45.27	735.86	53.25	483.8
637+45.27	638+45.27	100.00	53.25	65.7
638+45.27	640+85.	239.73	53.25	157.6
640+85.	645+45.27	460.27	66.65	378.7
645+45.27	646+45.27	100.00	59.25	73.1
646+45.27	655+50.	904.73	53.25	594.8
655+50.	661+28.57	578.57	53.25	380.4
661+28.57	662+28.57	100.00	62.50	77.2
665+75.93	666+75.93	100.00	62.50	77.2
666+75.93	689+58.43	2282.50	53.25	1500.5
691+33.93	695+35.11	401.18	53.25	263.7
698+97.65	710+89.05	1191.40	65.84	968.4
710+89.05	714+97.	407.95	53.25	268.2
714+97.	716+50.	153.00	53.25	100.6
716+50.	720+50.	400.00	62.50	308.6
720+50.	724+90.01	440.01	53.25	289.3
724+90.01	725+90.01	100.00	53.25	65.7
725+90.01	728+30.	239.99	53.25	157.8
728+30.	730+50.	220.00	68.25	185.4
730+50.	733+90.01	340.01	71.03	298.2
733+90.01	737+50.	359.99	62.50	277.8
737+50.	761+19.62	2369.62	53.25	1557.8
763+26.63	763+97.86	71.23	53.25	46.8
763+97.86	775+97.86	1200.00	65.75	974.1
775+97.86	778+35.38	237.52	53.25	156.1
781+30.62	787+70.68	640.06	53.25	420.8
787+70.68	789+00.	129.32	53.25	85.0
				20340.4

ADDITIONAL FOR 6" LAP JOINT NORTHBOUND

30026.0 x 6"/12 x 5"/12 / 27 = 231.7

ADDITIONAL FOR 6" LAP JOINT SOUTHBOUND

29998.0 x 6"/12 x 5"/12 / 27 = 231.5

TOTAL ITEM 855 = 20694.2 + 20340.4 = 41035 C.Y.

TOTAL ITEM 302 = 57587.2 + 231.7 + 56586.2 + 231.5 = 114,637 C.Y.

307qc04.dgn

MAINLINE QUANTITIES

ITEM 304 - 6" AGGREGATE BASE, AS PER PLAN

FROM NORTHBOUND	TO	LENGTH	WIDTH	AREA (SQ. YDS.)	VOLUME (CU. YDS.)	BASE UNDER NEW 305 SHOULDERS LENGTH	WIDTH	AREA (SQ. YDS.)	VOLUME (CU. YDS.)
473+00.	485+00.	1200.00	27.75	3700.0	616.7	0.00	0.00	0.0	0.0
485+00.	490+00.	500.00	63.50	3527.8	588.0	0.00	0.00	0.0	0.0
490+00.	539+66.	4966.00	53.75	29658.1	4943.0	0.00	0.00	0.0	0.0
541+71.5	545+19.45	347.95	53.75	2078.0	346.3	0.00	0.00	0.0	0.0
545+28.3	602+71.33	5743.03	53.75	31165.1	5194.2	0.00	0.00	0.0	0.0
602+71.33	608+45.	573.67	66.25	8833.3	1472.2	0.00	0.00	0.0	0.0
608+45.	610+71.33	226.33	53.75	2695.6	449.3	226.33	8.50	213.8	35.6
610+71.33	611+71.33	100.00	53.75	4248.7	708.1	0.00	0.00	0.0	0.0
611+71.33	619+53.5	782.17	53.75	597.2	99.5	0.00	0.00	0.0	0.0
619+53.5	621+00.	146.50	53.75	1436.9	239.5	146.50	6.50	105.8	17.6
621+00.	626+00.	500.00	65.83	4091.8	682.0	0.00	0.00	0.0	0.0
626+00.	633+32.	732.00	53.75	4394.7	732.5	0.00	0.00	0.0	0.0
633+32.	635+62.73	230.73	53.75	597.2	99.5	230.73	6.50	166.6	27.8
635+62.73	639+00.	337.27	53.75	1431.7	238.6	337.27	8.35	312.9	52.2
639+00.	651+00.	1200.00	67.15	3434.1	572.4	0.00	0.00	0.0	0.0
651+00.	661+28.57	1028.57	59.75	663.9	110.6	0.00	0.00	0.0	0.0
661+28.57	662+28.57	100.00	53.75	5403.2	900.5	0.00	0.00	0.0	0.0
665+75.93	666+75.93	100.00	53.75	3455.3	575.9	0.00	0.00	0.0	0.0
666+75.93	669+05.	229.07	63.50	705.6	117.6	0.00	0.00	0.0	0.0
669+05.	689+61.19	2056.19	63.50	705.6	117.6	0.00	0.00	0.0	0.0
691+27.69	695+41.08	413.39	53.75	13631.6	2271.9	0.00	0.00	0.0	0.0
698+84.62	699+62.97	78.35	53.75	2395.9	399.3	0.00	0.00	0.0	0.0
699+62.97	705+22.	559.03	66.34	8781.9	1463.7	0.00	0.00	0.0	0.0
705+22.	708+62.97	340.97	53.75	2436.4	406.1	0.00	0.00	0.0	0.0
708+62.97	715+61.	698.03	53.75	913.8	152.3	0.00	0.00	0.0	0.0
715+61.	717+00.	139.00	63.50	2822.2	470.4	0.00	0.00	0.0	0.0
717+00.	719+69.18	269.18	53.75	2627.8	438.0	0.00	0.00	0.0	0.0
719+69.18	731+69.18	1200.00	53.75	597.2	99.5	0.00	0.00	0.0	0.0
731+69.18	761+19.62	2950.44	53.75	1433.3	238.9	0.00	0.00	0.0	0.0
763+26.63	768+85.	558.37	68.75	1680.6	280.1	0.00	0.00	0.0	0.0
768+85.	771+02.95	217.95	72.03	2721.2	453.5	217.95	8.50	205.8	34.3
771+02.95	772+02.95	100.00	63.50	2539.9	423.3	0.00	0.00	0.0	0.0
772+02.95	778+35.38	632.43	53.75	14151.9	2358.6	0.00	0.00	0.0	0.0
781+30.62	789+00.	769.38	53.75	425.4	70.9	0.00	0.00	0.0	0.0
		0.00	66.25	8833.3	1472.2	0.00	0.00	0.0	0.0
		0.00	53.75	1418.5	236.4	0.00	0.00	0.0	0.0
		0.00	53.75	3822.6	637.1	0.00	0.00	0.0	0.0
		0.00	53.75	772.3	128.7	0.00	0.00	0.0	0.0
		30026.0		184829.8	30805.0				167.5

FROM SOUTHBOUND	TO	LENGTH	WIDTH	AREA (SQ. YDS.)	VOLUME (CU. YDS.)	BASE UNDER NEW 305 SHOULDERS LENGTH	WIDTH	AREA (SQ. YDS.)	VOLUME (CU. YDS.)
473+00.	485+00.	1200.00	27.75	3700.0	616.7	0.00	0.00	0.0	0.0
485+00.	490+00.	500.00	63.50	3527.8	588.0	0.00	0.00	0.0	0.0
490+00.	539+66.	4966.00	53.75	29658.1	4943.0	0.00	0.00	0.0	0.0
541+71.5	545+19.45	347.95	53.75	2078.0	346.3	0.00	0.00	0.0	0.0
545+28.3	597+46.65	5218.35	53.75	34298.7	5716.4	0.00	0.00	0.0	0.0
597+46.65	609+46.65	1200.00	65.65	4184.6	697.4	0.00	0.00	0.0	0.0
609+46.65	613+98.	451.35	53.75	1351.7	225.3	451.35	6.61	331.5	55.2
613+98.	621+09.41	711.41	53.75	597.2	99.5	0.00	0.00	0.0	0.0
621+09.41	622+09.41	100.00	53.75	4671.3	778.5	0.00	0.00	0.0	0.0
622+09.41	624+50.	240.59	53.75	874.9	145.8	240.59	7.50	200.5	33.4
624+50.	630+09.41	559.41	85.74	4763.3	793.9	0.00	0.00	0.0	0.0
630+09.41	637+45.27	735.86	66.19	5383.5	897.2	0.00	0.00	0.0	0.0
637+45.27	638+45.27	100.00	56.16	1439.8	240.0	0.00	0.00	0.0	0.0
638+45.27	640+85.	239.73	53.75	2014.3	335.7	239.73	8.50	226.4	37.7
640+85.	645+45.27	460.27	66.25	8833.3	1472.2	0.00	0.00	0.0	0.0
645+45.27	646+45.27	100.00	53.75	6142.8	1023.8	0.00	0.00	0.0	0.0
646+45.27	655+50.	904.73	63.50	705.6	117.6	0.00	0.00	0.0	0.0
655+50.	661+28.57	578.57	63.50	705.6	117.6	0.00	0.00	0.0	0.0
661+28.57	662+28.57	100.00	53.75	1368.1	228.0	0.00	0.00	0.0	0.0
665+75.93	666+75.93	100.00	53.75	12280.0	2046.7	0.00	0.00	0.0	0.0
666+75.93	689+58.43	2282.50	53.75	2468.9	411.5	0.00	0.00	0.0	0.0
691+33.93	695+35.11	401.18	53.75	467.9	78.0	0.00	0.00	0.0	0.0
698+97.65	710+89.05	1191.40	65.83	4089.0	681.5	0.00	0.00	0.0	0.0
710+89.05	714+97.	407.95	53.75	2036.3	339.4	0.00	0.00	0.0	0.0
714+97.	716+50.	153.00	53.75	4168.8	694.8	0.00	0.00	0.0	0.0
716+50.	720+50.	400.00	53.75	830.1	138.4	0.00	0.00	0.0	0.0
720+50.	724+90.01	440.01	87.30	2611.0	435.2	0.00	0.00	0.0	0.0
724+90.01	725+90.01	100.00	66.25	8833.3	1472.2	0.00	0.00	0.0	0.0
725+90.01	728+30.	239.99	53.75	17620.7	2936.8	0.00	0.00	0.0	0.0
728+30.	730+50.	220.00	67.04	4159.2	693.2	0.00	0.00	0.0	0.0
730+50.	733+90.01	340.01	53.75	1301.6	216.9	0.00	0.00	0.0	0.0
733+90.01	737+50.	359.99	53.75	597.2	99.5	0.00	0.00	0.0	0.0
737+50.	761+19.62	2369.62	53.75	3777.0	629.5	0.00	0.00	0.0	0.0
763+26.63	763+97.86	71.23	75.54	6457.7	1076.3	0.00	0.00	0.0	0.0
763+97.86	775+97.86	1200.00	0.00	0.0	0.0	0.00	0.00	0.0	0.0
775+97.86	778+35.38	237.52	0.00	0.0	0.0	237.52	8.50	224.3	37.4
781+30.62	787+70.68	640.06	0.00	0.0	0.0	0.00	0.00	0.0	0.0
787+70.68	789+00.	129.32	0.00	0.0	0.0	0.00	0.00	0.0	0.0
		29998.0		187997.3	31332.9				163.8

TOTAL ITEM 304 = 30805.0 + 167.5 + 31332.9 + 163.8 = 62469 C.Y.

ITEM 408 - BITUMINOUS PRIME COAT

(184829.8 S.Y. + 187997.3 S.Y.) x 0.40 GAL/S.Y. = 149131 GAL.

ITEM 305 - 10" CONCRETE BASE, AS PER PLAN

FROM NORTHBOUND	TO	LENGTH	WIDTH	AREA (SQ. YDS.)
608+45.	610+71.33	226.33	8.00	201.2
619+53.5	621+00.	146.50	6.00	97.7
633+32.	635+62.73	230.73	6.00	153.8
635+62.73	639+00.	337.27	7.85	294.2
768+85.	771+02.95	217.95	8.00	193.7
				940.6

FROM SOUTHBOUND	TO	LENGTH	WIDTH	AREA (SQ. YDS.)
609+46.65	613+98.	451.35	6.11	306.4
622+09.41	624+50.	240.59	7.00	187.1
638+45.27	640+85.	239.73	8.00	213.1
775+97.86	778+35.38	237.52	8.00	211.1
				917.8

TOTAL ITEM 305 = 940.6 + 917.8 = 1858 S.Y.

MAINLINE QUANTITIES

ITEM 254 - PAVEMENT PLANING, BITUMINOUS

FROM	TO	LENGTH	MILLED LENGTH	WIDTH	AREA (SQ. YDS.)
NORTHBOUND					
473+00.	485+00.	1200.00	0.00	0.00	0.0
485+00.	490+00.	500.00	0.00	0.00	0.0
490+00.	539+66.	4966.00	0.00	0.00	0.0
541+71.5	545+19.45	347.95	0.00	0.00	0.0
545+28.3	602+71.33	5743.03	0.00	0.00	0.0
602+71.33	608+45.	573.67	0.00	0.00	0.0
608+45.	610+71.33	226.33	226.33	26.50	666.4
610+71.33	611+71.33	100.00	100.00	10.00	111.1
611+71.33	619+53.5	782.17	0.00	0.00	0.0
619+53.5	621+00.	146.50	146.50	32.24	524.8
621+00.	626+00.	500.00	0.00	0.00	0.0
626+00.	633+32.	732.00	0.00	0.00	0.0
633+32.	635+62.73	230.73	230.73	33.60	861.4
635+62.73	639+00.	337.27	337.27	26.83	1005.4
639+00.	651+00.	1200.00	0.00	0.00	0.0
651+00.	661+28.57	1028.57	0.00	0.00	0.0
661+28.57	662+28.57	100.00	0.00	0.00	0.0
665+75.93	666+75.93	100.00	0.00	0.00	0.0
666+75.93	669+05.	229.07	0.00	0.00	0.0
669+05.	689+61.19	2056.19	0.00	0.00	0.0
691+27.69	695+41.08	413.39	0.00	0.00	0.0
698+84.62	699+62.97	78.35	0.00	0.00	0.0
699+62.97	705+22.	559.03	0.00	0.00	0.0
705+22.	708+62.97	340.97	340.97	32.75	1240.8
708+62.97	715+61.	698.03	0.00	0.00	0.0
715+61.	717+00.	139.00	139.00	36.81	568.5
717+00.	719+69.18	269.18	0.00	0.00	0.0
719+69.18	731+69.18	1200.00	0.00	0.00	0.0
731+69.18	761+19.62	2950.44	0.00	0.00	0.0
763+26.63	768+85.	558.37	0.00	0.00	0.0
768+85.	771+02.95	217.95	217.95	26.50	641.7
771+02.95	772+02.95	100.00	100.00	10.00	111.1
772+02.95	778+35.38	632.43	0.00	0.00	0.0
781+30.62	789+00.	769.38	0.00	0.00	0.0
		0.00	0.00	0.00	0.0
		0.00	0.00	0.00	0.0
		0.00	0.00	0.00	0.0
		0.00	0.00	0.00	0.0
		30026.0			5731.3

FROM	TO	LENGTH	MILLED LENGTH	WIDTH	AREA (SQ. YDS.)
SOUTHBOUND					
473+00.	485+00.	1200.00	0.00	0.00	0.0
485+00.	490+00.	500.00	0.00	0.00	0.0
490+00.	539+66.	4966.00	0.00	0.00	0.0
541+71.5	545+19.45	347.95	0.00	0.00	0.0
545+28.3	597+46.65	5218.35	0.00	0.00	0.0
597+46.65	609+46.65	1200.00	0.00	0.00	0.0
609+46.65	613+98.	451.35	451.35	30.50	1529.6
613+98.	621+09.41	711.41	0.00	0.00	0.0
621+09.41	622+09.41	100.00	100.00	10.00	111.1
622+09.41	624+50.	240.59	240.59	26.50	708.4
624+50.	630+09.41	559.41	0.00	0.00	0.0
630+09.41	637+45.27	735.86	0.00	0.00	0.0
637+45.27	638+45.27	100.00	100.00	10.00	111.1
638+45.27	640+85.	239.73	239.73	26.50	705.9
640+85.	645+45.27	460.27	0.00	0.00	0.0
645+45.27	646+45.27	100.00	0.00	0.00	0.0
646+45.27	655+50.	904.73	0.00	0.00	0.0
655+50.	661+28.57	578.57	0.00	0.00	0.0
661+28.57	662+28.57	100.00	0.00	0.00	0.0
665+75.93	666+75.93	100.00	0.00	0.00	0.0
666+75.93	689+58.43	2282.50	0.00	0.00	0.0
691+33.93	695+35.11	401.18	0.00	0.00	0.0
698+97.65	710+89.05	1191.40	0.00	0.00	0.0
710+89.05	714+97.	407.95	407.95	34.50	1563.8
714+97.	716+50.	153.00	0.00	0.00	0.0
716+50.	720+50.	400.00	0.00	0.00	0.0
720+50.	724+90.01	440.01	0.00	0.00	0.0
724+90.01	725+90.01	100.00	100.00	10.00	111.1
725+90.01	728+30.	239.99	239.99	32.75	873.3
728+30.	730+50.	220.00	0.00	0.00	0.0
730+50.	733+90.01	340.01	0.00	0.00	0.0
733+90.01	737+50.	359.99	0.00	0.00	0.0
737+50.	761+19.62	2369.62	0.00	0.00	0.0
763+26.63	763+97.86	71.23	0.00	0.00	0.0
763+97.86	775+97.86	1200.00	0.00	0.00	0.0
775+97.86	778+35.38	237.52	237.52	25.48	672.4
781+30.62	787+70.68	640.06	0.00	0.00	0.0
787+70.68	789+00.	129.32	0.00	0.00	0.0
		29998.0			6386.7

ADDITIONAL FOR 12" LAP JOINT NORTHBOUND

30026.0 x 1'/9 = 3336.2

ADDITIONAL FOR 12" LAP JOINT SOUTHBOUND

29998.0 x 1'/9 = 3333.1

TOTAL ITEM 254 = 5731.3 + 3336.2 + 6386.7 + 3333.1 = 18787 S.Y.

APPROACH SLAB QUANTITIES

FROM	TO	LENGTH	EXIST. WIDTH	PROP. WIDTH	AP. SLAB REM. (SQ. YDS.)	SUB. COMP. (SQ. YDS.)	AGGRE. BASE (CU. YDS)	APPROACH SLAB (SQ. YDS.)	CONCRETE BARRIER (LIN. FT.)
NORTHBOUND									
539+66.	539+91.	25.00	24.00	68.00	66.7	188.9	52.5	188.9	50.0
541+46.5	541+71.5	25.00	24.00	68.00	66.7	188.9	52.5	188.9	50.0
662+28.57	662+53.57	25.00	24.00	68.00	66.7	188.9	52.5	188.9	50.0
665+50.93	665+75.93	25.00	24.00	68.00	66.7	188.9	52.5	188.9	50.0
689+61.19	689+86.19	25.00	24.00	68.00	66.7	188.9	52.5	188.9	50.0
691+02.69	691+27.69	25.00	24.00	68.00	66.7	188.9	52.5	188.9	50.0
695+41.08	695+66.08	25.00	24.00	68.00	66.7	188.9	52.5	188.9	50.0
698+59.62	698+84.62	25.00	24.00	68.00	66.7	188.9	52.5	188.9	50.0
761+19.62	761+44.62	25.00	24.00	68.00	66.7	188.9	52.5	188.9	50.0
763+01.63	763+26.63	25.00	24.00	68.00	66.7	188.9	52.5	188.9	50.0
778+35.38	778+60.38	25.00	40.27	93.27	111.9	259.1	72.0	259.1	0.0
781+05.62	781+30.62	25.00	40.27	87.34	111.9	242.6	67.4	242.6	0.0
SOUTHBOUND									
539+66.	539+91.	25.00	24.00	68.00	66.7	188.9	52.5	188.9	50.0
541+46.5	541+71.5	25.00	24.00	68.00	66.7	188.9	52.5	188.9	50.0
662+28.57	662+53.57	25.00	24.00	68.00	66.7	188.9	52.5	188.9	50.0
665+50.93	665+75.93	25.00	24.00	68.00	66.7	188.9	52.5	188.9	50.0
689+58.43	689+83.43	25.00	24.00	68.00	66.7	188.9	52.5	188.9	50.0
691+08.93	691+33.93	25.00	24.00	68.00	66.7	188.9	52.5	188.9	50.0
695+35.11	695+60.11	25.00	24.00	68.00	66.7	188.9	52.5	188.9	50.0
698+72.65	698+97.65	25.00	24.00	68.00	66.7	188.9	52.5	188.9	50.0
761+19.62	761+44.62	25.00	24.00	68.00	66.7	188.9	52.5	188.9	50.0
763+01.63	763+26.63	25.00	24.00	68.00	66.7	188.9	52.5	188.9	50.0
778+35.38	778+60.38	25.00	40.27	87.34	111.9	242.6	67.4	242.6	0.0
781+05.62	781+30.62	25.00	40.27	93.27	111.9	259.1	72.0	259.1	0.0
					1780.8	4781.2	1328.1	4781.2	1000.0

ITEM 202 - APPROACH SLAB REMOVED ..... 1781 S.Y.

ITEM 203 - SUBGRADE COMPACTION ..... 4781 S.Y.

ITEM 304 - AGGREGATE BASE, AS PER PLAN ..... 1328 C.Y.

ITEM 611 - REINFORCED CONCRETE APPROACH SLAB (T=15"), AS PER PLAN ..... 4781 S.Y.

ITEM 622 - CONCRETE BARRIER, TYPE D, AS PER PLAN B ..... 1000 L.F.

RAMP QUANTITIES

ITEM 203 - SUBGRADE COMPACTION

FROM	TO	LENGTH	WIDTH	AREA (SQ. YDS.)
RAMP A				
110+71.06	111+71.06	100.00	7.00	77.8
111+71.06	115+00.	328.94	6.00	219.3
RAMP B				
114+18.2	115+18.2	100.00	6.00	66.7
115+18.2	118+00.	281.80	6.00	187.9
118+00.	120+85.	285.00	6.00	190.0
120+85.	122+40.	155.00	6.00	103.3
RAMP C				
115+59.44	116+59.44	100.00	6.00	66.7
116+59.44	121+00.	440.56	6.00	293.7
RAMP D				
113+96.65	114+96.65	100.00	6.00	66.7
114+96.65	119+60.	463.35	6.00	308.9
119+60.	124+30.	470.00	6.00	313.3
124+30.	124+50.	20.00	6.00	13.3
RAMP E				
123+93.	127+04.29	311.29	6.00	207.5
127+04.29	132+32.	527.71	6.00	351.8
132+32.	133+32.	100.00	6.00	66.7
RAMP F				
136+30.	137+46.93	116.93	6.00	78.0
137+46.93	138+46.93	100.00	7.00	77.8
RAMP AT				
214+97.	215+47.	50.00		
BAMP BT				
625+41.67	625+91.67	50.00		
RAMP CT				
115+11.	115+61.	50.00		
RAMP DT				
7+61.31	8+11.31	50.00		
RAMP A				
71+04.59	72+04.59	100.00	7.00	77.8
72+04.59	79+45.5	740.91	6.00	493.9
79+45.5	84+29.	483.50	6.00	322.3
84+29.	86+40.2	211.20	6.00	140.8
RAMP AB				
84+29.	85+69.	140.00	6.00	93.3
RAMP B				
74+12.	75+12.	100.00	6.00	66.7
75+12.	78+26.	314.00	6.00	209.3
78+26.	84+25.	599.00	6.00	399.3
84+25.	86+50.	225.00	6.00	150.0
RAMP C				
73+00.	75+17.	217.00	6.00	144.7
75+17.	81+50.	633.00	6.00	422.0
81+50.	84+55.	305.00	6.00	203.3
84+55.	85+55.	100.00	6.00	66.7
RAMP D				
83+55.24	87+72.34	417.10	6.00	278.1
87+72.34	88+72.34	100.00	6.00	66.7
RAMP CD				
73+72.66	75+17.	144.34	6.00	96.2
				5,920.4

TOTAL = 5,920 S.Y.

ITEM 203 - EXCAVATION NOT INCLUDING EMBANKMENT CONSTRUCTION

FROM	TO	LENGTH	WIDTH	DEPTH (INCHES)	VOLUME (CU. YDS.)
RAMP A					
110+71.06	111+71.06	100.00	7.50	17.75	41.1
111+71.06	115+00.	328.94	6.50	17.75	117.1
RAMP B					
114+18.2	115+18.2	100.00	6.50	17.75	35.6
115+18.2	118+00.	281.80	6.50	17.75	100.3
118+00.	120+85.	285.00	6.50	17.75	101.5
120+85.	122+40.	155.00	6.50	17.75	55.2
RAMP C					
115+59.44	116+59.44	100.00	6.50	17.75	35.6
116+59.44	121+00.	440.56	6.50	17.75	156.9
RAMP D					
113+96.65	114+96.65	100.00	6.50	17.75	35.6
114+96.65	119+60.	463.35	6.50	17.75	165.0
119+60.	124+30.	470.00	6.50	17.75	167.4
124+30.	124+50.	20.00	6.50	17.75	7.1
RAMP E					
123+93.	127+04.29	311.29	6.50	17.75	110.8
127+04.29	132+32.	527.71	6.50	17.75	187.9
132+32.	133+32.	100.00	6.50	17.75	35.6
RAMP F					
136+30.	137+46.93	116.93	6.50	17.75	41.6
137+46.93	138+46.93	100.00	7.50	17.75	41.1
RAMP AT					
214+97.	215+47.	50.00			
BAMP BT					
625+41.67	625+91.67	50.00			
RAMP CT					
115+11.	115+61.	50.00			
RAMP DT					
7+61.31	8+11.31	50.00			
RAMP A					
71+04.59	72+04.59	100.00	7.50	17.50	40.5
72+04.59	79+45.5	740.91	6.50	17.50	260.1
79+45.5	84+29.	483.50	6.50	17.50	169.7
84+29.	86+40.2	211.20	6.50	17.50	74.1
RAMP AB					
84+29.	85+69.	140.00	6.50	17.50	49.2
RAMP B					
74+12.	75+12.	100.00	6.50	17.50	35.1
75+12.	78+26.	314.00	6.50	17.50	110.2
78+26.	84+25.	599.00	6.50	17.50	210.3
84+25.	86+50.	225.00	6.50	17.50	79.0
RAMP C					
73+00.	75+17.	217.00	6.50	17.50	76.2
75+17.	81+50.	633.00	6.50	17.50	222.2
81+50.	84+55.	305.00	6.50	17.50	107.1
84+55.	85+55.	100.00	6.50	17.50	35.1
RAMP D					
83+55.24	87+72.34	417.10	6.50	17.50	146.4
87+72.34	88+72.34	100.00	6.50	17.50	35.1
RAMP CD					
73+72.66	75+17.	144.34	6.50	17.50	50.7
					3136.7

TOTAL = 3137 C.Y.

ITEM 203 - LINEAR GRADING, AS PER PLAN

FROM	TO	LENGTH	No. SIDES	TOTAL LENGTH
RAMP A				
110+71.06	111+71.06	100.00	1	100.00
111+71.06	115+00.	328.94	2	657.88
RAMP B				
114+18.2	115+18.2	100.00	2	200.00
115+18.2	118+00.	281.80	2	563.60
118+00.	120+85.	285.00	1	285.00
120+85.	122+40.	155.00	2	310.00
RAMP C				
115+59.44	116+59.44	100.00	1	100.00
116+59.44	121+00.	440.56	2	881.12
RAMP D				
113+96.65	114+96.65	100.00	2	200.00
114+96.65	119+60.	463.35	2	926.70
119+60.	124+30.	470.00	1	470.00
124+30.	124+50.	20.00	2	40.00
RAMP E				
123+93.	127+04.29	311.29	2	622.58
127+04.29	132+32.	527.71	2	1055.42
132+32.	133+32.	100.00	2	200.00
RAMP F				
136+30.	137+46.93	116.93	2	233.86
137+46.93	138+46.93	100.00	1	100.00
RAMP AT				
214+97.	215+47.	50.00	2	100.00
BAMP BT				
625+41.67	625+91.67	50.00	2	100.00
RAMP CT				
115+11.	115+61.	50.00	2	100.00
RAMP DT				
7+61.31	8+11.31	50.00	2	100.00
RAMP A				
71+04.59	72+04.59	100.00	1	100.00
72+04.59	79+45.5	740.91	2	1481.82
79+45.5	84+29.	483.50	1	483.50
84+29.	86+40.2	211.20	2	422.40
RAMP AB				
84+29.	85+69.	140.00	1	140.00
RAMP B				
74+12.	75+12.	100.00	2	200.00
75+12.	78+26.	314.00	2	628.00
78+26.	84+25.	599.00	1	599.00
84+25.	86+50.	225.00	2	450.00
RAMP C				
73+00.	75+17.	217.00	2	434.00
75+17.	81+50.	633.00	1	633.00
81+50.	84+55.	305.00	2	610.00
84+55.	85+55.	100.00	2	200.00
RAMP D				
83+55.24	87+72.34	417.10	2	834.20
87+72.34	88+72.34	100.00	1	100.00
RAMP CD				
73+72.66	75+17.	144.34	2	288.68
				14,950.8

TOTAL = 150 STA..

307qc07.dgn

RAMP QUANTITIES

ITEM 254 - PAVEMENT PLANING, BITUMINOUS

FROM	TO	PLANED LENGTH	WIDTH	AREA (SQ. YDS.)
RAMP A				
110+71.06	111+71.06	100.00	20.00	222.22
111+71.06	115+00.	328.94	19.00	694.43
RAMP B				
114+18.2	115+18.2	100.00	19.00	211.11
115+18.2	118+00.	281.80	19.00	594.91
118+00.	120+85.	285.00	17.00	538.33
120+85.	122+40.	155.00	19.00	327.22
RAMP C				
115+59.44	116+59.44	100.00	20.00	222.22
116+59.44	121+00.	440.56	19.00	930.07
RAMP D				
113+96.65	114+96.65	100.00	19.00	211.11
114+96.65	119+60.	463.35	19.00	978.18
119+60.	124+30.	470.00	17.00	887.78
124+30.	124+50.	20.00	19.00	42.22
RAMP E				
123+93.	127+04.29	311.29	19.00	657.17
127+04.29	132+32.	527.71	19.00	1114.05
132+32.	133+32.	100.00	19.00	211.11
RAMP F				
136+30.	137+46.93	116.93	19.00	246.85
137+46.93	138+46.93	100.00	20.00	222.22
RAMP AT				
214+97.	215+47.	50.00	19.00	105.56
BAMP BT				
625+41.67	625+91.67	50.00	25.00	138.89
RAMP CT				
115+11.	115+61.	50.00	21.00	116.67
RAMP DT				
7+61.31	8+11.31	50.00	25.00	138.89
RAMP A				
71+04.59	72+04.59	100.00	21.00	233.33
72+04.59	79+45.5	740.91	19.00	1564.14
79+45.5	84+29.	483.50	17.00	913.28
84+29.	86+40.2	211.20	19.00	445.87
RAMP AB				
84+29.	85+69.	140.00	34.00	528.89
RAMP B				
74+12.	75+12.	100.00	19.00	211.11
75+12.	78+26.	314.00	19.00	662.89
78+26.	84+25.	599.00	17.00	1131.44
84+25.	86+50.	225.00	19.00	475.00
RAMP C				
73+00.	75+17.	217.00	19.00	458.11
75+17.	81+50.	633.00	17.00	1195.67
81+50.	84+55.	305.00	19.00	643.89
84+55.	85+55.	100.00	19.00	211.11
RAMP D				
83+55.24	87+72.34	417.10	19.00	880.54
87+72.34	88+72.34	100.00	21.00	233.33
RAMP CD				
73+72.66	75+17.	144.34	17.00	272.64
				18,872.5

TOTAL = 18,872 S.Y.

ITEM 304 - 6" AGGREGATE BASE, AS PER PLAN

FROM	TO	LENGTH	WIDTH	AREA (SQ. YDS.)	VOLUME (CU. YDS.)
RAMP A					
110+71.06	111+71.06	100.00	7.50	83.33	13.89
111+71.06	115+00.	328.94	6.50	237.57	39.59
RAMP B					
114+18.2	115+18.2	100.00	6.50	72.22	12.04
115+18.2	118+00.	281.80	6.50	203.52	33.92
118+00.	120+85.	285.00	6.50	205.83	34.31
120+85.	122+40.	155.00	6.50	111.94	18.66
RAMP C					
115+59.44	116+59.44	100.00	6.50	72.22	12.04
116+59.44	121+00.	440.56	6.50	318.18	53.03
RAMP D					
113+96.65	114+96.65	100.00	6.50	72.22	12.04
114+96.65	119+60.	463.35	6.50	334.64	55.77
119+60.	124+30.	470.00	6.50	339.44	56.57
124+30.	124+50.	20.00	6.50	14.44	2.41
RAMP E					
123+93.	127+04.29	311.29	6.50	224.82	37.47
127+04.29	132+32.	527.71	6.50	381.12	63.52
132+32.	133+32.	100.00	6.50	72.22	12.04
RAMP F					
136+30.	137+46.93	116.93	6.50	84.45	14.07
137+46.93	138+46.93	100.00	7.50	83.33	13.89
RAMP AT					
214+97.	215+47.	50.00			
BAMP BT					
625+41.67	625+91.67	50.00			
RAMP CT					
115+11.	115+61.	50.00			
RAMP DT					
7+61.31	8+11.31	50.00			
RAMP A					
71+04.59	72+04.59	100.00	7.50	83.33	13.89
72+04.59	79+45.5	740.91	6.50	535.10	89.18
79+45.5	84+29.	483.50	6.50	349.19	58.20
84+29.	86+40.2	211.20	6.50	152.53	25.42
RAMP AB					
84+29.	85+69.	140.00	6.50	101.11	16.85
RAMP B					
74+12.	75+12.	100.00	6.50	72.22	12.04
75+12.	78+26.	314.00	6.50	226.78	37.80
78+26.	84+25.	599.00	6.50	432.61	72.10
84+25.	86+50.	225.00	6.50	162.50	27.08
RAMP C					
73+00.	75+17.	217.00	6.50	156.72	26.12
75+17.	81+50.	633.00	6.50	457.17	76.19
81+50.	84+55.	305.00	6.50	220.28	36.71
84+55.	85+55.	100.00	6.50	72.22	12.04
RAMP D					
83+55.24	87+72.34	417.10	6.50	301.24	50.21
87+72.34	88+72.34	100.00	6.50	72.22	12.04
RAMP CD					
73+72.66	75+17.	144.34	6.50	104.25	17.37
					1,068.5

TOTAL = 1069 C.Y.

ITEM 305 - 9" CONCRETE BASE, AS PER PLAN

FROM	TO	LENGTH	WIDTH	AREA (SQ. YDS.)
RAMP A				
110+71.06	111+71.06	100.00	7.00	77.8
111+71.06	115+00.	328.94	6.00	219.3
RAMP B				
114+18.2	115+18.2	100.00	6.00	66.7
115+18.2	118+00.	281.80	6.00	187.9
118+00.	120+85.	285.00	6.00	190.0
120+85.	122+40.	155.00	6.00	103.3
RAMP C				
115+59.44	116+59.44	100.00	6.00	66.7
116+59.44	121+00.	440.56	6.00	293.7
RAMP D				
113+96.65	114+96.65	100.00	6.00	66.7
114+96.65	119+60.	463.35	6.00	308.9
119+60.	124+30.	470.00	6.00	313.3
124+30.	124+50.	20.00	6.00	13.3
RAMP E				
123+93.	127+04.29	311.29	6.00	207.5
127+04.29	132+32.	527.71	6.00	351.8
132+32.	133+32.	100.00	6.00	66.7
RAMP F				
136+30.	137+46.93	116.93	6.00	78.0
137+46.93	138+46.93	100.00	7.00	77.8
RAMP AT				
214+97.	215+47.	50.00		
BAMP BT				
625+41.67	625+91.67	50.00		
RAMP CT				
115+11.	115+61.	50.00		
RAMP DT				
7+61.31	8+11.31	50.00		
RAMP A				
71+04.59	72+04.59	100.00	7.00	77.8
72+04.59	79+45.5	740.91	6.00	493.9
79+45.5	84+29.	483.50	6.00	322.3
84+29.	86+40.2	211.20	6.00	140.8
RAMP AB				
84+29.	85+69.	140.00	6.00	93.3
RAMP B				
74+12.	75+12.	100.00	6.00	66.7
75+12.	78+26.	314.00	6.00	209.3
78+26.	84+25.	599.00	6.00	399.3
84+25.	86+50.	225.00	6.00	150.0
RAMP C				
73+00.	75+17.	217.00	6.00	144.7
75+17.	81+50.	633.00	6.00	422.0
81+50.	84+55.	305.00	6.00	203.3
84+55.	85+55.	100.00	6.00	66.7
RAMP D				
83+55.24	87+72.34	417.10	6.00	278.1
87+72.34	88+72.34	100.00	6.00	66.7
RAMP CD				
73+72.66	75+17.	144.34	6.00	96.2
				5920.4

TOTAL = 5920 S.Y.

307qc08.dgn

RAMP QUANTITIES

ITEM 446 - 1½"ASPHALT CONCRETE, SURFACE COURSE, TYPE 1H, AS PER PLAN

FROM	TO	LENGTH	WIDTH	AREA (SQ. YDS.)	VOLUME (CU. YDS.)
RAMP A					
110+71.06	111+71.06	100.00	27.00	300.0	12.5
111+71.06	115+00.	328.94	25.00	913.7	38.1
RAMP B					
114+18.2	115+18.2	100.00	25.00	277.8	11.6
115+18.2	118+00.	281.80	25.00	782.8	32.6
118+00.	120+85.	285.00	23.00	728.3	30.3
120+85.	122+40.	155.00	25.00	430.6	17.9
RAMP C					
115+59.44	116+59.44	100.00	26.00	288.9	12.0
116+59.44	121+00.	440.56	25.00	1223.8	51.0
RAMP D					
113+96.65	114+96.65	100.00	25.00	277.8	11.6
114+96.65	119+60.	463.35	25.00	1287.1	53.6
119+60.	124+30.	470.00	23.00	1201.1	50.0
124+30.	124+50.	20.00	25.00	55.6	2.3
RAMP E					
123+93.	127+04.29	311.29	25.00	864.7	36.0
127+04.29	132+32.	527.71	25.00	1465.9	61.1
132+32.	133+32.	100.00	25.00	277.8	11.6
RAMP F					
136+30.	137+46.93	116.93	25.00	324.8	13.5
137+46.93	138+46.93	100.00	27.00	300.0	12.5
RAMP AT					
214+97.	215+47.	50.00	19.00	105.6	4.4
BAMP BT					
625+41.67	625+91.67	50.00	25.00	138.9	5.8
RAMP CT					
115+11.	115+61.	50.00	21.00	116.7	4.9
RAMP DT					
7+61.31	8+11.31	50.00	25.00	138.9	5.8
RAMP A					
71+04.59	72+04.59	100.00	27.00	300.0	12.5
72+04.59	79+45.5	740.91	25.00	2058.1	85.8
79+45.5	84+29.	483.50	23.00	1235.6	51.5
84+29.	86+40.2	211.20	25.00	586.7	24.4
RAMP AB					
84+29.	85+69.	140.00	40.00	622.2	25.9
RAMP B					
74+12.	75+12.	100.00	25.00	277.8	11.6
75+12.	78+26.	314.00	25.00	872.2	36.3
78+26.	84+25.	599.00	23.00	1530.8	63.8
84+25.	86+50.	225.00	25.00	625.0	26.0
RAMP C					
73+00.	75+17.	217.00	25.00	602.8	25.1
75+17.	81+50.	633.00	23.00	1617.7	67.4
81+50.	84+55.	305.00	25.00	847.2	35.3
84+55.	85+55.	100.00	25.00	277.8	11.6
RAMP D					
83+55.24	87+72.34	417.10	25.00	1158.6	48.3
87+72.34	88+72.34	100.00	27.00	300.0	12.5
RAMP CD					
73+72.66	75+17.	144.34	23.00	368.9	15.4
				24,781.8	1,032.6

TOTAL = 1033 C.Y.

ITEM 446 - ASPHALT CONCRETE, INTERMEDIATE COURSE, TYPE 2

FROM	TO	LENGTH	WIDTH	AREA (SQ. YDS.)	THICKNESS (INCHES)	VOLUME (CU. YDS.)
RAMP A						
110+71.06	111+71.06	100.00	27.00	300.0	2.25	18.8
111+71.06	115+00.	328.94	25.00	913.7	1.75	44.4
RAMP B						
114+18.2	115+18.2	100.00	25.00	277.8	2.25	17.4
115+18.2	118+00.	281.80	25.00	782.8	1.75	38.1
118+00.	120+85.	285.00	23.00	728.3	1.75	35.4
120+85.	122+40.	155.00	25.00	430.6	1.75	20.9
RAMP C						
115+59.44	116+59.44	100.00	26.00	288.9	2.25	18.1
116+59.44	121+00.	440.56	25.00	1223.8	1.75	59.5
RAMP D						
113+96.65	114+96.65	100.00	25.00	277.8	2.25	17.4
114+96.65	119+60.	463.35	25.00	1287.1	1.75	62.6
119+60.	124+30.	470.00	23.00	1201.1	1.75	58.4
124+30.	124+50.	20.00	25.00	55.6	1.75	2.7
RAMP E						
123+93.	127+04.29	311.29	25.00	864.7	1.75	42.0
127+04.29	132+32.	527.71	25.00	1465.9	1.75	71.3
132+32.	133+32.	100.00	25.00	277.8	2.25	17.4
RAMP F						
136+30.	137+46.93	116.93	25.00	324.8	1.75	15.8
137+46.93	138+46.93	100.00	27.00	300.0	2.25	18.8
RAMP AT						
214+97.	215+47.	50.00	19.00	105.6	2.25	6.6
BAMP BT						
625+41.67	625+91.67	50.00	25.00	138.9	2.25	8.7
RAMP CT						
115+11.	115+61.	50.00	21.00	116.7	2.25	7.3
RAMP DT						
7+61.31	8+11.31	50.00	25.00	138.9	2.25	8.7
RAMP A						
71+04.59	72+04.59	100.00	27.00	300.0	2.25	18.8
72+04.59	79+45.5	740.91	25.00	2058.1	1.75	100.0
79+45.5	84+29.	483.50	23.00	1235.6	1.75	60.1
84+29.	86+40.2	211.20	25.00	586.7	1.75	28.5
RAMP AB						
84+29.	85+69.	140.00	40.00	622.2	1.75	30.2
RAMP B						
74+12.	75+12.	100.00	25.00	277.8	1.75	13.5
75+12.	78+26.	314.00	25.00	872.2	2.25	54.5
78+26.	84+25.	599.00	23.00	1530.8	1.75	74.4
84+25.	86+50.	225.00	25.00	625.0	1.75	30.4
RAMP C						
73+00.	75+17.	217.00	25.00	602.8	1.75	29.3
75+17.	81+50.	633.00	23.00	1617.7	1.75	78.6
81+50.	84+55.	305.00	25.00	847.2	1.75	41.2
84+55.	85+55.	100.00	25.00	277.8	2.25	17.4
RAMP D						
83+55.24	87+72.34	417.10	25.00	1158.6	1.75	56.3
87+72.34	88+72.34	100.00	27.00	300.0	2.25	18.8
RAMP CD						
73+72.66	75+17.	144.34	23.00	368.9	1.75	17.9
						1,259.8

TOTAL = 1260 C.Y.

ITEM 407 - TACK COAT

24781.8 S.Y. x 0.10 GAL/SY = 2478 GALS

ITEM 407 - TACK COAT FOR INTERMEDIATE COURSE

24781.8 S.Y. x 0.05 GAL/SY = 1239 GALS

307qa09.dgn

MISCELLANEOUS QUANTITIES

ITEM 601 - ROCK CHANNEL PROTECTION, TYPE A, WITH FABRIC FILTER, AS PER PLAN

South Abutment Slope of CUY-71-0332 Bridge

[((16+20)/2 X 15) + ((20+23.5)/2 X 55) + ((23.5+28)/2 X 57) + ((28+30)/2 X 103) + ((30+28)/2 X 40) + (28 X 45) + ((28+25)/2 X 40)] X3 X1/27 =

TOTAL = 1045 Cu. Yds.

ITEM 203 - EMBANKMENT

STATION FROM	TO	SIDE	LENGTH X WIDTH	AVG. DEPTH (FT.)	VOLUME (CU.YD.)
Boston Road					
48+14.98	48+45.24	Lt./Rt.	2 X [30.26' X 3'(avg)]	0.33'	2.2
51+54.76	51+85.02	Lt./Rt.	2 X [30.26' X 3'(avg)]	0.33'	2.2

TOTAL = 4 Cu. Yds.

ITEM 254 - PAVEMENT PLANING BITUMINOUS

STATION FROM	TO	SIDE	LENGTH X WIDTH	AREA (SQ.YD.)
Boston Road				
48+14.98	48+57.98	Rt.	43' X 12'	57.3
51+42.02	51+85.02	Rt.	43' X 12'	57.3

TOTAL = 115 Sq. Yds.

ITEM 609 - CURB, TYPE 6

STATION FROM	TO	SIDE	LENGTH (FT.)	REMARKS
48+05.44	48+32.98	Lt./Rt.	2 X 26.0' = 52.0'	Boston Road
51+67.02	51+94.56	Lt./Rt.	26.0' = 26.0'	Boston Road
541+71.5	541+97.5	Lt./Rt.	2 X 26.0' = 52.0'	
662+55.87	662+81.87	Lt.	26.0' = 26.0'	
661+95.17	662+21.17	Rt.	26.0' = 26.0'	
689+32.43	689+58.43	Lt.	26.0' = 26.0'	
689+35.19	689+61.19	Rt.	26.0' = 26.0'	
761+02.74	761+28.47	Lt.	26.0' = 26.0'	
760+84.77	761+10.77	Rt.	26.0' = 26.0'	
776+87.2	777+13.2	Lt.	26.0' = 26.0'	
74+23.9	73+97.9	Rt.	26.0' = 26.0'	Ramp C - U.S. 42

TOTAL = 372 Lin. Ft.

ITEM 622 - CONCRETE BARRIER, TYPE B-50, AS PER PLAN

STATION FROM	TO	SIDE	LENGTH (FT.)
781+12.82	789+00.00	℄	765.72
		TOTAL	766

Deduct for Light Tower Foundations 1 X 10' = 10'
Deduct for Barrier Median Inlets 1 X 20' = 20'
Total Deducts 30'

TOTAL = 736 Lin. Ft.

ITEM 203 - EXCAVATION NOT INCLUDING EMBANKMENT CONSTRUCTION

STATION FROM	TO	SIDE	LENGTH X WIDTH	AVG. DEPTH (FT.)	VOLUME (CU.YD.)
Boston Road					
48+14.98	48+32.98	Lt./Rt.	18' X 6'	0.63'	2.5
51+67.02	51+85.02	Lt./Rt.	18' X 6'	0.63'	2.5

TOTAL = 5 Cu. Yds.

ITEM 304 - AGGREGATE BASE, AS PER PLAN

STATION FROM	TO	SIDE	LENGTH X WIDTH	AVG. DEPTH (FT.)	VOLUME (CU.YD.)
Boston Road					
48+14.98	48+32.98	Lt./Rt.	18' X 6'	0.38'	1.5
51+67.02	51+85.02	Lt./Rt.	18' X 6'	0.38'	1.5
Drive at South Abutment Slope of CUY-71-0332 Bridge					
10+55.00	14+01.50		346.5' X 10'	0.5'	64.2

TOTAL = 67 Cu. Yds.

ITEM 446 - 3½" ASPHALT CONCRETE, INTERMEDIATE COURSE, TYPE 2, PG 64-28

STATION FROM	TO	SIDE	LENGTH X WIDTH	AVG. DEPTH (FT.)	VOLUME (CU.YD.)
Boston Road					
48+14.98	48+32.98	Lt./Rt.	2 X [18' X 3']	0.29'	1.2
51+67.02	51+85.02	Lt./Rt.	2 X [18' X 3']	0.29'	1.2

TOTAL = 3 Cu. Yds.

ITEM 446 - 1½" ASPHALT CONCRETE, SURFACE COURSE, TYPE 1H, AS PER PLAN

STATION FROM	TO	SIDE	LENGTH X WIDTH	AVG. DEPTH (FT.)	VOLUME (CU.YD.)
Boston Road					
48+14.98	48+57.98	Lt./Rt.	43' X 30'	0.13'	6.0
51+42.02	51+85.02	Lt./Rt.	43' X 30'	0.13'	6.0

TOTAL = 12 Cu. Yds.

ITEM 407

STATION FROM	TO	SIDE	LENGTH X WIDTH	AREA SQ. YDS.	
Boston Road					
48+14.98	48+57.98	Lt./Rt.	43' X 30'	143.3	
51+42.02	51+85.02	Lt./Rt.	43' X 30'	143.3	TOTAL AREA = 287 S.Y.

ITEM 407 - TACK COAT

287 X 0.10 GAL/SY = 29 GAL.

ITEM 407 - TACK COAT FOR INTER. COURSE

287 X 0.05 GAL/SY = 14 GAL.

ITEM 626-BARRIER REFLECTORS

Station From	Station To	Side	Length	Type A Yellow Each	Type A White Each	Type B Yellow Each	Type B White Each
486+47.	487+34.	lt	87	3	0		
485+55.	487+25.	rt	170	0	2		1
486+97.	487+85.	lt	88	3	0		
487+06.	488+76.65	rt	170.65	0	2		1
527+24.15	530+00.	rt	275.85	0	4		
530+05.7	539+68.2	rt	962.5	0	11		
530+00.	539+67.9	rt	967.9	0	11		
537+36.81	539+68.06	lt	231.25	3	0		
541+69.3	545+00.	rt	330.7	0	4		
541+69.44	544+00.69	lt	231.25	3	0		
541+69.6	545+00.	rt	330.4	0	4		
545+00.	560+00.	rt	1500	0	16		
545+00.	560+00.	rt	1500	0	16		
560+00.	567+50.55	rt	750.55	0	9		
560+00.	568+25.85	rt	825.85	0	9		
579+34.	590+00.	rt	1066	0	12		
590+00.	605+00.	rt	1500	0	16		
596+50.	605+00.	rt	850	0	10		
597+40.	598+65.	lt	125	3	0		
601+90.	603+15.	lt	125	3	0		
605+00.	614+64.	rt	964	0	11		
605+00.	613+25.	rt	825	0	9		
606+40.	612+15.	lt	575	7	0		
620+20.	623+95.	lt	375	5	0		
621+52.75	623+71.	rt	218.25	0	2		1
622+93.5	624+43.5	lt	150	3	0		
623+17.34	626+35.49	rt	318.15	0	3		1
126+87.5	130+00.	rt	312.5	0	4		
636+33.	649+45.5	rt	1312.5	0	14		
636+65.	637+90.	lt	125	3	0		
640+86.	642+11.	lt	125	3	0		
641+20.	642+45.	lt	125	3	0		
645+55.	646+80.	lt	125	3	0		
650+25.	651+50.	lt	125	3	0		
655+25.	656+50.	lt	125	3	0		
655+56.21	661+99.96	rt	643.75	0	7		
658+23.77	662+61.27	rt	437.5	0	5		
659+56.26	662+25.01	lt	268.75	4	0		
665+43.22	667+43	rt	0	0	3		
665+79.48	668+10.73	lt	0	3	0		
666+06.83	670+25.58	rt	418.75	0	5		
670+55.	672+05.	rt	150	0	3		
670+25.	671+50.	lt	125	3	0		
675+00.	679+25.	rt	425	0	5		
675+25.	676+50.	lt	125	3	0		
680+25.	681+50.	lt	125	3	0		
681+29.88	689+61.13	rt	831.25	0	9		
684+50.09	689+62.59	rt	512.5	0	6		
685+19.14	689+62.89	lt	443.75	5	0		
691+23.53	694+00.	rt	276.47	0	4		
691+25.29	694+00.	lt	274.71	4	0		
691+32.23	694+00.	lt	267.77	4	0		
691+33.99	694+00.	rt	266.01	0	4		
694+00.	695+04.96	rt	104.96	0	3		
694+00.	695+36.14	lt	136.14	3	0		
694+00.	695+44.15	lt	144.15	3	0		
694+00.	695+75.33	rt	175.33	0	3		

ITEM 626-BARRIER REFLECTORS

Station From	Station To	Side	Length	Type A Yellow Each	Type A White Each	Type B Yellow Each	Type B White Each
698+44.4	708+00.	rt	955.6	0	11		
699+02.59	701+96.34	lt	293.75	4	0		
699+33.77	708+00.	rt	866.23	0	10		
704+62.5	706+00.	lt	137.5	3	0		
708+00.	710+50.	rt	237.5	0	3		
708+00.	714+02.52	rt	602.52	0	7		
708+60.	709+85.	lt	125	3	0		
712+65.	719+77.5	lt	712.5	8	0		
716+75.	718+62.5	rt	187.5	0	3		
718+01.85	719+75.	rt	173.15	0	2		1
717+99.	719+11.5	lt	112.5	3	0		
726+26.	736+00.	lt	974	11	0		
727+82.	729+57.	rt	175	0	3		
732+11.35	734+07.	rt	195.65	0	3		
733+19.5	734+07.	lt	87.5	3	0		
733+71.	735+91.65	rt	220.65	0	3		
736+00.	736+76.	lt	76	3	0		
739+35.	740+60.	lt	125	3	0		
744+25.	745+50.	lt	125	3	0		
743+30.	747+80.	rt	450	0	6		
746+95.	750+00.	rt	305	0	4		
749+25.	750+00.	lt	75	3	0		
750+00.	750+50.	lt	50	3	0		
750+00.	754+70.	rt	470	0	6		
754+25.	755+50.	lt	125	3	0		
758+51.38	761+20.13	lt	268.75	4	0		
758+44.35	761+13.1	rt	268.75	0	4		
763+26.12	764+00.	lt	73.88	3	0		
763+33.15	764+00.	rt	66.85	0	3		
764+00.	777+00.	rt	1300	0	14		
764+00.	766+44.87	lt	244.87	3	0		
768+02.5	769+65.	lt	162.5	3	0		
772+73.85	777+00.	lt	426.15	5	0		
777+00.	777+15.	rt	15	0	3		
779+90.54	780+95.	rt	104.46	0	3		
777+00.	778+55.1	lt	155.1	3	0		
87+00.	89+00.	rt	200	0	3		
786+50.	789+00.	rt	250	0	4		
				160	321		
BRIDGES							
539+91.	541+46.					4	4
662+53.	665+51.					7	7
689+86.	691+03.					3	3
695+60.	698+73.					7	7
761+45.	763+02.					4	4
778+60.	781+06.					6	6
MEDIAN BARRIER WALL							
781+09.	789+00.					16	
TOTALS				145	305	47	36
				*450		*83	

*Totals Carried To Traffic Control General Summary On Sheet 220

307qell.dgn

GUARDRAIL

SHEET NO.		203 Linear Grading, As Per Plan	448 3" Asphalt Conc. Intermediate Course Type 1, PG 64-22	606 Guardrail, Type 5	606 Guardrail, Barrier Design, Type 5	606 Guardrail, Type 5A	606 Bridge Terminal Assembly, Type 1	606 Bridge Terminal Assembly, Type 2	606 Anchor Assembly, Type T	606 Anchor Assembly, Type E-98		606 Impact Attenuator, Type 1-98	622 Concrete Barrier, Type D, As Per Plan A
		Sta.	Cu. Yd.	Lin. Ft.	Lin. Ft.	Lin. Ft.	Each	Each	Each	Each		Each	Lin. Ft.
80A													
81		2.5	28.5	375.0	100	50	2		2	2		2	108
83													
85			10.9	226						1			
87		4.6	114.5	2941.5			4	2	1	2			
89			111.1	3000									
91			59.1	1513.9					1	1			
93			40.2	1016						1			
95		2.5	97.2	2462.5					3	2			
97		6.0	90.3	2287.5					2	2			
99		5.6	47.3	775	50	87.5	2		3	4		1	228
101		5.0	70.6	1500					5	5			
103		5.2	62.1	1325			2	1	3	4			
105		4.8	66.2	1312.5			2	1	5	6			
107		11.1	113.2	2824			4	3	2	3			
109		7.3	107.9	2708.1			4	3	1	2			
111		10.0	82.4	1671.3	12.5	100	1		5	5		1	69
113		11.4	62.3	1312.5	12.5	25	2		3	4		1	108
115		4.4	47.6	730					4	5			
117		5.2	51.7	1010.7			4		2	4			
119		8.5	81.4	1971					1	3			
121		1.6	29.7	614			2	1	1	2			
122B			23.9	762.5					2				
123F			75.8	1875			1		1	2			
TOTALS		96	1474	34214	175	263	30	11	47	60		5	513

ROADWAY

SHEET NO.	202 Walk Removed	202 Guardrail Removed	202 Fence Removed	202 Gate Removed	202 Pipe Removed, 24" And Under	202 Catch Basin Abandoned	202 Catch Basin or Inlet Removed	203 Ditch Cleanout	Spec Pipe Cleanout	608 4" Concrete Walk	608 8" Concrete Walk
		Lin. Ft.	Lin. Ft.	Each	Lin. Ft.	Each	Each	Lin. Ft.	Lin. Ft.	Sq. Ft.	Sq. Ft.
80A											
81	192	1194	2636					120		2230	192
83		256	3044					945	213		
85		182.5	3004					300			
87		3143	3216			1		640	296		
89		2983	2985					994	484		
91		1445.5	3110					200			
93		664	3002				1	150	284		
95		2405	3013					285			
97		1692	1580		8		1				
99		1108	506		165		1				
101		1303	3013								
103		1092	2944		96		2	35			
105		1139	3291		39		1				
107		2472	3076						290		
109		2709	1821								
111		1792	221					190			
113		1252	2675					180			
115		763	2901		100	1	1	125			
117		1441	3107					180	100		
119		1745	1450	1			1		352		
121		1505	228		32		3				
122B		1016	4206								
123F		3503	3981		88	1	3				
TOTALS	192	36805	59010	1	528	3	14	4344	2019	2230	192

FENCE

SHEET NO.		607 Fence, Type CLT	607 Gate, Type CL, As Per Plan	625 Ground Rod
		Lin. Ft.	Each	Each
80A				
81		2636		
83		3044		
85		3004		
87		3150	2	
89		2985		
91		3110		
93		3002		
95		3013		
97		1580		
99		506		
101		3013		
103		2874	1	
105		3268	1	
107		3008	2	
109		1804	2	2
111		221		3
113		2675		3
115		2901		
117		3013	2	
119		1450	1	4
121		82		
122B		4206		
123F		3981		
TOTALS		58526	11	12

QUANTITIES FOR PRESSURE RELIEF JOINTS

SHEET NO.		202 Pavement Removed*	305 9" Concrete Base, A.P.P.	Special Pressure Relief Joint, Type A
		Sq. Yd.	Sq. Yd.	L. Ft.
121		178	178	44
TOTALS		178	178	44

* 16' x 50' ±

DRAINAGE/EROSION CONTROL

SHEET NO.		601 Dumped Rock Fill, Type C	601 Rock Channel Protection, Type B, Without Filter	601 Rock Channel Protection, Type C, With Filter	603 6" Conduit, Type F ##	603 12" Conduit, Type B	603 15" Conduit, Type B	603 15" Conduit, Type C	603 18" Conduit, Type B	603 21" Conduit, Type B
		Cu. Yd.	Cu. Yd.	Cu. Yd.	Lin. Ft.	Lin. Ft.	Lin. Ft.	Lin. Ft.	Lin. Ft.	Lin. Ft.
80A					90					
81			9		80	161				
83					180			448		
85					130					
87					245					
89					190					
91					120					
93					90					
95					180					
97					135					
99					110			30		55
101			15		170					
103					135		100	387		
105					195					
107					140					
109		11.1			150					
111					130					
113					315			10		
115					145					
117				3.5	160					
119					160					
121					130					
122B					45					
123F					301				130	
TOTALS		12	24	4	3726	161	100	875	130	55

SHEET NO.		604 Catch Basin, No. 2-2B, As Per Plan	604 Catch Basin, No. 2-2B	604 Catch Basin, No. 2-3 As Per Plan	604 Catch Basin, No. 3A, with V Grate	604 Catch Basin, No. 3A As Per Plan	604 Catch Basin, No. 4A with E Grate, As Per Plan	604 Catch Basin, No. 4 with E Grate, As Per Plan	604 Catch Basin, No. 5, As Per Plan	604 Catch Basin, No. 5, with B Grate, As Per Plan	604 Catch Basin, No. 6	604 Catch Basin, Reconstructed To Grade	604 Precast Reinforced Concrete Outlet	604 Inlet, No. 2-6, As Per Plan	604 Inlet, No. 2-10	604 Inlet, No. 3B50	604 Junction Chamber, Type 1, As Per Plan	604 Junction Chamber, Type 2, As Per Plan	604 Manhole, No. 3	604 Manhole, No. 3, As Per Plan	604 Manhole, No. 5, As Per Plan
		Each	Each	Each	Each	Each	Each	Each	Each	Each	Each	Each	Each	Each	Each	Each	Each	Each	Each	Each	Each
80A								3													
81					4			1					4								2
83								2					8								
85							1						4								
87								1		1			7								
89								1					6								
91								1					6								
93								1					6								
95								1					6								
97								1					4								
99		1						2			1	1	2				1				
101								2				2	4								
103								2					4						1		
105							1	2					8								
107								1					6								
109			2										4								
111								1			1		4								
113		1					1	4				1	5					1			
115							2						4								
117								1	1				7								
119							1					2	5								
121			1						1		1		4			1					
122B													2								
123F				1		1			1				5	1	1					1	
TOTALS		2	3	1	4	1	6	27	3	1	3	6	115	1	1	1	1	1	1	1	2

SHEET NO.	605 6" Rock Cut Underdrain	605 6" Shallow Pipe U.D. w/Fabric Wrap (18" Deep)	605 6" Shallow Pipe U.D. (30" Deep)	605 6" Shallow Pipe U.D. w/Fabric Wrap (30" Deep)	605 6" Unclassified Underdrain w/Fabric Wrap	605 6" Unclassified Underdrain	660 Reinforced Sodding	670 Ditch Erosion Protection	838 Gabions With Additional Coating
	Lin. Ft.	Lin. Ft.	Lin. Ft.	Lin. Ft.	Lin. Ft.	Lin. Ft.	Sq. Yd.	Sq. Yd.	Cu. Yd.
80A		2400	2400			72		375	
81		4000	3000	3000	44	26		169	
83		3000	3000	3000	88	52		250	
85		3000	3000	3000	44	32		125	
87		2516	2560	2590	237	172	69	277	7
89		2982	2982	2982	66	26		496	
91		3000	3000	3000	66	26		580	
93		3000	3000	3000	66	26		663	
95		3000	3000	3000	66	26		661	
97		3000	3000	3308	55	26		938	
99		3500	3000	3821	33	52		1095	
101		3000	3000	3708	44	52		1044	
103		3231	2500	2499	44	78	90.5	454	7
105	4303	2845	800	800	22	26		1037	
107		2384	2429	2487	200	144	65.4	125	7
109		2023	2069	2039	175	108	74.4	46.7	7
111		3519	2800	2793	22	26		620.8	
113		3350	2800	2816	88	143		625	
115		2000	2000	2000	1644	852		375	
117		2319	2372	2378	241	135	34.0	171.7	7
119		2600	2600	2815	58	26	36.2	125	3.3
121		1728	1770	1654	252	99		1263.2	
122B				3307	414				
123F				5177	221		17.5	300	3.3
TOTALS	4303	62397	57082	65174	4190	2225	387	11817	42

707.41 Non-Perforated ASTM D3034, SDR 35, 707.42 or 707.33

PLOT SUBMITTED:05-AUG-1998 13:02
08459GSB.DGN
PLOTTED BY: fkonopka
PLOTTED FROM: ...forsber...08459gsb.dgn

STORM WATER POLLUTION PREVENTION PLAN

CALC. BY DTB DATE 3/1/94	CUY-71-0.00	OHIO	74
CHKD. BY ARP DATE 12/29/94		FHWA REGION 5	361

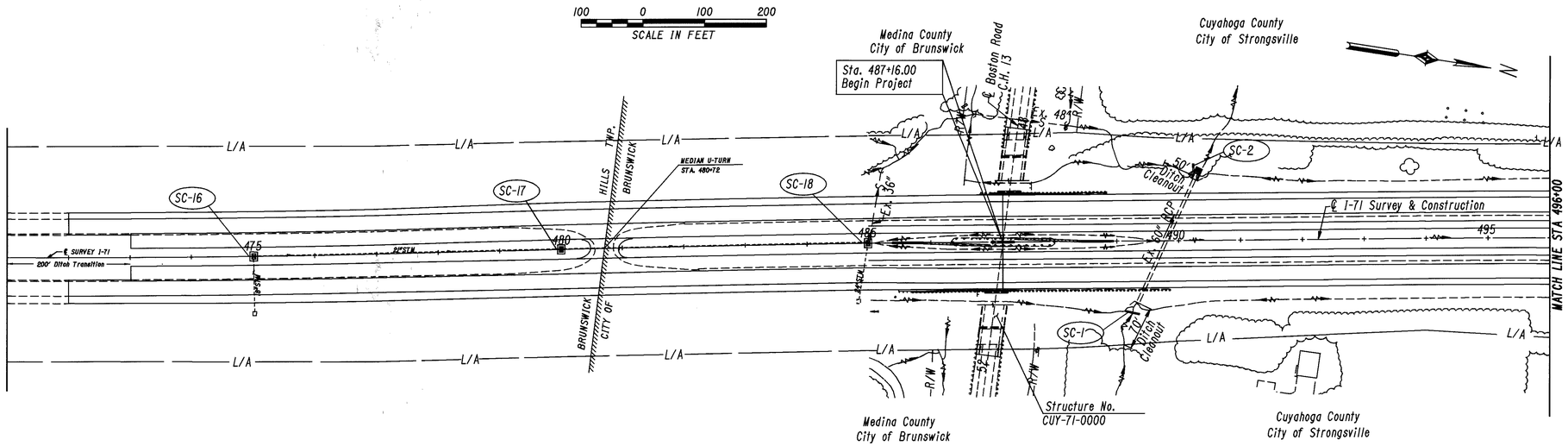

SEDIMENT CONTROL

REF. NO.	STATION FROM	STATION TO	SIDE	207 Straw or Hay Bales
				Each
SC-1	489+25	489+25	Rt.	7
SC-2	490+25	490+25	Lt.	7
SC-3	496+50	496+50	℄	8
SC-4	500+98	500+98	℄	8
SC-5	505+05	505+05	Rt.	7
SC-6	505+00	505+00	Lt.	7
SC-8	513+97	513+97	℄	8
SC-9	514+98	514+98	Rt.	7
SC-10	520+55	520+55	Lt.	7
SC-11	524+80	524+80	Lt.	7
SC-12	525+20	525+20	Lt.	7
SC-13	525+00	525+00	℄	8
SC-14	525+35	525+35	Rt.	7
SC-15	536+00	536+00	℄	8
SC-16	475+00	475+00	℄	8
SC-17	480+00	480+00	℄	8
SC-18	485+00	485+00	℄	8
		TOTAL=		127

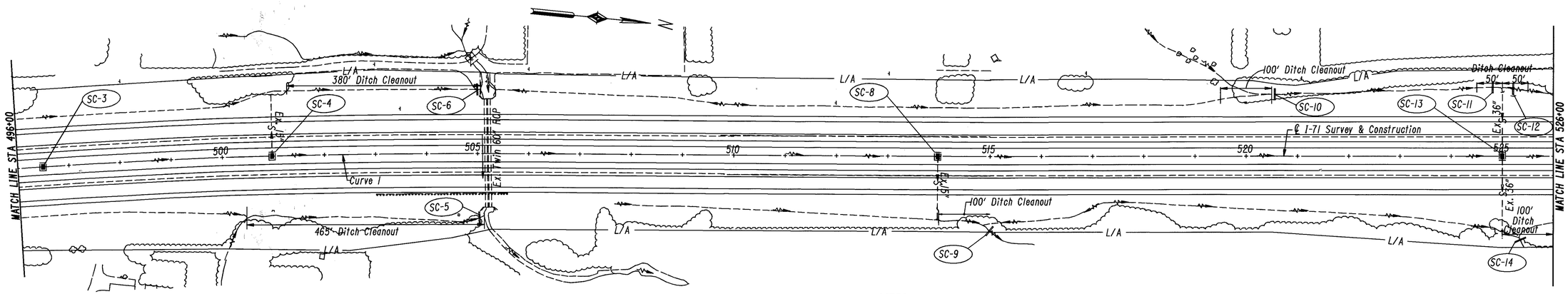

COEFFICIENT OF RUNOFF (BETWEEN CROWNS)

FOR A 100' TYPICAL SECTION

PRE-CONSTRUCTION

CONTRIBUTING WIDTH (W)	LAND USE	"C"	"CW"
32 Ft.	PAVED AREA	0.9	28.8
76 Ft.	EARTH BERMS & SLOPES	0.5	38.0
108 Ft.			66.8

WEIGHTED "C" = $\frac{66.8}{108}$ = 0.619

POST-CONSTRUCTION

CONTRIBUTING WIDTH (W)	LAND USE	"C"	"CW"
76 Ft.	PAVED AREA	0.9	68.4
32 Ft.	EARTH BERMS & SLOPES	0.5	16.0
108 Ft.			84.4

WEIGHTED "C" = $\frac{84.4}{108}$ = 0.781

LEGEND

- EXISTING DITCH
- PROPOSED INLET
- PROPOSED MANHOLE
- 15" PROPOSED STORM SEWER
- PROPOSED BALE FILTER DIKE
- PROPOSED FILTER FABRIC FENCE
- —S—S— EXISTING STORM SEWER
- DRAINAGE AREA BORDER (FILLING & GRADING)
- BALE DITCH CHECK

NOTES:

1. HAY BALES SHALL BE PLACED AROUND PROPOSED CATCH BASINS AND MEDIAN INLETS TO PROVIDE SEDIMENT CONTROL. SEE STANDARD CONSTRUCTION DRAWINGS DM-4.3M FOR DETAILS.
2. IN THE AREAS OF DITCH CLEANOUTS, THE CONTRACTOR SHALL PERFORM THE TEMPORARY SEEDING AND MULCHING AS SOON AS SUBSTANTIAL AREAS OF EXPOSED SLOPES ARE AVAILABLE. (NOTE: DITCH CLEANOUT QUANTITIES ARE INCLUDED UNDER ROADWAY QUANTITIES).
3. FOR SOIL PROFILE INFORMATION SEE THE CUY-42-0.00(MED-42-26.17) PROJECT SOIL SHEETS.
4. DITCH CHECKS SHALL BE PROVIDED AT ALL SIGNIFICANT CHANGES IN DITCH GRADES. DITCH CHECKS SHALL BE PLACED AT THE BEGINNING OF THE CONCRETE BARRIER AND AT CROSSOVERS AND BRIDGE APPROACHES.
5. NO SOIL PROFILES OR STRUCTURE FOUNDATION INVESTIGATIONS HAVE BEEN DONE FOR THIS PROJECT. INFORMATION ON SOILS INVESTIGATIONS DONE FOR THE PREVIOUS CUY-42-0.00 PROJECT AND CUY-42-3.38 PROJECT ARE AVAILABLE FOR INSPECTION AT DISTRICT 12 OFFICE DURING NORMAL BUSINESS HOURS.
6. ITEM 203 SHALL BE THE EMBANKMENT MATERIAL USED IN THE MEDIAN.
7. THE CONTRACTOR SHALL ALSO UTILIZE THE ESTIMATED QUANTITIES LOCATED ON SHEET 17 AS NECESSARY TO PROVIDE ADEQUATE SEDIMENT CONTROL.

SITE DESCRIPTION:

A LARGE PERCENTAGE OF THE EARTH DISTURBING ACTIVITY WILL BE LOCATED BETWEEN EXISTING I-71 E.O.P. (LT.) AND EXISTING I-71 E.O.P. (RT.). OTHER AREAS WHERE THE EARTH WILL BE DISTURBED ARE DURING THE REPLACEMENT OF THE GUARDRAIL AND TRAFFIC SIGN POLE FOUNDATIONS.
DITCH CLEANOUTS WILL BE PROVIDED AND RESTORED WITH SEEDING AND MULCHING.

AREA OF EARTH DISTURBING ACTIVITIES:

STA 472+00 TO STA 496+00 = 4.63 ACRES
STA 496+00 TO STA 526+00 = 5.79 ACRES

TOTAL EARTH DISTURBING ACTIVITIES: 61.15 ACRES

EUTHENICS INC.
CONSULTING ENGINEERS
CLEVELAND, OHIO

DESIGNED: DTB	CHECKED: ARP	DRAWN: DTB
DATE: 3-7-94	DATE: 12-29-94	SCALE: AS SHOWN

PLOTTED BY: fkonopka
PLOTTED in Project: Beforsber
PLOT SUBMITTED: 03-AUG-1998 13:24
307SCP01.DGN
Project id 08459 Bdgn B307scp01.dgn

STORM WATER POLLUTION PREVENTION PLAN

CALC. BY: DTB DATE 6/21/94	CUY-71-0.00	OHIO	75 / 361
CHKD. BY: ARP DATE 6/28/94		FHWA REGION 5	

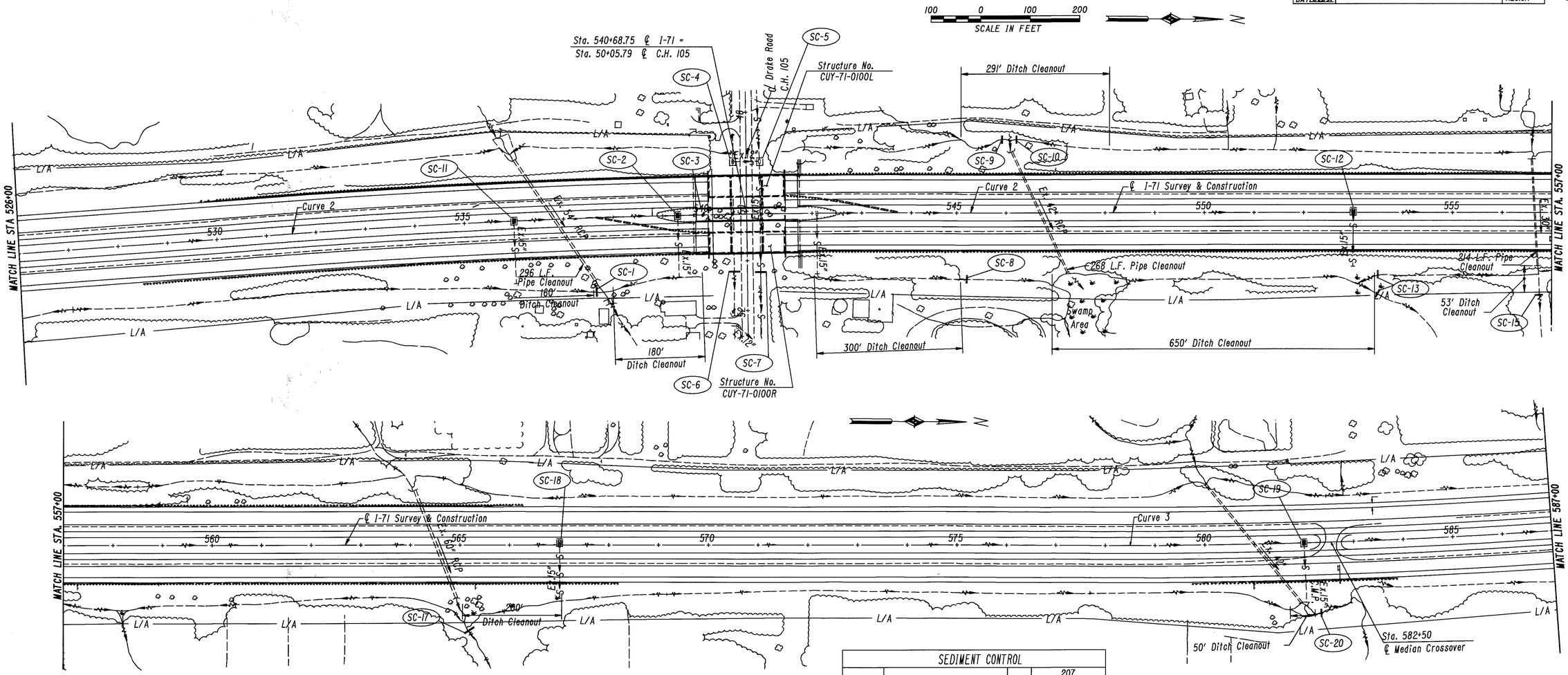

SEDIMENT CONTROL					
REF. NO.	STATION		SIDE	207	
				Straw or Hay Bales	Filter Fabric Fence
	FROM	TO		Each	Lin Ft
SC-1	537+61	537+61	Rt.	7	
SC-2	538+79	538+79	℄	8	
SC-3	539+67	539+92	℄	25	80
SC-4#	49+00	49+00	Rt.	8	
SC-5#	49+00	49+00	Lt.	8	
SC-6#	51+25	51+25	Rt.	5	
SC-7#	51+25	51+25	Lt.	5	
SC-8	545+10	545+10	Rt.	5	
SC-9	545+90	545+90	Lt.	5	
SC-10	546+20	546+20	Lt.	5	
SC-11	536+00	536+00	℄	8	
SC-12	553+00	553+00	℄	8	
SC-13	553+50	553+50	Rt.	5	
SC-15	556+75	556+75	Rt.	5	
SC-17	565+20	565+20	Rt.	5	
SC-18	567+00	567+00	℄	8	
SC-19	582+00	582+00	℄	8	
SC-20	582+30	582+30	Rt.	5	
	TOTALS			141	80

\# Stationed along ℄ Drake Road

AREA OF EARTH DISTURBING ACTIVITIES:

STA 526+00 TO STA 557+00 = 5.98 ACRES
STA 557+00 TO STA 587+00 = 5.79 ACRES

See Sheet 74 for Notes and Legend

EUTHENICS INC.
CONSULTING ENGINEERS
CLEVELAND, OHIO

DESIGNED: DTB	CHECKED: ARP	DRAWN: DTB
DATE: 3-7-94	DATE: 11-28-94	SCALE AS SHOWN

PLOTTED BY: fkonopka
PLOTTED: 08-AUG-1998 13:19
PLOT SUBMITTED: 03-AUG-1998 13:19
307SCP02.DGN
PLOT SCALE: 1:1
PLOT SETUP: forsberg
pid08459B.dgn
B307scp02.dgn

STORM WATER POLLUTION PREVENTION PLAN

CALC. BY DTB DATE 3/1/94 CHKD. BY ARP DATE 6/28/94	CUY-71-0.00	OHIO FHWA REGION 5	76 / 361

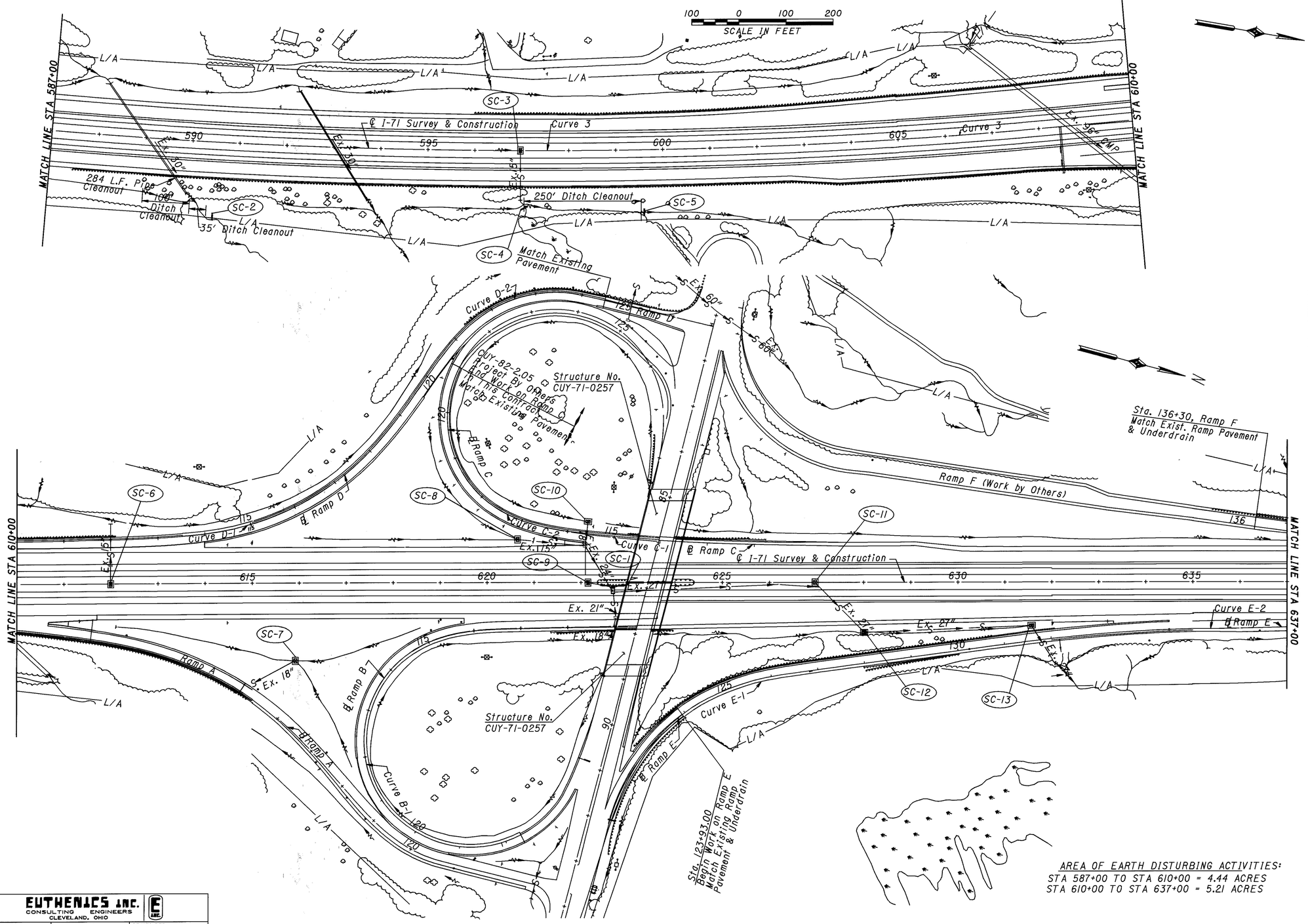

SEDIMENT CONTROL

REF. NO.	STATION FROM	STATION TO	SIDE	207 Straw or Hay Bales Each
SC-1	622+99	622+99	℄	8
SC-2	590+50	590+50	Rt.	5
SC-3	596+97.5	596+97.5	℄	8
SC-4	597+07	597+07	Rt.	5
SC-5	599+60	599+60	Rt.	5
SC-6	611+99	611+99	℄	12
SC-7	615+90	615+90	Rt.	8
SC-8	620+68	620+68	Lt.	8
SC-9	622+15	622+15	℄	12
SC-10	622+15	622+15	Lt.	8
SC-11	626+97	626+97	℄	12
SC-12	628+00	628+00	Rt.	8
SC-13	631+57	631+57	Rt.	8
	TOTALS			107

AREA OF EARTH DISTURBING ACTIVITIES:
STA 587+00 TO STA 610+00 = 4.44 ACRES
STA 610+00 TO STA 637+00 = 5.21 ACRES

See Sheet 74 for Notes and Legend

EUTHENICS INC.
CONSULTING ENGINEERS
CLEVELAND, OHIO

DESIGNED: DTB	CHECKED: ARP	DRAWN: DTB
DATE: 3-18-94	DATE: 11-29-94	SCALE: AS SHOWN

PLOTTED BY: fkonopka
PLOTTED: 08/03/98 13:20
PLOT SUBMITTED: 03-AUG-1998 13:20
307scp03.dgn
307scp03.dgn
307scp03.dgn

STORM WATER POLLUTION PREVENTION PLAN

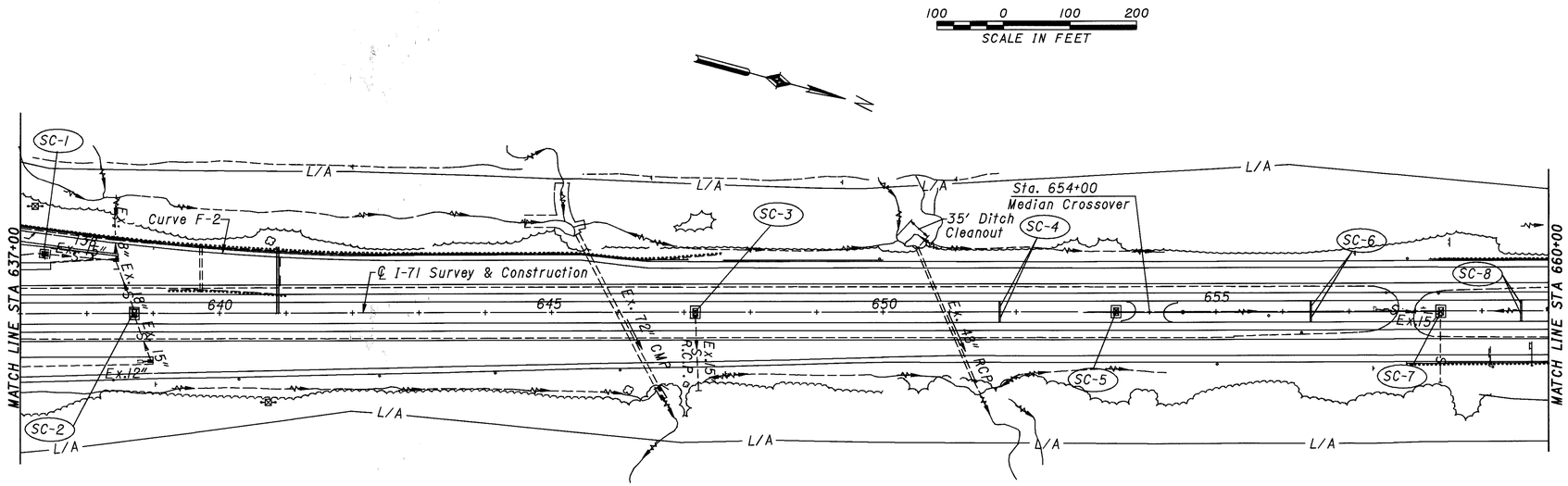

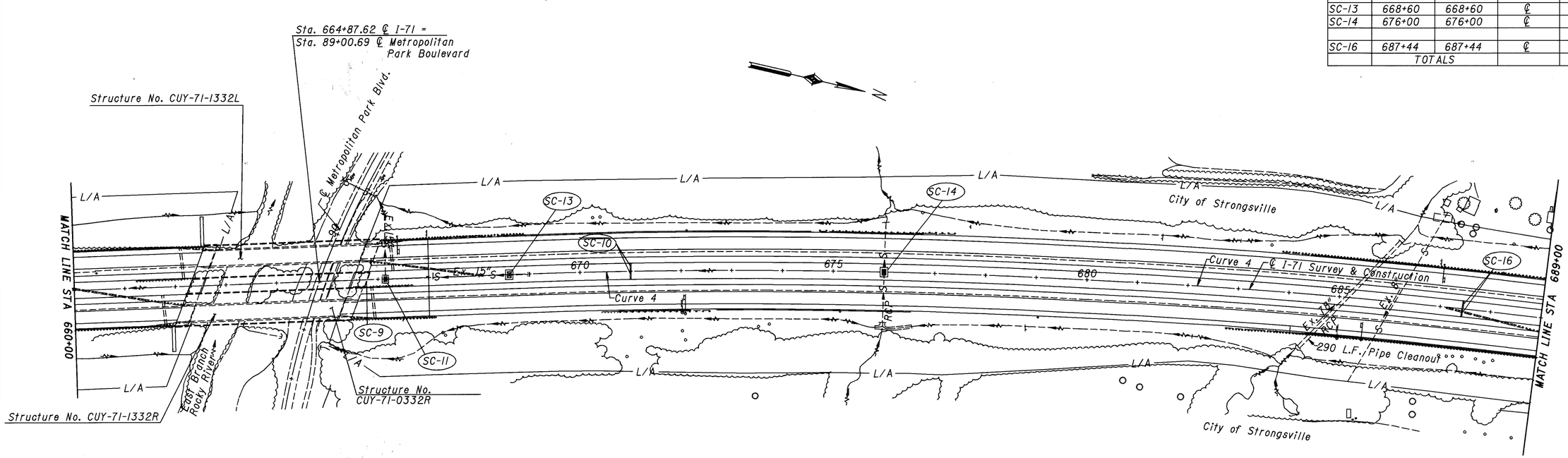

SEDIMENT CONTROL					
REF. NO.	STATION		SIDE	207	
				Straw or Hay Bales	Filter Fabric Fence
	FROM	TO		Each	Lin Ft
SC-1	637+23	637+23	Lt.	8	
SC-2	638+72.5	638+72.5	℄	12	
SC-3	647+16.5	647+16.5	℄	12	
SC-4	651+75	651+75	℄	8	
SC-5	653+57.86	653+57.86	10.56' Rt.	12	
SC-6	656+41	656+41	℄	4	12
SC-7	658+37	658+37	℄	12	
SC-8	659+50	659+50	℄	4	12
SC-9	665+51	665+75	Lt./Rt.	25	80
SC-10	671+00	671+00	℄	4	12
SC-11	666+15	666+15	℄	8	
SC-13	668+60	668+60	℄	12	
SC-14	676+00	676+00	℄	12	
SC-16	687+44	687+44	℄	8	
	TOTALS			141	116

AREA OF EARTH DISTURBING ACTIVITIES:
STA 637+00 TO STA 660+00 = 4.44 ACRES
STA 660+00 TO STA 689+00 = 5.59 ACRES

See Sheet 74 for Notes and Legend

EUTHENICS INC.
CONSULTING ENGINEERS
CLEVELAND, OHIO

DESIGNED: DTB	CHECKED: ARP	DRAWN: DTB
DATE: 3-18-94	DATE: 11-29-94	SCALE: AS SHOWN

PLOTTED BY: fkonopka
PLOTTED: 08-AUG-1998 13:35
PLOT SUBMITTED: 03-AUG-1998 13:35
307SCP04.DGN
Rpid08459B.dgn B307scp04.dgn

STORM WATER POLLUTION PREVENTION PLAN

CALC. BY DTB DAT 03/7/94	CUY-71-0.00	OHIO	78
CHKD. BY ARP DAT 03/28/94		FHWA REGION 5	361

100 0 100 200
SCALE IN FEET

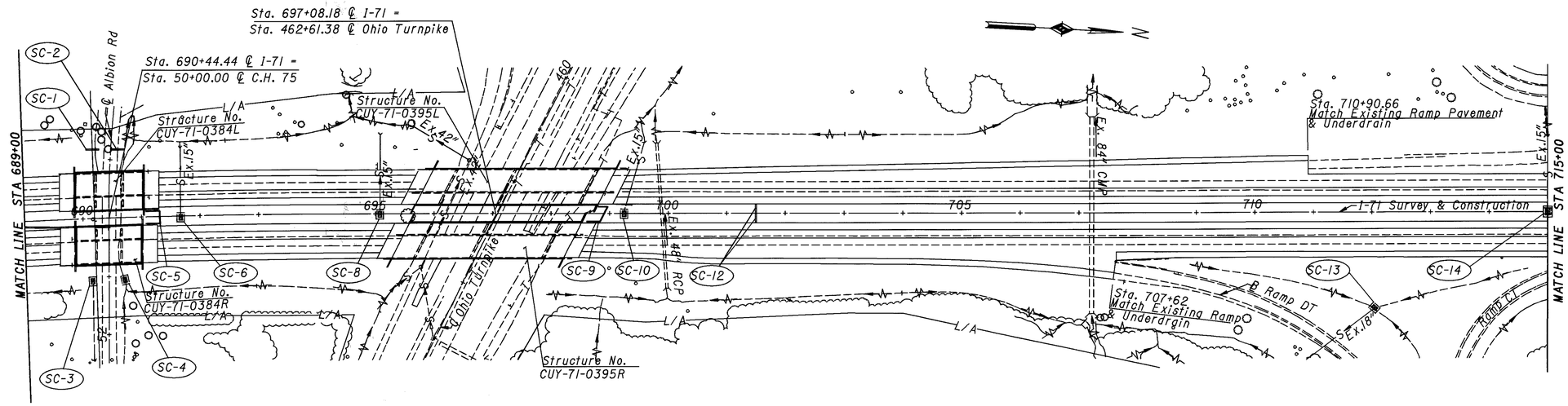

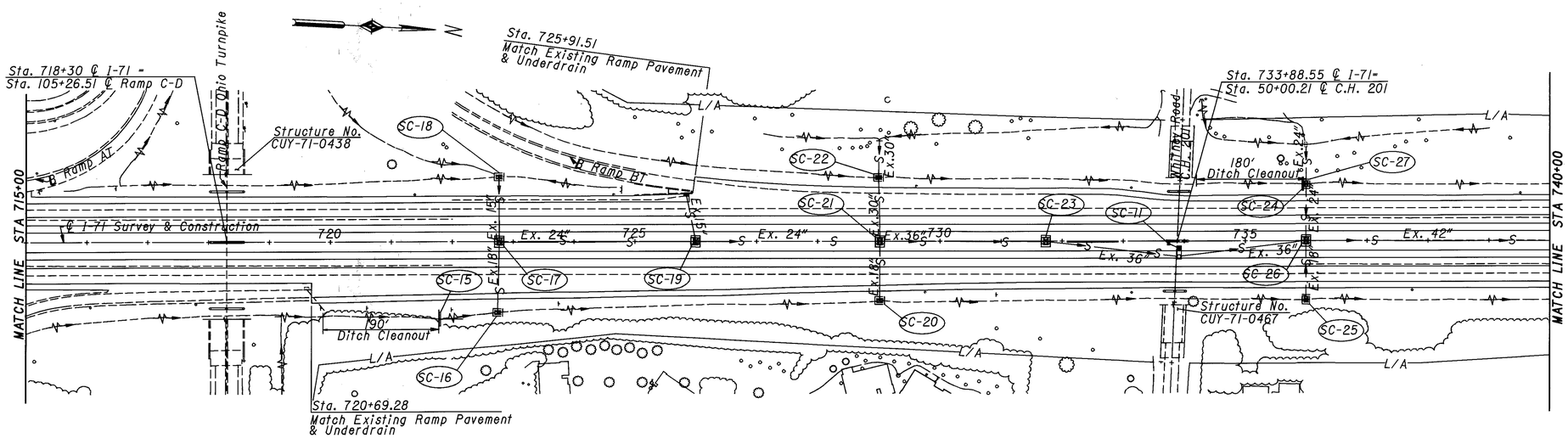

SEDIMENT CONTROL

REF. NO.	STATION FROM	STATION TO	SIDE	207 Straw or Hay Bales Each	207 Filter Fabric Fence Lin Ft
SC-1	48+75 #	48+75 #	Rt.	5	
SC-2	48+75 #	48+75 #	Lt.	5	
SC-3	51+04 #	51+04 #	Rt.	8	
SC-4	51+04 #	51+04 #	Lt.	8	
SC-5	691+08	691+32	℄	20	70
SC-6	691+67.5	691+67.5	℄	8	
SC-8	695+07.5	695+07.5	℄	8	
SC-9	698+61	698+81	℄	20	69
SC-10	699+25	699+25	℄	8	
SC-11	733+81	733+81	Rt.	8	
SC-12	701+50	701+50	℄	8	
SC-13	712+00	712+00	Rt.	8	
SC-14	715+00	715+00	℄	12	
SC-15	721+80	721+80	Rt.	7	
SC-16	722+75	722+75	Rt.	8	
SC-17	722+77	722+77	℄	12	
SC-18	722+78	722+78	Lt.	8	
SC-19	725+98.5	725+98.5	℄	12	
SC-20	729+02	729+02	Rt.	8	
SC-21	729+02	729+02	℄	12	
SC-22	729+02	729+02	Lt.	8	
SC-23	731+74	731+74	℄	12	
SC-24	735+90	735+90	Lt.	7	
SC-25	736+00	736+00	Rt.	8	
SC-26	736+00	736+00	℄	12	
SC-27	736+00	736+00	Lt.	8	
	TOTALS			248	139

Stationed along ℄ Albion Road

AREA OF EARTH DISTURBING ACTIVITIES:
STA 689+00 TO STA 715+00 = 5.01 ACRES
STA 715+00 TO STA 740+00 = 4.82 ACRES

See Sheet 74 for Notes and Legend

EUTHENICS INC.
CONSULTING ENGINEERS
CLEVELAND, OHIO

DESIGNED: DTB	CHECKED: ARP	DRAWN: MEK
DATE: 3-18-94	DATE: 11-29-94	SCALE: AS SHOWN

PLOTTED BY: fkonopka
PLOTTED: 11-30-94
307SCP05.DGN
PLOT SUBMITTED: 03-AUG-1998 13:37
307scp05.dgn

STORM WATER POLLUTION PREVENTION PLAN

CALC. BY DTB DAT 3/7/94	CUY-71-0.00	OHIO	79
CHKD. BY ARP DAT 11/29/94		FHWA REGION 5	361

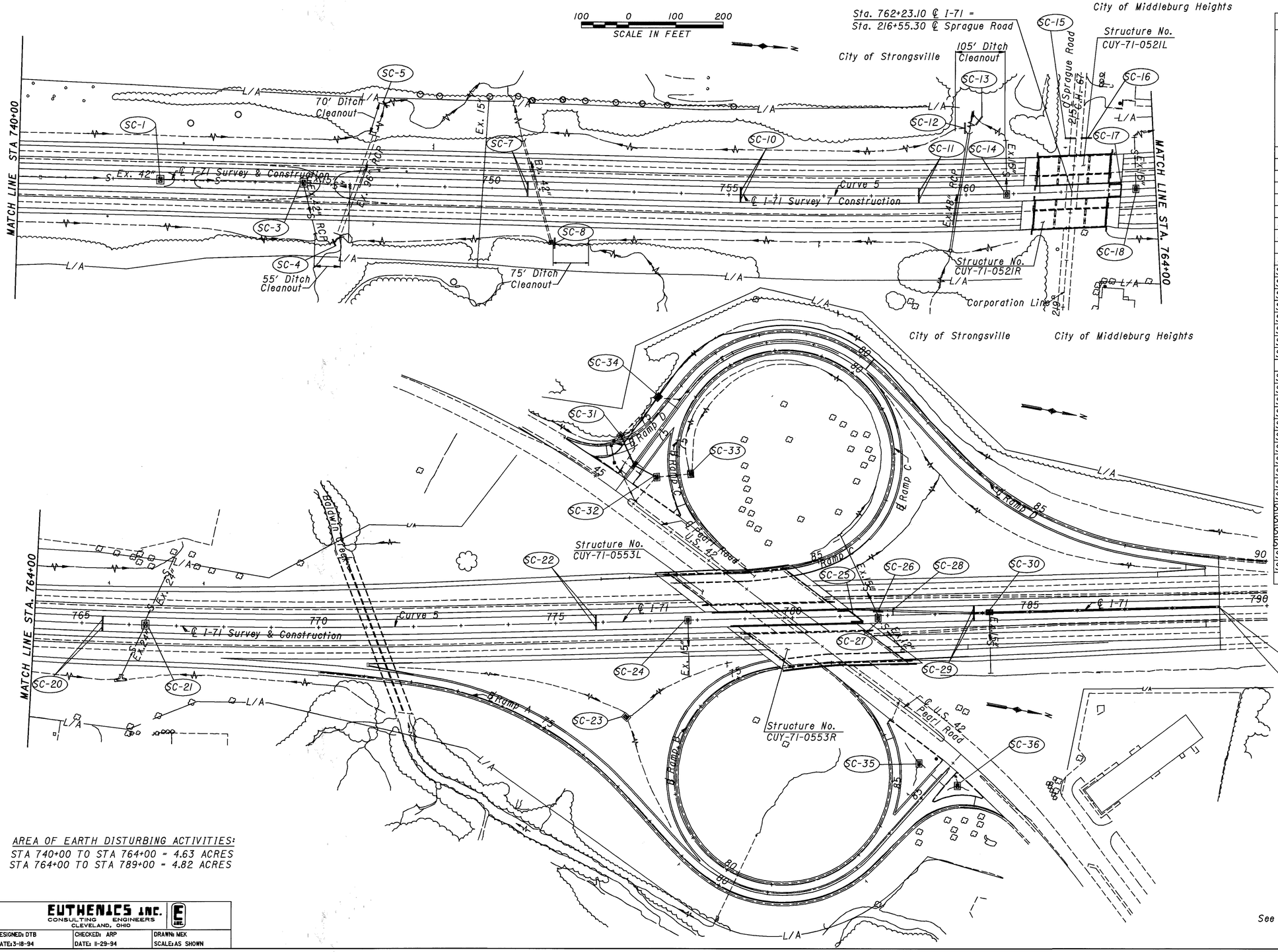

SEDIMENT CONTROL

REF. NO.	STATION FROM	STATION TO	SIDE	207 Straw or Hay Bales Each	207 Filter Fabric Fence Lin Ft
SC-1	743+00	743+00	℄	12	
SC-3	746+00.3	746+00.3	℄	12	
SC-4	746+70	746+70	Rt.	5	
SC-5	747+70	747+70	Lt.	5	
SC-7	750+75	750+75	℄	8	
SC-8	751+35	751+35	Rt.	7	
SC-10	755+25	755+25	℄	8	
SC-11	759+00	759+00	℄	8	
SC-12	760+00	760+00	Lt.	7	
SC-13	760+30	760+30	Lt.	7	
SC-14	760+85	760+85	℄	8	
SC-15#	215+35	215+35	Rt.	5	
SC-16#	215+35	215+35	Lt.	5	
SC-17	763+03	763+28	℄	20	69
SC-18	763+58	763+58	℄	8	
SC-20	765+44	765+44	℄	8	
SC-21	766+35	766+35	℄	12	
SC-22	775+85	775+85	℄	8	
SC-23	776+45	776+45	Rt.	12	
SC-24	777+80	777+80	℄	8	
SC-25	781+10	781+35	℄	25	82
SC-26	781+70	781+90	Lt.	6	
SC-27	781+80	781+80	5' Rt.	8	
SC-28	782+11.5	782+11.5	Lt.	2	
SC-29	783+82	783+82	℄	8	
SC-30	784+15	784+15	℄	12	
SC-31##	73+92	73+92	Lt.	8	
SC-32##	74+10	74+10	Rt.	8	
SC-33##	74+60	74+60	Rt.	8	
SC-34##	75+50	75+50	Lt.	8	
SC-35**	85+50	85+50	Lt.	8	
SC-36**	85+68	85+68	Rt.	8	
TOTALS				282	151

** Stationed along ℄ Ramp A-B
# Stationed along ℄ Sprague Road
Stationed along ℄ Ramp C-D

AREA OF EARTH DISTURBING ACTIVITIES:
STA 740+00 TO STA 764+00 = 4.63 ACRES
STA 764+00 TO STA 789+00 = 4.82 ACRES

See Sheet 74 for Notes and Legend

EUTHENICS INC.
CONSULTING ENGINEERS
CLEVELAND, OHIO

DESIGNED: DTB	CHECKED: ARP	DRAWN: MEK
DATE: 3-18-94	DATE: 11-29-94	SCALE: AS SHOWN

PLOTTED BY: fkonopka
PLOTTED: 11-01-98
PLOT SUBMITTED: 03-AUG-1998 13:38
307SCP06.DGN
307scp06.dgn
pid08459b.dgn
sbefor

PLOT SUBMITTED:04-AUG-1998 12:13
307PP01B.DGN
PLOTTED BY:fkonopka
PLOTTED FROM:/users/pid08459/dgn/307pp01b.dgn

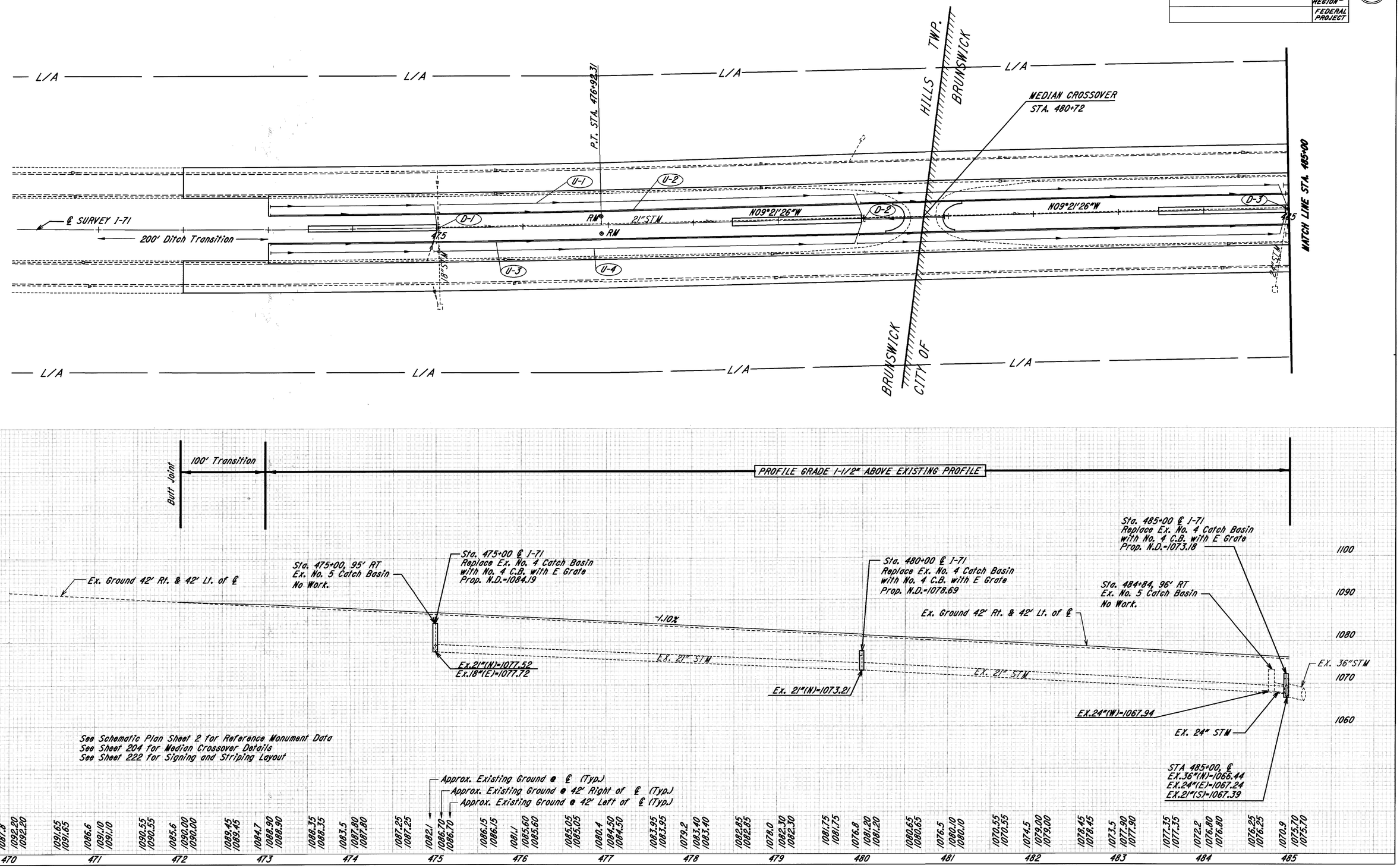

I-71 PLAN & PROFILE STA. 470+00 TO STA. 485+00

707.41 Non-Perforated ASTM D3034, SDR 35, 707.42 or 707.33

DRAINAGE

REF. NO.	STATION FROM	STATION TO	SIDE		603 6" Conduit, Type F ##		604 Catch Basin, No. 1 with E-Grate, As Per Plan	605 6" Shallow Pipe U.D. w/Fabric Wrap (18" Deep)	605 6" Shallow Pipe U.D. (30" Deep)	605 6" Shallow Pipe U.D. w/Fabric Wrap (30" Deep)	605 6" Unclassified Underdrain w/Fabric Wrap	605 6" Unclassified Underdrain	670 Ditch Erosion Protection	604 Precast Reinforced Concrete Outlet
					Lin.Ft.		Each	Lin.Ft.	Lin.Ft.	Lin.Ft.	Lin.Ft.	Lin.Ft.	Sq.Yd.	Each
U-1	473+00	485+00	Lt.						1200			36		
U-2	473+00	485+00	Lt.		45			1200						
U-3	473+00	485+00	Rt.		45			1200						
U-4	473+00	485+00	Rt.						1200			36		
D-1	473+50	475+00	℄				1						125	
D-2	478+50	480+00	℄				1						125	
D-3	483+50	485+00	℄				1						125	
TOTALS					90		3	2400	2400			72	375	

PLAN & PROFILE QUANTITIES STA. 470+00 TO STA. 485+00

PLOTTED BY: fkonopka
PLOTTED: 08-JUL-1998 07:55
PLOT SUBMITTED: 31-JUL-1998 07:55
307QU01B.DGN
/usr/bin/ksh -c /usr/bin/mkdir -p /tmp/forsberg/pid08459 ; /usr/bin/ln -s /home/forsberg/307qu01b.dgn

PLOT SUBMITTED:04-AUG-1998 11:56
307pp01.dgn
307pp01.dgn
PLOTTED BY:fkonopka
PLOTTED:Flower

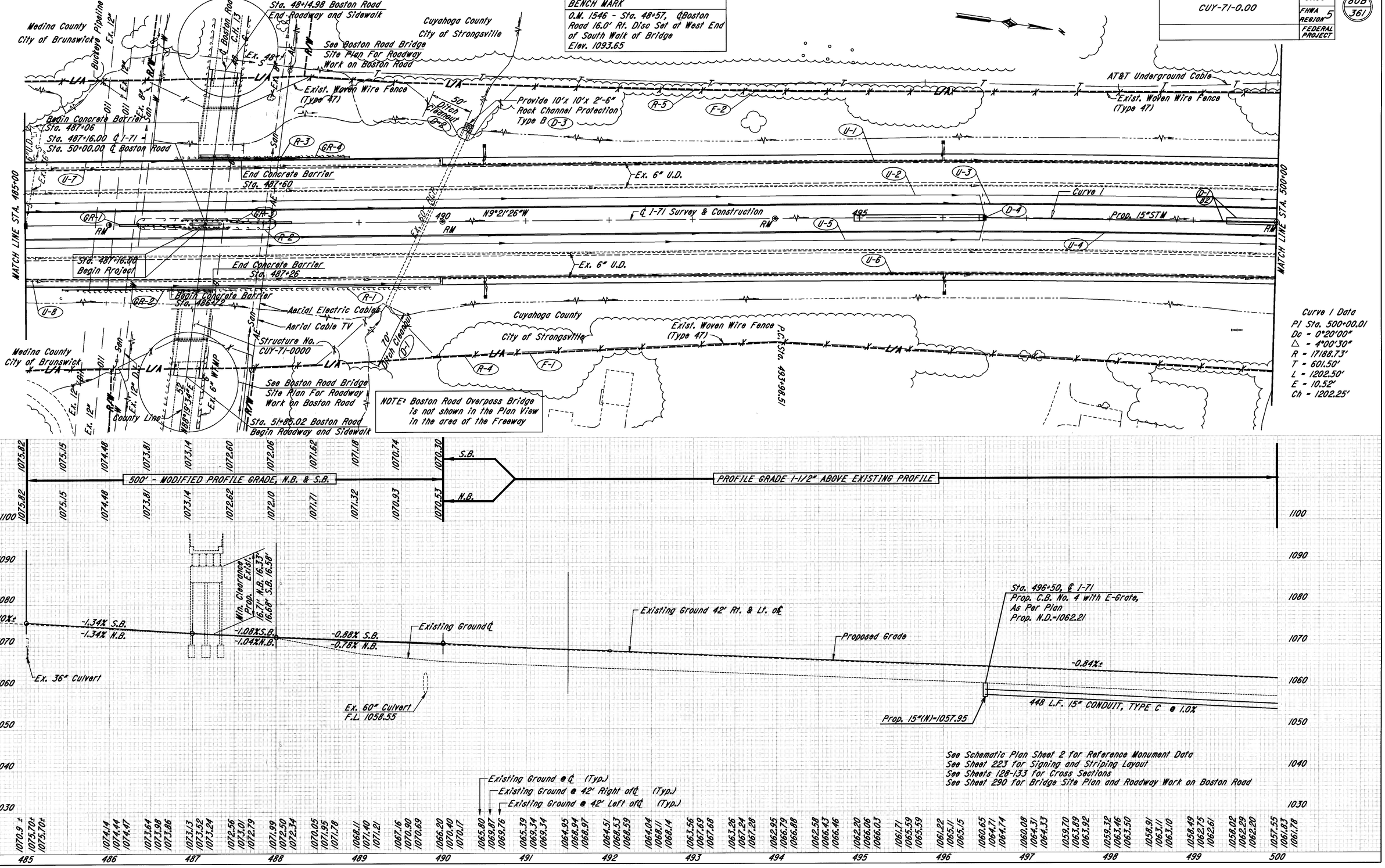

I-71 PLAN & PROFILE STA. 485+00 TO STA. 500+00

PLAN & PROFILE QUANTITIES STA. 485+00 TO STA. 500+00

DRAINAGE

** 707.41 Non-Perforated ASTM D3034, SDR 35, 707.42 or 707.33

REF. NO.	STATION FROM	STATION TO	SIDE	601 Rock Channel Protection, Type B Without Filter	603 6" Conduit, Type F **	603	604 Catch Basin, No. 4 with E-Grate, As Per Plan	605 6" Shallow Pipe U.D. w/Fabric Wrap (18" Deep)	605 6" Shallow Pipe U.D. (30" Deep)	605 6" Shallow Pipe U.D. w/Fabric Wrap (30" Deep)	605 6" Unclassified Underdrain w/Fabric Wrap	605 6" Unclassified Underdrain	670 Ditch Erosion Protection	604 Precast Reinforced Concrete Outlet
				Cu.Yd.	Lin.Ft.		Each	Lin.Ft.	Lin.Ft.	Lin.Ft.	Lin.Ft.	Lin.Ft.	Sq.Yd.	Each
U-1	485+00	500+00	Lt.		20					1500	22			2
U-2	485+00	500+00	Lt.		15				1500			13		
U-3	485+00	500+00	Lt.					1500						
U-4	485+00	500+00	Lt.					1500						
U-5	485+00	500+00	Rt.		15				1500			13		
U-6	485+00	500+00	Rt.		10					1500	22			2
U-7	485+00	490+00	Rt.		10			500						
U-8	485+00	490+00	Rt.		10			500						
D-3	490+26	490+26	Lt.	9										
D-4	494+95	496+50	℄				1						125	
TOTALS				9	80		1	4000	3000	3000	44	26	125	4

ROADWAY

REF. NO.	STATION FROM	STATION TO	SIDE	202 Guardrail Removed	202 Fence Removed	203 Ditch Cleanout
				Lin. Ft.	Lin. Ft.	Lin. Ft.
R-1	485+68	489+85	Rt.	417		
R-2	486+33	488+01	Lt./Rt.	336		
R-3	486+75	488+83	Lt.	203		
R-4	487+19	500+00	Rt.		1336	
R-5	487+56	500+00	Lt.		1300	
D-1	489+11	489+31	Rt.			70
D-2	489+75	490+20	Lt.			50
TOTALS				956	2636	120

GUARDRAIL

REF. NO.	STATION FROM	STATION TO	SIDE	606 Guardrail, Type 5	606 Anchor Assembly, Type E-98	606 Anchor Assembly, Type T	606 Bridge Terminal Assembly, Type 1	606 Guardrail, Type 5A	606 Guardrail, Barrier Design, Type 5	606 Impact Attenuator Type 1-98	622 Conc. Barrier Type D, As Per Plan A	448 3" Asphalt Conc. Intermediate Course Type 1, PG 64-22	203 Linear Grading, As Per Plan
				Lin. Ft.	Each	Each	Each	Lin. Ft.	Lin. Ft.	Each	Lin. Ft.	Cu.Yd.	Lin. Ft.
GR-1	486+47	487+34	Rt.			1		25	50	1		7.25	124
GR-2	485+55	487+25	Rt.	68.75	1		1				54	6.99	
GR-3	486+97	487+85	Lt.			1		25	50	1		7.25	124
GR-4	487+06	488+76.65	Lt.	68.75	1		1				54	6.99	
TOTALS				137.5	2	2	2	50	100	2	108	28.5	248
													2.5 Stas.

BOSTON ROAD QUANTITIES

DRAINAGE

REF. NO.	STATION FROM	STATION TO	SIDE	603 12" Conduit Type B			604 Manhole, No. 5, As Per Plan	604 Catch Basin, No. 3A with V Grate	670 Ditch Erosion Protection
				Lin.Ft.			Each	Each	Sq.Yd.
D-1	48+00	48+00	Lt.				1		
D-2	48+00	48+27	Lt.	28				1	
D-3	48+27	48+27	Lt./Rt.	28				1	
D-4	51+73	51+73	Lt./Rt.	28				1	
D-5	51+73	52+50	Lt.	77				1	
D-6	52+50	52+50	Lt.				1		
D-7*	487+58.2	487+82.2	Rt.						11
D-8*	486+80.1	487+05	Rt.						11
D-9*	487+27.6	487+52.5	Lt.						11
D-10*	486+49.3	486+74.4	Lt.						11
TOTALS				161			2	4	44

* Stationed off ℄ I-71

ROADWAY

REF. NO.	STATION FROM	STATION TO	SIDE	202 Guardrail Removed	202 Walk Removed	608 8" Concrete Walk	608 4" Concrete Walk
				Lin. Ft.	Sq.Ft.	Sq.Ft.	Sq.Ft.
R-1	47+93	48+43	Lt.	50			
R-2	48+10.5	48+48	Rt.	37.5			
R-3	48+31.24	48+42.74	Lt.		46		
R-4	48+35.24	48+47.74	Rt.		50		
R-5	51+52	52+64.5	Lt.	112.5			
R-6	51+57	51+94.5	Rt.	37.5			
R-7	51+52.26	51+64.76	Lt.		50		
R-8	51+57.26	51+68.76	Rt.		46		
SW-1	48+14.98	48+31.24	Lt.				65
SW-2	48+14.98	48+35.24	Rt.				81
SW-3	48+31.24	48+42.74	Lt.			46	
SW-4	48+35.24	48+47.74	Rt.			50	
SW-5	51+52.26	51+64.76	Lt.			50	
SW-6	51+57.26	51+68.76	Rt.			46	
SW-7	51+64.76	51+85.02	Lt.				81
SW-8	51+68.76	51+85.02	Rt.				65
SW-9*	487+02.3	487+58.2	Lt.				918
SW-10*	486+74.4	487+29.6	Rt.				1020
TOTALS				237.5	192	192	2230

GUARDRAIL

REF. NO.	STATION FROM	STATION TO	SIDE	606 Guardrail, Type 5
				Lin. Ft.
GR-1	47+93	48+43	Lt.	50
GR-2	48+10.5	48+48	Rt.	37.5
GR-3	51+52	52+64.5	Lt.	112.5
GR-4	51+57	51+94.5	Rt.	37.5
TOTALS				237.5

See Bridge Site Plan Sheet 290 for Drainage Layout and Roadway Items on Boston Road

Note: Guardrail Terminal Assemblies are to be Reused.

FENCE

REF. NO.	STATION FROM	STATION TO	SIDE	607 Fence, Type CLT
				Lin. Ft.
F-1	487+19	500+00	Rt.	1336
F-2	487+56	500+00	Lt.	1300
TOTALS				2636

PLOTTED BY: lmincek
PLOTTED FROM: Rforsberg
PLOT SUBMITTED: 05-AUG-1998 11:40
307QU01.DGN
307qu01.dgn
pid08459

CUY-71-0.00	OHIO
	FHWA REGION 5
	FEDERAL PROJECT

82
361

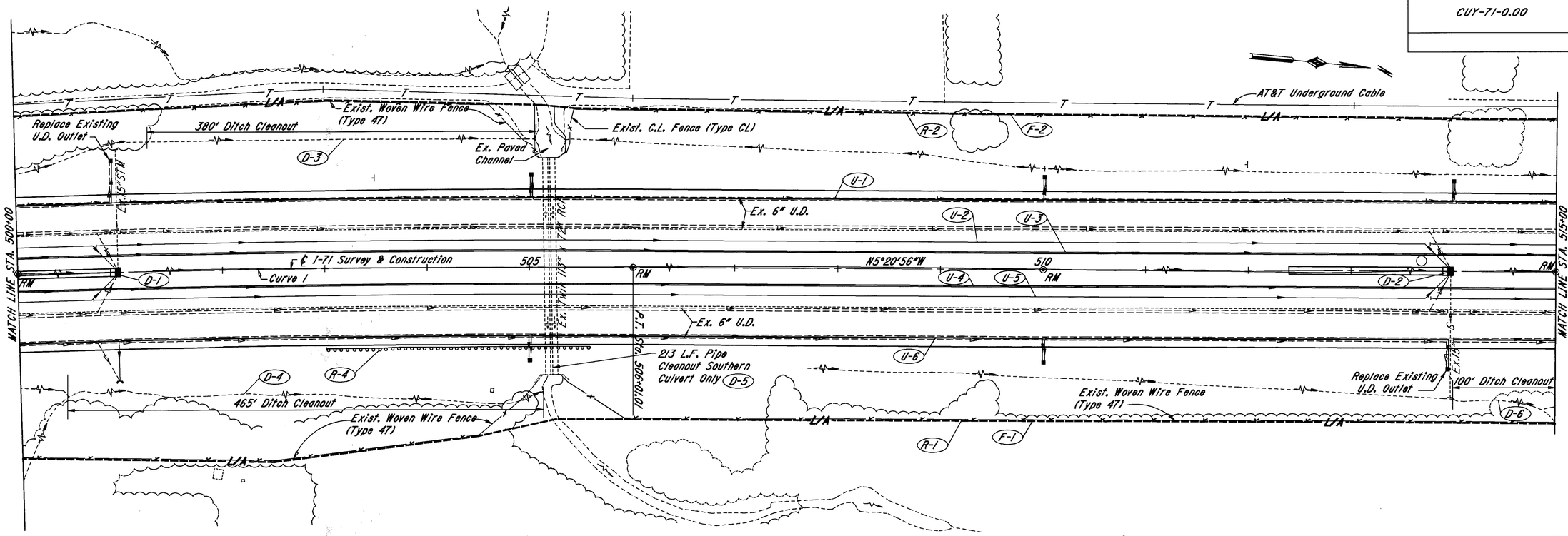

Curve 1 Data
PI Sta. 500+00.01
Dc = 0°20'00"
Δ = 4°00'30"
R = 17188.73'
T = 601.50'
L = 1202.50'
E = 10.52'
Ch = 1202.25'

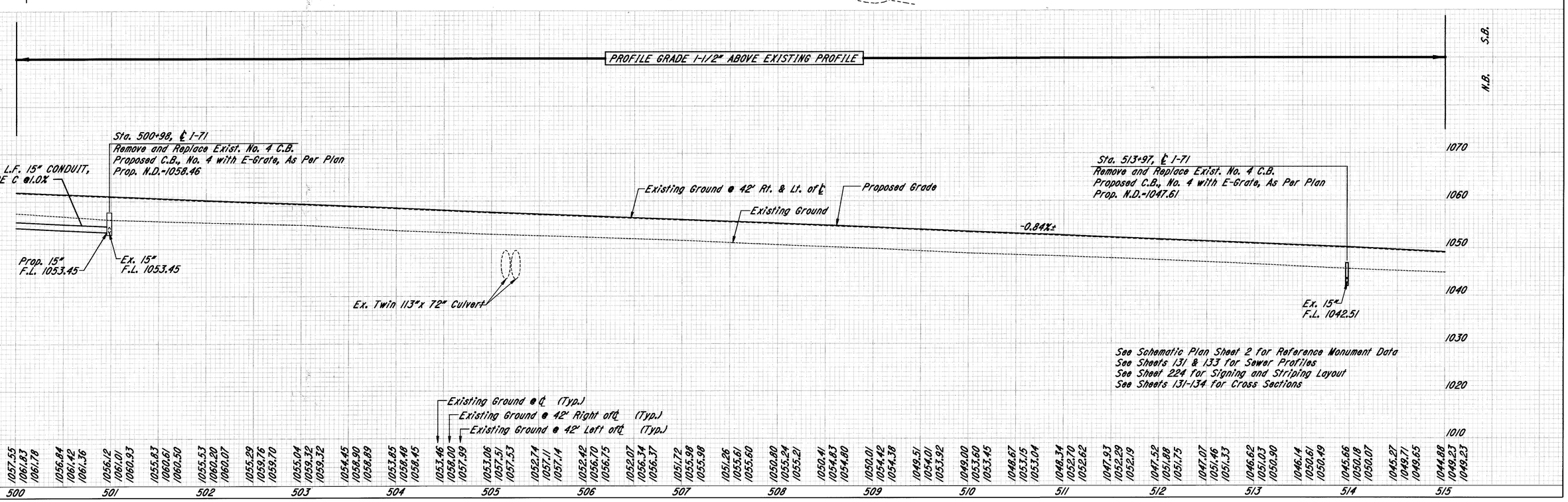

I-71 PLAN & PROFILE STA. 500+00 TO STA. 515+00

PLOTTED BY: fkonopka
PLOTTED: 04-AUG-1998 11:56
FROM: ...307pp02.dgn
PLOT SUBMITTED: ...307pp02.dgn

707.41 Non-Perforated ASTM D3034, SDR 35, 707.42 or 707.33

DRAINAGE

REF. NO.	STATION FROM	STATION TO	SIDE	603 6" Conduit, Type F ##	603 15" Conduit, Type C	604 Catch Basin, No. 4 With E-Grate, A.P.P.	604 6" Shallow Pipe U.D. w/Fabric Wrap (18" Deep)	605 6" Shallow Pipe U.D. (30" Deep)	605 6" Shallow Pipe U.D. w/Fabric Wrap (30" Deep)	605 6" Unclassified Underdrain w/Fabric Wrap	605 6" Unclassified Underdrain	670 Ditch Erosion Protection	604 Precast Reinforced Concrete Outlet
				Lin.Ft.	Lin.Ft.	Each	Lin.Ft.	Lin.Ft.	Lin.Ft.	Lin.Ft.	Lin.Ft.	Sq.Yd.	Each
U-1	500+00	515+00	Lt.	60					1500	44			4
U-2	500+00	515+00	Lt.	30				1500			26		
U-3	500+00	515+00	Lt.				1500						
U-4	500+00	515+00	Rt.				1500						
U-5	500+00	515+00	Rt.	30				1500			26		
U-6	500+00	515+00	Rt.	60					1500	44			4
D-1	496+50	500+98	℄		448	1						125	
D-2	500+98	500+98	℄			1						125	
		TOTALS		180	448	2	3000	3000	3000	88	52	250	8

ROADWAY

REF. NO.	STATION FROM	STATION TO	SIDE	202 Guardrail Removed	202 Fence Removed	202	203 Ditch Cleanout	Special Pipe Cleanout
				Lin.Ft.	Lin.Ft.		Lin.Ft.	Lin.Ft.
R-1	500+00	515+00	Rt.		1505			
R-2	500+00	515+00	Lt.		1539			
			–					
R-4	503+00	505+56	Rt.	256				
			–					
D-3	501+29	505+07	Lt.				380	
D-4	500+45	505+13	Rt.				465	
D-5	505+20	505+20	Rt./Lt.					213
D-6	513+99	514+98	Rt.				100	
	TOTALS			256	3044		945	213

FENCE

REF. NO.	STATION FROM	STATION TO	SIDE	607 Fence, Type CLT
				Lin.Ft.
F-1	500+00	515+00	Rt.	1505
F-2	500+00	515+00	Lt.	1539
	TOTALS			3044

PLAN & PROFILE QUANTITIES STA. 500+00 TO STA. 515+00

PLOTTED BY: fkonopka
PLOTTED: 08:00 31-JUL-1998
PLOT SUBMITTED: 31-JUL-1998 08:00
307qu02.dgn

CUY-71-0.00	OHIO	84 / 361
	FHWA REGION 5	
	FEDERAL PROJECT	

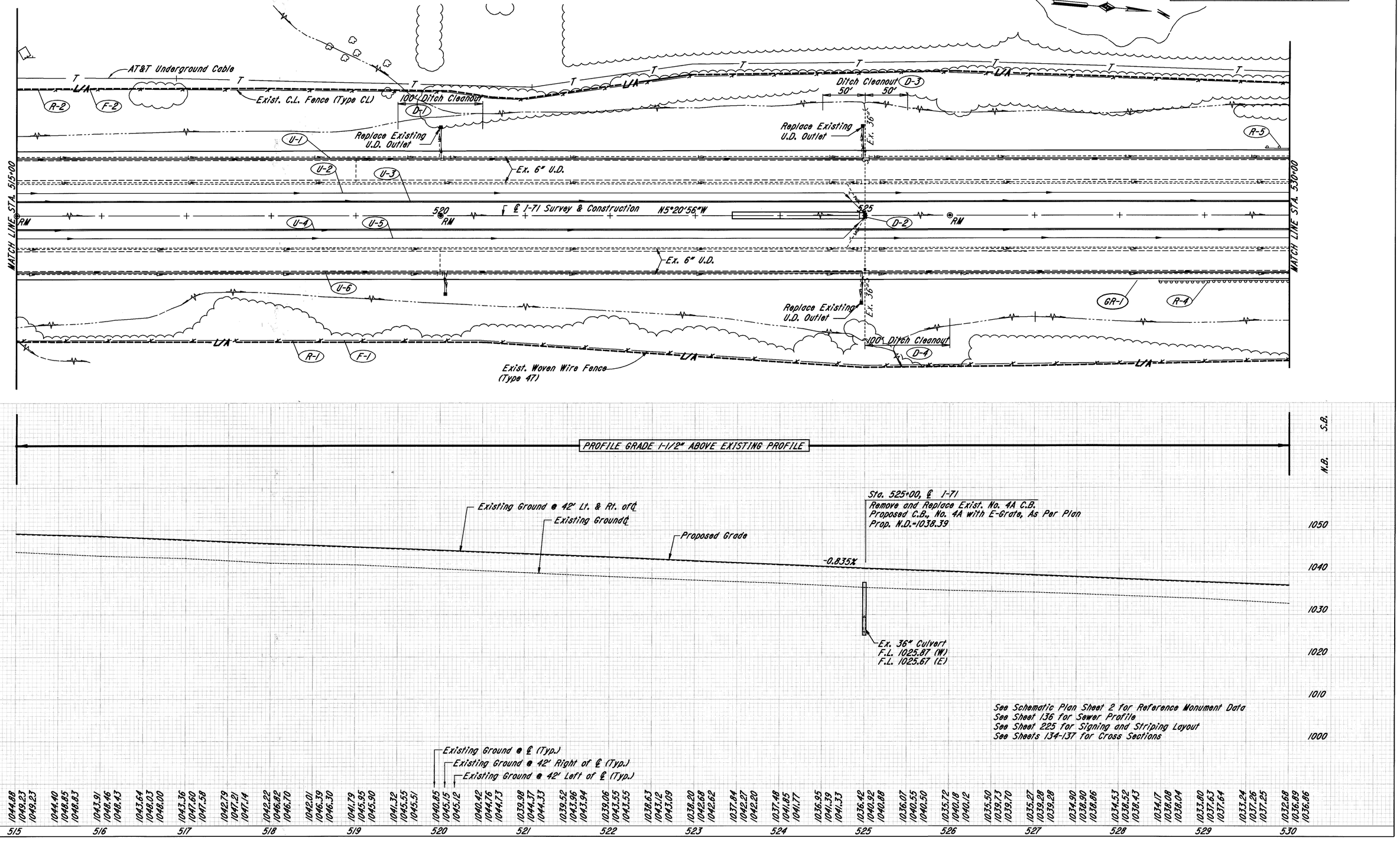

I-71 PLAN & PROFILE STA. 515+00 TO STA. 530+00

PLOTTED BY: fkonopka
PLOTTED: 04-AUG-1998 11:57
PLOT SUBMITTED: 04-AUG-1998 11:57
307pp03.dgn

707.41 Non-Perforated ASTM D3034, SDR 35, 707.42 or 707.33

DRAINAGE

REF. NO.	STATION FROM	STATION TO	SIDE	603 6" Conduit, Type F ##	603 Catch Basin, No. 4A with E-Grate, As Per Plan	604 6" Shallow Pipe U.D. w/Fabric Wrap (18" Deep)	605 6" Shallow Pipe U.D. (30" Deep)	605 6" Shallow Pipe U.D. w/Fabric Wrap (30" Deep)	605 6" Unclassified Underdrain w/Fabric Wrap	605 6" Unclassified Underdrain	670 Ditch Erosion Protection	604 Precast Reinforced Concrete Outlet
				Lin.Ft.	Each	Lin.Ft.	Lin.Ft.	Lin.Ft.	Lin.Ft.	Lin.Ft.	Sq.Yd.	Each
U-1	515+00	530+00	Lt.	50				1500	22			2
U-2	515+00	530+00	Lt.	15			1500			13		
U-3	515+00	530+00	Lt.			1500						
U-4	515+00	530+00	Rt.			1500						
U-5	515+00	530+00	Rt.	15			1500			13		
U-6	515+00	530+00	Rt.	50				1500	22			2
D-2	523+45	525+00	℄		1						125	
TOTALS				130	1	3000	3000	3000	44	32	125	4

ROADWAY

REF. NO.	STATION FROM	STATION TO	SIDE	202 Guardrail Removed	202 Fence Removed	202	203 Ditch Cleanout
				Lin.Ft.	Lin.Ft.		Lin.Ft.
R-1	515+00	530+00	Rt.		1501		
R-2	515+00	530+00	Lt.		1503		
R-4	528+46	530+00	Rt.	154			
R-5	529+71.5	530+00	Lt.	28.5			
D-1	519+50	520+50	Lt.				100
D-3	524+50	525+50	Lt.				100
D-4	525+00	526+00	Rt.				100
TOTALS				182.5	3004		300

FENCE

REF. NO.	STATION FROM	STATION TO	SIDE	607 Fence, Type CLT
				Lin.Ft.
F-1	515+00	530+00	Rt.	1501
F-2	515+00	530+00	Lt.	1503
TOTALS				3004

GUARDRAIL

REF. NO.	STATION FROM	STATION TO	SIDE	606 Guardrail, Type 5	606 Anchor Assembly, Type E-98	448 3" Asphalt Conc. Intermediate Course, Type 1, PG 64-22
				Lin.Ft.	Each	Cu.Yd.
GR-1	527+24.15	530+00	Rt.	225.85	1	10.91
TOTALS				226	1	10.9

PLAN & PROFILE QUANTITIES STA. 515+00 TO STA. 530+00

PLOTTED BY: lmincek
PLOTTED: FROM: Beforsber
PLOT SUBMITTED: 05-AUG-1998 11:41
307qu03.dgn
pid08459B.dgn B307qu03.dgn

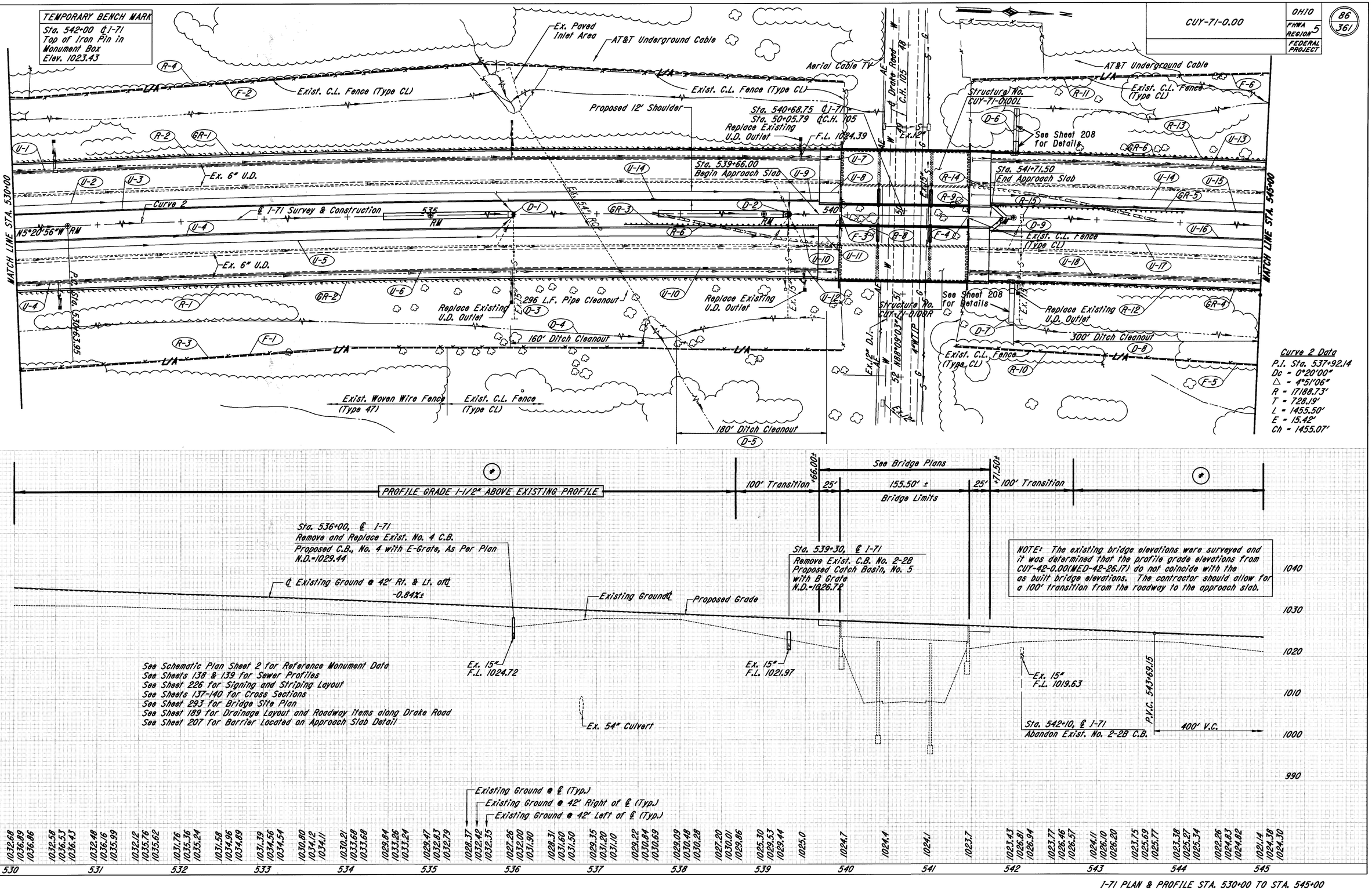

I-71 PLAN & PROFILE STA. 530+00 TO STA. 545+00

PLOTTED BY: fkonopka
PLOTTED: 04-AUG-1998 11:57
PLOT SUBMITTED: 04-AUG-1998 11:57
307pp04.dgn

DRAINAGE

** 707.41 Non-Perforated ASTM D3034, SDR 35, 707.42 or 707.33

REF. NO.	STATION FROM	STATION TO	SIDE	603 6" Conduit, Type F **	604 Catch Basin, No. 4 With E-Grate, As Per Plan	604 Catch Basin, No. 5 With B-Grate, As Per Plan	605 6" Shallow Pipe U.D. w/Fabric Wrap (18" Deep)	605 6" Shallow Pipe U.D. (30" Deep)	605 6" Shallow Pipe U.D. w/Fabric Wrap (30" Deep)	605 6" Unclassified Underdrain w/Fabric Wrap	605 6" Unclassified Underdrain	660 Reinforced Sodding	670 Ditch Erosion Protection	838 Gabions With Additional Coating	604 Precast Reinforced Concrete Outlet
				Lin.Ft.	Each	Each	Lin.Ft.	Lin.Ft.	Lin.Ft.	Lin.Ft.	Lin.Ft.	Sq.Yd.	Sq.Yd.	Cu.Yd.	Each
U-1	530+00	539+45	Lt.	60					945	33					3
U-2	530+00	539+30	Lt.	30				930			26				
U-3	530+00	539+30	Lt.	30			930								
U-4	530+00	539+30	Rt.	30			930								
U-5	530+00	539+30	Rt.	30				930			26				
U-6	530+00	539+49	Rt.	55					945	33					3
U-7	539+45	539+90	Lt.							45					
U-8	539+30	539+90	Lt.								60				
U-9	539+30	539+65	Lt.							35					
U-10	539+30	539+65	Rt.							35					
U-11	539+30	539+90	Rt.								60				
U-12	539+49	539+90	Rt.							45					
U-13	541+50	545+00	Lt.						350						
U-14	541+50	545+00	Lt.					350							
U-15	541+72	545+00	Lt.				328								
U-16	541+72	545+00	Rt.				328								
U-17	541+50	545+00	Rt.					350							
U-18	541+50	545+00	Rt.	10					350	11					1
D-1	534+45	536+00	℄		1								125		
D-2	537+75	539+30	℄			1							125		
D-6	542+00	542+00	Lt.									36.7		3.3	
D-7	542+00	542+00	Rt.									32.1		3.3	
D-9	541+71	542+00	℄										26.7		
	TOTALS			245	1	1	2516	2560	2590	237	172	69	277	7	7

ROADWAY

REF. NO.	STATION FROM	STATION TO	SIDE	202 Guardrail Removed	202 Fence Removed	202 Catch Basin Abandoned	203 Ditch Cleanout	Special Pipe Cleanout
				Lin.Ft.	Each	Each	Lin.Ft.	Lin.Ft.
R-1	530+00	539+90	Rt.	990				
R-2	530+00	539+90	Lt.	990				
R-3	530+00	539+92	Rt.		1111			
R-4	530+00	539+93	Lt.		1129			
R-6	537+66	539+90	Rt.	228				
R-8	539+90	539+90	Lt./Rt.		53			
R-9	541+45	541+45	Lt./Rt.		53			
R-10	541+45	545+00	Rt.		432			
R-11	541+45	545+00	Lt.		438			
R-12	541+46	545+00	Rt.	354				
R-13	541+47	545+00	Lt.	353				
R-14	541+47	543+72	Lt.	228				
R-15	542+10	542+10	℄			1		
D-3	536+07	537+61	Lt./Rt.					296
D-4	535+96	537+56	Rt.				160	
D-5	537+95	539+75	Rt.				180	
D-8	542+00	545+00	Rt.				300	
	TOTALS			3143	3216	1	640	296

FENCE

REF. NO.	STATION FROM	STATION TO	SIDE	607 Fence, Type CLT	607 Gate, Type CL, As Per Plan
				Lin.Ft.	Each
F-1	530+00	539+92	Rt.	1111	
F-2	530+00	539+93	Lt.	1129	
F-3	539+90	539+90	Lt./Rt.	20	1
F-4	541+45	541+45	Lt./Rt.	20	1
F-5	541+45	545+00	Rt.	432	
F-6	541+45	545+00	Lt.	438	
	TOTALS			3150	2

See Bridge Site Plan & Sheet 189 for drainage layout and roadway items on Drake Road.

GUARDRAIL

REF. NO.	STATION FROM	STATION TO	SIDE	606 Guardrail, Type 5	606 Anchor Assembly, Type E-98	606 Anchor Assembly, Type T	606 Bridge Terminal Assembly, Type 1	606 Bridge Terminal Assembly, Type 2	448 3" Asphalt Conc. Intermediate Course Type 1, PG 64-22	203 Linear Grading, As Per Plan
				Lin.Ft.	Each	Each	Each	Each	Cu.Yd.	Lin. Ft.
GR-1	530+05.70	539+68.20	Lt.	950		1		1	35.65	
GR-2	530+00	539+67.90	Rt.	967.90			1		35.85	
GR-3	537+36.81	539+68.06	Rt.	181.25	1		1		9.26	231.25
GR-4	541+69.30	545+00	Rt.	330.70				1	12.25	
GR-5	541+69.44	544+00.69	Lt.	181.25	1		1		9.26	231.25
GR-6	541+69.60	545+00	Lt.	330.40			1		12.24	
	TOTALS			2941.5	2	1	4	2	114.5	462.5
										4.6 Stas.

PLOTTED BY: lmincek
PLOTTED: 05-AUG-1998 11:42
PLOT SUBMITTED: 05-AUG-1998 11:42
307qu04.dgn

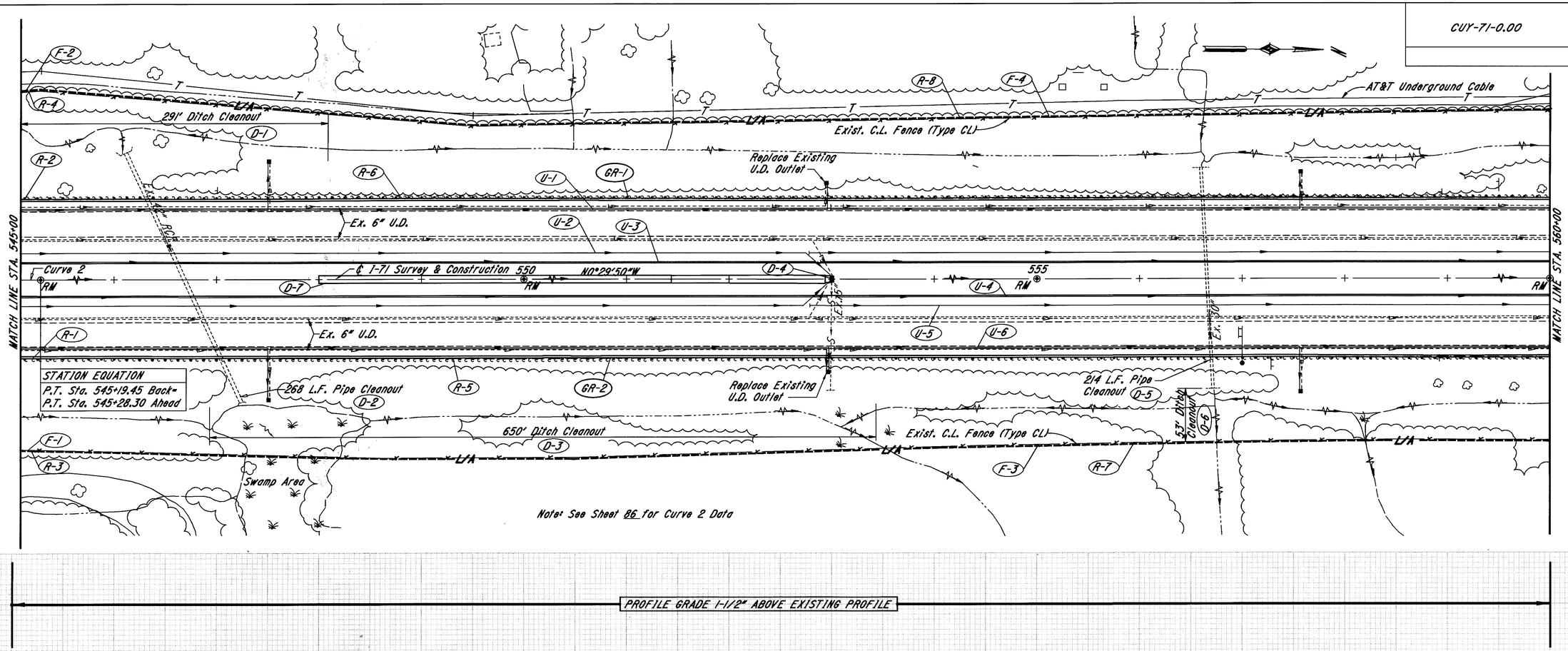

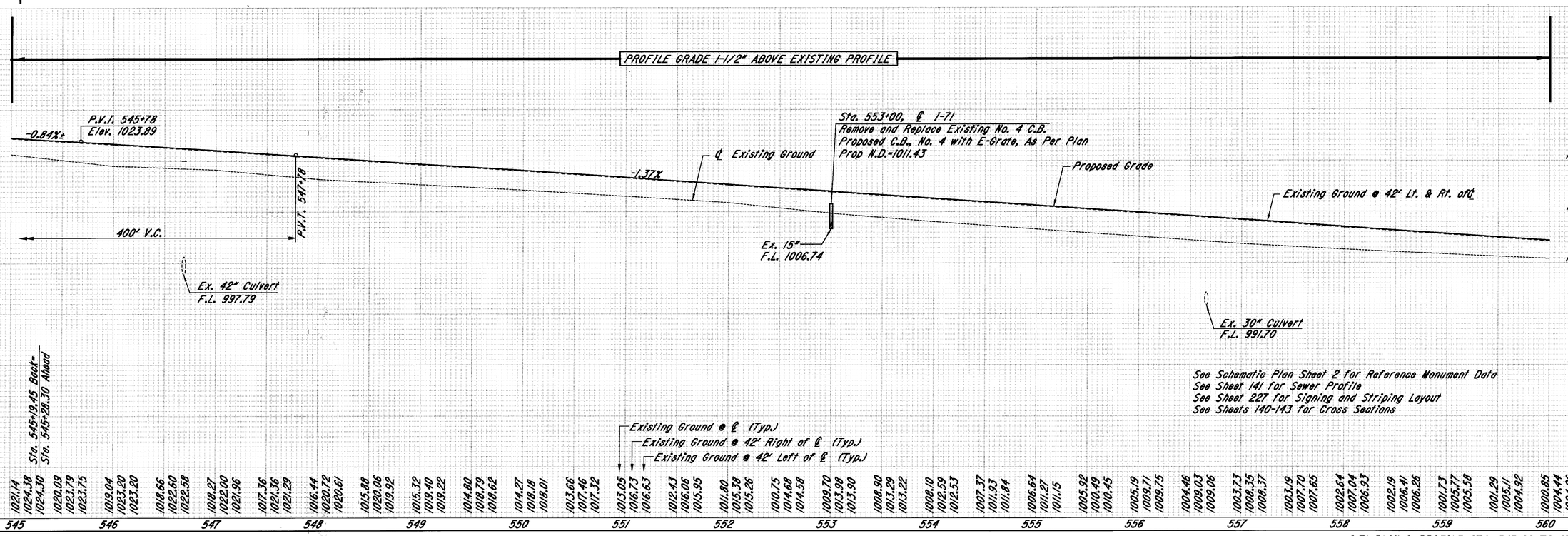

I-71 PLAN & PROFILE STA. 545+00 TO STA. 560+00

PLOTTED BY: fkonopka
PLOTTED: Friday, August 07, 1998 11:58
PLOT SUBMITTED: 04-AUG-1998 11:58
307pp05.dgn
307pp05.dgn
307pp05.dgn
Epid08459 Epid08459 Epid08459
Refors Refors Refors

707.41 Non-Perforated ASTM D3034, SDR 35, 707.42 or 707.33

DRAINAGE

REF. NO.	STATION FROM	STATION TO	SIDE	603 6" Conduit, Type F ##				604 Catch Basin, No. 4 with E-Grate, As Per Plan		605 6" Shallow Pipe U.D. w/Fabric Wrap (18" Deep)	605 6" Shallow Pipe U.D. (30" Deep)	605 6" Shallow Pipe U.D. w/Fabric Wrap (30" Deep)	605 6" Unclassified Underdrain w/Fabric Wrap	605 6" Unclassified Underdrain	670 Ditch Erosion Protection	604 Precast Reinforced Concrete Outlet
				Lin.Ft.				Each		Lin.Ft.	Lin.Ft.	Lin.Ft.	Lin.Ft.	Lin.Ft.	Sq.Yd.	Each
U-1	545+00	560+00	Lt.	75								1491	33			3
U-2	545+00	560+00	Lt.	15							1491			13		
U-3	545+00	560+00	Lt.							1491						
U-4	545+00	560+00	Rt.							1491						
U-5	545+00	560+00	Rt.	15							1491			13		
U-6	545+00	560+00	Rt.	85								1491	33			3
D-4	552+45	553+00	℄					1							125	
D-7	548+00	552+45	℄												371	
TOTALS				190				1		2982	2982	2982	66	26	496	6

NOTE: Station Equation - Sta. 545+19.45 Back = Sta. 545+28.30 Ahead

ROADWAY

REF. NO.	STATION FROM	STATION TO	SIDE	202 Guardrail Removed	202 Fence Removed			203 Ditch Cleanout	Special Pipe Cleanout
				Lin.Ft.	Lin.Ft.			Lin.Ft.	Lin.Ft.
R-1	545+00	545+19.45Bk.	Rt.	19.5					
R-2	545+00	545+19.45Bk.	Lt.	19.5					
R-3	545+00	545+19.45Bk.	Rt.		20				
R-4	545+00	545+19.45Bk.	Lt.		20				
R-5	545+28.30Ah.	560+00	Rt.	1471.7					
R-6	545+28.30Ah.	560+00	Lt.	1471.7					
R-7	545+28.30Ah.	560+00	Rt.		1472				
R-8	545+28.30Ah.	560+00	Lt.		1473				
D-1	545+00	548+00	Lt.					291	
D-2	546+11	547+23	Lt./Rt.						268
D-3	546+93	553+43	Rt.					650	
D-5	556+72	556+72	Lt./Rt.						216
D-6	556+72	556+72	Rt.					53	
TOTALS				2983	2985			994	484

GUARDRAIL

REF. NO.	STATION FROM	STATION TO	SIDE	606 Guardrail, Type 5	448 3" Asphalt Conc. Intermediate Course Type 1, PG 64-22
				Lin.Ft.	Cu.Yd.
GR-1	545+00	560+00	Lt.	1500	55.56
GR-2	545+00	560+00	Rt.	1500	55.56
TOTALS				3000	111.1

FENCE

REF. NO.	STATION FROM	STATION TO	SIDE	607 Fence, Type CLT
				Lin.Ft.
F-1	545+00	545+19.45Bk.	Rt.	20
F-2	545+00	545+19.45Bk.	Lt.	20
F-3	545+28.30Ah.	560+00	Rt.	1472
F-4	545+28.30Ah.	560+00	Lt.	1473
TOTALS				2985

PLAN & PROFILE QUANTITIES STA. 545+00 TO STA. 560+00

PLOTTED BY: fkonopka
PLOTTED: 07-AUG-1998 09:08
FROM: Bforsberg
PLOT SUBMITTED: 07-AUG-1998 09:08
307qu05.dgn
Bpid08459B.dgn B307qu05.dgn

CUY-71-0.00	OHIO FHWA REGION 5 FEDERAL PROJECT	90 / 361

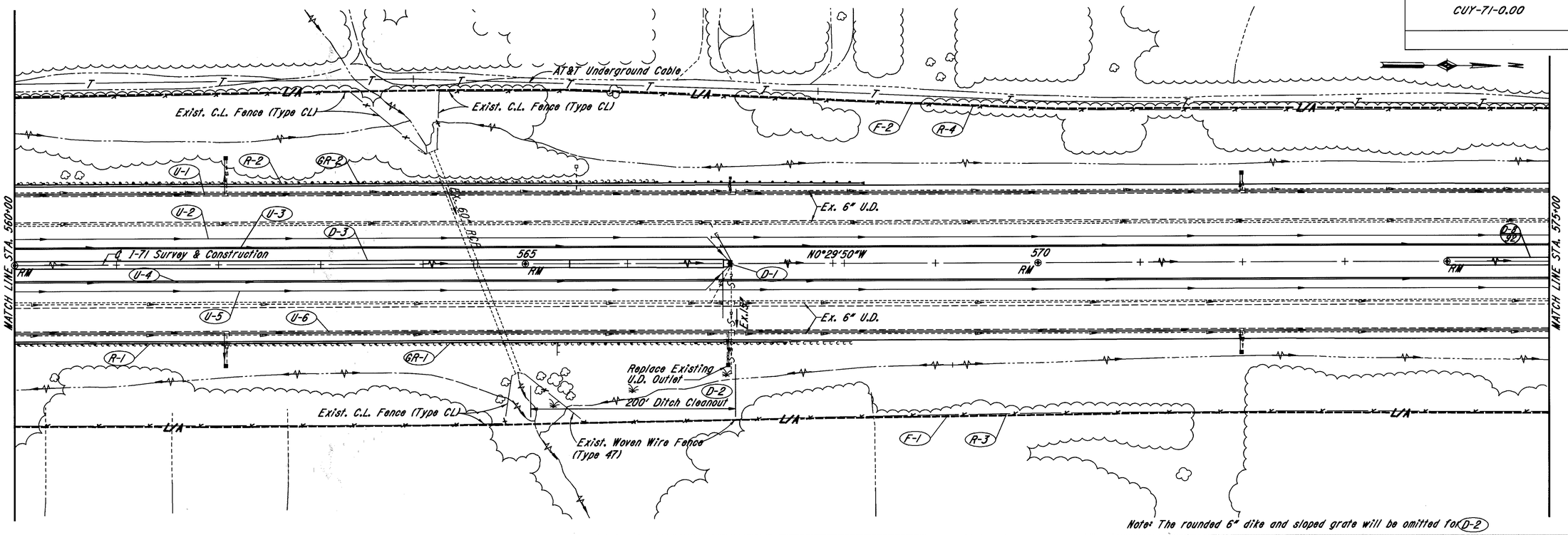

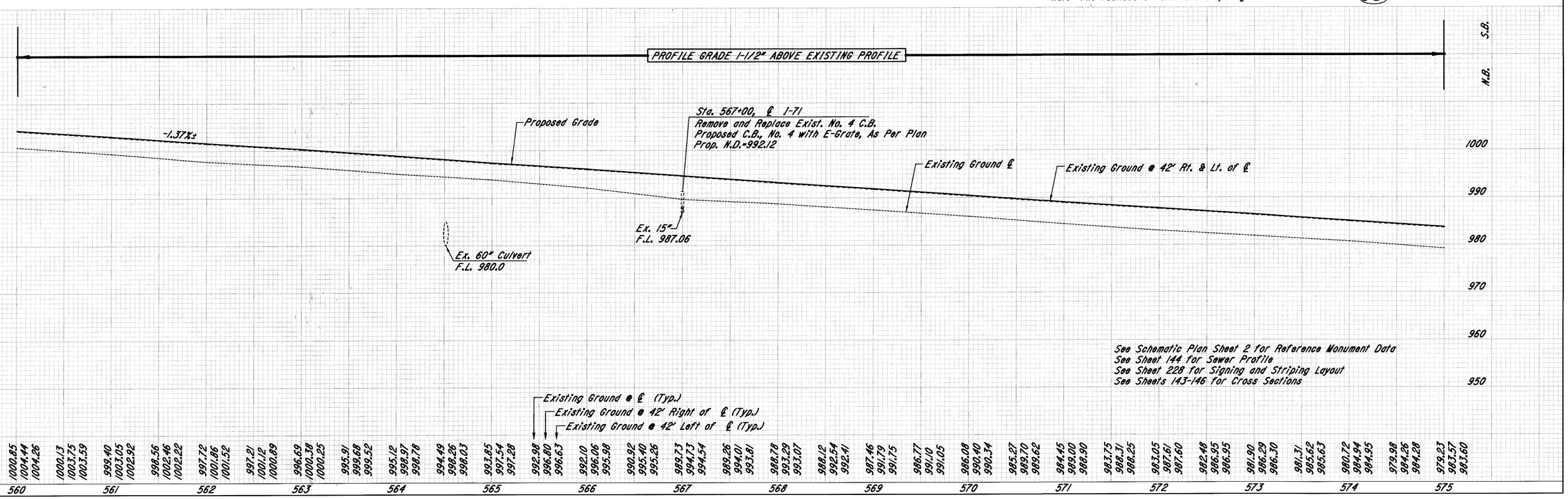

I-71 PLAN & PROFILE STA. 560+00 TO STA. 575+00

PLOTTED BY: fkonopka
PLOTTED: FRIDAY, AUGUST 14, 1998 11:58
PLOT SUBMITTED: 04-AUG-1998 11:58
307pp06.dgn
307pp06.dgn
d08459bpi
Bforsber

707.41 Non-Perforated ASTM D3034, SDR 35, 707.42 or 707.33

DRAINAGE

REF. NO.	STATION FROM	STATION TO	SIDE	603 6" Conduit, Type F ##	603	603	604 Catch Basin, No. 4 with E-Grate, As Per Plan	604	605 6" Shallow Pipe U.D. w/Fabric Wrap (18" Deep)	605 6" Shallow Pipe U.D. (30" Deep)	605 6" Shallow Pipe U.D. w/Fabric Wrap (30" Deep)	605 6" Unclassified Underdrain w/Fabric Wrap	605 6" Unclassified Underdrain	670 Ditch Erosion Protection	604 Precast Reinforced Concrete Outlet
				Lin.Ft.			Each			Lin.Ft.	Lin.Ft.	Lin.Ft.	Lin.Ft.	Sq.Yd.	Each
U-1	560+00	575+00	Lt.	40							1500	33			3
U-2	560+00	575+00	Lt.	15						1500			13		
U-3	560+00	575+00	Rt.						1500						
U-4	560+00	575+00	Rt.						1500						
U-5	560+00	575+00	Lt.	15						1500			13		
U-6	560+00	575+00	Rt.	50							1500	33			3
D-1	565+45	567+00	℄				1							125	
D-3	560+00	565+45	℄											455	
TOTALS				120			1		3000	3000	3000	66	26	580	6

ROADWAY

REF. NO.	STATION FROM	STATION TO	SIDE	202 Guardrail Removed	202 Fence Removed	202	202	203 Ditch Cleanout
				Lin.Ft.	Lin.Ft.			Lin.Ft.
R-1	560+00	568+18.5	Rt.	818.5				
R-2	560+00	566+27	Lt.	627				
R-3	560+00	575+00	Rt.		1543			
R-4	560+00	575+00	Lt.		1567			
D-2	565+05	567+05	Rt.					200
TOTALS				1445.5	3110			200

GUARDRAIL

REF. NO.	STATION FROM	STATION TO	SIDE	606 Guardrail, Type 5	606 Anchor Assembly, Type E-98	606 Anchor Assembly, Type T	448 3" Asphalt Concrete Intermed Course, Type 1, PG 64-22
				Lin.Ft.	Each	Each	Cu.Yd.
GR-1	560+00	567+50.55	Rt.	738.05		1	27.80
GR-2	560+00	568+25.85	Lt.	775.85	1		31.28
TOTALS				1513.9	1	1	59.1

FENCE

REF. NO.	STATION FROM	STATION TO	SIDE	607 Fence, Type CLT
				Lin.Ft.
F-1	560+00	575+00	Rt.	1543
F-2	560+00	575+00	Lt.	1567
TOTALS				3110

PLAN & PROFILE QUANTITIES STA. 560+00 TO STA. 575+00

PLOTTED BY: lmincek
PLOTTED in Bowersb
PLOTTED: PLOT SUBMITTED: 05-AUG-1998 11:43
307qu06.dgn

CUY-71-0.00	OHIO
	FHWA REGION 5
	FEDERAL PROJECT

92
361

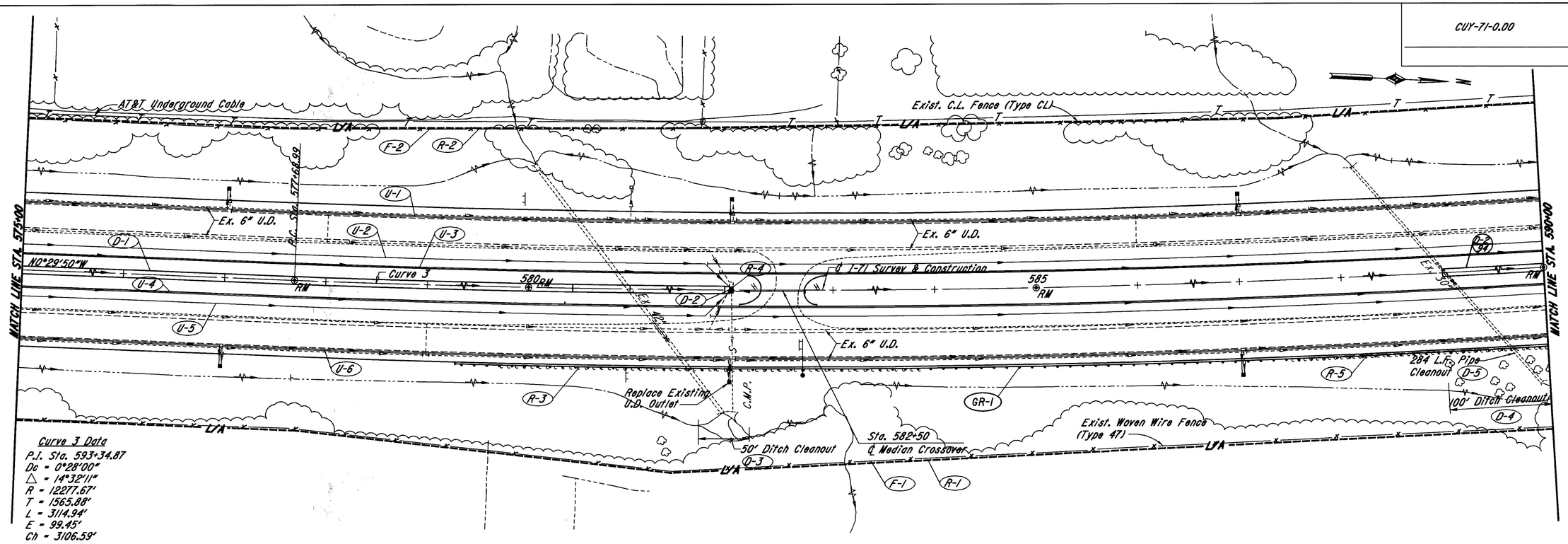

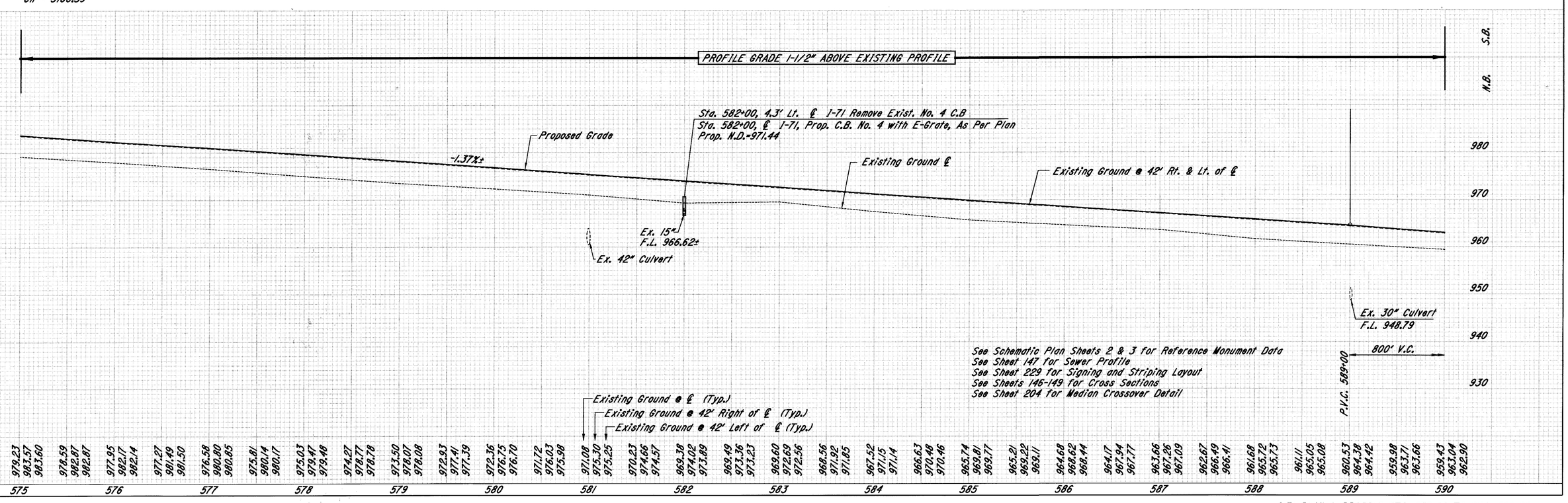

I-71 PLAN & PROFILE STA. 575+00 TO STA. 590+00

PLOTTED BY: fkonopka
PLOTTED: Friday, August 04, 1998 11:59
PLOT SUBMITTED: 04-AUG-1998 11:59
307pp07.dgn
307pp07.dgn
307pp07.dgn
d08459pi.dgn

707.41 Non-Perforated ASTM D3034, SDR 35, 707.42 or 707.33

DRAINAGE

REF. NO.	STATION FROM	STATION TO	SIDE	603 6" Conduit, Type F ##	603	603	604 Catch Basin, No. 4 with E-Grate, As Per Plan	604	605 6" Shallow Pipe U.D. w/Fabric Wrap (18" Deep)	605 6" Shallow Pipe U.D. (30" Deep)	605 6" Shallow Pipe U.D. w/Fabric Wrap (30" Deep)	605 6" Unclassified Underdrain w/Fabric Wrap	605 6" Unclassified Underdrain	670 Ditch Erosion Protection	604 Precast Reinforced Concrete Outlet
				Lin.Ft.			Each		Lin.Ft.	Lin.Ft.	Lin.Ft.	Lin.Ft.	Lin.Ft.	Sq.Yd.	Each
U-1	575+00	590+00	Lt.	30							1500	33			3
U-2	575+00	590+00	Lt.	15						1500			13		
U-3	575+00	590+00	Lt.						1500						
U-4	575+00	590+00	Rt.						1500						
U-5	575+00	590+00	Rt.	15						1500			13		
U-6	575+00	590+00	Rt.	30							1500	33			3
D-1	574+00	580+45	℄											538	
D-2	580+45	582+00	℄				1							125	
TOTALS				90			1		3000	3000	3000	66	26	663	6

ROADWAY

REF. NO.	STATION FROM	STATION TO	SIDE	202 Guardrail Removed	202 Fence Removed	202 Catch Basin or Inlet Removed	202	203 Ditch Cleanout	Special Pipe Cleanout
				Lin.Ft.	Lin.Ft.	Each		Lin.Ft.	Lin.Ft.
R-1	575+00	590+00	Rt.		1518				
R-2	575+00	590+00	Lt.		1484				
R-3	579+74	583+86	Rt.	412					
R-4	582+00	582+00	℄			1			
R-5	587+48	590+00	Rt.	252					
D-3	581+68	582+18	Rt.					50	
D-4	589+00	590+00	Rt.					100	
D-5	588+15	589+92	Lt./Rt.						284
TOTALS				664	3002	1		150	284

GUARDRAIL

REF. NO.	STATION FROM	STATION TO	SIDE	606 Guardrail, Type 5	606 Anchor Assembly, Type E-98	448 3" Asphalt Conc. Intermediate Course Type 1, PG 64-22
				Lin.Ft.	Each	Cu.Yd
GR-1	579+34	590+00	Rt.	1016	1	40.18
TOTALS				1016	1	40.2

FENCE

REF. NO.	STATION FROM	STATION TO	SIDE	607 Fence, Type CLT
				Lin.Ft.
F-1	575+00	590+00	Rt.	1518
F-2	575+00	590+00	Lt.	1484
TOTALS				3002

PLAN & PROFILE QUANTITIES STA. 575+00 TO STA. 590+00

PLOTTED BY: lmincek
PLOTTED ON: Wed, Aug 05, 1998 11:45
PLOT SUBMITTED: 05-AUG-1998 11:45
307qu07.dgn

CUY-71-0.00	OHIO	94 / 361
	FHWA REGION 5	
	FEDERAL PROJECT	

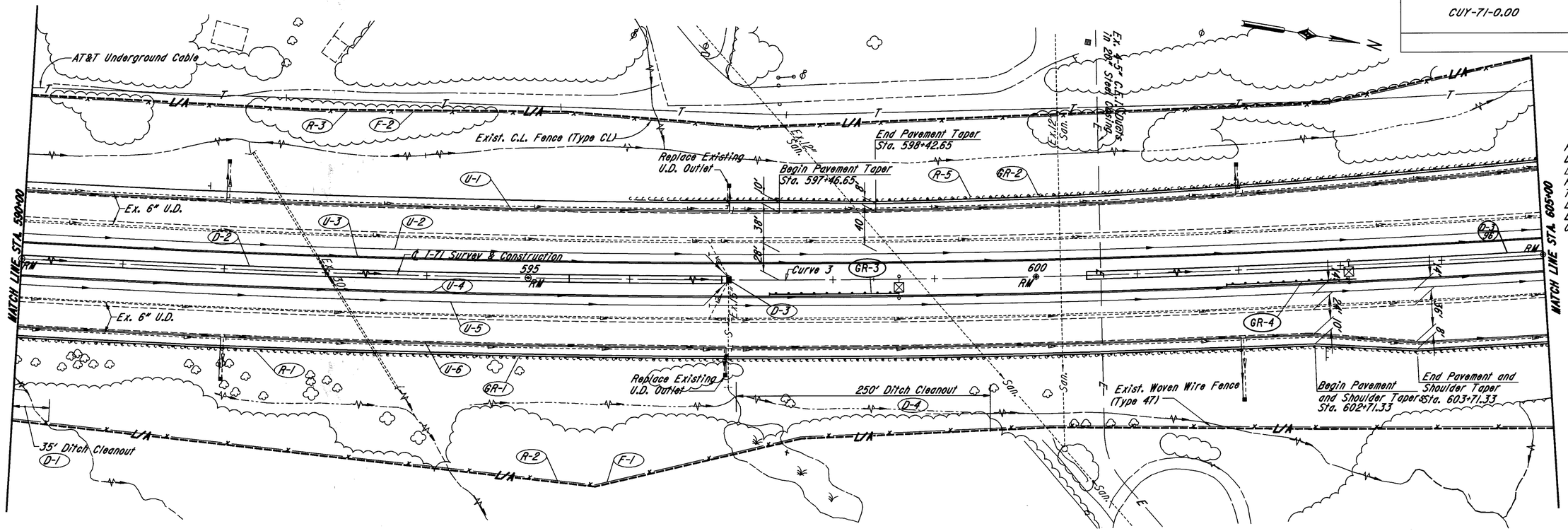

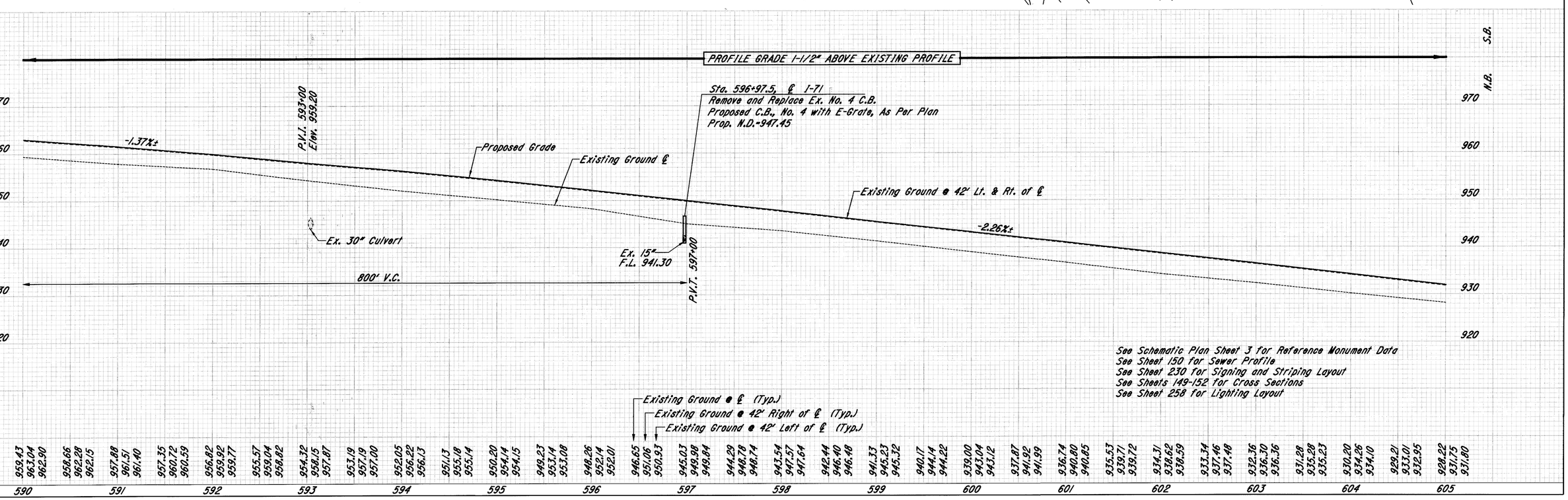

1-71 PLAN & PROFILE STA. 590+00 TO STA. 605+00

PLOTTED BY: fkonopka
PLOTTED: 04-AUG-1998 11:59
PLOT SUBMITTED: 04-AUG-1998 11:59
307pp08.dgn

707.41 Non-Perforated ASTM D3034, SDR 35, 707.42 or 707.33

DRAINAGE

REF. NO.	STATION FROM	STATION TO	SIDE	603 6" Conduit, Type F ##	603	604 Catch Basin, No. 4 with E-Grate, As Per Plan	605 6" Shallow Pipe U.D. w/Fabric Wrap (18" Deep)	605 6" Shallow Pipe U.D. (30" Deep)	605 6" Shallow Pipe U.D. w/Fabric Wrap (30" Deep)	605 6" Unclassified Underdrain w/Fabric Wrap	605 6" Unclassified Underdrain	670 Ditch Erosion Protection	604 Precast Reinforced Concrete Outlet
				Lin.Ft.		Each	Lin.Ft.	Lin.Ft.	Lin.Ft.	Lin.Ft.	Lin.Ft.	Sq.Yd.	Each
U-1	590+00	605+00	Lt.	55					1500	33			3
U-2	590+00	605+00	Lt.	15				1500			13		
U-3	590+00	605+00	Lt.				1500						
U-4	590+00	605+00	Rt.				1500						
U-5	590+00	605+00	Rt.	15				1500			13		
U-6	590+00	605+00	Rt.	95					1500	33			3
D-2	589+00	595+43	℄									536	
D-3	595+43	596+98	℄			1						125	
	TOTALS			180		1	3000	3000	3000	66	26	661	6

ROADWAY

REF. NO.	STATION FROM	STATION TO	SIDE	202 Guardrail Removed	202 Fence Removed	202	202	203 Ditch Cleanout
				Lin.Ft.	Lin.Ft.			Lin.Ft.
R-1	590+00	605+00	Rt.	1510				
R-2	590+00	605+00	Rt.		1529			
R-3	590+00	605+00	Lt.		1484			
R-5	595+99	605+00	Lt.	895				
D-1	590+00	590+35	Rt.					35
D-4	597+05	599+55	Rt.					250
	TOTALS			2405	3013			285

FENCE

REF. NO.	STATION FROM	STATION TO	SIDE	607 Fence, Type CLT
				Lin.Ft.
F-1	590+00	605+00	Rt.	1529
F-2	590+00	605+00	Lt.	1484
	TOTALS			3013

GUARDRAIL

REF. NO.	STATION FROM	STATION TO	SIDE	606 Guardrail, Type 5	606 Anchor Assembly, Type E-98	606 Anchor Assembly, Type T	448 3" Asphalt Conc. Intermediate Course Type 1, PG 64-22	203 Linear Grading, As Per Plan
				Lin.Ft.	Each	Each	Cu.Yd.	Lin.Ft.
GR-1	590+00	605+00	Rt.	1500			55.56	
GR-2	596+50	605+00	Lt.	837.5		1	31.02	
GR-3	597+40	598+65	Rt.	62.5	1	1	5.32	125
GR-4	601+90	603+15	Rt.	62.5	1	1	5.32	125
	TOTALS			2462.5	2	3	97.2	250
								2.5 Stas.

PLAN & PROFILE QUANTITIES STA. 590+00 TO STA. 605+00

PLOTTED BY: lmincek
PLOTTED: 08-AUG-1998 11:48
PLOT SUBMITTED: 05-AUG-1998 11:48
307qu08.dgn
pid08459 307qu08.dgn

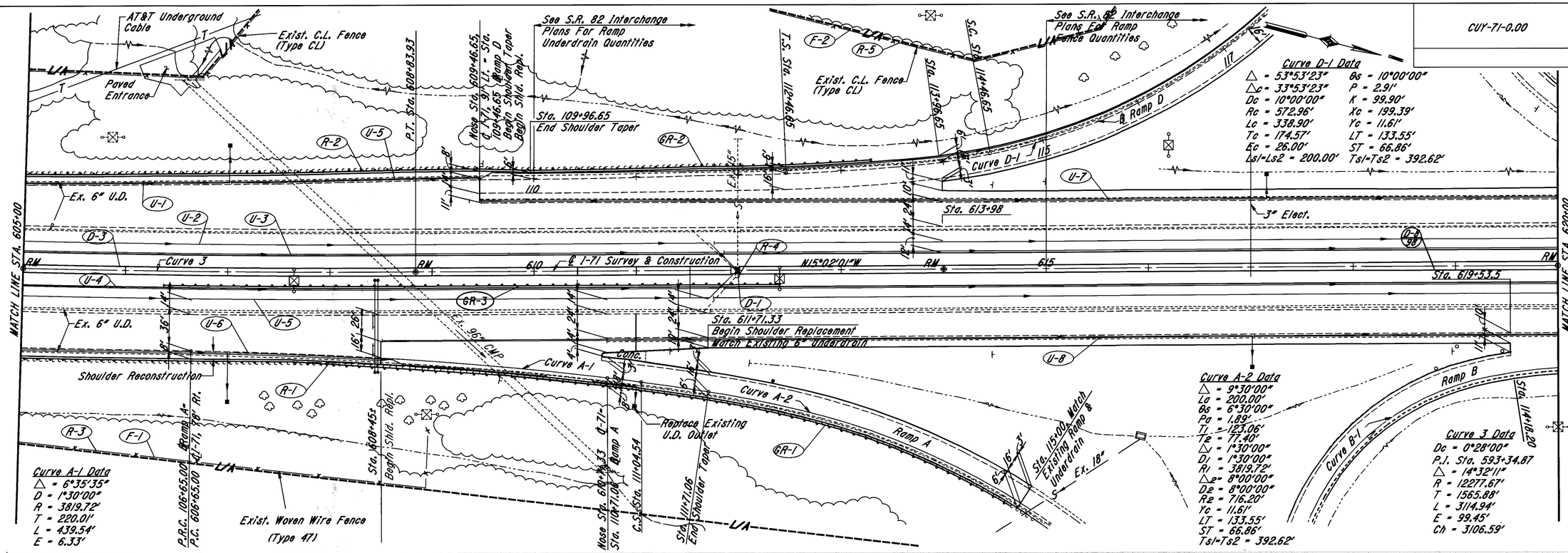

PROFILE GRADE 1-1/2" ABOVE EXISTING PROFILE

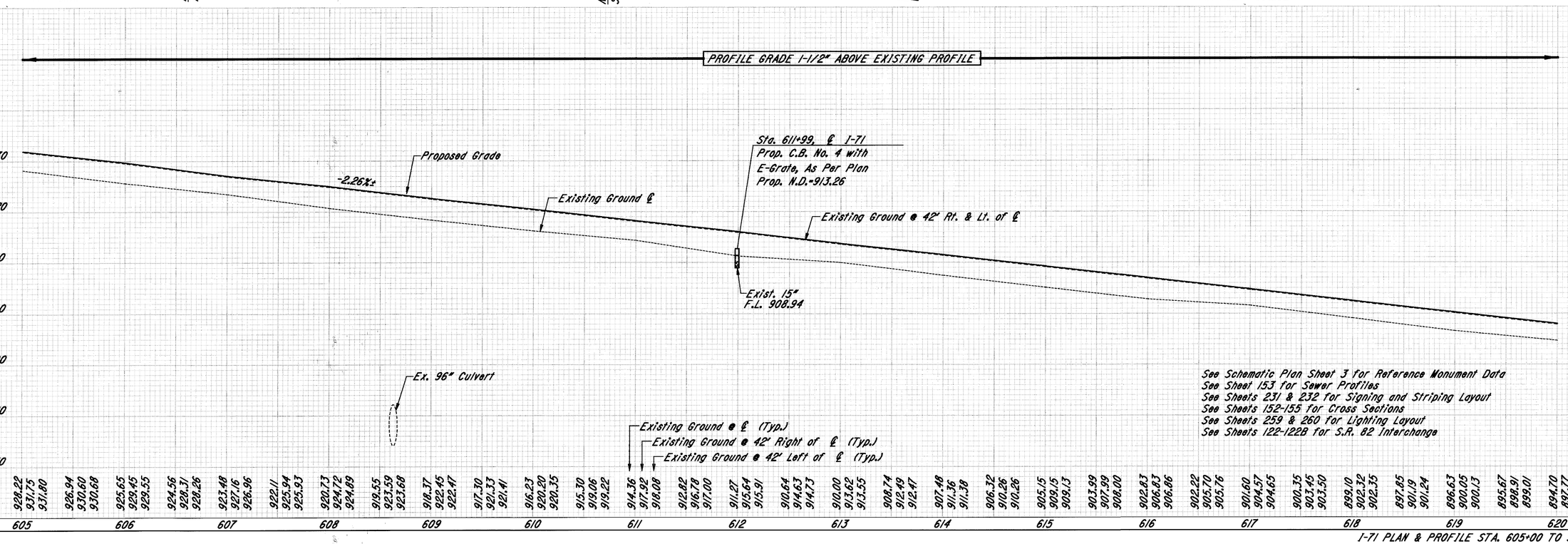

1-71 PLAN & PROFILE STA. 605+00 TO STA. 620+00

PLOTTED BY: fkonopka
PLOTTED: 04-AUG-1998 12:00
PLOT SUBMITTED: 04-AUG-1998 12:00
307pp09.dgn

707.41 Non-Perforated ASTM D3034, SDR 35, 707.42 or 707.33

DRAINAGE

REF. NO.	STATION FROM	STATION TO	SIDE	603 6" Conduit, Type F ##	604 Catch Basin, No. 4 with E-Grate As Per Plan	605 6" Shallow Pipe U.D. w/Fabric Wrap (18" Deep)	605 6" Shallow Pipe U.D. (30" Deep)	605 6" Shallow Pipe U.D. w/Fabric Wrap (30" Deep)	605 6" Unclassified Underdrain w/Fabric Wrap	605 6" Unclassified Underdrain	670 Ditch Erosion Protection	604 Precast Reinforced Concrete Outlet
				Lin.Ft.	Each	Lin.Ft.	Lin.Ft.	Lin.Ft.	Lin.Ft.	Lin.Ft.	Sq.Yd.	Each
U-1	605+00	610+00	Lt.	25				500	11			1
U-2	605+00	620+00	Lt.	15			1500			13		
U-3	605+00	620+00	Lt.			1500						
U-4	605+00	620+00	Rt.			1500						
U-5	607+02	620+00	Rt.	15			1500			13		
U-6	605+00	611+00	Rt.	50				600	22			2
U-7	609+47	620+00	Lt.	10				1053	11			1
U-8	608+45	620+00	Rt.	20				1155	11			
D-1	610+44	611+99	℄		1						125	
D-3	600+50	610+25	℄								813	
TOTALS				135	1	3000	3000	3308	55	26	938	4

ROADWAY

REF. NO.	STATION FROM	STATION TO	SIDE	202 Guardrail Removed	202 Fence Removed	202 Pipe Removed, 24" And Under	202 Catch Basin or Inlet Removed
				Lin.Ft.	Lin.Ft.	Lin.Ft.	Each
R-1	605+00	614+64	Rt.	992			
R-2	605+00	612+05	Lt.	700			
R-3	605+00	608+94	Rt.		457		
R-4*	611+99	611+99	℄			8	1
R-5	605+00	615+00	Lt.		1123		
TOTALS				1692	1580	8	1

GUARDRAIL

REF. NO.	STATION FROM	STATION TO	SIDE	606 Guardrail, Type 5	606 Anchor Assembly, Type E-98	606 Anchor Assembly, Type T	448 3" Asphalt Conc. Intermediate Course Type 1, PG 64-22	203 Linear Grading, As Per Plan
				Lin.Ft.	Each	Each	Cu.Yd.	Lin.Ft.
GR-1	605+00	614+64	Rt.	975		1	36.11	
GR-2	605+00	613+25	Lt.	775	1		31.24	
GR-3	606+40	612+40	Rt.	537.5	1	1	22.92	600
TOTALS				2287.5	2	2	90.3	600
								6.00 Stas.

FENCE

REF. NO.	STATION FROM	STATION TO	SIDE	607 Fence, Type CLT
				Lin.Ft.
F-1	605+00	608+94	Rt.	457
F-2	605+00	615+00	Lt.	1123
TOTALS				1580

PLOTTED BY: lminoek
PLOTTED: 05-AUG-1998 11:49
PLOT SUBMITTED: 307qu09.dgn

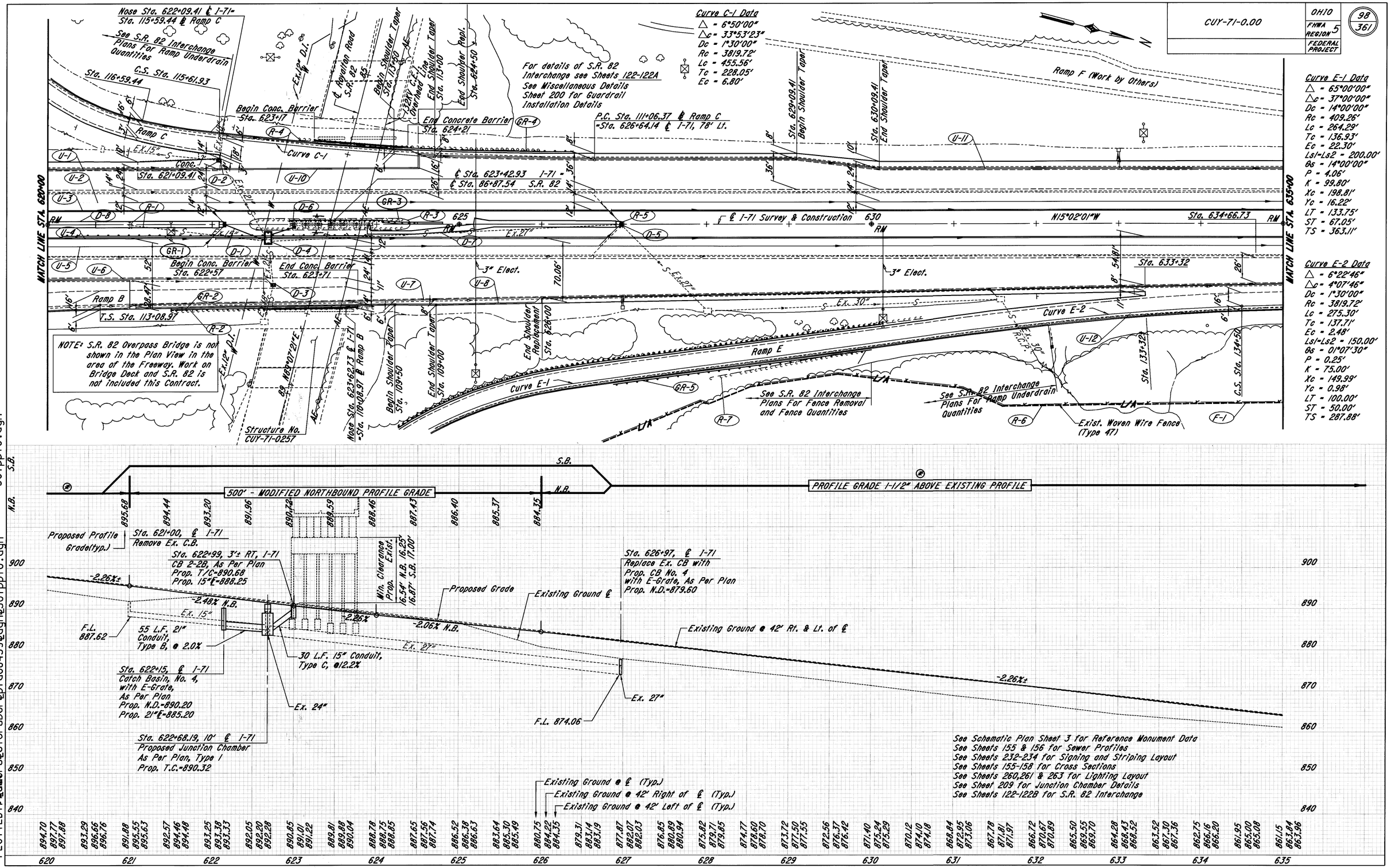

I-71 PLAN & PROFILE STA. 620+00 TO STA. 635+00

PLOTTED BY: fkonopka
PLOTTED: FROM: 307pp10.dgn
PLOTTED: 307pp10.dgn
PLOT SUBMITTED: 04-AUG-1998 12:01

707.41 Non-Perforated ASTM D3034, SDR 35, 707.42 or 707.33

DRAINAGE

REF. NO.	STATION FROM	STATION TO	SIDE	603 6" Conduit, Type F ##	603 15" Conduit, Type C	603 21" Conduit, Type B	604 Catch Basin, No. 2-2B, A.P.P.	604 Catch Basin, No. 4 With E Grate, As Per Plan	604 Catch Basin, No. 6	604 Junction Chamber, Type 1, As Per Plan	604 Catch Basin Reconstructed To Grade	605 6" Shallow Pipe U.D. w/Fabric Wrap (18" Deep)	605 6" Shallow Pipe U.D. (30" Deep)	605 6" Shallow Pipe U.D. w/Fabric Wrap (30" Deep)	605 6" Unclassified Underdrain w/Fabric Wrap	605 6" Unclassified Underdrain	670 Ditch Erosion Protection	604 Precast Reinforced Concrete Outlet
				Lin.Ft.	Lin.Ft.	Lin.Ft.	Each	Each	Each	Each	Each	Lin.Ft.	Lin.Ft.	Lin.Ft.	Lin.Ft.	Lin.Ft.	S.Y.	Each
U-1	620+00	622+10	Lt.	10										210				
U-2	620+00	635+00	Lt.	30									1500			26		
U-3	620+00	635+00	Lt.									1500						
U-4	620+00	635+00	Rt.									1500						
U-5	620+00	635+00	Rt.	30									1500			26		
U-6	620+00	622+70	Rt.	10										270				
U-7	620+00	635+00	Rt.	20										1500	22			1
U-8	621+00	626+00	Rt.									500						
U-10	622+09	624+50	Lt.											241				
U-11	622+00	635+00	Lt.	10										1300	11			1
U-12	632+00	635+00	Rt.											300				
D-1	620+60	622+15	℄			55		1									125	
D-2	622+08.83	622+08.83	78' Lt.								1							
D-3	622+74.24	622+74.24	74' Rt.						1									
D-4	622+68.19	622+68.19	10' Rt.							1								
D-5	625+42	626+97	℄					1									162	
D-6	622+68	622+99	3' Rt.		30		1											
D-7	626+97	626+97	Rt.														75	
D-8	611+99	620+60	℄														733	
	TOTALS			110	30	55	1	2	1	1	1	3500	3000	3821	33	52	1095	2

ROADWAY

REF. NO.	STATION FROM	STATION TO	SIDE	202 Guardrail Removed	202 Fence Removed	202 Catch Basin or Inlet Removed	202 Pipe Removed, 24" And Under	
				Lin.Ft.	Lin.Ft.	Each	Lin.Ft.	
R-1	621+00	622+68	℄			1	165	
R-2	621+50	623+96.5	Rt.	246.5				
R-3	622+45	624+40	Lt./Rt.	390				
R-4	623+05	625+95.5	Lt.	290.5				
R-6	631+00	635+00	Rt.		506			
R-7	128+02	129+83	Rt.	181				
	TOTALS			1108	506	1	165	

FENCE

REF. NO.	STATION FROM	STATION TO	SIDE	607 Fence, Type CLT
				Lin.Ft.
F-1	631+00	635+00	Rt.	506
	TOTALS			506

GUARDRAIL

REF. NO.	STATION FROM	STATION TO	SIDE	606 Guardrail, Type 5	606 Anchor Assembly, Type E-98	606 Anchor Assembly, Type T	606 Bridge Terminal Assembly, Type 1	606 Guardrail, Type 5A	606 Guardrail, Barrier Design, Type 5	606 Impact Attenuator, Type 1-98	622 Concrete Barrier, Type D, As Per Plan A	448 3" Asphalt Conc. Intermediate Course Type 1, PG 64-22	203 Linear Grading, As Per Plan
	FROM	TO		Lin.Ft.	Each	Each	Each	Lin.Ft.	Lin.Ft.	Each	Lin.Ft.	Cu.Yd.	Lin. Ft.
GR-1	620+20	623+95	Rt.	312.5	1	1						14.58	375
GR-2	621+52.75	623+71	Rt.	56.25	1		1				114	4.63	
GR-3	622+93.5	624+43.5	Lt.			1		87.5	50	1		7.5	181.5
GR-4	623+17.34	626+35.49	Lt.	156.25	1		1				114	8.33	
GR-5	126+87.5	130+00	Rt.	250	1	1						12.27	
	TOTALS			775	4	3	2	87.5	50	1	228	47.3	556.5
													5.6 Stas.

PLAN & PROFILE QUANTITIES STA. 620+00 TO STA. 635+00

PLOTTED BY: fkonopka
PLOTTED: 07-AUG-1998 09:11
PLOT SUBMITTED: 07-AUG-1998 09:11
307QU10.DGN

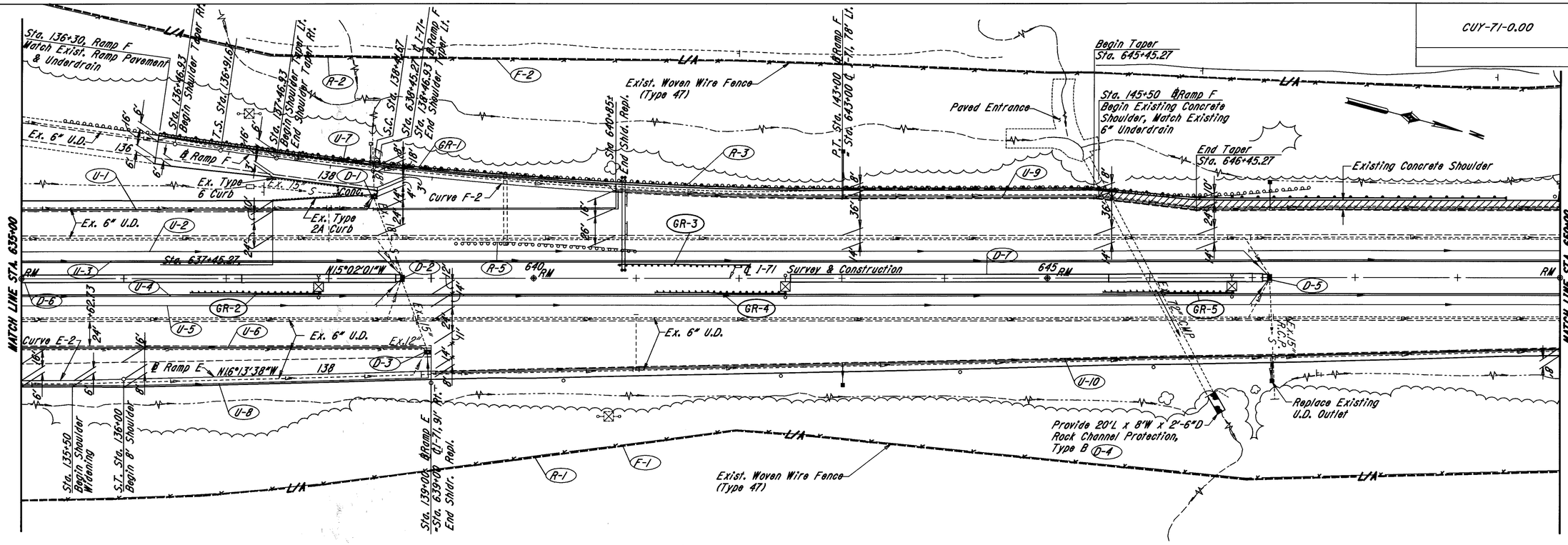

Curve F-2 Data

- Δ = 8°00'00"
- Δ_c = 6°52'30"
- Dc = 1°30'00"
- Rc = 3819.72'
- Lc = 458.33'
- Tc = 229.44'
- Ec = 6.88'
- Ls1 = 0
- Ls2 = 150.00'
- θs2 = 1°07'30"
- P2 = 0.25'
- K2 = 75.00'
- Xc2 = 149.99'
- Yc2 = 0.98'
- LT2 = 100.00'
- ST2 = 50.00'
- Ts1 = 268.86'
- Ts2 = 340.35'

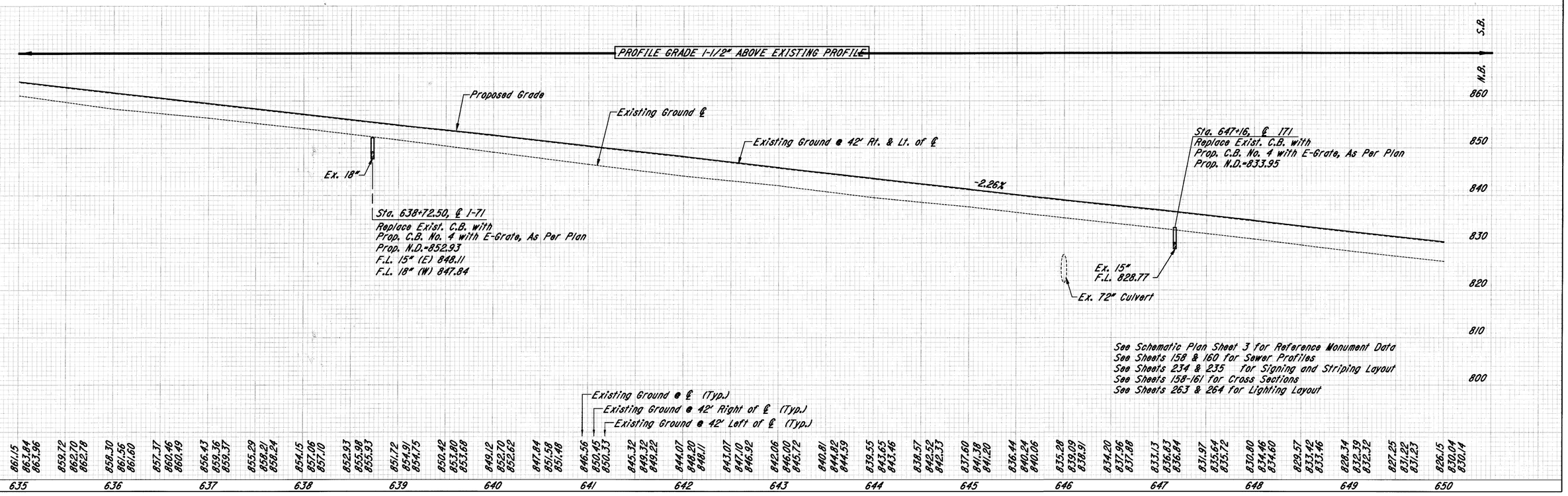

I-71 PLAN & PROFILE STA. 635+00 TO STA. 650+00

PLOTTED BY: fkonopka
PLOTTED: Friday, August 07, 1998 12:01
PLOT SUBMITTED: 04-AUG-1998 12:01
307ppl1.dgn
307ppl1.dgn
307ppl1.dgn
pid08459
sberforsber

** 707.41 Non-Perforated ASTM D3034, SDR 35, 707.42 or 707.33

DRAINAGE

REF. NO.	STATION FROM	STATION TO	SIDE	601 Rock Channel Protection, Type B Without Filter	603 6" Conduit, Type F **		604 Catch Basin, No.4 with E-Grate As Per Plan	604 Catch Basin Reconstructed To Grade		605 6" Shallow Pipe U.D. w/Fabric Wrap (18" Deep)	605 6" Shallow Pipe U.D. (30" Deep)	605 6" Shallow Pipe U.D. w/Fabric Wrap (30" Deep)	605 6" Unclassified Underdrain w/Fabric Wrap	605 6" Unclassified Underdrain	670 Ditch Erosion Protection	604 Precast Reinforced Concrete Outlet
				Cu.Yd.	Lin.Ft.		Each	Each		Lin.Ft.	Lin.Ft.	Lin.Ft.	Lin.Ft.	Lin.Ft.	S.Y.	Each
U-1	635+00	638+42	Lt.		10							342				
U-2	635+00	650+00	Lt.		30						1500			26		
U-3	635+00	650+00	Lt.							1500						
U-4	635+00	650+00	Rt.							1500						
U-5	635+00	650+00	Rt.		30						1500			26		
U-6	635+00	638+96	Rt.		10							496				
U-7	136+30**	640+85	Lt.									455				
U-8	135+00**	639+00	Rt.									400				
U-9	640+85	650+00	Lt.		55							915	22			2
U-10	639+00	650+00	Rt.		35							1100	22			2
D-1	638+44.09	638+44.09	79.8' Lt.					1								
D-2	637+17.5	638+72.5	℄				1								125	
D-3	638+96.20	638+96.20	72.5' Rt.					1								
D-4	646+60	646+60	Rt.	15												
D-5	645+61.5	647+17	℄				1								125	
D-6	630+75	637+17	℄												535	
D-7	642+50	645+61	℄												259	
TOTALS				15	170		2	2		3000	3000	3708	44	52	1044	4

** RAMP STATIONING

ROADWAY

REF. NO.	STATION FROM	STATION TO	SIDE	202 Guardrail Removed	202 Fence Removed		
				Lin.Ft.	Lin.Ft.		
R-1	635+00	650+00	Rt.		1506		
R-2	635+00	650+00	Lt.		1507		
R-3	636+33	647+56	Lt.	1126			
R-5	639+24	641+00	Lt.	177			
TOTALS				1303	3013		

GUARDRAIL

REF. NO.	STATION FROM	STATION TO	SIDE	606 Guardrail, Type 5	606 Anchor Assembly, Type E-98	606 Anchor Assembly, Type T	448 3" Asphalt Conc. Intermediate Course Type 1, PG 64-22	203 Linear Grading, As Per Plan
				Lin.Ft.	Each	Each	Cu.Yd.	Lin.Ft.
GR-1	636+33	649+45.5	Lt.	1250	1	1	49.31	
GR-2	636+65	637+90	Rt.	62.5	1	1	5.32	125
GR-3	640+86	642+11	Lt.	62.5	1	1	5.32	125
GR-4	641+20	642+45	Rt.	62.5	1	1	5.32	125
GR-5	645+55	646+80	Rt.	62.5	1	1	5.32	125
TOTALS				1500	5	5	70.6	500
								5.00 Stas.

FENCE

REF. NO.	STATION FROM	STATION TO	SIDE	607 Fence, Type CLT
				Lin.Ft.
F-1	635+00	650+00	Rt.	1506
F-2	635+00	650+00	Lt.	1507
TOTALS				3013

PLOTTED BY: lmincek
PLOTTED: FROM: PLOT SUBMITTED: 05-AUG-1998 11:52
307QU11.DGN
pid08459B.dgn B307qu11.dgn

PLOT SUBMITTED: 05-AUG-1998 11:45

307ppl2.dgn

PLOTTED BY: fkonopka

PLOTTED FROM: \users\eforsber\pid08459\307ppl2.dgn

I-71 PLAN & PROFILE STA. 650+00 TO STA. 665+00

DRAINAGE

707.41 Non-Perforated ASTM D3034, SDR 35, 707.42 or 707.33

REF. NO.	STATION FROM	STATION TO	SIDE	603 6" Conduit, Type F ##	603 15" Conduit, Type B	603 15" Conduit, Type C	604 Catch Basin, No. 4 with E-Grate, As Per Plan	604 Manhole, No. 3	605 6" Shallow Pipe U.D. w/Fabric Wrap (18" Deep)	605 6" Shallow Pipe U.D. (30" Deep)	605 6" Shallow Pipe U.D. w/Fabric Wrap (30" Deep)	605 6" Unclassified Underdrain w/Fabric Wrap	605 6" Unclassified Underdrain	660 Reinforced Sodding	670 Ditch Erosion Protection	838 Gabions with Additional Coating	604 Precast Reinforced Concrete Outlet
				Lin.Ft.	Lin.Ft.	Lin.Ft.	Each	Each	Lin.Ft.	Lin.Ft.	Lin.Ft.	Lin.Ft.	Lin.Ft.	Sq.Yd.	Sq.Yd.	Cu.Yd.	Each
U-1	650+00	658+37	Lt.	20							837	22					2
U-2	650+00	658+37	Lt.	30						837			26				
U-3	650+00	658+37	Lt.						837								
U-4	650+00	658+37	Rt.						837								
U-5	650+00	658+37	Rt.	30						837			26				
U-6	650+00	658+37	Rt.	25							837	22					2
U-7	658+37	662+57	Lt.						420								
U-8	658+37	662+76	Lt.								439						
U-9	658+37	662+61	Lt.	15						424			13				
U-10	658+37	662+34	Lt.						397								
U-11	658+37	662+18	Rt.						381								
U-12	658+37	662+39	Rt.	15						402			13				
U-13	658+37	662+23	Rt.								386						
U-14	658+37	661+96	Rt.						359								
D-2	651+95	653+50	℄				1								125		
D-3	653+50	654+50	℄		100			1									
D-4	654+50	659+92	℄			387	1								250		
D-5	651+00	651+95	℄												79		
D-6	662+30	662+30	Lt.											53.3		3.3	
D-7	661+70	661+70	Rt.											37.2		3.3	
TOTALS				135	100	387	2	1	3231	2500	2499	44	78	90.5	454	7	4

ROADWAY

REF. NO.	STATION FROM	STATION TO	SIDE	202 Guardrail Removed	202 Fence Removed	202 Catch Basin or Inlet Removed	202 Pipe Removed, 24" And Under	203 Ditch Cleanout
				Lin.Ft.	Lin.Ft.	Each	Lin.Ft.	Lin.Ft.
R-1	650+00	662+28	Rt.		1390			
R-2	650+00	662+88	Lt.		1478			
R-3	657+38	657+38	3' Lt.			1	96	
R-4	658+37	658+37	3' Rt.			1		
R-5	657+91	662+09	Rt.	418				
R-6	658+36	662+73	Lt.	437				
R-7	659+97	662+29	Rt.	237				
R-8	662+58	662+58	Lt./Rt.		76			
D-1	650+20	650+50	Lt.					35
TOTALS				1092	2944	2	96	35

FENCE

REF. NO.	STATION FROM	STATION TO	SIDE	607 Fence, Type CLT	607 Gate, Type CL, As Per Plan
				Lin.Ft.	Each
F-1	650+00	662+28	Rt.	1383	
F-2	650+00	662+88	Lt.	1469	
F-3	662+58	662+58	Lt./Rt.	22	1
TOTALS				2874	1

GUARDRAIL

REF. NO.	STATION FROM	STATION TO	SIDE	606 Guardrail, Type 5	606 Anchor Assembly, Type E-98	606 Anchor Assembly, Type T	606 Bridge Terminal Assembly, Type 1	606 Bridge Terminal Assembly, Type 2	448 3" Asphalt Conc. Intermediate Course Type 1, PG 64-22	203 Linear Grading, As Per Plan
	FROM	TO		Lin.Ft.	Each	Each	Each	Each	Cu.Yd.	Lin. Ft.
GR-1	650+25	651+50	Rt.	62.5	1	1			5.32	125
GR-2	655+25	656+50	Rt.	62.5	1	1			5.32	125
GR-3	655+56.21	661+99.96	Rt.	593.75	1		1		24.54	
GR-4	658+23.77	662+61.27	Lt.	425		1		1	16.20	
GR-5	659+56.26	662+25.01	Rt.	218.75	1		1		10.73	268.75
TOTALS				1325	4	3	2	1	62.1	518.75
										5.2 Stas.

PLAN & PROFILE QUANTITIES STA. 650+00 TO STA. 665+00

PLOTTED BY: lmincek
PLOTTED: 05-AUG-1998 11:53
PLOT SUBMITTED: 05-AUG-1998 11:53
3070U12.DGN
PLOTTED FROM: Bpid08459Bdgn\307qu12.dgn

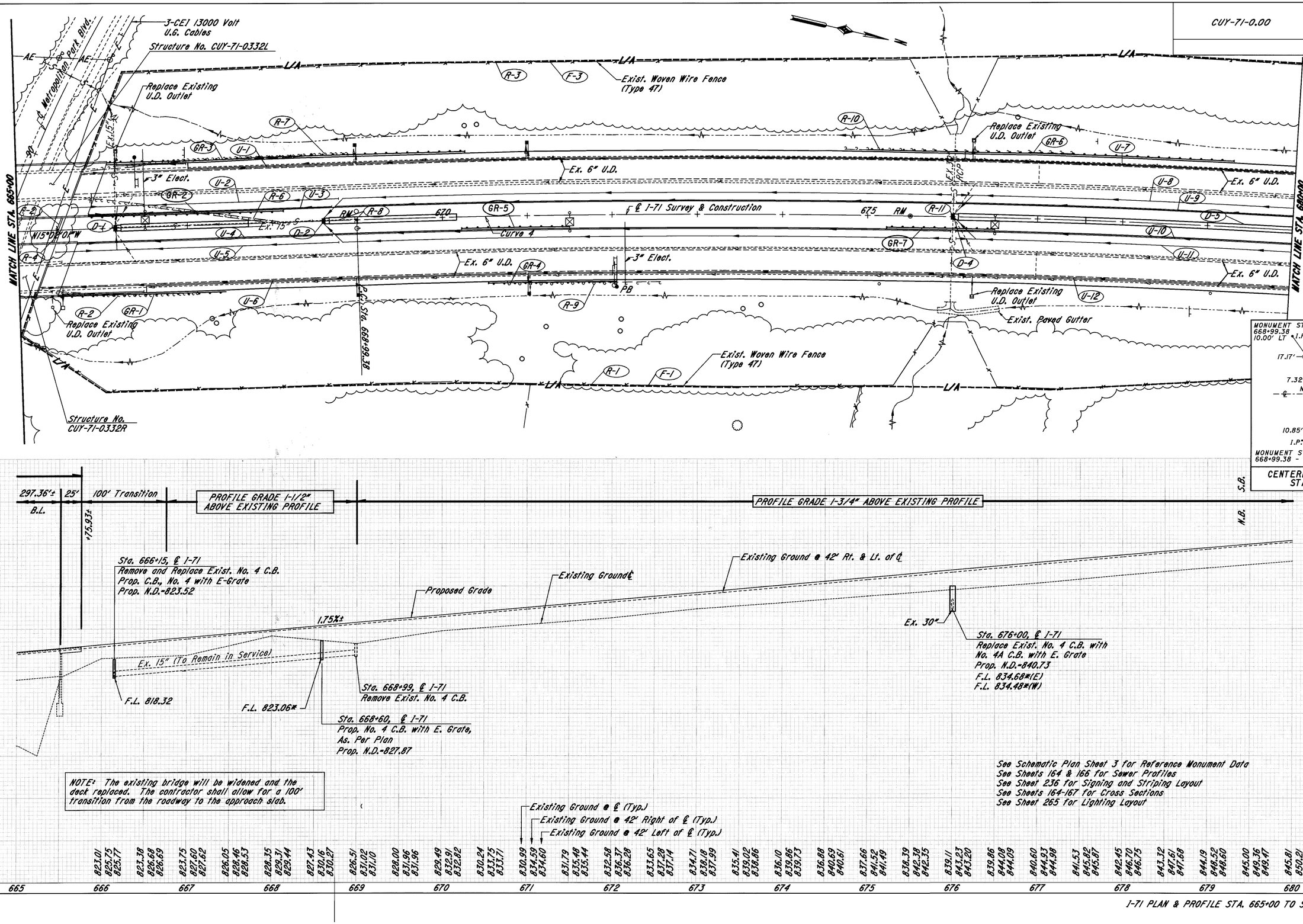

I-71 PLAN & PROFILE STA. 665+00 TO STA. 680+00

PLOTTED BY: fkonopka
PLOTTED FROM: :Buser$beforsber$pid08459d307pp13.dgn
PLOT SUBMITTED: 05-AUG-1998 07:04
307pp13.dgn

707.41 Non-Perforated ASTM D3034, SDR 35, 707.42 or 707.33

DRAINAGE

REF. NO.	STATION FROM	STATION TO	SIDE	603 6" Conduit, Type F ##	604 Catch Basin, No. 4 With E-Grate, As Per Plan	604 Catch Basin, No. 4A With E-Grate, As Per Plan	605 6" Rock Cut Underdrain	605 6" Shallow Pipe U.D. w/Fabric Wrap (18" Deep)	605 6" Shallow Pipe U.D. (30" Deep)	605 6" Shallow Pipe U.D. w/Fabric Wrap (30" Deep)	605 6" Unclassified Underdrain w/Fabric Wrap	605 6" Unclassified Underdrain	670 Ditch Erosion Protection	604 Precast Reinforced Concrete Outlet
				Lin.Ft.	Each	Each	Lin.Ft.	Lin.Ft.	Lin.Ft.	Lin.Ft.	Lin.Ft.	Lin.Ft.	Sq.Yd.	Each
U-1	665+80	676+00	Lt.	35			1053							3
U-2	665+65	676+00	Lt.	30			1061							
U-3	665+85	676+00	Lt.					1015						
U-4	665+70	676+00	Rt.					1030						
U-5	665+45	676+00	Rt.	30			1081							
U-6	665+25	676+00	Rt.	40			1108							3
U-7	676+00	680+00	Lt.	15						400	11			1
U-8	676+00	680+00	Lt.	15					400			13		
U-9	676+00	680+00	Lt.					400						
U-10	676+00	680+00	Rt.					400						
U-11	676+00	680+00	Rt.	15					400			13		
U-12	676+00	680+00	Rt.	15						400	11			1
D-1	666+15	667+70	℄		1								125	
D-2	668+60	670+15	℄		1								125	
D-4	676+00	677+55	℄			1							125	
D-5	677+55	685+50	℄										662	
TOTALS				195	2	1	4303	2845	800	800	22	26	1037	8

Underdrain runs U-1, U-2, U-5, and U-6 may require excavation through rock. These underdrain runs should be installed at the proper depth, as shown on the typical sections, if possible. If rock is encountered above the proposed flow lines, then the underdrains should be constructed a minimum of 12" into the rock. These underdrain runs shall be installed from the low point to the high point, to ensure a positive outlet is achieved.

If no rock is encountered, then the underdrain installation shall be paid for using the typical underdrain installation bid references. If rock is encounterd, then only the Rock Underdrain pay item shall be used.

ROADWAY

REF. NO.	STATION FROM	STATION TO	SIDE	202 Guardrail Removed	202 Fence Removed	202 Catch Basin or Inlet Removed	202 Pipe Removed 24" And Under
				Lin.Ft.	Lin.Ft.	Each	Lin.Ft.
R-1	665+03	680+00	Rt.		1645		
R-2	665+31	667+06	Rt.	175			
R-3	665+82	680+00	Lt.		1615		
R-4	665+42	665+54	Rt./Lt.		31		
R-6	665+77	668+09	Lt.	225			
R-7	665+88	668+91	Lt.	297			
R-8	668+60	668+99	℄			1	39
R-9	670+74	672+56	Rt.	181			
R-10	674+73	677+40	Lt.	269			
TOTALS				1139	3291	1	39

FENCE

REF. NO.	STATION FROM	STATION TO	SIDE	607 Fence, Type CLT	607 Gate, Type CL, As Per Plan
				Lin.Ft.	Each
F-1	665+03	680+00	Rt.	1639	
F-2	665+42	665+54	Lt./Rt.	22	1
F-3	665+82	680+00	Lt.	1607	
TOTALS				3268	1

GUARDRAIL

REF. NO.	STATION FROM	STATION TO	SIDE	606 Guardrail, Type 5	606 Anchor Assembly, Type E-98	606 Anchor Assembly, Type T	606 Bridge Terminal Assembly, Type 1	606 Bridge Terminal Assembly, Type 2	448 3" Asphalt Conc. Intermediate Course Type 1, PG 64-22	203 Linear Grading, As Per Plan
				Lin.Ft.	Each	Each	Each	Each	Cu.Yd.	Lin. Ft.
GR-1	665+43.22	667+43	Rt.	187.5		1		1	7.40	
GR-2	665+79.48	668+10.73	Lt.	181.25	1		1		9.26	231.25
GR-3	666+06.83	670+25.58	Lt.	368.75	1		1		16.20	
GR-4	670+55	672+05	Rt.	87.5	1	1			6.25	
GR-5	670+25	671+50	Rt.	62.5	1	1			5.32	125
GR-6	675+00	679+25	Lt.	362.5	1	1			16.44	
GR-7	675+25	676+50	Rt.	62.5	1	1			5.32	125
TOTALS				1312.50	6	5	2	1	66.2	481.25
										4.8 Stas.

PLOTTED BY: lmincek
PLOTTED: FROM: Rowersbeforsber Bpid08459Bdgn B307qu13.dgn
PLOT SUBMITTED: 05-AUG-1998 11:54
307QU13.DGN

TEMPORARY BENCH MARK
Sta. 688+00, ℄ I-71
Top of Iron Pin in Monument Box
Elev. 861.79

CUY-71-0.00 | OHIO | FHWA REGION 5 | FEDERAL PROJECT

106
361

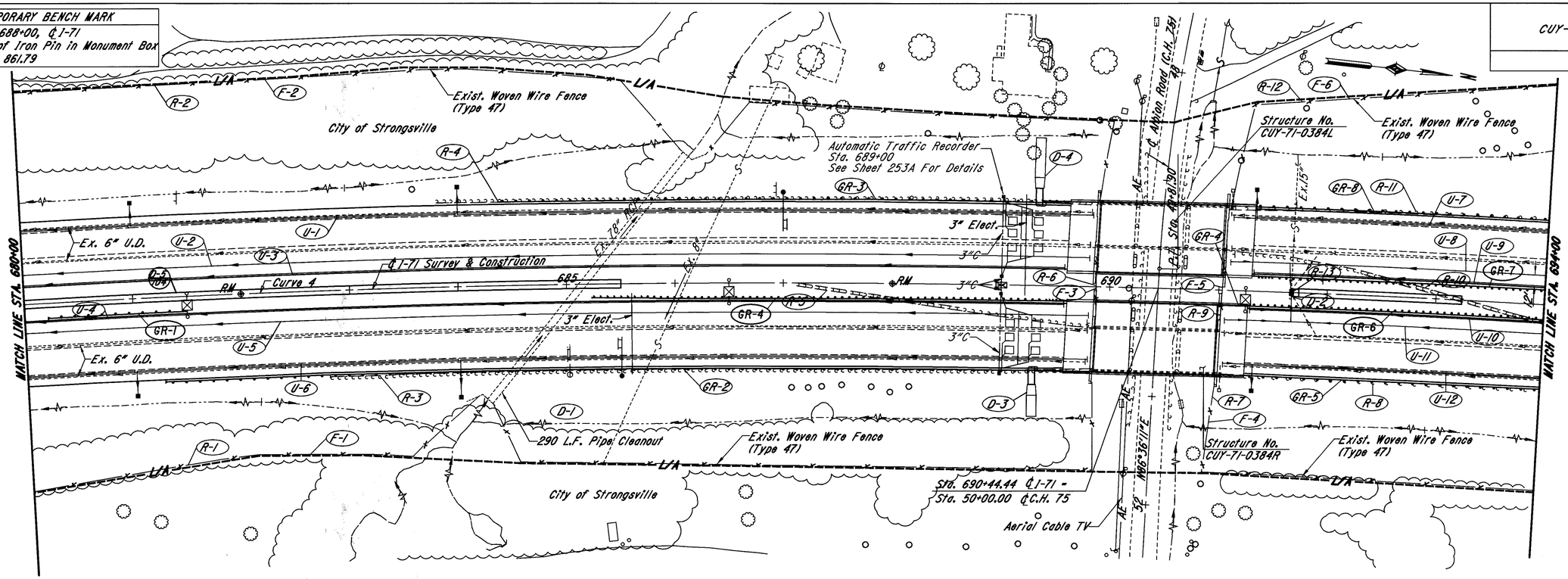

Curve 4 Data
P.I. Sta. 681+66.80
Dc = 0°28'00"
Δ = 11°47'15"
R = 12277.67'
T = 1267.42'
L = 2525.89'
E = 65.24'
Ch = 2521.44'

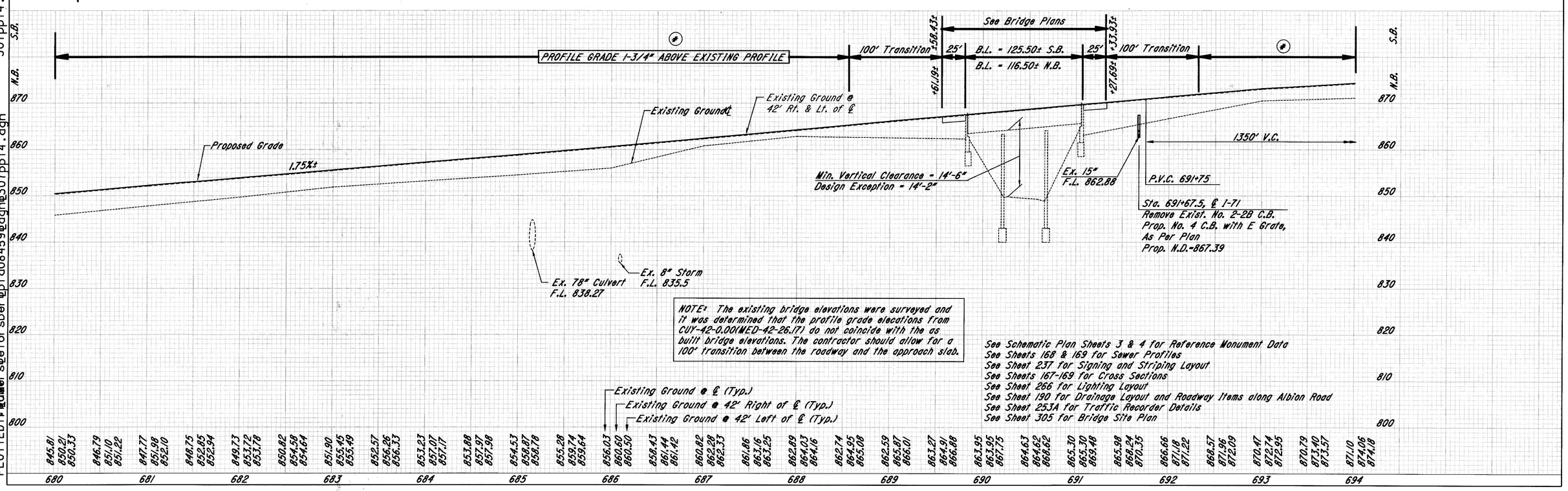

NOTE: The existing bridge elevations were surveyed and it was determined that the profile grade elevations from CUY-42-0.00(MED-42-26.17) do not coincide with the as built bridge elevations. The contractor should allow for a 100' transition between the roadway and the approach slab.

See Schematic Plan Sheets 3 & 4 for Reference Monument Data
See Sheets 168 & 169 for Sewer Profiles
See Sheet 237 for Signing and Striping Layout
See Sheets 167-169 for Cross Sections
See Sheet 266 for Lighting Layout
See Sheet 190 for Drainage Layout and Roadway Items along Albion Road
See Sheet 253A for Traffic Recorder Details
See Sheet 305 for Bridge Site Plan

I-71 PLAN & PROFILE STA. 680+00 TO STA. 694+00

PLOTTED BY: fkonopka
PLOTTED: Friday, August 07, 1998 07:06
PLOT SUBMITTED: 05-AUG-1998 07:06
307pp14.dgn
307pp14.dgn
307pp14.dgn
d08459bpi

DRAINAGE

** 707.41 Non-Perforated ASTM D3034, SDR 35, 707.42 or 707.33

REF. NO.	STATION FROM	STATION TO	SIDE	603 6" Conduit, Type F **			604 Catch Basin, No. 4 with E-Grate, As Per Plan		605 6" Shallow Pipe U.D. w/Fabric Wrap (18" Deep)	605 6" Shallow Pipe U.D. (30" Deep)	605 6" Shallow Pipe U.D. w/Fabric Wrap (30" Deep)	605 6" Unclassified Underdrain w/Fabric Wrap	605 6" Unclassified Underdrain	660 Reinforced Sodding	670 Ditch Erosion Protection	838 Gabion, With Additional Coating	604 Precast Reinforced Concrete Outlet
				Lin.Ft.			Each		Lin.Ft.	Lin.Ft.	Lin.Ft.	Lin.Ft.	Lin.Ft.	Sq.Yd.	Sq.Yd.	Cu.Yd.	Each
U-1	680+00	689+83	Lt.	30							983	22					2
U-2	680+00	689+82	Lt.							982							
U-3	680+00	689+59	Lt.						959								
U-4	680+00	689+59	Rt.						959								
U-5	680+00	689+81	Rt.							981							
U-6	680+00	689+80	Rt.	40							980	22					2
U-7	691+11	694+00	Lt.	20							259	41					1
U-8	691+10	694+00	Lt.	15						233			70				
U-9	691+30	694+00	Lt.						233			37					
U-10	691+30	694+00	Rt.						233			37					
U-11	691+06	694+00	Rt.	15						233			74				
U-12	691+05	694+00	Rt.	20							265	41					1
D-2	691+67.5	693+22.5	℄				1								125		
D-3	689+29.43	689+29.43	Rt.											19.2		3.3	
D-4	689+32.19	689+32.19	Lt.											46.2		3.3	
TOTALS				140			1		2384	2429	2487	200	144	65.4	125	7	6

ROADWAY

REF. NO.	STATION FROM	STATION TO	SIDE	202 Guardrail Removed	202 Fence Removed			Special Pipe Cleanout	
				Lin.Ft.	Lin.Ft.			Lin. Ft.	
R-1	680+00	689+86	Rt.		1100				
R-2	680+00	689+89	Lt.		1115				
R-3	682+79	689+83	Rt.	698					
R-4	683+81	689+87	Lt.	609					
R-5	687+11	689+85	Rt.	275					
R-6	689+87	689+87	Lt./Rt.		54				
R-7	690+99	694+00	Rt.		385				
R-8	691+00	694+00	Rt.	297					
R-9	691+03	691+03	Lt./Rt.		54				
R-10	691+07	694+00	Lt.	299					
R-11	691+08	694+00	Lt.	294					
R-12	691+10	694+00	Lt.		368				
D-1	684+28	684+28	Rt.					290	
TOTALS				2472	3076			290	

FENCE

REF. NO.	STATION FROM	STATION TO	SIDE	607 Fence, Type CLT	607 Gate, Type CL, As Per Plan
				Lin.Ft.	Each
F-1	680+00	689+86	Rt.	1100	
F-2	680+00	689+89	Lt.	1115	
F-3	689+87	689+87	Lt./Rt.	20	1
F-4	690+99	694+00	Rt.	385	
F-5	691+03	691+03	Lt./Rt.	20	1
F-6	691+10	694+00	Lt.	368	
TOTALS				3008	2

GUARDRAIL

REF. NO.	STATION FROM	STATION TO	SIDE	606 Guardrail, Type 5	606 Anchor Assembly, Type E-98	606 Anchor Assembly, Type T	606 Bridge Terminal Assembly, Type 1	606 Bridge Terminal Assembly, Type 2	203 Linear Grading, As Per Plan	448 3" Asphalt Concrete Intermediate, Course, Type 1, PG 64-22
				Lin.Ft.	Each	Each	Each	Each	Lin. Ft.	Cu.Yd.
GR-1	680+25	681+50	Rt.	62.5	1	1			125	5.32
GR-2	681+29.88	689+61.13	Rt.	781.25	1		1			31.48
GR-3	684+50.09	689+62.59	Lt.	500		1		1		18.98
GR-4	685+19.14	689+62.89	Rt.	393.75	1		1		443.75	17.13
GR-5	691+23.53	694+00	Rt.	276.47				1		10.24
GR-6	691+25.29	694+00	Rt.	276.47				1	276.47	10.24
GR-7	691+32.23	694+00	Lt.	267.77			1		267.77	9.92
GR-8	691+33.99	694+00	Lt.	266.01			1			9.85
TOTALS				2824	3	2	4	3	1112.99	113.2
									11.1 Stas.	

PLAN & PROFILE QUANTITIES STA. 680+00 TO STA. 694+00

PLOTTED BY: lmincek
PLOTTED: 08-AUG-1998 11:55
PLOT SUBMITTED: 05-AUG-1998 11:55
3070U14.DGN
307qu14.dgn
Bpid08459
Betorsber

PLOT SUBMITTED:05-AUG-1998 07:08

307pp15.dgn

PLOTTED BY:fkonopka

PLOTTED FROM:Users:Beforsberg:pid08459:dgn:307pp15.dgn

CUY-71-0.00	OHIO	108/361
	FHWA REGION 5	
	FEDERAL PROJECT	

I-71 PLAN & PROFILE STA. 694+00 TO STA. 708+00

707.41 Non-Perforated ASTM D3034, SDR 35, 707.42 or 707.33

DRAINAGE

REF. NO.	STATION FROM	STATION TO	SIDE	601 Dumped Rock Fill, Type C (Cu.Yd.)	603 6" Conduit, Type F ## (Lin.Ft.)	603	604 Catch Basin, No. 2-2B (Each)	605 6" Shallow Pipe U.D. w/Fabric Wrap (18" Deep) (Lin.Ft.)	605 6" Shallow Pipe U.D. (30" Deep) (Lin.Ft.)	605 6" Shallow Pipe U.D. w/Fabric Wrap (30" Deep) (Lin.Ft.)	605 6" Unclassified Underdrain w/Fabric Wrap (Lin.Ft.)	605 6" Unclassified Underdrain (Lin.Ft.)	660 Reinforced Sodding (Sq.Yd.)	670 Ditch Erosion Protection (Sq.Yd.)	838 Gabion, With Additional Coating (Cu.Yd.)	604 Precast Reinforced Concrete Outlet (Each)
U-1	694+00	695+90	Lt.							190						
U-2	694+00	695+70	Lt.						170							
U-3	694+00	695+43	Lt.					143								
U-4	694+00	695+30	Rt.					130								
U-5	694+00	695+49	Rt.						149							
U-6	694+00	695+29	Rt.							129						
U-7	699+09	708+00	Lt.		60					840	62					2
U-8	698+90	708+00	Lt.		15				875			48				
U-9	699+07	708+00	Lt.					875								
U-10	698+78	708+00	Rt.					875								
U-11	698+48	708+00	Rt.		15				875			60				
U-12	698+29	705+22	Rt.		60					602	113					2
U-13	705+22	708+00	Rt.							278						
D-1	695+07.50	695+41	℄				1							46.7		
D-2	694+98.43	694+98.43	Rt.										19.2		3.3	
D-3	695+69.50	695+69.50	Lt.										55.2		3.3	
D-4	699+25	699+25	℄				1									
D-5	705+72	705+72	Rt.	11.1												
TOTALS				11.1	150		2	2023	2069	2039	175	108	74.4	46.7	7	4

ROADWAY

REF. NO.	STATION FROM	STATION TO	SIDE	202 Guardrail Removed (Lin.Ft.)	202 Fence Removed (Lin.Ft.)			
R-1	694+00	695+07	Rt.	108				
R-2	694+00	695+59	Lt.	159				
R-3	694+00	695+29	Rt.	130				
R-4	694+00	695+28	Rt.		178			
R-5	694+00	696+00	Lt.		392			
R-7	695+64	695+64	Lt./Rt.		75			
R-8	698+20	707+69	Rt.		1176			
R-9	698+35	708+00	Rt.	968				
R-10	699+07	701+82	Lt./Rt.	277				
R-11	699+19	708+00	Lt.	885				
R-13	704+45	706+27	Rt.	182				
TOTALS				2709	1821			

FENCE

REF. NO.	STATION FROM	STATION TO	SIDE	607 Fence, Type CLT (Lin.Ft.)	607 Gate, Type CL, As Per Plan (Each)	625 Ground Rod (Each)
F-1	694+00	695+28	Rt.	178		
F-2	694+00	696+00	Lt.	392		
F-3	695+64	695+64	Lt./Rt.	23	1	
F-4	698+20	707+69	Rt.	1176		
F-5	698+66	698+66	Lt./Rt.	35	1	
F-6	710+78		Rt.			1
F-7	711+48		Rt.			1
TOTALS				1804	2	2

GUARDRAIL

REF. NO.	STATION FROM	STATION TO	SIDE	606 Guardrail, Type 5 (Lin.Ft.)	606 Anchor Assembly, Type E-98 (Each)	606 Anchor Assembly, Type T (Each)	606 Bridge Terminal, Assembly, Type 1 (Each)	606 Bridge Terminal, Assembly, Type 2 (Each)	203 Linear Grading, As Per Plan (Lin. Ft.)	448 3" Asphalt Concrete Intermediate, Course Type 1, PG 64-22 (Cu. Yd.)
GR-1	694+00	695+04.96	Rt.	104.96			1			3.88
GR-2	694+00	695+36.14	Rt.	136.14			1		141.36	5.04
GR-3	694+00	695+44.15	Lt.	144.15				1	149.15	5.33
GR-4	694+00	695+75.33	Lt.	175.33				1		6.49
GR-5	698+44.40	708+00	Rt.	962.5				1		35.65
GR-6	699+02.59	701+96.34	Lt.	243.75	1		1		293.75	13.51
GR-7	699+33.77	708+00	Lt.	866.23			1			32.08
GR-8	704+62.5	706+00	Rt.	75	1	1			142.5	5.87
TOTALS				2708.1	2	1	4	3	726.76	107.9
									7.3 Stas.	

PLAN & PROFILE QUANTITIES STA. 694+00 TO STA. 708+00

PLOTTED BY: lminceck
PLOTTED: 08-05-1998 11:56
FROM: PLOT SUBMITTED:05-AUG-1998 11:56
3070U15.DGN
Bpid08459Bdgn3070u15.dgn

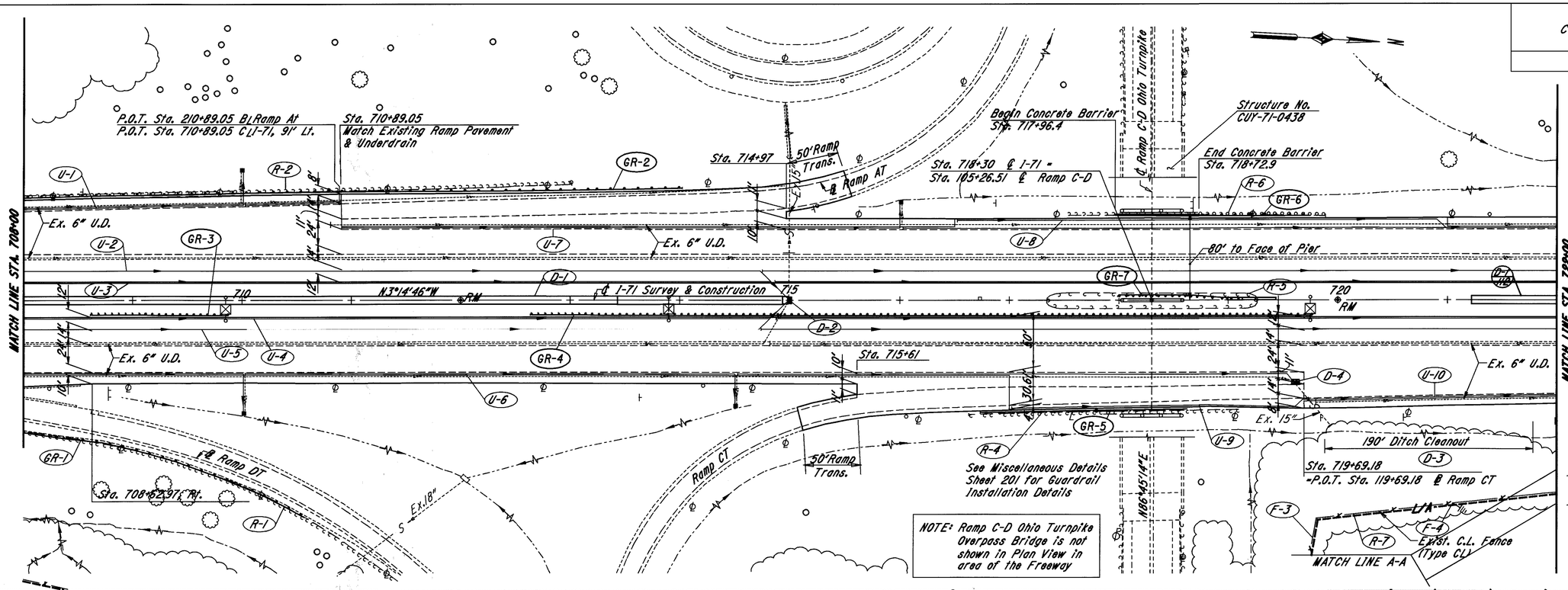

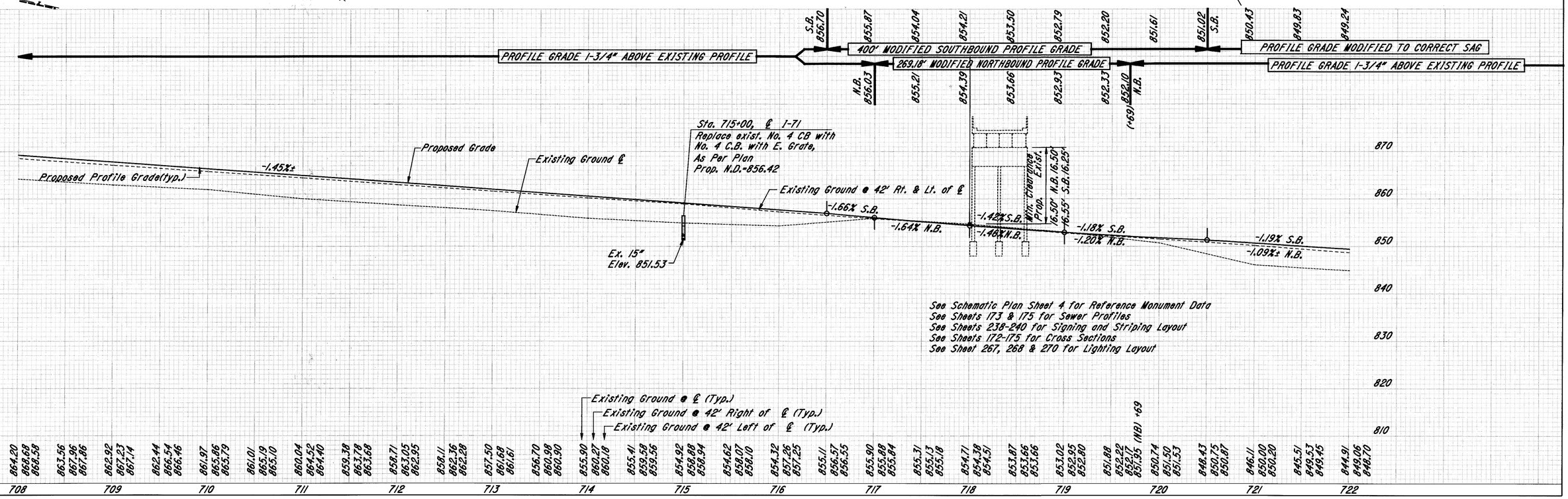

1-71 PLAN & PROFILE STA. 708+00 TO STA. 722+00

PLOTTED BY: fkonopka
PLOTTED: Friday, August 07, 1998 09:14
PLOT SUBMITTED: 07-AUG-1998 09:14
307pp16.dgn
307pp16.dgn
pid08459 307pp16.dgn
Beforsber

707.41 Non-Perforated ASTM D3034, SDR 35, 707.42 or 707.33

DRAINAGE

REF. NO.	STATION FROM	STATION TO	SIDE	603 6" Conduit, Type F ##	604 Catch Basin, No. 4 with E-Grate, As Per Plan	604 Catch Basin, No. 6	605 6" Shallow Pipe U.D. w/Fabric Wrap (18" Deep)	605 6" Shallow Pipe U.D. (30" Deep)	605 6" Shallow Pipe U.D. w/Fabric Wrap (30" Deep)	605 6" Unclassified Underdrain w/Fabric Wrap	605 6" Unclassified Underdrain	670 Ditch Erosion Protection	604 Precast Reinforced Concrete Outlet
				Lin.Ft.	Each	Each	Lin.Ft.	Lin.Ft.	Lin.Ft.	Lin.Ft.	Lin.Ft.	Lin.Ft.	Each
U-1	708+00	710+90	Lt.	25					290	11			1
U-2	708+00	722+00	Lt.	15				1400			13		
U-3	708+00	722+00	Lt.				1400						
U-4	708+00	722+00	Rt.				1400						
U-5	708+00	722+00	Rt.	15				1400			13		
U-6	708+00	719+62	Rt.	60					1162				2
U-7	710+90	722+00	Lt.	15					1110	11			1
U-8	716+50	721+00	Lt.				450						
U-9	717+00	719+69	Rt.				269						
U-10	719+69	722+00	Rt.						231				
D-1	707+50	713+45	℄									495.8	
D-2	713+50	715+00	℄		1							125	
D-4	219+62	219+62	Rt.			1							
TOTALS				130	1	1	3519	2800	2793	22	26	620.8	4

ROADWAY

REF. NO.	STATION FROM	STATION TO	SIDE	202 Guardrail Removed	202 Fence Removed	202	202	203 Ditch Cleanout
				Lin.Ft.	Lin.Ft.			Lin.Ft.
R-1	708+00	711+77	Rt.	422				
R-2	708+00	713+01	Lt.	501				
R-4	716+63	719+10	Rt.	247				
R-5	717+34	719+27	Lt./Rt.	386				
R-6	717+53	719+89	Lt.	236				
R-7	719+80	722+00	Rt.		221			
D-3	719+88	721+78	Rt.					190
TOTALS				1792	221			190

FENCE

REF. NO.	STATION FROM	STATION TO	SIDE	607 Fence, Type CLT	625 Ground Rod
				Lin.Ft.	Each
F-1	719+61		Rt.		1
F-2	719+74		Rt.		1
F-3	719+80	722+00	Rt.	221	
F-4	721+05		Rt.		1
TOTALS				221	3

GUARDRAIL

REF. NO.	STATION FROM	STATION TO	SIDE	606 Guardrail, Type 5	606 Anchor Assembly, Type E-98	606 Anchor Assembly, Type T	606 Bridge Terminal Assembly, Type 1	606 Bridge Terminal Assembly, Type 2	606 Guardrail, Type 5A	606 Guardrail, Barrier Design, Type 5	606 Impact Attenuator Type 1-98	622 Concrete Barrier, Type D, As Per Plan A	203 Linear Grading, As Per Plan	448 3" Asphalt Concrete Intermed. Course Type 1, PG 64-22
				Lin.Ft.	Each	Each	Each	Lin.Ft.	Lin.Ft.	Lin.Ft.	Each	Lin.Ft.	Lin. Ft.	Cu. Yd.
GR-1	708+00	710+50	Rt.	237.5		1								9.26
GR-2	708+00	714+02.52	Lt.	552.52	1									23.09
GR-3	708+60	709+85	Rt.	62.5	1	1							130	5.41
GR-4	712+65	719+77.5	Rt.	650	1	1							720	27.22
GR-5	716+75	718+62.5	Rt.	75	1	1			50					7.72
GR-6	718+01.85	719+75	Lt.	56.25	1		1					69		4.71
GR-7	717+99	719+11.5	Lt.	37.5		1			50	12.5	1		149	4.94
TOTALS				1671.3	5	5	1		100	12.5	1	69	999	82.4
													10 Stas.	

PLAN & PROFILE QUANTITIES STA. 708+00 TO STA. 722+00

PLOTTED BY: lmincek
PLOTTED: 8-5-98 11:57
PLOT SUBMITTED: 05-AUG-1998 11:57
3070U16.DGN
307qu16.dgn
Epid08459
Bdgn
Bforsber

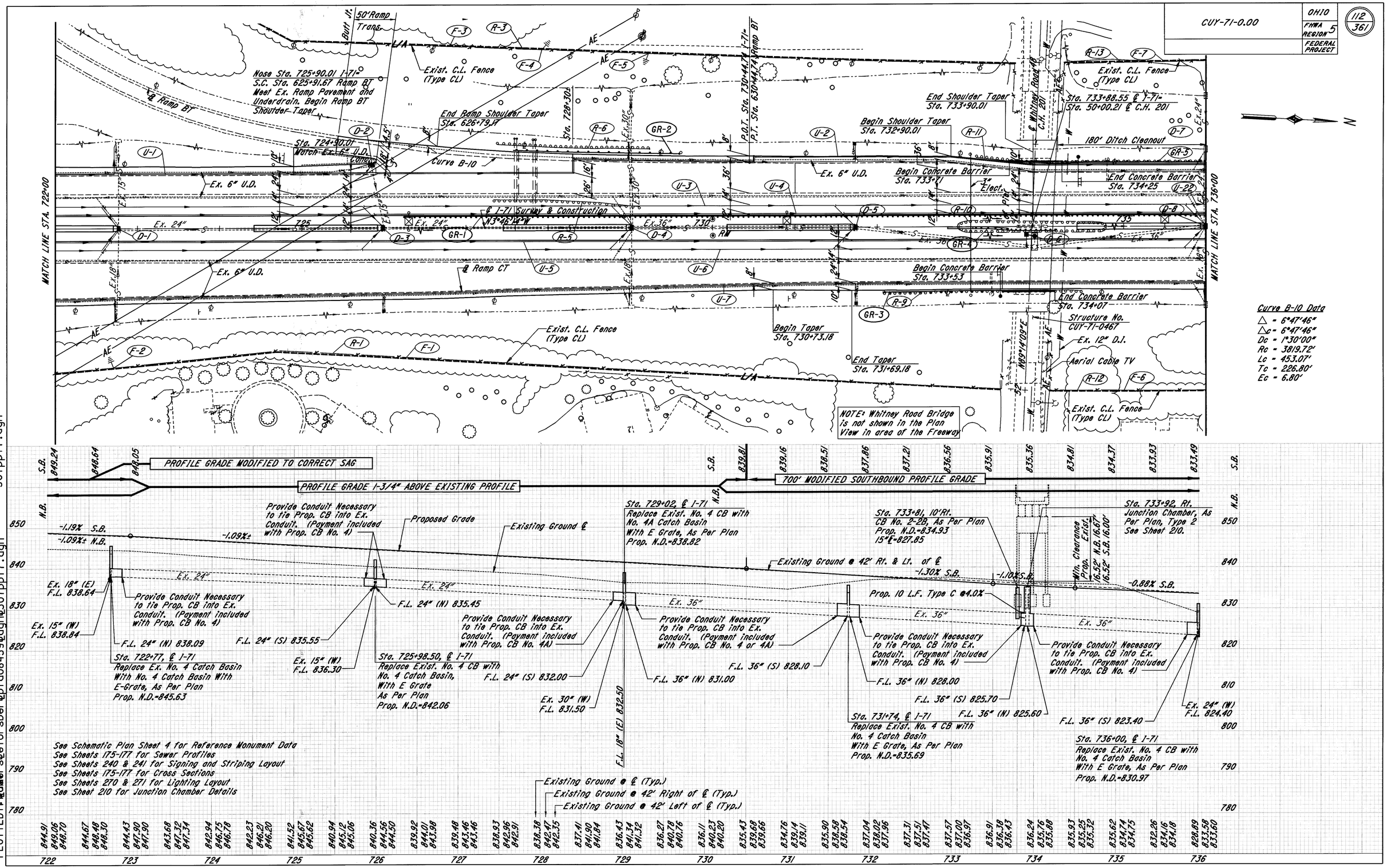

I-71 PLAN & PROFILE STA. 722+00 TO STA. 736+00

PLOTTED BY: fkonopka
PLOTTED: FRAMERS
PLOTTED: 08459 Bdgn 307pp17.dgn
PLOTTED: 08459 Bdgn 307pp17.dgn
PLOT SUBMITTED: 04-AUG-1998 12:04

DRAINAGE

707.41 Non-Perforated ASTM D3034, SDR 35, 707.42 or 707.33

REF. NO.	STATION FROM	STATION TO	SIDE	603 6" Conduit, Type F ##	603 15" Conduit, Type C	603	603	604 Catch Basin, No. 4 with E-Grate, As Per Plan	604 Catch Basin, No. 4A with E-Grate, As Per Plan	604 Catch Basin Reconstructed to Grade	604 Junction Chamber, Type 2, As Per Plan	604 Catch Basin, No. 2-2B, A.P.P.	605 6" Shallow Pipe U.D. w/Fabric Wrap (18" Deep)	605 6" Shallow Pipe U.D. (30" Deep)	605 6" Shallow Pipe U.D. w/Fabric Wrap (30" Deep)	605 6" Unclassified Underdrain w/Fabric Wrap	605 6" Unclassified Underdrain	670 Ditch Erosion Protection	604 Precast Reinforced Concrete Outlet
				Lin.Ft.	Lin.Ft.			Each	Each	Each	Each	Each	Lin.Ft.	Lin.Ft.	Lin.Ft.	Lin.Ft.	Lin.Ft.	Sq.Yd.	Each
U-1	722+00	736+00	Lt.	75											1416	44			2
U-2	730+50	736+00	Lt.										550						
U-3	722+00	736+00	Lt.	75										1400			65		
U-4	722+00	736+00	Lt.										1400						
U-5	722+00	736+00	Rt.										1400						
U-6	722+00	736+00	Rt.	90										1400			78		
U-7	722+00	736+00	Rt.	75											1400	44			3
D-1	721+22	722+77	℄					1										125	
D-2	725+84.5	725+84.5	76.8' Lt.							1									
D-3	724+43.5	725+98.5	℄					1										125	
D-4	727+47	729+02	℄						1									125	
D-5	730+19	731+74	℄					1										125	
D-6	733+92	733+92	14' Rt.								1								
D-8	734+45	736+00	℄					1										125	
D-9	733+81	733+92	10' RT		10							1							
	TOTALS			315	10			4	1	1	1	1	3350	2800	2816	88	143	625	5

ROADWAY

REF. NO.	STATION FROM	STATION TO	SIDE	202 Guardrail Removed	202 Fence Removed	202	202	202	203 Ditch Cleanout
				Lin.Ft.	Lin.Ft.				Lin.Ft.
R-1	720+00	733+63	Rt.		1223				
R-3	724+86	733+75	Lt.		950				
R-5	727+33	729+12	Lt.	179					
R-6	727+37	729+24	Lt.	187					
R-9	732+07	734+50	Rt.	242					
R-10	732+98	734+79	Lt./Rt.	362					
R-11	733+20	736+00	Lt.	282					
R-12	734+02	736+00	Rt.		259				
R-13	734+15	736+00	Lt.		243				
D-7	734+20	736+00	Lt.						180
	TOTALS			1252	2675				180

FENCE

REF. NO.	STATION FROM	STATION TO	SIDE	607 Fence, Type CLT	625 Ground Rod
				Lin.Ft.	Each
F-1	722+00	733+63	Rt.	1223	
F-2	722+71		Rt.		1
F-3	724+86	733+75	Lt.	950	
F-4	727+92		Lt.		1
F-5	729+22		Lt.		1
F-6	734+02	736+00	Rt.	259	
F-7	734+15	736+00	Lt.	243	
	TOTALS			2675	3

GUARDRAIL

REF. NO.	STATION FROM	STATION TO	SIDE	606 Guardrail, Type 5	606 Anchor Assembly, Type E-98	606 Anchor Assembly, Type T	606 Bridge Terminal Assembly, Type 1	622 Guardrail, Type 5A	606 Guardrail, Barrier Design, Type 5	606 Impact Attenuator Type 1-98	606 Concrete Barrier, Type D, As Per Plan A	203 Linear Grading, As Per Plan	448 3" Asphalt Concrete Intermed Course, Type 1, PG 64-22
				Lin.Ft.	Each	Each	Each	Lin.Ft.	Each	Each	Each	Lin. Ft.	Cu. Yd.
GR-1	726+26	736+00	Lt.	950	1	1						1017	37.5
GR-2	727+82	729+57	Lt.	112.5	1	1							7.26
GR-3	732+11.35	734+07	Rt.	93.75	1		1				54		6.10
GR-4	733+19.5	734+07	Rt.	37.5		1		25	12.5	1		124	5.19
GR-5	733+71	735+91.65	Lt.	118.75	1		1				54		6.25
	TOTALS			1312.50	4	3	2	25	12.5	1	108	1141	62.3
												11.4 Stas.	

PLAN & PROFILE QUANTITIES STA. 722+00 TO STA. 736+00

PLOTTED BY: lmincek
PLOTTED: 05-AUG-1998 11:57
PLOT SUBMITTED: 05-AUG-1998 11:57
307QU17.DGN

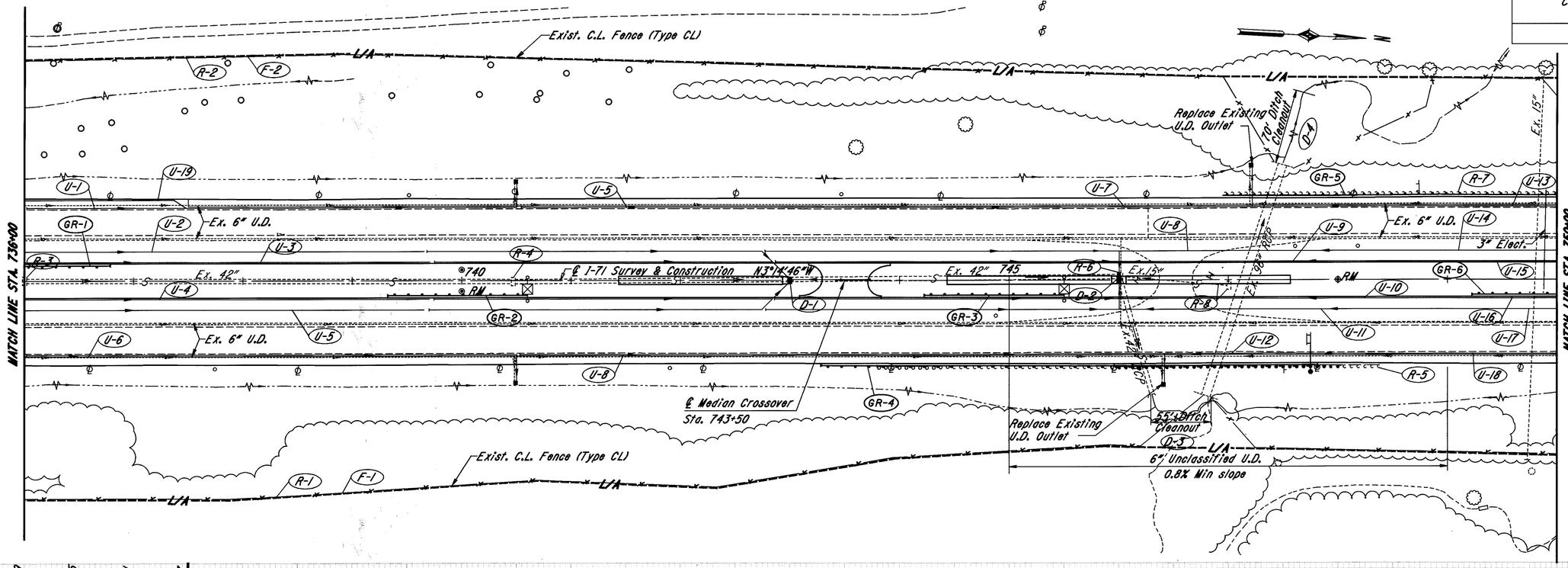

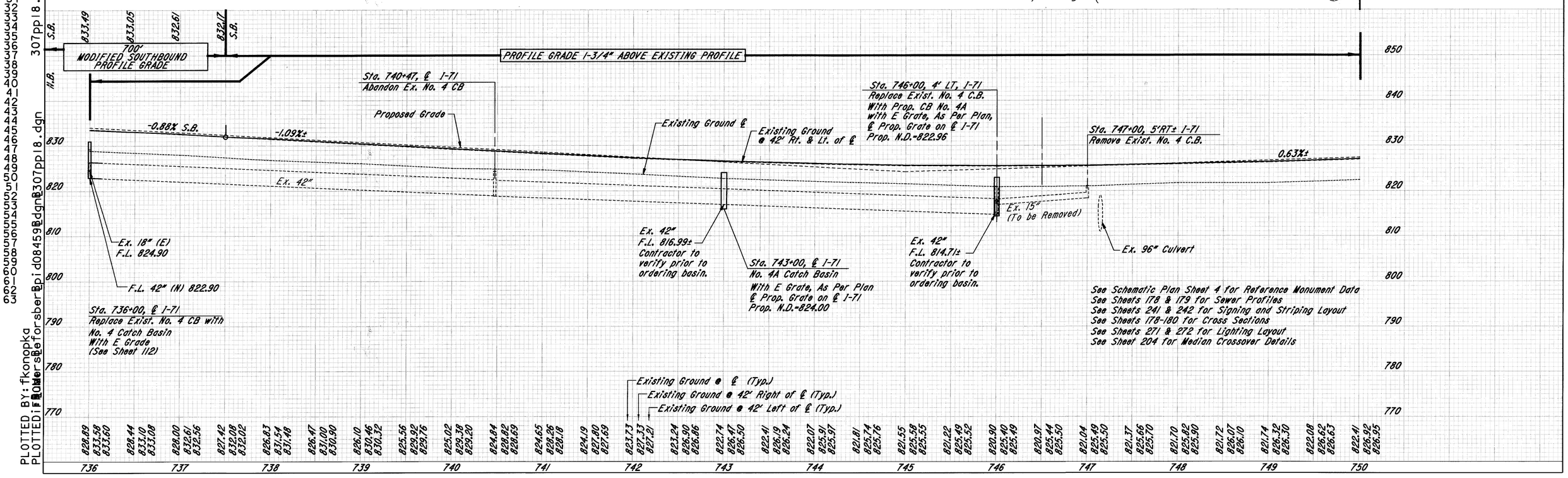

I-71 PLAN & PROFILE STA. 736+00 TO STA. 750+00

PLOTTED BY: Tkonopka
PLOTTED: FRIDAY, AUGUST 14, 1998 12:49
PLOT SUBMITTED: 04-AUG-1998 12:04
307pp18.dgn
307pp18.dgn
307pp18.dgn
pid08459 Beforsber

707.41 Non-Perforated ASTM D3034, SDR 35, 707.42 or 707.33

DRAINAGE

REF. NO.	STATION FROM	STATION TO	SIDE	603 6" Conduit, Type F ## Lin.Ft.	603 Lin.Ft.	604 Catch Basin, No. 4A with E-Grate, As Per Plan Lin.Ft.	604 Lin.Ft.	605 6" Shallow Pipe U.D. w/Fabric Wrap (18" Deep) Each	605 6" Shallow Pipe U.D. (30" Deep) Each	605 6" Shallow Pipe U.D. w/Fabric Wrap (30" Deep) Lin.Ft.	605 6" Unclassified Underdrain w/Fabric Wrap Lin.Ft.	605 6" Unclassified Underdrain Lin.Ft.	670 Ditch Erosion Protection Sq.Yd.	604 Precast Reinforced Concrete Outlet Each
U-1	736+00	745+00	Lt.	15						900	11			1
U-2	736+00	745+00	Lt.	15					900			13		
U-3	736+00	745+00	Lt.					900						
U-4	736+00	745+00	Rt.					900						
U-5	736+00	745+00	Rt.	15					900			13		
U-6	736+00	745+00	Rt.	20						900	11			1
U-7	745+00	749+00	Lt.	30							411			1
U-8	745+00	749+00	Lt.	15								413		
U-9	745+00	749+00	Lt.								400			
U-10	745+00	749+00	Rt.								400			
U-11	745+00	749+00	Rt.	15								413		
U-12	745+00	749+00	Rt.	20							411			1
U-13	749+00	750+00	Lt.							100				
U-14	749+00	750+00	Lt.						100					
U-15	749+00	750+00	Lt.					100						
U-16	749+00	750+00	Rt.					100						
U-17	749+00	750+00	Rt.						100					
U-18	749+00	750+00	Rt.							100				
D-1	741+45	743+00	℄			1							125	
D-2	744+45	747+55	℄			1							250	
TOTALS				145		2		2000	2000	2000	1644	852	375	4

ROADWAY

REF. NO.	STATION FROM	STATION TO	SIDE	202 Guardrail Removed Lin.Ft.	202 Fence Removed Lin.Ft.	202 Catch Basin or Inlet Removed Each	202 Pipe Removed, Under 24" Lin.Ft.	202 Catch Basin Abandoned Each	203 Ditch Cleanout Lin.Ft.
R-1	736+00	750+00	Rt.		1432				
R-2	736+00	750+00	Lt.		1469				
R-4	740+47	740+47	℄					1	
R-5	743+79	748+38	Rt.	459					
R-6	746+00.3	746+00.3	℄						
R-7	746+96	750+00	Lt.	304					
R-8	747+00	747+00	℄			1	100		
D-3	746+29	746+29	Rt.						55
D-4	747+50	747+50	Lt.						70
TOTALS				763	2901	1	100	1	125

FENCE

REF. NO.	STATION FROM	STATION TO	SIDE	607 Fence, Type CLT Lin.Ft.
F-1	736+00	750+00	Rt.	1432
F-2	736+00	750+00	Lt.	1469
TOTALS				2901

GUARDRAIL

REF. NO.	STATION FROM	STATION TO	SIDE	606 Guardrail, Type 5 Lin.Ft.	606 Anchor Assembly, Type E-98 Each	606 Anchor Assembly, Type T Each	203 Linear Grading, As Per Plan Lin. Ft.	448 3" Asphalt Concrete, Intermediate Course, Type 1, PG 64-22 Cu. Yd.
GR-1	736+00	736+76	Lt.	37.5	1		92.5	4.02
GR-2	739+35	740+60	Rt.	62.5	1	1	130	5.41
GR-3	744+25	745+50	Rt.	62.5	1	1	130	5.41
GR-4	743+30	747+80	Rt.	387.5	1	1		17.44
GR-5	746+95	750+00	Lt.	292.5		1		11.29
GR-6	749+25	750+00	Rt.	37.5	1		92.5	4.02
TOTALS				730	5	4	445	47.6
							4.4 Stas.	

PLAN & PROFILE QUANTITIES STA. 736+00 TO STA. 750+00

PLOTTED BY: lmincek
PLOTTED: 08-AUG-1998 11:59
PLOT SUBMITTED: 05-AUG-1998 11:59
307QU18.DGN
PLOTTED: 307qu18.dgn

CUY-71-0.00	OHIO	116
	FHWA REGION 5	361
	FEDERAL PROJECT	

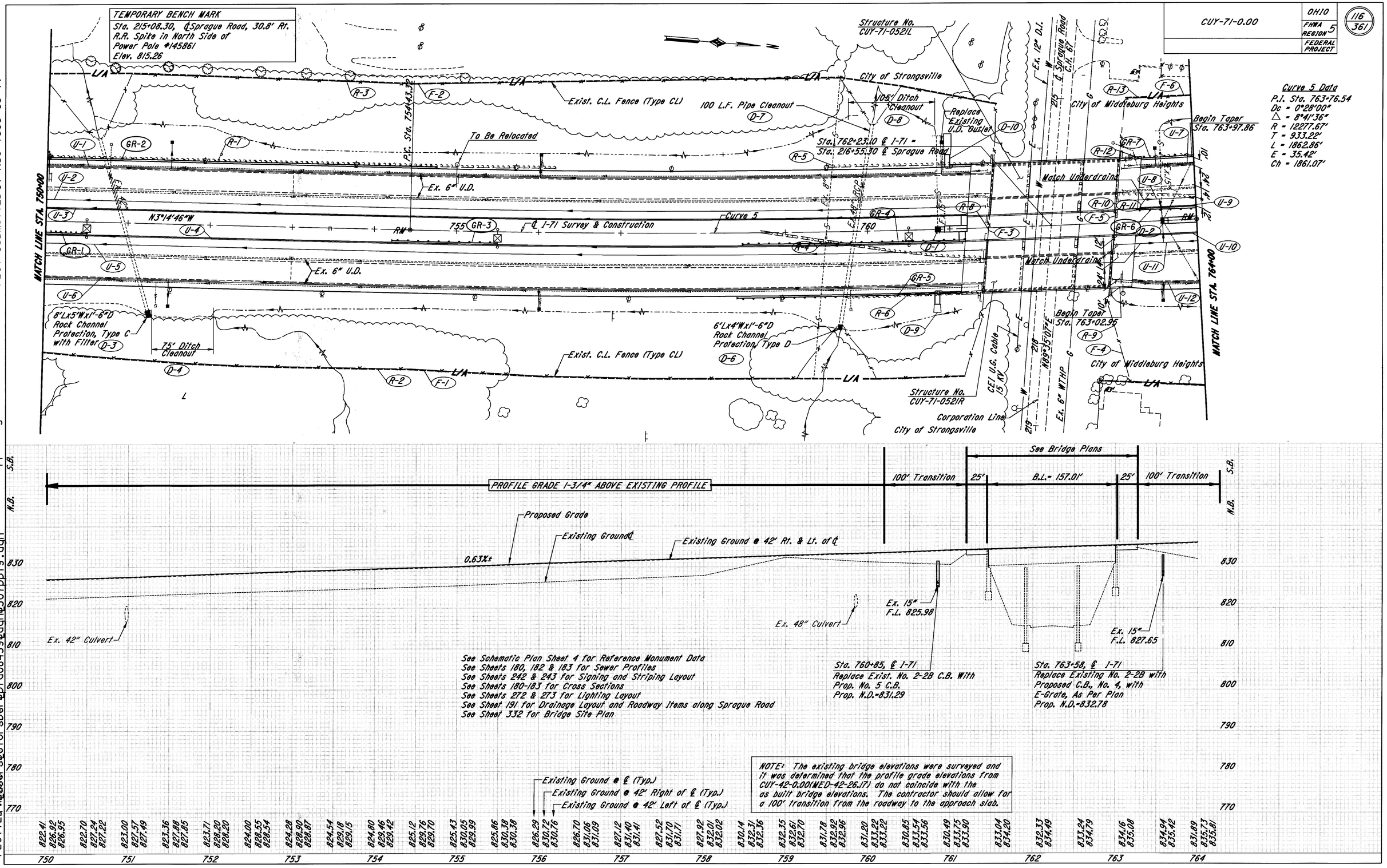

I-71 PLAN & PROFILE STA. 750+00 TO STA. 764+00

PLOTTED BY: fkonopka
PLOTTED: 10-AUG-1998 08:59
PLOT SUBMITTED 07-AUG-1998 09:17
307pp19.dgn

** 707.41 Non-Perforated ASTM D3034, SDR 35, 707.42 or 707.33

DRAINAGE

REF. NO.	STATION FROM	STATION TO	SIDE	601 Rock Channel Protection, Type C With Filter	603 6" Conduit, Type F **	603	604 Catch Basin, No. 4 with E-Grate, As Per Plan	604 Catch Basin, No. 5 As Per Plan	604	604	605 6" Shallow Pipe U.D. w/Fabric Wrap (18" Deep)	605 6" Shallow Pipe U.D. (30" Deep)	605 6" Shallow Pipe U.D. w/Fabric Wrap (30" Deep)	605 6" Unclassified Underdrain w/Fabric Wrap	605 6" Unclassified Underdrain	605	660 Reinforced Sodding	670 Ditch Erosion Protection	838 Gabion, With Additional Coating	604 Precast Reinforced Concrete Outlet
	FROM	TO		Cu.Yd.	Lin.Ft.	Lin.Ft.	Each	Each			Lin.Ft.	Lin.Ft.	Lin Ft	Lin Ft	Lin.Ft.		Lin.Ft.	Sq.Yd.	Cu.Yd.	Each
U-1	750+00	761+51	Lt.		75								1151	33						3
U-2	750+00	761+44	Lt.									1144								
U-3	750+00	761+20	Lt.								1120									
U-4	750+00	761+15	Rt.								1115									
U-5	750+00	761+38	Rt.									1144								
U-6	750+00	761+36	Rt.		45								1136	22						2
U-7	751+51	764+00	Lt.		10								48	52						1
U-8	751+51	764+00	Lt.		15							42			64					
U-9	753+46	764+00	Lt.								42			28						
U-10	753+46	764+00	Rt.								42			33						
U-11	756+02	764+00	Rt.		15							42			71					
U-12	756+02	764+00	Rt.										43	73						1
D-1	761+20	760+85	℄					1										46.7		
D-2	763+58	765+13	℄				1											125		
D-3	751+26	751+26	Rt.	2.2																
D-6	759+65	759+65	Rt.	1.3																
D-9	760+82.50	760+82.50	Rt.														9.3		3.3	
D-10	760+99.50	760+99.50	Lt.														24.7		3.3	
TOTALS				3.5	160		1	1			2319	2372	2378	241	135		34.0	171.7	7	7

ROADWAY

REF. NO.	STATION FROM	STATION TO	SIDE	202 Guardrail Removed	202 Fence Removed	202	202	203 Ditch Cleanout	Special Pipe Cleanout	
	FROM	TO		Lin.Ft.	Lin.Ft.			Lin. Ft.	Lin.Ft.	
R-1	750+00	756+20	Lt.	618						
R-2	750+00	761+39	Rt.		1281					
R-3	750+00	761+56	Lt.		1332					
R-4	758+69	761+41	Lt./Rt.	275						
R-5	759+51	761+53	Lt.	201						
R-6	759+74	761+37	Rt.	164						
R-8	761+47	761+47	Lt./Rt.		67					
R-9	762+90	764+00	Rt.		208					
R-10	763+00	763+00	Lt./Rt.		67					
R-11	763+05	764+00	Lt.	94						
R-12	763+09	764+00	Lt.	89						
R-13	763+09	764+00	Lt.		152					
D-4	751+29	752+04	Rt.					75		
D-7	760+08	760+08	Rt.						100	
D-8	759+76	760+81	Lt.					105		
TOTALS				1441	3107			180	100	

FENCE

REF. NO.	STATION FROM	STATION TO	SIDE	607 Fence, Type CLT	607 Gate, Type CL, As Per Plan
	FROM	TO		Lin.Ft.	Each
F-1	750+00	761+39	Rt.	1281	
F-2	750+00	761+56	Lt.	1332	
F-3	761+47	761+47	Lt./Rt.	20	1
F-4	762+90	764+00	Rt.	208	
F-5	763+00	763+00	Lt./Rt.	20	1
F-6	763+09	764+00	Lt.	152	
TOTALS				3013	2

GUARDRAIL

REF. NO.	STATION FROM	STATION TO	SIDE	606 Guardrail, Type 5	606 Anchor Assembly, Type E-98	606 Anchor Assembly, Type T	606 Bridge Terminal Assembly, Type 1	606 Bridge Terminal Assembly, Type 2	203 Linear Grading, As Per Plan	448 3" Asphalt Concrete, Intermediate Course, Type 1, PG 64-22
	FROM	TO		Lin.Ft.	Each	Each	Each	Each	Lin. Ft.	Cu.Yd.
GR-1	750+00	750+50	Rt.	25		1			42.5	1.39
GR-2	750+00	754+70	Lt.	420	1					18.19
GR-3	754+25	755+50	Rt.	62.5	1	1			130.0	5.41
GR-4	758+51.38	761+20.13	Rt.	218.75	1		1		273.7	10.73
GR-5	758+44.35	761+13.10	Rt.	218.75	1		1			10.73
GR-6	763+26.12	764+00	Lt.	73.88			1		78.9	2.74
GR-7	763+33.15	764+00	Lt.	66.85			1			2.48
TOTALS				1010.7	4	2	4		525	51.7
									5.2 Stas.	

PLAN & PROFILE QUANTITIES STA. 750+00 TO STA. 764+00

PLOT SUBMITTED:05-AUG-1998 12:15
PLOTTED BY: lmincek
PLOTTED IN: 307qu19.dgn
PLOTTED FROM: pid08459Bdgnl307qu19.dgn
307QU19.DGN

CUY-71-0.00	OHIO	118/361
	FHWA REGION 5	
	FEDERAL PROJECT	

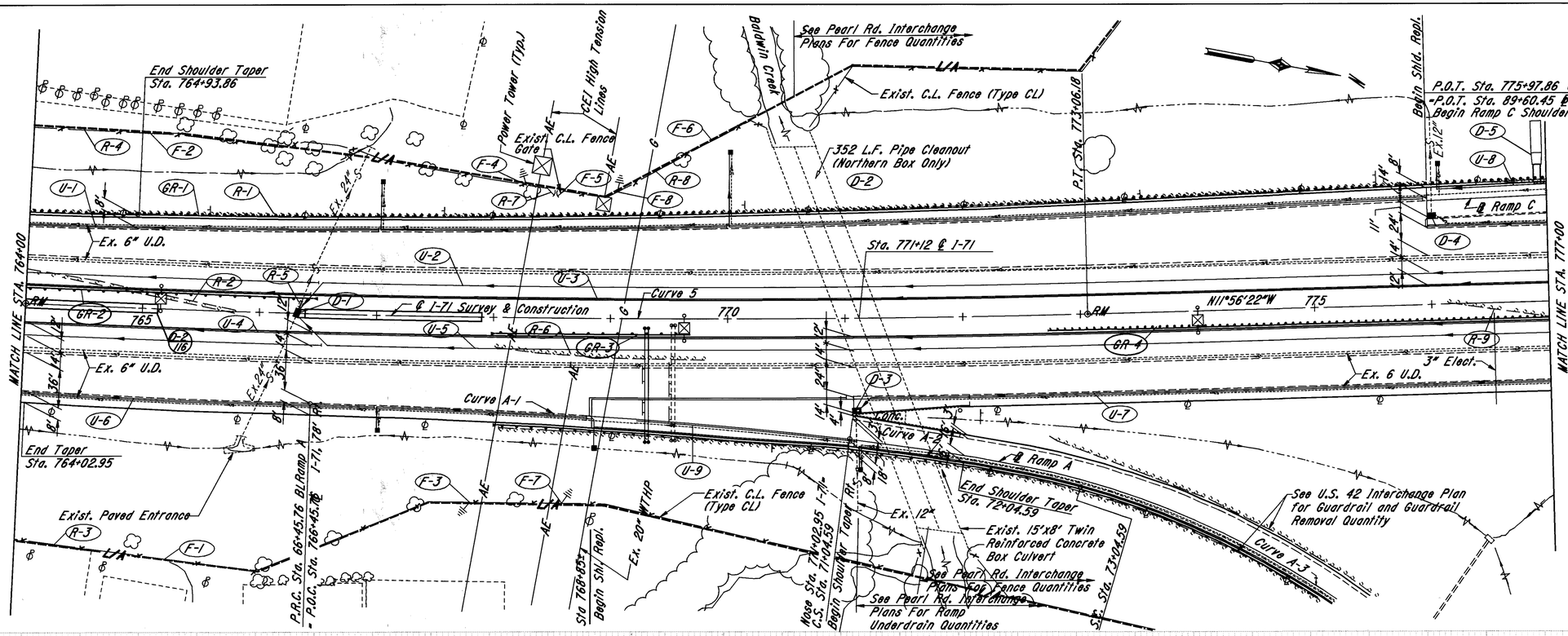

Curve A-1 Data

△ = 4°35'18"
D = 1°00'00"
R = 5729.58'
T = 229.54'
L = 458.83'
E = 4.60'

Curve A-2 Data

△ = 9°00'00"
La = 200.00'
θa = 7°00'00"
Pa = 2.04'
T1 = 126.16'
T2 = 74.25'
△1 = D1 = 1°00'00"
△2 = D2 = 8°00'00"
R1 = 5729.58'
R2 = 716.20'

Curve A-3 Data

△ = 32°55'42"
△a = 24°55'42"
Dc = 8°00'00"
Rc = 716.20'
Lc = 311.60'
Tc = 158.31'
Ec = 17.29'
Ls1 = 0.00'
Ls2 = 200.00'
θs2 = 8°00'00"
P2 = 2.33'
K2 = 99.94'
Xc2 = 199.61'
Yc2 = 9.30'
LT2 = 133.47'
ST2 = 66.79'
Ts1 = 215.94'
Ts2 = 308.00'

Curve 5 Data

P.I. Sta. 763+76.54
Dc = 0°28'00"
△ = 8°41'36"
R = 12277.67'
T = 933.22'
L = 1862.86'
E = 35.42'
Ch = 1861.07'

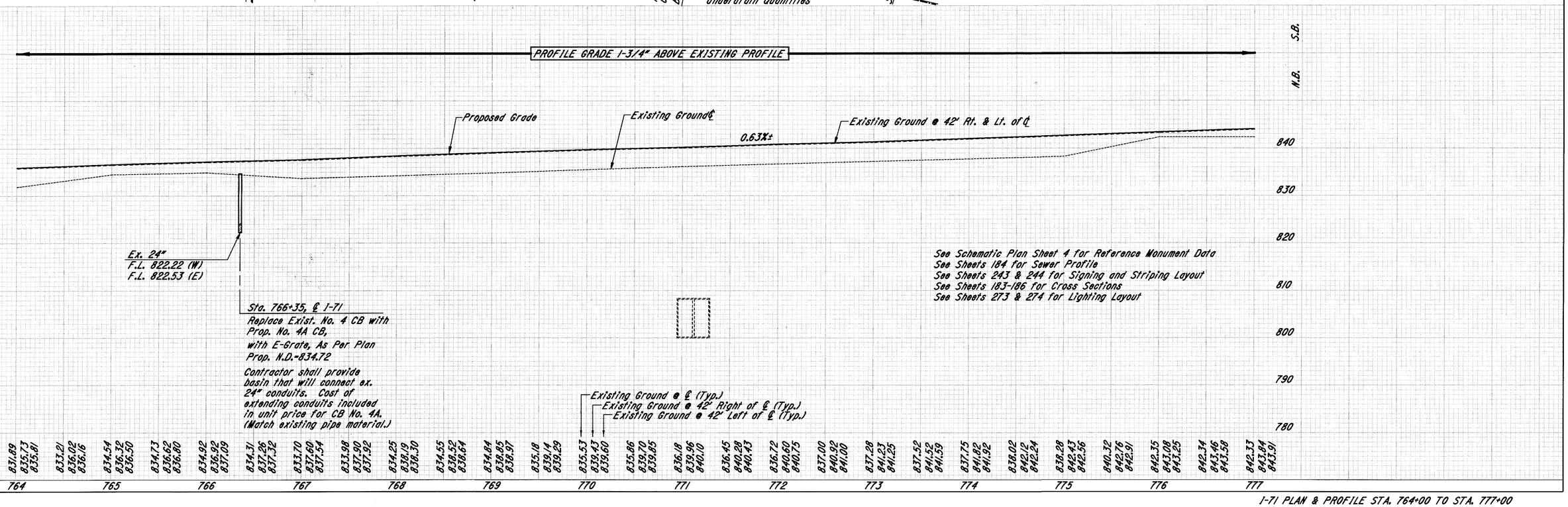

I-71 PLAN & PROFILE STA. 764+00 TO STA. 777+00

PLOTTED BY: fkonopka
PLOTTED: 06-AUG-1998 09:07
PLOT SUBMITTED 06-AUG-1998 09:07
307pp20.dgn

707.41 Non-Perforated ASTM D3034, SDR 35, 707.42 or 707.33

DRAINAGE

REF. NO.	STATION FROM	STATION TO	SIDE	603 6" Conduit, Type F ##		604 Catch Basin, No. 4A with E-Grate, As Per Plan	604 Catch Basin Reconstructed to Grade		605 6" Shallow Pipe U.D. w/Fabric Wrap (18" Deep)	605 6" Shallow Pipe U.D. (30" Deep)	605 6" Shallow Pipe U.D. w/Fabric Wrap (30" Deep)	605 6" Unclassified Underdrain w/Fabric Wrap	605 6" Unclassified Underdrain	660 Reinforced Sodding	670 Ditch Erosion Protection	838 Gabions with Additional Coatings	604 Precast Reinforced Concrete Outlet
				Lin.Ft.		Each	Each		Lin.Ft.	Lin.Ft.	Lin.Ft.	Lin.Ft.	Lin.Ft.	Sq. Yd.	Sq.Yd.	Cu. Yd.	Each
U-1	764+00	775+97	Lt.	85							1197	22					2
U-2	764+00	777+00	Lt.	15						1300			13				
U-3	764+00	777+00	Lt.						1300								
U-4	764+00	777+00	Rt.						1300								
U-5	764+00	777+00	Rt.	15						1300			13				
U-6	764+00	768+85	Rt.								485						
U-7	768+85	777+00	Rt.	20							815	25					1
U-8	775+97	777+00	Lt.	15							103						1
U-9	768+85	771+00	Lt.	10							215	11					1
D-1	766+35	766+35	℄			1									125		
D-3	771+09	771+09	79.4' Rt.				1										
D-4	776+02	776+02	76.3' Lt.				1										
D-5	776+84.2	776+84.2	Lt.											36.2		3.3	
	TOTALS			160		1	2		2600	2600	2815	58	26	36.2	125	3.3	5

ROADWAY

REF. NO.	STATION FROM	STATION TO	SIDE	202 Guardrail Removed	202 Fence Removed	202 Gate Removed	202 Catch Basin or Inlet Removed		Special Pipe Cleanout
				Lin.Ft.	Lin.Ft.	Each	Each		Lin.Ft.
R-1	764+00	777+00	Lt.	1294					
R-2	764+00	765+80	Lt.	182					
R-3	764+00	771+61	Rt.		816				
R-4	764+00	768+45	Lt.		444				
R-5	766+35	766+35	℄				1		
R-6	768+01	769+81	Rt.	181					
R-7	768+45	768+59	Lt.			1			
R-8	768+59	770+32	Lt.		190				
R-9	776+13	777+00	Rt.	88					
D-2	770+68	771+88	Lt.						352
	TOTALS			1745	1450	1	1		352

FENCE

REF. NO.	STATION FROM	STATION TO	SIDE	607 Fence, Type CLT	607 Gate, Type CL, As Per Plan	625 Ground Rod
				Lin.Ft.	Each	Each
F-1	764+00	771+61	Rt.	816		
F-2	764+00	768+45	Lt.	444		
F-3	767+82	767+82	Rt.			1
F-4	768+27	768+27	Lt.			1
F-5	768+45	768+59	Lt.		1	
F-6	768+59	770+32	Lt.	190		
F-7	768+60	768+60	Rt.			1
F-8	769+05	769+05	Lt.			1
	TOTALS			1450	1	4

GUARDRAIL

REF. NO.	STATION FROM	STATION TO	SIDE	606 Guardrail, Type 5	606 Anchor Assembly, Type E-98	606 Anchor Assembly, Type T	203 Linear Grading, As Per Plan	448 3" Asphalt Concrete Intermediate Course, Type 1, PG 64-22
				Lin.Ft.	Each	Each	Lin. Ft.	Cu.Yd.
GR-1	764+00	777+00	Lt.	1300				48.15
GR-2	764+00	766+44.87	Lt.	194.87	1		249.87	9.85
GR-3	768+02.5	769+65	Rt.	100	1	1	167.5	6.80
GR-4	772+73.85	777+00	Rt.	376.15	1		431.15	16.56
	TOTALS			1971	3	1	849	81.4
							8.5 Stas.	

PLAN & PROFILE QUANTITIES STA. 764+00 TO STA. 777+00

PLOTTED BY: lmincek
PLOTTED ON: Tue Aug 05, 1998 12:01
PLOT SUBMITTED:05-AUG-1998 12:01
307QU20.DGN

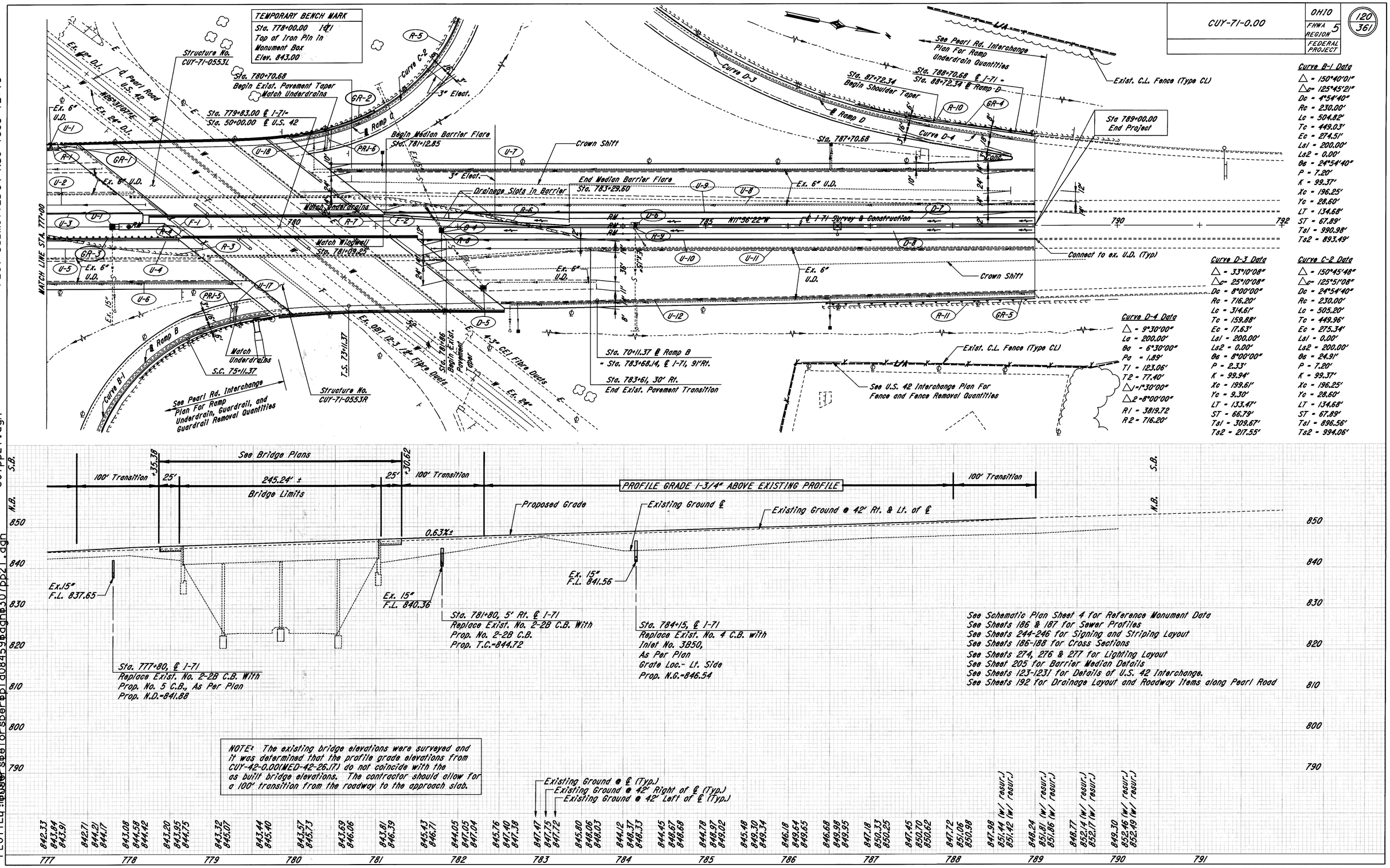

I-71 PLAN & PROFILE STA. 777+00 TO STA. 792+00

PLOTTED BY:fkonopka
PLOTTED :FROM:sbeforsber
PLOT SUBMITTED 04-AUG-1998 12:16
307pp21.dgn
B307pp21.dgn
Bpid08459B.dgn

DRAINAGE

707.41 Non-Perforated ASTM D3034, SDR 35, 707.42 or 707.33

REF. NO.	STATION FROM	STATION TO	SIDE	603 6" Conduit, Type F ##			604 Inlet, No. 3B50	604 Catch Basin, No. 2-2B	604 Catch Basin, No. 5, As Per Plan	604 Catch Basin, No. 6	605 6" Shallow Pipe U.D. w/Fabric Wrap (18" Deep)	605 6" Shallow Pipe U.D. (30" Deep)	605 6" Shallow Pipe U.D. w/Fabric Wrap (30" Deep)	605 6" Unclassified Underdrain w/Fabric Wrap	605 6" Unclassified Underdrain		670 Ditch Erosion Protection	604 Precast Reinforced Concrete Outlet
				Lin.Ft.			Each	Each	Each	Each	Lin.Ft.	Lin.Ft.	Lin.Ft.	Lin.Ft.	Lin.Ft.			Each
U-1	777+00	777+14	Lt.										14					
U-2	777+00	778+20	Lt.									120						
U-3	777+00	778+13	Lt.								113							
U-4	777+00	778+60	Rt.								160							
U-5	777+00	778+90	Rt.									190						
U-6	777+00	779+22	Rt.										222					
U-7	780+49	789+00	Lt.	40									791	82				2
U-8	781+00	789+00	Lt.	15								740			73			
U-9	781+10	789+00	Lt.								735			55				
U-10	781+55	789+00	Rt.								720			25				
U-11	781+67	789+00	Rt.	15								720			26			
U-12	782+53	789+00	Rt.	60									627	42				2
U-17	74+55	74+55	Rt.											23				
U-18	85+13	85+13	Lt.											25				
D-1	777+80	778+60	℄						1								71.7	
D-3	781+74.14	781+74.14	9.47' Lt.															
D-4	781+80	781+80	5' Rt.					1										
D-5	782+30.33	782+30.33	75' Rt.							1								
D-6	784+15	784+15	℄				1											
D-7	781+89	789+00	Lt.														591.5	
D-8	781+80	789+00	Rt.														600	
TOTALS				130			1	1	1	1	1728	1770	1654	252	99		1263.2	4

ROADWAY

REF. NO.	STATION FROM	STATION TO	SIDE	202 Guardrail Removed	202 Fence Removed	202 Catch Basin or Inlet Removed	202 Pipe Removed, 24" And Under	
				Lin.Ft.	Lin.Ft.	Each	Lin Ft.	
R-1	777+00	777+24	Lt.	24				
R-2	777+80	777+80	℄			1	5	
R-3	777+00	778+92	Rt.	198				
R-4	778+65	778+65	Lt./Rt.		114			
R-5	779+86.6	781+92	Lt.	266				
R-6	780+70	783+36	Lt./Rt.	273				
R-7	781+00	781+00	Lt./Rt.		114			
R-8	781+80	781+80	5' Rt.			1	23	
R-9	784+14	784+14	℄			1	4	
R-10	784+43	789+00	Lt.	486				
R-11	786+41	789+00	Rt.	258				
TOTALS				1505	228	3	32	

QUANTITIES FOR PRESSURE RELIEF JOINTS

REF. NO.	STATION FROM	STATION TO	SIDE	202 PAVEMENT REMOVED*	305 9" CONCRETE BASE, A.P.P.	SPECIAL Pressure Relief Joint, Type A
				SQ. YD.	SQ. YD.	Lin.Ft.
PRJ-5	74+55	74+55	Rt.	89	89	22
PRJ-6	85+13	85+13	Lt.	89	89	22
TOTALS				178	178	44

* 16' x 50' ±

FENCE

REF. NO.	STATION FROM	STATION TO	SIDE	607 Fence, Type CLT
				Lin.Ft.
F-1	778+65	778+65	Lt./Rt.	41
F-2	781+00	781+00	Lt./Rt.	41
TOTALS				82

GUARDRAIL

REF. NO.	STATION FROM	STATION TO	SIDE	606 Guardrail, Type 5	606 Anchor Assembly, Type E-98	606 Anchor Assembly, Type T	606 Bridge Terminal Assembly, Type 1	606 Bridge Terminal Assembly, Type 2	203 Linear Grading, As Per Plan	448 3" Asphalt Concrete Intermed Course, Type 1, PG 64-22
				Lin.Ft.	Each	Each	Each	Each	Lin. Ft.	Cu. Yd.
GR-1	777+00	777+15	Lt.	15				1		1.00
GR-2	779+90.54	780+95	Lt.	56.25	1		1			4.71
GR-3	777+00	778+55.10	Rt.	155.1			1		155.1	5.74
GR-4	87+00	89+00	Lt.	187.5		1				8.19
GR-5	786+50	789+00	Rt.	200	1					10.04
TOTALS				614	2	1	2	1	155.1	29.7
									1.6 Stas.	

PLAN & PROFILE QUANTITIES STA. 777+00 TO STA. 792+00

PLOTTED BY: lmincek
PLOTTED: 12:02
PLOT SUBMITTED:05-AUG-1998 12:02
307QU21.DGN
Bpid08459Bdgn307qu21.dgn

PLOT SUBMITTED:04-AUG-1998 12:19

307INT01,DGN

PLOTTED BY: fkonopka

PLOTTED FROM: ...pid08459Bdgn\B307int01.dgn

S.R. 82 INTERCHANGE PLAN - RAMPS A,B,C & D

PLOTTED BY: fkonopka
PLOTTED FROM: 307int02.dgn
PLOT SUBMITTED:04-AUG-1998 12:20
307INT02.DGN

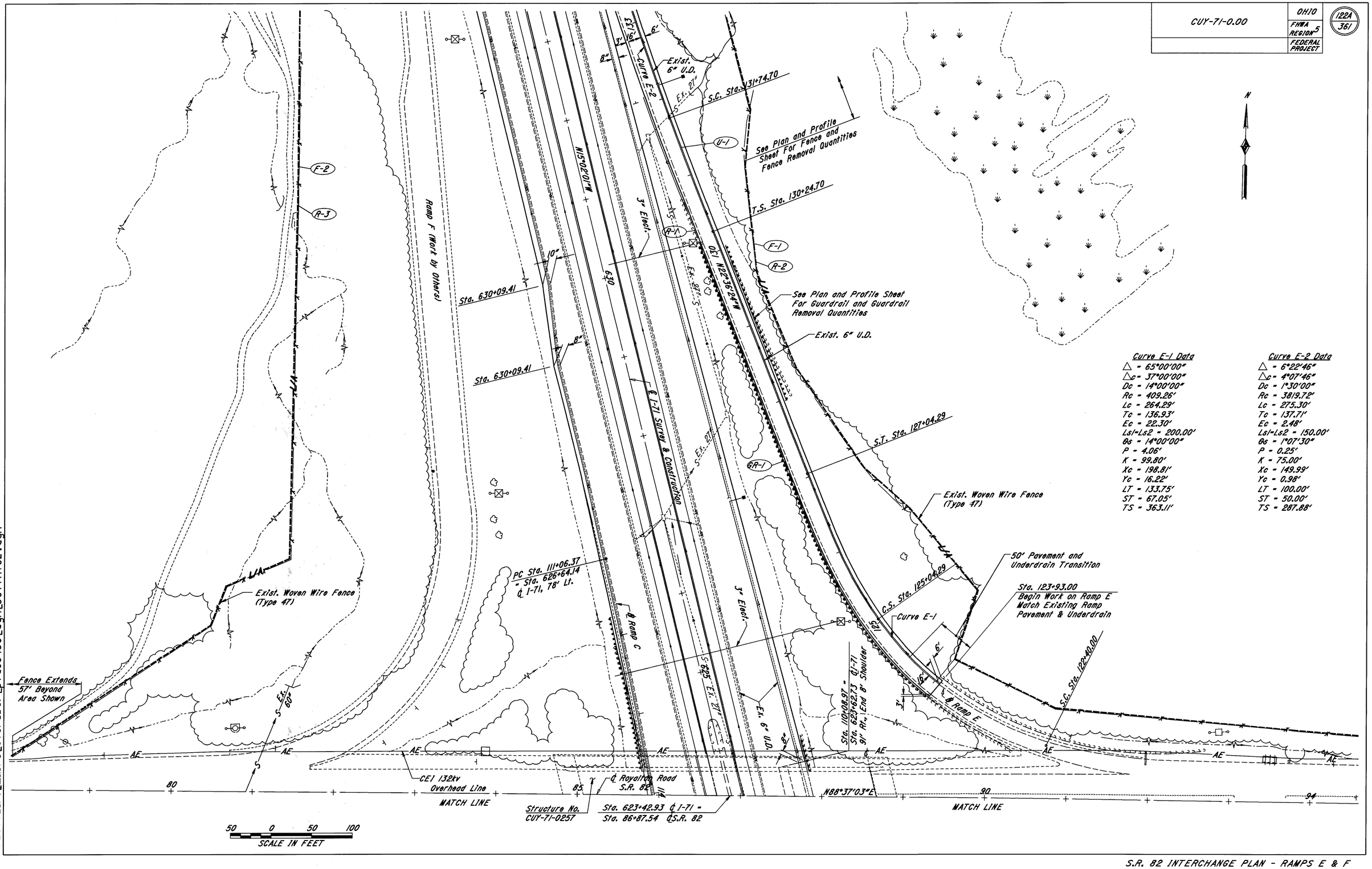

Curve E-1 Data	Curve E-2 Data
△ = 65°00'00"	△ = 6°22'46"
△c = 37°00'00"	△c = 4°07'46"
Dc = 14°00'00"	Dc = 1°30'00"
Rc = 409.26'	Rc = 3819.72'
Lc = 264.29'	Lc = 275.30'
Tc = 136.93'	Tc = 137.71'
Ec = 22.30'	Ec = 2.48'
Ls1=Ls2 = 200.00'	Ls1=Ls2 = 150.00'
θs = 14°00'00"	θs = 1°07'30"
P = 4.06'	P = 0.25'
K = 99.80'	K = 75.00'
Xc = 198.81'	Xc = 149.99'
Yc = 16.22'	Yc = 0.98'
LT = 133.75'	LT = 100.00'
ST = 67.05'	ST = 50.00'
TS = 363.11'	TS = 287.88'

S.R. 82 INTERCHANGE PLAN - RAMPS E & F

S.R. 82 INTERCHANGE QUANTITIES - RAMPS A, B, C, & D

ROADWAY				202	
REF. NO.	STATION FROM	STATION TO	SIDE	Guardrail Removed	Fence Removed
				Lin. Ft.	Lin. Ft.
R-1	115+09	122+90	Rt.		844
R-2	115+35	126+17	Lt.		1395
R-3	121+36	124+50	Lt.	325	
	TOTALS			325	2239

GUARDRAIL				606	
REF. NO.	STATION FROM	STATION TO	SIDE	Guardrail, Type 5	Anchor Assembly, Type T
				Lin. Ft.	Each
GR-1	122+87.5	124+50	Lt.	150	1
	TOTALS			150	1

FENCE				607
REF. NO.	STATION FROM	STATION TO	SIDE	Fence, Type CLT
				Lin. Ft.
F-1	115+09	122+90	Rt.	844
F-2	115+35	126+17	Lt.	1395
	TOTALS			2239

** 707.41 Non-Perforated ASTM D3034, SDR 35, 707.42 or 707.33

DRAINAGE				603	605		604
REF. NO.	STATION FROM	STATION TO	SIDE	6" Conduit, Type F **	6" Shallow Pipe Underdrain, 30" Depth with Fabric Wrap	6" Unclassified Pipe Underdrain with Fabric Wrap	Precast Reinforced Concrete Outlet
				Lin. Ft.	Lin. Ft.	Lin. Ft.	Each
U-1	110+53	122+40			870		
U-2	115+64	121+00		10	513	16	
U-3	110+00	117+00			700		
U-4	117+00	120+00		10		328	1
U-5	120+00	124+50			400	50	
	TOTALS			20	2483	394	1

S.R. 82 INTERCHANGE QUANTITIES - RAMPS E & F

ROADWAY				202	
REF. NO.	STATION FROM	STATION TO	SIDE	Guardrail Removed	Fence Removed
				Lin. Ft.	Lin. Ft.
R-1	123+93	130+77	Lt.	691	
R-2	124+00	130+92	Rt.		712
R-3	77+48 S.R. 82	635+00 I-71	Lt.		1255
	TOTALS			691	1967

GUARDRAIL				606		448
REF. NO.	STATION FROM	STATION TO	SIDE	Guardrail, Type 5	Anchor Assembly, Type T	3" Asphalt Concrete Intermediate Course, Type 1, PG 64-22
				Lin. Ft.	Each	Cu. Yd.
GR-1	123+93	130+10	Lt.	612.5	1	23.92
	TOTALS			612.5	1	23.9

FENCE				607
REF. NO.	STATION FROM	STATION TO	SIDE	Fence, Type CLT
				Lin. Ft.
F-1	124+00	130+92	Rt.	712
F-2	77+48 S.R. 82	635+00 I-71	Lt.	1255
	TOTALS			1967

** 707.41 Non-Perforated ASTM D3034, SDR 35, 707.42 or 707.33

DRAINAGE				603	605		604
REF. NO.	STATION FROM	STATION TO	SIDE	6" Conduit, Type F **	6" Shallow Pipe Underdrain, 30" Depth with Fabric Wrap	6" Unclassified Pipe Underdrain with Fabric Wrap	Precast Reinforced Concrete Outlet
				Lin. Ft.	Lin. Ft.	Lin. Ft.	Each
U-1	123+93.5	132+17.5		25	824	20	1
	TOTALS			25	824	20	1

PLOTTED BY: fkonopka
PLOTTED FROM: i:\Users\Beforsber\pid08459\dgn\qusr82.dgn QUSR82.DGN
PLOT SUBMITTED:04-AUG-1998 12:21

CUY-71-0.00	OHIO	123/361
	FHWA REGION 5	
	FEDERAL PROJECT	

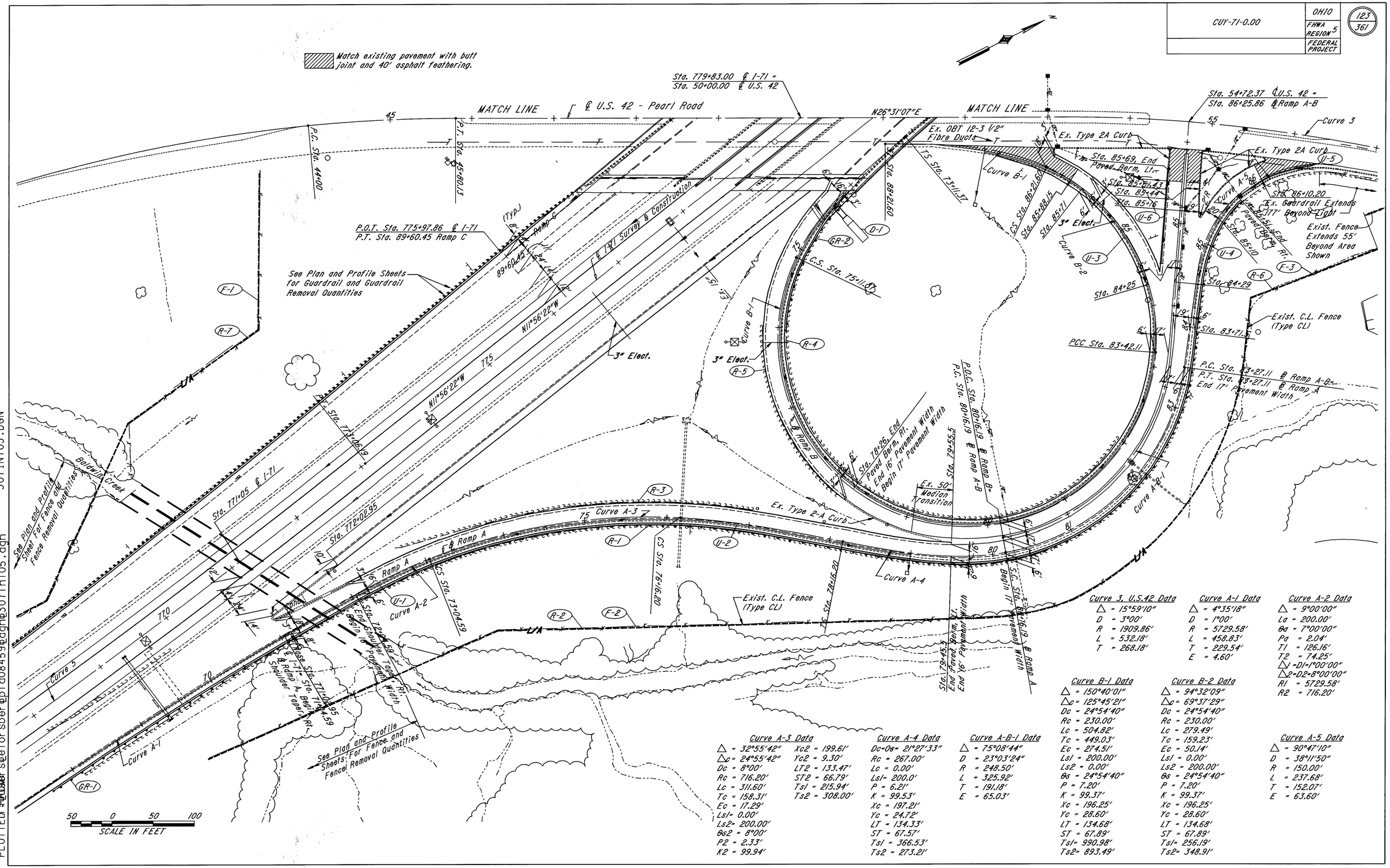

Curve 3, U.S.42 Data

Δ = 15°59'10"
D = 3°00'
R = 1909.86'
L = 532.18'
T = 268.18'

Curve A-1 Data

Δ = 4°35'18"
D = 1°00'
R = 5729.58'
L = 458.83'
T = 229.54'
E = 4.60'

Curve A-2 Data

Δ = 9°00'00"
La = 200.00'
θa = 7°00'00"
Pa = 2.04'
T1 = 126.16'
T2 = 74.25'
Δ1 = D1 = 1°00'00"
Δ2 = D2 = 8°00'00"
R1 = 5729.58'
R2 = 716.20'

Curve A-3 Data

Δ = 32°55'42"
Δc = 24°55'42"
Dc = 8°00'
Rc = 716.20'
Lc = 311.60'
Tc = 158.31'
Ec = 17.29'
Lsl = 0.00'
Ls2 = 200.00'
θs2 = 8°00'
P2 = 2.33'
K2 = 99.94'
Xc2 = 199.61'
Yc2 = 9.30'
LT2 = 133.47'
ST2 = 66.79'
Tsl = 215.94'
Ts2 = 308.00'

Curve A-4 Data

Dc = Ds = 21°27'33"
Rc = 267.00'
Lc = 0.00'
Lsl = 200.0'
P = 6.21'
K = 99.53'
Xc = 197.21'
Yc = 24.72'
LT = 134.33'
ST = 67.57'
Tsl = 366.53'
Ts2 = 273.21'

Curve A-B-1 Data

Δ = 75°08'44"
D = 23°03'24"
R = 248.50'
L = 325.92'
T = 191.18'
E = 65.03'

Curve B-1 Data

Δ = 150°40'01"
Δc = 125°45'21"
Dc = 24°54'40"
Rc = 230.00'
Lc = 504.82'
Tc = 449.03'
Ec = 274.51'
Lsl = 200.00'
Ls2 = 0.00'
θs = 24°54'40"
P = 7.20'
K = 99.37'
Xc = 196.25'
Yc = 28.60'
LT = 134.68'
ST = 67.89'
Tsl = 990.98'
Ts2 = 893.49'

Curve B-2 Data

Δ = 94°32'09"
Δc = 69°37'29"
Dc = 24°54'40"
Rc = 230.00'
Lc = 279.49'
Tc = 159.23'
Ec = 50.14'
Lsl = 0.00'
Ls2 = 200.00'
θs = 24°54'40"
P = 7.20'
K = 99.37'
Xc = 196.25'
Yc = 28.60'
LT = 134.68'
ST = 67.89'
Tsl = 256.19'
Ts2 = 348.91'

Curve A-5 Data

Δ = 90°47'10"
D = 38°11'50"
R = 150.00'
L = 237.68'
T = 152.07'
E = 63.60'

U.S. 42 INTERCHANGE PLAN - RAMPS A & B

PLOTTED BY: fkonopka
PLOTTED ON: Wed Aug 05, 1998 12:22
PLOT SUBMITTED: 04-AUG-1998 12:22
307INT05.DGN
307int05.dgn
PLOT SCALE: 1:20
ROUTE: 42
PID: 08459
BRIDGE: 307int05.dgn

CUY-71-0.00	OHIO FHWA REGION 5	123A 361

Curve C-D-1 Data
△ = 80°23'33"
D = 23°03'24"
R = 248.50'
L = 348.67'
T = 209.97'
E = 76.83'

Curve C-1 Data
△ = 89°11'33"
△c = 64°16'53"
Dc = 24°54'40"
Rc = 230.00'
Lc = 258.04'
Tc = 144.51'
Ec = 41.63'
Lsl= 200.00'
Ls2= 0.00'
θs = 24.91'
P = 7.20'
K = 99.37'
Xc = 196.25'
Yc = 28.60'
LT = 134.68'
ST = 67.89'
Tsl= 326.05'
Ts2= 233.98'

Curve C-2 Data
△ = 150°45'48"
△c = 125°51'08"
Dc = 24°54'40"
Rc = 230.00'
Lc = 505.20'
Tc = 449.96'
Ec = 275.34'
Lsl= 0.00'
Ls2= 200.00'
θs = 24.91'
P = 7.20'
K = 99.37'
Xc = 196.25'
Yc = 28.60'
LT = 134.68'
ST = 67.89'
Tsl= 896.56'
Ts2= 994.06'

Curve D-2 Data
Dc=Ds= 21°27'33"
Rc = 267.00'
Lc = 0.00'
Lsl= 200.00'
P = 6.21'
K = 99.53'
Xc = 197.21'
Yc = 24.72'
LT = 134.33'
ST = 67.57'
Tsl= 366.53'
Ts2= 273.21'

Curve D-3 Data
△ = 33°10'08"
△c = 25°10'08"
Dc = 8°00'
Rc = 716.20'
Lc = 314.61'
Tc = 159.88'
Ec = 17.63'
Lsl= 200.00'
Ls2= 0.00'
θs = 8°00'
P = 2.33'
K = 99.94'
Xc = 199.61'
Yc = 9.30'
LT = 133.47'
ST = 66.79'
Tsl= 309.67'
Ts2= 217.55'

Curve D-4 Data
△ = 9°30'00"
Ls = 200.00'
θs = 6°30'00"
Ps = 1.89'
T1 = 123.06'
T2 = 77.40'
△1=D1 =1°30'00"
△2=D2=8°00'00"
R1 = 3819.72'
R2 = 716.20'

Curve D-5 Data
△ = 6°50'00"
D = 1°30'00"
R = 3819.72'
L = 455.56'
T = 228.05'
E = 6.80'

Curve 2, U.S.42 Data
△ = 20°05'46"
D = 3°00'
R = 1909.86'
L = 669.87'
T = 338.41'
E = 29.75'

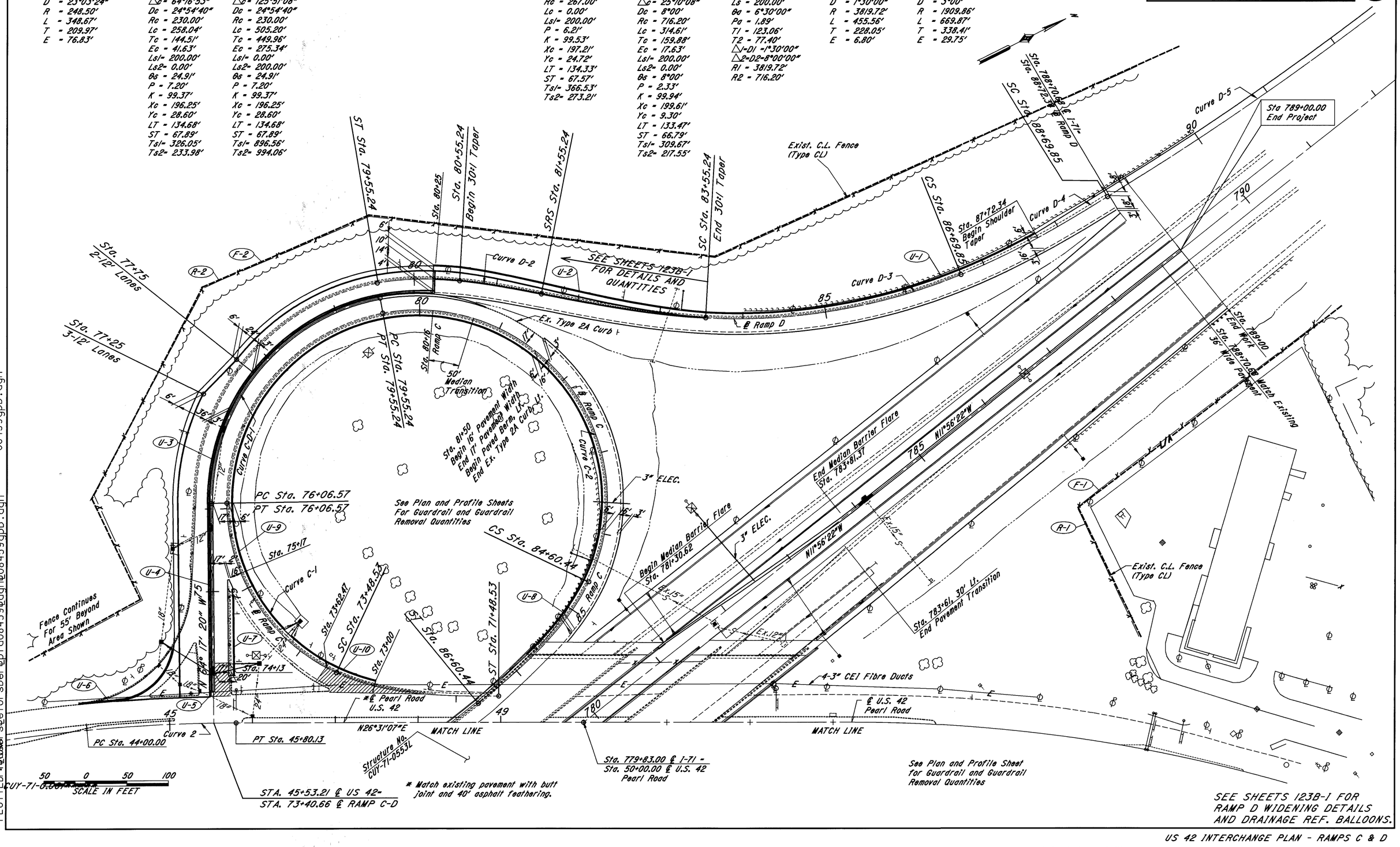

US 42 INTERCHANGE PLAN - RAMPS C & D

PLOT SUBMITTED:04-AUG-1998 12:23
08459gpb.dgn
PLOTTED BY:fkonopka
PLOTTED FROM:sbeforsber@pid08459@dgn@08459gpb.dgn
CUY-71-0.00

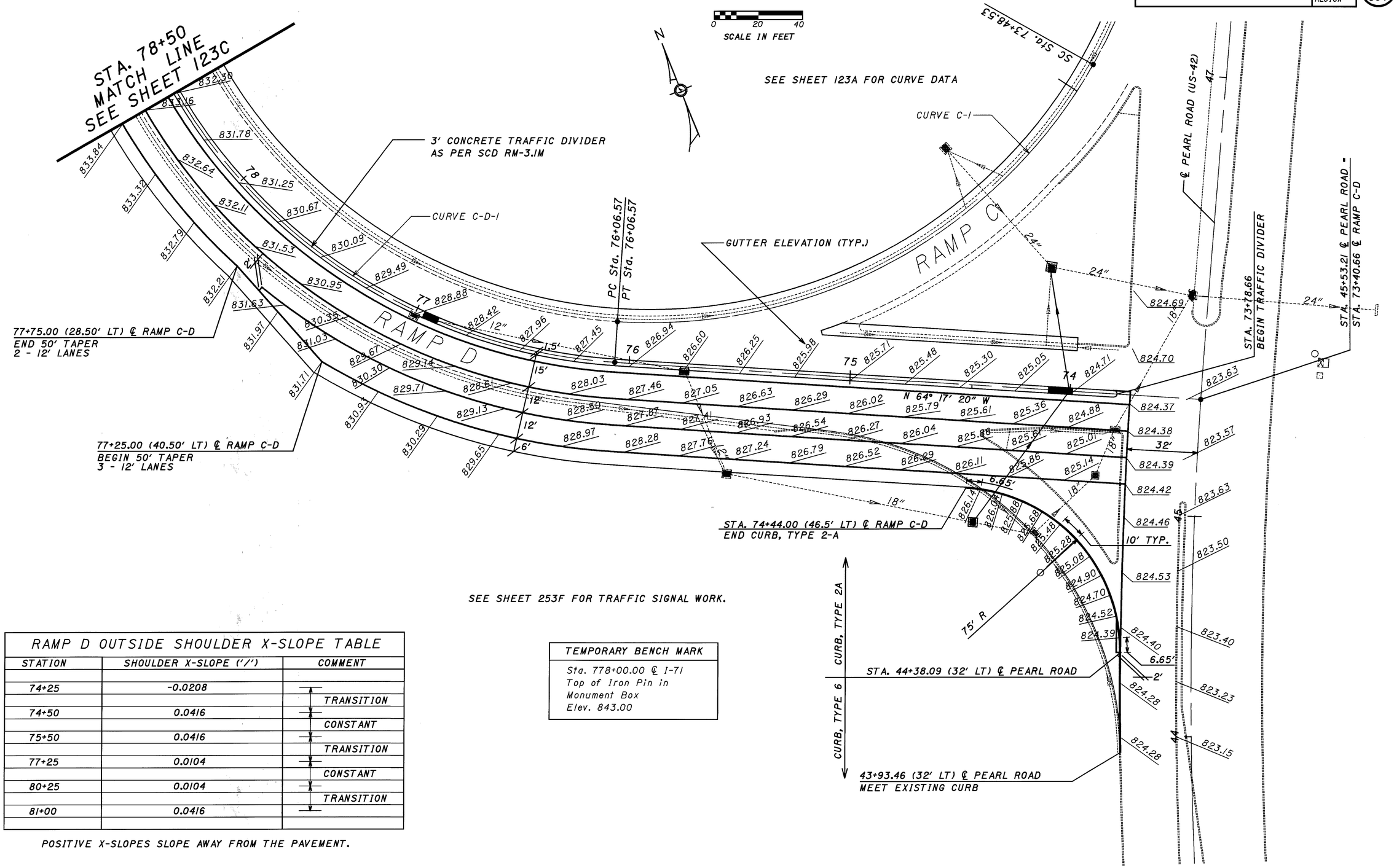

SEE SHEET 253F FOR TRAFFIC SIGNAL WORK.

TEMPORARY BENCH MARK
Sta. 778+00.00 ℄ I-71 Top of Iron Pin in Monument Box Elev. 843.00

RAMP D OUTSIDE SHOULDER X-SLOPE TABLE

STATION	SHOULDER X-SLOPE ('/')	COMMENT
74+25	-0.0208	
		TRANSITION
74+50	0.0416	
		CONSTANT
75+50	0.0416	
		TRANSITION
77+25	0.0104	
		CONSTANT
80+25	0.0104	
		TRANSITION
81+00	0.0416	

POSITIVE X-SLOPES SLOPE AWAY FROM THE PAVEMENT.

PLOTTED BY: tKonopka
PLOTTED: 31-JUL-1998 09:34
PLOT SUBMITTED: 31-JUL-1998 09:34
08459gaa.dgn

US-42 RAMP D PAVEMENT DETAILS

SEE TABLE ON SHEET 123B FOR RAMP D
SHOULDER X-SLOPE INFORMATION

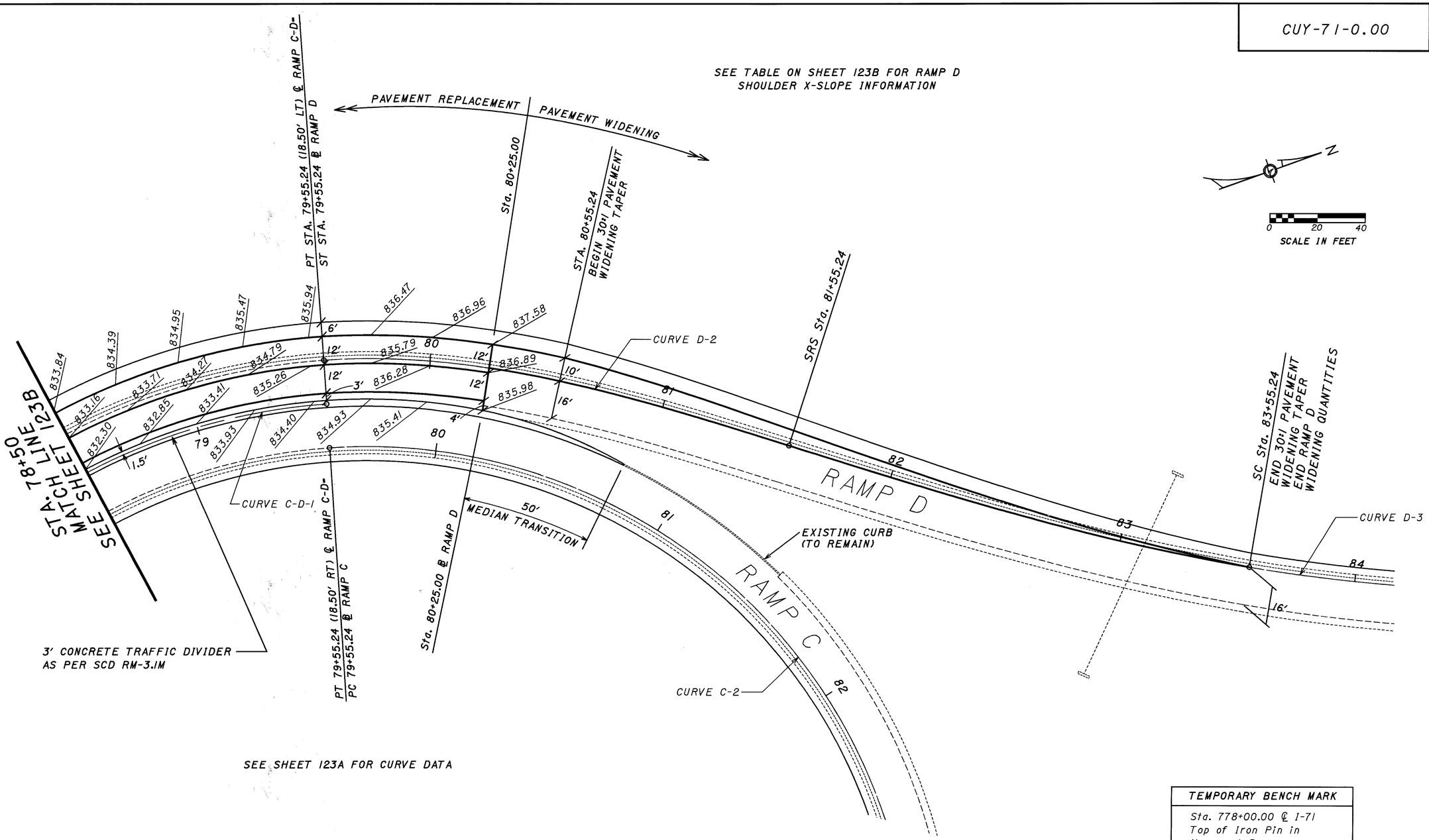

SEE SHEET 123A FOR CURVE DATA

TEMPORARY BENCH MARK
Sta. 778+00.00 ℄ I-71 Top of Iron Pin in Monument Box Elev. 843.00

SEE CROSS-SECTION SHEETS 123G-1 FOR EARTHWORK
SEE SHEET 123A FOR UNDERDRAIN LOCATIONS
SEE SHEETS 123E&F FOR ESTIMATED QUANTITIES

PLOTTED BY: fkonopka
PLOTTED: 05-AUG-1998 11:49
PLOT SUBMITTED: 05-AUG-1998 11:49
08459gab.dgn

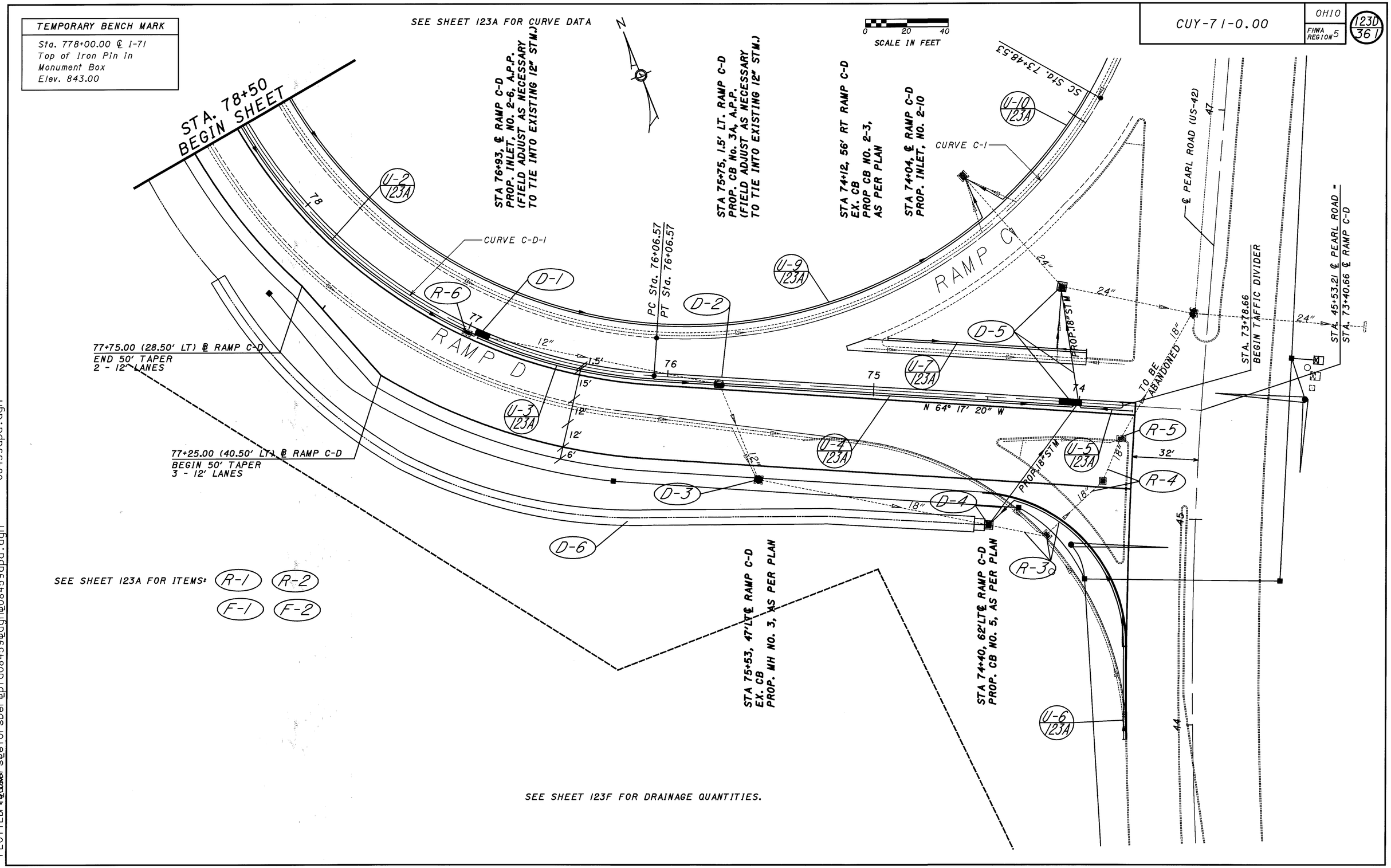

US-42 RAMP D DRAINAGE DETAILS

PLOTTED BY: fkonopka
PLOTTED ON: 05-AUG-1998 11:50
PLOT SUBMITTED: 05-AUG-1998 11:50
08459dpa.dgn

US-42 RAMP D QUANTITIES

FROM	TO	LENGTH (LF)	WIDTH (LF)	AREA (SQ. YDS.)
ITEM 202 - PAVEMENT REMOVED				
RAMP D				
73+72.66	79+55.24	582.58	17.00	1100.0
79+55.24	80+25	69.76	17.50 (AVG)	136.0
			SUBTOTAL -	1236.0
RAMP D TO US-42 SOUTH SPUR *				
72+90.96	73+71	80.04	10.00 (AVG)	89.0
73+71	74+71	100.00	20.00	156.0
74+41	76+21.57	180.57	10.00 (AVG)	201.0
			SUBTOTAL -	446.0
ADDITIONAL AREA NEAR SPUR				
		60.00	2.0	13.3
			SUBTOTAL -	13.3 SY
TYPE 2A CURB AREA				
		451	0.5	25.0
			SUBTOTAL -	25.0 SY
			TOTAL -	1720.3 SY
ITEM 202 - CONCRETE MEDIAN REMOVED				
73+78.66	80+25	646.34	3.00	215.0
80+25	80+75	50.00	1.75 (AVG)	9.7
			TOTAL -	225.1 SY
ITEM 203 - SUBGRADE COMPACTION				
RAMP D				
73+72.66	74+44	CADD MEASURE		483.0
74+44	77+25	281.00	45.50	1421.0
77+25	77+75	50.00	39.50 (AVG)	219.0
77+75	79+55.24	180.24	33.50	671.0
79+55.24	80+25	69.76	34.00 (AVG)	263.0
80+25	80+55.24	30.24	16.50	55.0
80+55.24	83+55.24	300.00	12.50 (AVG)	417.0
			SUBTOTAL -	3529.0
MEDIAN				
73+78.66	80+25	646.34	3.00	215.0
80+25	80+75	50.00	1.75 (AVG)	10.0
			SUBTOTAL -	225.0
			TOTAL -	3754.0 SY
ITEM 254 - PAVEMENT PLANING BITUMINOUS				
RAMP D				
80+25	83+55.24	330.24	19.00	697.0
			TOTAL -	697.0 SY

FROM	TO	LENGTH (LF)	WIDTH (LF)	VOLUME (CU. YDS.)
ITEM 304 - AGGREGATE BASE, AS PER PLAN				
PAVEMENT REPLACEMENT				
73+72.66	74+44	CADD MEASURE		81.0
74+44	77+25	281.00	45.50	236.7
77+25	77+75	50.00	39.50 (AVG)	36.6
77+75	79+55.24	180.24	33.50	111.8
79+55.24	80+25	69.76	34.00 (AVG)	43.9
			SUBTOTAL -	510.0 CY
WIDENING				
80+25	80+55.24	30.24	16.50	9.2
80+55.24	83+55.24	300.00	12.50 (AVG)	69.4
			SUBTOTAL -	78.6 CY
MEDIAN				
73+78.66	80+25	646.34	3.00	83.8
80+25	80+75	50.00	1.75 (AVG)	3.8
			SUBTOTAL -	87.6 CY
			TOTAL -	676.2 CY

FROM	TO	WIDTH (LF)	AREA	GALLONS
ITEM 407 - TACK COAT (0.075 GAL/SY)				
80+25	80+55.24	34.00	114.24	9.0
80+55.24	83+55.24	29.50	983.30	74.0
			TOTAL -	83.0 GAL
ITEM 407 - TACK COAT FOR INTERMEDIATE COURSE				
			TOTAL -	55.3 GAL

* STATIONING BASED ON OLD RAMP D SPUR ℄.
RAMP D SPUR ℄ INFORMATION NOT SHOWN IN THIS PLAN.

FROM	TO	LENGTH (LF)	WIDTH (LF)	VOLUME (CU. YDS.)
ITEM 446 - 1½" ASPHALT CONCRETE, SURFACE COURSE, TYPE 1H, AS PER PLAN				
80+25	80+55.24	30.24	34.00	4.8
80+55.24	83+55.24	300.00	29.50 (AVG)	41.0
			TOTAL -	45.8 CY
ITEM 446 - 1¾" ASPHALT CONCRETE, INTERMEDIATE COURSE, TYPE 2, PG-64-28				
80+25	80+55.24	30.24	34.00	5.5
80+55.24	83+55.24	300.00	29.50 (AVG)	47.8
			TOTAL -	53.3 CY

FROM	TO	LENGTH (LF)	WIDTH (LF)	AREA (SQ. YDS.)
ITEM 451 - 11" REINFORCED CONCRETE PAVEMENT				
73+72.66	74+44	CADD MEASURE		483.0
74+44	77+25	281.00	45.00	1405.0
77+25	77+75	50.00	39.00 (AVG)	217.0
77+75	79+55.24	180.24	33.00	661.0
79+55.24	80+25	69.76	33.50 (AVG)	260.0
			TOTAL -	3026.0 SY
ITEM 609 - CURB, TYPE 2-A				
44+38.09 (US 42)	74+44.00	113.3 (ALONG CURVE)		
			TOTAL -	113.3 LF
ITEM 609 - CURB, TYPE 6				
43+93.48 (US 42)	44+38.09 (US 42)	44.61		
			TOTAL -	45 LF
ITEM 612 - CONCRETE MEDIAN				
73+78.66	80+25	646.34	3.00	215.4
80+25	80+75	50.00	1.75 (AVG)	9.7
			TOTAL -	225.1 SY
ITEM 305 - 9" CONCRETE BASE, AS PER PLAN				
80+25	80+55.24	30.24	16.00	53.8
80+55.24	83+55.24	300.00	12.00 (AVG)	400.0
			TOTAL -	453.8 SY

PLOTTED BY: fkonopka
PLOTTED: 31-JUL-1998 09:35
PLOT SUBMITTED: 31-JUL-1998 09:35
08459gca.dgn

U.S. 42 INTERCHANGE QUANTITIES - RAMPS A & B

** 707.41 Non-Perforated ASTM D3034, SDR 35, 707.42 or 707.33

DRAINAGE									
REF. NO.	STATION		SIDE	603	605		604	660	838
				6" Conduit, Type F **	6" Shallow Pipe Underdrain, 30" Depth with Fabric Wrap	6" Unclassified Pipe Underdrain with Fabric Wrap	Precast Reinforced Concrete Outlet	Reinforced Sodding	Gabions with Additional Coating
	FROM	TO		Lin. Ft.	Lin. Ft.	Lin. Ft.	Each	Sq. Yd.	Cu. Yd.
U-1	71+14	74+50		10	335	9	1		
U-2	74+52	79+00		10	448	10	1		
U-3	74+10	87+00		65	1288		1		
U-4	84+00	85+54			140				
U-5	85+56	86+50		10	85				
U-6	84+50	85+90		30	101	40			
D-1	74+23.9	74+23.9						17.5	3.3
	TOTALS			125	2397	59	3	17.5	3.3

ROADWAY					
REF. NO.	STATION		SIDE	202	
				Guardrail Removed	Fence Removed
	FROM	TO		Lin. Ft.	Lin. Ft.
R-1	68+08	86+85	Rt.	2047	
R-2	72+22	81+50	Rt.		952
R-3	72+73	77+07	Lt.	445	
R-4	73+94	82+03	Lt.	777	
R-5	76+00	78+17	Rt.	234	
R-6	83+02	87+70	Rt.		350
R-7	770+70	774+27	Lt.		467
	TOTALS			3503	1769

GUARDRAIL								
REF. NO.	STATION		SIDE	606				448
				Guardrail, Type 5	Anchor Assembly, Type E	Anchor Assembly, Type T	Bridge Terminal Assembly, Type 1	3" Asphalt Concrete Intermediate Course, Type 1, PG 64-22
	FROM	TO		Lin. Ft.	Each	Each	Each	Cu. Yd.
GR-1	67+63.5	85+76	Rt.	1750	1	1		67.94
GR-2	74+00	75+94	Lt.	125	1		1	7.88
	TOTALS			1875	2	1	1	75.82

FENCE				
REF. NO.	STATION		SIDE	607
				Fence, Type CLT
	FROM	TO		Lin. Ft.
F-1	770+70	774+27	Lt.	467
F-2	72+22	81+50	Rt.	952
F-3	83+02	85+30	Rt.	350
	TOTALS			1769

U.S. 42 INTERCHANGE QUANTITIES - RAMPS C & D

ROADWAY							
REF. NO.	STATION		SIDE	202	202	202	202
				Catch Basin Abandoned	Catch Basin Removed	Pipe Removed, Under 24"	Fence Removed
	FROM	TO		Each	Each	Lin.Ft.	Lin.Ft.
R-1	785+71	789+00	Rt.				462
R-2	42+75*	88+84*	Lt.				1750
R-3	73+86	74+40	Lt.		1	62	
R-4	73+78	73+86	Lt.		1	26	
R-5	73+78	73+78	Lt.	1			
R-6	77+00	77+00	Lt.		1		
	TOTALS			1	3	88	2212

* Stationed off U.S. 42

FENCE				
REF. NO.	STATION		SIDE	607
				Fence, Type CLT
	FROM	TO		Lin. Ft.
F-1	785+71	789+00	Rt.	462
F-2	73+85	89+00	Lt.	1750
	TOTALS			2212

** 707.41 Non-Perforated ASTM D3034, SDR 35, 707.42 or 707.33

DRAINAGE															
REF. NO.	STATION		SIDE	603			604						605	670	604
				6" Conduit, Type F **	18" Conduit, Type B		Manhole, No. 3, As Per Plan	Catch Basin, No. 3A, As Per Plan	Inlet No. 2-6, As Per Plan	Inlet No. 2-10	Catch Basin, No. 2-3, As Per Plan	Catch Basin, No. 5, As Per Plan		6" Shallow Pipe U.D. w/Fabric Wrap (30" Deep)	6" Unclassified Underdrain w/Fabric Wrap	Ditch Erosion Protection	Precast Reinforced Concrete Outlet
	FROM	TO		Lin.Ft.	Lin.Ft.		Each	Each	Each	Each	Each	Each		Lin.Ft.	Lin.Ft.	Sq.Yd.	Each
U-1	83+25	87+72	Lt.	25										447			1
U-2	77+03	83+25	Lt.	10										656			
U-3	75+77	77+03	Lt.	10										126			
U-4	74+04	75+77	Lt.	10										173			
U-5	73+74	74+04	Lt.	10											30		
U-6	73+67	74+40	Lt.	16										142			
U-7	73+98	74+96	Rt.	30										83	15		
U-8	84+34	85+75	Rt.	25										141			1
U-9	74+22	84+34	Rt.	20										1012			
U-10	73+00	74+22	Rt.	20											117		
D-1	77+00	77+07	℄						1								
D-2	75+75	75+75	℄					1									
D-3	75+53	75+53	Lt.				1										
D-4	74+04	74+40	Lt.		74							1					
D-5	74+04	74+12	Rt.		56					1	1						
D-6	74+40	78+00	Rt.													300	
	TOTALS			176	130		1	1	1	1	1	1		2780	162	300	2

U.S. 42 INTERCHANGE QUANTITIES - RAMPS A, B, C, & D

PLOTTED BY: fkonopka
PLOTTED FROM: i:\Users\Beforsber\pid08459\dgn\quus42.dgn QUUS42.DGN
PLOT SUBMITTED:05-AUG-1998 11:51

CALC BY ____ DATE ____	CUY-71-0.00	OHIO	123G / 361
CHKD BY ____ DATE ____		FHWA REGION 5	

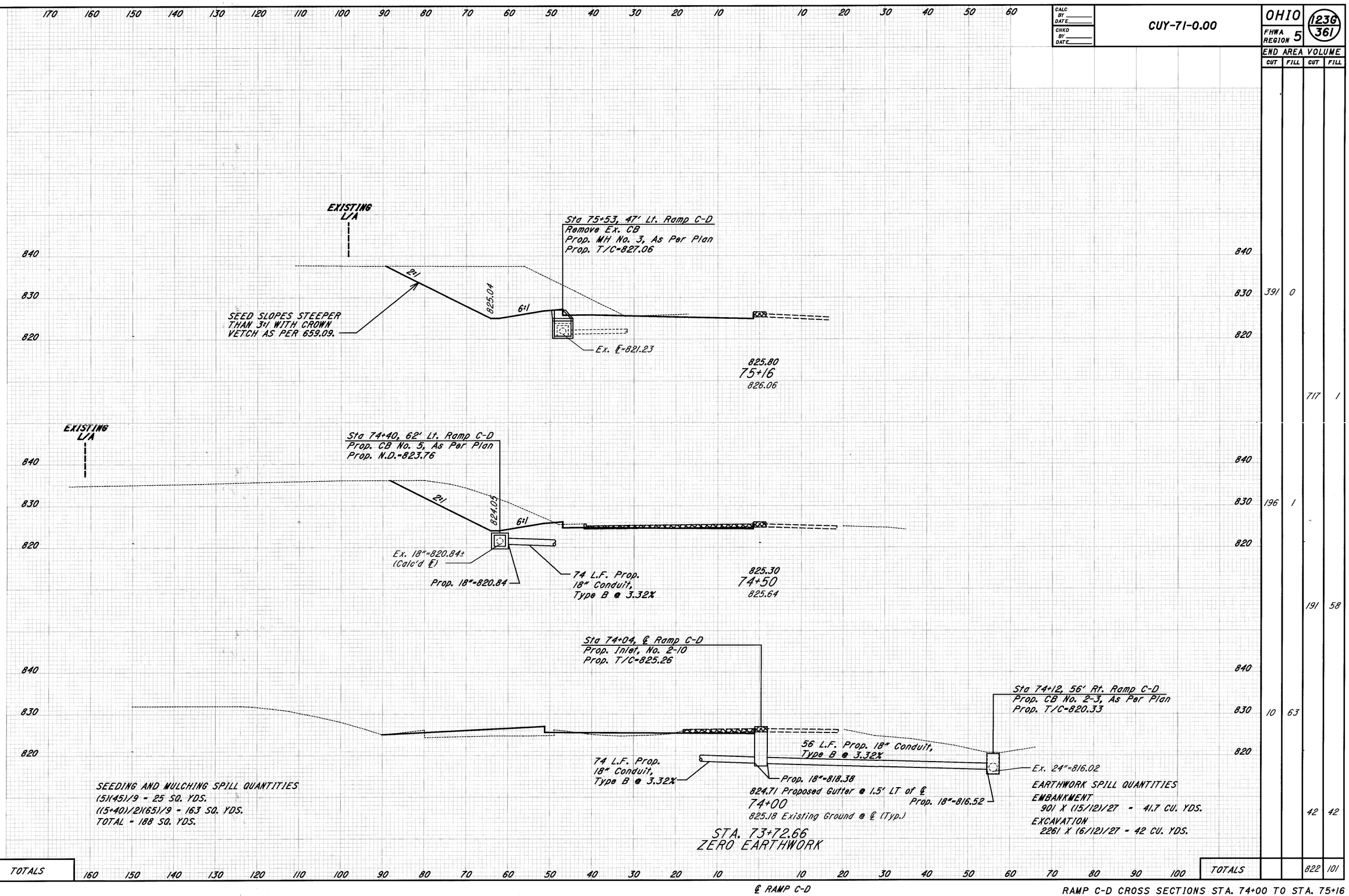

SEEDING END WIDTH	SEEDING SQ. YDS.	END AREA VOLUME CUT	END AREA VOLUME FILL	CUT	FILL
38		391	0		
	275			717	1
37		196	1		
	211			191	58
39		10	63		
	188			42	42
674	TOTALS	TOTALS		822	101

RAMP C-D CROSS SECTIONS STA. 74+00 TO STA. 75+16

PLOT SUBMITTED:05-AUG-1998 11:53

PLOTTED BY: tkonopka
PLOTTED: 05-AUG-1998 11:53
307XS70a.DGN
307xs70a.dgn
307xs70a.dgnB
d08459Bpi
forsberB

PLOTTED BY: fkonopka
PLOTTED ON: Wed Aug 03, 1998 06:35
PLOT SUBMITTED: 03-AUG-1998 06:35
307XS70a.DGN
307xs70a.dgn
d08459Bpi.dgn

CALC BY DATE	CHKD BY DATE	CUY-71-0.00	OHIO	FHWA REGION 5	123H 361

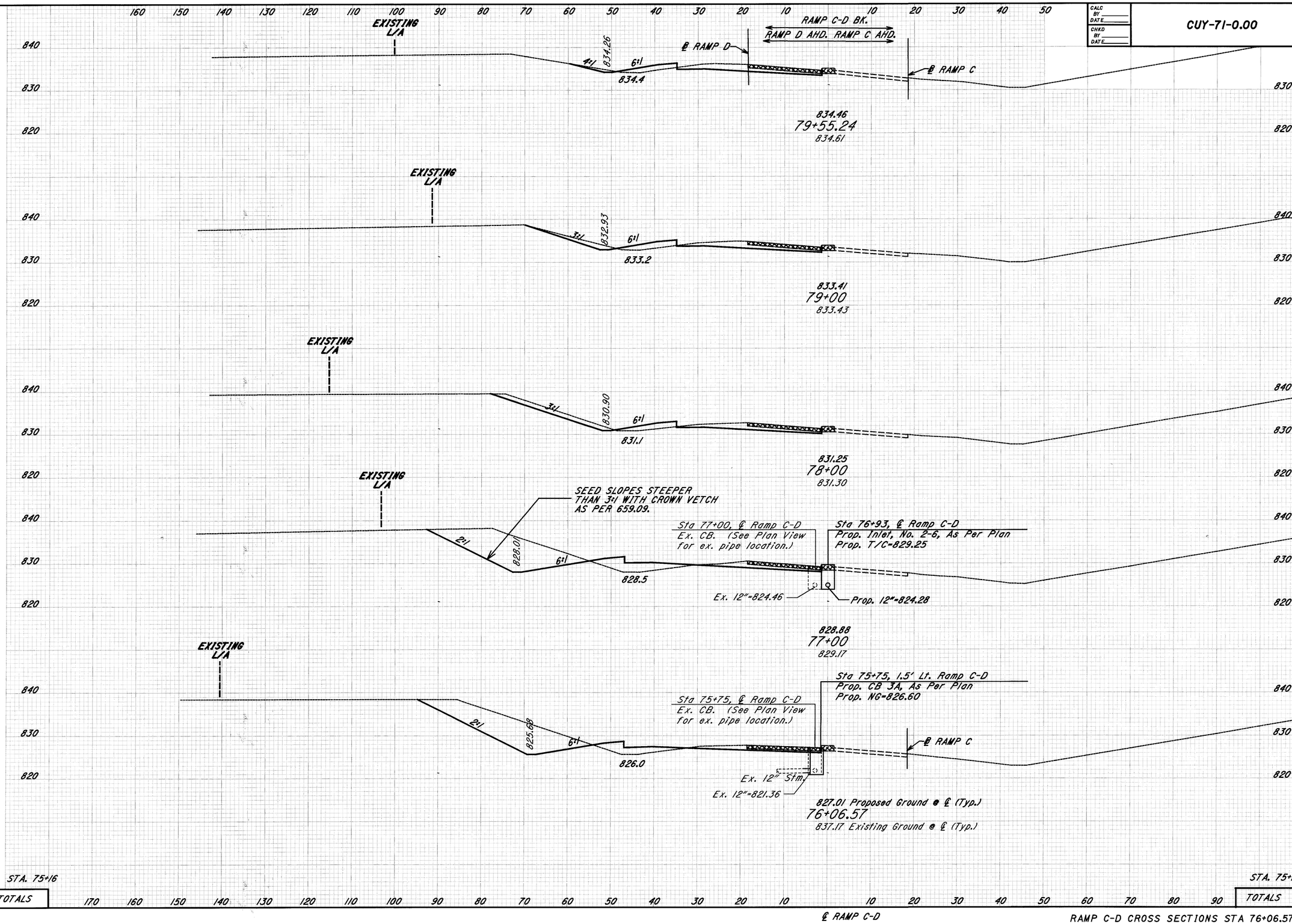

SEEDING END WIDTH	SEEDING SQ. YDS.	END AREA VOLUME CUT	END AREA VOLUME FILL	CUT	FILL
13		34	13		
	95			71	30
18		35	16		
	172			166	56
13		54	14		
	289			465	99
39		197	39		
	420			671	146
42		191	46		
	403			976	78
38		391	0		
	1379 TOTALS			2349	408

RAMP C-D CROSS SECTIONS STA 76+06.57 TO STA 79+55.24

SEEDING END WIDTH	SEEDING SQ. YDS.
10	
	19
27	
	171
5	
	53
14	
	150
13	
	81
14	
	136
13	
610	TOTALS

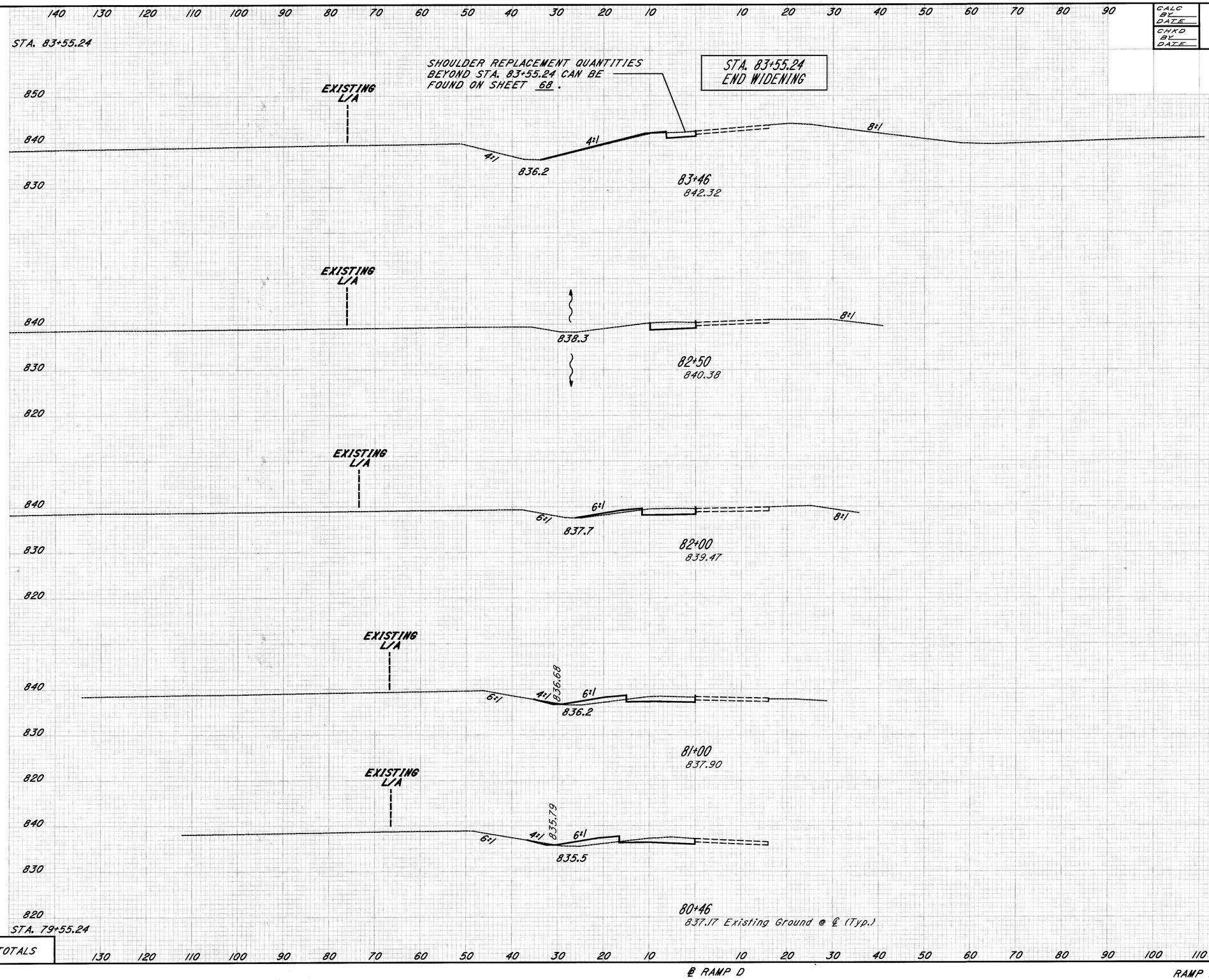

CALC BY DATE	CHKD BY DATE

CUY-71-0.00

OHIO FHWA REGION 5

(123) / (361)

END AREA CUT	END AREA FILL	VOLUME CUT	VOLUME FILL
10	0		
		3	1
7	5		
		39	8
15	0		
		28	5
15	5		
		58	32
17	12		
		34	26
17	14		
		13	11
STA. 80+25 (AHEAD) 17	14		
STA. 80+25 (BACK) 34	13		
		88	37
STA. 79+55.24 34	13		
TOTALS		263	120

℄ RAMP D

RAMP D CROSS SECTIONS STA. 80+46 TO STA. 83+46

PLOT SUBMITTED: 03-AUG-1998 06:35

PLOTTED BY: fkonopka

PLOTTED FROM: /users/tefor/sber/pid08459/dgn/307xs70.dgn

307XS70.DGN

EARTHWORK SUB-SUMMARY

Sheet No.	203 Excavation, Not Including Embankment Construction CU. YD.	203 Embankment CU. YD.	659 Seeding and Mulching SQ. YD.
125	226	385	933
126	1359	1110	1866
127	1095	835	1555
128	2522	180	1244
129	1948	924	1555
130	1665	1024	1555
131	1685	1183	1555
132	1751	1129	1555
133	1722	1156	1555
134	1665	1024	1555
135	1753	1131	1555
136	1819	1011	1555
137	1896	741	1555
138	2072	596	1555
139	836	240	605
140	1773	738	1555
141	1767	958	1555
142	1666	1215	1555
143	1716	1007	1555
144	1746	1000	1555
145	1846	1139	1555
146	1803	1047	1555
147	1921	1093	1555
148	1827	880	1555
149	1949	749	1555
150	1688	1049	1555
151	2241	1149	1555
152	1671	874	1555
153	2042	1065	1555
154	1572	619	1555
155	2161	517	1555
156	2692	483	1555
157	2218	1042	1555
158	2151	636	1696
159	2273	697	1414
160	2130	868	1555
161	1852	894	1555
162	2015	622	1555
163	2164	246	1333
164	1572	329	1008
165	1997	810	1555
166	1871	981	1555
167	2013	932	1555
168	2299	744	1745
169	1580	698	1286
SUB-TOTAL	82230	37750	67555

Sheet No.	203 Excavation, Not Including Embankment Construction CU. YD.	203 Embankment CU. YD.	659 Seeding and Mulching SQ. YD.
170	1059	268	407
171	2209	901	1555
172	2219	1018	1555
173	2063	1069	1555
174	2718	298	1555
175	2187	907	1555
176	2038	1049	1555
177	2766	355	1555
178	1826	1087	1555
179	2035	843	1555
180	1797	1157	1555
181	515	1266	1555
182	1980	697	1699
183	1141	188	778
184	2223	741	1555
185	2509	1263	1555
186	1001	92	1128
187	1371	215	906
188	2573	742	1610
CROSS ROADS			
193	1022	5	
194	267	66	
195	399	176	
196	319	5	
197	883	39	
198	155	17	
US-42 RAMP D WIDENING			
123G	822	101	674
123H	2349	408	1379
123I	263	120	610
SUB-TOTAL	42709	15093	29406
TOTAL	124939	52843	96961

THIS SEEDING AND MULCHING QUANTITY HAS BEEN PROVIDED FOR PART-WIDTH CONSTRUCTION REQUIREMENTS.

ITEM 659 - SEEDING AND MULCHING

STA. 471+00 TO STA. 789+00 = 31800 L.F.
DEDUCT FOR BRIDGES = 1270 L.F.
TOTAL LENGTH = 30530 L.F.

30530 (12) /9 = 40707 S.Y.

ITEM 659 - AGRICULTURAL LIMING

APPLICATION RATE	QUANTITY (TON)	REMARKS
46 Lbs./1000 sq. ft. X 137668 S.Y.	= 28.5	Area to be Seeded from Cross Sections & Part-Width Construction
46 Lbs./1000 sq. ft. X 12000 S.Y.	= 2.5	Area to be Seeded from General Notes

TOTAL = 31.0 Tons

ITEM 659 - COMMERCIAL FERTILIZER

APPLICATION RATE	QUANTITY (TON)	REMARKS
20 Lbs./1000 Sq. Ft. X 149668 S.Y.	= 13.47	Total Area to be Seeded

TOTAL = 13.47 Tons

PLOTTED BY: fkonopka
PLOTTED ON: Wed Aug 05 09:34 1998
PLOTTED FROM: d:\projects\08459\08459gsa.dgn
PLOT SUBMITTED: 07-AUG-1998 09:34
08459GSA.DGN

PLOT SUBMITTED: 24-JUL-1998 15:11

PLOTTED FROM: i:\users\eforsber\pid08459\dgn\307xs80.dgn

307XS80.DGN

CALC BY / DATE	CHKD BY / DATE	CUY-71-0.00	OHIO	FHWA REGION 5	125 / 361

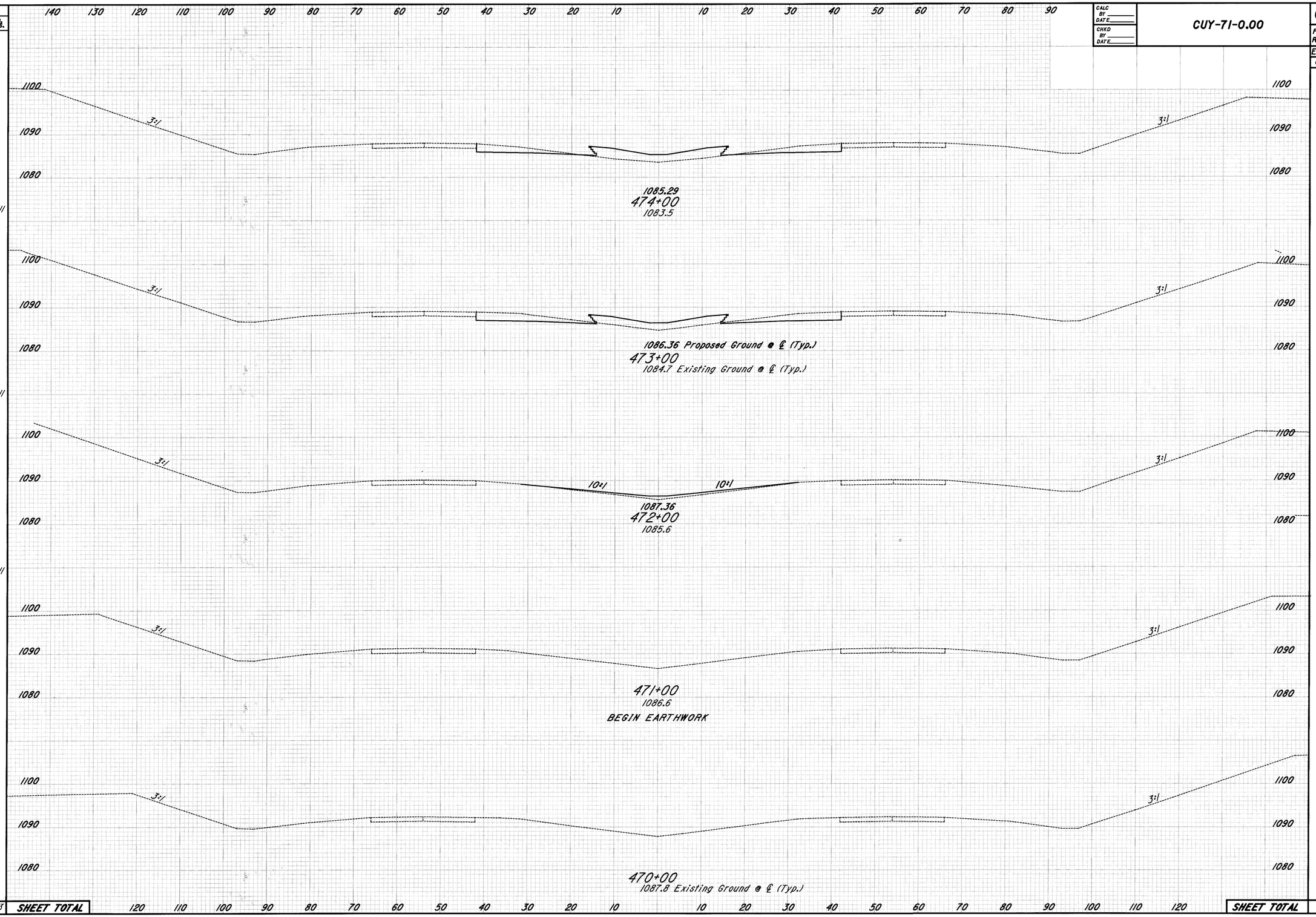

SEEDING END WIDTH	SEEDING SQ. YDS.	END AREA VOLUME CUT	END AREA VOLUME FILL	VOLUME CUT	VOLUME FILL
28		53	62		
	311			226	211
28		69	52		
	311			0	135
28		0	21		
	311			0	39
28		0	0		
	933			226	385

SHEET TOTAL

CROSS SECTIONS STA. 470+00 TO STA. 474+00

PLOT SUBMITTED: 24-JUL-1998 15:11

PLOTTED FROM: i:\users\eforsber\pid08459\dgn\307xs80.dgn

307XS80.DGN

CALC BY: DATE:	CHKD BY: DATE:	CUY-71-0.00	OHIO FHWA REGION 5	126 / 361

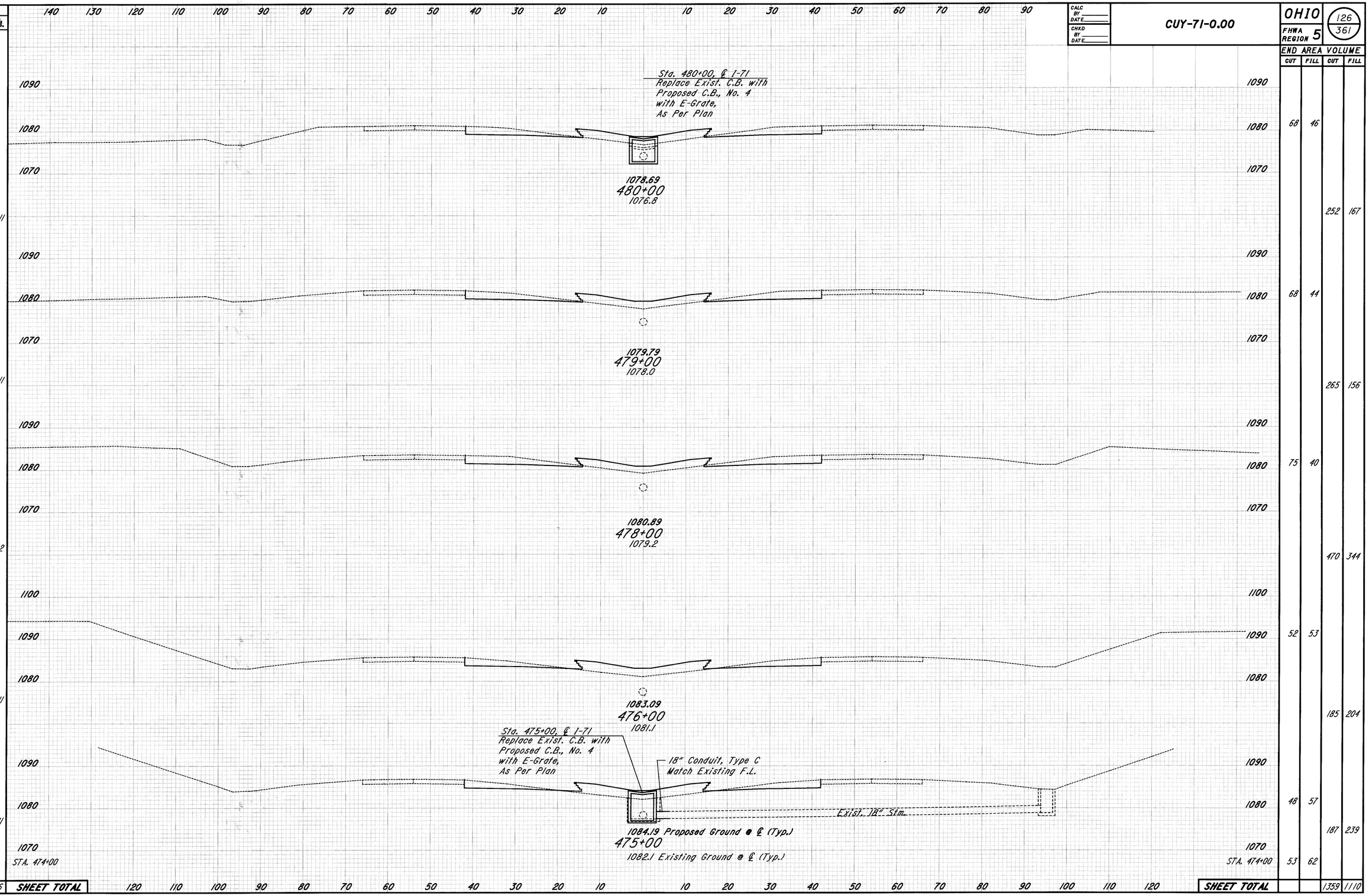

SEEDING END WIDTH	SEEDING SQ. YDS.	END AREA VOLUME CUT	END AREA VOLUME FILL	VOLUME CUT	VOLUME FILL
28		68	46		
	311			252	167
28		68	44		
	311			265	156
28		75	40		
	622			470	344
28		52	53		
	311			185	204
28		48	57		
	311			187	239
28		53	62		
	1866 SHEET TOTAL		SHEET TOTAL	1359	1110

CROSS SECTIONS STA. 475+00 TO STA. 480+00

PLOTTED FROM: i:\users\eforsber\pid08459\dgn\307xs80.dgn 307XS80.DGN PLOT SUBMITTED: 24-JUL-1998 15:11

CALC BY ____ DATE ____
CHKD BY ____ DATE ____

CUY-71-0.00

OHIO FHWA REGION 5

127 / 361

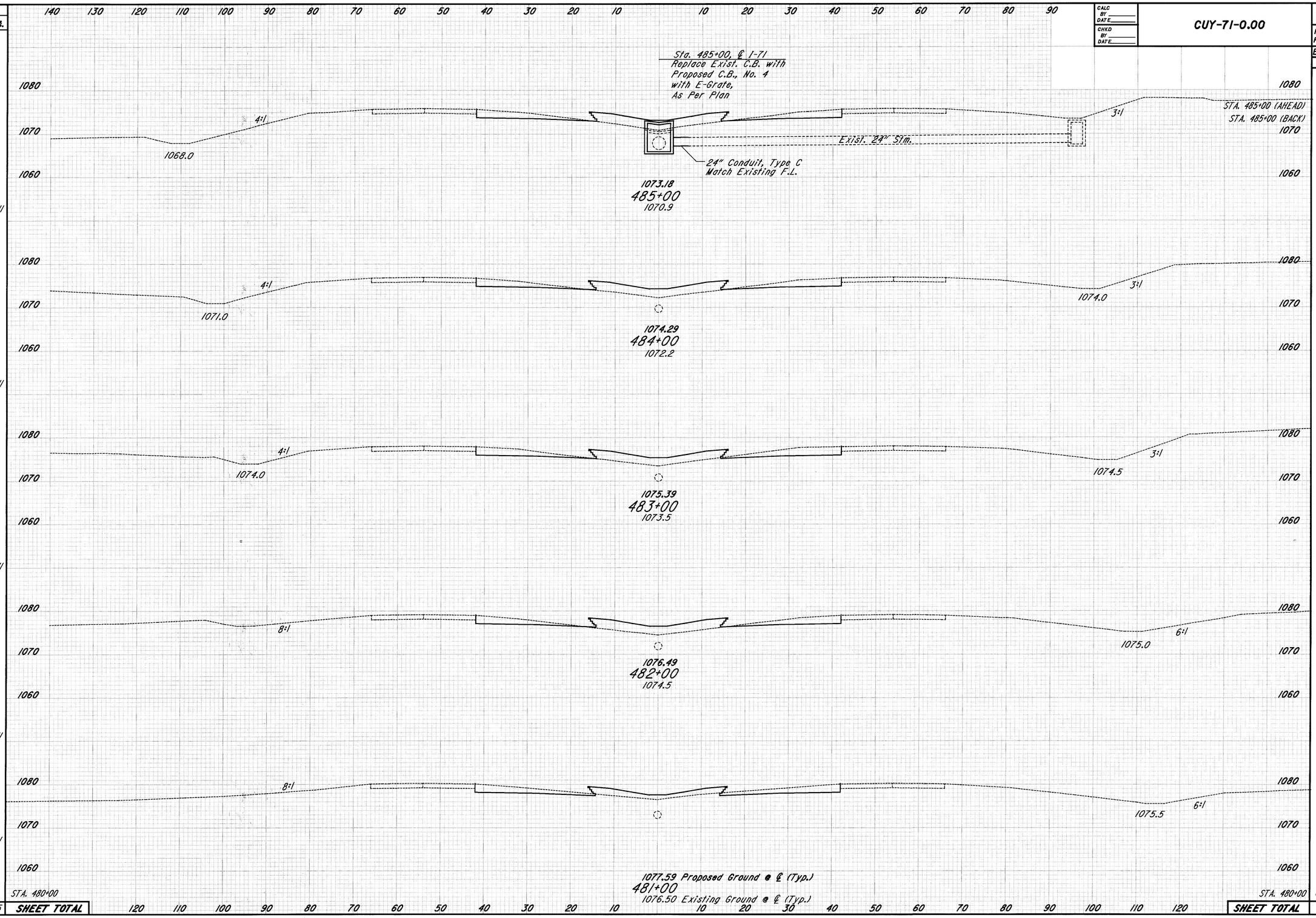

SEEDING END WIDTH	SEEDING SQ. YDS.	STA.	END AREA VOLUME CUT	END AREA VOLUME FILL	CUT	FILL
		STA. 485+00 (AHEAD)	144	17		
311		STA. 485+00 (BACK)	55	51		
	311				202	189
28			54	51		
	311				220	180
28			65	46		
	311				217	181
28			52	52		
	311				213	148
28			63	28		
	311				243	137
28		STA. 480+00	68	46		
	1555	SHEET TOTAL			1095	835

CROSS SECTIONS STA. 481+00 TO STA. 485+00

PLOTTED FROM: i:\users\eforsber\pid08459\dgn\307xs01.dgn PLOT SUBMITTED: 24-JUL-1998 15:11

307XS01.DGN

	CALC BY ____ DATE ____ CHKD BY ____ DATE ____	CUY-71-0.00	OHIO FHWA REGION 5	128 / 361

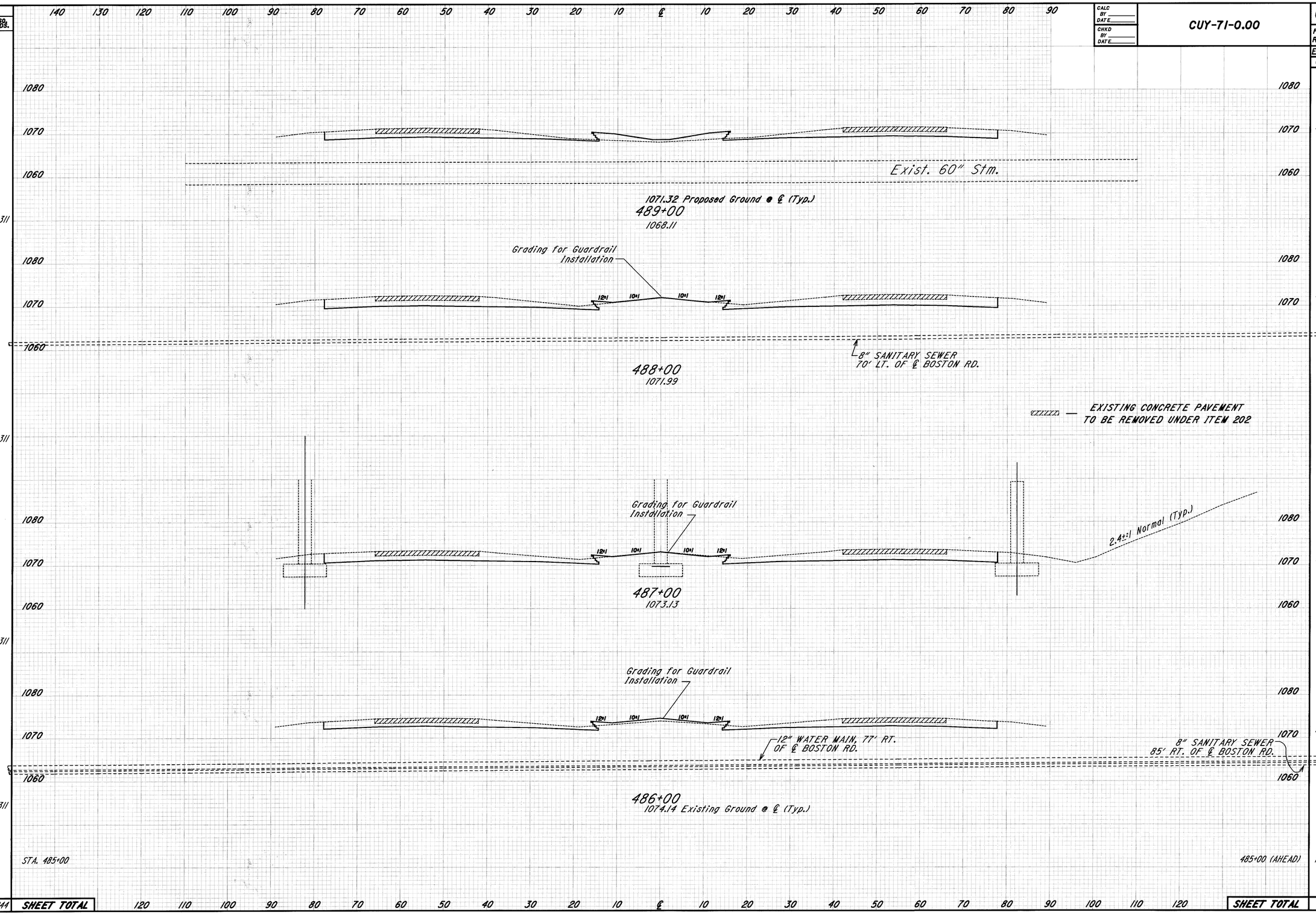

SEEDING END WIDTH	SEEDING SQ. YDS.		END AREA VOLUME CUT	END AREA VOLUME FILL	VOLUME CUT	VOLUME FILL
28			152	32		
	311				643	67
28			195	4		
	311				720	13
28			194	3		
	311				626	37
28			144	17		
	311				533	63
28			144	17		
	1244	SHEET TOTAL	SHEET TOTAL		2522	180

CROSS SECTIONS STA. 486+00 TO STA. 489+00

PLOT SUBMITTED: 24-JUL-1998 15:11

PLOTTED FROM: i:\users\eforsber\pid08459\dgn\307xs02.dgn

307XS02.DGN

CALC BY ____ DATE ____	CUY-71-0.00	OHIO	129 / 361
CHKD BY ____ DATE ____		FHWA REGION 5	

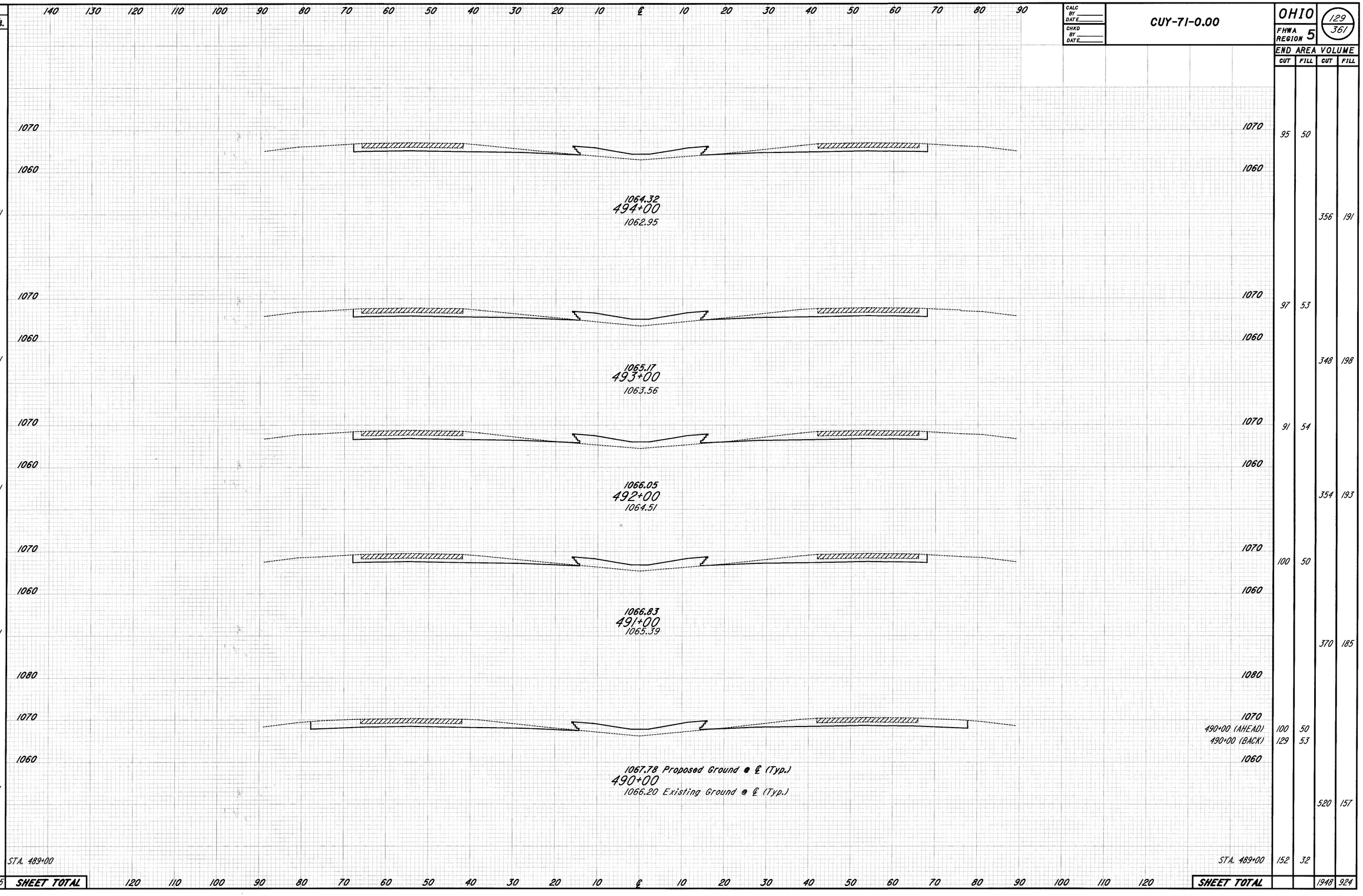

	SEEDING END WIDTH	SEEDING SQ. YDS.	END AREA CUT	END AREA FILL	VOLUME CUT	VOLUME FILL
490+00 (AHEAD)			100	50		
490+00 (BACK)			129	53		
STA. 489+00			152	32		
SHEET TOTAL	28	1555			1948	924
494+00	28	311	95	50		
					356	191
493+00	28	311	97	53		
					348	198
492+00	28	311	91	54		
					354	193
491+00	28	311	100	50		
					370	185
490+00	28	311				
					520	157

CROSS SECTIONS STA. 490+00 TO STA. 494+00

PLOTTED FROM: I:\users\eforsber\pid08459\dgn\307xs03.dgn PLOT SUBMITTED: 24-JUL-1998 15:11

CALC BY DATE	CHKD BY DATE	CUY-71-0.00	OHIO FHWA REGION 5	130 / 361

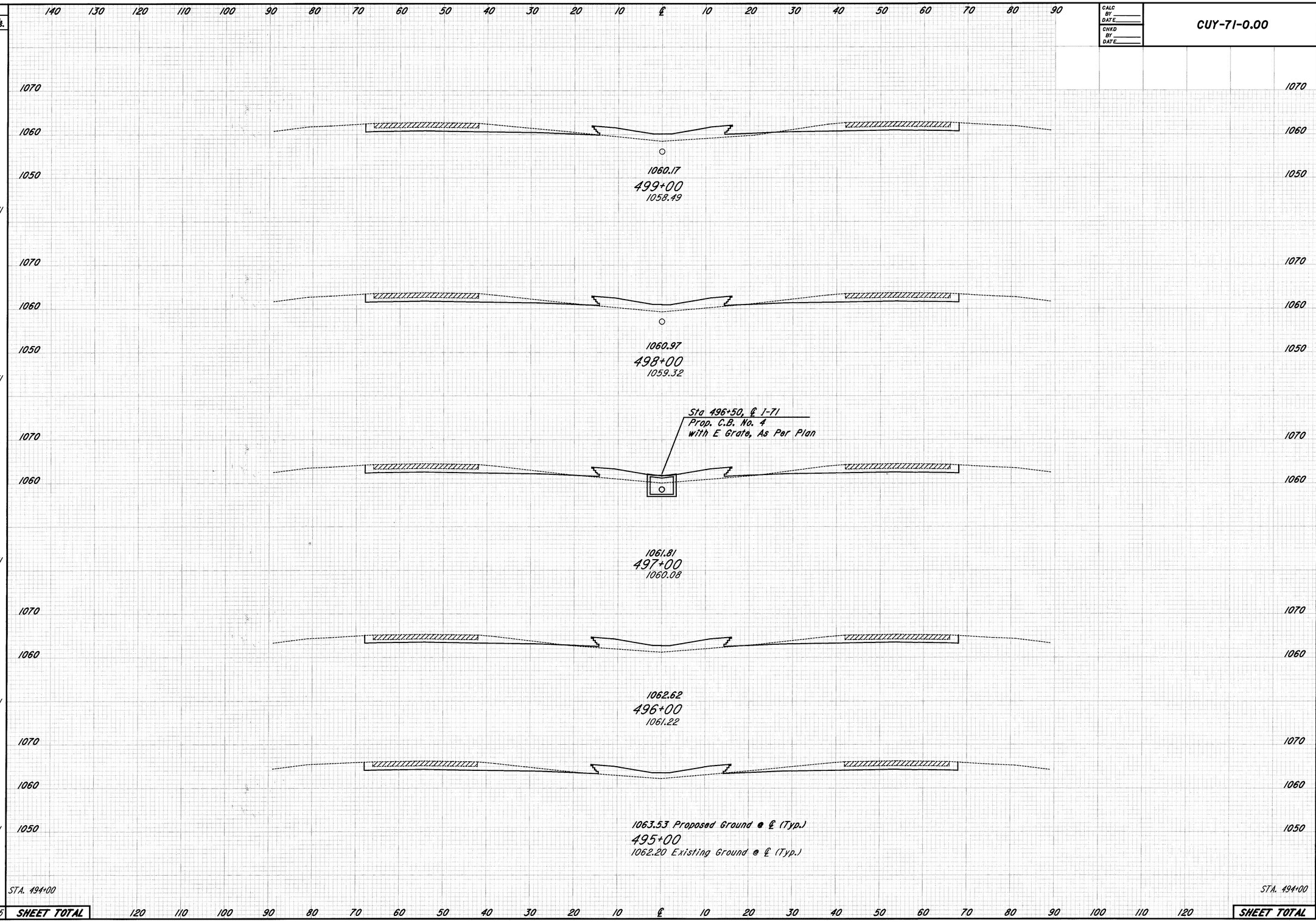

SEEDING END WIDTH	SEEDING SQ. YDS.	END AREA VOLUME CUT	END AREA VOLUME FILL	CUT	FILL
28		90	63		
	311			337	220
28		92	56		
	311			333	217
28		88	61		
	311			311	215
28		80	55		
	311			328	191
28		97	48		
	311			356	181
28		95	50		
	1555			1665	1024

CROSS SECTIONS STA. 495+00 TO STA. 499+00

PLOT SUBMITTED: 24-JUL-1998 15:11

PLOTTED FROM: ::\users\eforsber\pid08459\dgn\307xs04.dgn

307XS04.DGN

CALC BY	
DATE	
CHKD BY	
DATE	

CUY-71-0.00

OHIO — FHWA REGION 5 — (131/361)

SEEDING END WIDTH	SEEDING SQ. YDS.	STA.	END AREA CUT	END AREA FILL	VOLUME CUT	VOLUME FILL
28	311	504+00	90	66	337	231
28	311	503+00	92	59	337	233
28	311	502+00	90	67	337	254
28	311	501+00	92	70	339	239
28	311	500+00	91	59	335	226
28		STA. 499+00	90	63		
	1555	SHEET TOTAL			1685	1183

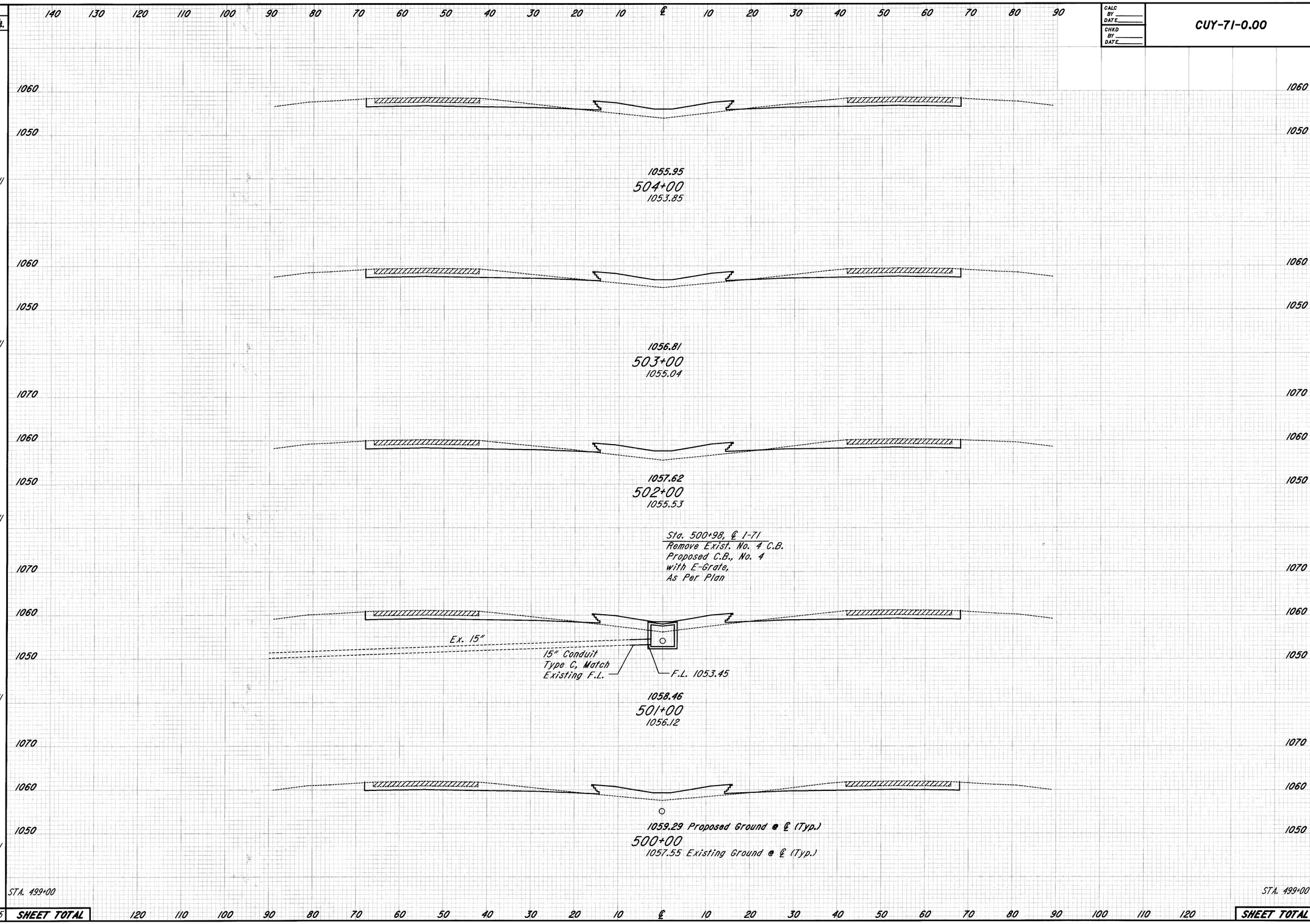

CROSS SECTIONS STA. 500+00 TO STA. 504+00

PLOTTED FROM: ::\users\eforsber\pid08459\dgn\307xs05.dgn
PLOT SUBMITTED: 24-JUL-1998 09:56
307XS05.DGN

CALC BY ____ DATE ____
CHKD BY ____ DATE ____

CUY-71-0.00

OHIO
FHWA REGION 5

132
361

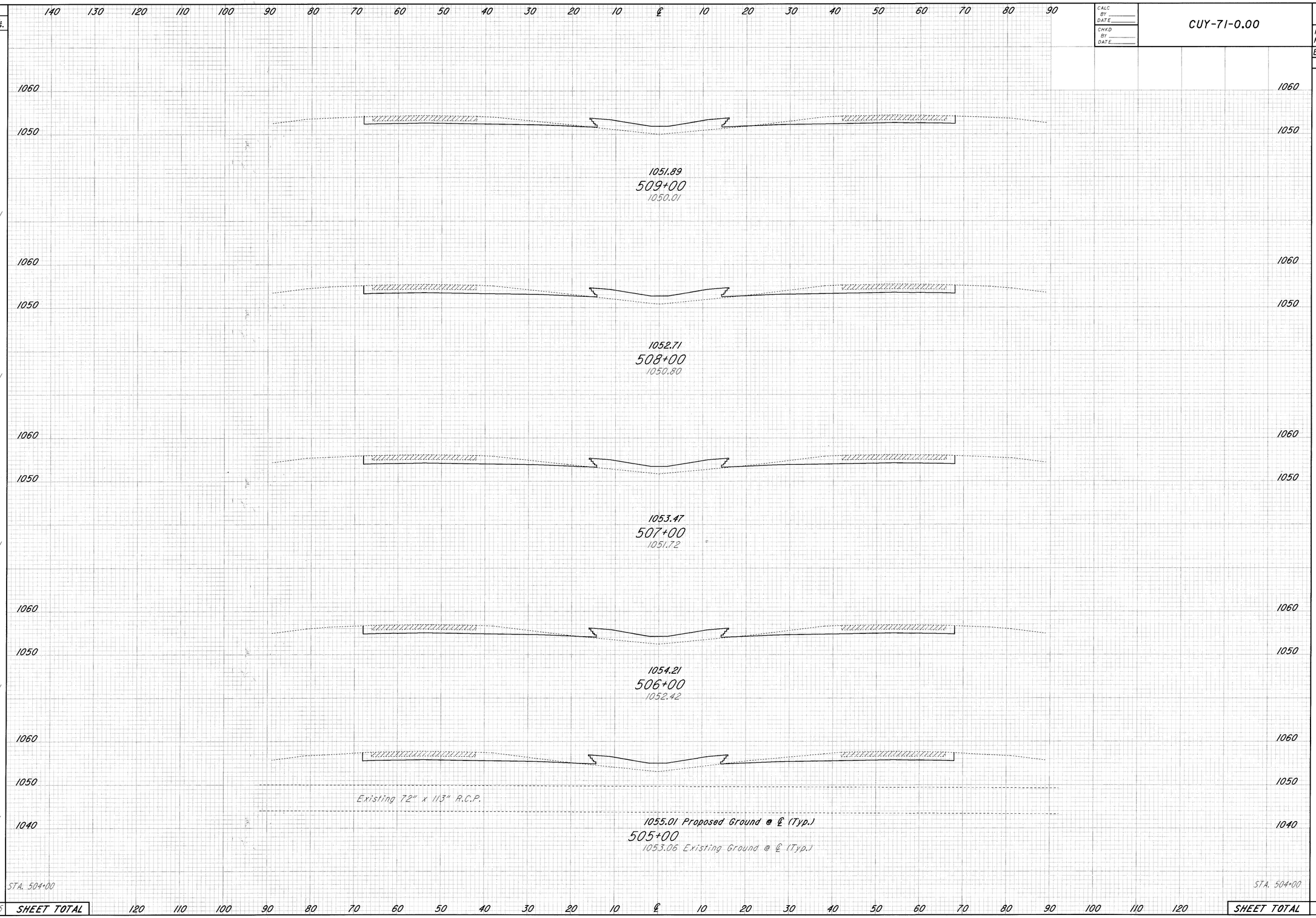

SEEDING END WIDTH	SEEDING SQ. YDS.	END AREA VOLUME CUT	END AREA VOLUME FILL	END AREA VOLUME CUT	END AREA VOLUME FILL
28		82	62		
	311			331	228
28		97	61		
	311			359	220
28		97	58		
	311			356	220
28		95	61		
	311			357	226
28		98	61		
	311			348	235
28		90	66		
1555	SHEET TOTAL			1751	1129

CROSS SECTIONS STA. 505+00 TO STA. 509+00

CALC BY	
DATE	
CHKD BY	
DATE	

CUY-71-0.00

OHIO — FHWA REGION 5 — (133 / 361)

SEEDING END WIDTH	SEEDING SQ. YDS.	STA.	END AREA VOLUME CUT	END AREA VOLUME FILL	CUT	FILL
28		514+00	96	62		
	311				350	230
28		513+00	93	62		
	311				352	224
28		512+00	97	59		
	311				352	226
28		511+00	93	63		
	311				344	239
28		510+00	93	66		
	311				324	237
28		STA. 509+00	82	62		
	1555	SHEET TOTAL			1722	1156

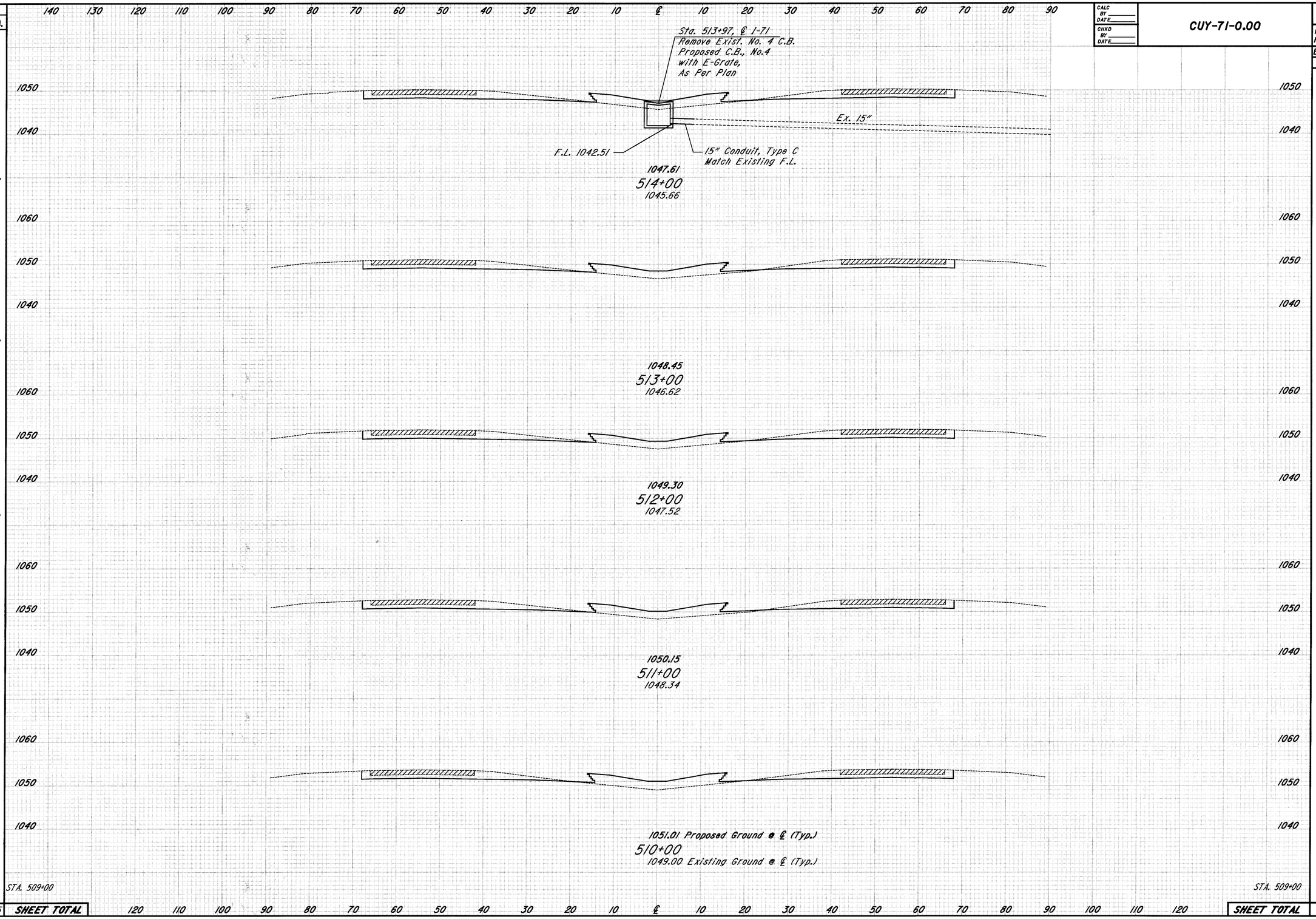

CROSS SECTIONS STA. 510+00 TO STA. 514+00

PLOT SUBMITTED: 24-JUL-1998 15:11

PLOTTED FROM: ::\users\eforsber\pid08459\dgn\307xs06.dgn

307XS06.DGN

SEEDING END WIDTH	SEEDING SQ. YDS.	CUT	FILL	CUT	FILL
28	311	93	55	333	228
28	311	87	68	333	230
28	311	93	56	339	222
28	311	90	64	335	233
28	311	91	62	346	230
28	STA. 514+00	96	62		
	1555 SHEET TOTAL			1665	1024

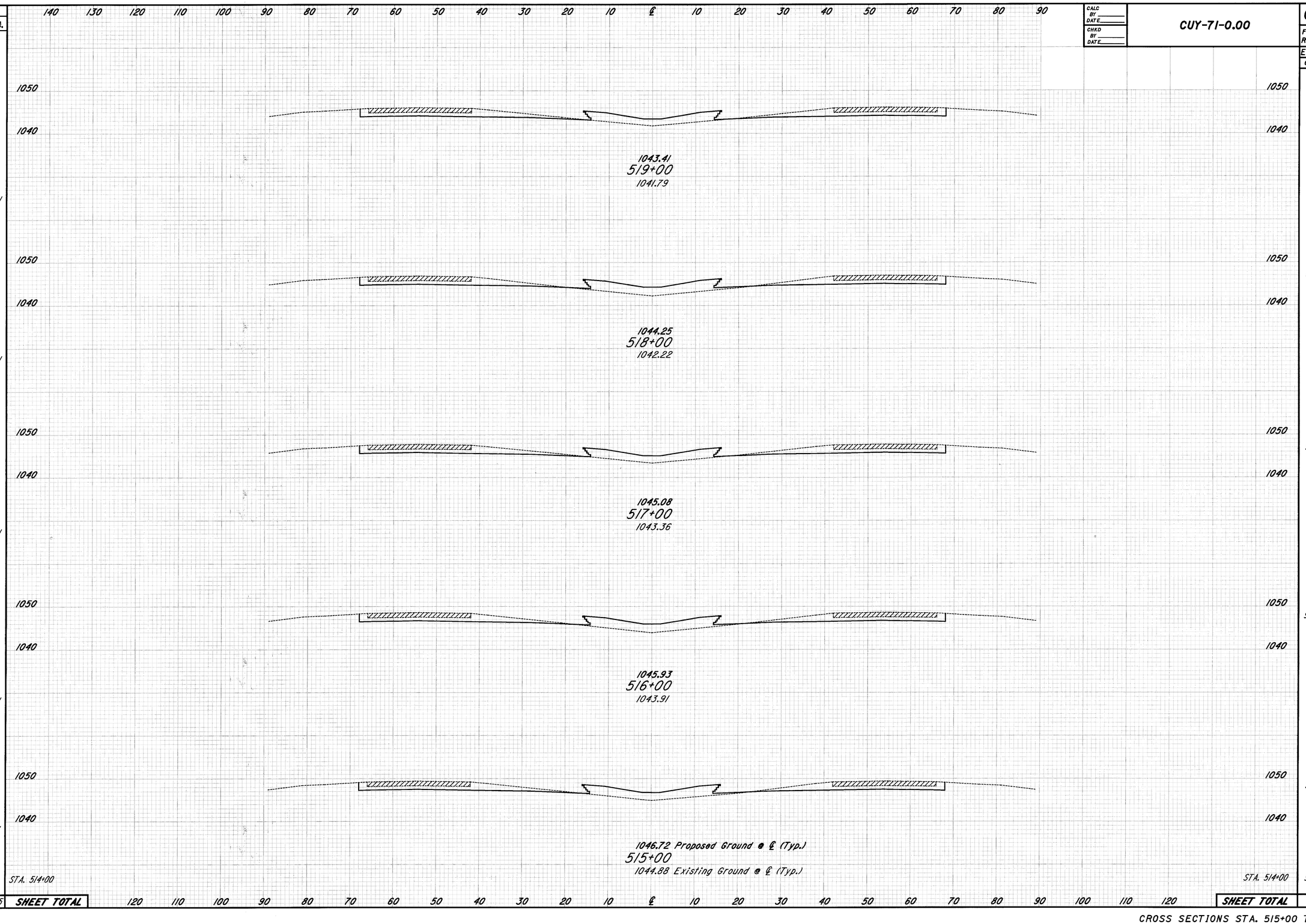

CALC BY ____ DATE ____
CHKD BY ____ DATE ____

CUY-71-0.00

OHIO
FHWA REGION 5

134
361

END AREA VOLUME

PLOTTED FROM Wersberger@pid08459@307xs07.dgn 24-JUL-1998 15:11
PLOT SUBMITTED: 307XS07.DGN

CROSS SECTIONS STA. 515+00 TO STA. 519+00

PLOTTED FROM: ::\users\eforsber\pid08459\dgn\307xs08.dgn PLOT SUBMITTED: 24-JUL-1998 15:11

307XS08.DGN

CALC BY ____ DATE ____
CHKD BY ____ DATE ____

CUY-71-0.00

OHIO
FHWA REGION 5

135
361

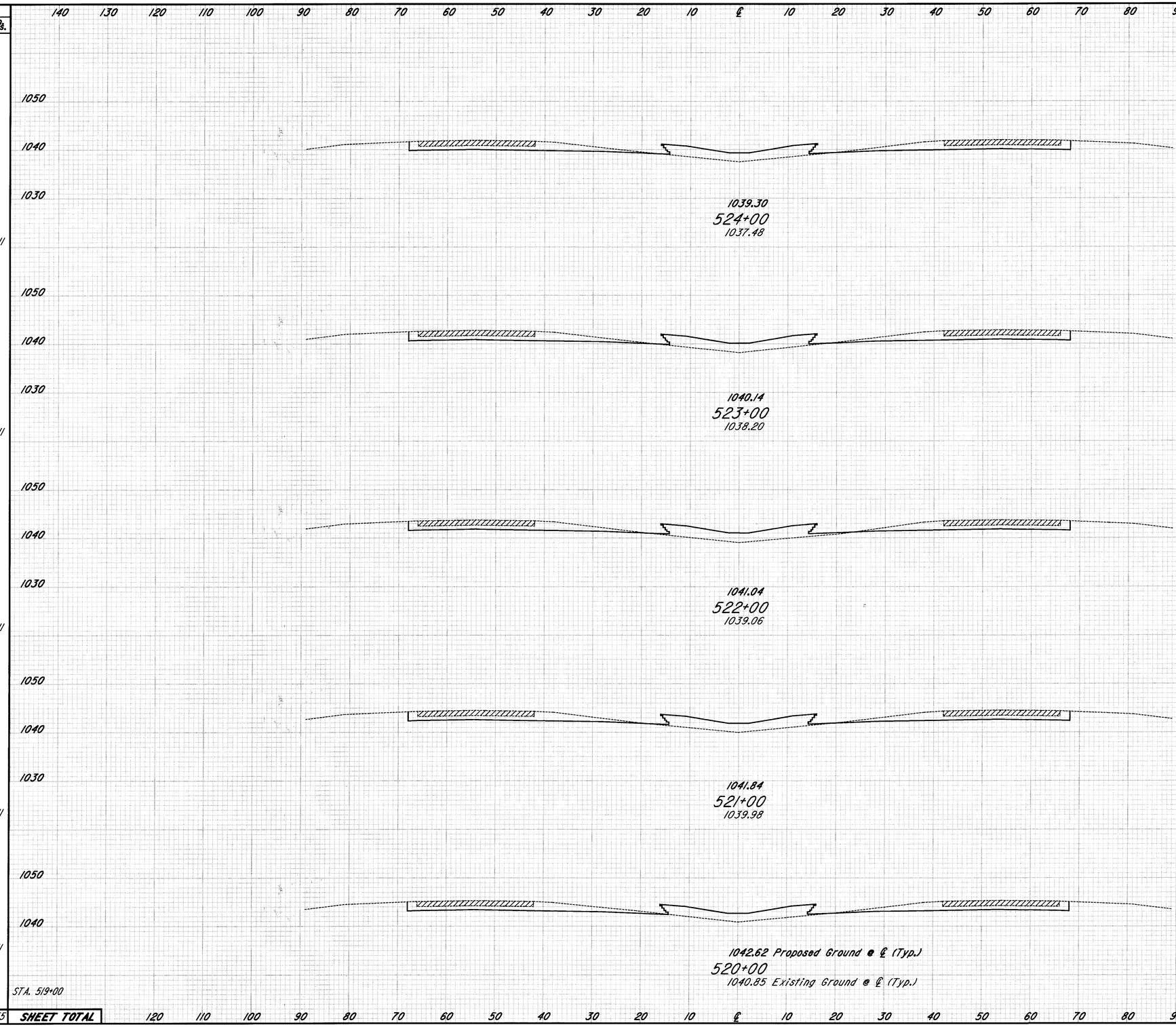

SEEDING END WIDTH	SEEDING SQ. YDS.	END AREA CUT	END AREA FILL	VOLUME CUT	VOLUME FILL
28	311	95	60	354	226
28	311	96	62	346	237
28	311	91	66	341	237
28	311	93	62	356	222
28	311	99	58	356	209
28	STA. 519+00	93	55		
	1555 SHEET TOTAL			1753	1131

CROSS SECTIONS STA. 520+00 TO STA. 524+00

CALC BY ____ DATE ____	CUY-71-0.00	OHIO	136 / 361
CHKD BY ____ DATE ____		FHWA REGION 5	

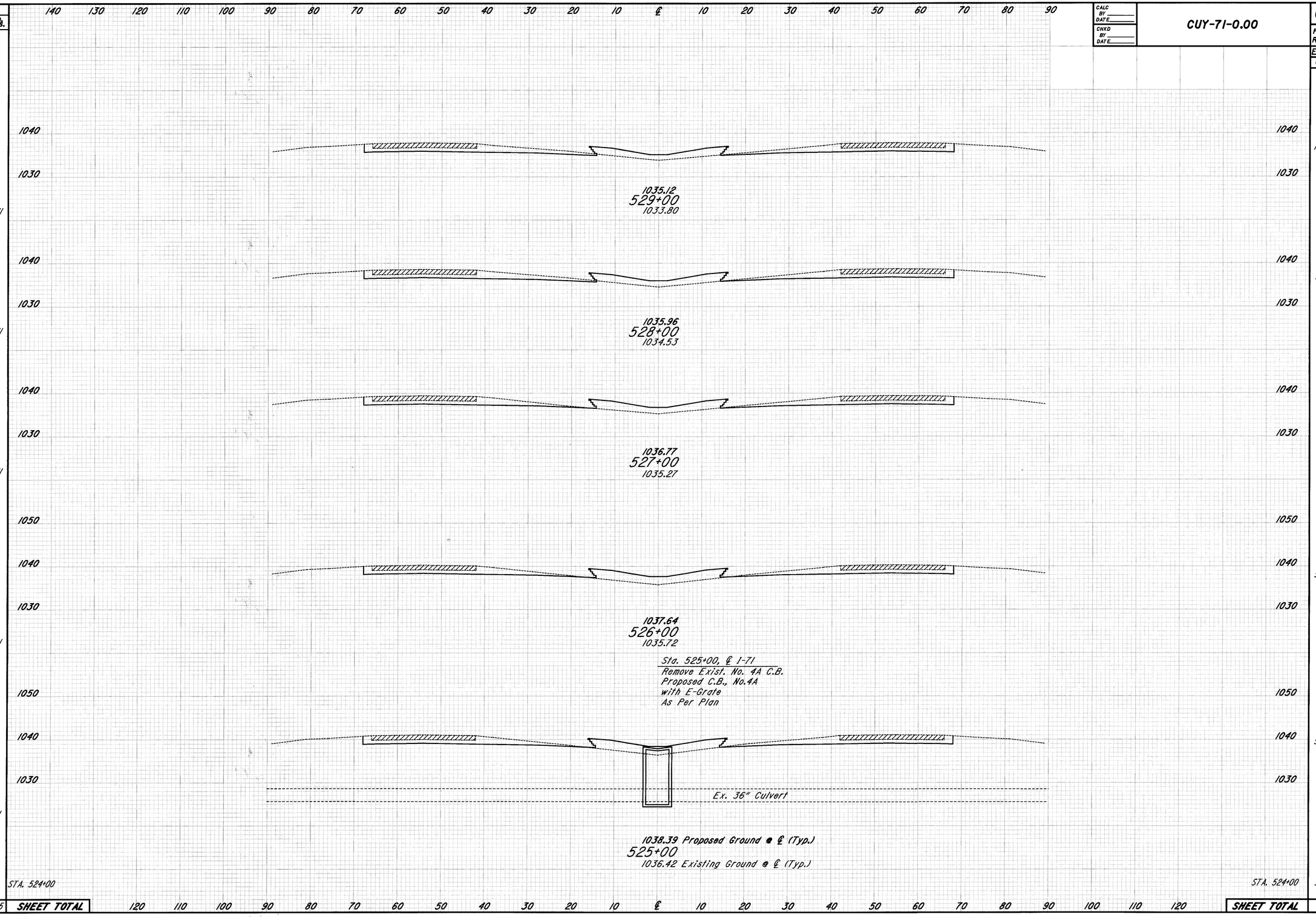

SEEDING END WIDTH	SEEDING SQ. YDS.	END AREA VOLUME CUT	END AREA VOLUME FILL	CUT	FILL
28		103	46		
	311			378	176
28		101	49		
	311			370	185
28		99	51		
	311			356	206
28		93	60		
	311			356	222
28		99	60		
	311			359	222
28		95	60		
	1555 SHEET TOTAL			1819	1011

CROSS SECTIONS STA. 525+00 TO STA. 529+00

PLOTTED FROM MRS Beforsber pid08459 dgn B307xs09.dgn 24-JUL-1998 15:11

PLOT SUBMITTED: 307XS09.DGN

PLOTTED FROM: ::\users\eforsber\pid08459\dgn\307xs10.dgn PLOT SUBMITTED: 24-JUL-1998 15:11

307XS10.DGN

CALC BY ____ DATE ____
CHKD BY ____ DATE ____

CUY-71-0.00

OHIO FHWA REGION 5

137 / 361

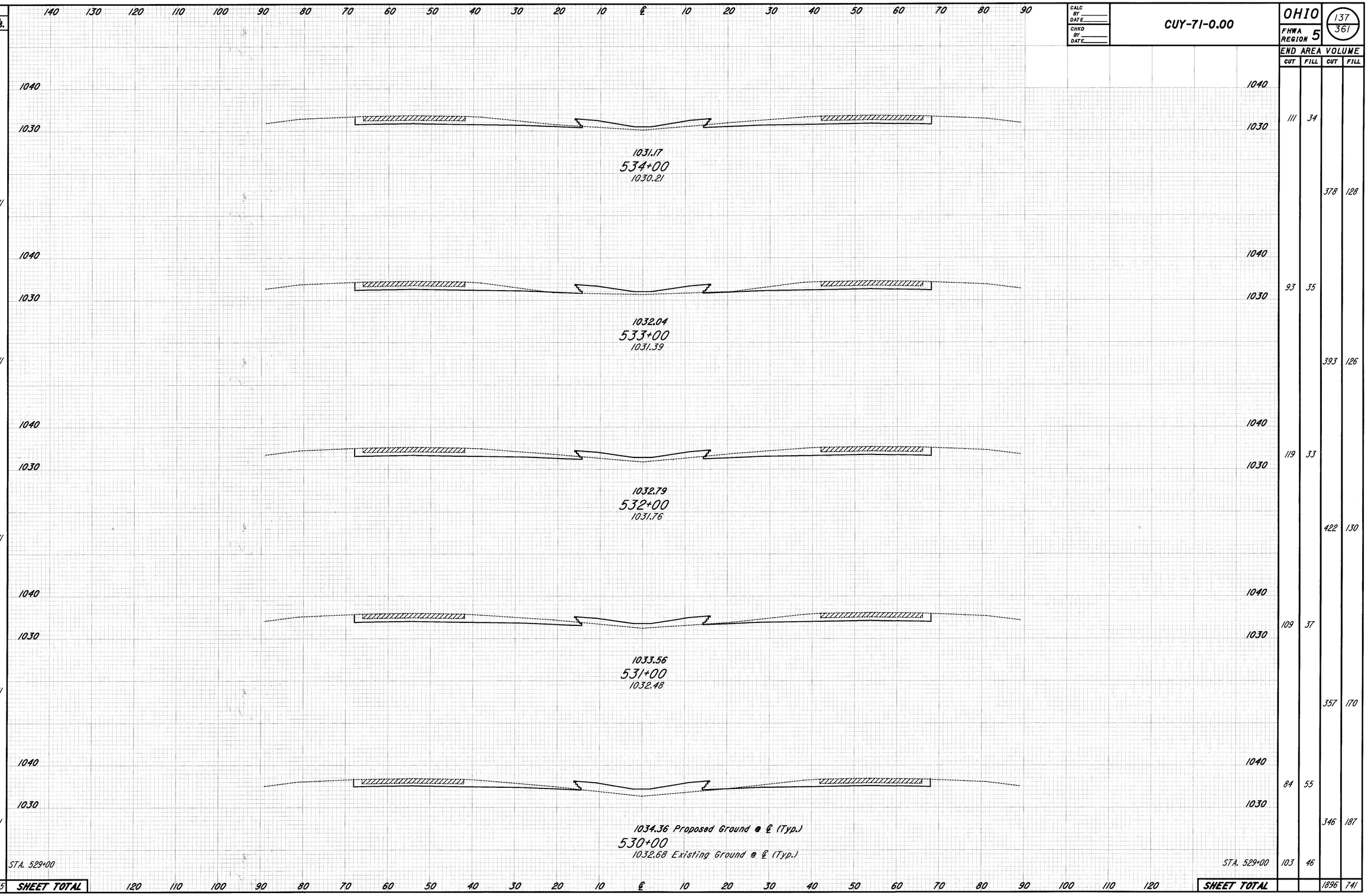

SEEDING END WIDTH	SEEDING SQ. YDS.	END AREA VOLUME CUT	END AREA VOLUME FILL	VOLUME CUT	VOLUME FILL
28	311	111	34	378	128
28	311	93	35	393	126
28	311	119	33	422	130
28	311	109	37	357	170
28	311	84	55	346	187
28	1555	103	46	1896	741

CROSS SECTIONS STA. 530+00 TO STA. 534+00

CALC BY ____ DATE ____
CHKD BY ____ DATE ____

CUY-71-0.00

OHIO
FHWA REGION 5

138
361

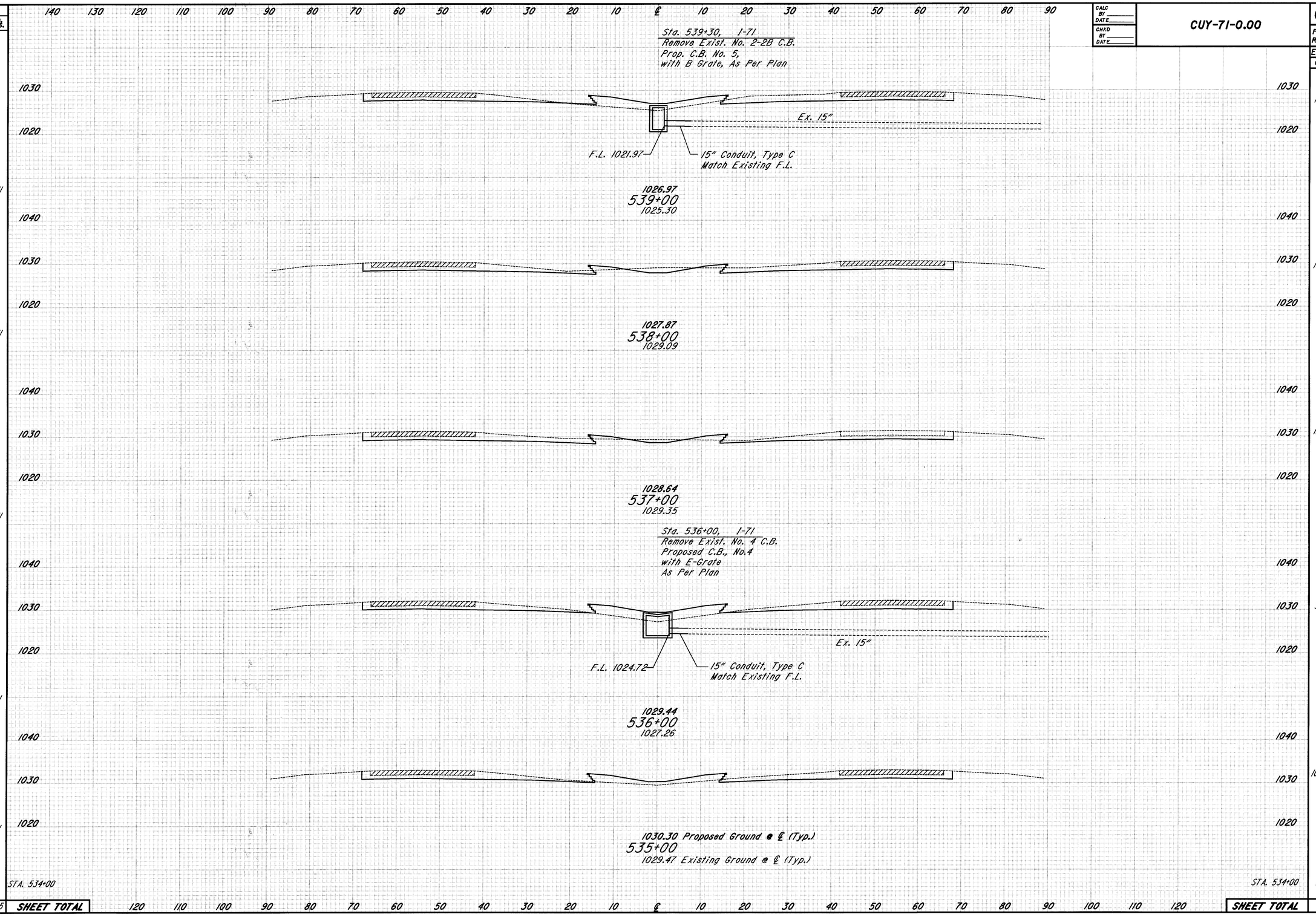

SEEDING END WIDTH	SEEDING SQ. YDS.	END AREA VOLUME CUT	END AREA VOLUME FILL	CUT	FILL
28	311	106	52	426	111
28	311	124	8	463	37
28	311	126	12	413	137
28	311	97	62	372	181
28	311	104	36	398	130
28		111	34		
	1555 SHEET TOTAL			2072	596

CROSS SECTIONS STA. 535+00 TO STA. 539+00

PLOTTED BY: Powers, Beforsber, Bpid08459, Bdgn, B307xs11.dgn
PLOTTED: 24-JUL-1998 15:11
307XS11.DGN

PLOTTED FROM: i:\users\eforsber\pid08459\dgn\307xs12.dgn 307XS12.DGN PLOT SUBMITTED: 24-JUL-1998 15:11

CALC BY ____ DATE ____
CHKD BY ____ DATE ____

CUY-71-0.00

OHIO FHWA REGION 5

139 / 361

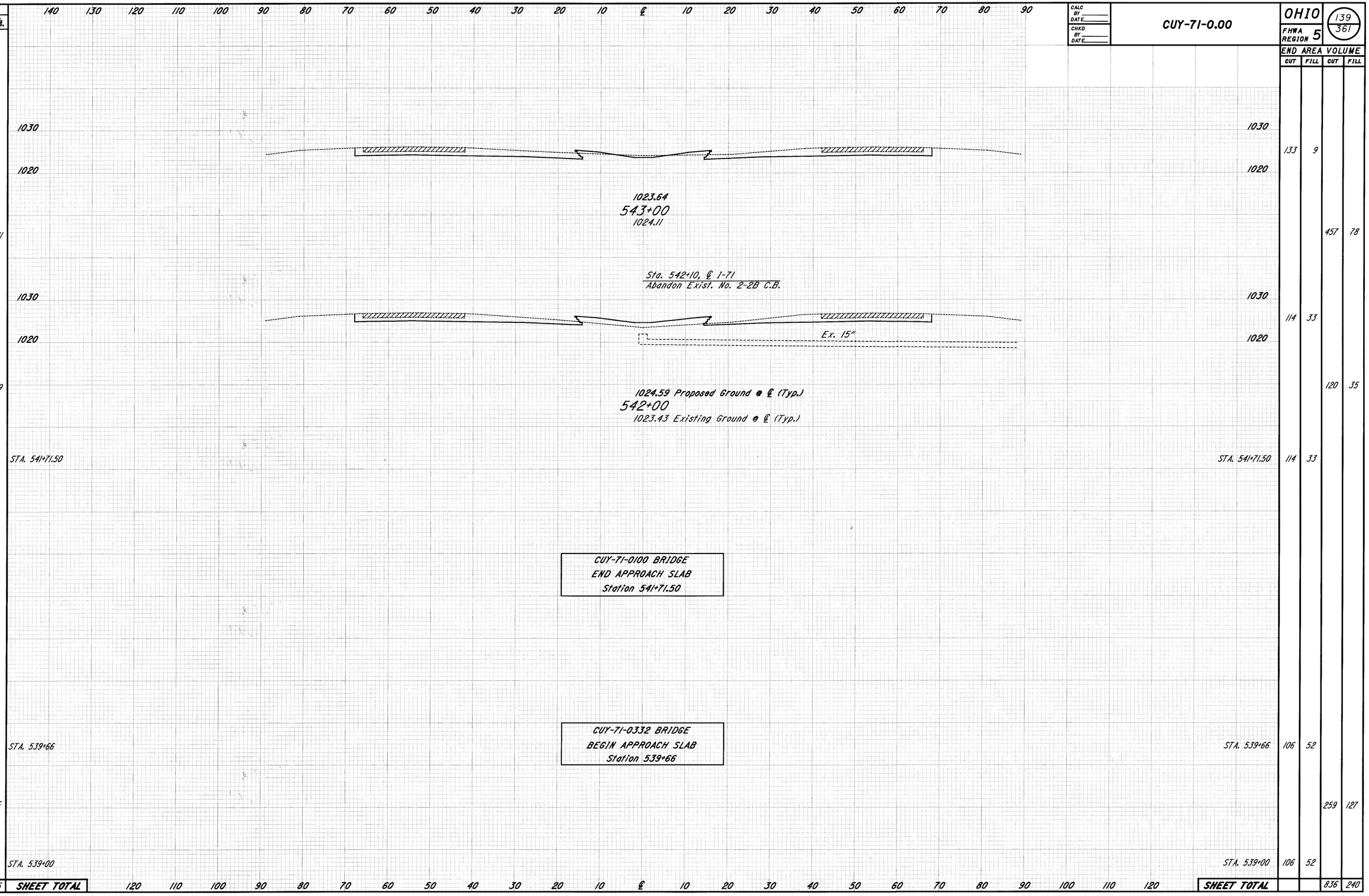

SEEDING END WIDTH	SEEDING SQ. YDS.	END AREA VOLUME CUT	END AREA VOLUME FILL	END AREA VOLUME CUT	END AREA VOLUME FILL
28		133	9		
	311			457	78
28		114	33		
	89			120	35
28		114	33		
28		106	52		
	205			259	127
28		106	52		
	605			836	240

CROSS SECTIONS STA. 540+00 TO STA. 543+00

SEEDING		
	END WIDTH	SQ. YDS.
	28	
		311
	28	
		311
	28	
		311
	28	
		311
	28	
		311
	28	
		311
	28	STA. 543+00
		1555 SHEET TOTAL

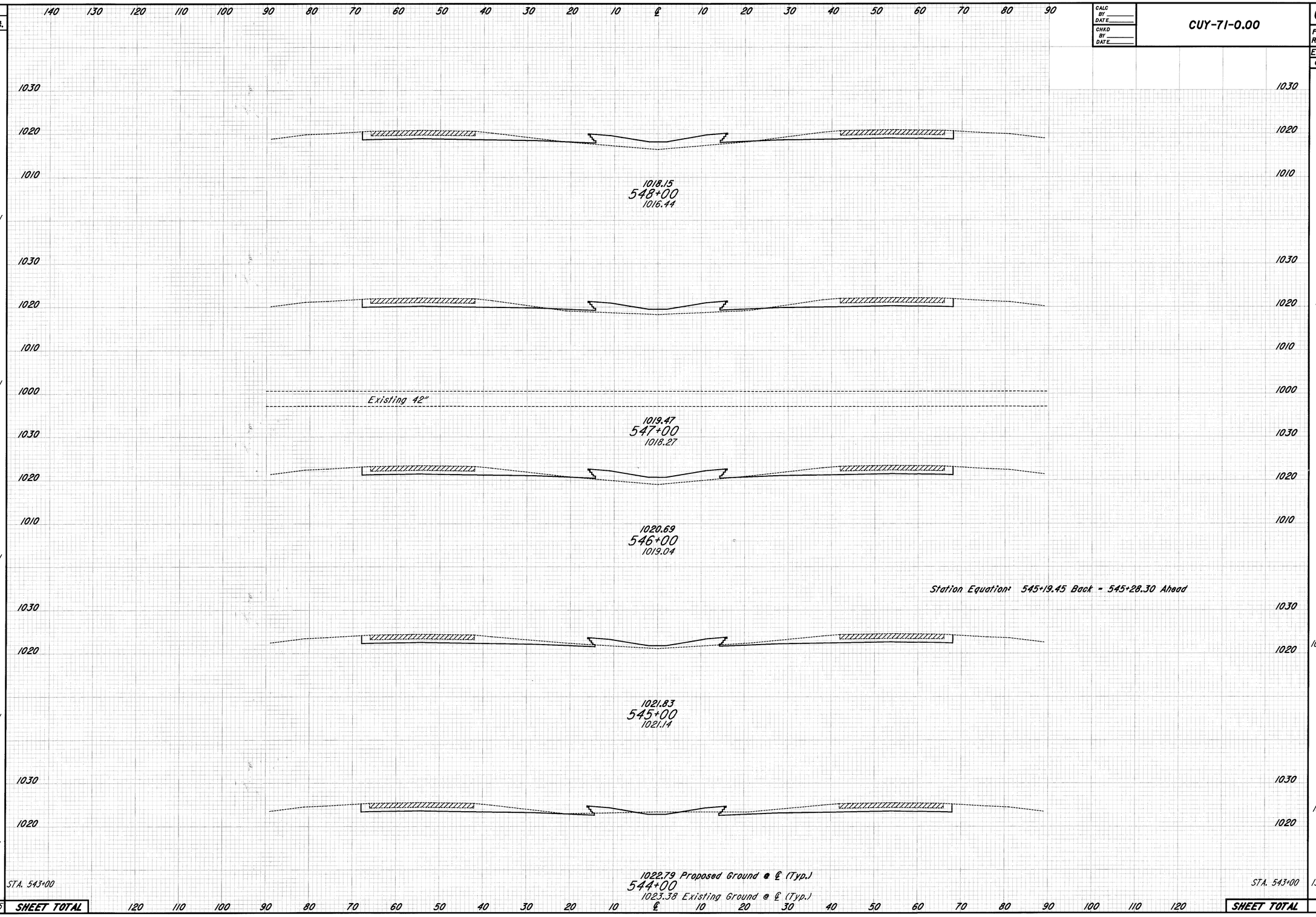

CALC BY ____ DATE ____
CHKD BY ____ DATE ____

CUY-71-0.00

OHIO
FHWA REGION 5

140 / 361

END AREA VOLUME			
CUT	FILL	CUT	FILL
86	62		
		313	224
83	59		
		322	215
91	57		
		327	155
103	35		
		378	96
101	17		
		433	48
133	9		
		1773	738

CROSS SECTIONS STA. 544+00 TO STA. 548+00

PLOT SUBMITTED: 24-JUL-1998 15:11
PLOTTED BY: grimmvse
PLOTTED FROM: ...sber@pid08459@dgn. 307xs13.dgn
307XS13.DGN

CALC BY ____ DATE ____	CUY-71-0.00	OHIO	141 / 361
CHKD BY ____ DATE ____		FHWA REGION 5	

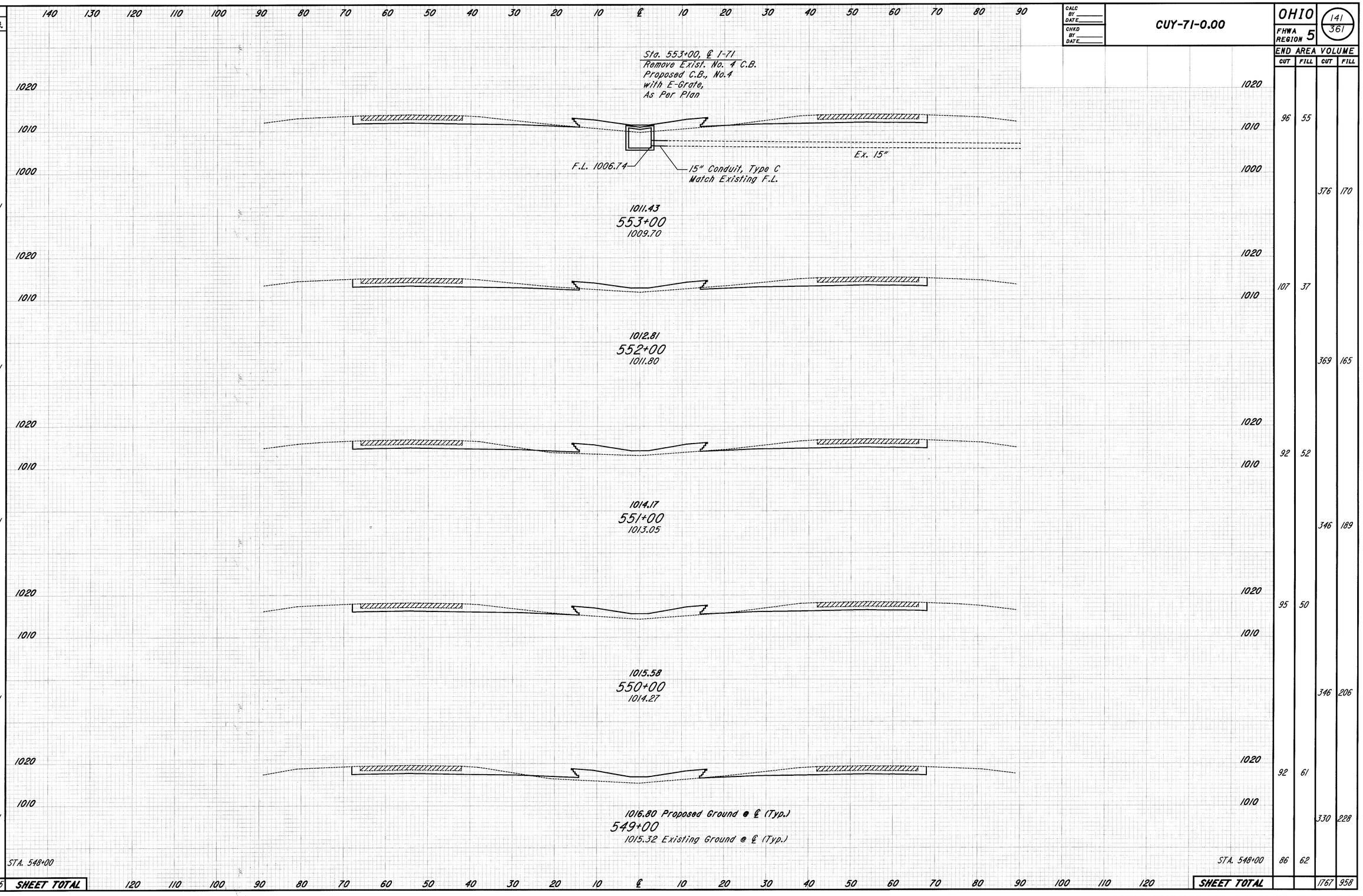

SEEDING END WIDTH	SEEDING SQ. YDS.	END AREA VOLUME CUT	END AREA VOLUME FILL	END AREA VOLUME CUT	END AREA VOLUME FILL
28		96	55		
	311			376	170
28		107	37		
	311			369	165
28		92	52		
	311			346	189
28		95	50		
	311			346	206
28		92	61		
	311			330	228
28		86	62		
	1555 SHEET TOTAL			1767	958

CROSS SECTIONS STA. 549+00 TO STA. 553+00

PLOT SUBMITTED: 24-JUL-1998 15:11

PLOTTED FROM: i:\users\eforsber\pid08459\dgn\307xs14.dgn

307XS14.DGN

CALC BY ____ DATE ____	CUY-71-0.00	OHIO FHWA REGION 5	142 / 361
CHKD BY ____ DATE ____			

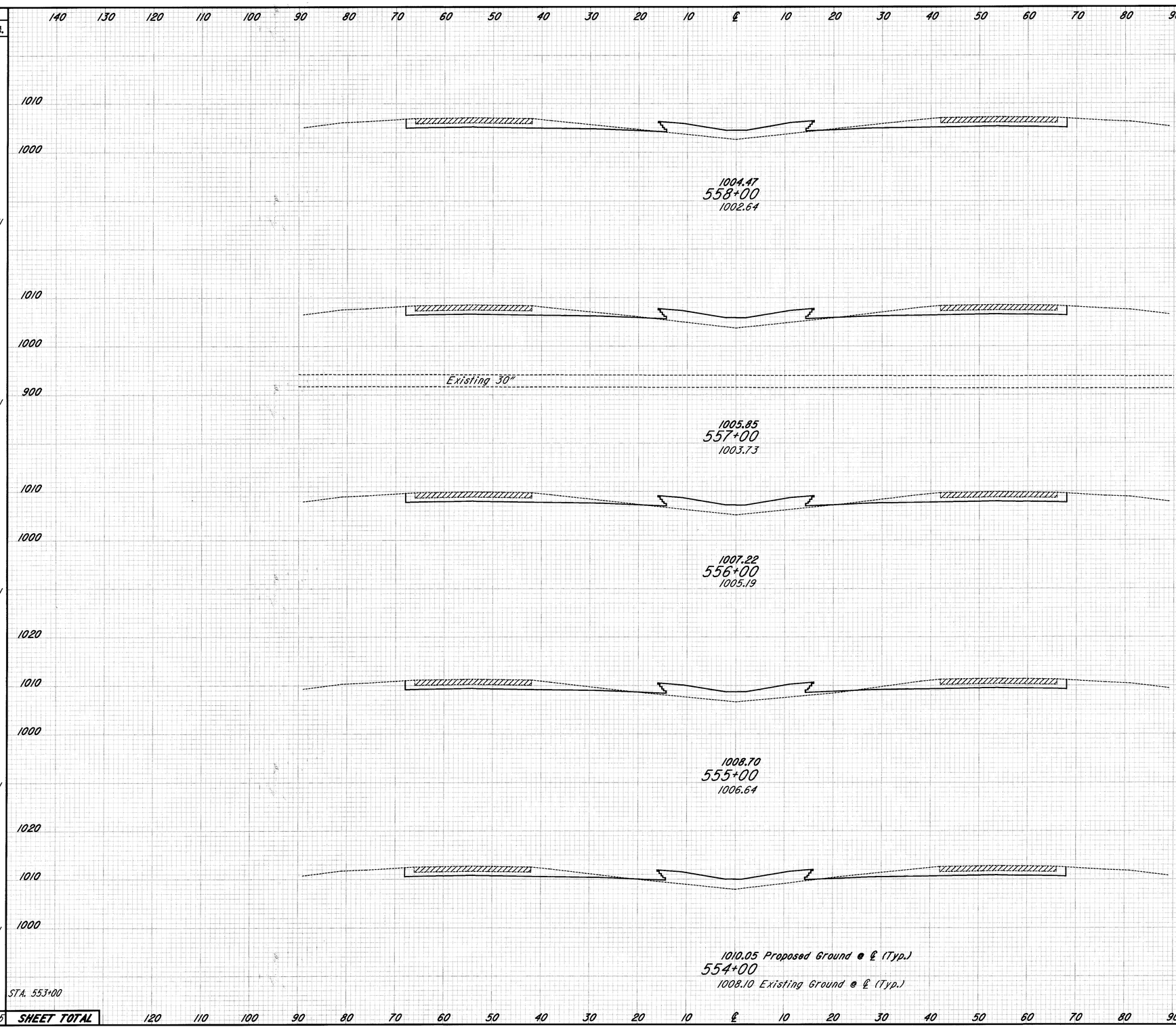

SEEDING END WIDTH	SEEDING SQ. YDS.	END AREA CUT	END AREA FILL	VOLUME CUT	VOLUME FILL
28		94	59		
	311			341	233
28		90	67		
	311			331	246
28		89	66		
	311			324	254
28		86	71		
	311			326	256
28		90	67		
	311			344	226
28		96	55		
	1555 SHEET TOTAL			1666	1215

PLOTTED FROM Powersberf:\pid08459\dgn\307xs15.dgn PLOT SUBMITTED: 24-JUL-1998 15:11

CROSS SECTIONS STA. 554+00 TO STA. 558+00

PLOT SUBMITTED: 24-JUL-1998 15:11

PLOTTED FROM: ::\users\eforsber\pid08459\dgn\307xs16.dgn

307XS16.DGN

CALC BY ____ DATE ____
CHKD BY ____ DATE ____

CUY-71-0.00

OHIO
FHWA REGION 5

143
361

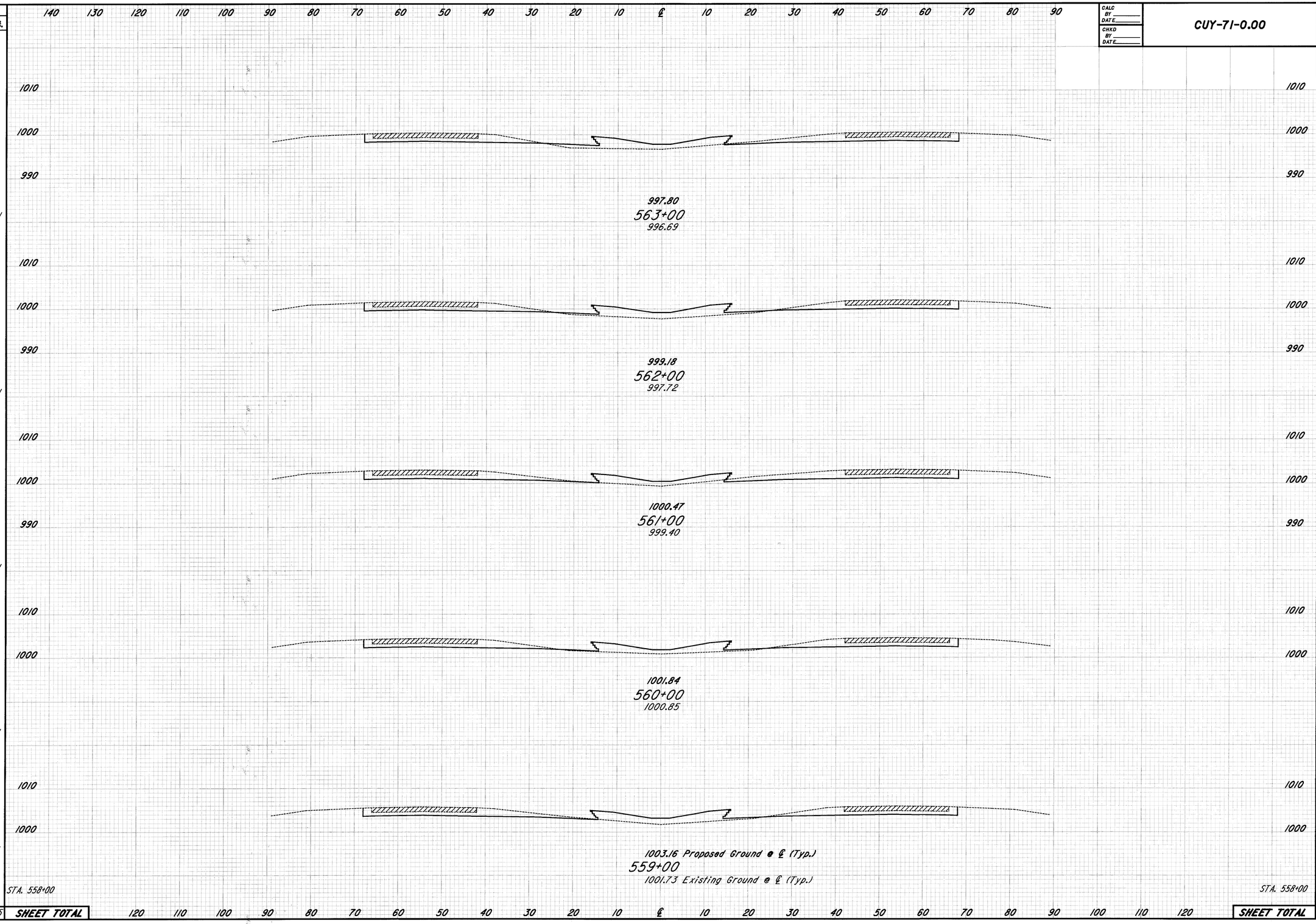

SEEDING END WIDTH	SEEDING SQ. YDS.	END AREA CUT	END AREA FILL	VOLUME CUT	VOLUME FILL
28		93	57		
	311			328	224
28		84	64		
	311			352	196
28		106	42		
	311			357	172
28		87	51		
	311			333	200
28		93	57		
	311			346	215
28		94	59		
	1555	SHEET TOTAL		1716	1007

CROSS SECTIONS STA. 559+00 TO STA. 563+00

SEEDING	END WIDTH	SQ. YDS.
	28	
		311
	28	
		311
	28	
		311
	28	
		311
	28	
		311
	28	
		311
	28	
		1555

CALC BY ____ DATE ____
CHKD BY ____ DATE ____

CUY-71-0.00

OHIO
FHWA REGION 5
144 / 361

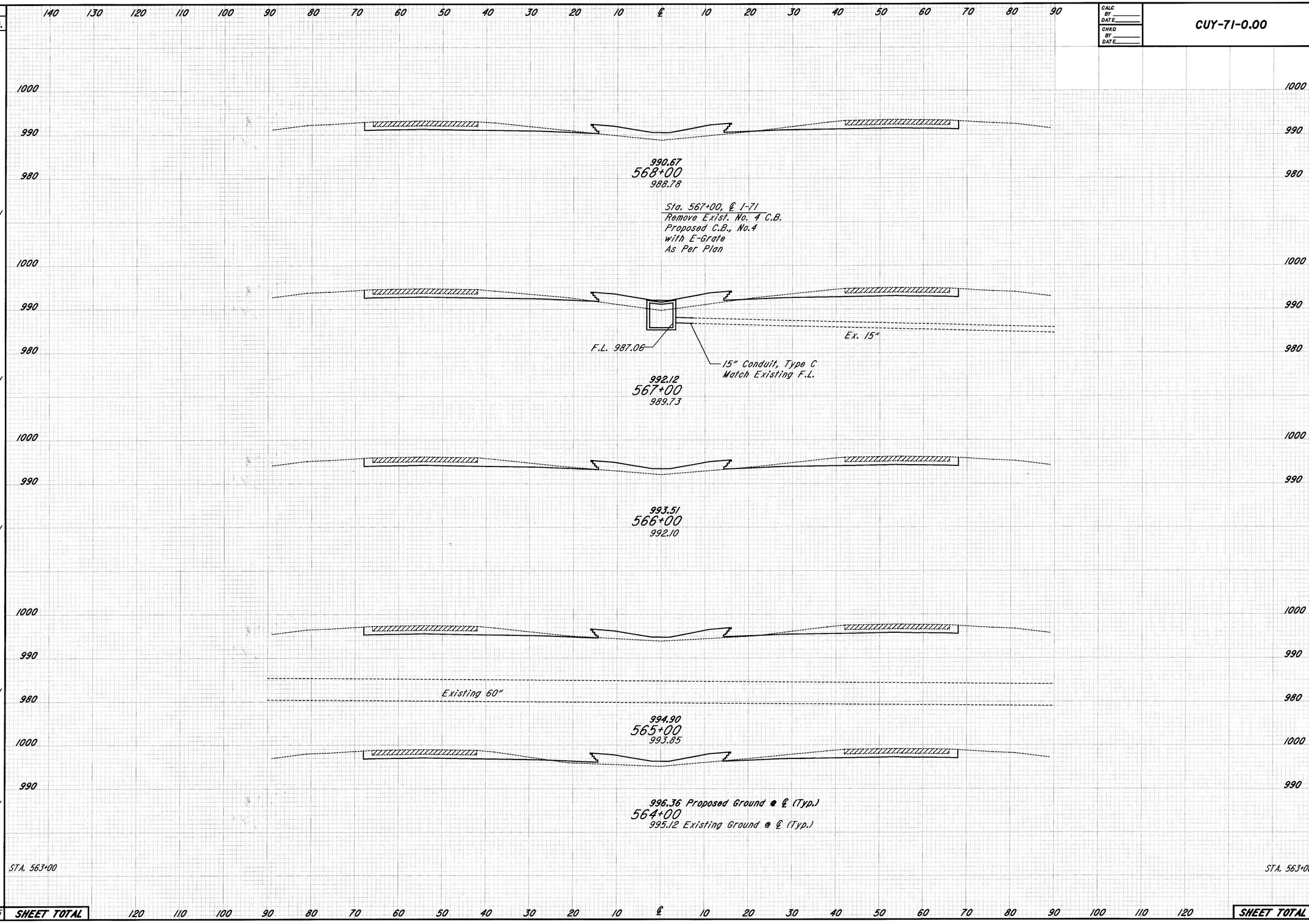

END AREA VOLUME			
CUT	FILL	CUT	FILL
107	47		
		374	212
95	68		
		351	219
95	50		
		341	180
89	47		
		337	185
92	53		
		343	204
93	57		
SHEET TOTAL		1746	1000

CROSS SECTIONS STA. 564+00 TO STA. 568+00

PLOTTED FROM Bforsber@pid08459@dgn@307xs17.dgn
PLOT SUBMITTED: 24-JUL-1998 15:11

PLOT SUBMITTED: 24-JUL-1998 15:11

PLOTTED FROM: ::\users\eforsber\pid08459\dgn\307xs18.dgn

307XS18.DGN

CALC BY / DATE	CHKD BY / DATE	CUY-71-0.00	OHIO	FHWA REGION 5	145 / 361

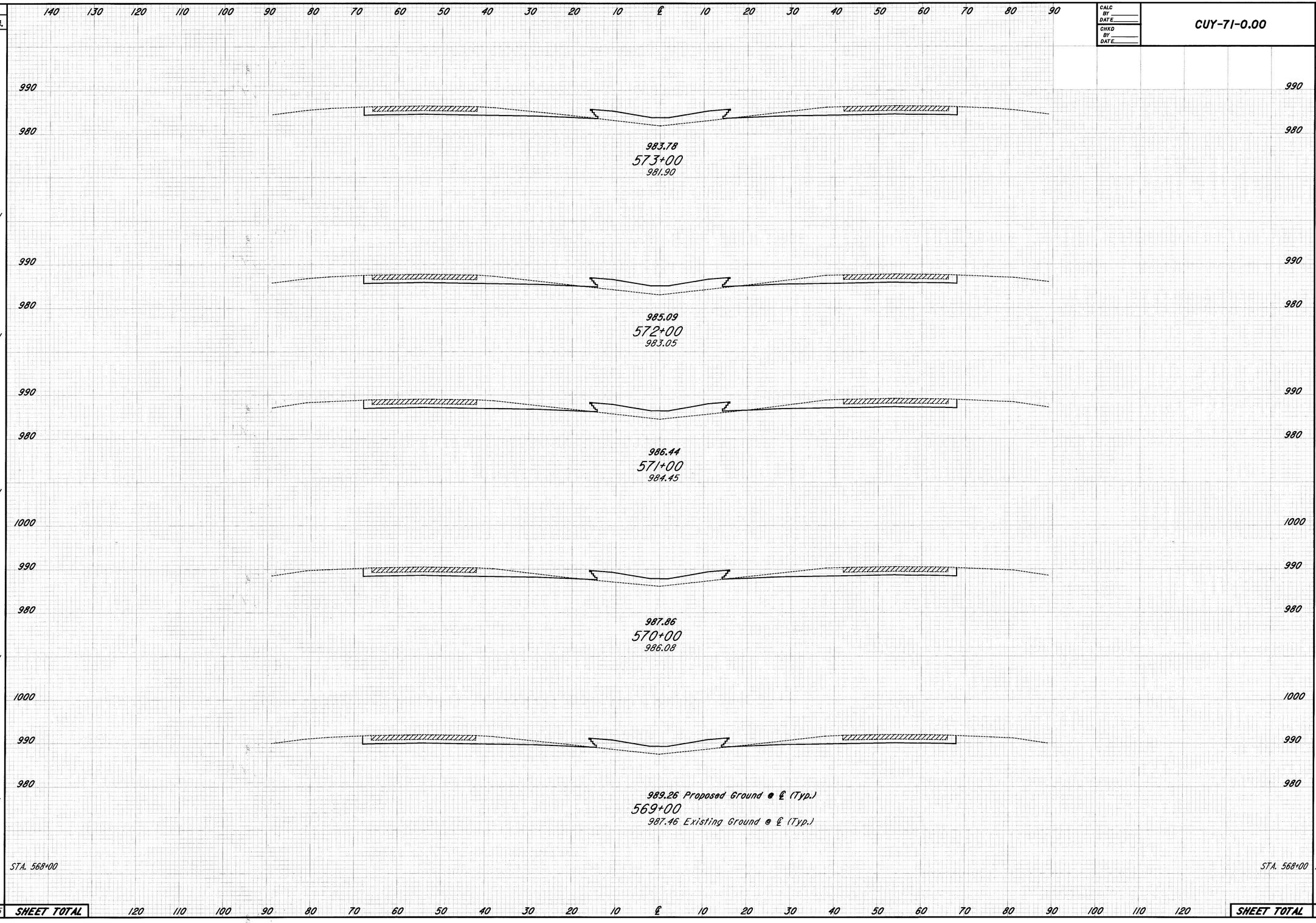

SEEDING END WIDTH	SEEDING SQ. YDS.	END AREA CUT	END AREA FILL	VOLUME CUT	VOLUME FILL
28	311	102	58	367	226
28	311	96	64	359	289
28	311	98	62	369	220
28	311	101	57	370	211
28	311	99	57	381	193
28		107	47		
SHEET TOTAL	1555	SHEET TOTAL		1846	1139

CROSS SECTIONS STA. 569+00 TO STA. 573+00

CALC BY ____ DATE ____ CHKD BY ____ DATE ____	CUY-71-0.00	OHIO FHWA REGION 5	146 / 361

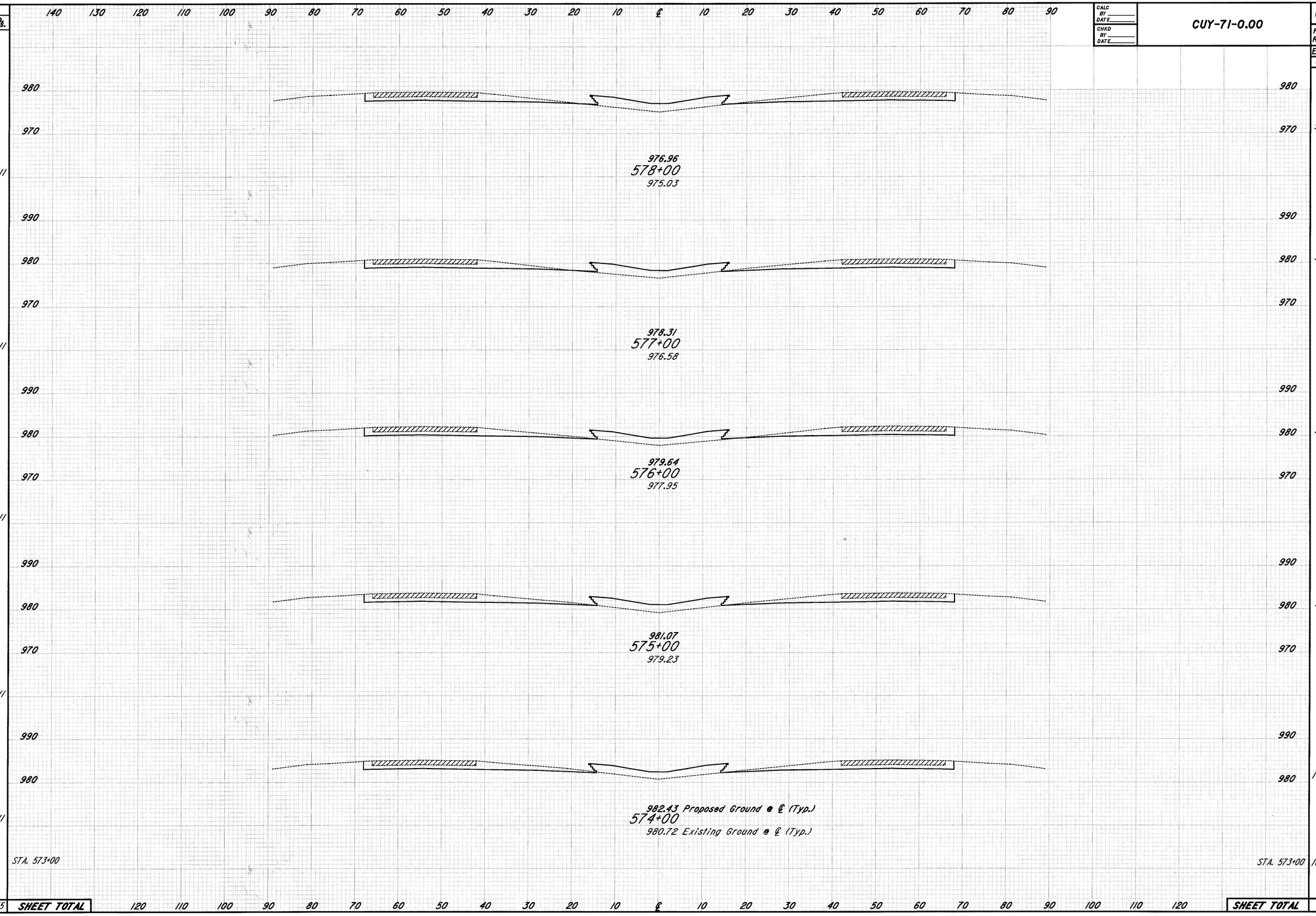

SEEDING END WIDTH	SEEDING SQ. YDS.	END AREA CUT	END AREA FILL	VOLUME CUT	VOLUME FILL
28	311	96	61	350	219
28	311	93	57	348	209
28	311	95	56	357	209
28	311	98	57	370	204
28	311	102	53	378	206
28		102	58		
	1555			1803	1047

CROSS SECTIONS STA. 574+00 TO STA. 578+00

PLOTTED FROM Rwerse@forsber@pid08459@dgn@307xsl9.dgn 24-JUL-1998 15:11 PLOT SUBMITTED: 307XS19.DGN

PLOTTED FROM: i:\user\eforsber\pid08459\dgn\307xs20.dgn 307XS20.DGN PLOT SUBMITTED: 24-JUL-1998 15:11

CALC BY ____ DATE ____
CHKD BY ____ DATE ____

CUY-71-0.00

OHIO FHWA REGION 5

147 / 361

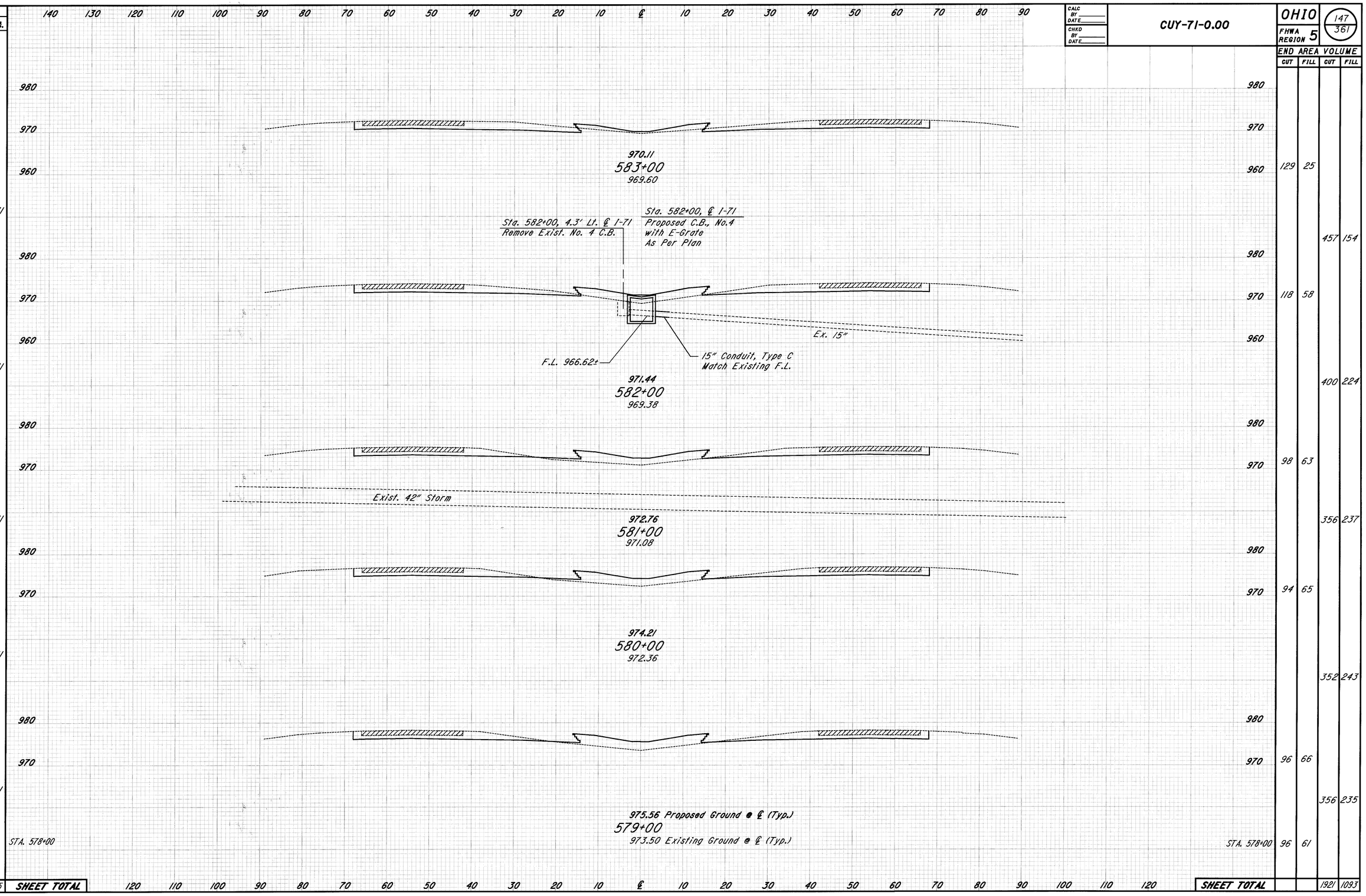

END AREA VOLUME			
CUT	FILL	CUT	FILL
129	25		
		457	154
118	58		
		400	224
98	63		
		356	237
94	65		
		352	243
96	66		
		356	235
96	61		
SHEET TOTAL		1921	1093

CROSS SECTIONS STA. 579+00 TO STA. 583+00

SEEDING	END WIDTH	SQ. YDS.
	28	311
	28	311
	28	311
	28	311
	28	311
	28	311
	28	STA. 583+00
		1555 SHEET TOTAL

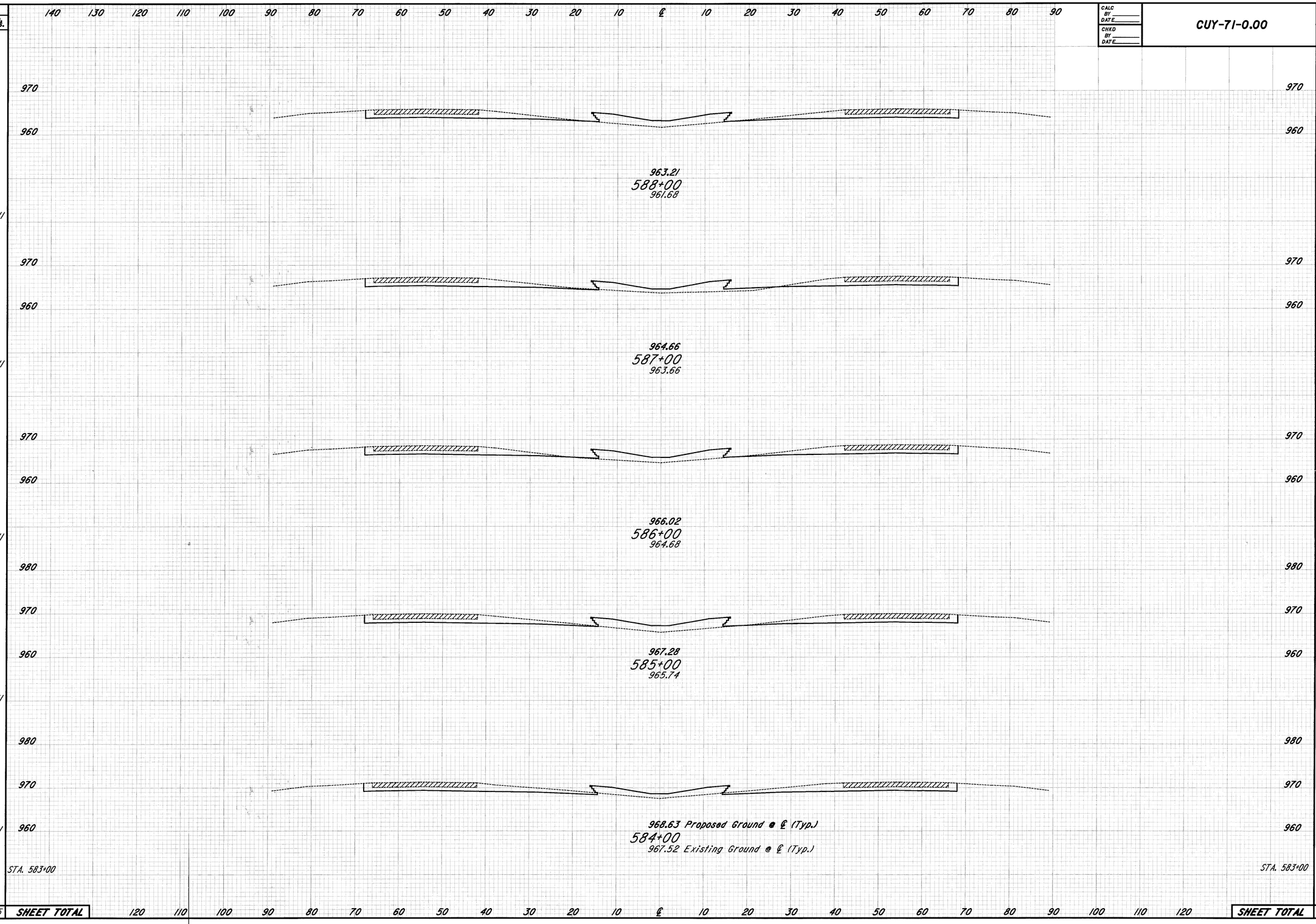

CALC BY ____ DATE ____
CHKD BY ____ DATE ____

CUY-71-0.00

OHIO
FHWA REGION 5
148 / 361

END AREA VOLUME			
CUT	FILL	CUT	FILL
92	53		
		333	196
88	53		
		331	194
91	52		
		346	194
96	53		
		378	174
108	41		
		439	122
129	25		
		1827	880

CROSS SECTIONS STA. 584+00 TO STA. 588+00

PLOTTED F-Rowers PLOT SUBMITTED: 24-JUL-1998 15:11
Beforsber pid08459 dgn 307xs21.dgn
307XS21.DGN

PLOT SUBMITTED: 24-JUL-1998 15:11

PLOTTED FROM: i:\user\eforsber\pid08459\dgn\307xs22.dgn

307XS22.DGN

CALC BY ____ DATE ____
CHKD BY ____ DATE ____

CUY-71-0.00

OHIO
FHWA REGION 5

149
361

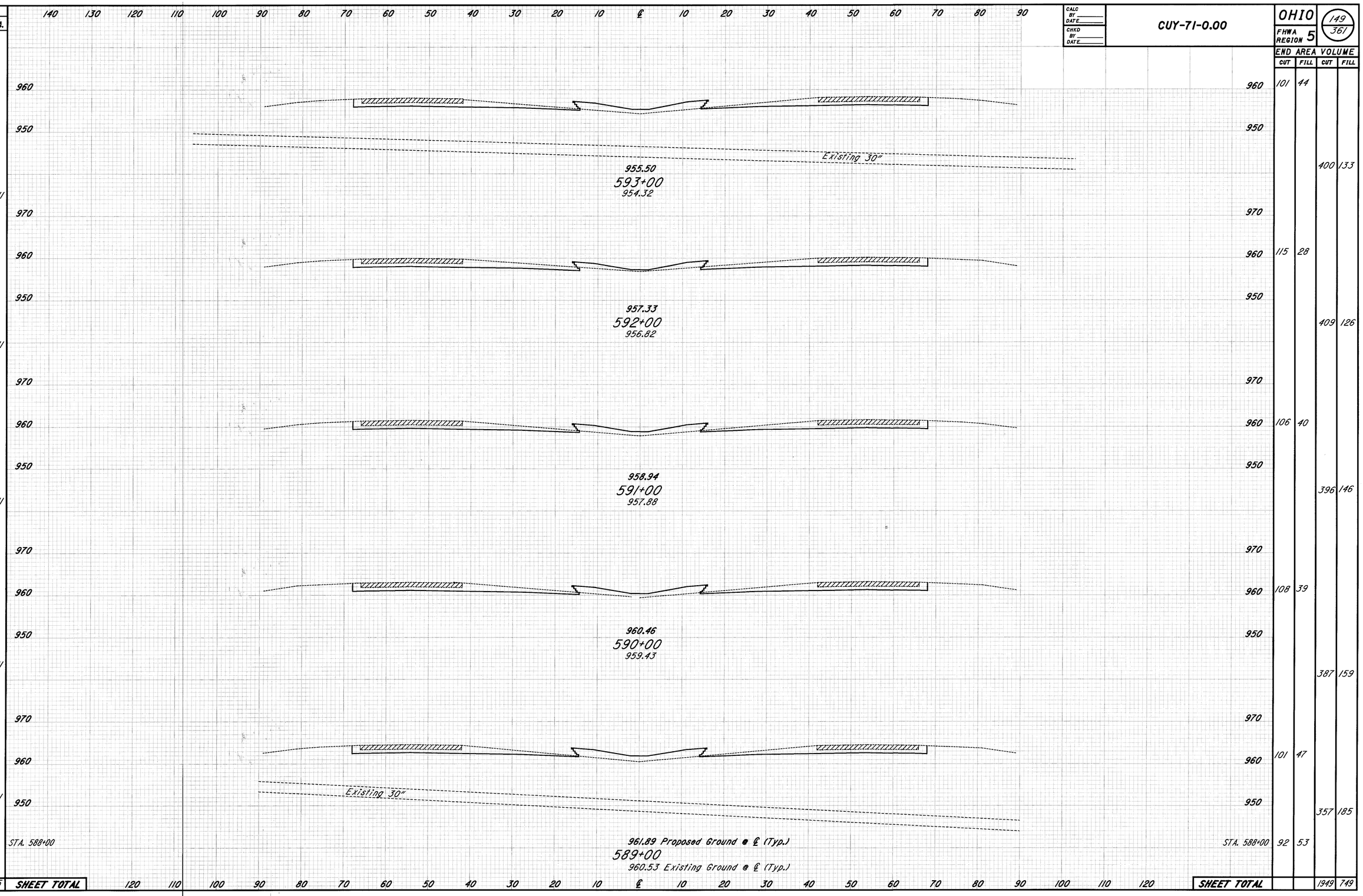

CROSS SECTIONS STA. 589+00 TO STA. 593+00

SEEDING	END WIDTH	SQ. YDS.
	28	311
	28	311
	28	311
	28	311
	28	311
	28	311
	28	
		1555

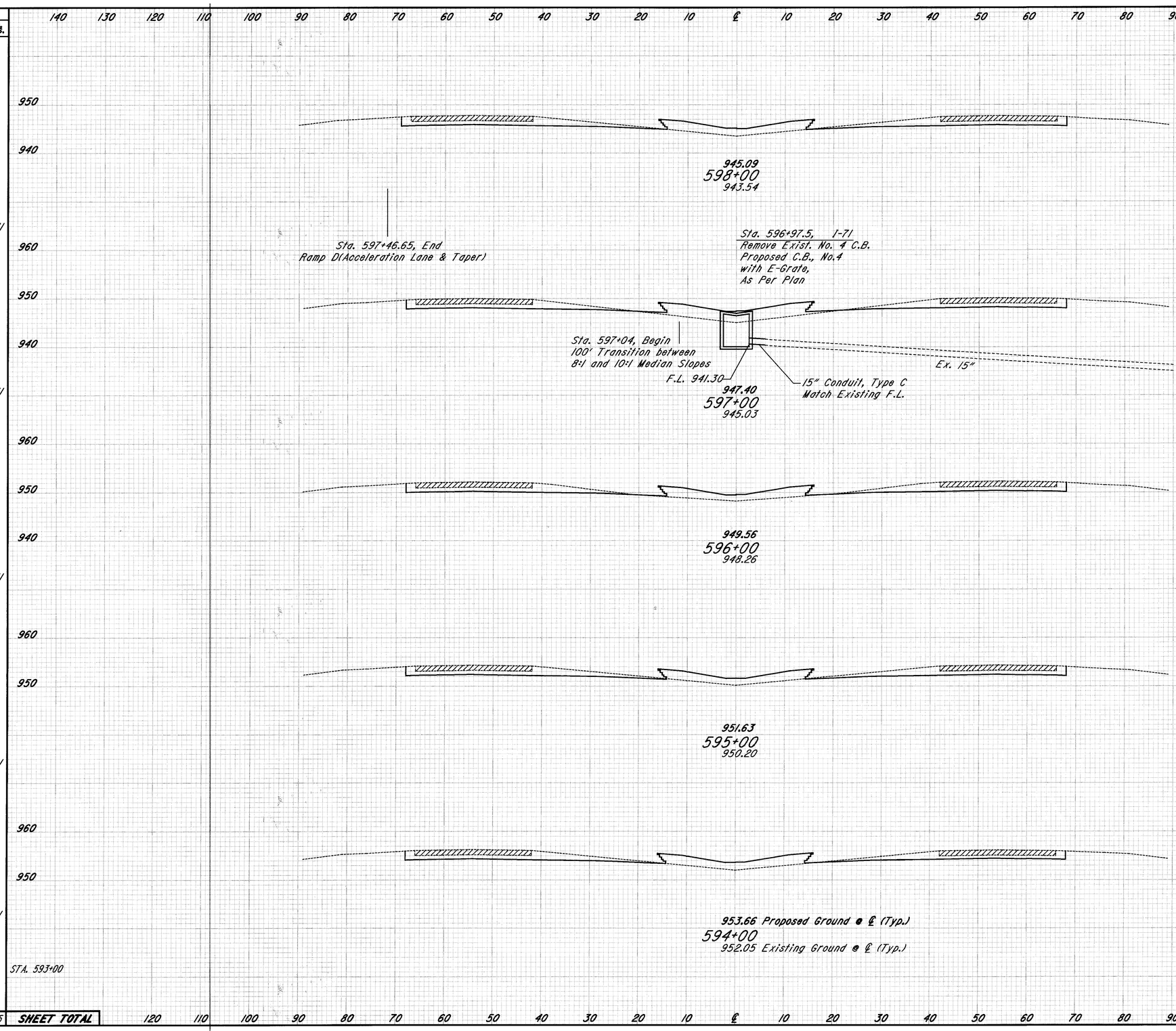

CALC BY ____ DATE ____
CHKD BY ____ DATE ____

CUY-71-0.00

OHIO
FHWA REGION 5

150
361

END AREA VOLUME			
CUT	FILL	CUT	FILL
97	52		
		180	125
85	75		
		149	130
85	75		
		322	233
89	51		
		348	187
99	50		
		343	193
86	54		
		346	181
101	44		
		1688	1049

SHEET TOTAL

CROSS SECTIONS STA. 594+00 TO STA. 598+00

PLOTTED FROM mrsBeforsber@pid08459@dgn@307xs23.dgn

PLOT SUBMITTED: 24-JUL-1998 15:11

307XS23.DGN

PLOT SUBMITTED: 24-JUL-1998 15:11

PLOTTED FROM: i:\users\eforsber\pid08459\dgn\307xs24.dgn

307XS24.DGN

CALC BY ____ DATE ____	CUY-71-0.00	OHIO FHWA REGION 5	151/361
CHKD BY ____ DATE ____			

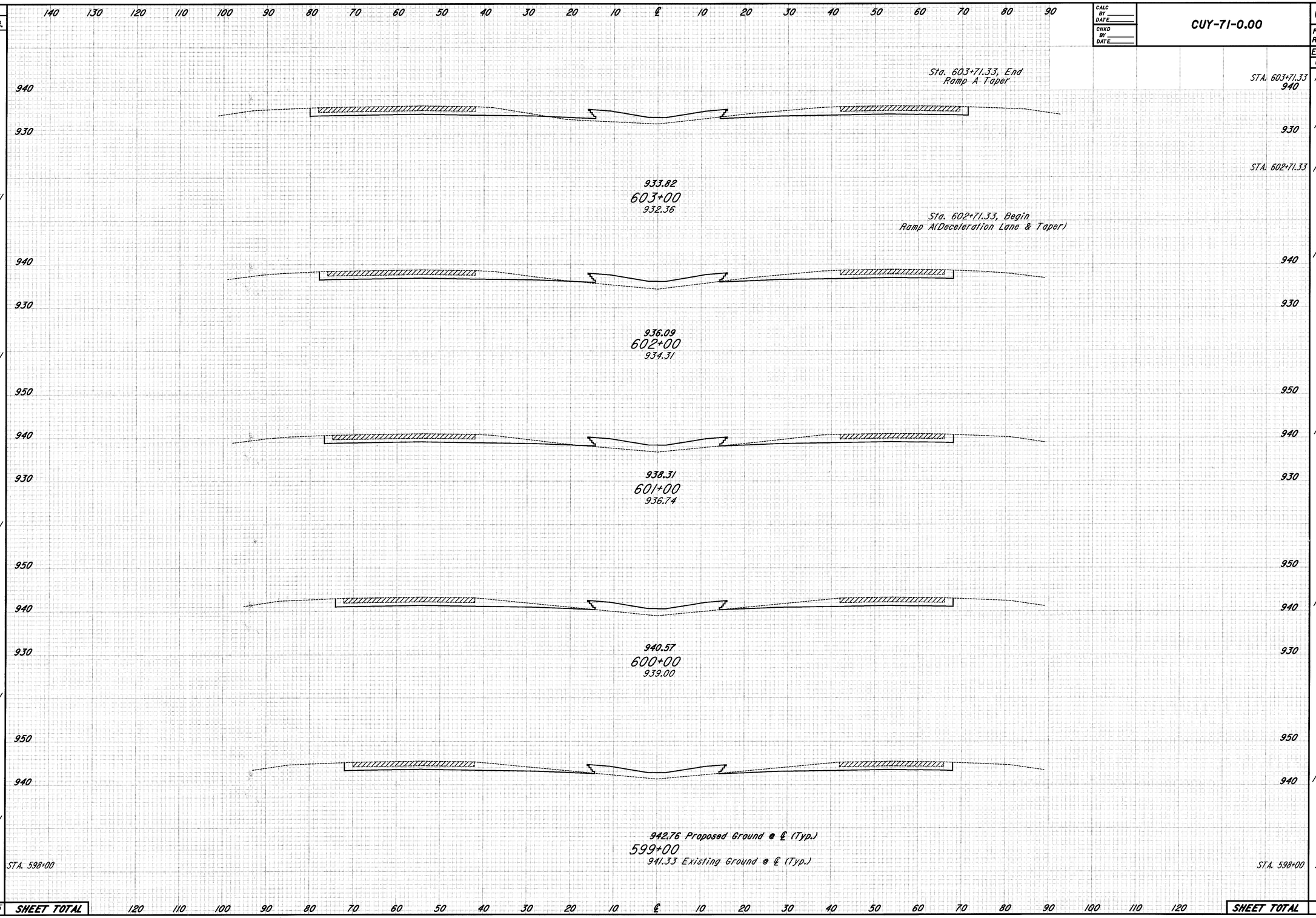

SEEDING END WIDTH	SEEDING SQ. YDS.	END AREA VOLUME CUT	END AREA VOLUME FILL	CUT	FILL
		112	62		
				297	157
28		113	57		
				118	61
		110	57		
	311				
				291	151
		110	57		
28					
				402	204
	311				
				385	196
28		107	53		
	311				
				378	191
28		101	53		
	311				
				370	189
28		103	50		
	311				
				224	114
28		97	52		
	1555	SHEET TOTAL			

CROSS SECTIONS STA. 599+00 TO STA. 603+00

SEEDING END WIDTH	SEEDING SQ. YDS.	STA.	END AREA VOLUME CUT	END AREA VOLUME FILL	VOLUME CUT	VOLUME FILL
		STA. 608+45 (BACK)	121	55		
					202	92
28			121	55		
	311				456	183
28			125	44		
	311				463	170
28			125	48		
	311				456	169
28			121	43		
	311				431	194
28			112	62		
	311				119	66
28		STA. 603+71.33	112	62		
	1555	SHEET TOTAL			1671	874

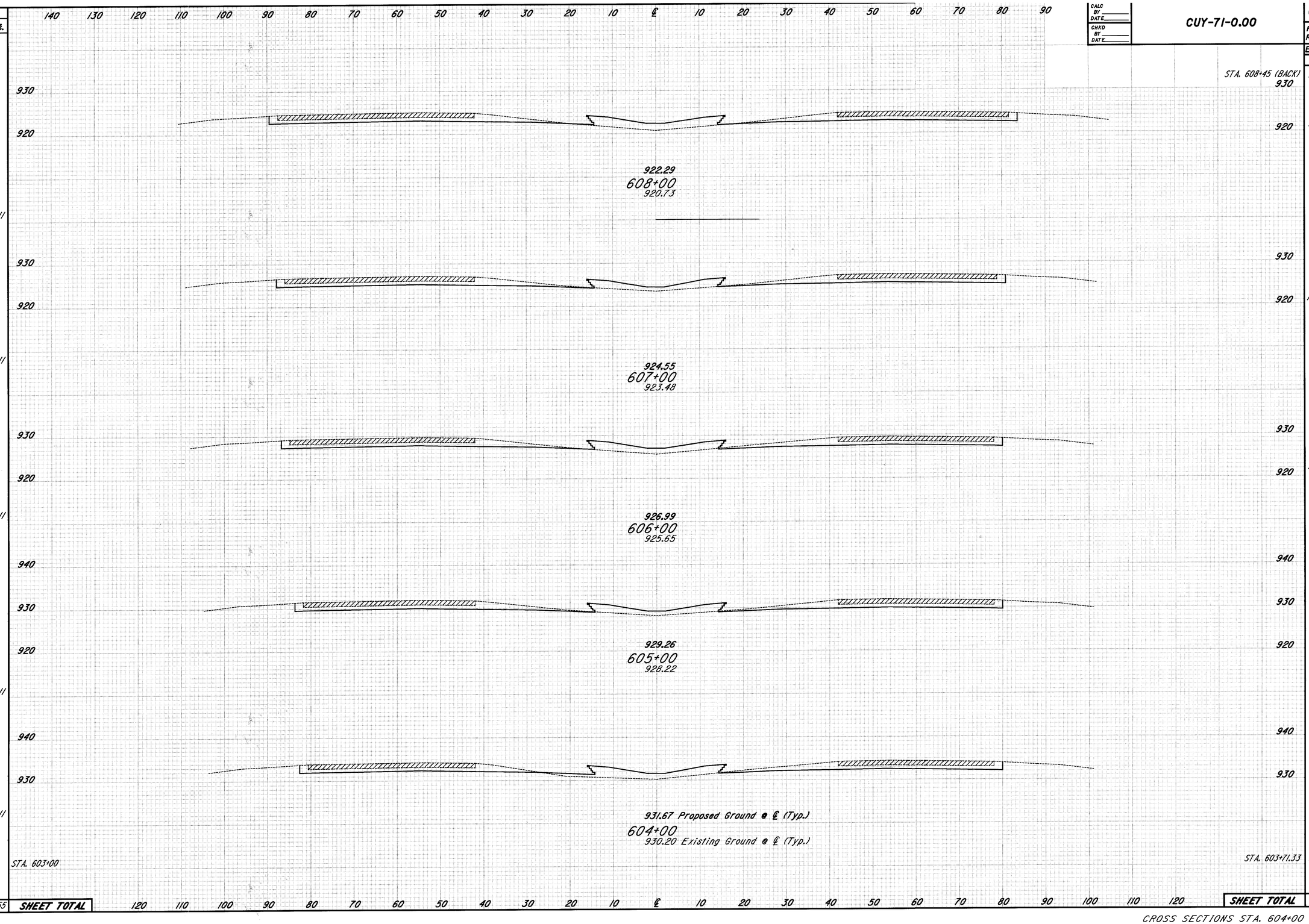

CALC BY ____ DATE ____
CHKD BY ____ DATE ____

CUY-71-0.00

OHIO
FHWA REGION 5
152
361

PLOTTED FROM Bforsberg pid08459 dgn B307xs25.dgn
PLOT SUBMITTED: 24-JUL-1998 15:11
307XS25.DGN

CROSS SECTIONS STA. 604+00 TO STA. 608+00

PLOT SUBMITTED: 24-JUL-1998 15:11

PLOTTED FROM: i:\users\eforsber\pid08459\dgn\307xs26.dgn

307XS26.DGN

CALC BY ____ DATE ____	CUY-71-0.00	OHIO	153 / 361
CHKD BY ____ DATE ____		FHWA REGION 5	

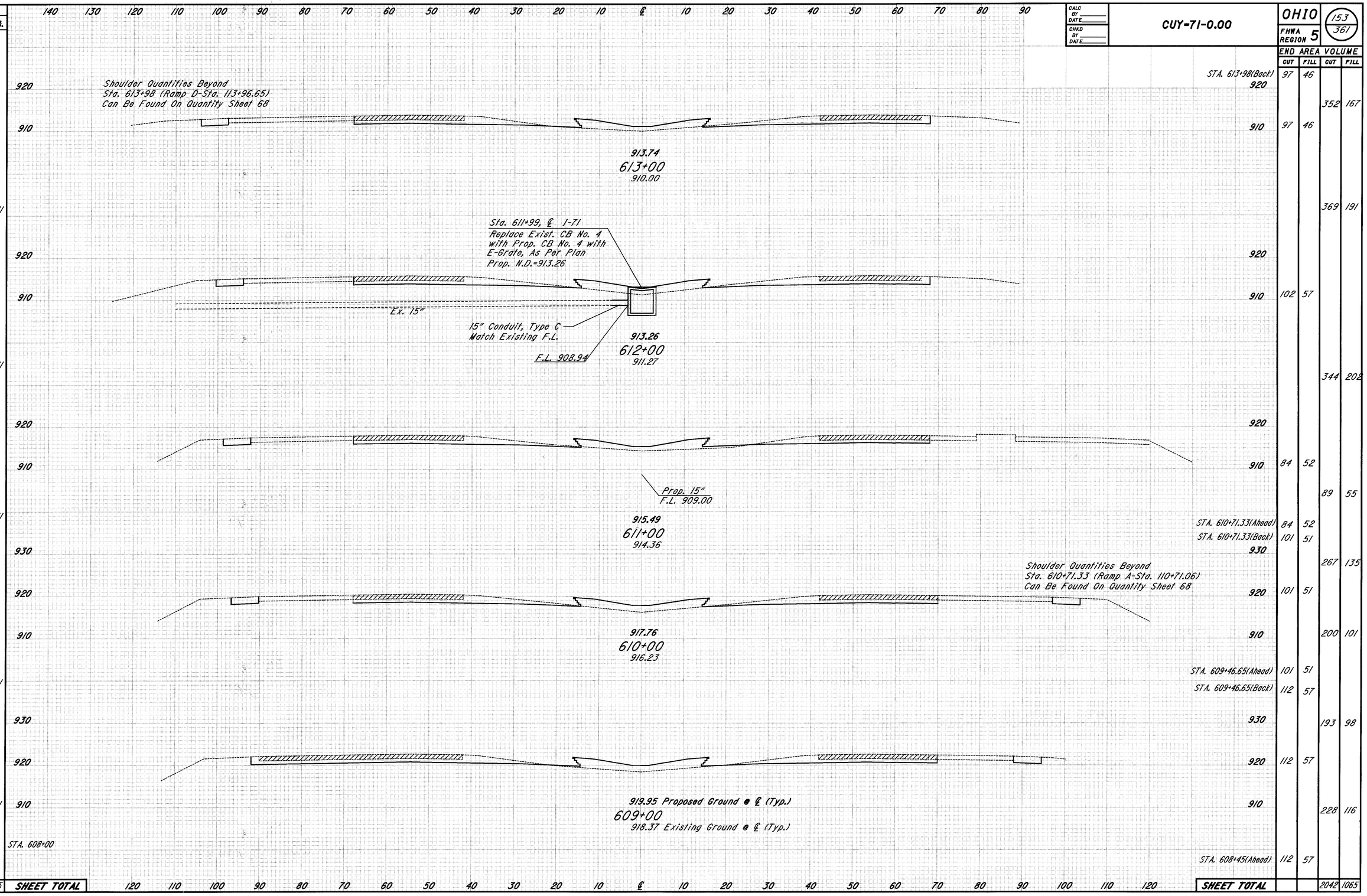

SEEDING END WIDTH	SEEDING SQ. YDS.		END AREA VOLUME CUT	END AREA VOLUME FILL	CUT	FILL
		STA. 613+98(Back)	97	46		
28			97	46	352	167
	311				369	191
28			102	57		
	311				344	202
28			84	52		
	311				89	55
		STA. 610+71.33(Ahead)	84	52		
		STA. 610+71.33(Back)	101	51		
28			101	51	267	135
	311				200	101
		STA. 609+46.65(Ahead)	101	51		
		STA. 609+46.65(Back)	112	57		
28			112	57	193	98
	311				228	116
28		STA. 608+45(Ahead)	112	57		
	1555	SHEET TOTAL			2042	1065

CROSS SECTIONS STA. 609+00 TO STA. 613+00

CALC BY ____ DATE ____	CUY-71-0.00	OHIO	154 / 361
CHKD BY ____ DATE ____		FHWA REGION 5	

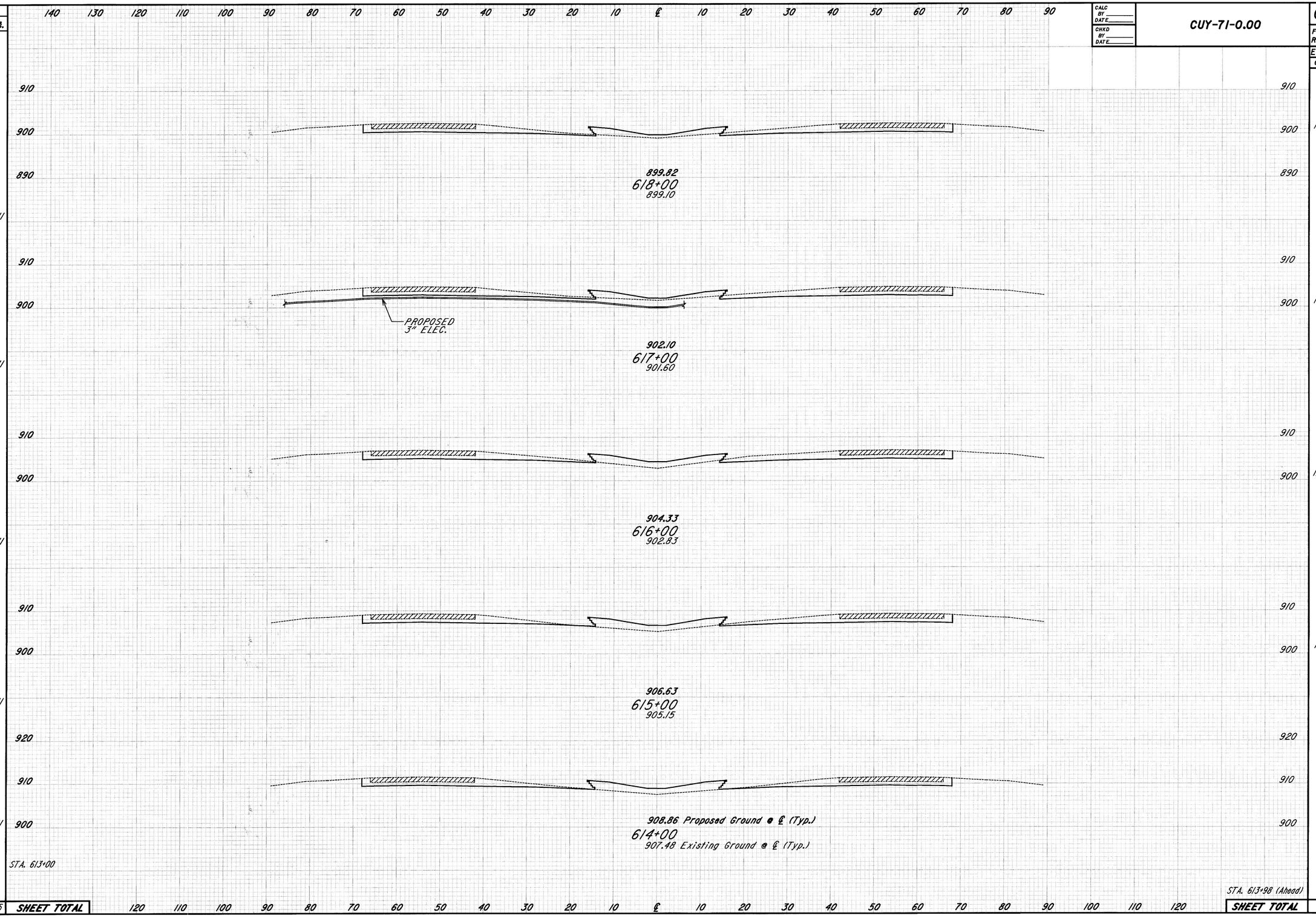

SEEDING END WIDTH	SEEDING SQ. YDS.	END AREA CUT	END AREA FILL	VOLUME CUT	VOLUME FILL
28		107	34		
	311			400	117
28		109	29		
	311			411	139
28		113	46		
	311			398	178
28		102	50		
	311			363	185
28		94	50		
	311				
28		94	50		
	1555			1572	619

PLOTTED FROM Mars Beforsber pid08459B dgnB307xs27.dgn 307XS27.DGN PLOT SUBMITTED: 24-JUL-1998 15:11

CROSS SECTIONS STA. 614+00 TO STA. 618+00

CALC BY ____ DATE ____
CHKD BY ____ DATE ____

CUY-71-0.00

OHIO FHWA REGION 5

155 / 361

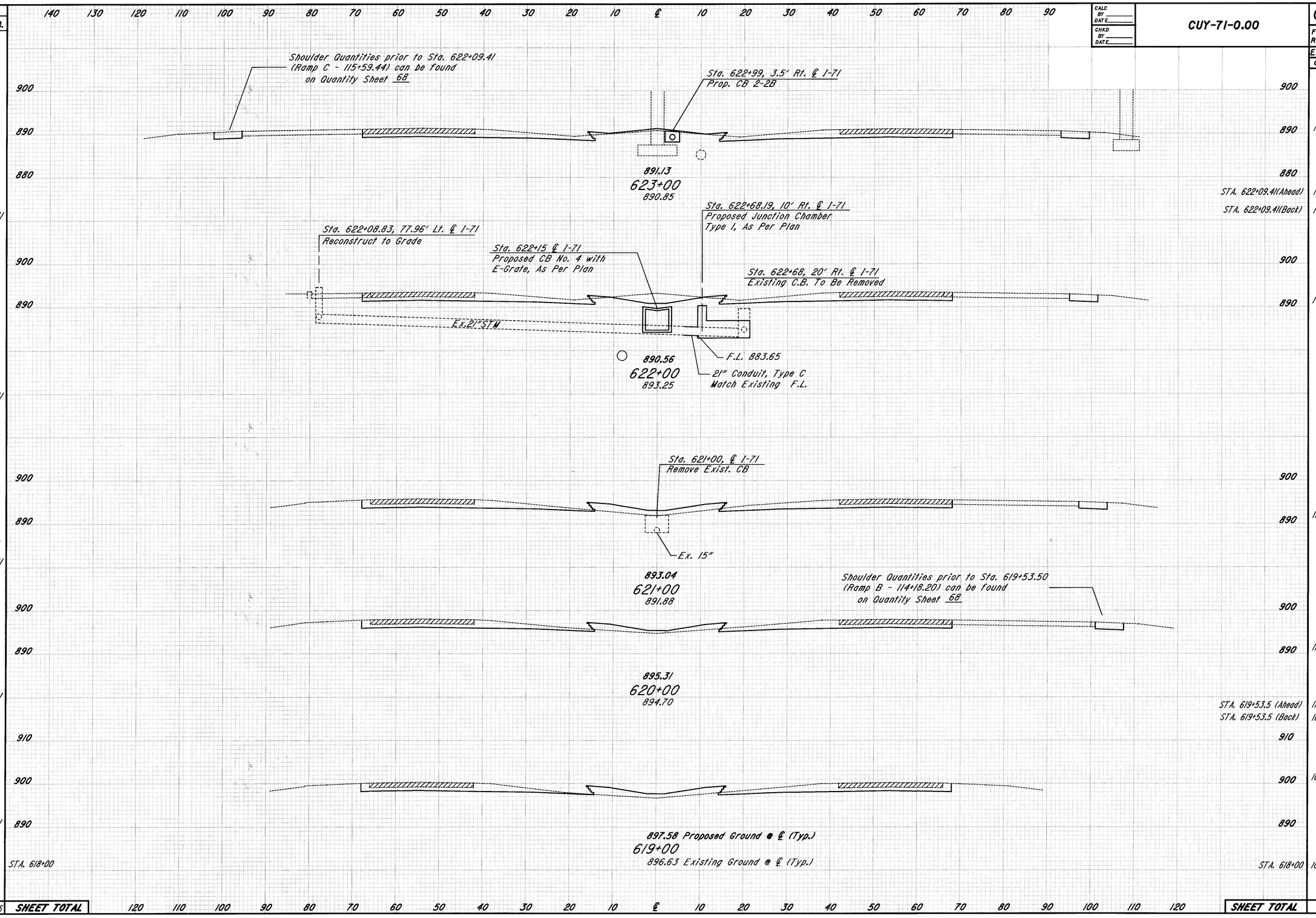

SEEDING END WIDTH	SEEDING SQ. YDS.		END AREA VOLUME CUT	FILL	CUT	FILL
28			117	10		
					393	34
			STA. 622+09.41 (Ahead)	117	10	
	311		STA. 622+09.41 (Back)	147	4	
					51	1
28			147	4		
	311				483	83
28			114	41		
	311				422	131
28			114	30		
					196	52
	311		STA. 619+53.5 (Ahead)	114	30	
			STA. 619+53.5 (Back)	109	40	
					216	79
28			109	40		
	311				400	137
28			STA. 618+00	107	34	
	1555	SHEET TOTAL	SHEET TOTAL		2161	517

CROSS SECTIONS STA. 619+00 TO STA. 623+00

PLOT SUBMITTED: 24-JUL-1998 15:11

PLOTTED FROM: u:\users\eforsber\pid08459\dgn\307xs28.dgn

307XS28.DGN

CALC BY ____ DATE ____
CHKD BY ____ DATE ____

CUY-71-0.00

OHIO FHWA REGION 5

156 / 361

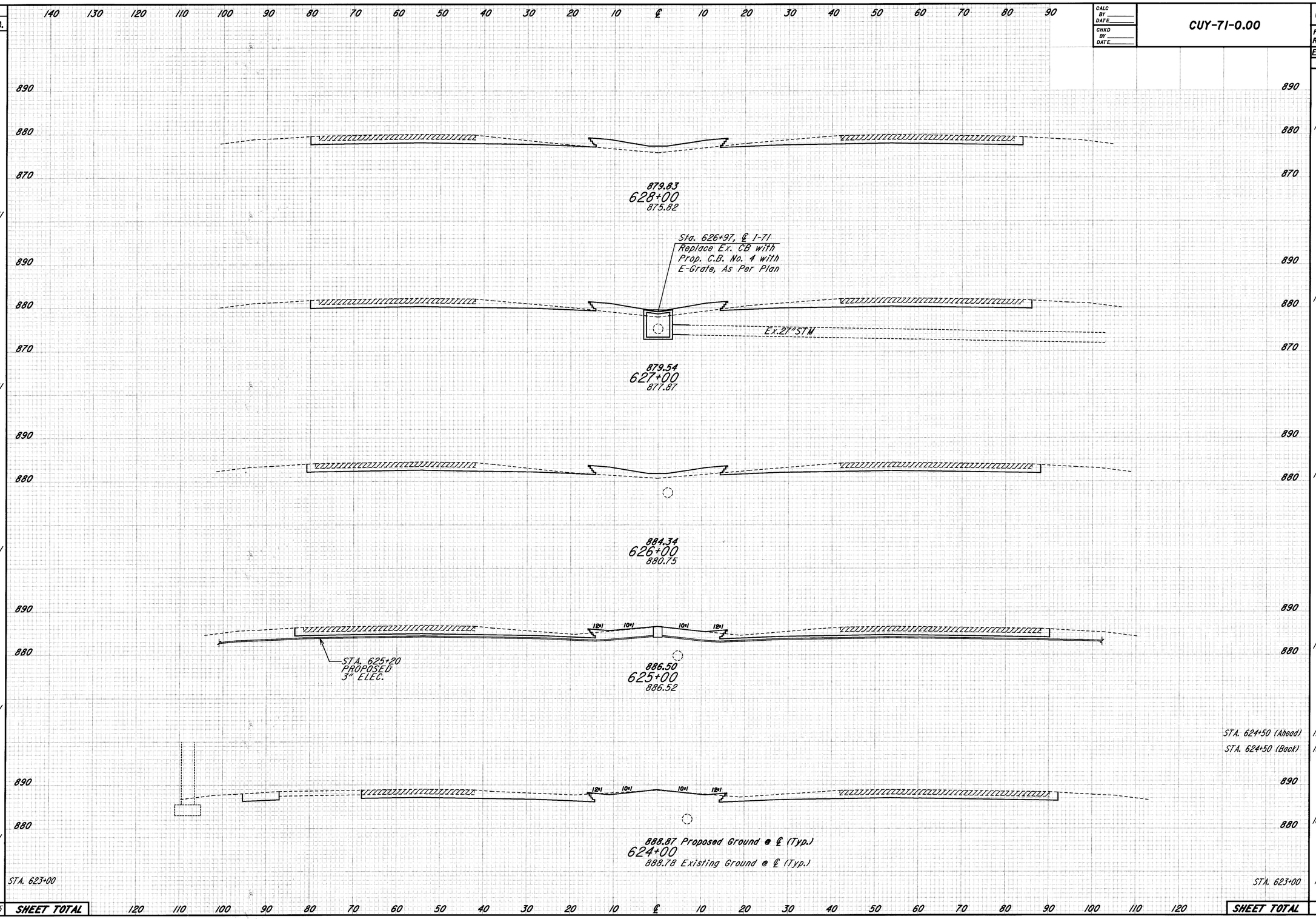

SEEDING END WIDTH	SEEDING SQ. YDS.	END AREA CUT	END AREA FILL	VOLUME CUT	VOLUME FILL
28		127	49		
	311			485	185
28		135	51		
	311			491	170
28		130	41		
	311			565	87
28		175	6		
	311			324	11
		STA. 624+50 (Ahead) 175	6		
		STA. 624+50 (Back) 165	3		
28		165	3	305	6
	311			522	24
28		STA. 623+00 117	10		
	1555 SHEET TOTAL	SHEET TOTAL		2692	483

CROSS SECTIONS STA. 624+00 TO STA. 628+00

PLOTTED BY:jgrmoyse
PLOTTED FROM:Mrsbeforsber@pid08459@dgn@307xs29.dgn
PLOTTED: 24-JUL-1998 15:11
307XS29.DGN

SEEDING	END WIDTH	SQ. YDS.
	28	
		311
	28	
		311
	28	
		311
	28	
		311
	28	
		311
	28	
		1555

CALC BY ____ DATE ____
CHKD BY ____ DATE ____

CUY-71-0.00

OHIO
FHWA REGION 5

157
361

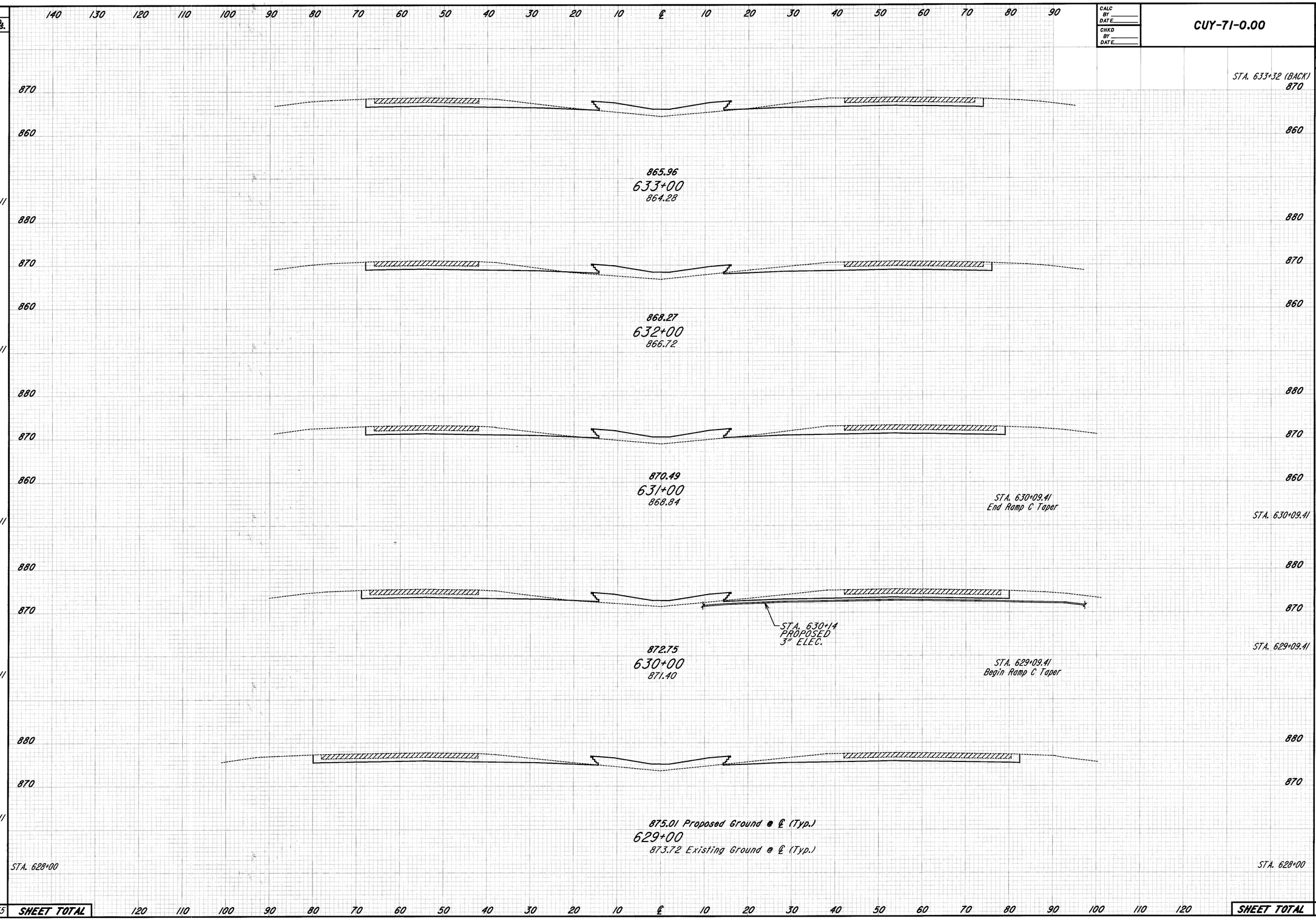

END AREA VOLUME

	CUT	FILL	CUT	FILL
STA. 633+32 (BACK)	103	56		
			122	66
	103	56		
			389	204
	107	54		
			394	202
	106	55		
			356	185
STA. 630+09.41	106	55		
			39	17
	111	50		
			401	168
STA. 629+09.41	128	50		
			45	17
	128	50		
			472	183
STA. 628+00	127	49		
SHEET TOTAL			2218	1042

CROSS SECTIONS STA. 629+00 TO STA. 633+00

PLOTTED FROM: i:\users\eforsber\pid08459\dgn\307xs30.dgn 307XS30.DGN PLOT SUBMITTED: 24-JUL-1998 15:11

SEEDING	END WIDTH	SQ. YDS.
	28	
		141
	28	
		311
	28	
		311
	28	
		311
	28	
		311
	28	
		311
	28	
		1696

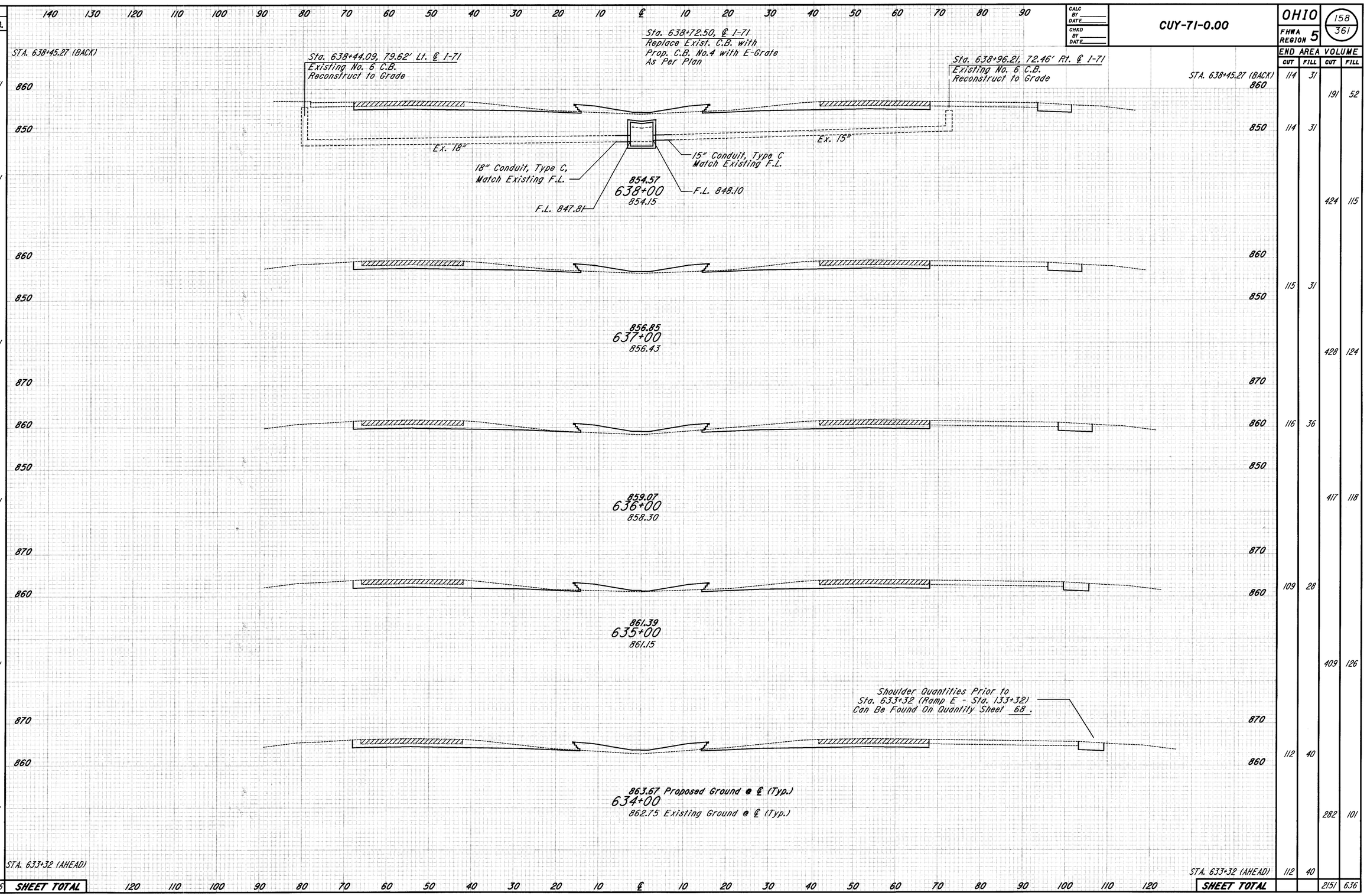

END AREA VOLUME			
CUT	FILL	CUT	FILL
114	31		
		191	52
114	31		
		424	115
115	31		
		428	124
116	36		
		417	118
109	28		
		409	126
112	40		
		282	101
112	40		
		2151	636

PLOTTED BY: jgrmouse
PLOTTED F-01 ers8ef orsber 0pid08459 0dgn 0307xs31.dgn
PLOT SUBMITTED: 24-JUL-1998 15:11
307XS31.DGN

CROSS SECTIONS STA. 634+00 TO STA. 638+00

PLOTTED FROM: i:\users\eforsber\pid08459\dgn\307xs32.dgn PLOT SUBMITTED: 24-JUL-1998 15:11

307XS32.DGN

CALC BY ____ DATE ____ / CHKD BY ____ DATE ____	CUY-71-0.00	OHIO FHWA REGION 5	159 / 361

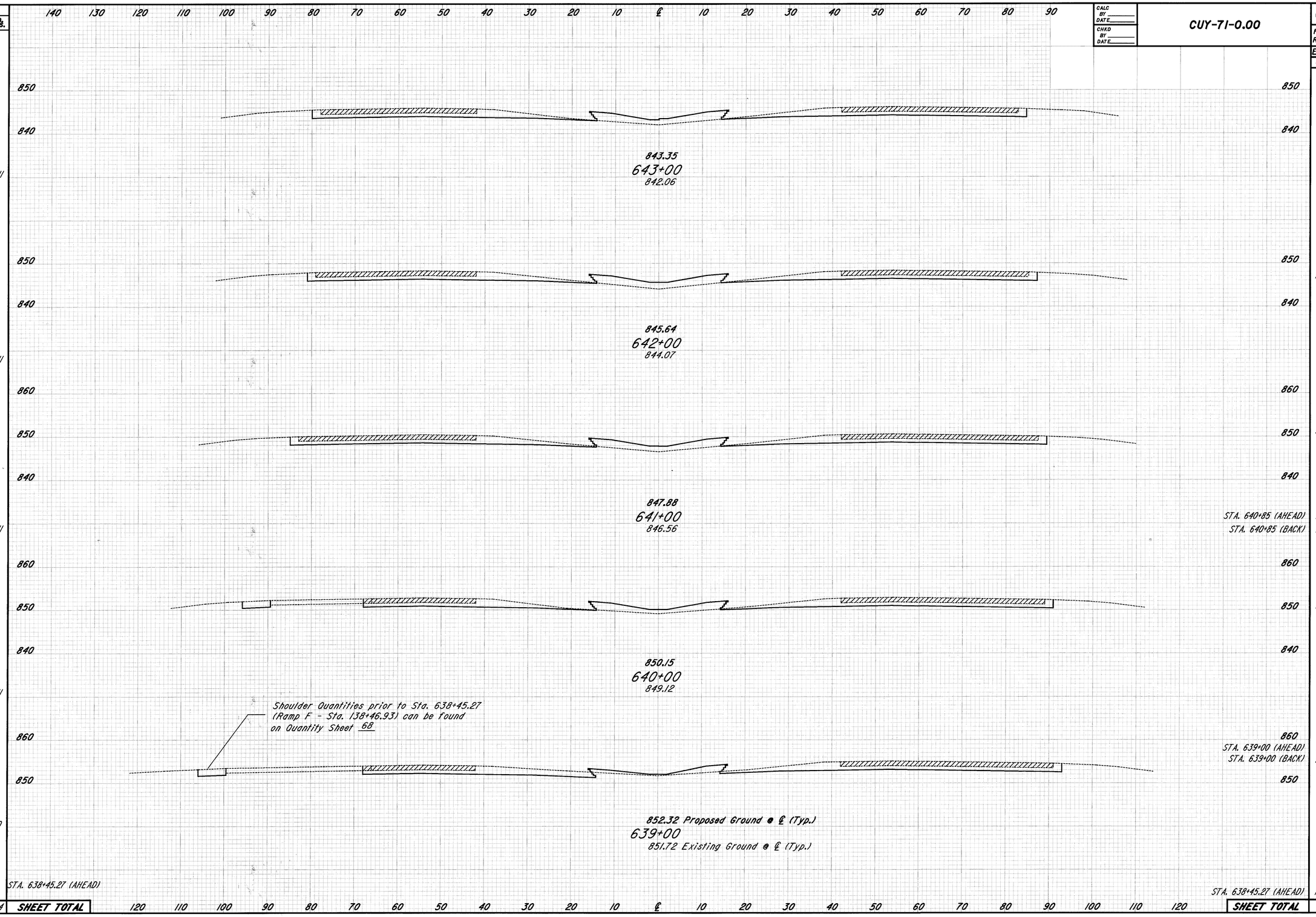

SEEDING END WIDTH	SEEDING SQ. YDS.	STA.	END AREA VOLUME CUT	END AREA VOLUME FILL	CUT	FILL
28			126	48		
	311				478	185
28			132	52		
	311				500	183
28			138	41		
	311				77	25
		STA. 640+85 (AHEAD)	140	43		
		STA. 640+85 (BACK)	129	43		
28			129	43	406	135
	311				518	120
		STA. 639+00 (AHEAD)	151	22		
		STA. 639+00 (BACK)	166	22		
28						
	170				294	49
28		STA. 638+45.27 (AHEAD)	124	26		
	1414	SHEET TOTAL			2273	697

CROSS SECTIONS STA. 639+00 TO STA. 643+00

SEEDING END WIDTH	SEEDING SQ. YDS.	STA.	CUT	FILL	CUT	FILL
28		840				
		830	103	45		
	311				394	163
28		840	110	43		
		830			223	87
	311	STA. 646+45.27	110	43		
					185	74
28		840	111	45		
		830			234	93
	311	STA. 645+45.27	120	47		
		850			201	79
28		840	120	47		
		830				
	311				441	185
		850				
28		840	118	53		
	311	830			452	187
28		STA. 643+00	126	48		
	1555	SHEET TOTAL			2130	868

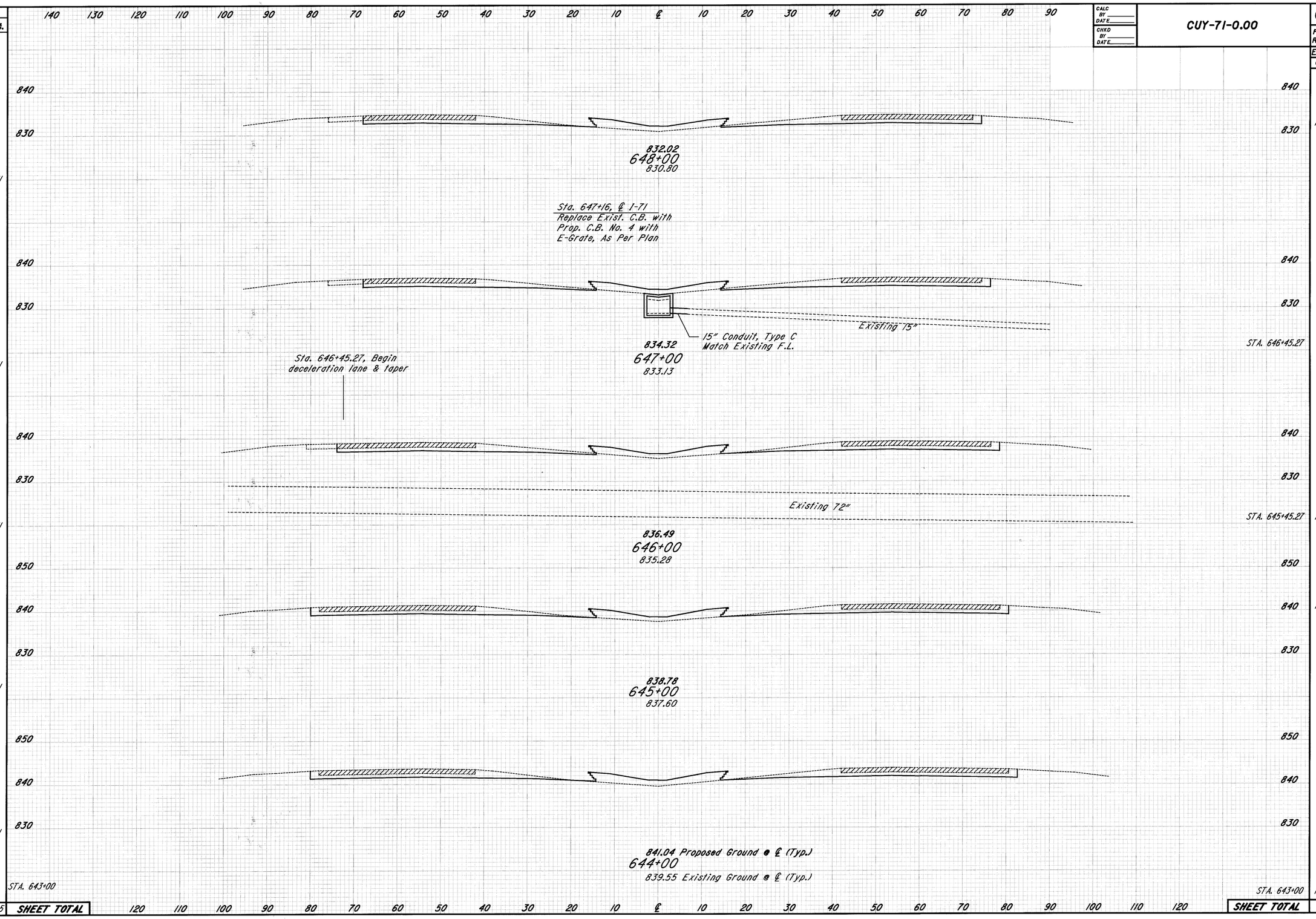

CALC BY ____ DATE ____
CHKD BY ____ DATE ____

CUY-71-0.00

OHIO
FHWA REGION 5

160
361

END AREA VOLUME

PLOTTED FROM: Mrsberforsber@bid08459@dan@307xs33.dgn 24-JUL-1998 15:11

307XS33.DGN

PLOT SUBMITTED:

CROSS SECTIONS STA. 644+00 TO STA. 648+00

PLOTTED FROM: i:\user5\eforsber\pid08459\dgn\307xs34.dgn
PLOT SUBMITTED: 24-JUL-1998 15:11
307XS34.DGN

CALC BY ____ DATE ____
CHKD BY ____ DATE ____

CUY-71-0.00

OHIO
FHWA REGION 5
161 / 361

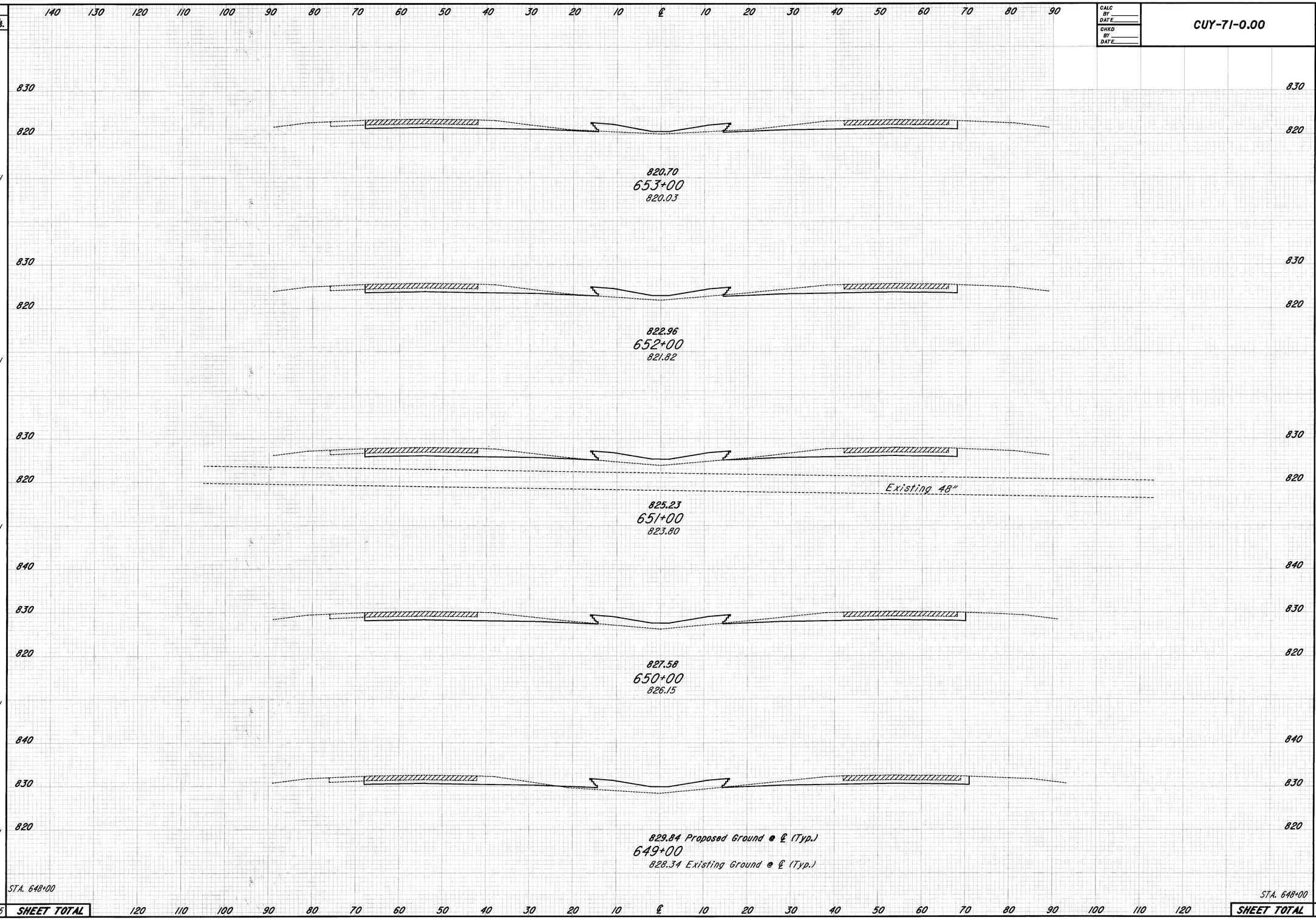

SEEDING END WIDTH	SEEDING SQ. YDS.	END AREA VOLUME CUT	END AREA VOLUME FILL	CUT	FILL
28	311	100	36		
				372	148
28	311	101	44		
				368	176
28	311	98	51		
				374	183
28	311	104	48		
				370	196
28	311	96	58		
				368	191
28		103	45		
1555	SHEET TOTAL			1852	894

CROSS SECTIONS STA. 649+00 TO STA. 653+00

CALC BY	
DATE	
CHKD BY	
DATE	

CUY-71-0.00

OHIO — FHWA REGION 5 — 162 / 361

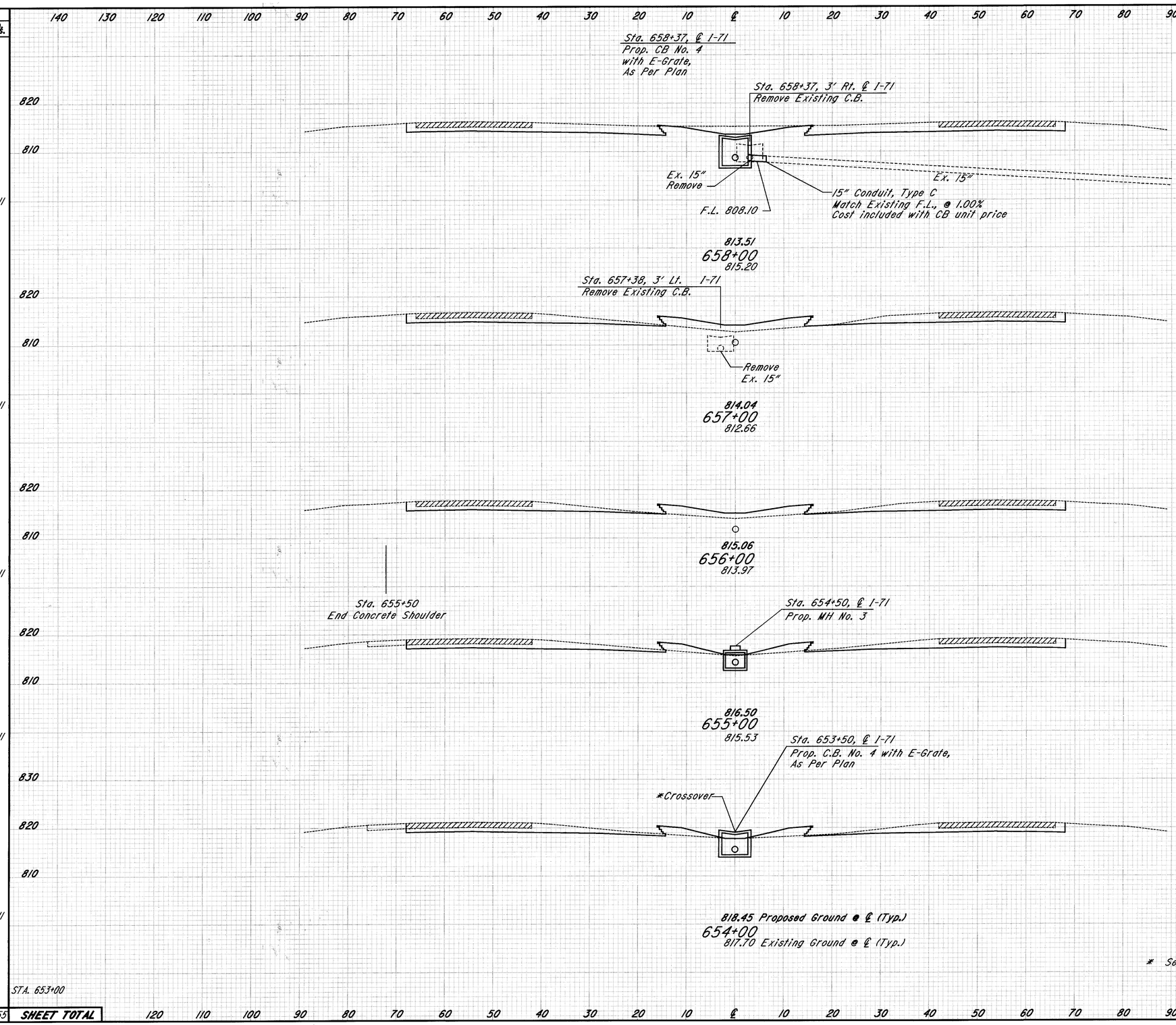

SEEDING END WIDTH	SEEDING SQ. YDS.	END AREA VOLUME CUT	END AREA VOLUME FILL	END AREA VOLUME CUT	END AREA VOLUME FILL
28	311	170	0	509	91
28	311	105	49	380	172
28	311	100	44	380	137
28	311	105	30	378	105
28	311	99	27	368	117
28		100	36		
	1555 SHEET TOTAL	SHEET TOTAL		2015	622

CROSS SECTIONS STA. 654+00 TO STA. 658+00

PLOTTED FROM ...Beforsber...pid08459...dgn...307xs35.dgn PLOT SUBMITTED: 24-JUL-1998 15:11

PLOTTED FROM: i:\users\eforsber\pid08459\dgn\307xs36.dgn
PLOT SUBMITTED: 24-JUL-1998 15:11
307XS36.DGN

CALC BY ____ DATE ____
CHKD BY ____ DATE ____

CUY-71-0.00

OHIO
FHWA REGION 5

163
361

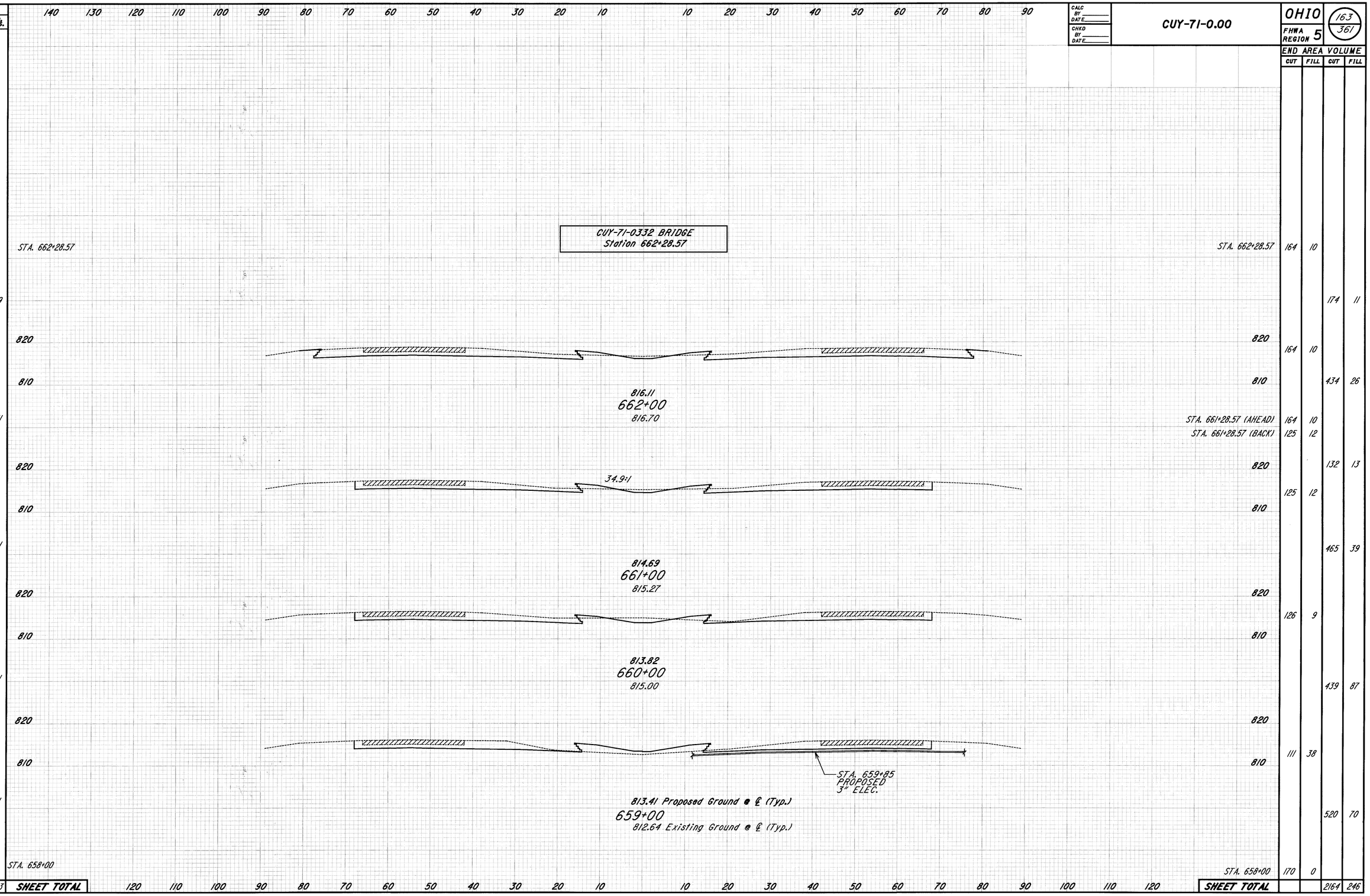

SEEDING END WIDTH	SEEDING SQ. YDS.	END AREA CUT	END AREA FILL	VOLUME CUT	VOLUME FILL
28		164	10		
	89			174	11
28		164	10		
				434	26
	311	164	10		
		125	12		
				132	13
28		125	12		
	311			465	39
28		126	9		
	311			439	87
28		111	38		
	311			520	70
28		170	0		
	1333			2164	246

CROSS SECTIONS STA. 659+00 TO STA. 662+28.57

SEEDING	END WIDTH	SQ. YDS.
	28	
		311
	28	
		311
	28	
		311
	28	
		75
	28	
		1008

CALC BY ____ DATE ____
CHKD BY ____ DATE ____

CUY-71-0.00

OHIO
FHWA REGION 5
164 / 361

END AREA VOLUME			
CUT	FILL	CUT	FILL
106	60		
		435	124
129	7		
		467	87
123	40		
		110	36
123	40		
151	22		
		425	62
151	22		
		135	20
151	22		
		1572	329

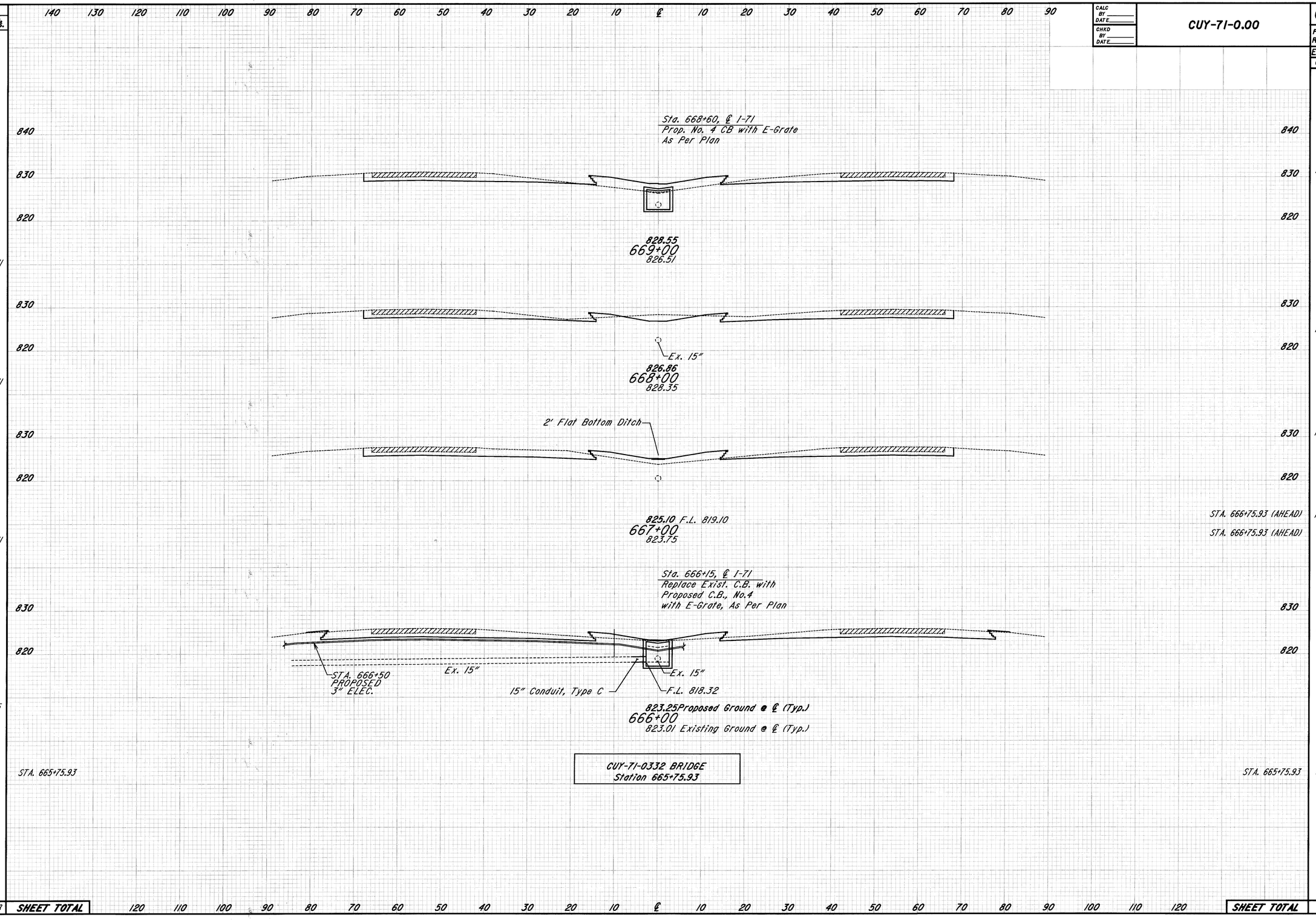

CROSS SECTIONS STA. 665+75.93 TO STA. 669+00

PLOTTED FROM: Beforsber@pid08459@dgn@307xs37.dgn
PLOT SUBMITTED: 24-JUL-1998 15:11
307XS37.DGN

PLOTTED FROM: i:\users\eforsber\pid08459\dgn\307xs38.dgn 307XS38.DGN PLOT SUBMITTED: 24-JUL-1998 15:11

CALC BY ____ DATE ____
CHKD BY ____ DATE ____

CUY-71-0.00

OHIO FHWA REGION 5

165 / 361

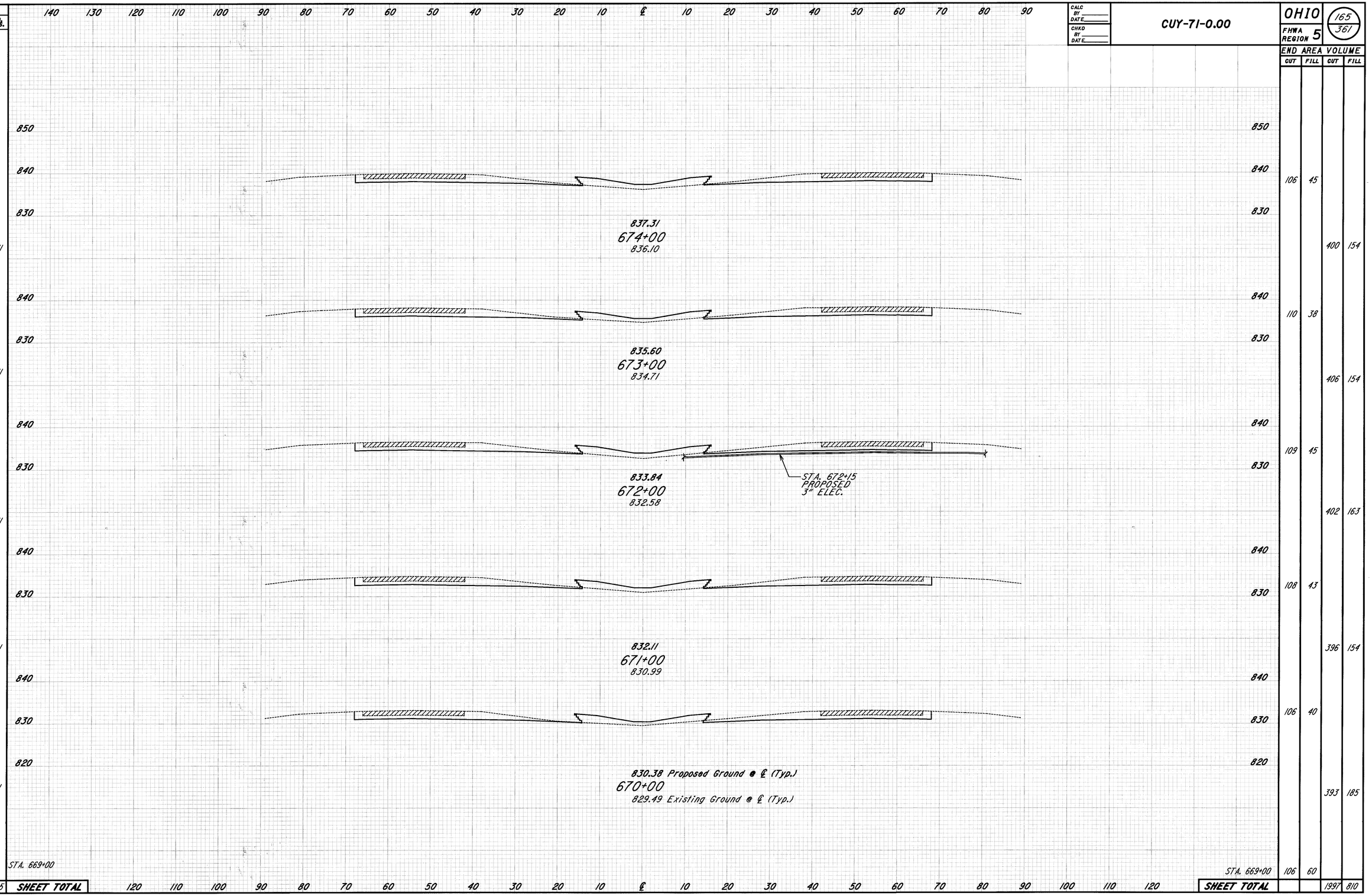

SEEDING END WIDTH	SEEDING SQ. YDS.	END AREA VOLUME CUT	END AREA VOLUME FILL	CUT	FILL
28		106	45		
	311			400	154
28		110	38		
	311			406	154
28		109	45		
	311			402	163
28		108	43		
	311			396	154
28		106	40		
	311			393	185
28	STA. 669+00	106	60		
	1555 SHEET TOTAL			1997	810

CROSS SECTIONS STA. 670+00 TO STA. 674+00

CALC BY ____ DATE ____	CUY-71-0.00	OHIO	166
CHKD BY ____ DATE ____		FHWA REGION 5	361

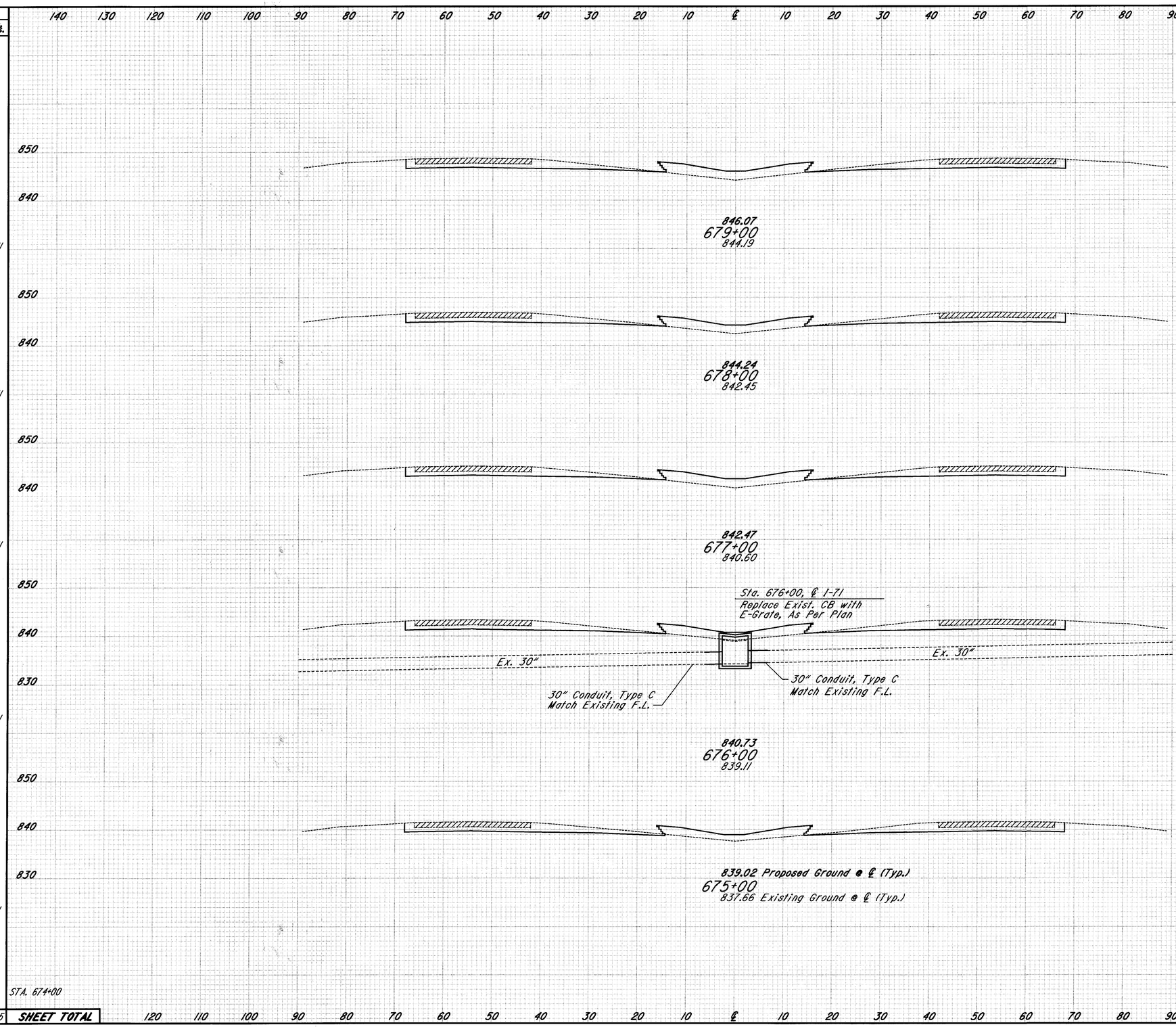

SEEDING END WIDTH	SEEDING SQ. YDS.	END AREA VOLUME CUT	END AREA VOLUME FILL	CUT	FILL
28		100	57		
	311			369	209
28		99	56		
	311			363	211
28		97	56		
	311			367	206
28		101	53		
	311			381	185
28		105	47		
	311			391	170
28		106	45		
	1555 SHEET TOTAL			1871	981

CROSS SECTIONS STA. 675+00 TO STA. 679+00

PLOTTED FROM Mrs@Beforsber@pid08459@dan@307xs39.dan 24-JUL-1998 15:11

307XS39.DGN

CALC BY ____ DATE ____	CUY-71-0.00	OHIO	167 / 361
CHKD BY ____ DATE ____		FHWA REGION 5	

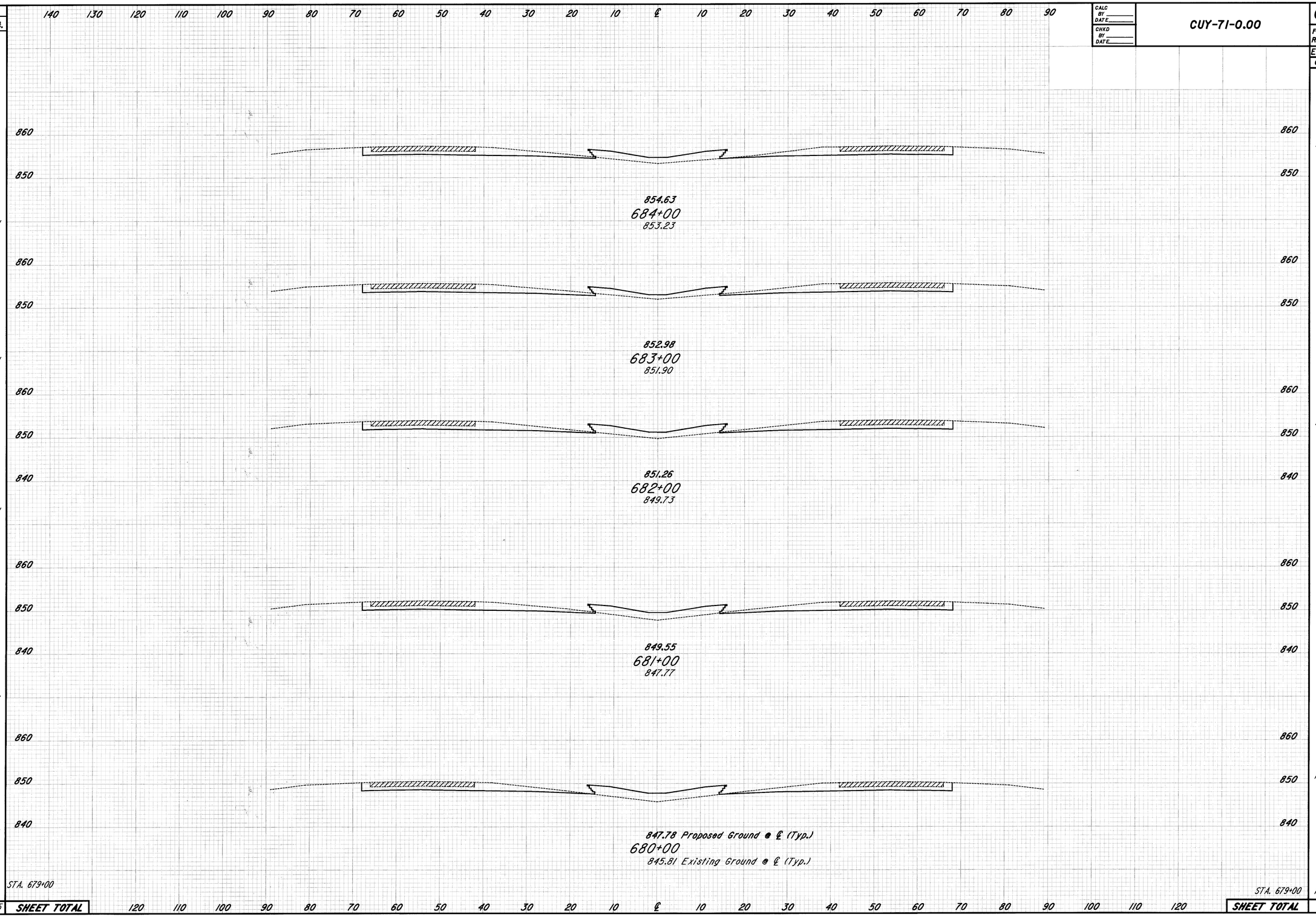

SEEDING	END WIDTH	SQ. YDS.	END AREA VOLUME CUT	FILL	CUT	FILL
	28		107	48		
		311			409	161
	28		114	39		
		311			413	163
	28		109	49		
		311			409	189
	28		112	53		
		311			402	206
	28		105	58		
		311			380	213
	28		100	57		
		1555			2013	932

CROSS SECTIONS STA. 680+00 TO STA. 684+00

PLOTTED FROM: ::\users\eforsber\pid08459\dgn\307xs40.dgn
PLOT SUBMITTED: 24-JUL-1998 15:11
307XS40.DGN

CALC BY ____ DATE ____	CUY-71-0.00	OHIO	168 / 361
CHKD BY ____ DATE ____		FHWA REGION 5	

SEEDING END WIDTH	SEEDING SQ. YDS.	STATION	END AREA VOLUME CUT	END AREA VOLUME FILL	VOLUME CUT	VOLUME FILL
28		STA. 689+61.19 (BACK)	117	32		
	190				265	73
28			117	32		
	311				476	69
28			140	5		
	311				456	35
28			106	14		
	311				372	143
28			95	63		
	311				354	226
28			96	59		
	311				376	198
28		STA. 684+00	107	48		
	1745	SHEET TOTAL			2299	744

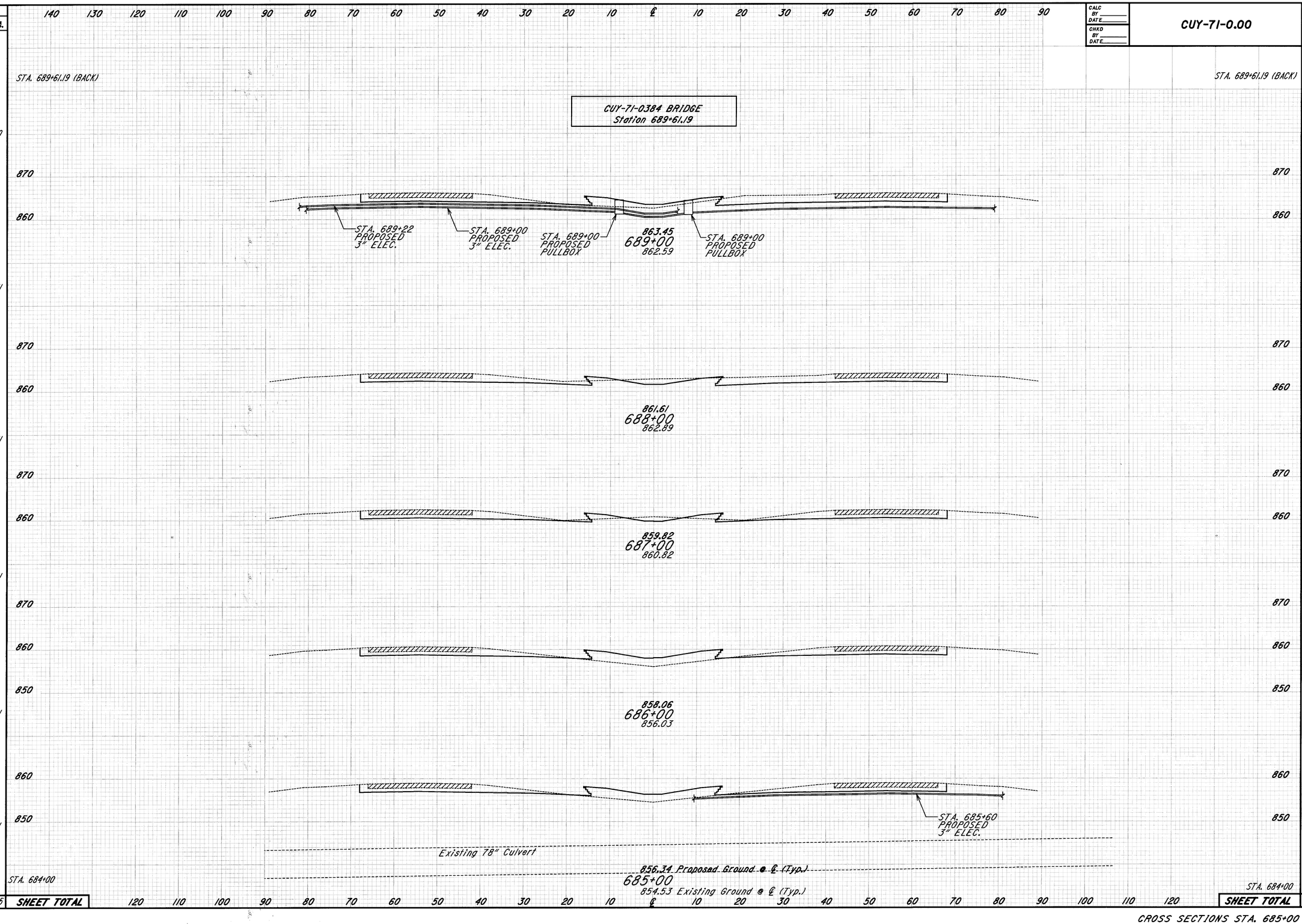

CROSS SECTIONS STA. 685+00 TO STA. 689+00

PLOTTED: F. Owens PLOT SUBMITTED: 24-JUL-1998 15:11

pid08459 B307XS41.DGN

CALC BY ____ DATE ____	CUY-71-0.00	OHIO	169 / 361
CHKD BY ____ DATE ____		FHWA REGION 5	

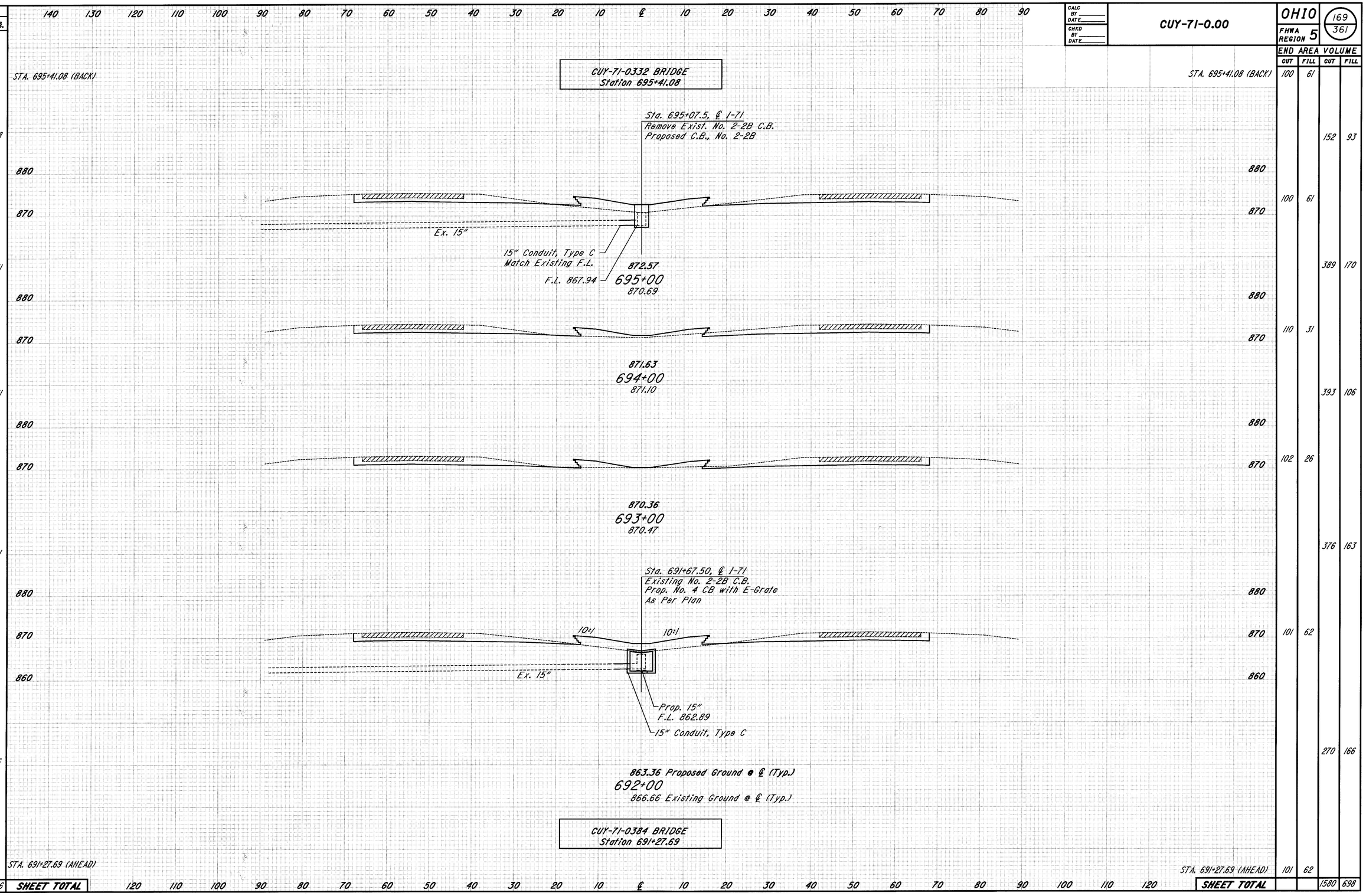

SEEDING END WIDTH	SEEDING SQ. YDS.	END AREA VOLUME CUT	END AREA VOLUME FILL	CUT	FILL
28		100	61		
	128			152	93
28		100	61		
	311			389	170
28		110	31		
	311			393	106
28		102	26		
	311			376	163
28		101	62		
	225			270	166
28		101	62		
	1286 SHEET TOTAL			1580	698

CROSS SECTIONS STA. 692+00 TO STA. 695+00

PLOT SUBMITTED: 24-JUL-1998 15:11

PLOTTED FROM: i:\users\eforsber\pid08459\dgn\307xs42.dgn

307XS42.DGN

SEEDING	END WIDTH	SQ. YDS.
	28	311
	28	48
	28	48
	28	
		407

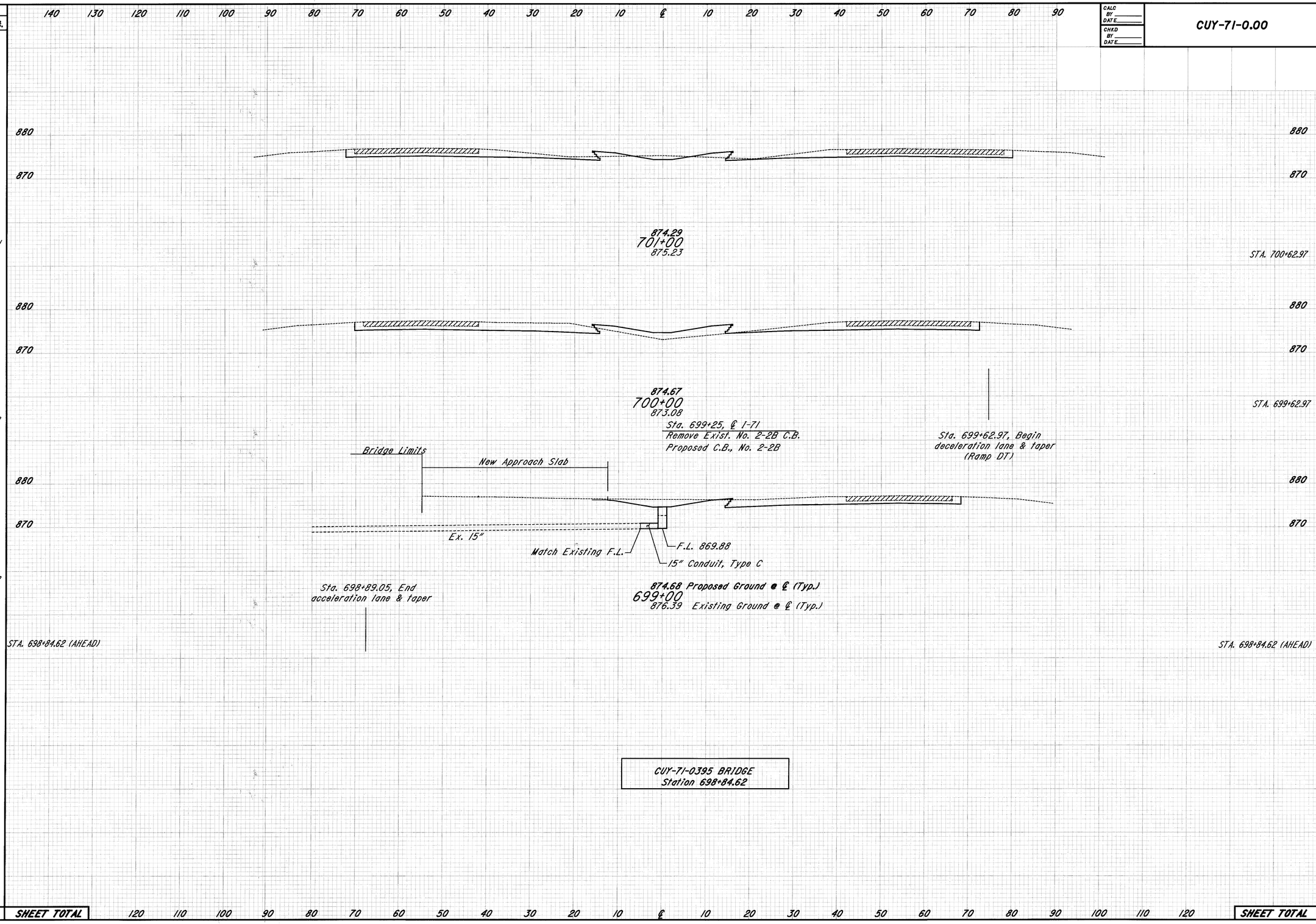

CALC BY ____ DATE ____
CHKD BY ____ DATE ____

CUY-71-0.00

OHIO
FHWA REGION 5
170 / 361

END AREA VOLUME			
CUT	FILL	CUT	FILL
115	13		
		453	106
115	13		
		286	66
130	44		
		71	20
120	26		
		213	61
63	26		
		36	15
63	26		
		1059	268

PLOT SUBMITTED: 24-JUL-1998 15:11

PLOTTED FROM 307XS43.DGN

CROSS SECTIONS STA. 699+00 TO STA. 701+00

CALC BY ____ DATE ____
CHKD BY ____ DATE ____

CUY-71-0.00

OHIO
FHWA REGION 5

171
361

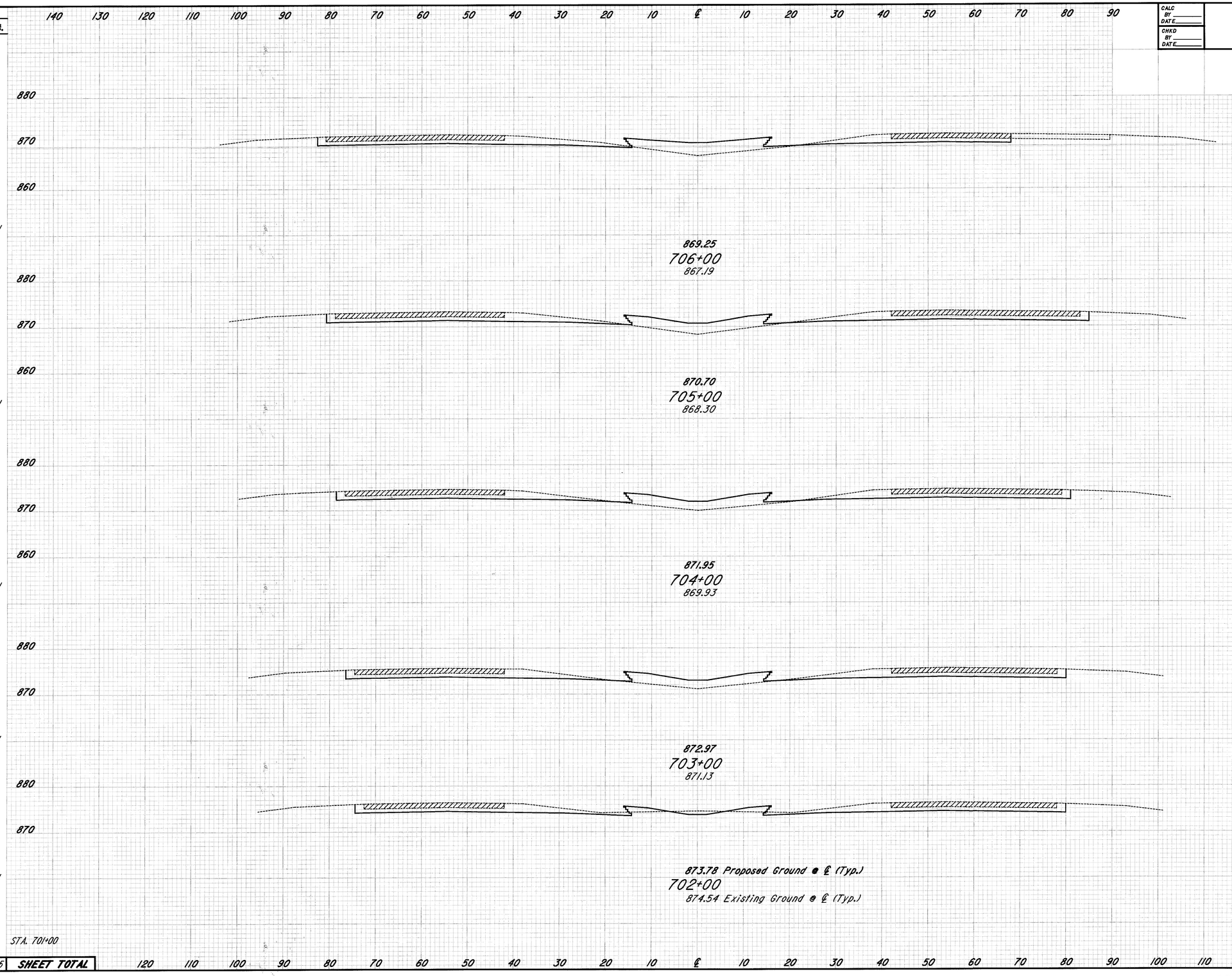

	END AREA VOLUME			
	CUT	FILL	CUT	FILL
	113	63		
			326	182
STA. 705+22(Ahead)	113	63		
STA. 705+22(Back)	126	69		
			103	56
	126	69		
			444	248
	114	65		
			426	230
	116	59		
			456	135
	130	14		
			454	50
STA. 701+00	115	13		
SHEET TOTAL			2209	901

CROSS SECTIONS STA. 702+00 TO STA. 706+00

PLOTTED FROM: i:\users\eforsber\pid08459\dgn\307xs44.dgn
PLOT SUBMITTED: 24-JUL-1998 15:11
307XS44.DGN

CALC BY ____ DATE ____	CUY-71-0.00	OHIO	172 / 361
CHKD BY ____ DATE ____		FHWA REGION 5	

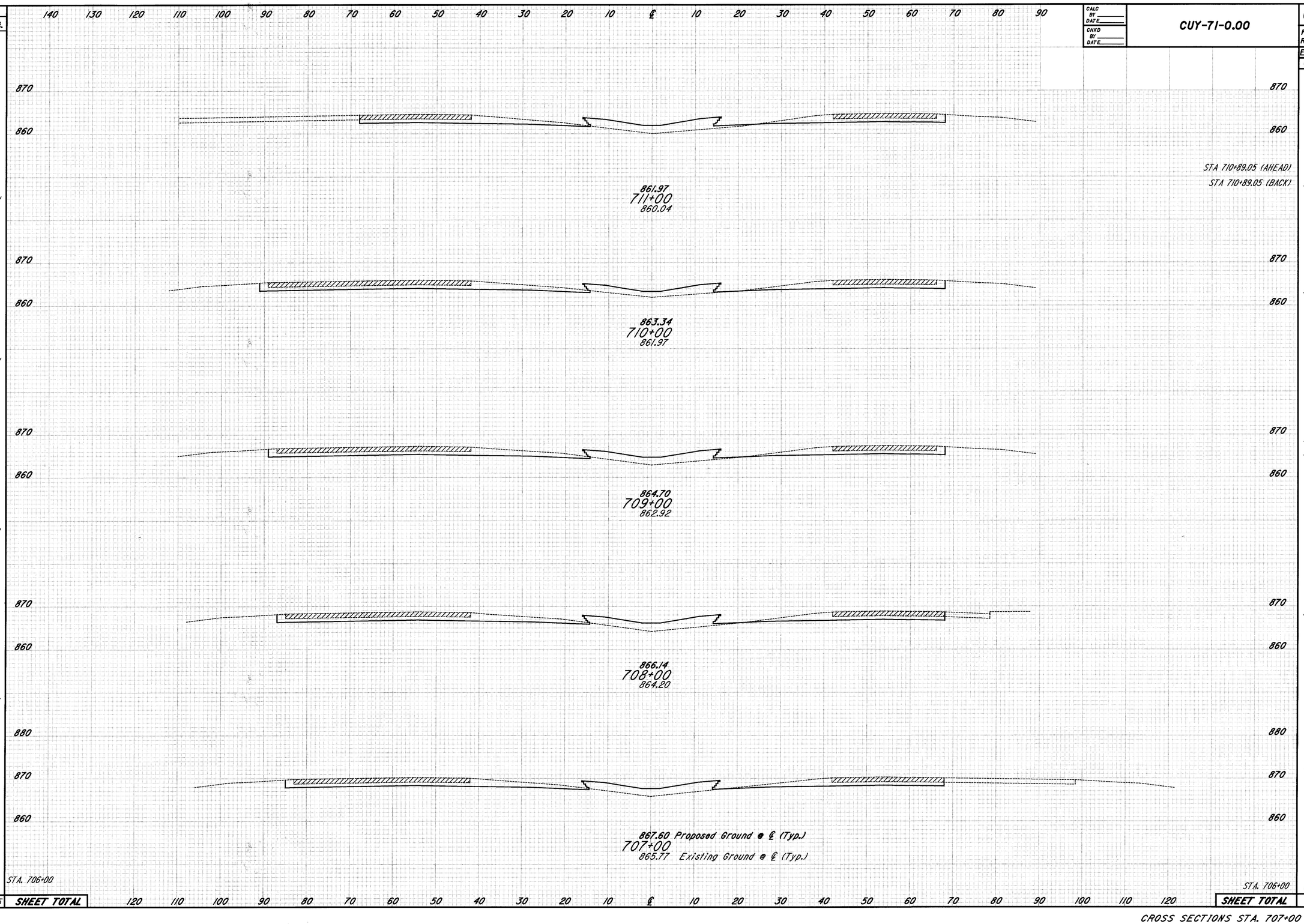

SEEDING END WIDTH	SEEDING SQ. YDS.	END AREA VOLUME CUT	END AREA VOLUME FILL	CUT	FILL
28		94	64		
				38	26
		STA 710+89.05 (AHEAD) 94	STA 710+89.05 (AHEAD) 64		
		STA 710+89.05 (BACK) 122	STA 710+89.05 (BACK) 48		
	311				
				402	158
28		122	48		
	311				
				448	193
28		120	56		
	311				
				461	215
28		129	60		
	311				
				450	213
28		114	55		
	311				
				420	213
28		113	63		
	1555			2219	1018

PLOTTED FROM: mrsbeforsberb pid08459 dgn 307xs45.dgn

PLOT SUBMITTED: 24-JUL-1998 15:11

CROSS SECTIONS STA. 707+00 TO STA. 711+00

SEEDING	END WIDTH	SQ. YDS.
	28	311
	28	311
	28	311
	28	311
	28	311
	28	311
	28	1555

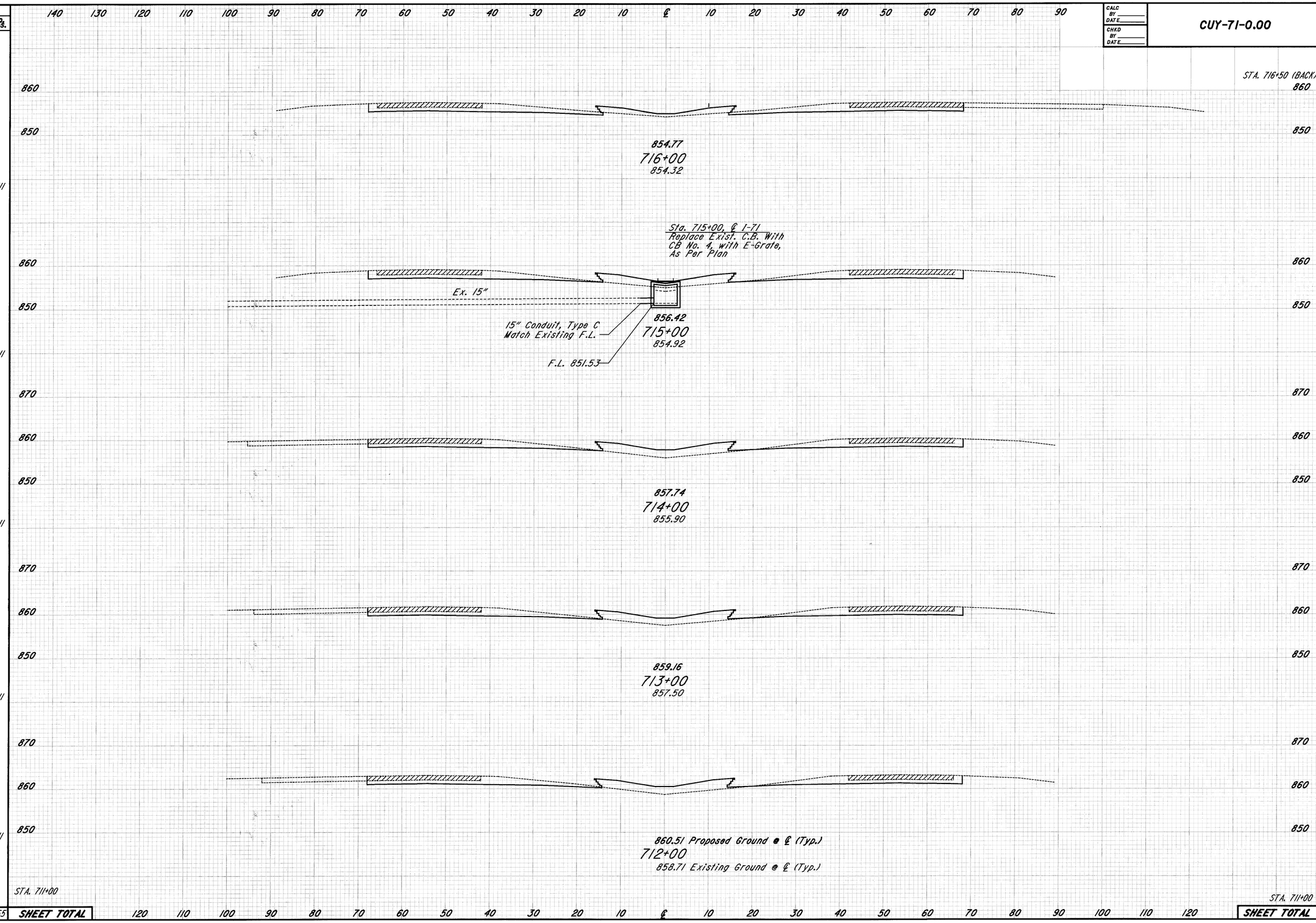

CALC BY ____ DATE ____
CHKD BY ____ DATE ____

CUY-71-0.00

OHIO
FHWA REGION 5

173
361

END AREA VOLUME			
CUT	FILL	CUT	FILL
114	33		
114	33	211	61
		396	157
100	52		
		365	207
97	60		
		361	213
98	55		
		369	207
101	57		
		361	224
94	64		
SHEET TOTAL		2063	1069

CROSS SECTIONS STA. 712+00 TO STA. 716+00

PLOTTED FROM: i:\users\eforsber\pid08459\dgn\307xs46.dgn
PLOT SUBMITTED: 24-JUL-1998 15:11
307XS46.DGN

CALC BY ____ DATE ____	CUY-71-0.00	OHIO	174 / 361
CHKD BY ____ DATE ____		FHWA REGION 5	

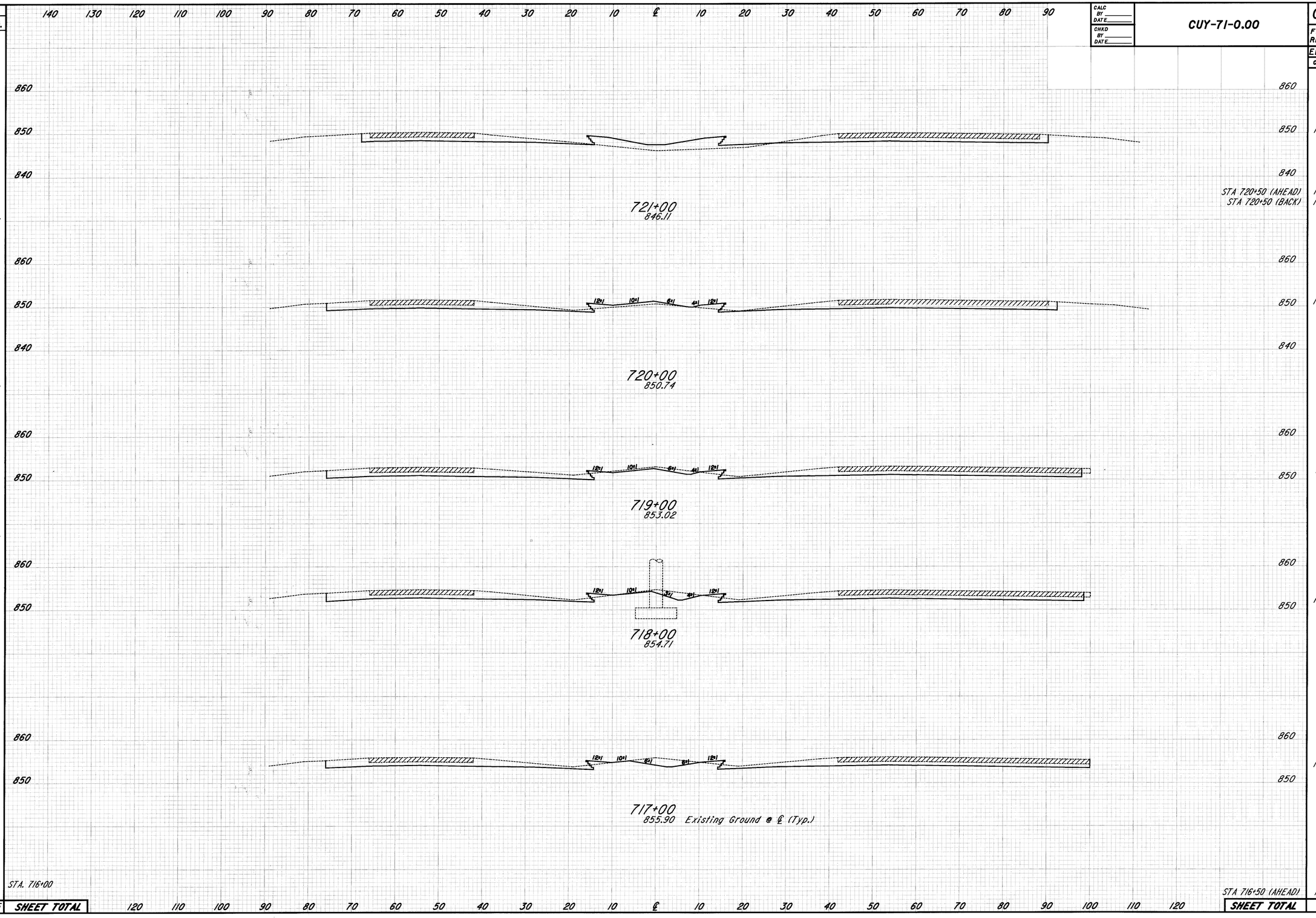

SEEDING END WIDTH	SEEDING SQ. YDS.		END AREA VOLUME CUT	FILL	CUT	FILL
28		STA. 716+00				
		STA 716+50 (AHEAD)	114	33		
					520	72
28	311	717+00	167	6		
					606	20
28	311	718+00	160	5		
					594	17
28	311	719+00	161	4		
					548	41
28	311	720+00	135	18		
					250	33
28	311	721+00	108	62		
		STA 720+50 (AHEAD)	108	62		
		STA 720+50 (BACK)	135	18		
28					200	115
1555	SHEET TOTAL	SHEET TOTAL			2718	298

PLOTTED FROM Mrsbeforsber@pid08459@dgn@307xs47.dgn PLOT SUBMITTED: 24-JUL-1998 15:11

307XS47.DGN

CROSS SECTIONS STA. 717+00 TO STA. 721+00

CALC BY ____ DATE ____	CUY-71.0.00	OHIO	175 / 361
CHKD BY ____ DATE ____		FHWA REGION 5	

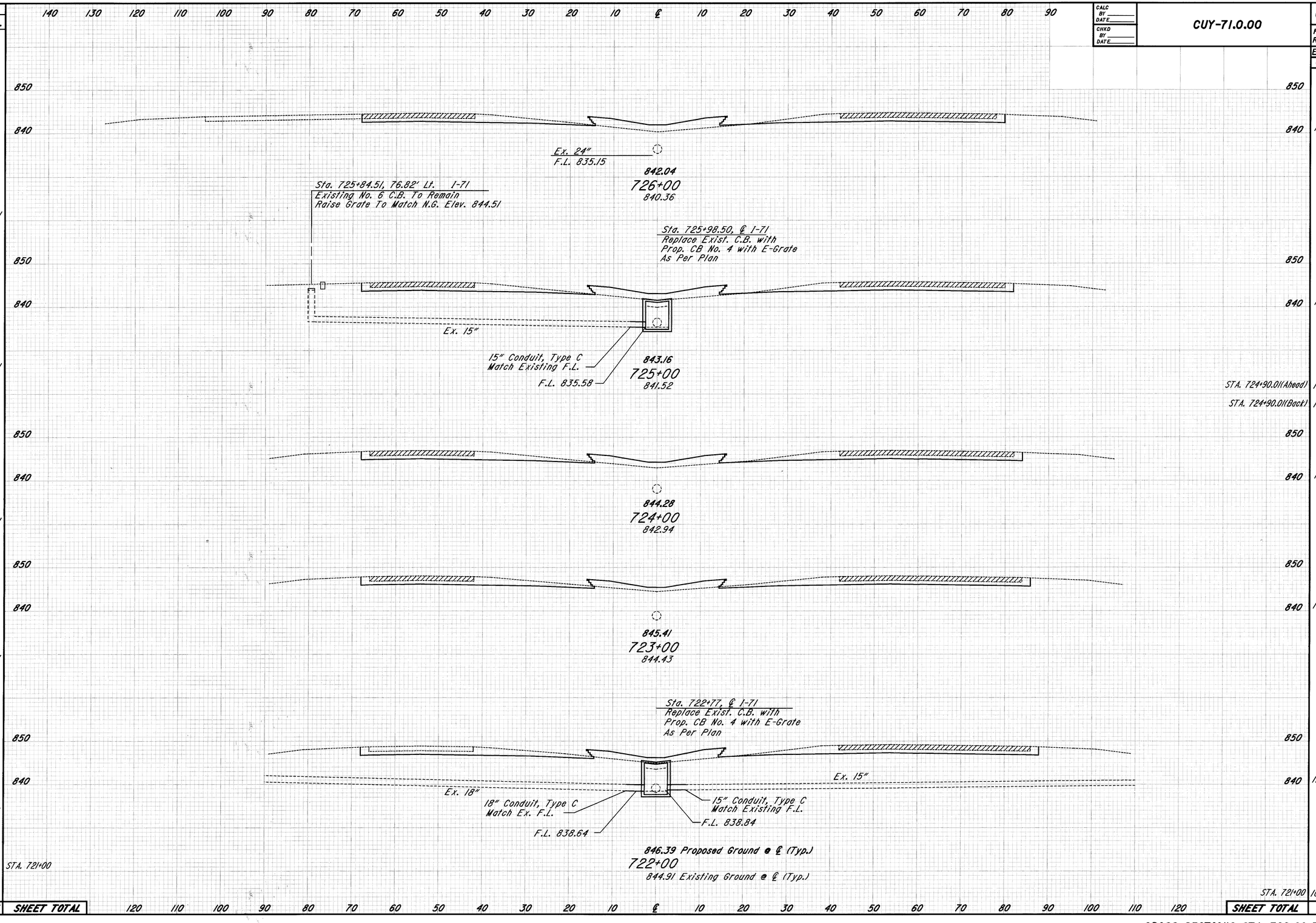

SEEDING END WIDTH	SEEDING SQ. YDS.	STA.	END AREA VOLUME CUT	END AREA VOLUME FILL	VOLUME CUT	VOLUME FILL
28	311	STA. 721+00	108	62		
					465	161
28	311		124	49		
					430	206
28	311		127	38		
					452	157
28	311		117	47		
					390	157
28	311	STA. 724+90.01(Ahead)	110	55		
		STA. 724+90.01(Back)	117	47		
					48	20
28	311		110	55		
					402	206
28	311		107	56		
	1555	SHEET TOTAL			2187	907

CROSS SECTIONS STA. 722+00 TO STA. 726+00

PLOTTED FROM: i:\users\eforsber\pid08459\dgn\307xs48.dgn PLOT SUBMITTED: 24-JUL-1998 15:11

307XS48.DGN

PLOTTED FROM mrsBeforsber@id08459@dgn@307xs49.dgn PLOT SUBMITTED: 24-JUL-1998 15:11

307XS49.DGN

CALC BY ____ DATE ____
CHKD BY ____ DATE ____

CUY-71-0.00

OHIO FHWA REGION 5

176 / 361

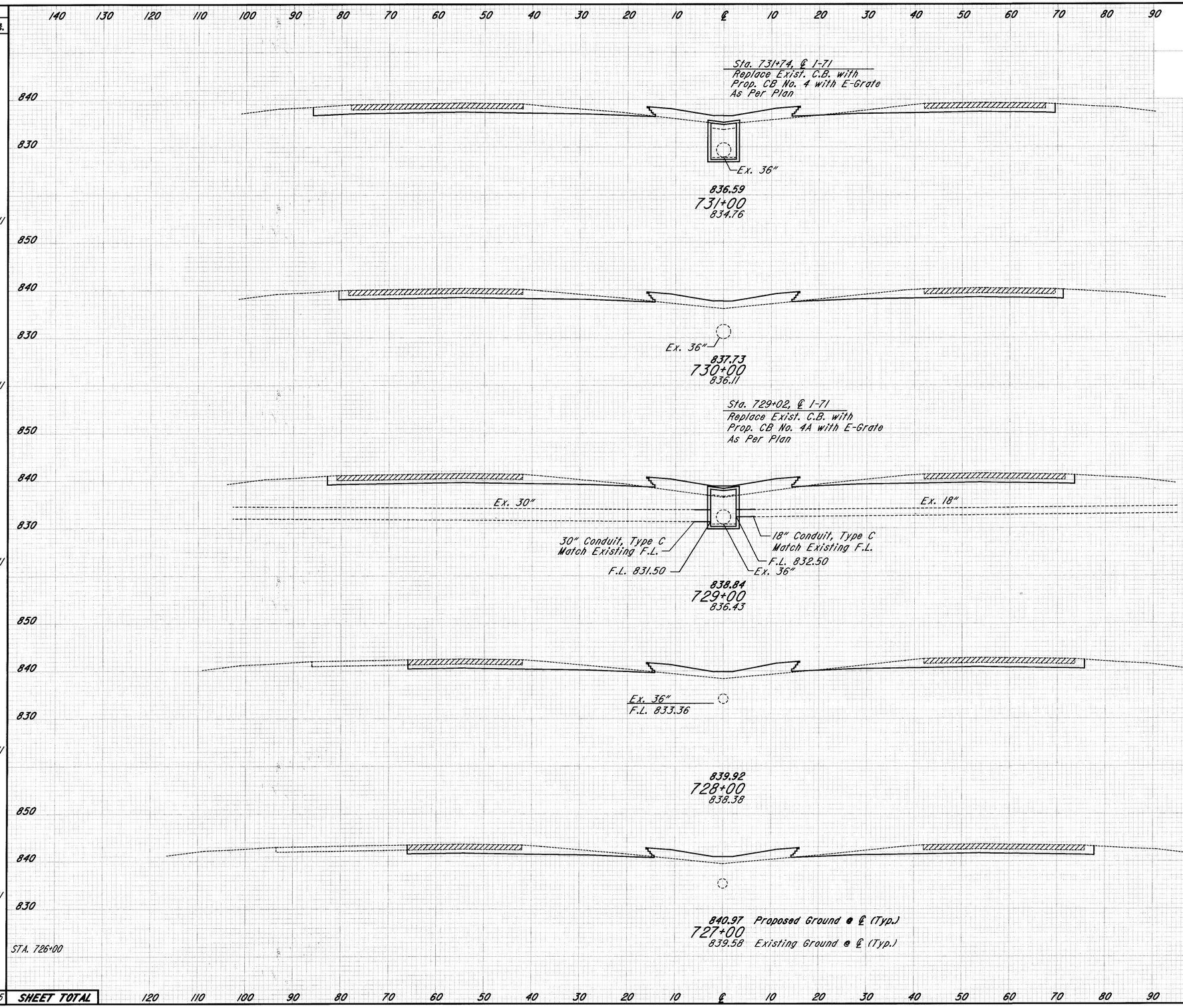

	SEEDING END WIDTH	SEEDING SQ. YDS.	END AREA VOLUME CUT	END AREA VOLUME FILL	CUT	FILL
STA. 730+50(Ahead)			117	59		
STA. 730+50(Back)			115	52		
					217	109
					213	96
					426	222
STA. 728+30(Ahead)			115	68		
STA. 728+30(Back)			99	53		
					298	176
					110	59
					380	191
					394	196
STA. 726+00			107	56		
SHEET TOTAL	28	1555			2038	1049

CROSS SECTIONS STA. 727+00 TO STA. 731+00

CALC BY ____ DATE ____	CUY-71-0.00	OHIO	177 / 361
CHKD BY ____ DATE ____		FHWA REGION 5	

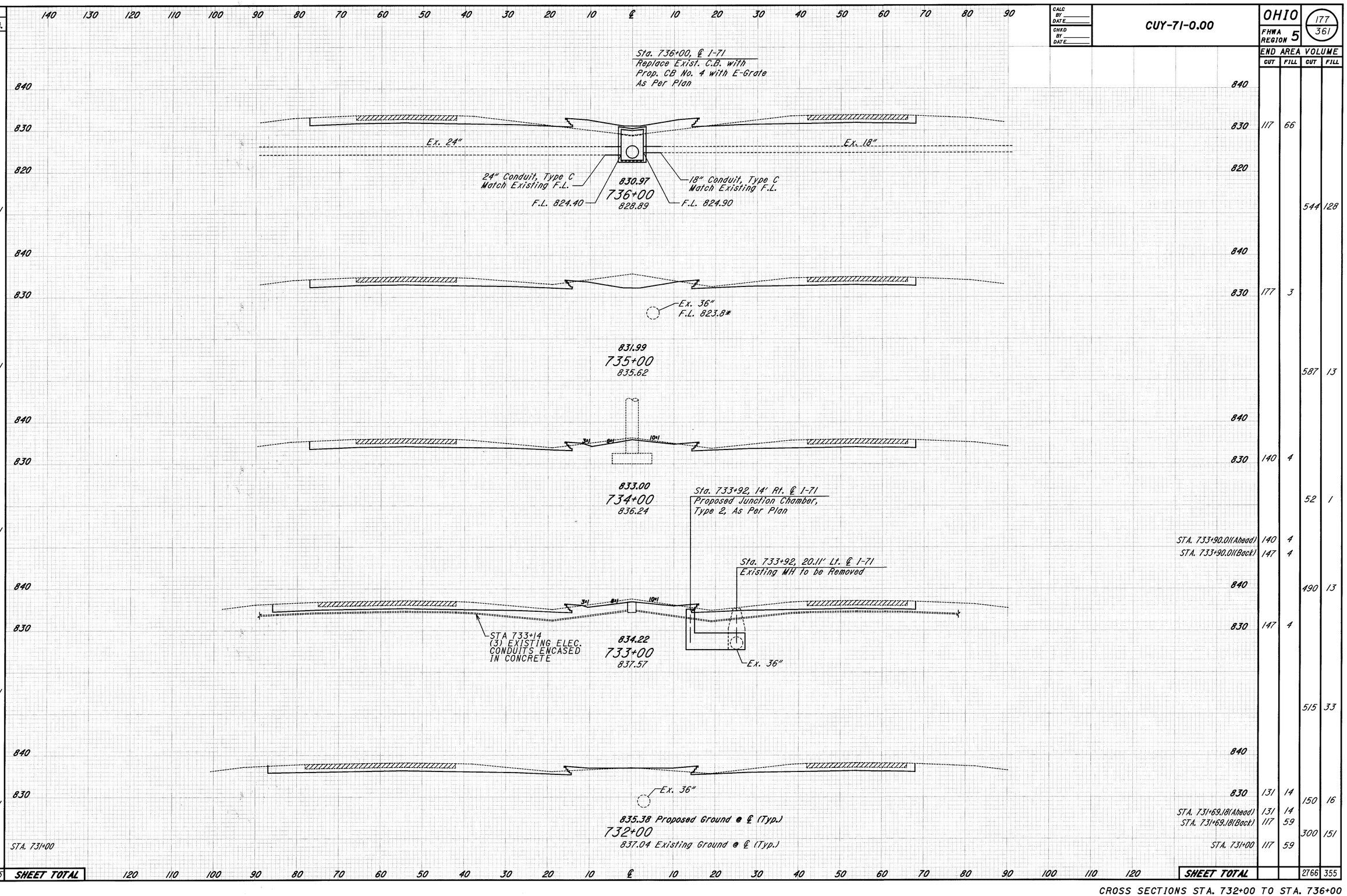

SEEDING END WIDTH	SEEDING SQ. YDS.	STATION	END AREA VOLUME CUT	END AREA VOLUME FILL	CUT	FILL
28			117	66		
	311				544	128
28			177	3		
	311				587	13
28			140	4		
	311				52	1
		STA. 733+90.01(Ahead)	140	4		
		STA. 733+90.01(Back)	147	4		
28			147	4	490	13
	311				515	33
28			131	14	150	16
	311	STA. 731+69.18(Ahead)	131	14		
		STA. 731+69.18(Back)	117	59	300	151
28		STA. 731+00	117	59		
	1555	SHEET TOTAL			2766	355

CROSS SECTIONS STA. 732+00 TO STA. 736+00

PLOT SUBMITTED: 24-JUL-1998 15:11

PLOTTED FROM: i:\users\eforsber\pid08459\dgn\307xs50.dgn

307XS50.DGN

CALC BY ____ DATE ____
CHKD BY ____ DATE ____

CUY-71-0.00

OHIO
FHWA REGION 5

178/361

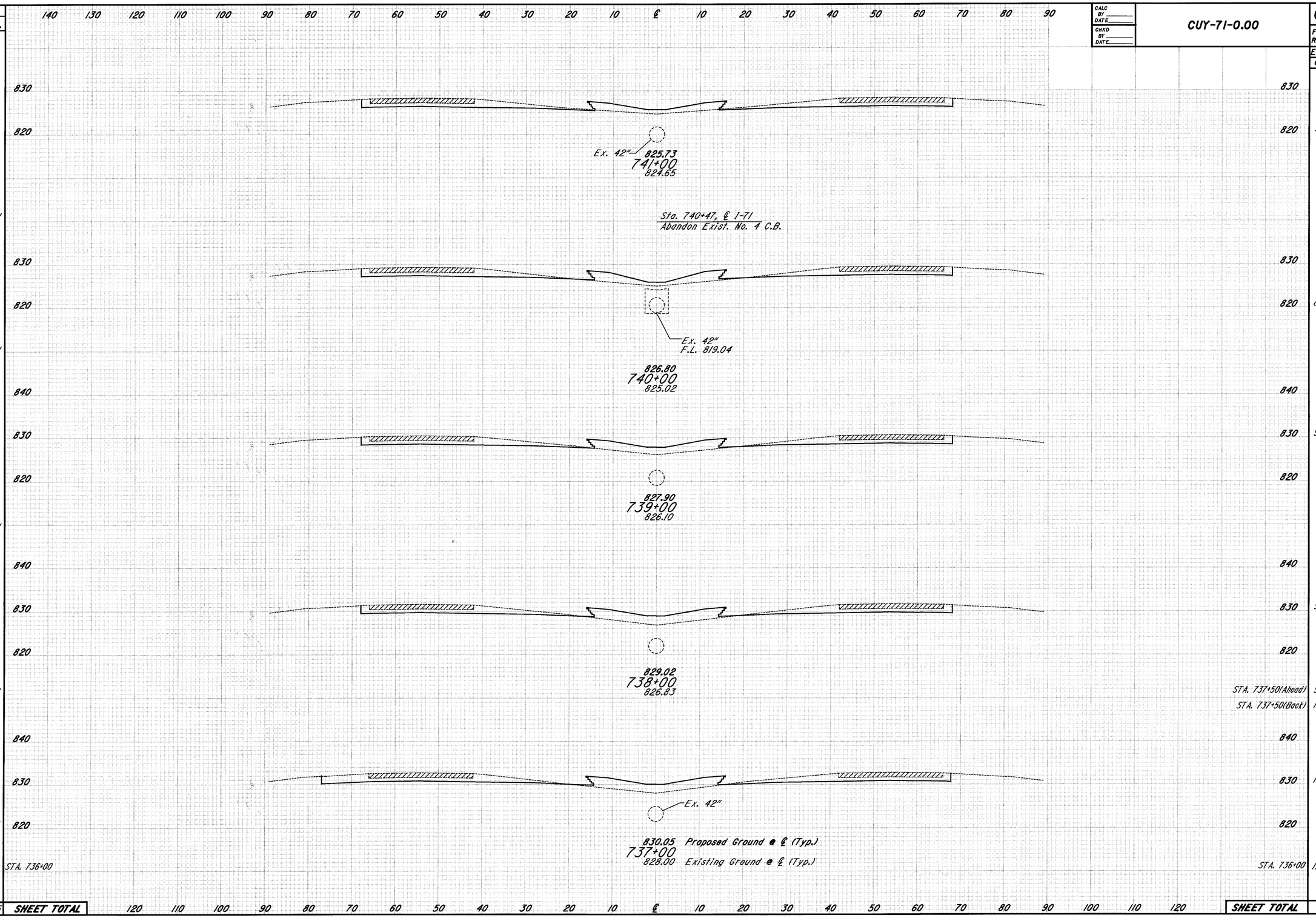

END AREA VOLUME			
CUT	FILL	CUT	FILL
99	43		
		348	172
89	50		
		341	200
95	58		
		348	230
93	66		
		172	122
93	66		
108	65		
		200	120
108	65		
		417	243
117	66		
		1826	1087

28		
	311	
28		
	311	
28		
	311	
28		
	311	
28		
	311	
28		
	311	
28		
	1555	SHEET TOTAL

CROSS SECTIONS STA. 737+00 TO STA. 741+00

PLOTTED FROM: 307XS51.DGN
PLOT SUBMITTED: 24-JUL-1998 15:11

PLOT SUBMITTED: 24-JUL-1998 15:11

PLOTTED FROM: i:\users\eforsber\pid08459\dgn\307xs52.dgn

307XS52.DGN

CALC BY / DATE	CHKD BY / DATE	CUY-71-0.00	OHIO FHWA REGION 5	179 / 361

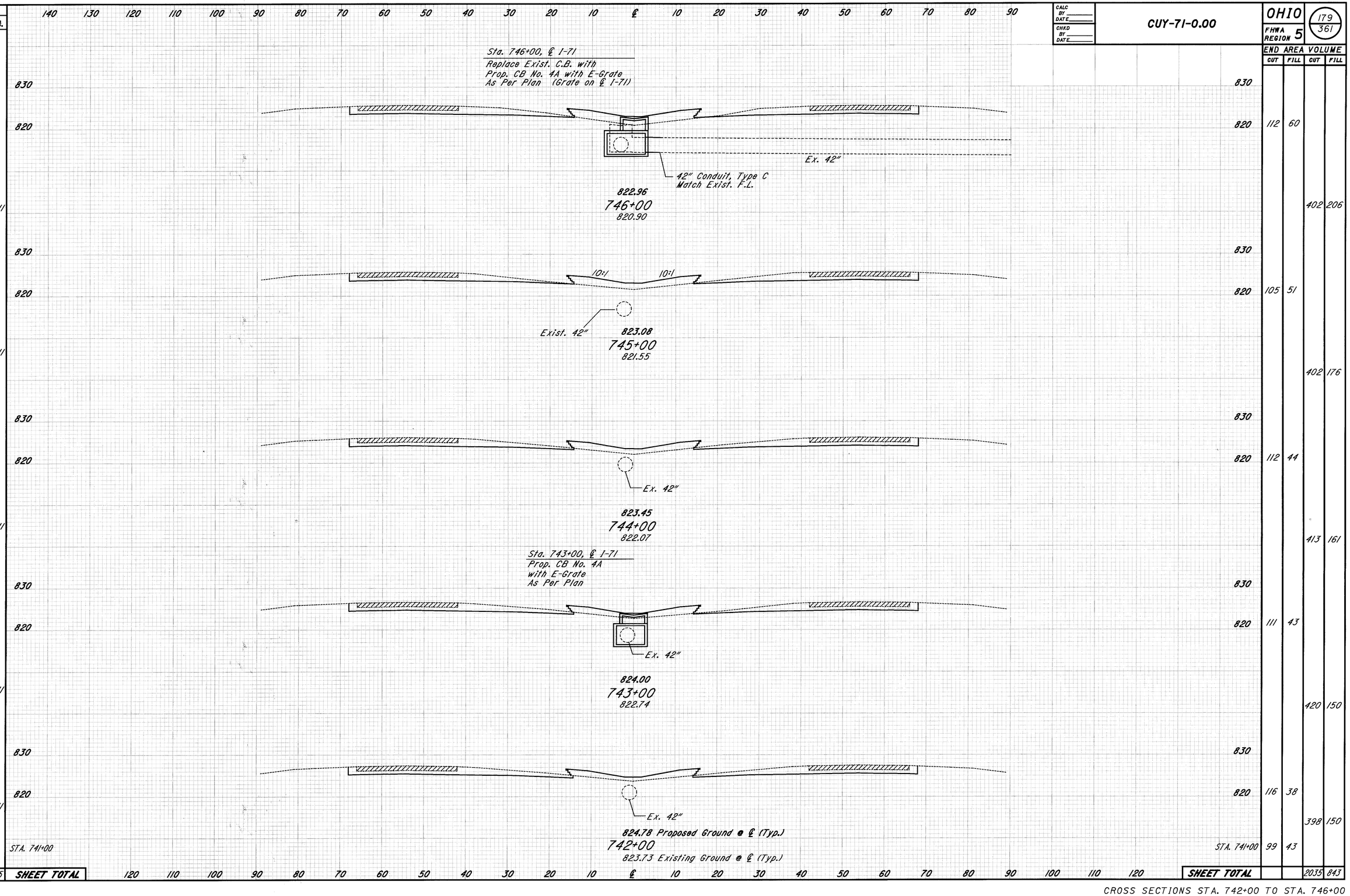

SEEDING END WIDTH	SEEDING SQ. YDS.	END AREA VOLUME CUT	END AREA VOLUME FILL	END AREA VOLUME CUT	END AREA VOLUME FILL
28	311	112	60	402	206
28	311	105	51	402	176
28	311	112	44	413	161
28	311	111	43	420	150
28	311	116	38	398	150
28		99	43		
	1555	SHEET TOTAL		2035	843

CROSS SECTIONS STA. 742+00 TO STA. 746+00

CALC BY ____ DATE ____	CUY-71-0.00	OHIO	180 / 361
CHKD BY ____ DATE ____		FHWA REGION 5	

SEEDING END WIDTH	SEEDING SQ. YDS.	STATION	END AREA CUT	END AREA FILL	VOLUME CUT	VOLUME FILL
28		751+00	93	67		
	311				333	250
28		750+00	87	68		
	311				324	252
28		749+00	88	68		
	311				344	226
28		748+00	98	54		
	311				385	209
28		747+00	110	59		
	311				411	220
28		STA. 643+00	112	60		
	1555	SHEET TOTAL			1797	1157

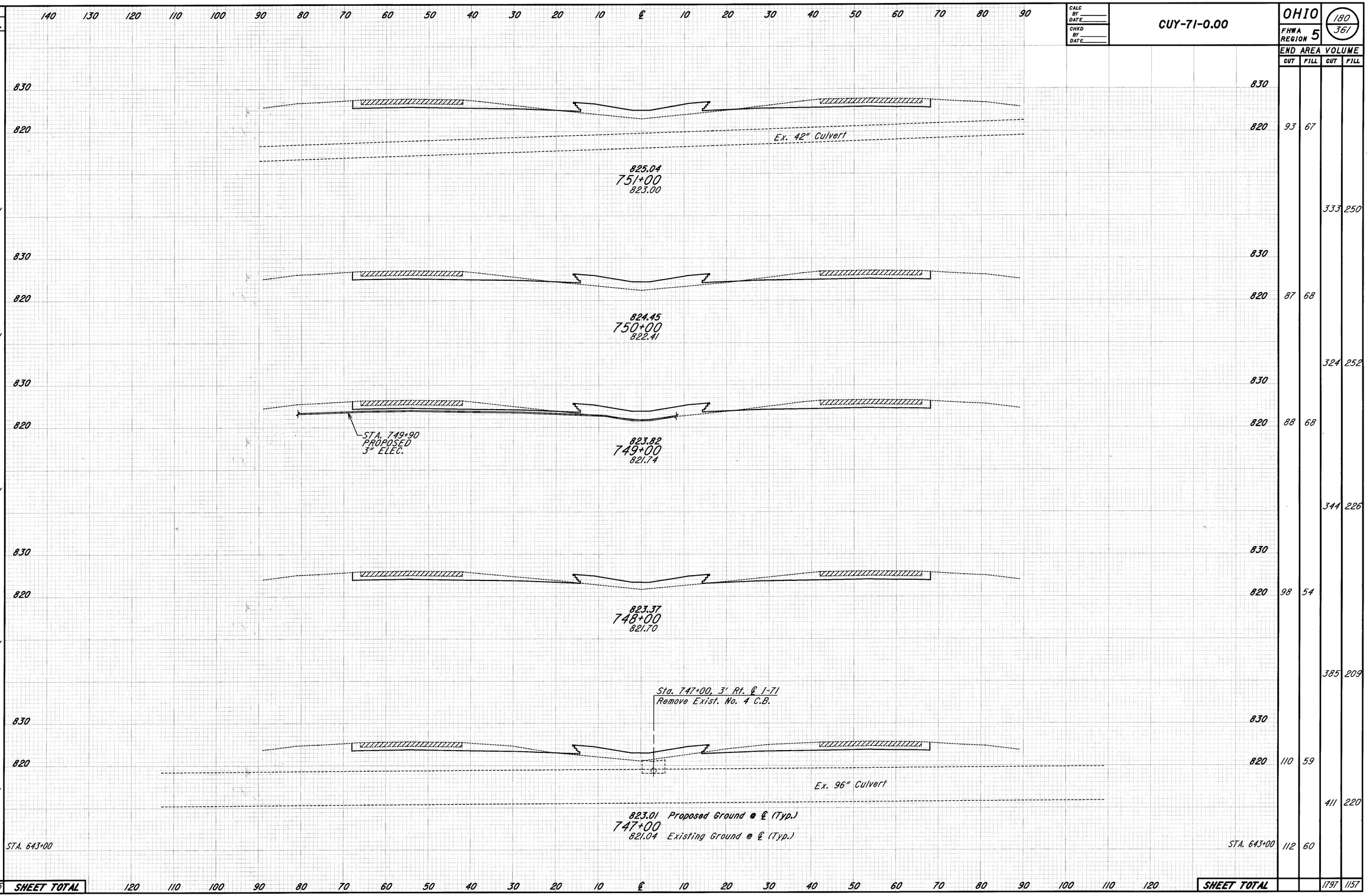

CROSS SECTIONS STA. 747+00 TO STA. 751+00

PLOTTED FROM C:\Users\beforsber\pid08459\307xs53.dgn 24-JUL-1998 15:11

PLOT SUBMITTED: 307XS53.DGN

PLOTTED FROM: i:\users\eforsber\pid08459\dgn\307xs54.dgn 307XS54.DGN PLOT SUBMITTED: 24-JUL-1998 15:11

CALC BY ____ DATE ____
CHKD BY ____ DATE ____

CUY-71-0.00

OHIO
FHWA REGION 5

181
361

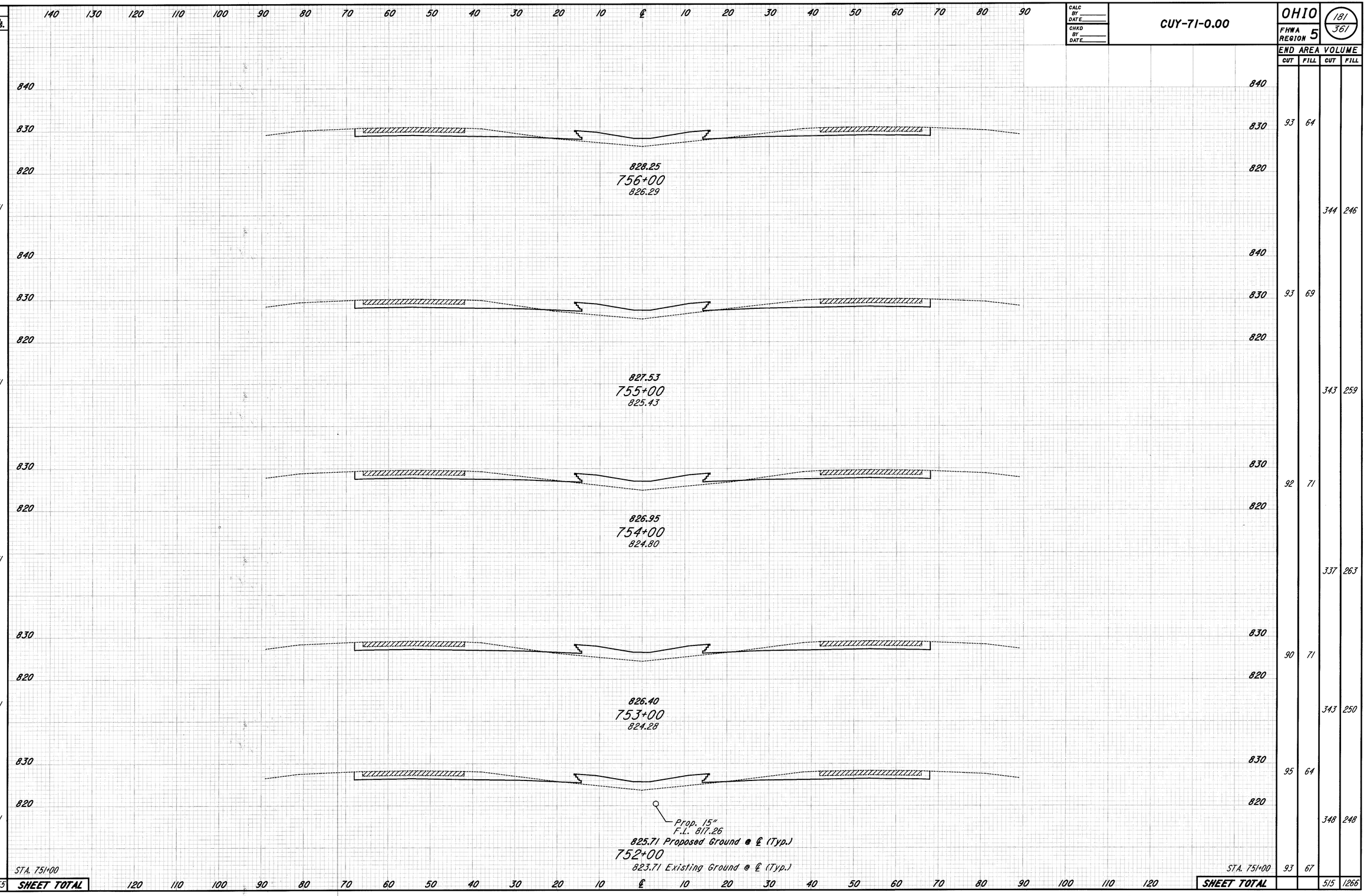

CROSS SECTIONS STA. 752+00 TO STA. 756+00

CALC BY ____ DATE ____	CUY-71-0.00	OHIO	182 / 361
CHKD BY ____ DATE ____		FHWA REGION 5	

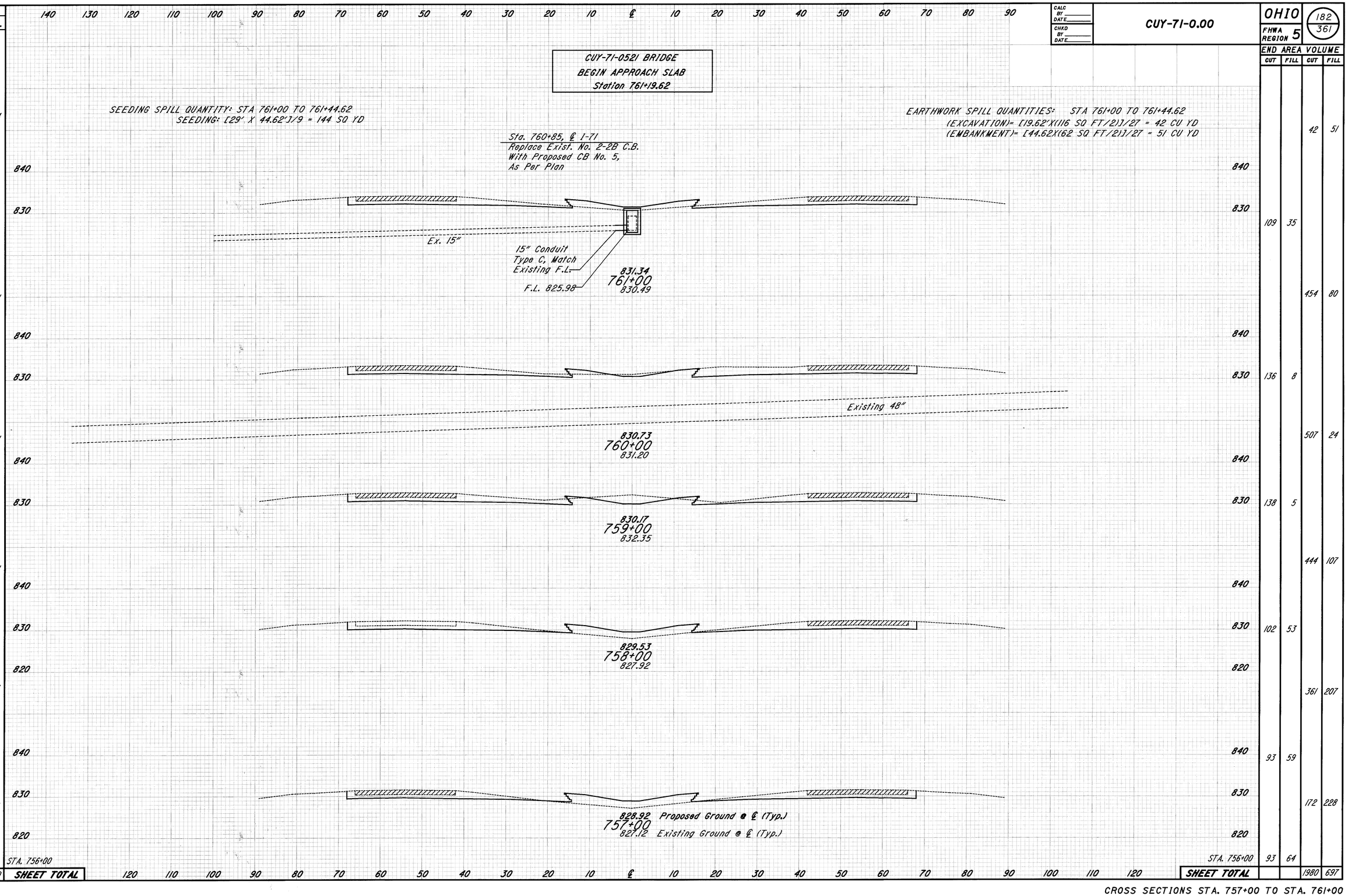

SEEDING END WIDTH	SEEDING SQ. YDS.	END AREA VOLUME CUT	END AREA VOLUME FILL	CUT	FILL
	144			42	51
28		109	35		
	311			454	80
28		136	8		
	311			507	24
28		138	5		
	311			444	107
28		102	53		
	311			361	207
28		93	59		
	311			172	228
28		93	64		
	1699			1980	697

PLOTTED FROM ...ris\Beforsber\pid08459\dgn\307xs55.dgn 24-JUL-1998 15:11 PLOT SUBMITTED:

SEEDING		
	END WIDTH	SQ. YDS.
	28	311
	28	311
	28	156
		778

CALC BY ____ DATE ____
CHKD BY ____ DATE ____

CUY-71-0.00

OHIO
FHWA REGION 5

183
361

END AREA VOLUME			
CUT	FILL	CUT	FILL
163	4		
		543	87
130	43		
		533	85
158	3		
		65	16
		1141	188

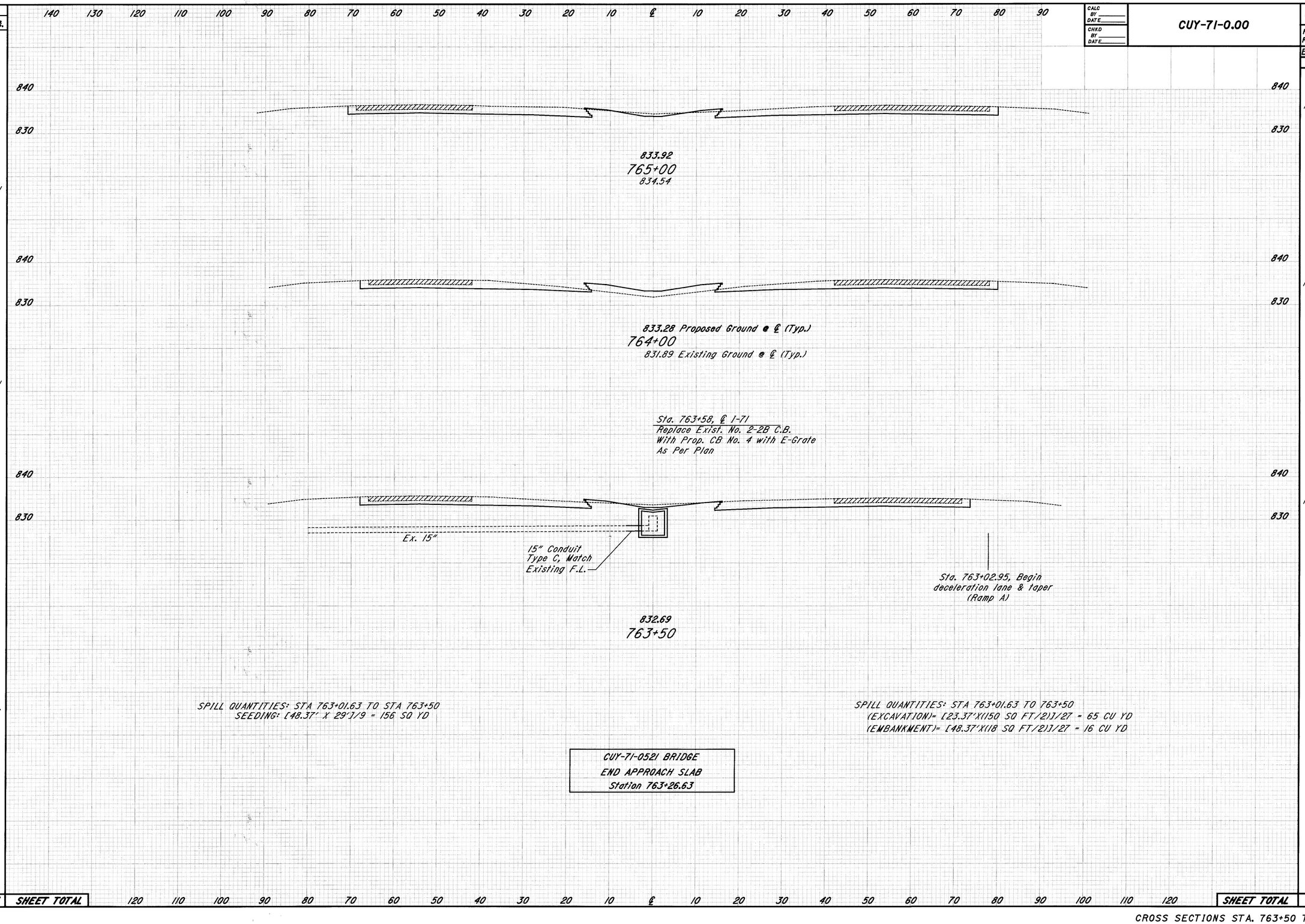

CROSS SECTIONS STA. 763+50 TO STA. 765+00

PLOT SUBMITTED: 24-JUL-1998 15:11

PLOTTED FROM: i:\users\eforsber\pid08459\dgn\307xs56.dgn

307XS56.DGN

SEEDING	END WIDTH	SQ. YDS.
	28	311
	28	311
	28	311
	28	311
	28	311
	28	311
	28	
	28	STA. 765+00
		1555 SHEET TOTAL

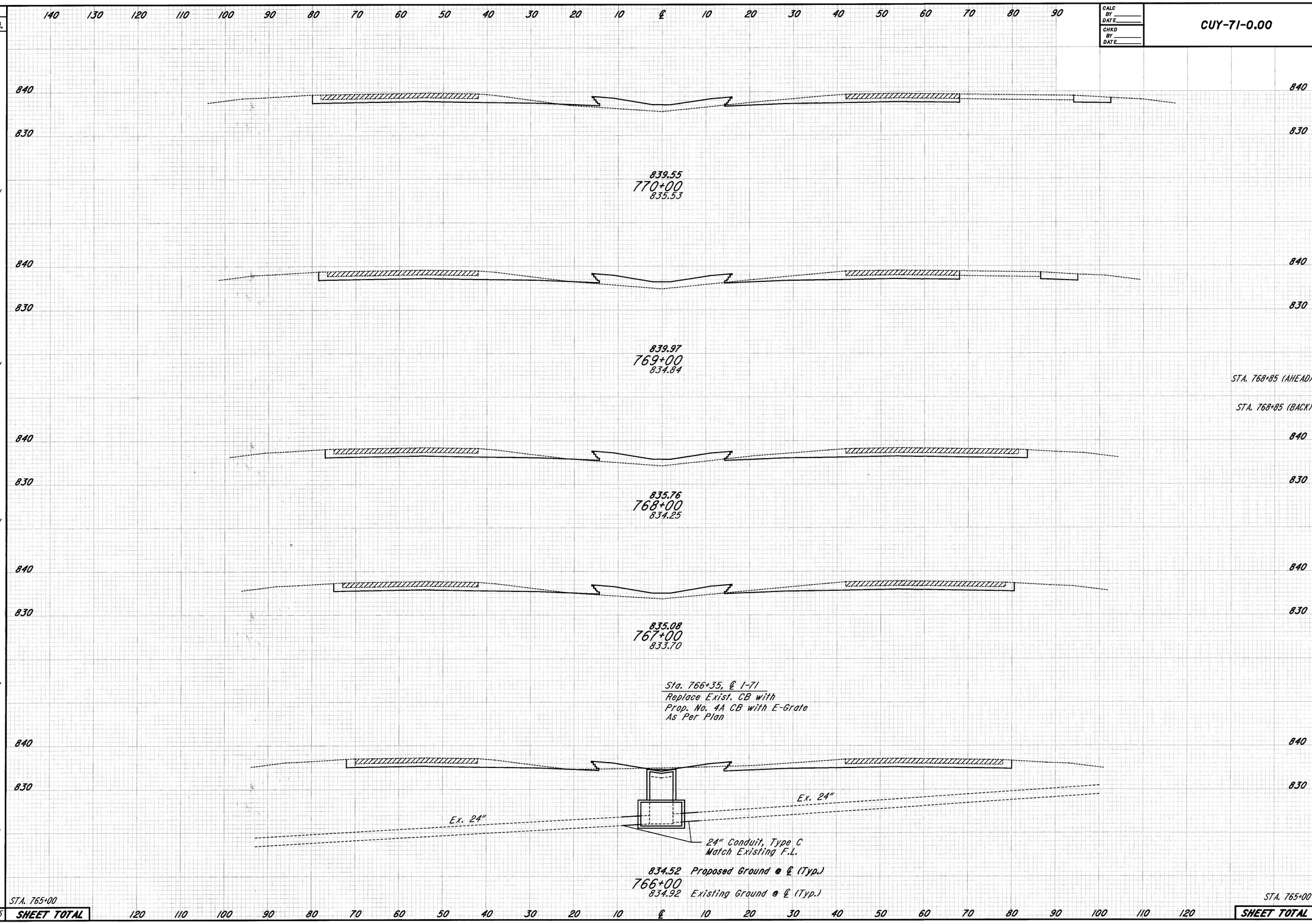

CALC BY ____ DATE ____
CHKD BY ____ DATE ____

CUY-71-0.00

OHIO
FHWA REGION 5
184
361

END AREA VOLUME			
CUT	FILL	CUT	FILL
105	52		
		387	196
104	54		
		58	30
104	54		
122	51		
		384	161
122	51		
		433	189
112	51		
		433	126
122	17		
		528	39
163	4		
		2223	741

PLOTTED FROM Mars Beforsber pid08459 dgn 307xs57.dgn 24-JUL-1998 15:11

PLOT SUBMITTED: 307XS57.DGN

CROSS SECTIONS STA. 766+00 TO STA. 770+00

PLOTTED FROM: i:\users\eforsber\pid08459\dgn\307xs58.dgn
PLOT SUBMITTED: 24-JUL-1998 15:11
307XS58.DGN

CALC BY	
DATE	
CHKD BY	
DATE	

CUY-71-0.00

OHIO FHWA REGION 5

185 / 361

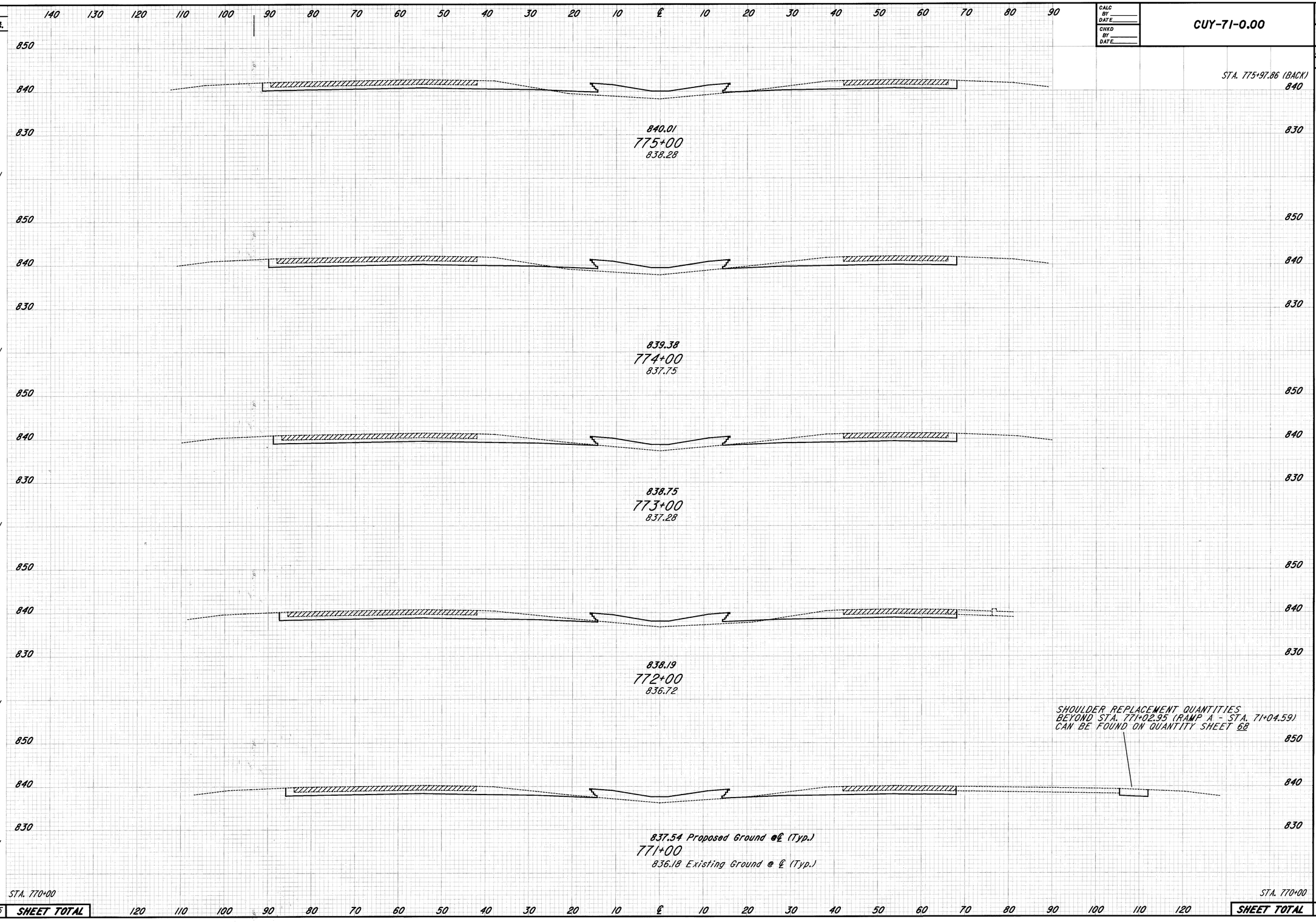

SEEDING END WIDTH	SEEDING SQ. YDS.	END AREA VOLUME CUT	END AREA VOLUME FILL	CUT	FILL
		STA. 775+97.86 (BACK) 112	67		
28		840		406	243
		112	67		
	311	830		419	237
28		840	114	61	
	311	830		435	207
28		840	121	51	
	311	830		430	196
28		840	111	55	
	311	830		415	193
28		840	113	49	
	311	830		404	187
28		STA. 770+00	105	52	
	1555	SHEET TOTAL		2509	1263

CROSS SECTIONS STA. 771+00 TO STA. 775+00

CALC BY ____ DATE ____ / CHKD BY ____ DATE ____	CUY-71-0.00	OHIO FHWA REGION 5	186 / 361

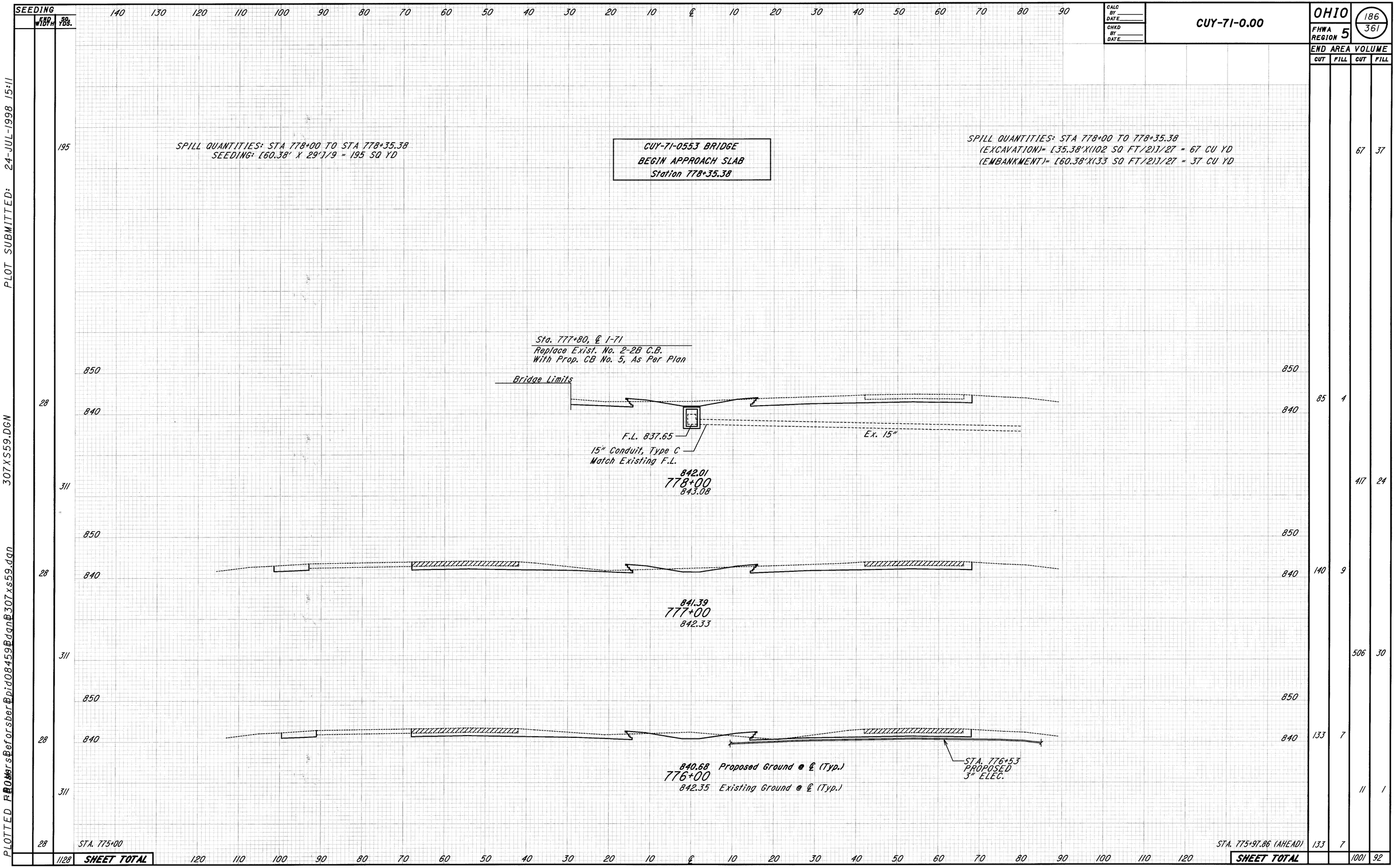

CROSS SECTIONS STA. 776+00 TO STA. 778+00

SEEDING END WIDTH	SEEDING SQ. YDS.
25	
	322
29	
	322
29	
	262
	906

CALC BY DATE
CHKD BY DATE

CUY-71-0.00

OHIO
FHWA REGION 5
187/361

END AREA VOLUME CUT	FILL	CUT	FILL
171	46		
		650	85
180	0		
		572	37
129	20		
		149	93
		1371	215

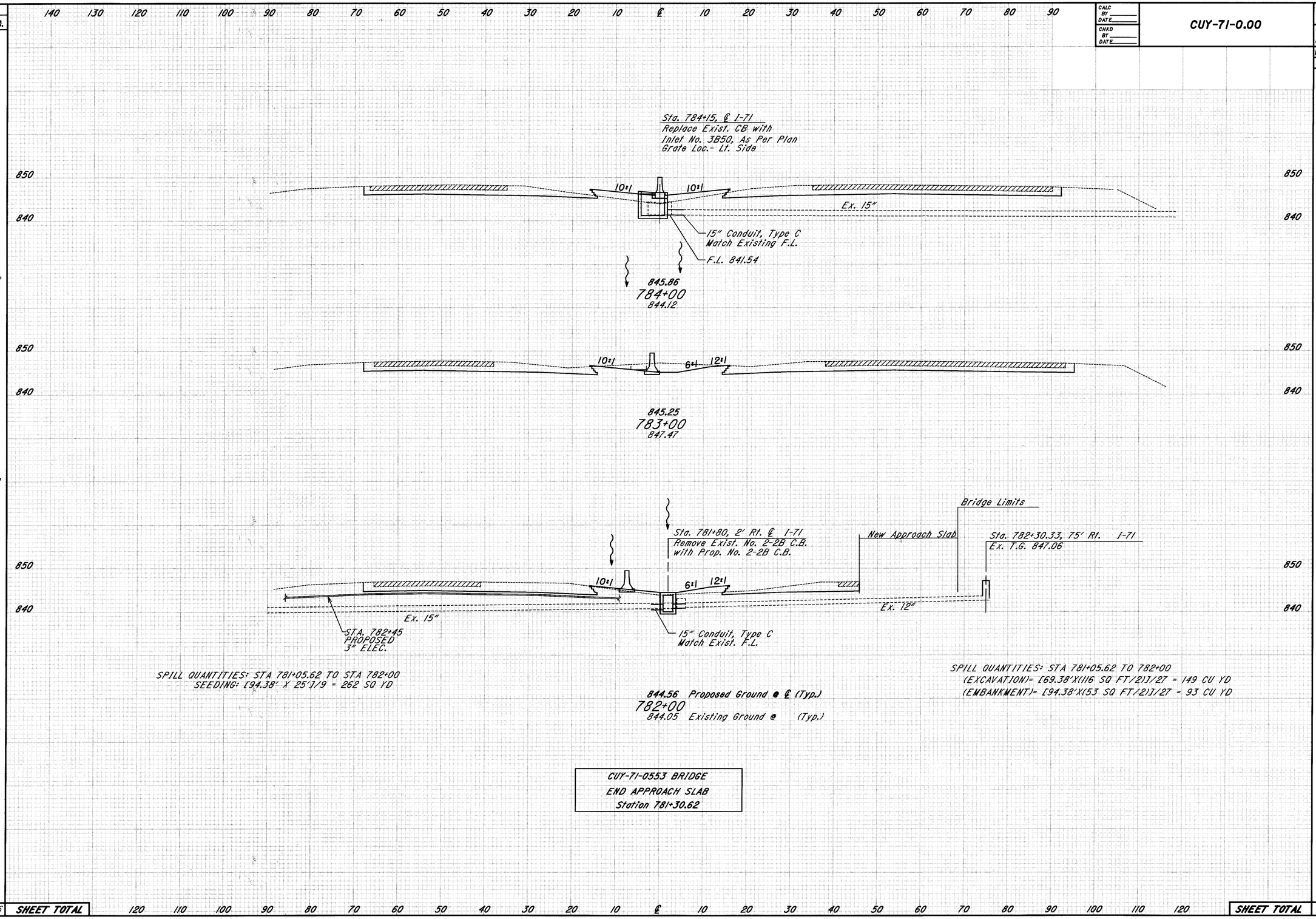

CROSS SECTIONS STA. 782+00 TO STA. 784+00

PLOTTED FROM 307XS60.DGN
PLOTTED BY: sberg0, sberg0 pid08459 dgn=307xs60.dgn 24-OCT-1996 15:11

CALC BY DATE	CHKD BY DATE	CUY-71-0.00	OHIO FHWA REGION 5	188/361

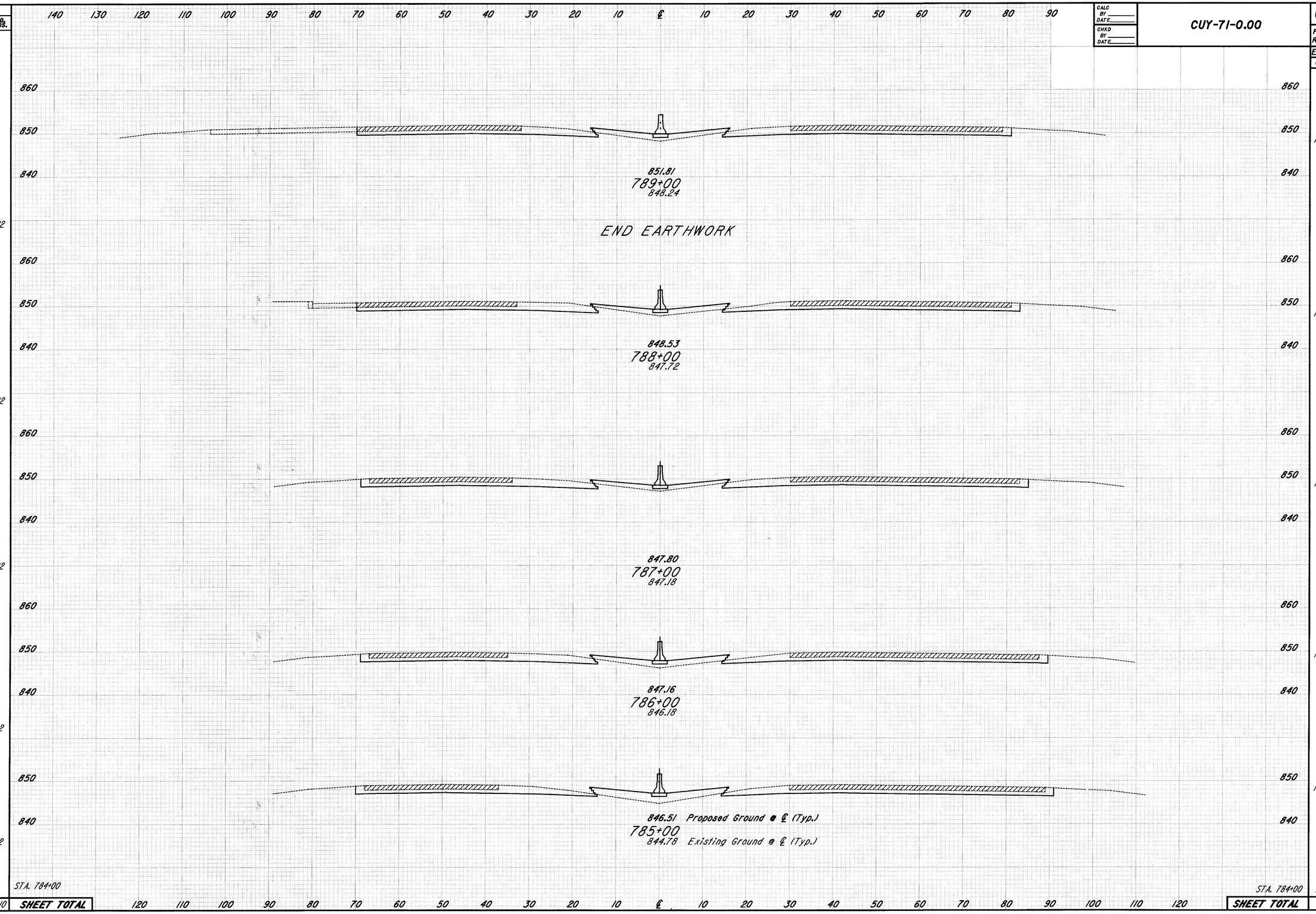

SEEDING END WIDTH	SEEDING SQ. YDS.	STA.	END AREA VOLUME CUT	END AREA VOLUME FILL	CUT	FILL
29		789+00	133	37		
	322	END EARTHWORK			491	133
29		788+00	132	35		
	322				498	120
29		787+00	137	30		
	322				507	128
29		786+00	137	39		
	322				507	174
29		785+00	137	55		
	322				570	187
29		STA. 784+00	171	46		
	1610	SHEET TOTAL			2573	742

CROSS SECTIONS STA. 785+00 TO STA. 789+00

PLOTTED FROM: PLOT SUBMITTED: 24-JUL-1998 15:11

307XS61.DGN

Flowers@Beforsber@pid08459@307xs61.dgn

DRAINAGE

REF. NO.	STATION FROM	STATION TO	SIDE	670 Ditch Erosion Protection Sq Yd
D-1	49+02.5	49+23	Lt.	9
D-2	49+02.5	49+23.5	Rt.	9
D-3	50+88.5	51+13.5	Lt.	11
D-4	50+89	51+14	Rt.	11
TOTALS				40

* The Crosshatched Area Designates the 4" Concrete Walk which will be Paid for Under the Roadway Quantities. The Concrete Slope Protection, As Per Plan Shall be Paid for Under the Bridge Quantities.

ROADWAY

REF. NO.	STATION FROM	STATION TO	SIDE	608 4" Concrete Walk Sq Ft
R-1	49+23.67	50+88.67	Rt.	2228
R-2	49+23.26	50+88.26	Lt.	2228
TOTALS				4456

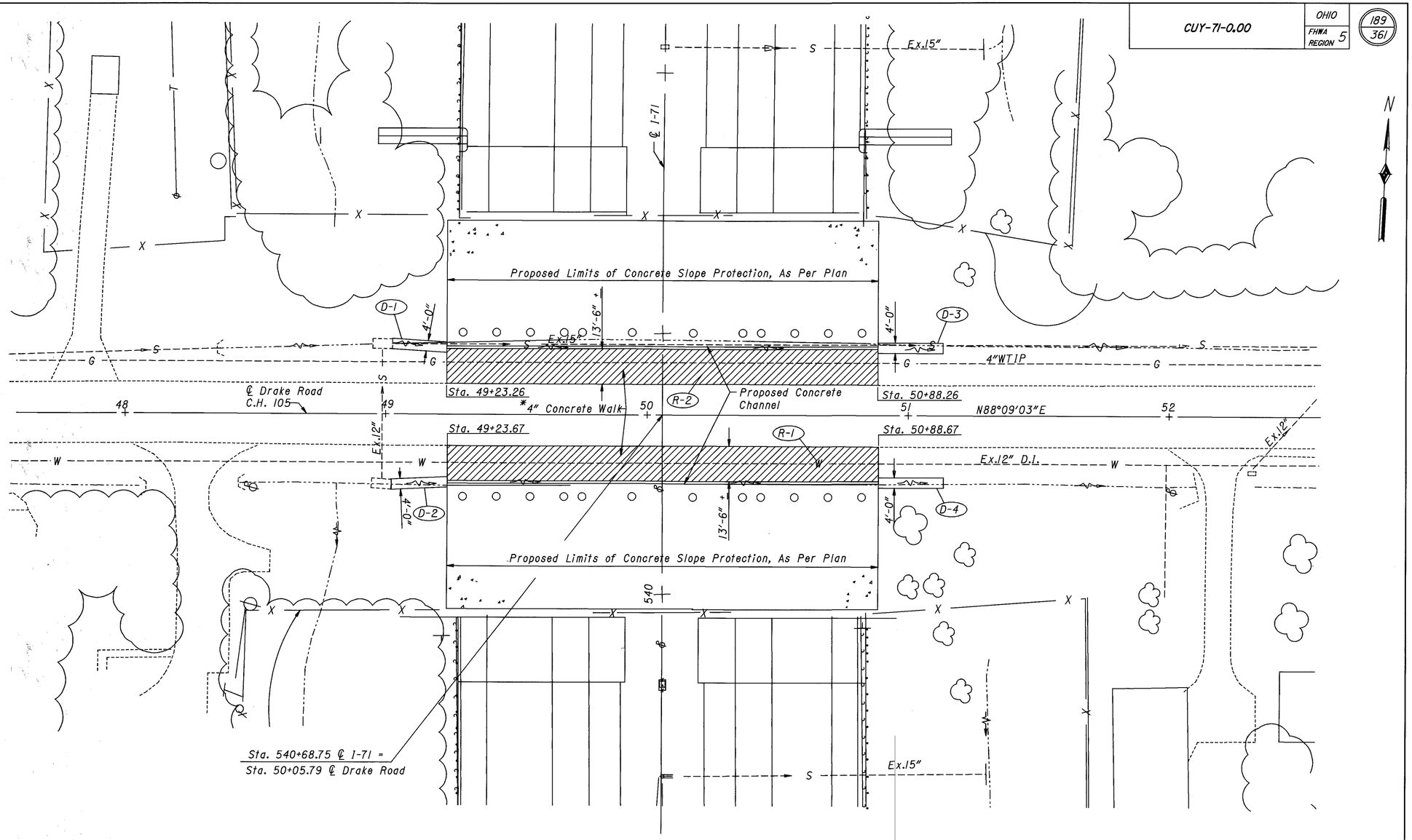

NOTE: A. There shall be no roadway pavement work on Drake Road
B. I-71 Bridges over Drake Road are not shown

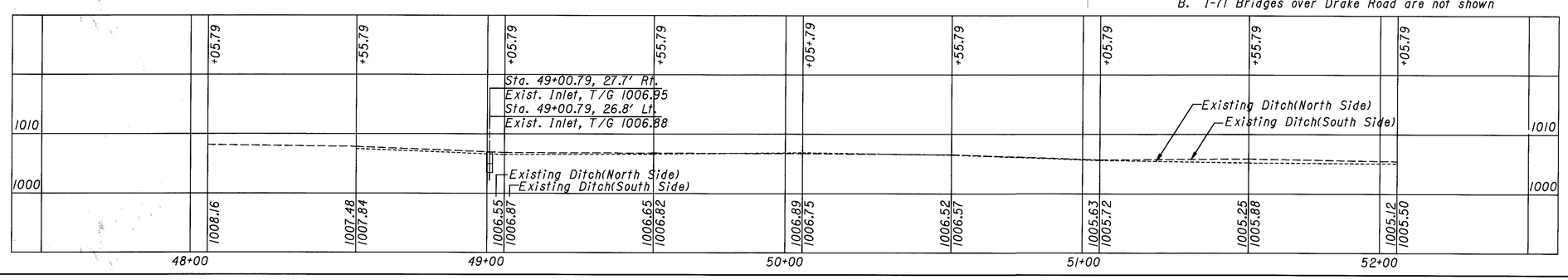

20 0 20 40
SCALE IN FEET

DRAKE ROAD PLAN & PROFILE

PLOTTED BY: fkonopka
PLOTTED: 03-AUG-1998 07:37
PLOT SUBMITTED:03-AUG-1998 07:37
307CRD01.DGN
307crd01.dgn
Bpid08459Bdgn
Beforsber

PLOTTED BY: fkonopka
PLOTTED: FROM: 307CRD02.DGN
PLOT SUBMITTED:03-AUG-1998 07:40

DRAINAGE

REF. NO.	STATION FROM	STATION TO	SIDE	670 Ditch Erosion Protection Sq Yd
D-1	48+88	49+13	Lt.	11
D-2	48+91.5	49+16.5	Rt.	11
D-3	50+83	51+04	Lt.	9
D-4	50+85	51+04	Rt.	8
TOTALS				39

* The Crosshatched Area Designates the 4" Concrete Walk which will be Paid for Under the Roadway Quantities. The Concrete Slope Protection, As Per Plan Shall be Paid for Under the Bridge Quantities.

ROADWAY

REF. NO.	STATION FROM	STATION TO	SIDE	608 4" Concrete Walk Sq Ft
R-1	49+16.85	50+85.01	Rt.	1850
R-2	49+13.35	50+83.31	Lt.	935
TOTALS				2785

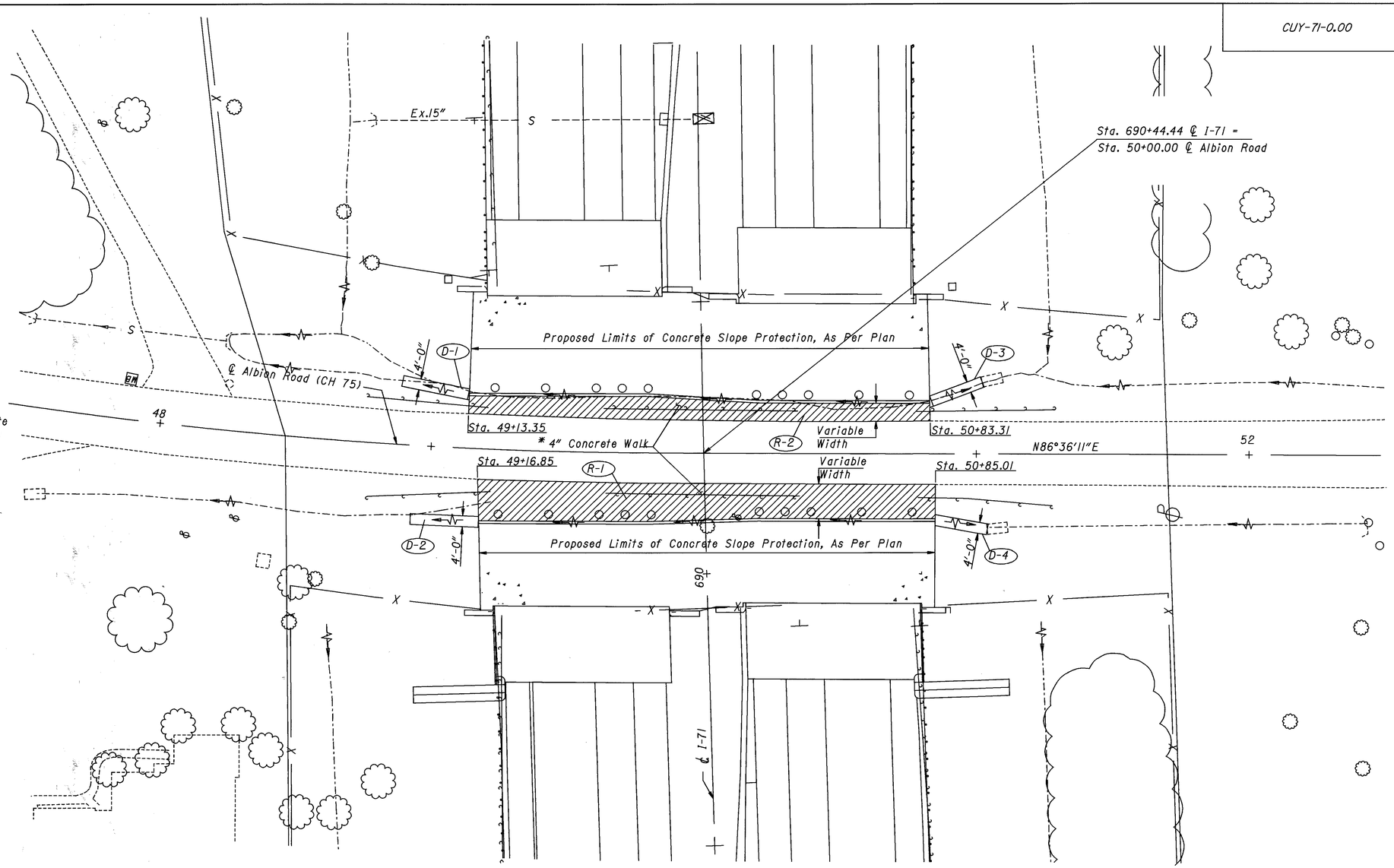

NOTE: A. There shall be no roadway pavement work on Albion Road
B. I-71 Bridges over Albion Road are not shown

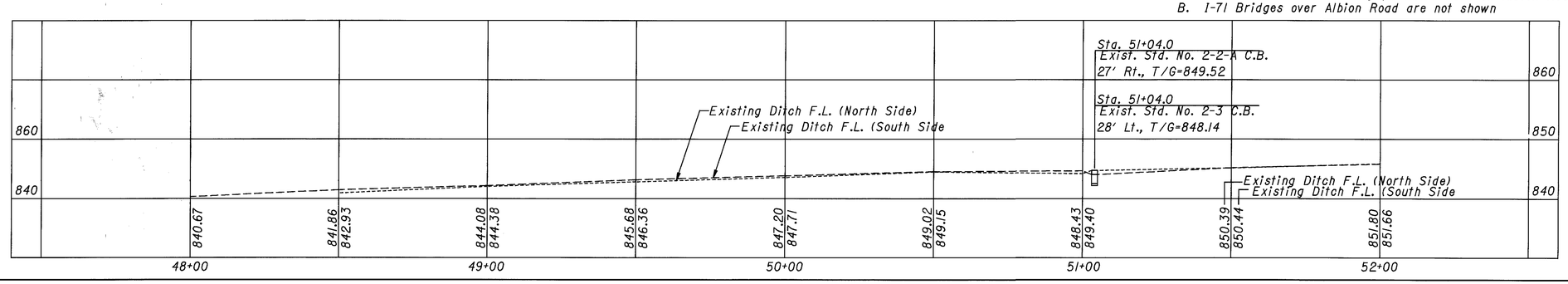

ALBION ROAD PLAN & PROFILE

DRAINAGE

REF. NO.	STATION FROM	STATION TO	SIDE	203 Ditch Cleanout Lin Ft	670 Ditch Erosion Protection Sq Yd
D-1	213+15	215+77	Rt.	262	
D-2	215+40	215+65	Lt.		11
D-3	215+52	215+77	Rt.		11
D-4	217+34	217+59	Lt.		11
D-5	217+45	217+70	Rt.		11
TOTALS				262	44

ROADWAY

REF. NO.	STATION FROM	STATION TO	SIDE	608 4" Concrete Walk Sq Ft
R-1	215+76.65	217+44.65	Rt.	1932
R-2	215+65	217+33.43	Lt.	1937
TOTALS				3869

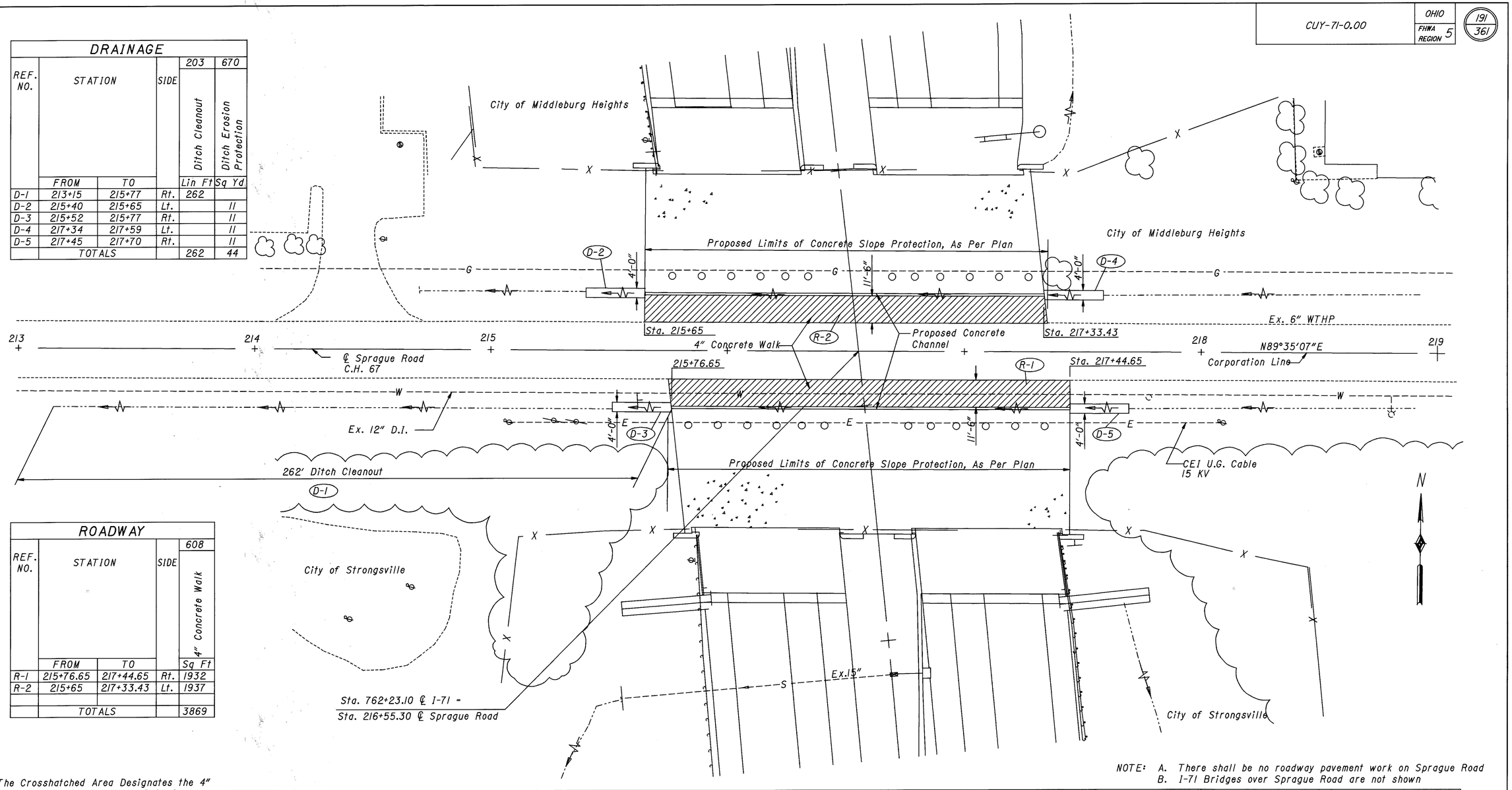

* The Crosshatched Area Designates the 4" Concrete Walk which will be Paid for Under the Roadway Quantities. The Concrete Slope Protection, As Per Plan Shall be Paid for Under the Bridge Quantities.

20 0 20 40
SCALE IN FEET

NOTE: A. There shall be no roadway pavement work on Sprague Road
B. I-71 Bridges over Sprague Road are not shown

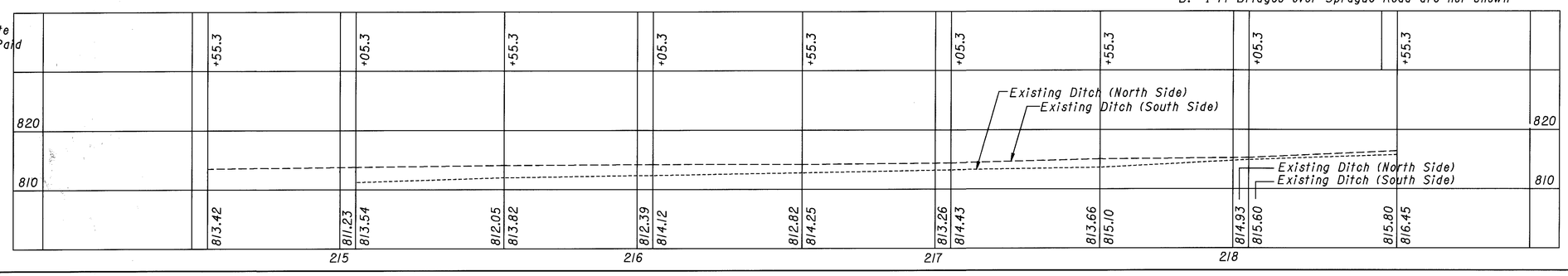

SPRAGUE ROAD PLAN & PROFILE

PLOTTED BY: fkonopka
PLOTTED: 03-AUG-1998 07:41
PLOT SUBMITTED: 03-AUG-1998 07:41
307CRD03.DGN
307crd03.dgn

DRAINAGE

REF. NO.	STATION FROM	STATION TO	SIDE	670 Ditch Erosion Protection Sq Yd
D-1	48+51	48+76	Lt.	11
D-2	47+14	47+39	Rt.	11
D-3	52+66	52+91	Lt.	11
D-4	51+26	51+51	Rt.	11
	TOTALS			44

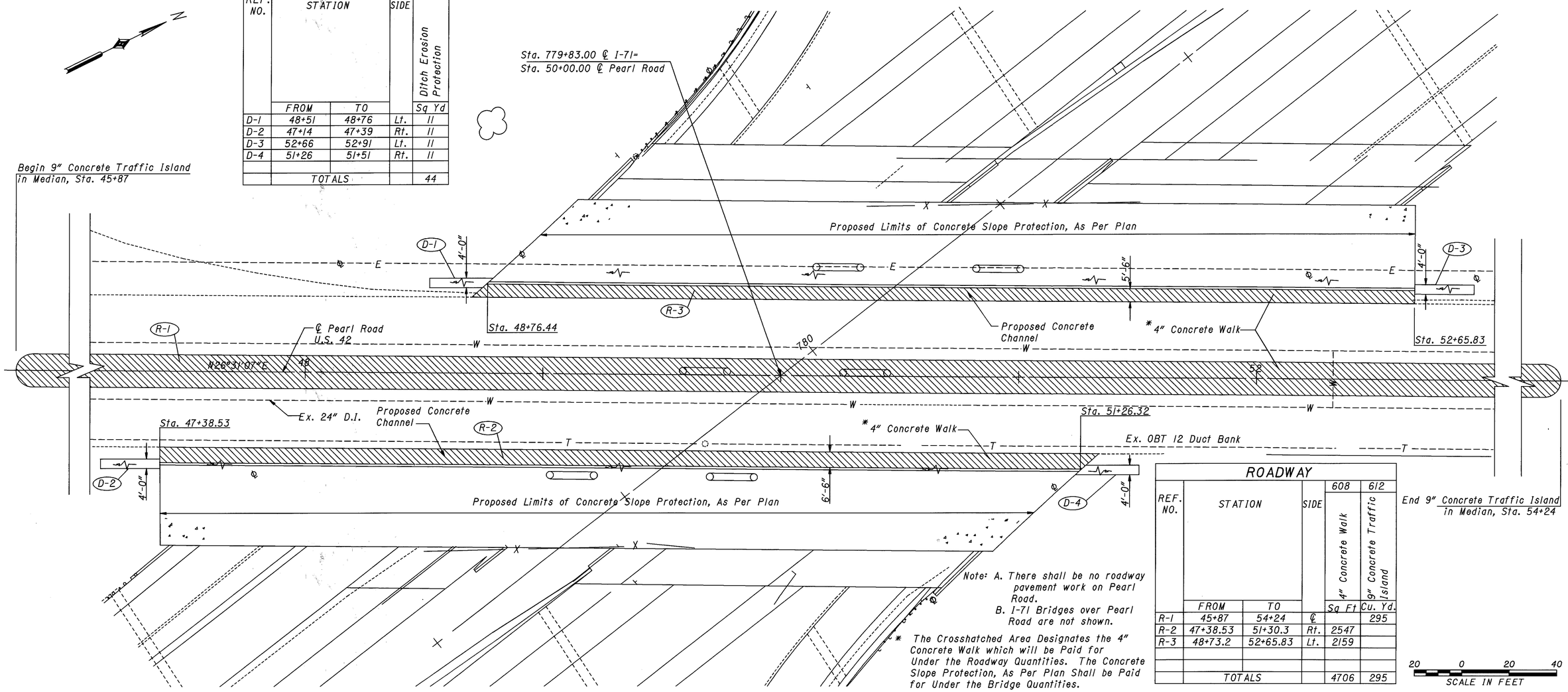

Note: A. There shall be no roadway pavement work on Pearl Road.
B. I-71 Bridges over Pearl Road are not shown.

* The Crosshatched Area Designates the 4" Concrete Walk which will be Paid for Under the Roadway Quantities. The Concrete Slope Protection, As Per Plan Shall be Paid for Under the Bridge Quantities.

ROADWAY

REF. NO.	STATION FROM	STATION TO	SIDE	608 4" Concrete Walk Sq Ft	612 9" Concrete Traffic Island Cu. Yd.
R-1	45+87	54+24	℄		295
R-2	47+38.53	51+30.3	Rt.	2547	
R-3	48+73.2	52+65.83	Lt.	2159	
	TOTALS			4706	295

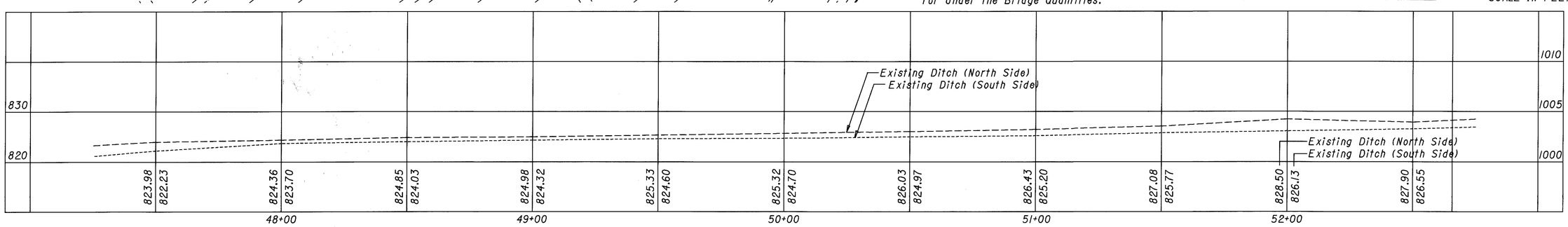

PEARL ROAD PLAN & PROFILE

PLOT SUBMITTED:03-AUG-1998 07:42
307CRD04.DGN
PLOTTED BY:fkonopka
PLOTTED:03-AUG-1998 07:42
PLOT SCALE:1:40
PLOT DATE:1-Jan-1994
/users/bforsber/pid08459/dgn/307crd04.dgn

SEEDING	END WIDTH	SQ. YDS.

CALC BY ____ DATE ____
CHKD BY ____ DATE ____

CUY-71-0.00

OHIO
FHWA REGION 5

193
361

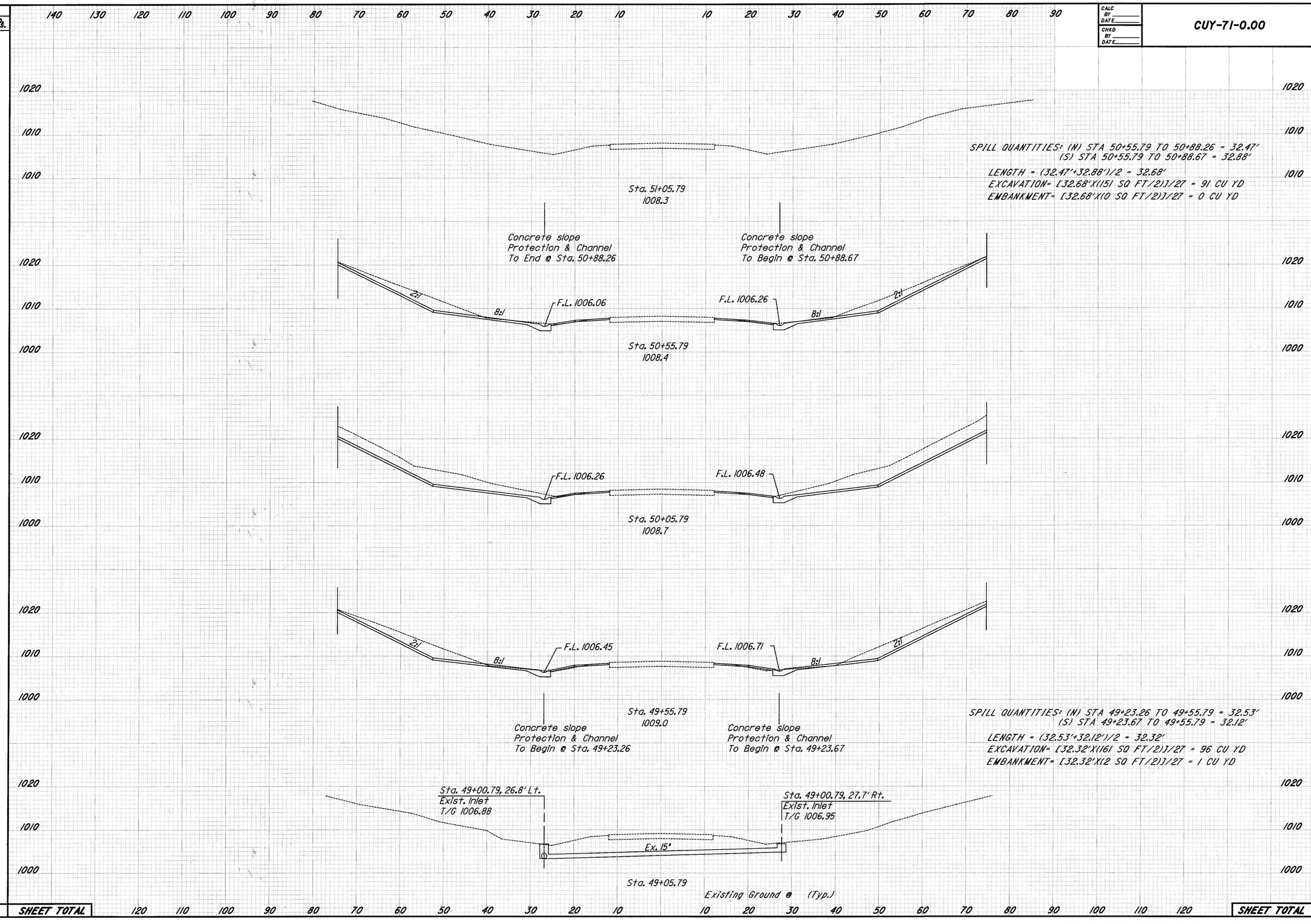

END AREA VOLUME			
CUT	FILL	CUT	FILL
		91	0
151	0		
		413	0
295	0		
		422	4
161	2		
		96	1
SHEET TOTAL		1022	5

DRAKE ROAD CROSS SECTIONS STA. 48+55.79 TO STA. 51+05.79

PLOT SUBMITTED:03-AUG-1998 07:49
307XSD01.DGN
PLOTTED BY:fkonopka
PLOTTED FROM:/usr/sbe/for/sber/pid08459/dgn/307xsd01.dgn

SEEDING		
	END WIDTH	SQ. YDS.

CALC BY ____ DATE ____
CHKD BY ____ DATE ____

CUY-71-0.00

OHIO — FHWA REGION 5 — 194/361

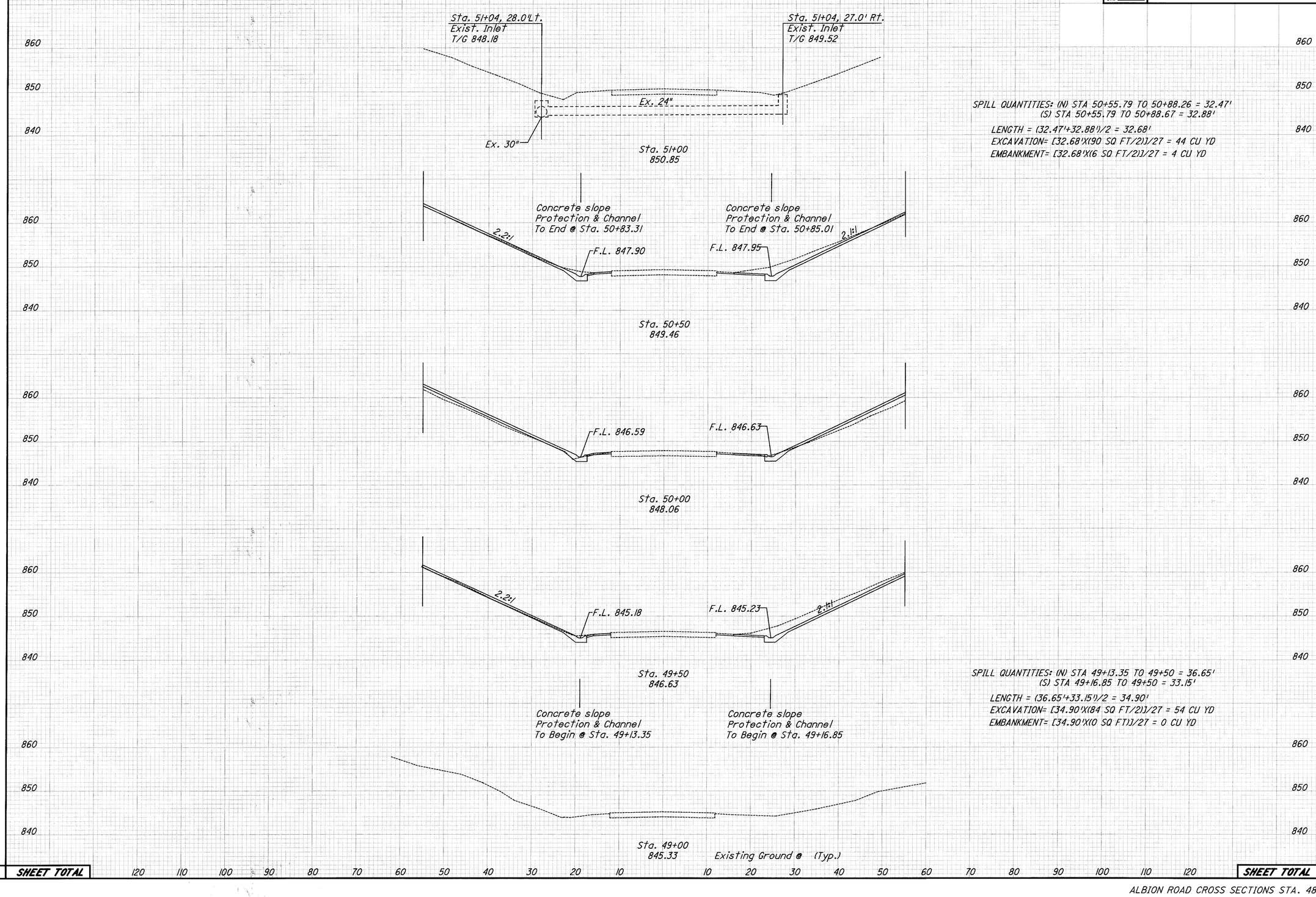

END AREA VOLUME			
CUT	FILL	CUT	FILL
		44	4
70	0		
		78	31
		91	31
84	0		
		54	0
SHEET TOTAL		267	66

ALBION ROAD CROSS SECTIONS STA. 48+50 TO STA. 51+00

PLOT SUBMITTED:03-AUG-1998 09:08
PLOTTED BY:fkonopka
PLOTTED:Monday, August 3, 1998 9:08:59 AM
307XSD02.DGN
Pid08459 307xsd02.dgn

SEEDING	END WIDTH	SQ. YDS.

CALC BY ____ DATE ____
CHKD BY ____ DATE ____

CUY-71-0.00

OHIO — FHWA REGION 5 — (195/361)

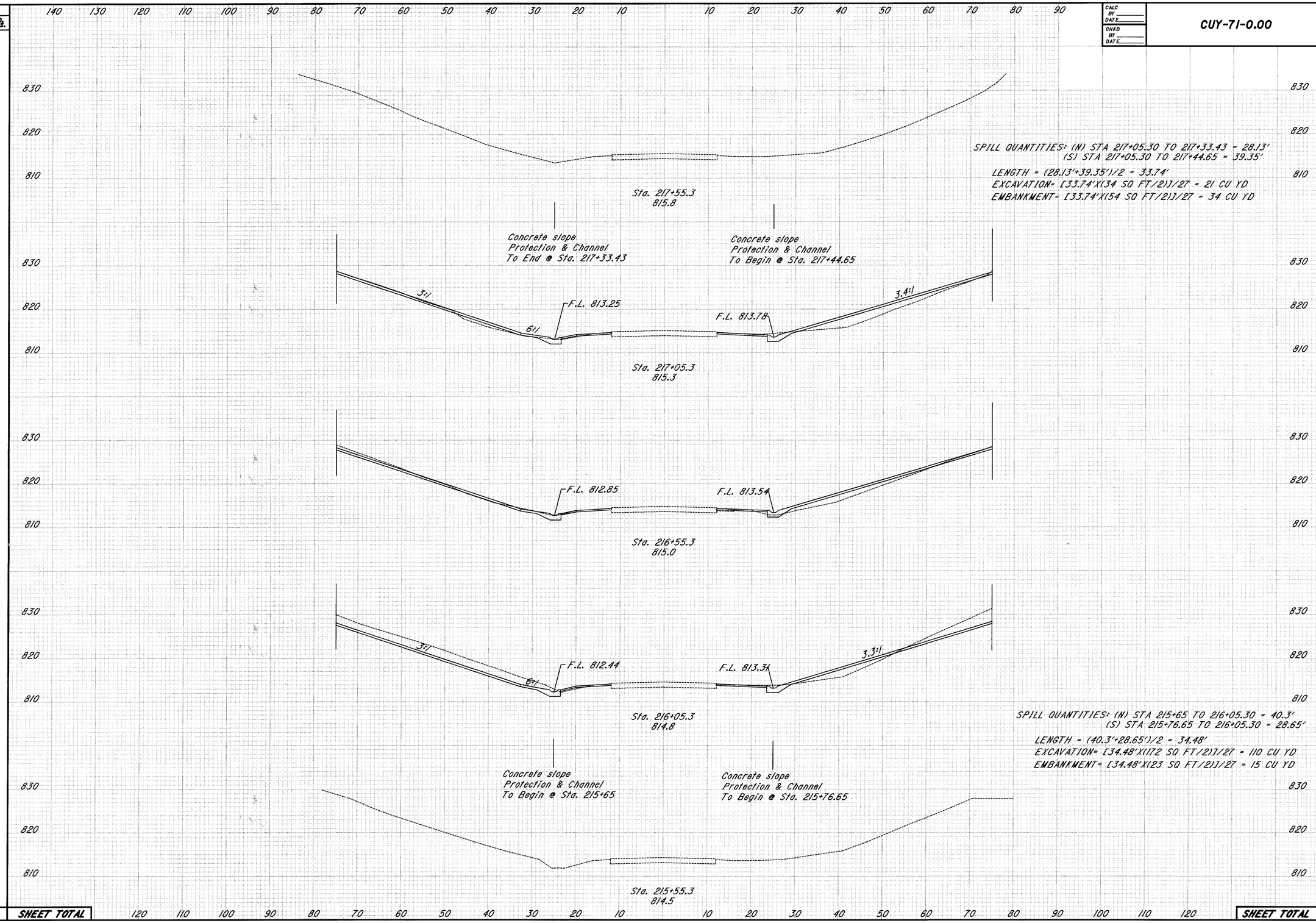

SPILL QUANTITIES: (N) STA 217+05.30 TO 217+33.43 = 28.13'
(S) STA 217+05.30 TO 217+44.65 = 39.35'
LENGTH = (28.13'+39.35')/2 = 33.74'
EXCAVATION= [33.74'X(34 SQ FT/2)]/27 = 21 CU YD
EMBANKMENT= [33.74'X(54 SQ FT/2)]/27 = 34 CU YD

SPILL QUANTITIES: (N) STA 215+65 TO 216+05.30 = 40.3'
(S) STA 215+76.65 TO 216+05.30 = 28.65'
LENGTH = (40.3'+28.65')/2 = 34.48'
EXCAVATION= [34.48'X(172 SQ FT/2)]/27 = 110 CU YD
EMBANKMENT= [34.48'X(23 SQ FT/2)]/27 = 15 CU YD

END AREA VOLUME			
CUT	FILL	CUT	FILL
		21	34
34	54		
		70	78
42	30		
		198	49
172	23		
		110	15
SHEET TOTAL		399	176

SPRAGUE ROAD CROSS SECTIONS STA. 215+55.3 TO STA. 217+55.3

PLOT SUBMITTED:03-AUG-1998 07:55
307XSD03.DGN
PLOTTED BY: fkonopka
PLOTTED FROM: /home/sber/pid08459/dgn/307xsd03.dgn

SEEDING	END WIDTH	SQ. YDS.

CALC BY ____ DATE ____
CHKD BY ____ DATE ____

CUY-71-0.00

OHIO
FHWA REGION 5

196/361

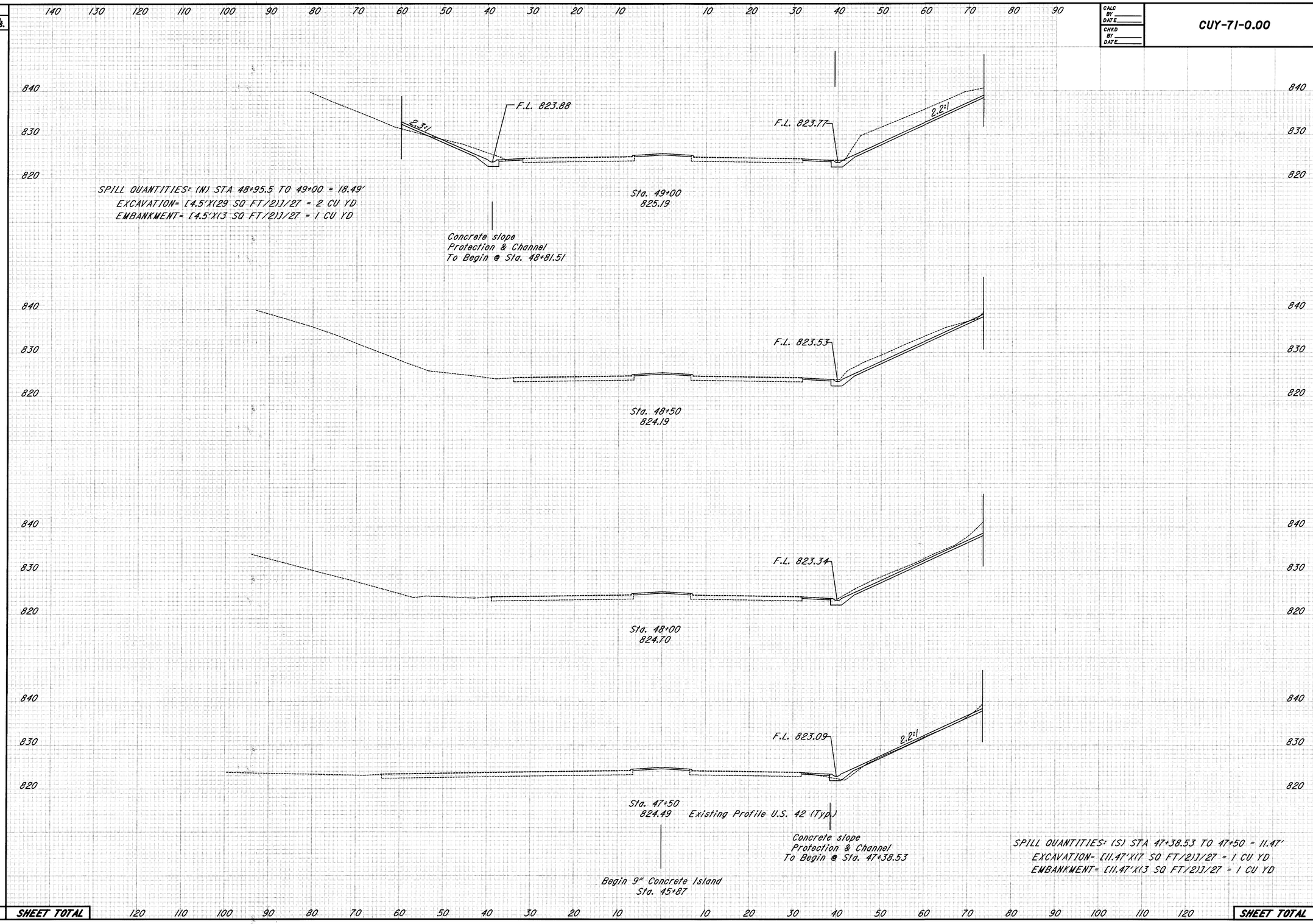

END AREA VOLUME

CUT	FILL	CUT	FILL
	(S)		
118	0		
(N)			
29	3		
		(S)	
		165	0
		(N)	
		2	1
60	0		
		100	0
48	0		
		51	3
7	3		
		1	1
SHEET TOTAL		319	5

PEARL ROAD CROSS SECTIONS STA. 47+50 TO STA. 49+00

PLOT SUBMITTED:03-AUG-1998 07:57
PLOTTED BY:fkonopka
PLOTTED FROM:/home/sberber/pid08459/dgn/307xsd04.dgn
307XSD04.DGN

SEEDING	END WIDTH	SQ. YDS.

CALC BY ____ DATE ____
CHKD BY ____ DATE ____

CUY-71-0.00

OHIO — FHWA REGION 5 — (197/361)

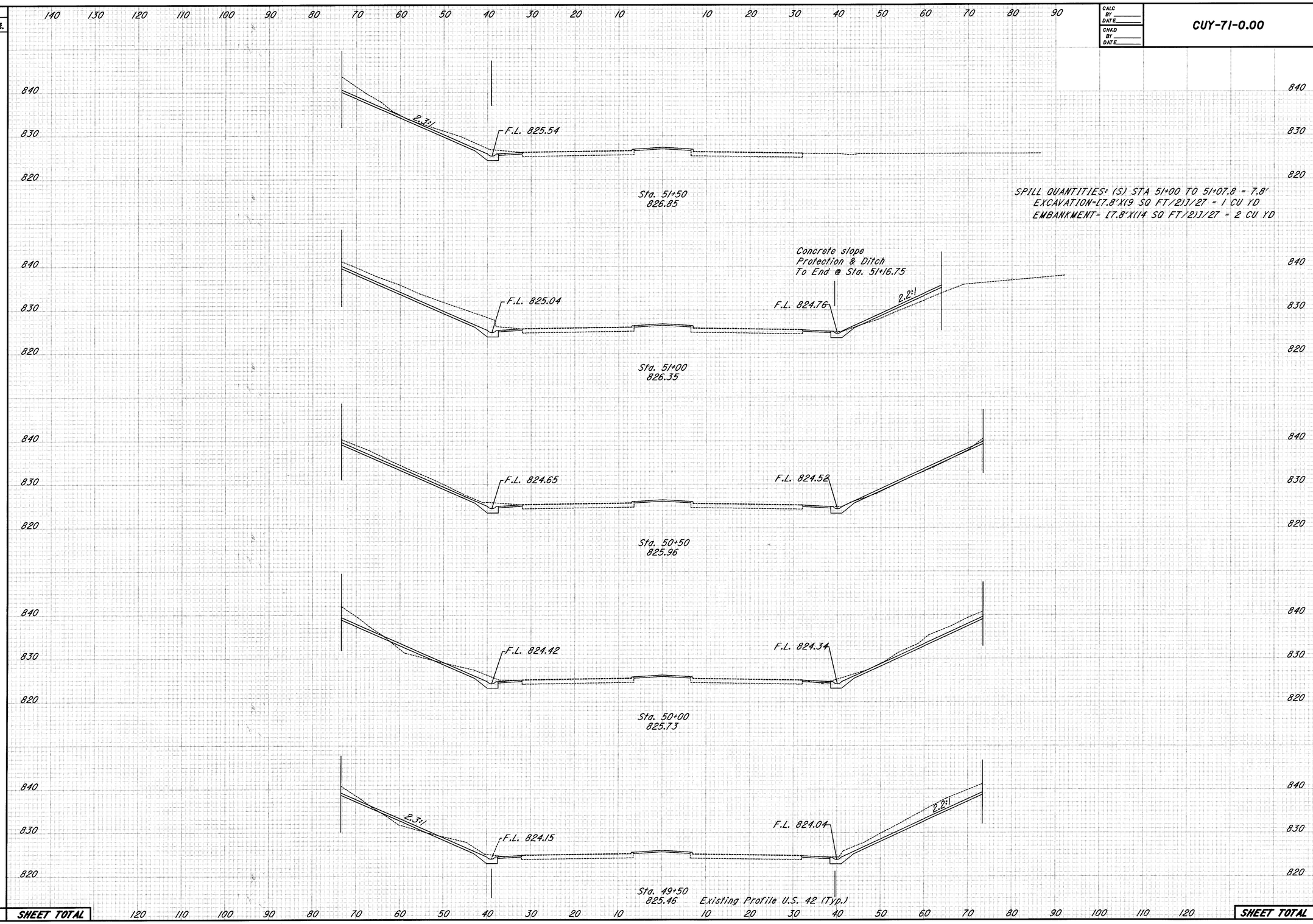

END AREA VOLUME

	CUT	FILL	CUT	FILL
	66	0		
			(S) 1	2
			(N) 147	0
	(S) 9	14		
	(N) 93	0		
			154	14
	64	1		
			146	6
	94	6		
			193	10
	114	5		
			242	7
SHEET TOTAL			883	39

PEARL ROAD CROSS SECTIONS STA. 49+50 TO STA. 51+50

PLOTTED BY: fkonopka
PLOTTED: 03-AUG-1998 07:59
PLOT SUBMITTED: 03-AUG-1998 07:59
307XSD05.DGN

SEEDING	END WIDTH	SQ. YDS.

CALC BY ____ DATE ____
CHKD BY ____ DATE ____

CUY-71-0.00

OHIO
FHWA REGION 5

198
361

END AREA VOLUME			
CUT	FILL	CUT	FILL

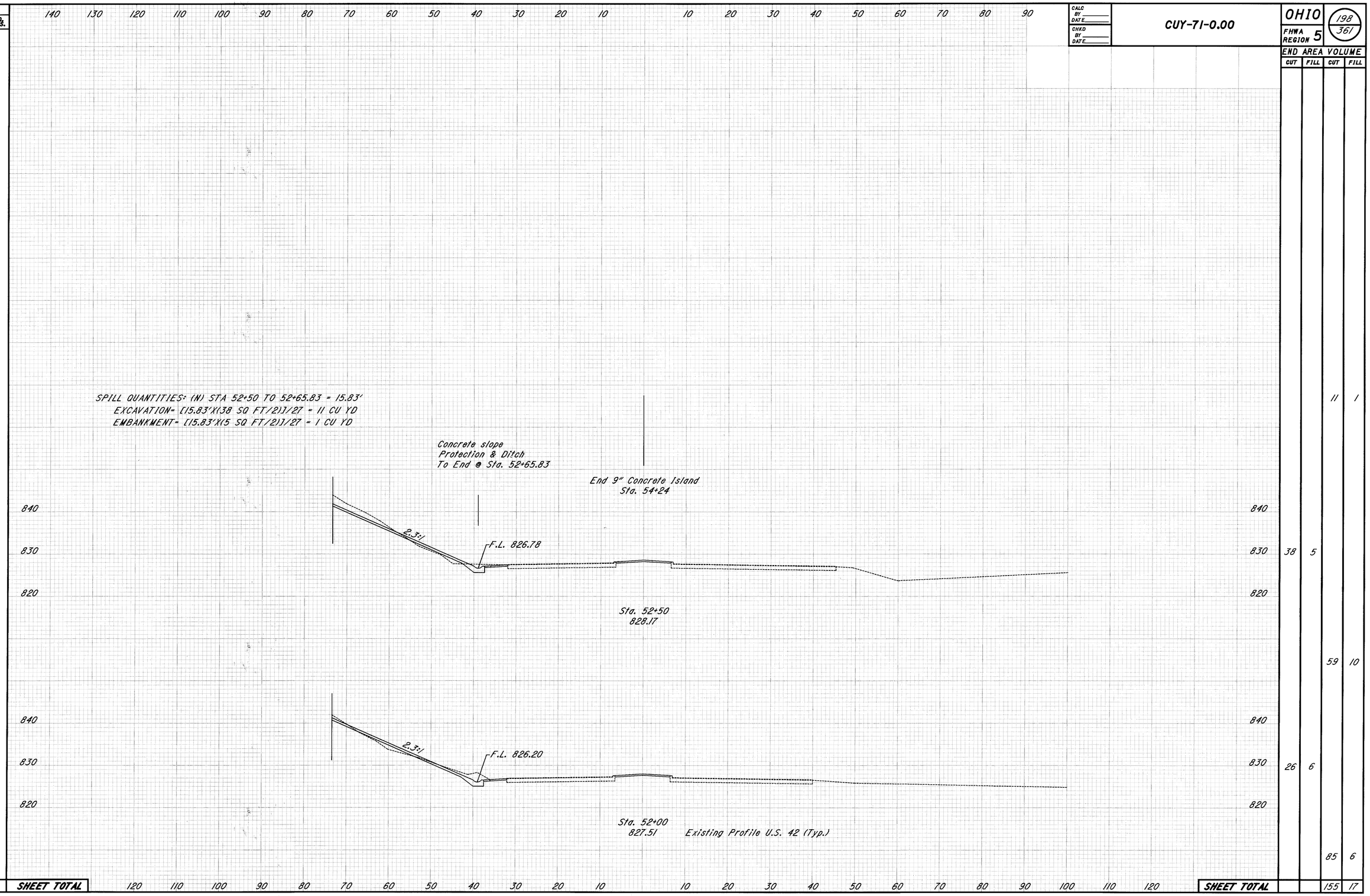

	CUT	FILL	CUT	FILL
			11	1
	38	5		
			59	10
	26	6		
			85	6
SHEET TOTAL			155	17

PEARL ROAD CROSS SECTIONS STA. 52+00 TO STA. 52+50

PLOT SUBMITTED:03-AUG-1998 08:01
PLOTTED BY:fkonopka
PLOTTED FROM:/users/beforsber/pid08459B/dgn/B307xsd06.dgn
307XSD06.DGN

SEEDING	END WIDTH	SQ. YDS.

CALC BY	
DATE	
CHKD BY	
DATE	

CUY-71-0.00

OHIO

FHWA REGION 5

199 / 361

END AREA VOLUME			
CUT	FILL	CUT	FILL

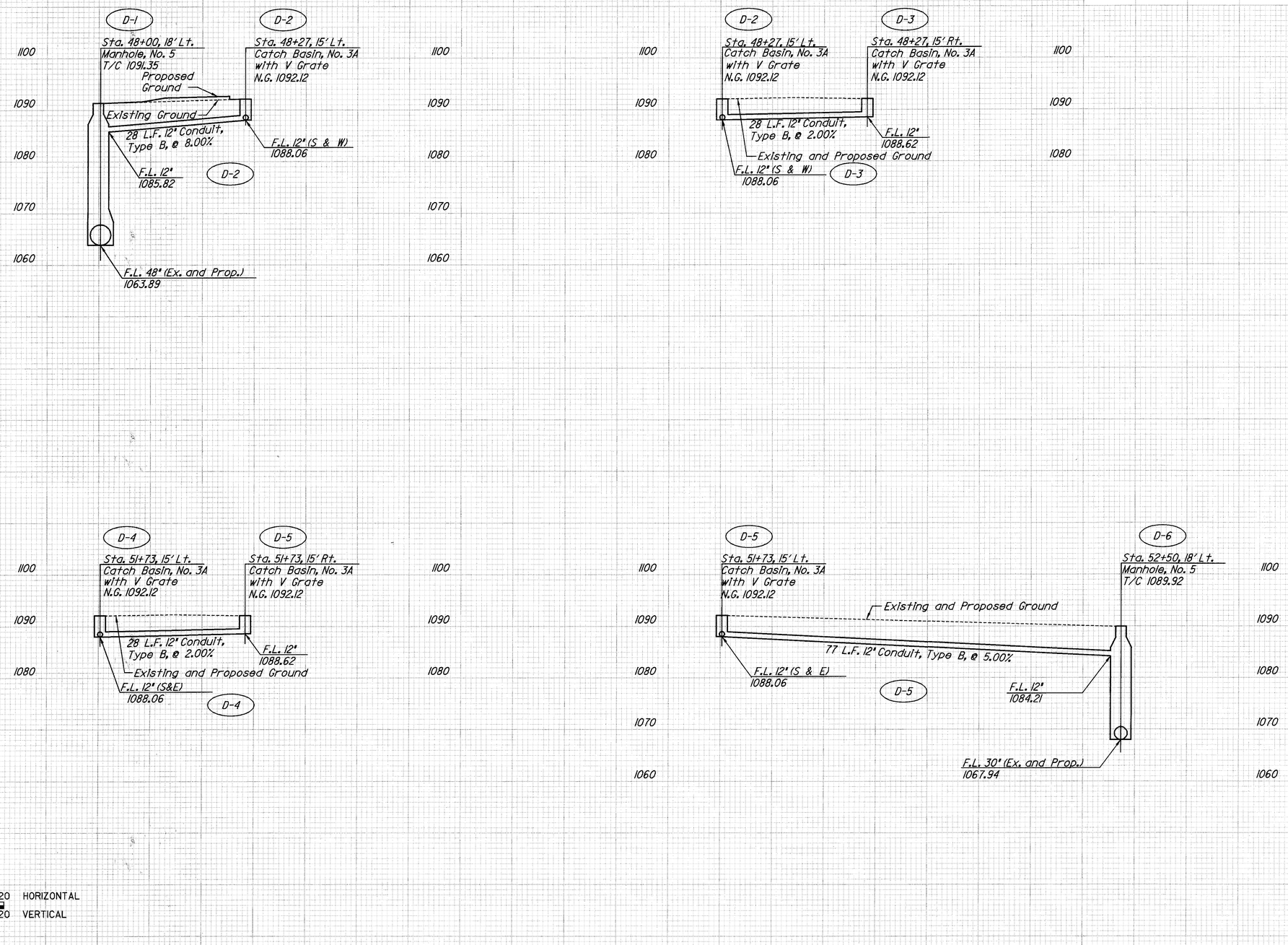

SHEET TOTAL

SHEET TOTAL

BOSTON ROAD STORM SEWER PROFILES

PLOT SUBMITTED:05-AUG-1998 12:35

PLOTTED BY: fkonopka

PLOTTED FROM: Rbid08459B.dgn B307ssp01.dgn

307SSP01.DGN

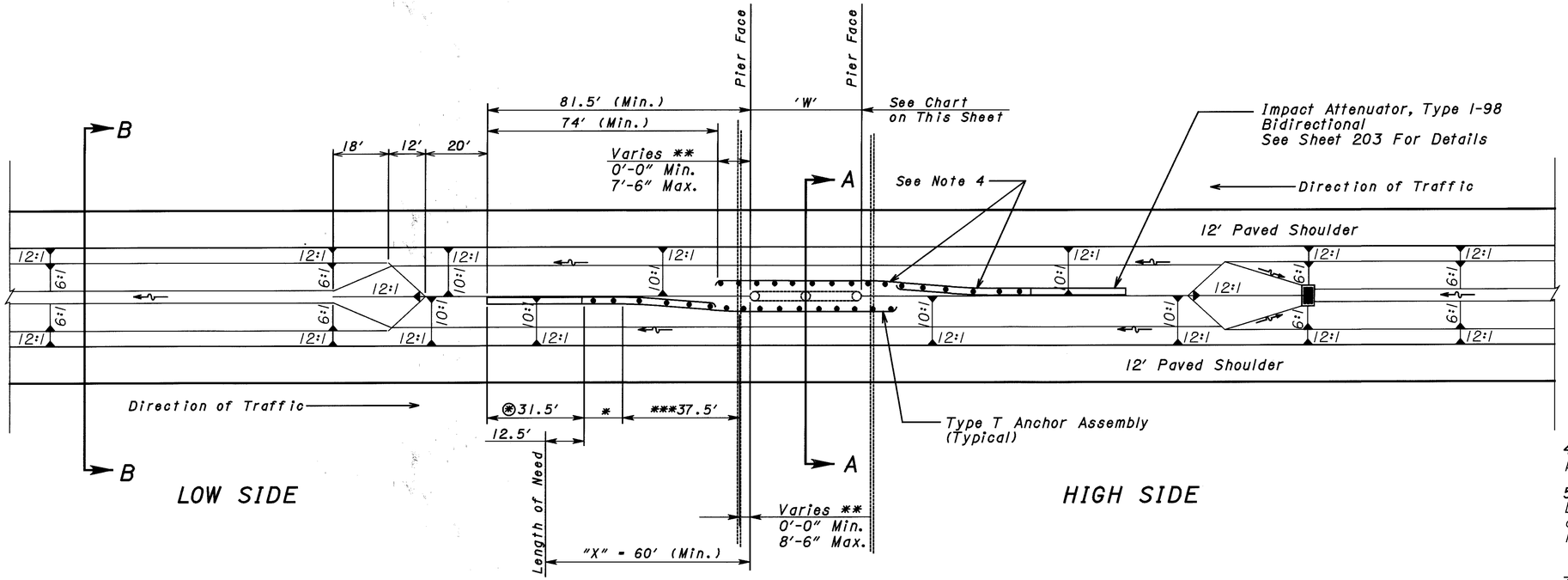

OVERHEAD BRIDGE PIER PROTECTION PLAN

Median Grading May Vary when Guardrail is 2 ft. from Shoulder (See X-Sections)

BRIDGE	PIER WIDTH 'W'
BOSTON	37'
ROYALTON	95'
TURNPIKE	54'
WHITNEY	37'

NOTES

4) Use a 25 ft Standard Flare Arc as per std. Constr. dwg. GR-5.1M.

5) Cross-slopes in front of guardrail must be 10:1 or flatter. Slopes shown in the median define the drainage flow direction and could vary. For additional details see the plan cross sections.

7) The "HIGH SIDE" and "LOW SIDE" designations are shown in reference to the drainage design and are dependent upon the longitudinal slope of the median.

* - 12.5' Type 5 Guardrail, Barrier Design, Parallel to Impact Attenuator

** - Variable Dimensions are Provided for the Purpose of Installing Whole Guardrail Sections.

*** - 37.5' Type 5 Guardrail, Barrier Design, @15:1 Taper

⊛ 31.5' or 32.67', See Sheet 203 .

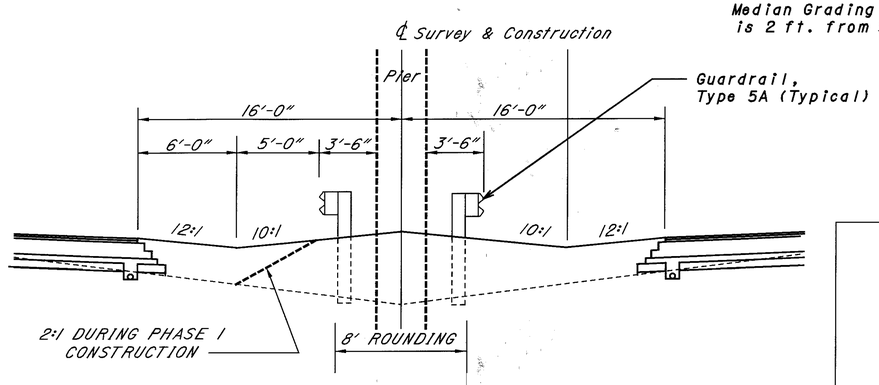

SECTION A-A

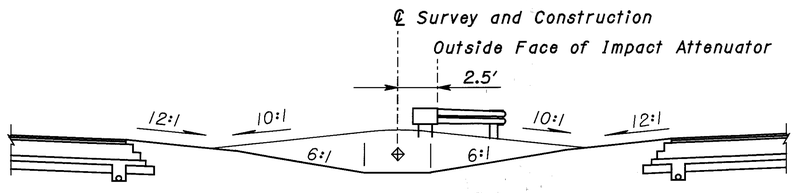

SECTION B-B

⌖ 8 FT rounding

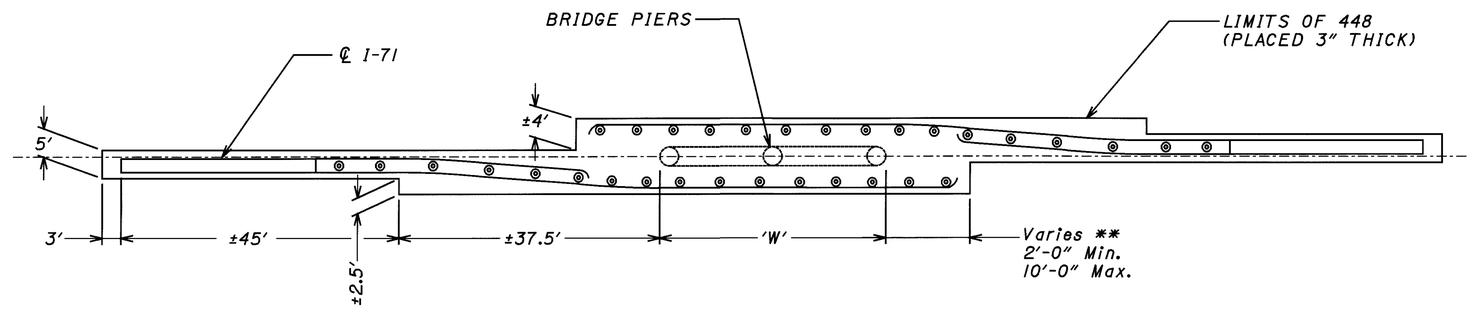

ITEM 448 PLACEMENT DETAILS FOR WEED CONTROL

PIER PROTECTION DETAILS

PLOTTED BY: fkonopka
PLOTTED: FRI, JUL 31, 1998 8:45
PLOT SUBMITTED: 30-JUL-1998 07:02
08459gra.dgn
08459gra.dgn
08459gra.dgn
Bpid08459Bdgn
Bforsberg

MISCELLANEOUS DETAILS

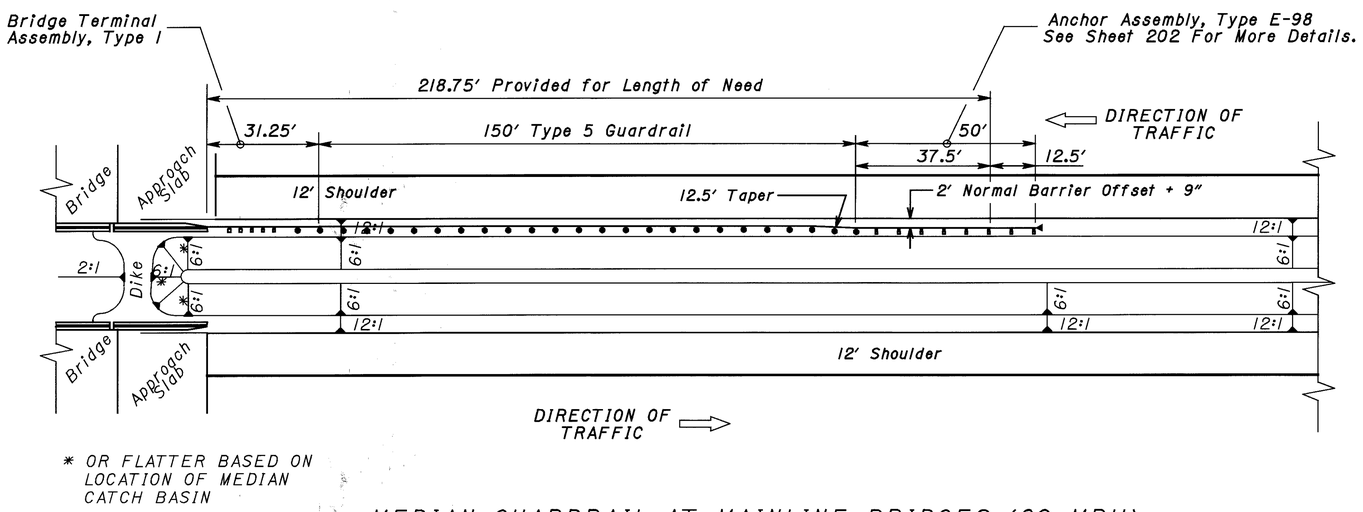

MEDIAN GUARDRAIL AT MAINLINE BRIDGES (60 MPH)

(WITH 14′-9″ G.R. OFFSET)

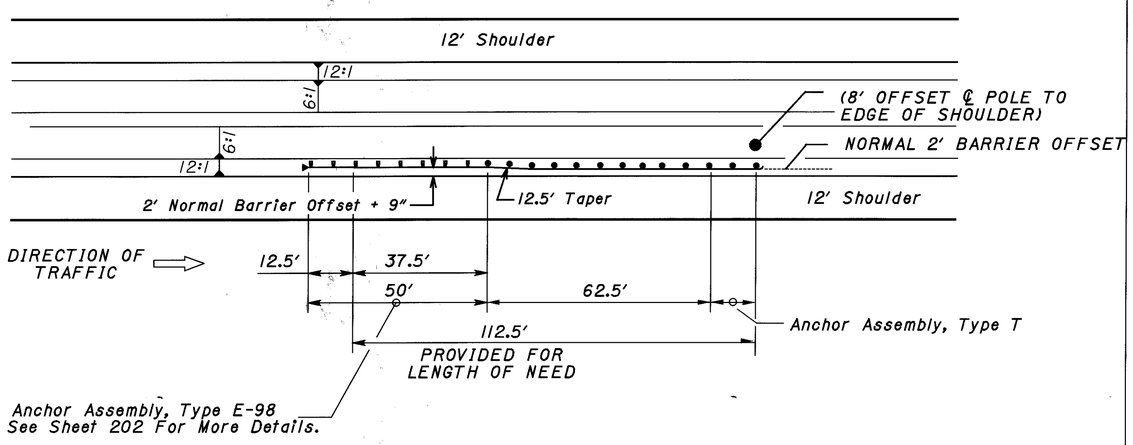

BARRIER PROTECTION DETAIL FOR MEDIAN HAZARDS (60 MPH)

(WITH 14′-9″ G.R. OFFSET)

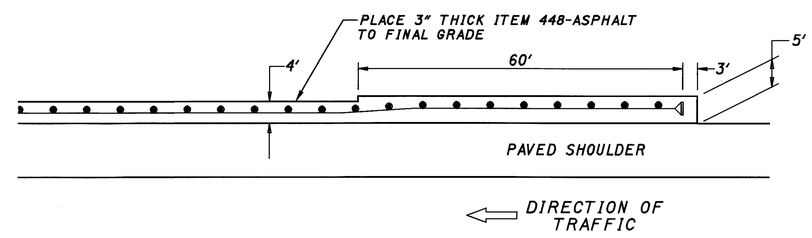

ITEM 448 UNDER GUARDRAIL WITH TYPE E-98 ANCHOR ASSEMBLY

PLOT SUBMITTED:30-JUL-1998 07:03
307MIS2A.DGN
PLOTTED BY: TKonopka
PLOTTED ON: 12/03/94
PLOTTED FROM: 307mis2a.dgn
PLOTTED FROM: Bpid08459B.dgn
PLOTTED FROM: Bforsber
PLOTTED FROM: 307MIS2.DWG; VWB 12/03/94

TYPE E-98 ANCHOR ASSEMBLY DETAILS

NCHRP REPORT 350 COMPLIANCE

ITEM 606, ANCHOR ASSEMBLY, TYPE E-98:

THIS ITEM SHALL CONSIST OF FURNISHING AND INSTALLING EITHER OF THE FOLLOWING GUARDRAIL END TERMINALS.

1) THE ET-2000 (1997) MANUFACTURED BY SYRO, INC., 1170 N. STATE STREET, GIRARD, OHIO 44420 (TELEPHONE:330.545.4373).

THE LENGTH OF THE ET-2000 (1997) SYSTEM IS CONSIDERED TO BE 50 FT, INCLUSIVE OF TWO 25 FT LONG RAIL ELEMENTS. INSTALLATION SHALL BE AT THE LOCATIONS SPECIFIED IN THE PLANS, IN ACCORDANCE WITH THE MANUFACTURER'S SPECIFICATIONS AS DETAILED ON THE FOLLOWING PRE-APPROVED SHOP DRAWINGS:

DWG. #	DRAWING NAME	DWG./REV. DATE	ODOT APPROVAL DATE
SS265M	ET-2000 (1997) PLAN, ELEVATION & SECTIONS	6/20/97	3/6/98

2) THE SKT-350 MANUFACTURED BY ROAD SYSTEMS, INC., 7631 NEW CASTLE DRIVE, FRANKFORT, IL 60423 (TELEPHONE: 815.464.5917).

THE LENGTH OF THE SKT-350 SYSTEM IS CONSIDERED TO BE 50 FT, INCLUSIVE OF FOUR 12.5 FT LONG RAIL ELEMENTS. INSTALLATION SHALL BE AT THE LOCATIONS SPECIFIED IN THE PLANS, IN ACCORDANCE WITH THE MANUFACTURER'S SPECIFICATIONS AS DETAILED ON THE FOLLOWING PRE-APPROVED SHOP DRAWINGS:

DWG. #	DRAWING NAME	DWG./REV. DATE	ODOT APPROVAL DATE
SKT-4M	SEQUENTIAL KINKING TERMINAL (SKT-350) ASSEMBLY WITH 4 FOUNDATION TUBES	12/11/97	3/6/98

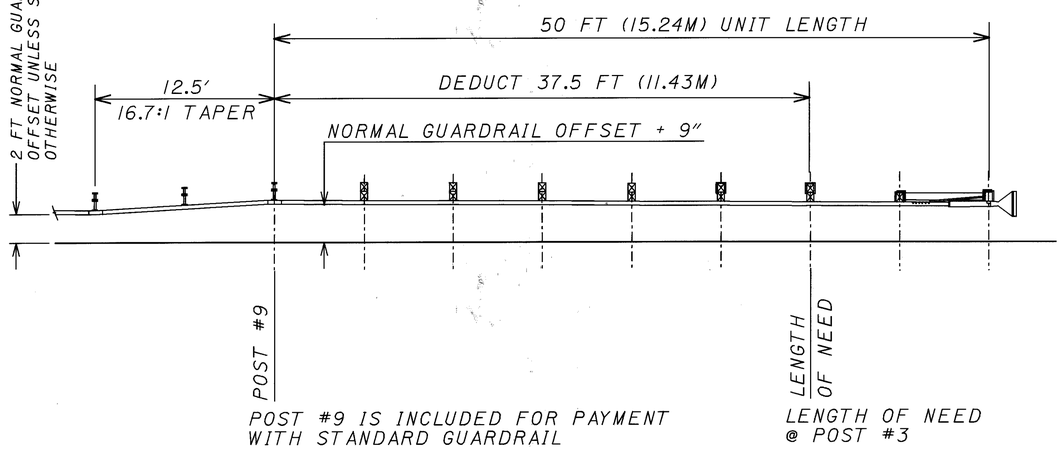

ET-2000

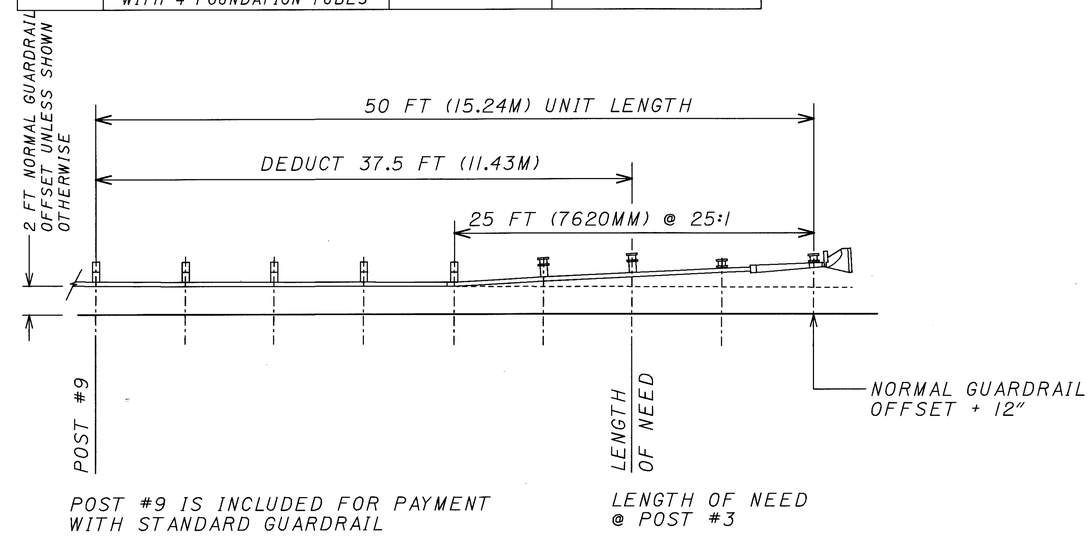

SKT-350

A TYPE C DELINEATOR SHALL BE INSTALLED AT THE HEAD OF ALL TYPE E-98 UNITS LOCATED ON THE RIGHT SIDE OF THE THROUGH ROADWAY. A TYPE D DELINEATOR SHALL BE INSTALLED AT THE HEAD OF ALL TYPE E-98 UNITS LOCATED ON THE LEFT SIDE OF THE THROUGH ROADWAY. DELINEATORS SHALL COMPLY WITH STANDARD TRAFFIC DRAWING TC-61.10M.

PAYMENT FOR THE ABOVE WORK SHALL BE MADE AT THE UNIT PRICE BID FOR ITEM 606, ANCHOR ASSEMBLY, TYPE E-98, EACH, AND SHALL INCLUDE ALL LABOR, TOOLS, EQUIPMENT AND MATERIALS NECESSARY TO CONSTRUCT A COMPLETE AND FUNCTIONAL ANCHOR ASSEMBLY SYSTEM, INCLUDING ALL RELATED TRANSITIONS, DELINEATORS, HARDWARE AND GRADING, NOT SEPARATELY SPECIFIED, AS REQUIRED BY THE MANUFACTURER.

PLOTTED BY: fkonopka
PLOTTED: 4-Mar-98
PLOT SUBMITTED:30-JUL-1998 07:04
08459grc.dgn
B08459grc.dgn
Bpid08459Bdgn
Bforsber

TYPE 1-98 IMPACT ATTENUATOR DETAILS

NCHRP REPORT 350 COMPLIANCE

ITEM 606, IMPACT ATTENUATOR, TYPE 1-98 [(UNIDIRECTIONAL OR BIDIRECTIONAL)]:

THIS ITEM SHALL CONSIST OF FURNISHING AND INSTALLING EITHER OF THE FOLLOWING IMPACT ATTENUATORS:

1) THE C-A-T MANUFACTURED BY SYRO, INC., 1170 N. STATE STREET, GIRARD, OHIO 44420 (TELEPHONE: 330.545.4373). THE LENGTH OF THE C-A-T SYSTEM IS CONSIDERED TO BE 31.25 FT LONG. INSTALLATION SHALL BE AT THE LOCATIONS SPECIFIED IN THE PLANS, IN ACCORDANCE WITH THE MANUFACTURER'S SPECIFICATIONS AS DETAILED ON THE FOLLOWING PRE-APPROVED SHOP DRAWINGS:

DWG. #	DRAWING NAME	DWG./REV. DATE	ODOT APPROVAL
SS245M	CRASH-CUSHION ATTENUATING TERMINAL PLAN, ELEVATION & SECTIONS FOR USE AS A LONGITUDINAL MEDIAN BARRIER TERMINAL OR CRASH CUSHION ATTENUATOR	4/10/97	3/6/98
SS224M	C-A-T TRANSITION TO MEDIAN BARRIER GUARDRAIL PLAN,ELEVATION & SECTIONS	4/26/96	3/6/98
SS226M	C-A-T TRANSITION TO VERTICAL WALL OR PIER PLAN, ELEVATION & SECTIONS	4/26/96	3/6/98

2) THE BRAKEMASTER MANUFACTURED BY ENERGY ABSORPTION SYSTEMS, INC., ONE EAST WACKER DRIVE, CHICAGO, IL 60601 (TELEPHONE: 312.467.6750). THE LENGTH OF THE BRAKEMASTER SYSTEM IS CONSIDERED TO BE 32.67 FT LONG. INSTALLATION SHALL BE AT THE LOCATIONS SPECIFIED IN THE PLANS, IN ACCORDANCE WITH THE MANUFACTURER'S SPECIFICATIONS AS DETAILED ON THE FOLLOWING PRE-APPROVED SHOP DRAWINGS:

DWG. #	DRAWING NAME	DWG./REV. DATE	ODOT APPROVAL
92-00-01	BRAKEMASTER GENERAL ASSEMBLY (UNIDIRECTIONAL SYSTEM)	3/6/97	3/6/98
92-00-81	BRAKEMASTER (UNIDIRECTIONAL) WITH FOUNDATION TUBES	2/9/98	3/6/98
92-00-02	BRAKEMASTER GENERAL ASSEMBLY (BIDIRECTIONAL SYSTEM)	3/10/97	3/6/98
92-00-82	BRAKEMASTER (BIDIRECTIONAL) WITH FOUNDATION TUBES	2/9/98	3/6/98
9202024-0000	ANCHOR ASSEMBLY, FOUNDATION TUBE, 6½FT, BRS	6/12/97	3/6/98

PAYMENT FOR THE ABOVE WORK SHALL BE MADE AT THE UNIT PRICE BID FOR ITEM 606, IMPACT ATTENUATOR, TYPE 1-98 (UNIDIRECTIONAL OR BIDIRECTIONAL), EACH, AND SHALL INCLUDE ALL LABOR, TOOLS, EQUIPMENT AND MATERIALS NECESSARY TO CONSTRUCT A COMPLETE AND FUNCTIONAL ANCHOR ASSEMBLY SYSTEM, INCLUDING ALL RELATED TRANSITIONS, HARDWARE AND GRADING, NOT SEPARATELY SPECIFIED, AS REQUIRED BY THE MANUFACTURER.

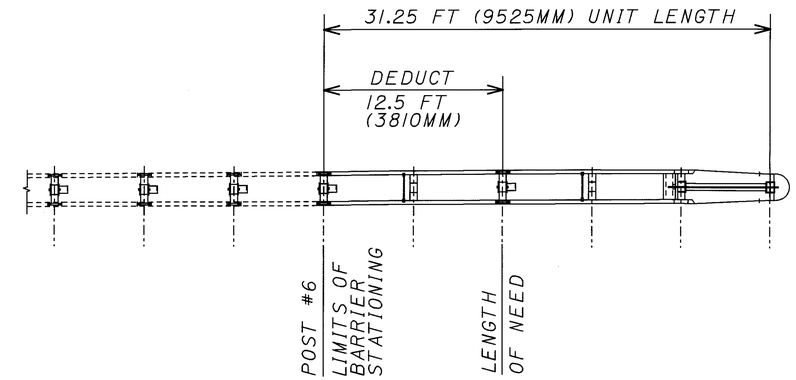

C-A-T

THE STATIONING LIMIT SHOWN IN THE PLANS FOR EACH GUARDRAIL RUN IS CALCULATED AT POST #6.

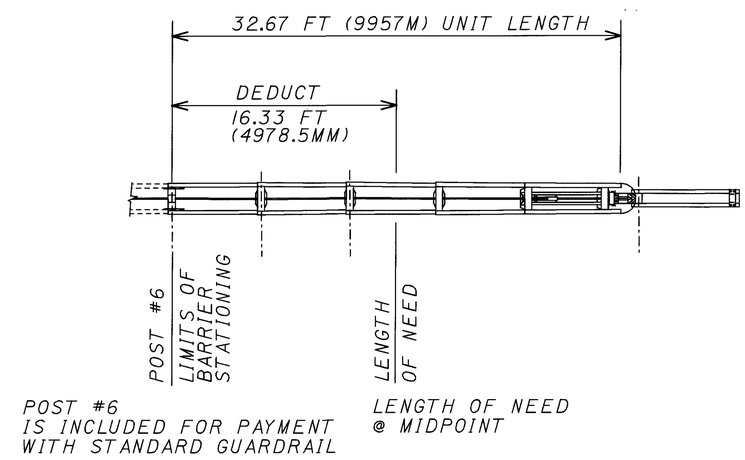

BRAKEMASTER

PLOTTED BY: fkonopka
PLOTTED: 30-JUL-1998 07:05
PLOT SUBMITTED:30-JUL-1998 07:05
08459grc.dgn

MEDIAN CROSSOVER DETAIL

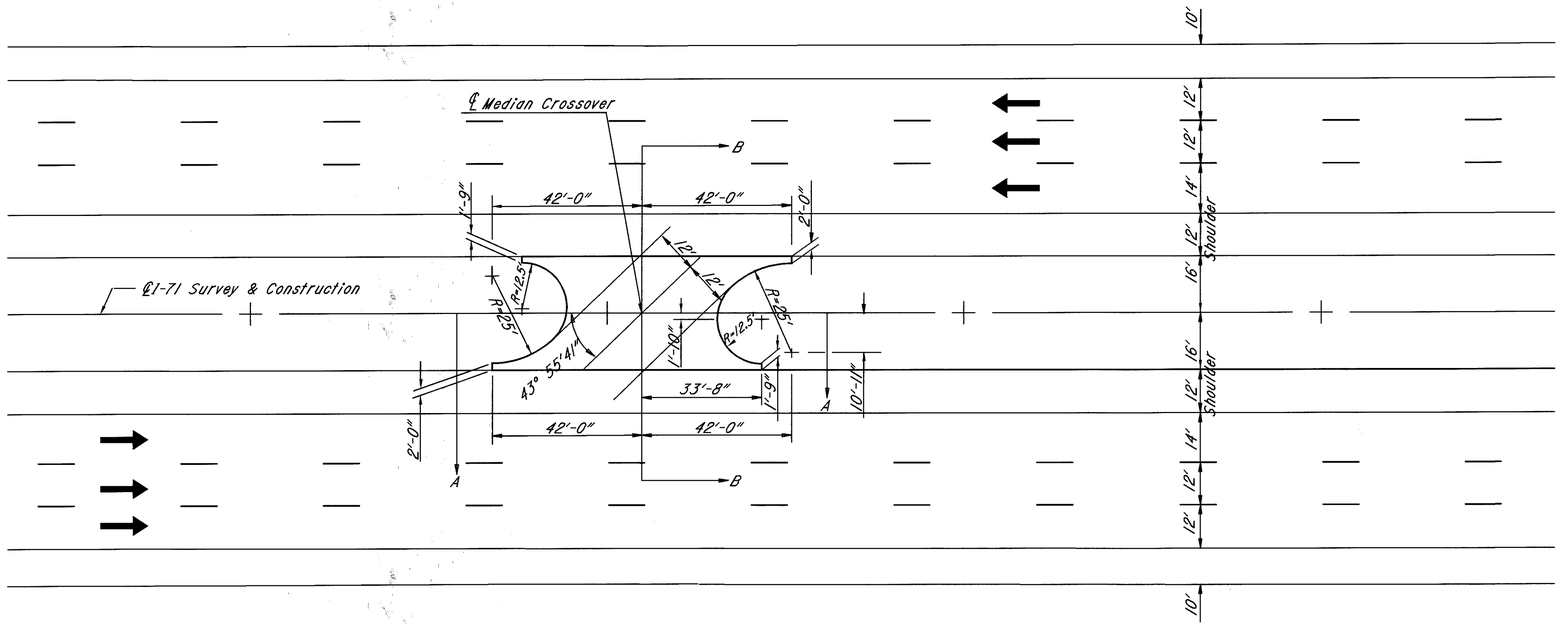

PLAN
Scale 1"=20

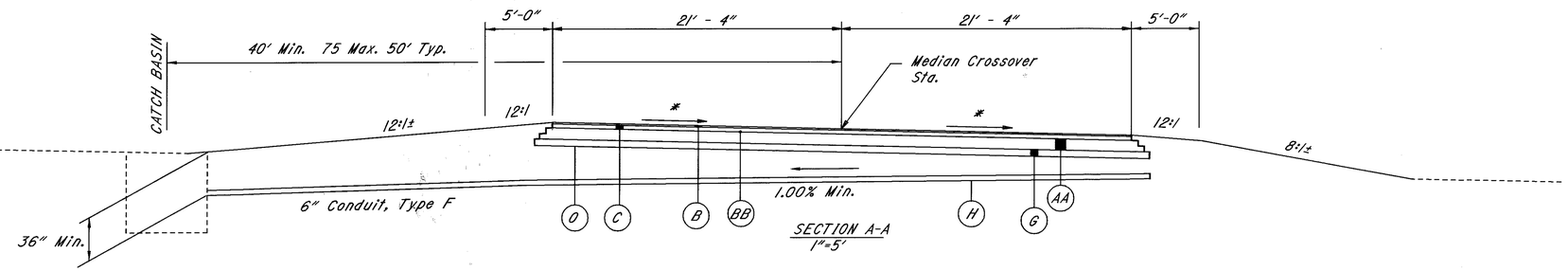

SECTION A-A
1"=5'

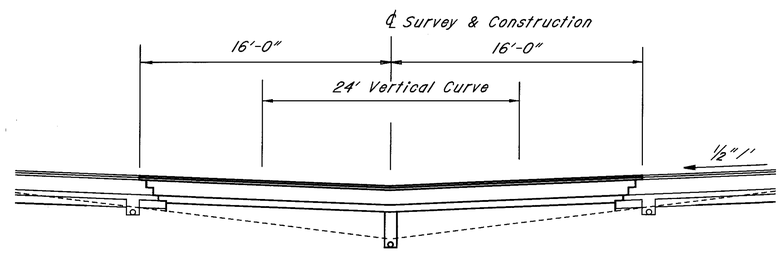

TYPICAL MEDIAN CROSSOVER

EXTRA QUANTITIES

MEDIAN CROSSOVER STATION	203 SUBGRADE COMPACTION	302 BITUMINOUS AGGREGATE BASE	304 AGGREGATE BASE, AS PER PLAN	407 TACK COAT FOR INTER. COURSE	446 ASPHALT CONCRETE SURFACE COURSE TYPE 1H, AS PER PLAN	446 ASP. CONC. SURFACE COURSE, TYPE 1H, AS PER PLAN	603 6" CONDUIT, TYPE F	605 6" UNCLASSIFIED PIPE UNDERDRAIN	
	SY	CY	SY	GAL	CY	CY	L.F.	L.F.	
480+72	188	59	31	85	9	8	49	46	
582+50	188	59	31	85	9	8	27	46	
654+00	188	59	31	85	9	8	27	46	
743+50	188	59	31	85	9	8	27	46	
SHEET TOTAL	752	236	124	340	36	32	130	184	

PROPOSED

- (B) Item 446 - 1 1/2" Asphalt Concrete Surface Course, Type 1, PG 67-28, APP
- (C) Item 446 - 1 3/4" Asphalt Concrete Intermediate Course, Type 2, PG 64-28
- (BB) Item 407 - Tack Coat For Intermediate Course (0.05 Gal./S.Y.)
- (AA) Item 302 - 11 1/4" Bituminous Aggregate Base
- (G) Item 304 - 6" Aggregate Base
- (H) Item 605 - 6" Unclassified Pipe Underdrain
- (O) Item 203 - Subgrade Compaction

* The Cross Slope On The Median Crossover Is The Same As The Longitudinal Slope of I-71.

PLOTTED BY: fkonopka
PLOTTED: 07-AUG-1998 09:25
PLOT SUBMITTED:07-AUG-1998 09:25
307C002.DGN
Bpid08459Bdgn307co02.dgn

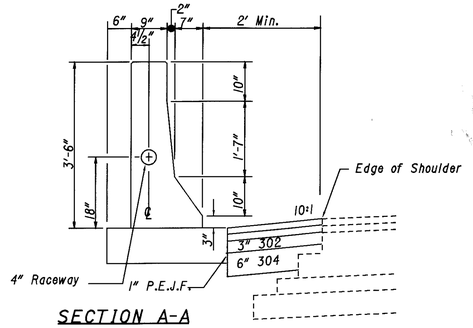

SECTION A-A
Extended Concrete Parapet
(Beginning of Approach Slab)

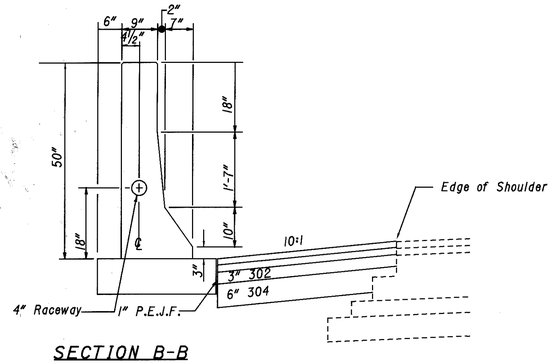

SECTION B-B
Formed Concrete Parapet

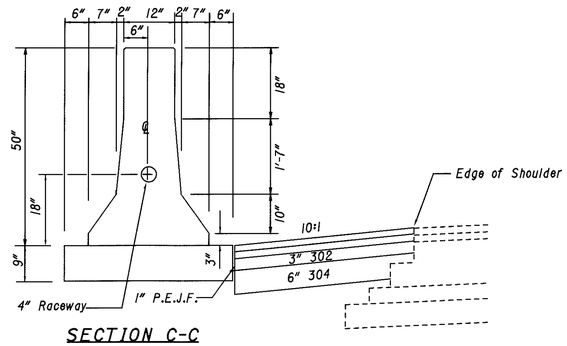

SECTION C-C
Type B-50 Concrete Barrier

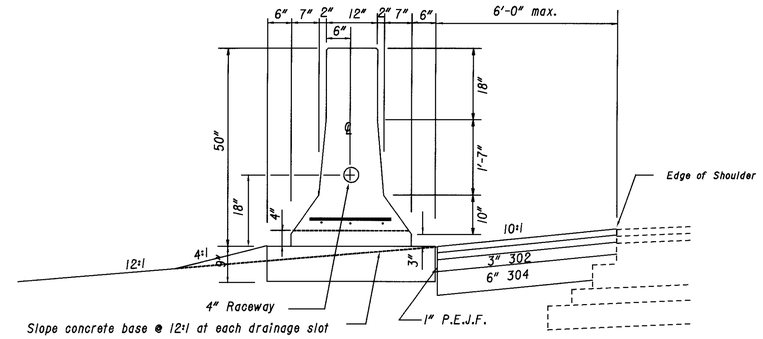

SECTION D-D
Type B-50 Concrete Barrier
with Drainage Slot

Drainage slots shall be placed at the following locations: Sta 781+75 and Sta. 782+55.

Item 622 - Concrete Barrier, Type B50, As Per Plan

This item shall include all transitions and drainage slots as detailed herein.
At each drainage slot there shall be of three 2 ft. openings spaced 2 ft apart.
Reinforcing shall consist of 3 No. 4 bars 14 ft. long and 10 No. 4 bars 18" long at 18" c/c.

EXTRA QUANTITIES

	302	304	407		446	446
MEDIAN PAVING STATION 781+13 to 781+89	BITUMINOUS AGGREGATE BASE	AGGREGATE BASE, AS PER PLAN	TACK COAT FOR INTER. COURSE		ASPHALT CONCRETE INTERMEDIATE COURSE TYPE 2, PG 64-28	ASP. CONC. SURFACE COURSE, TYPE 1H, AS PER PLAN
	CY	CY	GAL		CY	CY
SHEET TOTAL	3	5	14		2	1

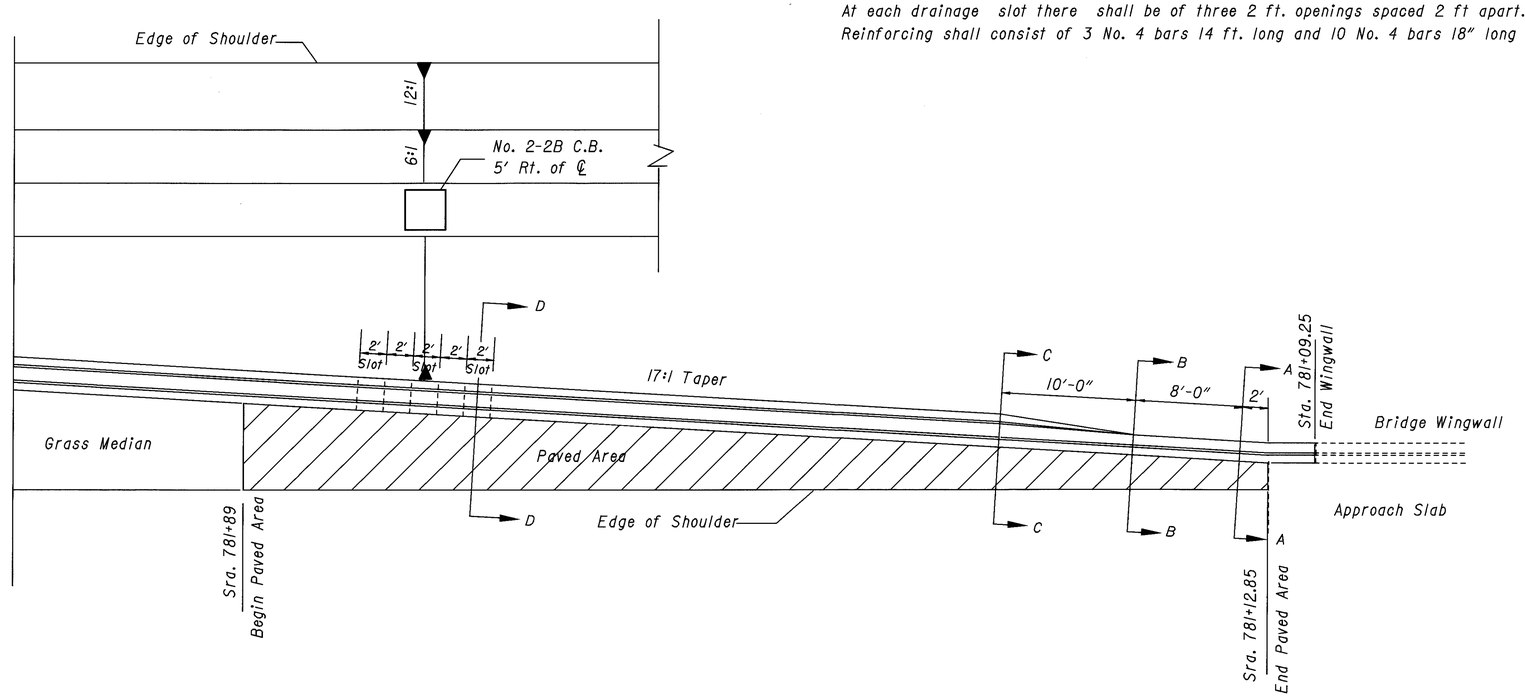

PLOTTED BY: fkonopka
PLOTTED: 30-JUL-1998 07:08
PLOT SUBMITTED:30-JUL-1998 07:08
307-det2.dgn
307-det2.dgn
307-det2.dgn

APPROACH SLAB - PART WIDTH CONSTRUCTION

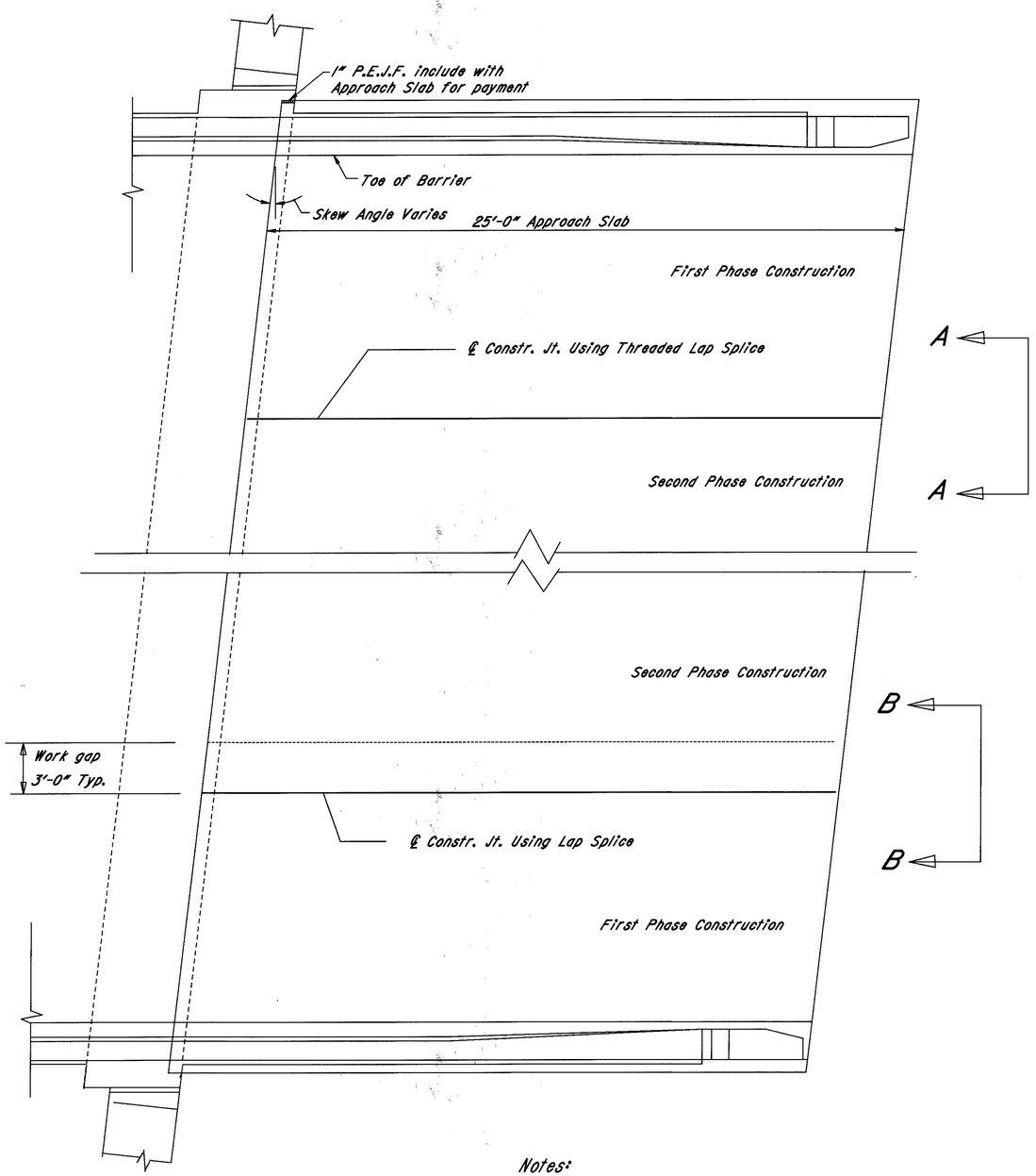

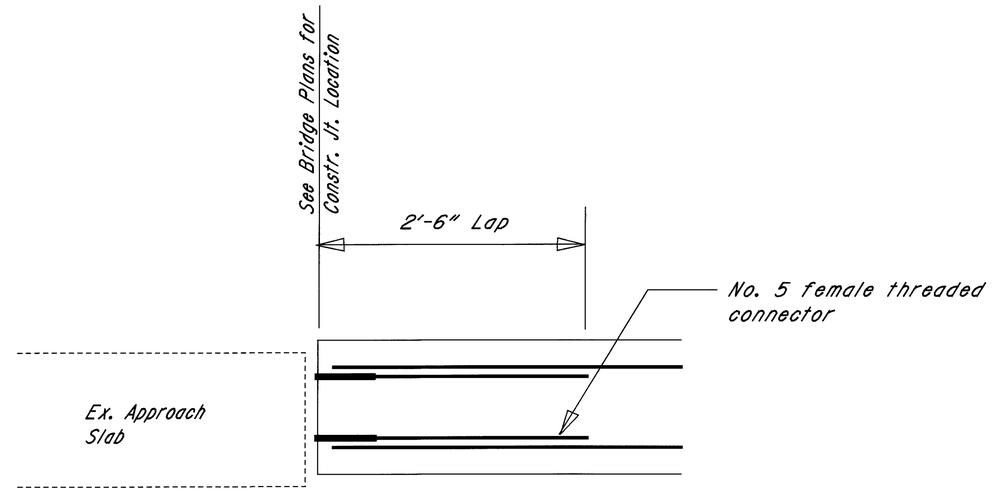

Section A-A

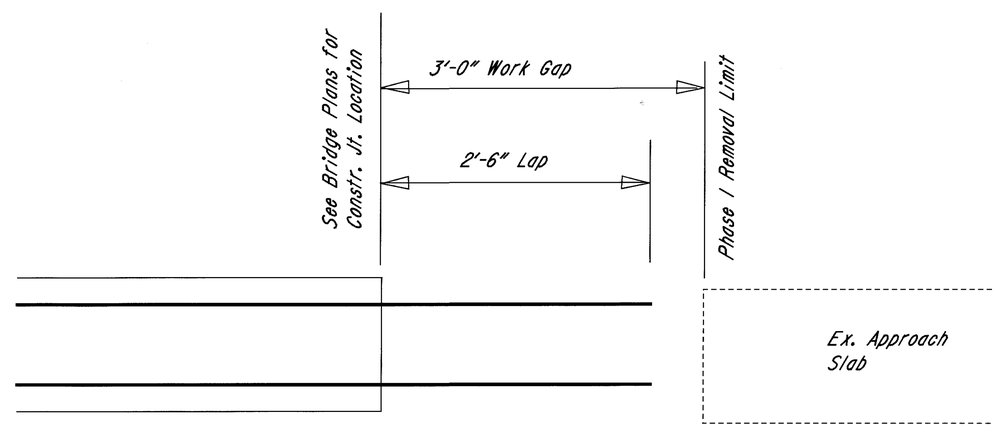

Section B-B

Notes:

For approach slab notes and details see Ohio Standard drawing AS-1-81, Sheets 1 and 2 of 3.

Item 611 - Reinforced Concrete Approach Slab, As Per Plan

This item shall also include all additional costs of part width construction, lap splices and threaded lap splices as shown.

PLOTTED BY: fkonopka
PLOTTED: PLOT SUBMITTED:30-JUL-1998 07:09
307co03.dgn
307co03.dgn

ITEM 622 - CONCRETE BARRIER, TYPE D, AS PER PLAN B
(Barrier Located on Approach Slabs)

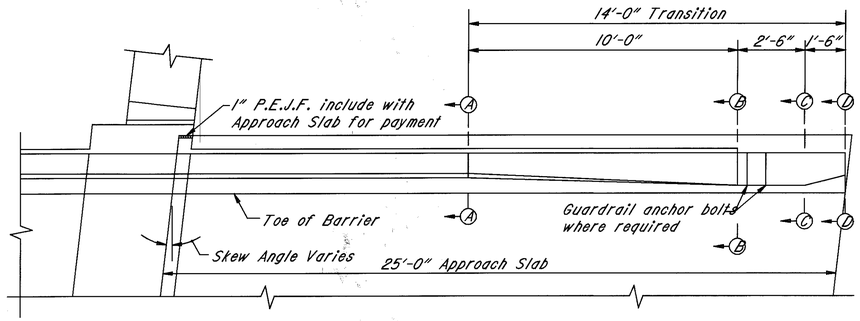

PARTIAL PLAN - BARRIER WITH TRANSITION

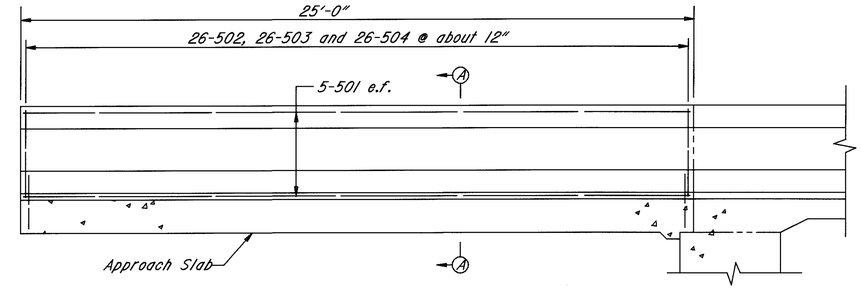

ELEVATION - BARRIER WITHOUT TRANSITION
(MEDIAN TRAILING ENDS WITHOUT GUARDRAIL ONLY)

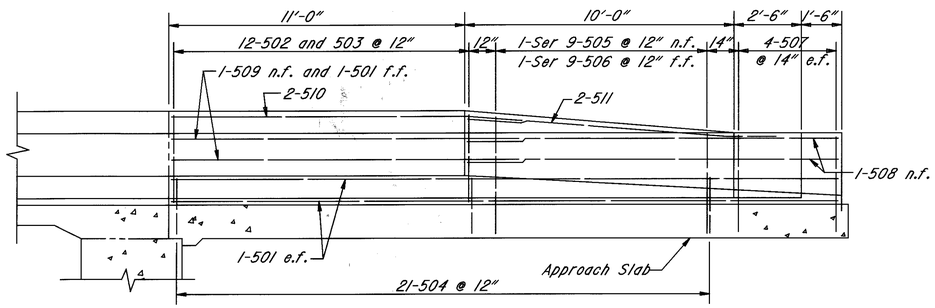

ELEVATION - BARRIER WITH TRANSITION

CONCRETE BARRIER REINFORCING STEEL

REINFORCING SCHEDULE

MARK	NO.	LENGTH	TYPE	SER. INCR.
Barrier with Transition				
501	6	24'-8"	Str.	
502	12	6'-11"	65	
503	12	2'-8"	5	
504	21	3'-5"	43	
505	1 Ser 9	3'-0" to 3'-8"	2	1"
506	1 Ser 9	4'-4" to 5'-0"	5	1"
507	8	4'-3"	5	
508	2	13'-8"	64	
509	2	13'-0"	Str.	
510	2	13'-0"	9	
511	2	12'-2"	9	
Barrier without Transition				
501	10	24'-8"	Str.	
502	26	6'-11"	65	
503	26	2'-8"	5	
504	26	3'-5"	43	

BENDING DIAGRAMS

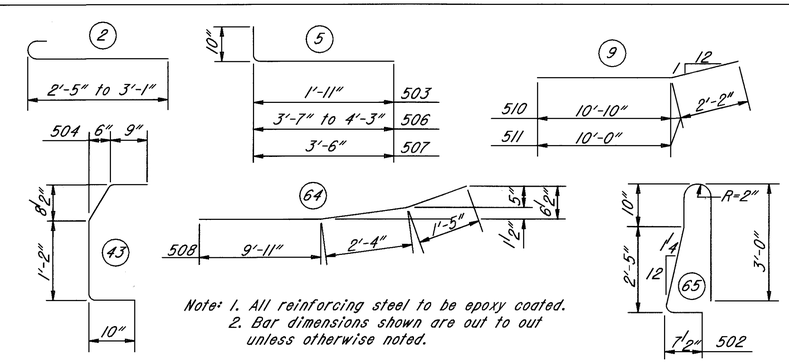

Note: 1. All reinforcing steel to be epoxy coated.
2. Bar dimensions shown are out to out unless otherwise noted.

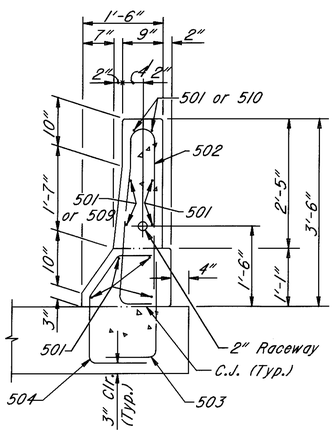

SECTION A-A

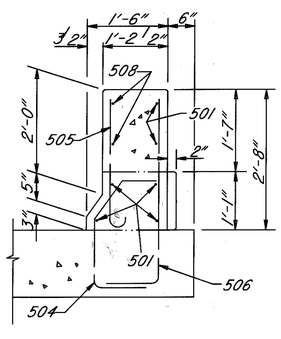

SECTION B-B

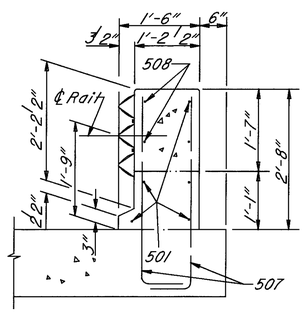

SECTION C-C

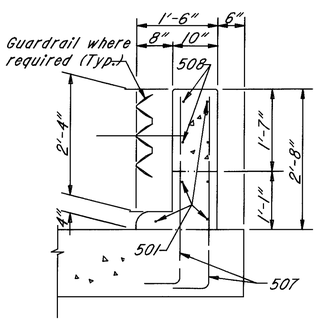

SECTION D-D

Notes:

Quantities of concrete and reinforcing steel for concrete barriers on approach slabs are included for payment in the linear foot cost of ITEM 622 - CONCRETE BARRIER, TYPE D, AS PER PLAN B

For guardrail anchor details see Ohio Standard Construction Drawing GR-3.1M, and GR-3.2M.

For approach slab notes and details see Ohio Standard drawing AS-1-81, Sheets 1 and 2 of 3.

The following abbreviations are used:
e.f. = each face Typ. = Typical
n.f. = near face f.f. = far face
Clr. = Clearance

EUTHENICS INC. CONSULTING ENGINEERS CLEVELAND, OHIO

DESIGNED FH	CHECKED KRD	DRAWN FH
DATE 5-24-94	DATE 5-26-94	SCALE AS NOTED

PLOT SUBMITTED:30-JUL-1998 07:10
307DET02.DGN
PLOTTED BY: fKonopka
PLOTTED: 4-Aug-98 07:10
PLOT SCALE: 1:1
PLOT DRIVER: pltsbrer.pltdr08459 pltdgn:B307det02.dgn

PLOT SUBMITTED: 30-JUL-1998 12:55
PLOTTED FROM: i:\users\eforsber\pid08459\dgn\307dt03.dgn
307DT03.DGN

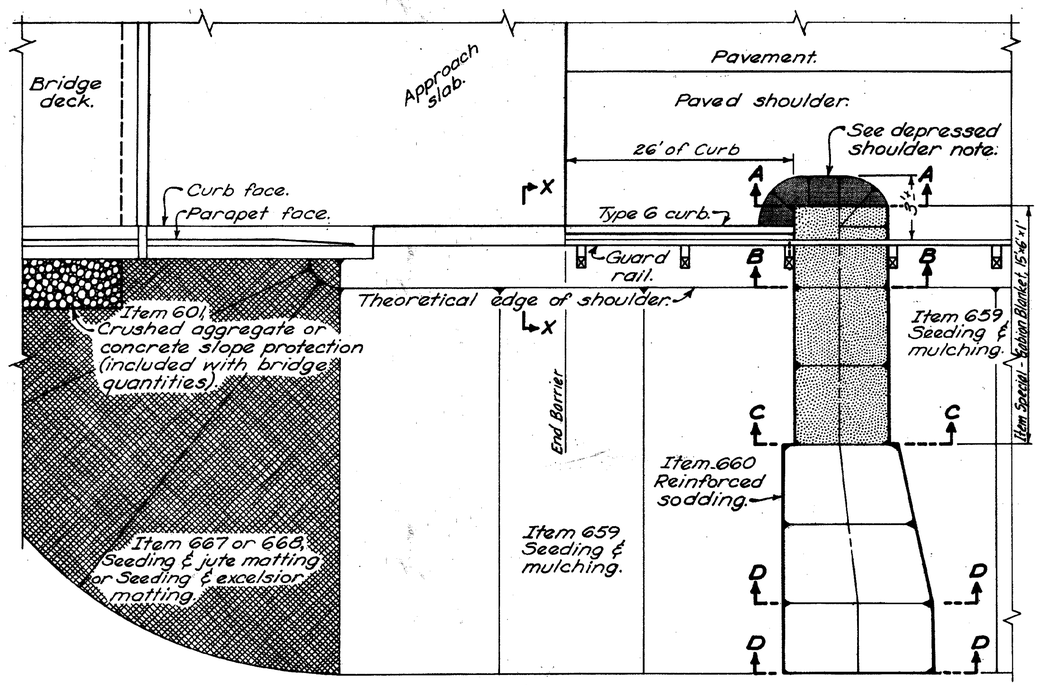

PLAN

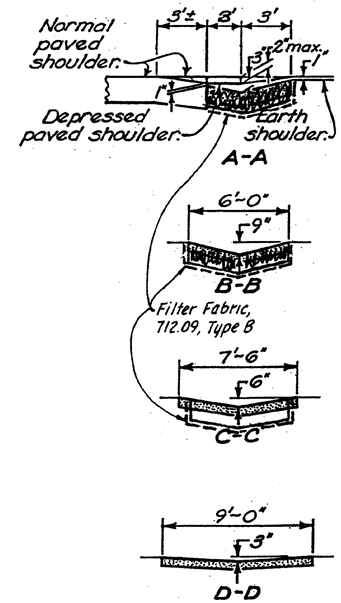

CROSS SECTIONS

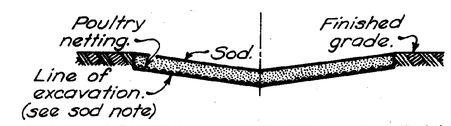

SOD INSTALLATION DETAIL

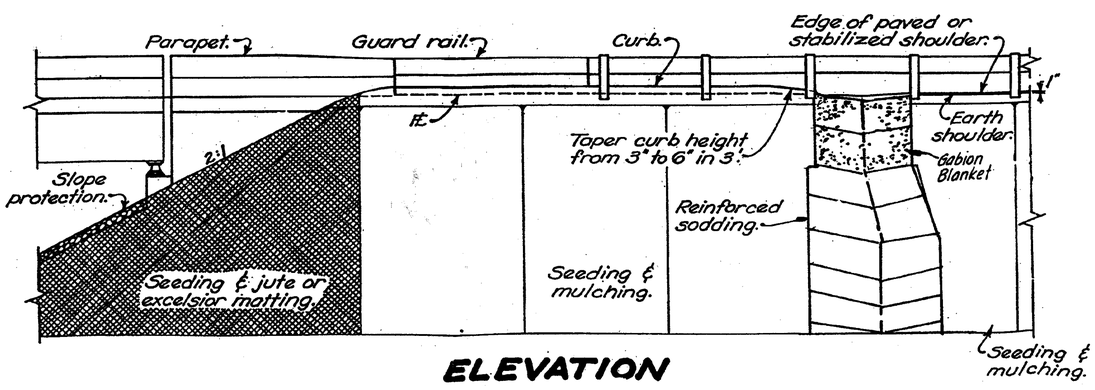

ELEVATION

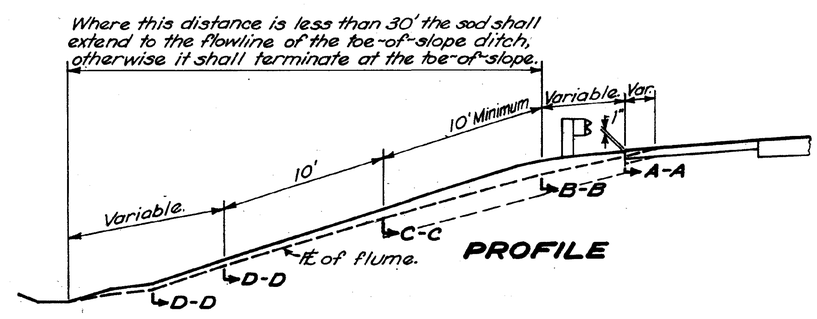

PROFILE

NOTES

DEPRESSED SHOULDER: This portion of the shoulder shall be depressed to assure positive drainage into the Gabion Flume. Especially in the shoulder area it is important to excavate and shape the subgrade according to the cross sections.

PLACING REINFORCED SODDING: Prior to the placement of sod, galvanized poultry netting shall be placed on the finished subgrade. The netting shall be 4 foot wide poultry fence or equivalent, with 2 inch mesh and No. 20 gauge minimum wire. Each strand shall be staked securely to the subgrade by using 1"x1"x8" wood stakes or T-shaped pins of the size stated in 660.06. The stakes or pins shall be placed at 4 foot intervals on the top and bottom and in rows 4 feet apart. The fence shall be fastened to the wood stakes with metal staples. Where the sodding is from 8 feet to 9 feet wide, two strands of netting for a total width of 8 feet is permitted.

SOD: Sod shall be laid in accordance with 660. Special care shall be taken to excavate the sod bed to a proper depth so that the sod is flush with the surrounding grade.

PAYMENT: Payment for all the above shall be included in the unit price bid for Item 660, Square Yard, Reinforced sodding.

GABION BLANKET

Item Special - Gabions, with additional coating, shall be installed in accordance with this detail and on Sheet 16.

PLACING FILTER FABRIC

Filter Fabric, 712.09 Type B shall be placed in accordance with the second paragraph of 601.08. In addition, securing pins as provided in 601.08 shall be placed to coincide with the gabion blanket wire basket. In such a manner so as to prevent downward migration of the wire basket lower surface.

All costs of furnishing and installing filter fabric shall be included in Item Special - Gabions, with additional coating.

CUY-71-0.00	OHIO	209
	FHWA REGION 5	361
	FEDERAL PROJECT	

JUNCTION CHAMBER AS PER PLAN, TYPE I

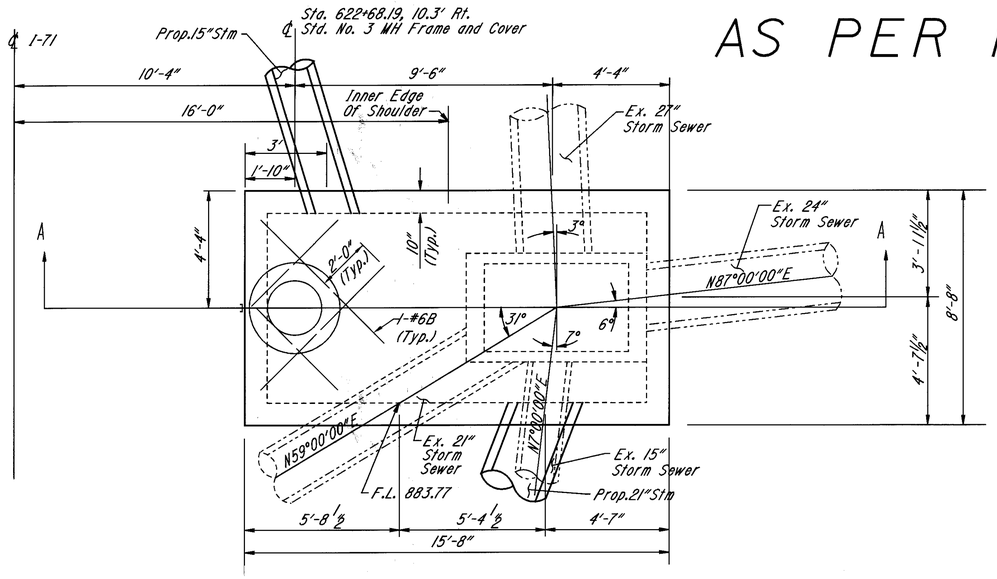

PLAN VIEW

Existing To Be Removed.
Existing To Remain.
Proposed.

Note:
1. See Std. Drawing MH-3 for Additional Details
2. 2" Minimum Concrete Cover, except as noted.
3. Constuction Joints are permissible at any location.
4. This structure maybe cast-in-place, precast or a combination of both.
5. All Junction Chamber boxes shall be constructed in accordance with the requirements of O.D.O.T. CMS Item 706.05.
6. Cut reinforcement as required at openings.
7. Bid price shall include the replacement of any connecting sewer damaged during the removal and installation of the chamber. The new pipe shall match the material type of the existing pipe and the requirements of Item 603.

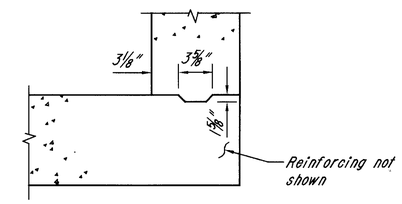

CONSTRUCTION JOINT DETAIL

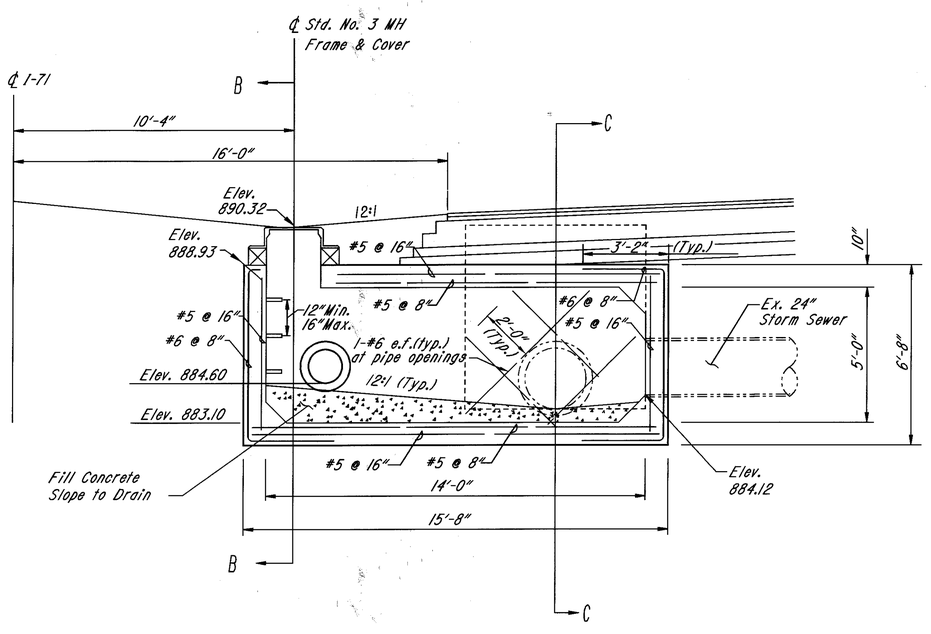

SECTION A-A

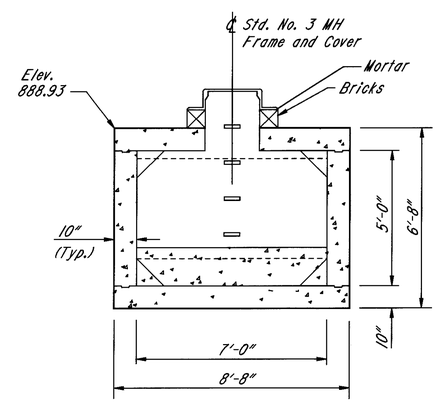

Note: For reinforcement see Section C-C

SECTION B-B

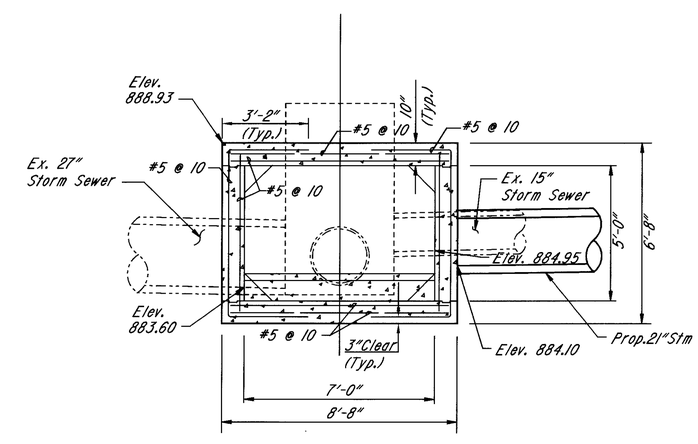

SECTION C-C

EUTHENICS INC. CONSULTING ENGINEERS CLEVELAND, OHIO		
DESIGNED: TB	CHECKED: RSW	DRAWN: TB
DATE: 11-94	DATE: 12-12-94	SCALE: ¼" = 1'-0"

DRAINAGE DETAILS

307jc01.dgn

CUY-71-0.00	OHIO
	FHWA REGION 5
	FEDERAL PROJECT

210
361

JUNCTION CHAMBER
AS PER PLAN, TYPE 2

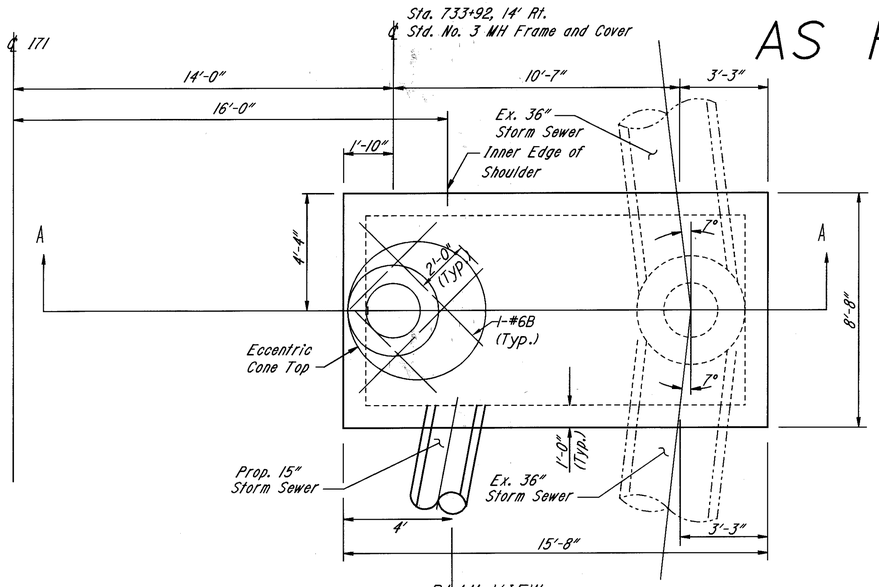

PLAN VIEW

- Existing To Be Removed.
- Existing To Remain.
- Proposed.

Note:
1. See Std. Drawing MH-3 for Additional Details
2. 2" Minimum Concrete Cover, except as noted.
3. Constuction Joints are permissible at any location.
4. This structure maybe cast-in-place, precast or a combination of both.
5. All Junction Chamber boxes shall be constructed in accordance with the requirements of O.D.O.T. CMS Item 706.05.
6. Cut reinforcement as required at openings.

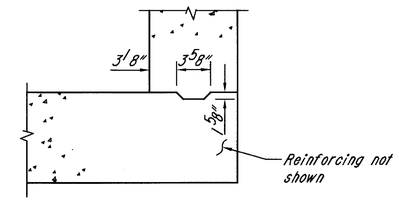

CONSTRUCTION JOINT DETAIL

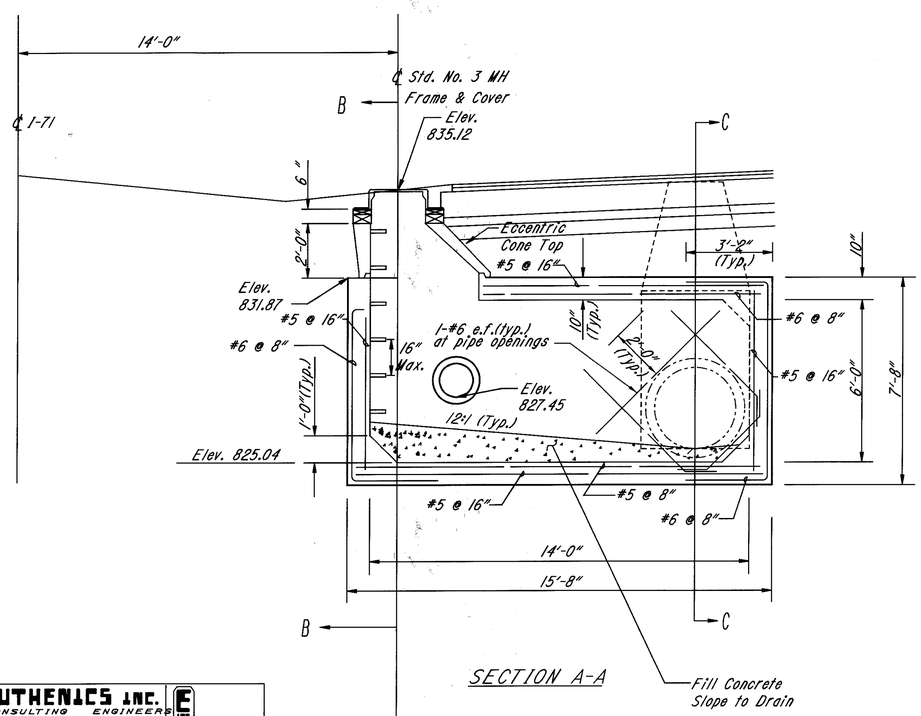

SECTION A-A

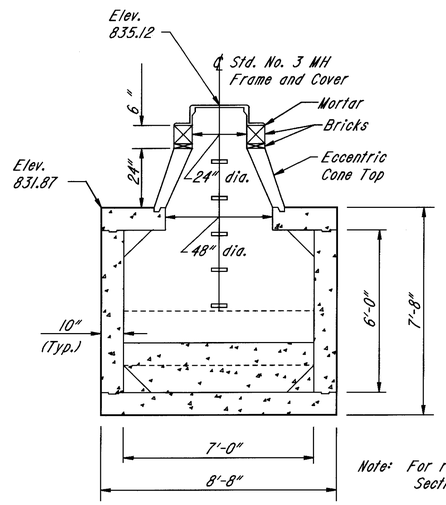

Note: For reinforcing see Section C-C

SECTION B-B

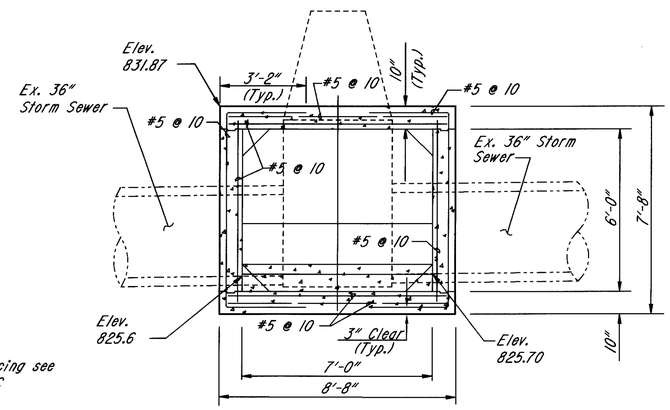

SECTION C-C

EUTHENICS INC. CONSULTING ENGINEERS CLEVELAND, OHIO		
DESIGNED: DTB	CHECKED: RSW	DRAWN: DTB
DATE: 11-94	DATE: 12-12-94	SCALE: ⅛" = 1'-0"

3071c02.dgn

DRAINAGE DETAILS

MISCELLANEOUS DETAILS

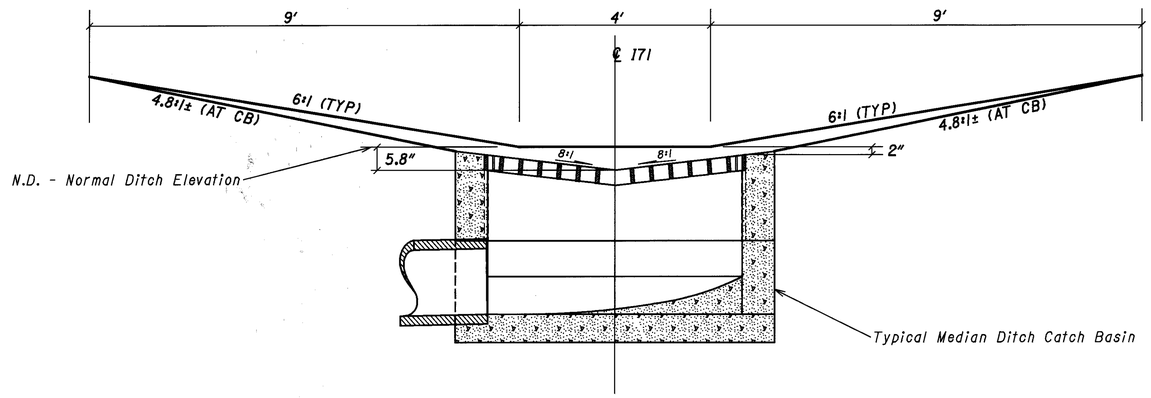

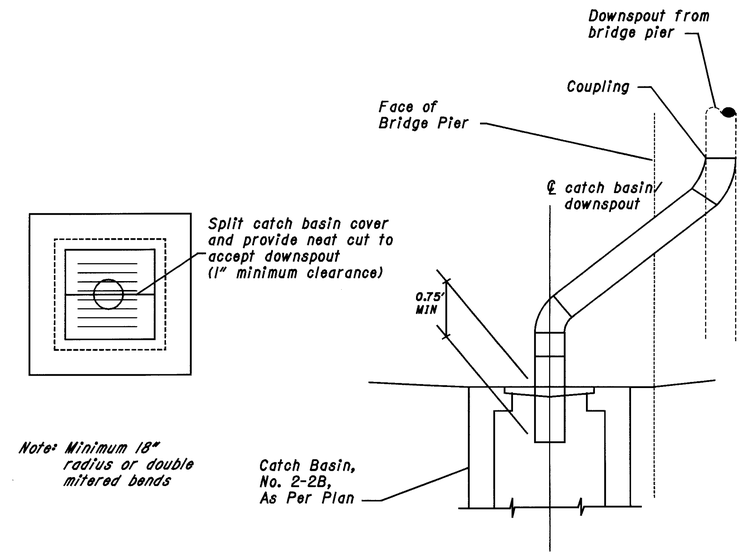

CATCH BASIN AT OVERHEAD BRIDGE

Item 604 - Catch Basin, No. 2-2B, As Per Plan

The unit bid price for this item shall include all of the modifications necessary to tie the existing downspouts into the proposed catch basin, as detailed above. The proposed downspout material shall match the material type of the existing downspout. This item shall also include any additional hardware necessary to securely attach the proposed downspout to the existing downspout. The connection method shall be approved by the project engineer prior to beginning work.

Note: This detail shall be used for No. 4, No.5 and No. 8 Catch Basins, as per plan. For details not shown see Std. Dwg. CB-4, CB-5, & CB-8.

For details not shown for concrete apron, see standard drawing for appropriate C.B.

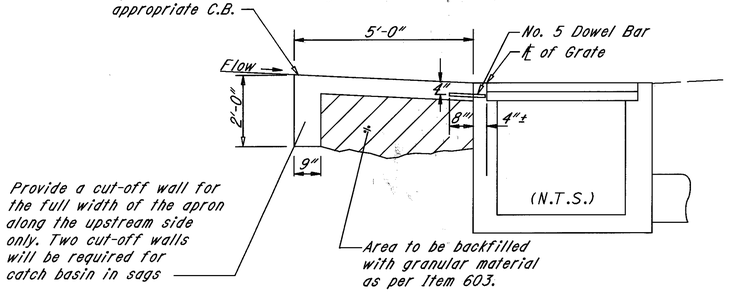

The requirements of Item 604 shall govern the replacement of the existing Catch Basin. The work shall include the removal and disposal of the existing Catch Basin and its subsequent replacement. The concrete apron shall be replaced and backfilled as shown here and in the pertinent standard drawing.

The unit price for each catch basin shall include the replacement of any connecting sewer pipes damaged during the removal or installation of the basin. The new pipe shall match the material type of the existing pipe and shall meet the requirements of Item 603.

Payment for the above work shall be included in the unit bid price for Item 604 Catch Basin, No. 4, 5, or 8, as per plan, and shall constitute full compensation for furnishing all material, labor, tools, and equipment incidental to complete this item of work.

BAR LOCATION DETAIL
CATCH BASIN NO. 4, 5, & 8, AS PER PLAN

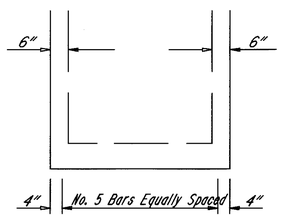

The number of bars needed along each side of a No. 4 Catch Basin with a concrete apron is 7. For a No. 5 & 8 Catch Basin the number of bars needed along each side with a concrete apron is 4.

CATCH BASIN NO.	TOTAL # OF BARS FOR A STD. APRON	TOTAL # OF BARS FOR A SAG APRON
4	7	14
5	12	16
8	12	16

The furnishing and placing of steel for the 5/8" x 12" dowel bars shall be per 509 reinforcing steel. The dowel bars shall be epoxy coated per 509.10. The dowel bars shall be installed per 510 or cast into the basin. Bolt or inserts may be used. The catch basin shall be precast or cast-in-place concrete, brick or concrete block will not be permitted. The 6" concrete apron shall be reinforced per 601.04(3).

CATCH BASIN NO. 4, 5 & 8 AS PER PLAN

PLOT SUBMITTED:05-AUG-1998 12:36
307MISC2.DGN
PLOTTED BY: fkonopka
PLOTTED: 08-AUG-1998 12:36
PLOT SCALE: 1:1
PLOT SEED FILE: 307misc2.dgn
PLOT SEED FILE: 307misc2.dgn
PLOT SEED FILE: pid08459
PLOT SEED FILE: 307misc2.DWG VNB 12/03/94

CALC. BY	MGB	CUY-71-0.00	OHIO	211A / 361
DATE	7-13-93		FHWA REGION 5	
CHK'D BY	PDH			
DATE	7-14-93			

℄ DRIVE
PT STA 13+81.03, 55' RT.
PRC STA 13+55.51, 48' RT.
PC STA 13+30.00, 41' RT.

PT STA 11+15.00, 41' RT.
PRC STA 10+89.49, 48' RT.
PC STA 10+63.97, 55' RT.

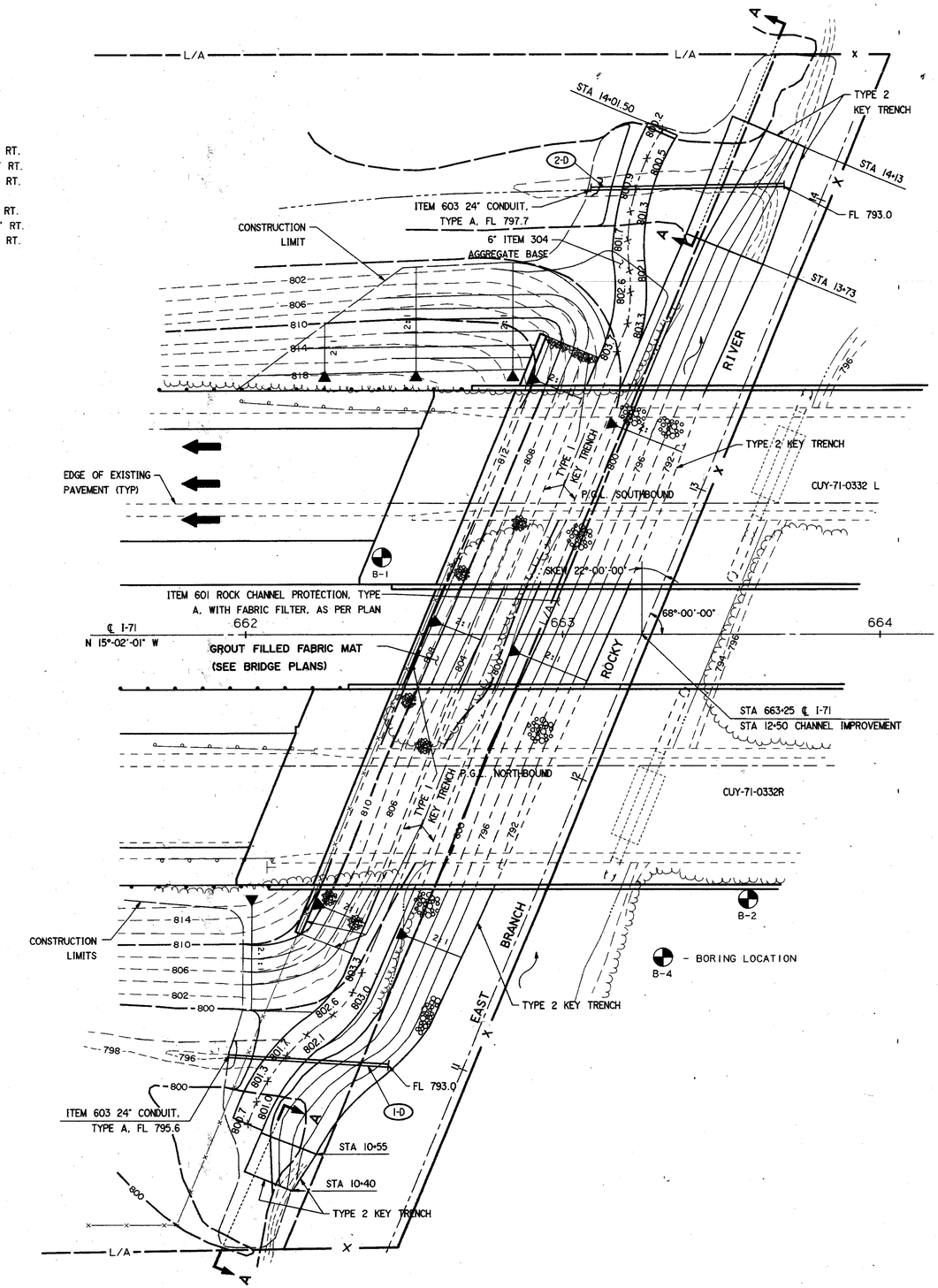

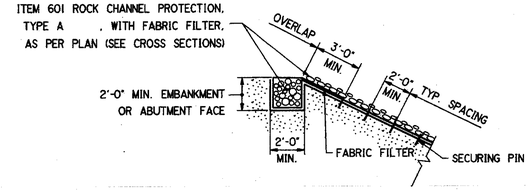

TYPE 1

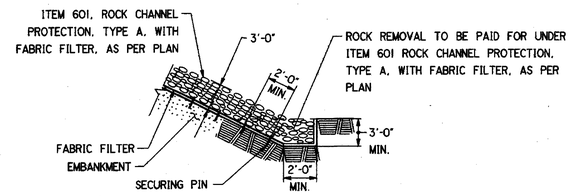

TYPE 2

TYPICAL KEY TRENCH DETAILS

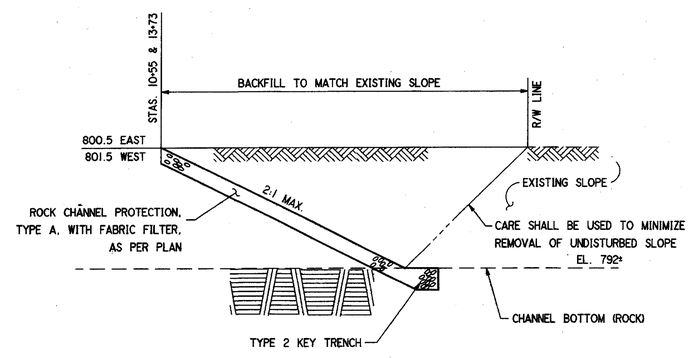

VIEW A-A
END CONDITION DETAIL

ESTIMATED QUANTITIES

REF. NO.	STATION TO STATION	SIDE	602 CONCRETE MASONRY (CU. YD.)	603 24" CONDUIT TYPE A (LIN. FT.)						
1-D	661+95.00 TO 662+45.00		0.92	50						
2-D	663+09.00 TO 663+69.00		0.92	60						
TOTALS			1.84	110						

CHANNEL PLAN

PLOTTED BY: fkonopka
PLOTTED ON: Wed Jul 30, 1998 07:46
PLOTTED FROM: c:\projects\cuy\cuy0332\307cp01.dgn
PLOTTED FROM: c:\projects\cuy\cuy0332\307cp01.dgn
PLOTTED BY: fkonopka
PLOTTED ON: Wed Jul 30, 1998 07:46
PLOT SUBMITTED:30-JUL-1998 07:46
307CP01.DGN

CALC. BY MGB DATE 7-9-93
CHK'D BY PDH DATE 7-14-93

CUY-71-0.00

OHIO FHWA REGION

211B / 361

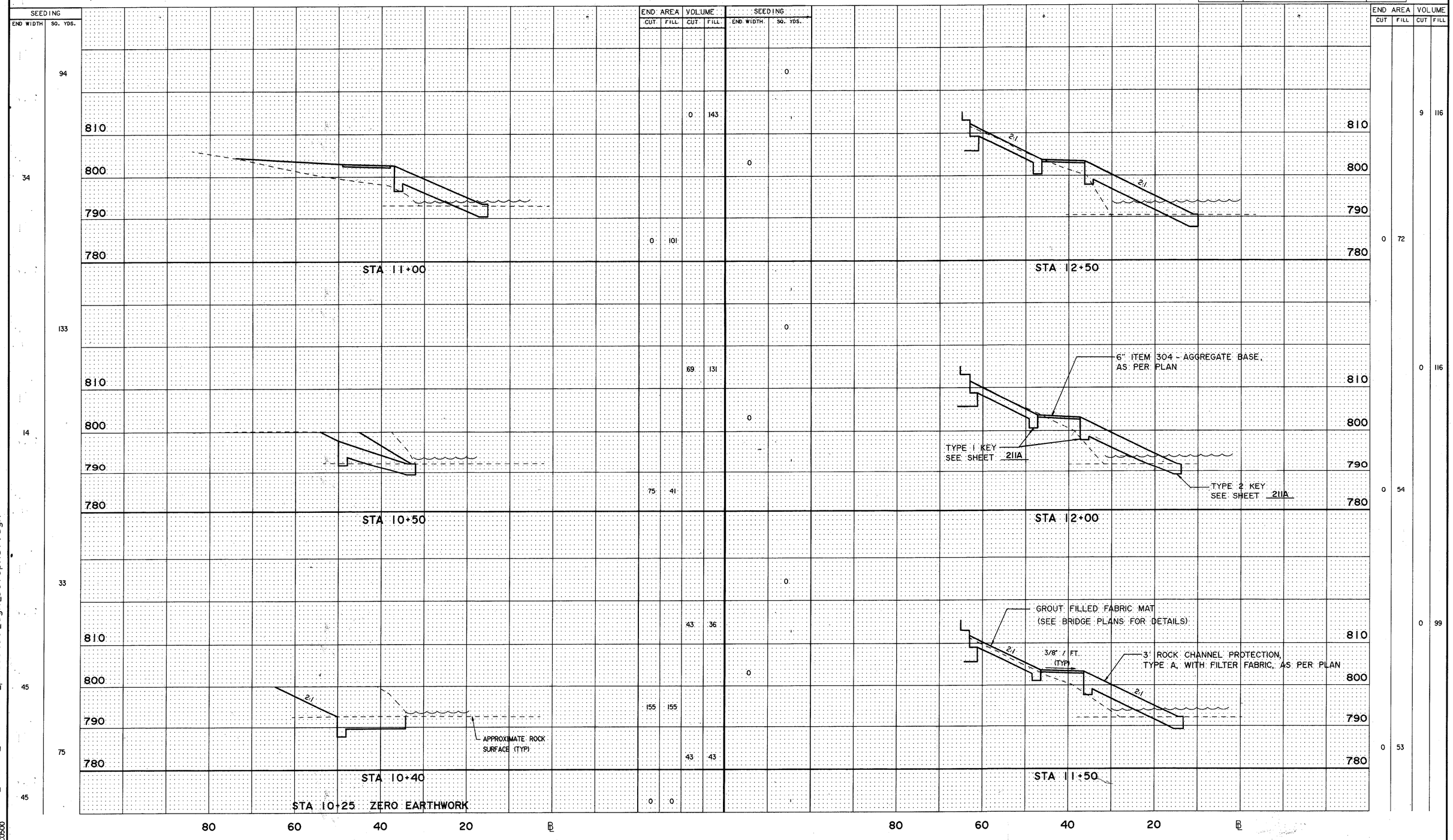

CROSS SECTIONS - STA 10+25 TO STA 12+50

PLOTTED BY: fkonopka
PLOTTED: 30-JUL-1998 07:47
PLOT SUBMITTED:30-JUL-1998 07:47
307CPXS1.DGN
307cpxs1.dgn
307cpxs1.dgn
pid08459
pid08459
sberset
sberset
PLOTTED BY: fkonopka
PLOTTED: 30-JUL-1998 07:47
307CPXS1.DGN

CALC. BY	MGB
DATE	7-9-93
CHK'D BY	PDH
DATE	7-14-93

CUY-71-0.00

OHIO
FHWA
REGION

211C
361

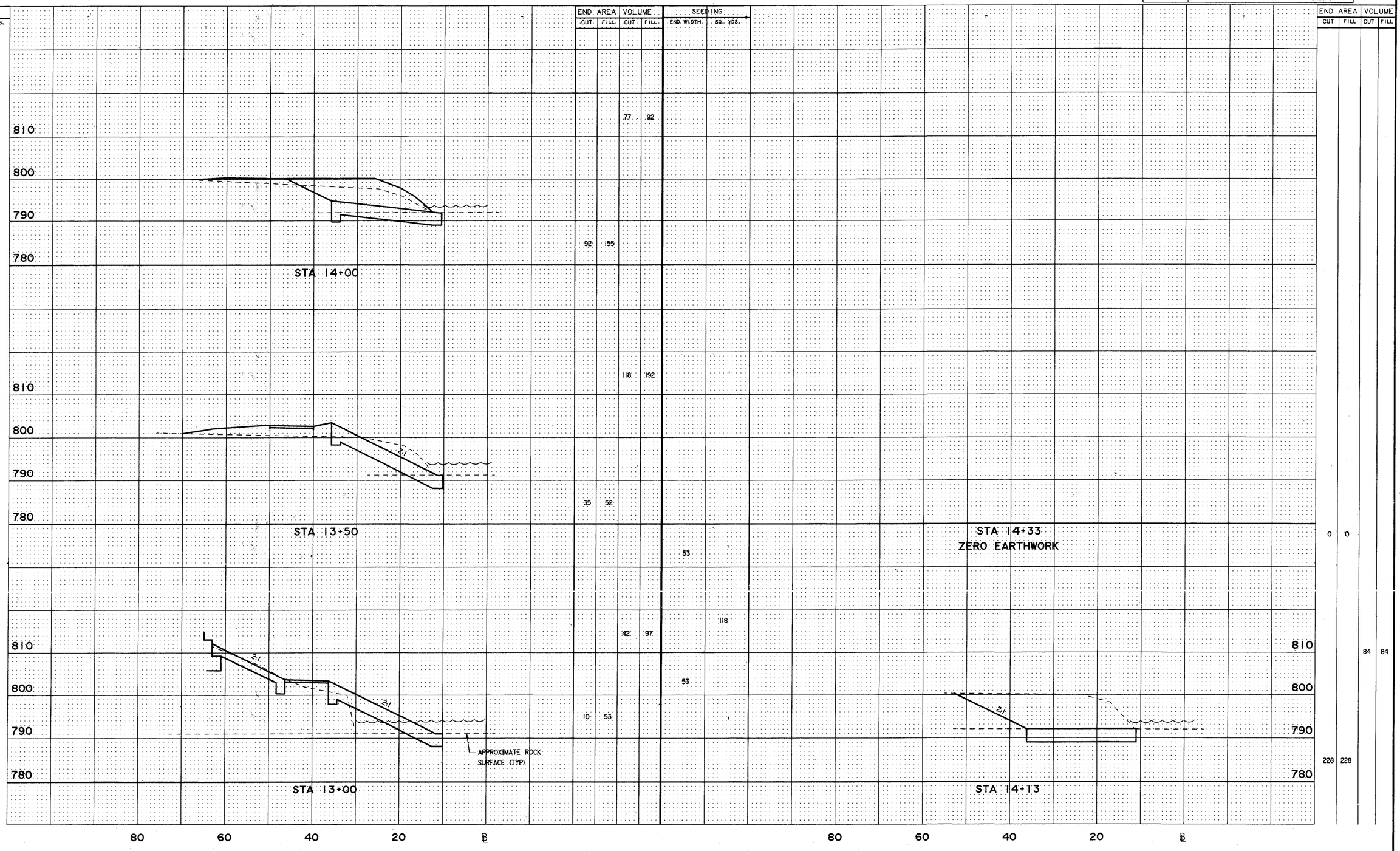

CROSS SECTION - STA 13+00 TO STA 14+33

PLOT SUBMITTED:30-JUL-1998 07:48
307CPXS2.DGN
PLOTTED BY:fkonopka
PLOTTED ON:sletorsber
HSCD000

TRAFFIC CONTROL

PLOT SUBMITTED: 27-JUL-1998 11:34
TCGN1.DGN
PLOTTED FROM: i:\users\eforsber\pid08459\dgn\tcgn1.dgn

TRAFFIC CONTROL STANDARD CONSTRUCTION DRAWINGS

REFERENCES TO SUPPLEMENTAL SPECIFICATION 857, 858, 861, 957, 958 AND 961 ON THE TRAFFIC CONTROL STANDARD CONSTRUCTION DRAWINGS IN THESE PLANS SHALL BE CONSIDERED TO READ AS RESPECTIVE REFERENCES TO ITEMS 630, 633, 730, 731, AND 733.

LAYOUT OF PAVEMENT MARKINGS

THE CONTRACTOR SHALL BE RESPONSIBLE FOR ALL THE LAYOUT AND LOCATIONS OF THE VARIOUS PAVEMENT MARKINGS.

REMOVAL OF EXISTING ITEMS

ALL 630 REMOVAL ITEMS NOT SPECIFICALLY INCLUDING STORAGE OR REERECTION SHALL BECOME THE PROPERTY OF THE CONTRACTOR. REMOVAL AND DISPOSAL SHALL BE THE RESPONSIBILITY OF THE CONTRACTOR.

EXIT NUMBER PANELS (GEP SERIES) ON SIGNS

EXIT NUMBER PANELS (GEP SERIES) ON OVERHEAD OR GROUND MOUNTED SIGNS SHALL BE PLACED TO THE TOP RIGHT OR LEFT OF THE MAJOR SIGN AS SHOWN ON THE ELEVATION VIEWS. LOCATION OF THE EXIT NUMBER PANEL IS BASED ON THE LOCATION OF THE EXIT RAMP IN RELATION TO THE THRU TRAFFIC MOVEMENT (RIGHT SIDE FOR RIGHT-HAND EXITS, LEFT SIDE FOR LEFT-HAND EXITS, ORIENTATED WITH THE DIRECTION OF TRAFFIC). ALL SIGNS WHICH HAVE EXIT NUMBER PANELS SHALL BE OFFSET AS STATED ABOVE.

ITEM 630-SIGN LOCATIONS

SIGN LOCATIONS OF EXISTING AND PROPOSED SIGNS ON THE PLANS ARE APPROXIMATE. THE CONTRACTOR PRIOR TO ERECTION OF ALL SIGN SUPPORTS (POSTS, BEAMS AND OVERHEADS) SHALL STAKE THE PROPOSED LOCATION, INCLUDING OFFSET. OVERHEAD SUPPORT LOCATIONS SHALL ALSO INCLUDE FOUNDATION ELEVATIONS. THE ENGINEER SHALL APPROVE ALL SUPPORT LOCATIONS AND MAY ADJUST THE LOCATION TO CORRECT SLOPE AND SUB-SURFACE DIFFICULTIES, SIGN SIGHT DISTANCE OBSTRUCTIONS, IMPROVE SAFETY AND ELIMINATE OVERHEAD OBSTACLES.

PAYMENT FOR STAKING SHALL BE INCIDENTAL TO THE VARIOUS SIGN SUPPORT ITEMS.

ITEM 630-REMOVAL OF OVERHEAD MOUNTED SIGN AND DISPOSAL, TYPE TC-16.20, AS PER PLAN

THE CONTRACTOR SHALL REMOVE AND DISPOSE OF THE EXISTING STRUCTURE MOUNTED SIGNS AND SUPPORTS AT STA.762+11.41 N.B. I-71 AND STA. 762+35.01 S.B. I-71. THE SIGN SUPPORTS INCLUDES A STEEL POLES, STEEL ARMS, PLATES AND BRACKETS ATTACHED TO A BEAM.

PAYMENT FOR THIS ITEM SHALL BE PAID PER EACH OF ITEM 630 REMOVAL OF OVERHEAD MOUNTED SIGN AND DISPOSAL, AS PER PLAN WHICH PAYMENT SHALL INCLUDE THE REMOVAL AND DISPOSAL OF THE SIGNS, SIGN SUPPORTS AND ALL LABOR, MATERIAL, EQUIPMENT AND INCIDENTALS NEEDED TO COMPLETE THE WORK.

ITEM 630-SIGN, FLAT SHEET, TYPE G, AS PER PLAN

THE CONTRACTOR SHALL REFER TO SHEET 252 OF THIS PLAN FOR DETAILS AND NOTES ON THE FABRICATION OF THE "WATCH FOR ICE ON BRIDGE" SIGNS. NOTE THAT THESE SIGNS ARE HINGED.

ITEM 631-REMOVAL OF SIGN WIRING AND DISPOSAL

THIS ITEM OF WORK SHALL CONSIST OF THE REMOVAL AND DISPOSAL OF THE EXISTING SIGN WIRING AND HARDWARE, BACK TO THE DISCONNECT SWITCH BOX. THE ELECTRICAL POWER SHALL BE SAFELY TERMINATED WITHIN THE SWITCH ENCLOSURE. HARDWARE INCLUDES THE RIGID OR FLEXIBLE CONDUIT, JUNCTION BOXES, BALLASTS, CLAMPS, ELBOWS, AND MISCELLANEOUS HARDWARE. ALL THREADED PIPE COUPLINGS OR NIPPLES SHALL BE COVERED WITH THREADED END CAPS.

PAYMENT FOR THIS ITEM SHALL BE PAID PER EACH OF ITEM 631-REMOVAL OF SIGN WIRING AND DISPOSAL WHICH PAYMENT SHALL INCLUDE ALL NECESSARY LABOR, MATERIAL, AND EQUIPMENT REQUIRED TO PERFORM THE WORK NOTED HEREIN.

ITEM 630-SIGN SERVICE, AS PER PLAN

THIS ITEM OF WORK SHALL CONSIST OF REPLACING THE EXISTING 2 WIRE SIGN SERVICE WITH A 3 WIRE SIGN SERVICE, MODIFYING THE DISCONNECT SWITCH BY ADDING A SECOND FUSE AND REWIRING THE DISCONNECT SWITCH FOR A 3 WIRE, GROUNDED NEUTRAL CIRCUIT.

ITEM 631-REMOVAL OF SIGN SERVICE AND DISPOSAL

THIS ITEM OF WORK SHALL CONSIST OF THE REMOVAL AND DISPOSAL OF THE EXISTING SIGN SERVICE FROM THE DISCONNECT SWITCH BOX TO THE NEAREST PULL BOX.

SIGN SERVICE CABLES SHALL BE PULLED BACK TO THE NEAREST PULL BOX AND DISCONNECTED FROM THE HIGHWAY LIGHTING DUCT CABLE. CARE MUST BE TAKEN NOT TO PERMANENTLY DISRUPT THE CONTINUITY OF THE HIGHWAY LIGHTING CIRCUITS. THE EXISTING CABLE SPLICE KITS IN THE PULL BOX SHALL BE REMOVED TO DISCONNECT THE SIGN SERVICE CABLES FROM THE HIGHWAY LIGHTING CABLE.

PAYMENT FOR THIS ITEM SHALL BE PAID PER EACH OF ITEM 631-REMOVAL OF SIGN SERVICE AND DISPOSAL WHICH PAYMENT SHALL INCLUDE ALL NECESSARY LABOR, MATERIAL, AND EQUIPMENT REQUIRED TO PERFORM THIS ITEM OF WORK.

ITEM 631-REMOVAL OF DISCONNECT SWITCH ENCLOSURE AND DISPOSAL

INCIDENTAL TO THE REMOVAL OF DISCONNECT SWITCH ENCLOSURE, THE DISCONNECT SWITCH SHALL BE REMOVED AND DISPOSED OF BY THE CONTRACTOR.

ITEM 631-REMOVAL OF LUMINAIRE AND DISPOSAL

INCIDENTAL TO THE REMOVAL OF THE LUMINAIRE, THE BALLAST, AND THE MOUNTING BRACKET ASSEMBLY SHALL BE REMOVED AND DISPOSED OF BY THE CONTRACTOR.

ITEM 631-BALLAST, BY TYPE, INTEGRAL

BALLAST FOR MERCURY VAPOR LUMINAIRES SHALL BE MOUNTED WITHIN THE LUMINAIRE HOUSING (INTEGRAL) OR MOUNTED IN A WEATHERPROOF HOUSING ATTACHED TO OR BESIDE THE LUMINAIRE (CONTIGUOUS). BALLAST HOUSINGS SHALL BE OF CORROSION RESISTANT MATERIALS.

INTEGRAL BALLASTS SHALL BE USED TO LIGHT ALL NON-STRUCTURALLY MOUNTED OVERHEAD SIGNS AS SHOWN IN THE PLANS.

ITEM 631-ENCLOSURE PADLOCKS

DISCONNECT SWITCH ENCLOSURES FURNISHED IN ACCORDANCE WITH SPECIFICATION 631.08 SHALL INCLUDE A PADLOCK EQUAL TO MASTER NO. 48KA OR WILSON BOHANNON 660, WITH LOCK BODY OF BRONZE OR BRASS, AND KEYING IN ACCORDANCE WITH THE FOREGOING SPECIFICATION.

RAISED PAVEMENT MARKERS

MATERIALS SUPPLIED BY THE DEPARTMENT

ALL MATERIALS ARE TO BE CONTRACTOR FURNISHED, EXCEPT THAT THE DEPARTMENT SHALL SUPPLY RPM MATERIALS IN THE QUANTITIES SHOWN HEREIN TO THE CONTRACTOR. PAY ITEMS FOR THE DEPARTMENT SUPPLIED MATERIALS SHALL BE INDICATED AS "INSTALLATION ONLY". THE TYPE OF DEPARTMENT SUPPLIED MATERIAL SHALL BE RAISED PAVEMENT MARKER CASTINGS.

THE CONTRACTOR SHALL PICK UP THE DEPARTMENT SUPPLIED RPM MATERIALS AT THE OPI WAREHOUSE IN COLUMBUS, OHIO.

THE CONTRACTOR SHALL PICK UP DEPARTMENT SUPPLIED RPM MATERIALS AT THE SPECIFIED LOCATION(S) FOR TRANSPORT TO THE WORK SITE OR TO THE CONTRACTOR'S STORAGE FACILITY. THE RECYCLED RAISED PAVEMENT MARKER (RPM) AUTHORIZATION FORM IS TO BE SIGNED BY THE DISTRICT CONSTRUCTION ENGINEER PRIOR TO PICK UP OF THE RPMS. THE CONTRACTOR SHALL NOTIFY THE DISTRICT AND / OR THE PARTIES LISTED ON THE AUTHORIZATION FORM IN WRITING AT LEAST FIVE (5) CALENDAR DAYS PRIOR TO PICK UP OF THE DEPARTMENT SUPPLIED MATERIALS. THE CONTRACTOR SHALL STORE THE RPMS WITHOUT DAMAGE OR CONTAMINATION WITH FOREIGN MATTER. A DEDUCTION IN THE AMOUNT OF THE ACTUAL COST TO THE DEPARTMENT SHALL BE MADE FOR MATERIALS DAMAGED BY THE CONTRACTOR OR FOR CASTINGS RECEIVED BY THE CONTRACTOR WHICH WERE NOT INSTALLED AND WERE NOT RETURNED TO THE DEPARTMENT.

RETURN OF NON-PERFORMED RAISED PAVEMENT MARKER MATERIALS SUPPLIED BY THE DEPARTMENT

RAISED PAVEMENT MARKER MATERIALS SUPPLIED BY THE DEPARTMENT, THAT ARE NON-PERFORMED SHALL BE CAREFULLY REPACKED OR PACKED IN THE BOXES IN THE SAME STYLE AND QUANTITY AS ORIGINALLY RECEIVED FROM THE DEPARTMENT. CASTING STYLES SHALL NOT BE MIXED WITHIN ANY ONE CONTAINER. THE CONTRACTOR SHALL CLEARLY MARK ON THE OUTSIDE OF EACH CONTAINER THE STYLE OF CASTING. BOXES SHALL BE PLACED ON SKIDS OR PALLETS IN THE SAME STYLE (LOW PROFILE OR CONVENTIONAL, REFLECTORISED OR NON REFLECTORISED) AND NO MORE THAN 420 RPMS (OR 21 BOXES) ON ONE SKID.

ONLY USE THE BOXES SUPPLIED BY THE RAISED PAVEMENT MARKER RECYCLER. BOXES MUST BE MARKED WITH THE RECYCLER'S PART OR CATALOG NUMBER AND THE PROJECT NUMBER. THE RECYCLER'S CATALOG OR PART NUMBERS MAY BE OBTAINED FROM THE OFFICE OF TRAFFIC ENGINEERING IN COLUMBUS, OHIO OR FROM THE RECYCLER. BOXES NOT MARKED WITH THE PROPER RECYCLER'S CATALOG OR PART NUMBERS, AND THE DEPARTMENT'S PROJECT NUMBER WILL NOT BE ACCEPTED AT THE RECYCLER'S WAREHOUSE.

NON PERFORMED MATERIALS WILL BE RETURNED TO THE LOCATION AS SPECIFIED BY THE DISTRICT CONSTRUCTION ENGINEER WITHIN 30 DAYS OF THE COMPLETION OF THE PROJECT.

THE ABOVE WORK INCLUDING ALL LABOR, EQUIPMENT AND MATERIAL NEEDED TO PERFORM THE WORK, SHALL BE CONSIDERED INCIDENTAL TO THE RESPECTIVE PAY ITEM.

IF THE DEPARTMENT HAS TO REPACKAGE THE RPMS CORRECTLY, THE CONTRACTOR WILL BE ASSESSED THE ACTUAL COST FOR REPACKAGING THE MATERIALS BY THE DEPARTMENT'S FORCES.

LOADING OF MATERIALS SUPPLIED BY THE DEPARTMENT AT THE RECYCLER'S WAREHOUSE

TRUCKS SHALL HAVE A LOADING HEIGHT OF 48 INCHES AND BE ABLE TO BACK UP FLUSH TO THE LOADING DOCK.

TRUCKS SHALL NOT HAVE ANY OBSTRUCTIONS OR PROTRUSIONS THAT PREVENT THE LOADING BY A STANDARD FORKLIFT OR LIFT TRUCK.

SEMI TRUCKS OR 20 FOOT COMMERCIAL TRUCKS ARE THE MOST APPROPRIATE TRUCKS FOR LOADS IN EXCESS OF 4 PALLETS (ONE PALLET = 21 BOXES = 2100 LBS).

STAKE BODY TRUCKS ARE APPROPRIATE TO LOAD LESS THAN 4 PALLETS, PROVIDED THE TRUCK IS RATED FOR THE LOAD AND THE LOAD CAN BE SAFELY SECURED FOR TRANSPORT BY CHAINING OR STRAPPING DOWN AS NEEDED.

PLOT SUBMITTED: 27-JUL-1998 11:34
PLOTTED FROM: i:\users\eforsber\pid08459\dgn\tcgn1.dgn
TCGN1.DGN

PICKUP TRUCKS ARE APPROPRIATE FOR LOADS OF APPROXIMATELY ONE PALLET, PROVIDED THE PICKUP TRUCK IS RATED FOR THE LOAD AND THE LOAD CAN BE SAFELY SECURED FOR TRANSPORT.

DUMP TRUCKS, TILT BED TRUCKS, AND NON COMMERCIAL MOVING VANS WILL NOT BE LOADED BY THE RECYCLERS WAREHOUSE.

THE WAREHOUSE SUPERVISOR WILL REFUSE TO LOAD ANY TRUCK THAT IS UNSAFE TO LOAD OR UNSUITABLE FOR THE LOAD BEING PLACED ON THE TRUCK.

THE FOLLOWING ESTIMATED QUANTITIES HAVE BEEN CARRIED TO THE GENERAL SUMMARY TO SUPPLY THE CONTRACTOR WITH RECYCLED RAISED PAVEMENT MARKER CASTINGS, AND PRISMATIC REFLECTORS:

ITEM 621-RAISED PAVEMENT MARKER CASTING,
INSTALLATION ONLY.....2100 EACH

ITEM 621-PRISMATIC RETROREFLECTOR.....2100 EACH

RETROREFLECTOR REPLACEMENT

THE FOLLOWING ESTIMATED QUANTITY HAS BEEN INCLUDED IN THE GENERAL SUMMARY TO BE USED AS DIRECTED BY THE ENGINEER TO REPLACE THE RETROREFLECTORS WHICH WERE REMOVED IN THE LANE CLOSURE AREAS WHICH WERE BEYOND THE RESURFACING LIMITS AND TO INSTALL (OR REPLACE) THE PROPER COLOR REFLECTOR(S) INTO DEPARTMENT SUPPLIED CASTINGS. THE RETROREFLECTORS IN THE DEPARTMENT SUPPLIED CASTINGS ONLY NEED TO BE REPLACED IF THE COLOR IN THE CASTINGS CONFLICTS WITH THE COLOR SPECIFIED FOR THE RPM'S LOCATION.

THIS ITEM SHALL INCLUDE THE COST OF REMOVING THE RETROREFLECTOR AND REPLACING IT WITH A CONTRACTOR SUPPLIED REFLECTOR OF THE REQUIRED COLOR.

ITEM 621-PRISMATIC RETROREFLECTOR.....160 EACH

ITEM 603-UNDERDRAIN FOR PULL BOXES

SEE SHEET 253A FOR NOTE AND QUANTITIES.

ITEM 626-BARRIER REFLECTORS

QUANTITIES FOR TYPE A AND TYPE B BARRIER REFLECTORS ARE CALCULATED ON SHEET 72 AND HAVE BEEN CARRIED TO THE TRAFFIC CONTROL GENERAL SUMMARY. LAYOUT OF BARRIER REFLECTORS SHALL BE AS INDICATED IN 626.03 .

ITEM SPECIAL-PAVEMENT MARKING MISC.: EPOXY

DESCRIPTION

THIS WORK SHALL CONSIST OF FURNISHING AND APPLYING EPOXY PAVEMENT MARKINGS IN ACCORDANCE WITH 641, 740, AND THE ADDITIONAL REQUIREMENTS DESCRIBED HEREIN.

EQUIPMENT

EQUIPMENT FOR APPLYING THE EPOXY PAVEMENT MARKING SHALL BE CAPABLE OF MIXING THE COMPONENTS IN PROPORTIONS RECOMMENDED BY THE MANUFACTURER AND APPLYING GLASS BEADS AT THE TIME OFLINE PLACEMENT. THE MARKING EQUIPMENT SHALL BE CAPABLE OF APPLYING EPOXY MATERIAL AT THE SPECIFIED THICKNESS. THE CONTRACTOR SHALL PROVIDE A CLIBRATED MEASURING DEVICE ACCEPTABLE TO THE ENGINEER TO MEASURE THE EPOXY RESIN IN THE STRIPER TANKS.

IN GENERAL, THE APPLICATING EQUIPMENT SHALL BE MOBILE, TRUCK MOUNTED AND SELF CONTAINED PAVEMENT MARKING MACHINE, SPECIFICALLY DESIGNED TO APPLY RESIN MATERIALS AND REFLECTIVE GLASS SPHERES IN CONTINUOUS AND SKIP-LINE PATTERNS. THE APPLICATING EQUIPMENT SHALL BE MANEUVERABLE TO THE EXTENT THAT THE STRAIGHT LINES CAN BE FOLLOWED AND NORMAL CURVES CAN BE MADE IN A TRUE ARC. IN ADDITION, THE TRUCK MOUNTED UNIT SHALL BE PROVIDED WITH ACCESSORIES TO ALLOW FOR MARKING OF LEGENDS, SYMBOLS, CROSSWALKS, AND OTHER SPECIAL PATTERNS.

THE ENGINEER AND THE MATERIAL MANUFACTURER TOGETHER MAY APPROVE THE USE OF A PORTABLE APPLICATOR IN LIEU OF TRUCK MOUNTED ACCESSORIES FOR USE IN APPLYING SPECIAL MARKING ONLY, PROVIDED SUCH EQUIPMENT CAN DEMONSTRATE SATISFACTORY APPLICATION OF REFLECTORIZED MARKINGS WITH THESE SPECIFICATIONS:

THE MOBILE APPLICATOR SHALL INCLUDE THE FOLLOWING FEATURES:

1. THE MOBILE APPLICATOR SHALL PROVIDE INDIVIDUAL MATERIAL RESERVOIRS, OR SPACE, FOR STORAGE OF PART A AND PART B OF THE RESIN COMPOSITION.

2. THE APPLICATOR SHALL BE EQUIPPED WITH HEATING EQUIPMENT OF THE SUFFICIENT CAPACITY TO MAITAIN THE INDIVIDUAL RESIN COMPONENTS AT THE MANUFACTURER'S RECOMMENDED TEMPERATURE AND PRODUCE THE REQUIRED AMOUNT OF HEAT AT THE MIXING HEAD & GUN TIP AND MAINTAIN THOSE TEMPERATURES WITH THE TOLERANCES RECOMMENDED BY THE RESIN MANUFACTURER FOR SPRAY APPLICATION.

3. THE APPLICATOR SHALL BE EQUIPPED WITH ADEQUATE INDIVIDUAL TANKS FOR STORAGE AND DISPENSING OF SIZE I AND SIZE II GLASS SPHERES AND BLACK AGGREGATE.

4. THE APPLICATOR SHALL BE EQUIPPED WITH INDIVIDUAL DISPENSERS FOR THE SIMULTANEOUS APPLICATION OF SIZE I AND SIZE II GLASS SPHERES RESPECTIVELY. ECH DISPENSER SHALL BE CAPABLE OF APPLYING SPHERES AT A MINIMUM RATE OF 20 LBS. PER GALLON OF THE RESIN COMPOSITION. THE APPLIED COMBINED TOTAL OF BOTH TYPES OF BEADS SHOULD BE OF MINIMUM OF 25 LBS. PER GALLON (12 TO 13 LBS OF EACH TYPE).

5. THE APPLICATOR SHALL BE EQUIPPED WITH INDIVIDUAL METERING DEVICES OR PRESSURE GAUGES, ON THE PROPORTIONING PUMPS (ONE INDICATOR PER PUMP) AS WELL AS STOKE COUNTERS TO MONITOR GALLON USAGE. ALL SUCH DEVICES SHALL BE VISIBLE TO THE ENGINEER.

6. THE APPLICATOR SHALL BE EQUIPPED WITH ALL NECESSARY SPRAY EQUIPMENT, MIXERS, COMPRESSORS AND OTHER APPURTENANCES TO ALLOW FOR THE PLACEMENT OF REFLECTORIZED PAVEMENT MARKING SYSTEM IN A SIMULTANEOUS SEQUENCE OF OPERATIONS.

7. EACH APPLICATION MUST HAVE A MINUMUM OF A 24" LONG STATIC MIXER UNIT AS MANUFACTURED BY KENICS COMPANY OF EQUAL FOR PROPER MIXING OF THE TWO COMPONENTS.

8. EACH MOBILE APPLICATOR MUST BE EQUIPPED WITH A COMPLETELY ENCLOSED FLUSH AND PURGE SYSTEM TO CLEAN THE LINES AND THE GUNS WITHOUT EXUDING ANY OF THE SOLUTION INTO THE ENVIRONMENT.

APPLICATION

CLEAN THE SURFACE TO REMOVE ALL DBRIS, LAITANCE AND ANY OTHER CONTAMINANTS THAT MAY HINDER THE ADHESION OF THE SYSTEM TO THE SURFACE. WHENEVER GRINDING, SCARIFYING, SANDBLASTING, SHOTBLASTING OR OTHER OPERATIONS ARE PERFORMED, THE DBRIS GENERATED MUST BE CONTAINED THROUGH VACUUM TYPE EQUIPMENT OR EQUIVALENT AND THE WORK SHALL BE CONDUCTED IN SUCH A MANNER THAT THE FINISHED PAVEMENT SURFACE IS NOT DAMAGED OR LEFT IN A PATTER THAT WILL MISLEAD OR MISDIRECT THE MOTORIST. WHEN THESE OPERATIONS ARE COMPLETEED THE PAVEMENT SURFACE SHALL FIRST BE POWER BROOMED AND THEN BLOWN OFF WITH COMPRESSED AIR TO REMOVE RESIDUE AND DEBRIS RESULTING FROM THE CLEANING WORK. ALL SUCH DEBRIS MUST BE PROPERLY CONTAINED ESPECIALLY WHEN REMOVING YELLOW PAINT LINES AND DISPOSED IN THE APPROPRIATE MANNER.

REMOVAL AND CLEANING WORK SHALL BE CONDUCTED IN SUCH A MANNER- AS TO CONTROL AND MINIMIZE AIRBORNE DUST, AND SIMILAR DEBRIS SO AS TO PREVENT A HAZARD TO MOTOR VEHICLE OPERATION OR NUISANCE TO PROPERTY.

CARE SHALL BE TAKEN ON BITUMINOUS AND PORTLAND CEMENT CONCRETE SURFACES WHEN PERFORMING REMOVAL AND CLEANING WORK TO PREVENT DAMAGE OR TRANSVERSE AND LONGITUDINAL JOINT SEALERS.

LIMITS OF WORK

CLEANING AND SURFACE PREPARATION WORK SHALL BE CONFINED TO THE SURFACE AREA SPECIFIED FOR THE APPLICATION OF THE PAVEMENT MARKING MATERIALS; OR THE SURFACE AREA OF EXISTING PAVEMENT MARKINGS THAT ARE SPECIFIED FOR REMOVAL ON THE PLANS, OR AS DIRECTED BY THE ENGINEER.

SURFACE PREPARATION WORK INCLUDES CLEANING FOR LINES OR CLEANING FOR LETTERS AND SYMBOLS. LINES WILL BE MEANT TO INCLUDE: SOLID LINES, BROKEN LINES, CHANNELIZING LINES, BARRIER LINES, STOP LINES CROSSWALK LINES AND CROSSBARS.

WHEN LINES ARE CLEANED, THE AREA OF PREPARATION WILL BE A WIDTH OF THE NEW PAVEMENT MARKING, OR EXISTING LINE, PLUS 1" ON EACH SIDE. WHEN LETTERS AND SYMBOLS ARE CLEANED, THE AREA OF PREPARATION WILL BE SUFFICIENTLY LARGE TO ACCOMMADATE THE NEW MARKING, OR TO REMOVE THE EXISTING MARKING.NO NEW MARKING LINE OR SYMBOLS SHALL BE APPLIED ON ANY PAVEMENT THAT HAS NOT BEEN PROPERLY PREPARED AS PER THIS SPECIFICATION.

REMOVAL OF CONCRETE CURING COMPOUNDS

ON NEW PORTLAND CEMENT CONCRETE PAVEMENTS, CLEANING OPERATIONS SHALL NOT BEGIN UNTIL A MINIMUM OF 30 DAYS AFTER THE PLACEMENT OF CONCRETE. THE EXTENT OF THE BLASTING WORL SHALL BE TO CLEAN AND PREPARE THE CONCRETE SURFACE SUCH THAT:

A. THERE IS NOT VISIBLE EVIDENCE OF CURING COMPOUND ON THE PEAKS OF THE TEXTURED CONCRETE SURFACE.

B. THERE ARE NO HEAVY PUDDLED DEPOSITS OF CURING COMPOUND IN THE VALLEYS OF THE TEXTURED CONCRETE SURFACE.

C. ALL REMAINING CURING COMPOUND IS INTACT; ALL LOOSE AND FLAKING MATERIAL IS REMOVED.

D. THE PEAKS OF THE TEXTURED PAVEMENT SURFACE ARE ROUNDED IN PROFILE AND FREE OF SHARP EDGES AND IRREGULARITIES.

E. THE EXTENT OF THE REMOVAL SHOULD BE AS SUCH TO INSURE THE LAITANCE IS REMOVED ON BOTH OLD AS WELL AS NEW CONCRETE.

PLOTTED FROM: ::\users\eforsber\pid08459\dgn\tcgn1.dgn
TCGN1.DGN
PLOT SUBMITTED: 27-JUL-1998 11:34

REMOVAL OF EXISTING PAVEMENT MARKINGS

EXISTING PAVEMENT MARKINGS SHALL BE CLEANED FOR THE PURPOSE OF:

A. PREPARING THE PAVEMENT SURFACE FOR THE APPLICATION OF NEW PAVEMENT MARKING IN THE SAME LOCATION AS THE EXISTING MARKINGS.

B. TO REMOVE EXISTING MARKINGS THAT ARE IN GOOD CONDITION WHICH, IF ALLOWED TO REMAIN, WILL INTERFERE WITH OR OTHERWISE CONFLICT WITH NEWLY APPLIED MARKING PATTERNS.

C. IT SHALL BE UNDERSTOOD THAT IN THIS CONTEXT, CLEANING MEANS THE REMOVAL OF AN EXISTING MARKING. IT IS NOT INTENDED THAT ALL DETERIORATED EXISTING PAVEMENT MARKINGS BE REMOVED. EXAMPLE: IF A NEW MARKING IS APPLIED TO AN UNMARKED "GAP" IN A BROKEN LINE PATTERN IS WORK OR DETERIORATED, AS DETERMINED BY THE ENGINEER, TO THE EXTENT THAT IT IS NOT MISLEADING OR CONFUSING TO THE MOTORIST, THE EXISTING PAVEMENT MARKINGS DO NOT REQUIRE REMOVAL.

D. PAVEMENT SHALL BE CLEANED TO THE EXTENT THAT 95% TO 100% OF THE EXISTING MARKING IS REMOVED. REMOVAL OPERATIONS SHALL BE CONDUCTED IN SUCH A MANNER THAT NO MORE THAN MODERATE COLOR AND/OR SURFACE TEXTURE CHANGE RESULTS ON THE SURROUNDING PAVEMENT SURFACE.

E. THE DETERMINATION OF ACCEPTABLE REMOVAL WILL BE MADE BY JUDGEMENT OF THE ENGINEER AND WILL BE GUIDED BY THE DEPARTMENT'S PICTORIAL STANDARDS OF ACCEPTABLE MARKING REMOVAL. PICTORIAL STANDARDS ARE AVAILABLE.

APPLICATION

EPOXY MARKING MATERIAL SHALL ONLY BE APPLIED WHEN THE SURFACE IS CLEAN AND DRY AND THE PAVEMENT AND AIR TEMPERATURES ARE ABOVE 50 DEGREES F (FOR APPLICATIONS BELOW 50 DEGREES F, THE EPOXY MANUFACTURER MUST BE CONTACTED FOR APPROVAL). THE CONTRACTOR SHALL TRANSFER THE ENTIRE CONTENTS OF EACH MATERIAL CONTAINER TO THE STRIPER TANKS. THE MATERIAL SHALL BE THOROUGHLY MIXED AT ALL TIMES DURING APPLICATION. EPOXY MARKING MATERIAL, PLUS RESIN, SHALL BE APPLIED UNIFORMLY TO THE SURFACE TO BE MARKED AT THE FOLLOWING RATES:

GALLONS PER MILE OF LINE	WIDTH OF LINE (INCHES) (THICKNESS OF 20 MILS)				
	4	6	8	12	24
SOLID LINE	22	33	44	66	132
DASHED LINE	5.5	8.5	11	17	34
DOTTED LINE	7.3	11	14.6	22	44
SYMBOLS, WORDS	1 GAL. PER 80 SQ.FT.				

THINNING SHALL NOT BE PERMITTED

GLASS BEADS SHALL BE APPLIED TO THE UNCURED EPOXY MATERIAL IN SUFFICIENT QUANTITY SO THAT THE BEADS COMPLETELY FILL THE EPOXY FILM FROM THE FILM-PAVEMENT INTERFACE TO THE TOP SURFACE OF THE FILM TO THE EXTENT THAT THERE ARE LOOSE BEADS ON THE SURFACE OF THE UNCURED LINE. THE RATE OF APPLICATIONSHALL NOT BE LES THAN 25 LBS.(3 KG) OF GLASS BEADS PER GALLON (LITER) OF EPOXY MATERIAL APPLIED.

IF THE EPOXY MARKING DOES NOT DRY TO A NO-TRACKING CONDITION CONSISTENTLY AND SHOWS A CYCLICAL SOFT SPOT, THE CONTRACTOR SHALL CEASE THE MARKING APPLICATION UNTIL THE PROBLEM IS CORRECTED.

CERTIFICATION OF COMPLIANCE

THE MANUFACTURER SHALL FURNISH A NOTARIZED CERTIFICATION THAT THE MATERIAL COMPLIES WITH THE PROVISIONS OF THIS SPECIFICATION. IT SHALL NOT BE INFERRED THAT THE PROVISIONS OF A CERTIFICATION OF COMPLIANCE WAIVES STATE INSPECTION, SAMPLING OR TESTING.

LABORATORY SAMPLES

PROMPTLY AFTER EXECUTION OF THIS CONTRACT, THE CONTRACTOR SHALL NOTIFY THE ENGINEER OF THE SOURCES OF MATERIAL HE EXPECTS TO USE. THE MATERIAL MANUFACTURER SHALL FURNISH SAMPLES OF THE EPOXY MATERIALS AS MAY BE REQUIRED BY THE ENGINEER, A MINIMUM OF TEN DAYS BEFORE THE DATE OF INTENDED USE OF THESE MATERIALS.

INFRARED SPECTRA

A COPY OF THE INFRARED SPECTRA OF EACH COMPONENT ON EACH LOT NUMBER SHALL BE SUPPLIED BY THE MANUFACTURER ALONG WITH CERTIFICATION PAPERS. THIS INFRARED SPECTRA WILL BE ON RECORD WITH THE OHIO DEPARTMENT OF TRANSPORTATION TO SERVE AS A QUALITY CONTROL MEASURE FOR THE FUTURE SUPPLY OF THIS SYSTEM TO THE STATE.

QUALIFYING A MANUFACTURER

THE MANUFACTURER MUST HAVE EXPERTISE REINFORCED WITH HISTORY IN THIS PATICULAR FIELD TO QUALIFY SUCH AS:

1. PROOF OF SUCCESSFUL INSTALLATIONS OF AT LEAST 4 YEARS (4 PLOWING SEASONS), COVERING A MINIMUM OF 200,000 LIN.FT. IN THIS STATE WHERE THIS PROJECT IS TO BE BID, WITH RETROREFLECTIVITY NUMBERS EXCEEDING 150 ON WHITE AND 100 ON YELLOW, UTILIZING MICROLUX 12 OR EQUIVALENT

2. AMPLE PRODUCTION CAPACITY

3. PROPER FACILITY

4. COMPLIANCE WITH EPA REGULATIONS

5. A VERIFIABLE QUALITY CONTROL PROGRAM

6. MUST HAVE COMPLETED AND PASSED THE SERVICE TEST IN ACCORDANCE WITH SUPPLEMENT 1047

QUALIFYING A CONTRACTOR

IN ORDER FOR AN INSTALLER OF SUCH PAVEMENT MARKING MATERIAL TO BE APPROVED, THE FOLLOWING DOCUMENT MUST BE SUBMITTED:

A CERTIFICATE FROM A PRE-APPROVED MANUFACTURER OF SUCH EPOXY PAVEMENT MARKING MATERIALS, CERTIFYING THAT SUCH A CONTRACTOR HAS FUNCTIONAL, APPROPRIATE EQUIPMENT TO INSTALL THE EPOXY PAVEMENT MATERIAL STATED WITH THE TECHNOLOGY IN THIS SPECIFICATION AND HE HAS AND CONTINUES TO BE SUCCESSFUL AT PERFORMING THIS TYPE OF WORK.

HYBRIDIZED POLYMER MATERIAL

MATERIAL SUPPLIED SHALL BE A 2 PART HYBRIDIZED POLYMER SYSTEM CAPABLE OF BEING APPLIED AT AMBIENT TEMPERATURES DOWN TO 50 DEGREES F. THE MATERIAL SHALL BE CAPABLE OF RETAINING REFLECTIVE GLASS BEADS OF THE DROP-ON OR SPRAY-ON TYPE.

THE EPOXY SHALL COMPLY WITH THE FOLLOWING REQUIREMENTS:

1. THE EPOXY SHALL BE FORMULATED AS A LONG LIFE PAVEMENT MARKING SYSTEM FREE OF ANY PEROXIDES, AND/OR TMPTA (TRI-METHYLOL PROPANE TRI-ACRYLATE) AND OTHER SUCH MULTI-FUNCTIONAL MONOMERS. THE EPOXY SHOULD BE DESIGNED TO PROVIDE A SIMPLE VOLUMETRIC MIXING RATIO OF ITS COMPONENTS SUCH AS 2:1.

2. VISCOSITY

   THE VISCOSITY OF THE PART A WHITE SHALL BE BETWEEN 19,000 AND 20,000 CP AND PART A YELLOW SHALL BE BETWEEN 25,000 AND 26,000 CP. THE VISCOSITY OF PART B SHALL BE BETWEEN 1,950 AND 2,050 CP. AT THE POINT OF APPLICATION, THE VISCOSITIES SHALL BE WITHIN 10% OF EACH OTHER.

3. WEIGHT

   THE WEIGHT OF PART A WHITE 11.8 LBS/GAL 0.2 LBS/GAL AND YELLOW AT 12.8 LBS/GAL 0.2 LBS/GAL. THE WEIGHT OF PART B SHALL BE 9.6 LBS/GAL 0.2 LBS/GAL.

4. EPOXIDE NUMBER

   THE EPOXIDE NUMBER OF THE MATERIAL SHALL BE 0.51 0.05 AS DETERMINED BY ASTM D-1652 FOR BOTH WHITE AND YELLOW COMPONENT A ON A PIGMENT FREE BASIS.

5. AMINE NUMBER

   THE AMINE NUMBER OF THE CURING AGENT (COMPONENT B) SHALL BE 375 50 AS PER ASTM D-2074.

6. TOXICITY

   UPON HEATING TO APPLICATION TEMPERATURE, THE MATERIAL SHALL NOT EXUDE FUMES WHICH ARE TOXIC OR INJURIOUS TO PERSONS OR PROPERTY. UPON CURING, THE MATERIALS SHOULD BE COMPLETELY INERT WITH ALL COMPONENTS FULLY REACTED AND ENVIRONMENTALLY SAFE.

7. DRYING TIME (LABORATORY): THE EPOXY PAVEMENT MARKING MATERIAL WHEN MIXED IN THE PROPER RATIO AND APPLIED AT THE APPROXIMATE PRESCRIBED WET FILM THICKNESS AT 75 DEGREES F 2 DEGREES F AND WITH PROPER SATURATION OF GLASS SPHERES SHALL EXHIBIT NO TRACKING TIME WHEN TESTED 40-45 MIN. ACCORDING TO ASTM D-711.

8. DRYING TIME (FIELD): THE PAVEMENT MARKING MATERIAL SHALL HAVE A SETTING TIME TO A NO-TRACKING CONDITION OF NOT MORE THAN 35 MINUTES AT 75 DEGREES F 2 DEGREES F. THE LINE MUST BE PROTECTED FROM TRACKING DURING THE SETTING PERIOD BY CONING OFF THE WET LINE FROM TRAFFIC OR BY USING A CONVOY OF VEHICLES TO PREVENT TRAFFIC FROM CROSSING THE WET LINE OR WITH A SATURATION OF GLASS BEADS ON THE WET LINE TO PREVENT TRACKING.

9. CURING

   THE EPOXY SHALL BE CAPABLE OF FULLY CURING UNDER A CONSTANT SURFACE TEMPERATURE OF 45 DEGREES F OR ABOVE.

PLOTTED FROM: ::\users\eforsber\pid08459\dgn\tcgn1.dgn
TCGN1.DGN
PLOT SUBMITTED: 27-JUL-1998 11:35

10. ADHESION TO PAVEMENT (CONCRETE AND ASPHALT)

THE CURED PAVEMENT MARKING MATERIALS, WHEN TESTED ACCORDING TO ACI METHOD 503, SHALL HAVE SUCH A HIGHER DEGREE OF ADHESION TO THE SPECIFIED CONCRETE (COMPRESSIVE STRENGTH, 4,000 PSI MIN.) OR ASPHALT SURFACE SUCH THAT THERE SHALL BE 100% CONCRETE FAILURE IN THE PERFORMANCE OF THIS TEST. THE PREPARED SPECIMENS SHALL BE CONDITIONED AT ROOM TEMPERATURE (75 DEGREES F 2 DEGREES F) FOR A MINIMUM OF 24 HOURS AND A MAXIMUM OF 72 HOURS PRIOR TO THE PERFORMANCE OF THE TESTS INDICATED.

11. HARDNESS

THE PAVEMENT MARKING MATERIAL, WHEN TESTED ACCORDING TO ASTM D-224-75, SHALL HAVE A SHORE D HARDNESS BETWEEN 70 AND 90. SAMPLES SHALL BE ALLOWED TO CURE AT ROOM TEMPERATURE FOR A MINIMUM OF 24 HOURS AND A MAXIMUM OF 72 HOURS PRIOR TO PERFORMING THE INDICATED TEST.

12. TENSILE STRENGTH

WHEN TESTED ACCORDING TO ASTM D-638, THE EPOXY PAVEMENT MARKING MATERIAL SHALL HAVE A TENSILE STRENGTH OF NOT LESS THAN 5,000 POUNDS PER SQUARE INCH. THE TYPE IV SPECIMENS SHALL BE CAST IN A SUITABLE MOLD AND PULLED AT A RATE OF 0.25INCHES PER MINUTE BY A SUITABLE DYNAMIC TESTING MACHINE. THE SAMPLES SHALL BE ALLOWED TO CURE AT ROOM TEMPERATURE FOR A MINIMUM OF 72 HOURS BEFORE PERFORMING THE INDICATED TESTS.

13. COMPRESSIVE STRENGTH

WHEN TESTED ACCORDING ASTM D-695, THE EPOXY PAVEMENT MARKING MATERIAL SHALL HAVE A COMPRESSIVE STRENGTH OF NOT LESS THAN 12,000 POUNDS PER SQUARE INCH. THE CAST SAMPLE SHALL BE CONDITIONED AT ROOM TEMPERATURE FOR A MINIMUM OF 72 HOURS BEFORE PERFORMING THE INDICATED TESTS. THE RATE OF COMPRESSION OF THESE SAMPLES SHALL BE NO MORE THAN 0.25 INCHES PER MINUTE.

14. ABRASION RESISTANCE

THE ABRASION RESISTANCE SHALL BE EVALUATED ON A TABER ABRADER WITH A 1000 GRAM LOAD AND CS-17 WHEELS. THE DURATION OF THE TEST SHALL BE 1000 CYCLES. THE WEAR INDEX SHALL BE CALCULATED BASED ON ASTM TEST METHOD C-501 AND THE WEAR INDEX FOR THE CATALYZED MATERIAL SHALL NOT BE MORE THAN 100 MG. THE TESTS SHALL BE RUN ON CURED SAMPLES OF MATERIAL WHICH HAVE BEEN APPLIED AT A FILM THICKNESS OF 20 0.5 MIL TO CODE S-16 STAINLESS PLATES. THE SAMPLES SHALL BE ALLOWED TO CURE AT 75 DEGREES F 2 DEGREES F FOR A MINIMUM OF 24 HOURS AND A MAXIMUM OF 72 HOURS PRIOR TO PERFORMING THE INDICATED TESTS.

15. IMPACT STRENGTH

SAMPLE PREPARATION: PROPERLY MIXED MATERIAL SHALL BE APPLIED ON A MINIMUM OF 28 DAY OLD CLEAN CONCRETE AND SHALL BE ALLOWED TO CURE FOR 72 HOURS AT 75 DEGREES F 2 DEGREES F. FILM THICKNESS OF THE MATERIAL SHALL BE AT THE APPROPRIATELY PRESCRIBED THICKNESS.

TESTING: AT A TEMPERATURE OF 75 DEGREES F 2 DEGREES F(25 DEGREES C), A 2 LB. ROUND STEEL BALL SHALL BE DROPPED FROM A HEIGHT OF 4 FT. ON THE CURED SAMPLE. NO CRACKING OR CHIPPING OF THE MATERIAL SHALL TAKE PLACE.

16. COLOR

THE MIXED HYBRIDIZED POLYMER COMPOUND, BOTH WHITE AND YELLOW, MUST BE APPLIED TO 2 SETS OF 3" X 6" ALUMINUM PANELS AT 20 1 MIL IN THICKNESS, ONE SET WITH NO GLASS SPHERES AND ONE SET WITH GLASS SPHERES AS SPECIFIED IN THIS SPECIFICATION SECTION 633.03.04, PARAGRAPH B (MUST ENSURE 50/50 DISTRIBUTION OF SIZE I AND SIZE II SPHERES FOR THIS WILL IMPACT THE RESULTS OF THIS TEST) AND EXPOSE THE PREPARED SAMPLES IN A Q.U.V. ENVIRONMENTAL TESTING CHAMBER, AS DESCRIBED IN ASTM G-53, AND THEY SHALL CONFORM TO THE FOLLOWING REQUIREMENTS. THE TEST SHALL BE CONDUCTED FOR 75 HOURS AT 122 DEGREES F, 4 HOURS HUMIDITY AND 4 HOURS U.V., IN ALTERNATING CYCLES. THE PREPARED PANELS SHALL BE CURED AT 77 DEGREES F FOR 72 HOURS PRIOR TO EXPOSURE. THE COLOR OF THE WHITE EPOXY MATERIAL SHALL NOT BE DARKER THAN FEDERAL STANDARD NO. 595A-17855. THE COLOR OF THE YELLOW EPOXY MATERIAL SHALL BE REASONABLY CLOSE TO FEDERAL STANDARD NO.595A-13415.

17. ACCELERATED LIFE CYCLE AGING TEST

THE MATERIAL MUST NOT SHOW ANY EVIDENCE OF BLISTERING, BUBBLING, OR DELAMINATING WHEN SUBMITTED TO TEST METHOD ATR-931. INDEPENDENT TEST LABORATORIES SUCH AS PSI CAN BE CONTACTED TO PERFORM ATR-931. CLEVELAND OFFICE: (216) 447-1335, CONTACT JIM McCUE.

REFLECTIVE MEDIA SHALL COMPLY WITH THE FOLLOWING REQUIREMENTS:

BOTH SIZE I AND SIZE II REFLECTIVE GLASS BEADS SHALL BE SIMULTANEOUSLY DISPENSED THROUGH INDIVIDUAL DISPENSING GUNS ON THE WET MATERIAL RESPECTIVELY AND THE COMBINED APPLICATION OF BOTH SIZES SHALL BE AT A MINIMUM RATE OF 25 LBS/GAL WITH EACH SIZE RANGING BETWEEN 12-13 LBS/GAL AND THE BEADS SHALL CONFORM TO THE FOLLOWING REQUIREMENTS:

THE GLASS BEADS SHALL BE COLORLESS, CLEAN TRANSPARENT, FREE FROM MILKINESS OR EXCESSIVE AIR BUBBLES, AND ESSENTIALLY CLEAN FROM SURFACE SCARRING OR SCRATCHING.

SIZE I AND SIZE II GLASS BEADS SHALL BE SPHERICAL IN SHAPE AND AT LEAST 70% SHALL BE TRUE SPHERES. SIZE I SPHERES SHALL BE TESTED FOR ROUNDNESS ACCORDING TO THE PROCEDURAL DIRECTIVES OF THE MATERIALS BUREAU. SIZE II SPHERES SHALL BE TESTED IN ACCORDANCE WITH ASTM D-1155.

THE REFRACTIVE INDEX OF THE BEADS SHALL BE A MINIMUM OF 1.50 AS DETERMINED BY THE LIQUID IMMERSION METHOD AT 75 DEGREES F. THE SILICA CONTENT OF THE GLASS BEADS SHALL NOT BE LESS THAN 60%.

SIZE I GLASS BEADS SHALL BE COATED WITH SILANE TYPE ADHERENCE COATING TO ENHANCE ITS EMBEDMENT AND ADHERENCE TO APPLIED BINDER MATERIAL FILM. THE COATED BEADS SHALL EMIT A YELLOW-GREEN FLUORESCENCE WHEN TESTED BY THE DANSYL CHLORIDE TEST PROCEDURE. SIZE II GLASS BEADS SHALL BE TREATED WITH A MOISTURE PROOF COATING. GLASS BEADS SHALL SHOW NO TENDENCY TO ABSORB MOISTURE IN STORAGE AND SHALL REMAIN FREE OF CLUSTERS AND LUMPS. THEY SHALL FLOW FREELY FROM DISPENSING EQUIPMENT AT ANY TIME WHEN ATMOSPHERIC CONDITIONS ARE SATISFACTORY FOR MARKING OPERATIONS. THE MOISTURE RESISTANCE OF THE GLASS BEAD SHALL BE DETERMINED ON THE BASIS OF THE FOLLOWING TEST: PLACE 2 LBS OF BEADS IN A WASHED COTTON BAG HAVING A THREAD COUNT OF 50 PER SQUARE INCH(WARP AND WOOF) AND IMMERSE THE BAG IN A CONTAINER OF WATER FOR 30 SECONDS. REMOVE THE BAG AND FORCE EXCESS WATER FROM THE SAMPLE BY SQUEEZING THE BAG. SUSPEND AND ALLOW THE BAG TO DRAIN FOR 2 HOURS AT ROOM TEMPERATURE (70-72 DEGREES F). THEN MIX THE SAMPLE IN THE BAG SHAKING THOROUGHLY. TRANSFER A SAMPLE SLOWLY TO A CLEAN, DRY GLASS FUNNEL HAVING A STEM 4 INCHES IN LENGTH WITH A 3/8 INCH INSIDE DIAMETER STEM ENTRANCE OPENING AND A MINIMUM EXIT OPENING 1/4 INCH. THE ENTIRE SAMPLE SHALL FLOW FREELY THROUGH THE FUNNEL. IF THE BEADS CLOG WHEN FIRST INTRODUCED, THEN IT IS PERMISSIBLE LIGHTLY TAP THE FUNNEL TO INITIATE THE FLOW.

IN ADDITION TO THE REQUIREMENTS OF 740.10, THE FOLLOWING SHALL APPLY:

INSPECTION SHALL BE DONE AT THE PROJECT SITE. RANDOM SAMPLES SHALL BE OBTAINED FROM THE MATERIAL DELIVERED TO THE PROJECT SITE OR AT OTHER LOCATIONS DESIGNATED BY THE LABORATORY.

GLASS BEADS FOR EPOXY MARKINGS SHALL HAVE THE FOLLOWING GRADATION WHEN TESTED IN ACCORDANCE WITH ASTM D-1214:

SIZE I			SIZE II		
U.S. STD. SIEVE NO.	% RETAINED	% PASSING	U.S. STD. SIEVE NO.	% RETAINED	% PASSING
10	0	100	20	0-5	95-100
12	0-5	95-100	30	5-20	80-95
14	5-20	80-95	50	30-75	9-42
16	40-80	10-40	80	9-32	0-10
18	10-40	0-5	100	0-5	-
20	0-5	0-2	PAN	0-2	-
PAN	0-2				

PERFORMANCE REQUIREMENTS

THE SYSTEM SHALL PROVIDE EFFECTIVE DELINEATION ON CONCRETE AS WELL AS ASPHALT FOR THE SPECIFIED PERIOD AND PROVIDE THE FOLLOWING INITIAL RETROREFLECTIVITY REQUIREMENTS:

	SPECIFIC LUMINAIRE (MILLICANDELAS/ SQ.FT./FT. CANDLE)-MICROLUX 12
WHITE LINE, SYMBOLS AND LEGENDS	250 MIN.
YELLOW LINE	175 MIN.

RE-APPLYING

THE RE-APPLICATION SHALL BE APPLIED OVER THE EXISTING BINDER WITH THE PROPER SURFACE PREPARATION AS STATED IN 641.05. THE RATES OF RE-APPLICATION SHALL BE AS FOLLOWS:

LINE WIDTH	WET FILM THICKNESS	BINDER	REFLECTORIZED SPHERES
4"	10 MILS	481 FT./GAL. 10.97 GAL./MILE	25 LBS./GAL. 274.25 LBS./MILE

METHOD OF MEASUREMENT

IN ADDITION TO THE REQUIREMENTS OF 641.12, THE FOLLOWING SHALL APPLY:

A. THE CONTRACTOR MUST SUBMIT CERTIFIED DOCUMENTS FROM THE MANUFACTURER OF THE AMOUNT OF GALLONS AND POUNDS OF BEADS SHIPPED FOR A PARTICULAR PROJECT.

B. IN THE FIELD, THE CONTRACTOR SHALL FURNISH A CALIBRATED MEASURING DEVICE TO BE USED TO MEASURE THE QUANTITY OF MATERIAL USED SUCH AS STROKE COUNTERS MOUNTED ON THE DISPENSING PUMPS. STROKE COUNTER READINGS MUST BE TAKEN AT THE BEGINNING AND END OF EACH DAY BY THE STATE AUTHORIZED INSPECTOR. CAUTION MUST BE TAKEN WHILE RECIRCULATING THE MATERIAL TO TURN OFF THE STROKE COUNTER ON THE PUMP. (USING "DIPPING THE TANK" METHOD AS THE ONLY MEASURE IS NOT SUFFICIENT)

C. THE RATE OF APPLICATION OF MATERIALS SHALL BE VERIFIED BY COMPARING THE AMOUNT OF MATERIAL USED WITH THE COMPUTED AMOUNT NEEDED FOR EACH SECTION. WHERE SHORT SECTIONS ARE INVOLVED AND IT IS NOT PRACTICAL OR FEASIBLE TO DETERMINE THE QUANTITIES USED ON EACH AND EVERY SHORT SECTION, SUCH SECTIONS MAY BY AGREEMENT BETWEEN THE ENGINEER AND CONTRACTOR, BE GROUPED TOGETHER TO VERIFY THE QUANTITIES USED.

PLOTTED FROM: ::\users\eforsber\pid08459\dgn\tcgn1.dgn
PLOT SUBMITTED: 27-JUL-1998 11:35
TCGN1.DGN

D. CONTRACT PRICE ADJUSTMENT FOR EACH SECTION WILL BE BASED ON THE FOLLOWING PERCENT OF BINDER AND BEADS USED FOR EACH SECTION VERSUS THE CALCULATED QUANTITIES, WITH PAYMENT DETERMINED USING THE LOW BAND IF THERE IS A DIFFERENT BAND FOR BEADS AND BINDER. WHERE SHORT SECTIONS ARE GROUPED TOGETHER FOR VERIFICATION OF QUANTITIES, THE BAND DETERMINED ON THE BASIS OF A SINGLE RATE APPLICATION VERIFICATION SHALL APPLY TO ALL SECTIONS OF THE GROUP.

100% TO 95%	BAND 1
94.9% TO 90%	BAND 2
89.9% TO 80%	BAND 3
79.9% AND LESS	BAND 4

BASIS OF PAYMENT

FOR THE NUMBER MILES OF LINE APPLIED, GROUPED INTO EACH BAND, THE CONTRACTOR WILL BE PAID THE CONTRACT PRICE, ADJUSTED IN ACCORD WITH THE FOLLOWING SCHEDULE:

BAND 1	100% OF CONTRACT UNIT PRICE
BAND 2	90% OF CONTRACT UNIT PRICE
BAND 3	80% OF CONTRACT UNIT PRICE
BAND 4	RE-APPLY

PAYMENT WILL BE MADE FOR:

ITEM	UNIT	DESCRIPTION
SPEC	MILE	PAVEMENT MARKING MISC.: EPOXY EDGE LINE
SPEC	MILE	PAVEMENT MARKING MISC.: EPOXY LANE LINE
SPEC	LIN FT	PAVEMENT MARKING MISC.: EPOXY CHANNELIZING LINE
SPEC	LIN FT	PAVEMENT MARKING MISC.: EPOXY TRANSVERSE LINE
SPEC	LIN FT	PAVEMENT MARKING MISC.: DOTTED LINE, 6 INCH
SPEC	LIN FT	PAVEMENT MARKING MISC.: EPOXY CURB MARKING
SPEC	SQ FT	PAVEMENT MARKING MISC.: EPOXY ISLAND MARKING
SPEC	EACH	PAVEMENT MARKING MISC.: LANE ARROWS
SPEC	EACH	PAVEMENT MARKING MISC.: WORD ON PAVEMENT, 72 INCH

PROTECTIVE COATING OF OVERHEAD SIGN STRUCTURES

GENERAL

OVERHEAD SIGN SUPPORTS CAN BE SEPARATED INTO MAJOR SECTIONS SUCH AS END FRAMES, TRUSSES, VERTICAL POLES AND CANTILEVER ARMS. DURING THE IMPLEMENTATION OF THIS WORK ITEM IT WILL BE BENEFICIAL TO REFER TO THE MAJOR SECTIONS OF THE OVERHEAD SIGN SUPPORTS RATHER THAN THE WHOLE SUPPORT. MORE SPECIFIC INSTRUCTIONS AND FLEXIBILITY CAN BE GIVEN BASED UPON THE UNIT OF MEASURE AND PAYMENT PER MAJOR SUPPORT SECTION.

THE PROTECTIVE COATING OF OVERHEAD SIGN SUPPORT SECTIONS SHALL BE A FOUR PART PROCESS TO INCLUDE SURFACE PREPARATION FOLLOWED BY A THREE STEP COATING SYSTEM. THIS THREE STEP COATING SYSTEM SHALL CONSIST OF AN EPOXY PRIME COAT, AN EPOXY INTERMEDIATE COAT, AND A URETHANE TOP COAT, WITH EACH COAT A DIFFERENT COLOR. FOR AN EXPLANATION OF THE MATERIALS TO BE USED SEE NOTE ENTITLED "COATING SYSTEM". THE PURPOSE OF THIS COATING IS TO PROVIDE PROTECTION FOR NEW (UNWEATHERED) AND OLDER (WEATHERED) GALVANIZED STEEL SUPPORT SECTIONS FROM CORROSIVE ELEMENTS IN THE ATMOSPHERE. COATING AND SURFACE PREPARATION OF THE NEW GALVANIZED SUPPORT SECTIONS SHOULD BE DONE BY THE MANUFACTURER.

THE CONTRACTOR SHALL TAKE ALL NECESSARY PRECAUTIONS TO COMPLY WITH POLLUTION LAWS. RULES OR REGULATIONS OF FEDERAL, STATE, OR LOCAL AGENCIES. THE COATING MATERIALS SPECIFIED FOR THE WORK CAN BE HAZARDOUS TO THE HEALTH OF THE APPLICATOR IF NOT APPLIED AS PER THE MANUFACTURER'S INSTRUCTIONS. THE CONTRACTOR SHALL FOLLOW THE DATA SHEET AND THE LABEL ON THE PAINT CONTAINERS. THESE PRECAUTIONS SHALL INCLUDE THE USE OF RESPIRATORS AND EYE AND SKIN PROTECTION AS SPECIFIED. THE CONTRACTOR SHALL ALSO INSURE THAT HIS PAINTING OPERATIONS AND LOCATION WILL NOT ENDANGER OR ADVERSELY AFFECT THE PUBLIC IN GENERAL.

THE PROPOSED CLEANING AND COATING OPERATIONS SHALL BE PERFORMED ONLY WHEN THE AMBIENT TEMPERATURE IS 50 DEGREES F OR ABOVE FOR A PERIOD OF 24 CONTINUOUS HOURS. PAINT SHALL NOT BE APPLIED DURING RAIN, FOG, OR MIST, OR WHEN THE STEEL SURFACE TEMPERATURE IS LESS THAN 5 DEGREES F ABOVE THE DEW POINT. PAINT SHALL NOT BE APPLIED TO WET OR DAMP SURFACES OR ON FROSTED OR ICE COATED SURFACES. PAINT SHALL NOT BE APPLIED WHEN THE RELATIVE HUMIDITY IS GREATER THAN 85%. ALL STEEL SURFACES OF TRUSS AND END FRAMES INCLUDING THE WELDED AREAS, BALLAST ENCLOSURE MOUNTING BRACKET AND THE BASE PLATES ARE TO BE CLEANED AND COATED. BEFORE EACH COATING IS APPLIED, IT SHALL BE MIXED WITH AN APPROVED POWER MECHANICAL MIXER TO A UNIFORM CONSISTENCY WHICH SHALL BE MAINTAINED DURING ITS APPLICATION. EACH COAT SHALL BE APPLIED IN A WORKMANLIKE MANNER AS A CONTINUOUS FILM OF UNIFORM THICKNESS WHICH IS FREE OF HOLIDAYS, PORES, RUNS, OR SAGS. ALL COATS SHALL BE APPLIED BY BRUSH. THINNING OF PAINT IS STRICTLY PROHIBITED. PAINT NOT CAPABLE OF BEING APPLIED AS SPECIFIED SHALL NOT BE USED. THE COATING SHALL PENETRATE ALL JOINTS AND CONNECTIONS. THE ENGINEER SHALL BE NOTIFIED 24 HOURS PRIOR TO ANY CLEANING OR COATING OPERATIONS SO THAT INSPECTION SERVICES CAN BE PROVIDED.

TO PROVIDE ASSURANCES THAT NO THINNING OF THE PROTECTIVE COATING MATERIAL IS BEING DONE, PERIODIC CHECKS BY A STATE INSPECTOR WILL BE MADE OF THE MATERIAL. THESE CHECKS WILL BE MADE UTILIZING A VISCOSITY TEST CUP PROCEDURE AS PROVIDED BY THE MANUFACTURER OF THE MATERIAL. THE FREQUENCY OF THESE CHECKS WILL BE DETERMINED BY THE ENGINEER BASED UPON FIELD EVALUATION AND JOB PERFORMANCE.

IF THE VISCOSITY CHECK REVEALS THAT THE MATERIAL HAS BEEN THINNED, IMMEDIATE REJECTION OF THE MATERIAL SHALL BE MADE. THIS REJECTION SHALL REQUIRE THE CONTRACTOR TO IMMEDIATELY STOP USING THE MATERIAL AND PROVIDE NEW MATERIAL OF THE PROPER SPECIFICATION PER PLAN. IN ADDITION, THE COATING OF THE SIGN SUPPORT WITH THE NON-APPROVED MATERIAL BE COSIDERED UNACCEPTABLE. THEREFORE THE SUPPORT SHALL BE STRIPPED AND RE-COATED WITH APPROVED MATERIAL (UNTHINNED MATERIAL).

3 TO 4 VISCOSITY CHECKS INDICATING A PERPETUAL QUALITY CONTROL PROBLEM (THINNED MATERIAL) SHALL BE CONSIDERED SUFFICIENT JUSTIFICATION TO TERMINATE THE CONTRACT.

THE COST FOR THE VISCOSITY TEST KIT SHALL BE BORN BY THE CONTRACTOR AND CONSIDERED INCIDENTAL TO THE ITEM SPECIALS PER COAT.THE TEST KIT SHALL CONTAIN ITEMS SUCH AS INSTRUCTIONS, VISCOSITY CUP, STANDARD COMPARISON RATES, CARRYING CASE, CLEANING EQUIPMENT, STOPWATCH, ETC. THE KIT SHALL BE GIVEN TO THE STATE INSPECTOR FOR USE DURING THE PERFORMANCE OF THE WORK. AFTER THE PROJECT IS COMPLETE, THE TEST KIT SHALL REVERT TO THE STATE AS STATE PROPERTY.

COATING SYSTEM

THE COATING SYSTEM SHALL CONSIST OF A POLYAMIDE-CURED EPOXY PRIME COAT, A POLYAMIDE-CURED EPOXY INTERMEDIATE COAT AND AN ALIPHATIC POLYURETHANE TOP COAT. THE COATING MATERIALS USED SHALL BE THOSE AS LISTED FROM ONE OF THE FOLLOWING MANUFACTURERS OR AN APPROVED EQUAL:

1. AMERON
   210 NORTH BERRY STREET
   BREA, CALIFORNIA 92622
   LOCAL TELEPHONE CONTACT : (419) 885-5336
   PRIME COAT : AMERCOAT 385
   INTERMEDIATE COAT : AMERLOCK 400
   TOP COAT : AMERCOAT 450 HS

2. ICI/DEVOE COATINGS
   5480 CLOVERLEAF PKWY. #5
   VALLEY VIEW, OHIO 44125
   LOCAL TELEPHONE CONTACT : (216) 328-1581
   PRIME COAT : DEVRAN 4170 CORROSION RESISTANT EPOXY
   INTERMEDIATE COAT : DEVRAN 4170 CORROSION RESISTANT EPOXY
   TOP COAT : DEVTHANE 4708 ALIPHATIC URETHANE ENAMEL

3. PORTER PAINT CO.
   400 SOUTH 13TH STREET
   LOUISVILLE, KY 40201
   LOCAL TELEPHONE CONTACT : (419) 666-0026
   PRIME COAT : PORTER PAINTS MCR 4300
   INTERMEDIATE COAT : PORTER PAINTS MCR 4300
   TOP COAT : PORTER PAINTS HYTHANE

4. POLYCARB
   33095 BAINBRIDGE ROAD
   P.O. BOX 39278
   SOLON, OHIO 44139
   LOCAL TELEPHONE CONTACT : (440) 248-1223
   PRIME COAT : MARK-60 (ULTRAPOX)
   INTERMEDIATE COAT : MARK-60 (ULTRAPOX)
   TOP COAT : MARK-73 (ULTRA-KOTE)

5. SHERWIN-WILLIAMS COMPANY
   671 BETA DRIVE
   MAYFIELD VILLAGE, OHIO 44143
   LOCAL TELEPHONE CONTACT : (440) 461-3310
   PRIME COAT : TILE-CLAD II HI-BILD PRIMER
   INTERMEDIATE COAT : HI-SOLIDS CATALYZED EPOXY
   TOP COAT : HI-BILD ALIPHATIC POLYURETHANE ENAMEL

ALL THREE COATS OF THE SYSTEM SHALL BE MANUFACTURED BY THE SAME COMPANY TO INSURE COMPATIBILITY AMONG COATS.

PLOTTED FROM: i:\users\eforsber\pid08459\dgn\tcgn1.dgn
TCGN1.DGN
PLOT SUBMITTED: 27-JUL-1998 11:35

SURFACE PREPARATIONS, NEW SUPPORT SECTIONS

NEW UNWEATHERED GALVANIZED SUPPORT SECTIONS SHALL HAVE THEIR SURFACE PREPARATION AS WELL AS THEIR PROTECTIVE COATING DONE AT THE MANUFACTURER OF THE SUPPORT SECTIONS.

THE SUPPORT SECTIONS SHALL BE PREPARED FOR COATING BY SSPC - SP1 FOLLOWED BY SSPC - SP7 (SOLVENT CLEANING) FOLLOWED BY A BRUSH-OFF BLAST. BLASTING ABRASIVES CONTAINING MORE THAN 1% FREE SILICA SHALL NOT BE ALLOWED. BEFORE THE PREPARED SURFACE DEGRADES FROM THE PRESCRIBED STANDARDS, THE PRIME COAT SHALL BE APPLIED. IN EVERY CASE, THE SURFACE SHALL BE COATED WITH THE EPOXY PRIME COAT ON THE SAME DAY OF SURFACE PREPARATION. CAREFUL HANDLING AND STORAGE WILL BE REQUIRED TO PREVENT AND SCRAPING, MARRING, OR OTHER SURFACE DAMAGE TO THE PREPARED SURFACE.

PAYMENT SHALL INCLUDE ALL LABOR, EQUIPMENT, HANDLING, TRANSPORTATION COSTS AND MATERIALS NECESSARY TO ACCOMPLISH THIS ITEM OF WORK PER MAJOR SUPPORT SECTION.

BASIS OF PAYMENT WILL BE AS FOLLOWS:
ITEM 630-SURFACE PREPARATION, NEW SUPPORT SECTIONS AT THE CONTRACT BID PRICE PER EACH MAJOR SUPPORT SECTION.

SURFACE PREPARATION, EXISTING SUPPORT SECTIONS

EXISTING, WEATHERED GALVANIZED SUPPORT SECTIONS SHALL HAVE THEIR SURFACE PREPRATION AS WELL AS THEIR PROTECTIVE COATING UNDER CONDITIONS OF TEMPERATURE AND HUMIDITY WITHIN THE SAME RANGE AS SPECIFIED BY THE MANUFACTURER OF THE EPOXY - PRIME COAT MATERIAL TO BE USED IMMEDIATELY AFTER THIS CLEANING OPERATION. THE SUPPORT SECTIONS SHALL BE PREPARED FOR COATING BY SSPC - SP1 FOLLOWED BY SSPC - SP6 (SOLVENT CLEANING FOLLOWED BY A COMMERCIAL BLAST CLEANING). BEFORE THE PREPARED SURFACE DEGRADES FROM THE PRESCRIBED STANDARDS, THE PRIME COAT SHALL BE APPLIED. IN EVERY CASE, THE SURFACE SHALL BE COATED WITH THE EPOXY PRIME COAT ON THE SAME DAY AS THE SURFACE PREPARATION. CAREFUL HANDLING AND STORAGE WILL BE REQUIRED TO PREVENT ANY SCRAPING, MARRING, OR OTHER SURFACE DAMAGE TO THE PREPARED SURFACE.

PAYMENT SHALL INCLUDE ALL LABOR, EQUIPMENT, HANDLING, TRANSPORTATION COSTS AND MATERIALS NECESSARY TO ACCOMPLISH THIS ITEM OF WORK PER MAJOR SUPPORT SECTION.

BASIS OF PAYMENT WILL BE AS FOLLOWS:
ITEM 630-SURFACE PREPARATION, EXISTING SUPPORT SECTIONS AT THE CONTRACT BID PRICE PER EACH MAJOR SUPPORT SECTION.

COATING, EPOXY PRIME COAT, SUPPORT SECTIONS

THIS ITEM SHALL CONSIST OF ONE (1) COAT OF AN EPOXY PRIMER TO SUPPORT SECTIONS. THE TOTAL DRY FILM THICKNESS OF THIS COAT SHALL BE BETWEEN 1.5 AND 2.0 MILS. IF MORE THAN ONE PASS IS NECESSARY TO OBTAIN THE REQUIRED THICKNESS, THAT COAT SHALL BE BORNE BY THE CONTRACTOR.

THIS COAT SHALL IN ALL CASES BE APPLIED BY BRUSH OVER SURFACES THAT WERE PREPARED EARLIER THAT SAME DAY. THE THINNING OF THE EPOXY MATERIAL IS STRICTLY PROHIBITED. MATERIAL NOT CAPABLE OF BEING APPLIED AS SPECIFIED SHALL NOT BE USED.

WHEN THE AVERAGE DRY FILM THICKNESS OF THIS COAT OVER THE ENTIRE SUPPORT SECTION IS LESS THAN THE SPECIFIED 1.5 BUT IS AT LEAST 1.25 MILS, THE CONTRACT BID PRICE FOR THIS ITEM SHALL BE REDUCED IN DIRECT PROPORTION TO THE PERCENT DEFICIENCY OF COATING UP TO 16-2/3%. IF THE DEFICIENCY OF COATING IS MORE THAN 16-2/3% (I.E. THE AVERAGE DRY FILM THICKNESS IS LESS THAN 1.25 MILS) THE WORK FOR THIS ITEM SHALL BE CONSIDERED UNSATISFACTORY AND SHALL BE RECOATED AT THE FULL EXPENSE OF THE CONTRACTOR, INCLUDING ALL LABOR, EQUIPMENT AND MATERIAL.

THE EPOXY PRIME COAT CHOSEN BY THE CONTRACTOR SHALL BE ONE OF THE FOLLOWING TWO-COMPONENT COMPOSITIONS CONFORMING TO ITS LISTED PROPERTIES:

AMERCOAT 385
% SOLIDS BY VOLUME : 47% +/- 3 %
POT LIFE : 8 HRS. @ 77 DEGREES F (25 DEGREES C)
DRYING TIME : 4 HRS. @ 77 DEGREES F

DEVRAN 4170 CORROSION RESISTANT EPOXY PRIMER 5465 SERIES
% SOLIDS BY VOLUME : 54% +/- 1%
% SOLIDS BY WEIGHT : 71 % +/- 1%
POT LIFE : 4 HRS. @ 77 DEGREES F
DRYING TIME : TOUCH 1-2 HRS., RECOAT 7 HRS.
VISCOSITY : 95-100 KU

MCR-4301 EPOXY PRIMER
% SOLIDS BY VOLUME : 48.0% +/- 2%
POT LIFE : 30 HRS. @ 50-60 DEGREES F
16 HRS. @ 80-100 DEGREES F
DRYING TIME : 4-6 HRS. @ 50-60 DEGREES F

MARK-60 ULTRAPOX
% SOLIDS BY WEIGHT : 70-75% +/- 2%
POT LIFE : 6 HRS. @ 75 DEGREES F
DRYING TIME : 2-3 HRS. INITIAL SET @ 75 DEGREES F
VISCOSITY : 300-500 CPS @ 75 DEGREES F

TILE-CLAD II HI-BILD PRIMER
% SOLIDS BY VOLUME : 48% +/- 2%
% SOLIDS BY WEIGHT : 63% +/- 2%
POT LIFE : 8 HRS. @ 77 DEGREES F
@ 77 DEGREES F
DRYING TIME : 1 HR. TO TOUCH, 6 HRS. TO RECOAT

FOR NEW SUPPORT SECTIONS THIS PRIME COAT SHALL BE DONE AT THE MANUFACTURER OF THE SUPPORT SECTIONS. VERIFICATION BY THE MANUFACTURER OF THE COATING MATERIAL FOR THE PRIME COAT PROCEDURES WILL BE REQUIRED. CAREFUL HANDLING AND STORAGE WILL BE REQUIRED TO PREVENT ANY SCRAPING, MARRING OR OTHER SURFACE DAMAGE TO THE PRIME COAT.

THE PAYMENT SHALL INCLUDE ALL LABOR, EQUIPMENT, HANDLING COSTS, AND MATERIALS NECESSARY TO ACCOMPLISH THIS ITEM OF WORK. THIS PRIME COAT SHALL BE MANUFACTURED BY THE SAME COMPANY SUPPLYING THE INTERMEDIATE AND TOP COATS. A PROPERLY CALIBRATED DRY FILM THICKNESS INSTRUMENT WILL BE USED TO CHECK THE COATING.

BASIS OF PAYMENT WILL BE AS FOLLOWS:
ITEM 630-COATING, EPOXY PRIME COAT, SUPPORT SECTIONS, AT THE CONTRACT BID PRICE PER EACH MAJOR SUPPORT SECTION.

COATING EPOXY INTERMEDIATE COAT, SUPPORT SECTIONS

THIS ITEM SHALL CONSIST OF THE APPLICATION OF ONE (1) COAT OF EPOXY TO SUPPORT SECTIONS. THE TOTAL DRY FILM THICKNESS OF THIS COAT SHALL NOT BE LESS THAN SIX (6.0) MILS. IF MORE THAN ONE PASS IS NECESSARY TO OBTAIN THE REQUIRED THICKNESS, THAT COAT SHALL BE BORNE BY THE CONTRACTOR. THIS COAT SHALL BE APPLIED BY BRUSH. THINNING OF THE EPOXY MATERIAL IS STRICTLY PROHIBITED.MATERIAL NOT CAPABLE OF BEING APPLIED AS SPECIFIED SHALL NOT BE USED.

WHEN THE AVERAGE DRY FILM THICKNESS OF THIS COAT OVER THE ENTIRE SUPPORT SECTION IS LESS THAN THE SPECIFIED SIX (6.0) MILS, BUT IS AT LEAST FIVE (5.0) MILS, THE CONTRACT PRICE FOR THIS ITEM SHALL BE REDUCED IN DIRECT PROPORTION TO THE PERCENT DEFICIENCY OF COATING UP TO 16-2/3%. IF THE DEFICIENCY OF COATING IS MORE THAN 16-2/3 %, (I.E. THE AVERAGE FILM THICKNESS IS LESS THAN 5.0 MILS), THE WORK FOR THIS ITEM SHALL BE CONSIDERED UNSATISFACTORY AND SHALL BE RECOATED AT THE FULL EXPENSE OF THE CONTRACTOR, INCLUDING ALL LABOR, EQUIPMENT, AND MATERIAL. THE EPOXY INTERMEDIATE COAT CHOSEN BY THE CONTRACTOR SHALL BE ONE OF THE FOLLOWING TWO-COMPONENT COMPOSITIONS CONFORMING TO ITS LISTED PROPERTIES:

AMERLOCK 400
% SOLIDS BY VOLUME : 83% +/- 2%
POT LIFE : 2-1/2 HRS. @ 70 DEGREES F
DRYING TIME : 20 HRS. @ 70 DEGREES F

DEVRAN 4170 CORROSION RESISTANT EPOXY PRIMER 5465 SERIES
% SOLIDS BY VOLUME : 54% +/- 1%
% SOLIDS BY WEIGHT : 71 % +/- 1%
POT LIFE : 4 HRS. @ 77 DEGREES F
DRYING TIME : TOUCH 1-2 HRS., RECOAT 7 HRS.
VISCOSITY : 95-100 KU
70 DEGREES F, 50% R.H.

MCR-4301 EPOXY PRIMER
% SOLIDS BY VOLUME : 48.0% +/- 2%
POT LIFE : 30 HRS. @ 50-0 DEGREES F, 16 HRS. @ 80 DEGREES F
DRYING TIME : 1-2 HRS. @ 60-80 DEGREES F

MARK-60 ULTRAPOX
% SOLIDS BY WEIGHT : 70-75% +/- 2%
POT LIFE : 6 HRS. @ 75 DEGREES F
DRYING TIME : 2-3 HRS. INITIAL SET @ 75 DEGREES F

HI-SOLIDS CATALYZED EPOXY
% SOLIDS BY VOLUME : 61% +/- 2% (SLATE GRAY)
% SOLIDS BY WEIGHT : 77% +/- 2%
POT LIFE : 5 HRS. @ 77 DEGREES F
DRYING TIME : 1 HR. TO TOUCH, 4 HRS. TACK FREE
6 HRS. TO RECOAT @ 77 DEGREES F, 50% R.H.

AT LEAST 24 HOURS BUT NO MORE THAN THREE (3) DAYS SHALL ELAPSE AFTER THE APPLICATION OF THE EPOXY PRIME COAT AND BEFORE THE APPLICATION OF THE EPOXY INTERMEDIATE COAT. SURFACES SHALL IN ALL CASES BE CLEAN BEFORE THE INTERMEDIATE COAT IS APPLIED.

FOR NEW SUPPORT SECTIONS, THE INTERMEDIATE COAT SHALL BE DONE AT THE MANUFACTURER OF THE SUPPORT SECTIONS. VERIFICATION BY THE MANUFACTURER FOR THE INTERMEDIATE COAT PROCEDURE WILL BE REQUIRED. CAREFUL HANDLING AND STORAGE WILL BE REQUIRED TO PREVENT ANY SCRAPING, MARRING OR OTHER SURFACE DAMAGE TO THE INTERMEDIATE COAT.

THE PAYMENT SHALL INCLUDE ALL LABOR, EQUIPMENT, HANDLING COSTS AND MATERIAL NECESSARY TO ACCOMPLISH THIS ITEM OF WORK. THIS INTERMEDIATE COAT SHALL BE MANUFACTURED BY THE SAME COMPANY SUPPLYING THE PRIME AND TOP COATS. A PROPERLY CALIBRATED DRY FILM THICKNESS INSTRUMENT WILL BE USED TO CHECK THE COATING.

BASIS OF PAYMENT WILL BE AS FOLLOWS:
ITEM 630-COATING, EPOXY, INTERMEDIATE COAT, SUPPORT SECTIONS AT THE CONTRACT BID PRICE PER EACH MAJOR SUPPORT SECTION.

PLOT SUBMITTED: 29-JUL-1998 10:07
PLOTTED FROM: I:\users\eforsber\pid08459\dgn\tcgn1.dgn
TCGN1.DGN

COATING, URETHANE TOP COAT, SUPPORT SECTIONS

THIS ITEM SHALL CONSIST OF THE APPLICATION OF ONE (1) COAT OF URETHANE TO SUPPORT SECTIONS. THE TOTAL DRY FILM THICKNESS OF THIS COAT SHALL NOT BE LESS THAN ONE AND ONE-HALF (1.5) MILS. IF MORE THAN ONE PASS IS NECESSARY TO OBTAIN THE REQUIRED THICKNESS, THAT COAT SHALL BE BORNE BY THE CONTRACTOR. THIS COAT SHALL BE APPLIED BY BRUSH. THINNING OF THE URETHANE MATERIAL IS STRICTLY PROHIBITED. MATERIAL NOT CAPABLE OF BEING APPLIED AS SPECIFIED SHALL NOT BE USED.

WHEN THE AVERAGE DRY FILM THICKNESS OF THIS COAT OVER THE ENTIRE SUPPORT SECTION IS LESS THAN THE SPECIFIED ONE AND ONE-HALF (1.5) MILS BUT IS AT LEAST ONE (1.0) MIL, THE CONTRACT PRICE FOR THIS ITEM SHALL BE REDUCED IN DIRECT PROPORTION TO THE PERCENT DEFICIENCY OF COATING UP TO 33 1/3%. IF THE DEFICIENCY OF THE COATING IS MORE THAN 33 1/3% , (I.E. THE AVERAGE DRY FILM THICKNESS IS LESS THAN 1.0 MIL), THE WORK FOR THIS ITEM SHALL BE CONSIDERED UNSATISFACTORY AND SHALL BE RECOATED AT THE FULL EXPENSE OF THE CONTRACTOR, INCLUDING ALL LABOR, EQUIPMENT AND MATERIAL.

THE URETHANE TOP COAT CHOSEN BY THE CONTRACTOR SHALL BE ONE OF THE FOLLOWING MATERIALS CONFORMING TO ITS LISTED PROPERTIES:

AMERCOAT 450 HS
% SOLIDS BY VOLUME : 45% +/- 2%
POT LIFE : 20 HRS. @ 77 DEGREES F
DRYING TIME : 8 HRS. @ 77 DEGREES F DRY THROUGH

DEVTHANE 4708 ALIPHATIC URETHANE ENAMEL (6200/6252)
% SOLIDS BY VOLUME : 48 +/- 1%
% SOLIDS BY WEIGHT : 59 +/- 1%
POT LIFE : 6 HRS. @ 70 DEGREES F
DRYING TIME: 4 HRS. @ 77 DEGREES F RECOAT

HYTHANE
% SOLIDS BY VOLUME : 42 +/- 2%
POT LIFE : 16 HRS. @ 50 DEGREES F
12 HRS. @ 75 DEGREES F

MARK-73 (ULTRA-KOTE)
% SOLIDS BY VOLUME : 52.5% +/- 2%
% SOLIDS BY WEIGHT : 55% +/- 2%
POT LIFE : 8 HRS. @ 75 DEGREE F
DRYING TIME : 4-5 HRS. @ 75 DEGREES F TACK FREE
VISCOSITY : 70-75 KU @ 75 DEGREES F

HI-BILD ALIPHATIC POLYURETHANE ENAMEL
% SOLIDS BY VOLUME : 40% +/- 2% (CATALYZED)
% SOLIDS BY WEIGHT : 48 % +/- 2%
POT LIFE : 6 HRS. @ 77 DEGREES F
DRYING TIME : 30 MIN. TO TOUCH, 4 HRS. TAK FREE
18 HRS. MIN. 72 HRS. MAX TO RECOAT

AT LEAST 24 HOURS BUT NO MORE THAN THREE (3) DAYS SHALL ELAPSE AFTER THE APPLICATION OF THE EPOXY INTERMEDIATE COAT AND BEFORE THE APPLICATION OF THE URETHANE TOP COAT. SURFACES SHALL IN ALL CASES BE CLEAN BEFORE THE TOP COAT IS APPLIED.

FOR NEW SUPPORT SECTIONS, THIS TOP COAT SHALL BE DONE AT THE MANUFACTURER OF THE SUPPORT SECTIONS. VERIFICATION BY THE MANUFACTURER FOR THE TOP COAT PROCEDURE WILL BE REQUIRED. CAREFUL HANDLING AND STORAGE WILL BE REQUIRED TO PREVENT ANY SCRAPING, MARRING OR OTHER SURFACE DAMAGE TO THE TOP COAT.

THE PAYMENT SHALL INCLUDE ALL LABOR, EQUIPMENT, HANDLING COST AND MATERIALS NECESSARY TO ACCOMPLISH THIS ITEM OF WORK. THIS TOP COAT SHALL BE MANUFACTURED BY THE SAME COMPANY SUPPLYING THE PRIME AND INTERMEDIATE COATS. A PROPERLY CALIBRATED DRY FILM INSTRUMENT WILL BE USED TO CHECK THE COATING.

BASIS OF PAYMENT WILL BE AS FOLLOWS:
ITEM 630-COATING, URETHANE TOP COAT, SUPPORT SECTIONS AT THE CONTRACT BID PRICE PER EACH MAJOR SUPPORT SECTION.

PREQUALIFICATION

PRIOR TO USE, THE CONTRACTOR SHALL SUBMIT TO THE DIRECTOR COPIES OF THE MANUFACTURER'S CERTIFIED TEST DATA SHOWING THAT THE MATERIAL COMPLIES WITH THE REQUIREMENTS OF THIS SPECIFICATION. THE TEST DATA SHALL INCLUDE THE BRAND NAME OF THE PAINT, NAME OF MANUFACTURER, NUMBER OF THE LOT TESTED AND DATE OF MANUFACTURE. WHEN THE PAINT HAS BEEN APPROVED BY THE DIRECTOR, FURTHER PERFORMANCE TESTING BY THE MANUFACTURER WILL NOT BE REQUIRED UNLESS THE FORMULATION OR MANUFACTURING PROCESS HAS BEEN CHANGED, IN WHICH CASE NEW CERTIFIED TEST RESULTS WILL BE REQUIRED.

ACCEPTANCE

THE MANUFACTURER SHALL SUBMIT CERTIFIED TEST DATA IN ACCORDANCE WITH THE REQUIREMENTS OF THIS SPECIFICATION. THE STATE RESERVES THE RIGHT TO SAMPLE AND TEST DELIVERED LOTS FOR COMPLIANCE.

LOCATIONS

THE FOLLOWING SUMMARY OF MAJOR SUPPORT SECTIONS TO HAVE A PROTECTIVE COATING APPLIED IS NOTE BELOW:

SUPPORT NO.	MAJOR SECTIONS	SUPPORT NO.	MAJOR SECTIONS
4	1 POLE, 1 ARM	20	1 POLE, 1 ARM
5	1 POLE, 1 ARM	21	1 POLE, 1 ARM
7	1 POLE, 1 ARM	22	1 POLE, 1 ARM
8	2 END FRAMES	24	1 POLE, 1 ARM
10	2 END FRAMES	27	1 POLE, 1 ARM
11	1 POLE, 1 ARM	28	1 POLE, 1 ARM
12	1 POLE, 1 ARM	29	2 END FRAMES
13	1 POLE, 1 ARM	32	1 POLE, 1 ARM
14	1 POLE, 1 ARM	33	1 POLE, 1 ARM
15	1 POLE, 1 ARM	34	1 POLE, 1 ARM
16	2 END FRAMES	35	1 POLE, 1 ARM
19	2 END FRAMES	53	1 POLE, 1 ARM

THE FOLLOWING QUANTITIES HAVE BEEN CARRIED TO THE GENERAL SUMMARY:

ITEM 630-SURFACE PREPARATION, NEW SUPPORT SECTIONS....48 EACH
ITEM 630-COATING, EPOXY PRIME COAT, SUPPORT SECTIONS..48 EACH
ITEM 630-COATING, EPOXY INTERMEDIATE COAT, SUPPORT SECTIONS.....48 EACH
ITEM 630-COATING, URETHANE TOP COAT, SUPPORT SECTIONS.....48 EACH

Sign Code & Size

Sht. No.	Station	Side	R-1-48 48" x 48"	R-2-36 36" x 36" x 36"	R-2-60 60" x 60" x 60"	R-7B-48 48" x 96"	R-10-48 48" x 60"	R-15B-30 30" x 18"	R-19-24 24" x 30"	R-24-24 24" x 30"	R-37R-24 24" x 30"	R-41A-36 36" x 24"	R-41B-36 36" x 36"	R-43L-48 48" x 18"	R-43R-48 48" x 18"	R-123-36 36" x 36"	
224	503+50 SB I-71	Lt.															
224	503+50 NB I-71	Rt.															
226	530+00 NB I-71	Rt.															
226	530+00 NB I-71	Med.															
226	539+87 NB I-71	Med.															
226	539+87 NB I-71	Rt.															
226	541+52 SB I-71	Med.															
226	541+52 SB I-71	Lt.															
227	547+00 SB I-71	Lt.															
227	552+00 SB I-71	Lt.															
227	552+00 SB I-71	Med.															
227	557+27 NB I-71	Rt.															
227	558+95 SB I-71	Lt.															
227	558+95 NB I-71	Rt.															
227	559+50 SB I-71	Lt.															
229	582+20 NB I-71	Med.															
229	582+20 NB I-71	Med.							1							1	
229	582+77 SB I-71	Med.							1							1	
229	582+85 SB I-71	Med.															
230	591+90 SB I-71	Lt.															
230	602+90 NB I-71	Rt.															
231	608+40 NB I-71	Rt.															
231	609+50 SB I-71	Lt.															
231	609+65 NB I-71	Rt.															
231	614+50 NB I-71	Rt.															
232	614+50 SB I-71	Lt.															
232	615+00 SB I-71	Lt.															
232	618+80 NB I-71	Rt.															
232	622+25 SB I-71	Lt.															
232	622+69 NB I-71	Rt.															
233	624+90 SB I-71	Lt.															
233	632+00 NB I-71	Rt.															
234	633+15 NB I-71	Rt.															
234	639+00 NB I-71	Rt.															
234	647+65 NB I-71	Rt.															
235	652+00 NB I-71	Med.															
235	652+00 NB I-71	Rt.															
235	653+70 NB I-71	Rt.							1							1	
235	654+32 NB I-71	Lt.							1							1	
235	655+50 NB I-71	Rt.															
235	657+10 SB I-71	Lt.															
235	657+35 NB I-71	Rt.															
235	657+56 NB I-71	Med.															
235	658+11 SB I-71	Med.															
235	658+50 SB I-71	Lt.															
235	661+96 NB I-71	Rt.															
235	662+19 SB I-71	Lt.															
235	662+08 NB I-71	Rt.															
235	662+18 NB I-71	Med.															
235	662+19 NB I-71	Med.															
236	665+74 SB I-71	Med.															
236	665+86 SB I-71	Med.															
236	665+98 SB I-71	Lt.															
236	666+00 SB I-71	Lt.															
236	666+50 NB I-71	Rt.															
236	667+00 SB I-71	Lt.															
231	606+88 SB I-71	Lt.			1												
233	626+33 NB I-71	Rt.			1												
234	640+29 NB I-71	Rt.			1												
	TOTALS				3				4							4	

Sht. No.	Station	Side	W-2-36 36" x 36"	W-14-36 36" x 36"	W-33-30 30" x 36"	W-49R-48 48" x 48"	W-68-48 48" x 48"	W-76D-36 36" x 36"	W-97-48 48" x 60"	W-98-48 48" x 60"	W-143-24 24" x 24"	W SPECIAL 36" x 36"	EXISTING		IW-17-24 24" x 12"	IW-37-36 36" x 18"	IW-38-36 36" x 18"			W-1-36-2 36" x 36"	W-5-24-2 24" x 24"	W-5-36-2 36" x 36"	W-25-30 30" x 24"		N-41-12 12" x 48"		X-6L-12 12" x 36"	X-6R-12 12" x 36"	
224	503+50 SB I-71	Lt.																							1				
224	503+50 NB I-71	Rt.																							1				
226	530+00 NB I-71	Rt.					1																						
226	530+00 NB I-71	Med.					1																						
226	539+87 NB I-71	Med.																									1		
226	539+87 NB I-71	Rt.																										1	
226	541+52 SB I-71	Med.																									1		
226	541+52 SB I-71	Lt.																										1	
227	547+00 SB I-71	Lt.																											
227	552+00 SB I-71	Lt.					1																						
227	552+00 SB I-71	Med.					1																						
227	557+27 NB I-71	Rt.																											
227	558+95 SB I-71	Lt.																							1				
227	558+95 NB I-71	Rt.																							1				
227	559+50 SB I-71	Lt.																											
229	582+20 NB I-71	Med.																											
229	582+20 NB I-71	Med.																											
229	582+77 SB I-71	Med.																											
229	582+85 SB I-71	Med.																											
230	591+90 SB I-71	Lt.															1					1							
230	602+90 NB I-71	Rt.																											
231	608+40 NB I-71	Rt.							1																				
231	609+50 SB I-71	Lt.																											
231	609+65 NB I-71	Rt.																											
231	614+50 NB I-71	Rt.																							1				
232	614+50 SB I-71	Lt.																							1				
232	615+00 SB I-71	Lt.				1																							
232	618+80 NB I-71	Rt.				1																							
232	622+25 SB I-71	Lt.																											
232	622+69 NB I-71	Rt.																											
233	624+90 SB I-71	Lt.									1	1																	
233	632+00 NB I-71	Rt.				1																							
234	633+15 NB I-71	Rt.																											
234	639+00 NB I-71	Rt.																											
234	647+65 NB I-71	Rt.																											
235	652+00 NB I-71	Med.					1																						
235	652+00 NB I-71	Rt.					1																						
235	653+70 NB I-71	Rt.																											
235	654+32 NB I-71	Lt.																											
235	655+50 NB I-71	Rt.														1						1							
235	657+10 SB I-71	Lt.																											
235	657+35 NB I-71	Rt.						1																					
235	657+56 NB I-71	Med.																											
235	658+11 SB I-71	Med.																											
235	658+50 SB I-71	Lt.																											
235	661+96 NB I-71	Rt.																										1	
235	662+19 SB I-71	Lt.																											
235	662+08 NB I-71	Rt.																											
235	662+18 NB I-71	Med.																									1		
235	662+19 NB I-71	Med.																											
236	665+74 SB I-71	Med.																									1		
236	665+86 SB I-71	Med.																											
236	665+98 SB I-71	Lt.																											
236	666+00 SB I-71	Lt.																										1	
236	666+50 NB I-71	Rt.																											
236	667+00 SB I-71	Lt.																											
231	606+88 SB I-71	Lt.																											
233	626+33 NB I-71	Rt.																											
234	640+29 NB I-71	Rt.																											
	TOTALS					3	6	1	1		1	1				1	1					2			6		4	4	

Sht. No.	Station	Side	620 Reflector Type D	630 Ground Mounted Beam Support Foundation Each	Ground Mounted Support, No. 3 Post Lin. Ft.		Ground Mounted Support, No. 4 Post Lin. Ft.	Ground Mounted Support S 4 x 7.7 Beam		One Way Support No. 4 Post Lin. Ft.		Sign Support Assembly Pole Mounted Each	Sign, Flat Sheet, Type G, As Per Plan Sq. Ft.	Sign, Flat Sheet, Type G Sq. Ft.	Removal of Ground Mounted Sign and Disposal Each	Removal of Ground Mounted Sign and Reerection Each	Removal of Ground Mounted Major Sign and Disposal Each	Removal of Ground Mounted Major Sign and Re-erection Each	Removal of Ground Mounted Post Support and Disposal Each	Removal of Ground Mounted Beam Support and Disposal Each	Removal of Pole Mounted Sign and Disposal Each		
224	503+50 SB I-71	Lt.			12.00									4.0	1				1				
224	503+50 NB I-71	Rt.			12.00									4.0									
226	530+00 NB I-71	Rt.					15.5-16.0						16.0										
226	530+00 NB I-71	Med.			15.5-16.0								16.0										
226	539+87 NB I-71	Med.			11.00									3.0	1				1				
226	539+87 NB I-71	Rt.			11.00									3.0	1				1				
226	541+52 SB I-71	Med.			11.00									3.0	1				1				
226	541+52 SB I-71	Lt.			11.00									3.0	1				1				
227	547+00 SB I-71	Lt.													2				1				
227	552+00 SB I-71	Lt.					15.5-16.0						16.0										
227	552+00 SB I-71	Med.			15.5-16.0								16.0										
227	557+27 NB I-71	Rt.													1		1			2			
227	558+95 SB I-71	Lt.			12.00									4.0	1				1				
227	558+95 NB I-71	Rt.			12.00									4.0	1				1				
227	559+50 SB I-71	Lt.															1			2			
229	582+20 NB I-71	Med.													2				1				
229	582+20 NB I-71	Med.	1		14.5									5.0-9.0									
229	582+77 SB I-71	Med.	1		14.5									5.0-9.0									
229	582+85 SB I-71	Med.													2				1				
230	591+90 SB I-71	Lt.			14.5									4.5-9.0	2				1				
230	602+90 NB I-71	Rt.													1		1			2			
231	608+40 NB I-71	Rt.					15.5-16.0							20.0									
231	609+50 SB I-71	Lt.													1				2				
231	609+65 NB I-71	Rt.													1				2				
231	614+50 NB I-71	Rt.			12.00									4.0	1				1				
232	614+50 SB I-71	Lt.			12.00									4.0	1				1				
232	615+00 SB I-71	Lt.			15.5-16.0									16.0	1				2				
232	618+80 NB I-71	Rt.			15.5-16.0									16.0	1				2				
232	622+25 SB I-71	Lt.													2				1				
232	622+69 NB I-71	Rt.													1				2				
233	624+90 SB I-71	Lt.					15.5							4.5-9.0									
233	632+00 NB I-71	Rt.			15.5-16.0									16.0	2				2				
234	633+15 NB I-71	Rt.													1				1				
234	639+00 NB I-71	Rt.													1				2				
234	647+65 NB I-71	Rt.													1				1				
235	652+00 NB I-71	Med.			15.5-16.0								16.0										
235	652+00 NB I-71	Rt.			15.5-16.0								16.0										
235	653+70 NB I-71	Rt.	1		14.5									5.0-9.0									
235	654+32 NB I-71	Lt.	1		14.5									5.0-9.0									
235	655+50 NB I-71	Rt.			14.5									4.5-9.0									
235	657+10 SB I-71	Lt.													2				1				
235	657+35 NB I-71	Rt.			14.5									9.0	1				2				
235	657+56 NB I-71	Med.													2				1				
235	658+11 SB I-71	Med.													2				1				
235	658+50 SB I-71	Lt.													1		1			2			
235	661+96 NB I-71	Rt.			11.00									3.0									
235	662+19 SB I-71	Lt.													1				1				
235	662+08 NB I-71	Rt.													1				1				
235	662+18 NB I-71	Med.			11.00									3.0									
235	662+19 NB I-71	Med.													1				1				
236	665+74 SB I-71	Med.			11.00									3.0									
236	665+86 SB I-71	Med.													1				1				
236	665+98 SB I-71	Lt.													1				1				
236	666+00 SB I-71	Lt.			11.00									3.0									
236	666+50 NB I-71	Rt.													1				1				
236	667+00 SB I-71	Lt.															1			2			
231	606+88 SB I-71	Lt.					15.5-16.0							10.83									
233	626+33 NB I-71	Rt.			15.5-16.0									10.83									
234	640+29 NB I-71	Rt.			15.5-16.0									10.83									
	TOTALS		4		545.0		141.5						96.0	253.99	45		5		41	10			

PLOT SUBMITTED: 27-JUL-1998 11:55
TCSD01.DGN
PLOTTED FROM: i:\users\eforsber\pid08459\dgn\tcsd01.dgn

CALC. BY JEN DATE 3-22-94
CHKD. BY FLK DATE 7-1-98

CUY-71-0.00

OHIO
FHWA REGION 5

214F
361

PLOT SUBMITTED: 27-JUL-1998 11:56
TCSD02.DGN
PLOTTED FROM: i:\users\eforsber\pid08459\dgn\tcsd02.dgn

Sign Code & Size

Sht. No.	Station	Side	R-1-48 48" x 48"	R-2-36 36" x 36" x 36"	R-2-60 60" x 60" x 60"	R-7B-48 48" x 96"	R-10-48 48" x 60"	R-15B-30 30" x 18"	R-19-24 24" x 30"	R-24-24 24" x 30"	R-37R-24 24" x 30"	R-41A-36 36" x 24"	R-41B-36 36" x 36"	R-43L-48 48" x 18"	R-43R-48 48" x 18"	R-123-36 36" x 36"	W-2-36 36" x 36"	W-14-36 36" x 36"	W-33-30 30" x 36"	W-49R-48 48" x 48"	W-68-48 48" x 48"	W-76D-36 36" x 36"	W-97-48 48" x 60"	W-98-48 48" x 60"	W-143-24 24" x 24"	W SPECIAL 36" x 36"	EXISTING	IM-17-24 24" x 12"	IM-37-36 36" x 18"	IM-38-36 36" x 18"	M-1-36-2 36" x 36"	M-5-24-2 24" x 24"	M-5-36-2 36" x 36"	M-25-30 30" x 24"	N-41-12 12" x 48"	X-6L-12 12" x 36"	X-6R-12 12" x 36"
236	667+10 NB I-71	Rt.																																	1		
236	667+10 SB I-71	Lt.																																	1		
236	676+00 SB I-71	Lt.																			1																
236	676+00 SB I-71	Med.																			1																
236	677+75 SB I-71	Lt.																																			
236	680+00 SB I-71	Lt.																				1															
237	681+45 SB I-71	Lt.																																			
237	686+90 SB I-71	Lt.																																			
237	689+80 NB I-71	Med.																																			
237	689+80 NB I-71	Rt.																																			1
237	689+81 NB I-71	Med.																																		1	
237	691+10 SB I-71	Med.																																		1	
237	691+10 SB I-71	Lt.																																			1
237	691+70 SB I-71	Lt.																																			
237	693+00 SB I-71	Lt.																											1			1					
238	695+00 NB I-71	Rt.																																			
238	695+15 NB I-71	Rt.																																			1
238	695+15 NB I-71	Med.																																			
238	695+50 NB I-71	Med.																																		1	
238	698+85 SB I-71	Med.																																		1	
238	699+05 SB I-71	Med.																																			
238	699+20 SB I-71	Lt.																																			1
238	699+25 SB I-71	Lt.																																			
238	705+80 NB I-71	Rt.																						1													
238	706+00 SB I-71	Lt.																			1																
238	706+00 SB I-71	Med.																			1																
238	708+60 SB I-71	Lt.																																			
239	713+60 NB I-71	Rt.																		1																	
239	715+15 SB I-71	Lt.																		1																	
239	716+50 SB I-71	Lt.																																			
239	717+30 SB I-71	Lt.																																	1		
239	717+30 NB I-71	Rt.																																	1		
240	719+90 NB I-71	Rt.																																			
240	720+60 NB I-71	Rt.																																			
240	722+00 NB I-71	Rt.																																			
240	723+25 NB I-71	Rt.																																			
240	727+85 SB I-71	Lt.																																			
240	727+68 SB I-71	Lt.																						1													
241	730+90 NB I-71	Rt.																																			
241	740+00 NB I-71	Rt.																										1				1					
242	746+15 NB I-71	Med.																																			
242	746+90 SB I-71	Med.																																			
242	747+50 NB I-71	Rt.																																			
242	748+74 SB I-71	Lt.																																			
242	749+21 NB I-71	Med.						1								1																					
242	749+80 SB I-71	Med.						1								1																					
243	758+50 SB I-71	Lt.																											1			1					
243	761+33 NB I-71	Rt.																																			1
243	761+40 NB I-71	Med.																																		1	
243	763+06 SB I-71	Med.																																		1	
243	763+10 SB I-71	Lt.																																			1
243	768+90 NB I-71	Rt.																					1														
244	770+10 SB I-71	Lt.																																	1		
244	770+10 NB I-71	Rt.																																	1		
244	770+35 NB I-71	Rt.																																			
244	775+50 SB I-71	Lt.																																			
	TOTALS							2								2				2	4	1	1	2					1	2			3		6	6	6

Sht. No.	Station	Side	620	630															
			Reflector, Type D	Ground Mounted Beam Support Foundation Each	Ground Mounted Support, No. 3 Post Lin. Ft.	Ground Mounted Support, No. 4 Post Lin. Ft.	Ground Mounted Support S 4 x 7.7 Beam	One Way Support No. 4 Post Lin. Ft.	Breakaway Beam Connection Each	Sign Support Assembly Pole Mounted Each	Sign, Flat Sheet, Type G As Per Plan Sq. Ft.	Sign, Flat Sheet, Type G Sq. Ft.	Removal of Ground Mounted Sign and Disposal Each	Removal of Ground Mounted Sign and Reerection Each	Removal of Ground Mounted Major Sign and Disposal Each	Removal of Ground Mounted Major Sign and Re-erection Each	Removal of Ground Mounted Post Support and Disposal Each	Removal of Ground Mounted Beam Support and Disposal Each	Removal of Pole Mounted Sign and Disposal Each
236	667+10 NB I-71	Rt.			12.00							4.0							
236	667+10 SB I-71	Lt.			12.00							4.0							
236	676+00 SB I-71	Lt.				15.0-15.5					16.0								
236	676+00 SB I-71	Med.			15.5-16.0						16.0								
236	677+75 SB I-71	Lt.											1				2		
236	680+00 SB I-71	Lt.			15.0							9.0							
237	681+45 SB I-71	Lt.																	
237	686+90 SB I-71	Lt.											1		1			2	
237	689+80 NB I-71	Med.											1				1		
237	689+80 NB I-71	Rt.			11.00							3.0	1				1		
237	689+81 NB I-71	Med.			11.00							3.0							
237	691+10 SB I-71	Med.			11.00							3.0	1				1		
237	691+10 SB I-71	Lt.			11.00							3.0	1				1		
237	691+70 SB I-71	Lt.											2				1		
237	693+00 SB I-71	Lt.				14.5						4.5-9.0							
238	695+00 NB I-71	Rt.											1				1		
238	695+15 NB I-71	Rt.			11.00							3.0							
238	695+15 NB I-71	Med.											1				1		
238	695+50 NB I-71	Med.			11.00							3.0							
238	698+85 SB I-71	Med.			11.00							3.0							
238	699+05 SB I-71	Med.											1				1		
238	699+20 SB I-71	Lt.			11.00							3.0							
238	699+25 SB I-71	Lt.											1				1		
238	705+80 NB I-71	Rt.				16.0-16.5						20.0							
238	706+00 SB I-71	Lt.				15.5-16.0					16.0								
238	706+00 SB I-71	Med.			15.5-16.0						16.0								
238	708+60 SB I-71	Lt.											1				2		
239	713+60 NB I-71	Rt.			15.5-16.0							16.0	1				2		
239	715+15 SB I-71	Lt.			15.5-16.0							16.0	1				2		
239	716+50 SB I-71	Lt.											1				1		
239	717+30 SB I-71	Lt.			12.00							4.0							
239	717+30 NB I-71	Rt.			12.00							4.0							
240	719+90 NB I-71	Rt.											1				1		
240	720+60 NB I-71	Rt.											1				2		
240	722+00 NB I-71	Rt.											1				2		
240	723+25 NB I-71	Rt.											1				2		
240	727+85 SB I-71	Lt.																	2
240	727+68 SB I-71	Lt.				15.5-16.0						20.0							
241	730+90 NB I-71	Rt.											1				2		
241	740+00 NB I-71	Rt.			14.5							4.5-9.0							
242	746+15 NB I-71	Med.											2				1		
242	746+90 SB I-71	Med.											2				1		
242	747+50 NB I-71	Rt.											1				2		
242	748+74 SB I-71	Lt.											1				2		
242	749+21 NB I-71	Med.	1		14.5							5.0-9.0							
242	749+80 SB I-71	Med.	1		14.5							5.0-9.0							
243	758+50 SB I-71	Lt.			14.5							4.5-9.0							
243	761+33 NB I-71	Rt.			11.0							3.0	1				1		
243	761+40 NB I-71	Med.			11.0							3.0							
243	763+06 SB I-71	Med.			11.0							3.0							
243	763+10 SB I-71	Lt.			11.0							3.0	1				1		
243	768+90 NB I-71	Rt.				15.5-16.0						20.0							
244	770+10 SB I-71	Lt.			12.0							4.0	1				1		
244	770+10 NB I-71	Rt.			12.0							4.0	1				1		
244	770+35 NB I-71	Rt.											1				1		
244	775+50 SB I-71	Lt.											1				2		
	TOTALS		2		403.0	172.0					64.0	229.5	33		1		40	2	2

PLOT SUBMITTED: 03-AUG-1998 12:22

TCSD03.DGN

Sign Code & Size

Sht. No.	Station	Side	R-1-48 48" x 48"	R-2-48 48" x 48" 48" x 48"	R-2-60 60" x 60" 60" x 60"	R-7B-48 48" x 96"	R-10-48 48" x 60"	R-15B-30 30" x 18"	R-19-24 24" x 30"	R-23-24 24" x 24"	RP-23-24 24" x 9"	R-24-24 24" x 30"	R-26A-36 42" X 36"	R-27A-36 42" X 36"	R-31N-48 48" X 30"	R-37R-24 24" x 30"	R-41A-36 36" x 24"	R-41B-36 36" x 36"	R-43L-48 48" x 18"	R-43R-48 48" x 18"	R-123-36 36" x 36"	W-2-36 36" x 36"	W-14-36 36" x 36"	W-33-30 30" x 36"	W-49R-48 48" x 48"	W-68-48 48" x 48"	W-76D-36 36" x 36"	W-97-48 48" x 60"	W-98-48 48" x 60"	W-143-24 24" x 24"	W SPECIAL 36" x 36"	EXISTING	W-47-48 48" X 48"	IM-17-24 24" x 12"	IM-37-36 36" x 18"	IM-38-36 36" x 18"	W-1-24-2 24" x 24"	W-5-24-2 24" x 24"	W-5-36-2 36" x 36"	W-25-21 21" x 15"	W-41-12 12" x 48"	Y-6L-12 12" x 36"	Y-6R-12 12" x 36"
244	778+60 NB I-71	Rt.																						1																		
244	778+64 NB I-71	Med.																																							1	
244	778+80 NB I-71	Med.																																									
244	779+90 NB I-71	Rt.																																								1
245	780+75 SB I-71	Lt.																						1																		
245	780+92 SB I-71	Med.																																									
245	781+12 SB I-71	Med.																																							1	
232	117+30 Ramp C-82	Lt.																					1																			
232	117+90 Ramp C-82	Lt.																					1																			
232	118+55 Ramp C-82	Lt.																					1																			
232	119+00 Ramp C-82	Lt.																					1																			
232	119+90 Ramp C-82	Lt.																					1																			
232	120+70 Ramp C-82	Lt.																					1																			
244	76+25 Ramp A-Pearl	Rt.																				1							1													
244	76+35 Ramp A-Pearl	Rt.														1																										
244	76+35 Ramp A-Pearl	Lt.														1																										
244	77+95 Ramp A-Pearl	Rt.																																									
244	79+05 Ramp A-Pearl	Rt.																													1											
244	83+15 Ramp A-Pearl	Rt.														1*																				1*			1*			
244	86+20 Ramp A-Pearl	Rt.		1																																							
244	84+55 Ramp B-Pearl	Lt.		1																																							
244	85+07 Ramp B-Pearl	Rt.																																									
244	85+30 Ramp B-Pearl	Lt.																																									
244	85+35 Ramp B-Pearl	Lt.						1																																			
244	85+85 Ramp B-Pearl	Lt.						1																																			
244	86+10 Ramp B-Pearl	Lt.																												1	1												
245	73+95 Ramp C-Pearl	Rt.																												1	1												
245	74+25 Ramp C-Pearl	Rt.						1																																			
245	74+50 Ramp C-Pearl	Rt.																																									
245	74+60 Ramp C-Pearl	Lt.																																									
245	75+10 Ramp C-Pearl	Rt.		1																																							
245	85+65 Ramp C-Pearl	Rt.																																								1
245	74+00 Ramp D-Pearl	Lt.																																									
245	74+25 Ramp D-Pearl	Lt.																1	1	1																							
245	74+90 Ramp D-Pearl	Lt.																																									
245	75+69 Ramp D-Pearl	Lt.														1																										
245	76+00 Ramp D-Pearl	Lt.											(1)	(2)																													
245	77+38 Ramp D-Pearl	Lt.													1																													
245	79+85 Ramp D-Pearl	Lt.																															1										
245	82+55 Ramp D-Pearl	Lt.														1						1							1													
245	82+55 Ramp D-Pearl	Rt.														1																										
244	37+50 Pearl Rd.	Rt.																																1				1					
244	42+15 Pearl Rd.	Rt.																																									
245	45+30 Pearl Rd.	Lt.																																									
245	45+55 Pearl Rd.	Lt.														1																											
245	45+80 Pearl Rd.	Lt.						1																																			
245	45+90 Pearl Rd.	Med.																																									
245	45+85 Pearl Rd.	Lt.																																									
244	54+18 Pearl Rd.	Med.														1																											
244	54+44 Pearl Rd.	Rt.																																									
245	54+77 Pearl Rd.	Lt.																																									
244	54+72 Pearl Rd.	Rt.														1																											
244	54+96 Pearl Rd.	Rt.	1															1	1	1																							
245	63+00 Pearl Rd.	Lt.																																1				1					
237	683+00 NB I-71	Med.																								1																	
237	683+00 NB I-71	Rt.																								1																	
239	709+01 SB I-71	Lt.			1																																						
240	722+75 NB I-71	Rt.			1																																						
244	774+94 SB I-71	Lt.			1																																						
245	785+63 NB I-71	Rt.			1																																						
245	76+82 Ramp D-Pearl	Lt.																																			1**			1**			
253F	45+62 Pearl Rd.	Rt.								[1]	[1]																															
	TOTALS		1	3	4			4		1	1		1	2	1	3		2	2	2			2	6	2	2				4	2	1	1	2			2			2		2	2

630

Sht. No.	Station	Side	Ground Mounted Beam Support Foundation Each		Ground Mounted Support, No. 3 Post Lin. Ft.	Ground Mounted Support, No. 4 Post Lin. Ft.	Ground Mounted Support S 4 x 7.7 Beam	Sign Hanger Assembly, Mast Arm Mounted, As Per Plan Each	One Way Support No. 4 Post Lin. Ft.	Breakaway Beam Connection Each	Sign Support Assembly Pole Mounted Each	Sign, Flat Sheet, Type G, As Per Plan Sq. Ft.	Sign, Flat Sheet, Type G Sq. Ft.	Removal of Ground Mounted Sign and Disposal Each	Removal of Ground Mounted Sign and Reerection Each	Removal of Ground Mounted Major Sign and Disposal Each	Removal of Ground Mounted Major Sign and Re-erection Each	Removal of Ground Mounted Post Support and Disposal Each	Removal of Ground Mounted Beam Support and Disposal Each	Sign, Extrusheet, Type G Sq. Ft.	Removal of Pole Mounted Sign and Disposal Each		
244	778+60 NB I-71	Rt.			15.5-16.0								16.0	1				2					
244	778+64 NB I-71	Med.			11.0								3.0										
244	778+80 NB I-71	Med.													1				1					
244	779+90 NB I-71	Rt.			11.0								3.0	1				1					
245	780+75 SB I-71	Lt.			15.5-16.0								16.0	1				1					
245	780+92 SB I-71	Med.													1				1					
245	781+12 SB I-71	Med.			11.0								3.0										
232	117+30 Ramp C-82	Lt.			13.5								7.5	1				1					
232	117+90 Ramp C-82	Lt.			13.5								7.5	1				1					
232	118+55 Ramp C-82	Lt.			13.5								7.5	1				1					
232	119+00 Ramp C-82	Lt.											7.5	1				1					
232	119+90 Ramp C-82	Lt.			13.5								7.5	1				1					
232	120+70 Ramp C-82	Lt.			13.5								7.5	1				1					
244	76+25 Ramp A-Pearl	Rt.				15.0							4.0-9.0	2				2					
244	76+35 Ramp A-Pearl	Rt.			13.5								6.0	1				1					
244	76+35 Ramp A-Pearl	Lt.			13.5								6.0	1				1					
244	77+95 Ramp A-Pearl	Rt.															1		2					
244	79+05 Ramp A-Pearl	Rt.			13.5										1							
244	83+15 Ramp A-Pearl	Rt.											2.2-4.0	3				2		6.0			
244	86+20 Ramp A-Pearl	Rt.			12.5-12.5								6.9	1				1					
244	84+55 Ramp B-Pearl	Lt.			12.5-12.5								6.9	1				1					
244	85+07 Ramp B-Pearl	Rt.													1				1					
244	85+30 Ramp B-Pearl	Lt.													1				1					
244	85+35 Ramp B-Pearl	Lt.			12.0								3.75										
244	85+85 Ramp B-Pearl	Lt.			12.0								3.75										
244	86+10 Ramp B-Pearl	Lt.				15.0							4.0-9.0	2				2					
245	73+95 Ramp C-Pearl	Rt.				15.0							4.0-9.0	2				1					
245	74+25 Ramp C-Pearl	Rt.			12.0								3.75										
245	74+50 Ramp C-Pearl	Rt.													1				1					
245	74+60 Ramp C-Pearl	Lt.													1				1					
245	75+10 Ramp C-Pearl	Rt.			12.5-12.5								6.9	1				1					
245	85+65 Ramp C-Pearl	Rt.			11.0								3.0	1				1					
245	74+00 Ramp D-Pearl	Lt.													1				1					
245	74+25 Ramp D-Pearl	Lt.				14.5			15.0				9-6-6										
245	74+90 Ramp D-Pearl	Lt.																					1		
245	75+69 Ramp D-Pearl	Lt.			13.5								6.0	1				1					
245	76+00 Ramp D-Pearl	Lt.											31.5										
245	77+38 Ramp D-Pearl	Lt.			15.5-16.5								10.0										
245	79+85 Ramp D-Pearl	Lt.			15.5-16.0								16.0	1				2					
245	82+55 Ramp D-Pearl	Lt.			15.0								6-9-4	3				2					
245	82+55 Ramp D-Pearl	Rt.			13.5								6.0	1				1					
244	37+50 Pearl Rd.	Rt.			13.5								2.0-4.0										
244	42+15 Pearl Rd.	Rt.													1				2					
245	45+30 Pearl Rd.	Lt.													2				2					
245	45+55 Pearl Rd.	Lt.											5.0	1									
245	45+80 Pearl Rd.	Lt.									2		3.75										
245	45+90 Pearl Rd.	Med.													1									
245	45+85 Pearl Rd.	Lt.													1				2					
244	54+18 Pearl Rd.	Med.			13.5								5.0	1				1					
244	54+44 Pearl Rd.	Rt.													1				2					
245	54+77 Pearl Rd.	Lt.													3				1					
244	54+72 Pearl Rd.	Rt.			13.5								5.0										
244	54+96 Pearl Rd.	Rt.				14.5			15.0				16-9-6-6	5				1					
245	63+00 Pearl Rd.	Lt.			13.5								2.0-4.0										
237	683+00 NB I-71	Med.			15.5-16.0							16.0											
237	683+00 NB I-71	Rt.			15.5-16.0							16.0											
239	709+01 SB I-71	Lt.				15.5-16.0							10.83										
240	722+75 NB I-71	Rt.			15.5-16.0								10.83										
244	774+94 SB I-71	Lt.				15.5-16.0							10.83										
245	785+63 NB I-71	Rt.			15.5-16.0								10.83										
245	76+82 Ramp D-Pearl	Lt.											2.2-4.0										
253F	45+62 Pearl Rd.	Rt.						1					4.0-1.5										
	TOTALS				611.5	137.0		1	30.0		2	32.0	410.42	53	1	1		49		6.0	1		

* Attached to Sign No. 31 ( ) Mounted on Sign No. 53

** Attached to Sign No. 36 [ ] Mounted on Mast Arm Pl, See Sheet 253E For Location

PLOTTED FROM: i:\users\eforsber\pid08459\dgn\tcsd03.dgn

PLOT SUBMITTED: 05-AUG-1998 13:06

TCSS01.DGN

PLOTTED FROM: i:\users\eforsber\pid08459\dgn\tcss01.dgn

									625	630																															631														
Sheet Number	Station	Side	Sign Number	Existing Sign Size (Effective)	Existing Sign Size (Overall)	Proposed Sign Size (Effective)	Proposed Sign Size (Overall)	Proposed Sign Size (Actual)	Ground Rod	Rigid Overhead Sign Support Foundation Each	Ground Mounted Beam Support Foundation Each	Ground Mounted Support, S4X7.7 Beam	Ground Mounted Support, W10X12 Beam	Ground Mounted Support, W8X18	Breakaway Beam Connection	Overhead Sign Support Type TC-16.20, Design 1, Arm 9'	Overhead Sign Support Type TC-16.20, Design 2, Arm 12'	Overhead Sign Support, Type TC-12.30, Design 4, Arm 19'	Overhead Sign Support, Type TC-12.30, Design 4, Arm 20'	Overhead Sign Support, Type TC-12.30, Design 8, Arm 30'	Overhead Sign Support, Type TC-12.30, Design 10, Arm 30'	Overhead Sign Support, Type TC-12.30, Design 12, Arm 30'	Overhead Sign Support, Type TC-7.65, Design 8, 93' Span	Overhead Sign Support, Type TC-7.65, Design 8, 94' Span		Sign Attachment Assembly	Luminaire Support Assembly Type TC-31.21, 3'-3" Arm	Luminaire Support Assembly Type TC-31.21, 4'-3" Arm	Luminaire Support Assembly Type TC-31.21, 5'-9" Arm	Sign, Extrusheet, Type G	Removal of Ground Mounted Sign and Disposal	Removal of Ground Mounted Major Sign and Disposal	Removal of Ground Mounted Major Sign and Reerection	Removal of Ground Mounted Post Support and Disposal	Removal of Ground Mounted Beam Support and Disposal	Removal of Overhead Mounted Sign and Reerection	Removal of Overhead Mounted Sign and Disposal	Removal of Overhead Mounted Sign and Disposal, As Per Plan	Removal of Overhead Sign Support and Disposal, Type TC-12.30	Removal of Overhead Sign Support and Disposal, Type TC-7.65	Removal Misc. & Luminaire Support Assembly and Disposal	Sign Service	Sign Wired	Disconnect Switch with Enclosure, Type X		Ballast, Type CMRI-175-480, Integral	Ballast, Type CMRI-250-480, Integral		Mercury Vapor Luminaire, Type TC-31.21 with 175 Watt Lamp	Mercury Vapor Luminaire, Type TC-31.21 with 250 Watt Lamp	Removal of Luminaire and Disposal	Removal of Disconnect Switch and Disposal	Removal of Ballast and Disposal	Removal of Sign Wiring and Disposal	Removal of Sign Service and Disposal
				L x H	L x H	L x H	L x H	L x H	Each	Each	Each	Lin.Ft.	Lin.Ft.	Lin.Ft.	Each	Each	Each	Each	Each	Each	Each	Each	Each	Each		Each	Each	Each	Each	Sq.Ft.	Each	Each	Each	Each	Each	Each	Each	Each	Each	Each	Each	Each	Each	Each		Each	Each		Each	Each	Each	Each	Each	Each	Each
223	476+75NB I-71	Rt.		11'x3'-6"	11'x3'-6"																											1			2																				
				9'x5'-6"	9'x5'-6"																																																		
223	486+80 NB I-71	Rt.	1			11'x8'-6"	11'x8'-6"	11'x8'-6"			2			22.50 23.50																93.5																									
223	487+55 SB I-71	Lt.	2			9'x8'-6"	9'x8'-6"	9'x8'-6"			2		22.50 23.50																	76.5																									
223	487+60 SB I-71	Lt.		10'x6'	10'x6'																											1			2																				
226	538+00 NB I-71	Rt.	3	11'x5'-6"	11'x5'-6"						2		21.00 23.50																				1	3																					
227	545+00 NB I-71	Rt.	4			16'x9'-6"	16'x9'-6"	16'x9'-6"	1	1										1										152.0																									
								8'x2'																						16.0																									
227	557+00 NB I-71	Rt.	5			13'x7'	13'x7'	13'x7'		1										1										91.0																									
								8'x2'																						16.0																									
227	557+00 SB I-71	Lt.	6			16'x5'	16'x5'	16'x5'			2			22.00 26.50																80.0																									
229	582+70 NB I-71	Rt.	7			16'x9'-6"	16'x9'-6"	16'x9'-6"	1	1										1										152.0																									
								8'x2'																						16.0																									
231	608+47 NB I-71	Rt.	8A			16'x12'	16'x13'	16'x12'-6"	2	2													1							200.0												1	1	1			2			2					
								8'x2'																						16.0																									
			8B			19'x7'	19'x8'	19'x7'-6"																						142.5													1			2			2						
								8'x2'																						16.0																									
231	612+10 NB I-71	Rt.	9	6'x5'	6'x5'	8'x5'	8'x5'	8'x5'			2	18.00 18.00			2															40.0	1				2																				
234	639+70 SB I-71	Lt.		13'x7'	13'x8'																																1			1	2										2	1	2	1	1
				15'x9'-6"	15'x10'-6"																																1				2										2		2	1	
					9'x2'																																1																		
				19'x7'	19'x8'																																1				2										2		2	1	
					9'x2'																																1																		
234	640+86 SB-I-71	Lt.	10A			16'x9'-6"	16'x10'-6"	16'x10'	2	2													1							160.0												1	1	1		2			2						
								9'x2'																						18.0																									
			10B			19'x7'	19'x8'	19'x7'-6"																						142.5													1			2			2						
								9'x2'																						18.0																									
235	659+12 NB I-71	Rt.		16'x11'-6"	16'x12'-6"																																1		1		2										2	1	2	1	1
					8'x2'																																1																		
235	659+75 NB I-71	Rt.	11			16'x12'	16'x13'	16'x12'-6"	1	1												1								200.0												1	1	1			2			2					
								8'x2'																						16.0																									
236	666+40 SB I-71	Lt.	12			16'x9'-6"	16'x9'-6"	16'x9'-6"	1	1											1									152.0																									
								12'x2'																						24.0																									
236	672+00 NB I-71	Rt.		18'x8'	18'x9'																																1		1		2										2	1	2	1	1
					8'x2'																																1																		
236	672+05 NB I-71	Rt.	13			18'x8.5'	18'x9.5'	18'x9'	1	1											1									162.0												1	1	1		2			2						
								8'x2'																						16.0																									
237	685+02 NB I-71	Rt.		16'x10'-6	16'x11'-6"																																1		1												2	1	2	1	1
					8'x2'																																1																		
237	685+50 NB I-71	Rt.	14			16'x12'	16'x13'	16'x12'-6"	1	1												1								200												1	1	1			2			2					
								8'x2'																						16.0																									
237	687+00 SB I-71	Lt.	15			13'x10'	13'x10'	13'x10'	1	1										1										130.0																									
238	705+72 NB I-71	Rt.		13'x7'	13'x8'																																1			1	2										2	1	2	1	1
				16'x11'	16'x12'																																1				2										2		2	1	
					8'x2'																																1																		
	TOTAL								11	12	10	36.00	90.50	94.50	2					4	2	2	2							2362.0	1	2	1	3	6		14		3	2	14	5	7	5		8	6		8	6	16	5	16	8	5

PLOT SUBMITTED: Ø5-AUG-1998 13:Ø6
TCSSØ2.DGN
PLOTTED FROM: i:\users\eforsber\pidØ8459\dgn\tcssØ2.dgn

									625	630																															631														
Sheet Number	Station	Side	Sign Number	Existing Sign Size (Effective)	Existing Sign Size (Overall)	Proposed Sign Size (Effective)	Proposed Sign Size (Overall)	Proposed Sign Size (Actual)	Ground Rod	Rigid Overhead Sign Support Foundation Each	Ground Mounted Beam Support Foundation Each	Ground Mounted Support, S4X7.7 Beam	Ground Mounted Support, W8x18	Ground Mounted Support, W10X12 Beam	Breakaway Beam Connection	Overhead Sign Support Type TC-16.20, Design 1, Arm 9'	Overhead Sign Support Type TC-16.20, Design 1, Arm 12'	Overhead Sign Support, Type TC-12.30, Design 4, Arm 19'	Overhead Sign Support, Type TC-12.30, Design 4, Arm 20'	Overhead Sign Support, Type TC-12.30, Design 8, Arm 30'	Overhead Sign Support, Type TC-12.30, Design 10, Arm 30'	Overhead Sign Support, Type TC-12.30, Design 12, Arm 30'	Overhead Sign Support, Type TC-7.65, Design 8, 93' Span	Overhead Sign Support, Type TC-7.65, Design 8, 94' Span	Overhead Sign Support, Type TC-7.65, Design 8, 96' Span	Sign Attachment Assembly	Luminaire Support Assembly Type TC-31.21, 3'-3" Arm	Luminaire Support Assembly Type TC-31.21, 4'-3" Arm	Luminaire Support Assembly Type TC-31.21, 5'-9" Arm	Sign, Flat Sheet	Sign, Extrusheet, Type G	Removal of Ground Mounted Sign and Disposal	Removal of Ground Mounted Major Sign and Disposal	Removal of Ground Mounted Post Support and Disposal	Removal of Ground Mounted Beam Support and Disposal	Removal of Overhead Mounted Sign and Reerection	Removal of Overhead Mounted Sign and Disposal	Removal of Overhead Mounted Sign and Disposal, As Per Plan	Removal of Overhead Sign Support and Disposal, Type TC-12.30	Removal of Overhead Sign Support and Disposal, Type TC-7.65	Removal Misc. & Luminaire Support Assembly and Disposal	Sign Service	Sign Wired	Disconnect Switch with Enclosure, Type X		Ballast, Type CMRI-175-480, Integral	Ballast, Type CMRI-250-480, Integral		Mercury Vapor Luminaire, Type TC-31.21 with 175 Watt Lamp	Mercury Vapor Luminaire, Type TC-31.21 with 250 Watt Lamp	Removal of Luminaire and Disposal	Removal of Disconnect Switch and Disposal	Removal of Ballast and Disposal	Removal of Sign Wiring and Disposal	Removal of Sign Service and Disposal
				L x H	L x H	L x H	L x H	L x H	Each	Each	Each	Lin.Ft.	Lin.Ft.	Lin.Ft.	Each	Each	Each	Each	Each	Each	Each	Each	Each	Each	Each	Each	Each	Each	Each	Sq.Ft.	Sq.Ft.	Each	Each	Each	Each	Each	Each	Each	Each	Each	Each	Each	Each	Each		Each	Each		Each	Each	Each	Each	Each	Each	Each
238	705+88 NB I-71	Rt.	16A			12'x9'-6"	12'x10'-6"	12'x10'	2	2													1								120.0											1	1	1		2			2						
								8'x2'																							16.0																								
			16B	19'x9'-6"	19'x10'-6"																															1							1			2			2		2		2		
					8'x2'																															1																			
238	708+75 NB I-71	Rt.	17	6'x5'	6'x5'	8'x5'	8'x5'	8'x5'			2	17.50 17.50			2																40.0		1		2																				
240	724+80 SB I-71	Lt.	18	8'x5'	8'x5'	8'x5'	8'x5'	8'x5'																							40.0		1																						
240	727+60 SB I-71	Lt.	19A			16'x9'-6"	16'x10'-6"	16'x10'	2	2														1							160.0																								
								12'x2'																							24.0																								
			19B			19'x9'-6"	19'x10'-6"	19'x10'																							190.0																								
								8'x2'																							16.0																								
240	727+82 SB I-71	Lt.		13'x7'	13'x8'																																1			1	2	1	1	1		2			2		2	1	2	1	1
				16'x11'	16'x12'																																1				2		1			2			2		2		2	1	
					12'x2'																																1																		
				19'x8'-6"	19'x9'-6"																																1				2										2		2	1	
					8'x2'																																1																		
241	733+39 NB I-71	Rt.		10'x4'-6"	10'x5'-6"																																1		1																
					8'x2'																																1																		
241	733+50 NB I-71	Rt.	20			13'x7'	13'x7'	13'x7'	1	1										1											91.0																								
								8'x2'																							16.0																								
241	734+45 SB I-71	Lt.	21			16'x12'	16'x13'	16'x12'-6"	1	1											1										200.0											1	1	1			2			2					
								8'x2'																							16.0																								
241	734+80 SB I-71	Lt.		15'x10'-6"	15'x11'-6"																																1		1		2										2	1	2	1	1
					8'x2'																																1																		
242	747+75 NB I-71	Rt.	22			12'x9'-6"	12'x9'-6"	12'x9'-6"	1	1										1											114.0																								
																															16.0																								
242	750+00 SB I-71	Lt.	24			18'X8'-6"	18'X9'-6"	18'X9'	1	1											1										162.0											1	1	1		2			2						
								8'x2'																							16.0																								
242	754+99 SB I-71	Lt.		18'x8'	18'x9'																																1		1		2										2	1	2	1	1
					8'x2'																																1																		
243	756+90 NB I-71	Rt.	26	11'x5'	11'x5'	12'X6'	12'X6'	12'X6'			2			17.00 20.00	2																72.0		1	3																					
243	762+11.41 NB I-71	Rt.	27	11'x3'	11'x3'	11'x3'-6"	11'x3'-6"	11'x3'-6"									1														38.5							1																	
243	762+35.01 SB I-71	Lt.	28	8'x3'	8'x3'	8'x3'-6"	8'x3'-6"	8'x3'-6"								1															28.0							1																	
243	763+06 NB I-71	Rt.		16'X11'	16'X12'																																1		1		2										2	1	2	1	1
					8'x2'																																1																		
243	769+30 NB I-71	Rt.	29A			14'x6'	14'x7'	14'x6'-6"	2	2															1						91.0											1	1	1		2			2						
								8'x2'																							16.0																								
			29B			15'x7'	15'x8'	15'x7'-6"																							112.5												1			2			2						
								8'x2'																							16.0																								
243	769+52 NB I-71	Rt.		13'x7'	13'x8'																																1			1	2										2	1	2	1	1
				21'x10'	21'x11'																																1				3										3		3	1	
					8'x2'																																1																		
				19'x9'	19'x10'																																1				2										2		2	1	
					8'x2'																																1																		
244	772+10 NB I-71	Rt.	30	8'x5'	8'x5'	8'x5'	8'x5'	8'x5'																							40.0		1																						
244	83+15 Ramp A Pearl	Rt.	31	11'x4'	11'x4'	12'x6'	12'x6'	12'x6'			2		20.75 25.00																		72.0		1																						
244	39+50 NB Pearl	Rt.	32			10'x4'	10'x4'	10'x4'	1	1									1												40.0																								
244	42+19 NB Pearl	Rt.		13'x5'-6"	13'x6'-6"																																1			1	2										2	1	2	1	1
				11'x7'	11'x8'																																1				1										1		1	1	
244	54+34 SB Pearl	Rt.	33			9'x6'-6"	9'x7'-6"	9'x7'	1	1									1												63.0											1	1	1		1			1						
TOTAL									12	12	6	35.00	45.75	37.00	4	1	1		2	2	2		1	1	1						1826.0		5	3	2	2	20	2	4	3	22	6	9	6		15	2		15	2	24	6	24	11	6

SIGN SUB-SUMMARY

PLOT SUBMITTED: 05-AUG-1998 13:07

TCSS03.DGN

PLOTTED FROM: i:\users\eforsber\pid08459\dgn\tcss03.dgn

									625	630																														631														
Sheet Number	Station	Side	Sign Number	Existing Sign Size (Effective)	Existing Sign Size (Overall)	Proposed Sign Size (Effective)	Proposed Sign Size (Overall)	Proposed Sign Size (Actual)	Ground Rod	Rigid Overhead Sign Support Foundation Each	Ground Mounted Beam Support Foundation Each	Ground Mounted Support, S4x7.7 Beam	Ground Mounted Support, W10x12 Beam	Ground Mounted Support, W8x18 Beam	Breakaway Beam Connection	Overhead Sign Support Type TC-16.20, Design 4, Arm 43'	Overhead Sign Support Type TC-16.20, Design 1, Arm 12'	Overhead Sign Support, Type TC-12.30, Design 4, Arm 12'	Overhead Sign Support, Type TC-12.30, Design 4, Arm 19'	Overhead Sign Support, Type TC-12.30, Design 4, Arm 20'	Overhead Sign Support, Type TC-12.30, Design 4, Arm 21'	Overhead Sign Support, Type TC-12.30, Design 8, Arm 30'	Overhead Sign Support, Type TC-12.30, Design 10, Arm 30'	Overhead Sign Support, Type TC-12.30, Design 12, Arm 30'	Sign Attachment Assembly	Luminaire Support Assembly Type TC-31.21, 3'-3" Arm	Luminaire Support Assembly Type TC-31.21, 4'-3" Arm	Luminaire Support Assembly Type TC-31.21, 5'-9" Arm	Sign, Extrusheet, Type G		Removal of Ground Mounted Sign and Disposal	Removal of Ground Mounted Major Sign and Disposal	Removal of Ground Mounted Post Support and Disposal	Removal of Ground Mounted Beam Support and Disposal	Removal of Overhead Mounted Sign and Reerection	Removal of Overhead Mounted Sign and Disposal	Removal of Overhead Mounted Sign and Disposal, As Per Plan	Removal of Overhead Sign Support and Disposal, Type TC-12.30	Removal of Overhead Sign Support and Disposal, Type TC-7.65	Existing Sign Revised With Demountable Copy	Removal of Misc. : Luminaire Support Assembly and Disposal	Sign Service	Sign Wired	Sign Service, As Per Plan	Disconnect Switch with Enclosure, Type X	Ballast, Type CMRI-100-480, Intergral	Ballast, Type CMRI-175-480, Integral	Ballast, Type CMRI-250-480, Integral	Mercury Vapor Luminaire, Type TC-31.21 with 175 Watt Lamp	Mercury Vapor Luminaire, Type TC-31.21 with 250 Watt Lamp	Removal of Luminaire and Disposal	Removal of Disconnect Switch and Disposal	Removal of Ballast and Disposal	Removal of Sign Wiring and Disposal	Removal of Sign Service and Disposal
				L x H	L x H	L x H	L x H	L x H	Each	Each	Each	Lin.Ft.	Lin.Ft.	Lin.Ft.	Each	Each	Each	Each	Each	Each	Each	Each	Each	Each	Each	Each	Each	Each	Sq.Ft.		Each	Each	Each	Each	Each	Each	Each	Each	Each	Each	Each	Each	Each	Each	Each	Each	Each	Each	Each	Each	Each	Each	Each	Each	Each
245	45+80 NB Pearl	Lt.	34			9'x6'-6"	9'x7'-6"	9'x7'	1	1								1											63.0													1	1		1		1		1						
245	56+83 SB Pearl	Lt.		13'x5'-6"	13'x6'-6"																															1			1		2										2	1	2	1	1
				11'x7'	11'x8'																															1					1										1		1	1	
245	61+00 SB Pearl	Lt.	35			10'x4'	10'x4'	10'x4'	1	1										1									40.0																										
245	76+82 Ramp D Pearl	Lt.	36	11'x6'	11'x6'	12'x6'	12'x6'	12'x6'			2		20.0 22.5		2														72.0		2	1		2																					
246	787+60 SB I-71	Lt.	37	6'x5'	6'x5'	8'x5'	8'x5'	8'x5'			2	18.00 18.00			2														40.0		1			2																					
246	791+30 SB I-71	Lt.	38	19'x11'-6"	19'X12'-6"	15'x7'	15'x8'	15'x7'-6"																	3		2		112.5							1								1			2		2						
								8'x2'																					16.0							1																			
246	806+51 SB I-71	Lt.	39A	18'x12'	18'x13'																																											2		2					
					8'x2'																																																		
			39B	16x10'-6"	16x11'-6"	12x9'-6"	12x10'-6"	12'x10'																	3		2		120.0							1							1	1	1		2		2		2		2	2	
					8'x2'			8'x2'																					16.0							1																			
246	834+00 SB I-71	Lt.	40	11x4'-6"	11x5'-6"	13'x7'	13'x8'	13x7'-6"																	3		2		97.5							1														2		2	1	
					8'x2'			8'x2'																					16.0							1																			
246	842+00 SB I-71	Lt.	41	16x10'-6"	16x11'-6"	12x9'-6"	12x10'-6"	12x10																	3		2		120							1														2		2	1	
					8'x2'			8'x2'																					16.0							1																			
229	580+00 SB I-71	Lt.	42			8'x4'	8'x4'	8'x4'			2	20.0/20.5			2														32.0		2		4																						
							R-9B-48																																																
236	678+85 NB I-71	Rt.	43			8'x4	8'x4	8'x4			2	20.0/20.5			2														32.0		2		4																						
							R-9B-48																																																
237	683+00 SB I-71	Lt.	44			8'x4'	8'x4'	8'x4'			2	20.0/20.5			2														32.0		2		4																						
							R-9B-48																																																
224	503+20 SB I-71	Lt.	45			16'x5	16'x5	16'x5			2	24.25-26.50			2														80.0																										
							W-54A-192																																																
224	503+20 SB I-71	Med.	46			16'x5	16'x5	16'x5			2	20.25-19.50			2														80.0																										
							W-54A-192																																																
224	513+40 SB I-71	Lt.	47			16'x5	16'x5	16'x5			2	20.25-17.50			2														80.0																										
							W-54A-192																																																
224	513+40 SB I-71	Med.	48			16'x5	16'x5	16'x5			2	21.25-20.50			2														80.0																										
							W-54A-192																																																
225	526+60 SB I-71	Lt.	49			16'x5	16'x5	16'x5			2	24.25-26.50			2														80.0																										
							W-54A-192																																																
225	526+60 SB I-71	Med.	50			16'x5	16'x5	16'x5			2	21.25-20.50			2														80.0																										
							W-54A-192																																																
227	554+00 SB I-71	Lt.	51			16'x5	16'x5	16'x5			2	22.00-26.50			2														80.0																										
							W-54A-192																																																
227	554+00 SB I-71	Med.	52			16'x5	16'x5	16'x5			2	21.25-20.50			2														80.0																										
							W-54A-192																																																
245	76+00 Ramp D Pearl	Lt.	53			3'-6"x3'	3'-6"x3'	3'-6"x3'		1						1																																							
244	39+30 NB Pearl	Rt.																																		1		1																	
255	62+75 SB Pearl	Lt.																																		1		1																	
232	81+68 SR-82	Rt.																																										1											
232	90+37 SR-82	Rt.																																										1											
233	92+00 SR-82	Lt.																																										1											
233	131+50 Ramp F																																							1				1											
233	113+00 Ramp C																																							1				1											
246	799+00 NB I-71	Rt.																																										1											
	TOTAL								2	3	26	510.25	42.5		26	1		1		1					12		8		1465.0		9	1	12	4		12		2	1	2	3	2	2	8	2		5	2	5	2	9	1	9	6	1

642-4" EDGE LINE (WHITE)				
Station From	Station To	Location	Calculations	Lin. Ft.
I-71 Northbound				
472+00	500+20	Rt.	50020-47200	2820
I-71 Southbound				
472+00	500+20	Lt.	50020-47200	2820
TOTAL			1.07 Miles	5640

690-4" EDGE LINE (WHITE)				
Station From	Station To	Location	Calculations	Lin. Ft.
I-71 Northbound				
500+20	545+19 Bk.	Rt.	54519-50020	4499
545+28 Ah.	707+59	Rt.	70759-54528	16231
708+60	789+00	Rt.	78900-70860	8040
I-71 Southbound				
500+20	545+19 Bk.	Lt.	54519-50020	4499
545+28 Ah.	724+95	Lt.	72495-54528	17967
725+95	798+70	Lt.	79870-72595	7275
Ramp A-82				
111+70	115+00	Rt.	11500-11170	330
Ramp B-82				
107+65	122+40	Rt.	12240-10750	1490
Ramp C-82				
116+65	121+00	Rt.	12100-11665	435
Ramp D-82				
111+12	124+50	Lt.	12450-11112	1338
Ramp E-82				
123+93	140+29	Rt.	14029-12393	1636
Ramp F-82				
136+30	137+47	Lt.	13747-13630	117
Ramp AT				
709+01	710+90	Lt.	71090-70901	189
Ramp A-Pearl				
72+03	86+75	Rt.	8675-7203	1472
85+30	86+15	Rt.	8615-8530	85
Ramp B-Pearl				
68+15	87+00	Lt.	8700-6815	1885
84+00	85+55	Lt.	8555-8400	155
Ramp C-Pearl				
74+10	89+35	Rt.	8935-7410	1525
89+50	90+90	Rt.	9090-8950	140
Ramp D-Pearl				
73+75	89+00	Lt.	8900-7375	1525
TOTAL			13.43 Miles	70833

690- 24" TRANSVERSE LINE (WHITE)				
Station From	Station To	Location	Calculations	Lin. Ft.
I-71 Northbound				
608+11	610+70	Rt.	(20x14) Avg.	280
705+49	707+75	Rt.	(16x12) Avg.	192
768+60	771+05	Rt.	(19x13) Avg.	247
I-71 Southbound				
622+00	626+54	Lt.	(32x13) Avg.	416
638+47	641+25	Lt.	(21x14) Avg.	294
725+90	728+05	Lt.	(18x11) Avg.	198
788+72	791+16	Lt.	(18x13) Avg.	234
TOTAL				1861

690- LANE ARROW				
Station From	Station To	Location	Calculations	Each
Ramp D-Pearl				
74+30	-	Lt.	3x1	3
74+90	-	Lt.	3x1	3
TOTAL				6

690- WORD "ONLY" ON PAVEMENT, 72"				
Station From	Station To	Location	Calculations	Each
Ramp D-Pearl				
74+60	-	Lt.	3x1	3
TOTAL				3

642-4" EDGE LINE (YELLOW)				
Station From	Station To	Location	Calculations	Lin. Ft.
I-71 Northbound				
472+00	500+20	Lt.	50020-47200	2820
I-71 Southbound				
472+00	500+20	Rt.	50020-47200	2820
TOTAL			1.07 Miles	5640

690-4" EDGE LINE (YELLOW)				
Station From	Station To	Location	Calculations	Lin. Ft.
I-71 Northbound				
500+20	545+19 Bk.	Lt.	54519-50020	4499
545+28 Ah.	798+70	Lt.	79870-54528	25342
I-71 Southbound				
500+20	545+19Bk.	Rt.	54519-50020	4499
545+28 Ah.	798+70	Rt.	79870-54528	25,042
Ramp A-82				
111+70	115+70	Lt.	11500-11170	400
Ramp B-82				
109+10	122+40	Lt.	12240-10910	1330
Ramp C-82				
116+65	121+00	Lt.	12100-11665	435
Ramp D-82				
106+88	124+50	Rt.	12450-10688	1762
Ramp E-82				
123+93	138+93	Lt.	13893-12393	1500
Ramp F-82				
136+30	137+47	Rt.	13747-13630	117
Ramp A-Pearl				
72+03	86+15	Lt.	8615-7203	1412
85+30	86+20	Lt.	8620-8530	90
Ramp B-Pearl				
69+80	86+20	Rt.	8620-6980	1614
84+00	85+55	Rt.	8555-8400	155
Ramp C-Pearl				
72+70	89+35	Lt.	8935-7270	1665
74+10	75+50	Lt.	7550-7410	140
Ramp D-Pearl				
73+75	89+00	Rt.	8900-7375	1525
TOTAL			13.62 Miles	71827

690-CURB MARKING (WHITE)				
Station From	Station To	Location	Calculations	Lin. Ft.
I-71 Northbound				
610+65	611+65	Rt.	100x2	200
707+59	708+59	Rt.	100x2	200
771+00	772+00	Rt.	100x2	200
I-71 Southbound				
621+07	622+07	Lt.	100x2	200
637+50	638+50	Lt.	100x2	200
724+95	725+95	Lt.	100x2	200
787+70	788+70	Lt.	100x2	200
TOTAL				1400

690-ISLAND MARKING (WHITE)				
Station From	Station To	Location	Calculations	Sq. Ft.
I-71 Northbound				
610+65	611+05	Rt.	40x7	280
707+59	707+99	Rt.	40x7	280
771+00	771+50	Rt.	50x7	350
I-71 Southbound				
621+90	622+07	Lt.	20x6	120
638+10	638+50	Lt.	40x7	280
725+75	725+95	Lt.	20x6	120
788+30	788+70	Lt.	40x8	320
TOTAL				1750

690- DOTTED LINE (WHITE)				
Station From	Station To	Location	Calculations	Lin. Ft.
Ramp D-Pearl				
44+80 (Pearl)	74+00 (Ramp D)	-	-	70
TOTAL				70

690-8" CHANNELIZING LINE				
Station From	Station To	Location	Calculations	Lin. Ft.
I-71 Northbound				
608+11	611+70	Rt.	(61170-60811)x2	718
624+70	626+33	Rt.	62633-62470	163
638+90	640+29	Rt.	64029-63890	139
705+49	707+59	Rt.	(70759-70549)x2	420
707+59	708+59	Rt.	70859-70759	100
719+65	722+75	Rt.	72275-71965	310
768+60	772+00	Rt.	(77200-76860)x2	680
784+00	785+63	Rt.	78563-78400	163
I-71 Southbound				
606+88	611+15	Lt.	61115-60688	427
621+07	626+54	Lt.	(62654-62107)x2	1094
637+47	641+25	Lt.	(64125-63747)x2	756
709+01	710+90	Lt.	71090-70901	189
724+95	725+95	Lt.	72595-72495	100
725+95	728+05	Lt.	(72805-72595)x2	420
774+94	776+30	Lt.	77630-77494	136
787+71	791+15	Lt.	79115-78771	688
Ramp A-Pearl				
85+25	85+35	Lt.	(8535-8525)x2	20
Ramp D-Pearl				
74+00	75+40	Lt.	(7540-7400)x2	280
TOTAL				6,803

642-4" LANE LINE				
Station From	Station To	Location	Calculations	Lin. Ft.
I-71 Northbound				
472+00	500+20	Rt.	50020-47200	2820
I-71 Southbound				
472+00	500+20	Lt.	50020-47200	2820
TOTAL			1.07 Miles	5640

690-4" LANE LINE				
Station From	Station To	Location	Calculations	Lin. Ft.
I-71 Northbound				
500+20	545+19 Bk.	Rt.	(54519-50020)x2	8998
545+28 Ah.	798+70	Rt.	(79870-54528)x2	50684
606+06	608+11	Rt.	60811-60606	205
626+33	629+80	Rt.	62980-62633	347
703+20	705+49	Rt.	70549-70320	229
722+75	727+23	Rt.	72723-72275	448
765+95	768+60	Rt.	76860-76595	265
785+63	787+95	Rt.	78795-78563	232
I-71 Southbound				
500+20	545+19 Bk.	Lt.	(54519-50020)x2	8998
545+28 Ah.	798+70	Lt.	(79870-54528)x2	50684
605+25	608+88	Lt.	60888-60525	363
626+54	628+93	Lt.	62893-62654	239
641+25	643+45	Lt.	64345-64125	220
706+80	709+00	Lt.	70900-70680	220
728+05	730+05	Lt.	73005-72805	200
772+00	774+94	Lt.	77494-77200	294
791+16	793+40	Lt.	79340-79116	224
Ramp D-Pearl				
75+40	77+55	Lt.	(7755-7540)x2	430
77+55	80+16	Lt.	8016-7755	261
TOTAL			23.40 Miles	123,541

690-24" STOP LINE				
Station From	Station To	Location	Calculations	Lin. Ft.
Ramp A- Pearl				
86+10	-	Median	16x1	16
Ramp D-Pearl				
74+00	-	Median	68x1	68
TOTAL				84

PLOTTED FROM: i:\users\eforsber\pid08459\dgn\tcsp10.dgn TCSP10.DGN PLOT SUBMITTED: 27-JUL-1998 12:00

SHEET NUMBER																	ITEM	ITEM EXT.	GRAND TOTAL	UNIT	DESCRIPTION	SEE SHEET NO.
					72	213	214D	214E	214F	215	216	217	218	253A	253B	253G						
																					TRAFFIC CONTROL	
														40	40		603	00400	40	LIN. FT.	4" CONDUIT, TYPE E	
								4	2								620	40300	6	EACH	REFLECTOR, TYPE D	
						2260											621	00300	2260	EACH	PRISMATIC RETROREFLECTOR	
						2100											621	00600	2100	EACH	RAISED PAVEMENT MARKER CASTING, INSTALLATION ONLY	
														30		777	625	25400	807	LIN. FT.	CONDUIT, 2", 713.04	
														177		133	625	25500	310	LIN. FT.	CONDUIT, 3", 713.04	
																11	625	25600	11	LIN. FT.	CONDUIT, 4", 713.04	
																92	625	25900	92	LIN. FT.	CONDUIT, JACKED OR DRILLED UNDER PAVEMENT, SIZE: 3"	
														177		921	625	29000	1098	LIN. FT.	TRENCH	
														4		8	625	30700	12	EACH	PULLBOX, 713.08, 18"	
											11	12	2	1		3	625	32000	29	EACH	GROUND ROD	
					450												626	00100	450	EACH	BARRIER REFLECTOR, TYPE A	
					83												626	00200	83	EACH	BARRIER REFLECTOR, TYPE B	
								545	403	612							630	03100	1560	LIN. FT.	GROUND MOUNTED SUPPORT, NO. 3 POST	
								142	172	137							630	04100	451	LIN. FT.	GROUND MOUNTED SUPPORT, NO. 4 POST	
											36	35	510				630	06400	581	LIN. FT.	GROUND MOUNTED SUPPORT, S4x7.7 BEAM	
											95	46					630	07000	141	LIN. FT.	GROUND MOUNTED SUPPORT, W8x18 BEAM	
											91	37	43				630	07600	171	LIN. FT.	GROUND MOUNTED SUPPORT, W10x12 BEAM	
										30							630	08100	30	LIN. FT.	ONE WAY SUPPORT, NO. 4 POST	
											2	4	26				630	09000	32	EACH	BREAKAWAY BEAM CONNECTION	
							48										630	09102	48	EACH	SURFACE PREPARATION, NEW SUPPORT SECTION	214B
							48										630	09104	48	EACH	COATING, EPOXY PRIME COAT, SUPPORT SECTION	214B
							48										630	09106	48	EACH	COATING, EPOXY INTERMEDIATE COAT, SUPPORT SECTION	214B
							48										630	09108	48	EACH	COATING, URETHANE TOP COAT, SUPPORT SECTION	214B
												2					630	10100	2	EACH	OVERHEAD SIGN SUPPORT, TYPE TC-16.20 DESIGN 1	
													1				630	10400	1	EACH	OVERHEAD SIGN SUPPORT, TYPE TC-16.20 DESIGN 4	
												2	2				630	20400	4	EACH	OVERHEAD SIGN SUPPORT, TYPE TC-12.30, DESIGN 4	
											4	2					630	20800	6	EACH	OVERHEAD SIGN SUPPORT, TYPE TC-12.30, DESIGN 8	
											2	2					630	21000	4	EACH	OVERHEAD SIGN SUPPORT, TYPE TC-12.30, DESIGN 10	
											2						630	21200	2	EACH	OVERHEAD SIGN SUPPORT, TYPE TC-12.30, DESIGN 12	
											2	1					630	45500	3	EACH	OVERHEAD SIGN SUPPORT, TYPE TC-7.65, DESIGN 8, 93 FT.	
												1					630	45500	1	EACH	OVERHEAD SIGN SUPPORT, TYPE TC-7.65, DESIGN 8, 94 FT.	
												1					630	45500	1	EACH	OVERHEAD SIGN SUPPORT, TYPE TC-7.65, DESIGN 8, 96 FT.	
													12				630	75000	12	EACH	SIGN ATTACHMENT ASSEMBLY	
													8				630	75106	8	EACH	LUMINAIRE SUPPORT ASSEMBLY, TYPE TC-31.21	
										1							630	79101	1	EACH	SIGN HANGER ASSEMBLY, MAST ARM MOUNTED, AS PER PLAN	253B
										2							630	79500	2	EACH	SIGN SUPPORT ASSEMBLY, POLE MOUNTED	
								254	230	410							630	80102	894	SQ. FT.	SIGN, FLAT SHEET, TYPE G	
								96	64	32							630	80103	192	SQ. FT.	SIGN, FLAT SHEET, TYPE G, AS PER PLAN	252
										6	2362	1826	1465				630	80204	5659	SQ. FT.	SIGN, EXTRUSHEET, TYPE G	
													2				630	82500	2	EACH	REVISE EXISTING SIGN WITH DEMOUNTABLE COPY	
											10	6	26				630	84500	42	EACH	GROUND MOUNTED BEAM SUPPORT FOUNDATION	
											12	12	3				630	84510	27	EACH	RIGID OVERHEAD SIGN SUPPORT FOUNDATION	
								45	33	53	1		9				630	84900	141	EACH	REMOVAL OF GROUND MOUNTED SIGN AND DISPOSAL	
										1							630	85100	1	EACH	REMOVAL OF GROUND MOUNTED SIGN AND REERECTION	
								5	1	1	2	5	1				630	85400	15	EACH	REMOVAL OF GROUND MOUNTED MAJOR SIGN AND DISPOSAL	
											1						630	85600	1	EACH	REMOVAL OF GROUND MOUNTED MAJOR SIGN AND REERECTION	
								41	40	49	3	3	12				630	86002	148	EACH	REMOVAL OF GROUND MOUNTED POST SUPPORT AND DISPOSAL	
								10	2		6	2	4				630	86102	24	EACH	REMOVAL OF GROUND MOUNTED BEAM SUPPORT AND DISPOSAL	
												2					630	87100	2	EACH	REMOVAL OF OVERHEAD MOUNTED SIGN AND REERECTION	
											14	20	12				630	87400	46	EACH	REMOVAL OF OVERHEAD MOUNTED SIGN AND DISPOSAL	
												2					630	87401	2	EACH	REMOVAL OF OVERHEAD MOUNTED SIGN AND DISPOSAL, AS PER PLAN	212

PLOT SUBMITTED: 07-AUG-1998 07:59
PLOTTED FROM: i:\users\eforsber\pid08459\dgn\tcgs1.dgn
TCGS1.DGN

PLOT SUBMITTED: 05-AUG-1998 13:08
TCGS1.DGN
PLOTTED FROM: i:\users\eforsber\pid08459\dgn\tcgs1.dgn

SHEET NUMBER 214F	215	216	217	218	219	253A	253B	253G	ITEM	ITEM EXT.	GRAND TOTAL	UNIT	DESCRIPTION * EPOXY	SEE SHEET NO.
													TRAFFIC CONTROL	
2	1								630	87500	3	EACH	REMOVAL OF POLE MOUNTED SIGN AND DISPOSAL	
		3	4	2					630	89706	9	EACH	REMOVAL OF OVERHEAD SIGN SUPPORT AND	
													DISPOSAL, TYPE TC-12.30	
		2	3	1					630	89802	6	EACH	REMOVAL OF OVERHEAD SIGN SUPPORT AND	
													DISPOSAL, TYPE TC-7.65	
		5	6	2					631	84000	13	EACH	SIGN SERVICE	
				8					631	84001	8	EACH	SIGN SERVICE, AS PER PLAN	
		7	9	2					631	84300	18	EACH	SIGN WIRED	212
		5	6	2					631	85100	13	EACH	DISCONNECT SWITCH WITH ENCLOSURE, TYPE X	
		8	15	5					631	87202	28	EACH	BALLAST, TYPE CMRI-175-480, INTEGRAL	
		6	2	2					631	87302	10	EACH	BALLAST, TYPE CMRI-250-480, INTEGRAL	
		8	15	5					631	89200	28	EACH	MERCURY VAPOR LUMINAIRE, TYPE TC-31.21 WITH	
													175 WATT LAMP	
		6	2	2					631	89300	10	EACH	MERCURY VAPOR LUMINAIRE, TYPE TC-31.21 WITH	
													250 WATT LAMP	
		16	24	9					631	94200	49	EACH	REMOVAL OF LUMINAIRE AND DISPOSAL	
		5	6	1					631	94304	12	EACH	REMOVAL OF DISCONNECT SWITCH AND DISPOSAL	
		16	24	9					631	94404	49	EACH	REMOVAL OF BALLAST AND DISPOSAL	
		8	11	6					631	94408	25	EACH	REMOVAL OF SIGN WIRING AND DISPOSAL	
		5	6	1					631	94412	12	EACH	REMOVAL OF SIGN SERVICE AND DISPOSAL	
		14	22	3					631	94420	39	EACH	REMOVAL MISC.: LUMINAIRE SUPPORT ASSEMBLY AND	
													DISPOSAL	
								4	632	00303	4	EACH	VEHICULAR SIGNAL HEAD, 3 SECTION, 12" LENS, 1-WAY, AS PER PLAN	253B
								2	632	00503	2	EACH	VEHICULAR SIGNAL HEAD, 5 SECTION, 12" LENS, 1-WAY, AS PER PLAN	253B
								6	632	25000	6	EACH	COVERING OF VEHICULAR SIGNAL HEAD	
						6		9	632	26500	15	EACH	DETECTOR LOOP	
								5	632	27102	5	EACH	LOOP DETECTOR UNIT, 2 CHANNEL	
						6			632	27300	6	EACH	PIEZOCABLE CLASS II, AXLE SENSOR	
								528	632	40300	528	LIN. FT.	SIGNAL CABLE, 3 CONDUCTOR, NO. 14 AWG	
								342	632	40500	342	LIN. FT.	SIGNAL CABLE, 5 CONDUCTOR, NO. 14 AWG	
								244	632	40700	244	LIN. FT.	SIGNAL CABLE, 7 CONDUCTOR, NO. 14 AWG	
								528	632	43300	528	LIN. FT.	SIGNAL CABLE ITEM, MISC.: PREEMPT DETECTOR CABLE	253B
								2	632	64010	2	EACH	SIGNAL SUPPORT FOUNDATION	
						1			632	64020	1	EACH	PEDESTAL FOUNDATION	
						700		2979	632	65200	3679	LIN. FT.	LOOP DETECTOR LEAD-IN CABLE	
								54	632	68300	54	LIN. FT.	POWER CABLE, 3 CONDUCTOR, NO. 6 AWG	
								1	632	70400	1	EACH	CONDUIT RISER, 2" DIAMETER	
								1	632	75130	1	EACH	SIGNAL SUPPORT, TYPE TC-12.30, DESIGN 5, WITH MAST ARM TC-81.20, DESIGN 11 AND TC-81.20, DESIGN 4	
								1	632	80600	1	EACH	SIGNAL SUPPORT, TYPE TC-81.20, DESIGN 12	
						1			632	89800	1	EACH	PEDESTAL, 3', TRANSFORMER BASE	
								1	632	90101	1	EACH	REMOVAL OF TRAFFIC SIGNAL INSTALLATION, AS PER PLAN	253B
						1			632	90400	1	EACH	SIGNALIZATION MISC.: SOLAR PANEL	253A
								2	632	90400	2	EACH	SIGNALIZATION MISC.: SURFACE PREPARATION, NEW SIGNAL SUPPORT	253C
								2	632	90400	2	EACH	SIGNALIZATION MISC.: EPOXY PRIME COAT, SIGNAL SUPPORT	253C
								2	632	90400	2	EACH	SIGNALIZATION MISC.*INTERMEDIATE COAT, SIGNAL SUPPORT	253C
								2	632	90400	2	EACH	SIGNALIZATION MISC.: EPOXY TOP COAT, SIGNAL SUPPORT	253D
						580			632	90500	580	LIN. FT.	SIGNALIZATION MISC.: COAX CABLE	253A

SHEET NUMBER								214F	215	216	217	218	219	253A	253B	253G	ITEM	ITEM EXT.	GRAND TOTAL	UNIT	DESCRIPTION	SEE SHEET NO.
																					TRAFFIC CONTROL	
																1	633	34001	1	EACH	CONTROLLER, ACTUATED, 4 PHASE, SOLID-STATE DIGITAL MICROPROCESSOR, AS PER PLAN	253B
														1			633	65001	1	EACH	CABINET, WITHOUT CONTROLLER, PREWIRED, PEDESTAL MOUNTING,	
																					TYPE G, AS PER PLAN	253A
																1.0	633	70000	1.0	CU. FT.	CONCRETE FOR CABINET FOUNDATION	
																8.4	633	70500	8.4	SQ. FT.	CONTROLLER WORK PAD	
																3	633	99000	3	EACH	CONTROLLER ITEM, MISC.: PREEMPT CONFIRMATION LIGHT	253B
																1	633	99000	1	EACH	CONTROLLER ITEM, MISC.: PREEMPT PHASE SELECTOR	253B
																3	633	99000	3	EACH	CONTROLLER ITEM, MISC.: PREEMPT DETECTOR, SINGLE CHANNEL, ONE DIRECTION	253B
															LUMP		633	99300	LUMP		CONTROLLER ITEM, MISC.: PREEMPTION	253B
													2.14				642	00100	2.14	MILE	EDGE LINE, TYPE I	
													1.07				642	00200	1.07	MILE	LANE LINE, TYPE I	
													27.05				SPECIAL	69080000	27.05	MILE	PAVEMENT MARKING MISC.: EDGE LINE	213
													23.40				SPECIAL	69080000	23.40	MILE	PAVEMENT MARKING MISC.: LANE LINE	213
													6803				SPECIAL	69080010	6803	LIN. FT.	PAVEMENT MARKING MISC.: CHANNELIZING LINE	213
													84				SPECIAL	69080010	84	LIN. FT.	PAVEMENT MARKING MISC.: STOP LINE	213
													1861				SPECIAL	69080010	1861	LIN. FT.	PAVEMENT MARKING MISC.: TRANSVERSE LINE	213
													1400				SPECIAL	69080010	1400	LIN. FT.	PAVEMENT MARKING MISC.: CURB MARKING	213
													1750				SPECIAL	69080020	1750	SQ. FT.	PAVEMENT MARKING MISC.: ISLAND MARKING	213
													6				SPECIAL	69080030	6	EACH	PAVEMENT MARKING MISC.: LANE ARROW	213
													3				SPECIAL	69080030	3	EACH	PAVEMENT MARKING MISC.: WORD ON PAVEMENT, 72"	213
													70				SPECIAL	69080010	70	LIN. FT.	PAVEMENT MARKING MISC.: DOTTED LINE, 6"	213

PLOTTED FROM: I:\users\eforsber\pid08459\dgn\tcgs1.dgn
PLOT SUBMITTED: 03-AUG-1998 12:24
TCGS1.DGN

SIGN LEGEND

NEW

EXISTING, TO REMAIN

EXISTING, TO BE RELOCATED OR (TO BE RELOCATED)

EXISTING, TO BE REMOVED OR

OVERHEAD SUPPORT LEGEND

	NEW	EXISTING
CANTILEVER		
CENTER MOUNT		
SPAN		
SPAN WIRE		

LEGEND

1. EDGE LINE (WHITE)
2. EDGE LINE (YELLOW)
3. LANE LINE (WHITE)
4. CHANNELIZING LINE (WHITE)
5. TRANSVERSE LINE (WHITE), 12' CENTER SPACING
6. ISLAND (WHITE)
7. CURB (WHITE)
8. STOP LINE
9. DOTTED LINE (WHITE)

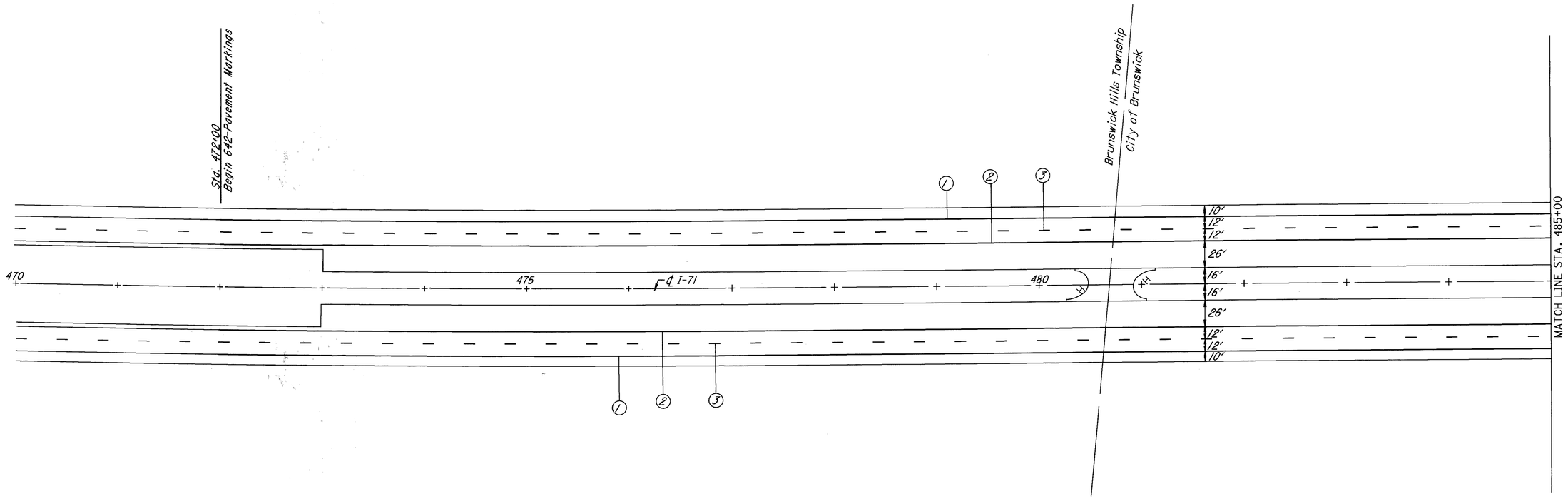

50 0 50 100
SCALE IN FEET

TRAFFIC CONTROL STA. 470+00 TO STA. 485+00

PLOT SUBMITTED: 27-JUL-1998 12:01
TC01.DGN
PLOTTED FROM: u:\users\eforsber\pid08459\dgn\tc01.dgn

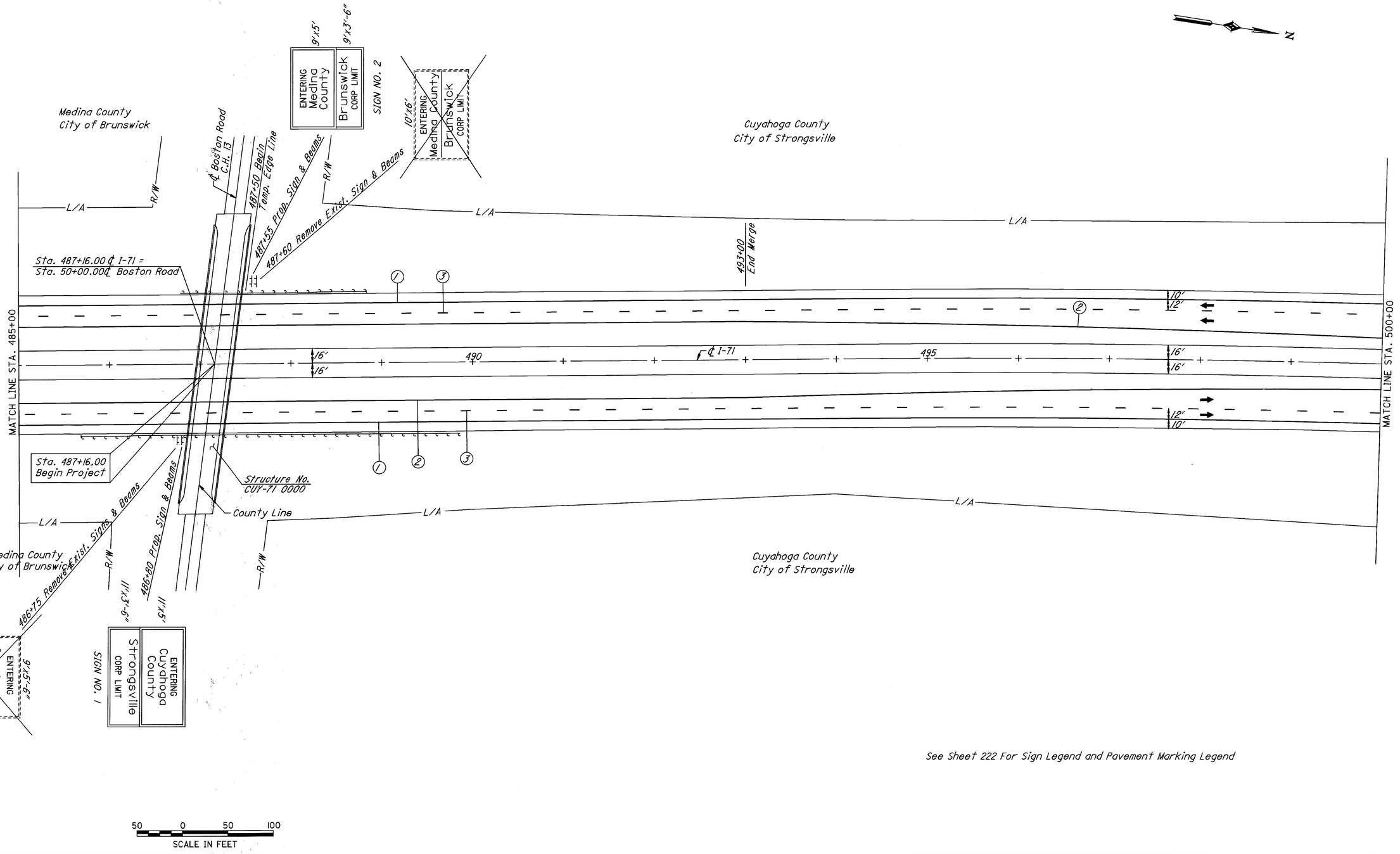

See Sheet 222 For Sign Legend and Pavement Marking Legend

TRAFFIC CONTROL STA. 485+00 TO STA. 500+00

PLOTTED FROM: i:\users\eforsber\pid08459\dgn\tc01.dgn
TC01A.DGN
PLOT SUBMITTED: 27-JUL-1998 12:01

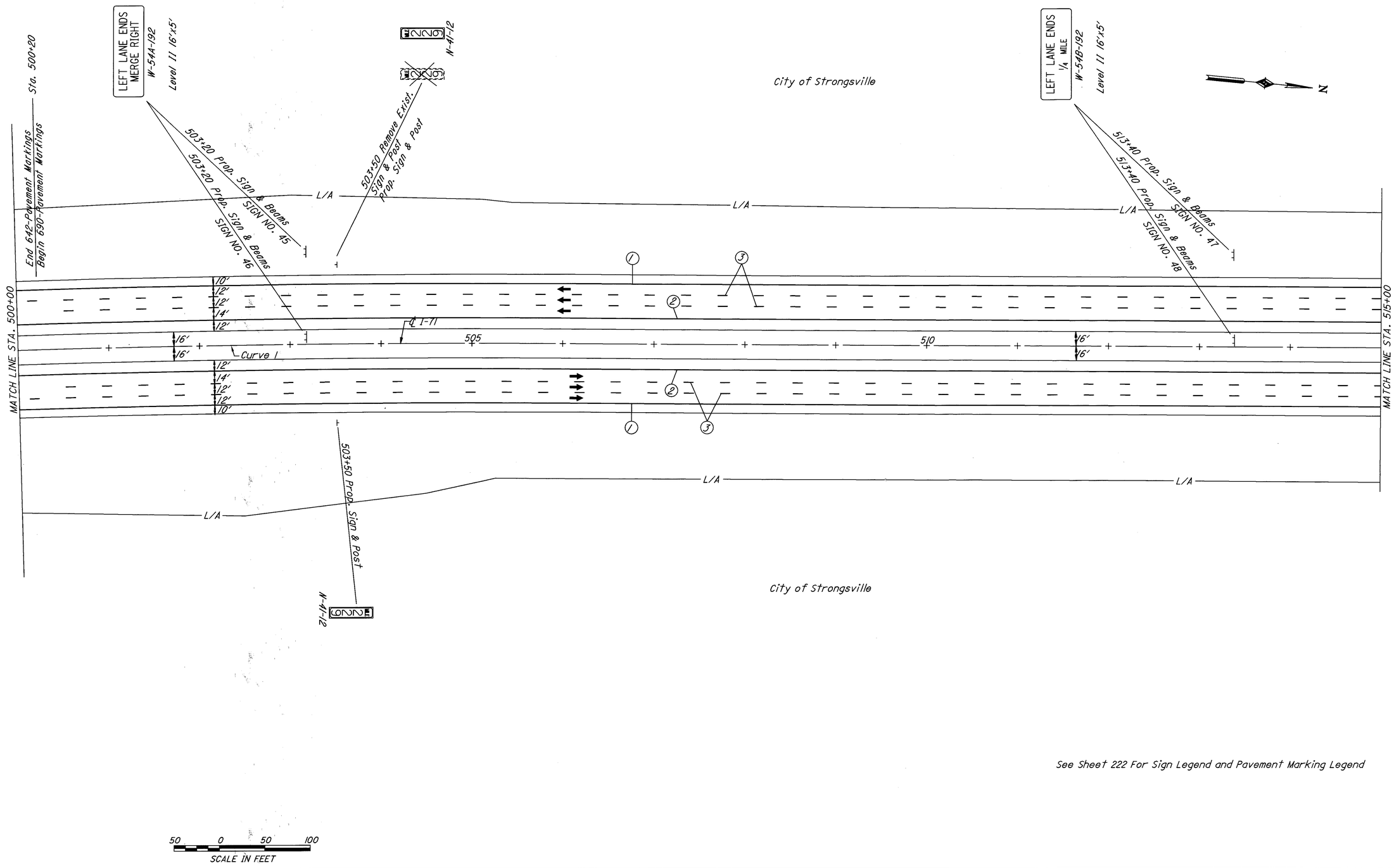

TRAFFIC CONTROL STA. 500+00 TO STA. 515+00

PLOTTED FROM: ::\users\eforsber\pid08459\dgn\tc02.dgn
TC02.DGN
PLOT SUBMITTED: 27-JUL-1998 12:02

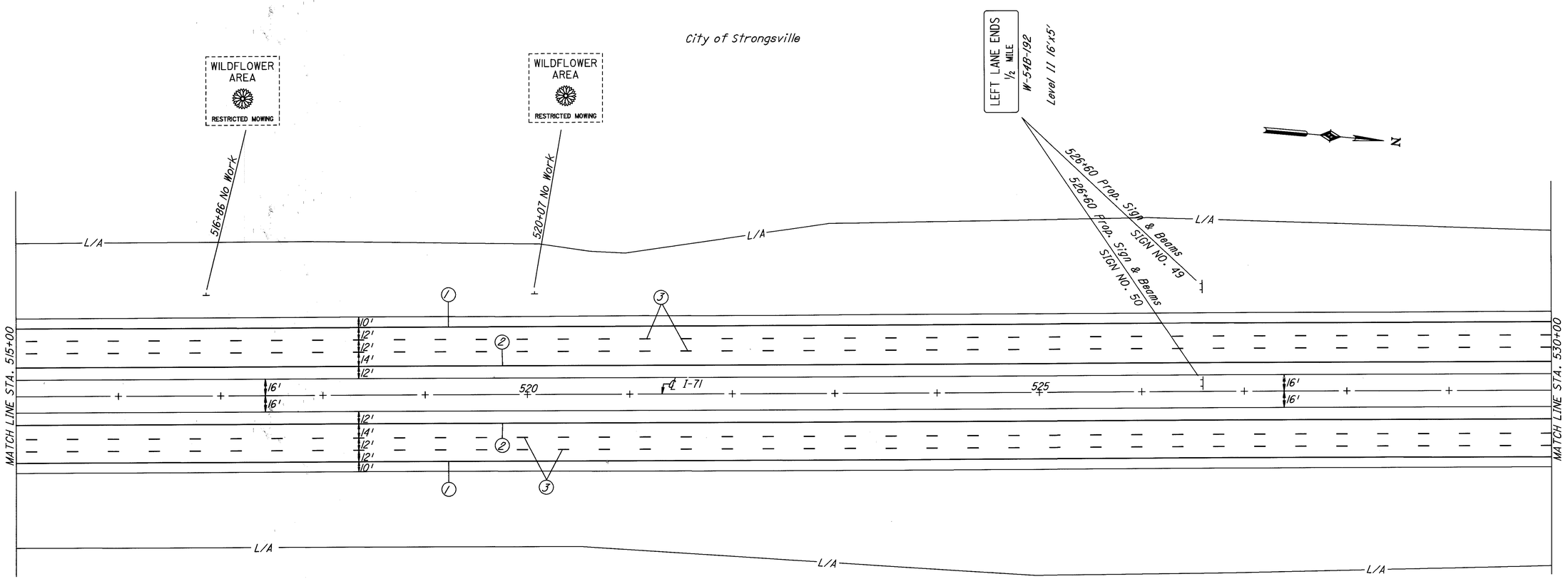

City of Strongsville

See Sheet 222 For Sign Legend and Pavement Marking Legend

50 0 50 100
SCALE IN FEET

TRAFFIC CONTROL STA. 515+00 TO STA. 530+00

PLOTTED FROM: i:\users\eforsber\pid08459\dgn\tc03.dgn
TC03.DGN
PLOT SUBMITTED: 27-JUL-1998 12:02

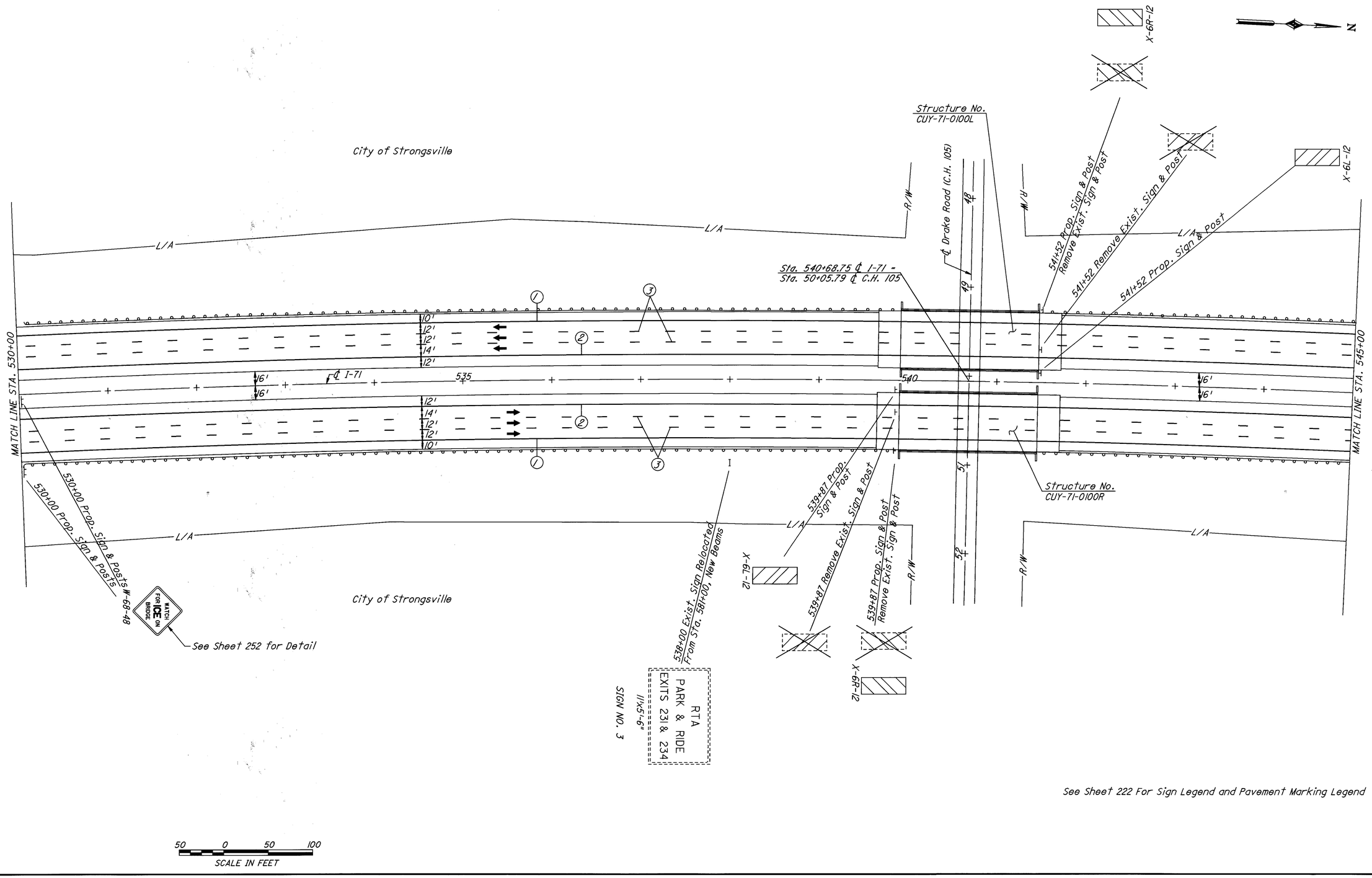

See Sheet 222 For Sign Legend and Pavement Marking Legend

TRAFFIC CONTROL STA. 530+00 TO STA. 545+00

PLOT SUBMITTED: 27-JUL-1998 12:12
PLOTTED FROM: I:\users\eforsber\pid08459\dgn\tc04.dgn
TC04.DGN

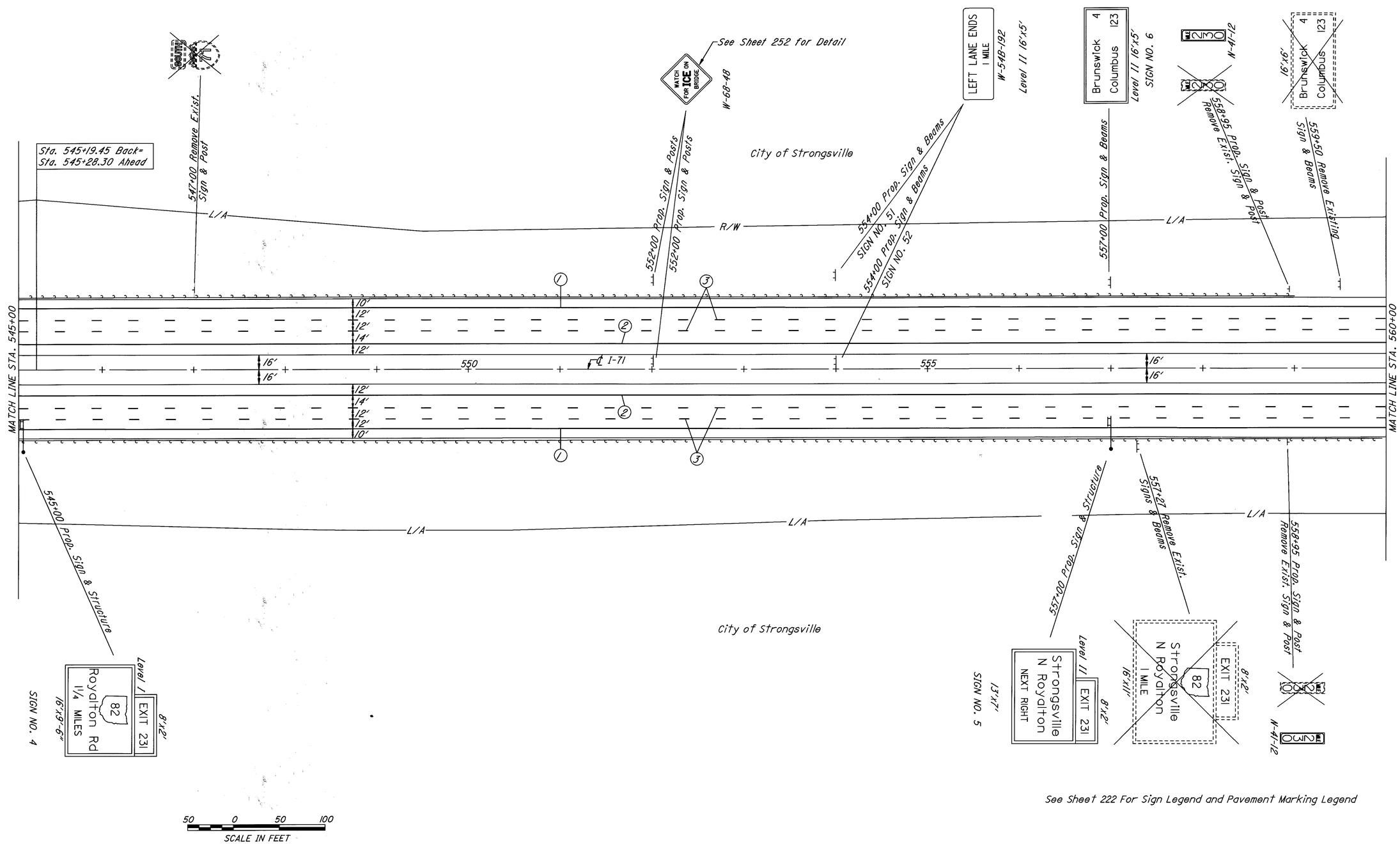

See Sheet 222 For Sign Legend and Pavement Marking Legend

TRAFFIC CONTROL STA. 545+00 TO STA. 560+00

PLOTTED FROM: i:\users\eforsber\pid08459\dgn\tc05.dgn TC05.DGN PLOT SUBMITTED: 27-JUL-1998 12:13

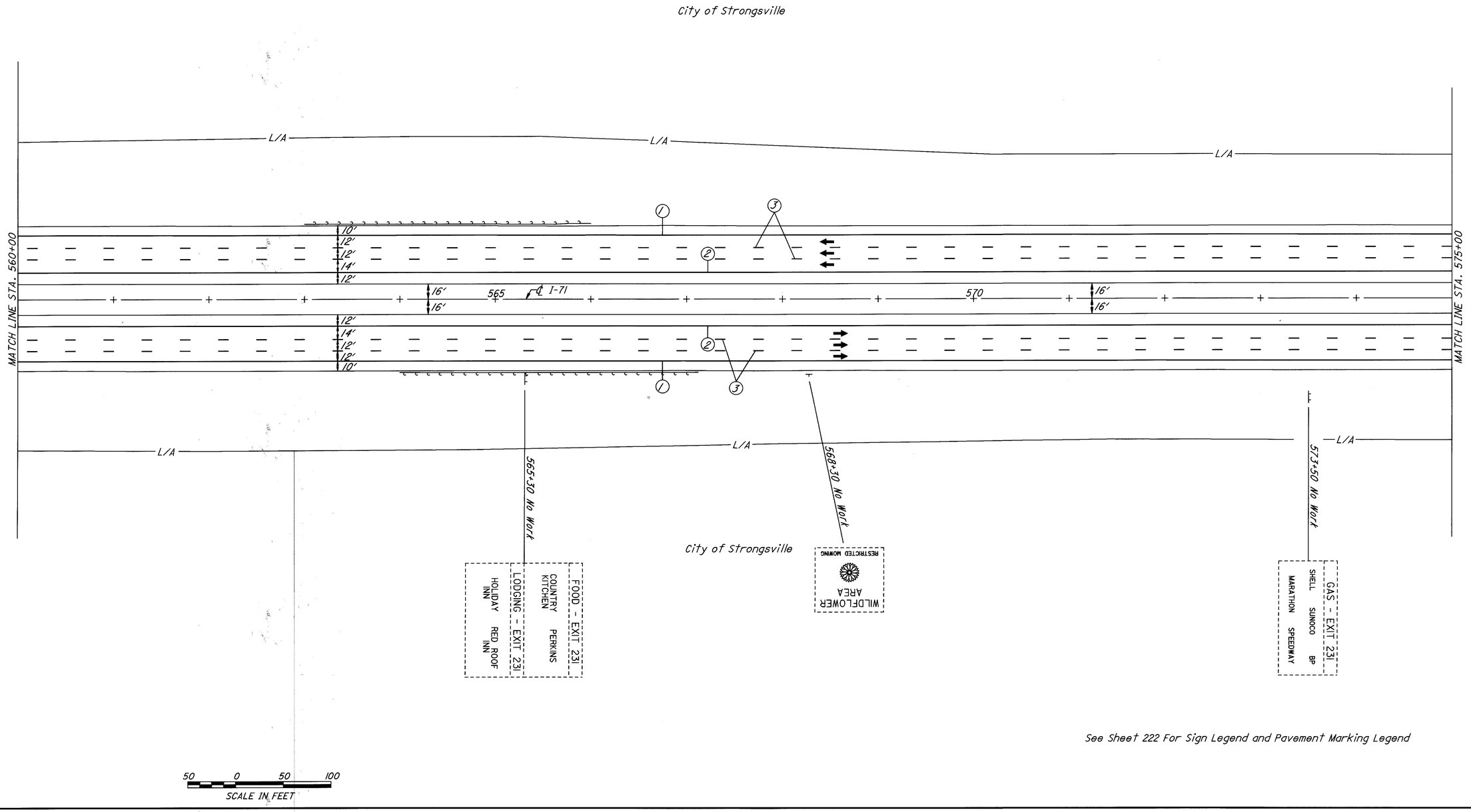

See Sheet 222 For Sign Legend and Pavement Marking Legend

TRAFFIC CONTROL STA. 560+00 TO STA. 575+00

PLOTTED FROM: I:\users\eforsber\pid08459\dgn\tc06.dgn
TC06.DGN
PLOT SUBMITTED: 27-JUL-1998 12:13

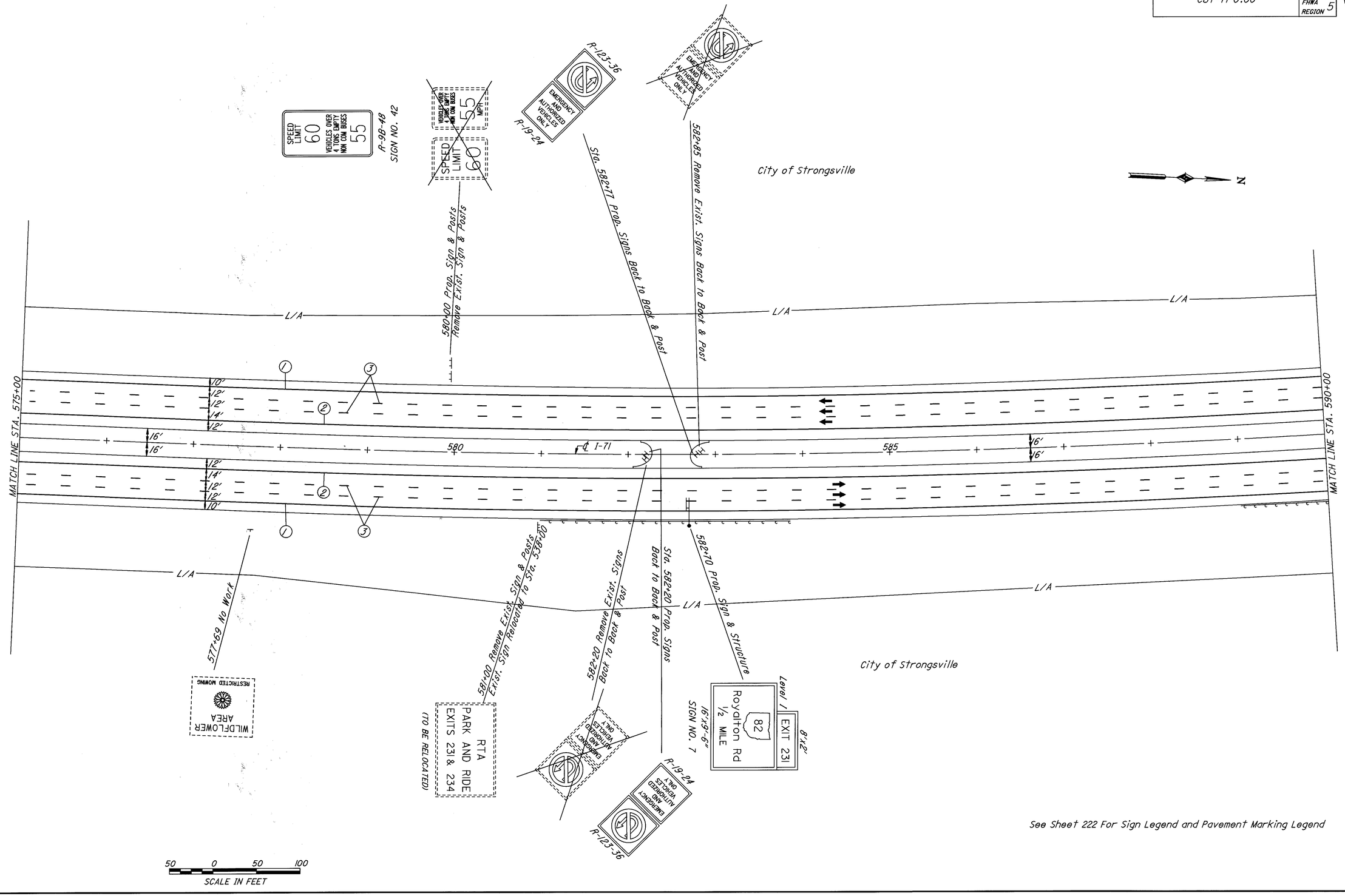

TRAFFIC CONTROL STA. 575+00 TO STA. 590+00

PLOTTED FROM: i:\users\eforsber\pid08459\dgn\tc07.dgn
TC07.DGN
PLOT SUBMITTED: 27-JUL-1998 12:14

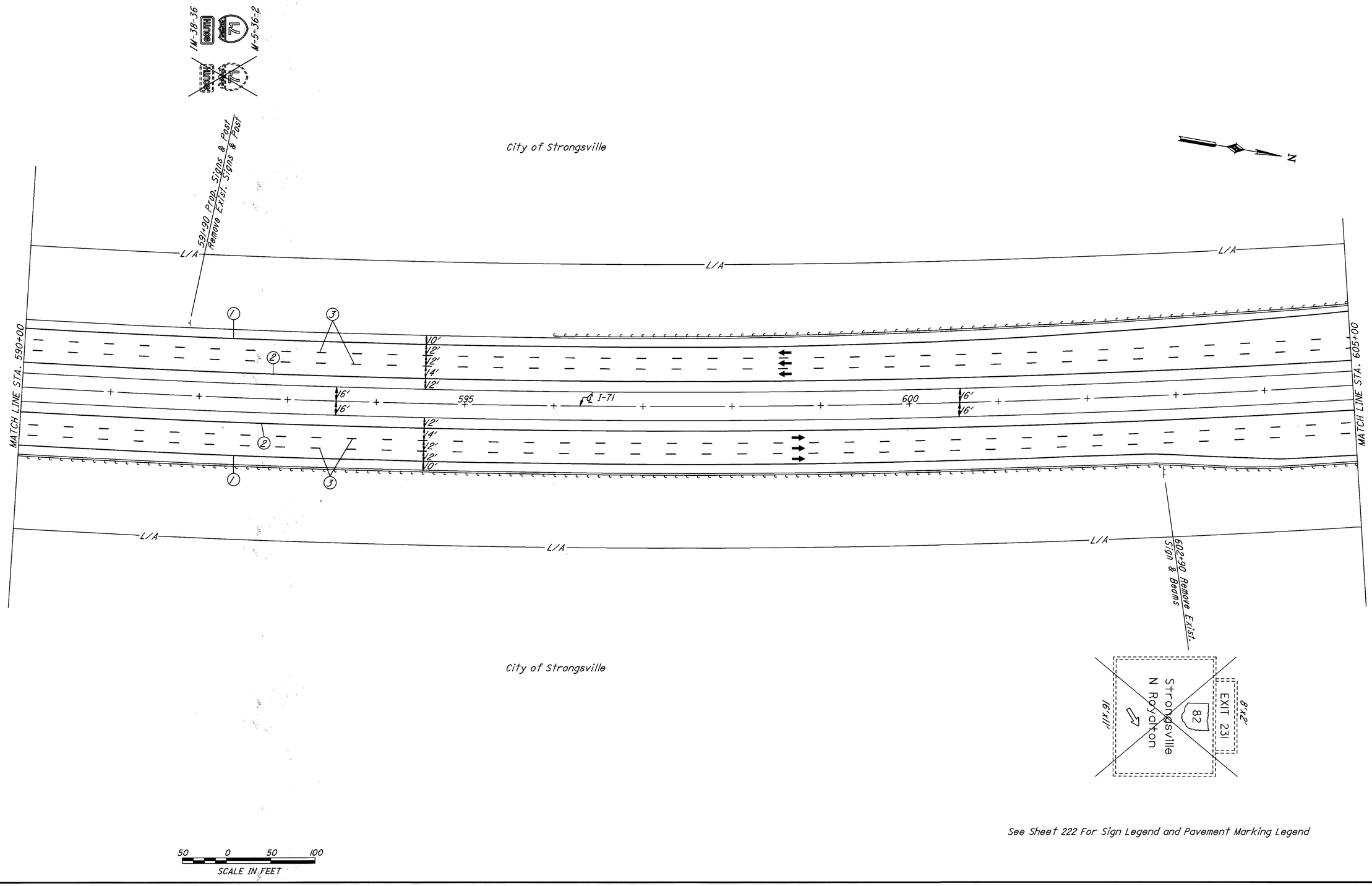

See Sheet 222 For Sign Legend and Pavement Marking Legend

TRAFFIC CONTROL STA. 590+00 TO STA. 605+00

PLOTTED FROM: i:\users\eforsber\pid08459\dgn\tc08.dgn
TC08.DGN
PLOT SUBMITTED: 27-JUL-1998 12:14

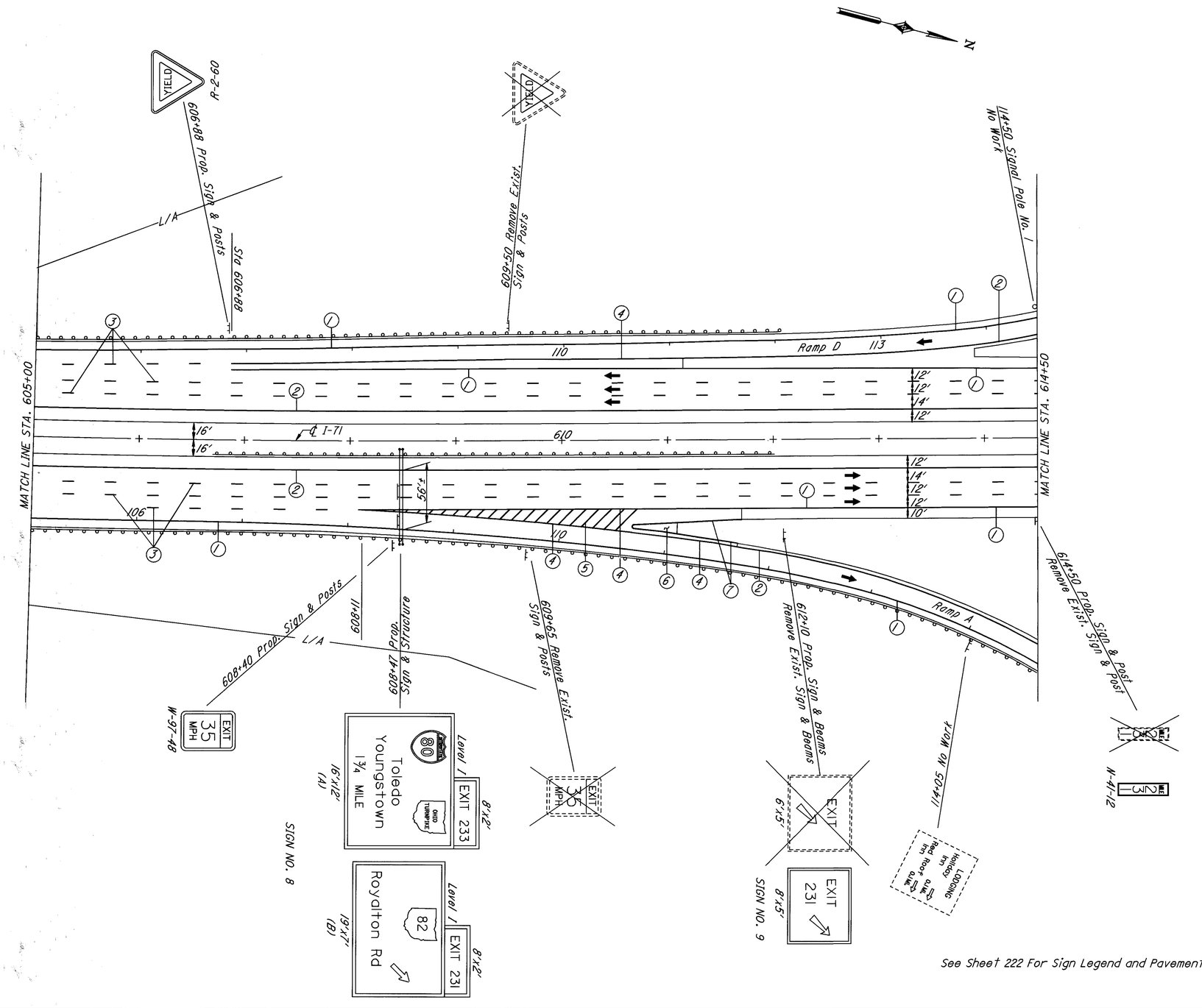

See Sheet 222 For Sign Legend and Pavement Marking Legend

TRAFFIC CONTROL STA. 605+00 TO STA. 614+50

PLOTTED FROM: :\users\eforsber\pid08459\dgn\tc09.dgn TC09.DGN PLOT SUBMITTED: 27-JUL-1998 12:15

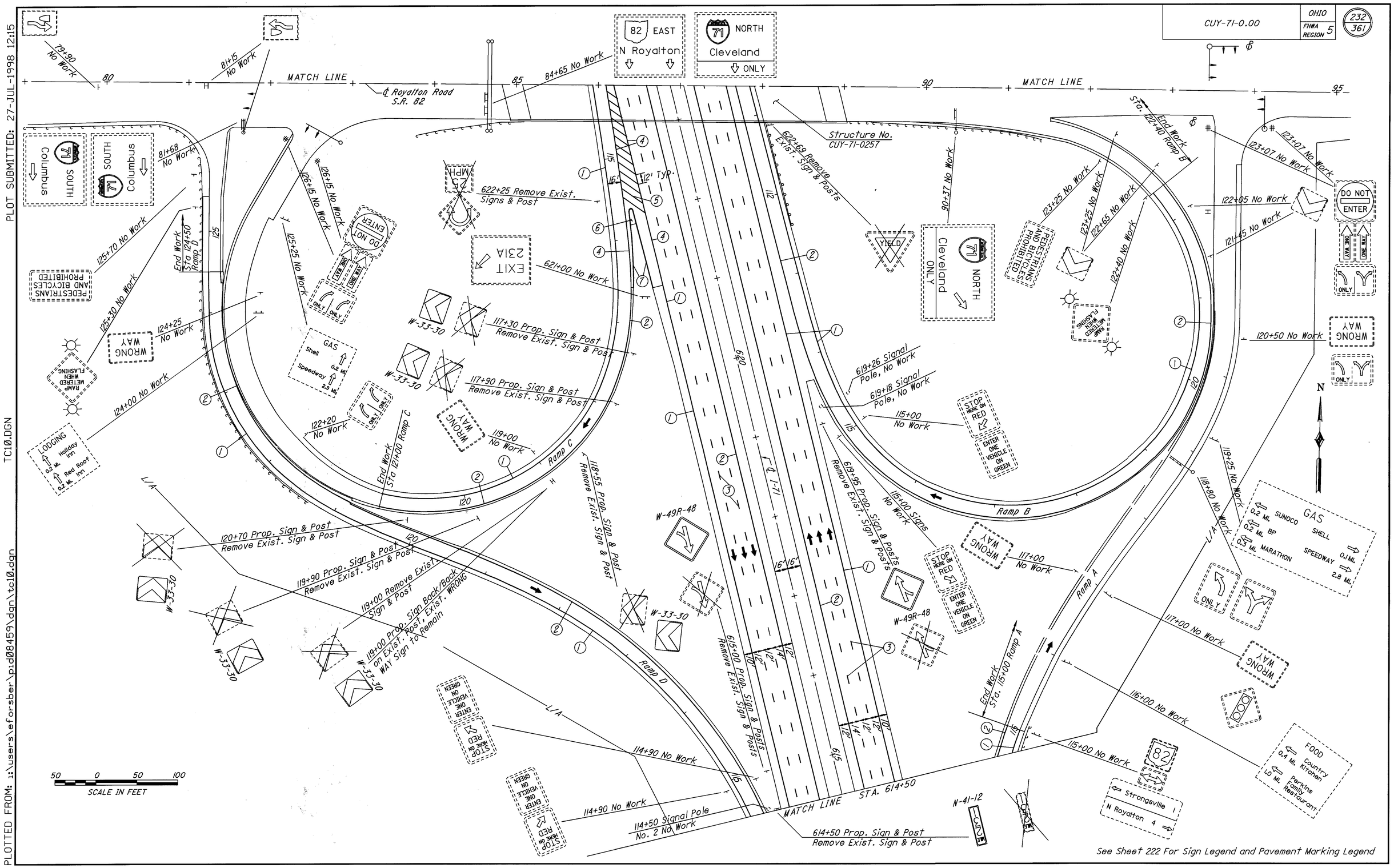

TRAFFIC CONTROL STA. 614+50 TO 623+42.93

PLOTTED FROM: ::\users\eforsber\pid08459\dgn\tc10.dgn
PLOT SUBMITTED: 27-JUL-1998 12:15
TC10.DGN

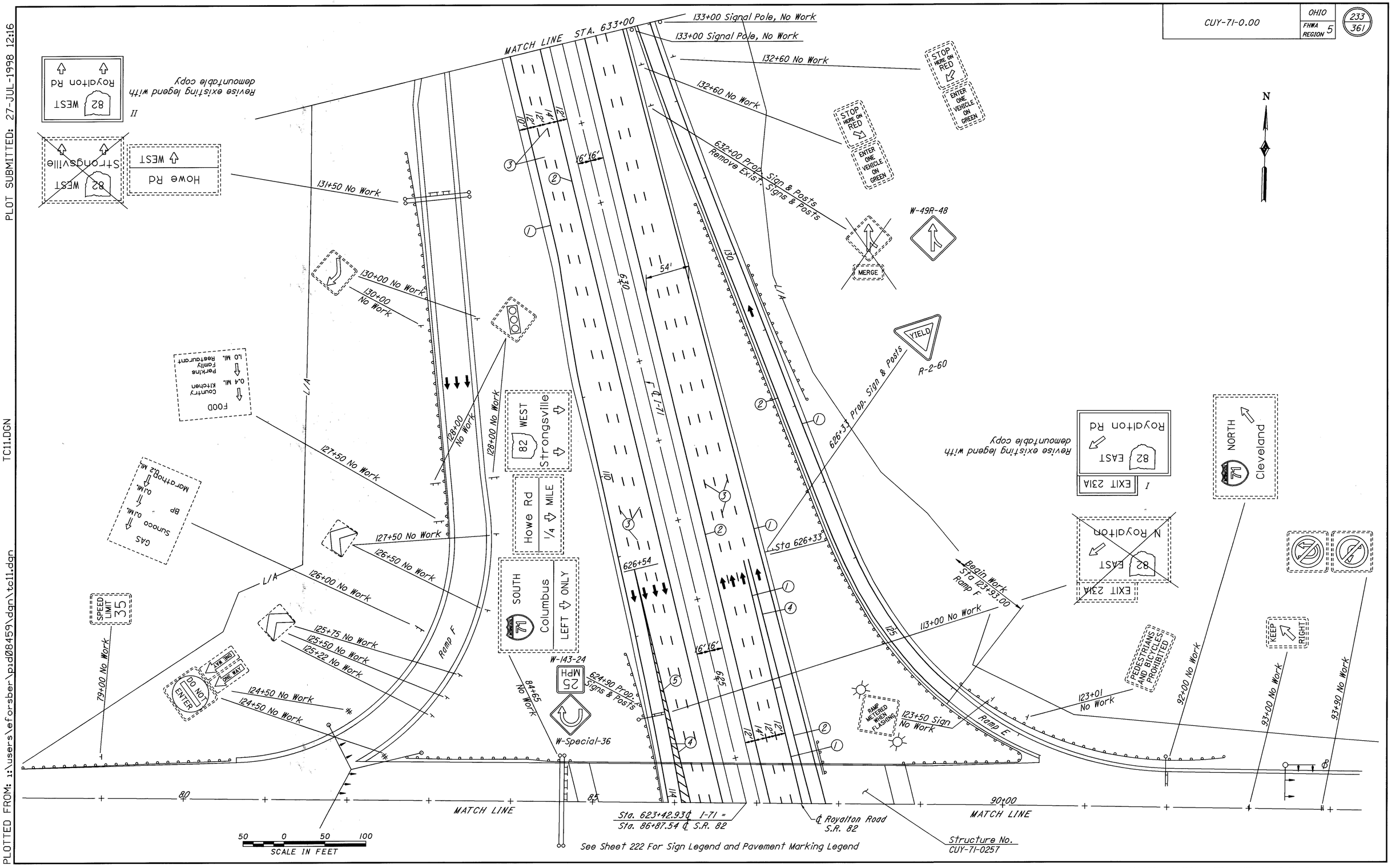

See Sheet 222 For Sign Legend and Pavement Marking Legend

TRAFFIC CONTROL STA. 623+42.93 TO STA. 633+00

PLOT SUBMITTED: 27-JUL-1998 12:16

PLOTTED FROM: i:\users\leforsber\pid08459\dgn\tc11.dgn

TC11.DGN

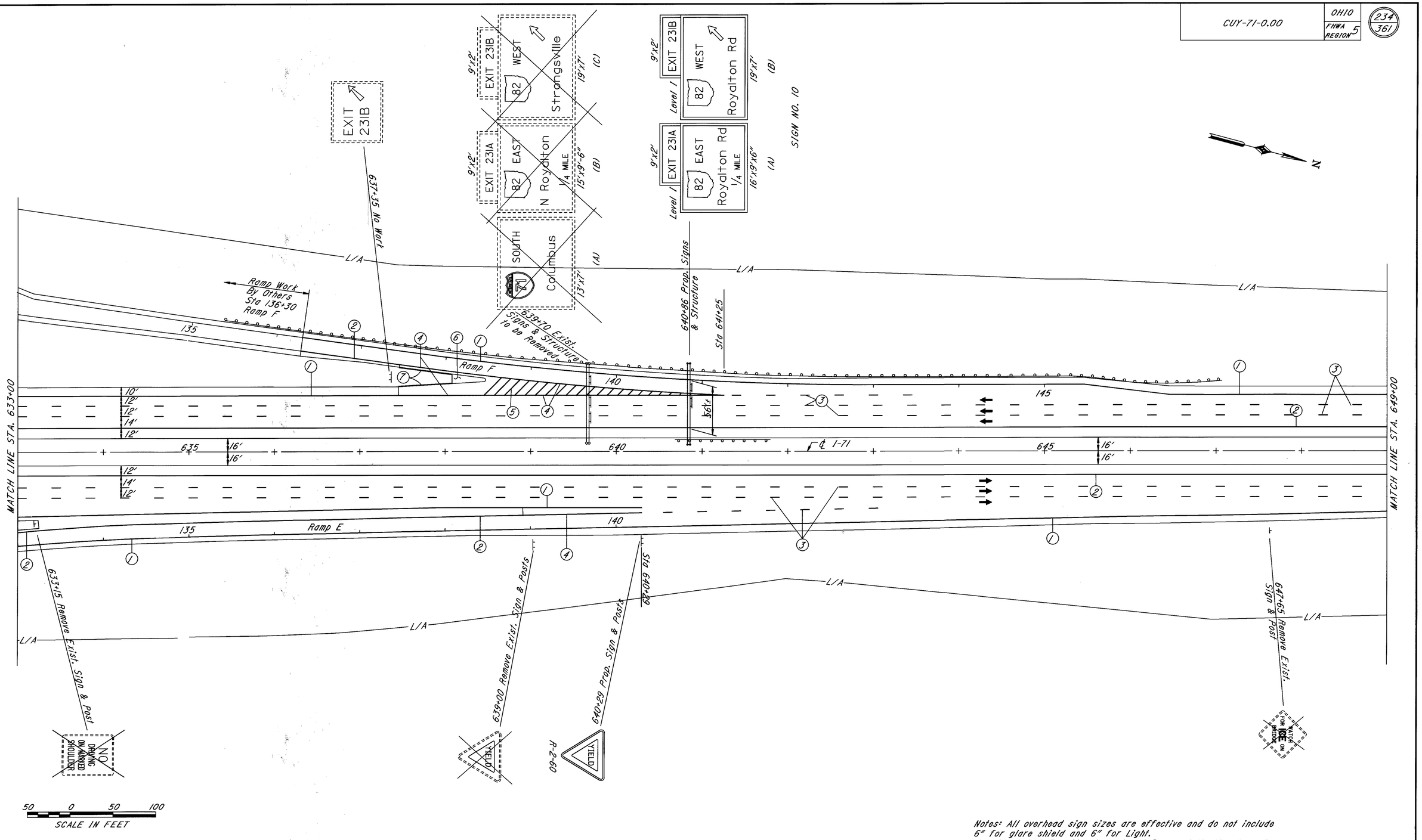

Notes: All overhead sign sizes are effective and do not include 6" for glare shield and 6" for Light.
See Sheet 222 For Sign Legend and Pavement Marking Legend.

TRAFFIC CONTROL STA. 633+00 TO STA. 649+00

PLOTTED FROM: ::\user\eforsber\pid08459\dgn\tc12.dgn
PLOT SUBMITTED: 27-JUL-1998 12:16
TC12.DGN

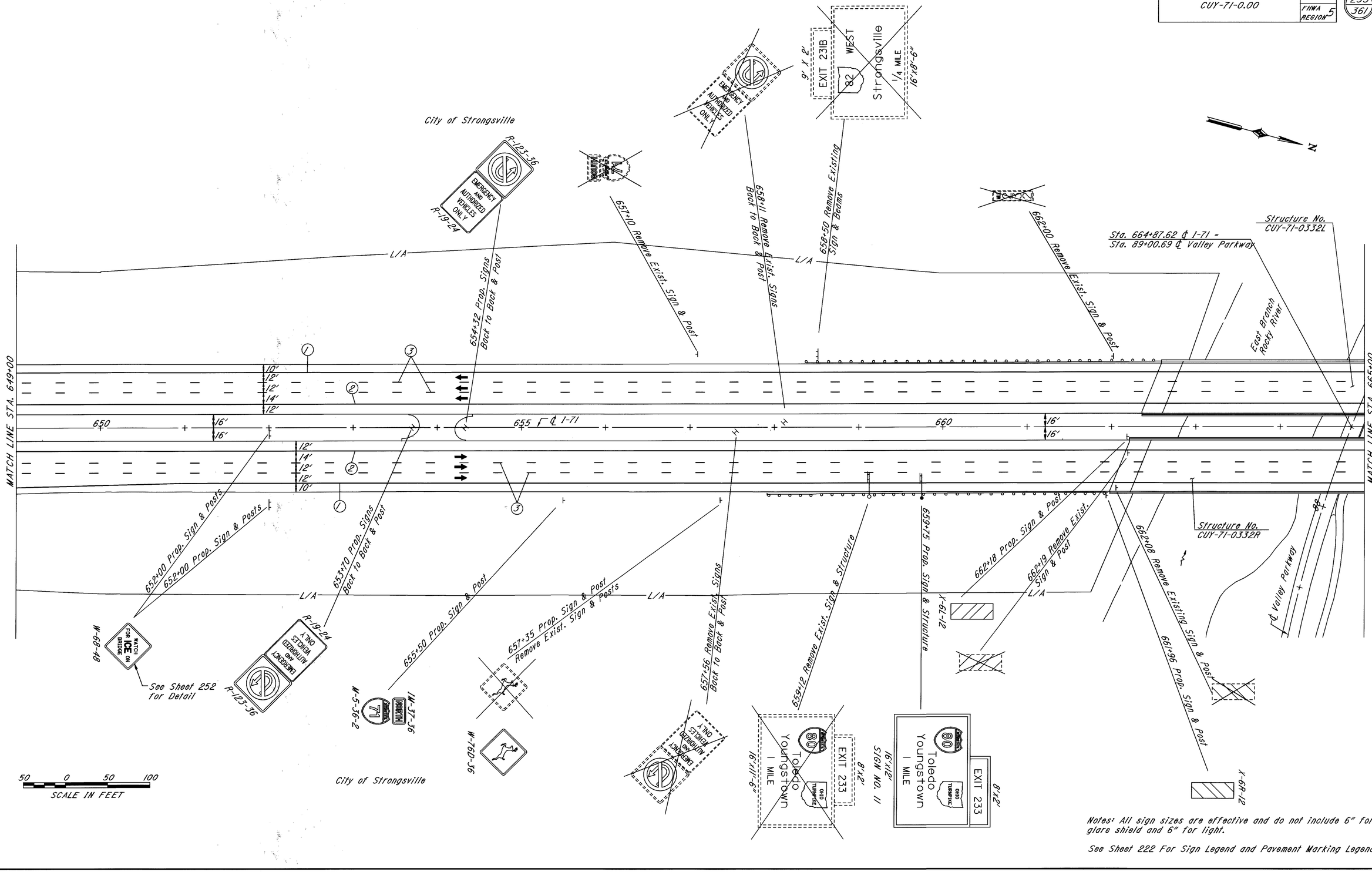

Notes: All sign sizes are effective and do not include 6" for glare shield and 6" for light.

See Sheet 222 For Sign Legend and Pavement Marking Legend.

TRAFFIC CONTROL STA. 649+00 TO STA. 665+00

PLOTTED FROM: i:\user=s\efors=ber\pid08459\dgn\tc13.dgn TC13.DGN PLOT SUBMITTED: 27-JUL-1998 12:17

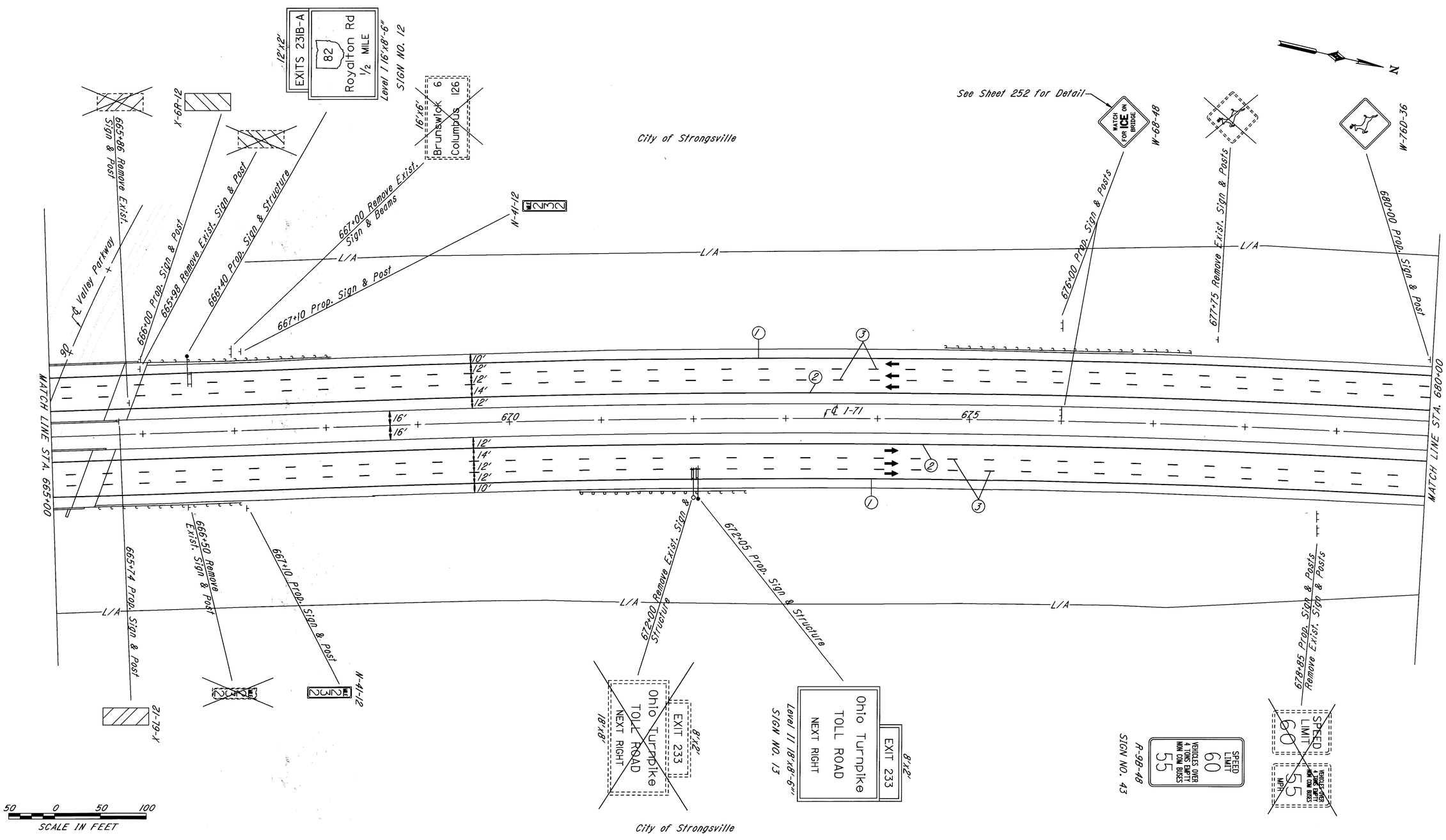

See Sheet 222 For Sign Legend and Pavement Marking Legend

TRAFFIC CONTROL STA. 665+00 TO STA. 680+00

PLOT SUBMITTED: 27-JUL-1998 12:17
TC14.DGN
PLOTTED FROM: :\users\eforsber\pid08459\dgn\tc14.dgn

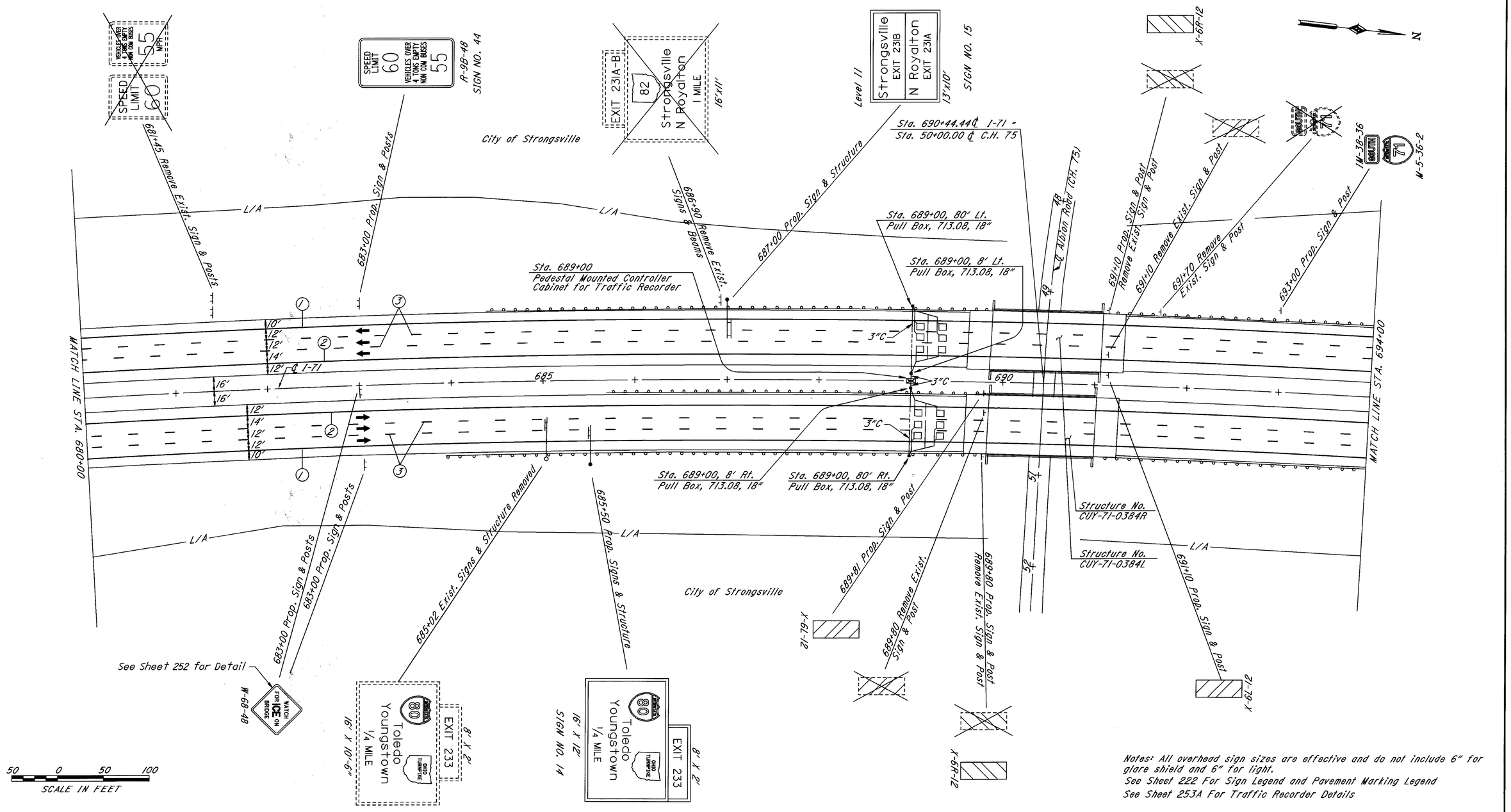

Notes: All overhead sign sizes are effective and do not include 6" for glare shield and 6" for light.
See Sheet 222 For Sign Legend and Pavement Marking Legend
See Sheet 253A For Traffic Recorder Details

TRAFFIC CONTROL STA. 680+00 TO STA. 694+00

PLOTTED FROM: ::\users\eforsber\pid08459\dgn\tc15.dgn
TC15.DGN
PLOT SUBMITTED: 27-JUL-1998 12:17

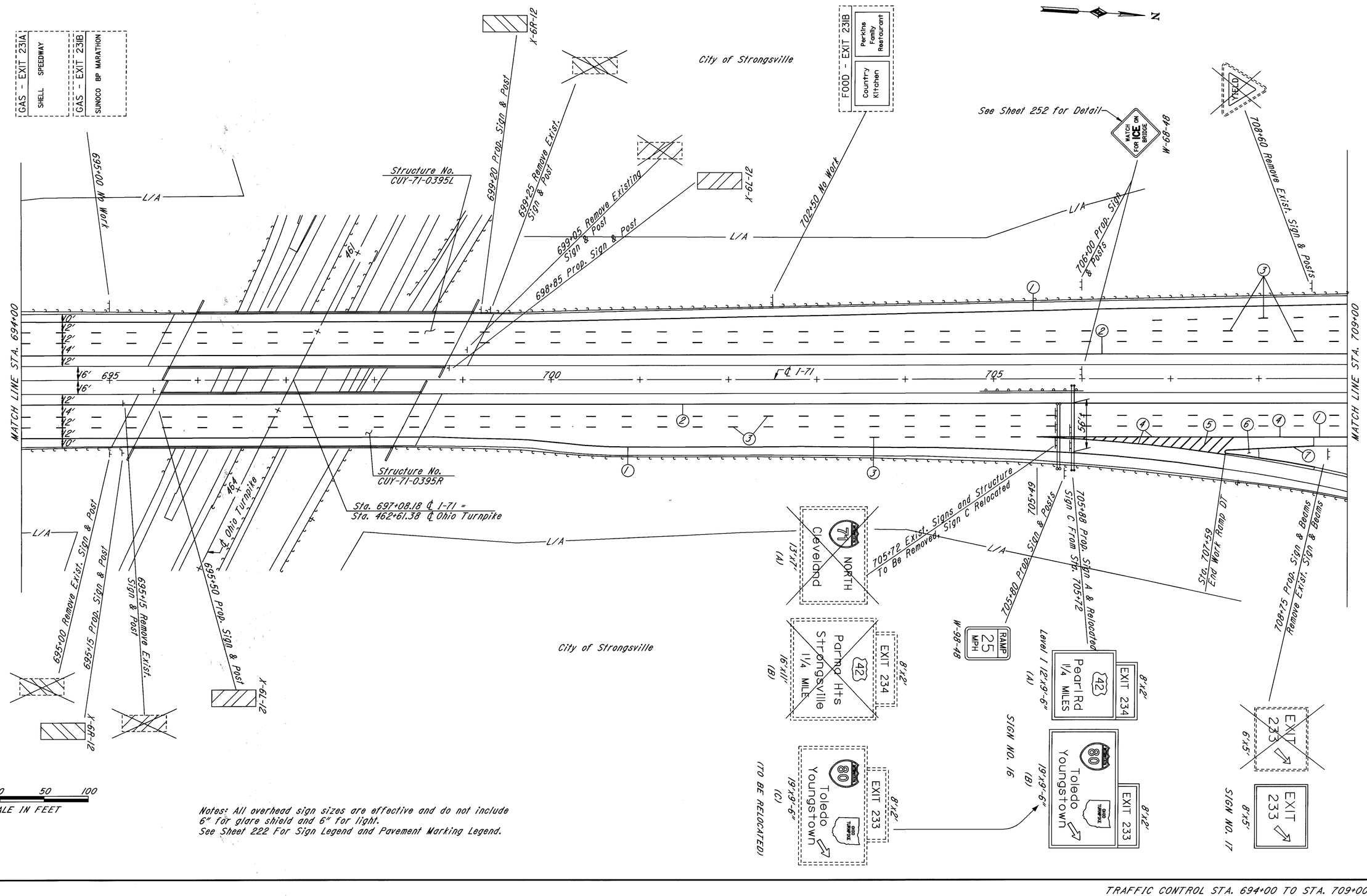

Notes: All overhead sign sizes are effective and do not include 6" for glare shield and 6" for light.
See Sheet 222 For Sign Legend and Pavement Marking Legend.

TRAFFIC CONTROL STA. 694+00 TO STA. 709+00

PLOT SUBMITTED: 27-JUL-1998 12:18
PLOTTED FROM: i:\users\eforsber\pid08459\dgn\tc16.dgn
TC16.DGN

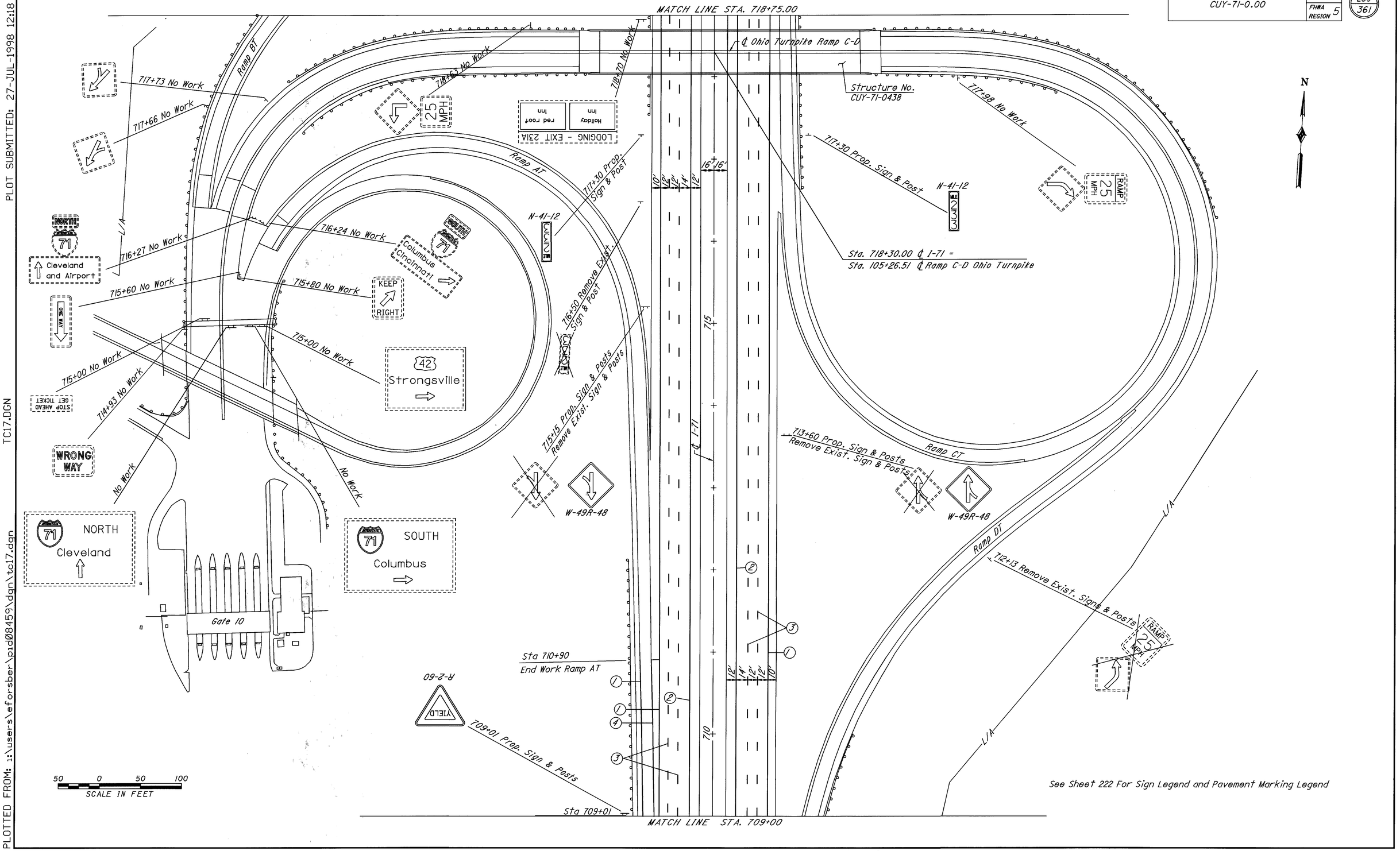

See Sheet 222 For Sign Legend and Pavement Marking Legend

TRAFFIC CONTROL STA. 709+00 TO STA. 718+75

PLOTTED FROM: ::\users\eforsber\pid08459\dgn\tc17.dgn
PLOT SUBMITTED: 27-JUL-1998 12:18
TC17.DGN

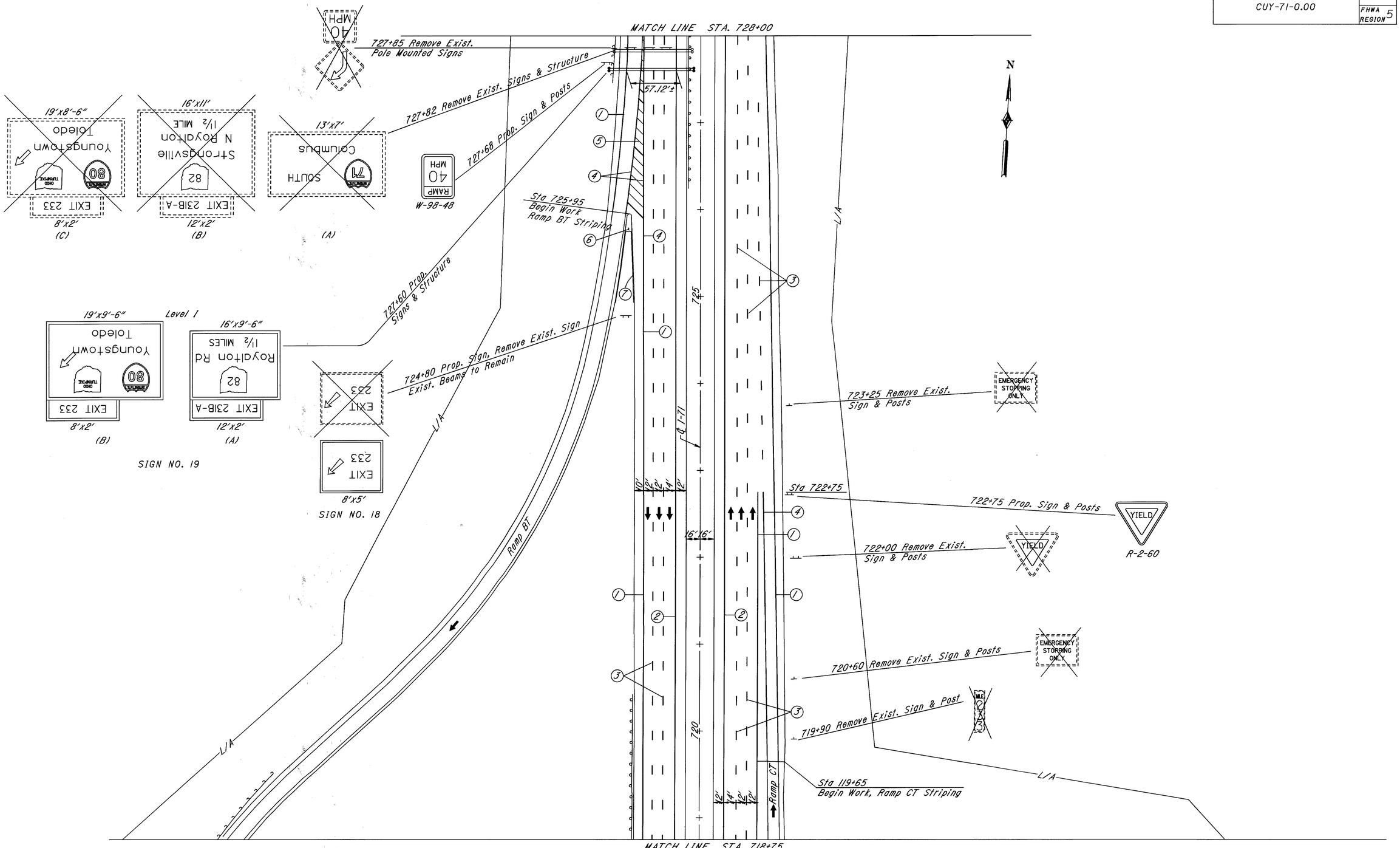

Notes: All overhead sign sizes shown are effective and do not include 6" for glare shield and 6" for light.

See Sheet 222 For Sign Legend and Pavement Marking Legend.

TRAFFIC CONTROL STA. 718+75 TO STA. 728+00

PLOTTED FROM: i:\users\eforsber\pid08459\dgn\tc18.dgn TC18.DGN PLOT SUBMITTED: 27-JUL-1998 12:19

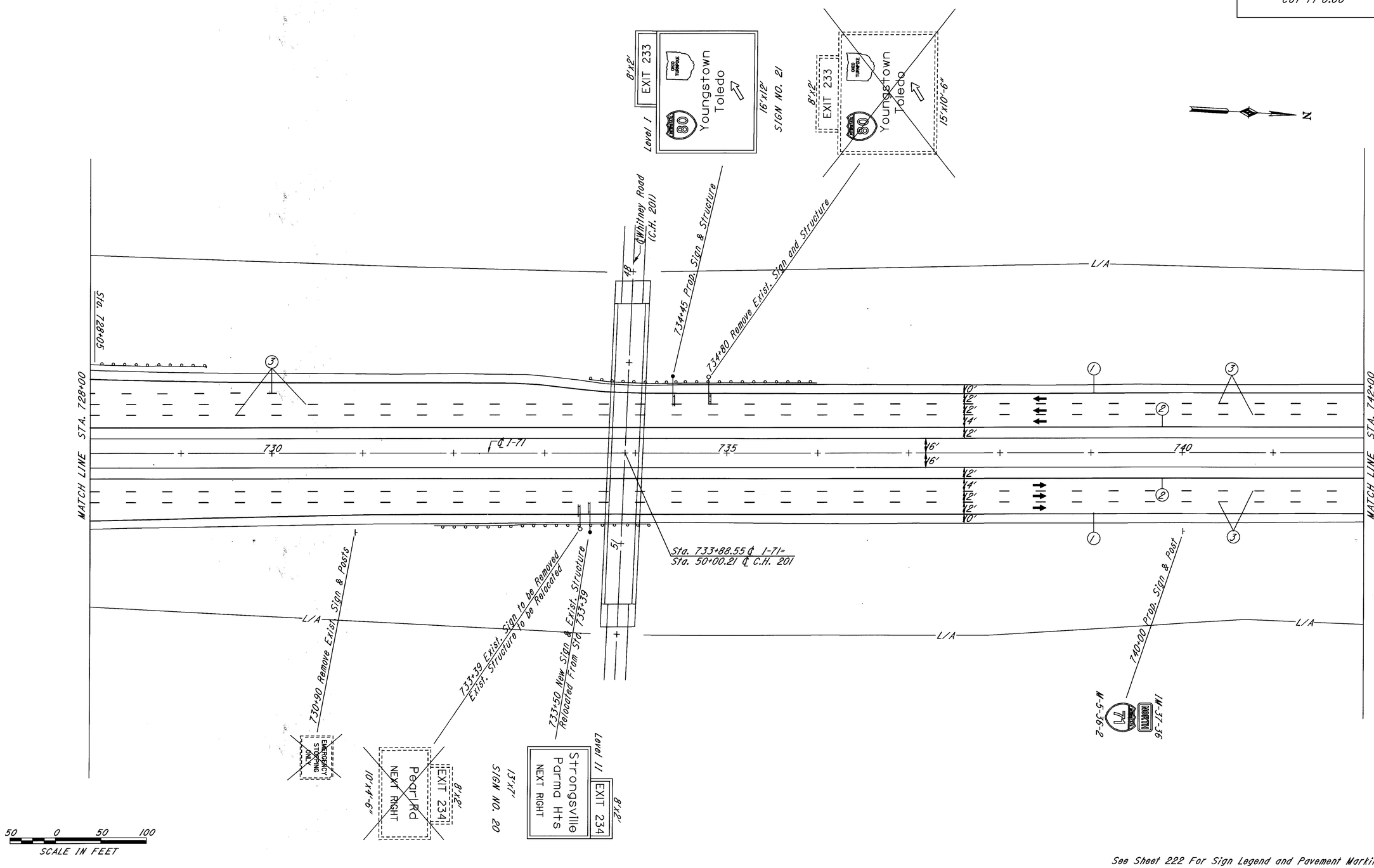

See Sheet 222 For Sign Legend and Pavement Marking Legend

TRAFFIC CONTROL STA. 728+00 TO STA. 742+00

PLOT SUBMITTED: 27-JUL-1998 12:19
PLOTTED FROM: i:\users\eforsber\pid08459\dgn\tc19.dgn
TC19.DGN

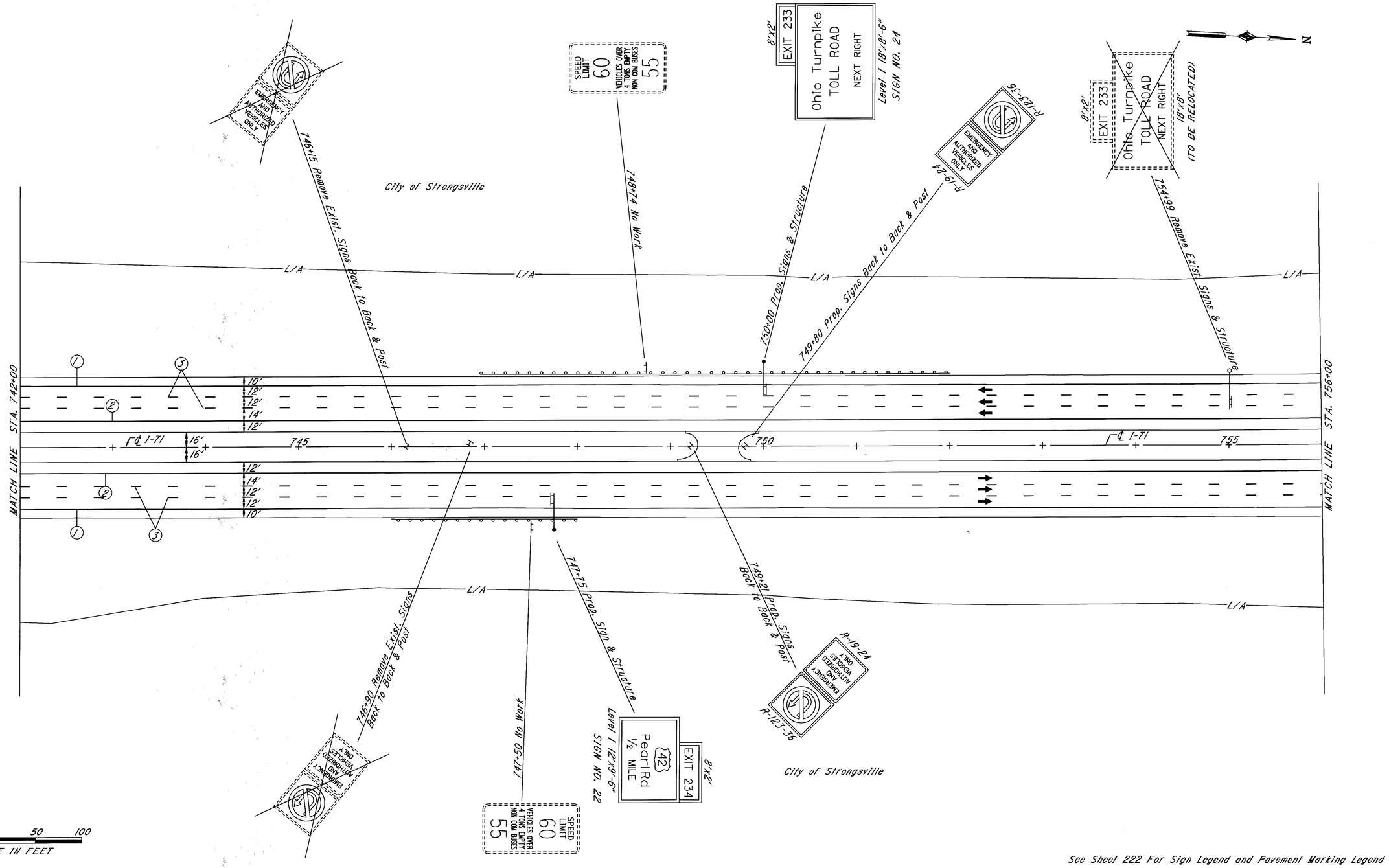

See Sheet 222 For Sign Legend and Pavement Marking Legend

TRAFFIC CONTROL STA. 742+00 TO STA. 756+00

PLOT SUBMITTED: 27-JUL-1998 12:19
PLOTTED FROM: i:\users\eforsber\pid08459\dgn\tc20.dgn
TC20.DGN

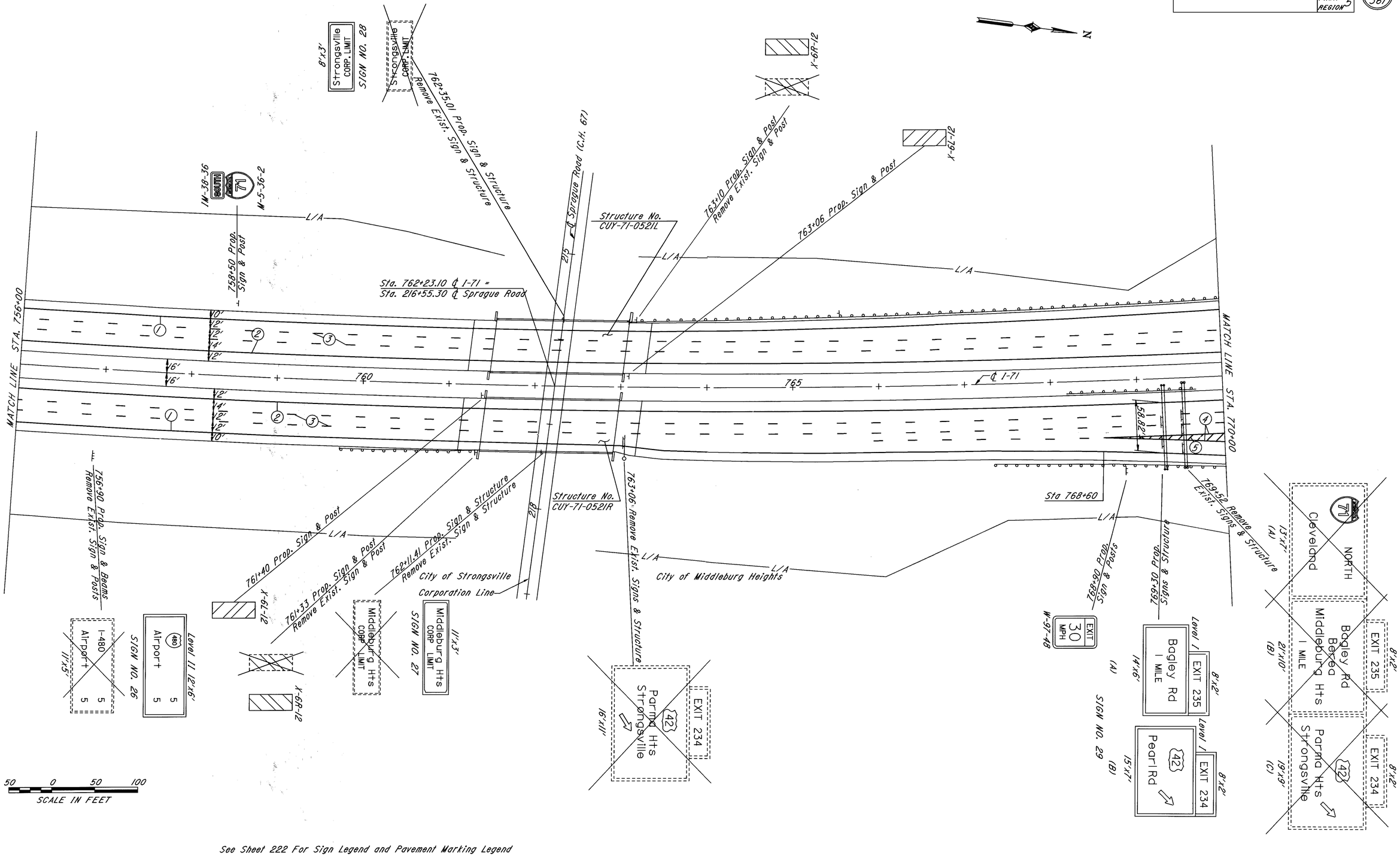

See Sheet 222 For Sign Legend and Pavement Marking Legend

TRAFFIC CONTROL STA. 756+00 TO STA. 770+00

PLOTTED FROM: ::\users\eforsber\pid08459\dgn\tc21.dgn
TC21.DGN
PLOT SUBMITTED: 27-JUL-1998 12:20

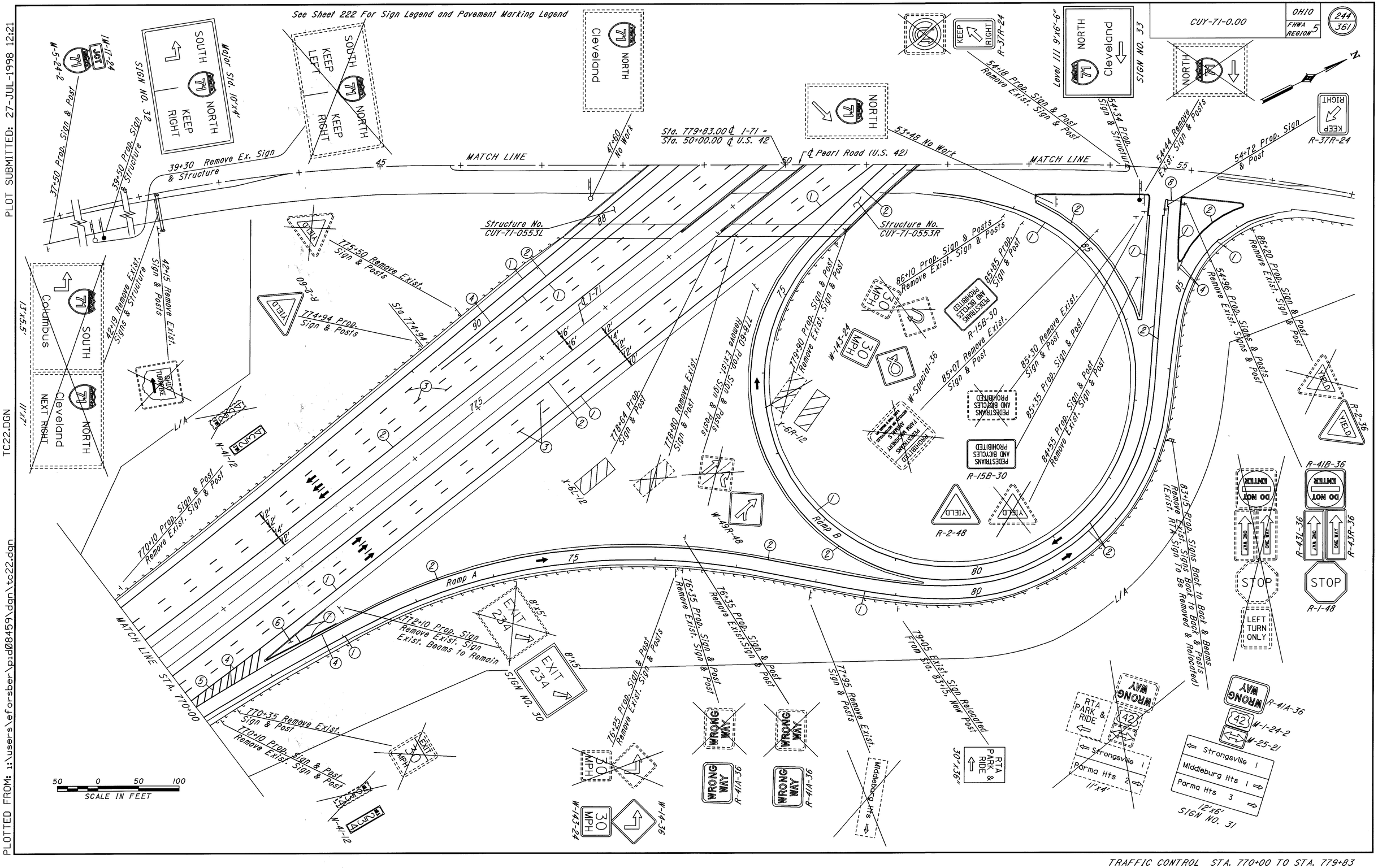

PLOTTED FROM: i:\users\eforsber\pid08459\dgn\tc22.dgn
PLOT SUBMITTED: 27-JUL-1998 12:21
TC22.DGN

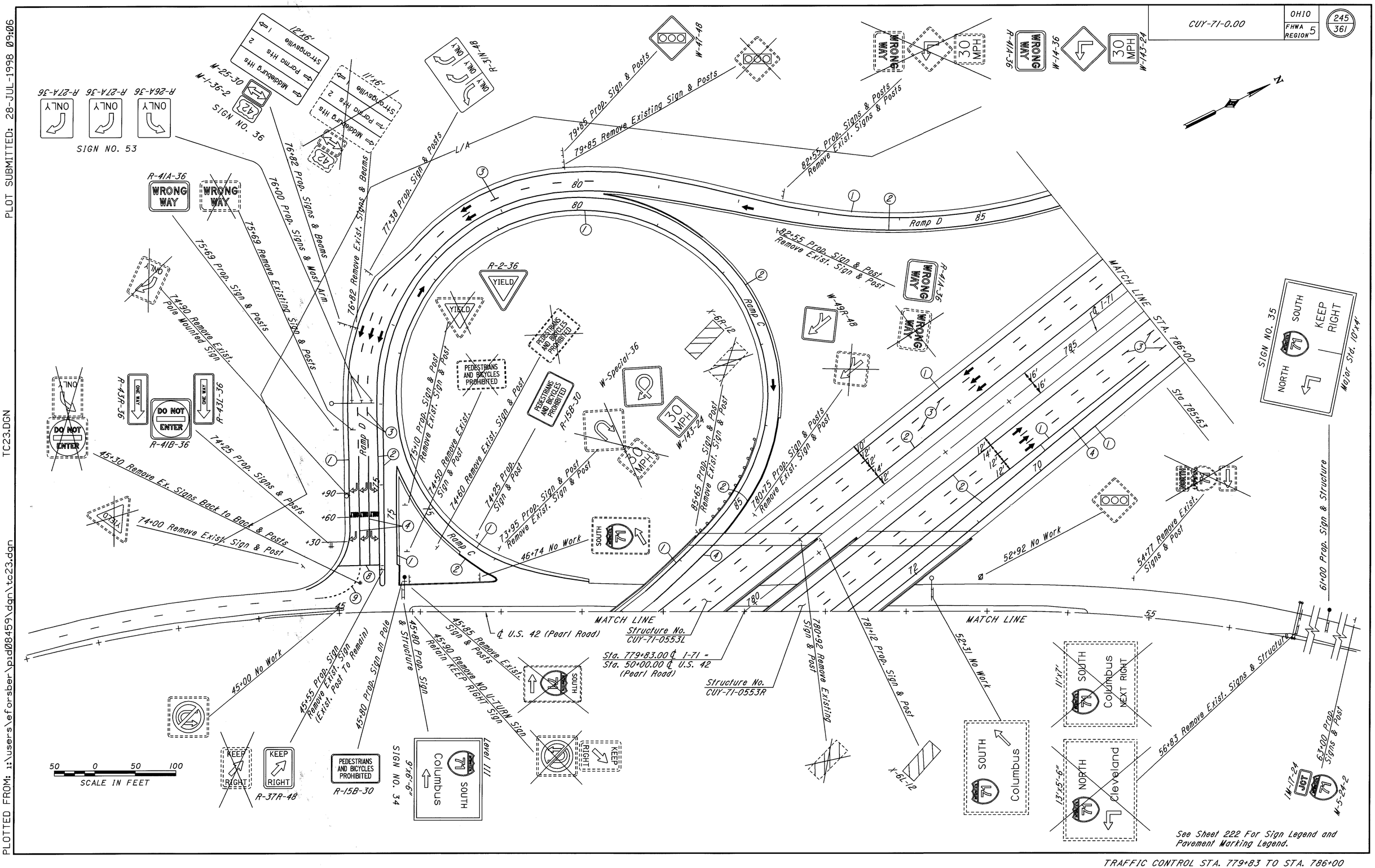

TRAFFIC CONTROL STA. 779+83 TO STA. 786+00

PLOT SUBMITTED: 28-JUL-1998 09:06
PLOTTED FROM: I:\user\eforsber\pid08459\dgn\tc23.dgn
TC23.DGN

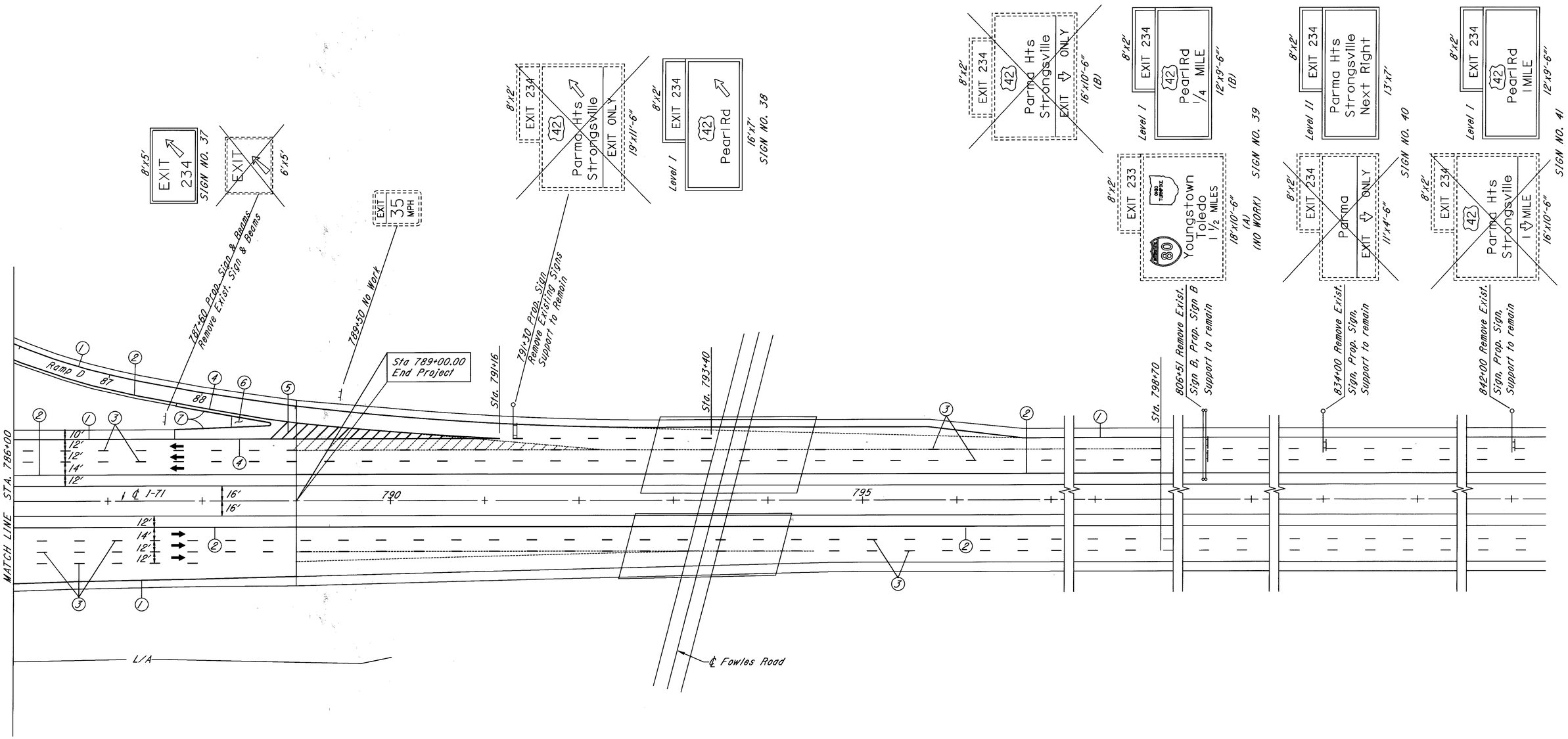

See Sheet 222 For Sign Legend and Pavement Marking Legend

TRAFFIC CONTROL STA. 786+00 TO STA. 792+00

PLOT SUBMITTED: 27-JUL-1998 13:09
PLOTTED FROM: i:\users\eforsber\pid08459\dgn\tc24.dgn
TC24.DGN

PLOTTED FROM: :\users\eforsber\pid08459\dgn\tcev3.dgn TCEV3.DGN PLOT SUBMITTED: 27-JUL-1998 12:33

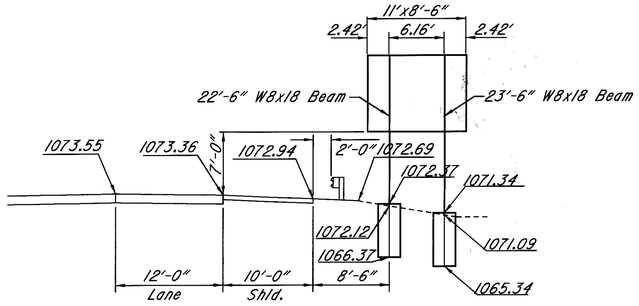

SIGN NO. 1
STA. 486+80 N.B. I-71
GROUND MOUNTED

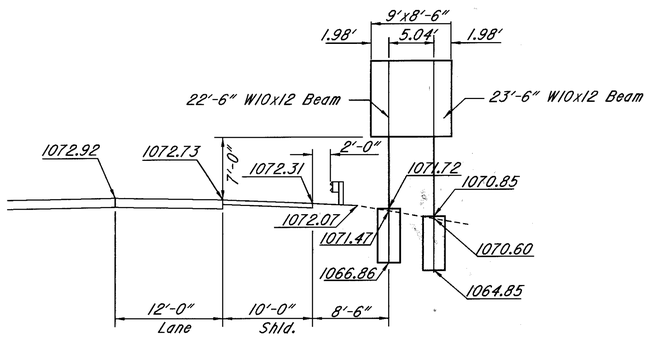

SIGN NO. 2
STA. 487+55 S.B. I-71
GROUND MOUNTED

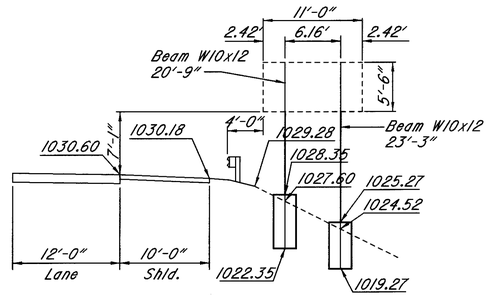

SIGN NO. 3
STA. 538+00 N.B. I-71
EXISTING RELOCATED FROM STA. 581+00
GROUND MOUNTED

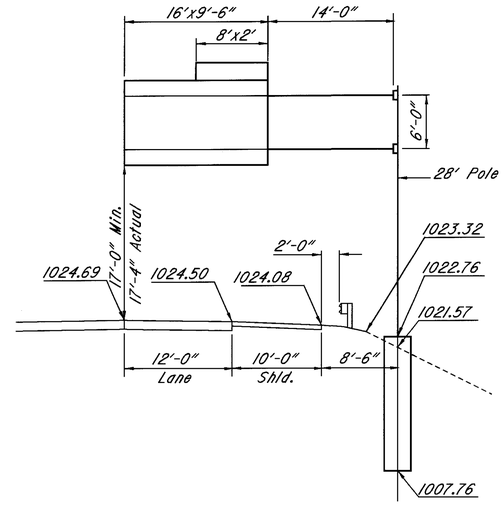

SIGN NO. 4
STA. 545+00 N.B. I-71
TC-12.30, DESIGN NO. 8, 30' ARMS
PROPOSED SUPPORT

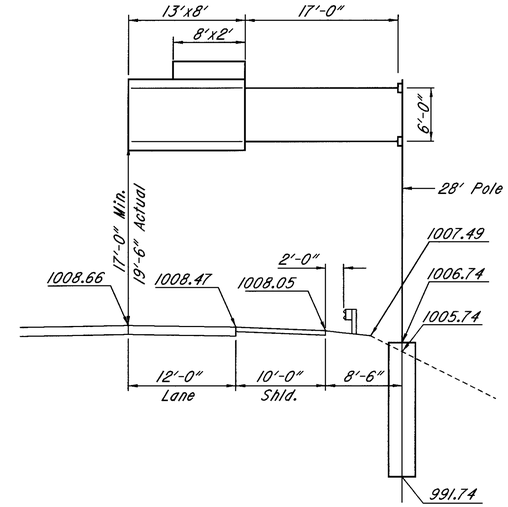

SIGN NO. 5
STA. 557+00 N.B. I-71
TC-12.30, DESIGN NO. 8, 30' ARMS
PROPOSED SUPPORT

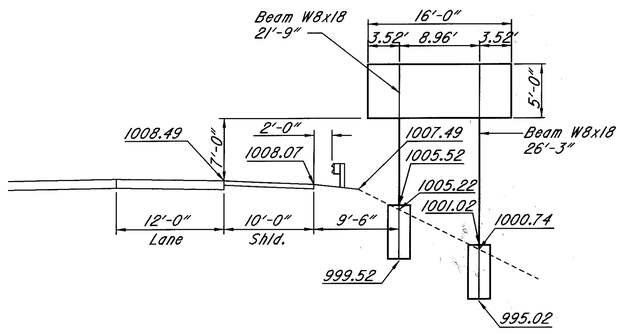

SIGN NO. 6
STA. 557+00 S.B. I-71
GROUND MOUNTED

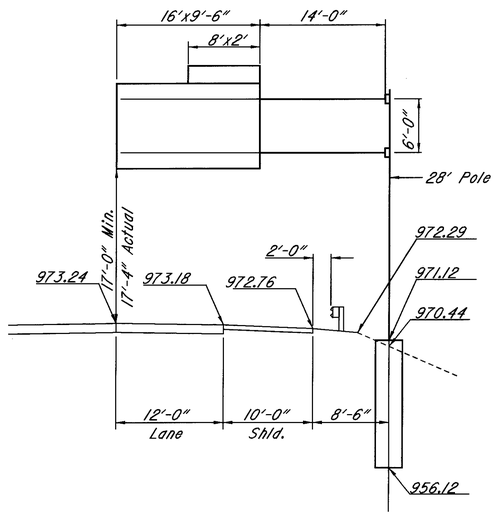

SIGN NO. 7
STA. 582+70 N.B. I-71
TC-12.30, DESIGN NO. 8, 30' ARMS
PROPOSED SUPPORT

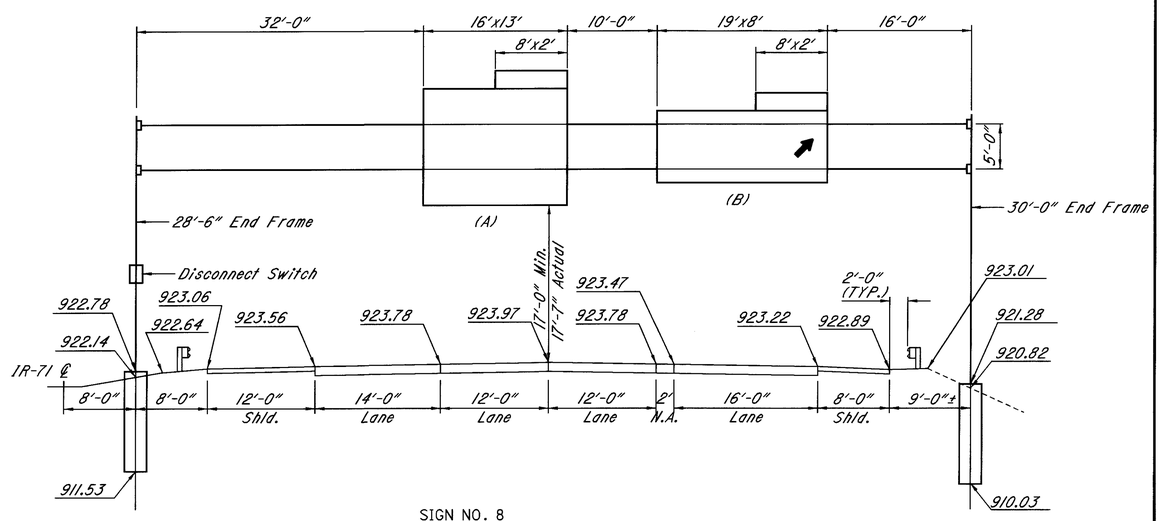

SIGN NO. 8
STA. 608+47 N.B. I-71
TC-7.65, DESIGN NO. 8, SPAN = 93'
PROPOSED SUPPORT

8 0 8 16
SCALE IN FEET

PLOT SUBMITTED: 27-JUL-1998 12:23
TCEV4.DGN
PLOTTED FROM: i:\user\eforsber\pid08459\dgn\tcev4.dgn

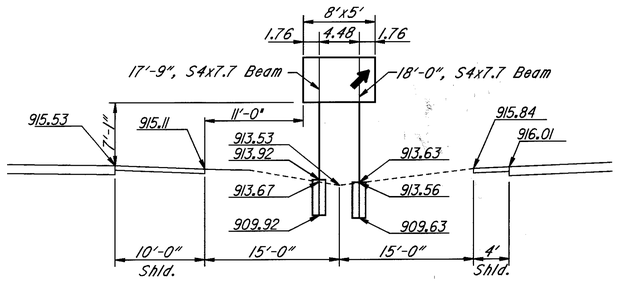

SIGN NO. 9
STA. 612+10 N.B. I-71
GROUND MOUNTED

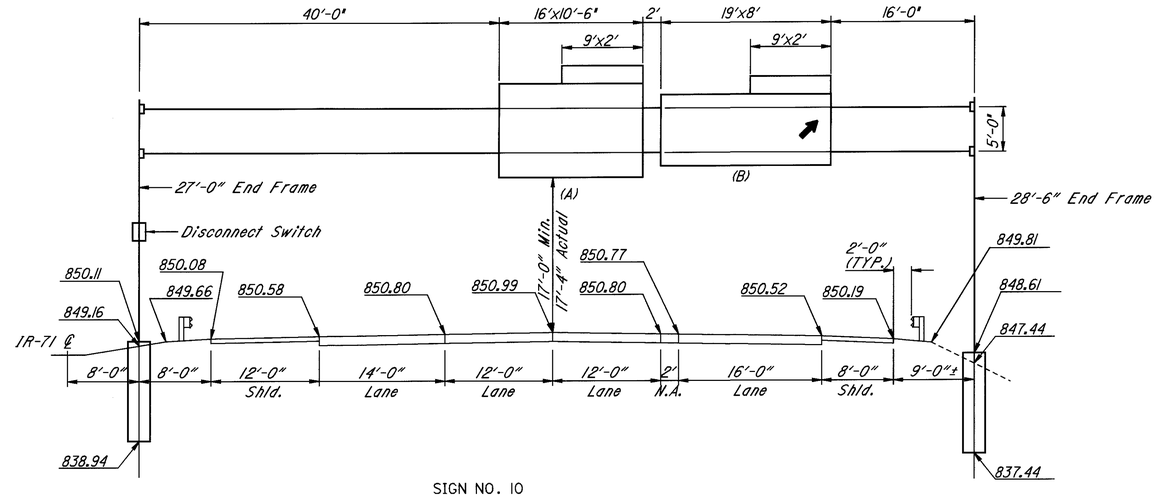

SIGN NO. 10
STA. 640+86 S.B. I-71
TC-7.65, DESIGN NO. 8, SPAN = 93'
PROPOSED SUPPORT

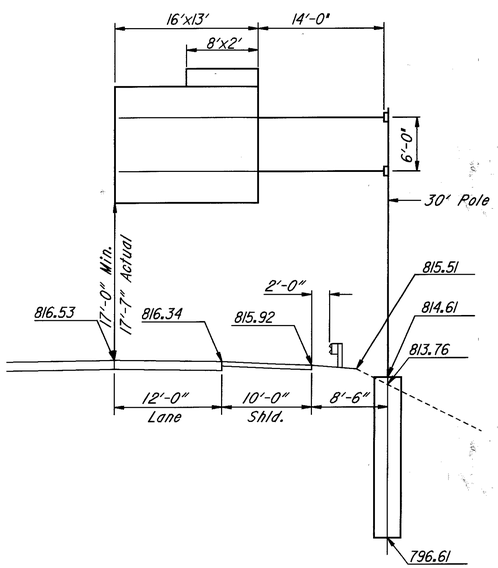

SIGN NO. 11
STA. 659+75 N.B. I-71
TC-12.30, DESIGN NO. 12, 30' ARMS
PROPOSED SUPPORT

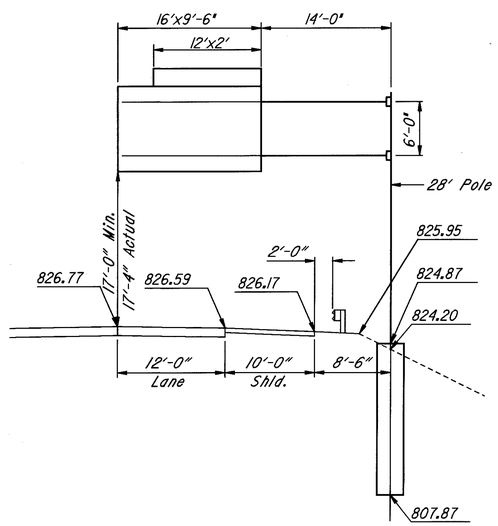

SIGN NO. 12
STA. 666+40 S.B. I-71
TC-12.30, DESIGN NO. 10, 30' ARMS
PROPOSED SUPPORT

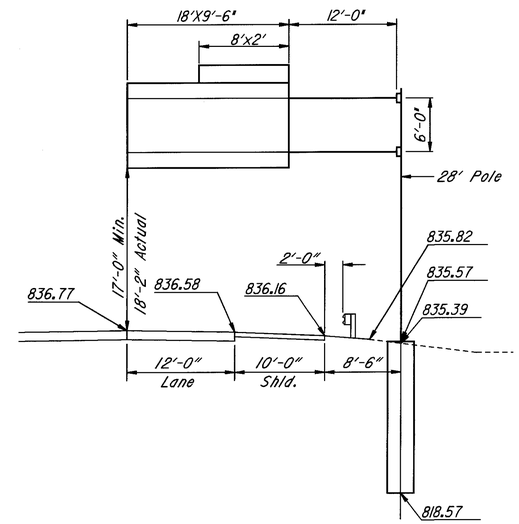

SIGN NO. 13
STA. 672+05 N.B. I-71
TC-12.30, DESIGN NO. 10, 30' ARMS
PROPOSED SUPPORT

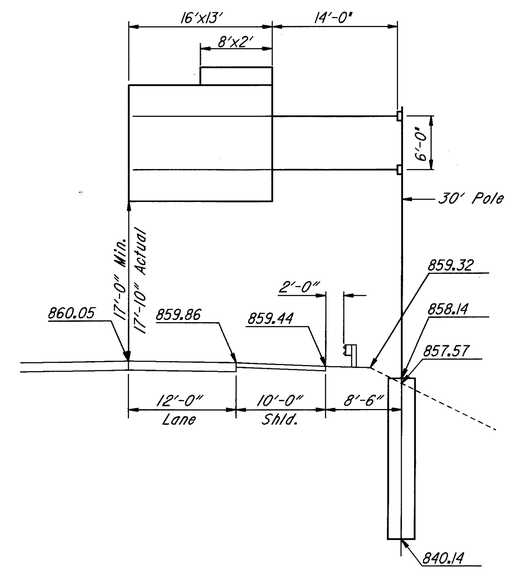

SIGN NO. 14
STA. 685+50 N.B. I-71
TC-12.30, DESIGN NO. 12, 30' ARMS
PROPOSED SUPPORT

8 0 8 16
SCALE IN FEET

PLOT SUBMITTED: 27-JUL-1998 12:23
TCEV5.DGN
PLOTTED FROM: i:\users\eforsber\pid08459\dgn\tcev5.dgn

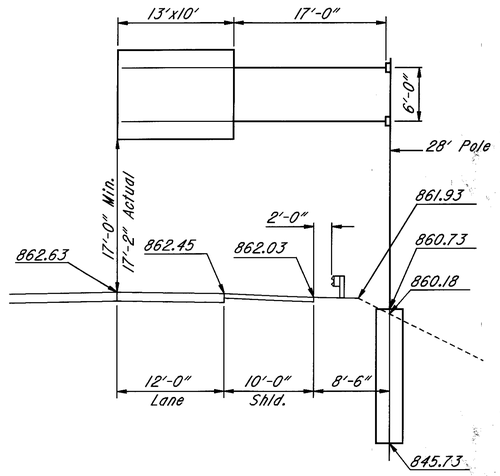

SIGN NO. 15
STA. 687+00 S.B. I-71
TC-12.30, DESIGN NO. 8, 30' ARMS
PROPOSED SUPPORT

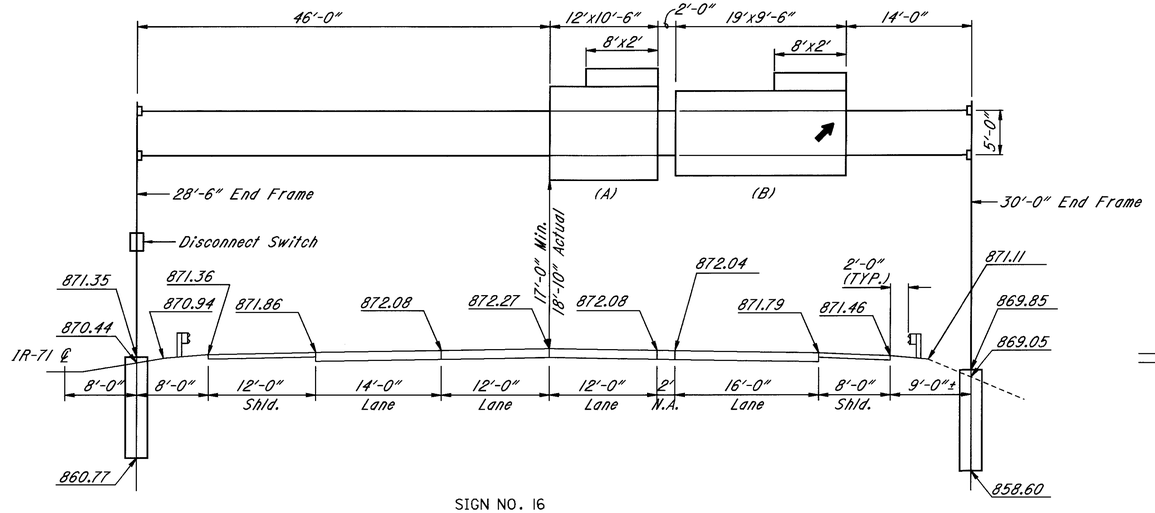

SIGN NO. 16
STA. 705+88 N.B. I-71
TC-7.65, DESIGN NO. 8, SPAN = 93'
PROPOSED SUPPORT

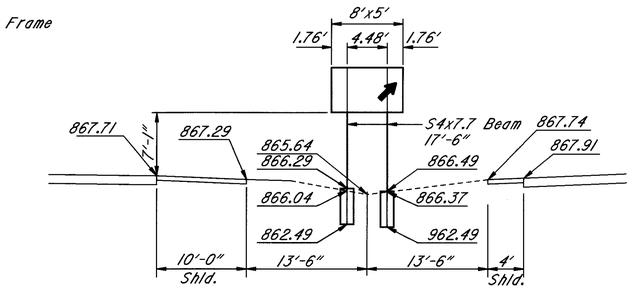

SIGN NO. 17
STA. 708+75 N.B. I-71
GROUND MOUNTED

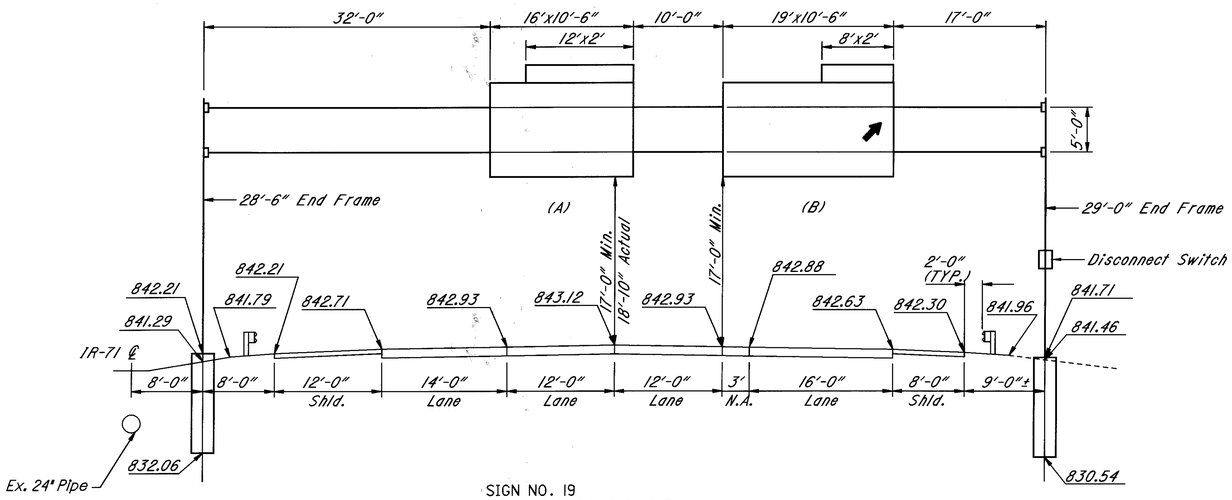

SIGN NO. 19
STA. 727+60 S.B. I-71
TC-7.65, DESIGN NO. 8, SPAN = 94'
PROPOSED SUPPORT

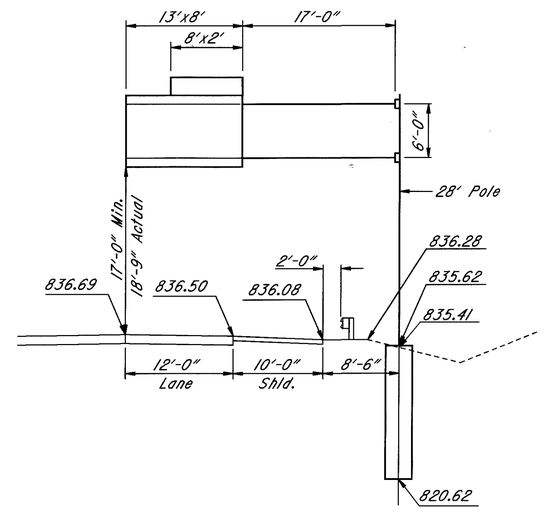

SIGN NO. 20
STA. 733+50 N.B. I-71
TC-12.30, DESIGN NO. 8, 30' ARMS
PROPOSED SUPPORT

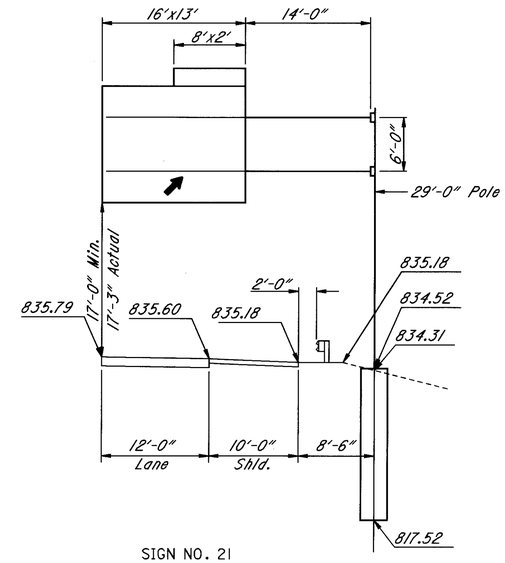

SIGN NO. 21
STA. 734+45 S.B. I-71
TC-12.30, DESIGN NO. 10, 30' ARMS
PROPOSED SUPPORT

8 0 8 16
SCALE IN FEET

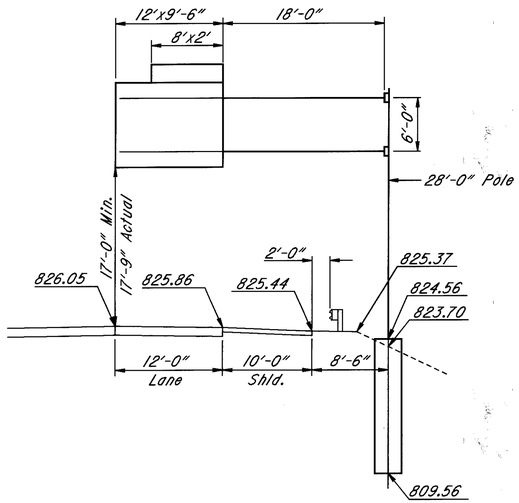

SIGN NO. 22
STA. 747+75 N.B. I-71
TC-12.30, DESIGN NO. 8, 30' ARMS
PROPOSED SUPPORT

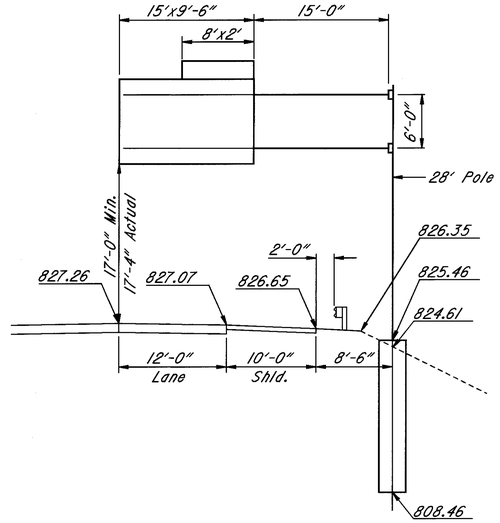

SIGN NO. 24
STA. 750+00 S.B. I-71
TC-12.30, DESIGN NO. 10, 30' ARMS
PROPOSED SUPPORT

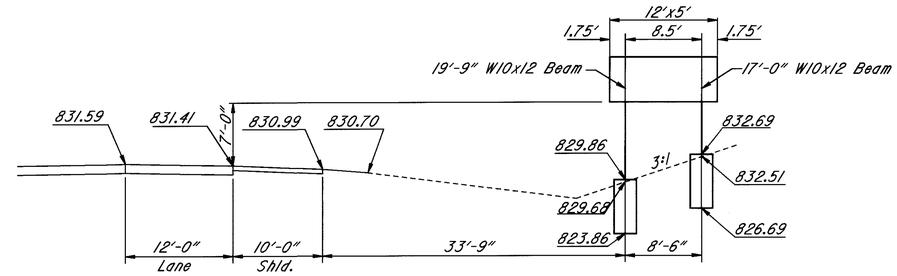

SIGN NO. 26
STA. 756+90 N.B. I-71
GROUND MOUNTED

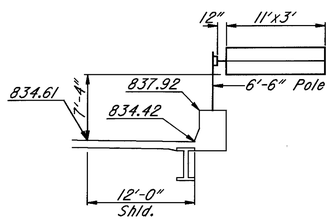

SIGN NO. 27
STA. 762+11.41 N.B. I-71
TC-16.20, DESIGN NO. 1, 12' ARM
MOUNTED ON PARAPET
PROPOSED SUPPORT

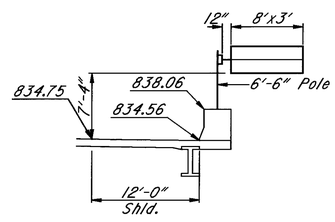

SIGN NO. 28
STA. 762+35.01 S.B. I-71
TC-16.20, DESIGN NO. 1, 9' ARM
MOUNTED ON PARAPET
PROPOSED SUPPORT

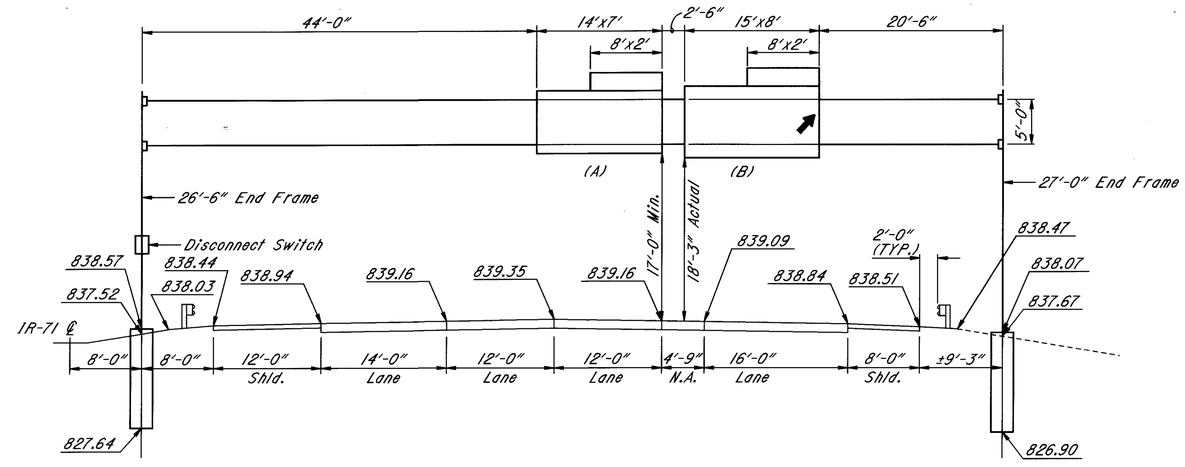

SIGN NO. 29
STA. 769+30 N.B. I-71
TC-7.65, DESIGN NO. 8, SPAN = 96'
PROPOSED SUPPORT

8 0 8 16
SCALE IN FEET

PLOTTED FROM: ::\users\eforsber\pid08459\dgn\tcev6.dgn
PLOT SUBMITTED: 27-JUL-1998 12:23
TCEV6.DGN

PLOT SUBMITTED: 27-JUL-1998 12:24
PLOTTED FROM: ::\users\eforsber\pid08459\dgn\tcev7.dgn
TCEV7.DGN

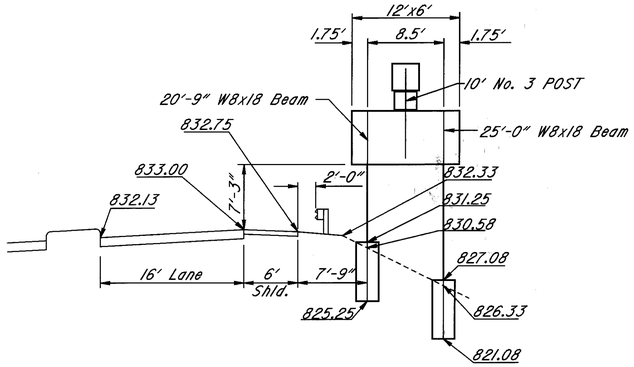

SIGN NO. 31
STA. 83+15 RAMP A-PEARL
GROUND MOUNTED

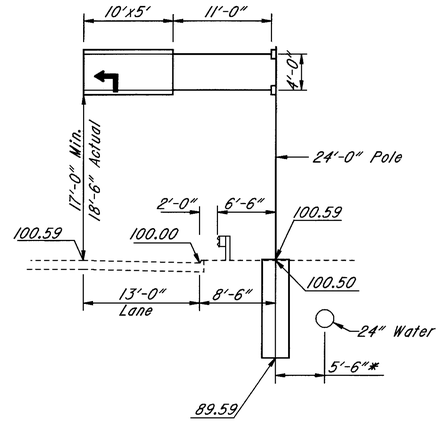

SIGN NO. 32
STA. 39+50 N.B. PEARL ROAD
TC-12.30, DESIGN NO. 4, 21' ARMS
PROPOSED SUPPORT

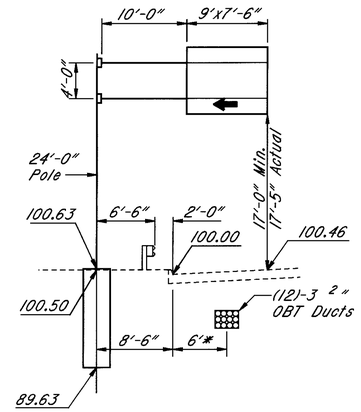

SIGN NO. 33
STA. 54+34 S.B. PEARL ROAD
TC-12.30, DESIGN NO. 4, 19' ARMS
PROPOSED SUPPORT

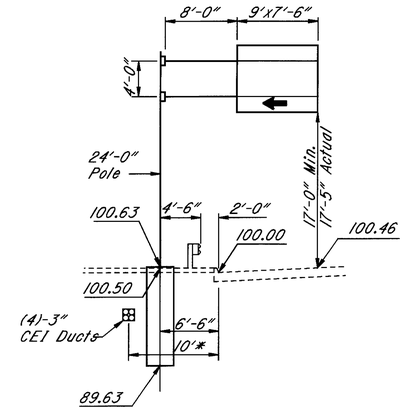

SIGN NO. 34
STA. 45+80 N.B. PEARL ROAD
TC-12.30, DESIGN NO. 4, 17' ARMS
PROPOSED SUPPORT

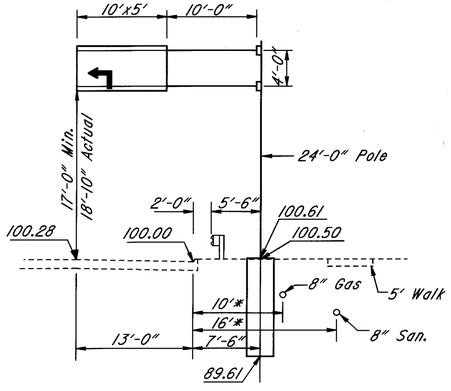

SIGN NO. 35
STA. 61+00 S.B. PEARL ROAD
TC-12.30, DESIGN NO. 4, 20' ARMS
PROPOSED SUPPORT

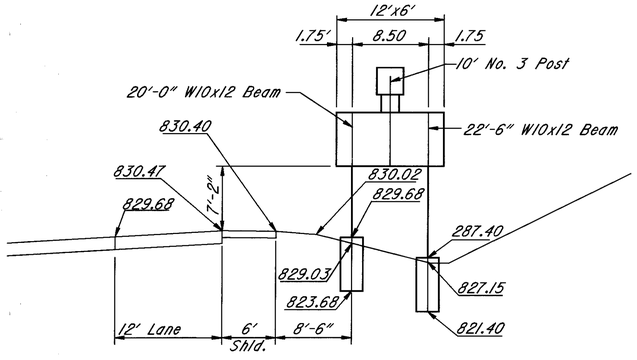

SIGN NO. 36
STA. 76+82 RAMP D-PEARL
GROUND MOUNTED

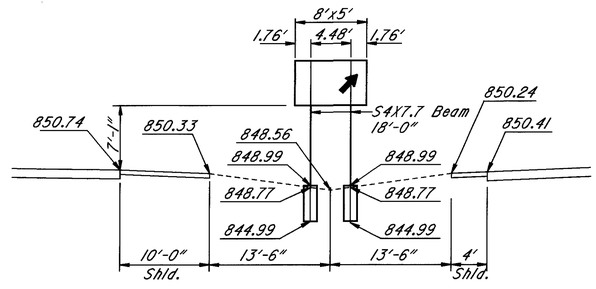

SIGN NO. 37
STA. 787+60 S.B. I-71
GROUND MOUNTED

8 0 8 16
SCALE IN FEET

Note: Sign details 32, 33, 34 and 35 have arbitrary elevation datum 100.00 at edge of pavement.

PLOT SUBMITTED: 27-JUL-1998 12:24
PLOTTED FROM: ::\users\eforsber\pid08459\dgn\tcev8.dgn
TCEV8.DGN

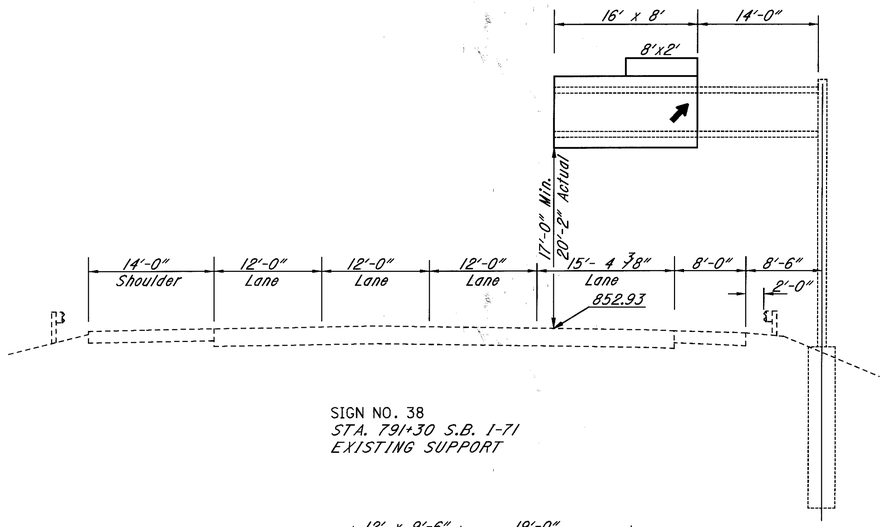

SIGN NO. 38
STA. 791+30 S.B. I-71
EXISTING SUPPORT

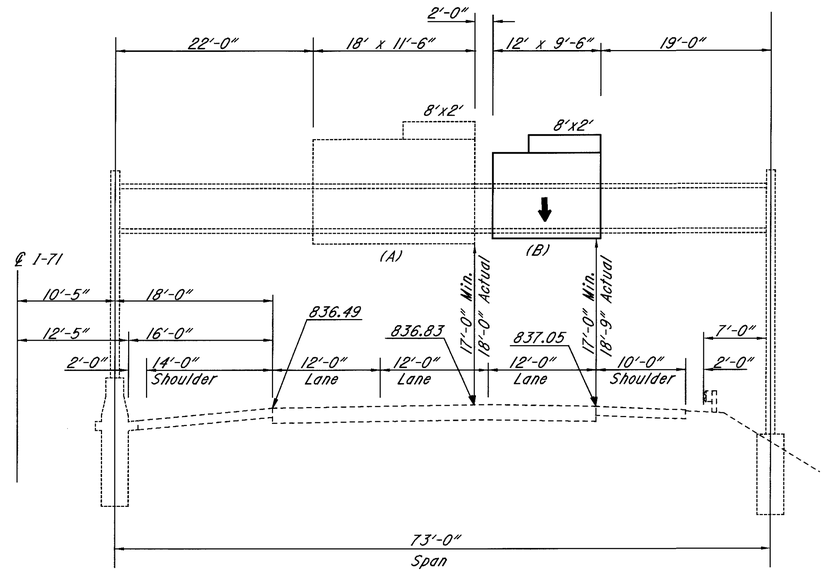

SIGN NO. 39
STA. 806+51 S.B. I-71
EXISTING SUPPORT

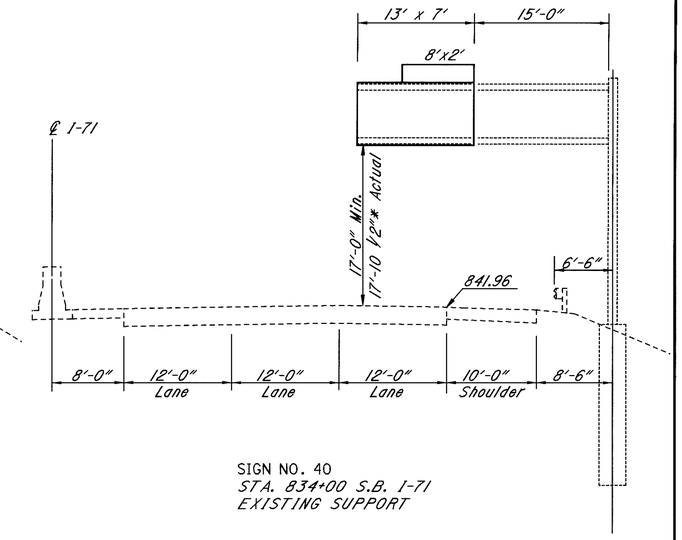

SIGN NO. 40
STA. 834+00 S.B. I-71
EXISTING SUPPORT

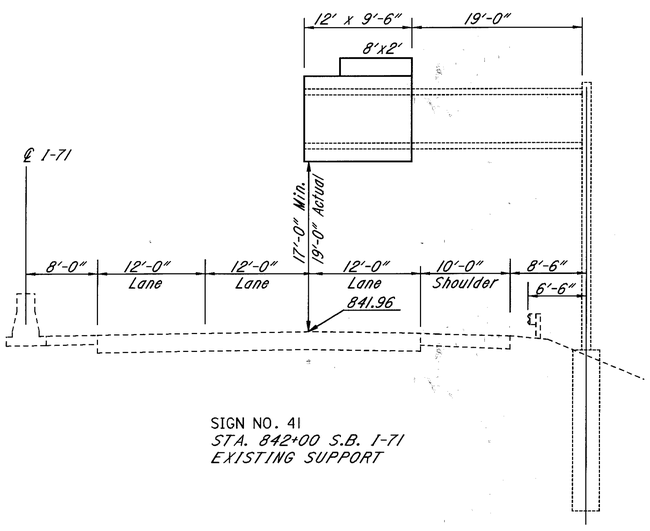

SIGN NO. 41
STA. 842+00 S.B. I-71
EXISTING SUPPORT

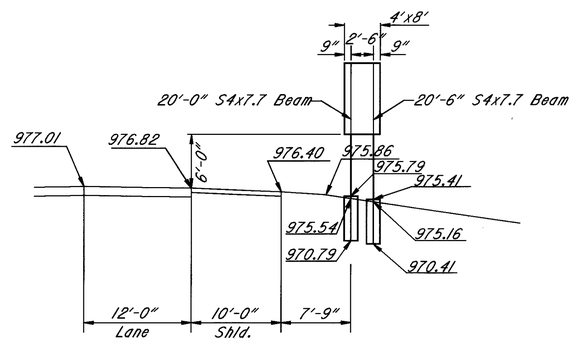

SIGN NO. 42
STA. 580+00 S.B. I-71
GROUND MOUNTED

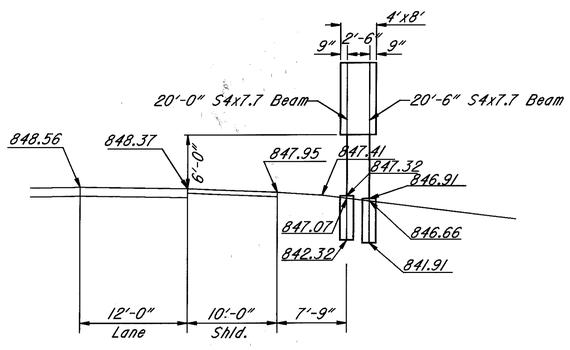

SIGN NO. 43
STA. 678+85 N.B. I-71
GROUND MOUNTED

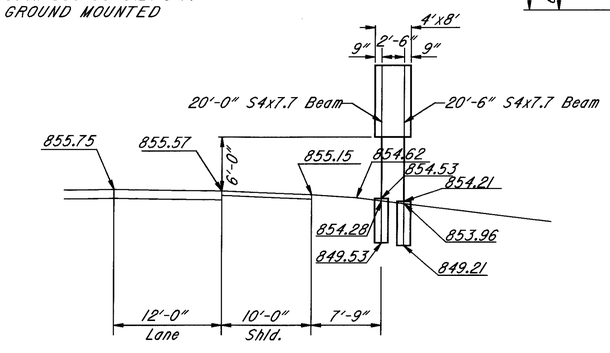

SIGN NO. 44
STA. 683+00 S.B. I-71
GROUND MOUNTED

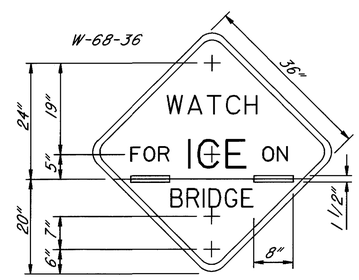

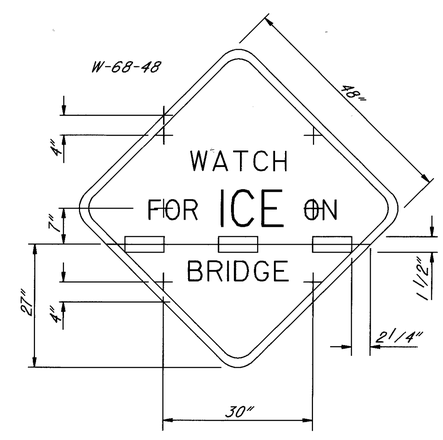

"HINGED" WATCH FOR ICE ON BRIDGE SIGN W-68

Notes:

1. The sign shall be hinged with 8" lengths of 1 1/2" brass-plated hinge which is riveted to each section of the sign and then covered with yellow reflective sheeting (Type F-730.18 or Type G-730.19) to match the background of the sign.

2. To fold the sign down, remove the top two bolts, fold the upper part of the sign down and insert a bolt through the lowest hole in the sign and into the post. Tighten the bolt to prevent the sign from flapping in the wind and sustaining damage.

3. Payment shall be made under Item 630 - Signs Flat Sheet, Type G, As Per Plan

8 0 8 16
SCALE IN FEET

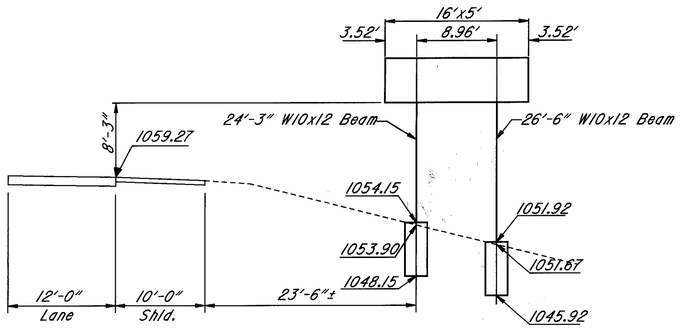

SIGN NO. 45
STA. 503+20 S.B. I-71
GROUND MOUNTED

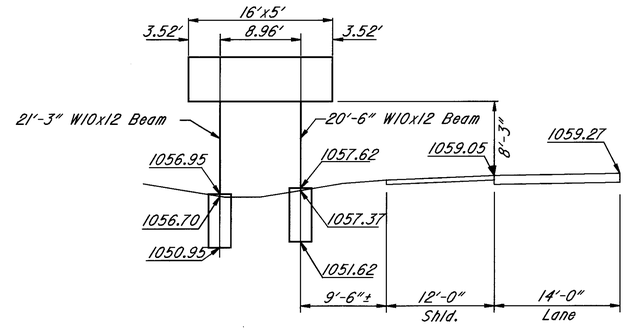

SIGN NO. 46
STA. 503+20 S.B. I-71
GROUND MOUNTED

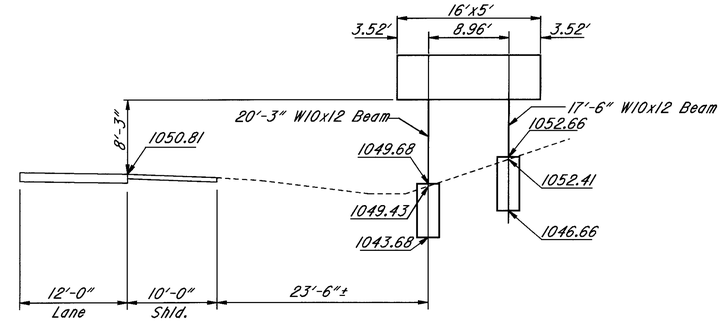

SIGN NO. 47
STA. 513+40 S.B. I-71
GROUND MOUNTED

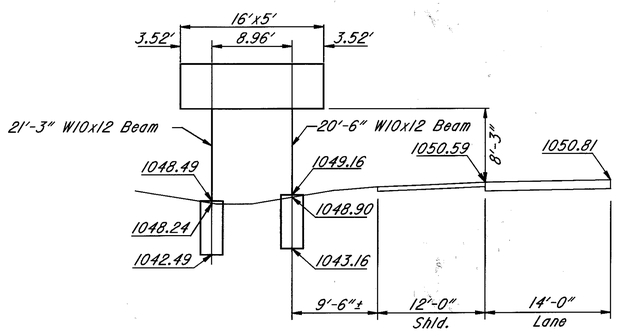

SIGN NO. 48
STA. 513+40 S.B. I-71
GROUND MOUNTED

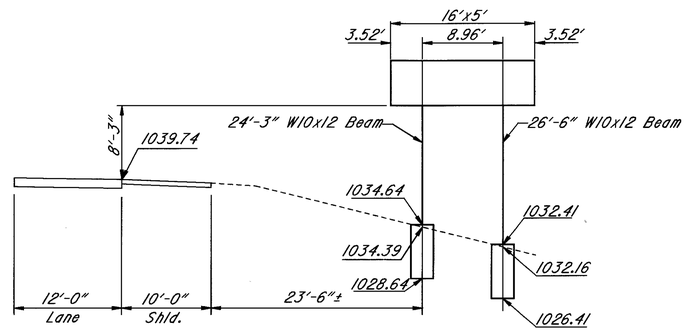

SIGN NO. 49
STA. 526+60 S.B. I-71
GROUND MOUNTED

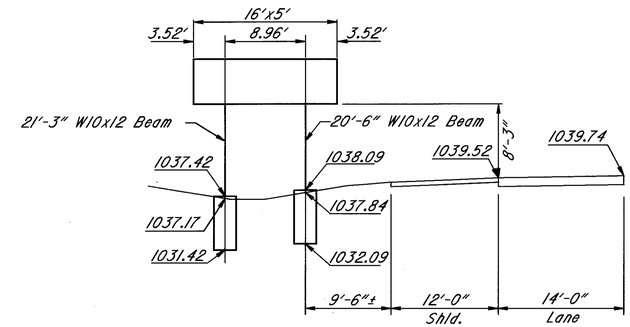

SIGN NO. 50
STA. 526+60 S.B. I-71
GROUND MOUNTED

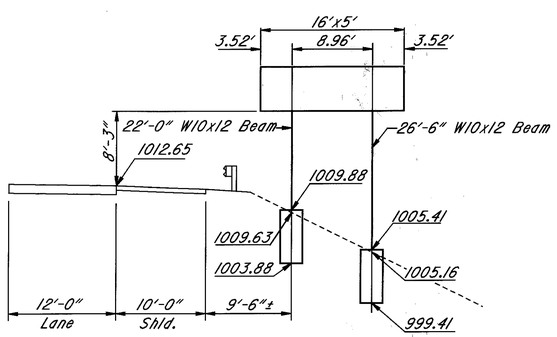

SIGN NO. 51
STA. 554+00 S.B. I-71
GROUND MOUNTED

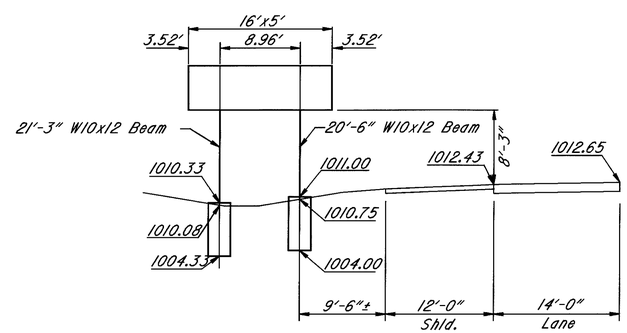

SIGN NO. 52
STA. 554+00 S.B. I-71
GROUND MOUNTED

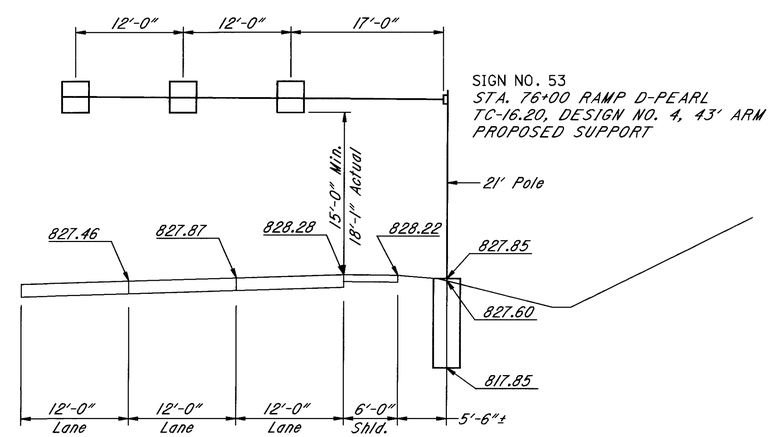

SIGN NO. 53
STA. 76+00 RAMP D-PEARL
TC-16.20, DESIGN NO. 4, 43' ARM
PROPOSED SUPPORT

8 0 8 16
SCALE IN FEET

PLOTTED FROM: i:\users\eforsber\pid08459\dgn\tcev8.dgn
PLOT SUBMITTED: 27-JUL-1998 12:24
TCEV8A.DGN

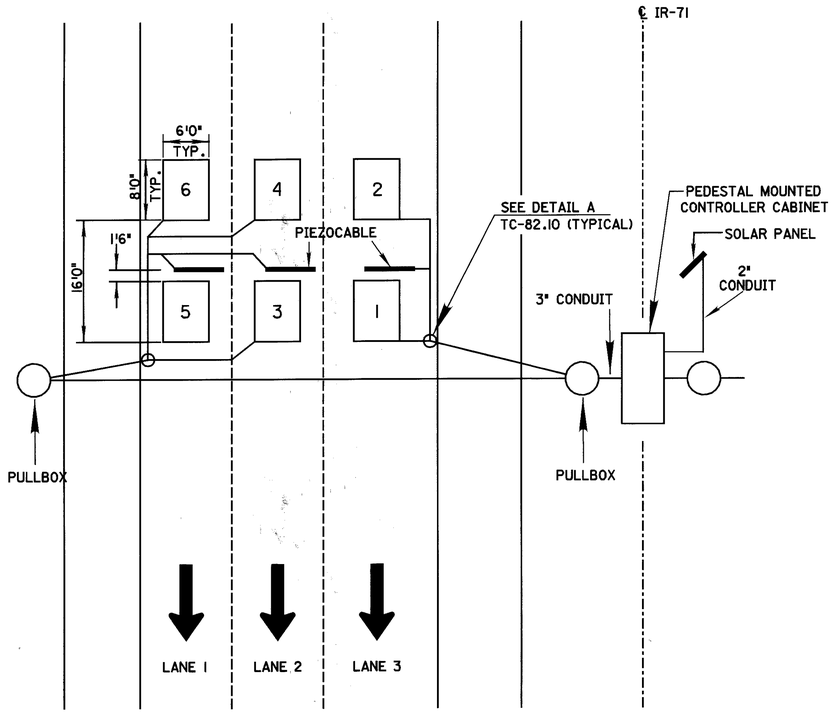

AUTOMATIC TRAFFIC RECORDER INSTALLATION

6 LANE SECTION

OPPOSITE DIRECTION TO BE THE SAME

ITEM	ITEM EXT.	TOTAL	UNIT	DESCRIPTION
603	00400	40	LIN. FT.	4" CONDUIT, TYPE E
625	25400	30	LIN. FT.	CONDUIT, 2", 713.04
625	25500	177	LIN. FT.	CONDUIT, 3", 713.04
625	29000	177	LIN. FT.	TRENCH
625	30700	4	EACH	PULL BOX, 713.08, 18"
625	32000	1	EACH	GROUND ROD
632	26500	6	EACH	DETECTOR LOOP
632	27300	6	EACH	PIEZOCABLE CLASS II, AXLE SENSOR (6' IN LENGTH)
632	64020	1	EACH	PEDESTAL FOUNDATION
632	65200	700	LIN. FT.	LOOP DETECTOR LEAD-IN CABLE
632	89800	1	EACH	PEDESTAL, 3', TRANSFORMER BASE
632	90400	1	EACH	SIGNALIZATION MISC.: SOLAR PANEL
632	90500	580	LIN. FT.	SIGNALIZATION MISC.: COAX CABLE (RG58 TYPE) LEADIN CABLE FOR PIEZOCABLE SENSOR
633	65001	1	EACH	CABINET, WITHOUT CONTROLLER, PREWIRED, PEDESTAL MOUNTING, TYPE G, AS PER PLAN

NOTES

1. ALL LOOPS SHALL BE 6' X 8'. LOOPS SHALL BE SPACED 16'0" FROM LEADING EDGE TO LEADING EDGE. INSTALLATION OF LOOPS SHALL CONFORM TO TC-82.10.

2. THE PIEZOCABLE AXLE SENSOR SHALL BE MADE BY MITRON OR PHILIPS OR APPROVED EQUAL. IT SHALL BE INSTALLED IN ACCORDANCE WITH THE MANUFACTURERS DIRECTION. THE END OF A PIEZOCABLE AXLE SENSOR SHALL NOT BE INSTALLED WITHIN 6" INCHES OF A LONGITUDINAL JOINT. PAYMENT WILL BE AT THE CONTRACT UNIT PRICE PER EACH FOR ITEM SPECIAL PIEZOCABLE AXLE SENSOR AND SHALL INCLUDE ALL MATERIAL, LABOR, TOOLS, EQUIPMENT AND INCIDENTALS NECESSARY FOR EACH INSTALLATION, IN PLACE COMPLETE AND ACCEPTED.

3. THE CABINET SHALL BE CLEAN CUT IN DESIGN AND APPEARANCE AND SHALL CONFORM TO THE FOLLOWING:
   A. IT SHALL BE MADE OF ACCEPTABLE STRENGTH ALUMINUM (NATURAL FINISH).
   B. THE MINIMUM USEABLE INSIDE DIMENSIONS SHALL BE: HEIGHT 30", WIDTH 19", AND DEPTH 13".
   C. HINGED DOOR SHALL BE PROVIDED ON THE FRONT OF THE CABINET WHICH SHALL INCLUDE SUBSTANTIALLY THE FULL AREA OF THE FRONT OF THE CABINET.
   D. THE DOOR SHALL BE FULLY GASKETED SO THAT WHEN CLOSED IT SHALL FIT CLOSELY TO THE GASKETING MATERIAL, MAKING THE CABINET WEATHER RESISTANT. A ONE POINT LATCH SHALL BE PROVIDED FOR THIS PURPOSE.
   E. THE DOOR SHALL BE PROVIDED WITH AN ACCEPTABLE STRONG LOCK WITH PERMANENT LUBICATION AND A WEATHERPROOF TAB AND FURNISHED WITH TWO KEYS.
   F. THE DOOR PINS SHALL BE GREASE-LUBRICATED AND OF A NON-CORRODING STEEL MATERIAL.
   G. THE CABINET SHALL CONTAIN ONE SHELF FOR SUPPORT OF TRAFFIC COUNTING EQUIPMENT. SHELF TO BE CENTERED AT 15" FROM THE TOP OF THE CABINET.
   H. THE CABINET SHALL INCLUDE A VENT.
   I. 12 WIRE TERMINAL BLOCKS 6" FROM BOTTOM OF CABINET CENTERED ON BACK PANEL (PENN UNION # 6012 OR APPROVED EQUAL). 2 LANE-2 TERMINAL STRIPS, 4 LANE-3 TERMINAL STRIPS, 6 LANE 4 TERMINAL STRIPS, 8 LANE-5 TERMINAL STRIPS.
   J. MOUNTING FACILITIES SHALL INCLUDE ONE BACK PANEL WITH 5 HOLES (ALUMINMUM).

   ALL PIECES SHALL BE SMOOTH AND FREE FROM FLAWS, CRACKS, BLOW-HOLES AND OTHER IMPERFECTIONS. THE CABINET SHALL BE ORIENTED SO THAT THE DOOR OPENS TOWARD THE ROADWAY.

4. CABLE AND WIRE SHALL BE IDENTIFIED IN ACCORDANCE WITH 632.04. IDENTIFICATION SHALL INCLUDE THE DIRECTION OF TRAVEL (I.e., NB, WB) AND THE LOOP NUMBER AS SHOWN. EACH CABLE AND WIRE SHALL HAVE 5'0" COILED IN THE CONTROLLER CABINET FOR CONNECTION BY OTHERS.

5. ADJACENT LOOPS (TRANSVERSE AND LONGITUDINAL) SHALL BE INSTALLED IN OPPOSITE DIRECTIONS, i.e., LANE 1, LOOP 1 AND LANE 2, LOOP 4 CLOCKWISE; LANE 1, LOOP 2 AND LANE 2, LOOP 3 COUNTERCLOCKWISE. EACH LOOP SHALL HAVE A SEPARATE LEAD-IN CABLE ROUTED TO THE CONTROLLER CABINET AND TAGGED.

6. REFFERENCE IS MADE TO STANDARD DRAWING HL-30.11 FOR DETAILS OF DRAINING PULLBOXES. UNDERDRAINS FOR PULLBOXES SHALL BE USED AS DIRECTED BY THE ENGINEER AND SHALL BE PROVIDED WHERE THE LENGTH REQUIRED FOR A SATISFACTORY OUTLET DOES NOT EXCEED APPROXIMATELY 20'. AN ESTIMATED QUANTITY OF 40 LINEAR FEET OF ITEM 603, 4" CONDUIT TYPE E IS INCLUDED IN THE GENERAL SUMMARY FOR THIS PURPOSE.

NOTES (continued)

7. FIVE (5) WORKING DAYS PRIOR TO THE SCHEDULED INSTALLATION, THE CONTRACTOR SHALL CONTACT OFFICE OF TECH. SERVICES AT 614-466-3727.

8. ALL ITEMS SHALL CONFORM TO C&M SPECIFICATIONS 625, 713, 632, 732, 633 AND 733, UNLESS OTHERWISE SPECIFIED.

9. ON AN EIGHT LANE SECTION, LANES 1 AND 2 SHALL BE SAWED TO ONE SIDE OF THE ROADWAY AND LANES 3 AND 4 SHALL BE SAWED TO THE OTHER.

10. LOOPS SHALL BE CUT IN THE FINAL ASPHALT COURSE. THEY SHALL NOT BE INSTALLED BETWEEN THE INTERMEDIATE AND FINAL COURSES.

11. PIEZOCABLES SHALL BE INSTALLED WHEN THE TEMP. IS ABOVE 60 DEGREES FAHRENHEIT, OR SPECIAL PROVISION MADE TO ENSURE CURING OF EPOXY TAKES PLACE.

12. THE SOLAR PANEL SHALL BE INSTALLED WITH 2" RIGID CONDUIT MOUNTED IN CONCRETE BASE WITH PANEL BEING AT A MIN. HEIGHT ABOVE GROUND LEVEL OF 15'. SOLAR PANEL OUTPUT CABLE SHALL BE SECURED AND ROUTED TO THE INSIDE OF THE CABINET FOR CONNECTION TO TERMINAL BLOCK. SOLAR PANEL SHALL BE MOUNTED AT A 45° ANGLE FACING SOUTH.

13. SOLAR PANEL SHALL BE A SOLAREX MODEL MSX 10 OR AN APPROVED EQUAL WITH MOUNTING HARDWARE.

14. ALL SENSORS ARE TO BE TESTED BY O.D.O.T. PERSONNEL AFTER THE INSTALLATION IS COMPLETE SO AS TO VERIFY THAT THE STATION IS UP AND OPERATING PROPERLY. IF THE ELECTRONIC EQUIPMENT DOES NOT PERFORM PROPERLY BECAUSE OF A POORLY INSTALLED SENSOR, THE CONTRACTOR SHALL BE RESPONSIBLE FOR THE REPLACEMENT OF THE FAULTY SENSOR, AS SOON AS POSSIBLE AT HIS OWN COST.

REVISED BY:	DATE:
TRAFFIC CONTROL	DATE 06/06/91 09/28/92 03/26/93 07/25/95
AUTOMATIC TRAFFIC RECORDER INSTALLATION —— 6	
PLAN INSERT SHEET	

PLOTTED FROM: ::\users\forsber\pid08459\dgn\tctr-6lane.dgn TCTR6LANE.DGN PLOT SUBMITTED: 27-JUL-1998 12:25

TRAFFIC SIGNAL NOTES

TRAFFIC CONTROL STANDARD CONSTRUCTION DRAWINGS

REFERENCES TO SUPPLEMENTAL SPECIFICATIONS 857, 858, 861, 957, 958 AND 961 ON THE TRAFFIC CONTROL STANDARD CONSTRUCTION DRAWINGS IN THESE PLANS SHALL BE CONSIDERED TO READ AS RESPECTIVE REFERENCES TO ITEMS 630, 631, 633, 730, 731 AND 733.

REFERENCES TO ITEM 608 4" CONCRETE WALK FOR CONTROLLER WORK PADS ON THE STANDARD CONSTRUCTION DRAWINGS IN THESE PLANS SHALL BE CONSIDERED TO READ AS REFERENCES TO ITEM 633, CONTROLLER WORK PAD.

SUPPLY FOR TRAFFIC SIGNALS

ELECTRIC POWER SHALL BE OBTAINED FROM THE CLEVELAND ELECTRIC ILLUMINATING COMPANY AT THE LOCATION INDICATED ON THE PLANS. POWER SUPPLIED SHALL BE 115 VOLTS.

UNDERDRAINS FOR PULLBOXES

RERERENCE IS MADE TO STANDARD CONSTRUCTION DRAWING HL-30.11 FOR DETAILS OF PULLBOX UNDERDRAINS. UNDERDRAINS FOR PULLBOXES SHALL BE USED AS DIRECTED BY THE ENGINEER AND SHALL PROVIDE WHERE THE LENGTH REQUIRED FOR SATISFACTORY OUTLET DOES NOT EXCEED APPROXIMATELY 40 FEET. AN ESTIMATED QUANTITY OF 500 LINEAR FEET OF ITEM 603, 4" CONDUIT, TYPE E, 707.31, IS INCLUDED IN THE GENERAL SUMMARY FOR THIS PURPOSE.

630 SIGN HANGER ASSEMBLY, MAST ARM MOUNTED, AS PER PLAN

SIGNS MOUNTED ON PROPOSED TRAFFIC SIGNAL MAST ARMS SHALL BE RIGIDLY ATTACHED TO THE ARM AND CENTERED VERTICALLY WITH THE ARM. THE CONTRACTOR MAY USE THE METHOD OF ATTACHMENT SHOWN IN STANDARD CONSTRUCTION DRAWING TC-16.20 OR ANOTHER METHOD OF RIGID ATTACHMENT AS APPROVED BY THE ENGINEER. THE CONTRACTOR SHALL INSURE THE SIGN FACE IS MOUNTED PERPENDICULAR (90 DEGREES) TO THE DIRECTION OF TRAFFIC.

PAYMENT FOR "ITEM 630 SIGN HANGER ASSEMBLY, MAST ARM, AS PER PLAN" SHALL BE MADE AT THE CONTRACT UNIT PRICE BID FOR EACH. PAYMENT SHALL BE FULL COMPENSATION FOR ALL MATERIALS, LABOR, TOOLS, EQUIPMENT AND ALL PARTS NECESSARY TO ERECT ONE INDIVIDUAL SIGN.

632 VEHICULAR SIGNAL HEAD, (BY TYPE), AS PER PLAN

SECTION 732.01 OF THE SPECIFICATIONS IS MODIFIED FOR THIS PROJECT AS FOLLOWS:

A) SIGNAL HEADS AND VISORS SHALL BE CONSTRUCTED OF INJECTION MOLDED, UV STABILIZED, POLYCARBONATE PLASTIC AND MEET I.T.E. SPECIFICATIONS.

B) GLASS LENSES SHALL BE USED.

C) PIPE, SPACERS, AND FITTINGS CONSTRUCTED OF POLYCARBONATE PLASTIC MAY BE USED IN LIEU OF GALVANIZED STEEL OR ALUMINUM.

D) PROPER EXTERIOR COLORS SHALL BE OBTAINED BY USE OF COLORED PLASTIC MATERIAL RATHER THAN PAINTING.

E) SIGNAL HEADS SHALL RIGID MOUNTED AS SHOWN ON TC-85.20 OR ALTERNATE RIGID SIGNAL HEAD MOUNTING DEVICES AS SPECIFIED IN NOTE 5 ON TC-85.20.

632 REMOVAL OF TRAFFIC SIGNAL INSTALLATION, AS PER PLAN

TRAFFIC SIGNAL INSTALLATIONS, INCLUDING SIGNAL HEADS, CABLE, MESSENGER WIRE, POLES, MAST ARMS, CABINET, CONTROLLER, PULLBOX, ETC., SHALL BE REMOVED IN ACCORDANCE WITH 632.25 AND AS INDICATED ON THE PLANS. REMOVED ITEMS SHALL BE STORED ON THE PROJECT FOR SALVAGE BY THE CITY OF MIDDLEBURG HTS., IN ACCORDANCE WITH THE LISTING GIVEN HEREIN. ANY ITEMS NOT DESIGNATED FOR SALVAGE, AND/OR ANY ITEMS NOT SALVAGED BY THE CITY BY THE COMPLETION DATE SHALL BE DISPOSED OF BY THE CONTRACTOR AT HIS EXPENSE.

THE FOLLOWING ITEMS SHALL BE STORED FOR SALVAGE:

1. CONTROLLERS, CABINETS & DETECTOR UNITS
2. VEHICULAR SIGNAL HEADS
3. PEDESTRIAN SIGNAL HEADS

THE FOLLOWING ITEMS SHALL BE DISPOSED OF BY THE CONTRACTOR:

1. CABLE & MESSENGER WIRE
2. POLES, WOOD OR STEEL
3. MAST ARMS
4. PULLBOXES

633 CONTROLLER, ACTUATED, 4 PHASE, SOLID STATE DIGITAL MICROPROCESSOR, AS PER PLAN

THIS ITEM OF WORK SHALL CONSIST OF FURNISHING AND INSTALLING ACTUATED, SOLID STATE DIGITAL MICROPROCESSOR TYPE CONTROLLERS WITH SECONDARY COORDINATOR, MENU DRIVEN PROMPTS, INTERNAL TBC, TELEMETRY UNIT, AND ALL OTHER ACCESSORIES THAT ARE NECESSARY TO MAKE THE CONTROLLER COMPLETELY FUNCTIONAL AND OPERATIONAL AS SHOWN IN THE PLANS.

THE CONTROLLER AND CABINET SHALL CONFORM TO O.D.O.T. SPECIFICATION 633, NEMA TS2 FOR TYPE 1 CONTROLLERS AND SHALL MATCH THE EXACT MAKE, MODEL AND FEATURES SUPPLIED UNDER THE CITY OF MIDDLEBURG HEIGHTS CITY WIDE PROJECT, CUY-42-5.46, PID # 12728. IT SHALL BE THE RESPONSIBILITY OF THE CONTRACTOR TO CONTACT THE CITY AT 234-2216 AND VERIFY THE TYPE, MAKE, MODEL NUMBER AND FEATURES SUPPLIED UNDER THAT CONTRACT.

633 CONTROLLER ITEM MISC.: PREEMPTION

THIS ITEM OF WORK SHALL CONSIST OF FURNISHING AND INSTALLING PREEMPTION EQUIPMENT IN THE LOCATIONS AND LOCAL CONTROLLER AS SHOWN IN THE PLANS.

THE PREEMPTION SHALL CONFORM TO O.D.O.T. SPECIFICATION 633 AND SHALL UTILIZE COMMUNICATIONS TO IDENTIFY THE PRESENCE OF AN EMERGENCY PRIORITY VEHICLE. IT SHALL CAUSE THE TRAFFIC SIGNAL CONTROLLER TO SELECT A PRE-PROGRAMMED PRE-EMPTIONS PLAN THAT WILL DISPLAY AND HOLD THE DESIRED SIGNAL PHASE FOR THE DIRECTION OF THE EMERGENCY VEHICLE.

THE PREEMPTION EQUIPMENT SHALL MATCH THE EXACT MAKE, MODEL AND FEATURES SUPPLIED UNDER THE CITY OF MIDDLEBURG HEIGHTS CITY WIDE PROJECT, CUY-42-5.46, PID # 12728. IT SHALL BE THE RESPONSIBILITY OF THE CONTRACTOR TO CONTACT THE CITY AT 234-2216 AND VERIFY THE TYPE, MAKE, MODEL NUMBER AND FEATURES SUPPLIED UNDER THAT CONTRACT.

633 CONTROLLER ITEM MISC.: PREEMPTION DETECTORS

DETECTORS SHALL CONSIST OF A LIGHT WEIGHT, WEATHERPROOF AND DIRECTIONAL ASSEMBLY. EACH DETECTOR SHALL BE 360 DEGREE ADJUSTABLE. DETECTOR SHALL BE CAPABLE OF SENDING THE PROPER ELECTRICAL SIGNAL TO THE TRAFFIC SIGNAL CONTROLLER VIA THE PREEMPTION DETECTOR CABLE. DETECTORS SHALL BE SUPPLIED WITH SPAN WIRE OR MAST ARM MOUNTING HARDWARE AS SHOWN IN THE PLANS. THE LOCATION OF THE PREEMPT DETECTORS SHALL BE AS RECOMMENDED BY THE PREEMPT DETECTOR SUPPLIER. MOUNTING OF THE PREEMPT DETECTORS SHALL BE ACCOMPLISHED BY FIELD DRILLING A WIRE ENTRANCE HOLE IN THE MAST ARMS. COST FOR PERFORMING THE FIELD DRILLING SHALL BE INCIDENTAL TO THE COST OF THE DETECTORS.

PAYMENT FOR ITEM 633 CONTROLLER ITEM MISC.: PREEMPTION DETECTORS WILL BE AT THE CONTRACT UNIT PRICE FOR EACH DETECTOR IN PLACE, COMPLETELY INSTALLED AT THE LOCATION SHOWN IN THE PLANS, WIRED TESTED AND ACCEPTED

632 SIGNAL CABLE ITEM MISC.: PREEMPTION DETECTOR CABLE

THIS ITEM SHALL CONSIST OF FURNISHING AND INSTALLING PREEMPTION DETECTOR CABLE IN THE LOCATIONS SHOWN IN THE PLANS. IT SHALL CONNECT THE PREEMPT DETECTORS TO THE PHASE SELECTORS IN THE LOCAL CONTROLLER CABINET.

PREEMPTION DETECTOR CABLE SHALL CONFORM TO O.D.O.T. SPECIFICATION 632. THE CABLE SHALL BE APPROVED FOR BOTH OVERHEAD AND UNDERGROUND USE. THE JACKET SHALL WITHSTAND EXPOSURE TO SUNLIGHT AND ATMOSPHERIC TEMPERATURES AND STRESSES REASONABLY EXPECTED IN NORMAL INSTALLATIONS.

PAYMENT FOR 632 SIGNAL CABLE ITEM MISC.: PREEMPTION DETECTOR CABLE WILL BE MADE AT THE CONTRACT UNIT PRICE FOR THE CABLE FURNISHED, IN PLACE, ALL CONNECTIONS MADE AND WIRING COMPLETED, TESTED AND ACCEPTED.

633 CONTROLLER ITEM MISC.: PREEMPT PHASE SELECTOR

THIS ITEM SHALL CONSIST OF FURNISHING AND INSTALLING PREEMPT PHASE SELECTORS INCLUDING WIRING INTERFACE PANELS IN THE LOCAL CONTROLLER CABINET, AND ALL OTHER ACCESSORIES THAT ARE NECESSARY TO MAKE THE PREEMPT PHASE SELECTORS COMPLETELY FUNCTIONAL AND OPERATIONAL AS SHOWN IN THE PLANS. THIS ITEM SHALL INCLUDE THE EXTRA CABINET SPACE NECESSARY TO BE LOCATED IN THE LOCAL CONTROLLER CABINETS WHERE INDICATED IN THE PLANS.

THE PHASE SELECTORS SHALL CONSIST OF A MODULE OR MODULES THAT WILL PROVIDE THE NECESSARY INPUTS TO THE CONTROLLER. PHASE SELECTORS SHALL BE SUPPLIED WITH SUFFICIENT QUANTITIES OF CHANNELS TO PROVIDE PREEMPTION FOR ALL APPROACHES TO THE INTERSECTION SEPARATELY. POWER SHALL BE OBTAINED FROM THE PHASE SELECTOR OR PHASES SELECTOR POWER SUPPLY AND NOT FROM THE LOCAL CONTROLLER TIMER.

THE PHASE SELECTORS SHALL HAVE FRONT PANEL INDICATORS FOR ACTIVE PREEMPT CHANNEL STATUS. IT SHALL HAVE TEST SWITCHES TO ACTIVATE ALL PREEMPT CHANNELS.

PAYMENT FOR ITEM 633 CONTROLLER ITEM MISC.: PREEMPT PHASE SELECTOR WILL BE MADE AT THE CONTRACT UNIT PRICE FOR ALL PHASE SELECTORS AT EACH INTERSECTION, IN PLACE, COMPLETELY INSTALLED IN THE LOCAL CONTROLLER SHOWN IN THE PLANS, WIRED, TESTED AND ACCEPTED.

633 CONTROLLER ITEM MISC.: PREEMPT CONFIRMATION LIGHT

THIS ITEM SHALL CONSIST OF FURNISHING AND INSTALLING PREEMPT CONFIRMATION LIGHT INCLUDING MOUNTING HARDWARE AND ALL OTHER ACCESSORIES THAT ARE NECESSARY TO MAKE THE PREEMPT CONFIRMATION LIGHT COMPLETELY FUNCTIONAL AND OPERATIONAL AS SHOWN IN THE PLANS.

A CONFIRMATION LIGHT SHALL BE SUPPLIED FOR EACH INTERSECTION TO INDICATE THAT THE EMERGENCY VEHICLE HAS ACHIEVED CONTROL OF THE TRAFFIC SIGNAL.

THE CONFIRMATION LIGHT SHALL BE A VAPOR TIGHT ALUMINUM LIGHTING FIXTURE. IT SHALL BE SUPPLIED WITH A BLUE COLORED GLOBE, 150 WATT INCANDESCENT LAMP AND MOUNTING HARDWARE TO ATTACH TO THE TRAFFIC SIGNAL MAST ARM. THE CONFIRMATION LIGHT SHALL BE POWERED BY A LOAD SWITCH IN THE TRAFFIC SIGNAL CONTROLLER.

PAYMENT FOR 633 CONTROLLER ITEM MISC.: PREEMPTION CONFIRMATION LIGHT WILL BE MADE AT THE CONTRACT PRICE FOR EACH LIGHT IN PLACE, COMPLETELY INSTALLED IN THE LOCATION SHOWN IN THE PLANS, WIRED, TESTED, AND ACCEPTED.

PLOTTED FROM: i:\users\eforsber\pid08459\dgn\pearlsig\98086gna.dgn 98086GNA.DGN PLOT SUBMITTED: 28-JUL-1998 13:44

TRAFFIC SIGNAL NOTES

PROTECTIVE COATING OF SIGNAL SUPPORT SECTIONS

GENERAL

THE PROTECTIVE COATING OF SIGNAL SUPPORTS SHALL BE A FOUR PART PROCESS TO INCLUDE SURFACE PREPARATION FOLLOWED BY A THREE STEP COATING SYSTEM. THIS THREE STEP COATING SYSTEM SHALL CONSIST OF AN EPOXY PRIME COAT, AN EPOXY INTERMEDIATE COAT, AND A URETHANE TOP COAT, WITH EACH COAT A DIFFERENT COLOR. FOR AN EXPLANATION OF THE MATERIALS TO BE USED SEE NOTE ENTITLED "COATING SYSTEM". THE PURPOSE OF THIS COATING IS TO PROVIDE PROTECTION FOR NEW UNWEATHERED) AND OLDER (WEATHERED)GALVANIZED STEEL SIGNAL SUPPORTS FROM CORROSIVE ELEMENTS IN THE ATMOSPHERE. COATING AND SURFACE PREPARATION OF THE NEW GALVANIZED SUPPORT SECTIONS SHOULD BE DONE BY THE MANUFACTURER.

THE CONTRACTOR SHALL TAKE ALL NECESSARY PRECAUTIONS TO COMPLY WITH POLLUTION LAWS, RULES OR REGULATIONS OF FEDERAL, STATE, OR LOCAL AGENCIES. THE COATING MATERIALS SPECIFIED FOR THE WORK CAN BE HAZARDOUS TO THE HEALTH OF THE APPLICATOR IF NOT APPLIED AS PER THE MANUFACTURER'S INSTRUCTIONS. THE CONTRACTOR SHALL FOLLOW THE DATA SHEET AND THE LABEL ON THE PAINT CONTAINERS. THESE PRECAUTIONS SHALL INCLUDE THE USE OF RESPIRATORS AND EYE AND SKIN PROTECTION AS SPECIFIED. THE CONTRACTOR SHALL ALSO INSURE THAT HIS PAINTING OPERATIONS AND LOCATION WILL NOT ENDANGER OR ADVERSELY AFFECT THE PUBLIC IN GENERAL.

THE PROPOSED CLEANING AND COATING OPERATIONS SHALL BE PERFORMED ONLY WHEN THE AMBIENT TEMPERATURE IS 50 DEGREES F OR ABOVE FOR A PERIOD OF 24 CONTINUOUS HOURS. PAINT SHALL NOT BE APPLIED DURING RAIN, FOG, OR MIST, OR WHEN THE STEEL SURFACE TEMPERATURE IS LESS THAN 5 DEGREES F ABOVE THE DEW POINT. PAINT SHALL NOT BE APPLIED TO WET OR DAMP SURFACES OR ON FROSTED OR ICE COATED SURFACES. PAINT SHALL NOT BE APPLIED WHEN THE RELATIVE HUMIDITY IS GREATER THAN 85%. ALL STEEL SURFACES OF TRUSS AND END FRAMES INCLUDING THE WELDED AREAS, BALLAST ENCLOSURE MOUNTING BRACKET AND THE BASE PLATES ARE TO BE CLEANED AND COATED. BEFORE EACH COATING IS APPLIED, IT SHALL BE MIXED WITH AN APPROVED POWER MECHANICAL MIXER TO A UNIFORM CONSISTENCY WHICH SHALL BE MAINTAINED DURING ITS APPLICATION. EACH COAT SHALL BE APPLIED IN A WORKMANLIKE MANNER AS A CONTINUOUS FILM OF UNIFORM THICKNESS WHICH IS FREE OF HOLIDAYS, PORES, RUNS OR SAGS. ALL COATS SHALL BE APPLIED BY BRUSH. THINNING OF PAINT IS STRICTLY PROHIBITED. PAINT NOT CAPABLE OF BEING APPLIED AS SPECIFIED SHALL NOT BE USED. THE COATING SHALL PENETRATE ALL JOINTS AND CONNECTIONS. THE ENGINEER SHALL BE NOTIFIED 24 HOURS PRIOR TO ANY CLEANING OR COATING OPERATIONS SO THAT INSPECTION SERVICES CAN BE PROVIDED.

TO PROVIDE ASSURANCES THAT NO THINNING OF THE PROTECTIVE COATING MATERIAL IS BEING DONE, PERIODIC CHECKS BY THE CONTRACTOR WILL BE MADE OF THE MATERIAL TO BE WITNESSED BY THE ENGINEER. THESE CHECKS WILL BE MADE UTILIZING A VISCOSITY TEST CUP PROCEDURE AS PROVIDED BY THE MANUFACTURER OF THE MATERIAL. THE FREQUENCY OF THESE CHECKS WILL BE DETERMINED BY THE ENGINEER BASED UPON FIELD EVALUATION AND JOB PERFORMANCE.

IF THE VISCOSITY CHECK REVEALS THAT THE MATERIAL HAS BEEN THINNED, IMMEDIATE REJECTION OF THE MATERIAL SHALL BE MADE. THIS REJECTION SHALL REQUIRE THE CONTRACTOR TO IMMEDIATELY STOP USING THE MATERIAL AND PROVIDE NEW MATERIAL OF THE PROPER SPECIFICATION PER PLAN. IN ADDITION, THE COATING OF THE SIGNAL SUPPORTS WITH THE NON-APPROVED MATERIAL BE CONSIDERED UNACCEPTABLE. THEREFORE THE SUPPORT SHALL BE STRIPPED AND RE-COATED WITH APPROVED MATERIAL (UNTHINNED MATERIAL).

3 TO 4 VISCOSITY CHECKS INDICATING A PERPETUAL QUALITY CONTROL PROBLEM (THINNED MATERIAL) SHALL BE CONSIDERED SUFFICIENT JUSTIFICATION TO TERMINATE THE CONTRACT.

THE COST FOR THE VISCOSITY TEST KIT SHALL BE BORN BY THE CONTRACTOR AND CONSIDERED INCIDENTAL TO THE ITEM SPECIALS PER COAT. THE TEST KIT SHALL CONTAIN ITEMS SUCH AS INSTRUCTIONS, VISCOSITY CUP, STANDARD COMPARISON RATES, CARRYING CASE, CLEANING EQUIPMENT, STOPWATCH, ETC. AFTER THE PROJECT IS COMPLETE, THE TEST KIT SHALL REVERT TO THE MUNICIPALITY AS ODOT PROPERTY.

COATING SYSTEM

THE COATING SYSTEM SHALL CONSIST OF A POLYAMIDE-CURED EPOXY PRIME COAT, A POLYAMIDE-CURED EPOXY INTERMEDIATE COAT AND AN ALIPHATIC POLYURETHANE TOP COAT. THE COATING MATERIALS USED SHALL BE THOSE AS LISTED FROM ONE OF THE FOLLOWING MANUFACTURERS OR AN APPROVED EQUAL:

1. AMERON
   210 NORTH BERRY STREET
   BREA, CALIFORNIA 92621
   LOCAL TELEPHONE CONTACT: (216) 896-3602
   PRIME COAT: AMERCOAT 385
   INTERMEDIATE COAT: AMERLOCK 400
   TOP COAT: AMERCOAT 450 HS

2. ICI/DEVOE COATINGS (GLIDDEN)
   5480 CLOVERLEAF PKWY. #5
   VALLEY VIEW, OHIO 44125
   LOCAL TELEPHONE CONTACT: (216) 328-1581
   PRIME COAT: DEVRAN 4170 CORROSION RESISTANT EPOXY
   INTERMEDIATE COAT: DEVRAN 4170 CORROSION RESISTANT EPOXY
   TOP COAT: DEVTHANE 4708 ALIPHATIC URETHANE ENAMEL

3. PORTER PAINT CO.
   400 SOUTH 13TH STREET
   LOUISVILLE, KY 40201
   LOCAL TELEPHONE CONTACT: (216) 562-6709
   PRIME COAT: PORTER PAINTS MCR 4300
   INTERMEDIATE COAT: PORTER PAINTS MCR 4300
   TOP COAT: PORTER PAINTS HYTHANE

4. POLYCARB
   33095 BAINBRIDGE ROAD
   P.O. BOX 39278
   SOLON, OHIO 44139
   LOCAL TELEPHONE CONTACT: (216) 248-1223
   PRIME COAT: MARK-60 (ULTRAPOX)
   INTERMEDIATE COAT: MARK-60 (ULTRAPOX)
   TOP COAT: MARK-73 (ULTRA-KOTE)

5. SHERWIN-WILLIAMS COMPANY
   671 BETA DRIVE
   MAYFIELD VILLAGE, OHIO 44143
   LOCAL TELEPHONE CONTACT: (216) 461-8287
   PRIME COAT: TILE-CLAD II HI-BILD PRIMER
   INTERMEDIATE COAT: HI-SOLIDS CATALYZED EPOXY
   TOP COAT: HI-BILD ALIPHATIC POLYURETHANE ENAMEL

ALL THREE COATS OF THE SYSTEM SHALL BE MANUFACTURED BY THE SAME COMPANY TO INSURE COMPATIBILITY AMONG COATS.

632 COATING, EPOXY PRIME COAT, SIGNAL SUPPORTS

THIS ITEM SHALL CONSIST OF ONE (1) COAT OF AN EPOXY PRIMER TO SIGNAL SUPPORTS. THE TOTAL DRY FILM THICKNESS OF THIS COAT SHALL BE BETWEEN 1.5 AND 2.0 MILS. IF MORE THAN ONE PASS IS NECESSARY TO OBTAIN THE REQUIRED THICKNESS, COST OF THAT COAT SHALL BE BORNE BY THE CONTRACTOR.

THIS COAT SHALL IN ALL CASES BE APPLIED BY BRUSH OVER SURFACES THAT WERE PREPARED EARLIER THAT SAME DAY. THE THINNING OF THE EPOXY MATERIAL IS STRICTLY PROHIBITED. MATERIAL NOT CAPABLE OF BEING APPLIED AS SPECIFIED SHALL NOT BE USED.

WHEN THE AVERAGE DRY FILM THICKNESS OF THIS COAT OVER THE ENTIRE SUPPORT SECTION IS LESS THAN THE SPECIFIED 1.5 BUT IS AT LEAST 1.25 MILS, THE CONTRACT BID PRICE FOR THIS ITEM SHALL BE REDUCED IN DIRECT PROPORTION TO THE PERCENT DEFICIENCY OF COATING UP TO 16-2/3%. IF THE DEFICIENCY OF COATING IS MORE THAN 16-2/3% (I.E. THE AVERAGE DRY FILM THICKNESS IS LESS THAN 1.25 MILS), THE WORK FOR THIS ITEM SHALL BE CONSIDERED UNSATISFACTORY AND SHALL BE RECOATED AT THE FULL EXPENSE OF THE CONTRACTOR, INCLUDING ALL LABOR, EQUIPMENT AND MATERIAL.

THE EPOXY PRIME COAT CHOSEN BY THE CONTRACTOR SHALL BE ONE OF THE FOLLOWING TWO-COMPONENT COMPOSITIONS CONFORMING TO ITS LISTED PROPERTIES:

AMERCOAT 385
% SOLIDS BY VOLUME: 47% +/- 3 %
POT LIFE: 8 HRS. @ 77 DEGREES F (25 DEGREES C)
DRYING TIME: 4 HRS. @ 77 DEGREES F

DEVRAN 4170 CORROSION RESISTANT EPOXY PRIMER 5465 SERIES
% SOLIDS BY VOLUME: 54% +/- 1%
% SOLIDS BY WEIGHT: 71 % +/- 1%
POT LIFE: 4 HRS. @ 77 DEGREES F
DRYING TIME: TOUCH 1-2 HRS., RECOAT 7 HRS.
VISCOSITY: 95-100 KU

MCR-4301 EPOXY PRIMER
% SOLIDS BY VOLUME: 48.0% +/- 2%
POT LIFE: 30 HRS. @ 50-60 DEGREES F, 16 HRS. @ 80-100 DEGREES F
DRYING TIME: 4-6 HRS. @ 50-60 DEGREES F

MARK-60 ULTRAPOX
% SOLIDS BY WEIGHT: 70-75% +/- 2%
POT LIFE: 6 HRS. @ 75 DEGREES F
DRYING TIME: 2-3 HRS. INITIAL SET @ 75 DEGREES F
VISCOSITY: 300-500 CPS @ 75 DEGREES F

TILE-CLAD II HI-BILD PRIMER
% SOLIDS BY VOLUME: 48% +/- 2%
% SOLIDS BY WEIGHT: 63% +/- 2%
POT LIFE: 8 HRS. @ 77 DEGREES F
DRYING TIME: 1 HR. TO TOUCH, 6 HRS. TO RECOAT

FOR NEW SIGNAL SUPPORTS, THIS PRIME COAT SHALL BE DONE AT THE MANUFACTURER OF THE SIGNAL SUPPORTS. VERIFICATION BY THE MANUFACTURER OF THE COATING MATERIAL FOR THE PRIME COAT PROCEDURES WILL BE REQUIRED. CAREFUL HANDLING AND STORAGE WILL BE REQUIRED TO PREVENT ANY SCRAPING, MARRING OR OTHER SURFACE DAMAGE TO THE PRIME COAT.

THE PAYMENT SHALL INCLUDE ALL LABOR, EQUIPMENT, HANDLING COSTS, AND MATERIALS NECESSARY TO ACCOMPLISH THIS ITEM OF WORK. THIS PRIME COAT SHALL BE MANUFACTURED BY THE SAME COMPANY SUPPLYING THE INTERMEDIATE AND TOP COATS. A PROPERLY CALIBRATED DRY FILM THICKNESS INSTRUMENT WILL BE USED TO CHECK THE COATING.

BASIS OF PAYMENT WILL BE AS FOLLOWS:

ITEM 632-COATING, EPOXY PRIME COAT, SIGNAL SUPPORTS, AT THE CONTRACT BID PRICE FOR EACH SIGNAL SUPPORT.

632 COATING EPOXY INTERMEDIATE COAT, SUPPORT SECTIONS

THIS ITEM SHALL CONSIST OF THE APPLICATION OF ONE (1) COAT OF EPOXY TO SIGNAL SUPPORTS. THE TOTAL DRY FILM THICKNESS OF THIS COAT SHALL NOT BE LESS THAN SIX (6.0) MILS. IF MORE THAN ONE PASS IS NECESSARY TO OBTAIN THE REQUIRED THICKNESS, COST OF THAT COAT SHALL BE BORNE BY THE CONTRACTOR. THIS COAT SHALL BE APPLIED BY BRUSH. THINNING OF THE EPOXY MATERIAL IS STRICTLY PROHIBITED. MATERIAL NOT CAPABLE OF BEING APPLIED AS SPECIFIED SHALL NOT BE USED.

WHEN THE AVERAGE DRY FILM THICKNESS OF THIS COAT OVER THE ENTIRE SUPPORT SECTION IS LESS THAN THE SPECIFIED SIX (6.0) MILS, BUT IS AT LEAST FIVE (5.0) MILS, THE CONTRACT PRICE FOR THIS ITEM SHALL BE REDUCED IN DIRECT PROPORTION TO THE PERCENT DEFICIENCY OF COATING UP TO 16-2/3%. IF THE DEFICIENCY OF COATING IS MORE THAN 16-2/3 %, (I.E. THE AVERAGE FILM THICKNESS IS LESS THAN 5.0 MILS), THE WORK FOR THIS ITEM SHALL BE CONSIDERED UNSATISFACTORY AND SHALL BE RECOATED AT THE FULL EXPENSE OF THE CONTRACTOR, INCLUDING ALL LABOR, EQUIPMENT, AND MATERIAL. THE EPOXY INTERMEDIATE COAT CHOSEN BY THE CONTRACTOR SHALL BE ONE OF THE FOLLOWING TWO-COMPONENT COMPOSITIONS CONFORMING TO ITS LISTED PROPERTIES:

AMERLOCK 400
% SOLIDS BY VOLUME: 83% +/- 2%
POT LIFE: 2-1/2 HRS. @ 70 DEGREES F
DRYING TIME: 20 HRS. @ 70 DEGREES F

DEVRAN 4170 CORROSION RESISTANT EPOXY PRIMER 5465 SERIES
% SOLIDS BY VOLUME: 54% +/- 1%
% SOLIDS BY WEIGHT: 71 % +/- 1%
POT LIFE: 4 HRS. @ 77 DEGREES F
DRYING TIME: TOUCH 1-2 HRS., RECOAT 7 HR
VISCOSITY: 95-100 KU, 70 DEGREES F, 50% R.H.

MCR-4301 EPOXY PRIMER
% SOLIDS BY VOLUME: 48.0% +/- 2%
POT LIFE: 30 HRS. @ 50 DEGREES F, 16 HRS. @ 80 DEGREES F
DRYING TIME: 1-2 HRS. @ 60-80 DEGREES F

MARK-60 ULTRAPOX
% SOLIDS BY WEIGHT: 70-75% +/- 2%
POT LIFE: 6 HRS. @ 75 DEGREES F
DRYING TIME: 2-3 HRS. INITIAL SET @ 75 DEGREES F

PLOTTED FROM: I:\users\eforsber\pid08459\dgn\pearlsig\98086gnb.dgn PLOT SUBMITTED: 28-JUL-1998 13:44
98086GNB.DGN

TRAFFIC SIGNAL NOTES

MARK-60 ULTRAPOX
% SOLIDS BY WEIGHT: 70-75% +/- 2%
POT LIFE: 6 HRS. @ 75 DEGREES F
DRYING TIME: 2-3 HRS. INITIAL SET @ 75 DEGREES F

HI-SOLIDS CATALYZED EPOXY
% SOLIDS BY VOLUME: 61% +/- 2% (SLATE GRAY)
% SOLIDS BY WEIGHT: 77% +/- 2%
POT LIFE: 5 HRS. @ 77 DEGREES F
DRYING TIME: 1 HR. TO TOUCH, 4 HRS. TACK FREE
6 HRS. TO RECOAT @ 77 DEGREES F, 50% R.H.

AT LEAST 24 HOURS BUT NO MORE THAN THREE (3) DAYS SHALL ELAPSE AFTER THE APPLICATION OF THE EPOXY PRIME COAT AND BEFORE THE APPLICATION OF THE EPOXY INTERMEDIATE COAT. SURFACES SHALL IN ALL CASES BE CLEAN BEFORE THE INTERMEDIATE COAT IS APPLIED.

FOR NEW SIGNAL SUPPORTS, THE INTERMEDIATE COAT SHALL BE DONE AT THE MANUFACTURER OF THE SIGNAL SUPPORTS. VERIFICATION BY THE MANUFACTURER FOR THE INTERMEDIATE COAT PROCEDURE WILL BE REQUIRED. CAREFUL HANDLING AND STORAGE WILL BE REQUIRED TO PREVENT ANY SCRAPING, MARRING OR OTHER SURFACE DAMAGE TO THE INTERMEDIATE COAT.

THE PAYMENT SHALL INCLUDE ALL LABOR, EQUIPMENT, HANDLING COSTS AND MATERIAL NECESSARY TO ACCOMPLISH THIS ITEM OF WORK. THIS INTERMEDIATE COAT SHALL BE MANUFACTURED BY THE SAME COMPANY SUPPLYING THE PRIME AND TOP COATS. A PROPERLY CALIBRATED DRY FILM THICKNESS INSTRUMENT WILL BE USED TO CHECK THE COATING.

BASIS OF PAYMENT WILL BE AS FOLLOWS:

ITEM 632-COATING, EPOXY, INTERMEDIATE COAT, SIGNAL SUPPORTS AT THE CONTRACT BID PRICE FOR EACH SIGNAL SUPPORT.

632 COATING, URETHANE TOP COAT, SIGNAL SUPPORTS

THIS ITEM SHALL CONSIST OF THE APPLICATION OF ONE (1) COAT OF URETHANE TO SIGNAL SUPPORTS. THE TOTAL DRY FILM THICKNESS OF THIS COAT SHALL NOT BE LESS THAN ONE AND ONE-HALF (1.5) MILS. IF MORE THAN ONE PASS IS NECESSARY TO OBTAIN THE REQUIRED THICKNESS, THAT COAT SHALL BE BORNE BY THE CONTRACTOR. THIS COAT SHALL BE APPLIED BY BRUSH. THINNING OF THE URETHANE MATERIAL IS STRICTLY PROHIBITED. MATERIAL NOT CAPABLE OF BEING APPLIED AS SPECIFIED SHALL NOT BE USED.

WHEN THE AVERAGE DRY FILM THICKNESS OF THIS COAT OVER THE ENTIRE SUPPORT SECTION IS LESS THAN THE SPECIFIED ONE AND ONE-HALF (1.5) MILS BUT IS AT LEAST ONE (1.0) MIL, THE CONTRACT PRICE FOR THIS ITEM SHALL BE REDUCED IN DIRECT PROPORTION TO THE PERCENT DEFICIENCY OF COATING UP TO 33 1/3%. IF THE DEFICIENCY OF THE COATING IS MORE THAN 33 1/3%, (I.E., THE AVERAGE DRY FILM THICKNESS IS LESS THAN 1.0 MIL), THE WORK FOR THIS ITEM SHALL BE CONSIDERED UNSATISFACTORY AND SHALL BE RECOATED AT THE FULL EXPENSE OF THE CONTRACTOR, INCLUDING ALL LABOR, EQUIPMENT AND MATERIAL.

THE URETHANE TOP COAT CHOSEN BY THE CONTRACTOR SHALL BE ONE OF THE FOLLOWING MATERIALS CONFORMING TO ITS LISTED PROPERTIES:

AMERCOAT 450 HS
% SOLIDS BY VOLUME : 45% +/- 2%
POT LIFE : 20 HRS. @ 77 DEGREES F
DRYING TIME : 8 HRS. @ 77 DEGREES F DRY THROUGH

DEVTHANE 4708 ALIPHATIC URETHANE ENAMEL (6200/6252)
% SOLIDS BY VOLUME : 48 +/- 1%
% SOLIDS BY WEIGHT : 59 +/- 1%
POT LIFE : 6 HRS. @ 70 DEGREES F
DRYING TIME: 4 HRS. @ 77 DEGREES F RECOAT

HYTHANE
% SOLIDS BY VOLUME : 42 +/- 2%
POT LIFE : 16 HRS. @ 50 DEGREES F
12 HRS. @ 75 DEGREES F

MARK-73 (ULTRA-KOTE)
% SOLIDS BY VOLUME : 52.5% +/- 2%
% SOLIDS BY WEIGHT : 55% +/- 2%
POT LIFE : 8 HRS. @ 75 DEGREE F
DRYING TIME : 4-5 HRS. @ 75 DEGREES F TACK FREE
VISCOSITY : 70-75 KU @ 75 DEGREES F

HI-BILD ALIPHATIC POLYURETHANE ENAMEL
% SOLIDS BY VOLUME : 40% +/- 2% (CATALYZED)
% SOLIDS BY WEIGHT : 48 % +/- 2%
POT LIFE : 6 HRS. @ 77 DEGREES F
DRYING TIME : 30 MIN. TO TOUCH, 4 HRS. TACK FREE
18 HRS. MIN. 72 HRS. MAX TO RECOAT

AT LEAST 24 HOURS BUT NO MORE THAN THREE (3) DAYS SHALL ELAPSE AFTER THE APPLICATION OF THE EPOXY INTERMEDIATE COAT AND BEFORE THE APPLICATION OF THE URETHANE TOP COAT. SURFACES SHALL IN ALL CASES BE CLEAN BEFORE THE TOP COAT IS APPLIED.HE COLOR OF THE TOP COAT SHALL BE THE LATEST REVISION, FEDERAL STANDARD 595B, COLOR 30040, DARK BROWN (BRONZE). A PAINT COLOR CHIP SHALL BE SUMITTED TO THE CITY OF MIDDLEBURG HEIGHTS FOR APPROVAL BEFORE POLES ARE PAINTED.

FOR NEW SIGNAL SUPPORTS, THIS TOP COAT SHALL BE DONE AT THE MANUFACTURER OF THE SUPPORT SECTIONS. VERIFICATION BY THE MANUFACTURER FOR THE TOP COAT PROCEDURE WILL BE REQUIRED. CAREFUL HANDLING AND STORAGE WILL BE REQUIRED TO PREVENT ANY SCRAPING, MARRING OR OTHER SURFACE DAMAGE TO THE TOP COAT.

THE PAYMENT SHALL INCLUDE ALL LABOR, EQUIPMENT, HANDLING COST AND MATERIALS NECESSARY TO ACCOMPLISH THIS ITEM OF WORK. THIS TOP COAT SHALL BE MANUFACTURED BY THE SAME COMPANY SUPPLYING THE PRIME AND INTERMEDIATE COATS. A PROPERLY CALIBRATED DRY FILM INSTRUMENT SHALL BE USED TO CHECK THE COATING.

BASIS OF PAYMENT WILL BE AS FOLLOWS:

ITEM 632-COATING, URETHANE TOP COAT, SIGNAL SUPPORTS AT THE CONTRACT BID PRICE FOR EACH SIGNAL SUPPORT.

MAINTENANCE OF TRAFFIC SIGNAL/FLASHER INSTALLATIONS

THE CONTRACTOR SHALL BE RESPONSIBLE FOR MAINTAINING TRAFFIC SIGNAL AND/OR FLASHER INSTALLATIONS WITHIN THE PROJECT UNDER THE FOLLOWING CONDITIONS:

A) EXISTING SIGNAL/FLASHER INSTALLATIONS WHICH THE PLANS REQUIRE THE CONTRACTOR TO ACTUALLY ADJUST, MODIFY OR OTHERWISE DISTURB: THE CONTRACTOR SHALL BE RESPONSIBLE FOR THE ENTIRE INSTALLATION (AT AN INTERSECTION) FROM THE TIME HIS OPERATION FIRST DISTURBS THE INSTALLATION UNTIL THE INSTALLATION HAS BEEN SUBSEQUENTLY REMOVED OR MODIFIED AND THE WORK IS ACCEPTED.

B) NEW OR REUSED SIGNAL/FLASHER INSTALLATIONS OR DEVICES, INSTALLED BY THE CONTRACTOR: THE CONTRACTOR SHALL BE RESPONSIBLE FOR MAINTENANCE OF THESE FROM THE TIME OF INSTALLATION UNTIL THE WORK IS ACCEPTED.

THE CONTRACTOR SHALL CORRECT AS QUICKLY AS POSSIBLE ALL OUTAGES OR MALFUNCTIONS. HE SHALL PROVIDE THE CITY AND THE ENGINEER SUCH ADDRESSES AND PHONE NUMBERS WHERE HIS MAINTENANCE FORCES CAN BE CONTACTED. THE CONTRACTOR SHALL PROVIDE ONE OR MORE PERSONS TO RECEIVE ALL CALLS AND DISPATCH THE NECESSARY MAINTENANCE FORCES TO CORRECT OUTAGES. SUCH A PERSON OR PERSONS MAY BE USED TO PERFORM OTHER DUTIES AS LONG AS PROMPT ATTENTION IS GIVEN TO THESE CALLS AND A PERSON IS READILY AVAILABLE CONTINUOUSLY 24 HOURS A DAY, 7 DAYS A WEEK. ALL LAMP OUTAGES, CABLE OUTAGES, ELECTRICAL FAILURES, EQUIPMENT MALFUNCTIONS AND MISALIGNED SIGNAL HEADS SHALL BE CORRECTED TO THE SATISFACTION OF THE ENGINEER WITH THE SIGNAL BACK TO SERVICE WITHIN FOUR HOURS AFTER THE CONTRACTOR HAS BEEN NOTIFIED OF THE OUTAGE.

IN THE EVENT NEW SIGNALS ARE DAMAGED PRIOR TO ACCEPTANCE, ALL DAMAGED EQUIPMENT EXCEPT POLES AND CONTROL EQUIPMENT SHALL BE REPLACED BY THE CONTRACTOR TO THE SATISFACTION OF THE ENGINEER WITH THE SIGNAL BACK IN SERVICE WITHIN 8 HOURS AFTER THE CONTRACTOR'S NOTIFICATION OF THE OUTAGE.

IF POLES AND/OR CONTROL EQUIPMENT ARE DAMAGED AND MUST BE REPLACED, THE CONTRACTOR SHALL MAKE TEMPORARY REPAIRS AS NECESSARY TO BRING THE SIGNAL BACK INTO FULL OPERATION WITHIN THE ALLOWED 8-HOUR PERIOD, AND SHALL MAKE PERMANENT REPAIRS OR REPLACEMENT AS SOON THEREAFTER AS POSSIBLE.

NONE OF THE ABOVE SHALL BE CONSTRUED AS COLLECTIVE OR CONSECUTIVE OUTAGE TIME PERIODS AT ANY ONE LOCATION. THAT IS, WHERE MORE THAN ONE OUTAGE OCCURS AT ANY ONE LOCATION, THEN THE ALLOTTED TIME LIMIT SHALL BE FOR THE WORST SINGLE OUTAGE.

WHERE OUTAGES ARE THE DIRECT RESULT OF A VEHICLE ACCIDENT, THE RESPONSE OF THE CONTRACTOR SHALL BE AS OUTLINED ABOVE. THE CONTRACTOR SHALL BE RESPONSIBLE FOR COLLECTION OF ANY COMPENSATION FOR THIS WORK FROM THOSE PARTIES RESPONSIBLE FOR THE DAMAGE.

WHERE THE CONTRACTOR HAS FAILED TO OR CANNOT RESPOND TO AN OUTAGE OR SIGNAL EQUIPMENT MALFUNCTION, AT THESE LOCATIONS WITHIN HIS RESPONSIBILITY, WITHIN PERIODS SPECIFIED ABOVE, THE ENGINEER MAY INVOKE THE PROVISIONS OF SECTION 105.15 AND ANY SUBSEQUENT BILLINGS TO THE STATE OR THE CITY OF MIDDLEBURG HTS. FOR POLICE SERVICES AND MAINTENANCE SERVICE BY CITY FORCES SHALL BE DEDUCTED FROM MONIES DUE OR TO BECOME DUE THE CONTRACTOR IN ACCORDANCE WITH PROVISIONS OF SECTION 105.15.

THE CONTRACTOR SHALL PROVIDE THE MAINTENANCE SERVICE ENTIRELY WITH HIS FORCES.

THE CONTRACTOR SHALL BE RESPONSIBLE FOR ANY DAMAGE TO ANY TRAFFIC SIGNAL COMPONENTS REQUIRED TO BE HANDLED DURING THE RELOCATION OF POLES AND REVISIONS TO THE SIGNAL SYSTEM.

WHEN A TRAFFIC SIGNAL MUST BE TAKEN OUT OF SERVICE BY THE CONTRACTOR, DUE TO CONSTRUCTION PROCEDURES, THIS OUTAGE SHALL NOT EXCEED 6 HOURS AND SHALL NOT INCLUDE THE HOURS OF 7:00 A.M. TO 9:00 A.M. AND 4:00 P.M. TO 6:00 P.M.. ANY SIGNALIZED INTERSECTION, WHERE THE SIGNAL IS OUT OF SERVICE DUE TO CONSTRUCTION PROCEDURES, OR DUE TO AN OUTAGE OR MALFUNCTION OF EQUIPMENT AS DESCRIBED ABOVE, SHALL BE PROTECTED BY THE CONTRACTOR, BY OFF DUTY CITY OF MIDDLEBURG HEIGHTS POLICE, HIRED BY THE CONTRACTOR.

ANY VEHICULAR TRAFFIC SIGNAL HEAD, EITHER NEW OR EXISTING WHICH WILL BE OUT OF OPERATION SHALL BE COVERED IN THE MANNER DESCRIBED IN 632.24.

ALL COSTS RESULTING IN THE ABOVE REQUIREMENTS SHALL BE CONSIDERED TO BE INCLUDED IN THE LUMP SUM PRICE BID FOR ITEM 614, MAINTAINING TRAFFIC.

PLOTTED FROM: i:\user\eforsber\pid08459\dgn\pearlsig\98086gnc.dgn PLOT SUBMITTED: 28-JUL-1998 13:44

PLOT SUBMITTED: 03-AUG-1998 12:16
PLOTTED FROM: i:\users\eforsber\pid08459\dgn\pearlsig\98086tpr.dgn 98086TPR.DGN

SIGNALS

ALL HEADS ARE 12" POLYCARBONATE
TUNNEL VISORS FOR C & D

SIGNS

NO TURN ON RED
EXCEPT CURB LANE

① R-23-24
RP-23-24
24" x 24"
9" x 24"
QTY = 1

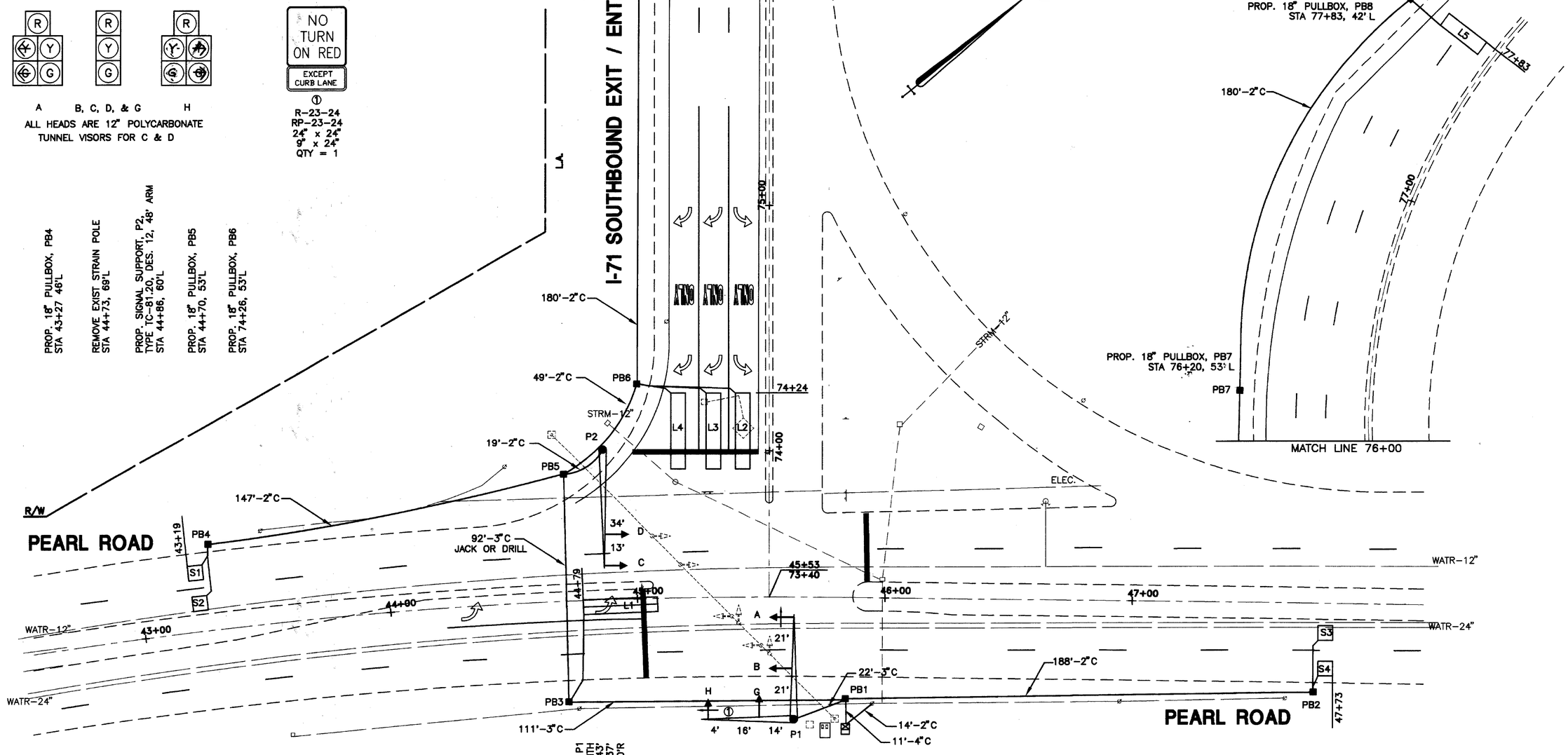

PROP. 18" PULLBOX, PB3 STA 44+71, 42'R

PROP. SIGNAL SUPPORT, P1 TYPE TC-12.30, DES. 5 POLE, WITH MAST ARMS TYPE TC-81.20, DES. 11, 43' AND TYPE TC-81.20, DES. 4, 37' STA 45+62, 50'R

REMOVE EXIST. PULLBOX STA 45+68, 53'R

REMOVE EXIST. CONTROLLER STA 45+74, 53'R

REMOVE EXIST. STRAIN POLE STA 45+78, 50'R

PROP. 24" PULLBOX, PB1 STA 45+82, 42'R

PROP. CONTROLLER, FOUNDATION, AND WORK PAD, STA 45+82, 54'R

PROP. 2" CONDUIT RISER FOR POWER SERVICE STA 45+93, 44'R

PROP. 24" PULLBOX, PB2 STA 47+73, 36'R

NOTE: THE CONTRACTOR SHALL CONNECT EXISTING INTERCONNECT CABLE TO NEW CONTROLLER. COST TO BE INCIDENTAL TO CONTROLLER PAY ITEM.

STATE OF OHIO
MICHAEL WILLIAM SCHWEICHART
E-56982
REGISTERED PROFESSIONAL ENGINEER

SIGNAL DISPLAY CHART

SIGNAL HEAD	ø1 R/W	ø1 CLEAR	ø1 CLEAR	ø2 R/W	ø2 R/W	ø2 CLEAR	ø2 CLEAR	ø4 R/W	ø4 R/W	ø4 CLEAR	ø4 CLEAR	FLASH
A	~~G~~/G	~~Y~~/G	G	G	G	Y	R	R	R	R	R	Y
B	G	G	G	G	G	Y	R	R	R	R	R	Y
C	R	R	R	G	G	Y	R	R	R	R	R	Y
D	R	R	R	G	G	Y	R	R	R	R	R	Y
G	R	R	R	R	R	R	R	G	G	Y	R	R
H	R/~~G~~	R/~~Y~~	R	R	R	R	R	G	G	Y	R	R

PREEMPT CHANNELS

CHANNEL 1 = ø2 (EASTBOUND ONLY)

CHANNEL 3 = ø1 (WESTBOUND ONLY)
CHANNEL 4 = ø4 (SOUTHBOUND ONLY)

PREEMPT NOTES:

1. ACTIVE WALK INDICATIONS SHALL IMMEDIATELY GO TO "DON'T WALK" UPON RECEIVING PREEMPTION SIGNAL.
2. IF PHASE ACTIVE CONFLICTS WITH PREEMPT PHASE CALLED, IT SHALL IMMEDIATELY TIME ITS YELLOW AND ALL RED CLEARANCES.
3. IF ACTIVE PHASE = THE PREEMPT PHASE, THEN THE PHASE SHALL HOLD FOR THE DURATION OF THE PREEMPT SIGNAL.
4. AFTER RELEASE FROM PREEMPT, YELLOW AND ALL RED CLEARANCE SHALL BE DISPLAYED AND RETURN PHASE SHALL BE ø2.
5. IF PREEMPT PHASE = RETURN PHASE ø2 THEN YELLOW AND ALL RED CLEARANCE AFTER PREEMPT SHALL NOT BE DISPLAYED.

ESTIMATED QUANTITIES

ITEM	QUANT	UNIT	DESCRIPTION
625	777	LIN FT	CONDUIT, 2", 713.04
625	133	LIN FT	CONDUIT, 3", 713.04
625	11	LIN FT	CONDUIT, 4", 713.04
625	92	LIN FT	CONDUIT, JACKED OR DRILLED UNDER PAVEMENT, SIZE: 3"
625	921	LIN FT	TRENCH
625	8	EACH	PULLBOX, 713.08, 18"
625	3	EACH	GROUND ROD
632	4	EACH	VEHICULAR SIGNAL HEAD, 3 SECT., 12" LENS, 1-WAY, AS PER PLAN
632	2	EACH	VEHICULAR SIGNAL HEAD, 5 SECT., 12" LENS, 1-WAY, AS PER PLAN
632	6	EACH	COVERING OF VEHICULAR SIGNAL HEAD
632	9	EACH	DETECTOR LOOP
632	5	EACH	LOOP DETECTOR UNIT, 2 CHANNEL
632	528	LIN FT	SIGNAL CABLE, 3 CONDUCTOR, NO. 14 AWG
632	342	LIN FT	SIGNAL CABLE, 5 CONDUCTOR, NO. 14 AWG
632	244	LIN FT	SIGNAL CABLE, 7 CONDUCTOR, NO. 14 AWG
632	528	LIN FT	SIGNAL CABLE, MISC.: PREEMPT DETECTOR CABLE
632	2	EACH	SIGNAL SUPPORT FOUNDATION
632	2979	LIN FT	LOOP DETECTOR LEAD-IN CABLE
632	54	LIN FT	POWER CABLE, 3 CONDUCTOR, NO. 6 AWG
632	1	EACH	CONDUIT RISER, 2" DIAMETER
632	1	EACH	SIGNAL SUPPORT, TYPE TC-12.30, DESIGN 5
632	1	EACH	SIGNAL SUPPORT, TYPE TC-81.20, DESIGN 12
632	1	EACH	REMOVAL OF TRAFFIC SIGNAL INSTALLATION, AS PER PLAN
632	2	EACH	SIGNALIZATION MISC.: SURFACE PREPARATION, NEW SIGNAL SUPPORT
632	2	EACH	SIGNALIZATION MISC.: EPOXY PRIME COAT, SIGNAL SUPPORT
632	2	EACH	SIGNALIZATION MISC.: EPOXY INTERMEDIATE COAT, SIGNAL SUPPORT
632	2	EACH	SIGNALIZATION MISC.: EPOXY TOP COAT, SIGNAL SUPPORT
633	1	EACH	CONTROLLER, ACTUATED, 4 PHASE, SOLOID-STATE DIGITAL,
			MICROPROCESSOR, AS PER PLAN
633	1.0	CU YD	CONCRETE FOR CABINET FOUNDATION
633	8.4	SQ FT	CONTROLLER WORK PAD
633	3	EACH	CONTROLLER ITEM, MISC.: PREEMPT CONFIRMATION LIGHT
633	1	EACH	CONTROLLER ITEM, MISC.: PREEMPT PHASE SELECTOR
633	3	EACH	CONTROLLER ITEM, MISC.: PREEMPTION DETECTOR, SINGLE CHANNEL,
			ONE DIRECTION
633	LUMP		CONTROLLER ITEM MISC.: PREEMPTION

LOOP DETECTOR CHART

LOOP #	SIZE	# TURNS	MODE	DELAY	AMP #	CHANNEL	PHASE
L1	6' x 30'	2-4-2	PRESENCE		1	1	1
L2	6' x 35'	2	PRESENCE		1	2	4
L3	6' x 35'	2	PRESENCE		2	1	4
L4	6' x 35'	2	PRESENCE	8	2	2	4
L5	6' x 30'	3	PRESENCE		3	1	QUEUE
S1	6' x 6'	3	PRESENCE		4	1	SYSTEM
S2	6' x 6'	3	PRESENCE		4	2	SYSTEM
S3	6' x 6'	3	PRESENCE		5	1	SYSTEM
S4	6' x 6'	3	PRESENCE		5	2	SYSTEM

PHASING DIAGRAM

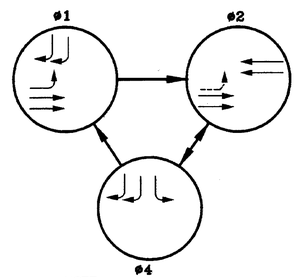

NOTE:
OMIT ø1 IF ø2 IS ON

SIGNAL TIMING

INTERVAL	ø1	ø2	ø4
INITIAL	7	10	10
PASSAGE	2.5	--	4.0
YELLOW	3.6	3.6	4.5
RED CLEAR	1.5	1.2	1.5
MAX I	8	63	24
MAX II	8	63	24
WALK	0	0	0
PED CLEAR	0	0	0
RECALL	NONE	MIN	NONE
MEMORY	OFF	ON	ON

COORDINATION TIMING

	DIAL 1	DIAL 2	DIAL 3
CYCLE LENGTH	90 SEC	115 SEC	130 SEC
PHASE 1 SPLIT	15 %	12 %	11 %
PHASE 2 SPLIT	51 %	41 %	65 %
PHASE 4 SPLIT	34 %	47 %	24 %
PERMISSIVE	10 %	10 %	10 %
OFFSET	66 %	0 %	0 %
TIME OF DAY SCHEDULE	ALL OTHER TIMES	6:30AM TO 9:00AM MON-SAT	3:30PM TO 6:30PM MON-SAT

NOTES:

1. PHASE SPLITS SHALL INCLUDE ALL GREEN PLUS YELLOW & ALL RED
2. PERMISSIVES SHALL START AT THE ZERO POINT OF THE CYCLE
3. OFFSETS SHALL BE REFERENCED TO THE BEGINNING OF PHASE 2 YELLOW

ORIENTATION ANGLES

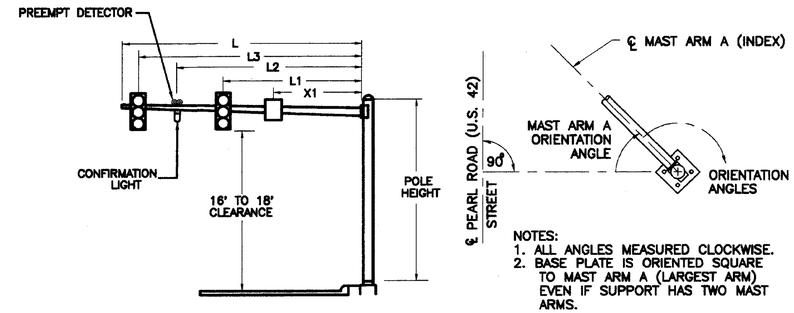

NOTES:
1. ALL ANGLES MEASURED CLOCKWISE.
2. BASE PLATE IS ORIENTED SQUARE TO MAST ARM A (LARGEST ARM) EVEN IF SUPPORT HAS TWO MAST ARMS.

SUPPORT NO.	SIGNAL SUPPORT: POLE DESIGN NO. TC-81.20	POLE DESIGN NO. TC-12.30	ARM DESIGN NO.	POLE HEIGHT (FT)	FOUNDATION STATION	FOUNDATION OFFSET	L (FT.)	L1 (FT.)	L2 (FT.)	L3 (FT.)	X1 (FT.)	MAST ARM A ANGLE (DEG.)	ORIENTATION ANGLES (DEG.) FROM MAST ARM "A": MAST ARM B	PEDESTRIAN SIGNALS	PEDESTRIAN PUSHBUTTONS	HANDHOLE
P1		5	11	20	45+62	50'R	43	21	32	42	--	0	--			180
			4				37	14	21	27			270			
P2	12		12	20	44+86	50'L	48	34	41	47	--	0	--			180

WIRING DIAGRAM

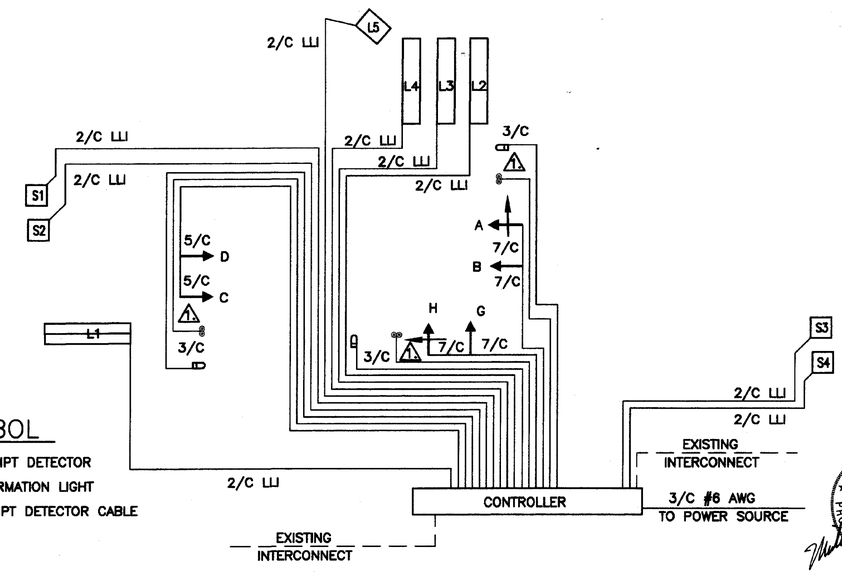

STATE OF OHIO MICHAEL WILLIAM SCHWECKART 65962 REGISTERED PROFESSIONAL ENGINEER

PLOT SUBMITTED: 03-AUG-1998 12:16
PLOTTED FROM: i:\users\eforsber\pid08459\dgn\pearlsig\98086tdr.dgn 98086TDR.DGN

LIGHTING SCHEMATIC PLAN

CUY-71-0.00	OHIO	254 / 361
	FHWA REGION 5	
	FEDERAL PROJECT	

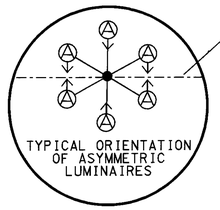

ALIGNMENT AXIS AS SHOWN ON PLANS OR PARALLEL TO ℄ IR-71

→ INDICATES "STREET SIDE" ORIENTATION OF LUMINAIRE

"A3/A3" INDICATES 3 ASYMETRICS IN EACH DIRECTION

200 0 200 400
SCALE IN FEET

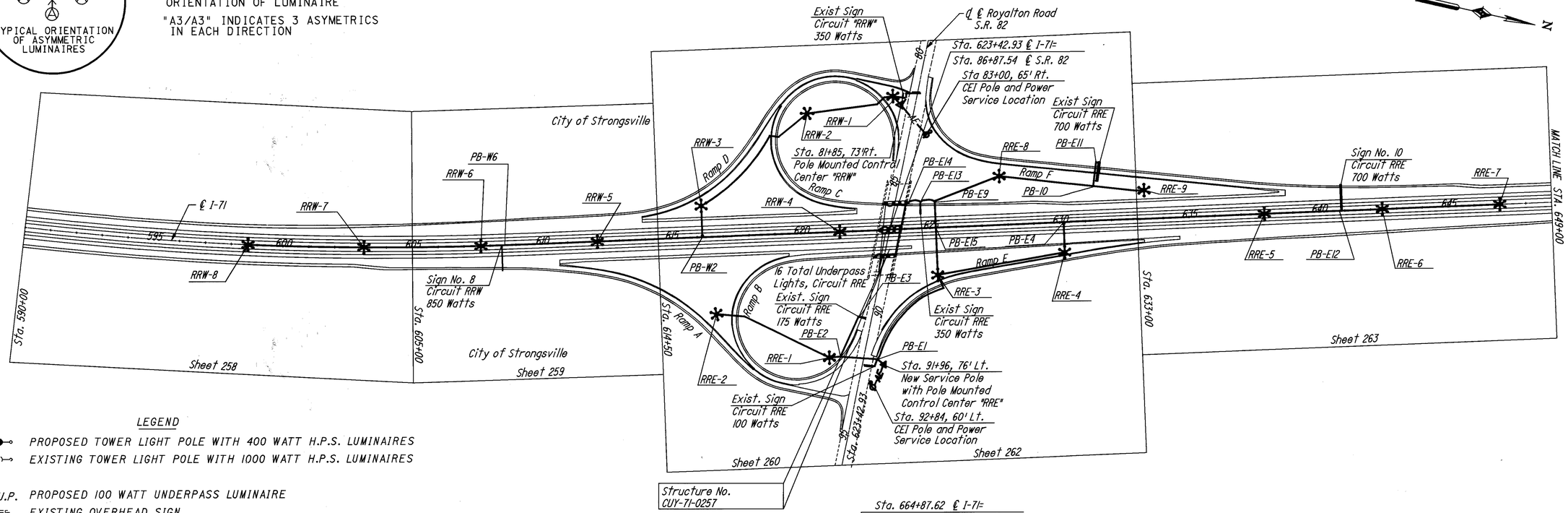

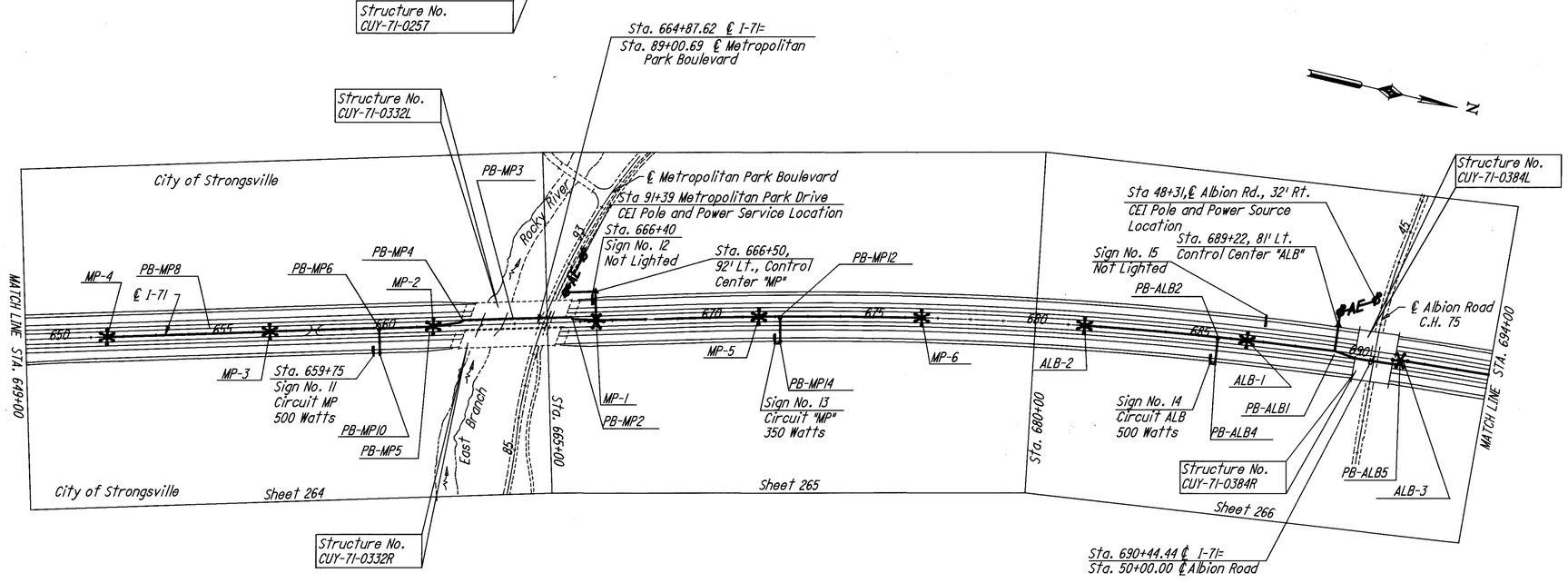

LEGEND

- PROPOSED TOWER LIGHT POLE WITH 400 WATT H.P.S. LUMINAIRES
- EXISTING TOWER LIGHT POLE WITH 1000 WATT H.P.S. LUMINAIRES
- U.P. PROPOSED 100 WATT UNDERPASS LUMINAIRE
- EXISTING OVERHEAD SIGN
- PROPOSED OVERHEAD SIGN
- -----E-- EXISTING DUCT CABLE
- ------B------ PROPOSED DUCT CABLE (3-#4AWG)
- ------BB------ PROPOSED DUCT CABLE (3-#2AWG)
- ------BBB------ PROPOSED DUCT CABLE (3-#1/0AWG)
- --C-- EXISTING CONDUIT
- —3"— PROPOSED CONDUIT
- PROPOSED 3" CONDUIT With 1½" DUCT CABLE PULLED THROUGH
- STUB AND CAP
- PROPOSED PULL BOX, 713.08
- EXISTING PULL BOX
- EXISTING CONTROL CENTER
- J.B. PROPOSED JUNCTION BOX ON BRIDGE
- PROPOSED CONTROL CENTER
- EXISTING C.E.I. POWER POLE

TOWER LIGHTING LEGEND

BBBBBB 100 - 400 - A3

- NUMBER OF LUMINAIRES/EACH ORIENTATION
- DISTRIBUTION TYPE (A=ASYMMETRIC) (V=SYMMETRIC)
- LAMP WATTAGE
- TOWER MOUNTING HEIGHT
- NUMBER OF LUMINAIRES

PLOTTED BY: lmincek
PLOTTED: 08-05-1998 12:45
PLOT SUBMITTED: 05-AUG-1998 12:45
307L TSC1.DGN

LIGHTING SCHEMATIC PLAN

CUY-71-0.00	OHIO	255/361
	FHWA REGION 5	
	FEDERAL PROJECT	

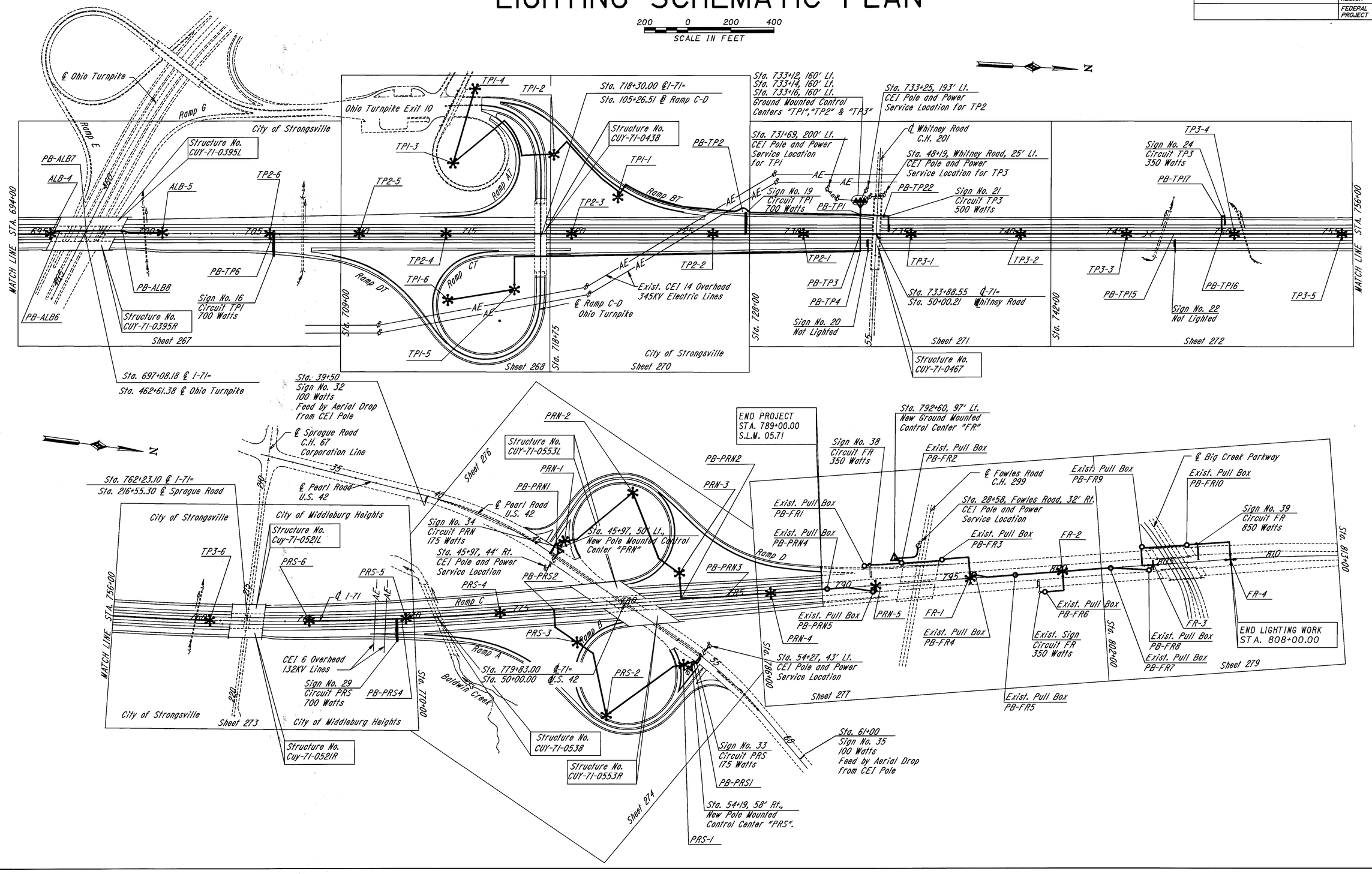

LIGHTING SCHEMATIC PLAN

PLOTTED BY: jgrmovse
PLOTTED: 24-JUL-1998 15:11
PLOT SUBMITTED: 24-JUL-1998 15:11
307LTSC2.DGN

LIGHTING NOTES

SEQUENCE OF OPERATIONS

THE EXISTING LIGHTS LOCATED ON STRUCTURES SHALL REMAIN OPERATIVE UNTIL THE DECK IS REMOVED. OTHER EXISTING LIGHTS SHALL REMAIN OPERATIVE UNTIL ALL OF THE PROPOSED TOWERS ARE IN PLACE AND AS MUCH OF THE PROPOSED CIRCUITS AS POSSIBLE HAVE BEEN INSTALLED. AT THE IR-71 BRIDGES OVER PEARL ROAD ONLY, THE CONTRACTOR SHALL INSTALL A TEMPORARY CIRCUIT(S) ACROSS THE BRIDGE WHEN THE STRUCTURE CIRCUIT IS CUT. THE CONTRACTOR SHALL ESTABLISH A FUNCTIONING NEW LIGHTING SYSTEM PRIOR TO DISCONNECTING THE EXISTING SYSTEM. ALL COSTS FOR SEQUENCING THIS WORK AND PROVIDING A TEMPORARY CIRCUIT CONNECTION SHALL BE CONSIDERED AS INCIDENTAL TO THE LIGHTING PAY ITEMS

ITEM 625 - POWER SERVICE, AS PER PLAN

THE POWER SUPPLYING AGENCY FOR THIS PROJECT IS:
THE CLEVELAND ELECTRIC ILLUMINATING CO.
55 PUBLIC SQUARE
CLEVELAND, OHIO 44101

SERVICE: CONTROLLED 480 VOLT FOR TOWER LIGHTS AND SIGN SERVICE, SINGLE PHASE, 3 WIRE SERVICE WITH GROUNDED NEUTRAL.

THIS ITEM SHALL INCLUDE ALL COSTS OF EQUIPMENT, MATERIALS AND LABOR TO CONSTRUCT EITHER A GROUND MOUNTED POWER SERVICE OR POLE MOUNTED POWER SERVICE AS DETAILED IN THE PLANS. THIS ITEM SHALL INCLUDE ALL COSTS CHARGED BY THE POWER COMPANY FOR EXTENDING SECONDARY SERVICE TO THE SERVICE POLE LOCATION. ALL COSTS INVOLVED SHALL BE PAID DIRECTLY TO THE POWER COMPANY BY THE CONTRACTOR. THE COST OF SERVICE POLES AS SHOWN IN THE PLANS SHALL BE INCLUDED UNDER THIS ITEM FOR PAYMENT.

IN ADDITION TO THE REQUIREMENTS OF 625.18 THIS ITEM SHALL INCLUDE ALL COSTS OF PROVIDING POWER SERVICE FROM A CEI POLE MOUNTED TRANSFORMER TO A GROUND MOUNTED POWER SERVICE OR POLE MOUNTED AND POWER SERVICE INCLUDING A 20 AMP BY-PASS SWITCH COMPLETE WITH WIRE AND CONDUITS. THE CLEVELAND ILLUMINATING COMPANY WILL MAKE THE FINAL CONNECTION TO THE SWITCH FOR MANUAL BYPASS CONTROL OF THEIR LIGHTING CONTROLLER. ANY TRANSFORMATION COSTS SPECIFIC TO THIS THAT ARE INCURRED BY THE CEI WILL BE THE RESPONSIBILITY OF THE CONTRACTOR. THE CONTRACTOR SHALL SHALL BE RESPONSIBLE FOR TRENCHING, UNDERGROUND WIRING, AND ALL COSTS OF EXTENDING POWER FROM THE EXISTING POWER SOURCE TO THE POWER FEED POINT.

SERVICE CONDUIT LOCATIONS AND TERMINATION HEIGHTS ON THE SERVICE POLES SHALL BE AS DIRECTED BY THE UTILITY COMPANY. THE CONTRACTOR SHALL ARRANGE WITH THE UTILITY COMPANY FOR A FIELD INSPECTION OF EACH SERVICE LOCATION PRIOR TO HIS INSTALLATION OF THE SERVICE EQUIPMENT.

BASIS OF PAYMENT SHALL BE INCLUDED IN "ITEM 625 - POWER SERVICE, AS PER PLAN".

ITEM 625 - ELECTRICAL SERVICE FOR ILLUMINATED SIGNS

THE PAY ITEMS IN THE LIGHTING GENERAL SUMMARY INCLUDE THE PULL BOX OR JUNCTION BOX ADJACENT TO EACH LIGHTED SIGN AND THE ELECTRICAL SERVICE CONNECTIONS LEADING INTO THE BOX, INCLUDING CABLE SPLICING KITS IN THE PULL BOX OR JUNCTION BOX. QUANTITIES FOR ELECTRICAL SERVICE FROM THE CONNECTION IN THE PULL BOX OR JUNCTION BOX TO THE SIGN ARE INCLUDED IN THE TRAFFIC CONTROL GENERAL SUMMARY.

HIGH VOLTAGE DIRECT CURRENT TEST

A HIGH VOLTAGE DIRECT CURRENT TEST, AS DESCRIBED IN THE SPECIFICATIONS SHALL BE PERFORMED ON ALL DISTRIBUTION CABLE AND DUCT CABLE SYSTEMS TO BE INSTALLED ON THIS PROJECT. THE TEST SHALL NOT BE PERFORMED UNTIL AFTER ALL NEW CONSTRUCTION, SUCH AS GUARD RAIL,FENCE, DELINEATOR POSTS, SIGN SUPPORTS, ETC., IN THE IMMEDIATE OF THE LOCATION OF THE CABLE RUN BEING TESTED, HAS BEEN COMPLETED. A LUMP SUM PAYMENT FOR THIS TEST HAS BEEN INCLUDED IN THE LIGHTING GENERAL SUMMARY.

HIGH MAST LUMINARIES

THE LUMINAIRE ARRAYS AND ASSOCIATED ILLUMINATION TEST AREAS SPECIFIED IN SECTION 713.21 OF THE CONSTRUCTION AND MATERIAL SPECIFICATIONS ARE HEREBY WAIVED FOR THIS PROJECT. INSTEAD, THE LUMINARIES FOR TOWER LIGHTING SHALL MEET THE FOLLOWING REQUIREMENTS.

SYMMETRIC, TYPE V, LUMINARIES FOR TOWER LIGHTING SHALL BE HOLOPHANE "HMSC" TEST #43842. ASYMMETRIC, TYPE I OR II, LUMINARIES FOR TOWER LIGHTING (INDICATED BY AN "A") SHALL BE HOLOPHANE "HMSC" TEST #43191.

IN ADDITION, OTHER CUT OFF STYLE LUMINARIES WILL BE CONSIDERED IF THE DESIGNED INTENSITY AND UNIFORMITY ARE PROVIDED USING THE DESIGNED POLE LOCATIONS AND THE DESIGNED NUMBER AND TYPE OF FIXTURES PER POLE.

UNDERDRAINS FOR PULL BOXES

REFERENCE IS MADE TO STANDARD DRAWING HL-30.11 FOR DETAILS OF DRAINING PULL BOXES. UNDERDRAINS FOR PULL BOXES SHALL BE USED AS DIRECTED BY THE ENGINEER AND SHALL BE PROVIDED WHERE THE LENGTH REQUIRED FOR A SATISFACTORY OUTLET DOES NOT EXCEED APPROXIMATELY 20 FEET. AN ESTIMATED QUANTITY OF "ITEM 603 - 4" CONDUIT, TYPE E" IS INCLUDED IN THE LIGHTING GENERAL SUMMARY FOR THIS PURPOSE. THIS ITEM SHALL ALSO INCLUDE THE COST OF RESTORING PAVED SHOULDER AREAS WHEN NECESSARY TO DRAIN THE PULL BOX INTO EXISTING DRAINS.

ITEM 603 - 4" CONDUIT, TYPE E — 340 LIN. FT.

713.14 LAMPS

HIGH PRESSURE SODIUM LAMPS SHALL BE GENERAL ELECTRIC "LUCALOX", WESTINGHOUSE "CERMALUX", SYLVANIA "LUMALUX", OR EQUAL APPROVED BY THE ENGINEER.

625.07 - 713.13 UNDERPASS LUMINARIES

THIS ITEM SHALL BE HOLOPHANE "UNDERPASS WALLPACK", GENERAL ELECTRIC W40L UNDERPASS UNIT, WESTINGHOUSE, OR EQUAL APPROVED BY THE ENGINEER, AND SHALL BE FURNISHED WITH AN INTEGRAL FUSE HOLDER AND 10 AMPERE FUSE. THE INTEGRAL HIGH PRESSURE SODIUM BALLAST SHALL BE OF A REGULATOR TYPE RATED FOR 120 OR 480 VOLTS AS REQUIRED, 100 WATTS.

PADLOCKS AND KEYS

PADLOCKS FURNISHED SHALL BE EITHER BRASS OR BRONZE PADLOCKS EQUAL TO MASTER NO. 4 BKA OR WILSON BOHANNAN 660 OR EQUAL AS APPROVED BY THE ENGINEER, AND SHALL BE KEYED IN ACCORDANCE WITH SPECIFICATION 631.08, PARAGRAPH 3. PAYMENT WILL BE INCLUDED IN THE BID FOR THE ITEM(S) BEING LOCKED.

EXISTING DUCT CABLE AND CONDUIT

THE LOCATIONS OF EXISTING CONDUIT AND DUCT CABLE SHOWN ON THE PLANS HAVE BEEN OBTAINED BY SEARCHES OF AVAILABLE RECORDS AND FIELD CHECKS. IT IS BELIEVED THAT THEY ARE ESSENTIALLY CORRECT, HOWEVER, THE STATE OF OHIO DOES NOT GUARANTEE THEIR ACCURACY OR COMPLETENESS.

ITEM 625 - SERVICE TO UNDERPASS LIGHTING, AS PER PLAN

THIS ITEM SHALL CONSIST OF PROVIDING COMPLETE ELECTRICAL SERVICE, EXCEPT FOR LUMINARIES AND STRUCTURE GROUNDING, FOR ALL UNDERPASS LIGHTING CIRCUITS DETAILED IN THIS PROJECT. THE INSTALLATION WORK SHALL INCLUDE CONDUITS, CONDUIT GROUNDING, MOUNTINGS, FITTINGS, JUNCTION BOXES, CABLES, SERVICE SWITCHES, AND ALL INCIDENTALS NECESSARY TO COMPLETE, READY FOR USE, THE SERVICE AS DETAILED IN THE LIGHTING PLANS. THE UNIT PRICE BID FOR "ITEM 625 - SERVICE TO UNDERPASS LIGHTING, AS PER PLAN" SHALL INCLUDE PAYMENT FOR ALL EQUIPMENT, LABOR, AND MATERIALS NECESSARY TO COMPLETE THE WORK AS SPECIFIED. PAYMENT FOR EACH "SERVICE TO UNDERPASS LIGHTING, AS PER PLAN" UNIT INCLUDES COMPLETE ELECTRICAL SERVICE TO EXISTING OVERPASS BRIDGE AT S.R. 82 (ROYALTON ROAD) , COMPONENT PARTS NOT SPECIFICALLY MENTIONED BUT REQUIRED FOR SATISFACTORY OPERATION OF THIS ITEM SHALL BE FURNISHED AND CONSIDERED PAID FOR AS PART OF THE ITEM.

SOIL INFORMATION

SUBSURFACE INVESTIGATIONS WERE MADE FOR THE ORIGINAL CONSTRUCTION OF I.R. 71. COPIES OF THIS DATA MAY BE INSPECTED AT THE DISTRICT 12 DESIGN OFFICE, 5500 TRANSPORTATION BLVD., GARFIELD HTS. OHIO 44125.

ITEM 625 - LIGHT TOWER FOUNDATIONS

LIGHT TOWER FOUNDATIONS NOT LOCATED ON A CONCRETE BARRIER SHALL CONFORM TO THE DESIGN SHOWN ON STANDARD CONSTRUCTION DRAWING HL-20.21 EXCEPT THEY SHALL PROJECT ABOVE GRADE 6" OR AS SHOWN ON SHEETS 285 AND 286. LIGHT TOWER FOUNDATIONS LOCATED ON A BARRIER MEDIAN SHALL CONFORM TO THE DESIGN SHOWN ON SHEET 281 AND 282. THE CONTRACTOR SHALL ACCURATELY LOCATE UNDERGROUND CONDUITS PRIOR TO DRILLING FOR FOUNDATIONS. FOUNDATION LOCATIONS SHALL BE SHIFTED, AS DIRECTED BY THE ENGINEER, TO AVOID ANY UNDERGROUND UTILITIES OR CONDUITS BY AT LEAST 10 FEET. ALL FOUNDATION RELOCATIONS SHALL BE APPROVED BY THE ENGINEER PRIOR TO DRILLING. ALL COSTS OF REMOVAL OF EXCAVATED MATERIAL, GRADING, AND RESTORATION OF ALL DISTURBED AREAS IN ACCORDANCE WITH ITEM 659 SHALL BE CONSIDERED AS INCIDENTAL TO THE LIGHT TOWER FOUNDATION ITEM.

TOWER LIGHT POLE - STA. 800+20

THE BASE PLATE BOLT PATTERN FOR THIS POLE SHALL MATCH THE PATTERN OF THE EXISTING FOUNDATION.

PLOTTED BY: lmincek
PLOTTED FROM: ~~~Busers~~~Beforsberg~~~pid08459~~~Bdgn~~~B3071tgnl.dgn 3071tgnl.dgn
PLOT SUBMITTED:05-AUG-1998 12:30

LIGHTING NOTES

HIGH MAST LIGHT TOWERS

THE MANUFACTURER SHALL SUBMIT A REPORT FROM AN INDEPENDENT TESTING LABORATORY TO SHOW THAT THE LUMINAIRES DO NOT RECEIVE MORE THAN THE SPECIFIED ACCELERATION LOAD. THE TESTING LABORATORY'S REPORT SHALL SPECIFY IN DETAIL THE MOUNTING LOCATIONS OF THE ACCELEROMETERS AND THE TEST PROCEDURES USED. IN ADDITION TO THIS REPORT ODOT RESERVES THE RIGHT TO CONDUCT FIELD MEASUREMENTS OF THOSE ACCELERATION LOADS AND TO ACCEPT ONLY THOSE DESIGNS IN WHICH THE TESTED INSTALLATIONS MEET THE SPECIFICATIONS.THE TERMINAL BLOCK SHOWN ON THE STANDARD CONSTRUCTION DRAWINGS SHALL BE INCLUDED IN THE PRICE OF THE LIGHT TOWER.

PORTABLE POWER UNIT

THE CONTRACTOR SHALL SUPPLY A PORTABLE POWER UNIT AS SPECIFIED IN THE ODOT CONSTRUCTION AND MATERIAL SPECIFICATIONS. A QUANTITY OF "1 EACH" OF "ITEM 625 - PORTABLE POWER UNIT" IS INCLUDED IN THE GENERAL SUMMARY FOR THIS PURPOSE.

CONDUIT ON STRUCTURE

EXPANSION FITTINGS FOR CONDUIT ON STRUCTURES SHALL BE OZ TYPE AX-4, CROUSE-HINDS TYPE XJ-4, APPLETON TYPE XJ-4, OR EQUAL APPROVED BY THE ENGINEER FOR ALL BRIDGES.EACH EXPANSION FITTING SHALL HAVE A COPPER EXTERNAL BONDING JUMPER.

ITEM 202 - REMOVAL MISCELLANEOUS: LIGHT TOWER MAINTENANCE PLATFORM REMOVED

THIS ITEM OF WORK SHALL BE IN ACCORDANCE WITH ITEM 202 AND SHALL INCLUDE THE REMOVAL OF THE EXISTING LIGHT TOWER MAINTENANCE PLATFORM WHICH SHALL THEN BE PROPERLY DISPOSED OF OFF THE PROJECT SITE. THE RESULTANT DEPRESSED AREA SHALL THEN BE BACKFILLED TO GRADE WITH SUITABLE COMPACTED SOIL AND RESTORED TO MATCH THE SURROUNDING AREA.

ITEM 202 - LIGHT TOWER FOUNDATION REMOVED, AS PER PLAN

THIS ITEM OF WORK SHALL BE IN ACCORDANCE WITH ITEM 202 AND SHALL CONSIST OF REMOVING THE EXISTING LIGHT TOWER FOUNDATION TO A MINIMUM OF TWO (2) FEET BELOW FINISHED GRADE AND BACKFILLING THE RESULTANT DEPRESSION WITH COMPACTED SOIL AND RESTORING THE DISTURBED AREA.

ITEM 202 - LIGHT TOWER REMOVED

THIS ITEM OF WORK SHALL BE IN ACCORDANCE WITH ITEM 202 AND SHALL CONSIST OF REMOVING THE EXISTING LIGHT TOWER FROM ITS FOUNDATION AND PROPERLY DISPOSING OF IT OFF THE PROJECT SITE. PAYMENT SHALL BE FOR EACH LIGHT TOWER REMOVED.

ITEM 202 - REMOVAL MISCELLANEOUS: LIGHT TOWER LUMINAIRE ASSEMBLY REMOVED FOR STORAGE, AS PER PLAN

THIS ITEM OF WORK SHALL BE IN ACCORDANCE WITH ITEM 202 AND SHALL CONSIST OF REMOVING THE EXISTING LIGHT TOWER LUMINAIRE RING ASSEMBLY; WINCH ASSEMBLY; ALL LUMINAIRES; ALL APPURTENANCES SUCH AS REFLECTORS, REFRACTORS, HOUSING AND SUPPORTS THAT ARE INTEGRAL WITH THE HOUSING; BALLASTS; AND LAMPS AND STORING THEM ON THE PROJECT SITE FOR PICK UP BY ODOT. PAYMENT SHALL BE MADE FOR EACH LIGHT TOWER LUMINAIRE ASSEMBLY REMOVED FOR STORAGE AND SHALL INCLUDE ALL ITEMS LISTED ABOVE

EXISTING TOWER FOUNDATION (ABANDONED)

EXISTING TOWER FOUNDATIONS INDICATED IN THE PLANS TO BE ABANDONED SHALL BE ABANDONED IN PLACE UNDER A MINIMUM OF TWO (2) FEET OF PROPOSED FILL MATERIAL. NO REMOVAL OF THE FOUNDATION IS REQUIRED.

ITEM 202 - REMOVAL MISCELLANEOUS.: POWER SERVICE REMOVED, AS PER PLAN

THIS ITEM OF WORK SHALL BE IN ACCORDANCE WITH 202 AND SHALL CONSIST OF REMOVING AND DISPOSING OF GROUND MOUNTED AND/OR POLE MOUNTED CONTROL CENTERS, CONCRETE FOUNDATION, POLE MOUNTED CONDUIT AND WEATHERHEADS, AND EXISTING POWER CABLES. THE WORK SHALL BE STARTED AFTER THE CLEVELAND ELECTRIC ILLUMINATING COMPANY DISCONNECTS THE EXISTING POWER CABLES SERVICING THE LIGHTING CIRCUITS. ALL REMOVED MATERIALS AND EQUIPMENT SHALL BE DISPOSED OF OFF THE PROJECT SITE. PAYMENT SHALL BE MADE FOR EACH POWER SERVICE REMOVED AND SHALL BE INCLUDE ALL LABOR, EQUIPMENT, MATERIALS AND INCIDENTALS REQUIRED FOR THE COMPLETE REMOVAL OF THE EXISTING POWER SERVICE INCLUDING THE CONTROL CENTERS, FOUNDATIONS, CONDUIT, WEATHERHEAD AND WIRING.

ITEM 202 - LIGHT POLE REMOVED, AS PER PLAN

THIS ITEM OF WORK SHALL BE IN ACCORDANCE WITH ITEM 202 AND SHALL CONSIST OF REMOVING EITHER A GROUND MOUNTED OR BRIDGE MOUNTED LIGHT POLE FROM ITS FOUNDATION OR BRIDGE PILASTER AND PROPERLY DISPOSING OF IT OFF THE PROJECT SITE. ON BRIDGE DECKS WHICH ARE NOT BEING REPLACED, AFTER REMOVAL OF THE LIGHT POLES, PROTRUDING STRUCTURE CONDUIT SHALL BE TRIMMED AT THE STRUCTURE AND A 3 INCH GALVANIZED STEEL COVER PLATE, FITTING THE EXISTING LIGHT POLE MOUNTING BOLT PATTERN SHALL BE GASKETED OR CAULKED AND INSTALLED OVER THE OPENING. ANCHOR BOLT COVERS SHALL BE PROVIDED FOR EACH BOLT. SEE SHEET 284 FOR DETAIL.

PAYMENT SHALL BE MADE PER EACH LIGHT POLE REMOVED AND SHALL NOT BE DIFFERENTIATED BY GROUND MOUNTED OR BRIDGE MOUNTED TYPE.

ITEM 202 - LUMINAIRE REMOVED, AS PER PLAN

THIS ITEM OF WORK SHALL BE IN ACCORDANCE WITH ITEM 202 AND SHALL CONSIST OF REMOVING THE LIGHT POLE LUMINAIRE AND ALL OF ITS APPURTENANCES SUCH AS REFLECTORS, REFRACTORS, HOUSINGS AND SUPPORTS THAT ARE INTEGRAL WITH THE HOUSING, BALLAST AND LAMP AND PROPERLY DISPOSING OF IT OFF THE THE PROJECT SITE. PAYMENT SHALL BE MADE FOR EACH LUMINAIRE REMOVED.

ITEM 202 - LIGHT POLE FOUNDATION REMOVED, AS PER PLAN

THIS ITEM OF WORK SHALL BE IN ACCORDANCE WITH ITEM 202 AND SHALL CONSIST OF REMOVING EXISTING LIGHT POLE FOUNDATIONS TO A MINIMUM OF TWO (2) FEET BELOW FINISHED GRADE AND BACKFILLING THE RESULTANT DEPRESSION WITH COMPACTED SOIL AND RESTORING THE DISTURBED AREA. PAYMENT SHALL BE MADE PER EACH LIGHT POLE FOUNDATION REMOVED TO A MINIMUM OF TWO (2) FEET BELOW GRADE. WHEREVER THE LIGHTING PLANS INDICATE "LIGHT POLE TO BE REMOVED" OR "LIGHT POLE FOUNDATION TO BE REMOVED", THE FOUNDATIONS SHALL BE REMOVED TO A MINIMUM OF TWO (2) FEET BELOW FINISHED GRADE.

LIGHTING ABANDONED OR REMOVED

THE REMOVAL OR ABANDONMENT OF ANY ITEMS WHICH ARE NOT ITEMIZED SEPARATELY SHALL BE CONSIDERED INCIDENTAL TO THE ADJACENT WORK ITEM.

ITEM 202 - PULL BOX REMOVED, AS PER PLAN

THIS ITEM OF WORK SHALL BE IN ACCORDANCE WITH ITEM 202 AND SHALL CONSIST OF REMOVING THE EXISTING PULL BOX WHICH SHALL BE DISPOSED OF OFF THE PROJECT SITE. THE RESULTANT OPENING SHALL THEN BE BACKFILLED TO GRADE WITH SUITABLE COMPACTED SOIL AND RESTORED TO MATCH THE SURROUNDING AREA. PAYMENT SHALL BE MADE PER EACH PULL BOX REMOVED.

ITEM SPECIAL - DISCONNECT EXISTING CIRCUIT

THIS ITEM OF WORK SHALL CONSIST OF THE DISCONNECTION OF AN EXISTING LIGHT CIRCUIT AT A PULL BOX OR A LIGHT POLE.

DISCONNECTION AT A PULL BOX SHALL INVOLVE CUTTING THE EXISTING CIRCUIT AND REMOVING ALL SPLICE KITS. ANY CABLE THAT IS TO BE ABANDONED SHALL BE TERMINATED IN A MANNER SUCH THAT NO CABLE IS LEFT REMAINING IN THE PULL BOX.

DISCONNECTION AT A LIGHT SHALL INVOLVE THE REMOVAL OF THE PART OF CABLE TO BE ABANDONED FROM THE POLE. THOSE ENDS OF THE CONNECTOR KITS FROM WHICH THE ABANDONED CABLE IS REMOVED SHALL BE PLUGGED AND TAPED.

ANY CABLE THAT IS TO BE REUSED IN A PULL BOX OR LIGHT POLE SHALL BE CUT IN SUCH A MANNER SO THAT THERE IS SUFFICIENT LENGTH OF CABLE LEFT FOR RECONNECTION. CABLE SPLICE KITS AND CONNECTOR KITS WILL BE PAID FOR RESPECTIVELY UNDER ITEM 625.

PAYMENT WILL BE MADE AT THE UNIT BID PRICE FOR EACH ITEM SPECIAL "DISCONNECT EXISTING CIRCUIT" AND SHALL BE FULL COMPENSATION FOR ALL LABOR, MATERIALS AND INCIDENTALS REQUIRED TO COMPLETE THE WORK.

RECONNECTION OF OVERHEAD SIGNS TO NEW LIGHTING CIRCUITS

THE EXISTING LIGHTED SIGNS SHALL BE RECONNECTED TO THE NEW LIGHTING CIRCUITS. PAYMENT FOR THIS WORK WILL BE UNDER THE FOLLOWING ITEMS:

DISCONNECTION OF THE SIGN FROM THE EXISTING CIRCUIT SHALL BE PAID BY ITEM 625 SPECIAL - "DISCONNECT EXISTING CIRCUIT".

REMOVAL OF THE EXISTING PULL BOX SHALL BE PAID BY ITEM 202 - "PULL BOX REMOVED, AS PER PLAN".

PLACEMENT OF A NEW PULL BOX AT THE SAME LOCATION SHALL BE PAID UNDER ITEM 625 - "PULL BOX, 713.08, 18".

RECONNECTION OF THE SIGNS TO THE NEW LIGHTING CIRCUIT SHALL BE PROVIDED BY ITEM 625 - "CABLE SPLICING KIT" (3 PER PULL BOX), AND ITEM 631 - SIGN SERVICE, AS PER PLAN.

COORDINATION WITH OHIO TURNPIKE COMMISSION

PRIOR TO ANY WORK IN THE UTILITY BUILDING, THE CONTRACTOR IS TO OBTAIN PERMISSION FROM THE OHIO TURNPIKE'S CHIEF ENGINEER. ANY POWER SHUT DOWN IS TO BE KEPT TO MINIMUM DURATION AND COORDINATED WITH THE COMMISSION'S TOLL OPERATIONS AND CHIEF ENGINEER.

THE OHIO TURNPIKE COMMISSION
682 PROSPECT STREET, BEREA, OHIO 44017
TELEPHONE: 216/234-2081 TELECOPIER: 216/234-7273

PLOTTED BY: jgrmovse
PLOTTED FROM: /usersRef/orsberb/pid08459/dgn/3071tgn2.dgn
PLOT SUBMITTED: 24-JUL-1998 15:11
3071tgn2.dgn

GENERAL SUMMARY

SHEET NUMBER																														ITEM	ITEM EXT.	GRAND TOTAL	UNIT	DESCRIPTION	AS PER PLAN REF. SHEET
			256	256A		258	259	261	261	263	264	265	266	267		269	269		271	272	273		275	275		278	278							* HIGH MAST	
																																		LIGHTING	
							1	5	4	4				3		10	3		1				5	8		2				202	75301	46	Each	Pull Box Removed, As Per Plan	256A
							2	3		2																				202	75350	7	Each	Light Tower Removed	256A
														20		41	18		14	16	16		29	21		18	8			202	75401	201	Each	Light Pole Removed, As Per Plan	256A
														16		39	18		14	16	15		33	25		18	8			202	75501	202	Each	Light Pole Foundation Removed, As Per Plan	256A
														20		39	18		14	16	16		29	21		18	8			202	75507	199	Each	Luminaire Removed, As Per Plan	256A
									1															2		1				202	75511	4	Each	Power Service Removed, As Per Plan	256A
								3		2																				202	75541	5	Each	Light Tower Foundation Removed, As Per Plan	256A
								2	3	1				1			1		1				1	1		2				202	75800	13	Each	Disconnect Existing Circuit	256A
							2																							202	98100	2	Each	Removal, Misc.: Light Tower Maintenance Platform Removed	256A
							2	3		2																				202	98100	7	Each	Removal, Misc.: Light Tower Luminaire Assembly Removed for Storage, as per plan	256A
			340																											603	00400	340	Lin. Ft.	4" Conduit, Type E	
																								3						625	01000	3	Each	Connector Kit, Type VII A	
																										3				625	01004	3	Each	Connector Kit, Type VII B	
																										3				625	01100	3	Each	Connector Kit, Type VII C	
							3	12	18	3	12	9	9	6		3	3		18	6			6	3		12	6			625	01500	129	Each	Cable Splicing Kit	
																	1		2							3	2			625	13000	8	Each	Light Tower, BBBB80	
																	1													625	13200	1	Each	Light Tower, BBBB100	
						2	2	1		2	3	3	3	3		2	1		1	3	3		2	2		1				625	13400	34	Each	Light Tower, BBBBBB100	
								4	3	1						4	1						1	1						625	13404	15	Each	Light Tower, BBBBBB110	
								1		1													1							625	13406	3	Each	Light Tower, BBBBBB120	
																	1		2							2	2			625	15100	7	Each	Light Tower Foundation, 36" x 20' Deep	
						2	2	6	3	4	3	3	3	3		6	3		1	3	3		4	3						625	15200	52	Each	Light Tower Foundation, 36" x 25' Deep	
																										1				625	15700	1	Each	Light Tower Foundation, Misc.: Median Mounted, 36" X 25' Deep, As Per Plan	281
				1																										625	20000	1	Each	Portable Power Unit	
									1																					625	21200	1	Each	Light Tower Maintenance Platform, Type C	
								81																						625	22900	81	Lin. Ft.	No. 1/0 AWG 5000 Volt Distribution Cable	
								151	978		1071	804	1209	1140					540	303				1536		4302	1509			625	23200	13543	Lin. Ft.	No. 4 AWG 5000 Volt Distribution Cable	
								417	441										1290				81							625	23300	2229	Lin. Ft.	No. 2 AWG 5000 Volt Distribution Cable	
								443																						625	24314	443	Lin. Ft.	1 1/2" Duct Cable with Three No. 1/0 AWG 5000 Volts Cables	
								1176	945	955	1133	1110	1087	335		1560	2054		650		957		1275	916		595	410			625	24320	15158	Lin. Ft.	1 1/2" Duct Cable with Three No. 4 AWG 5000 Volt Cables	
						650	980	679	1258	495				330		995	978		1959	1445			499							625	24330	10268	Lin. Ft.	1 1/2" Duct Cable with Three No. 2 AWG 5000 Volt Cables	
									21		268	80	203	355					210				17				31			625	25400	1185	Lin. Ft.	Conduit, 2", 713.04	
								88	359		80	117	126							180			78	74		10				625	25500	1112	Lin. Ft.	Conduit, 3", 713.04	
								142	86			41	41			255	35			41			62	103		171	144			625	25900	1121	Lin. Ft.	Conduit, Jacked or Drilled Under Pavement, 3"	
																			510											625	25911	510	Lin. Ft.	Conduit Cleaned and Cables Removed, As Per Plan	271 & 284
						12	12	12		18	18	18	18	18		18	10		14	18	18					18	8			625	26260	230	Each	Luminaire,*Asymmetric, 400 Watt High Pressure Sodium, 713.21, 480 Volt	
								24	18	6						18	10						24	18						625	26260	118	Each	Luminaire,*Symmetric, 400 Watt High Pressure Sodium, 713.21, 480 Volt	
								16																						625	27500	16	Each	Luminaire, Underpass, High Pressure Sodium, 713.13	
						635	950	2210	2477	1410	1157	1267	1213	640		2240	2921		2619	1450	937		1674	898		394	277			625	29002	25369	Lin. Ft.	Trench, 24" Deep	
											1			1																625	29920	2	Each	Structure Junction Box	
							1	1	5	1	4	3	3	3		1	1		3	3	1		2	1						625	30700	33	Each	Pull Box, 713.08, 18"	
																			1											625	30706	1	Each	Pull Box, 713.08, 24"	
																								2						625	31501	2	Each	Median Pull Box, Type IV, As Per Plan	283
																										3	2			625	31600	5	Each	Pull Box, Misc.: Cleaned and Cables Removed	
						4	4	12	7	8	6	6	6	6		12	8		6	6	6		8	8		7	4			625	32000	124	Each	Ground Rod	
								1			1		1	1																625	33000	4	Each	Structure Grounding System	
									1			1	1						3				1	1		1				625	34001	9	Each	Power Service, As Per Plan	256
								1																						625	37101	1	Each	Service to Underpass Lighting, As Per Plan	256
																														625	38000	Lump	Lump	High Voltage Test	
								1																						625	98000	1	Each	Lighting, Misc.: Modify Existing Control Center, As Per Plan	284

PLOTTED BY: fkonopka
PLOTTED FROM: Users\Reforsber\pid08459\dgn\B3071tgsi.dgn 307LTGSI.DGN
PLOT SUBMITTED: 07-AUG-1998 08:10

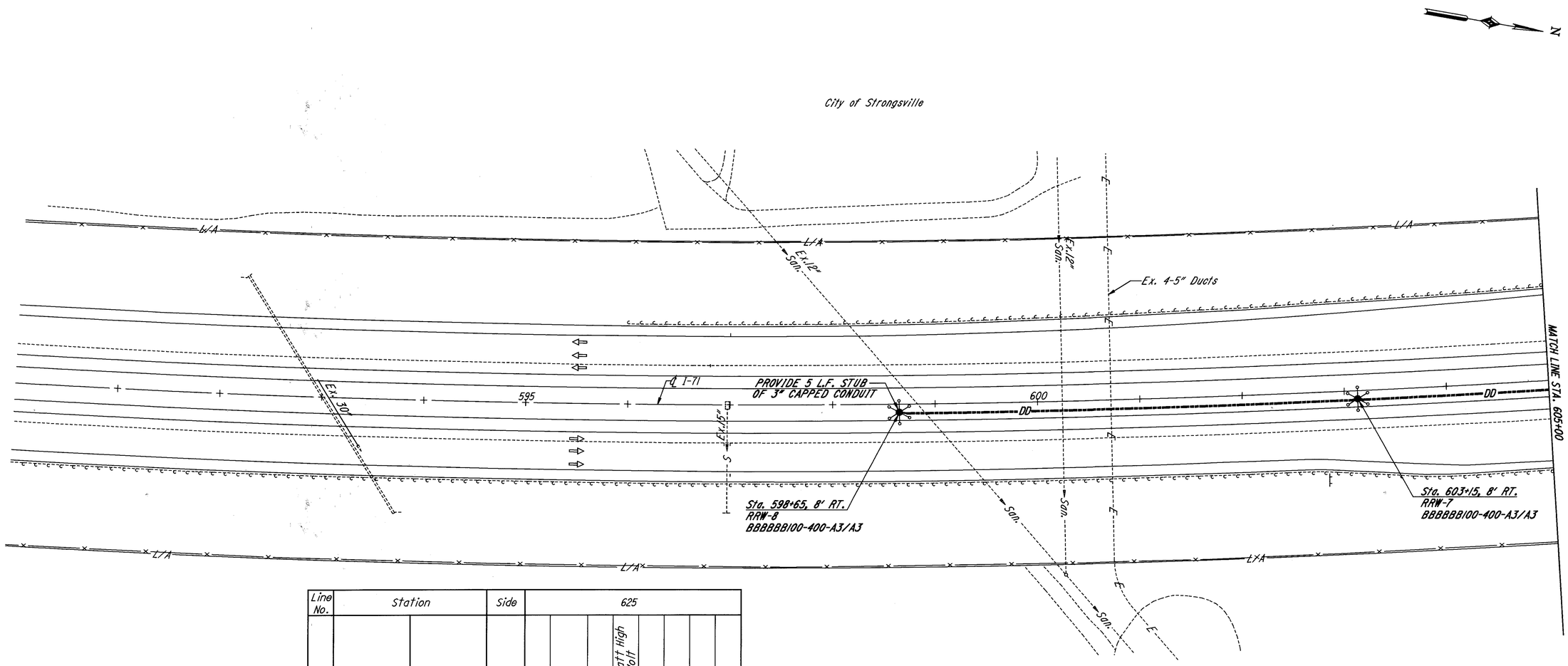

Line No.	Station From	Station To	Side	Light Tower, BBBBBB100 (625) Each	Light Tower Foundation, 36" x 25' Deep. Each	1 1/2" Duct Cable with 3-#2 AWG 5000V Cables L.F.	Luminaire, Asymmetric, 400 Watt High Pressure Sodium, 713.21, 480 Volt Each	Trench, 24" Deep L.F.	Ground Rod Each		
1	598+65	603+15	MED	1	1	460	6	450	2		
2	603+15	605+00	MED	1	1	190	6	185	2		
Totals				2	2	650	12	635	4		

NOTE:

1. For Lighting Legend See Sheet 254
2. For Median Tower Light Foundation See Sheet HL-20.21

4. All circuits shall be 3 wire, 480 volt, single phase.

50 0 50 100
SCALE IN FEET

LIGHTING PLAN STA. 590+00 TO STA. 605+00

PLOTTED BY: jgrmovse
PLOTTED FROM: Users\beforsber\pid08459\307lp01.dgn
307LP01.DGN
PLOT SUBMITTED: 24-JUL-1998 15:11

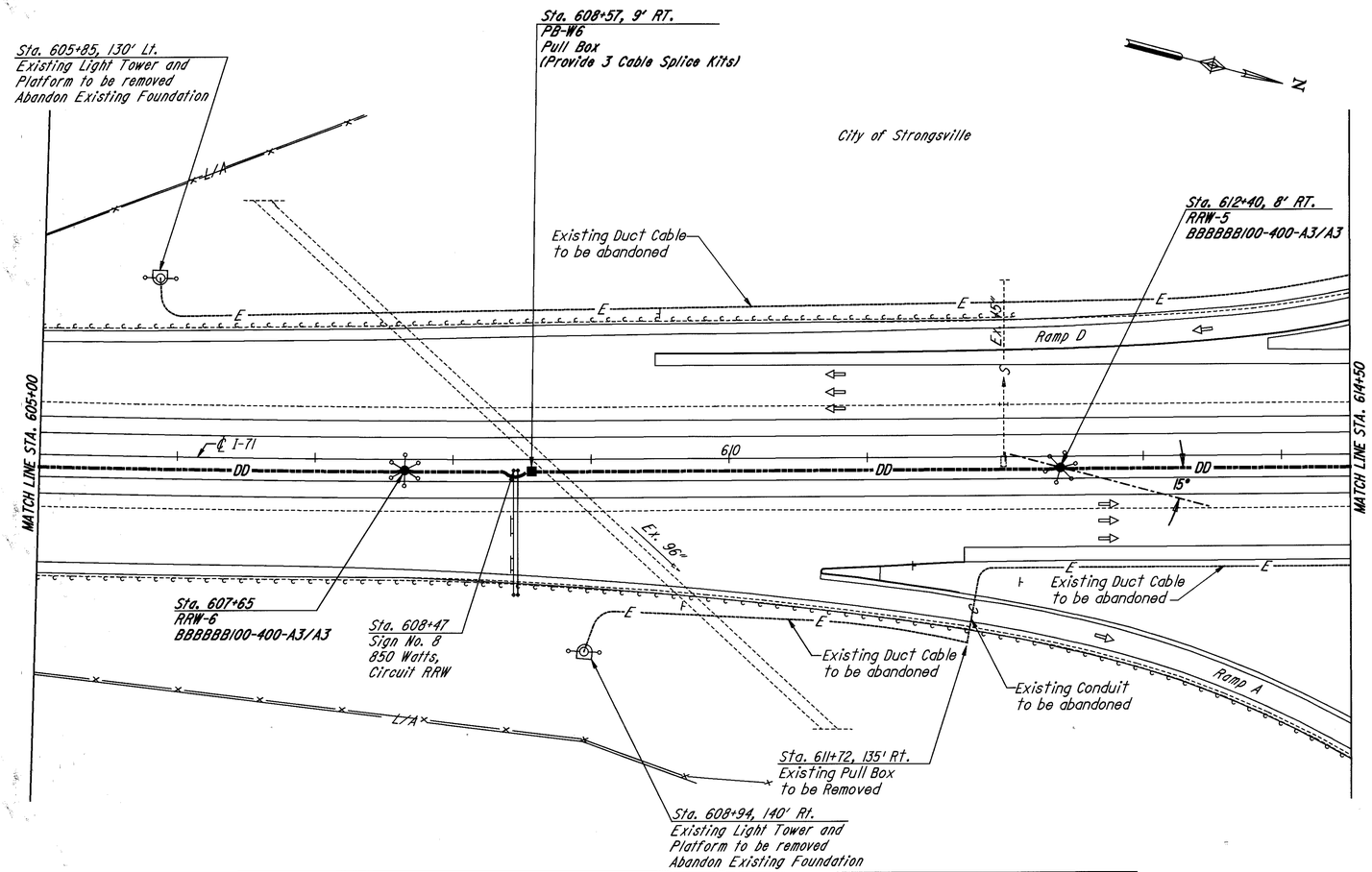

Line No.	Station From	Station To	Side	202 Pull Box Removed, As Per Plan (Each)	202 Removal Miscellaneous: Light Tower Luminaire Assembly Removed For Storage, As Per Plan (Each)	202 Light Tower Removed (Each)	202 Removal Miscellaneous: Light Tower Maintenance Platform Removed (Each)	625 Cable Splicing Kit (Each)	625 Light Tower, BBBBBB100 (Each)	625 Light Tower Foundation, 36" x 25' Deep (Each)	625 No. 2 AWG 5000 Volt 1 1/2" Duct Cable With 3 Cables (L.F.)	625 Trench, 24" Deep (L.F.)	625 Luminaire Asymmetric, 400 Watt High Pressure Sodium, 713.21, 480 Volt (Each)	625 Pull Box, 713.08, 18" (Each)	625 Ground Rod (Each)
1	605+00	607+65	MED								270	265			
2	607+65	608+57	MED						1	1	102	92	6		2
3	608+57	612+40	MED					3			393	383		1	
4	612+40	614+50	MED						1	1	215	210	6		2
5	605+85		LT.		1	1	1								
6	608+94		RT.		1	1	1								
7	611+72		RT.	1											
Totals				1	2	2	2	3	2	2	980	950	12	1	4

NOTE:

1. For Lighting Legend See Sheet 254
2. For Median Tower Light Foundation See HL-20.20
3. All existing electrical wiring is to be abandoned unless otherwise noted.
5. All circuits shall be 3 wire, 480 volt, single phase.

50 0 50 100
SCALE IN FEET

LIGHTING PLAN STA. 605+00 TO STA. 614+50

PLOTTED BY: jgrmovse
PLOTTED FROM: pw:\\Users\Beforsber\pid08459\Bdgn\B307lp02.dgn
307LP02.DGN
PLOT SUBMITTED: 24-JUL-1998 15:11

CALC. BY		CUY-71-0.00	OHIO
DATE			FHWA REGION 5
CHKD. BY			
DATE			FEDERAL PROJECT

260
361

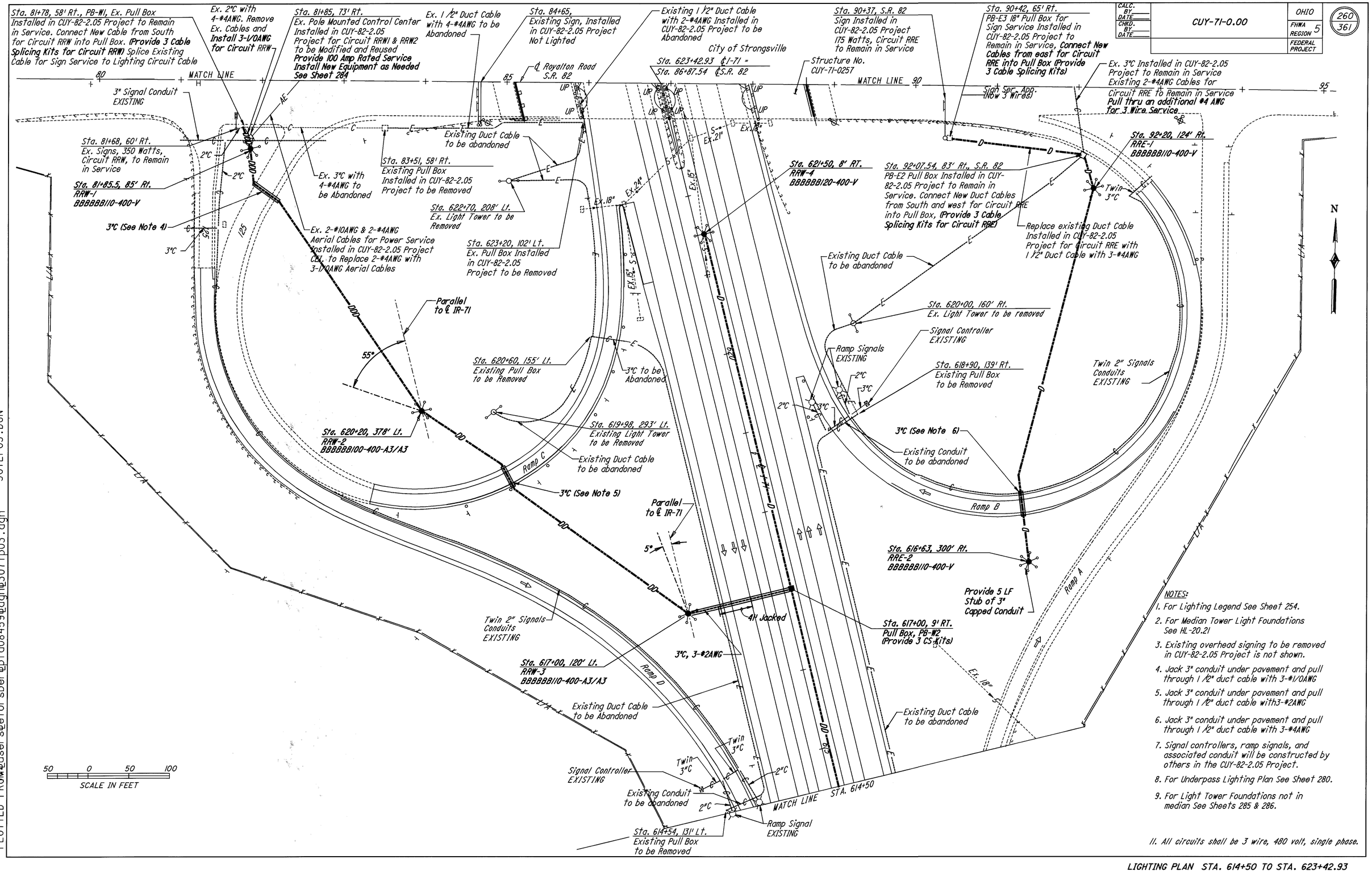

NOTES:

1. For Lighting Legend See Sheet 254.
2. For Median Tower Light Foundations See HL-20.21
3. Existing overhead signing to be removed in CUY-82-2.05 Project is not shown.
4. Jack 3" conduit under pavement and pull through 1 1/2" duct cable with 3-#1/0AWG
5. Jack 3" conduit under pavement and pull through 1 1/2" duct cable with3-#2AWG
6. Jack 3" conduit under pavement and pull through 1 1/2" duct cable with 3-#4AWG
7. Signal controllers, ramp signals, and associated conduit will be constructed by others in the CUY-82-2.05 Project.
8. For Underpass Lighting Plan See Sheet 280.
9. For Light Tower Foundations not in median See Sheets 285 & 286.

11. All circuits shall be 3 wire, 480 volt, single phase.

LIGHTING PLAN STA. 614+50 TO STA. 623+42.93

PLOTTED BY:jgrmovse
PLOTTED FROM:c:\pwworking\usersbeforsber\pid08459\d0307lp03.dgn
307LP03.DGN
PLOT SUBMITTED:24-JUL-1998 15:11

CALC. BY	CUY-71-0.00	OHIO
CHKD. BY		FHWA REGION 5
DATE		FEDERAL PROJECT

261
361

QUANTITIES FOR STA. 614+50 TO STA. 623+42.93

Line No.	Station From	Station To	Side	202 Pull Box Removed, As Per Plan (Each)	202 Light Tower Foundation Removed, As Per Plan (Each)	202 Removal Miscellaneous Light Tower Luminaire Assembly Removed for Storage, As Per Plan (Each)	202 Light Tower Removed (Each)	625 Cable Splicing Kit (Each)	625 Light Tower, BBBBBBI00 (Each)	625 Light Tower, BBBBBBI10 (Each)	625 Light Tower, BBBBBBI20 (Each)	625 Luminaire Asymmetric, 400 Watt High Pressure Sodium, 713.21, 480 Volt (Each)	625 Light Tower Foundation, 36" x 25' Deep (Each)	625 No. 1/0 AWG 5000 Volt Distribution Cable (L.F.)	625 No. 2 AWG 5000 Volt Distribution Cable (L.F.)	625 No. 4 AWG 5000 Volt Distribution Cable (L.F.)	625 Conduit, 3", 713.04 (L.F.)	625 Conduit, Jacked or Drilled Under Pavement, 3" (L.F.)	625 Luminaire, Underpass, High Pressure Sodium, 713.13 (Each)	625 Luminaire Symmetric, 400 Watt High Pressure Sodium, 713.21, 480 Volt (Each)	625 Trench, 24" Deep (L.F.)	625 Pull Box, 713.08, 18" (Each)	625 Ground Rod (Each)	625 1 1/2" Duct Cable with three No. 1/0 AWG 5000 Volt Cables (L.F.)	625 1 1/2" Duct Cable with three No. 2 AWG 5000 Volt Cables (L.F.)	625 1 1/2" Duct Cable with three No. 4 AWG 5000 Volt Cables (L.F.)	625 Lighting, Misc Modify Existing Control Center, As Per Plan (Each)	625 Service to Underpass Lighting, As Per Plan (Each)	625 Structure Grounding System (Each)	202 Disconnect Existing Circuit (Each)
1	614+50	617+00	MED																		250				255						
2	617+00	621+50	MED									1		1						6	450		2			460					
3	617+00	617+00	MED					3							417		88	41			88	1									
4	617+00	620+20	LT.							1			6	1				34			380		2		424						
5	620+20	81+85.5 S.R.82	LT./RT.						1				6	1				36			359		2	405							
6	81+85.5 S.R. 82	81+78 S.R.82	RT.							1				1						6	28		2	38							
7	81+78 S.R.82	81+85 S.R.82	RT.					3								81												1			1
8	616+63	92+20 S.R.82	RT./RT.							1				1				31		6	441		2			482					
9	92+20 S.R.82	92+07.54 S.R.82	RT.							1				1						6	43		2			53					
10	Structure No. CUY-71-0257		-																16									1	1		
11	614+54		LT.	1																											
12	620+60		LT.	1																											
13	619+98		LT.		1	1	1																								
14	622+70		LT.		1	1	1																								
15	618+90		RT.	1																											
16	620+00		RT.		1	1	1																								
17	83+51 S.R.82		RT.	1																											
18	623+20		LT.	1																											
19	92+07.54	91+87.54	Rt./Lt.					3								151															
20	90+42	92+07.54	Rt./Rt.					3													171					181					1
Totals				5	3	3	3	12	1	4	1	12	6	81	417	151	88	142	16	24	2210	1	12	443	679	1176	1	1	1	2

QUANTITIES FOR STA. 623+42.93 TO STA. 633+00

Line No.	Station From	Station To	Side	202 Pull Box Removed, As Per Plan (Each)	202 Power Service Removed, As Per Plan (Each)	625 Cable Splicing kit (Each)	625 Light Tower, BBBBBBI10 (Each)	625 Light Tower Maintenance Platform Type C (Each)	625 Light Tower Foundation, 36" x 25' Deep (Each)	625 No. 2 AWG 5000 Volt Distribution Cable (L.F.)	625 No. 4 AWG 5000 Volt Distribution Cable (L.F.)	625 Conduit, 2", 713.04 (L.F.)	625 Conduit, 3", 713.04 (L.F.)	625 Conduit, Jacked or Drilled Under Pavement, 3" (L.F.)	625 Luminaire Symmetric, 400 Watt High Pressure Sodium, 713.21, 480 Volt (Each)	625 Trench, 24" Deep (L.F.)	625 Pull Box, 713.08, 18" (Each)		625 Ground Rod (Each)	625 1 1/2" Duct Cable with three No. 2 AWG 5000 Volt Cables (L.F.)	625 1 1/2" Duct Cable with three No. 4 AWG 5000 Volt Cables (L.F.)	625 Power Service, As Per Plan (Each)	202 Disconnect Existing Circuit (L.F.)
1	624+20	625+20	LT.			6										100	1				120		1
2	625+20	627+73	LT.			3										267	1				277		
3	627+73	631+35	LT.				1		1						6	366			2		376		
4	631+35	631+35	LT.			3							23			23	1						
5	631+35	633+00	LT.													167					172		
6	91+96 S.R.82	91+87.54 S.R.82	LT.							93	93	21				21			1			1	
7	91+87.54 S.R.82	625+20	LT./RT.			3								31		413				454			1
8	625+20	630+14	RT.				1		1						6	498			2	508			
9	630+14	630+14	RT./MED				1	1	1	348			106		6	106			2				
10	625+20	625+20	RT./LT.								885		230	55		230	1						
11	626+20		LT.	1																			
12	629+00		LT.	1																			
13	631+70		LT.	1																			1
14	91+87.54 S.R.82		LT.		1																		
15	625+24		RT.	1																			
16	630+14	633+00	MED			3										286	1			296			
Totals				4	1	18	3	1	3	441	978	21	359	86	18	2477	5		7	1258	945	1	3

LIGHTING QUANTITIES STA. 614+50 TO STA. 633+00

PLOTTED BY: lminceck
PLOTTED: 05-AUG-1998 12:32
PLOT SUBMITTED:05-AUG-1998 12:32
307LPQDD.DGN
pid08459b.dgn 3071pdd.dgn

CALC. BY DATE	CUY-71-0.00	OHIO	262/361
CHKD. BY DATE		FHWA REGION 5	
		FEDERAL PROJECT	

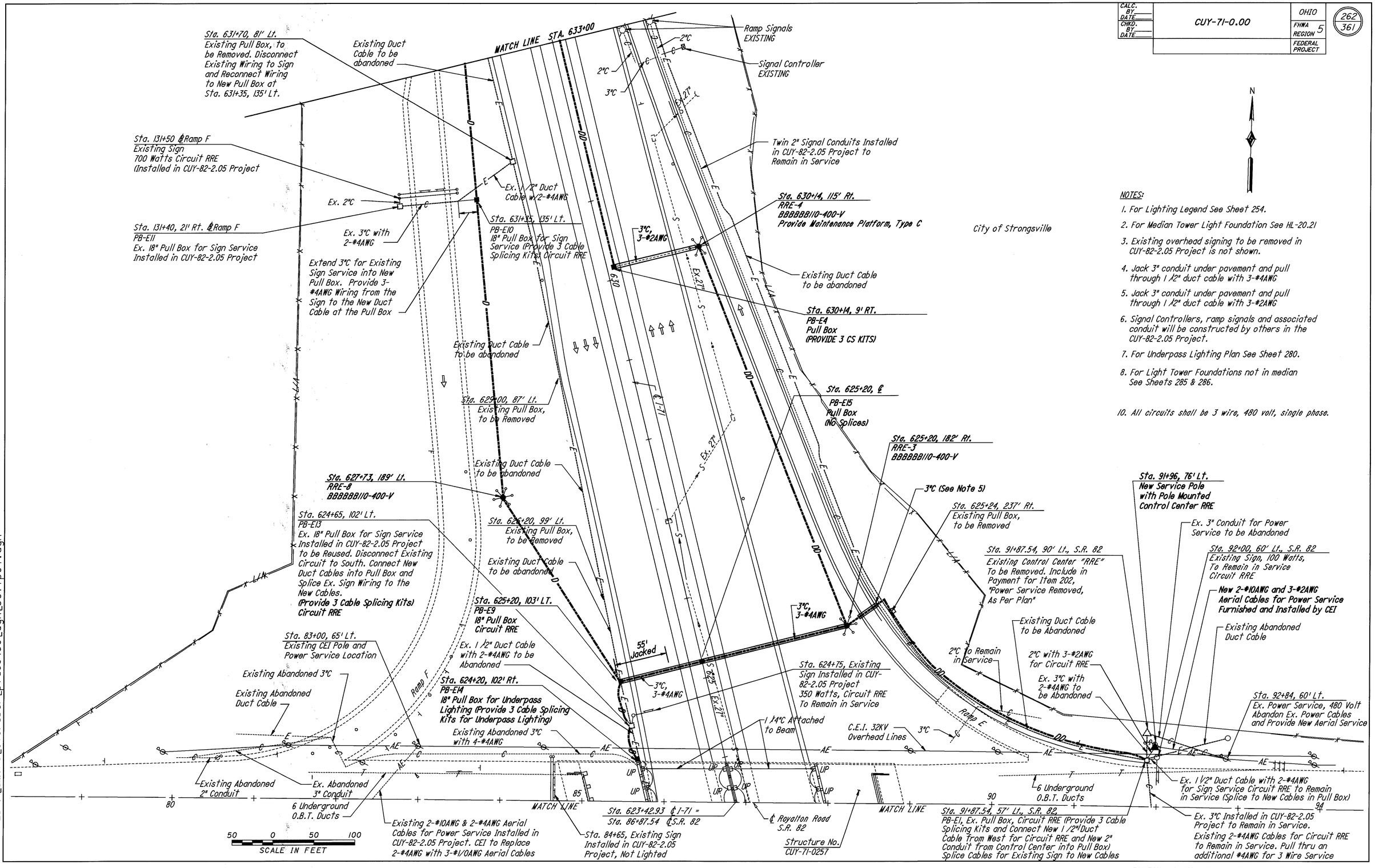

N

NOTES:

1. For Lighting Legend See Sheet 254.
2. For Median Tower Light Foundation See HL-20.21
3. Existing overhead signing to be removed in CUY-82-2.05 Project is not shown.
4. Jack 3" conduit under pavement and pull through 1 1/2" duct cable with 3-#4AWG
5. Jack 3" conduit under pavement and pull through 1 1/2" duct cable with 3-#2AWG
6. Signal Controllers, ramp signals and associated conduit will be constructed by others in the CUY-82-2.05 Project.
7. For Underpass Lighting Plan See Sheet 280.
8. For Light Tower Foundations not in median See Sheets 285 & 286.

10. All circuits shall be 3 wire, 480 volt, single phase.

LIGHTING PLAN STA. 623+42.93 TO STA. 633+00

PLOTTED BY: jgrmovse
PLOTTED: Friday, July 24, 1998 15:11
PLOT SUBMITTED: 24-JUL-1998 15:11
307LP04.DGN

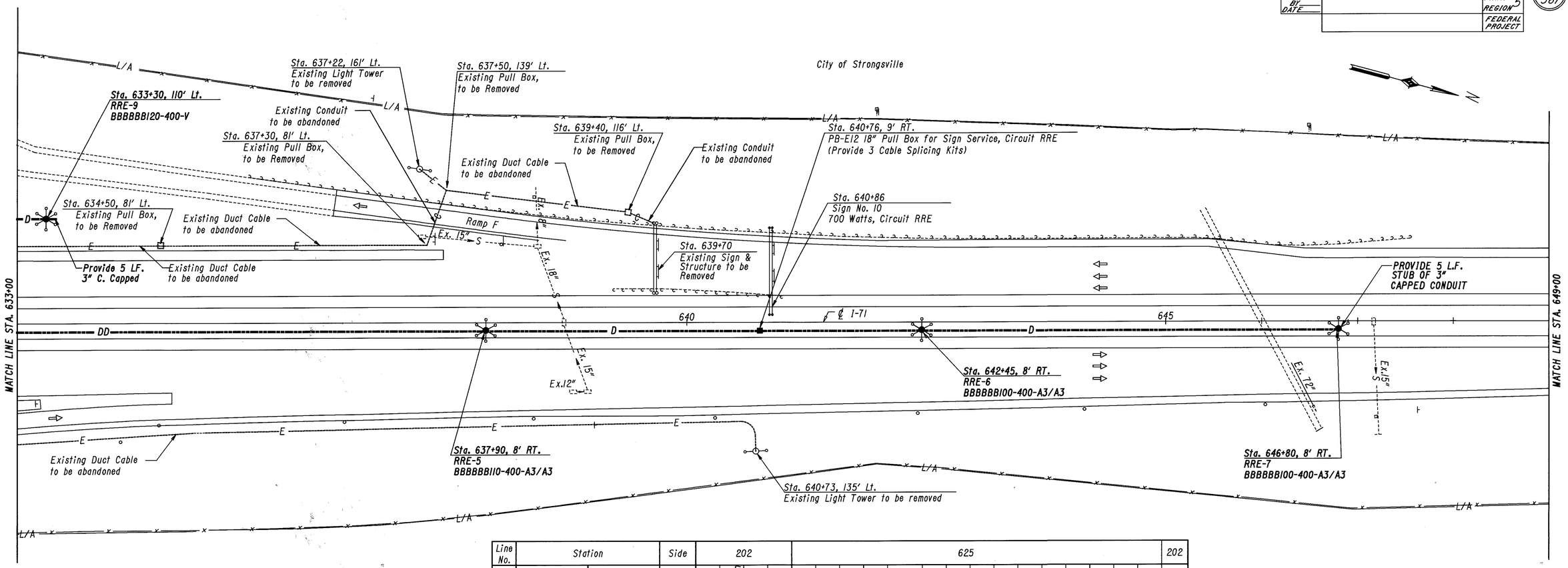

Line No.	Station From	Station To	Side	202 Pull Box Removed, As Per Plan (Each)	202 Removal Miscellaneous Light Tower Luminaire Assembly Removed For Storage, As Per Plan (Each)	202 Light Tower Removed (Each)	202 Light Tower Foundation Removed, As Per Plan (Each)	625 Cable Splicing Kit (Each)	625 Light Tower, BBBBBBI00 (Each)	625 Light Tower, BBBBBBII0 (Each)	625 Light Tower, BBBBBBI20 (Each)	625 Luminaire Asymmetric, 400 Watt High Pressure Sodium, 713.21, 480 Volt (Each)	625 Light Tower Foundation, 36" x 25' Deep (Each)	625 1 1/2" Duct Cable with Three No. 2 AWG 5000 Volt Cable (L.F.)	625	625	625 Luminaire Symmetric, 400 Watt High Pressure Sodium, 713.21, 480 Volt (Each)	625 Trench, 24" Deep (L.F.)	625 Pull Box, 713.08, 18" (Each)	625	625 Ground Rod (Each)	625 1 1/2" Duct Cable with three No. 4 AWG 5000 Volt Cables (L.F.)	202 Disconnect Existing Circuit (Each)
1	633+00	637+90	MED											495				490					
2	637+90	640+76	MED							1		6	1					286			2	296	
3	640+76	642+45	MED					3										169	1			179	
4	642+45	646+80	MED						2			12	2					435			4	445	
5	633+00	633+30	LT.								1		1				6	30			2	35	
6																							
7	634+50		LT.	1																			
8	637+30		LT.	1																			
9	637+50		LT.	1																			
10	637+22		LT.		1	1	1																
11	639+40		LT.	1																			1
12	640+73		RT.		1	1	1																
Totals				4	2	2	2	3	2	1	1	18	4	495			6	1410	1		8	955	1

NOTES:

1. For Lighting Legend See Sheet 254.
2. For Median Tower Light Foundation See HL-20.21
3. Jack 3" conduit under pavement and pull through 1 1/2" duct cable with 3-#4AWG
4. For Light Tower Foundations not in Median See Sheets 285 & 286.
6. All circuits shall be 3 wire, 480 volt, single phase.

50 0 50 100
SCALE IN FEET

LIGHTING PLAN STA. 633+00 TO STA. 649+00

PLOTTED BY: lmincek
PLOTTED: FROM: Powersbefor sberBpid08459Bdgn B307lp05.dgn
307LP05.DGN
PLOT SUBMITTED:05-AUG-1998 12:32

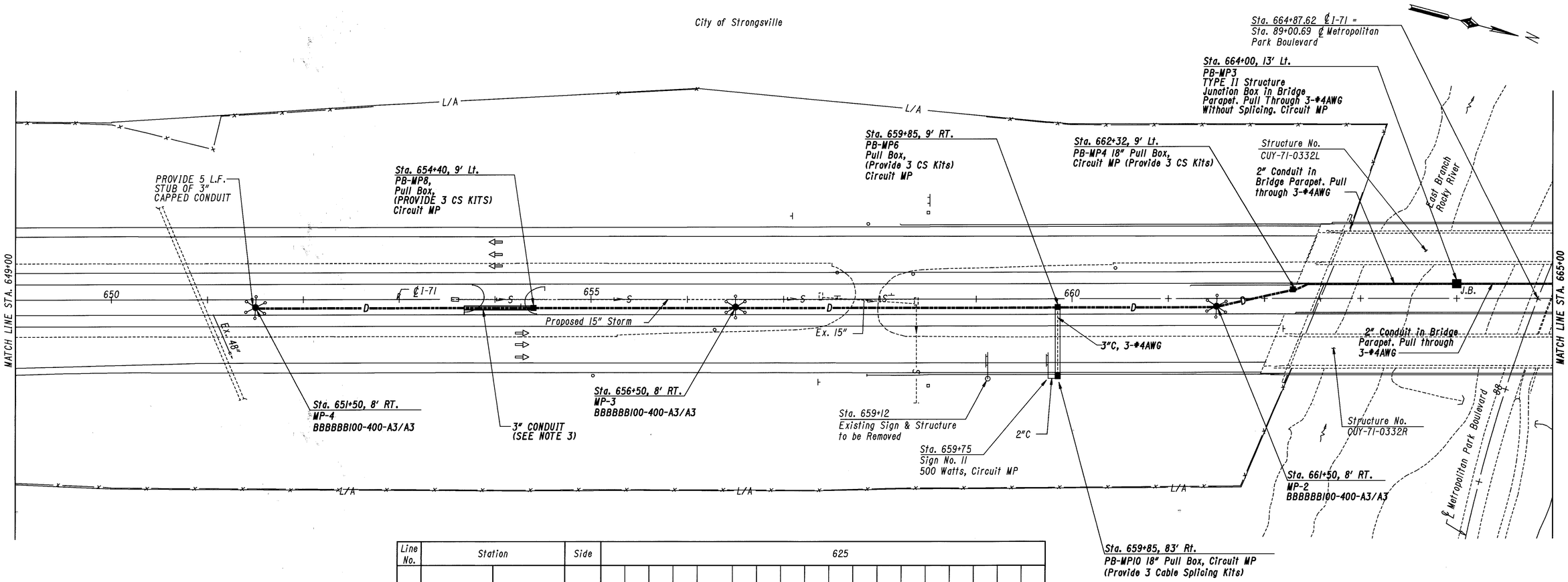

Line No.	Station From	Station To	Side	625 Cable Splicing Kit Each	Light Tower, BBBBBBB100 Each		1½" Duct Cable with Three No. 4 AWG 5000 Volt Cables L.F.	Light Tower Foundation, 36" x 25' Deep Each	No. 4 AWG 5000 Volt Distribution Cable L.F.	Conduit, 2", 713.04 L.F.	Conduit, 3", 713.04 L.F.		Luminaire Asymmetric, 400 Watt High Pressure Sodium, 713.21, 480 Volt Each	Trench, 24" Deep L.F.	Pull Box, 713.08, 18" Each		Ground Rod Each	Str. Junction Box Each	Structure Grounding System Each	
1	651+50	654+40	MED		1		300	1			80		6	290			2			
2	654+40	656+50	MED	3			220							210	1					
3	656+50	659+85	MED		1		345	1					6	385			2			
4	659+85	659+85	RT/MED	3					252					74	1					
5	659+85	661+50	MED	3			175							165	1					
6	661+50	662+32	MED		1		93	1					6	83			2			
7	662+32	665+00	MED	3					819	268					1			1		
8	Structure No. CUY-71-0332L		Lt.																1	
Totals				12	3		1133	3	1071	268	80		18	1157	4		6	1	1	

NOTES:

1. For Lighting Legend See Sheet 254.
2. For Median Tower Light Foundation See HL-20.21
3. 3" Conduit under pavement, Pull thru 1 1/2" Duct Cable with 3-#4 AWG.
5. All circuits shall be 3 wire, 480 volt, single phase.

50 0 50 100
SCALE IN FEET

LIGHTING PLAN STA. 649+00 TO STA. 665+00

PLOTTED BY:jgrmovse
PLOTTED:Fri Jul 24 10:15:15 1998
PLOT SUBMITTED:24-JUL-1998 15:11
307LP06.DGN

CALC. BY	CUY-71-0.00	OHIO
DATE		FHWA REGION 5
CHKD. BY		
DATE		FEDERAL PROJECT

265
361

City of Strongsville

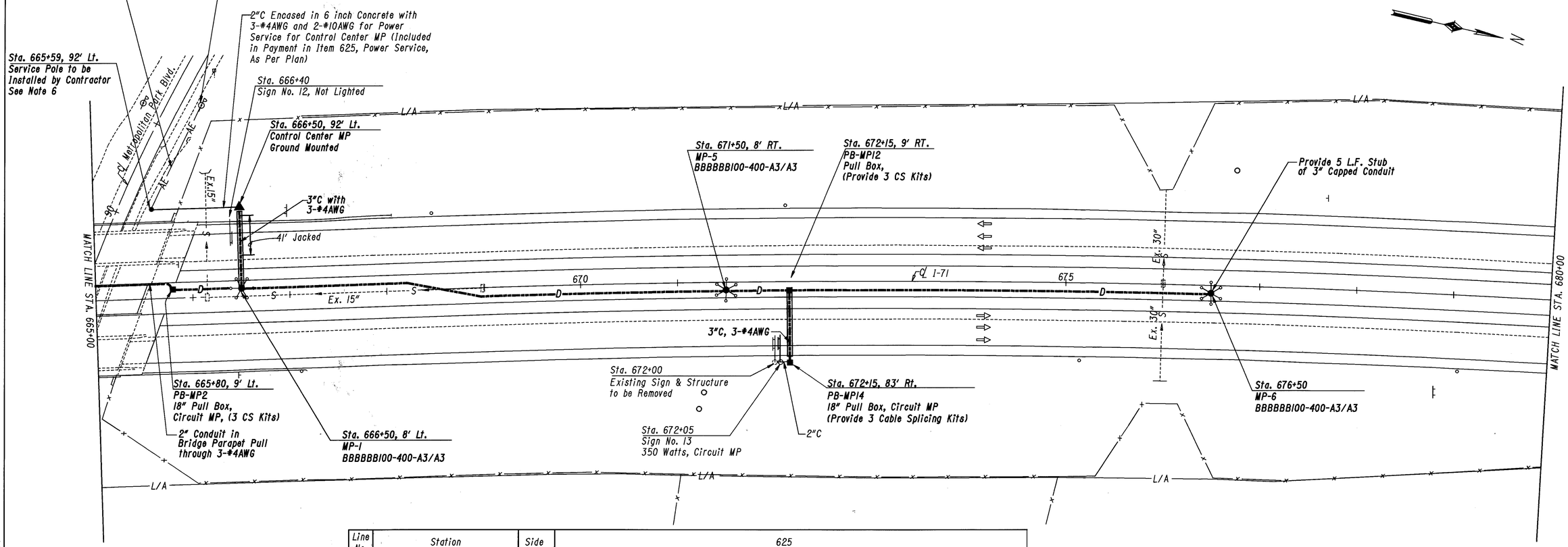

Line No.	Station From	Station To	Side	625 Cable Splicing Kit (Each)	Light Tower, BBBBBBI00 (Each)	1 1/2" Duct Cable with Three No. 4 AWG 5000 Volt Cables (L.F.)	Light Tower Foundation, 36" x 25' Deep (Each)	No. 4 AWG 5000 Volt Distribution Cable (L.F.)	Conduit, 2", 713.04 (L.F.)	Conduit, 3", 713.04 (L.F.)	Conduit, Jacked or Drilled Under Pavement, 3" (L.F.)	Luminaire Asymmetric, 400 Watt High Pressure Sodium, 713.21, 480 Volt (Each)	Trench, 24" Deep (L.F.)	Pull Box, 713.08, 18" (Each)			Ground Rod (Each)	Power Service, As Per Plan (Each)		
1	665+00	665+80	MED					270	80				80							
2	666+50	666+50	LT/MED					282		43	41		43							
3	665+59	666+50	LT.															1		
4	665+80	666+50	MED	3		80							70	1						
5	666+50	671+50	MED		1	510	1					6	500				2			
6	671+50	672+15	MED		1	75	1					6	65				2			
7	672+15	672+15	RT/MED	3				252		74			74	1						
8	672+15	676+50	MED	3	1	445	1					6	435	1			2			
Totals				9	3	1110	3	804	80	117	41	18	1267	3			6	1		

50 0 50 100
SCALE IN FEET

NOTES:

1. For Lighting Legend See Sheet 254.
2. For Median Tower Light Foundation See Sheet HL-20.21

4. The Contractor shall ground all median pull boxes.
5. All circuits shall be 3 wire, 480 volt, single phase.
6. Contractor to provide service pole, conduit and weatherhead, ground rod, 3-#4AWG cables and 2-#10AWG cables for by-pass. (Contractor to contact CEI prior to installing service pole).

LIGHTING PLAN STA. 665+00 TO STA. 680+00

PLOTTED BY: jgrmovse
PLOTTED: 24-JUL-1998 15:11
PLOT SUBMITTED: 24-JUL-1998 15:11
307LP07.DGN

CALC. BY	CUY-71-0.00	OHIO
DATE		FHWA REGION 5
CHKD. BY		
DATE		FEDERAL PROJECT

266
361

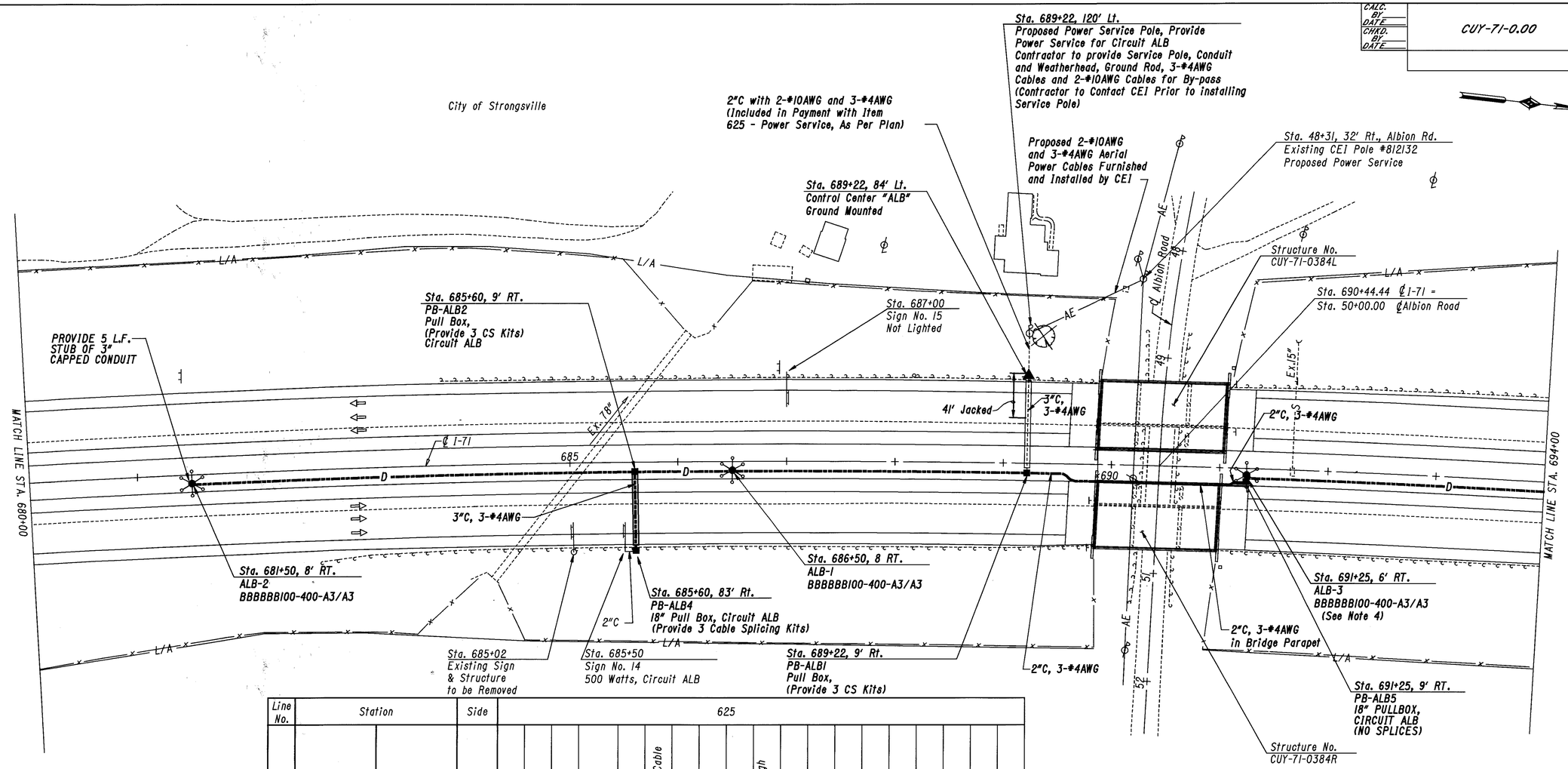

Line No.	Station From	Station To	Side	625	Cable Splicing Kit	Light Tower, BBBBBBI00	1 1/2" Duct Cable with Three No. 4 AWG 5000 Volt Cables	Light Tower Foundation, 36" x 25' Deep	No. 4 AWG 5000 Volt Distribution Cable	Conduit, 2", 713.04	Conduit, 3", 713.04	Conduit, Jacked or Drilled Under Pavement, 3"	Luminaire Asymmetric, 400 Watt High Pressure Sodium, 713.21, 480 Volt	Trench, 24" Deep	Pull Box, 713.08, 18"		Ground Rod	Power Service, As Per Plan	Structure Grounding System			
					Each	Each	L.F.	Each	L.F.	L.F.	L.F.	L.F.	Each	L.F.	Each		Each	Each	Each			
1	681+50	685+60	MED			1	420	1					6	410			2					
2	685+60	685+60	RT./MED		3				252		74			74	1							
3	685+60	686+50	MED		3		100							90								
4	686+50	689+22	MED			1	282	1					6	272			2					
5	689+22	691+25	MED		3				648	203				40	2							
6	691+25	694+00	MED			1	285	1					6	275			2					
7	689+22	689+22	LT./MED						309		52	41		52								
8	689+22	689+22	LT.															1				
9	Structure No. CUY-71-0384R		RT.																1			
Totals					9	3	1087	3	1209	203	126	41	18	1213	3		6	1	1			

NOTE:

1. For Lighting Legend See Sheet 254
2. For Tower Light Foundation See Sheet HL-20.21
3. The Contractor shall ground all median pull boxes.
4. Connect 3" Conduit from tower to pullbox.
5. All circuits shall be 3 wire, 480 volt, single phase.

50 0 50 100
SCALE IN FEET

LIGHTING PLAN STA. 680+00 TO STA. 694+00

PLOTTED BY:jgrmovse
PLOTTED:Fri Jul 24 15:11:08 1998
PLOTTED FROM:C:\users\temp\pid08459.dgn
PLOT SUBMITTED:24-JUL-1998 15:11
307LP08.DGN

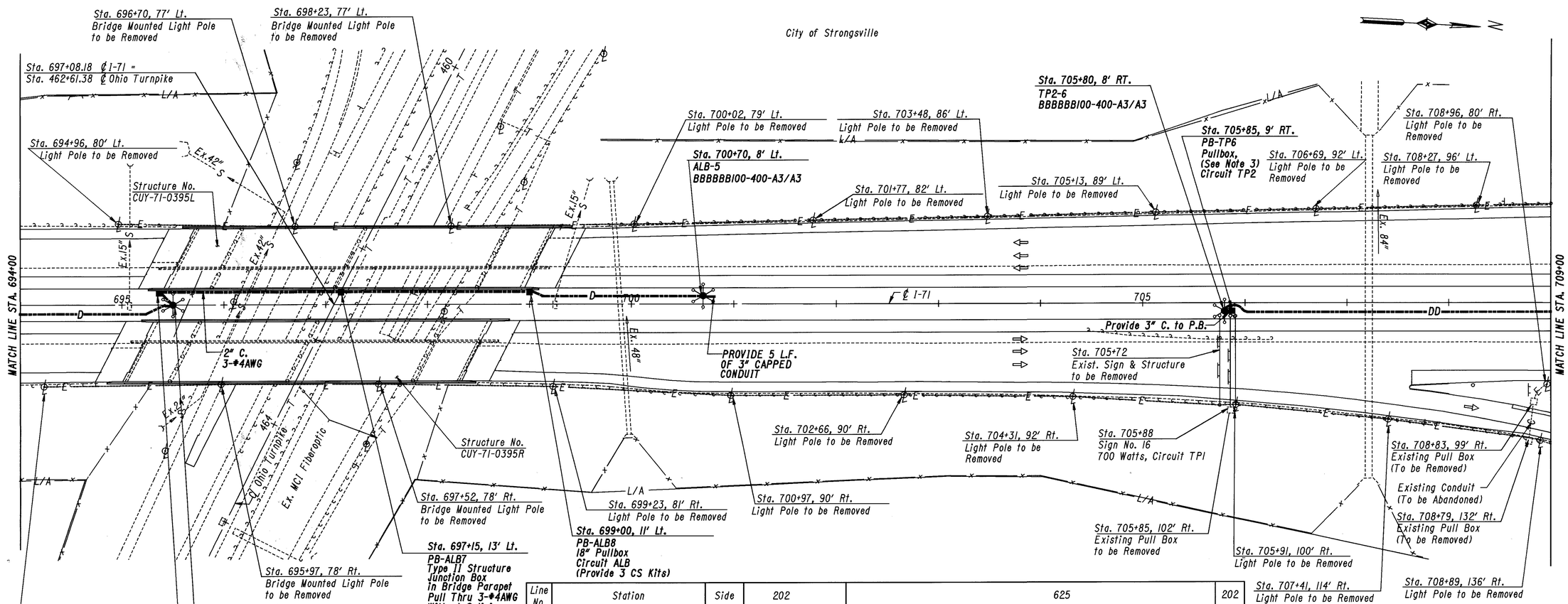

Line No.	Station From	Station To	Side	202 Pull Box Removed, As Per Plan	202 Light Pole Removed, As Per Plan	202 Light Pole Foundation Removed, As Per Plan	202 Luminaire Removed, As Per Plan	625 Cable Splicing Kit	625 Light Tower, BBBBBBI00	625	625 Structure Junction Box	625 Light Tower Foundation, 36" x 25" Deep	625 1 1/2" Duct Cable with Three No. 2 AWG 5000 Volt Cables	625 No. 4 AWG 5000 Volt Distribution Cable	625 Conduit, 2", 713.04	625 Luminaire Aymmetric, 400 Watt High Pressure Sodium, 713.21, 480 Volt	625 Trench, 24" Deep	625 Pull Box, 713.08, 18"	625 Structure Grounding System	625 Ground Rod	625 1 1/2" Duct Cable with three No. 4 AWG 5000 Volt Cables	202 Disconnect Existing Circuit
				Each	Each	Each	Each	Each	Each		Each	Each	L.F.	L.F.	L.F.	Each	L.F.	Each	Each	Each	L.F.	Each
1	694+00	695+50	MED														150				155	
2	695+50	695+45	MED						1			1		60		6				2		
3	695+45	699+00	MED								1			1080	355			1				
4	699+00	700+70	MED					3	1			1				6	170	1		2	180	
5	705+85		RT.	1																		1
6	708+79		RT.	1																		
7	708+83		RT.	1																		
8	694+00	709+00	LT.& RT		20	16	20															
9	705+80	709+00	MED					3	1			1	330			6	320	1		2		
10	Structure No. CUY-71-0395L		LT.																1			
Totals				3	20	16	20	6	3		1	3	330	1140	355	18	640	3	1	6	335	1

NOTES:

1. For Lighting Legend See Sheet 254.
2. For Tower Light Foundation See HL-20.21
3. Connect Sign Service Thru Pullbox (No Splices) to Light Tower
4. All existing electrical wiring is to be abandoned unless otherwise noted.
5. Connect 3" Conduit from Tower to Pullbox
6. All circuits shall be 3 wire, 480 volt, single phase.

LIGHTING PLAN STA. 694+00 TO STA. 709+00

PLOTTED BY: lmincek
PLOTTED: FROM: ersberg
PLOTTED: TO: ersberg
307LP09.DGN
PLOT SUBMITTED:05-AUG-1998 12:33

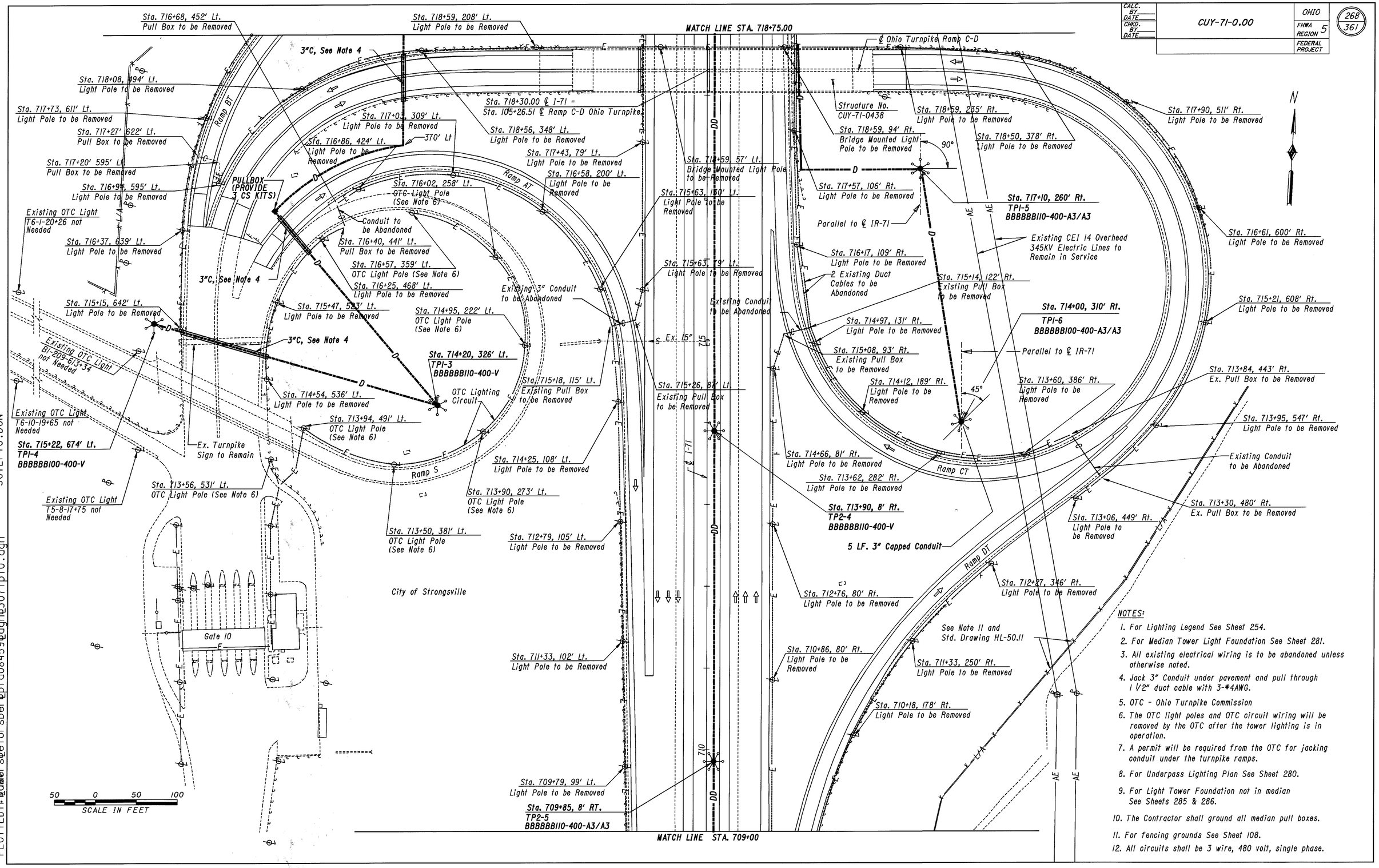

NOTES:

1. For Lighting Legend See Sheet 254.
2. For Median Tower Light Foundation See Sheet 281.
3. All existing electrical wiring is to be abandoned unless otherwise noted.
4. Jack 3" Conduit under pavement and pull through 1 1/2" duct cable with 3-#4AWG.
5. OTC - Ohio Turnpike Commission
6. The OTC light poles and OTC circuit wiring will be removed by the OTC after the tower lighting is in operation.
7. A permit will be required from the OTC for jacking conduit under the turnpike ramps.
8. For Underpass Lighting Plan See Sheet 280.
9. For Light Tower Foundation not in median See Sheets 285 & 286.
10. The Contractor shall ground all median pull boxes.
11. For fencing grounds See Sheet 108.
12. All circuits shall be 3 wire, 480 volt, single phase.

LIGHTING PLAN STA. 709+00 TO STA. 718+75

PLOTTED BY: jgrmoyse
PLOTTED: Friday, July 24, 1998 15:11
PLOT SUBMITTED: 24-JUL-1998 15:11
307LP10.DGN
307LP10.dgn B307lp10.dgn pid08459 forsber

QUANTITIES FOR STA. 709+00 TO STA. 718+75

Line No.	Station From	Station To	Side	202 Pull Box Removed, As Per Plan (Each)	202 Light Pole Removed, As Per Plan (Each)	202 Light Pole Foundation Removed, As Per Plan (Each)	202 Luminaire Removed, As Per Plan (Each)	625 Cable Splicing Kit (Each)	625 Light Tower, BBBBBB100 (Each)	625 Light Tower, BBBBBB110 (Each)			625 Light Tower Foundation, 36"x 25' Deep (Each)		625 Conduit, Jacked or Drilled Under Pavement, 3" (L.F.)	625 Luminaire Asymmetric, 400 Watt High Pressure Sodium, 713.21, 480 Volt (Each)	625 Luminaire Symmetric, 400 Watt High Pressure Sodium, 713.21, 480 Volt (Each)	625 Trench, 24" Deep (L.F.)	625 Pull Box, 713.08, 18" (Each)	625 1 1/2" Duct Cable with three No. 2 AWG 5000 Volt Cables (L.F.)	625 Ground Rod (Each)	625 1 1/2" Duct Cable with three No. 4 AWG 5000 Volt Cables (L.F.)		
1	709+00	709+85	MED															85		90				
2	709+85	713+90	MED							1			1			6		405		415	2			
3	713+90	718+75	MED							1			1				6	485		490	2			
4																								
5	714+00	717+10	RT.						1				1			6		313			2	323		
6	717+10	718+75	RT.							1			1			6		315			2	320		
7																								
8																								
9	715+22	714+20	LT.						1				1		128		6	235			2	313		
10	714+20	718+75	LT.					3		1			1		127		6	402	1		2	544		
11	713+30		RT.	1																				
12	713+84		RT.	1																				
13	715+08		RT.	1																				
14	715+14		RT.	1																				
15	715+18		LT.	1																				
16	715+26		LT.	1																				
17	716+40		LT.	1																				
18	716+68		LT.	1																				
19	717+20		LT.	1																				
20	717+27		LT.	1																				
21	709+00	718+75	LT.& RT.		41	39	39																	
Totals				10	41	39	39	3	2	4			6		255	18	18	2240	1	995	12	1560		

QUANTITIES FOR STA. 718+75 TO STA. 728+00

Line No.	Station From	Station To	Side	202 Pull Box Removed, As Per Plan (Each)	202 Light Pole Removed, As Per Plan (Each)	202 Light Pole Foundation Removed, As Per Plan (Each)	202 Luminaire Removed, As Per Plan (Each)	625 Cable Splicing Kit (Each)	625 Light Tower, BBBBBB110 (Each)	625 Light Tower, BBBBB0 (Each)	625 Light Tower, BBBB100 (Each)	625 Light Tower, BBBBBB100 (Each)	625 Light Tower Foundation, 36"x 25' Deep (Each)	625 Light Tower Foundation, 36" x 20' Deep (Each)	625 Luminaire Asymmetric, 400 Watt High Pressure Sodium, 713.21, 480 Volt (Each)	625 Conduit, Jacked or Drilled Under Pavement, 3" (L.F.)	625 Luminaire Symmetric, 400 Watt High Pressure Sodium, 713.21, 480 Volt (Each)	625 Trench, 24" Deep (L.F.)	625 Pull Box, 713.08, 18" (Each)	625 1 1/2" Duct Cable with three No. 2 AWG 5000 Volt Cables (L.F.)	625 Ground Rod (Each)	625 1 1/2" Duct Cable with three No. 4 AWG 5000 Volt Cables (L.F.)	202 Disconnect Existing Circuit (Each)
1	718+75	719+75	MED															100		105			
2	719+75	726+30	MED						1				1		6			655		665	2		
3	726+30	728+00	MED							1				1	4			170		175	2		
4	718+75	728+00	RT.															925				925	
5	718+75	718+90	LT.															15				20	
6	718+90	721+90	LT.									1	1				6	444			2	454	
7	721+90	727+72	LT.								1		1			35	4	584			2	655	
8	727+72	728+00	LT.					3										28	1	33			
9	724+93		LT.	1																			
10	724+87		LT.	1																			
11	727+80		LT.	1																			1
12	718+75	728+00	LT.& RT.		18	18	18																
Totals				3	18	18	18	3	1	1	1	1	3	1	10	35	10	2921	1	978	8	2054	1

LIGHTING PLAN QUANTITIES STA. 709+00 TO STA. 728+00

PLOTTED BY: lmincek
PLOTTED: 05-AUG-1998 12:34
PLOT SUBMITTED: 05-AUG-1998 12:34
307LPQAA.DGN
PLOT SCALE: 1:1
PLOT SEED: seforsberg.dgn
PLOT DRIVER: pid08459.pltg
PLOT LINE WT: 307lpqaa.dgn

CALC. BY	CUY-71-0.00	OHIO
DATE		FHWA REGION 5
CHKD. BY		FEDERAL PROJECT
DATE		

270
361

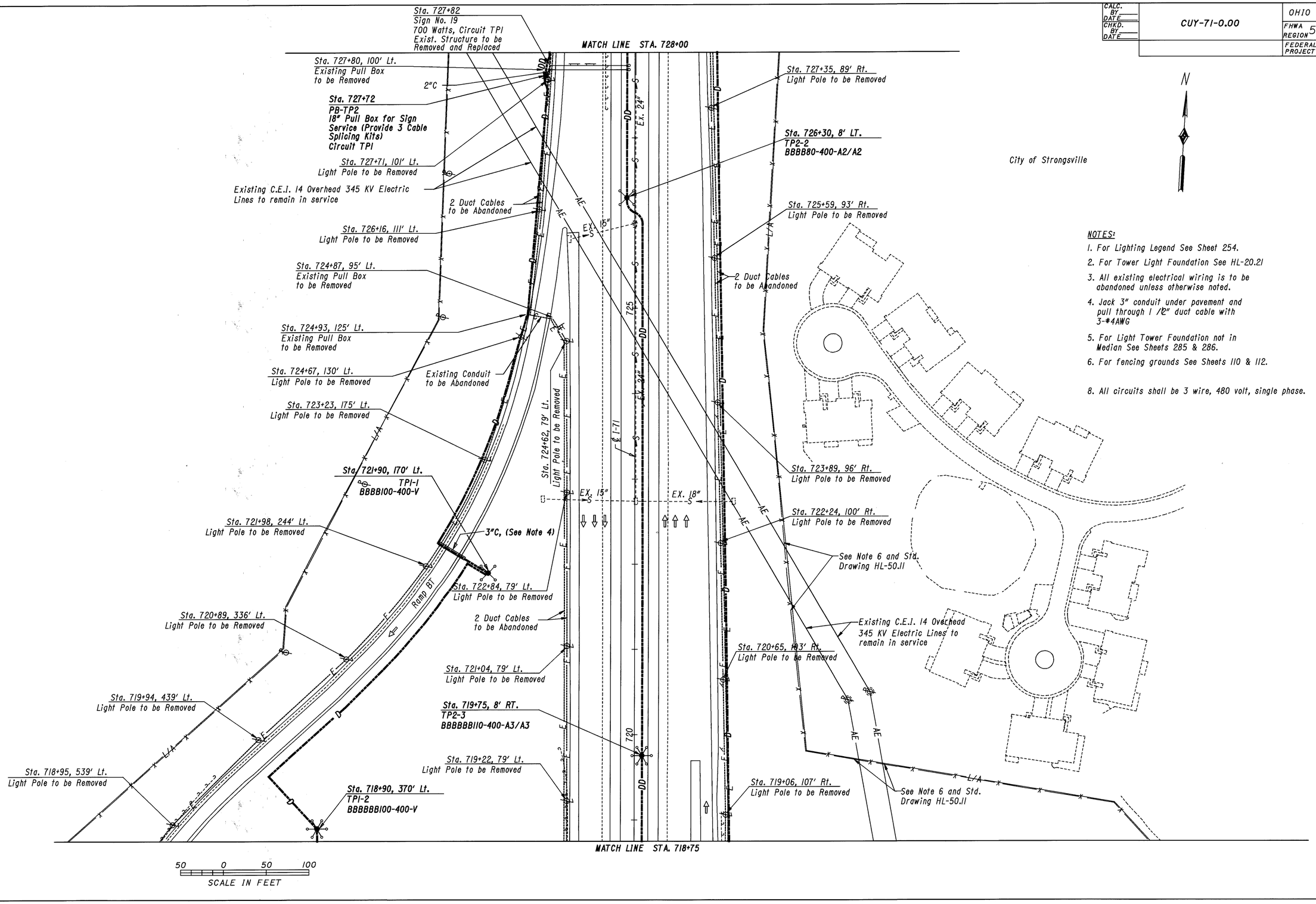

NOTES:

1. For Lighting Legend See Sheet 254.
2. For Tower Light Foundation See HL-20.21
3. All existing electrical wiring is to be abandoned unless otherwise noted.
4. Jack 3" conduit under pavement and pull through 1 1/2" duct cable with 3-#4AWG
5. For Light Tower Foundation not in Median See Sheets 285 & 286.
6. For fencing grounds See Sheets 110 & 112.
8. All circuits shall be 3 wire, 480 volt, single phase.

LIGHTING PLAN STA. 718+75 TO STA. 728+00

PLOTTED BY: jgrmovse
PLOTTED: Friday, August 07, 1998 at 3:00 pm
PLOT SUBMITTED: 24-JUL-1998 15:11
307LP11.DGN
307lpl1.dgn

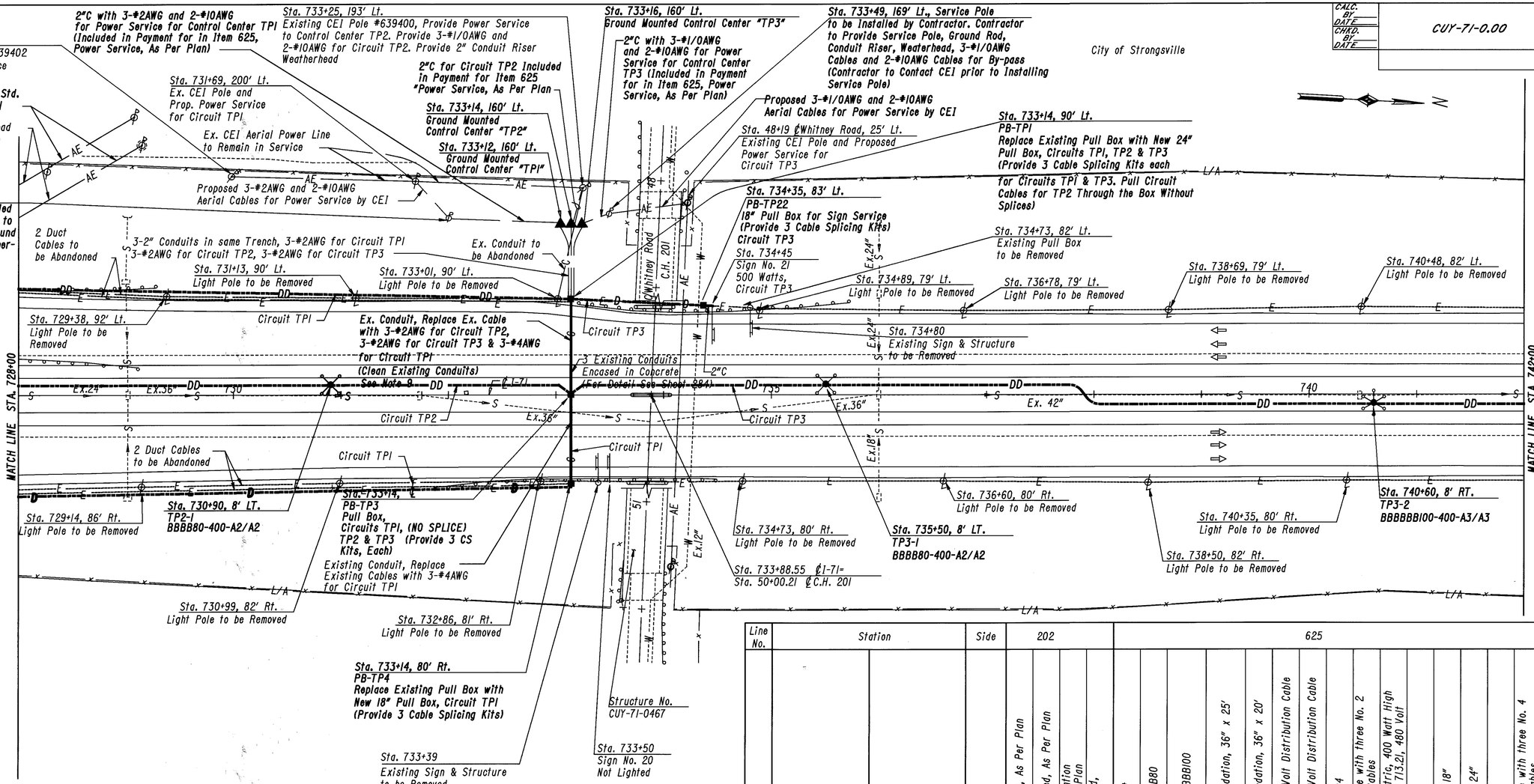

Line No.	Station From	Station To	Side	202 Pull Box Removed, As Per Plan (Each)	202 Light Pole Removed, As Per Plan (Each)	202 Light Pole Foundation Removed, As Per Plan (Each)	202 Luminaire Removed, As Per Plan (Each)	625 Cable Splicing Kit (Each)	625 Light Tower, BBBB80 (Each)	625 Light Tower BBBBBB100 (Each)	625 Light Tower Foundation, 36" x 25' (Each)	625 Light Tower Foundation, 36" x 20' (Each)	625 No. 2 AWG 5000 Volt Distribution Cable (L.F.)	625 No. 4 AWG 5000 Volt Distribution Cable (L.F.)	625 Conduit, 2", 713.04 (L.F.)	625 1 1/2" Duct Cable with three No. 2 AWG 5000 Volt Cables (L.F.)	625 Luminaire Asymmetric, 400 Watt High Pressure Sodium, 713.21, 480 Volt (Each)	625 Trench, 24" Deep (L.F.)	625 Pull Box, 713.08, 18" (Each)	625 Pull Box, 713.08, 24" (Each)	625 Ground Rod (Each)	625 1 1/2" Duct Cable with three No. 4 AWG 5000 Volt Cables (L.F.)	625 Power Service, As Per Plan (Each)	625 Conduits Cleaned and Cables Removed, As Per Plan (L.F.)	202 Disconnect Existing Conduit (Each)
1	728+00	730+90	MED													295		290							
2	730+90	733+14	MED						1			1				234	4	224			2				
3	733+14	735+50	MED					3								246		236	1						
4	735+50	740+60	MED						1			1				520	4	510			2				
5	740+60	742+00	MED							1	1					145	6	140			2				
6	728+00	733+14	RT.															514				519			
7	733+14	733+14	RT./℄					3						255					1					240	
8	728+00	733+14	LT.													519		514							
9	733+14	734+35	LT.					9										121	1	1		131			
10	733+14	Control Centers *	LT.										720		210			70							
11	Control Centers *	CEI Power Poles **	LT.																				3		
12	734+73		LT.	1																					1
13	728+00	742+00	LT.& RT.		14	14	14																		
14	733+14	733+14	℄/LT.					3					570	285										270	
	Totals			1	14	14	14	18	2	1	1	2	1290	540	210	1959	14	2619	3	1	6	650	3	510	1

* At Stations 733+12, 733+14, and 733+16

** At Stations 731+69 I-71, 733+25 I-71, and 48+19 Whitney Road

NOTES:

1. For Lighting Legend See Sheet 254.
2. For Tower Light Foundation See HL-20.21
3. All existing electrical wiring is to be abandoned unless otherwise noted.
4. Exercise extreme caution when drilling the Foundation for the light tower at Sta. 735+50.
5. For Clarity the Whitney Road Bridge over I-71 is not shown in the area of the freeway
7. For fencing grounds See Sheet 112.
8. All circuits shall be 3 wire, 480 volt, single phase.
9. The Contractor shall clean out the existing 3 concrete encased conduits between sta. 733+14, 90' Lt. and sta. 733+14, 80' Rt. and remove all of the existing cables. Payment shall be made per linear feet for each conduit cleaned in the bid item for Conduit Cleaned and Cables Removed, As Per Plan.

50 0 50 100
SCALE IN FEET

LIGHTING PLAN STA. 728+00 TO STA. 742+00

PLOTTED BY: lmincek
PLOTTED: 4:05 PM
PLOT SUBMITTED: 05-AUG-1998 12:34
307LP12.DGN
307lp12.dgn
307lp12.dgn
pid08459

CALC. BY DATE	CUY-71-0.00	OHIO	272/361
CHKD. BY DATE		FHWA REGION 5	
		FEDERAL PROJECT	

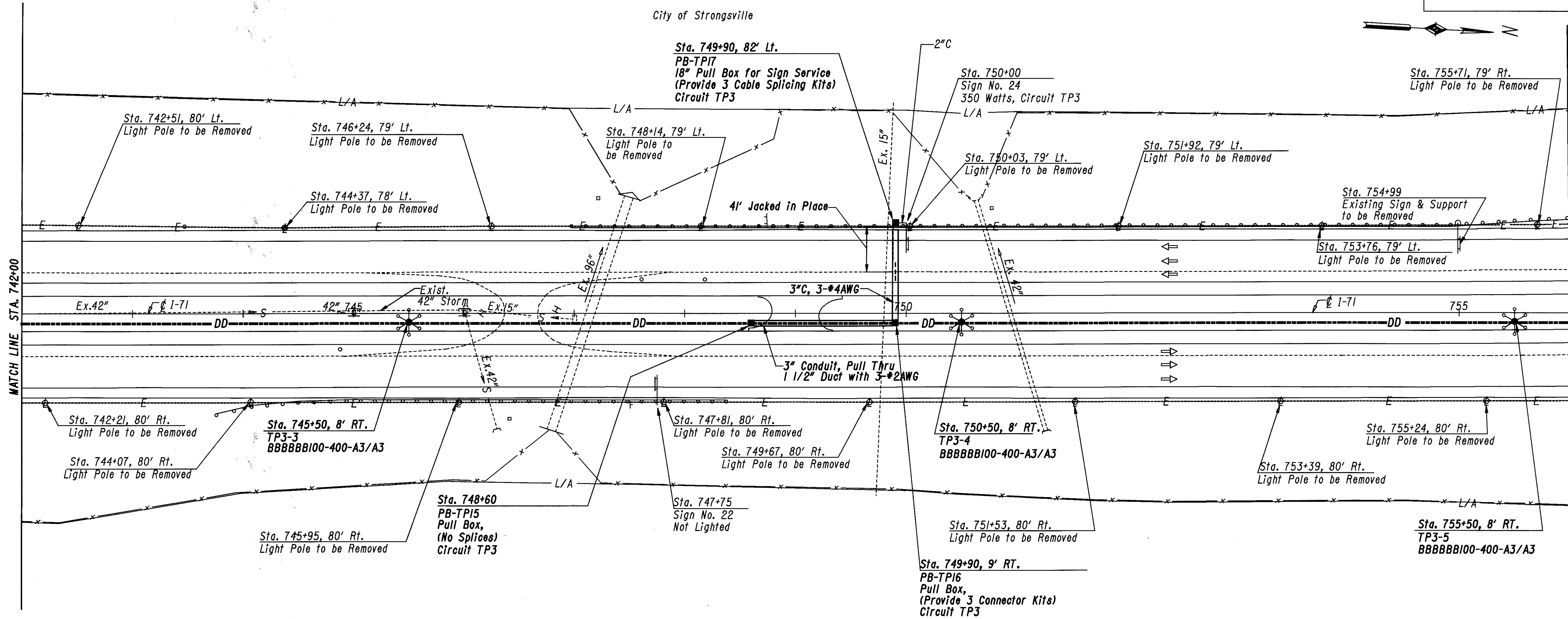

Line No.	Station From	Station To	Side	202 Light Pole Removed, As Per Plan	202 Light Pole Foundation Removed, As Per Plan	202 Luminaire Removed, As Per Plan	625	Cable Splicing Kit	Light Tower, BBBBBB100	Light Tower Foundation, 36" x 25' Deep,	1 1/2" Duct Cable with Three No. 2 AWG 5000 Volt Cables	No. 4 AWG 5000 Volt Distribution Cable	Conduit, 3", 713.04	Conduit, Jacked or Drilled Under Pavement, 3"	Luminaire Asymmetric, 400 Watt High Pressure Sodium, 713.21, 480 Volt	Trench, 24" Deep	Pull Box, 713.08, 18"		Ground Rod	
				Each	Each	Each		Each	Each	Each	L.F.	L.F.	L.F.	L.F.	Each	L.F.	Each		Each	
1	742+00	745+50	MED								360					350				
2	745+50	749+90	MED						1	1	450		130		6	440	1		2	
3	749+90	750+50	MED					3			70					60	1			
4	750+50	755+50	MED						1	1	510				6	500			2	
5	755+50	756+00	MED						1	1	55				6	50			2	
6	749+88	749+90	LT./MED					3				303	50	41		50	1			
7	742+00	756+00	RT./LT.	16	16	16														
Totals				16	16	16		6	3	3	1445	303	180	41	18	1450	3		6	

50 0 50 100
SCALE IN FEET

NOTES:

1. For Lighting Legend See Sheet 254.
2. For Tower Light Foundation See HL-20.21
3. All existing electrical wiring is to be abandoned unless otherwise noted.

6. All circuits shall be 3 wire, 480 volt, single phase.

LIGHTING PLAN STA. 742+00 TO STA. 756+00

PLOT SUBMITTED:24-JUL-1998 15:11
307LP13.DGN
PLOTTED BY: jgrmovse

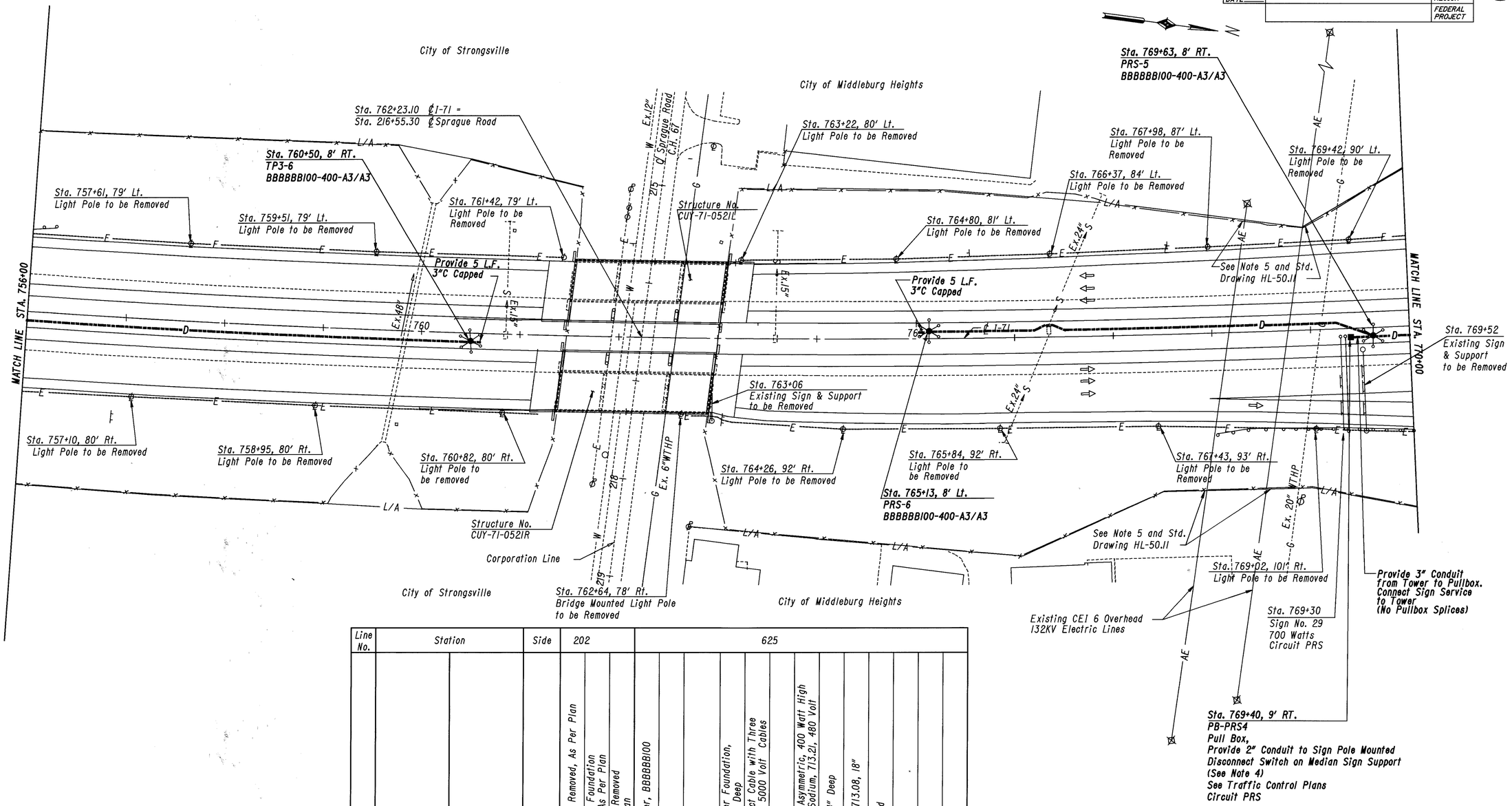

Line No.	Station From	Station To	Side	202 Light Pole Removed, As Per Plan	202 Light Pole Foundation Removed, As Per Plan	202 Luminaire Removed As Per Plan	625 Light Tower, BBBBBBI00			625 Light Tower Foundation, 36" x 25' Deep	625 1 1/2" Duct Cable with Three No. 4 AWG 5000 Volt Cables		625 Luminaire Asymmetric, 400 Watt High Pressure Sodium, 713.21, 480 Volt	625 Trench, 24" Deep	625 Pull Box, 713.08, 18"	625 Ground Rod			
				Each	Each	Each	Each			Each	L.F.		Each	L.F.	Each	Each			
1	756+00	760+50	MED				1			1	455		6	450		2			
2	765+13	769+63	MED				1			1	460		6	450		2			
3	769+40		MED												1				
4	769+63	770+00	MED				1			1	42		6	37		2			
5	756+00	770+00	LT.& RT.	16	15	16													
Totals				16	15	16	3			3	957		18	937	1	6			

NOTES:

1. For Lighting Legend See Sheet 254.
2. For Tower Light Foundation See HL-20.21
3. All existing electrical wiring is to be abandoned unless otherwise noted.
4. Connect Sign Service Thru Pullbox (No Splices) to Tower Light
5. For fencing grounds See Sheet 118.
6. All circuits shall be 3 wire, 480 volt, single phase.

LIGHTING PLAN STA. 756+00 TO STA. 770+00

PLOTTED BY: jgrmovse
PLOTTED ON: Wed, 24-Jul-1998 15:11
PLOT SUBMITTED: 24-JUL-1998 15:11
307LP14.DGN
Power Beforsber Bpid08459 Bdgn B307lp14.dgn

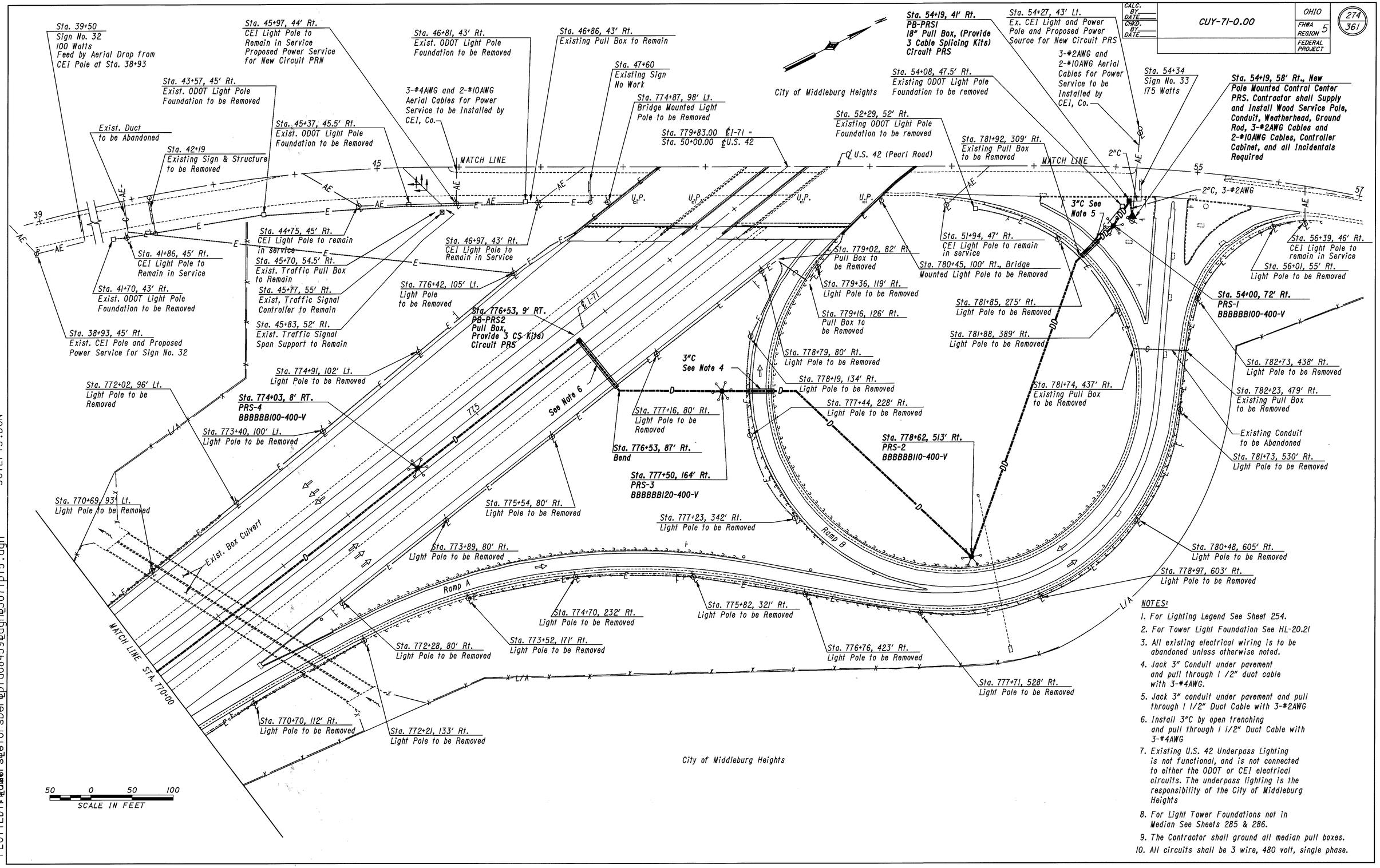

NOTES:

1. For Lighting Legend See Sheet 254.
2. For Tower Light Foundation See HL-20.21
3. All existing electrical wiring is to be abandoned unless otherwise noted.
4. Jack 3" Conduit under pavement and pull through 1 /2" duct cable with 3-#4AWG.
5. Jack 3" conduit under pavement and pull through 1 1/2" Duct Cable with 3-#2AWG
6. Install 3"C by open trenching and pull through 1 1/2" Duct Cable with 3-#4AWG
7. Existing U.S. 42 Underpass Lighting is not functional, and is not connected to either the ODOT or CEI electrical circuits. The underpass lighting is the responsibility of the City of Middleburg Heights
8. For Light Tower Foundations not in Median See Sheets 285 & 286.
9. The Contractor shall ground all median pull boxes.
10. All circuits shall be 3 wire, 480 volt, single phase.

LIGHTING PLAN STA. 770+00 TO STA. 779+83

PLOTTED BY: jgrmovse
PLOTTED: 24-JUL-1998 15:11
PLOT SUBMITTED: 24-JUL-1998 15:11
307LP15.DGN
307lp15.dgn

CALC. BY DATE	CUY-71-0.00	OHIO
CHKD. BY DATE		FHWA REGION 5
		FEDERAL PROJECT

275/361

QUANTITIES FOR STA. 770+00 TO STA. 779+83

Line No.	Station From	Station To	Side	202 Pull Box Removed, As Per Plan	202 Light Pole Removed, As Per Plan	202 Light Pole Foundation Removed, As Per Plan	202 Luminaire Removed, As Per Plan		625 Cable Splicing Kit	625 Light Tower, BBBBBB100	625 Light Tower, BBBBBB110	625 Light Tower, BBBBBB120		625 Light Tower Foundation, 36" x 25' Deep	625 No. 2 AWG 5000 Volt Distribution Cable		625 Conduit, 2", 713.04	625 Conduit, 3", 713.04	625 Conduit, Jacked or Drilled Under Pavement, 3"	625 Luminaire Symmetric, 400 Watt High Pressure Sodium, 713.21, 480 Volt	625 Trench, 24" Deep	625 Pull Box, 713.08, 18"		625 Ground Rod	625 1 1/2" Duct Cable with three No. 2 AWG 5000 Volt Cables	625 1 1/2" Duct Cable with three No. 4 AWG 5000 Volt Cables	625 Power Service, As Per Plan	202 Disconnect Existing Circuit
				Each	Each	Each	Each		Each	Each	Each	Each		Each	L.F.		L.F.	L.F.	L.F.	Each	L.F.	Each		Each	L.F.	L.F.	Each	Each
1	770+00	774+03	MED																		403					408		
2	774+03	776+53	MED							1				1						6	250			2		260		
3	776+53	777+50	MED/RT.						3									78			203	1				213		
4	777+50	778+62	RT.									1		1					31	6	353			2		394		
5	778+62	54+00 Pearl Rd.	RT./RT.								1			1					31	6	413			2	454			
6	54+00 Pearl Rd.	54+19 Pearl Rd.	RT.							1				1						6	35			2	45			
7	54+19 Pearl Rd.	54+19 Pearl Rd.	RT.						3						81		17				17	1					1	
8	779+02		RT.	1																								
9	779+16		RT.	1																								
10	781+92		RT.	1																								
11	781+74		RT.	1																								
12	782+23		RT.	1																								
13	770+00	779+83	LT.& RT.		29	33	29																					
14	42+19 Pearl Rd.		RT.																									1
Totals				5	29	33	29		6	2	1	1		4	81		17	78	62	24	1674	2		8	499	1275	1	1

QUANTITIES FOR STA. 779+83 TO STA. 786+00

Line No.	Station From	Station To	Side	202 Pull Box Removed, As Per Plan	202 Light Pole Removed, As Per Plan	202 Light Pole Foundation Removed, As Per Plan	202 Luminaire Removed, As Per Plan	202 Power Service Removed, As Per Plan	625 Connector Kit, Type VII A	625 Cable Splicing Kit	625 Light Tower, BBBBBB100	625 Light Tower, BBBBBB110	625 Light Tower Foundation, 36" x 25' Deep	625 No. 4 AWG 5000 Volt Distribution Cable	625 Conduit, 3", 713.04	625 Conduit, Jacked or Drilled Under Pavement, 3"	625 Luminaire Symmetric, 400 Watt High Pressure Sodium, 713.21, 480 Volt	625 Trench, 24" Deep	625 Pull Box, 713.08, 18"	625 Median Pull Box, As Per Plan, Type IV	625 Ground Rod	625 1 1/2" Duct Cable with three No. 4 AWG 5000 Volt Cables	625 Power Service, As Per Plan	202 Disconnect Existing Circuit
				Each	Each	Each	Each	L.F.	Each	Each	Each	Each	Each	L.F.	L.F.	L.F.	Each	L.F.	Each	Each	Each	L.F.	Each	Each
1	45+97 Pearl Rd.	45+80 Pearl Rd.	LT.											81									1	
2	45+80 Pearl Rd.	46+04 Pearl Rd.	LT.							3								40	1			50		
3	46+04 Pearl Rd.	780+57	LT./LT.								1		1			31	6	367			2	408		
4	780+57	782+45	LT.								1		1			31	6	417			2	458		
5	782+45	782+45	MED									1	1	375	74	41	6	74			2			
6	782+45	786+00	MED							3				1080						2	2			
7	41+86 Pearl Rd.		LT.	1																				
8	43+57 Pearl Rd.		LT.	1																				
9	46+39 Pearl Rd.		LT.	1																				
10	777+52		LT.	1																				
11	778+04		LT.	1																				
12	781+14		LT.	1																				
13	781+33		LT.	1																				
14	52+84 Pearl Rd.		LT.	1																				
15	779+83	786+00	LT.& RT.		21	25	21																	
16	41+82 Pearl Rd.		LT.					1																
17	56+31 Pearl Rd.		LT.					1																
18	56+83 Pearl Rd.		LT.																					1
Totals				8	21	25	21	2	3	3	2	1	3	1536	74	103	18	898	1	2	8	916	1	1

LIGHTING PLAN QUANTITIES STA. 770+00 TO STA. 786+00

PLOTTED BY: lmincek
PLOTTED: 05-AUG-1998 12:35
PLOT SUBMITTED:05-AUG-1998 12:35
307LPQBB.DGN
307LPQBB.dgn
B307lpqbb.dgn
Bpid08459Bdgn
Bforsber

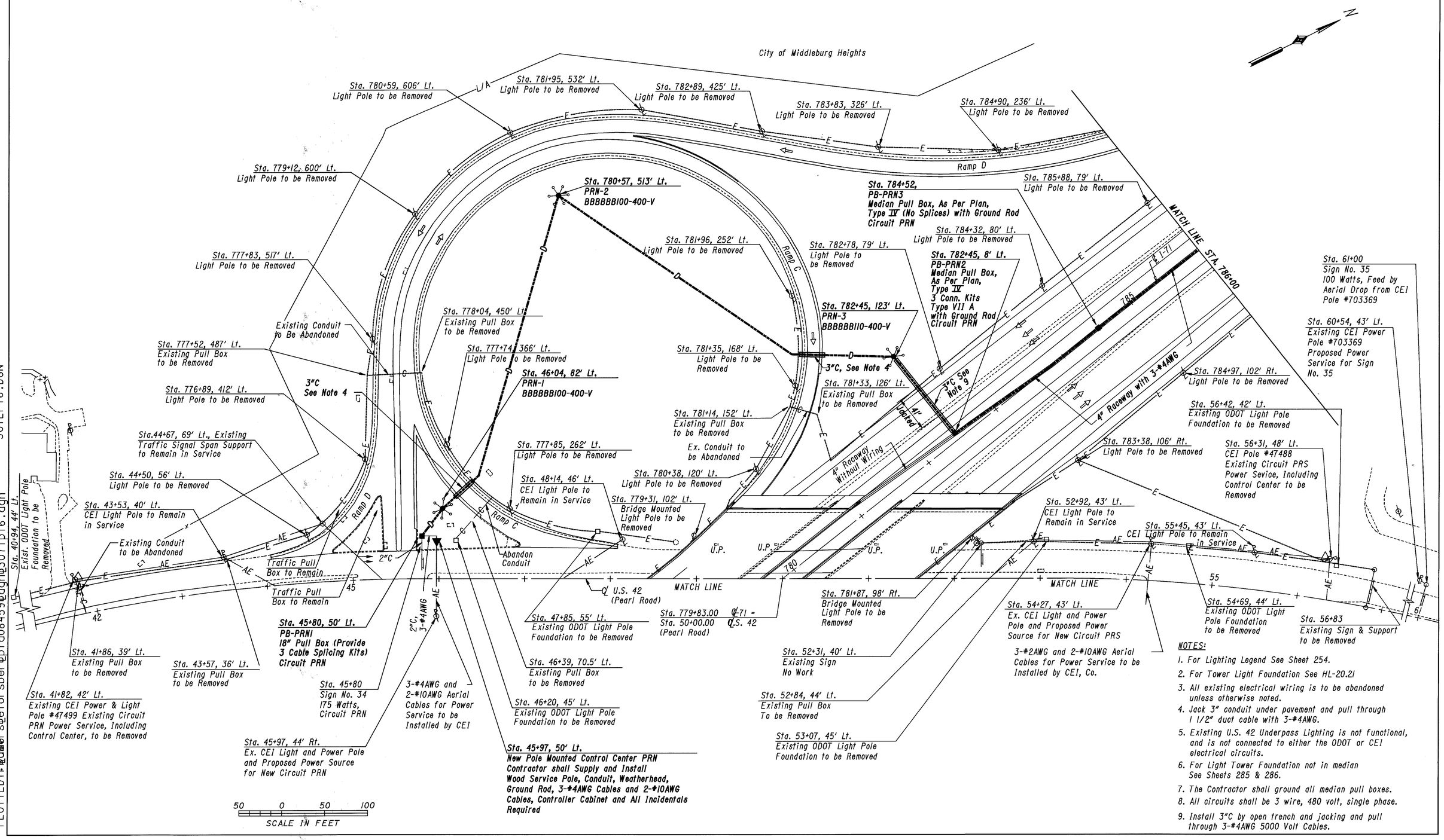

NOTES:

1. For Lighting Legend See Sheet 254.
2. For Tower Light Foundation See HL-20.21
3. All existing electrical wiring is to be abandoned unless otherwise noted.
4. Jack 3" conduit under pavement and pull through 1 1/2" duct cable with 3-#4AWG.
5. Existing U.S. 42 Underpass Lighting is not functional, and is not connected to either the ODOT or CEI electrical circuits.
6. For Light Tower Foundation not in median See Sheets 285 & 286.
7. The Contractor shall ground all median pull boxes.
8. All circuits shall be 3 wire, 480 volt, single phase.
9. Install 3"C by open trench and jacking and pull through 3-#4AWG 5000 Volt Cables.

LIGHTING PLAN STA. 779+83 TO STA. 786+00

PLOTTED BY: jgrmovse
PLOTTED: 24-JUL-1998 15:11
PLOT SUBMITTED: 24-JUL-1998 15:11
307LP16.DGN

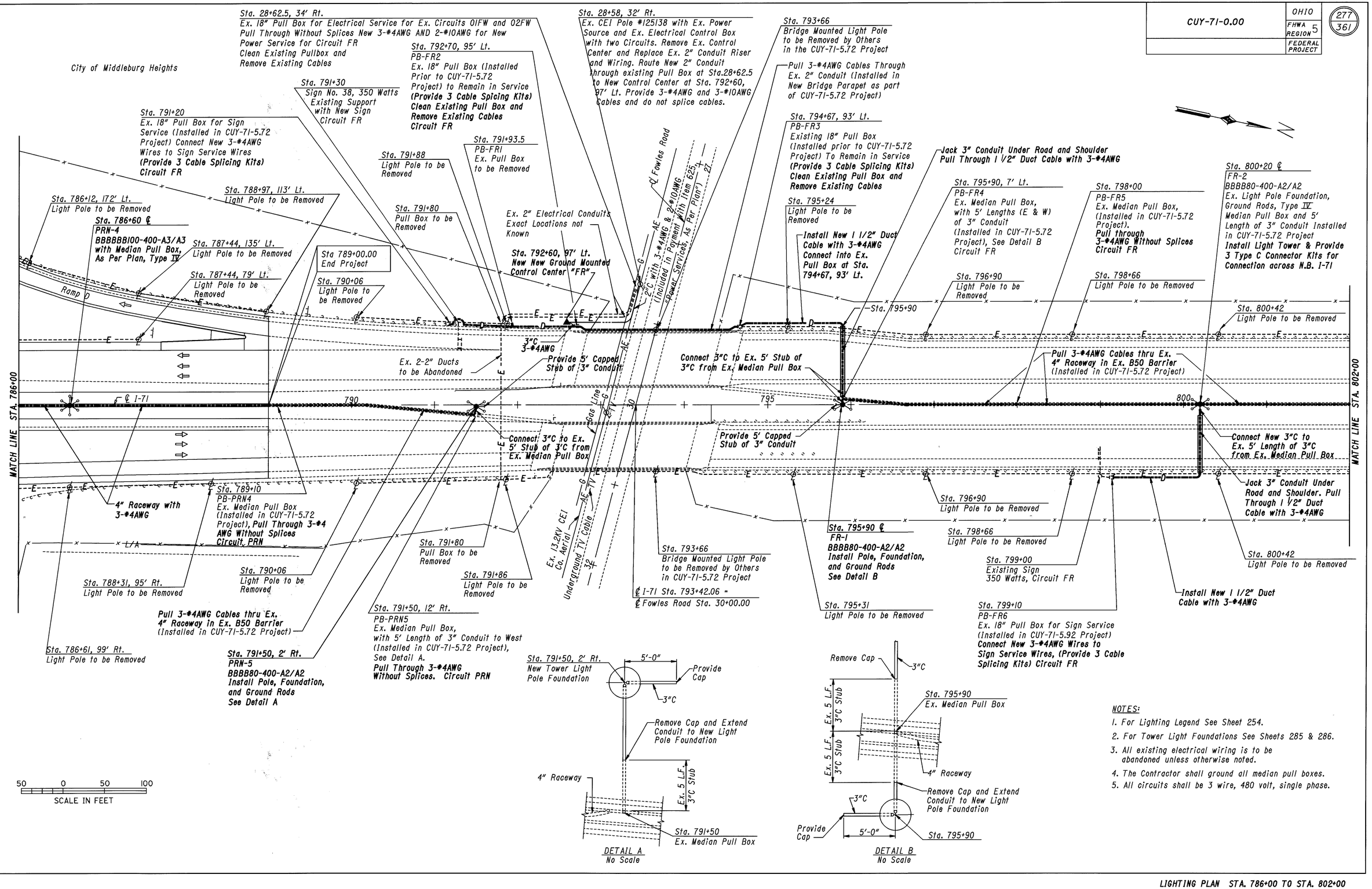

NOTES:

1. For Lighting Legend See Sheet 254.
2. For Tower Light Foundations See Sheets 285 & 286.
3. All existing electrical wiring is to be abandoned unless otherwise noted.
4. The Contractor shall ground all median pull boxes.
5. All circuits shall be 3 wire, 480 volt, single phase.

LIGHTING PLAN STA. 786+00 TO STA. 802+00

PLOTTED BY: jgrmovse
PLOTTED: 24-JUL-1998 15:11
PLOT SUBMITTED: 24-JUL-1998 15:11
307LP17.DGN

QUANTITIES FOR STA. 786+00 TO STA. 802+00

Line No.	Station From	Station To	Side	202 Pull Box Removed, As Per Plan (Each)	202 Light Pole Removed, As Per Plan (Each)	202 Light Pole Foundation Removed, As Per Plan (Each)	202 Luminaire Removed, As Per Plan (Each)	202 Power Service Removed, As Per Plan (Each)	625 Connector Kit, Type VII B (Each)	625 Connector Kit, Type VII C (Each)	625 Cable Splicing Kit (Each)	625 Light Tower, BBBBBB100 (Each)	625 Light Tower Foundation, Misc.: Median Mounted, 36" x 25' Deep, As Per Plan (Each)	625 Light Tower Foundation, 36" x 20' Deep (Each)	625 No. 4 AWG 5000 Volt Distribution Cable (L.F.)	625 Conduit, 3", 713.04 (L.F.)	625 Conduit, Jacked or Drilled Under Pavement, 3" (L.F.)	625 Luminaire Asymmetric, 400 Watt High Pressure Sodium, 713.21, 480 Volt (Each)	625 Trench, 24" Deep (L.F.)	625 Ground Rod (Each)	625 1 1/2" Duct Cable with three No. 4 AWG 5000 Volt Cables (L.F.)	625 Power Service, As Per Plan (Each)	625 Pull Box Misc: Cleaned and Cables Removed (Each)	625 Light Tower, BBBB80 (Each)	202 Disconnect Existing Circuit (Each)
1	786+00	786+60	℄												195										
2	786+60	791+50	MED									1	1	1	1530			10		5				1	
3	791+20	792+70	LT.								3								150		160				1
4	792+60	792+70	LT.								3				30	10			10				1		
5	792+60	28+58 Fowles Rd.	LT./RT.					1														1	1		
6	792+70	794+67	LT.												621										
7	794+67	795+90	LT.								3						88		123		226		1		
8	795+90	795+90	LT./℄						3					1	51			4		2				1	
9	795+90	800+20	LT./℄												1320										
10	800+20	802+00	℄							3					555			4						1	
11	800+20	799+10	℄/RT.								3						83		111		209				1
12	791+80		RT.	1																					
13	791+80		LT.	1																					
14	786+00	802+00	LT.& RT.		18	18	18																		
15																									
16																									
Totals				2	18	18	18	1	3	3	12	1	1	2	4302	10	171	18	394	7	595	1	3	3	2

QUANTITIES FOR STA. 802+00 TO STA. 813+00

Line No.	Station From	Station To	Side	202 Light Pole Removed, As Per Plan (Each)	202 Light Pole Foundation Removed, As Per Plan (Each)	202 Luminaire Removed, As Per Plan (Each)	625 Cable Splicing Kit (Each)	625 Light Tower, BBBB80 (Each)	625 Light Tower Foundation, 36" x 20' Deep (Each)	625 No. 4 AWG 5000 Volt Distribution Cable (L.F.)	625 Conduit, 2", 713.04 (L.F.)	625 Conduit, 3", 713.04 (L.F.)	625 Conduit, Jacked or Drilled Under Pavement, 3" (L.F.)	625 Luminaire Asymmetric, 400 Watt High Pressure Sodium, 713.21, 480 Volt (Each)	625 Trench, 24" Deep (L.F.)	625 Pull Box Misc: Cleaned and Cables Removed (Each)	625 Ground Rod (Each)	625 1 1/2" Duct Cable with three No. 4 AWG 5000 Volt Cables (L.F.)
1	802+00	804+40	MED							771								
2	804+40	804+05	℄/LT.					1	1				61	4	87		2	158
3	804+05	806+41	LT.				3			738	31				31	2		
4	806+41	808+05	LT./℄				3	1	1				83	4	159		2	252
5	802+00	809+22	LT.& RT.	8	8	8												
Totals				8	8	8	6	2	2	1509	31		144	8	277	2	4	410

LIGHTING PLAN QUANTITIES STA. 786+00 TO STA. 813+00

PLOTTED BY: lmincek
PLOTTED: 05-AUG-1998 12:36
PLOT SUBMITTED: 05-AUG-1998 12:36
307LPOCC.DGN

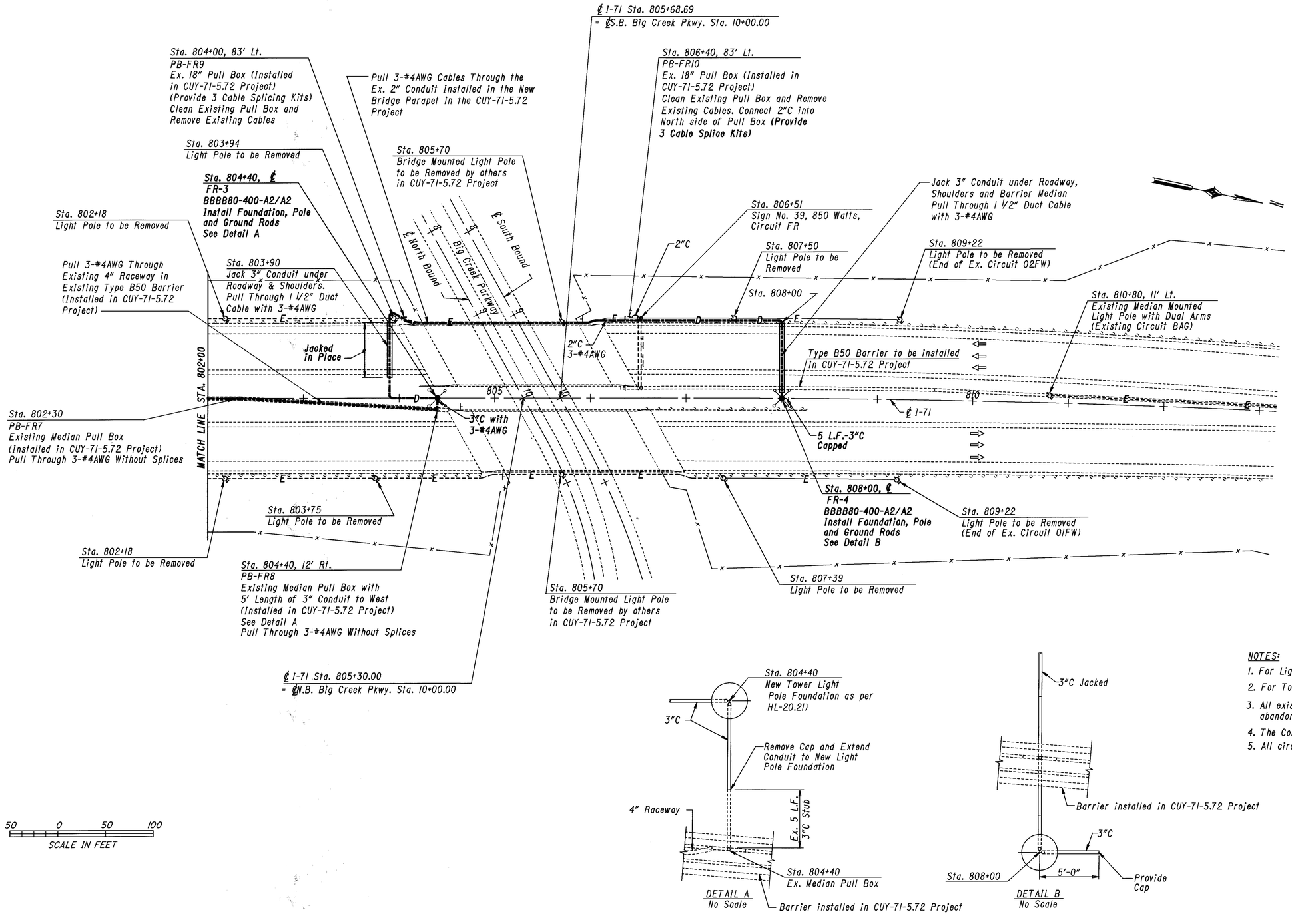

NOTES:

1. For Lighting Legend See Sheet 254.
2. For Tower Light Foundations See Sheets 285 & 286.
3. All existing electrical wiring is to be abandoned unless otherwise noted.
4. The Contractor shall ground all median pull boxes.
5. All circuits shall be 3 wire, 480 volt, single phase.

LIGHTING PLAN STA. 802+00 TO STA. 813+00

PLOTTED BY: jgrmovse
PLOTTED in Bowersberpid08459Bdgn
PLOT SUBMITTED: 24-JUL-1998 15:11
307LP18.DGN

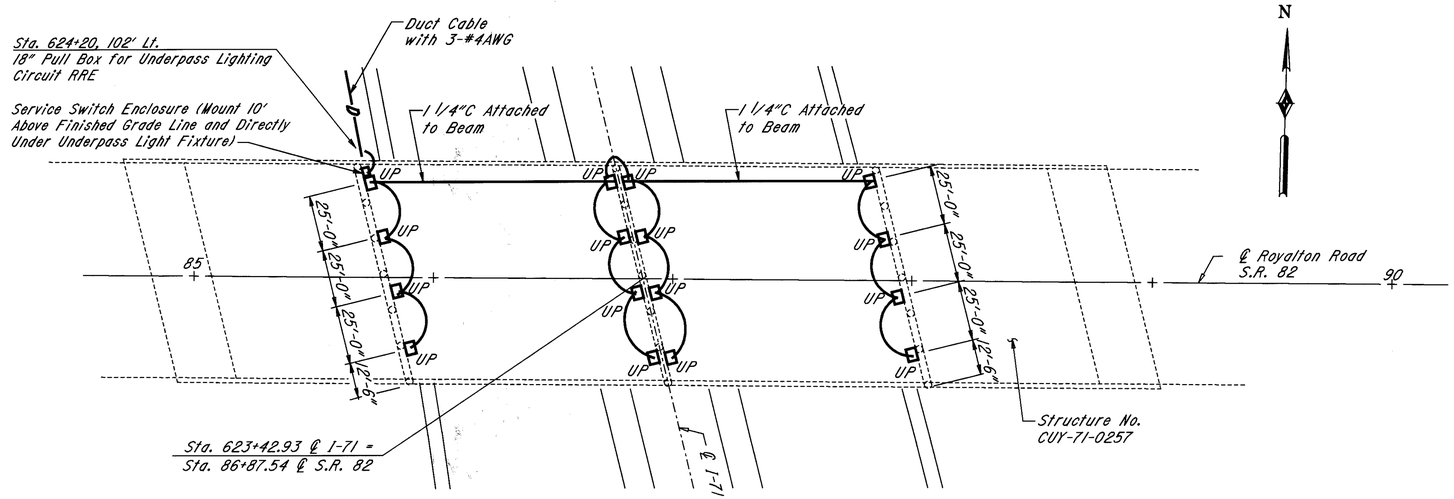

S.R. 82 UNDERPASS
SCHEMATIC PLAN
Scale: 1"=30'

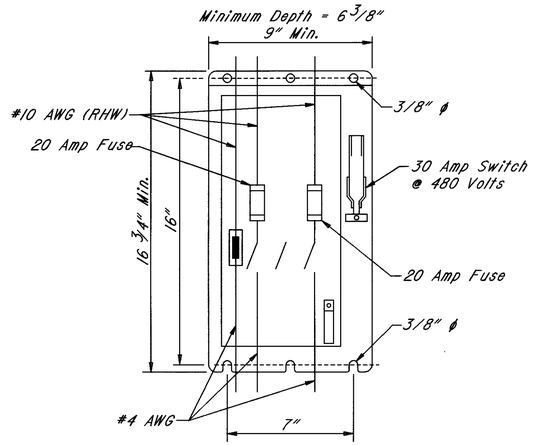

SERVICE SWITCH ENCLOSURE
No Scale

LEGEND

3 - #10AWG in 1 1/4" Conduit

NOTES:

All Conduit except Flexible Conduit shall be Rigid Ferrous Metal, 713.04.

The Service Switch Enclosure shall be a NEMA 4 Enclosure, Watertight AISI 302 or 303 Stainless Steel with Flange Mounted Switch Handle, Square "D" - Model H361NDS. Westinghouse - Model WHF-461-N, Cuttler Hammer - Model 9589X601-2F30, or Approved Equal.

See Std. Drawing HL-20.31 for Additional Details.

See General Lighting Notes for Light Fixture Specifications.

The Conduit and Junction Boxes shall be Attached to the Concrete with 1/4" Flat Head Drive Pins.

The Contract Unit Price Bid per Each for Item 625 "Service to Underpass Lighting, As Per Plan" includes Providing and Installing Service Switches as shown.

All circuits shall be 3 wire, 480 volt, single phase.

PLOTTED BY: jgrmovse
PLOTTED: 24-JUL-1998 15:11
PLOT SUBMITTED: 24-JUL-1998 15:11
307UP01.DGN

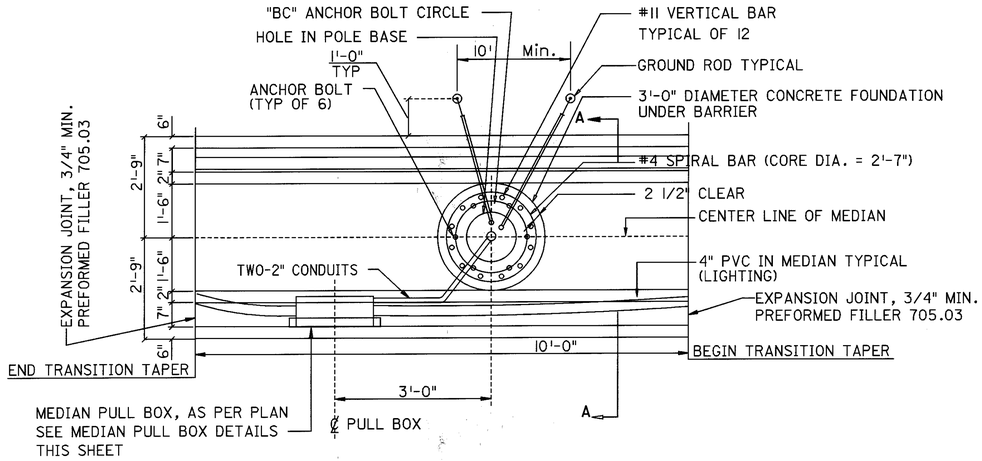

PLAN OF LIGHT TOWER FOUNDATION MISC: MEDIAN MOUNTED, 36" x 25' DEEP, AS PER PLAN

NO SCALE

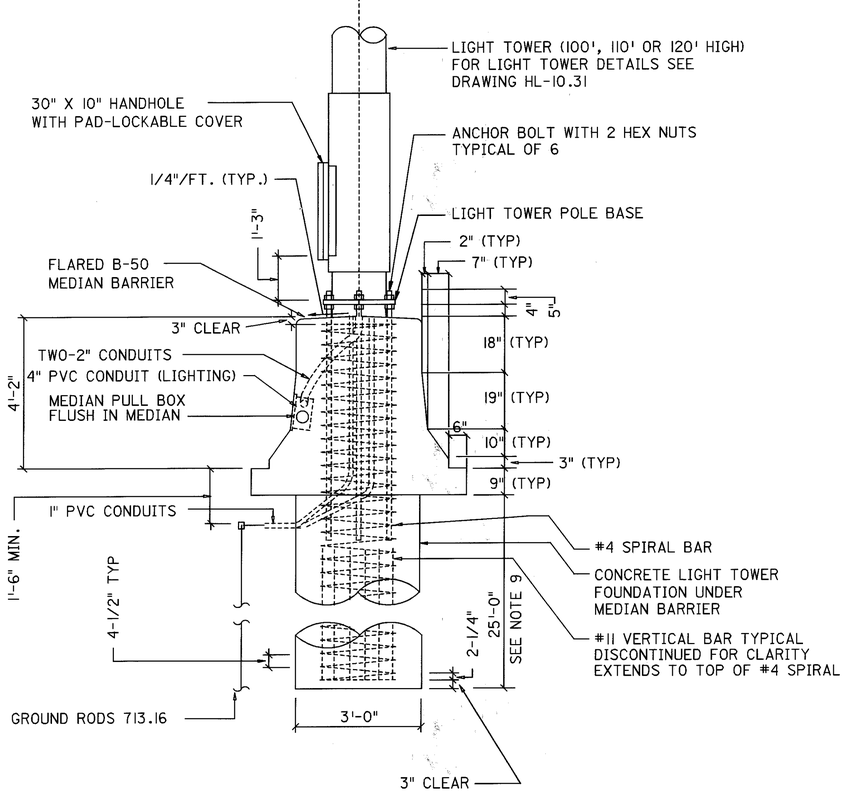

SECTION A-A

NO SCALE

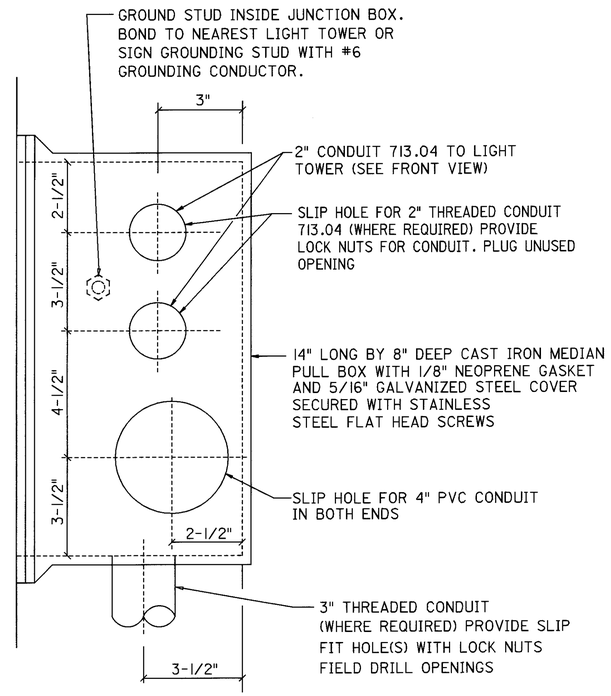

SECTION B

NO SCALE

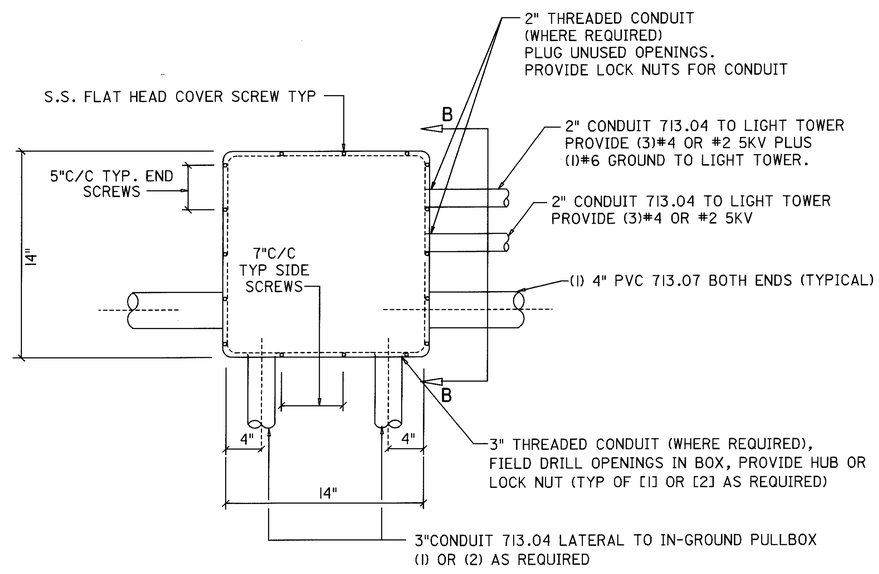

MEDIAN PULL BOX, AS PER PLAN

NO SCALE

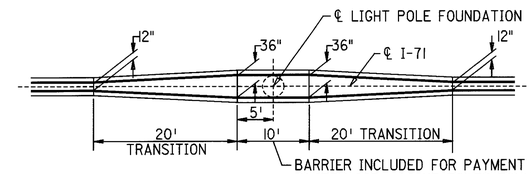

PLAN

BARRIER TRANSITION AT LIGHT POLE FOUNDATION

NOTES

1. FOUNDATION TO BE CAST-IN-PLACE CLASS "C" CONCRETE AS PER 499.
2. REINFORCING TO COMPLY WITH AND BE PLACED IN ACCORDANCE WITH 509.
3. LIGHT POLE ANCHOR BOLT SIZE AND SPACING TO FIT MOUNTING PLATE SUPPLIED WITH TOWER. HOWEVER, BOLT CIRCLE SHALL BE EQUAL TO OR LESS THAN 26". THE MINIMUM LENGTH ANCHOR BOLT SHALL BE 70" AND THE BOLTS SHALL HAVE EITHER A 6" "L" BEND OR A 5" X 5" PLATE ON THE EMBEDDED END.
4. CONSTRUCTION SHALL CONFORM TO THE REQUIREMENTS OF 622 AND 625.
5. GROUND RODS WILL BE PAID SEPARATELY.
6. SEE LIGHTING PLANS TO DETERMINE NUMBER AND SIZES OF CONDUITS ENTERING MEDIAN PULL BOXES AT EACH TOWER LIGHT FOUNDATION LOCATION AND AT EACH CONDUIT CROSSOVER AND SIGN SERVICE LOCATION.
7. THE UNIT PRICE BID FOR EACH ITEM 625 - LIGHT TOWER FOUNDATION, MISC: MEDIAN MOUNTED, 36" x 25' DEEP, AS PER PLAN AND FOR EACH ITEM 625 - LIGHT TOWER FOUNDATION, MISC: MEDIAN MOUNTED 36" X 30' DEEP, AS PER PLAN. SHALL BE FULL COMPENSATION FOR FURNISHING AND PLACING ANCHOR BOLTS, CONCRETE FOUNDATION, CONDUIT RACEWAYS, REINFORCING, MEDIAN PULL BOX, EMT. THE 10' SECTION OF CONCRETE BARRIER, AND ALL LABOR, MATERIAL, EQUIPMENT, AND INCIDENTALS NECESSARY TO COMPLETE THE WORK AS SPECIFIED.
8. DEDUCT 10 LINEAR FEET FROM ITEM 622 - CONCRETE BARRIER, TYPE B-50, AS PER PLAN FOR EACH MEDIAN MOUNTED LIGHT TOWER FOUNDATION.
9. EXTEND REINFORCING STEEL AND CONCRETE 5 FEET DEEPER FOR 30' DEEP FOUNDATION.
10. PROVIDE TWO-2" CONDUITS FROM PULL BOX TO EACH LIGHT TOWER BASE.
11. ALL WIRING SHALL BE FED THROUGH THE PULL BOX DIRECTLY INTO THE BASE OF THE LIGHT TOWER WHERE ALL CONNECTIONS SHALL BE MADE. NO CONNECTIONS OR SPLICES SHALL BE MADE IN THE PULL BOX.

PLOTTED BY:jgrmovse
PLOTTED:FROM:users$forsberb$pid08459dgn307ltfd.dgn
PLOT SUBMITTED:24-JUL-1998 15:11
307LTFD.DGN

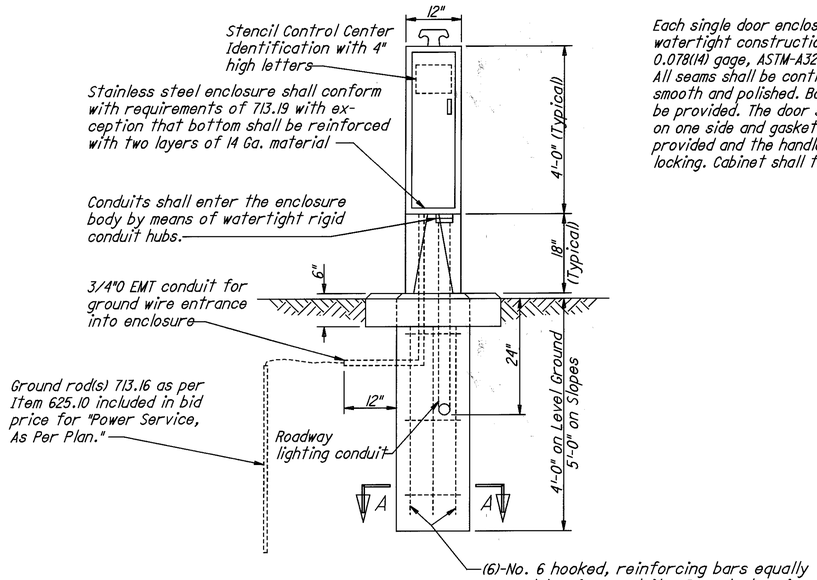

FRONT VIEW

Each single door enclosure shall be NEMA Type 4 watertight construction with NEMA 3 rainshield of 0.078(14) gage, ASTM-A320-304 stainless steel. All seams shall be continuously welded and ground smooth and polished. Body and door stiffeners shall be provided. The door shall have a continuous hinge on one side and gasketed 3-point latching shall be provided and the handle shall be arranged for padlocking. Cabinet shall face roadway.

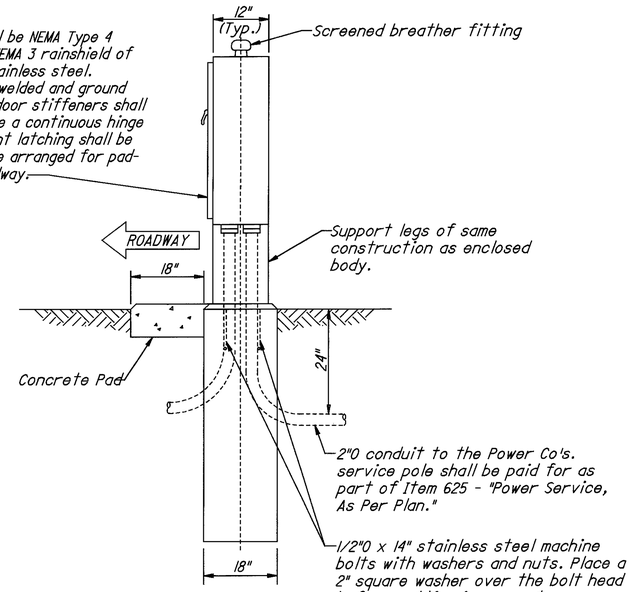

SIDE VIEW

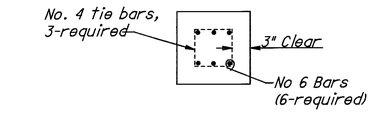

SECTION A-A THRU FOUNDATION

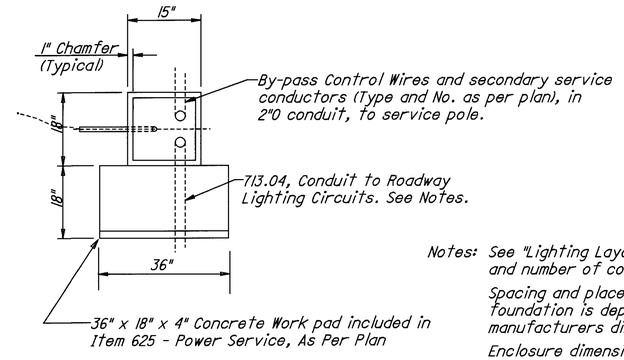

Notes: See "Lighting Layout" sheets for direction and number of conduits out of foundations.

Spacing and placement of anchor bolts in foundation is dependent upon the enclosure manufacturers dimensions.

Enclosure dimensions are inside measurements.

PAD MOUNTED
CONTROL CENTER DETAILS

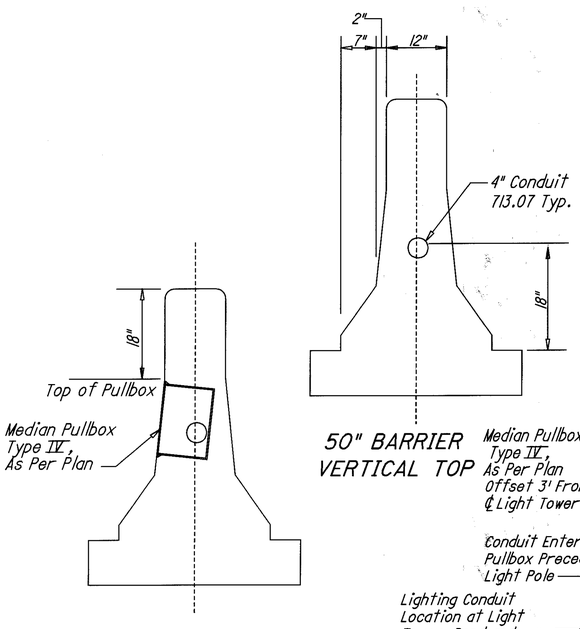

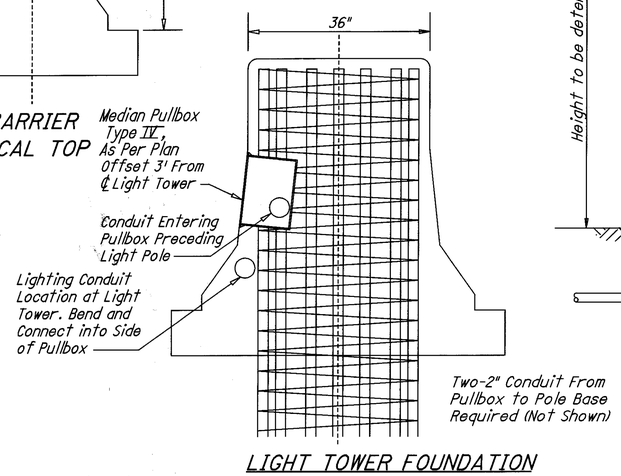

LIGHT TOWER FOUNDATION

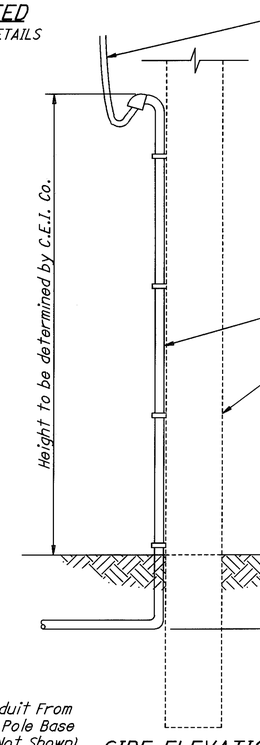

SIDE ELEVATION

480 Vac Lighting for Tower Lights and Sign Service. The low point of the drip loop shall be a minimum of 12" below the service head. The Contractor shall provide and install a weatherhead. (Mounting Height to be approved by C.E.I. Company.)

BYPASS SWITCH

A 20 Ampere by-pass switch rated at 240 volts, complete with No. 10 wire and conduit shall be furnished and installed by the Contractor. The Cleveland Electric Illuminating Co. will make the final connection to the switch for manual bypass control of their lighting controller. The bypass switch will be located inside of the pad mounted control center cabinet. Bypass switch included in Item 625 - "Power Service, As Per Plan."

The Contractor shall provide and install 2"Ø conduit (paid for as part of Item 625 - "Power Service, As Per Plan."

Existing or Proposed C.E.I. Power Pole, or Proposed Service Pole by the Contractor.
Note: The Contractor shall bond the weatherhead and conduit to the No. 4 AWG ground conductor. Payment included in Item 625 - "Power Service, As Per Plan."
The Contractor shall arrange with the utility company for a field inspection of each service location prior to his installation of service equipment.

The contactor shall leave a minimum of 10' pigtails for connections to overhead feeder connections.

The Contractor shall provide and install No. 4 AWG insulated conductor for neutral and equipment ground. Attach to pole with staples. Provide wood molding to at least 10' above the ground.

Ground Wire

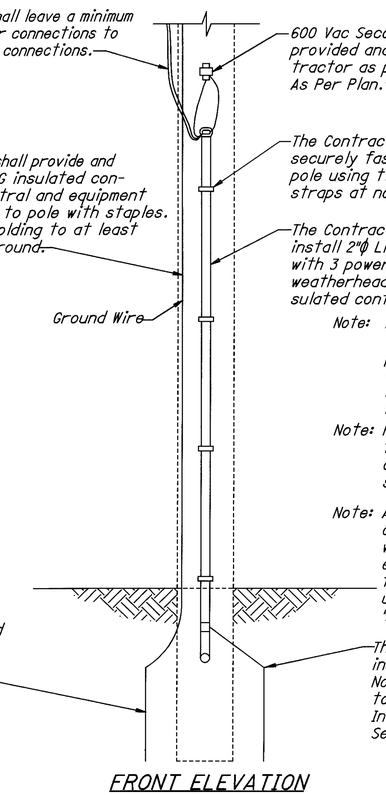

FRONT ELEVATION

600 Vac Secondary lighting arrestor provided and installed by the Contractor as part of "Power Service, As Per Plan."

The Contractor shall provide and securely fasten the conduit to the pole using two-hole galvanized straps at not over 6'-0" centers.

The Contractor shall provide and install 2"Ø Lighting Conduit 713.04 with 3 power service conductors, weatherhead and 2-#10 AWG insulated control wires

Note: Power cable and conduit between the control center and the C.E.I. power connection point is included in the lump sum bid price for Item 625 - "Power Service, As Per Plan."

Note: Power cable shall extend from the power pole to the control center enclosure without any splices.

Note: All service poles installed by the contractor, conduit, weatherhead, wire, ground rods and miscellaneous material and labor are to be included in the lump sum unit bid price for Item 625 - "Power Service, As Per Plan."

The Contractor shall provide and install 1"Ø x 10'-0" ground rod(s) 713.16, included in Item 625 - "Power Service, As Per Plan."

The Contractor shall provide and install the grounding conductor No. 4 AWG exothermically welded to the ground rod. (Typical). Included in Item 625 - "Power Service, As Per Plan."

POWER SERVICE DETAIL FOR PAD MOUNTED CABINET AND WOOD SERVICE POLE

No Scale

LIGHTING DETAILS

PLOTTED BY: lmincek
PLOTTED: 05-AUG-1998 12:37
PLOT SUBMITTED: 05-AUG-1998 12:37
307LGD2.DGN

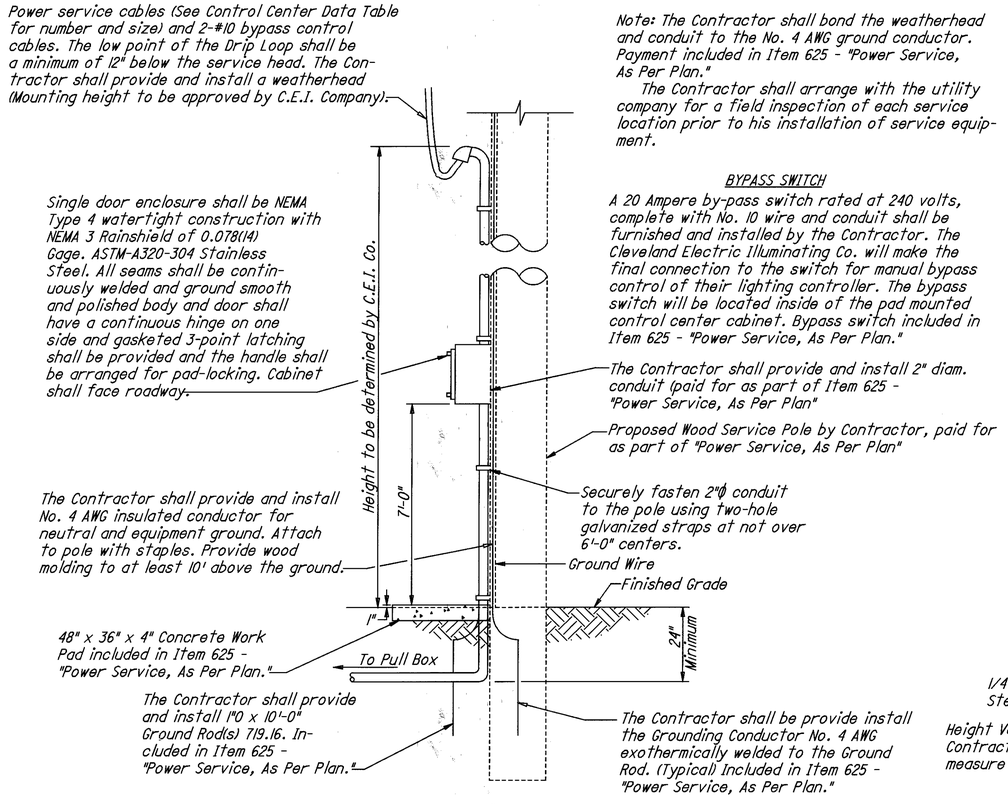

Note: The Contractor shall bond the weatherhead and conduit to the No. 4 AWG ground conductor. Payment included in Item 625 - "Power Service, As Per Plan."

The Contractor shall arrange with the utility company for a field inspection of each service location prior to his installation of service equipment.

BYPASS SWITCH

A 20 Ampere by-pass switch rated at 240 volts, complete with No. 10 wire and conduit shall be furnished and installed by the Contractor. The Cleveland Electric Illuminating Co. will make the final connection to the switch for manual bypass control of their lighting controller. The bypass switch will be located inside of the pad mounted control center cabinet. Bypass switch included in Item 625 - "Power Service, As Per Plan."

POWER SERVICE DETAIL FOR POLE MOUNTED CABINET
No Scale

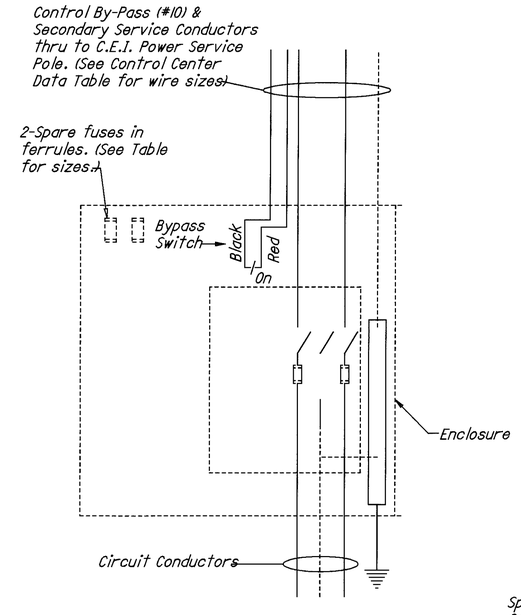

TYPICAL WIRING DIAGRAM
No Scale

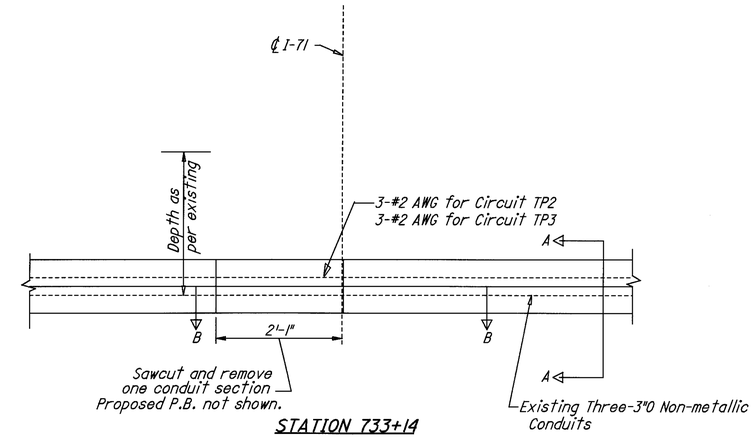

STATION 733+14

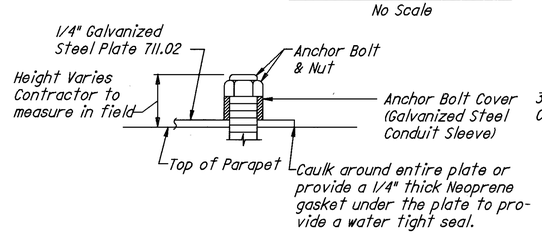

ANCHOR BOLT COVER
No Scale

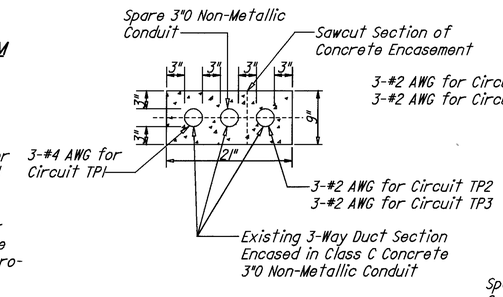

SECTION A-A
No Scale

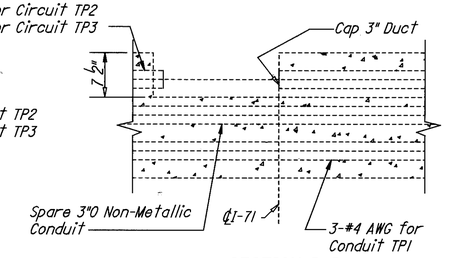

SECTION B-B
Sawcut Section
No Scale

NOTES:
1. See Plan View of 3-way Duct on Sheet 271
2. Contractor shall clean out all three conduits and remove existing cables.
3. Excavation and sawcutting shall be included in the cost of "Trench, 24" Deep"

CONTROL CENTER DATA TABLE

Control Center	Location	Cabinet Type	Enclosure Rating (Amps)	Secondary Voltage (Volts)	Secondary Load (KVA)	Service Entrance Conductors Size (AWG)	Lamp Type 400W HPS 1.1 Amp Each	Lamp Type 100W HPS 0.28 Amp Each	Sign Load (Watts)	Circuit Load (Amps)	Circuit Fuse (Amps)	Circuit Drop (%)	Maintaining Agency	Notes
RRW	81+85, 73' Rt. S.R. 82	Pole Mounted	100	480	26.8	3-# 1/0	48	0	1200	55.80	100	4.98	ODOT	Ex. Control Center Modified See Note "A"
RRE	91+96, 76' Lt. S.R. 82	Pole Mounted	100	480	33.1	3-#2	54	16	2025	68.94	100	4.96	ODOT	Replaces Exist. Control Center
MP	666+50, 92' Rt. I-71	Ground Mounted	60	480	20.0	3-#4	36	0	850	41.73	60	2.79	ODOT	
ALB	689+22, 81' Lt. I-71	Ground Mounted	60	480	16.4	3-#4	30	0	500	34.25	60	1.40	ODOT	
TP1	733+12, 160' Lt. I-71	Ground Mounted	60	480	18.8	3-#2	34	0	700	39.15	60	4.83	ODOT	
TP2	733+14, 160' Lt. I-71	Ground Mounted	60	480	17.7	3-#2	32	0	700	36.95	60	4.73	ODOT	
TP3	733+16, 160' Lt. I-71	Ground Mounted	60	480	19.0	3-#2	34	0	850	39.53	60	4.85	ODOT	
PRS	54+19, 58' Rt. S.R. 42	Pole Mounted	60	480	20.1	3-#2	36	0	875	41.79	60	4.63	ODOT	
PRN	45+97, 50' Lt. S.R. 42	Pole Mounted	60	480	15.0	3-#4	28	0	175	31.24	60	3.08	ODOT	
FR	792+60, 97' Lt. I-71	Ground Mounted	60	480	10.3	3-#4	16	0	1550	21.48	60	2.53	ODOT	

Note A: The existing 60 Amp enclosure with 60 Amp circuit fuse shall be replaced with a 100 Amp enclosure with 100 Amp circuit fuse. The existing 2-#4 AWG service entrance conductors shall be replaced with 3-# 1/0 service entrance conductors. Paid for as part of "Modify Existing Control Center. As per Plan"

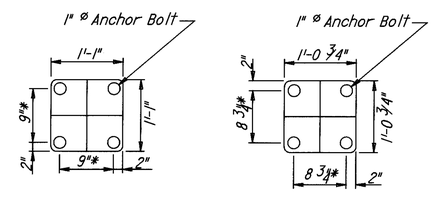

1/4" Galvanized Steel Plate (Type I) No Scale

1/4" Galvanized Steel Plate (Type II) No Scale

BRDIGE MOUNTED LIGHT POLE COVER PLATES

BRIDGE MOUNTED LIGHT POLE LOCATIONS

Station	Location	Type I	Type II
695+97, 78' Rt.	I-71 Over Ohio Turnpike	X	
696+70, 77' Lt.	I-71 Over Ohio Turnpike	X	
697+52, 78' Rt.	I-71 Over Ohio Turnpike	X	
698+23 77' Lt.	I-71 Over Ohio Turnpike	X	
718+59, 57' Lt.	Turnpike Over I-71		X
718+59, 94' Rt.	Turnpike Over I-71		X
762+64, 78' Rt.	I-71 Over Sprague Road	X	
774+87, 98' Lt.	I-71 Over Pearl Road	X	
779+31, 102' Lt.	I-71 Over Pearl Road	X	
780+45, 100' Rt.	I-71 Over Pearl Road	X	
781+87, 98' Rt.	I-71 Over Pearl Road	X	

* Note: For bridge decks which are not scheduled to be replaced: after the light poles have been removed from the bridges the contractor shall verify the bolt diameters and bolt spacing before fabricating the cover plates. The Contractor shall reuse the existing nuts at the light poles to secure the cover plates. Anchor Bolt covers shall be provided. (See Detail on this Sheet)

PLOTTED BY: lmincek
PLOTTED: 05-AUG-1998 12:38
PLOT SUBMITTED: 05-AUG-1998 12:38
307LGDI.DGN

SEEDING	
END WIDTH	SQ. YDS.

CUY-71-0.00	OHIO
	FHWA REGION 5
	FEDERAL PROJECT

285
361

END AREA		VOLUME	
CUT	FILL	CUT	FILL

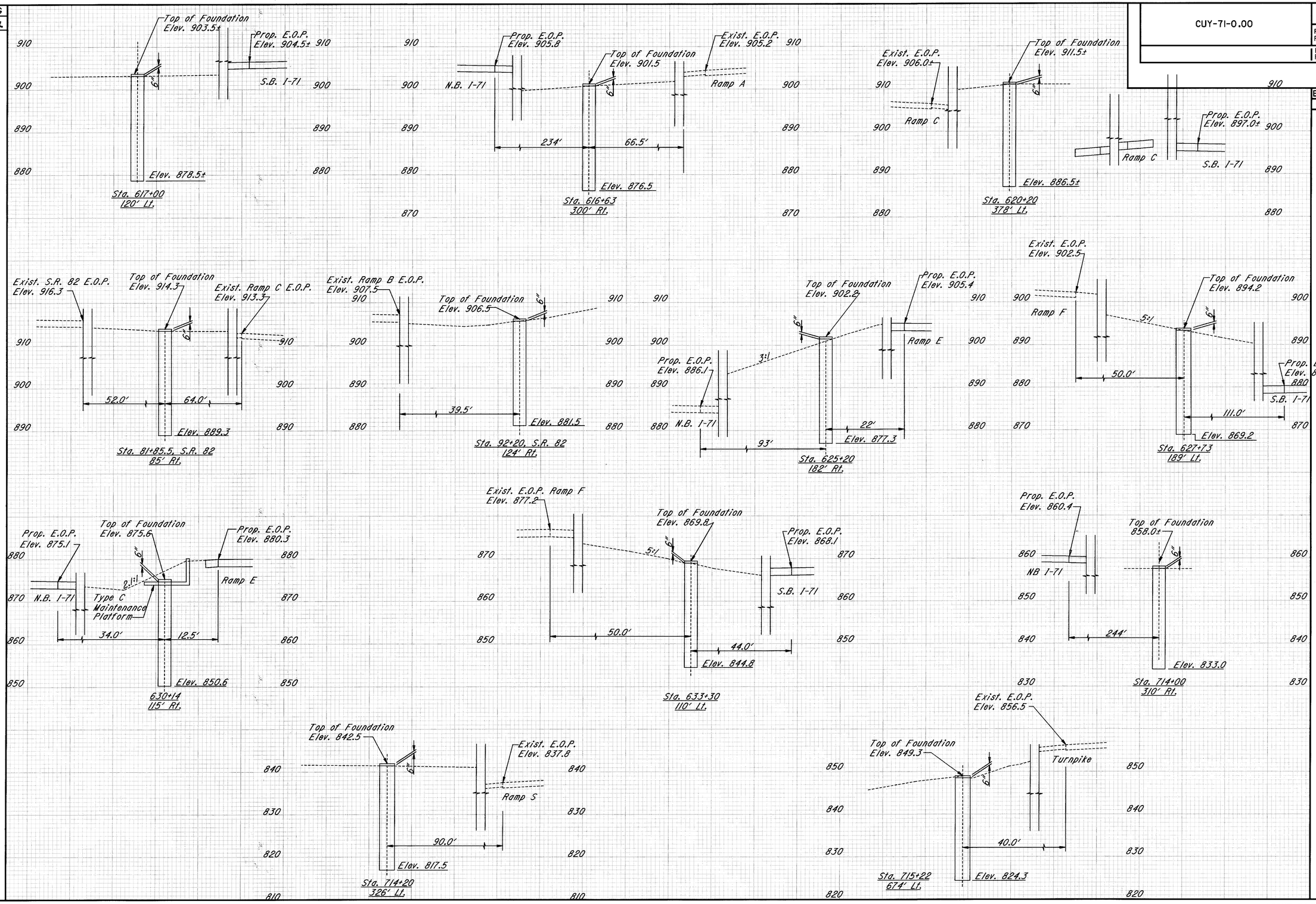

LIGHT TOWER FOUNDATIONS

PLOTTED BY: jgrmoyse
PLOTTED: 24-JUL-1998 15:12
PLOT SUBMITTED: 24-JUL-1998 15:12
307LFDN1.DGN
307lfdn1.dgn

SEEDING	
END WIDTH	SQ. YDS.

CUY-71-0.00	OHIO
	FHWA REGION 5
	FEDERAL PROJECT

286/361

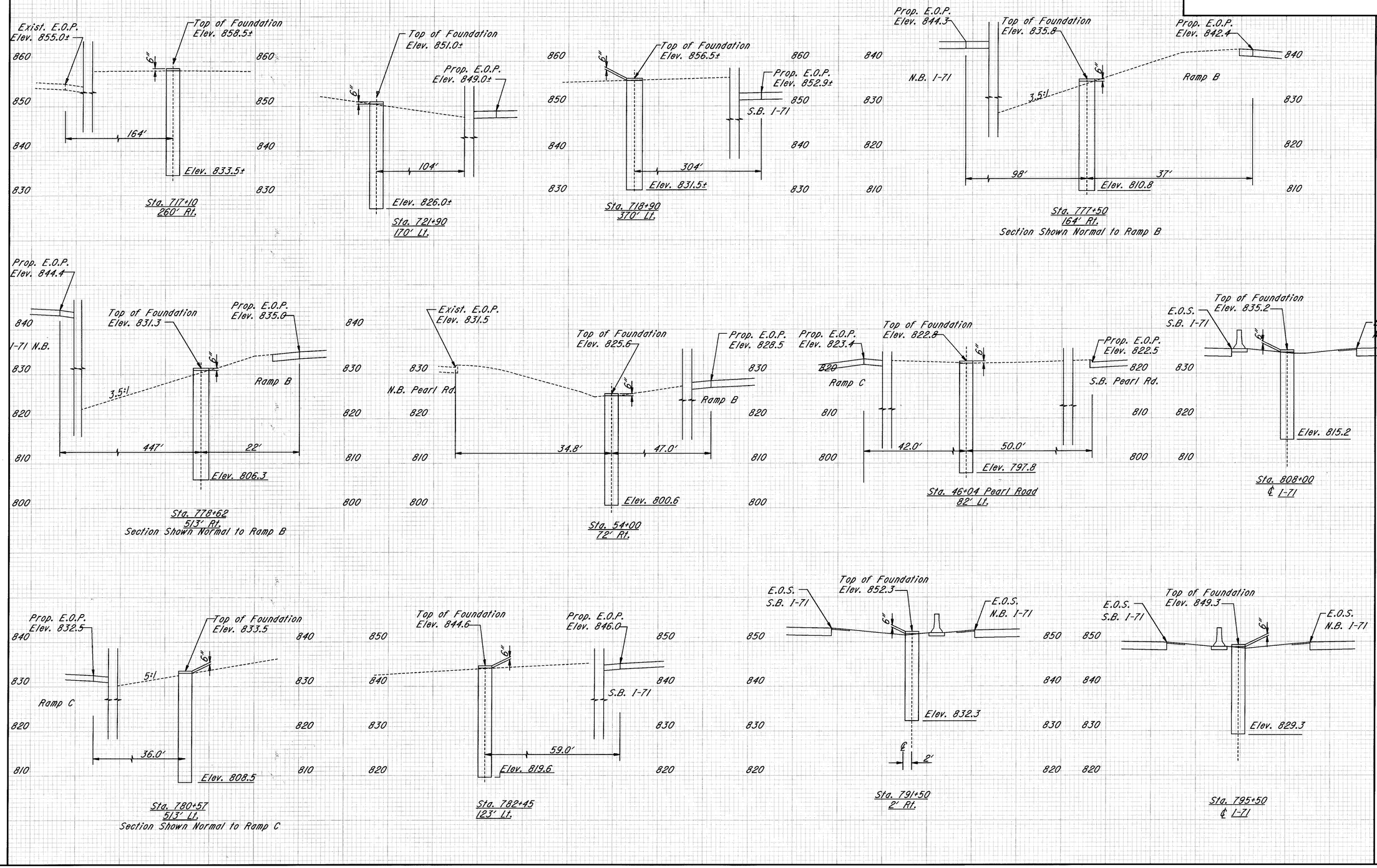

END AREA		VOLUME	
CUT	FILL	CUT	FILL

LIGHT TOWER FOUNDATIONS

PLOT SUBMITTED:24-JUL-1998 15:12

307LFDN2.DGN

PLOTTED BY:jgrmovse
PLOTTED FROM:rsbeforsber

GENERAL NOTES - STRUCTURES

STANDARD DRAWINGS AND SUPPLEMENTAL SPECIFICATIONS

REFERENCE SHALL BE MADE TO STANDARD DRAWINGS

AS-1-81 DATED 9-15-94
EXJ-4-87 DATED 2-14-97
SD-1-69 DATED 6-12-69
FB-1-82 DATED 5-10-82
PCB-91 DATED 4-24-92
BR-1 DATED 12-15-94

AND TO SUPPLEMENTAL SPECIFICATIONS

815 DATED 5-30-96
825 DATED 10-2-89
843 DATED 5-5-98
844 DATED 5-5-98
846 DATED 9-9-97
863 DATED 9-9-97
910 DATED 4-21-97
911 DATED 7-10-97
954 DATED 9-9-97

DESIGN SPECIFICATIONS

THESE STRUCTURES CONFORM TO "STANDARD SPECIFICATIONS FOR HIGHWAY BRIDGES" ADOPTED BY THE AMERICAN ASSOCIATION OF STATE HIGHWAY AND TRANSPORTATION OFFICIALS, 1996, INCLUDING THE 1997 INTERIM SPECIFICATIONS AND THE O.D.O.T. BRIDGE DESIGN MANUAL.

THE DESIGN DATA IS AS FOLLOWS:

DESIGN LOADING	- HS20-44 CASE I AND THE ALTERNATE MILITARY LOADING FOR BRIDGE NOS. CUY-71-0332, 0384, 0395, 0521 AND 0553 L AND R - HS20-44 CASE II AND THE ALTERNATE MILITARY LOADING FOR BRIDGE NO. CUY-71-0100 L AND R - C.F. = 400 (57) FOR BRIDGE NO. CUY-71-0000
HIGH PERFORMANCE CONCRETE SUPERSTRUCTURE	- COMPRESSIVE STRENGTH 4,500 PSI
HIGH PERFORMANCE CONCRETE SUBSTRUCTURE	- COMPRESSIVE STRENGTH 4,000 PSI
STRUCTURAL STEEL	- ASTM A709 GRADE 50 - UNIT STRESS 27,000 PSI FOR BRIDGE NOS. CUY-71-0395, 0521 AND 0553 L AND R ASTM A709 GRADE 36 - UNIT STRESS 20,000 PSI FOR BRIDGE NOS. CUY-71-0100, 0332 AND 0384 L AND R
REINFORCING STEEL	- ASTM A615, A616 OR A617 - GRADE 60, MINIMUM YIELD STRENGTH 60,000 PSI SPIRAL REINFORCEMENT MAY BE PLAIN BARS, ASTM A82 OR A615
DECK PROTECTION METHOD	- EPOXY COATED REINFORCING STEEL, 2 1/2" CONCRETE COVER FOR BRIDGE NOS. CUY-71-0100, 0332, 0384, 0395, 0521 AND 0553 L AND R 1 3/4" SUPERPLASTICIZED DENSE CONCRETE OVERLAY FOR BRIDGE NO. CUY-71-0000
MONOLITHIC WEARING SURFACE	- MONOLITHIC WEARING SURFACE IS ASSUMED FOR DESIGN PURPOSES TO BE 1" THICK.

PROPOSED WORK

THE WORK TO BE DONE UNDER THIS CONTRACT IS AS SHOWN ON THE CONSTRUCTION PLANS AND, IN GENERAL, INCLUDES THE FOLLOWING:

BRIDGE NO. CUY-71-0000

1. PLUG EXISTING SCUPPERS
2. MODIFY EXISTING END DAM FOR STRIP SEAL
3. OVERLAY DECK WITH 1¾" MICRO-SILICA CONCRETE OVERLAY
4. ASPHALT CONCRETE RESURFACING ON APPROACHES
5. PLACE NEW GROUTE FILLED FABRIC MAT SLOPE PROTECTION

BRIDGE NOS. CUY-71-0100, 0384, 0521 AND 0553 L AND R

1. STAGE REMOVAL OF EXISTING CONCRETE DECKS, APPROACH SLABS AND PORTIONS OF THE ABUTMENTS
2. MODIFY, REPAIR AND EXTEND EXISTING SUBSTRUCTURE UNITS
3. REPLACE EXISTING EXPANSION BEARINGS
4. ERECT NEW STRUCTURAL STEEL FOR WIDENED STRUCTURES
5. PLACE NEW CONCRETE DECKS AND PARAPETS
6. SEAL CONCRETE SURFACES
7. PLACE NEW CONCRETE SLOPE PROTECTION

BRIDGE NO. CUY-71-0332 L&R

1. REMOVAL OF EXISTING DECKS AND REPLACE WITH WIDENED DECKS.
2. WIDEN PIERS, ABUTMENTS AND DECKS.
3. REPLACE THE EXISTING APPROACH SLABS.
4. ELIMINATE THE EXISTING EXPANSION JOINTS BY MODIFYING THE ABUTMENTS TO ACT AS A SEMI-INTEGRAL TYPE STRUCTURE.
5. ELIMINATE ALL DRAINAGE STRUCTURES FROM BRIDGES.
6. INSTALL PRESSURE RELIEF JOINTS.
7. CLEAN AND PAINT STRUCTURAL STEEL.
8. REPAIR EXISTING ABUTMENTS AND PIERS.
9. REPAIR ABUTMENT SLOPES AND INSTALL NEW GROUTE FILLED FABRIC MAT SLOPE PROTECTION
10. RETROFIT EXISTING INTERMEDIATE STIFFENERS.
11. ADD MEDIAN RETAINING WALLS BETWEEN ABUTMENTS.

BRIDGE NO. CUY-71-0395 L AND R

1. STAGE REMOVAL OF EXISTING SUPERSTRUCTURE AND PORTIONS OF THE EXISTING ABUTMENTS
2. MODIFY, REPAIR AND EXTEND EXISTING SUBSTRUCTURE UNITS
3. ERECT NEW STRUCTURAL STEEL
4. PLACE NEW CONCRETE DECK AND PARAPETS
5. SEAL CONCRETE SURFACES
6. PLACE NEW GROUTE FILLED FABRIC MAT SLOPE PROTECTION

PORTIONS OF STRUCTURE REMOVED, OVER 20 FOOT SPAN, AS PER PLAN

BRIDGE NO. CUY-71-0395 L AND R:

DESCRIPTION:

THIS WORK SHALL INCLUDE THE ELEMENTS INDICATED IN THE PLANS AND GENERAL NOTES AND ARE NOT SEPARATELY LISTED FOR PAYMENT. ITEMS TO BE REMOVED INCLUDE ALL EXISTING MATERIALS BEING REPLACED BY NEW CONSTRUCTION AND MISCELLANEOUS ITEMS THAT ARE NOT SHOWN TO BE INCORPORATED INTO THE FINAL CONSTRUCTION AND ARE DIRECTED TO BE REMOVED BY THE ENGINEER. THE USE OF EXPLOSIVES, HEADACHE BALLS AND/OR HOE-RAMS WILL NOT BE PERMITTED. THE METHOD OF REMOVAL AND THE WEIGHT OF HAMMER SHALL BE APPROVED BY THE ENGINEER. CHIPPING HAMMERS SHALL NOT BE HEAVIER THAN THE NORMAL 90-POUND CLASS.

PROTECTION OF TRAFFIC:

PRIOR TO DEMOLITION OF ANY PORTION OF THE EXISTING SUPERSTRUCTURE, THE CONTRACTOR SHALL SUBMIT HIS PLANS FOR THE PROTECTION OF VEHICULAR TRAFFIC UNDER THE STRUCTURE TO THE OHIO TURNPIKE COMMISSION AND THE DIRECTOR FOR APPROVAL. THESE PLANS SHALL INCLUDE PROVISIONS FOR ANY DEVICES AND STRUCTURES THAT MAY BE NECESSARY TO ENSURE SUCH PROTECTION. TEMPORARY VEHICAL CLEARANCES SPECIFIED ON THE PLANS OR IN THE PROPOSAL, SHALL BE MAINTAINED AT ALL TIMES EXCEPT AS OTHERWISE APPROVED BY THE DIRECTOR.

THE CONTRACTOR SHALL FURNISH AND ERECT A TEMPORARY PROTECTIVE STRUCTURE UNDER THE SPANS THAT ARE DIRECTLY OVER THE ROADWAY AND SHOULDER AREAS, PLUS ENOUGH ADDITIONAL COVERAGE IN THE AREA TO PREVENT ANY FALLING MATERIAL FROM ANY SPAN FROM REACHING THESE AREAS.

IN ADDITION TO THE TEMPORARY PROTECTIVE STRUCTURE, THE CONTRACTOR SHALL PROVIDE PLASTIC SHEETING OR OTHER APPROVED METHODS TO CONTROL WATER FROM FALLING ON VEHICULAR TRAFFIC.

THE FLOORING AND SIDING OF THE PROTECTIVE STRUCTURES SHALL HAVE NO CRACKS OR OPENINGS THROUGH WHICH MATERIAL PARTICLES MAY FALL. AS A MINIMUM, 3/4 INCH PLYWOOD LAPPED AND NAILED AT THE SEAMS, OR AN EQUIVALENT DESIGN SHALL BE PLACED BETWEEN THE LOWER FLANGES OF THE STRUCTURAL STEEL GIRDERS. PROTECTIVE STRUCTURES EXTENDING A SUFFICIENT DISTANCE BEYOND THE EXTERIOR BEAM, WITH SIDE WALLS EXTENDING UP 4 FEET MINIMUM, WILL BE REQUIRED TO PROTECT THE TURNPIKE TRAFFIC FROM THE FALLING AND FLYING DEBRIS. SIDEWALLS SHALL BE BRACED SUBSTANTIALLY TO RESIST WIND LOADS. DURING SAW CUTTING AND PARAPET REMOVAL OPERATIONS, TEMPORARY SHIELDS ATTACHED TO THE SIDEWALLS AND EXTENDING 1 FOOT ABOVE THE TOP OF PARAPET, SHALL BE INSTALLED TO LIMITS AS DIRECTED BY THE ENGINEER. DEBRIS SHALL NOT BE PERMITTED TO COLLECT ON THE PROTECTIVE STRUCTURES.

BRIDGE NOS. CUY-71-0100, 0332, 0384, 0521 AND 0553 L AND R:

DESCRIPTION:

THIS WORK SHALL INCLUDE THE ELEMENTS INDICATED IN THE PLANS AND GENERAL NOTES AND ARE NOT SEPARATELY LISTED FOR PAYMENT. ITEMS TO BE REMOVED INCLUDE ALL EXISTING MATERIALS BEING REPLACED BY THE NEW CONSTRUCTION AND MISCELLANEOUS ITEMS THAT ARE NOT SHOWN TO BE INCORPORATED INTO THE FINAL CONSTRUCTION AND ARE DIRECTED BY THE ENGINEER, TO BE REMOVED. ALSO THIS WORK SHALL CONSIST OF THE REMOVAL OF CONCRETE DECKS INCLUDING PARAPETS, RAILINGS, DECK JOINTS AND OTHER APPURTENANCES FROM STEEL SUPPORTING SYSTEMS (BEAMS, CROSS FRAMES, ETC.) CARE SHALL BE TAKEN DURING DECK REMOVALS TO PROTECT PORTIONS OF SUCH SYSTEMS THAT ARE TO BE SALVAGED AND INCORPORATED INTO THE PROPOSED STRUCTURE. IN THIS RESPECT, THE USE OF EXPLOSIVES, HEADACHE BALLS AND/OR HOE-RAM TYPE OF EQUIPMENT IS PROHIBITED.

PROTECTION OF TRAFFIC:

PRIOR TO DEMOLITION OF ANY PORTIONS OF THE EXISTING SUPERSTRUCTURE, THE CONTRACTOR SHALL SUBMIT HIS PLANS FOR THE PROTECTION OF TRAFFIC (VEHICULAR, PEDESTRIAN, ETC.) ADJACENT TO AND/OR UNDER THE STRUCTURE TO THE DIRECTOR FOR APPROVAL. THESE PLANS SHALL INCLUDE PROVISIONS FOR ANY DEVICES AND STRUCTURES THAT MAY BE NECESSARY TO INSURE SUCH PROTECTION. TEMPORARY VERTICAL CLEARANCES SPECIFIED ON THE PLANS OR IN THE PROPOSAL SHALL BE MAINTAINED AT ALL TIMES EXCEPT AS OTHERWISE APPROVED BY THE DIRECTOR.

PROTECTION OF STEEL SUPPORT SYSTEMS:

BEFORE DECK SLAB CUTTING IS PERMITTED, THE OUTLINE OF PRIMARY STEEL MEMBERS IN CONTACT WITH THE BOTTOM OF THE DECK SHALL BE DRAWN ON THE SURFACE OF THE DECK. SMALL DIAMETER PILOT HOLES SHALL BE DRILLED 2 INCHES OUTSIDE THESE LINES TO CONFIRM THE LOCATION OF FLANGE EDGES. DECK CUTS OVER OR WITHIN 2 INCHES OF FLANGE EDGES SHALL NOT EXTEND LOWER THAN THE BOTTOM LAYER OF DECK SLAB REINFORCING STEEL. CUTS MADE OUTSIDE 2 INCHES OF FLANGE EDGES MAY EXTEND THE FULL DEPTH OF THE DECK. DURING CUTTING OF THE DECK SLAB, CARE SHALL BE TAKEN NOT TO DAMAGE STEEL MEMBERS THAT ARE TO BE INCORPORATED INTO THE PROPOSED STRUCTURE.

REMOVAL METHODS:

CONCRETE MAY BE REMOVED BY CUTTING AND BY MEANS OF HAND OPERATED PNEUMATIC HAMMERS EMPLOYING POINTED OR BLUNTED CHISEL TYPE TOOLS. FOR REMOVALS ABOVE STEEL MEMBERS, A HAMMER HEAVIER THAN 35 POUNDS BUT NOT TO EXCEED 90 POUNDS MAY BE USED AT THE APPROVAL OF THE ENGINEER, TO ENSURE ADEQUATE DEPTH CONTROL AND TO PREVENT NICKING OR GOUGING THE PRIMARY STEEL MEMBERS.

DECK REMOVALS:

DUE TO THE POSSIBLE PRESENCE OF WELDED ATTACHMENTS TO EXISTING STRUCTURAL STEEL (FINISHING MACHINE, SCUPPER AND FORM SUPPORTS, ETC.) CARE SHALL BE TAKEN DURING DECK REMOVAL TO AVOID DAMAGING STRINGERS WHICH ARE TO REMAIN. STRINGERS DAMAGED BY THE CONTRACTOR'S REMOVAL OPERATIONS SHALL, AT NO COST TO THE PROJECT, BE REPLACED OR REPAIRED. PROPOSED REPAIRS, DEVELOPED BY A REGISTERED PROFESSIONAL ENGINEER, SHALL BE SUBMITTED IN WRITING FOR REVIEW AND APPROVAL BY THE DIRECTOR.

STRUCTURAL STEEL REMOVALS: END CROSSFRAMES NEAR THE CENTERLINE OF BEARINGS SHALL BE REMOVED AND THE EXISTING WEB SURFACES GROUND SMOOTH. BEARINGS AT THE ABUTMENTS AND PIER 1 SHALL BE REMOVED AND THE BEAM FLANGE SURFACES GROUND SMOOTH. GRINDING SHALL BE CAREFULLY DONE AND PARALLEL TO THE BEAMS.

EXTRANEOUS MEMBERS:

EXISTING EXTRANEOUS MEMBERS (I.E., FINISHING MACHINE AND FORM SUPPORTS, ETC., AND THE SUPPORT FOR SCUPPERS WHICH ARE TO BE REMOVED) ATTACHED BY WELDED CONNECTIONS TO PORTIONS OF THE TOP FLANGES DESIGNATED "TENSION" SHALL BE REMOVED AND THE FLANGE SURFACE GROUND SMOOTH. GRINDING SHALL BE CAREFULLY DONE AND PARALLEL TO THE FLANGES.

LOADING LIMITATIONS:

NO PART OF THE STRUCTURE SHALL BE SUBJECTED TO UNIT STRESSES THAT EXCEED 136.5% OF THE ALLOWABLE UNIT STRESSES GIVEN IN THE AASHTO STANDARD SPECIFICATIONS FOR HIGHWAY BRIDGES DUE EITHER TO DEMOLITION, ERECTION OR CONSTRUCTION METHODS, OR TO THE USE OR MOVEMENT OF DEMOLITION OR ERECTION EQUIPMENT ON OR ACROSS THE STRUCTURE. STRUCTURAL ANALYSIS COMPUTATIONS, BY A REGISTERED PROFESSIONAL ENGINEER, SHOWING THE ALLOWABLE STRESSES AND THE MAXIMUM STRESSES PRODUCED BY THE CONTRACTOR'S METHODS OR EQUIPMENT SHALL BE SUBMITTED TO THE DIRECTOR FOR REVIEW AND APPROVAL AT LEAST TWO WEEKS PRIOR TO THE START OF THE WORK.

PAYMENT:

THIS WORK WILL BE PAID FOR AT THE CONTRACT LUMP SUM PRICE BID, WHICH PRICE AND PAYMENT SHALL BE FULL COMPENSATION FOR ALL LABOR, EQUIPMENT, MATERIALS AND INCIDENTALS NECESSARY TO COMPLETE THE WORK IN CONFORMANCE WITH THESE REQUIREMENTS, WITH PERTINENT PROVISIONS OF 202, AND TO THE SATISFACTION OF THE ENGINEER.

CUT LINE CONSTRUCTION JOINT PREPARATION

SAW CUT BOUNDARIES OF PROPOSED CONCRETE REMOVALS 1 INCH DEEP. REMOVE CONCRETE TO A ROUGH SURFACE. WHERE PRACTICABLE, THE EXISTING REINFORCING STEEL WHERE REQUIRED IN THE PLANS SHALL BE LEFT IN PLACE. INSTALL DOWEL BARS IF SPECIFIED. PRIOR TO CONCRETE PLACEMENT ABRASIVELY CLEAN JOINT SURFACE AND EXPOSED REINFORCEMENT TO REMOVE LOOSE AND DISINTEGRATED CONCRETE AND LOOSE RUST. THEN, THE JOINT SURFACE AND EXPOSED REINFORCEMENT SHALL BE THOROUGHLY CLEANED OF ALL DIRT, DUST, OR OTHER FOREIGN MATERIAL BY USE OF WATER, AIR UNDER PRESSURE, OR OTHER METHODS THAT PRODUCE SATISFACTORY RESULTS. CONCRETE BONDING SURFACES SHALL BE WET WITHOUT FREE WATER AS CONCRETE IS PLACED.

PLOT SUBMITTED:05-AUG-1998 13:16
307GNS01.DGN
PLOTTED BY: lmincek
PLOT DRIVER: ...pid08459 dgn genote 307gns01.dgn

GENERAL NOTES - STRUCTURES

SUBSTRUCTURE CONCRETE REMOVAL:

SUBSTRUCTURE CONCRETE REMOVAL SHALL BE BY MEANS OF APPROVED PNEUMATIC HAMMERS EMPLOYING POINTED AND BLUNT CHISEL TOOLS. HYDRAULIC HOE-RAM TYPE HAMMERS WILL NOT BE PERMITTED. THE WEIGHT OF THE HAMMER SHALL NOT BE MORE THAN 35 POUNDS FOR REMOVAL WITHIN 18 INCHES OF PORTIONS TO BE PRESERVED. OUTSIDE THE 18 INCH LIMIT, A HAMMER HEAVIER THAN 35 POUNDS, BUT NOT TO EXCEED 90 POUNDS, MAY BE USED AT THE APPROVAL OF THE ENGINEER. PNEUMATIC HAMMERS SHALL NOT BE PLACED IN DIRECT CONTACT WITH REINFORCING STEEL THAT IS TO BE RETAINED IN THE REBUILT STRUCTURE.

ITEM 503, UNCLASSIFIED EXCAVATION, INCLUDING ROCK, AS PER PLAN

UNCLASSIFIED EXCAVATION SHALL BE IN ACCORDANCE WITH 503 EXCEPT THAT THE BACKFILL MATERIAL BEHIND THE ABUTMENTS SHALL BE C.M.S. 304 MATERIAL PLACED IN LIFTS NOT TO EXCEED A THICKNESS OF SIX (6) INCHES.

PILES DRIVEN TO BEDROCK

PILES SHALL BE DRIVEN TO REFUSAL ON BEDROCK. REFUSAL SHALL BE CONSIDERED AS OBTAINED BY PENETRATING SOFT BEDROCK FOR SEVERAL INCHES WITH A MINIMUM RESISTANCE OF 20 BLOWS PER INCH OR REFUSAL SHALL BE CONSIDERED OBTAINED AFTER THE PILE HAS CONTACTED HARD BEDROCK AND THE PILE HAS THEN RECEIVED AT LEAST 20 BLOWS.

PILES DRIVEN TO BEDROCK :

CUY-71-0100 L&R

THE ULTIMATE BEARING VALUE IS 70 TONS PER PILE FOR THE HP 10X42 ABUTMENT PILES.

ABUTMENT PILES:
40 PILES 19 FEET LONG, ESTIMATED LENGTH
40 PILES OF ORDER LENGTH 19 FEET LONG
20 SPLICES

CUY-71-0332 L&R

THE ULTIMATE BEARING VALUE IS 70 TONS PER PILE FOR THE HP 10X42 ABUTMENT PILES.

ABUTMENT PILES:
78 PILES 15 FEET LONG, ESTIMATED LENGTH
78 PILES OF ORDER LENGTH 15 FEET LONG
39 SPLICES

CUY-71-0384 L&R

THE ULTIMATE BEARING VALUE IS 70 TONS PER PILE FOR THE HP 10X42 ABUTMENT PILES. THE ULTIMATE BEARING VALUE IS 80 TONS PER PILE FOR THE HP 10X42 PER PILES.

ABUTMENT PILES:
40 PILES 34 FEET LONG, ESTIMATED LENGTH
40 PILES OF ORDER LENGTH 34 FEET LONG
20 SPLICES

PIER PILES:
40 PILES 22 FEET LONG, ESTIMATED LENGTH
40 PILES OF ORDER LENGTH 22 FEET LONG
20 SPLICES

CUY-71-0553 L&R

THE ULTIMATE BEARING VALUE IS 70 TONS PER PILE FOR THE HP 10X42 ABUTMENT PILES. THE ULTIMATE BEARING VALUE IS 90 TONS PER PILE FOR THE HP 10X42 PER PILES.

ABUTMENT PILES:
50 PILES 56 FEET LONG, ESTIMATED LENGTH
50 PILES OF ORDER LENGTH 56 FEET LONG
25 SPLICES

PIER PILES:
60 PILES 43 FEET LONG, ESTIMATED LENGTH
60 PILES OF ORDER LENGTH 43 FEET LONG
30 SPLICES

PILES NOT DRIVEN TO BEDROCK:

CUY-71-0395 L&R
THE ULITIMATE BEARING VALUE IS 70 TOMS PER PILE FOR THE 12" CIP ABUTMENT PILES,
THE ULTIMATE BEARING VALUE IS 80 TONS PER PILE FOR THE 12" CIP PIER PILES.

ABUTMENT PILES: 36 PILES 35' LONG, ESTIMATED LENGTH
18 SPLICES 36 PILES OF ORDER LENGTH 40 FEET LONG

PIER PILES: 204 PILES 25 FEET LONG ESTIMATED LENGTH
102 SPLICES 204 PILES OF ORDER LENGTH 30 FEET LONG

ITEM 844, HIGH PERFORMANCE CONCRETE, SUPERSTRUCTURE (DECK), AS PER PLAN

EXPANDED POLYSTYRENE FILLER AS SHOWN IN THE ABUTMENT DETAILS SHALL BE INCLUDED FOR PAYMENT WITH THIS ITEM. THE THICKNESS OF THE POLYSTYRENE FILLER SHALL MATCH THE THICKNESS OF THE BEARINGS.

CONCRETE PLACED ABOVE THE BEAMSEAT SHALL BE INCLUDED FOR PAYMENT WITH THIS ITEM.

THIS ITEM SHALL APPLY TO BRIDGE NUMBERS: CUY-71-0100, 0332, 0384, 0395 , 0521 AND 0553.

FOUNDATION BEARING PRESSURE

ABUTMENT AND PIER FOOTINGS, AS DESIGNED, PRODUCE A MAXIMUM BEARING PRESSURE OF 2 TONS PER SQUARE FOOT. THE ALLOWABLE BEARING PRESSURE IS 2 TONS PER SQUARE FOOT FOR BRIDGE NO. CUY-71-0521 L AND R

PIER FOOTINGS, AS DESIGNED, PRODUCE A MAXIMUM BEARING PRESSURE OF 6 TONS PER SQUARE FOOT. THE ALLOWABLE BEARING PRESSURE IS 6 TONS PER SQUARE FOOT ON BRIDGE NO. CUY-71-0100 L AND R.

AND A MINIMUM VERTICAL CLEARANCE OF 13'-6" SHALL BE MAINTAINED AT ALL TIMES ON VALLEY PARKWAY.

FOOTINGS, BRIDGE NO. CUY-71-0100 L AND R

PIER FOOTINGS SHALL EXTEND A MINIMUM OF 3 INCHES INTO BEDROCK OR TO THE ELEVATION SHOWN, WHICHEVER IS LOWER.

MAINTENANCE OF TRAFFIC

PERIODIC CLOSURE OF ONE DIRECTIONAL LANE ON THE EASTBOUND AND/OR WESTBOUND LANES OF THE OHIO TURNPIKE IS PERMITTED, AT THE CONVENIENCE OF THE COMMISSION. A MINIMUM VERTICAL CLEARANCE OF 14'-0" SHALL BE MAINTAINED ON THE TURNPIKE AT ALL TIMES.

ONE LANE OF TRAFFIC IN EACH DIRECTION WITH A MINIMUM HORIZONTAL WIDTH OF 12'-0" PER LANE

ONE LANE OF TRAFFIC WITH A MINIMUM HORIZONTAL WIDTH OF 12'-0" AND A MINIMUM VERTICAL CLEARANCE OF 14'-0" SHALL BE MAINTAINED AT ALL TIMES ON DRAKE ROAD, ALBION ROAD AND SPRAGUE ROAD.

ONE LANE OF TRAFFIC IN EACH DIRECTION WITH A MINIMUM HORIZONTAL WIDTH OF 12'-0" AND MINIMUM VERTICAL CLEARANCE OF 14'-0" SHALL BE MAINTAINED ON U.S. 42 (PEARL ROAD) AT ALL TIMES.

ONE LANE OF TRAFFIC WITH A MINIMUM HORIZONTAL WIDTH OF 11'-0" SHALL BE MAINTAINED ON BOSTON ROAD AT ALL TIMES.

IN ALL CASES, NO PROTRUSIONS OF GREATER THAN 2 INCHES SHALL EXIST ON THE TRAFFIC SIDE OF THE PORTABLE CONCRETE BARRIER.

UTILITY LINES

ALL EXPENSE INVOLVED IN RELOCATING THE AFFECTED UTILITY LINES SHALL BE BORN BY THE UTILITIES. THE CONTRACTOR AND UTILITIES ARE TO COOPERATE BY ARRANGING THEIR WORK IN SUCH A MANNER THAT INCONVENIENCE TO EITHER WILL BE HELD TO A MINIMUM.

EXISTING STRUCTURE VERIFICATION

DETAILS AND DIMENSIONS SHOWN IN THESE PLANS PERTAINING TO THE EXISTING STRUCTURES HAVE BEEN OBTAINED FROM PLANS OF THE EXISTING STRUCTURES AND FROM FIELD OBSERVATIONS AND MEASUREMENTS. CONSEQUENTLY, THEY ARE INDICATIVE OF THE EXISTING STRUCTURES AND THE PROPOSED WORK BUT THEY SHALL BE CONSIDERED TENTATIVE AND APPROXIMATE. THE CONTRACTOR IS REFERRED TO CMS SECTIONS 102.05, 105.02 AND 513.02.

CONTRACT BID PRICES SHALL BE BASED UPON A RECOGNITION OF THE UNCERTAINTIES DESCRIBED ABOVE AND UPON A PREBID EXAMINATION OF THE EXISTING STRUCTURE BY THE CONTRACTOR. HOWEVER, ALL PROJECT WORK SHALL BE BASED UPON ACTUAL DETAILS AND DIMENSIONS WHICH HAVE BEEN VERIFIED BY THE CONTRACTOR IN THE FIELD.

INSPECTION OF STRUCTURAL STEEL

THE ENGINEER SHALL VISUALLY INSPECT ALL EXISTING BUTT-WELDED SPLICES AND/OR TOP FLANGE COVER PLATE FILLET WELDS TO ENSURE THAT THEY ARE FREE OF DEFECTS. THE DECK SLAB HAUNCH FORMS IMMEDIATELY ADJACENT TO SUCH WELDS SHALL NOT BE ERECTED UNTIL AFTER THE ENGINEER HAS COMPLETED THIS INSPECTION. THIS INSPECTION SHALL NOT TAKE PLACE UNTIL AFTER THE TOP FLANGES ARE CLEANED AS SPECIFIED IN 511.08, BUT IT SHALL BE DONE BEFORE THE DECK SLAB REINFORCEMENT IS INSTALLED. THE COST ASSOCIATED WITH THIS INSPECTION SHALL BE INCLUDED WITH ITEM 844, HIGH PERFORMANCE CONCRETE, SUPERSTRUCTURE (DECK), AS PER PLAN FOR PAYMENT.

ITEM 518, 6" PERFORATED CORRUGATED PLASTIC PIPE, AS PER PLAN

CORRUGATED PIPE USED IN ABUTMENT DRAINAGE SHALL BE 6 INCH DIAMETER, PLASTIC CORRUGATED AS PER CMS 707.33, AASHTO M294, TYPE SP.

ITEM 518, 6" NON-PERFORATED CORRUGATED PLASTIC PIPE, INCLUDING SPECIALS, AS PER PLAN

CORRUGATED PIPE USED IN ABUTMENT DRAINAGE SHALL BE 6 INCH DIAMETER, PLASTIC CORRUGATED AS PER CMS 707.33, AASHTO M294, TYPE S. THIS ITEM SHALL INCLUDE ALL ELBOWS, TEES AND END CAPS REQUIRED TO COMPLETE THE ABUTMENT DRAINAGE SYSTEM.

ITEM 601, CONCRETE SLOPE PROTECTION, AS PER PLAN

THIS WORK SHALL INCLUDE THE FOLLOWING:

1) EXCAVATION OF EXISTING CRUSHED AGGREGATE SLOPE PROTECTION TO A DEPTH NECESSARY TO ESTABLISH A PROPER SUBGRADE DEPTH WHICH WILL ACCEPT THE PROPOSED SIX INCH THICK CONCRETE SLOPE PROTECTION. THE EXISTING CRUSHED AGGREGATE NEED NOT BE REMOVED IN ITS ENTIRETY; HOWEVER, THE CONTRACTOR SHALL GRADE THE REMAINING CRUSHED AGGREGATE TO PROVIDE A UNIFORM PLANE FOR THE SUBGRADE. ADDITIONAL MATERIAL MEETING THE REQUIREMENTS OF ITEM 203 MAY BE REQUIRED, AS DIRECTED BY THE ENGINEER, TO FILL VOIDS BETWEEN THE CRUSHED AGGREGATE.

AT THE CONTRACTOR'S OPTION, THE ENTIRE TWELVE INCH LAYER OF CRUSHED AGGREGATE SLOPE PROTECTION MAY BE EXCAVATED AND REPLACED WITH EMBANKMENT THAT MEETS THE REQUIREMENTS OF 203 AND WILL BRING THE PROPOSED SUBGRADE TO SIX INCHES BELOW THE FINAL GRADE OF THE PROPOSED CONCRETE SLOPE PROTECTION. THIS ADDITIONAL EXCAVATION AND EMBANKMENT WORK MAY BE DONE AT NO ADDITIONAL COST TO THE STATE.

2) PROPOSED SLOPE PROTECTION: THE INSTALLATION OF THE NEW WELDED STEEL WIRE FABRIC REINFORCED SLOPE PROTECTION AS SHOWN IN THE CONTRACT DRAWINGS. INCLUDING REINFORCING STEEL, WELDED STEEL FABRIC, 709.10, DOWEL HOLES AND GROUT, GEOTEXTILE FILTER, PREFORMED EXPANSION JOINT FILLER AND CONCRETE. THE FABRIC SHALL MEET THE REQUIREMENTS OF 712.09, TYPE B (NONWOVEN). FIELD SPLICES SHALL CONSIST OF 12 INCHES OVERLAP SECURED IN ANY MANNER SUITABLE TO THE ENGINEER THAT WILL ASSURE THAT THE OVERLAP IS MAINTAINED. OVERLAP CLOSURE AT THE TOP OF THE TRENCH SHALL BE 18 INCHES, SECURED AS ABOVE.

ALL COSTS OF CONSTRUCTING THE NEW SLOPE PROTECTION, INCLUDING ALL NECESSARY EMBANKMENT, EXCAVATION, 3-#5 REBAR @ 12", WELDED STEEL WIRE FABRIC, FILTER FABRIC, PREFORMED EXPANSION JOINT FILLER, JOINT SEALER, CONCRETE AND ALL OTHER MATERIALS NECESSARY TO COMPLETE THIS WORK. SHALL BE INCLUDED UNDER ITEM 601 - CONCRETE SLOPE PROTECTION, AS PER PLAN.

EUTHENICS INC. CONSULTING ENGINEERS CLEVELAND, OHIO | GN 2

GENERAL NOTES

BRIDGE NOS. CUY-71-0000 AND CUY-71-0100, 0332, 0384, 0395, 0521 AND 0553 L AND R

DESIGN	DRAWN	TRACED	CHECKED	REVIEW	DATE	REVISED
KRD	EEF	——	GFH	RAB	3-94	

PLOTTED BY: lmincek
PLOT: 1:1 Scale
PLOT SUBMITTED: 05-AUG-1998 13:16
307GNS02.DGN
307gns02.dgn

GENERAL NOTES - STRUCTURES

ITEM 511-CONCRETE MISC.: REPLACEMENT OF EXISTING REINFORCING STEEL

ANY EXISTING REINFORCING BARS DEEMED BY THE ENGINEER TO BE UNUSABLE BECAUSE OF CORROSION SHALL BE REPLACED WITH NEW STEEL. ANY EXISTING REINFORCING BARS WHICH ARE TO BE INCORPORATED INTO THE NEW WORK AND WHICH ARE MADE UNUSABLE BY THE CONTRACTOR'S CONCRETE REMOVAL OPERATIONS SHALL BE REPLACED WITH NEW REINFORCING STEEL OF THE SAME SIZE AT THE CONTRACTOR'S COST. ALL WORK SHALL BE TO THE SATISFACTION OF THE ENGINEER. ALL PROVISIONS OF ITEM 509, REINFORCING STEEL AND ITEM 510, DOWEL HOLES, SHALL REMAIN IN EFFECT.

THIS ITEM WILL BE PAID FOR AT THE CONTRACT UNIT PRICE UNDER:

Item Ext.	Unit	Description
511 81400	Pound	Concrete Misc.: Replacement of Existing Reinforcing Steel

ITEM 844 HIGH PERFORMANCE CONCRETE, SUBSTRUCTURE, AS PER PLAN:

INSTALL A 3 FOOT WIDE STRIP, 3/32 INCH THICK, GENERAL PURPOSE, HEAVY DUTY NEOPRENE SHEET WITH NYLON FABRIC REINFORCEMENT AT LOCATIONS SHOWN IN THE PLANS. SECURE THE 3 FOOT WIDE NEOPRENE SHEETING TO THE CONCRETE WITH 1 1/4" X 3/32" (LENGTH X SHANK DIAMETER) #10 GALVANIZED BUTTON HEAD SPIKE THROUGH A 1 INCH OUTSIDE DIAMETER, #10 GAGE GALVANIZED WASHER. MAXIMUM FASTENER SPACING IS 9 INCHES. OTHER SIMILAR GALVANIZED DEVICES WHICH WILL NOT DAMAGE EITHER THE NEOPRENE OR THE CONCRETE MAY BE USED SUBJECT TO THE APPROVAL OF THE ENGINEER.

CENTER THE NEOPRENE STRIPS ON ALL JOINTS. FOR HORIZONTAL JOINTS, SECURE THE HORIZONTAL NEOPRENE STRIP BY USING A SINGLE LINE OF FASTENERS, STARTING AT 6 INCHES (±) FROM THE TOP OF THE NEOPRENE STRIP. FOR THE VERTICAL JOINTS SECURE THE VERTICAL NEOPRENE STRIP BY USING A SINGLE VERTICAL LINE OF FASTENERS, STARTING AT 6 INCHES (±) FROM THE VERTICAL EDGE OF THE NEOPRENE STRIP NEAREST TO THE CENTERLINE OF ROADWAY. FOR VERTICAL JOINTS, INSTALL 2 ADDITIONAL FASTENERS, AT 6 INCHES CENTER TO CENTER, ACROSS THE TOP OF THE NEOPRENE STRIP ON THE SAME SIDE OF THE VERTICAL JOINT AS WHERE THE SINGLE VERTICAL ROW OF FASTENERS IS LOCATED.

THE VERTICAL NEOPRENE STRIPS SHOULD COMPLETELY OVERLAP THE HORIZONTAL STRIPS. LAPS IN THE LENGTH OF THE HORIZONTAL STRIPS DUE TO MATERIAL MANUFACTURING SHALL BE AT LEAST ONE FOOT IN LENGTH, IF NOT VULCANIZED OR ADHESIVE BONDED, OR 6 INCHES IN LENGTH IF THE LAP IS VULCANIZED OR ADHESIVE BONDED. NO LAPS ARE ACCEPTABLE IN VERTICALLY INSTALLED NEOPRENE STRIPS.

THE NEOPRENE SHEETING SHALL BE 3/32 INCH THICK GENERAL PURPOSE, HEAVY DUTY NEOPRENE SHEET WITH NYLON FABRIC REINFORCEMENT. THE SHEETING SHALL BE "FAIRPRENE NUMBER NN-0003", BY E.I. DUPONT DE NEMOURS AND COMPANY, INC., "WINGPRENE" BY THE GOODYEAR TIRE AND RUBBER COMPANY, OR AN APPROVED ALTERNATE. THE NEOPRENE SHEETING SHALL CONFORM TO THE FOLLOWING:

DESCRIPTION OF TEST	ASTM METHOD	REQUIREMENT
THICKNESS, INCHES	D 751	0.94 * .01
BREAKING STRENGTH, GRAB WXF, LBS, MINIMUM	D 751	700 X 700
ADHESIVE 1" STRIP, 2" MINIMUM, LBS, MINIMUM	D 751	9
BURST STRENGTH (MULLEN) PSI, MINIMUM	D 751	1400
HEAT AGING 70 HOURS T 212 F, 180 BEND WITHOUT CRACKING	D2136	NO CRACKING OF COATING
LOW TEMPERATURE BRITTLENESS 1 HOUR AT -40 F, BEND AROUND 1/4 INCH MANDREL	D 2136	NO CRACKING OF COATING

PAYMENT FOR LABOR, MATERIALS AND INSTALLATION OF THESE ITEMS SHALL BE INCLUDED IN ITEM 844 HIGH PERFORMANCE CONCRETE, SUBSTRUCTURE, AS PER PLAN

ITEM 516, VERTICAL EXTENSION OF STRUCTURAL EXPANSION JOINTS, AS PER PLAN

DESCRIPTION:

THIS ITEM SHALL INCLUDE ALL WORK REQUIRED TO INSTALL JOINT SEALS IN THE BRIDGE DECK AT LOCATIONS AS DETAILED IN THESE PLANS, PROVIDE AND INSTALL STEEL PLATES, STEEL RETAINERS, NEOPRENE STRIP SEAL, POURED POLYURETHANE JOINT SEAL, AND ANY ADDITIONAL LABOR, EQUIPMENT, AND MATERIALS NECESSARY TO COMPLETE THIS WORK.

STRUCTURAL STEEL UNDER THIS ITEM WILL NOT REQUIRE SHOP DRAWINGS PRIOR TO FABRICATION. THE CONTRACTOR SHALL MAKE NECESSARY MEASUREMENTS AND PREPARE SKETCHES, DRAWINGS TABLES, ETC. THE ENGINEER SHALL HAVE AUTHORITY AND RESPONSIBILITY FOR ENSURING THAT THE FABRICATED STEEL IS ACCEPTABLE. TECHNICAL ASSISTANCE WILL BE PROVIDED ON REQUEST BY THE BUREAU OF BRIDGES. MILL TEST REPORTS AND SHIPPING DOCUMENTS SHALL BE SUBMITTED TO THE ENGINEER FOR REVIEW AND APPROVAL PRIOR TO INCORPORATING STEEL ITEMS INTO THE WORK, AS REQUIRED BY 501.07. AFTER FABRICATION, THE CONTRACTOR SHALL SUBMIT SHOP DRAWINGS TO THE ENGINEER FOR REVIEW AND APPROVAL TO ENSURE THAT THE DRAWINGS DEPICT THE STEEL AS ACTUALLY INCORPORATED INTO THE WORK. THE ENGINEER WILL THEN SEND ONE APPROVED SET TO THE BUREAU OF BRIDGES FOR INFORMATION. THE FABRICATOR SHALL FURNISH A 35 MILLIMETER MICROFILM COPY OF EACH SHOP DRAWING, WHICH SHALL BE MOUNTED ON AN APERTURE CARD AS SPECIFIED IN 501.05.

MATERIALS:

THE JOINT SEAL SYSTEM SHALL BE A STRIP SEAL CONSISTING OF STEEL RETAINERS AND A NEOPRENE STRIP SEAL GLAND AS MANUFACTURED BY WATSON BOWMAN & ACME CORPORATION, 95 PINEVIEW DRIVE, AMHERST, NEW YORK 14120 (716) 691-7566; STRUCTURAL ACCESSORIES, INC., SOUTH MAIN STREET, P. O. BOX 10, TERRYVILLE CONNECTICUT 06786 (203) 589-8826, OR AN APPROVED EQUAL. AN ADHESIVE SHALL BE USED TO FACILITATE PLACEMENT OF THE NEOPRENE GLAND. ALL MATERIALS SHALL BE STORED AND INCORPORATED IN THE WORK AS RECOMMENDED BY THE MANUFACTURER. A MANUFACTURER'S REPRESENTATIVE SHALL BE PRESENT AT THE JOB SITE UNTIL SUCH TIME AS HE AND THE ENGINEER ARE SURE THAT THE CONTRACTOR IS QUALIFIED IN ALL ASPECTS OF JOINT SEALING.

PHYSICAL PROPERTIES:

1) THE STEEL RETAINER SHALL CONFORM TO ASTM A242 OR A36, (LOW PROFILE).
2) THE ADHESIVE SHALL BE A ONE-PART MOISTURE CURING POLYURETHANE AND HYDROCARBON MIXTURE AS RECOMMENDED BY THE MANUFACTURER.
3) THE NEOPRENE GLAND SHALL CONFORM TO THE PHYSICAL PROPERTIES SPECIFIED FOR AASHTO M220 EXCEPT FOR THE RECOVERY TEST.

INSTALLATION:

THE CONTRACTOR SHALL INSTALL STEEL RETAINERS IN MAXIMUM LENGTHS TO MINIMIZE WELDED BUTT JOINTS. AFTER ALL OTHER WORK ON THE STRUCTURE IS COMPLETE, THE CONTRACTOR SHALL ABRASIVELY CLEAN THE STEEL RETAINER SURFACES WHICH WILL CONTACT THE NEOPRENE GLAND. AFTER AN AIR BLAST AND APPLICATION OF THE ADHESIVE, THE CONTRACTOR SHALL INSTALL THE NEOPRENE GLAND. THE NEOPRENE GLAND SHALL BE ONE CONTINUOUS PIECE ACROSS THE ROADWAY.

METHOD OF MEASUREMENT:

FOOTAGE UNDER THIS ITEM SHALL BE THE LINEAR FEET OF STRIP SEAL MEASURED ALONG THE CENTERLINE OF THE NEOPRENE GLAND COMPLETED, INSTALLED AND ACCEPTED BY THE ENGINEER.

BASIS OF PAYMENT:

THE ACCEPTED QUANTITIES OF SEALED JOINTS SHALL BE PAID FOR AT THE CONTRACT UNIT PRICE BID PER LINEAR FOOT, WHICH PRICE AND PAYMENT SHALL BE FULL COMPENSATION FOR ALL NECESSARY REMOVALS, FURNISHINGS AND PLACING ALL MATERIALS, AND ALL LABOR AND EQUIPMENT NECESSARY TO COMPLETE THE SEALING OF EXPANSION JOINTS ON THE BRIDGE AS SHOWN.

PAYMENT WILL BE MADE UNDER THE FOLLOWING:

ITEM 516 - VERTICAL EXTENSION OF STRUCTURAL EXPANSION JOINTS, AS PER PLAN	LIN. FT.

URETHANE TOP COAT SEALER FOR CONCRETE SURFACES

APPLY URETHANE TOP COAT SEALER TO NEW CONCRETE SUBSTRUCTURE UNITS ADJACENT TO EXISTING SUBSTRUCTURE UNITS AT LOCATIONS SHOWN IN THE PLANS. THE COLOR OF THE URETHANE TOP COAT SHALL MATCH THE COLOR OF THE EPOXY-URETHANE SEALER TO BE APPLIED TO THE EXISTING SUBSTRUCTURE UNITS. THE URETHANE TOP COAT SHALL BE APPLIED ACCORDING TO THE MANUFACTURER'S RECOMMENDATIONS AT THE MINIMUM APPLICATION RATE OF 150 SQ. FT. PER GALLON. THE SURFACE SHALL BE CLEAN WHEN THE URETHANE IS APPLIED. APPLICATION SHALL BE AIRLESS SPRAY, BRUSH OR ROLLER AS DIRECTED BY THE ENGINEER.

THE URETHANE TOP COAT SHALL BE ONE OF THE FOLLOWING PRODUCTS:

1. AMERON AMERCOAT 450 H.S.
2. POLY-CARB MARK 73
3. TNEMEC SERIES 70 ENDURA SHIELD
4. DURAL AQUATHANE/URETHANE 37722

THE COST OF ALL LABOR, EQUIPMENT AND MATERIAL NECESSARY TO ACCOMPLISH THIS ITEM OF WORK SHALL BE PAID FOR UNDER ITEM "SPECIAL - URETHANE TOP COAT SEALER".

CUTTING OR BENDING OF REINFORCING BARS

ANY CUTTING OR BENDING OF BARS NECESSARY TO ACCOMMODATE ANY ESSENTIAL ELEMENT OF WORK RELATED TO THE PROJECT SHALL BE INCLUDED WITH THE APPROPRIATE ITEM 844 FOR PAYMENT.

EUTHENICS INC.
CONSULTING ENGINEERS
CLEVELAND, OHIO

GN 3

GENERAL NOTES

BRIDGE NOS. CUY-71-0000 AND CUY-71-0100, 0332, 0384, 0395, 0521 AND 0553 L AND R

DESIGN	DRAWN	TRACED	CHECKED	REVIEW	DATE	REVISED
KRD	EEF	—	GFH	RAB	3-94	

PLOTTED BY: lminoek
PLOT: PLOT SUBMITTED:05-AUG-1998 13:24
307GNS03.DGN
307gns03.dgn 307gnsnotes.dgn 08459pid.dgn

GENERAL NOTES - STRUCTURES

ITEM 601 - SLOPE PROTECTION MISC.: GROUT FILLED FABRIC MATS

EMBANKMENT SLOPE PROTECTION EXTENDING FROM THE FACE OF THE ABUTMENT DOWN TO THE TOE OF SLOPE SHALL BE AS SPECIFIED IN ITEM 601.05 OF THE CONSTRUCTION AND MATERIAL SPECIFICATION EXCEPT AS MODIFIED HEREIN. THE FOLLOWING SHALL BE CONSIDERED AS SUPPLEMENTAL TO THE PROVISIONS SET FORTH THEREIN.

MATERIAL

THE MATERIAL USED FOR EMBANKMENT SLOPE PROTECTION SHALL CONSIST OF SPECIALLY-WOVEN MULTIPLE PANELS OF DOUBLE LAYER, OPEN SELVAGE NYLON FABRIC, JOINED IN A MAT CONFIGURATION SIMILAR TO "FABRIFORM" 8" FILTER POINT OR APPROVED ALTERNATE. THIS MAT SHALL BE FILLED WITH A GROUT CONSISTING OF A MIXTURE OF PORTLAND CEMENT, FINE AGGREGATE AND WATER SO PROPORTIONED AND MIXED AS TO PROVIDE A PUMPABLE SLURRY. POZZOLAN AND GROUT FLUIDIFIER MAY BE USED AT THE OPTION OF THE CONTRACTOR. THE MIX SHALL EXHIBIT A COMPRESSIVE STRENGTH OF 2,000 P.S.I. AT TWENTY-EIGHT DAYS WHEN MADE AND TESTED IN ACCORDANCE WITH A.S.T.M. C-31 AND C-39.

INSTALLATION

THE GROUT FILLED FABRIC MATS SHALL BE INSTALLED ON THE PREPARED SLOPE IN STRICT ACCORDANCE WITH MANUFACTURER'S RECOMMENDATIONS. THE SIDES AND BOTTOM OF THE GROUT FILLED FABRIC MATS SHALL TERMINATE IN ANCHOR TRENCHES. THE TOP OF THE GROUT FILLED FABRIC MATS SHALL TERMINATE AT THE ABUTMENTS AGAINST 2" PREFORMED EXPANSION JOINT FILLER. (SEE PLAN DETAIL ON SHEET 304B OF 361).

MEASUREMENT FOR PAYMENT

GROUT FILLED FABRIC MATS, AS PER PLAN WILL BE MEASURED BY THE SQUARE YARD OF FINISHED SURFACE COMPLETE IN PLACE.

BASIS OF PAYMENT

PAYMENT FOR ACCEPTED QUANTITIES, COMPLETE IN PLACE WILL BE MADE AT THE CONTRACT UNIT PRICE BID FOR:

ITEM	EXT.	UNIT	DESCRIPTION
601	21100	SQ. YD.	SLOPE PROTECTION MISC.: GROUT-FILLED FABRIC MATS

THIS PRICE SHALL BE FULL COMPENSATION FOR ALL MATERIALS, LABOR, EQUIPMENT AND INCIDENTALS NECESSARY TO COMPLETE THIS ITEM AS SPECIFIED.

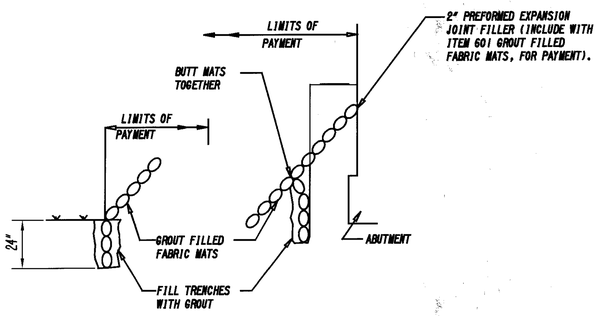

GROUT FILLED FABRIC MAT DETAIL

MECHANICAL CONNECTORS

AN APPROVED TYPE OF THREADED MECHANICAL CONNECTOR FOR REINFORCING BARS SHALL BE USED. INSTALLATION OF CONNECTORS SHALL CONFORM WITH MANUFACTURER'S RECOMMENDED PROCEDURES.

CONNECTORS USED WITH EPOXY COATED BARS SHALL BE EPOXY COATED. COATING FOR BOTH CONNECTORS AND BARS SHALL CONFORM TO THE SAME SPECIFICATIONS. COATINGS WHICH HAVE BEEN DAMAGED OR WHICH OTHERWISE DO NOT MEET SPECIFICATIONS WITH RESPECT TO COLOR, CONTINUITY AND UNIFORMITY MAY BE REPAIRED AS DIRECTED BY THE ENGINEER OF THEY SHALL BE REPLACED WITH MATERIAL WHICH MEETS THE SPECIFICATIONS.

CONNECTORS SHALL CONFORM TO CMS 509 AND BE INCLUDED WITH THE APPROPRIATE ITEM 844 - HIGH PERFORMANCE CONCRETE FOR PAYMENT.

CONSTRUCTION OF BRIDGE RAILING ON ANY STRUCTURE OVER 3 METERS IN SPAN

ALL CONCRETE PARAPETS SHALL NOT BE SLIP FORMED

THE MINIMUM CONCRETE SLUMP DURING PLACEMENT OF ALL CONCRETE PARAPETS SHALL BE 6 INCHES. THE MAXIMUM SLUMP ALLOWED DURING PLACEMENT IS 8 INCHES.

FORMS SHALL NOT BE REMOVED UNTIL AT LEAST 2 HOURS AFTER THE FINAL SET. DETERMINATION OF THE FINAL SET SHALL BE AS PER ASTM C266 (GILLMORE NEEDLE). TESTING SHALL BE PERFORMED BY THE CONTRACTOR AT NO COST TO THE STATE.

ANCHOR BOLTS FOR FENCE POSTS SHALL BE CAST IN PLACE.

THE CONTRACTOR SHALL CONSTRUCT 1 " DEEP AND 1/4 " WIDE CONTROL JOINTS SPACED AT A MINIMUM OF 6 FT AND A MAXIMUM OF 8 FT ON CENTER. THE CONTROL JOINTS SHALL BE MADE IN THE COMPLETE CIRCUMFERENCE OF THE PARAPET, STARTING AND ENDING AT THE ELEVATION OF THE TOP OF THE CONCRETE DECK. THE CONTRACTOR MAY EITHER FORM THE CONTROL JOINTS IN WITH FORM LINERS, OR, WITHIN 24 HOURS OF PLACEMENT, SAW CUT THE CONTROL JOINTS IN WITH THE USE OF AN EDGE GUIDE, FENCE, OR JIG WHICH IS REQUIRED TO ENSURE THAT THE CUT JOINT IS STRAIGHT, TRUE, AND ALIGNED ON ALL FACES OF THE PARAPET. THE ENTIRE LENGTH OF EACH CONTROL JOINT SHALL BE SEALED TO A MINIMUM DEPTH OF 1 *" WITH A CAULKING MATERIAL CONFORMING TO FEDERAL SPECIFICATION, TT-S-00227E.

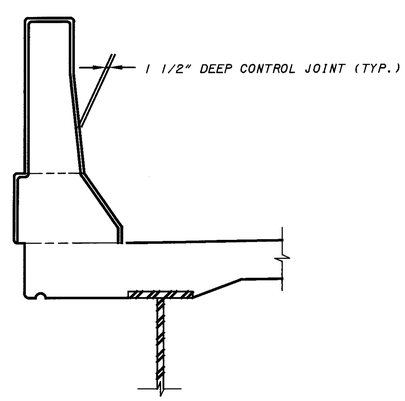

TYPICAL CONTROL JOINT DETAIL

ITEM 516, JACKING AND TEMPORARY SUPPORT OF SUPERSTRUCTURE, AS PER PLAN. THIS ITEM SHALL CONSIST OF FURNISHING ALL NECESSARY LABOR, MATERIALS, AND EQUIPMENT TO RAISE OR REPOSITION ANY EXISTING STRUCTURES TO THE DIMENSIONS AND REQUIREMENTS DEFINED IN THE PROJECT PLANS.

THE CONTRACTOR SHALL BE RESPONSIBLE FOR THE DESIGN, INSTALLATION AND OPERATION OF AN ADEQUATE JACKING SYSTEM, INCLUDING ANY TEMPORARY OR PERMANENT SUPPORTS NECESSARY TO PERFORM THE WORK DESCRIBED IN THE PROJECT PLANS. THREE (3) SETS OF JACKING PLANS, WHICH INCLUDE THE INFORMATION DESCRIBED IN THIS NOTE, SHALL BE SUBMITTED TO THE DIRECTOR FOR APPROVAL AT LEAST THIRTY (30) DAYS BEFORE ACTUAL WORK IS TO BEGIN. THE PLANS SHALL BE PREPARED AND STAMPED BY A REGISTERED PROFESSIONAL ENGINEER.

JACKING SUBMITTALS SHALL INCLUDE AT LEAST THE FOLLOWING:

1. THE SIGNATURE AND NUMBER, OR PROFESSIONAL SEAL, OF THE REGISTERED PROFESSIONAL ENGINEER WHO PREPARED THE SUBMITTAL.

2. CALCULATIONS AND ANALYSIS OF THE STRUCTURE TO DETERMINE AND DEFINE THE ACTUAL LOADING APPLIED AT THE CONTRACTOR'S SELECTION JACKING POINTS.

3. A DRAWING SHOWING THE PHYSICAL AND DIMENSIONAL POSITION OF THE JACKS WITH RESPECT TO THE STRUCTURE INCLUDING CLEARANCES AND CENTER OF LIFT.

4. A SCHEMATIC LAYOUT OF JACKS, CHECK VALVES, PUMPS WITH 3-WAY RETRACTOR VALVE, PRESSURE GAGES, FLOW CONTROL VALVES, ETC. IN ACCORDANCE WITH MANUFACTURER'S RECOMMENDATIONS. ALL JACKS FOR EACH ABUTMENT OR PIER SHALL BE CONNECTED TOGETHER. ALL JACKS AT EACH ABUTMENT OR PIER SHALL BE THE SAME SIZE.

5. ANALYSIS AND CALCULATIONS OF THE STRESSES INDUCED OR CREATED IN THE STRUCTURE AND ANY TEMPORARY OR PERMANENT SUPPORTS. DESIGN CALCULATIONS FOR ANY TEMPORARY OR PERMANENT SUPPORTS.

6. PHYSICAL DIMENSIONS, MATERIALS, AND FABRICATION DETAILS OF ANY TEMPORARY OR PERMANENT SUPPORTS. HORIZONTAL AND VERTICAL MOVEMENT RESTRAINT SHALL BE PROVIDED.

7. A STEP BY STEP PROCEDURE DETAILING ALL STEPS IN THE JACKING OPERATION.

8. METHOD OF ATTACHMENT TO STRUCTURAL MEMBERS. WELDING TO TENSION AREAS WILL NOT BE PERMITTED.

THE ENTIRE SYSTEM INCLUDING JACKS SHALL HAVE 20 % MORE CAPACITY THAN REQUIRED BASED ON CALCULATED LOADS.

FOR LIFTS GREATER THAN 1", JACKS SHALL HAVE LOCKING NUTS TO POSITIVELY LOCK AND SUPPORT THE STRUCTURE DURING THE LIFT.

JACKS SHALL HAVE A SWIVEL LOAD CAP, A DOMED PISTON HEAD OR SOME OTHER DEVICE TO PROTECT AGAINST THE EFFECTS OF SIDE LOAD ON THE JACK.

JACKS ALONE SHALL NOT BE USED TO SUPPORT LOADS EXCEPT DURING THE ACTUAL JACKING OPERATION. TEMPORARY SUPPORTS, BLOCKING OR OTHER METHODS APPROVED BY THE DIRECTOR SHALL BE USED.

SINGLE ACTING RAMS WITH NO OVER-TRAVEL PROTECTION SYSTEM SHALL NOT BE USED.

SPARE EQUIPMENT SHALL BE AVAILABLE ON SITE FOR THE REQUIRED STRUCTURE RAISING TO PROCEED IN THE EVENT OF BREAKDOWN. A LIST OF SPARE EQUIPMENT SHALL BE PROVIDED TO THE ENGINEER.

AT A MINIMUM, A JACKING OPERATION SHALL LIFT ALL BEAMS AT ANY ONE ABUTMENT OR PIER SIMULTANEOUSLY. THE ONLY EXCEPTION IS THE SITUATION WHERE THE WORK INVOLVES REPLACING OR REHABILITATING INDIVIDUAL BEARINGS; NO PERMANENT SHIMMING IS REQUIRED AND THE HEIGHT OF THE LIFT SHALL NOT EXCEED 1/4".

MAXIMUM DIFFERENTIAL JACKING HEIGHT BETWEEN ANY ADJACENT ABUTMENTS OR PIERS SHALL BE 1" OR LESS

IF, DURING THE JACKING OPERATIONS, CRACKING OF THE CONCRETE SUPERSTRUCTURE, SEPARATION OF THE CONCRETE DECK FROM THE STEEL STRINGERS, OR OTHER DAMAGE TO THE STRUCTURE IS VISUALLY OBSERVED, THE JACKING OPERATION SHALL IMMEDIATELY CEASE AND APPROVED SUPPORTS SHALL BE INSTALLED. THE CONTRACTOR SHALL THEN ANALYZE THE DAMAGE AND SUBMIT A METHOD OF CORRECTION TO THE ENGINEER FOR APPROVAL. ANY BEAMS THAT SEPARATE FROM THE DECK SHALL BE EPOXY INJECTED FOR THE DISTANCE OF THE SEPARATION IN ACCORDANCE WITH THE PROPOSAL NOTE "CONCRETE REPAIR BY EPOXY INJECTION". COST OF THIS EPOXY INJECTION OR OTHER REQUIRED REPAIRS SHALL BE BORNE BY THE CONTRACTOR.

THE CONTRACTOR SHALL DEMONSTRATE TO THE ENGINEER THAT THE BRIDGE BEARINGS ARE FULLY SEATED BETWEEN ALL CONTACT AREAS. IF FULL SEATING IS NOT ATTAINED, SUITABLE MEANS OF REPAIR, SUBJECT TO THE APPROVAL OF THE ENGINEER, WILL BE REQUIRED AT THE CONTRACTOR'S EXPENSE.

THE JACKING OPERATION SHALL BE DIRECTED BY A PROFESSIONAL ENGINEER EMPLOYED BY THE CONTRACTOR. FAILURE TO HAVE A PROFESSIONAL ENGINEER PRESENT SHALL BE CAUSE FOR CEASING JACKING OPERATIONS.

PAYMENT SHALL BE MADE AT THE LUMP SUM PRICE BID FOR ITEM 516, JACKING AND TEMPORARY SUPPORT OF SUPERSTRUCTURE, AS PER PLAN AND SHALL INCLUDE ALL NECESSARY TOOLS, LABOR, EQUIPMENT AND MATERIALS NECESSARY TO COMPLETE THIS ITEM OF WORK.

EUTHENICS INC. CONSULTING ENGINEERS CLEVELAND, OHIO | GN 4

GENERAL NOTES

BRIDGE NOS. CUY-71-0000 AND CUY-71-0100, 0332, 0384, 0395, 0521 AND 0553 L AND R

DESIGN	DRAWN	TRACED	CHECKED	REVIEW	DATE	REVISED
KRD	EEF	—	GFH	RAB	3-94	

PLOTTED BY: lmincek
PLOTTED: Tue, 06-Aug-1998 13:25
PLOT SUBMITTED: 05-AUG-1998 13:25
307GNS04.DGN
d:\projects\ohio\cuy\71\0\cuy71-0.00\pid08459\dgn\307gns04.dgn

ITEM SPECIAL - SHOP PAINTING AND FIELD TOUCHUP OF STRUCTURAL STEEL

DESCRIPTION

This specification covers shop cleaning and shop application of a 3 coat paint system on Item 863 - structural steel and the field cleaning and repair of surfaces damaged in shipping, handling, and erecting the structural steel and any other damages during construction.

This specification shall also include the galvanizing as per 711.02 of all nuts, washers, bolts, anchor bolts, and all other structural members designated in the plans.

MATERIAL

A. A three coat paint system consisting of an

Organic Zinc Prime Coat
Epoxy Intermediate Coat
Urethane Finish Coat

and meeting the requirements of Supplemental Specification 910 entitled "OZEU Structural Steel Paint"

B. Inorganic Zinc Silicate primer paint, for the bolted faying surfaces, meeting the requirements of C & MS 708.17.

C. A tie coat. Consisting of an Epoxy Intermediate Coat, meeting the requirements of Supplemental Specification 910, "Epoxy Intermediate Coat" and thinned 50%, by volume, with a thineer as recommended by the paint manufacturer.

Approved paint, items A and C, shall be from one manufacturer, regardless of shop or field application.

Approved paint, Item B, may be from a different manufacturer than Items A and C. Item B paint used shall be from the same manufacturer for both shop application and field touch-up.

PRE-PAINT CONFERENCE

If designated on the plan a pre-paint conference shall be held separately from the preconstruction meeting. Attendees to this meeting shall include the General Contractor, Paint Contractor, Structural Steel erector, Fabricator, Quality Control Specialist, Engineer, Structural Steel Engineer, and others if required in the plan.

The meeting shall take place before the steel is fabricated or painted.

QUALITY CONTROL SPECIALISTS

This person will not be a Foreman or member of the Contractor's or Fabricator's production staff (ie. he will not abrasive blast, paint, recover spent abrasives, etc.).He will not be involved in any other miscellaneous task (ie. mixing paint, running errands, running or working on equipment, etc. Documentation that personnel performing quality control related functions are qualified shall be submitted to the Engineer prior to allowing the Quality Control Specialist (QCS) to begin work. Documentation/verification shall be provided to the Engineer that the QCS has received formal training from one of the following: KTA tator, S.G. Pinney, or Corrosion Control Consultants. He shall be equipped with material safety data sheets, tools and equipment to provide quality control on all facets of the work and shall have a thorough understanding of the plans and specifications pertaining to this project. He shall be responsible for inspecting the equipment at the specified intervals, the abrasives, and the work, at all quality control points. He shall also be responsible for verifying that all work is done within the specified work limitation. He shall cooperate with the Inspector and compare and document quality control readings. He shall have the authority to stop work and the responsibility to inform the Contractor's or Fabricator's Foreman of nonconforming work.

Quality control specialists will be required in the shop and in the field. Before fabrication the fabricator shall designate one individual for each shop as a Quality Control Specialist.

At the preconstruction or pre-paint meeting, the Contractor shall also designate one individual on each project as a Quality Control Specialist (only one person per project will be necessary unless the Contractor is working at more than three (3) sites simultaneously). It will then be necessary to provide an additional Quality Control Specialist and a set of testing equipment as described in the equipment section for each additional three sites being painted simultaneously.

Quality Control Points

Quality control points (QCP) are points in time when one phase of the work is complete and ready for inspection by the Contractor or Fabricator and the Structural Steel Engineer or the Engineer prior to continuing with the next operational step. At these points: The Contractor or Fabricator shall afford access to inspect all affected surfaces. If inspection indicates a deficiency, that phase of the work shall be corrected in accordance with these specifications prior to beginning the next phase of work. Discovery of defective work or material after a Quality Control Point is past or failure of the final product before final acceptance, shall not in any way prevent rejection or obligate the State of Ohio to final acceptance.

Quality Control Points (QCP)	(PURPOSE)
1.) Washing	Remove water soluble oil, grease, salt, dirt, etc.
2.) Solvent Cleaning	Remove asphaltic cement, oil, grease, salt, dirt, etc., not removed during washing
3.) Grinding Edges	Grind edges required.
4.) Abrasive Blasting	Blast surface to receive paint
5.) Prime Coat Application	Check surface cleanlyness, apply prime coat check coating thickness
6.) Intermediate Coat Application	Check surface cleanliness, apply intermediate coat, check coating thickness
7.) Finish Coat Application	Check surface cleanliness, apply finish coat, check coating thickness
8.) Visual Inspection	Visually inspect paint before shipment of steel and check of total system thickness.
9.) Repair of Damage Areas	Check for damage areas after completion of structure and repeat QCP 1 - 7 for damage areas.
10.) Final Review	Wash structure as per QCP#1. Visually inspect system for acceptance and check total system thickness.

SURFACE PREPARATION

This item shall consist of washing, solvent cleaning, and abrasive cleaning of structural steel members.

PLOTTED BY: lmincek
PLOTTED: 05-AUG-1998 13:26
PLOT SUBMITTED:05-AUG-1998 13:26
SHOP.DGN
Bpid08459Bdgn Bgennote Bshop.dgn

DESIGN AGENCY
O.D.O.T.
DISTRICT TWELVE
L&D DEPARTMENT

DATE 03/09/98
REVIEWED MJM
STRUCTURE FILE NUMBER
DRAWN MJM
REVISED
DESIGNED BGW
CHECKED GWM

SHOP PAINTING AND FIELD TOUCH-UP OF STRUCTURAL STEEL NOTES

CUYAHOGA COUNTY
CUY-71-0.00

Washing (QCP #1)

Prior to abrasive blasting, all surfaces to be painted shall be washed with potable water having a nozzle pressure of at least 1,000 PSI and a delivery rate of not less than 4 gallons per minute. (QCP #1) The contractor or fabricator, shall provide equipment specifications to verify the above. The equipment shall also be equipped with gauges to verify the pressure. The water shall contain tri-sodium phosphate detergent at a rate of 2 ounces (by weight) per gallon of technical grade, hydrated water (minimum) to remove water soluble oil, grease, salt and dirt. Before the surfaces dry, the bridge or structural steel member shall be rinsed to remove all remaining detergent. The nozzle shall be held at a maximum of twelve (12) inches from the surface being washed or rinsed. Surfaces shall not be considered as clean until clear rinse water runs off the structure. After the surface is rinsed and allowed to dry, it shall be checked for remaining visible dirt. Surfaces shall be rewashed and rinsed as necessary to remove all remaining dirt. The finish coat shall be applied within three (3) months of washing the structure or structural steel member.

Solvent Cleaning (QCP #2)

After washing, all traces of asphaltic cement, oil, grease, diesel fuel deposits, and other soluble contaminants which remain, shall be removed by solvent cleaning (QCP #2) (see SSPC-SP 1 Solvent Cleaning for recommended practices). Under no circumstances shall any abrasive blasting be done to areas with asphaltic cement, oil, grease, or diesel fuel deposits. All solvent cleaned areas shall be rewashed as previously noted.

Grinding Edges (QCP #3)

The edges of all steel shall be rounded in accordance with AWS D1.5 Section 3.2.9 before abrasive blasting.

Abrasive Blasting (QCP #4)

All steel to be painted shall be blast cleaned according to SSPC-SP10 (near-white blast) as shown in SSPC-Vis 1-89 (pictorial surface preparation standards for painting steel surfaces). Steel shall be maintained in a blast cleaned condition until it has received a prime coat of paint.

During Shop application and field touchup galvanized steel (including corrugated steel bridge flooring), adjacent concrete, existing painted surface and other surfaces not intended to be painted, shall be masked to prevent damage from abrasive blasting and painting operations.

The abrasive shall be a recyclable steel grit. After each use and prior to reuse, the steel grit shall be cleaned of paint chips, rust, mill scale and other foreign material by equipment specifically designed for such cleaning.

The surface profile shall be a minimum of one (1) mils and a maximum of three and one half (3.5) mils. Abrasives of a size suitable to develop the required surface profile shall be used. Any abrasive blasting which is done when the steel temperature is less than 5 degrees above the dew point shall be reblasted when the steel temperature is five (5) degrees above the dew point. Dew point shall be defined as the temperature at which moisture condenses on the steel surfaces.

All fins, tears, slivers, and burred or sharp edges that are present on any steel member after blasting shall be removed by grinding and the area reblasted.

All abrasives and residue shall be removed from surfaces to be painted with a vacuum system equipped with a brush-type cleaning tool. All steel blast cleaned in any one day shall be kept dust free and prime coated the same day. Failure to prime coat the same day will require reblasting before prime coating. No dust or abrasives from adjacent work shall be left on the finish coat.

The Quality Control Specialist shall perform the following test (and the Inspector will verify) to ensure that the air is not contaminated: blow air from the nozzle for thirty (30) seconds onto a white cloth or blotter held in a rigid frame. If any oil or other contaminants are present on the cloth or blotter, abrasive blasting shall be suspended until the problem is corrected and verified by another test. This test shall be done at the start of each shift and at four (4) hour intervals.

Abrasive blasting and painting may take place simultaneously on any one bridge as long as abrasive blasting debris and/or dust created by be the blowing operation does not come in contact with freshly painted surfaces.

The Contractor shall remove all blasting residues from the roadway, pedestrian walkways, gutters and other drainage facilities at the end of each day's work. Care shall be taken to keep all blasting residues out of drains or catch basins. Nearby drains and catch basins shall be covered during blasting operations. Blasting residue shall not be permitted on surfaces which are being used by vehicles or pedestrians. The blasting residues shall be disposed of outside the highway right of way.

TESTING EQUIPMENT

Both the Contractor for the field application and the Fabricator for shop application, shall provide and assign to the Engineer the following testing equipment in good working order, for the duration of the project,one set of testing equipment for each quantity control specialist. These shall be separate sets from those contractor or fabricator provide for Quality Control Specialist.

Each Quality Control Specialist shall have his own testing equipment. When no test equipment is available, no work shall be performed.

1. One (1) Spring micrometer and 1 roll of coarse and 3 (unless otherwise specified on plans) rolls of extra-coarse replica tape.

2. One (1) Positector 2000-6000, Quanix 2200, or Elcometer (A345FBII) and the calibration plates as per the NBS calibration standards in accordance with ASTM D-1186.

3. One (1) Sling Psychrometer including Psychometric tables Used to calculate relative humidity and dew point temperature.

4. Two (2) steel surface thermometers accurate within 2 degrees.

5. Flashlight 2-D cell

6. SSPC Visual Standard for Abrasive Blast Cleaned Steel SSPC-Vis 1-89

7. One (1) Recorder Thermometer capable of recording the date, time, and temperature over a period of at least 12 hours.

HANDLING

All paint and thinner shall be delivered to the project site or Fabricator's shop in original, unopened containers with labels intact. Minor damage to containers is acceptable provided the container has not been punctured. Thinner containers shall be a maximum of five (5) gallons.

Paint shall be stored at the temperature recommended by the manufacturer to prevent paint deterioration.

Each container of paint and thinner shall be clearly marked or labeled to show paint identification, component, color, lot number, stock number, date of manufacture, and information and warnings as may be required by Federal and State laws.

All containers of paint and thinner shall remain unopened until required for use. The label information shall be legible and shall be checked at the time of use.

Solvent used for cleaning equipment is exempt from the above requirements.

Paint which has livered, gelled or otherwise deteriorated during storage shall not be used. However, thixotropic materials which can be stirred to attain normal consistency may be used.

The oldest paint of each kind shall be used first. No paint shall be used which has surpassed its shelf life.

Paint may be considered as eligible for payment for material on hand as specified in 109.07. However, only paint which the contractor can prove to the Engineer will be used during the construction season shall be eligible for payment. The Contractor shall provide the Engineer calculations indicating the total square feet of steel to be painted during the construction season. He shall also provide calculations showing the total number of gallons required. The Contractor shall be responsible to store the paint on the project in such manner to prevent theft and adverse temperatures. He shall provide thermometers capable of monitoring the maximum high and low temperatures within the storage facility. The Contractor is responsible for properly disposing of all unused paint and paint containers.

The Contractor shall furnish shipping invoices for all materials used on the project to the Engineer, prior to use.

MIXING AND THINNING

All ingredients in any container of paint shall be thoroughly mixed immediately before use and shall be agitated often enough during application to maintain a uniform composition; however, the primer shall be continuously mixed by an automated agitation system (Hand held mixers not allowed). Paint shall be carefully examined after mixing for uniformity and to verify that no unmixed pigment remains on the bottom of the container. The paint shall be mixed with a high shear mixer (such as a Jiffy Mixer). Paddle mixers or paint shakers are not allowed. Paint shall not be mixed or kept in suspension by means of an air stream bubbling under the paint surface.

All paint shall be strained after mixing. Strainers shall be of a type to remove only skins and undesirable matter, but not the pigment.

No thinner shall be added to the paint without the Engineer's approval, and only if necessary for proper application as recommended by the manufacturer. When the use of thinner is permissible, thinner shall be added slowly to the paint during the mixing process. All thinning shall be done under supervision of the Engineer. In no case shall more thinner be added than that recommended by the manufacturer's printed instructions. Only thinners recommended and supplied by the paint manufacturer may be added to the paint. No other additives shall be added to the paint.

Catalysts, curing agents, or hardeners which are in separate packages shall be added to the base paint only after the base paint has been thoroughly mixed. The proper volume of the catalyst shall then be slowly poured into the required volume of base with constant agitation. Liquid which has separated from the pigment shall not be poured off prior to the mixing. The mixture shall be used within the pot life specified by the manufacturer. Therefore only enough paint shall be catalyzed for prompt use. Most mixed, catalyzed paints cannot be stored, and unused portions of these shall be discarded at the end of each working day.

COATING APPLICATION

General

All structural steel, scuppers, bulb angles, expansion joints, steel railing, exposed steel piling, drain troughs, galvanized surfaces and other areas indicated on the plans shall be painted unless otherwise noted in the plans.

Galvanized surfaces to be embedded in concrete and surfaces in contact with seals, shall be masked and receive no paint.

All areas where field welding is required shall be masked prior to shop coating and receive no paint.

The top of flanges shall receive the prime coat only.

Areas to receive studs shall not be masked but paint shall be removed before studs are applied.

Treatment of Faying Surfaces

Surfaces indicated below shall be treated according to Method A or Method B as described in this specification:

1. Faying surfaces of main beam or girder bolted field splices.

2. All internal contact surfaces of filler and splice plates.

3. Other surfaces indicated in the plans.

Bolted crossframes on straight beams or girders do not need to meet the requirements of Method A or Method B unless indicated otherwise in the plans.

Method A

The faying surfaces shall be coated with inorganic zinc primer.

The coating of these faying surfaces with the inorganic zinc-rich primer shall be done by using a double masking technique. First, the areas adjacent to the faying surfaces shall be tightly masked and the inorganic zinc primer applied. After this primer has dried sufficiently enough to avoid damage, the faying surfaces shall be masked and the remainder of the girder shall be coated with the organic zinc-rich primer and subsequent coats.

All bolted shop connections and bolted cross frames shall be removed and disassembled prior to the blasting and coating of the girders or beams. The parts shall be blasted separately and primed, then reassembled and the bolts fully tightened using the turn of the nut method.

Method B

The faying surfaces shall be coated with organic zinc primer only per this specification. In order to use Method B, the primer shall be tested in accordance with the methods described in "Allowable Stress Design Specification for Structural Joints Using ASTM A325 or A490 Bolts". Testing shall include slip tests and tension creep tests. A minimum slip coefficient of 0.33 shall be attained.

Testing shall be performed by an accredited laboratory at the Contractor's expense. Certified test results shall be furnished to the Engineer. Documentation shall also include certification that the essential variables (defined in section 1.2, Appendix A, of the Structural Joints Specification) used in the testing are the same as those used in the paint provided for the structure.

All galvanized components, including galvanized nuts, bolts, and washers, shall be solvent cleaned after installation. The epoxy tiecoat, epoxy coat and the urethane protective coat shall then be applied.

Temporary erection marks added by the fabricator to highlight or enhance the required steel stamped erection marks shall be made without damaging the paint system. Temporary erection marks shall be applied only after the finish coat is cured and shall be removed at the end of the project.

Unless otherwise specified, all coats shall be applied by spray.

The Contractor for field application and the Fabricator for shop application, shall supply the Engineer with the product data sheets before any coating is done. The product data sheets shall indicate the mixing and thinning directions, the recommended spray nozzles and pressures and the minimum drying time for shop applied coats.

PLOTTED BY: lmincek
PLOTTED: 03-Sep-98 13:28
PLOT SUBMITTED: 05-AUG-1998 13:28
SHOP.DGN
Pgennotes\shop.dgn
Pid08459\dgn\Pbrsber\forsber

289D
361
DESIGN AGENCY
O.D.O.T.
DISTRICT TWELVE
L&D DEPARTMENT
DATE 03/09/98
REVIEWED MJM
STRUCTURE FILE NUMBER
DRAWN MJM
REVISED
DESIGNED BGW
CHECKED GWM

SHOP PAINTING AND FIELD TOUCH-UP OF STRUCTURAL STEEL NOTES

CUYAHOGA COUNTY
CUY-71-0.00

These product data sheets shall be followed except when they conflict with these specifications, in which case the specifications shall govern.

If the surface is degraded or contaminated after surface preparation and before painting, the surface shall be restored before painting application. In order to prevent degradation or contamination of cleaned surface, the prime coat of paint shall be applied within twenty four (24) hours after blast cleaning with method A, and within eight (8) hours after blast cleaning with method B, as required in surface preparation above.

Cleaning and painting shall be scheduled so that dust or other contaminants do not fall on wet, newly-painted surfaces. Surfaces not intended to be painted shall be suitably protected from the effects of cleaning and painting operations. Overspray shall be removed with a stiff bristle brush, wire screen, or a water wash with sufficient pressure to remove overspray without damaging the paint. The overspray must be removed before applying the next coat. All abrasives and residue shall be removed from painted surfaces before recoating, with a vacuum system equipped with a brush type cleaning tool.

No visible abrasives from adjacent work shall be left on any coat. Abrasives shall be removed.

Spray application for the intermediate coat (epoxy) shall not be used where traffic (including railroad, highway and river traffic, public and private property) is affected unless the operation is totally contained to prevent overspray. If brushed more than one coat may be necessary to produce the required millage.

Spray Application (General)

All spray application of paint shall be in accordance with the following:

Primer ingredients shall be kept uniformly mixed in the Spray equipment shall be kept clean so that dirt, dried paint and other foreign materials are not deposited in the paint film. Any solvent left in the equipment shall be completely removed before using.

Paint shall be applied in a uniform layer with overlapping at the edges of the spray pattern. The border of the spray pattern shall be painted first; with the painting of the interior of the spray pattern to follow, before moving to the next spray pattern area. A spray pattern area is such that the gun shall be held perpendicular to the surface and at a distance which will ensure that a wet layer of paint is deposited on the surface. The trigger of the gun should be released at the end of each stroke. All bolts and rivet heads shall be sprayed from at least two (2) directions or brushed to insure coverage.

Each spray operator shall demonstrate to the Engineer his ability to apply the paint as specified. Any operator who does not demonstrate this ability shall not spray.

If mud cracking occurs, the affected area shall be cleaned to bare metal in accordance with surface preparation above and repainted.

All spray equipment used shall be suitable for use with the specified paint. Paint manufacturer's equipment recommendations shall be consulted in the event of paint application problems.

If air spray is used, traps or separators shall be provided to remove oil and condensed water from the air. The traps or separators must be of adequate size and must be drained periodically during operations. The following test shall be done by the Contractor and verified by the Engineer to insure that the traps or separators are working properly. Blow air from the spray gun for thirty (30) seconds onto a white cloth or blotter held in a rigid frame. If any oil, water or other contaminants are present on the cloth or blotter: painting shall be suspended until the problem is corrected and verified by another test. This test shall be done at the start of each shift and at four (4) hour intervals. This is not required for an airless sprayer.

Application Approval

The beginning of the application of each of the three different coats shall be subject to inspection and approval. The purpose of this inspection is to detect any defects which might result from the Contractor's method of application. If any defects are discovered, the Contractor shall make all necessary adjustments to his method of application to eliminate these defects before proceeding with application.

Temperature

Paint shall not be applied when the temperature of the air, steel, or paint is below 50 degrees F. Paint shall not be applied when the steel surface temperature is expected to drop below 50 degrees F before the paint has cured for the minimum times specified below:

	50 F	60 F	70 F
Primer	4 hrs.	3 hrs.	2 hrs.
Intermediate	6 hrs.	5 hrs.	4 hrs.
Finish	8 hrs.	6 hrs.	4 hrs.

The above temperatures and times shall be monitored with the recording thermometer.

Moisture

Paint shall not be applied when the steel surface temperature is less than 5 degrees F above the dew point. Paint shall not be applied to wet or damp surfaces or on frosted or ice-coated surfaces. Paint shall not be applied when the relative humidity is greater than 85%. Paint shall not be applied during rain, fog or mist unless the above moisture criteria is met.

Continuity

Each coat of paint shall be applied as a continuous film of uniform thickness free of all defects such as holidays, runs, sags, etc. All thin spots or areas missed shall be repainted and permitted to dry before the next coat of paint is applied.

Dry Film Thickness

Prime thickness, cumulative prime and intermediate thickness and cumulative prime, intermediate and finish thickness shall be determined by use of type 2 magnetic gage in accordance with the following:

Five (5) separate spot measurement spaced evenly over each 100 square feet of area to be measured. For field measurements these measurements shall be taken on flanges, webs, cross bracing, stiffeners, etc. Three (3) gage readings shall be made for each spot measurement of either the substrate or the paint. Move the probe a distance of one to three inches for each new gage reading. Discard any unusually high or low gage reading that cannot be repeated consistently. Take the average (mean) of the three gage readings as the spot measurement. The average of five spot measurements for each such 100 square foot area shall not be less that the specified thickness. No single spot measurement in any 100 square foot area shall be less than 80% of the specified thickness. Any one of three readings which are average to produce each spot measurement, may under- run by a greater amount. The five spot measurements shall be made for each 100 square feet of area as follows:

1. For structures or batch of structural steel not exceeding 300 square feet in area, each 100 square foot area shall be measured.

2. For structures or batch of structural steel not exceeding 1,000 square feet in area, three 100 square foot areas shall be randomly selected and measured.

3. For structures or batch of structural steel exceeding 1,000 square feet in area, the first 1,000 square feet shall be measured as stated in section 2 and for each additional 1,000 square feet, or increment thereof, one 100 square

PLOTTED BY: lmincek
PLOTTED: 05-AUG-1998 13:28
PLOT SUBMITTED: 05-AUG-1998 13:28
SHOP.DGN
Pid08459Bdgn Bannotes Bshop.dgn

DESIGN AGENCY: O.D.O.T. DISTRICT TWELVE L&D DEPARTMENT

DATE: 03/09/98

REVIEWED: MJM STRUCTURE FILE NUMBER

DRAWN: MJM REVISED

DESIGNED: BGW CHECKED: GWM

SHOP PAINTING AND FIELD TOUCH-UP OF STRUCTURAL STEEL NOTES

CUYAHOGA COUNTY CUY-71-0.00

GN8

foot area shall be randomly selected and measured.

4. If the dry film thickness for any 100 square foot area (sections 2 & 3 is not in compliance with the requirements of paragraph 1 of this section, then each 100 square foot area shall be measured.

5. Other size areas or number of spot measurements may be specified in the contract plans as appropriate for the size and shape of the structure to be measured.

Each coat of paint shall have the following mil thickness measured above the peaks:

	Min. Spec Thickness	Max. Spec. Spot	Min. Spot	Max
Prime	3.0	5.0	2.5	7.5
Intermediate	5.0	7.0	4.0	10.5
Sub Total	8.0	12.0	6.4	18.0
Finish	2.0	4.0	1.6	6.0
Total	10.0	16.0	8.0	24.0

Film thicknesses greater than the maximum specified thicknesses that do no exhibit defects (such as runs, sags, bubbles, mudcracking, etc.) and for which the Contractor has received a written statement from the coating manufacturer stating that this excessive thickness is not detrimental, may remain in place at the discretion of the Director.

For any spot or maximum average thickness over 24 mils, it will be necessary for the Contractor to prove to the Department that the excess thickness will not be detrimental to the coating system. This shall be accomplished by providing the Director, for approval, certified test data proving that the excessive thickness will adequately bond to the steel when subjected to thermal expansion and contraction. This thermal expansion and contraction and expansion cycles have taken place, the tested system shall be subjected to pull off tests and the results compared to the results of pull off tests which have been performed on a paint system with the proper thicknesses. In addition to the certified test results, it will also be necessary for the Contractor to provide the Director a written statement from the paint manufacturer stating that this excessive thickness is not detrimental.

If the Director does not approve the excessive coating thicknesses or the Contractor elects not to provide the required written statement from the plant manufacturer and the certified test results when required, the Contractor, at his own expense, shall remove and replace the coating. The removal and replacement of the coating shall be done as specified in the section of this specification titled Repair Procedures.

Prime, Intermediate And Finish Coat Application (QCP #5, #6 & #7

Each coat of paint shall be in a proper state of cure or dryness before the application of the succeeding coat. Paint shall be considered ready for recoating when an additional coat can be applied without the development of any detrimental film irregularities, such as lifting, wrinkling or loss of adhesion of the undercoat. The time interval between coating applications shall be in compliance with manufacture's written instructions and no more than thirty (30) days between the prime and intermediate coats and thirteen (13) days between the intermediate and finish coats. These maximum recoat times include weather related days.

No additional time for weather delays will be allowed. Any coat which has cured more than the above allotted time without recoating shall be removed and the steel reblasted to SSPC-SP10.

The completion date (month and year) of the finish coat and the letters OZEU shall be stenciled on the steel in 4" letters with a black urethane paint. This date shall be applied at four locations near the end of each outside beam on the outside web visible from the road or as directed by the Engineer.

HANDLING AND SHIPPING

Extreme care shall be exercised in handling the steel in the shop, during shipping, during erection, and during subsequent construction of the bridge. Painted steel shall not be moved or handled until sufficient cure time has elapsed and approval has been obtained from the inspector. The steel shall be insulated from the binding chains by softeners approved by the Engineer. Hooks and slings used to hoist steel shall be padded. Diaphragms and similar pieces shall be spaced in such a way that no rubbing will occur during shipment that may damage the coatings. The steel shall be stored on pallets at the job site, or by other means approved by the Engineer, so that it does not rest on the ground or so that components do not fall or rest on each other. All shipping and job site storage details shall be presented to the Engineer prior to fabrication in writing and be approved prior to shipping the steel. Approval of the above does not relieve the contractor of responsibility of shipping or storage damage.

REPAIR OF DAMAGED AREAS (QCP #9)

Damaged areas of paint and areas which do not comply with the requirements of this specification, shall have the paint removed and all defects corrected. The steel shall then be retextured to a near white condition to produce a profile of between 1 to 3 1/2 mils. This profile shall be measured immediately prior to the application of the prime coat to insure that the profile is not destroyed during the feathering procedure.

The existing paint shall be feathered to expose a minimum of 1/2 inch of each coat.

During the reapplication of the paint, care shall be used to insure that each coat of paint is only applied within the following areas. The prime coat shall only be applied to the surface of the bare steel and the existing prime coat, which has been exposed by feathering. The prime coat shall not be applied to the adjacent intermediate coat. The intermediate coat shall only be applied to the new prime coat and the existing feathered intermediate coat. The intermediate coat and the existing finish coat which has been feathered or lightly sanded. The finish coat shall not extend beyond the areas which has been feathered or lightly sanded.

The first two coats shall be applied by brush. The finish coat shall be applied by either brush or spray.

It may be necessary to make several applications in order to achieve the proper thickness for each coat.

During the application of the prime coat, the paint should be continuously mixed.

All abrasive blasting and painting shall still be done in accordance with the specifications.

All repairs should be made in a manner to blend the patched are with the adjacent coating. The finished surface of the patched area shall have a smooth even profile with the adjacent surface.

The first repair area shall be used as a test section and no more repairs made until the methods are approved by the Engineer.

The Contractor or fabricator shall submit his method of correcting runs in writing to the Director for approval.

Damaged paint which will be inaccessible for coating after erection shall be repaired and recoated prior to erection.

In order to minimize damage to the painted steel, concrete splatter and form leakage shall be washed from the surface of the

PLOTTED BY: lmincek
PLOTTED ON: 5-AUG-1998 13:29
PLOTTED FROM: PLOT SUBMITTED:05-AUG-1998 13:29
SHOP.DGN
Bpid03459Bdgn Bgennote Bshop.dgn

289F
361
DESIGN AGENCY O.D.O.T. DISTRICT TWELVE L&D DEPARTMENT
DATE 03/09/98
REVIEWED MJM
STRUCTURE FILE NUMBER
DRAWN MJM
REVISED
DESIGNED BGW
CHECKED GWM

SHOP PAINTING AND FIELD TOUCH-UP OF STRUCTURAL STEEL NOTES

CUYAHOGA COUNTY CUY-71-0.00

steel shortly after the concrete is placed and before it is dry. If concrete dries it shall be removed and paint repaired.

Temporary attachments, supports for scaffolding and,finishing machine or forms shall not damage the coating system.(In particular, on the fascias where bracing is used, sufficient size support pads shall be used.)

After the erection work has been completed, including all connections and the approved repair of any damaged beams, girders or other steel members, and the deck has been placed, the Contractor and Engineer shall inspect the structure for damaged paint. (QCP #10). Damaged areas shall be repaired by repeating QCP #1 to #8. The contractor shall wash the structure as per QCP#1 after all work to the structure is completed.

SAFETY REQUIREMENTS AND PRECAUTIONS

The contractor shall meet the safety requirements of the Ohio Industrial Commission and the Occupational Safety and Health Administration (OSHA), in addition to the scaffolding requirements below.

The Contractor is required to meet the applicable safety requirements of the Ohio Industrial Commission in addition to the scaffolding requirements specified below.

The Material Safety Data Sheets (MSDS) shall be provided at the preconstruction meeting for all paint, thinners and abrasives used on this project. No work shall start until the MSDS has been submitted.

The fabricator shall also provide MSDS for all abrasives to be used on this project to the shop inspector. No work shall start until MSDS have been submitted.

SCAFFOLDING

Rubber rollers, or other protective devices meeting the approval of the Engineer, shall be used on scaffold fastenings. Metal rollers or clamps and other types of fastenings which will mar or damage coated surfaces shall not be used.

INSPECTION ACCESS FOR FIELD TOUCHUP

In addition to the requirement of 105.11, the contractor shall furnish, erect, and move scaffolding and other appropriate equipment, to permit the Inspector the opportunity to inspect (closely observe), all affected surfaces. This opportunity shall be provided to the Inspector during all phases of the work and continue for a period of at least ten (10) working days after the touch-up work has been completed. When scaffolding is used, it shall be provided in accordance with the following requirements.

When scaffolding, or the hangers attached to the scaffolding are supported by horizontal wire ropes, or when scaffolding is placed directly under the surface to be painted, the following requirements shall be complied with:

When scaffolding is suspended forty three inches or more below the surface to be painted, two rows of guardrail shall be placed on all sides of the scaffolding. One row of guardrail shall be placed at forty two inches above the scaffolding and the other row at twenty inches above the scaffolding.

When the scaffolding is suspended at least twenty one inches, but less than forty three inches below the surface to be painted, a row of guardrail shall be placed on all sides of the scaffolding at twenty inches above the scaffolding.

Two rows of guardrail shall be placed on all sides of scaffolding not previously mentioned. The rows of guardrail shall be placed at forty two and twenty inches above scaffolding, as previously mentioned.

All scaffolding must be at least twenty four inches wide when guardrail is used and twenty eight inches wide when the scaffolding is suspended less than twenty one inches below the surface to be painted and guardrail is not used. If two or more scaffolding are laid parallel to achieve the proper width, they must be rigidly attached to each other to preclude any differential movement.

All guardrail shall be constructed as a substantial barrier which is securely fastened in place and is free from protruding objects such as nails, screws and bolts. There shall be an opening in the guardrail, properly located, to allow the Inspector access onto the scaffolding.

The rails and uprights shall be either metal or wood. If pipe railing is used, the railing shall have a nominal diameter of no less than one and one half inches. If structural steel railing is use, the rails shall be 2 X 2 X 3/8 inch steel angles or other metal shapes of equal or greater strength. If wood railing is used, the railing shall be 2 X 4 inch (nominal) stock. All uprights shall be spaced at no more than 8 feet on center. If wood uprights are used, the uprights shall be 2 X 4 inches (nominal) stock.

When the surface to be inspected is more than fifteen feet above the ground or water, and the scaffolding is supported from the structure being painted, the Contractor shall provide the Inspector with a safety belt and lifeline. The lifeline shall not allow a fall greater than six feet. The Contractor shall provide a method of attaching the lifeline to the structure independent of the scaffolding, cables, or brackets supporting the scaffolding.

When scaffolding is more than two and one half feet above the ground, the Contractor shall provide a ladder for access onto the scaffolding. The ladder and any equipment used to attach the ladder to the structure shall be capable of supporting 250 pounds with a safety factor of at least four (4). All rungs, steps, cleats, or treads shall have uniform spacing and shall not exceed twelve inches on center. At least one side rail shall extend at least thirty six inches above the landing near the top of the ladder.

An additional landing shall be required when the distance from the ladder to the point where the scaffolding may be accessed, exceeds twelve inches. The landing shall be a minimum of at least twenty four inches wide and twenty four inches long. It shall also be of adequate size and shape so that the distance from the landing to the point where the scaffolding is accessed does not exceed twelve inches. The landing shall be rigid and firmly attached to the ladder; however, it shall not be supported by the ladder. The scaffolding shall be capable of supporting a minimum of one thousand pounds.

In addition to the aforementioned requirements, the Contractor is still responsible to observe and comply with all Federal, State and local laws, ordinances, regulations, orders and decrees.

The Contractor shall furnish all necessary traffic control to permit inspection during and after all phases of the project.

PROTECTION OF PERSONS AND PROPERTY

The Contractor shall collect, remove and dispose of all buckets, rags or other discarded materials and shall leave the job site in a clean condition.

The Contractor shall protect all portions of the structure which are not to be painted, against damage or disfigurement by splashes, spatters, and smirches of paint.

The Contractor shall install and maintain suitable shields or enclosures to prevent damage to adjacent buildings, parked cars, trucks, boats, or vehicles traveling on, over, or under structures being painted. They shall be suitably anchored and reinforced to prevent interfering with normal traffic operations in the open lanes. Payment for the shields shall be included as incidental to the applicable field coating operation. Work shall be suspended when damage to adjacent buildings, motor vehicles, boats, or other property is occurring.

When or where any direct or indirect damage or injury is done to public or private property, the Contractor shall restore, at his own expense, such property, to a condition similar or equal to

PLOTTED BY:lmincek
PLOTTED:05-AUG-1998 13:30
SHOP.DGN

that existing before such damage or injury was done.

POLLUTION CONTROL

The Contractor shall take all necessary precautions to comply with pollution control laws, rules or regulations of Federal, State or local agencies.

WORK LIMITATIONS

Abrasive blasting and painting done in the field shall be performed between April 15 and October 15. Even though the Contractor is permitted to work prior to May 1, April is considered a winter month and no extension due to adverse weather conditions will be granted for this period. Additional work limitations on specific bridges/projects may be required by plan note.

METHOD OF MEASUREMENT

The method of measurements shall be according to the pertinent of 513, 514 and 516 of the current Constructions and Materials Specifications.

COLOR OF FINISH COAT

Finish coat shall be gray matching FEDERAL COLOR STANDARD NO. FS-595A-16440.

METHOD OF PAYMENT

The area of the top of the top flange which shall receive the prime coat only shall not be included in the measurement for the pay item.

The cost of the above including labor, material, equipment and incidentals shall be included in the unit price bid for each item as listed below.

Payment for this item shall include all labor, surface preparation, materials, inspection and equipment to shop apply a prime, intermediate and finish paint coat at the item 863 structural steel fabricator's shop facilities. Also included in this item is all required field site surface preparation, cleaning, painting and/or repair of damaged shop paint caused during shipping, erection or construction procedures.

The cost of the surface preparation and prime coat to the top of the top flange shall be included as an incidental for payment under Shop Painting and Field Touch-Up of Structural Steel.

Shop painting per 513.222 shall not be included with the price bid for structural steel but shall be included with Item Special, Shop Painting and Field Touch-Up of Structural Steel for payment.

ITEM	UNIT	DESCRIPTION
514	sq. ft.	Field painting, Misc.: Shop Painting and Field Touch-Up of Structural Steel

PLOTTED BY: fKonopka
PLOTTED ON: 07-AUG-1998 10:16
PLOT SUBMITTED:07-AUG-1998 10:16
SHOP.DGN
PLOT SCALE: 1
Bpid08459Bdgn Bgennote Bshop.dgn

DESIGN AGENCY
O.D.O.T.
DISTRICT TWELVE
L&D DEPARTMENT

DESIGNED	DRAWN	REVIEWED	DATE
BGW	MJM	MJM	03/09/98
CHECKED	REVISED	STRUCTURE FILE NUMBER	
GWM			

SHOP PAINTING AND FIELD TOUCH-UP
OF STRUCTURAL STEEL NOTES

CUYAHOGA COUNTY
CUY-71-0.00

CUY-71-0.00	OHIO	290/361
	FHWA REGION 5	
	FEDERAL PROJECT	

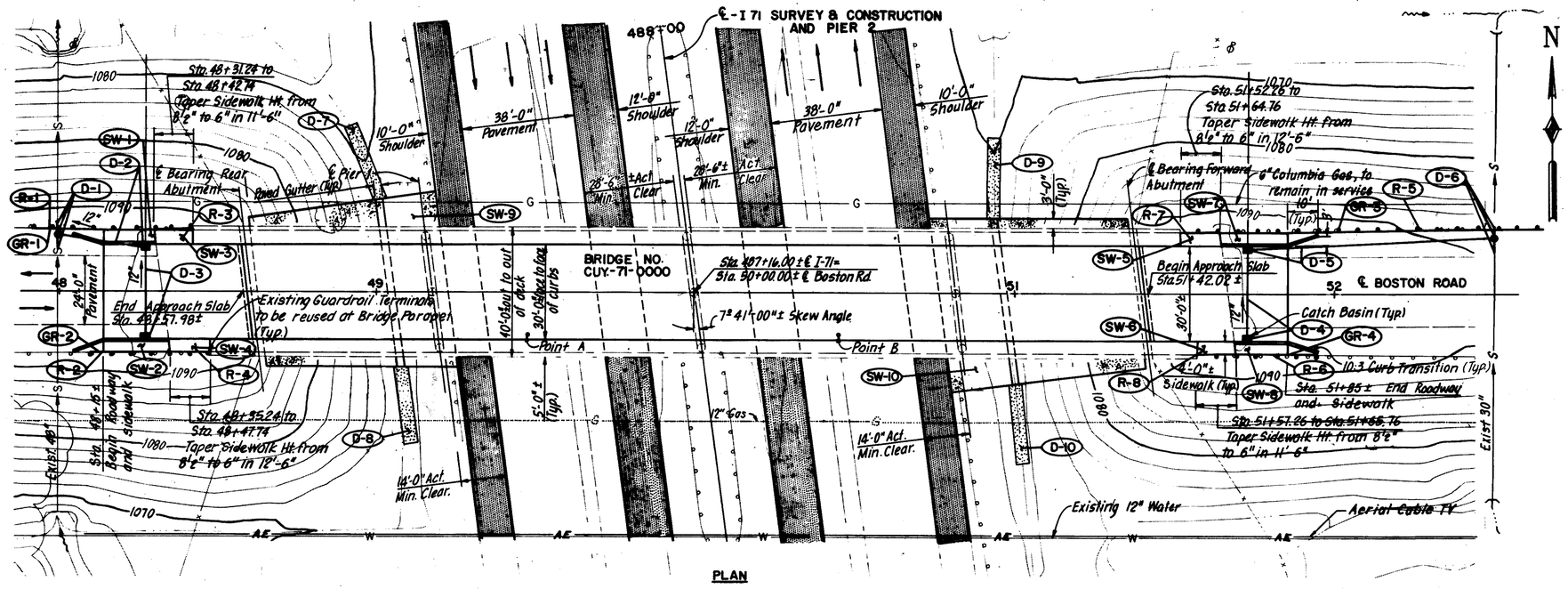

PLAN

Traffic Data – (Boston Road)

1993	A.D.T.	=	7,622
	A.D.T.T.	=	152
2013	A.D.T.	=	9,088
	A.D.T.T.	=	182

BENCH MARK
O.M. 1546 at west end of south walk of bridge, Sta. 47+57 16.0' Rt. of ℄ Boston Road Elev. 1093.65

EXISTING STRUCTURE	
Type:	Continuous Steel Beam with Reinforced Concrete Deck and Substructure
Spans:	57'-6"± , 82'-3"± , 82'-3"± , 57'-6"± Center to Center Bearings
Roadway:	30'-0" Toe to Toe of Curbs with two 4'-0"± Sidewalks
Loading:	C.F. = 400 (57)
Skew:	7°-41'-00"± Right Forward
Wearing Surface:	1½"± Asphalt Concrete
Approach Slab:	AS-1-54 (25'-0" Long)
Alignment:	Tangent
Crown:	Normal, 0.0156 Ft./Ft.
Date Built:	1966
Structural File No.:	1803549

MODIFIED STRUCTURE	
Proposed Work:	Place new Wearing Surface and Seal Expansion Joints
Type:	Continuous Steel Beam with Reinforced Concrete Deck and Substructure
Spans:	57'-6"± , 82'-3"± , 82'-3"± , 57'-6"± Center to Center Bearings
Roadway:	30'-0"± Toe to Toe of Curbs with 4'-0"± Sidewalks
Loading:	C.F. = 400 (57)
Skew:	7°-41'-00"± Right Forward
Wearing Surface:	1 3/4" Microsilica Modified Concrete
Approach Slab:	Reuse Existing
Alignment:	Tangent
Crown:	Normal, 0.0156 Ft./Ft.

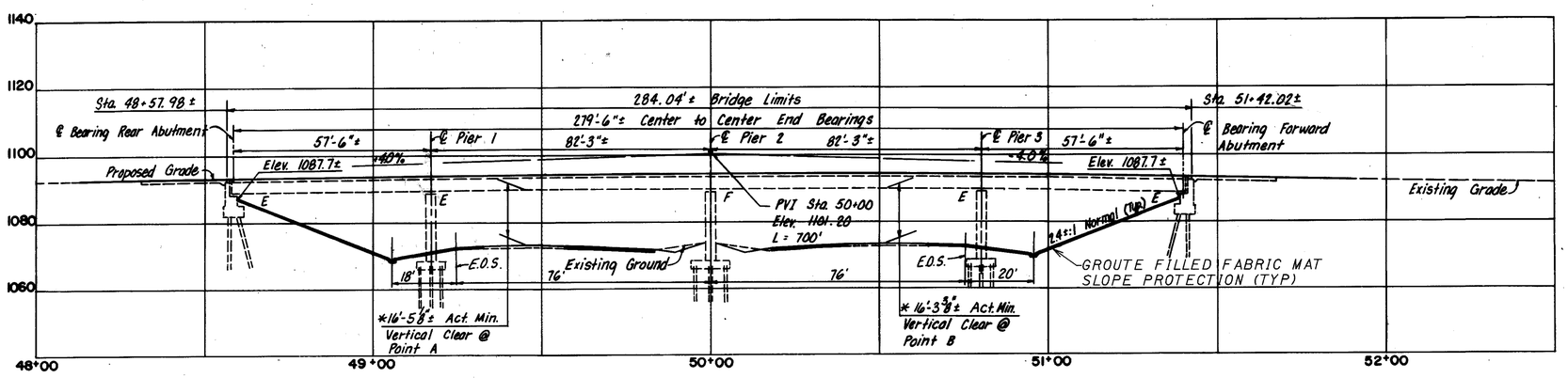

PROFILE ALONG CENTERLINE BOSTON ROAD

NOTE: 16'-0" required minimum vertical clearance. Actual minimum vertical clearance at Points A and B occur at the intersection of the centerline of existing I-71 roadway pavement and the South edge of the South exterior beam.

Notes:
See Sheet 199 for Sewer Profiles.
See Plan and Profile Quantities Sheet 81 for Roadway Quantities.
See Sheet 81 for Concrete Walk Quantities under Boston Road Bridge.
See Plan and Profile Sheet 81 for Drainage Quantities.

STRUCTURE FILE NOS. 1803549

EUTHENICS INC. CONSULTING ENGINEERS CLEVELAND, OHIO — 1/3

SITE PLAN

BRIDGE NO. CUY-71-0000
BOSTON ROAD OVER I-71

CUYAHOGA COUNTY STA. 48+57.98± TO STA. 51+42.02±

DESIGN	DRAWN	TRACED	CHECKED	REVIEW	DATE	REVISED
KRD	GLD	—	MEK	RAB	3-94	

PLOTTED BY: fkonopka
PLOTTED in Bentley Microstation V8 using: 307sp05.dgn
PLOT SUBMITTED: 06-AUG-1998 06:15
307SP05.DGN

CALC. BY KRD DATE: 12-93

ESTIMATED QUANTITIES

CHK'D BY: GFH DATE: 3-94

ITEM	ITEM EXT.	TOTAL	UNIT	DESCRIPTION	ABUT-MENTS	PIER	SUPER-STRUCTURE	GENERAL	AS PER PLAN SHEET REF.
202	23500	472	SQ. YD.	WEARING COURSE REMOVED			472		
516	11801	61	LIN. FT.	VERTICAL EXTENSION OF STRUCTURAL EXPANSION JOINT, AS PER PLAN			61		3/3
SPECIAL	51267510	3	SQ. YD.	SEALING OF CONCRETE SURFACES (EPOXY - URETHANE) ✱	1	2			
SPECIAL	51922006	944	SQ. YD.	MICRO-SILICA MODIFIED CONCRETE OVERLAY (1-3/4" THICK) ✱			944		
SPECIAL	51922100	24	CU. YD.	MICRO-SILICA MODIFIED CONCRETE OVERLAY (VARIABLE THICKNESS) ✱			24		
SPECIAL	51922200	2	CU. YD.	FULL DEPTH REPAIR			2		
SPECIAL	51922300	LUMP	LUMP	TEST SLAB				LUMP	
601	21100	503	SQ. YD.	SLOPE PROTECTION MISC.: GROUT FILLED FABRIC MATS				503	
843	50000	10	SQ. FT.	PATCHING CONCRETE STRUCTURES WITH TROWELABLE MORTAR △	4	6			

✱ SEE PROPOSAL NOTE

△ TO BE USED AS DIRECTED BY THE ENGINEER

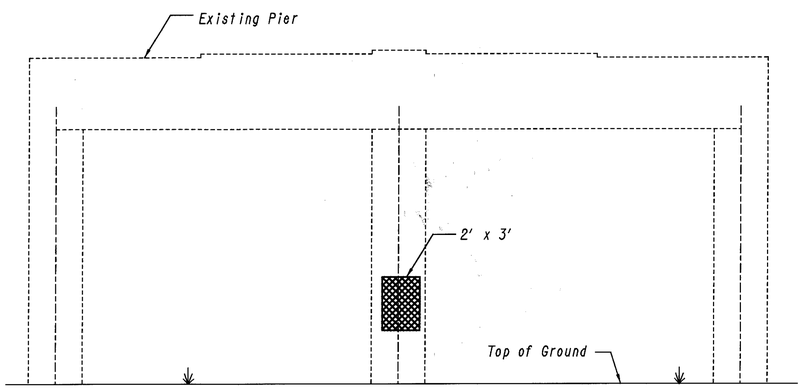

PIER 1
(East Elevation)

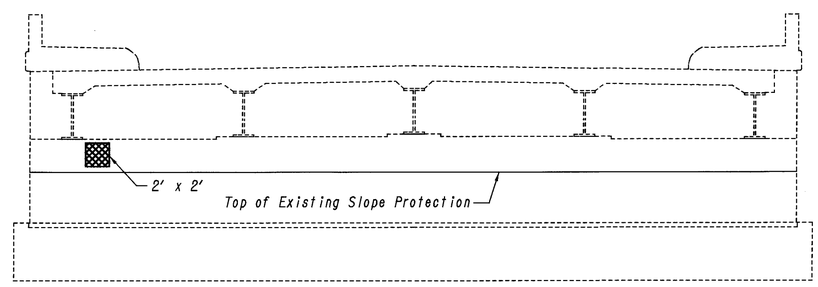

ELEVATION OF EAST ABUTMENT

ABUTMENT AND PIER PATCHING

Notes:

Filter fabric shall extend to the top of the joint. The fabric around the trench key shall be continuous and overlap a minimum of 18" as shown.

Welded Wire Fabric - 6x6, W4.0xW4.0 (58 lbs/100 sq ft) sheets only. Lap sheets a minimum of 1'-5" in both directions.

Item 843 - Patch concrete structures with trowelable mortar.

Patched areas to be sealed with epoxy-urethane.

EUTHENICS INC.
CONSULTING ENGINEERS
CLEVELAND, OHIO

2 / 3

ESTIMATED QUANTITIES AND MISCELLANEOUS DETAILS

BRIDGE NO. CUY.-71-0000
BOSTON ROAD OVER I-71

DESIGN	DRAWN	TRACED	CHECKED	REVIEW	DATE	REVISED
KRD	EEF	—	GFH	RAB	12-94	

PLOTTED BY: fkonopka
PLOTTED: 06-AUG-1998 06:29
PLOT SUBMITTED: 06-AUG-1998 06:29
307EQ09.DGN

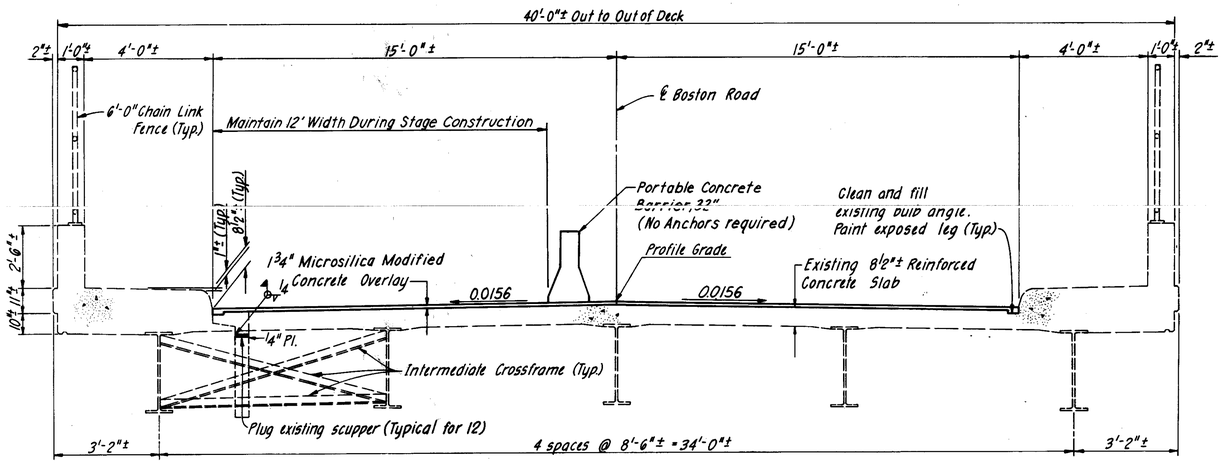

TRANSVERSE SECTION

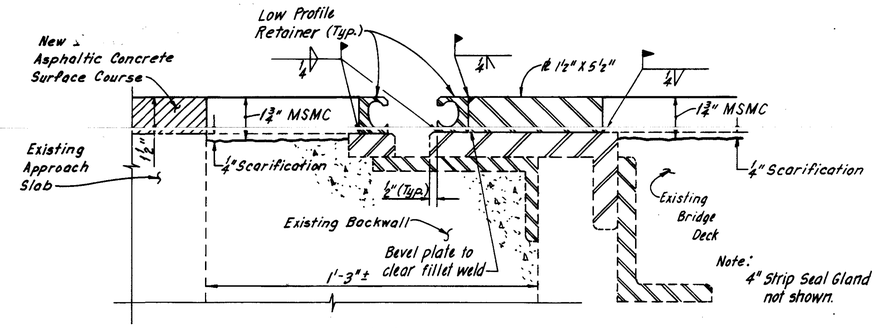

SECTION A-A

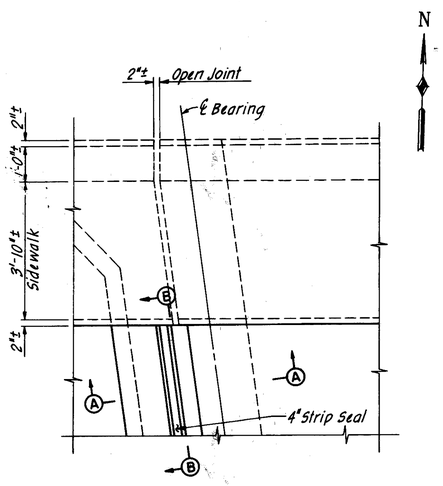

PARTIAL PLAN - REAR ABUTMENT

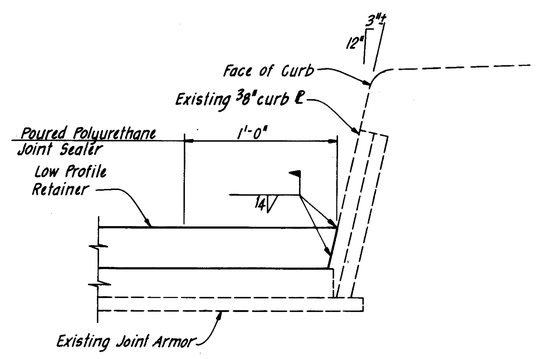

SECTION B-B

Notes:

Existing bulb angles and scuppers shall be abrasively cleaned and filled with microsilica modified concrete. Prior to filling, scuppers shall be plugged with a 1/4" welded plate. Cost for cleaning, filling and welded plates shall be included in the price bid per cubic yard for microsilica modified concrete.

Deck joint plates shall be A588. The plates shall be abrasively cleaned in the shop. Shop painting is not required.

Deck Joint Painting: After cleaning in the field as directed, and preferably after installation of joint seals, all upper exposed steel surfaces excluding roadway surfaces in traveled lanes shall be painted with a system OZEU prime, intermediate, and finish coat of paint as described in the proposal. Cost for field cleaning and painting shall be included in the price bid per lineal foot for the deck expansion joints.

The exposed leg of the existing bulb angle shall be painted with a system OZEU prime, intermediate, and finish coat of paint as described in the proposal. Cost for painting shall be included in the price bid per lineal foot for the deck expansion joints.

Poured polyurethane joint seal is a two-part, cold applied, chemically curing self leveling elastomeric, polyurethane joint sealant. The sealant shall be "FX-551" as manufactured by Fox Industries Incorporated. "Urexpan NR-200" as manufactured by Pecora Corporation or an approved equal. The installed and cured material shall be bonded to the sides of the joint. Any unbonded section shall be removed and replaced at the contractors expense.

The polyurethane seal shall be poured on top of the elastomeric strip seal to the top of the retainer for a length of one foot from the curb. Dams shall be provided to contain the poured sealer. Cost for the poured sealer and dams shall be included in the price bid per lineal foot for the deck expansion joints.

EUTHENICS INC. CONSULTING ENGINEERS CLEVELAND, OHIO | 3/3

SUPERSTRUCTURE DETAILS

BRIDGE NO. CUY-71-0000
BOSTON ROAD OVER I-71

DESIGN	DRAWN	TRACED	CHECKED	REVIEW	DATE	REVISED
KRD	GLD	—	GFH	RAB	3-94	

PLOTTED BY: fkonopka
PLOTTED IN: 307SD15.DGN
PLOTTED: 06-AUG-1998 06:30
PLOT SUBMITTED: 06-AUG-1998 06:30
307SD15.DGN

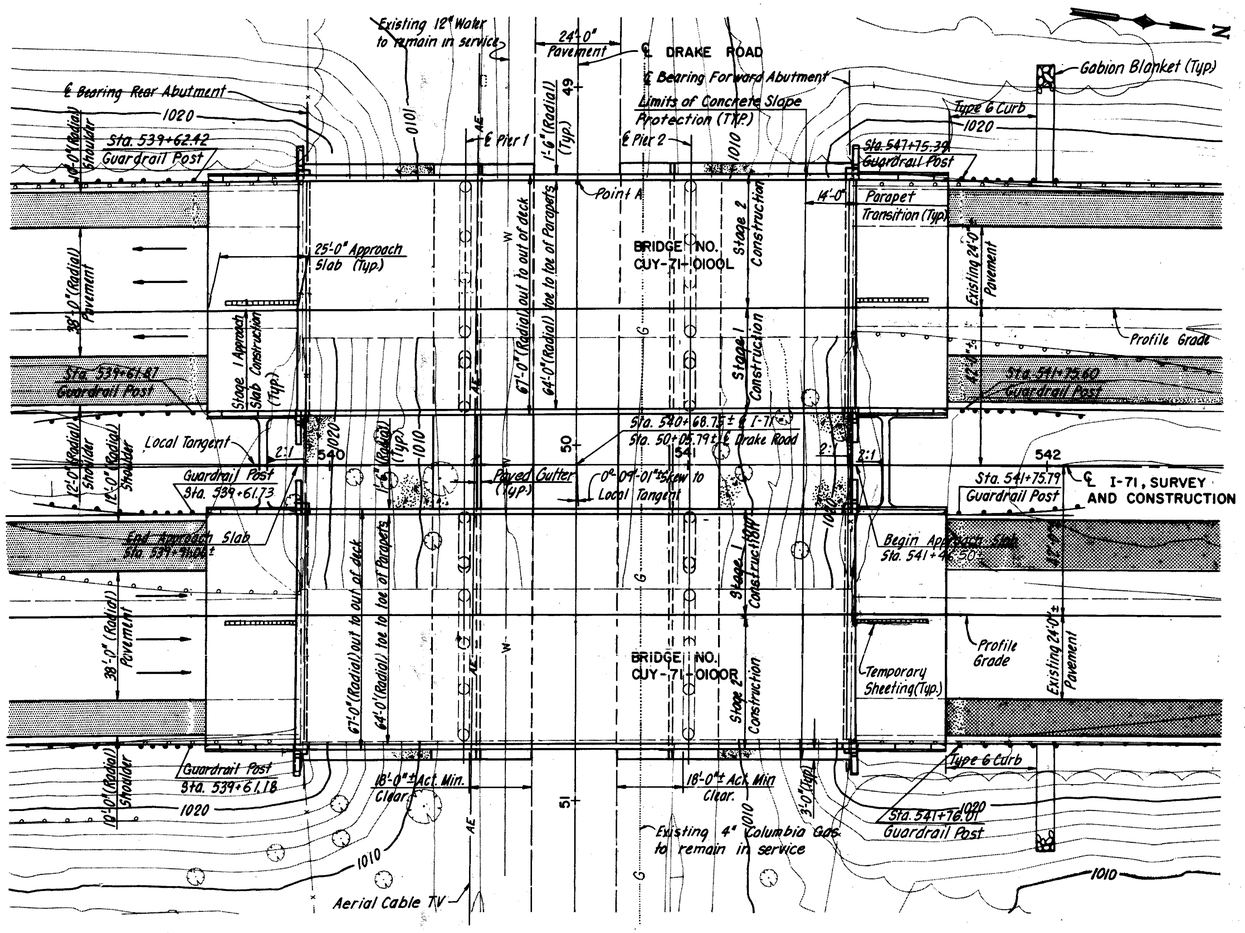

PLAN

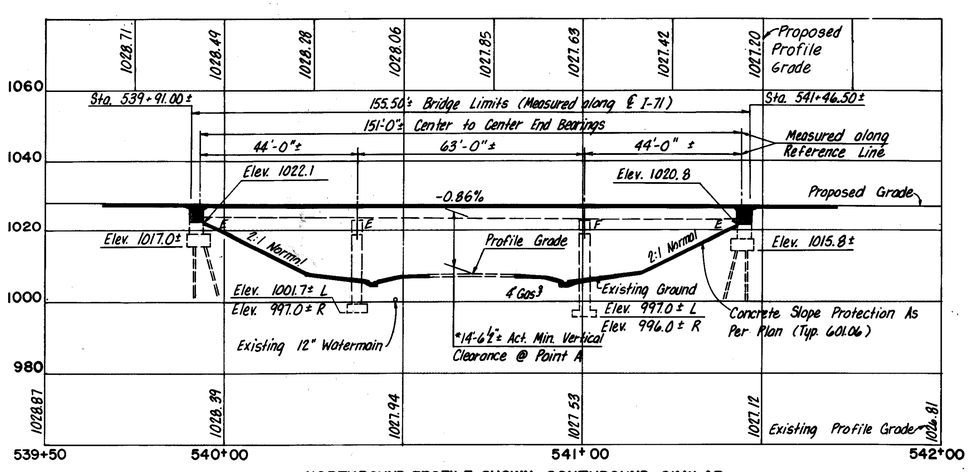

NORTHBOUND PROFILE SHOWN, SOUTHBOUND SIMILAR

TEMPORARY BENCH MARK
Sta 542+00 ℄ I-71
Top of iron pin in monument box
Elev. 1023.43

CURVE DATA – ℄ I-71

P.C. Sta. 530+63.95
P.T. Sta. 545+28.30
Δ = 04°-51'-06"
Dc = 00°-20'-00" Rt.
R = 17,188.73'
L = 1455.50'
T = 728.19'

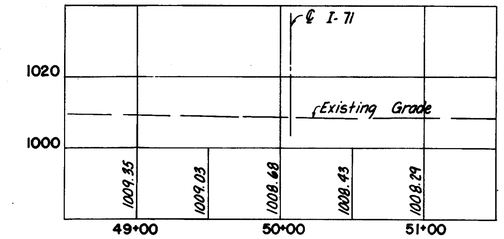

PROFILE DRAKE ROAD

TRAFFIC DATA – (I-71)

1994 A.D.T. = 23,080
A.D.T.T. = 1,385
2014 A.D.T. = 28,850
A.D.T.T. = 1,730

EXISTING STRUCTURES	
Type:	Continuous Steel Beam, A36, with Reinforced Concrete Deck and Substructure
Spans:	44'-0"± , 63'-0"± , 44'-0"± Center to Center Bearings, along reference chord
Roadway:	41'-8"± Face to Face of Parapets
Loading:	C.F.= 2000, Adequate for A.A.S.H.O. Alternate Loading
Skew:	0°-09'-01"± Left Forward, to Local Tangent
Wearing Surface:	1" Latex Modified Concrete
Approach Slab:	AS-1-54 (25'-0" Long)
Alignment:	0°-20'± Right
Crown:	Normal, 0.0156 Ft./Ft.
Date Built:	1965
Structural File No.:	1803573 L 1803603 R

PROPOSED STRUCTURES	
Proposed Work:	Widen bridge, replace concrete deck, modify, repair and extend existing substructure units and seal concrete surfaces
Type:	Existing Continuous Steel Beams, A36, and new Continuous Steel Beams A572, Painted, with Reinforced Concrete Deck and Substructure
Spans:	44'-0"± , 63'-0"± , 44'-0"± Center to Center of Bearings along Reference Chord
Roadway:	64'-0" Toe to Toe of Parapets
Loading:	HS20-44 Case II and the Alternate Military Loading
Skew:	0°-09'-01"± Left Forward, to Local Tangent
Wearing Surface:	Monolithic Concrete
Approach Slab:	AS-1-81 (25'-0" Long) (As per plan)
Alignment:	0°-20'± Right
Crown:	Normal, 0.0156 Ft./Ft.

Note: All piles shall be steel H piles HP 10x42 with an estimated pay length of 19 feet.

* Note: 14'-6" required minimum vertical clearance. Actual minimum vertical clearance at Point A occurs at the intersection of the centerline of Drake Road and the west edge of the west exterior beam in the southbound Roadway Bridge.

STRUCTURE FILE NOS. 1803573L and 1803603R

EUTHENICS INC. CONSULTING ENGINEERS CLEVELAND, OHIO — 1/12

SITE PLAN

BRIDGE NO. CUY-71-0100L AND R OVER DRAKE ROAD

CUYAHOGA COUNTY STA. 539+91.00± TO STA. 541+46.50±

DESIGN	DRAWN	TRACED	CHECKED	REVIEW	DATE	REVISED
KRD	SMM	—	MEK	RAB	3-94	

PLOTTED BY:fkonopka PLOTTED in Bforsberg PLOTTED: 06-AUG-1998 06:35 PLOT SUBMITTED:06-AUG-1998 06:35 307SP06.DGN pid08459B dgnB307sp06.dgn

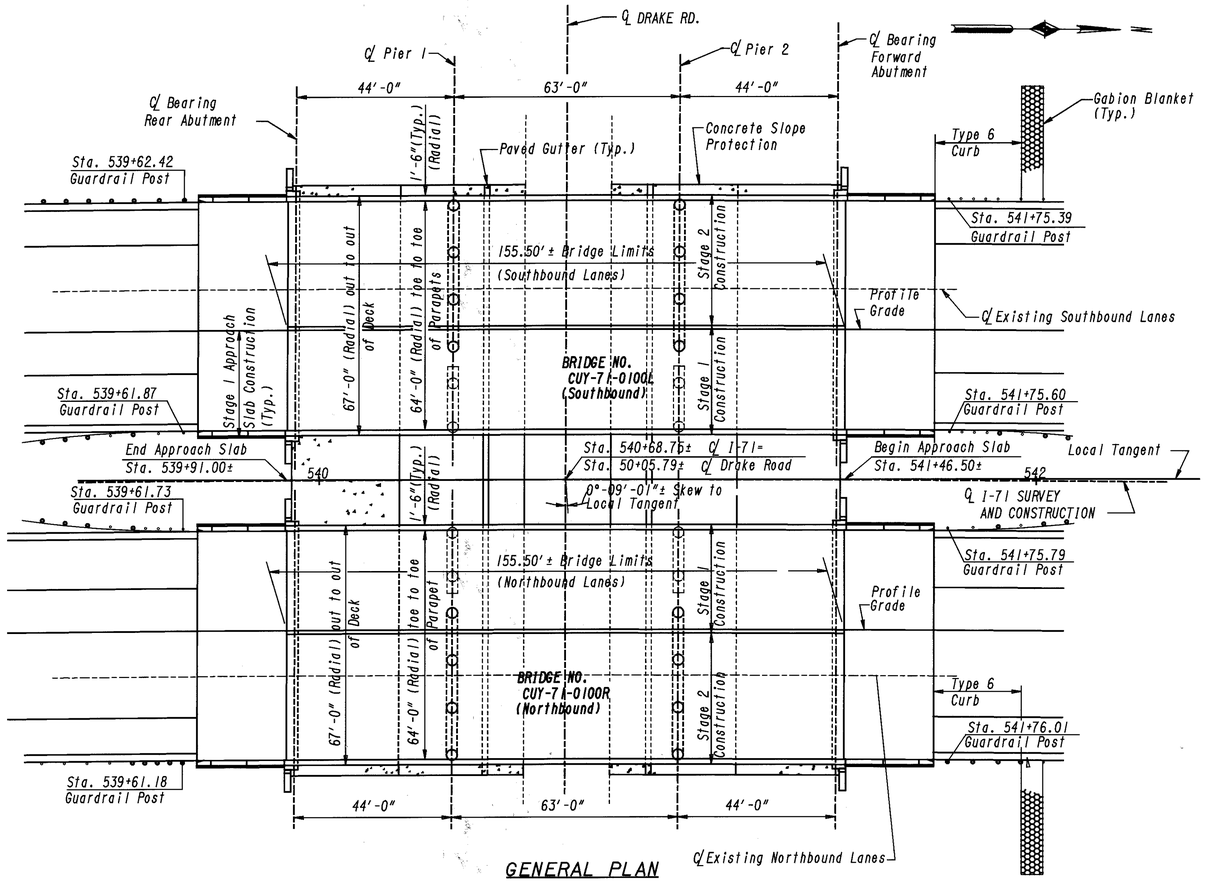

GENERAL PLAN

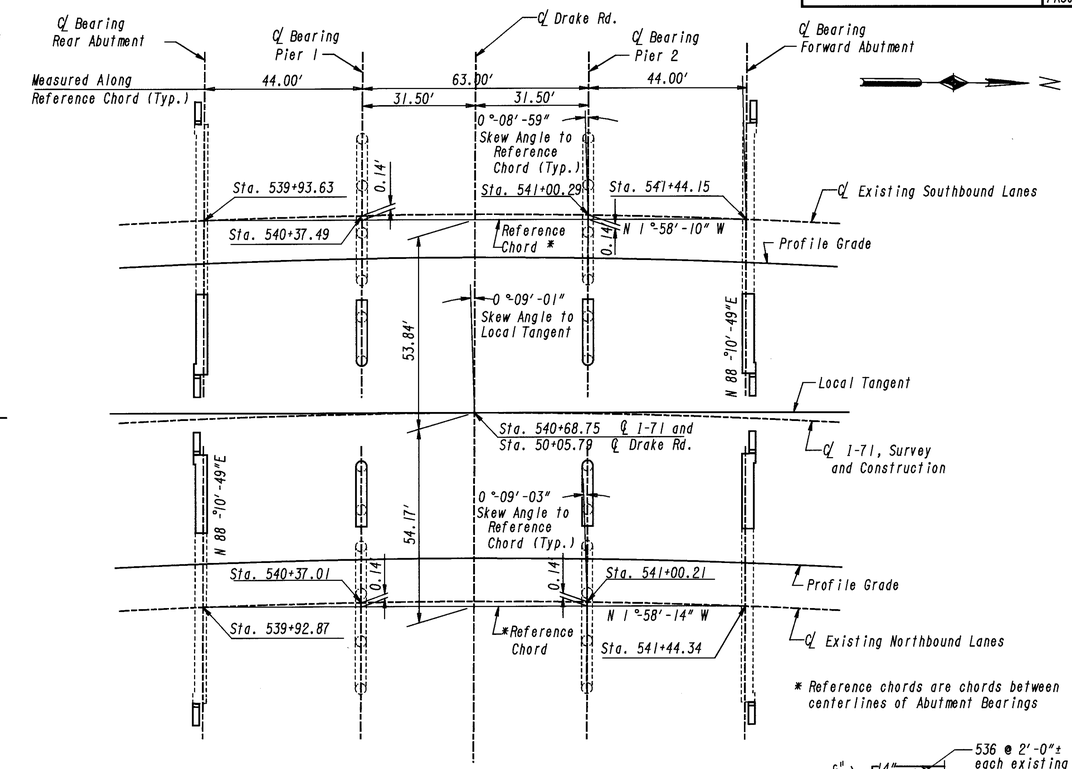

GEOMETRIC LAYOUT DIAGRAM

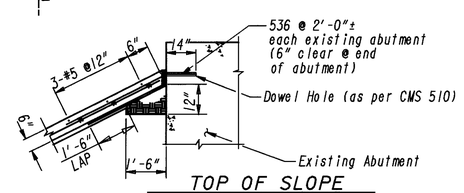

TOP OF SLOPE
EXISTING ABUTMENT DETAIL

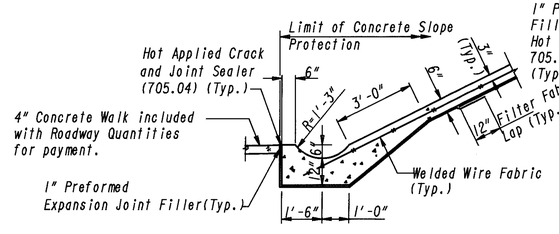

PAVED GUTTER

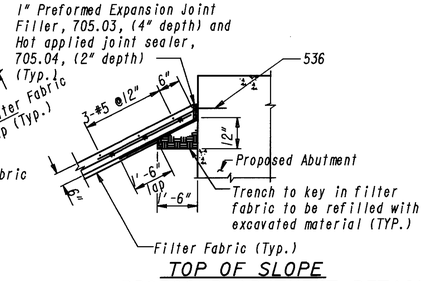

TOP OF SLOPE
PROPOSED ABUTMENT DETAIL

Notes:

Payment for removal of the existing crushed aggregate slope protection, 3-#5 @ 12", wire fabric, geotextile fabric, preformed expansion joint filler, dowel holes and grout, and hot applied sealer shall be included with Item 601, Concrete Slope Protection, as per plan

Filter fabric shall extend to the top of the joint. The fabric around the trench key shall be continuous and overlap a minimum of 18" as shown.

Welded Wire Fabric - 6x6, W4.0xW4.0 (58 lbs/100 sq ft) sheets only. Lap sheets a minimum of 1'-5" in both directions.

See sheet GN2 for further details of concrete slope protection.

CONCRETE SLOPE PROTECTION DETAILS

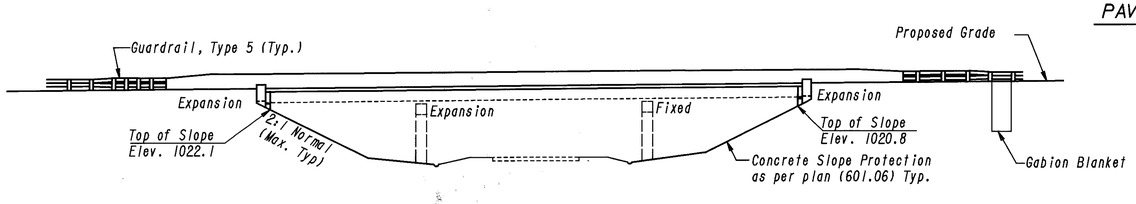

ELEVATION

EUTHENICS INC. CONSULTING ENGINEERS CLEVELAND, OHIO

2/12

GENERAL PLAN

BRIDGE NO. CUY-71-0100L AND R OVER DRAKE ROAD

DESIGN	DRAWN	TRACED	CHECKED	REVIEW	DATE	REVISED
GFH	RM	—	KRD	RAB	3-94	

PLOTTED BY: fkonopka
PLOT SUBMITTED:06-AUG-1998 06:59
307GP02.DGN

CUY-71-0.00	OHIO	295/361
	FHWA REGION 5	
	FEDERAL PROJECT	

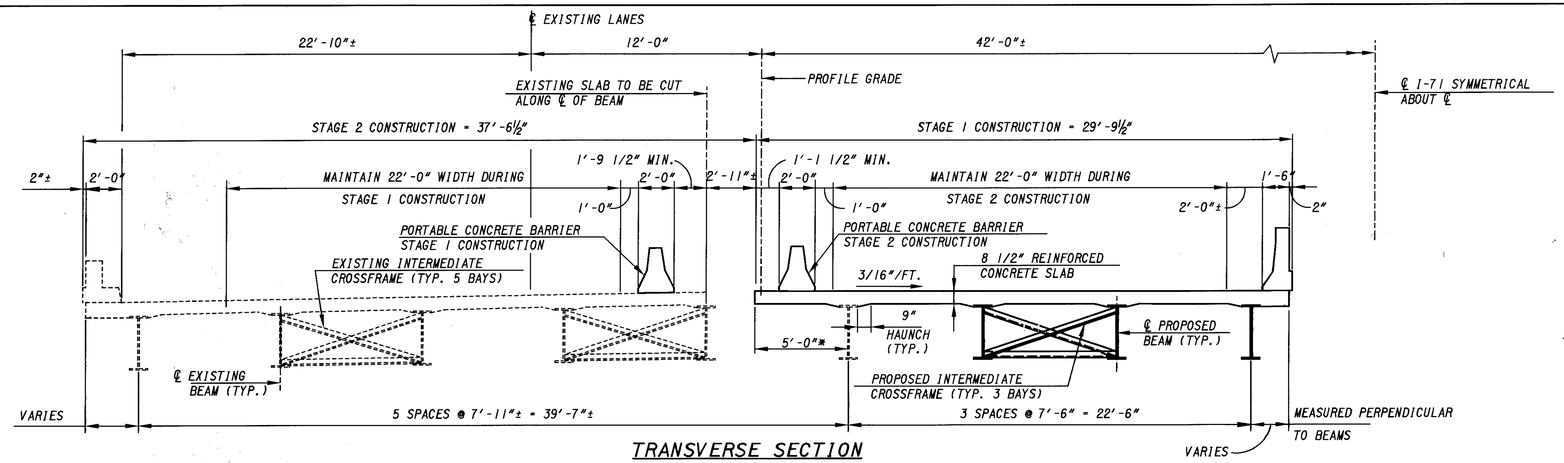

TRANSVERSE SECTION STAGE CONSTRUCTION

NOTE: TRANSVERSE DIMENSIONS MEASURED RADIALLY, EXCEPT AS NOTED

32", BRIDGE MOUNTED, PORTABLE CONCRETE BARRIER ANCHORS △	
M.O.T. Stage	No. Anchors/ SEGMENT
1	3
2	3

△ ON EXISTING DECKS, NON- TRAFFIC SIDE ANCHORS MUST BE THRU- BOLTED, ON NEW DECKS, ONLY APPROVED RESIN ANCHORS MAY BE USED.

CALC. BY: KXG DATE: 2-94

ESTIMATED QUANTITIES

CHK'D. BY: KRD DATE: 3-94

					CUY-71-0100 L					CUY-71-0100 R					
ITEM	ITEM EXT.	TOTAL	UNIT	DESCRIPTION	ABUT-MENTS	PIER	SUPER-STRUCTURE	GENERAL	TOTAL	ABUT-MENTS	PIER	SUPER-STRUCTURE	GENERAL	TOTAL	AS PER PLAN SHEET REF.
202	11203	LUMP	LUMP	PORTIONS OF STRUCTURE REMOVED, OVER 20 FOOT SPAN, AS PER PLAN				LUMP	LUMP				LUMP	LUMP	GN1
503	11100	LUMP	LUMP	COFFERDAMS, CRIBS AND SHEETING				LUMP	LUMP				LUMP	LUMP	
503	21105	496	CU. YD.	UNCLASSIFIED EXCAVATION, INCLUDING ROCK, AS PER PLAN	164	84			248	165	83			248	GN2
505	11100	LUMP	LUMP	PILE DRIVING EQUIPMENT MOBILIZATION				LUMP	LUMP				LUMP	LUMP	
507	00100	760	LIN. FT.	STEEL PILES HP10 x 42, FURNISHED	380				380	380				380	
507	00150	760	LIN. FT.	STEEL PILES HP10 x 42, DRIVEN	380				380	380				380	
507	50500	20	EACH	STEEL PILE SPLICES	10				10	10				10	
511	81400	50	POUND	CONCRETE MISC.: REPLACEMENT OF EXISTING REINFORCING STEEL *				25	25				25	25	
512	44400	7	SQ. YD.	TYPE B WATERPROOFING	3				3	4				4	
SPECIAL	51267510	531	SQ. YD.	SEALING OF CONCRETE SURFACES (EPOXY-URETHANE) (SEE PROPOSAL NOTE)	11	254			265	12	254			266	
SPECIAL	51271500	445	SQ. YD.	URETHANE TOP COAT SEALER	101	121			222	102	121			223	
514	27706	135,500	POUND	FIELD PAINTING MISC.: SHOP PAINTING AND FIELD TOUCH UP OF STEEL			67,750		67,750			67,750		67,750	
516	44001	18	EACH	ELASTOMERIC BEARING WITH INTERNAL LAMINATES AND LOAD PLATE (NEOPRENE) (8½" x 12" x 1.52") WITH 9½" X 13" X 1½" LOAD PLATE, AS PER PLAN, (SEE PROPOSAL NOTE)	9				9	9				9	11/12
516	44001	6	EACH	ELASTOMERIC BEARING WITH INTERNAL LAMINATES AND LOAD PLATE (NEOPRENE) (9½" x 16" x 1.75") WITH 10½" X 17" X 1⅝" LOAD PLATE, AS PER PLAN, (SEE PROPOSAL NOTE)		3			3		3			3	11/12
516	44001	12	EACH	ELASTOMERIC BEARING WITH INTERNAL LAMINATES AND LOAD PLATE (NEOPRENE) (9½" x 16" x 1.75") WITH 10½" X 17" X 2 13/16" LOAD PLATE, AS PER PLAN, (SEE PROPOSAL NOTE)		6			6		6			6	11/12
516	44101	18	EACH	ELASTOMERIC BEARING WITH INTERNAL LAMINATES AND LOAD PLATE (NEOPRENE) (8½" x 12" x 2.10") WITH 9½" X 13" X 1½" LOAD PLATE, AS PER PLAN, (SEE PROPOSAL NOTE)	9				9	9				9	11/12
516	46900	6	EACH	BEARING DEVICE, MISC., (F-150)		3			3		3			3	
516	47001	LUMP	LUMP	JACKING AND TEMPORARY SUPPORT OF SUPERSTRUCTURE, AS PER PLAN			LUMP		LUMP			LUMP		LUMP	GN4
518	21200	168	CU. YD.	POROUS BACKFILL WITH FILTER FABRIC	84				84	84				84	
518	40001	346	LIN. FT.	6" PERFORATED CORRUGATED PLASTIC PIPE, AS PER PLAN	173				173	173				173	GN2
518	40011	19	LIN. FT.	6" NON-PERFORATED CORRUGATED PLASTIC PIPE, INCLUDING SPECIALS, AS PER PLAN	9				9	10				10	GN2
601	21001	1,875	SQ. YD.	CONCRETE SLOPE PROTECTION, AS PER PLAN				937	937				937	937	GN2, 2/12, 6/12
843	50000	95	SQ. FT.	PATCHING CONCRETE STRUCTURES WITH TROWELABLE MORTAR *	50	5			55	35	5			40	
844	48001	624	CU. YD.	HIGH PERFORMANCE CONCRETE, SUPERSTRUCTURE (DECK), AS PER PLAN			312		312			312		312	GN2
844	48020	81	CU. YD.	HIGH PERFORMANCE CONCRETE, SUPERSTRUCTURE (PARAPET)			40		40			41		41	
844	48041	436	CU. YD.	HIGH PERFORMANCE CONCRETE, SUBSTRUCTURE, AS PER PLAN	170	48			218	171	47			218	GN3
844	49000	LUMP	LUMP	HIGH PERFORMANCE CONCRETE, TRIAL MIX				LUMP	LUMP				LUMP	LUMP	
863	10240	135,500	POUND	STRUCTURAL STEEL MEMBERS, LEVEL TWO (2) FABRICATION, A709, GRADE 36			67,750		67,750			67,750		67,750	

* TO BE USED AS DIRECTED BY THE ENGINEER

EUTHENICS INC. CONSULTING ENGINEERS CLEVELAND, OHIO — 3/12

STAGE CONSTRUCTION AND ESTIMATED QUANTITIES

BRIDGE NO. CUY-71-0100L AND R OVER DRAKE ROAD

DESIGN	DRAWN	TRACED	CHECKED	REVIEW	DATE	REVISED
KXG	GFH	—	KRD	RAB	3-94	

PLOT SUBMITTED:20-AUG-1998 05:48
PLOTTED BY:jgrmovse
PLOT FILE:307E002.DGN

CUY-71-0.00	OHIO	296/361
	FHWA REGION 5	
	FEDERAL PROJECT	

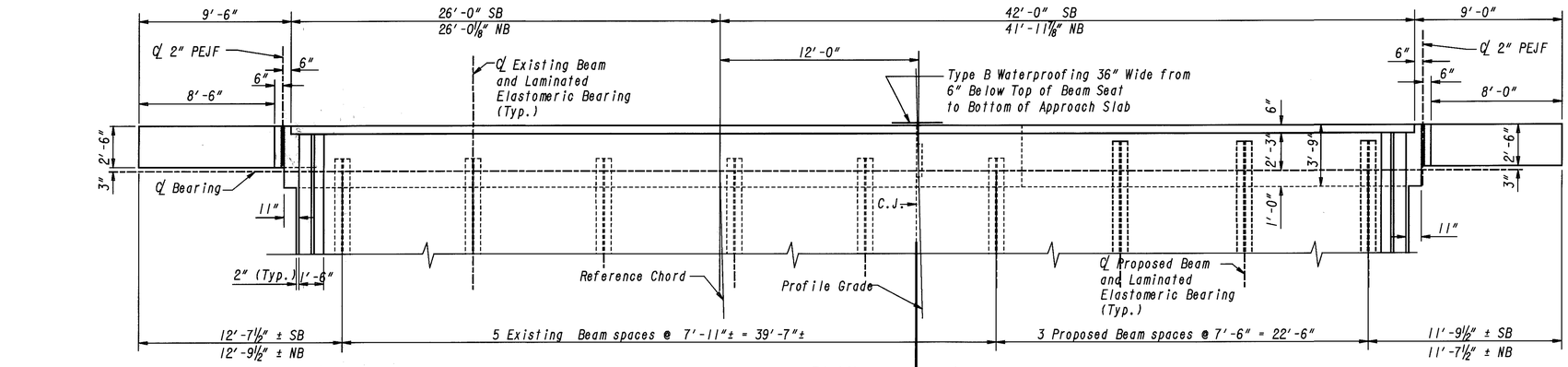

PLAN

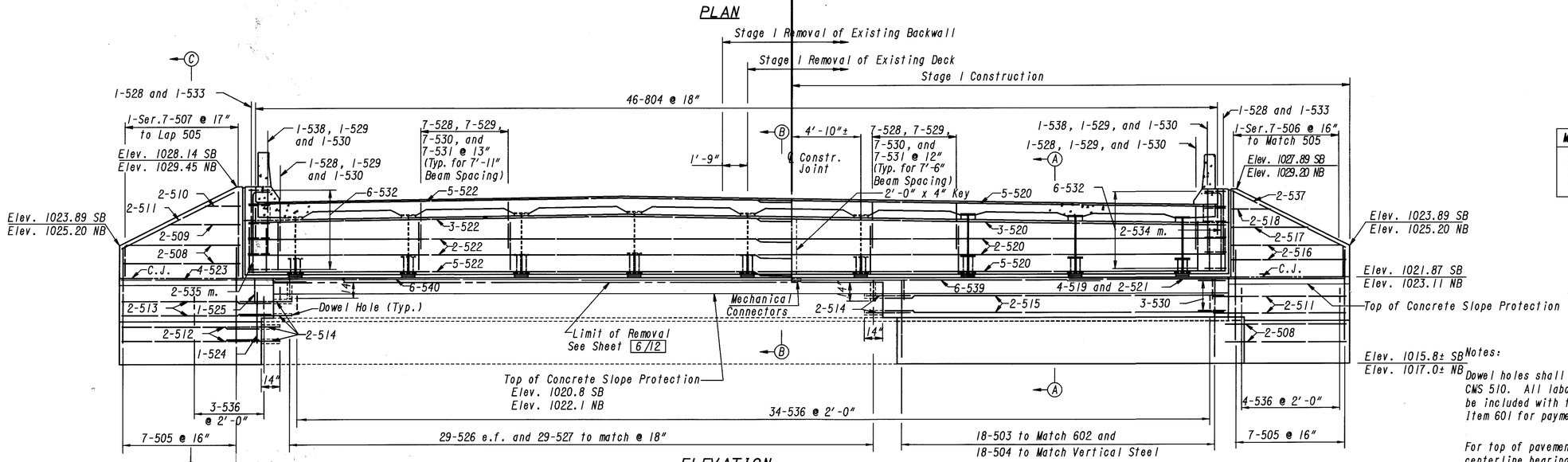

ELEVATION
(Piles not shown)

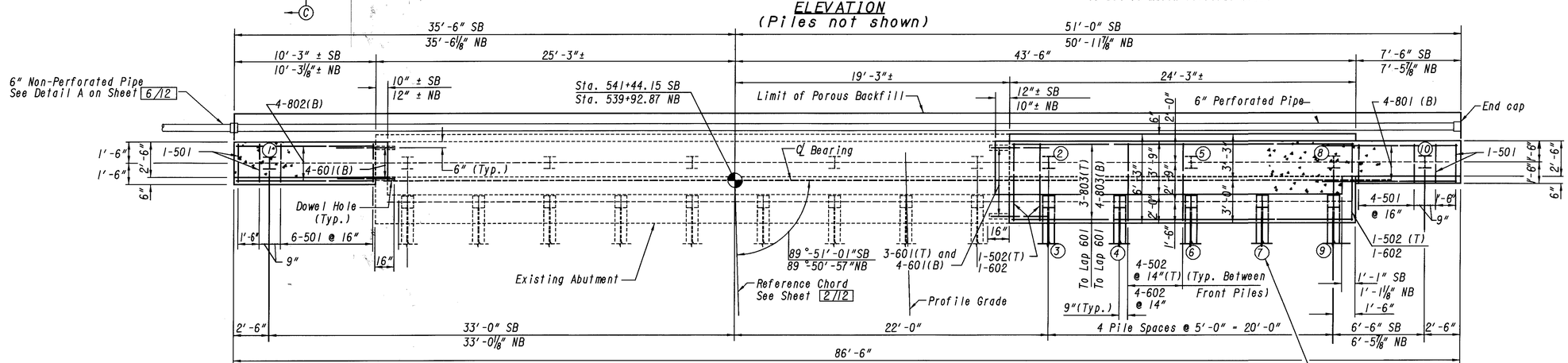

FOOTING PLAN

Minimum Lap Lengths
No. 5 Bar = 2'-2"
No. 6 Bar = 2'-4"
No. 8 Bar = 4'-0"

Notes:

Dowel holes shall be placed in accordance with CMS 510. All labor, materials and installation shall be included with the appropriate Item 844 or Item 601 for payment.

For top of pavement elevations along centerline bearing see Deck Screed Elevations on sheet 9/12.

For Sections A-A, B-B and C-C and additional notes see sheet 6/12.

All piles are steel H Piles HP10 x 42

All battered piles shall be inclined 3 in 12 in the direction shown.

For location of patching areas see sheet 5A/12

The following abbreviations are used:

Elev.	= Elevation	T	= Top
(Typ.)	= Typical	B	= Bottom
SB	= Southbound	e.f.	= each face
NB	= Northbound	f.f.	= far face
C.J.	= Construction Joint	m.	= middle
PEJF	= Preformed Expansion Joint Filler		

EUTHENICS INC. CONSULTING ENGINEERS CLEVELAND, OHIO

4/12

SOUTHBOUND FORWARD ABUTMENT AND NORTHBOUND REAR ABUTMENT

BRIDGE NO. CUY-71-0100L AND R OVER DRAKE ROAD

DESIGN	DRAWN	TRACED	CHECKED	REVIEW	DATE	REVISED
KRD	EEF	—	GFH	RAB	3-94	

PLOTTED BY: fkonopka
PLOT SUBMITTED: 06-AUG-1998 06:38
Pid08459B.dgn Cuy-71-100L307abt21.dgn 307ABT21.DGN

CUY-71-0.00	OHIO	297 / 361
	FHWA REGION 5	
	FEDERAL PROJECT	

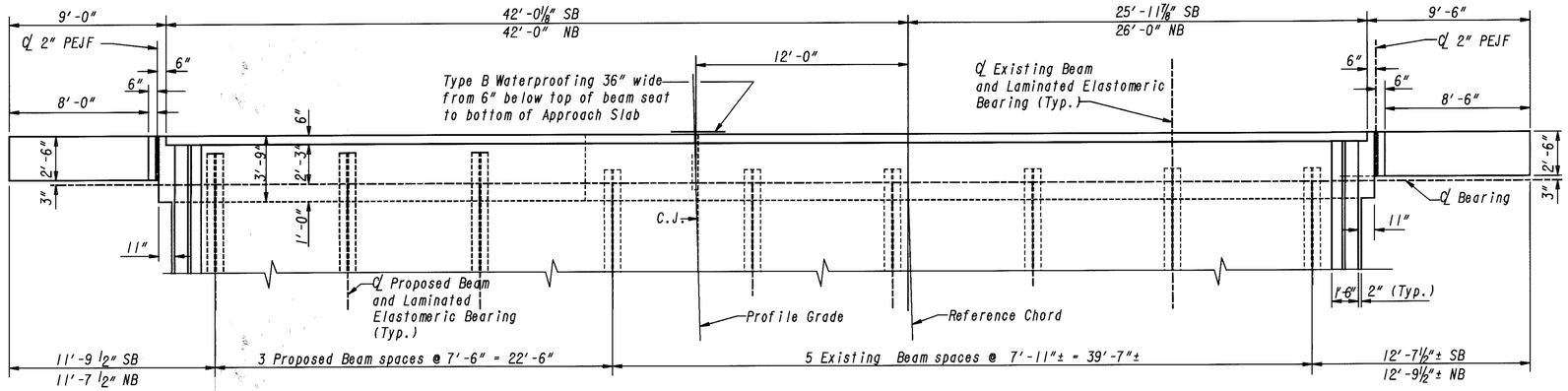

PLAN

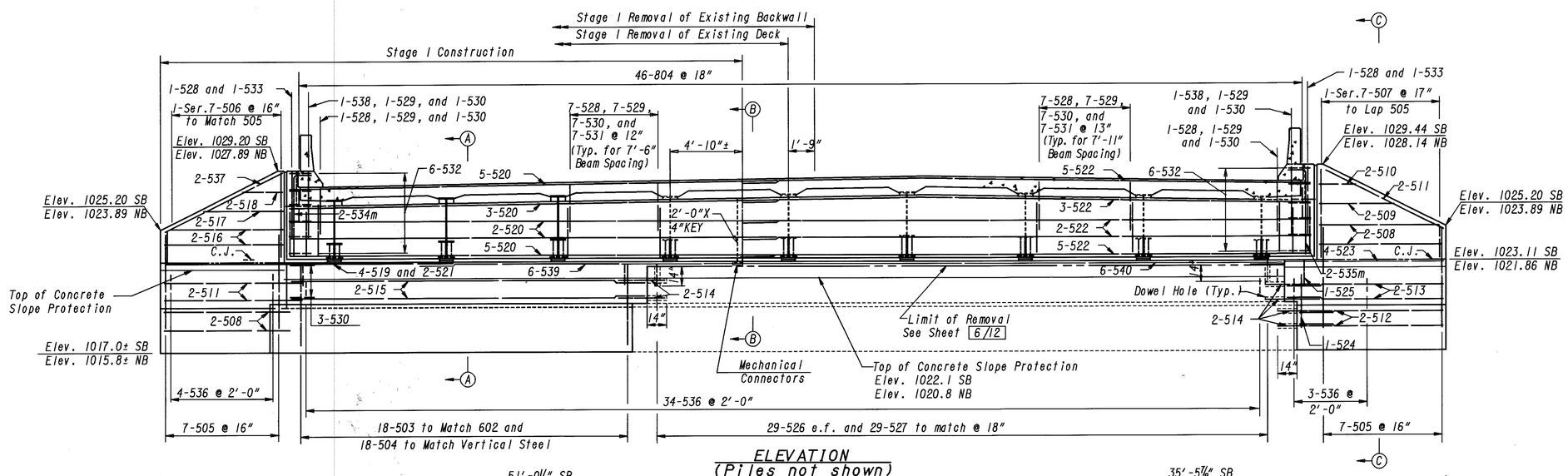

ELEVATION
(Piles not shown)

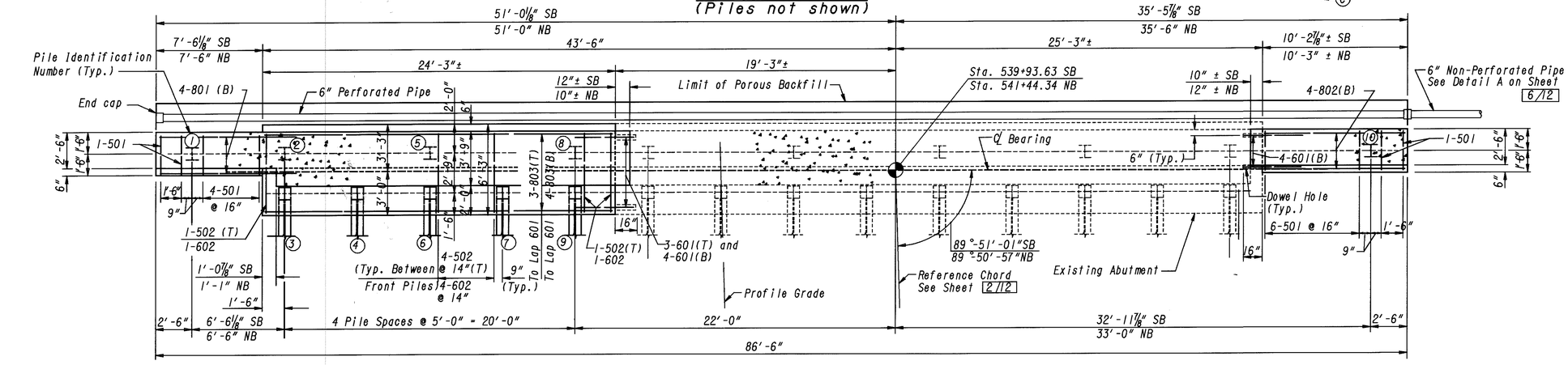

FOOTING PLAN

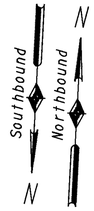

Minimum Lap Lengths
No. 5 Bar = 2'-2"
No. 6 Bar = 2'-4"
No. 8 Bar = 4'-0"

Notes:

For notes see sheet 4/12

EUTHENICS INC.
CONSULTING ENGINEERS
CLEVELAND, OHIO

5/12

SOUTHBOUND REAR ABUTMENT AND NORTHBOUND FORWARD ABUTMENT

BRIDGE NO. CUY-71-0100L AND R OVER DRAKE ROAD

DESIGN	DRAWN	TRACED	CHECKED	REVIEW	DATE	REVISED
KRD	EEF	—	GFH	RAB	3-94	

PLOTTED BY: fkonopka
PLOTTED: 06-AUG-1998 06:39
PLOT SUBMITTED: 06-AUG-1998 06:39
307ABT22.DGN

CUY-71-0.00	OHIO	297A/361
	FHWA REGION 5	
	FEDERAL PROJECT	

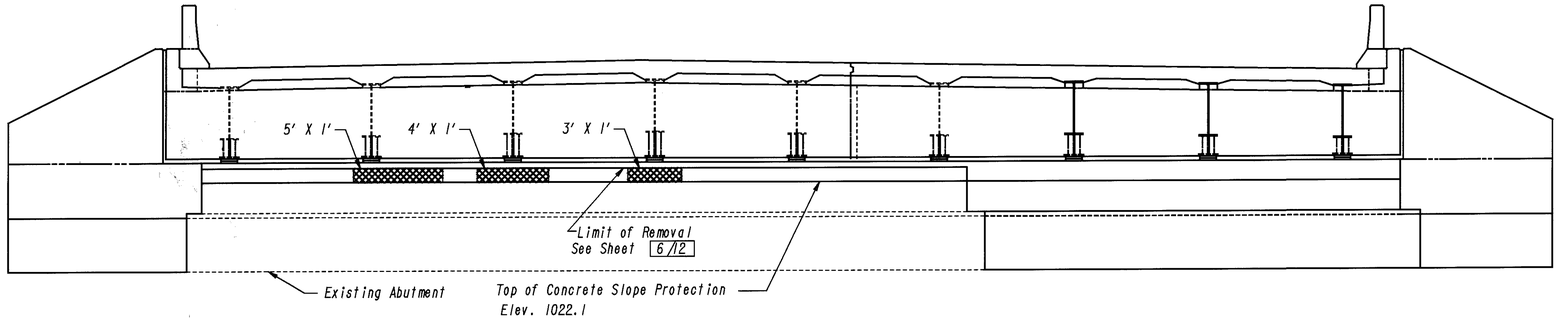

NORTHBOUND REAR ABUTMENT ELEVATION

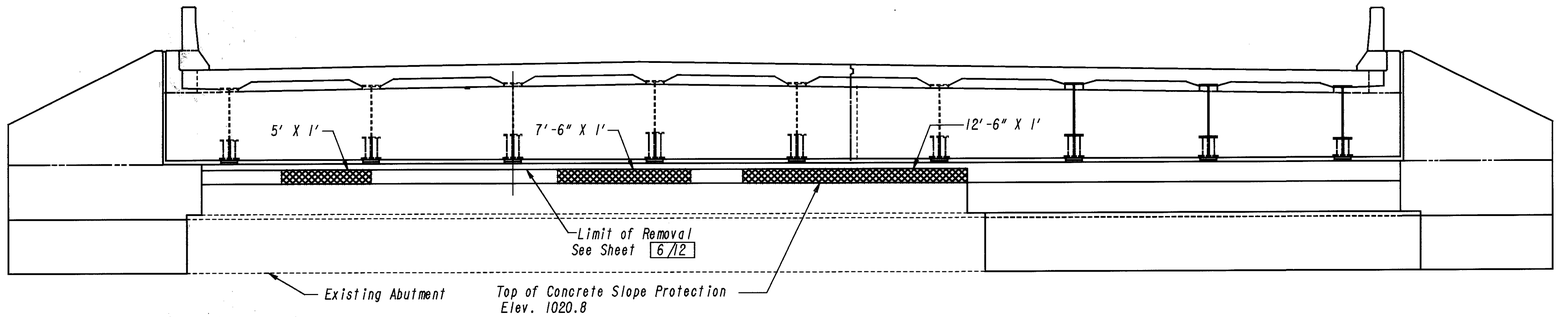

SOUTHBOUND FORWARD ABUTMENT ELEVATION

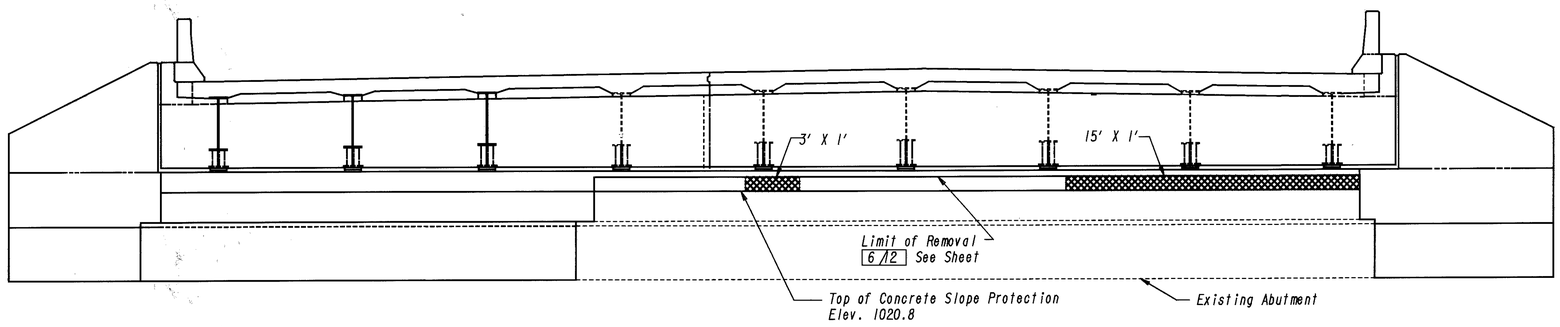

NORTHBOUND FORWARD ABUTMENT ELEVATION

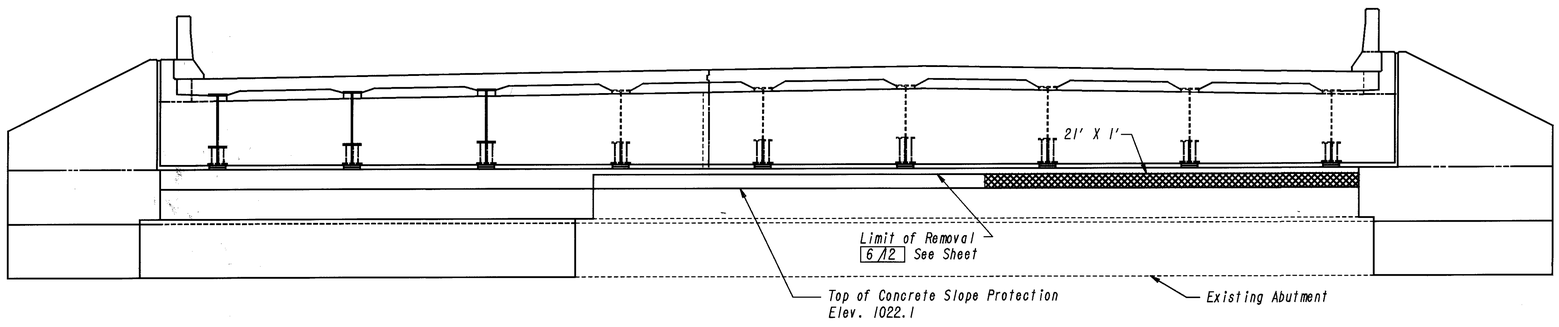

SOUTHBOUND REAR ABUTMENT ELEVATION

Note:

Item 843 - Trowelable Mortar

EUTHENICS INC.
CONSULTING ENGINEERS
CLEVELAND, OHIO

5A/12

ABUTMENT PATCHING PLAN

BRIDGE NO. CUY-71-0100L AND R
OVER DRAKE ROAD

DESIGN	DRAWN	TRACED	CHECKED	REVIEW	DATE	REVISED
KRD	EEF	—	GFH	RAB	3-94	

PLOTTED BY: fkonopka
PLOT SUBMITTED: 06-AUG-1998 06:40
307PCH02.DGN

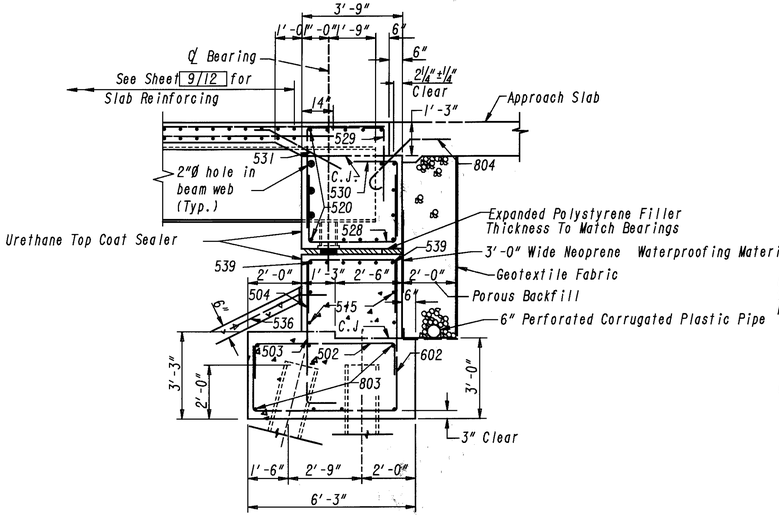

SECTION A-A

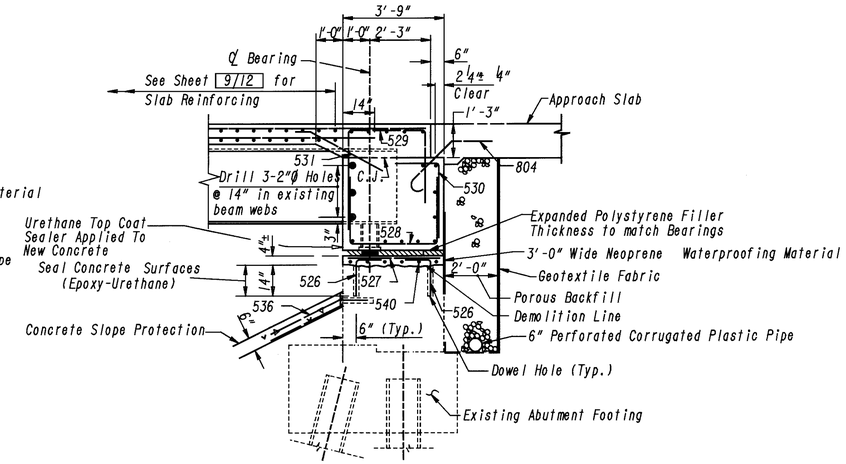

SECTION B-B

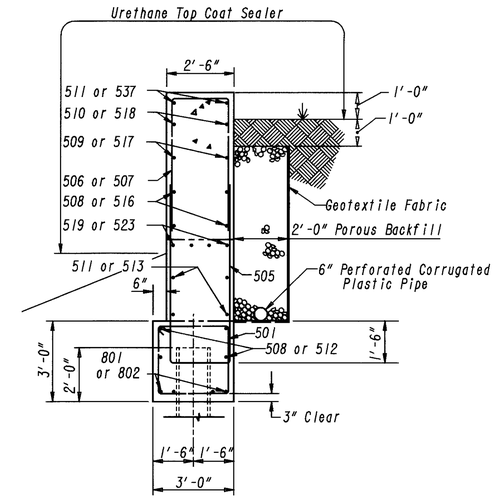

SECTION C-C

Notes:
For location of Sections A-A, B-B and C-C see sheets 4/12 and 5/12.

Expanded Polystyrene Filler is to be Included for Payment with Item 844 High Performance Concrete, Superstructure (Deck), As Per Plan.

Porous Backfill with filter fabric, 2 feet thick, shall extend up to the plane of the subgrade, up to the approach slab, and laterally as shown on the plans.

For Approach Slab notes and details, see Roadway Plans.

Drilling of 2"Ø holes in beam webs shall be included with Item 863 for payment.

Concrete Above the Beam Seat shall be included with Item 844- High Performance Concrete, Superstructure (Deck) As Per Plan for Payment.

All reinforcing bars shall be prefixed:
EA - Epoxy coated abutment

For reinforcement schedule see sheet 12/12.

The following abbreviations are used:

C.J. - Construction Joint	Typ. - Typical
PEJF - Preformed Expansion Joint Filler	R.A. - Rear Abutment
	F.A. - Forward Abutment

Dowel holes shall be placed in accordance with CMS 510.
All labor, materials and installation shall be included with the appropriate Item 844 or Item 601 for payment.

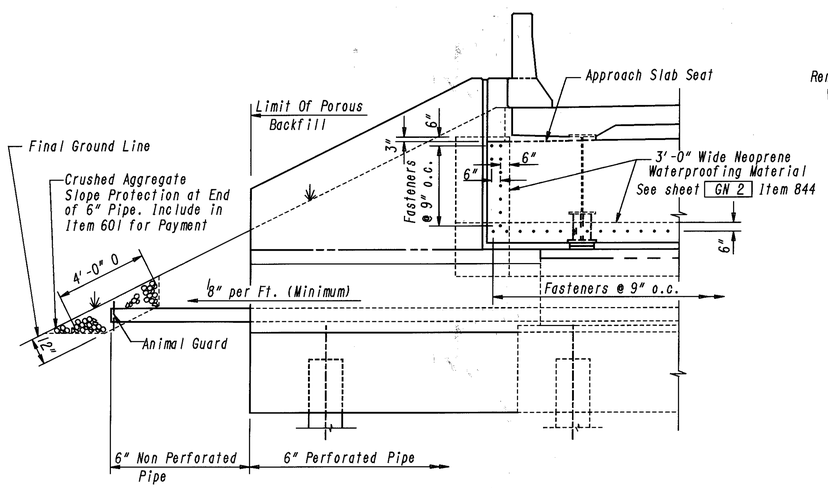

DETAIL A

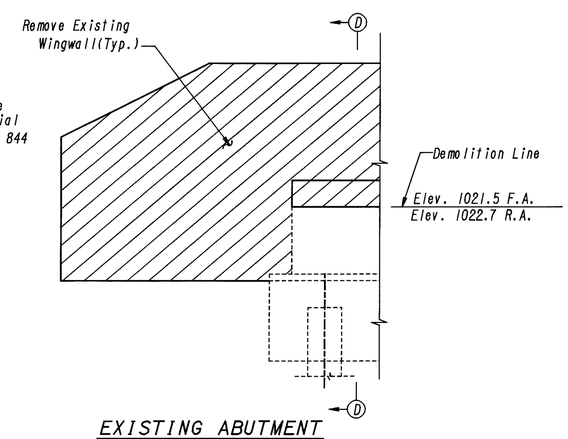

EXISTING ABUTMENT LIMIT OF REMOVAL

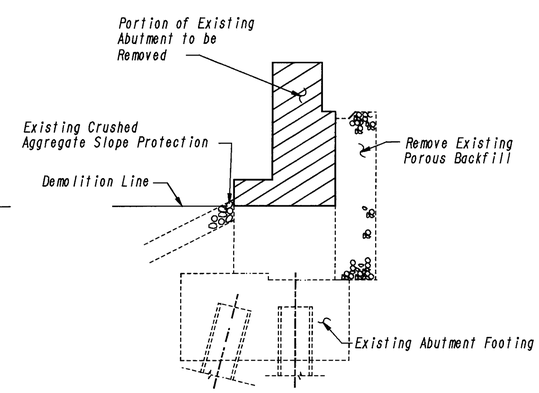

SECTION D-D

Minimum Lap Lengths
No. 5 Bar = 2'-2"
No. 6 Bar = 2'-4"

EUTHENICS INC. CONSULTING ENGINEERS CLEVELAND, OHIO

6/12

ABUTMENT SECTIONS AND DETAILS

BRIDGE NO. CUY-71-0100L AND R
OVER DRAKE ROAD

DESIGN	DRAWN	TRACED	CHECKED	REVIEW	DATE	REVISED
KRD	EEF	—	GFH	RAB	3-94	

PLOTTED BY: Konopka
i:\Bridge\cuy\cuy71\100B\307asd02.dgn
PLOT SUBMITTED: 05-AUG-1998 06:42

CUY-71-0.00	OHIO	299 / 361
	FHWA REGION 5	
	FEDERAL PROJECT	

PIER	LANE	ELEVATION A	B	C	D	E	STATION F
1	SB	1023.87	1023.75	1023.63	1019.63	1001.7 ±	540+37.49
	NB	1023.87	1023.75	1023.64	1019.64	997.0 ±	540+37.01
2	SB	1023.01	1022.90	1022.78	1018.78	997.0 ±	541+00.29
	NB	1023.02	1022.90	1022.78	1018.78	996.0 ±	541+00.21

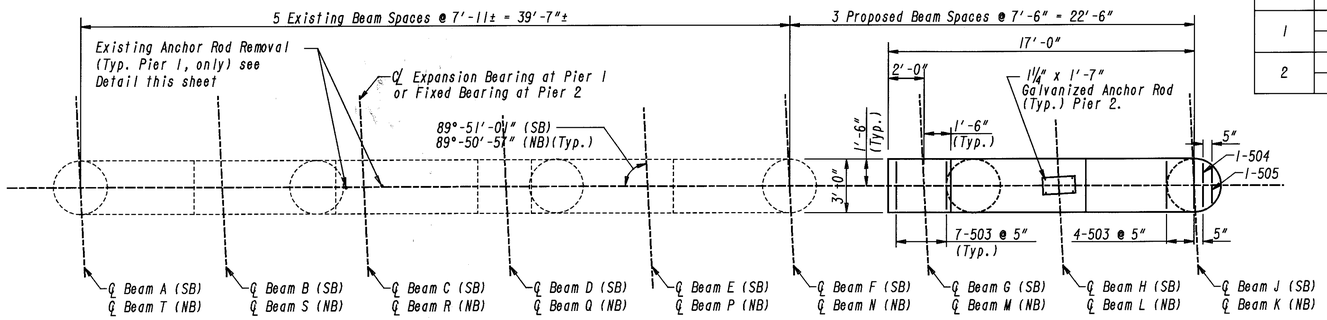

PLAN

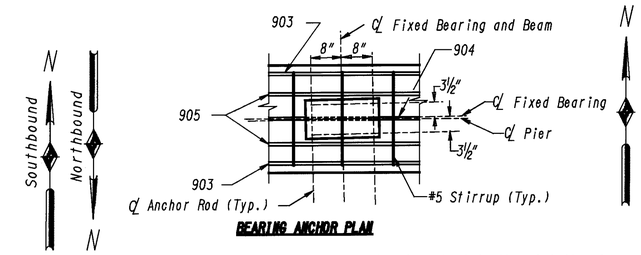

BEARING ANCHOR PLAN

Note: Bridge Seat Reinforcing: Reinforcing steel in the vicinity of the bridge seat at Pier 2 shall be accurately placed to avoid interference with the drilling of bearing anchor holes or the pre-setting of bearing anchors.

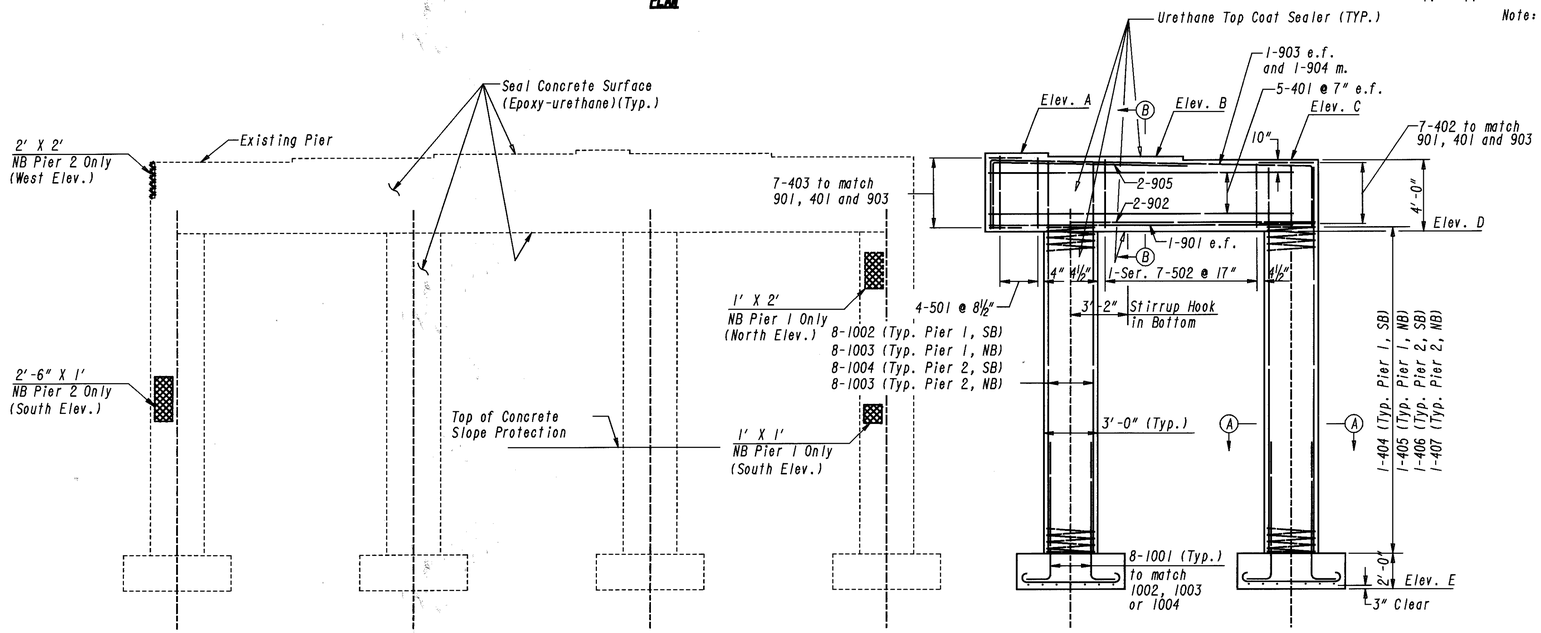

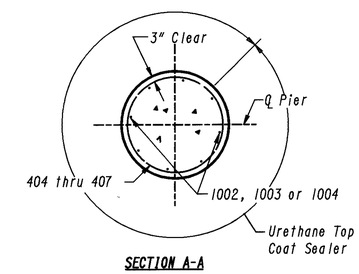

SECTION A-A

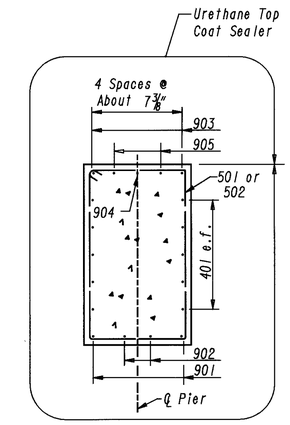

SECTION B-B

MINIMUM LAP LENGTHS
No. 4 Bar = 1'-8"
No. 10 Bar = 8'-3"

Notes:

Dimensions and reinforcement are typical for all piers , except as noted.

Bearing Anchors: At the option of the Contractor, bearing anchors (or formed holes) located and supported by templates, may be cast in place.

The cap beam stirrups shall be placed with the hook on top, except as noted.

All reinforcing bars shall be prefixed EP = Epoxy Coated Pier.

Item 843 - Trowelable Mortar

For reinforcement schedule see sheet 12/12

For details of anchor rods see Ohio Standard Drawing FB-1-82.

The following abbreviations are used:

e.f. = each face	Ser. = series
m. = middle	NB = Northbound
Elev. = elevation	SB = Southbound
(Typ.) = typical	

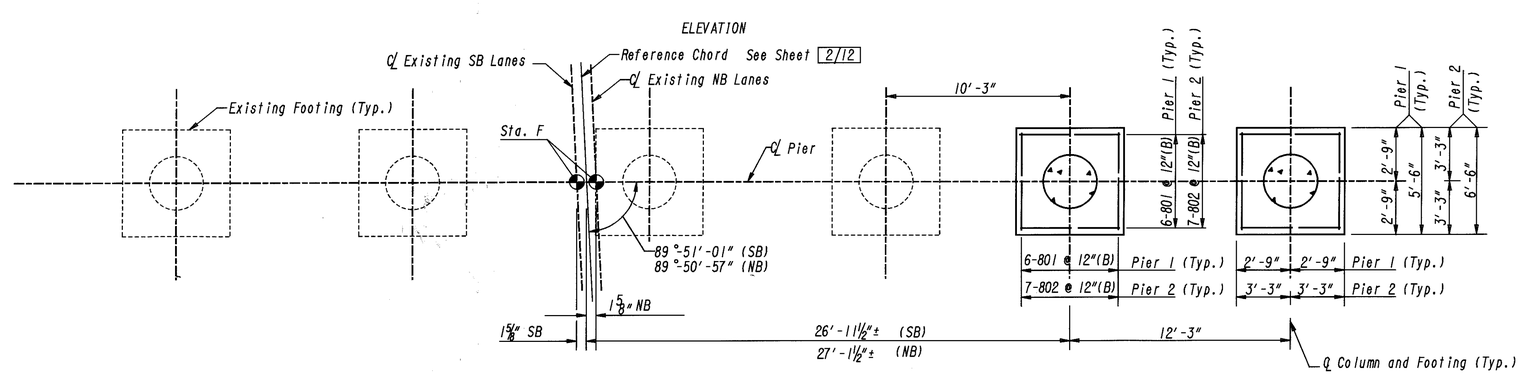

FOOTING PLAN

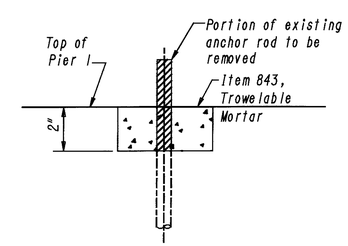

EXISTING ANCHOR ROD REMOVAL

Note: Removal of existing concrete and anchor rod shall be included for payment with Item 843 - Trowelable Mortar

EUTHENICS INC. CONSULTING ENGINEERS CLEVELAND, OHIO

7/12

PIERS

BRIDGE NO. CUY-71-0100L AND R OVER DRAKE ROAD

DESIGN	DRAWN	TRACED	CHECKED	REVIEW	DATE	REVISED
GFH	EEF	—	KRD	RAB	3-94	

PLOTTED BY: fkonopka
PLOT SUBMITTED: 06-AUG-1998 06:43
307PRS02.DGN

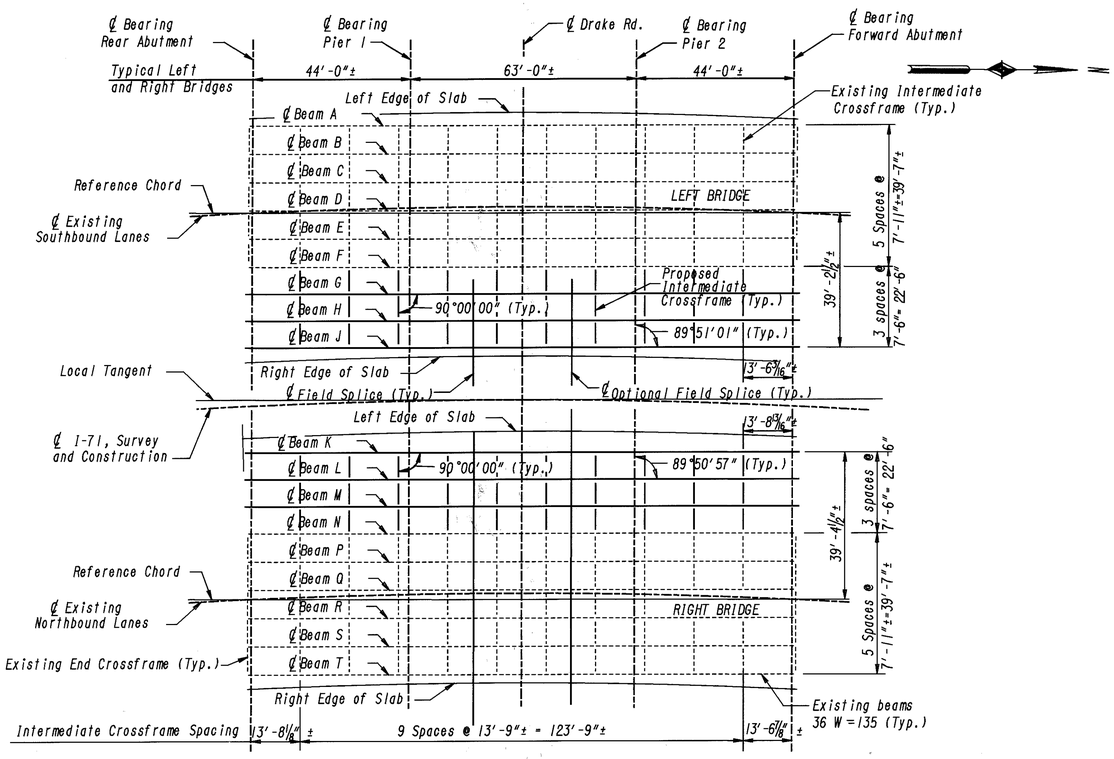

FRAMING PLAN

HORIZONTAL OFFSETS TO EDGE OF SLAB											
LOCATION	1/4	1/2	3/4	℄ Pier 1	1/4	1/2	3/4	℄ Pier 2	1/4	1/2	3/4
℄ Beam A to Left Edge of Slab	2'-8"	2'-8 1/2"	2'-8 7/8"	2'-9 1/8"	2'-9 3/8"	2'-9 1/2"	2'-9 3/8"	2'-9 1/8"	2'-8 3/4"	2'-8 3/8"	2'-8"
℄ Beam J to Right Edge of Slab	2'-2 7/8"	2'-2 1/2"	2'-2 1/8"	2'-1 7/8"	2'-1 5/8"	2'-1 1/2"	2'-1 5/8"	2'-1 7/8"	2'-2 1/8"	2'-2 3/8"	2'-3"
℄ Beam K to Left Edge of Slab	2'-2"	2'-2 1/2"	2'-2 7/8"	2'-3 1/8"	2'-3 3/8"	2'-3 1/2"	2'-3 3/8"	2'-3 1/8"	2'-2 3/4"	2'-2 1/2"	2'-2"
℄ Beam T to Right Edge of Slab	2'-9"	2'-8 1/2"	2'-8 1/8"	2'-7 7/8"	2'-7 5/8"	2'-7 1/2"	2'-7 5/8"	2'-7 7/8"	2'-8 1/8"	2'-8 1/2"	2'-9"

Note: The 1/4, 1/2 and 3/4 points are measured between bearings. Horizontal offsets are measured perpendicular to ℄ beam.

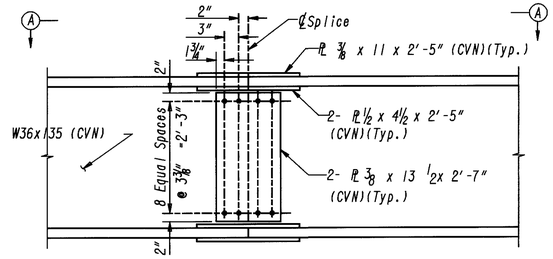

PROPOSED BEAM FIELD SPLICE DETAIL

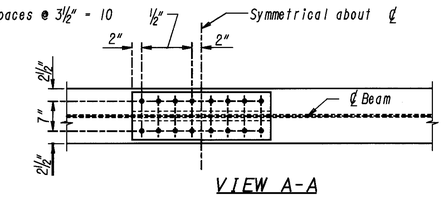

VIEW A-A

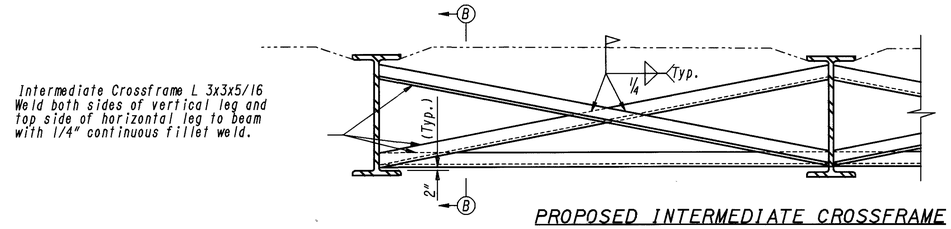

PROPOSED INTERMEDIATE CROSSFRAME

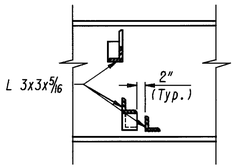

SECTION B-B

DEAD LOAD DEFLECTION AND CAMBER																					
Beam	SPAN 1				SPAN 2												SPAN 3			
	1/2				F.S.				1/2				Optional F.S.				1/2			
	Stl.	Rem.D.L.	Con.	Tot.	Stl.	Rem.D.L.	Con.	Tot.	Stl.	Rem.D.L.	Con.	Tot.	Stl.	Rem.D.L.	Con.	Tot.	Stl.	Rem.D.L.	Con.	Tot.
G	0	1/16	0	1/16	1/16	1/4	0	5/16	1/16	3/8	0	7/16	1/16	1/4	0	5/16	0	1/16	0	1/16
H	0	1/16	0	1/16	1/16	1/4	0	5/16	1/16	3/8	0	7/16	1/16	1/4	0	5/16	0	1/16	0	1/16
J	0	1/16	0	1/16	1/16	3/16	0	1/4	1/16	5/16	0	3/8	1/16	3/16	0	1/4	0	1/16	0	1/16
K	0	1/16	0	1/16	1/16	3/16	0	1/4	1/16	5/16	0	3/8	1/16	3/16	0	1/4	0	1/16	0	1/16
L	0	1/16	0	1/16	1/16	1/4	0	5/16	1/16	3/8	0	7/16	1/16	1/4	0	5/16	0	1/16	0	1/16
M	0	1/16	0	1/16	1/16	1/4	0	5/16	1/16	3/8	0	7/16	1/16	1/4	0	5/16	0	1/16	0	1/16

Note: Deflections and convexities are given to the nearest 1/16 inch.

The following abbreviations are used:

Stl. = Dead load deflection due to weight of steel
Rem D.L. = Remaining dead load deflection
Con. = Convexity
Tot. = Total required camber

Notes:

Where a shape or plate is designated (CVN) the material shall meet the specified minimum notch toughness requirements as specified in 711.01 of CMS.

High strength bolts shall be 1" diameter A325 unless otherwise noted.

Welded attachment of supports for concrete deck finishing machine may be made to areas of the fascia stringer flanges designated "Compression". Attachments shall not be made to areas designated "Tension". Fillet welds to compression flanges shall be not closer than 1" from edge of flange, be not more than 2" long, and be not smaller than the minimum size required by AASHTO.

For additional beam splice notes and details see Ohio Standard Drawing SD-1-69 Sheet 4 of 4.

For details of fixed bearings see Ohio Standard Drawing FB-1-82.

EXPANSION BEARINGS: Existing expansion bearings at the abutments and Pier 1 shall be removed and replaced. For details of expansion bearings see sheet 11/12.

The following abbreviations are used:
(Typ.) = Typical Pl = Plate
F.S. = Field Splice

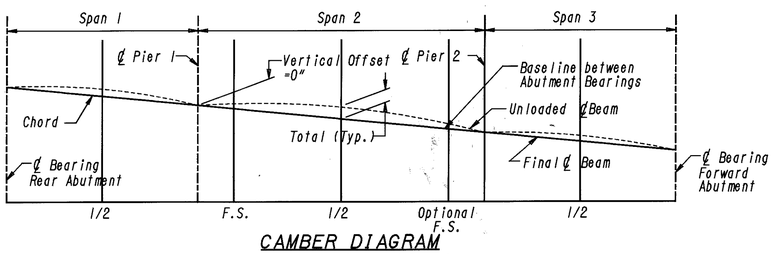

CAMBER DIAGRAM
(Typical All Proposed Beams)

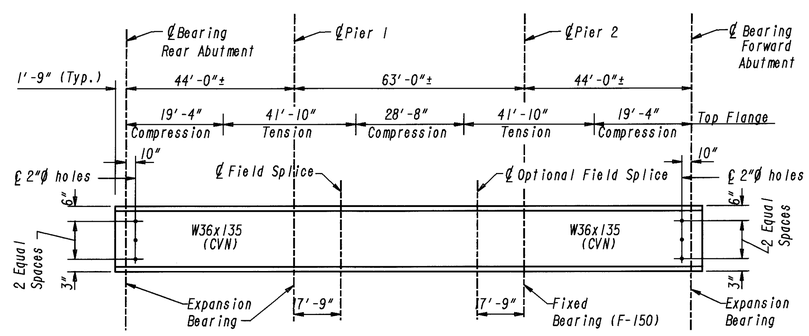

TYPICAL PROPOSED BEAM ELEVATION
(Beams G thru M)

EUTHENICS INC. CONSULTING ENGINEERS CLEVELAND, OHIO 8/12

FRAMING PLAN

BRIDGE NO. CUY-71-0100L AND R
OVER DRAKE ROAD

DESIGN	DRAWN	TRACED	CHECKED	REVIEW	DATE	REVISED
GFH	EEF	—	KRD	RAB	3-94	

PLOTTED BY: fKonopka
PLOT SCALE: 1:1
PLOT DATE: 06-AUG-1998 06:47
307FP02.DGN
PLOT SUBMITTED: 06-AUG-1998 06:47
307FP02.dgn
Pcuy-71-100B307fp02.dgn
Pid08459Bdgn
Porsberg

CUY-71-0.00	OHIO FHWA REGION 5 FEDERAL PROJECT	30/36

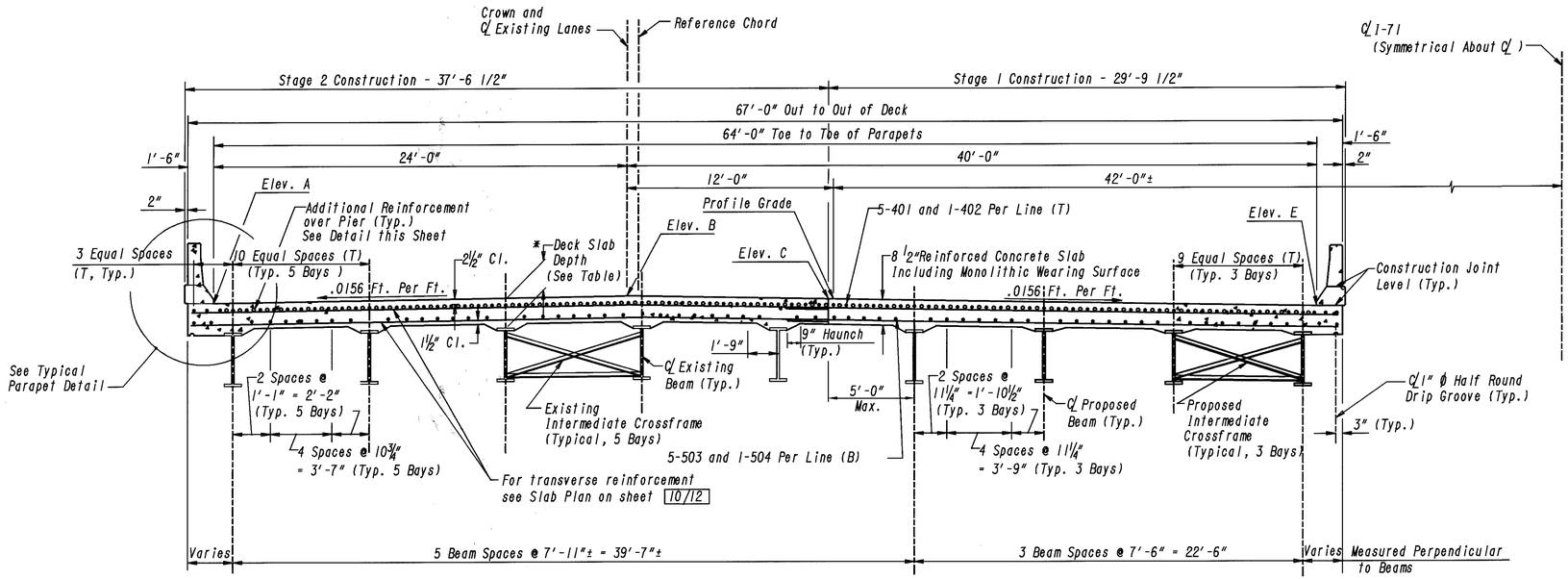

TRANSVERSE SECTION

*TABLE OF DECK SLAB DEPTH (at ℄ Bearing)				
	Rear Abutment	Pier 1	Pier 2	Forward Abutment
Existing Beams	12 1/8±	12 5/8±	12 3/8±	11 3/4±
Proposed Beams	10½	10½	10½	10½

*DECK SLAB DEPTH: The distances shown from top of deck slab to top of steel beams are the design dimensions. The quantity of deck concrete in each span to be paid for shall be based on the averages of these slab depths at the end of each span, even though deviation from it may be necessary because the top flange of the beam may not have the exact camber or conformation required to place it parallel to the finished grade.

Note:
Transverse dimensions measured radially, except as noted.

Minimum Lap Lengths	
No.4 Bar	1'-7"
No.5 Bar	2'-6"
No.6 Bar	2'-4"

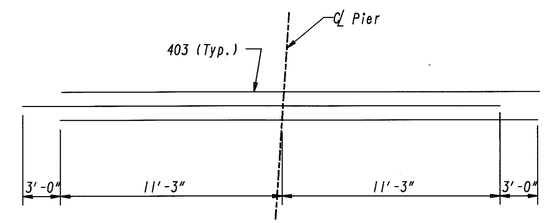

ADDITIONAL REINFORCEMENT OVER PIER

Notes:

All reinforcing bars shall be prefixed ES.

2"Ø conduit 713.07 in median parapets to be included with High Performance Concrete (Parapets) for payment.

See Sheet 10/12 for Parapet Reinforcing.

The following abbreviations are used:
T = Top B = Bottom
Typ. = Typical Fwd. = Forward

A haunch width of 9" shall be used for computing quantity of concrete. However, the haunch width may vary between 6 and 12 inches.

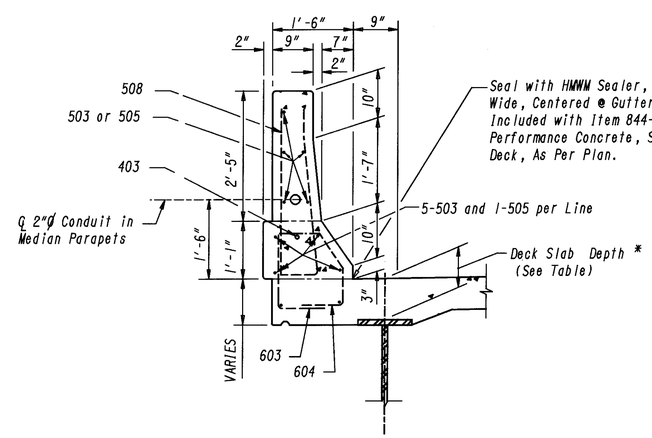

TYPICAL PARAPET DETAIL

DECK SCREED ELEVATIONS

	Elev.	SPAN 1 ℄ Bearing Rear Abutment	SPAN 1 1/2	SPAN 1 ℄ Bearing Pier 1	SPAN 2 F.S.	SPAN 2 1/2	SPAN 2 Optional F.S.	SPAN 3 ℄ Bearing Pier 2	SPAN 3 1/2	SPAN 3 ℄ Bearing Fwd. Abutment	Elev.
SOUTHBOUND LANES	A	1028.36	1028.17	1027.98	1027.85	1027.74	1027.61	1027.44	1027.26	1027.06	A
	B	1028.73	1028.55	1028.36	1028.22	1028.12	1027.99	1027.82	1027.63	1027.44	B
	C	1028.54	1028.36	1028.17	1028.03	1027.93	1027.80	1027.63	1027.44	1027.25	C
	D	not used									D
	E	1028.11	1027.93	1027.73	1027.60	1027.49	1027.36	1027.19	1027.01	1026.81	E
	Beam										Beam
	A	1028.37	1028.19	1028.00	1027.87	1027.76	1027.63	1027.46	1027.28	1027.08	A
	B	1028.50	1028.32	1028.12	1027.99	1027.89	1027.76	1027.58	1027.40	1027.20	B
	C	1028.62	1028.44	1028.25	1028.12	1028.01	1027.88	1027.71	1027.52	1027.33	C
	D	1028.72	1028.54	1028.34	1028.21	1028.10	1027.97	1027.80	1027.62	1027.42	D
	E	1028.60	1028.41	1028.22	1028.08	1027.98	1027.85	1027.68	1027.50	1027.30	E
	F	1028.47	1028.29	1028.09	1027.96	1027.85	1027.73	1027.55	1027.37	1027.18	F
	G	1028.36	1028.17	1027.98	1027.84	1027.74	1027.61	1027.44	1027.25	1027.06	G
	H	1028.24	1028.06	1027.86	1027.73	1027.62	1027.49	1027.32	1027.14	1026.94	H
	J	1028.12	1027.93	1027.74	1027.61	1027.50	1027.37	1027.20	1027.02	1026.83	J
NORTHBOUND LANES	Elev.										Elev.
	A	1028.37	1028.18	1027.99	1027.85	1027.74	1027.61	1027.44	1027.26	1027.06	A
	B	1028.74	1028.56	1028.36	1028.23	1028.12	1027.99	1027.82	1027.63	1027.44	B
	C	1028.55	1028.37	1028.17	1028.04	1027.93	1027.80	1027.63	1027.44	1027.25	C
	D	not used									D
	E	1028.11	1027.93	1027.73	1027.60	1027.49	1027.36	1027.19	1027.01	1026.81	E
	Beam										Beam
	K	1028.12	1027.94	1027.75	1027.61	1027.50	1027.37	1027.20	1027.02	1026.82	K
	L	1028.24	1028.06	1027.86	1027.73	1027.62	1027.49	1027.32	1027.14	1026.94	L
	M	1028.36	1028.18	1027.98	1027.85	1027.74	1027.61	1027.44	1027.25	1027.06	M
	N	1028.47	1028.29	1028.10	1027.97	1027.86	1027.73	1027.55	1027.37	1027.17	N
	P	1028.60	1028.42	1028.22	1028.09	1027.98	1027.85	1027.68	1027.49	1027.30	P
	Q	1028.72	1028.54	1028.35	1028.21	1028.10	1027.98	1027.80	1027.62	1027.42	Q
	R	1028.63	1028.45	1028.25	1028.12	1028.01	1027.88	1027.71	1027.52	1027.33	R
	S	1028.51	1028.32	1028.13	1027.99	1027.89	1027.76	1027.58	1027.40	1027.21	S
	T	1028.39	1028.20	1028.00	1027.87	1027.76	1027.63	1027.46	1027.28	1027.08	T

Note: The top of concrete deck elevations above are those which are required before concrete is placed. Proper allowances have been made for the anticipated dead load deflections caused by the weight of the concrete.

EUTHENICS INC. CONSULTING ENGINEERS CLEVELAND, OHIO — 9/12

TRANSVERSE SECTION

BRIDGE NO. CUY-71-0100L AND R OVER DRAKE ROAD

DESIGN	DRAWN	TRACED	CHECKED	REVIEW	DATE	REVISED
KRD	EEF	—	GFH	RAB	3-94	

PLOT SUBMITTED:06-AUG-1998 06:48
PLOTTED BY:fkonopka
PLOT SCALE:1:1
307TSX02.DGN
PLOT DATE:6-AUG-98 Pid08459 Bdgn Bcuy-71-100B307tsx02.dgn

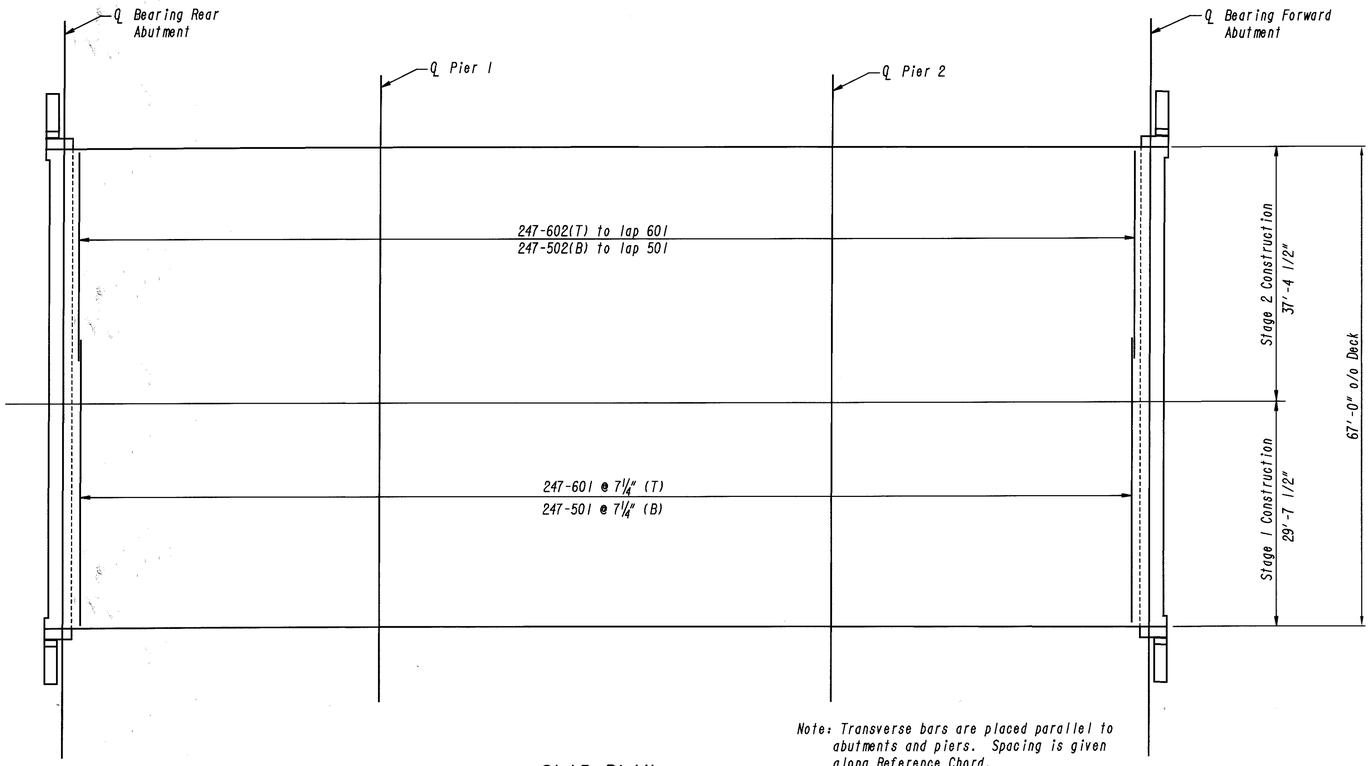

SLAB PLAN

(Southbound Shown, Northbound Similar)

Note: Transverse bars are placed parallel to abutments and piers. Spacing is given along Reference Chord.

For longitudinal reinforcing see Transverse Section on sheet 9/12.

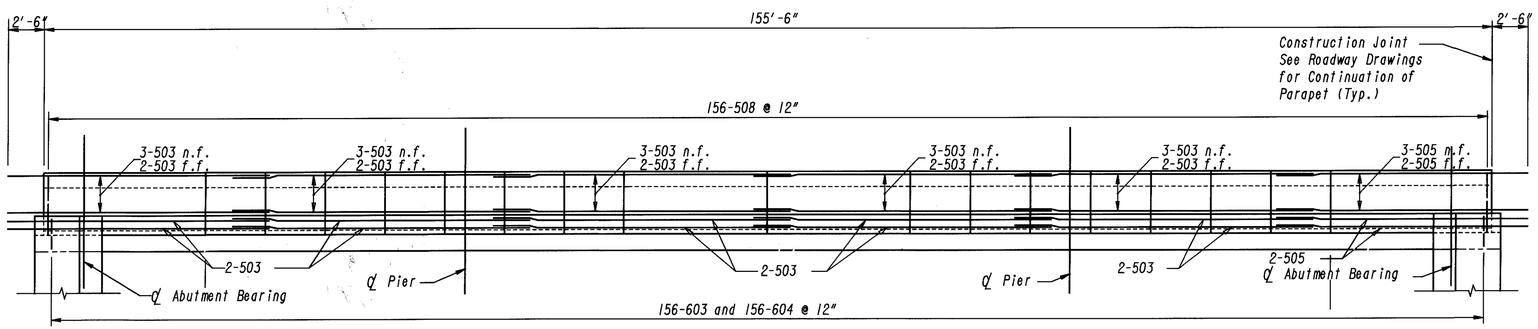

TYPICAL PARAPET ELEVATION

Minimum Lap Lengths	
No.5 Bar	2'-6"
No.6 Bar	2'-4"

Notes:

Quantities of concrete and reinforcing steel for parapets are included with their appropriate items under superstructure for payment.

All reinforcing bar marks shall be prefixed ES.

The following abbreviations are used:

(T) = Top	e.f. = each face
(B) = Bottom	(Typ.) = Typical
n.f. = near face	f.f. = far face

For parapet sawcut joint spacing, see sheet GN4.

EUTHENICS INC. CONSULTING ENGINEERS CLEVELAND, OHIO — 10/12

SLAB PLAN AND PARAPET ELEVATION

BRIDGE NO. CUY-71-0100L and R OVER DRAKE ROAD

DESIGN	DRAWN	TRACED	CHECKED	REVIEW	DATE	REVISED
KRD	EEF	—	GFH	RAB	3-94	

PLOTTED BY: fkonopka
PLOT SCALE: 1:1
PLOT DATE: 06-AUG-1998 06:49
PLOT SUBMITTED: 06-AUG-1998 06:49
307PE02.DGN
pid08459Bdgn Cuy-71-100B307pe02.dgn

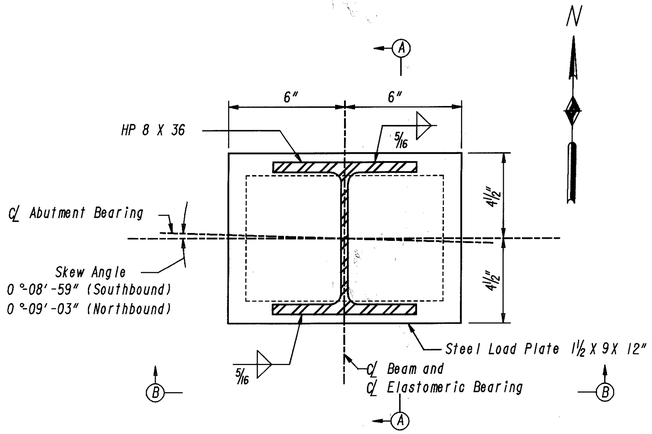

EXPANSION BEARING AT ABUTMENTS

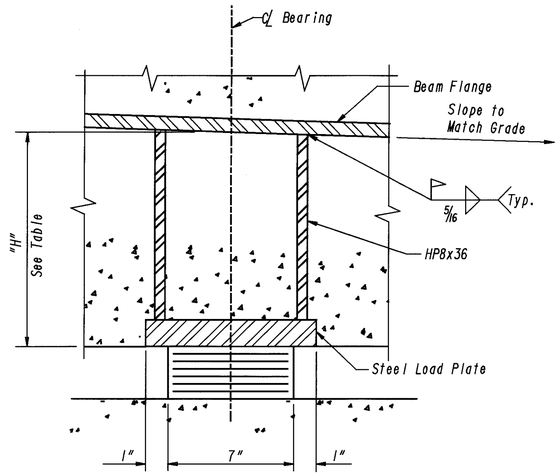

SECTION A-A

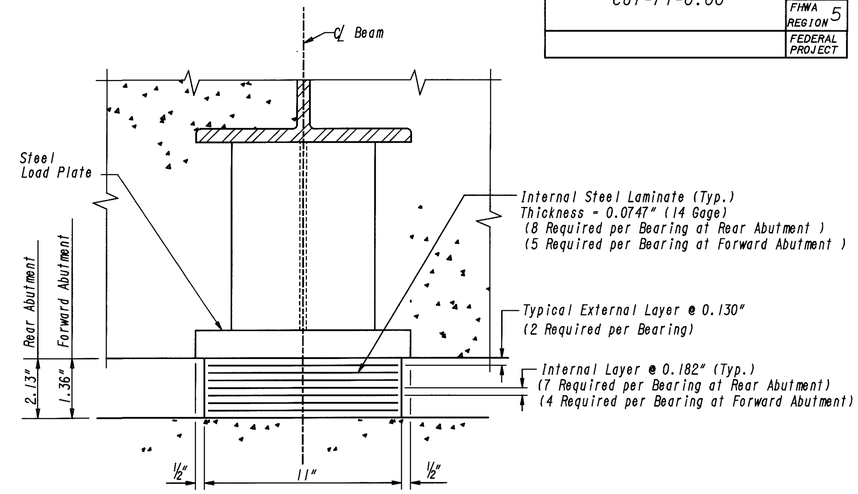

SECTION B-B

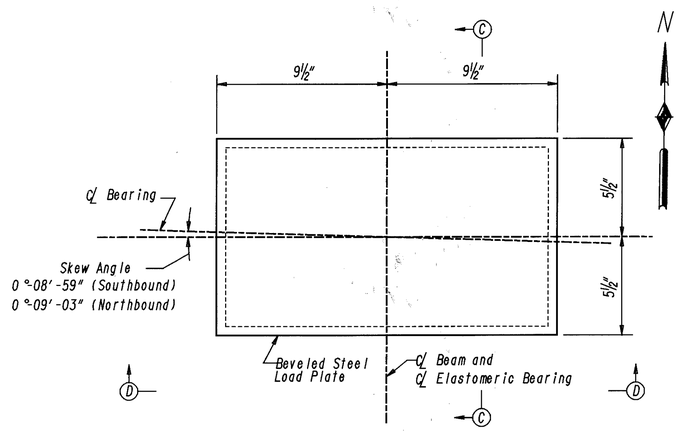

EXPANSION BEARING AT PIER 1

PEDESTAL HEIGHT "H" (Inches)										
SOUTHBOUND	BEAM	A	B	C	D	E	F	G	H	J
	Forward Abutment	13 11/16	15 1/8	16 11/16	17 5/16	16 5/16	15 3/8	14 13/16	13 3/8	12
	Rear Abutment	13 1/4	14 15/16	16 1/4	17 7/16	16	14 5/16	14 13/16	13 3/8	12
NORTHBOUND	BEAM	K	L	M	N	P	Q	R	S	T
	Forward Abutment	12	13 3/8	14 13/16	15 1/16	16 3/4	18 3/16	17 1/8	15 7/16	13 7/8
	Rear Abutment	12	13 3/8	14 13/16	14 9/16	16 1/8	17 5/16	16 1/4	14 15/16	13 5/8

LAMINATED ELASTOMERIC BEARING NOTES:
DESIGN LOADING: SERVICE LOAD REACTIONS - KIPS

	DEAD LOAD	LIVE LOAD WITHOUT IMPACT	TOTAL
ABUTMENTS:	24.1	38.9	63.0
PIER:	95.6	49.3	144.9

LAMINATED ELASTOMERIC BEARING NOTES:

WELDING OF THE SUPPORT POST TO THE LOAD PLATE AND OF THE LOAD PLATE TO THE GIRDER SHALL BE CONTROLLED SO THAT THE PLATE TEMPERATURE AT THE ELASTOMER BONDED SURFACE DOES NOT EXCEED 300 DEGREES FAHRENHEIT AS DETERMINED BY USE OF PYROMETRIC STICKS OR OTHER TEMPERATURE MONITORING DEVICES.

STEEL FOR LOAD PLATES SHALL BE ASTM A709, GRADE 36.

THE STEEL LOAD PLATE SHALL BE BONDED BY VULCANIZATION TO THE ELASTOMER DURING THE MOLDING PROCESS.

ELASTOMERIC BEARINGS SHALL COMPLY WITH ITEM 516 AND ARTICLES 18.5 THROUGH 18.10 OF SECTION 18, BEARING, DIVISION II - CONSTRUCTION OF THE CURRENT AASHTO SPECIFICATIONS FOR HIGHWAY BRIDGES. BEARINGS SHALL BE GRADE 3, 50 DUROMETER NEOPRENE ELASTOMER, AND SHALL BE SUBJECTED TO THE TEST REQUIREMENTS OF ARTICLE 18.7.4.5. THE BEARINGS WERE DESIGNED PER ARTICLE 14.6.6 OF AASHTO DIVISION I-DESIGN. THE UNIT PRICE BID SHALL INCLUDE TESTING, STEEL SUPPORT POST AND ALL OTHER MATERIALS, LABOR AND INCIDENTALS NECESSARY TO FURNISH AND INSTALL LAMINATED ELASTOMERIC BEARINGS. PAYMENT WILL BE MADE AT THE CONTRACT PRICE BID FOR THE APPROPRIATE ITEM 516 - ELASTOMERIC BEARING WITH INTERNAL LAMINATES AND LOAD PLATE (NEOPRENE), AS PER PLAN.

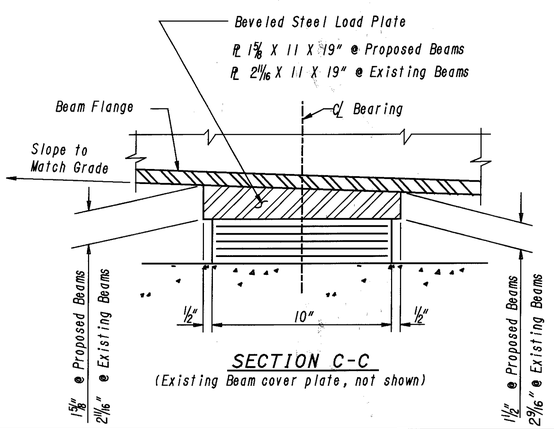

SECTION C-C
(Existing Beam cover plate, not shown)

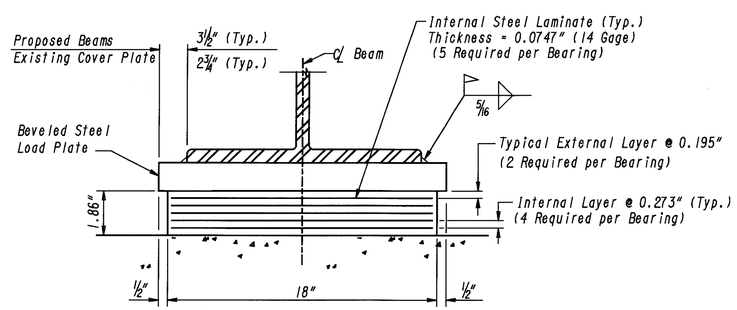

SECTION D-D
(Existing Beam cover plate, not shown)

EUTHENICS INC. CONSULTING ENGINEERS CLEVELAND, OHIO | 11/12

LAMINATED ELASTOMERIC BEARINGS

BRIDGE NO. CUY-71-0100L AND R
OVER DRAKE ROAD

DESIGN	DRAWN	TRACED	CHECKED	REVIEW	DATE	REVISED
KRD	EEF	—	GFH	RAB	3-94	

PLOTTED BY: fkonopka
PLOT SUBMITTED:06-AUG-1998 06:50
PLOT SCALE: 1.000000
PLOT USER SCALE: 1.000000
PLOT OFFSET (X,Y): 0.000000, 0.000000
PLOT DEVICE: PS2
PLOT FORM: 1
PLOT SUBMITTED:06-AUG-1998 06:50
cuy-71-100B307leb02.dgn
d08459bridge.dgn
307LEB02.DGN

MARK	NO.	LENGTH	TYPE	SER. INCR.	WEIGHT (LBS.)
ABUTMENTS					
EA 501	56	11'-0"	10		642
EA 502	76	9'-6"	6		753
EA 503	72	6'-4"	5		476
EA 504	72	7'-10"	6		588
EA 505	56	14'-11"	6		871
EA 506	4 Ser 7	5'-9" to 13'-7"	6	1'-3 11/16"	282
EA 507	4 Ser 7	5'-9" to 14'-1"	6	1'-4 11/16"	290
EA 508	32	8'-7"	Str		286
EA 509	8	5'-9"	Str		48
EA 510	8	2'-11"	Str		24
EA 511	24	9'-7"	Str		240
EA 512	16	9'-11"	Str		165
EA 513	16	10'-9"	Str		179
EA 514	48	3'-8"	Str		184
EA 515	16	23'-8"	Str		395
EA 516	16	8'-1"	Str		135
EA 517	8	5'-5"	Str		45
EA 518	8	2'-8"	Str		22
EA 519	16	19'-5"	Str		324
EA 520	68	33'-1"	Str		2,346
EA 521	8	11'-0"	Str		92
EA 522	68	38'-1"	Str		2,701
EA 523	16	13'-8"	Str		228
EA 524	4	10'-7"	6		44
EA 525	4	6'-11"	6		29
EA 526	232	2'-0"	5		484
EA 527	116	3'-5"	Str		413
EA 528	240	9'-2"	6		2,295
EA 529	240	9'-5"	27		2,357
EA 530	252	4'-7"	5		1,205
EA 531	224	4'-3"	9		993
EA 532	48	7'-6"	6		300
EA 533	8	13'-2"	6		110
EA 534	8	6'-10"	5		57
EA 535	8	7'-1"	5		59
EA 536	164	4'-1"	9		698
EA 537	8	9'-0"	Str		75
EA 538	8	11'-4"	6		95
EA 539	24	22'-0"	52		551
EA 540	24	36'-0"	53		901
EA 601	44	4'-0"	Str		264
EA 602	76	13'-4"	27		1,522
EA 801	16	11'-6"	Str		491
EA 802	16	9'-11"	Str		424
EA 803	28	23'-9"	Str		1,776
EA 804	184	4'-10"	8		2,375
				TOTAL WEIGHT	28,834*
PIERS					
EP 401	40	16'-10"	Str		450
EP 402	28	8'-8"	45		162
EP 403	28	7'-0"	6		131
EP 404	2	16'-1"	51		610
EP 405	2	20'-10"	51		784
EP 406	2	20'-0"	51		746
EP 407	2	21'-0"	51		785
EP 501	16	13'-16"	10		225
EP 502	4 Ser 7	13'-0" to 13'-4"	10	11/16"	385
EP 503	72	4'-5"	6		332
EP 504	4	4'-2"	6		17
EP 505	4	3'-8"	6		15
EP 801	48	7'-0"	1		897
EP 802	56	8'-0"	1		1,196
EP 901	8	16'-10"	Str		458
EP 902	8	13'-5"	Str		365
EP 903	8	23'-6"	26		639
EP 904	4	24'-10"	26		338
EP 905	8	14'-6"	49		394
EP 1001	64	11'-7"	5		3,190
EP 1002	16	19'-8"	Str		1,354
EP 1003	32	24'-4"	Str		3,351
EP 1004	16	23'-6"	Str		1,618
				TOTAL WEIGHT	18,442*

MARK	NO.	LENGTH	TYPE	SER. INCR.	WEIGHT (LBS.)
SUPERSTRUCTURE					
ES 401	840	30'-0"	Str		16,834
ES 402	168	13'-1"	Str		1,468
ES 403	324	25'-6"	Str		5,519
ES 501	494	32'-2"	Str		16,574
ES 502	494	37'-1"	Str		19,107
ES 503	780	30'-0"	Str		24,406
ES 504	120	13'-10"	Str		1,731
ES 505	36	23'-0"	Str		863
ES 506		NOT USED			
ES 507		NOT USED			
ES 508	624	6'-11"	67		4,502
ES 601	494	32'-2"	Str		23,867
ES 602	494	37'-1"	Str		27,515
ES 603	624	2'-6"	5		2,343
ES 604	624	3'-2"	43		2968
				TOTAL WEIGHT	147,697*

BENDING DIAGRAMS

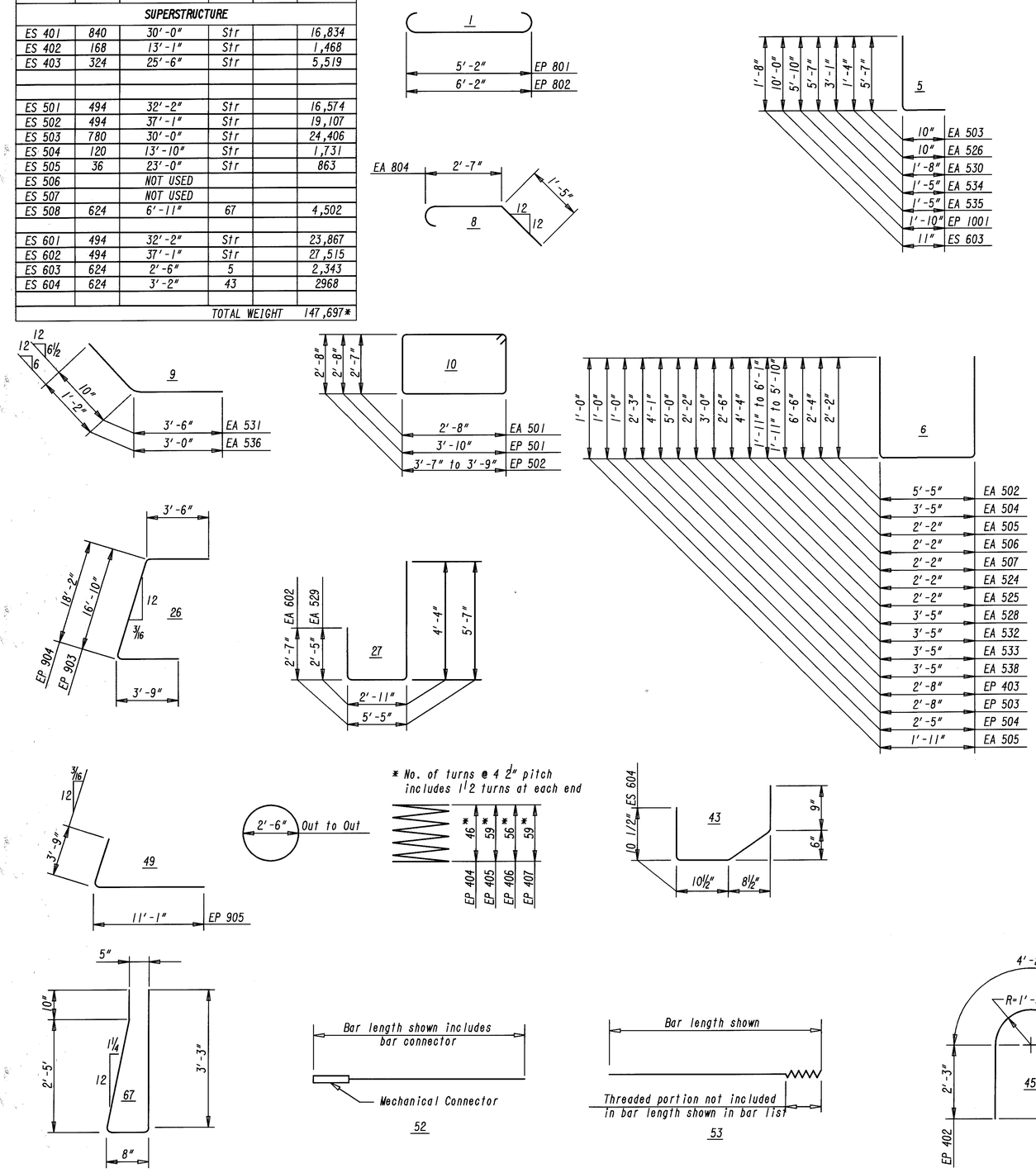

CUY-71-0.00	OHIO FHWA REGION 5 FEDERAL PROJECT	304 / 361

NOTES

1. THE BAR SIZE NUMBER IS SPECIFIED ON THE PLANS IN THE BAR MARK COLUMN. THE FIRST DIGIT WHERE THREE DIGITS ARE USED AND THE FIRST TWO DIGITS WHERE FOUR ARE USED INDICATES THE BAR SIZE NUMBER. FOR EXAMPLE, P601 IS A NO. 6 BAR. BAR DIMENSIONS SHOWN ARE OUT TO OUT UNLESS OTHERWISE INDICATED. R INDICATES INSIDE RADIUS. UNLESS OTHERWISE NOTED, "STD." WRITTEN IN PLACE OF A DIMENSION INDICATES A STANDARD BEND AT THE END OF THE BAR.

2. ALL REINFORCING STEEL TO BE EPOXY COATED.

3. CONCRETE SPACERS OR OTHER APPROVED NONCORROSIVE SPACING DEVICES SHALL BE USED AT SUFFICIENT INTERVALS (NEAR THE BOTTOM AND AT INTERVALS NOT EXCEEDING 10 FEET) TO ENSURE CONCENTRIC SPACING FOR THE ENTIRE CAGE LENGTH. SPACERS SHALL BE CONSTRUCTED OF APPROVED MATERIAL EQUAL IN QUALITY AND DURABILITY TO THE CONCRETE SPECIFIED FOR THE SHAFT. THE SPACERS SHALL HAVE ADEQUATE DIMENSIONS TO ENSURE A MINIMUM 3 INCH CLEAR SPACE BETWEEN THE OUTSIDE OF THE REINFORCING CAGE AND THE DESIGN DIMENSION OF THE COLUMN. CYLINDRICAL CONCRETE FEET (BOTTOM SUPPORTS) SHALL BE PROVIDED TO ENSURE THAT THE BOTTOM OF THE CAGE IS MAINTAINED AT THE PROPER DISTANCE ABOVE THE BASE.

4. SPIRAL REINFORCING BARS: THE "LENGTH" SHOWN IN THE STEEL LIST FOR THE SPIRAL BARS IS THE LENGTH OF THE SPIRAL ALONG THE AXIS OF THE SPIRAL. THREE STEEL CHANNEL, TEE OR ANGLE SPACERS, WEIGHING APPROXIMATELY 0.80 LB PER LINEAR FEET OF SPACER, SHALL BE PROVIDED FOR EACH SPIRAL UNIT. THEY SHALL BE EQUALLY SPACED ALONG THE PERIPHERY OF THE COILS. THE NUMBER OF POUNDS OF THESE SPACERS, BASED ON 2.40 LB PER LINEAR FOOT IS INCLUDED IN THE TABULATED QUANTITIES OF SPIRAL BARS.

#5 ALL REINFORCING STEEL SHALL BE INCLUDED WITH THE APPROPRIATE ITEM 844 FOR PAYMENT. WEIGHTS ARE GIVEN FOR INFORMATIONAL PURPOSES ONLY.

EUTHENICS INC. CONSULTING ENGINEERS CLEVELAND, OHIO

12/12

REINFORCEMENT SCHEDULE

BRIDGE NO. CUY-71-0100L AND R OVER DRAKE ROAD

DESIGN	DRAWN	TRACED	CHECKED	REVIEW	DATE	REVISED
GFH	EEF	—	KRD	RAB	3-94	

PLOTTED BY: fkonopka
PLOTTED ON: Tue, 07-Apr-98 07:51
PLOT SUBMITTED: 06-AUG-1998 06:51
Filename: 307RS02.DGN
Dgn: b307rs02.dgn
Dgn: cuy-71-100L
Dgn: d08459pid

CUY-71-0.00	OHIO	304A
	FHWA REGION 5	361

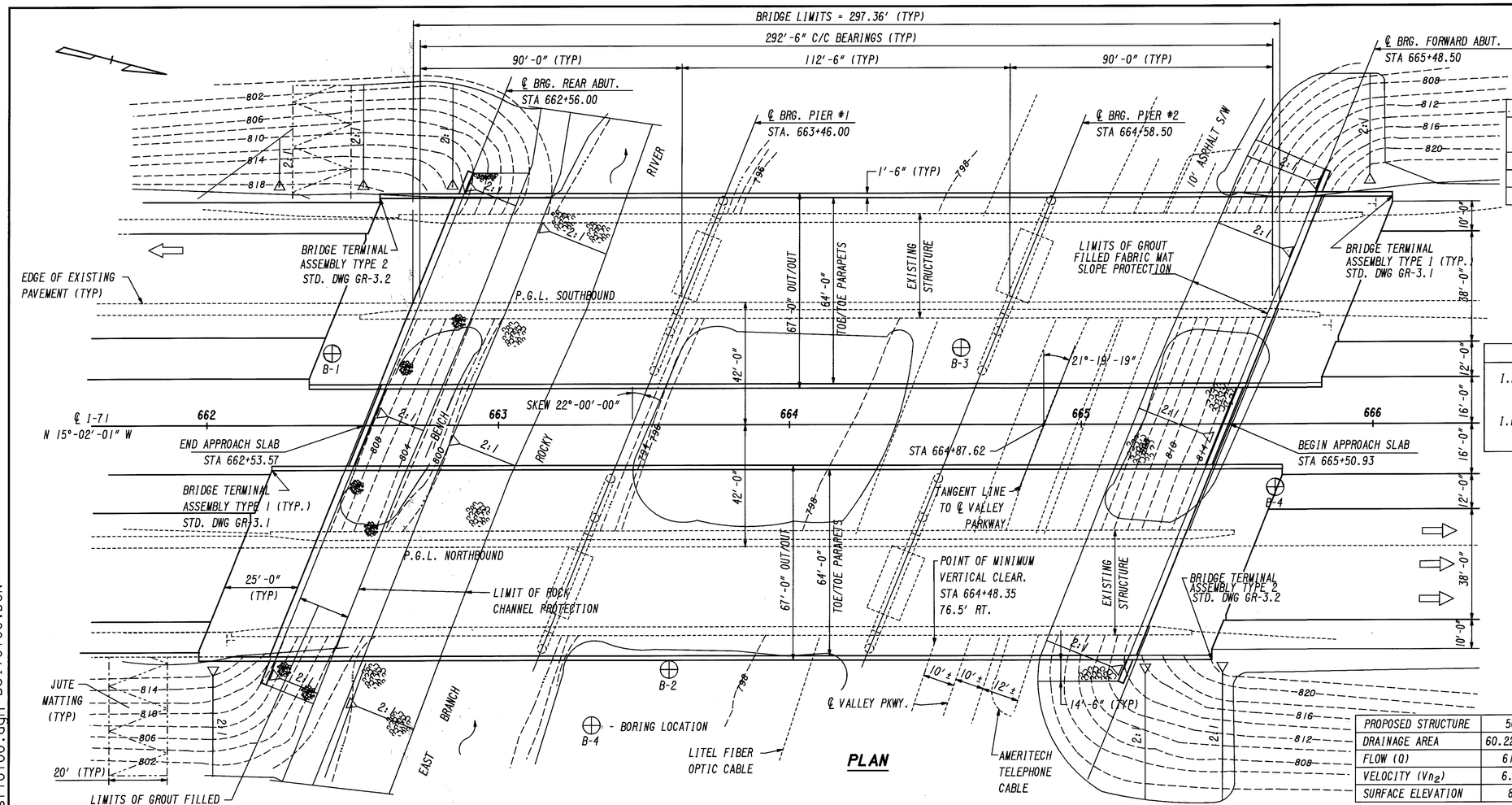

PLAN

APPROACH GUARDRAIL POST LOCATIONS				
STRUCTURE	QUADRANT			
	LEFT REAR	RIGHT REAR	LEFT FORWARD	RIGHT FORWARD
NORTHBOUND	662+18.76	661+92.91	-	665+48.67
SOUTHBOUND	662+55.83	-	666+11.59	665+85.74

NOTE: EARTHWORK LIMITS SHOWN ARE APPROXIMATE, ACTUAL SLOPES SHALL CONFORM TO PLAN CROSS SECTIONS.

BENCHMARKS
I.P. STA 665+64.54 ℄ I-71 EL. 824.64
I.P. STA 662+43.39 ℄ I-71 EL. 818.76

EXISTING STRUCTURE

TYPE: CONTINUOUS STEEL GIRDERS WITH REINFORCED CONCRETE DECK AND SUBSTRUCTURE
SPANS: 90'-0"±, 112'-6"±, 90'-0"± C/C BEARINGS
ROADWAY WIDTH: 30'-0" F/F CURB
SKEW: 22°-00'-00" LEFT FORWARD
LOADING: CF=2000
WEARING SURFACE: 1" LATEX MODIFIED CONCRETE
APPROACH SLABS: AS-1-54, 25'-0" LONG
ALIGNMENT: TANGENT
DATE BUILT: 1966
STRUCTURE FILE NUMBER: 1803662 / 1803697

PROPOSED STRUCTURE

- REMOVE THE EXISTING DECKS AND REPLACE WITH WIDENED DECKS.
- WIDEN THE PIERS, ABUTMENTS AND DECKS
- REPLACE THE EXISTING APPROACH SLABS
- ELIMINATE THE EXISTING EXPANSION JOINTS BY MODIFYING THE ABUTMENT TO ACT AS A SEMI-INTERGRAL TYPE STRUCTURE
- ELIMINATE ALL DRAINAGE STRUCTURES FROM BRIDGE
- INSTALL PRESSURE RELIEF JOINTS
- CLEAN AND PAINT STRUCTURAL STEEL
- REPAIR EXISTING ABUTMENTS AND PIERS
- REPAIR ABUTMENT SLOPES AND INSTALL NEW SLOPE PROTECTION

- RETROFIT EXISTING INTERMEDIATE STIFFENERS.
- ADD MEDIAN RETAINING WALLS BETWEEN ABUTMENTS

TYPE: A709 GRADE 36 PAINTED CONTINUOUS STEEL GIRDERS WITH NEW REINFORCED CONCRETE DECK
SUBSTRUCTURE: SEMI-INTEGRAL REINFORCED CONCRETE ABUTMENTS AND REINFORCED CONCRETE PIERS
SPANS: 90'-0"±, 112'-6"±, 90'-0"± C/C BEARINGS
ROADWAY WIDTH: 64'-0" T/T PARAPETS
SKEW: 22°-00'-00" LEFT FORWARD
LOADING: HS-20-44 & ALTERNATE MILITARY CASE I
WEARING SURFACE: MONOLITHIC CONCRETE
APPROACH SLABS: AS-1-81 (25'-0" LONG)
ALIGNMENT: TANGENT
CROSS SLOPE: 3/16" PER FOOT
ADT (1993): 71190
ADT (2012): 90660
ADTT (2012): 9066

PROPOSED STRUCTURE	50 YEAR	100 YEAR
DRAINAGE AREA	60.22 SQ. MI.	60.22 SQ. MI.
FLOW (Q)	6190 CFS	7110 CFS
VELOCITY (Vn_2)	6.10 FPS	6.19 FPS
SURFACE ELEVATION	801.30	802.00

NOTE: MAXIMUM ALLOWABLE BEARING PRESSURE FOR DRILLED SHAFTS = 15 TONS/SQ. FT.

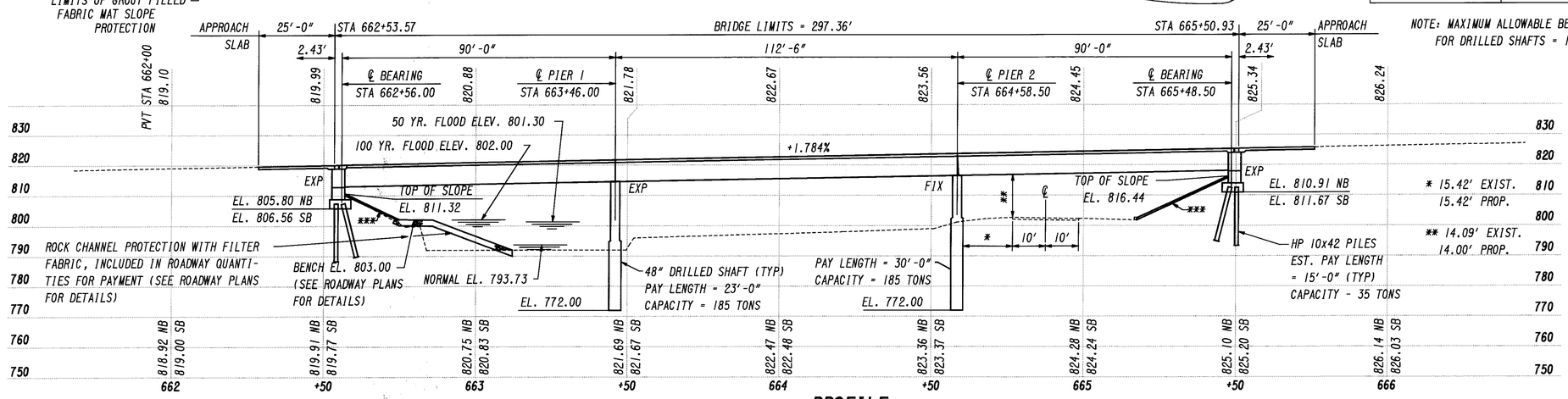

PROFILE

*** - GROUT FILLED FABRIC MAT SLOPE PROTECTION

GREINER ENGINEERING INC. - OHIO
MIDDLEBURG HTS., OHIO 44130

1 / 24

SITE PLAN

BRIDGE NO. CUY-71-0332 L&R
OVER EAST BRANCH ROCKY RIVER

CUYAHOGA COUNTY

STA. 662+53.57
STA. 665+50.93

DESIGNED	DRAWN	CHECKED	REVIEWED	DATE	REVISED
TSB	JLL	JMB	WRF	6-25-93	

SITE PLAN

PLOTTED BY: lmincek
PLOT SUBMITTED: 06-AUG-1998 12:12
PLOT SCALE: 1:1
PLOT DATE: 1998
PLOT USER: lmorsber
Pid08459 Pdgn Bcuy-71-332 Bsit0100.dgn BSIT0100.DGN

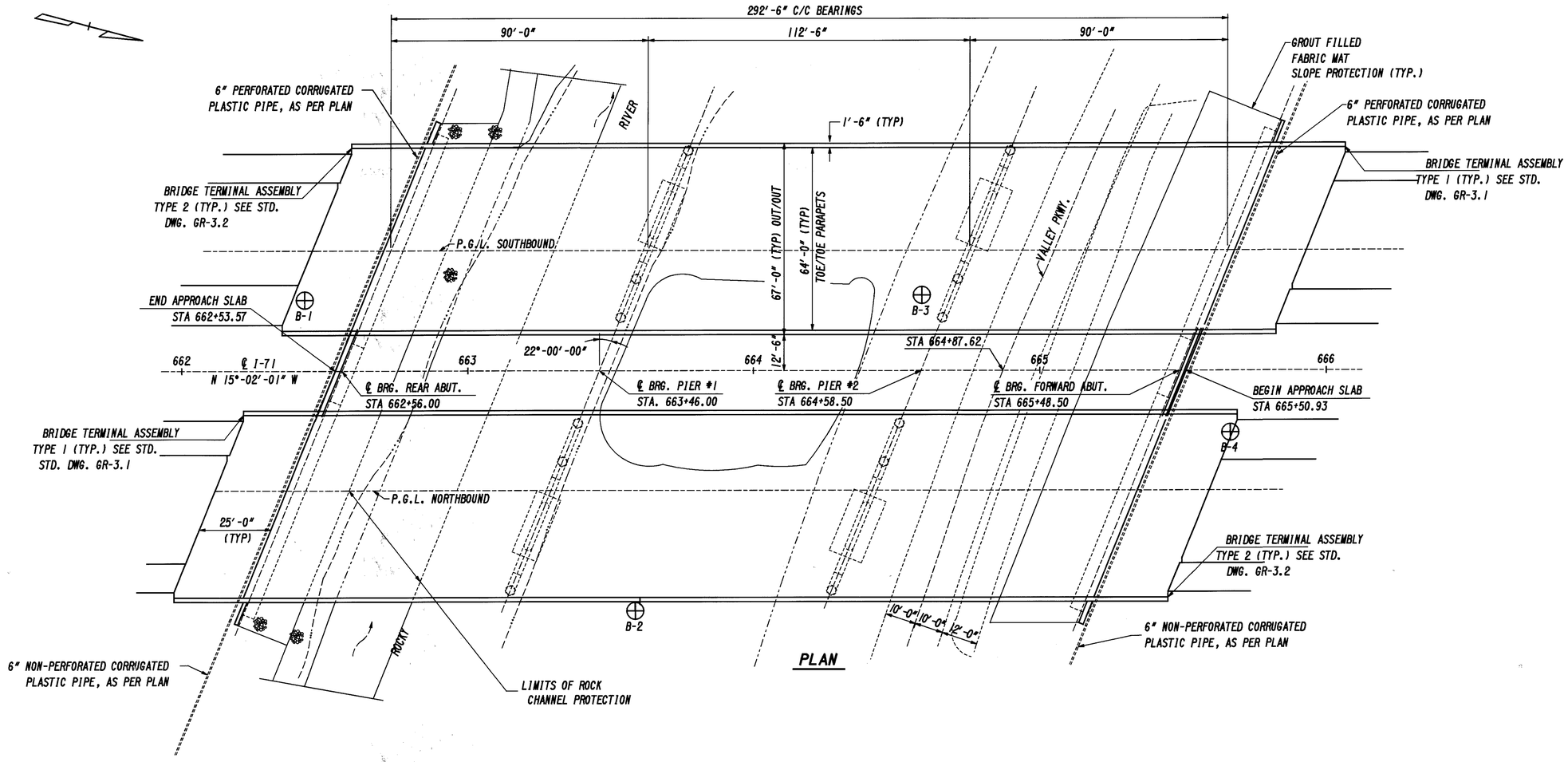

PLAN

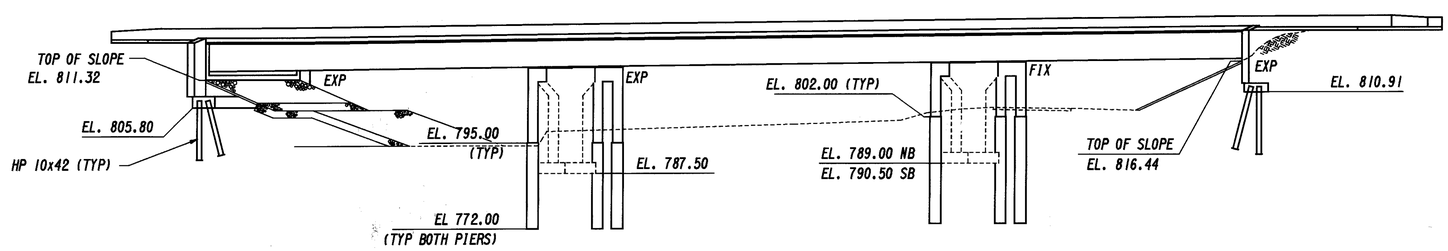

ELEVATION

SEE GENERAL NOTES FOR ABBREVIATIONS.

GREINER ENGINEERING INC. - OHIO
MIDDLEBURG HTS., OHIO 44130

2 / 24

GENERAL PLAN & ELEVATION

BRIDGE NO. CUY-71-0332 L&R
OVER EAST BRANCH ROCKY RIVER

DESIGNED	DRAWN	CHECKED	REVIEWED	DATE	REVISED
AMZ	JLL	JMB	WRF	7-1-93	

GENERAL PLAN & ELEVATION

PLOTTED BY: lmincek
PLOT SUBMITTED: 06-AUG-1998 12:13
bgpe0100.dgn BGPE0100.DGN

NORTHBOUND CUY-71-0332 R							SOUTHBOUND CUY-71-0332 L							ITEM	ITEM EXT	TOTAL	UNIT	DESCRIPTION
SUPER	FORWARD ABUTMENT	REAR ABUTMENT	PIER 1	PIER 2	GEN'L	TOTAL	SUPER	FORWARD ABUTMENT	REAR ABUTMENT	PIER 1	PIER 2	GEN'L	TOTAL					
					LUMP	LUMP						LUMP	LUMP	202	11203	LUMP	LUMP	PORTIONS OF STRUCTURE REMOVED, OVER 20 FOOT SPAN, AS PER PLAN
	97	99			102 (C)	298		75	74				149	503	21100	447	CU. YD.	UNCLASSIFIED EXCAVATION
	5	5			6 (C)	16		5					10	503	21101	26	CU. YD.	UNCLASSIFIED EXCAVATION, AS PER PLAN
						LUMP							LUMP	505	11100	LUMP	LUMP	PILE DRIVING EQUIPMENT MOBILIZATION
	255	255			75 (C)	585		255	255			75 (C)	585	507	00100	1170	LIN. FT.	STEEL PILES HP 10x42 FURNISHED
	255	255			75 (C)	585		255	255			75 (C)	585	507	00150	1170	LIN. FT.	STEEL PILES HP 10x42 DRIVEN
					20	20						19	19	507	50500	39	EACH	STEEL PILE SPLICES
	2	2	121	73		198		2	2	121	73		198	SPECIAL	51267510	396	SQ. YD.	SEALING OF CONCRETE SURFACES (EPOXY URETHANE)*
	76	75	90	72	52 (C)	365		76	75	90	72		313	SPECIAL	51271500	678	SQ. YD.	URETHANE TOP COAT SEALER*
	21	21				42		21	21				42	516	13600	84	SQ. FT.	1" PREFORMED EXPANSION JOINT FILLER
	33	33				66		34	35				69	516	13900	135	SQ. FT.	2" PREFORMED EXPANSION JOINT FILLER
	9					9		9					9	516	44001	18	EACH	ELASTOMERIC BEARING WITH INTERNAL LAMINATES AND LOAD PLATE (NEOPRENE), AS PER PLAN 9"x14"x1.46" WITH 10"x15"x1.594" LOAD PLATE
		9				9			9				9	516	44101	18	EACH	ELASTOMERIC BEARING WITH INTERNAL LAMINATES AND LOAD PLATE (NEOPRENE), AS PER PLAN 9"x14"x2.80" WITH 10"x15"x1.594" LOAD PLATE
			9			9				9			9	516	44101	18	EACH	ELASTOMERIC BEARING WITH INTERNAL LAMINATES AND LOAD PLATE (NEOPRENE), AS PER PLAN 13 1/2"x21"x2.03" WITH 14 1/2"x22"x2.000" LOAD PLATE
				4		4					4		4	516	46000	8	EACH	BEARING DEVICE, BOLSTER
						LUMP							LUMP	516	47001	LUMP	LUMP	JACKING AND TEMPORARY SUPPORT OF SUPERSTRUCTURE, AS PER PLAN
	64	64			14 (C)	142		64	64			14 (C)	142	518	21200	284	CU. YD.	POROUS BACKFILL WITH FILTER FABRIC
					203 (A)	203						203 (B)	203	518	40001	406	LIN. FT.	6" PERFORATED CORRUGATED PLASTIC PIPE, AS PER PLAN
					88 (A)	88						88 (B)	88	518	40011	176	LIN. FT.	6" NON-PERFORATED CORRUGATED PLASTIC PIPE, INCLUDING SPECIALS, AS PER PLAN
			69	90		159				69	90		159	524	94904	318	LIN. FT.	DRILLED SHAFTS, 48" DIAMETER, INTO BEDROCK
					730 (A)	730						418 (B)	418	601	21100	1148	SQ. YD.	SLOPE PROTECTION MISC.: GROUT FILLED FABRIC MATS
												1	1	625	33000	1	EACH	STRUCTURE GROUNDING SYSTEM
25960						25960	25960						25960	815	00050	51920	SQ. FT.	SURFACE PREPARATION OF EXISTING STEEL, SYSTEM OZEU
25960						25960	25960						25960	815	00056	51920	SQ. FT.	FIELD PAINTING OF EXISTING STEEL, PRIME COAT, SYSTEM OZEU
25960						25960	25960						25960	815	00060	51920	SQ. FT.	FIELD PAINTING OF EXISTING STEEL, INTERMEDIATE COAT, SYSTEM OZEU
25960						25960	25960						25960	815	00066	51920	SQ. FT.	FIELD PAINTING OF EXISTING STEEL, FINISH COAT, SYSTEM OZEU
100						100	100						100	815	00504	200	MAN HOUR	GRINDING FINS, TEARS, SLIVERS
900						900	900						900	815	00508	1800	LIN. FT.	GRINDING FLANGE EDGES
315,000						315,000	315,000						315,000	816	00610	630,000	LBS.	FIELD PAINTING OF NEW STEEL, INTERMEDIATE AND FINISH COAT, SYSTEM IZEU
	45	15				60		30					30	843	50000	90	SQ. FT.	PATCHING CONCRETE STRUCTURE WITH TROWELABLE MORTAR **
715						715	715						715	844	48001	1430	CU. YD.	HIGH PERFORMANCE CONCRETE SUPERSTRUCTURE (DECK), AS PER PLAN
77						77	77						77	844	48020	154	CU. YD.	HIGH PERFORMANCE CONCRETE SUPERSTRUCTURE (PARAPET)
	77	75	27	22	26 (C)	227		75	77	26	21	26 (C)	225	844	48041	452	CU. YD.	HIGH PERFORMANCE CONCRETE SUBSTRUCTURE, AS PER PLAN
315,000						315,000	315,000						315,000	863	10280	630,000	LB.	STRUCTURAL STEEL MEMBERS, LEVEL FOUR (4) FABRICATION

(A) FORWARD ABUTMENT
(B) REAR ABUTMENT
(C) RETAINING WALL

* SEE PROPOSAL NOTE
** PERFORMED AS DIRECTED BY THE ENGINEER.

CUY-71-0.00	OHIO	FHWA 5 REGION	304C / 361

GREINER ENGINEERING INC. - OHIO
MIDDLEBURG HTS., OHIO 44130

3 / 24

ESTIMATED QUANTITIES

BRIDGE NO. CUY-71-0332 L&R
OVER EAST BRANCH ROCKY RIVER

DESIGNED	DRAWN	CHECKED	REVIEWED	DATE	REVISED
TSB	JLL	JMB	WRF	7-2-93	

PLOT SUBMITTED:20-AUG-1998 05:42
PLOTTED BY:jgrmovse
PLOT SCALE:1:1
USER:bsumo100.dgn
BSUMO100.DGN

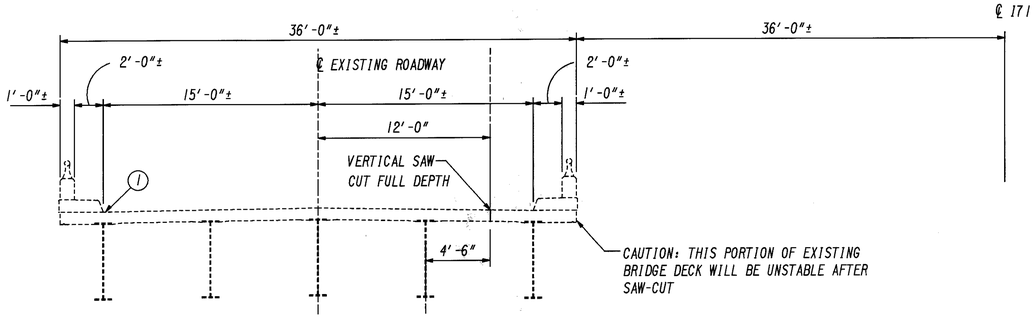

EXISTING

(1) FILL EXISTING SCUPPERS WITH CONCRETE FLUSH WITH ADJACENT PAVEMENT SURFACE PRIOR TO SHIFTING TRAFFIC

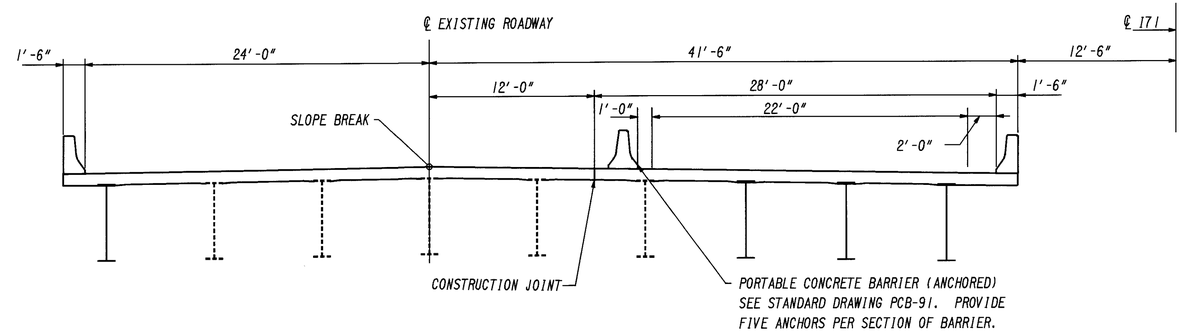

PHASE II

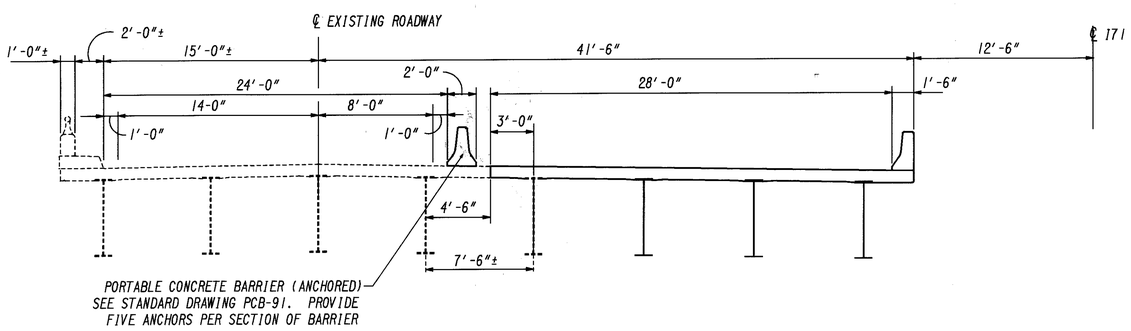

PHASE I

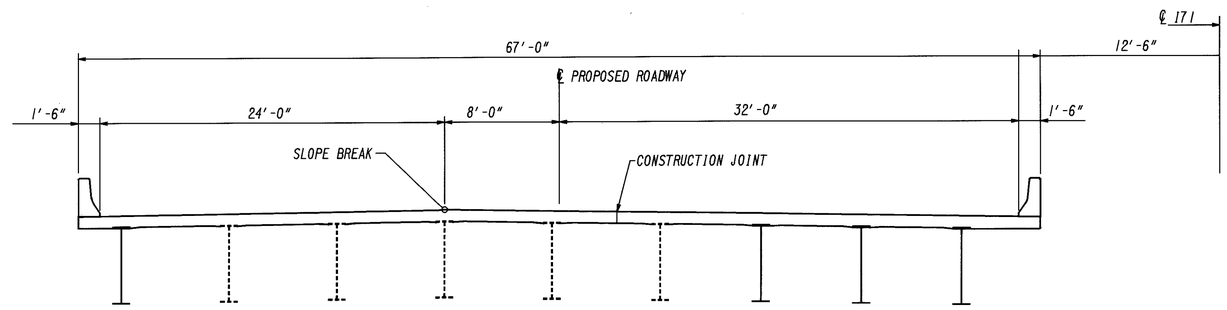

PROPOSED

NOTE: SOUTHBOUND ROADWAY SHOWN, NORTHBOUND SIMILAR.
FOR ADDITIONAL DECK REMOVAL DETAILS, SEE SHEET 5 OF 24.

GREINER ENGINEERING INC. - OHIO
MIDDLEBURG HTS., OHIO 44130

4 / 24

DECK STAGING

BRIDGE NO. CUY-71-0332 L&R
OVER EAST BRANCH ROCKY RIVER

DESIGNED	DRAWN	CHECKED	REVIEWED	DATE	REVISED
JMB	JLL	TSB	WRF	6-28-93	

PLOTTED BY: lmincek
PLOT SUBMITTED: 06-AUG-1998 09:52
BDEC0100.DGN

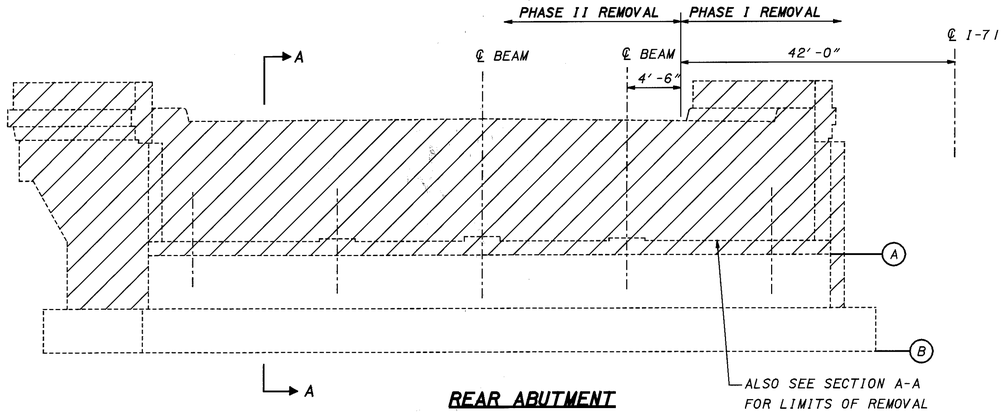

REAR ABUTMENT
(PILES NOT SHOWN)

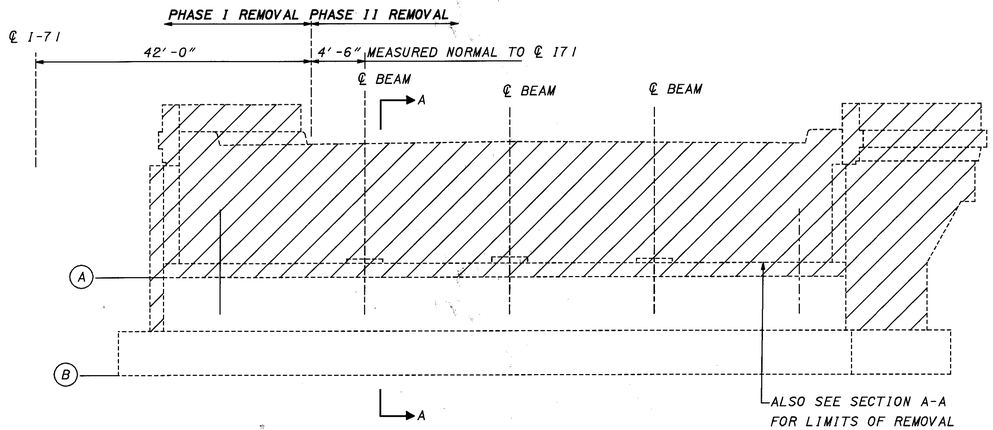

FORWARD ABUTMENT
(PILES NOT SHOWN)

	NORTHBOUND		SOUTHBOUND	
	FORWARD	REAR	FORWARD	REAR
(A)	816.72	811.66	816.94	811.82
(B)	810.91±	805.80±	811.67±	806.56±

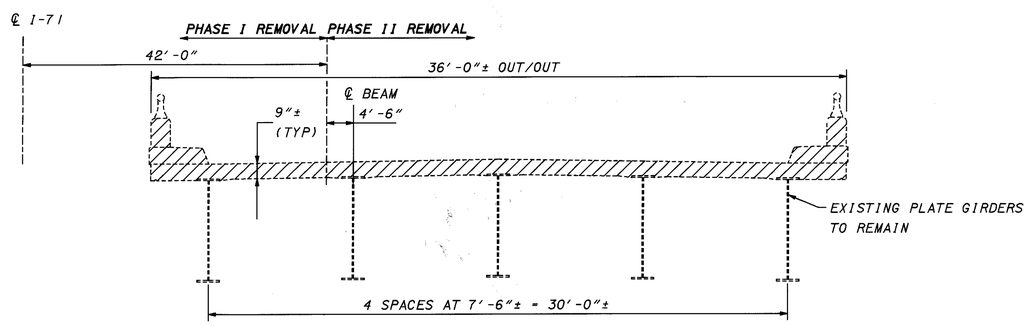

TYPICAL CROSS SECTION
FOR ADDITIONAL DETAILS SEE DECK STAGING

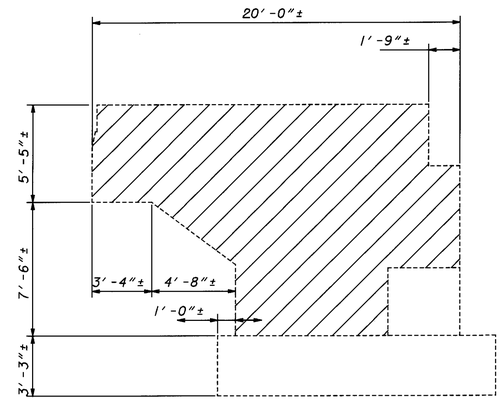

TYPICAL WINGWALL ELEVATION

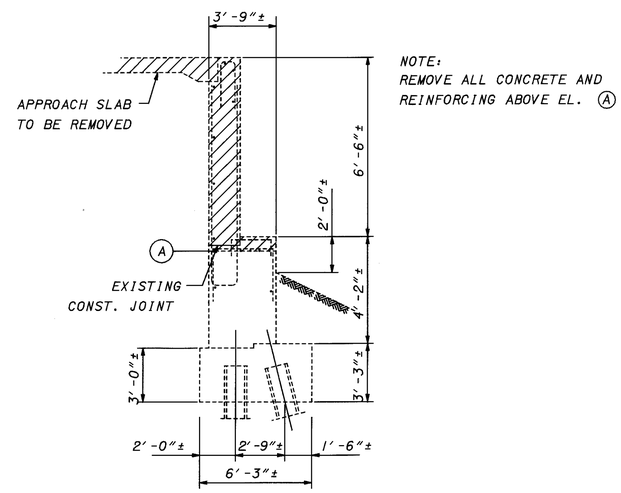

NOTE:
REMOVE ALL CONCRETE AND
REINFORCING ABOVE EL. (A)

SECTION A-A

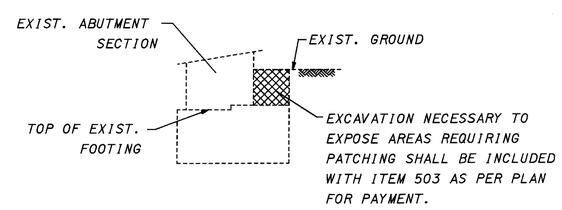

EXCAVATION LIMITS FOR REPAIR AREAS

▨ - AREAS TO BE REMOVED AS PER ITEM 202 PORTIONS OF STRUCTURE REMOVED

PHYSICAL INVENTORY OF MEASURED QUANTITIES OF DETERIORATION WAS PERFORMED IN 7/98

SUMMARY OF PATCHING QUANTITIES *	
LOCATION	QUANTITY
NB REAR ABUT.	15 S.F.
NB FORWARD ABUT.	45 S.F.
NB PIER NO. 1	0 S.F.
NB PIER NO. 2	0 S.F.
SB REAR ABUT.	0 S.F.
SB FORWARD ABUT.	20 S.F.
SB PIER NO. 1	0 S.F.
SB PIER NO. 2	0 S.F.

* ESTIMATED QUANTITY HAS BEEN INCREASED 50% OVER FIELD MARKED QUANTITY TO COMPENSATE FOR ADDITIONAL DETERIORATION.

GREINER ENGINEERING INC. - OHIO
MIDDLEBURG HTS., OHIO 44130

5 / 24

REMOVAL AND REPAIR DETAILS

BRIDGE NO. CUY-71-0332 L&R
OVER EAST BRANCH ROCKY RIVER

DESIGNED	DRAWN	CHECKED	REVIEWED	DATE	REVISED
AMZ	JLL	JMB	WRF	6-18-93	

PLOTTED BY: lmincek
PLOT SUBMITTED: 06-AUG-1998 09:53
PLOT DATE: 06-AUG-1998 09:53
PLOT SCALE: 1:1
PLOT USER: mcorsberi
BABT0100.DGN
cuy-71-332bbabt0100.dgn
pid08459bdgnbcuy-71-332bbabt0100.dgn

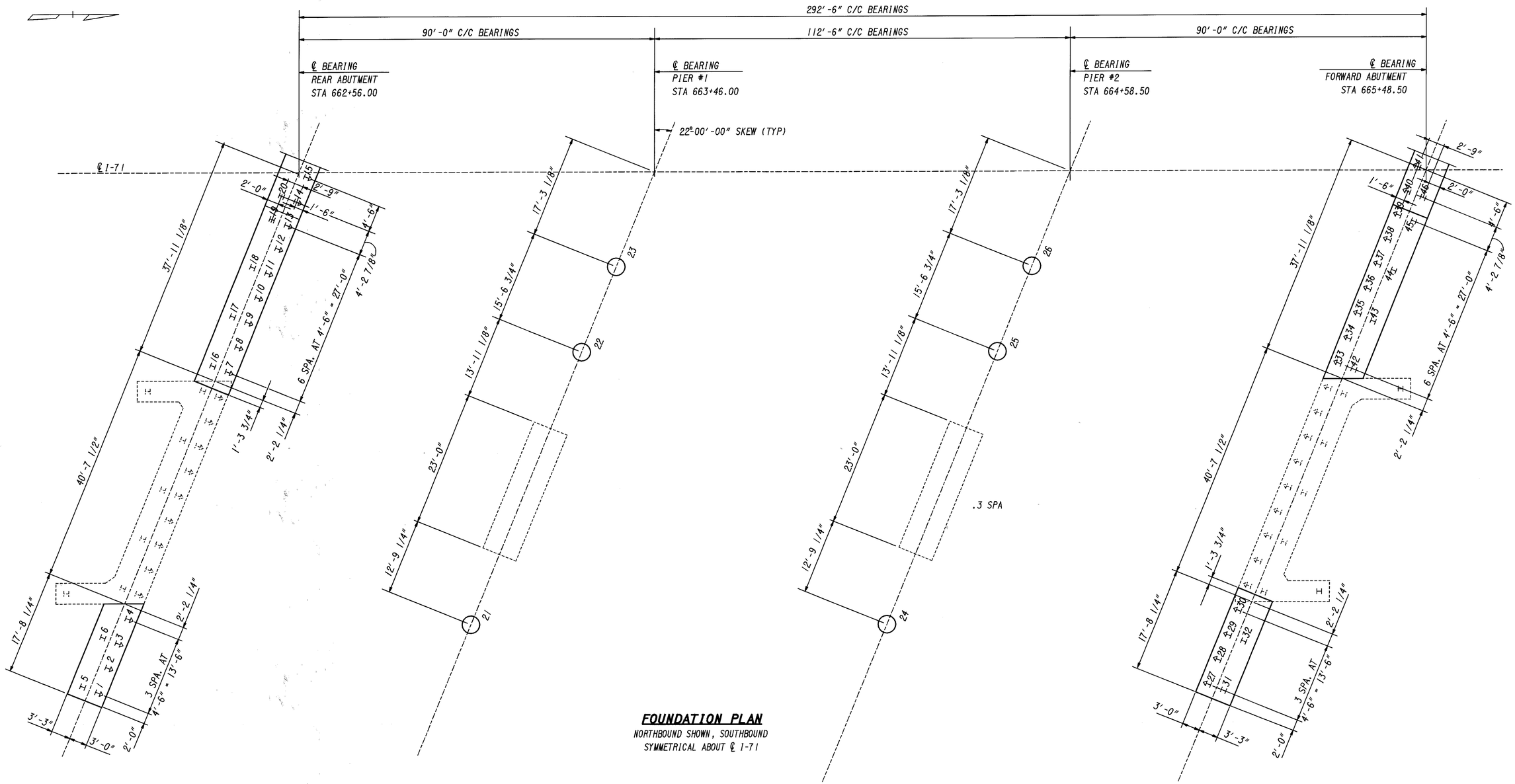

FOUNDATION PLAN

NORTHBOUND SHOWN, SOUTHBOUND SYMMETRICAL ABOUT ℄ I-71

LEGEND

- I - VERTICAL PILE, HP 10x42
- ⋚ - BATTERED PILE (1:4), HP 10x42
- ○ - 48" DIA. DRILLED SHAFT

GREINER ENGINEERING INC. - OHIO
MIDDLEBURG HTS., OHIO 44130

6 / 24

FOUNDATION PLAN

BRIDGE NO. CUY-71-0332 L&R
OVER EAST BRANCH ROCKY RIVER

DESIGNED	DRAWN	CHECKED	REVIEWED	DATE	REVISED
AMZ	JLL	JMB	WRF	6-28-93	

PLOTTED BY: jlmincek
PLOT SUBMITTED: 06-AUG-1998 09:54
Design BPIR0300.DGN

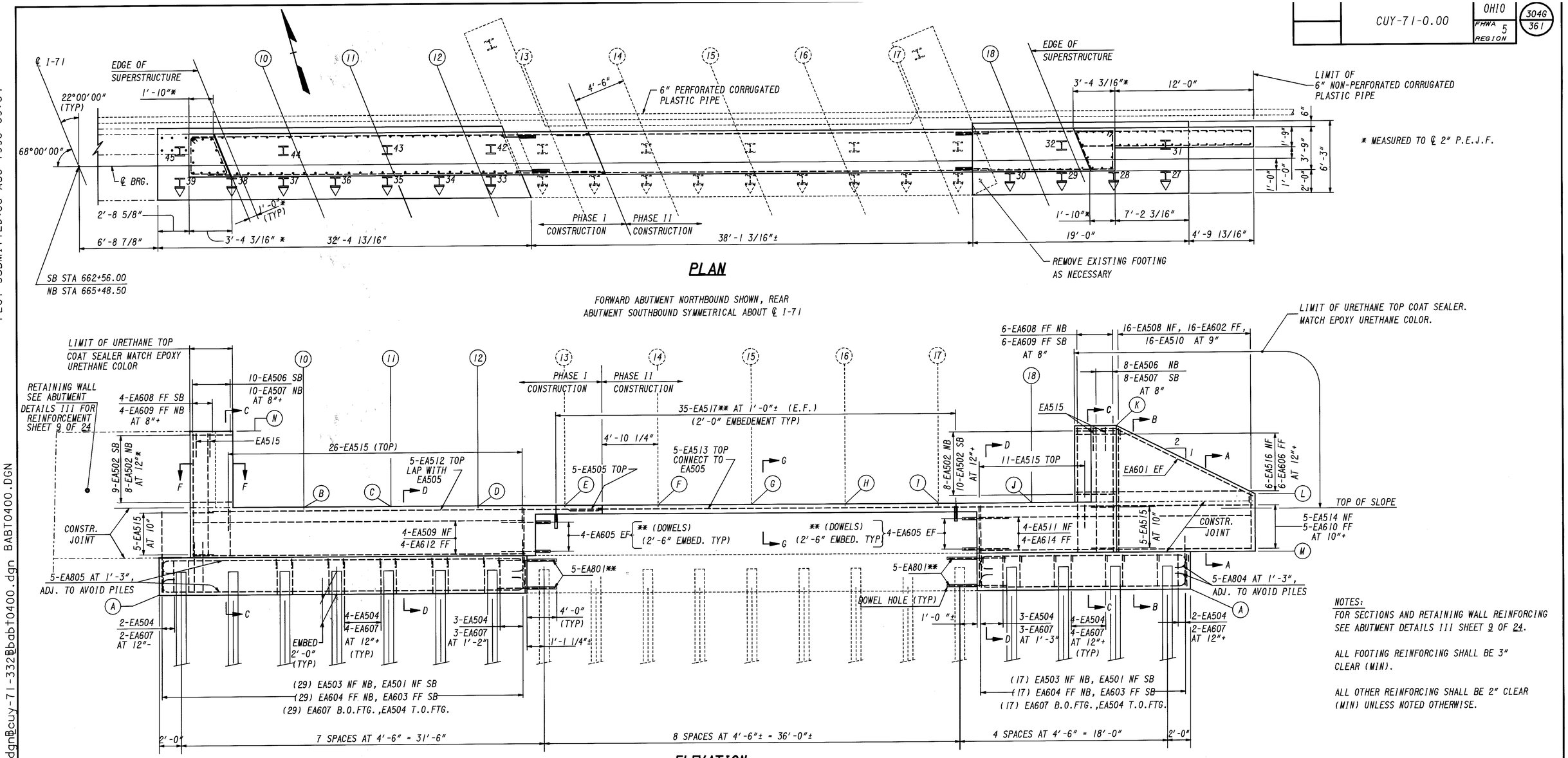

	A	B	C	D	E	F	G	H	I	J	K	L	M	N
SB REAR	806.56	812.67	812.67	812.67	812.67	812.67	812.67	812.67	812.67	812.67	821.55	815.55	809.81	820.84
NB FORWARD	810.91	817.70	817.70	817.70	817.70	817.70	817.70	817.70	817.70	817.70	825.65	819.65	814.16	825.86

ELEVATIONS

NOTES:

FOR SECTIONS AND RETAINING WALL REINFORCING SEE ABUTMENT DETAILS III SHEET 9 OF 24.

ALL FOOTING REINFORCING SHALL BE 3" CLEAR (MIN).

ALL OTHER REINFORCING SHALL BE 2" CLEAR (MIN) UNLESS NOTED OTHERWISE.

LEGEND

HP10x42 BEARING PILE

HP10x42 BEARING PILE BATTERED 1:4

GREINER ENGINEERING INC. - OHIO
MIDDLEBURG HTS., OHIO 44130

7 / 24

ABUTMENT DETAILS I

BRIDGE NO. CUY-71-0332 L
OVER EAST BRANCH ROCKY RIVER

DESIGNED	DRAWN	CHECKED	REVIEWED	DATE	REVISED
AMZ	JLL	TSB	WRF	6-28-93	

PLOTTED BY: lmincek
PLOT SUBMITTED:06-AUG-1998 09:54
bdgn BABT0400.DGN

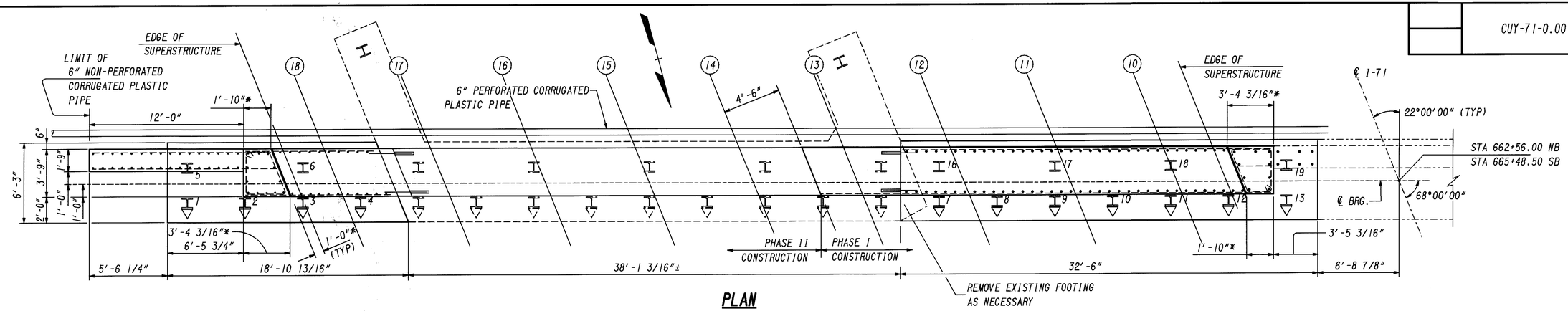

PLAN

REAR ABUTMENT NORTHBOUND SHOWN, FORWARD ABUTMENT SOUTHBOUND SYMMETRICAL ABOUT ℄ I-71

* MEASURED TO ℄ 2" P.E.J.F.

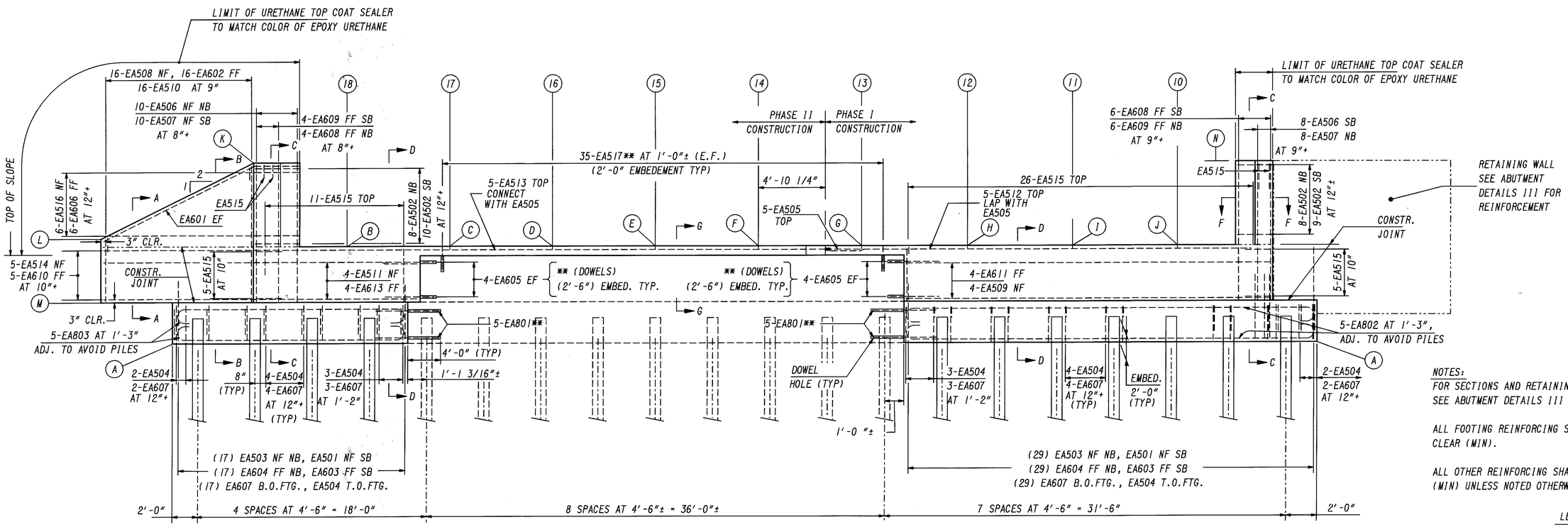

ELEVATION

REAR ABUTMENT NORTHBOUND SHOWN, FORWARD ABUTMENT SOUTHBOUND SYMMETRICAL ABOUT ℄ I-71

** PROVIDE 6" MIN. CLEARANCE FROM FACE OF EXISTING SUBSTRUCTURE UNITS TO DOWELS

	(A)	(B)	(C)	(D)	(E)	(F)	(G)	(H)	(I)	(J)	(K)	(L)	(M)	(N)
NB REAR	805.80	812.43	812.43	812.43	812.43	812.43	812.43	812.43	812.43	812.43	820.43	814.43	809.05	820.64
SB FORWARD	811.67	818.00	818.00	818.00	818.00	818.00	818.00	818.00	818.00	818.00	826.77	820.77	814.92	826.06

ELEVATIONS

NOTES:

FOR SECTIONS AND RETAINING WALL REINFORCING SEE ABUTMENT DETAILS III SHEET.

ALL FOOTING REINFORCING SHALL BE 3" CLEAR (MIN).

ALL OTHER REINFORCING SHALL BE 2" CLEAR (MIN) UNLESS NOTED OTHERWISE.

LEGEND

HP10x42 BEARING PILE

HP10x42 BEARING PILE BATTERED 1:4

GREINER ENGINEERING INC. - OHIO | 8 / 24
MIDDLEBURG HTS., OHIO 44130

ABUTMENT DETAILS II

BRIDGE NO. CUY-71-0332 R
OVER EAST BRANCH ROCKY RIVER

DESIGNED	DRAWN	CHECKED	REVIEWED	DATE	REVISED
AMZ	JLL	JMB	WRF	6-28-93	

PLOTTED BY: lmincek
PLOTTED: 06-AUG-1998 09:55
PLOT SUBMITTED:06-AUG-1998 09:55
BABT0300.DGN

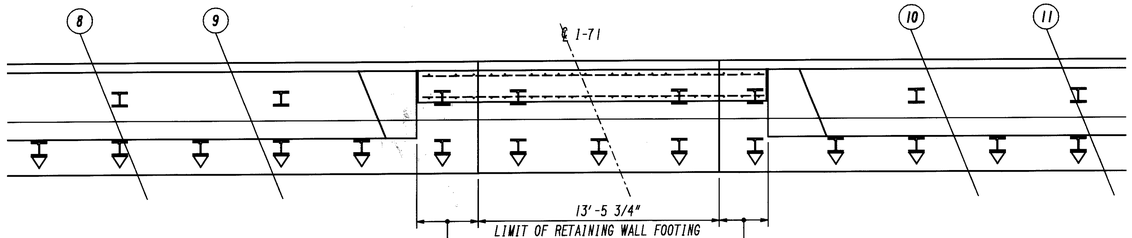

RETAINING WALL PLAN

FORWARD WALL SHOWN, REAR WALL SIMILAR

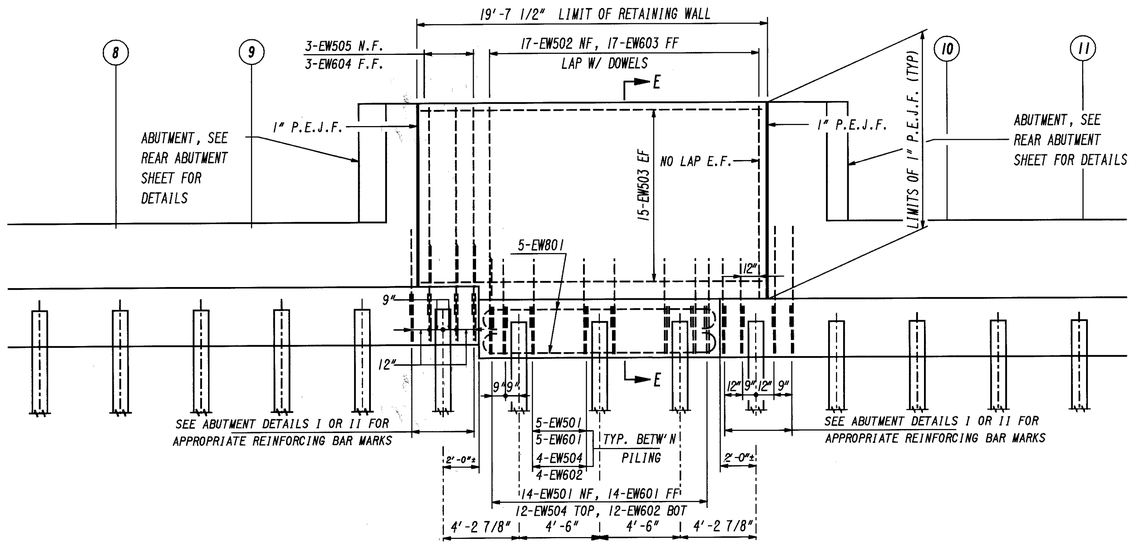

ELEVATION

FORWARD WALL SHOWN, REAR WALL SIMILAR

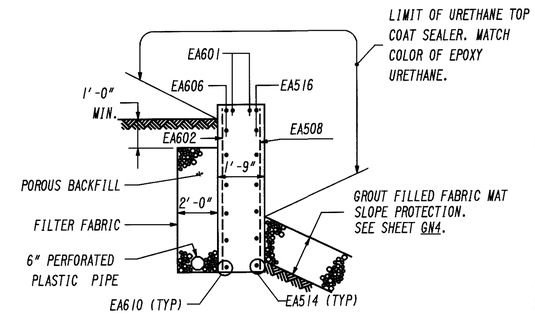

SECTION A-A

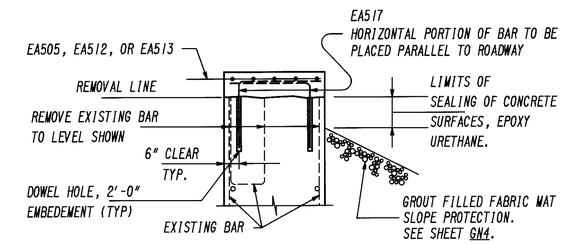

SECTION G-G

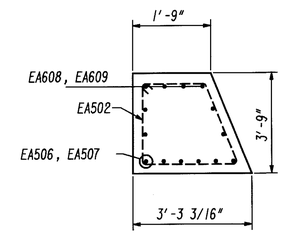

SECTION F-F

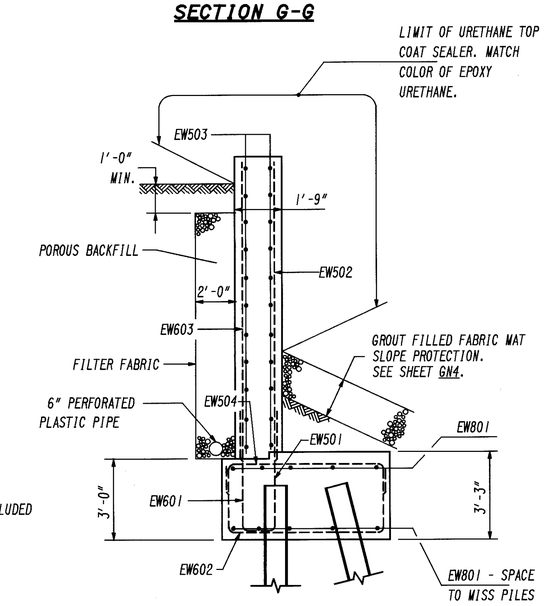

SECTION E-E

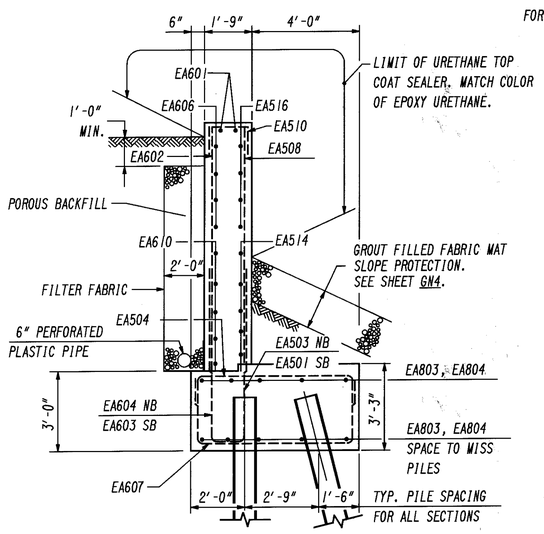

SECTION B-B

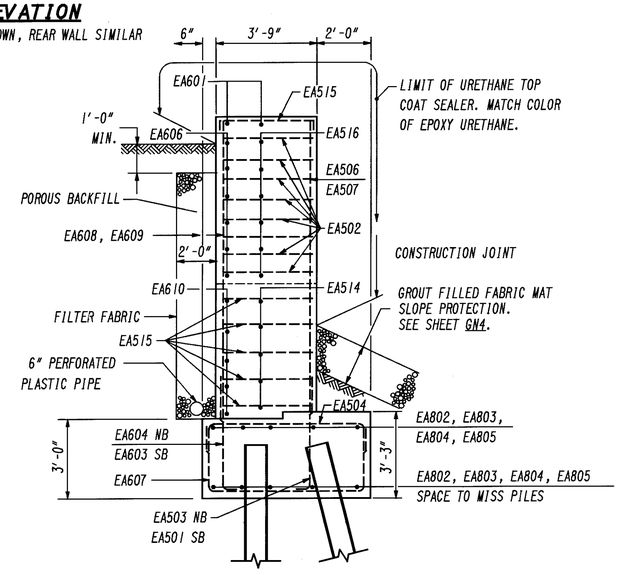

SECTION C-C

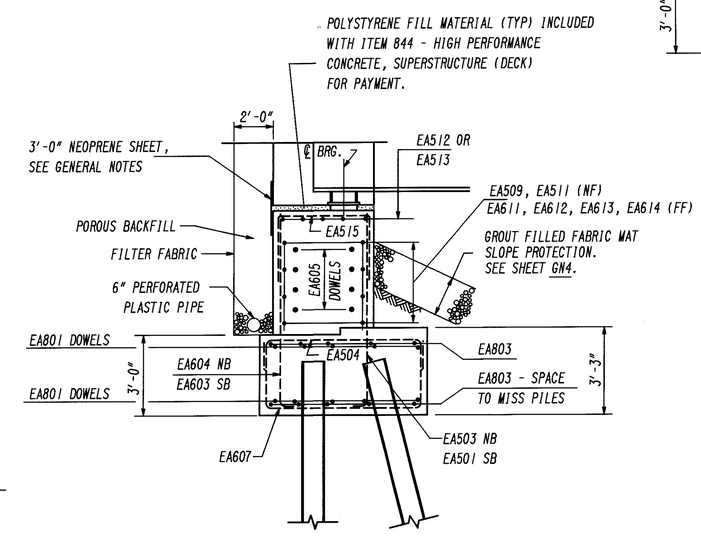

SECTION D-D

NOTES:

POROUS BACKFILL, 2'-0" THICK, SHALL EXTEND UP TO THE PLANE OF THE SUBGRADE TO ONE FOOT BELOW THE PROPOSED GROUND SURFACE AND LATERALLY TO THE ENDS OF THE ABUTMENT AND WINGWALL. THE FABRIC SHALL CONFORM TO 712.09, TYPE A, AND BE INCLUDED WITH THE POROUS BACKFILL FOR PAYMENT.

GREINER ENGINEERING INC. - OHIO
MIDDLEBURG HTS., OHIO 44130

9 / 24

ABUTMENT DETAILS III

BRIDGE NO. CUY-71-0332 L&R
OVER EAST BRANCH ROCKY RIVER

DESIGNED	DRAWN	CHECKED	REVIEWED	DATE	REVISED
AWZ	JLL	JMB	WRF	7-1-93	

PLOTTED BY: lmincek
PLOT SUBMITTED: 06-AUG-1998 09:55
PLOT SCALE: 1:1
PLOT DATE: 8/6/98
Pid08459 Bdgn Bcuy-71-332 Bbab to200.dgn BABT0200.DGN

CUY-71-0.00	OHIO	304J / 361
	FHWA REGION 5	

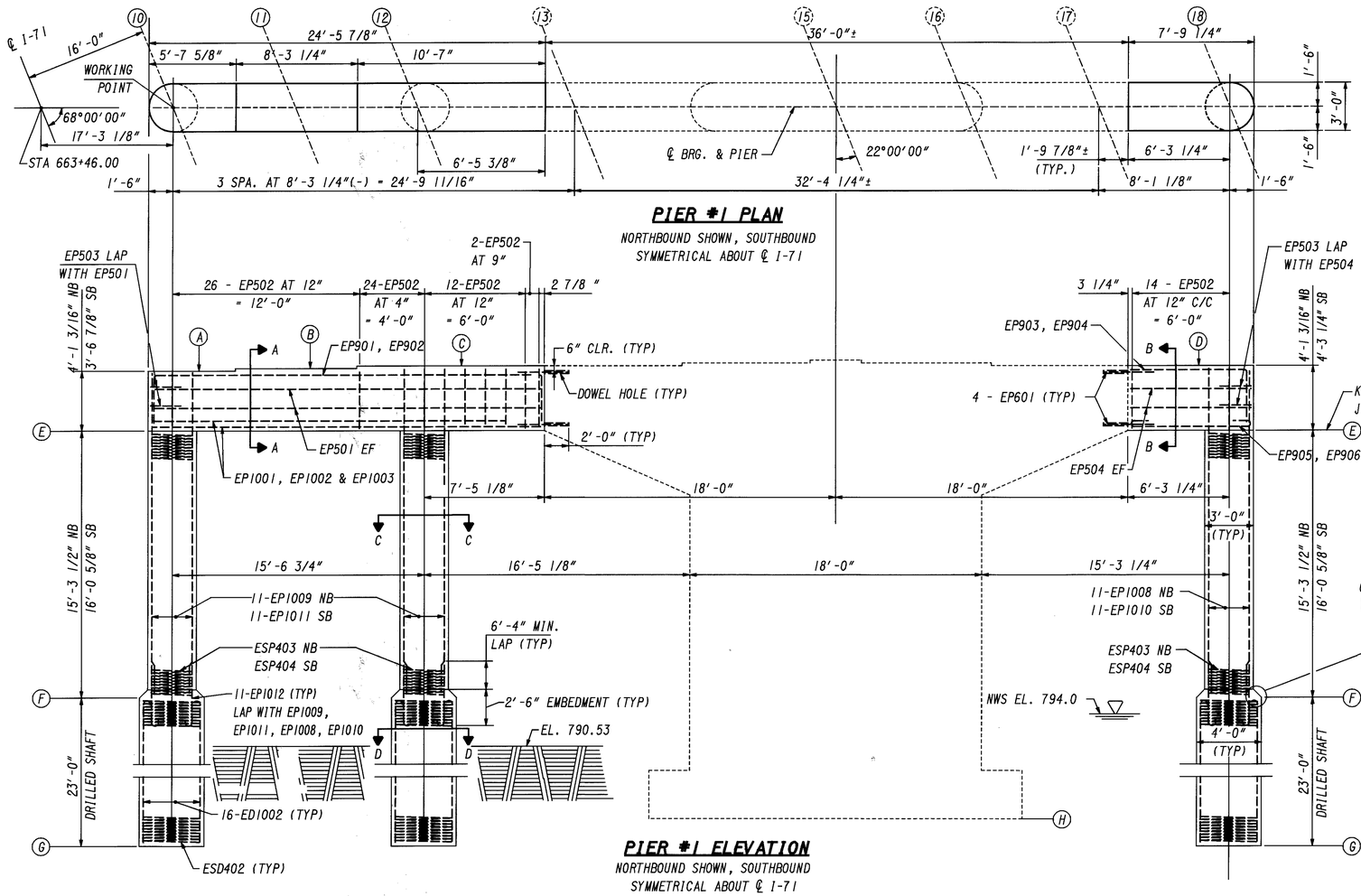

PIER #1 ELEVATION
NORTHBOUND SHOWN, SOUTHBOUND SYMMETRICAL ABOUT ℄ I-71

NOTES:

CONCRETE SEALER:
THE FOLLOWING EXISTING CONCRETE SURFACES SHALL BE SEALED WITH EPOXY URETHANE:
- PIER SHAFT, FROM GROUND LINE TO CAP
- ALL ENDS AND SIDE OF PIER CAP

ALL NEW CONCRETE SHALL BE SEALED WITH A TOP COAT OF URETHANE SEALER TO MATCH THE EPOXY URETHANE COLOR AS FOLLOWS:

- COLUMNS, FROM GROUND LINE TO PIER CAP
- ALL ENDS, SIDES AND BOTTOM OF PIER CAP
- 3'-9" OF THE TOP OF THE PIER CAP MEASURED FROM THE ENDS OF THE CAP

CLEARANCE:
REINFORCING CLEARANCE SHALL BE 2" UNLESS OTHERWISE NOTED.

DRILLED SHAFTS:
REINFORCING IN THE DRILLED SHAFTS IS INCLUDED WITH ITEM 524 DRILLED SHAFTS, 48" DIAMETER, INTO BEDROCK FOR PAYMENT.

MINIMUM LAP SPLICE LENGTH

#5	2'-0"
#9	5'-0"
#10	6'-4"

	(A)	(B)	(C)	(D)	(E)	(F)	(G)	(H)
NB	814.39	814.46	814.52	814.39	810.29	795.00	772.00	787.50
SB	814.62	814.80	814.97	815.32	811.05	795.00	772.00	787.50

ELEVATIONS

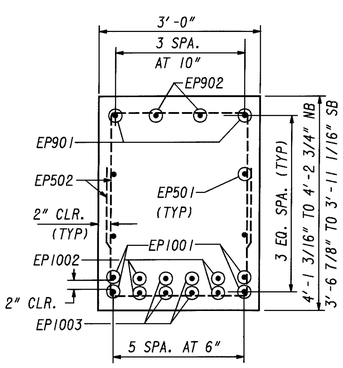

SECTION A-A

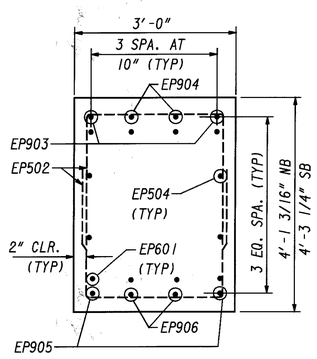

SECTION B-B

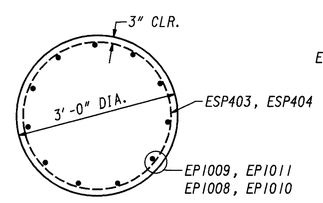

SECTION C-C
TYPICAL ALL COLUMNS

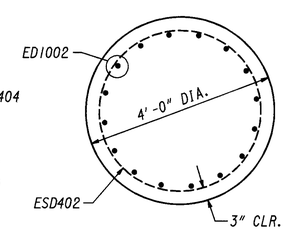

SECTION D-D
TYPICAL ALL DRILLED SHAFTS

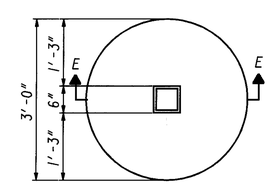

VIEW

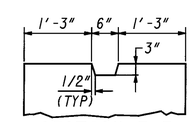

SECTION E-E

KEYED CONSTRUCTION JOINT

GREINER ENGINEERING INC. - OHIO
MIDDLEBURG HTS., OHIO 44130

10/24

PIER NO. 1 DETAILS

BRIDGE NO. CUY-71-0332 L&R
OVER EAST BRANCH ROCKY RIVER

DESIGNED	DRAWN	CHECKED	REVIEWED	DATE	REVISED
TSB	JLL	JMB	WRF	6-25-93	

PLOTTED BY: lmincek
PLOT SUBMITTED: 06-AUG-1998 09:56
PLOT USER: rsbrsber
PLOT SCALE: 1:1
PLOT DATE: 1998
bpid08459bdgnbcuy-71-332bbpir0100.dgn bpir0100.dgn

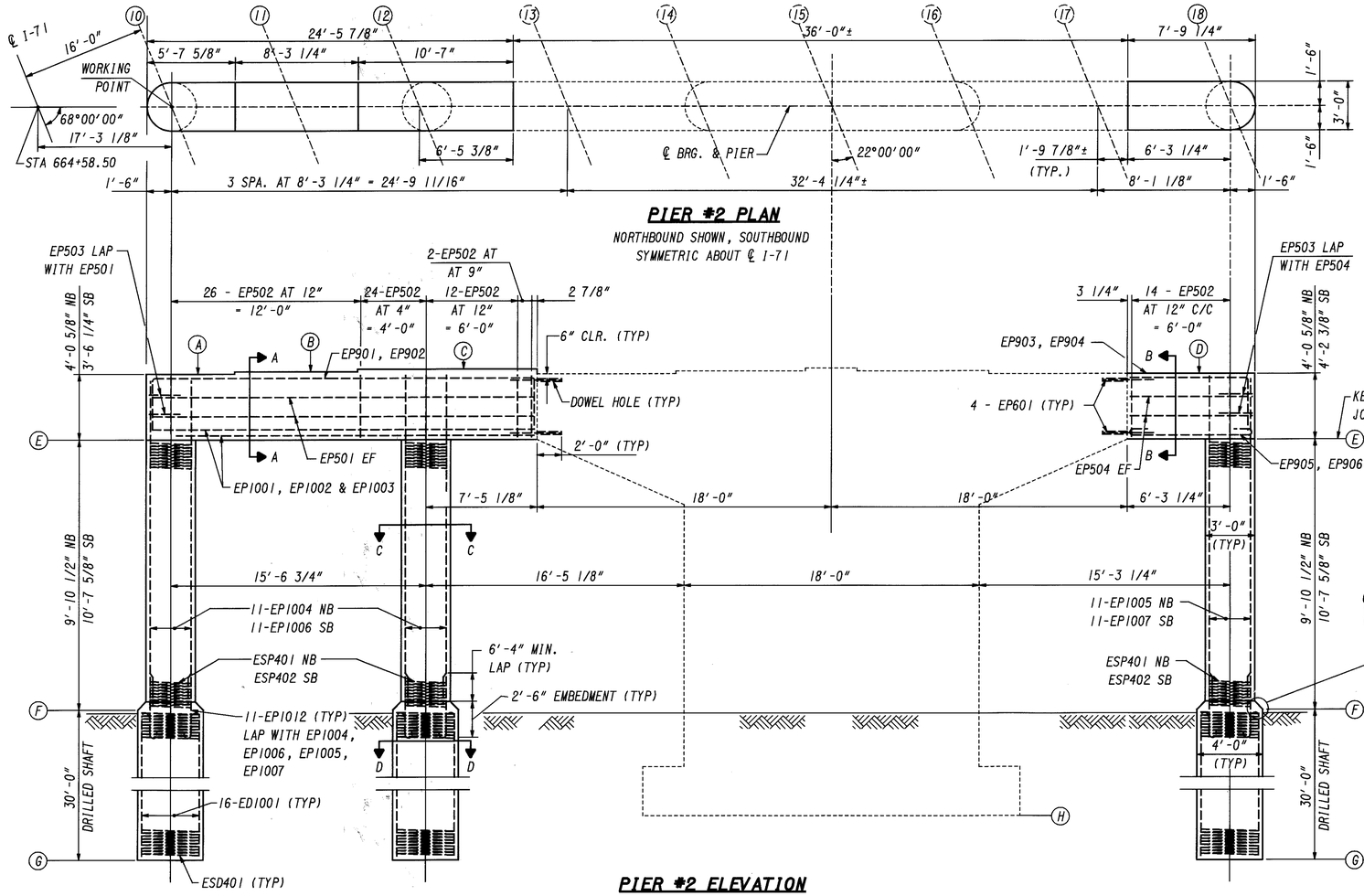

PIER #2 PLAN

NORTHBOUND SHOWN, SOUTHBOUND SYMMETRIC ABOUT ℄ I-71

PIER #2 ELEVATION

NORTHBOUND SHOWN, SOUTHBOUND SYMMETRICAL ABOUT ℄ I-71

NOTES:

BRIDGE SEAT REINFORCING:
REINFORCING STEEL IN THE VICINITY OF THE BRIDGE SEAT SHALL BE ACCURATELY PLACED TO AVOID INTERFERENCE WITH THE DRILLING OF BEARING ANCHOR HOLES OR THE PRE-SETTING OF BEARING ANCHORS.

BEARING ANCHORS:
AT THE OPTION OF THE CONTRACTOR, BEARING ANCHORS (OR FORMED HOLES), LOCATED AND SUPPORTED BY TEMPLATES, MAY BE CAST-IN-PLACE.

CONCRETE SEALER:
THE FOLLOWING EXISTING CONCRETE SURFACES SHALL BE SEALED WITH EPOXY URETHANE:
- PIER SHAFT, FROM GROUND LINE TO CAP
- ALL ENDS AND SIDE OF PIER CAP

ALL NEW CONCRETE SHALL BE SEALED WITH A TOP COAT OF URETHANE SEALER TO MATCH THE EPOXY URETHANE COLOR AS FOLLOWS:

- COLUMNS, FROM GROUND LINE TO PIER CAP
- ALL ENDS, SIDES AND BOTTOM OF PIER CAP
- 3'-9" OF THE TOP OF THE PIER CAP MEASURED FROM THE ENDS OF THE CAP

CLEARANCE:
REINFORCING CLEARANCE SHALL BE 2" UNLESS OTHERWISE NOTED.

DRILLED SHAFTS:
REINFORCING IN THE DRILLED SHAFTS IS INCLUDED WITH ITEM 524 DRILLED SHAFTS, 48" DIAMETER, INTO BEDROCK FOR PAYMENT.

MINIMUM LAP SPLICE LENGTH

#5	2'-0"
#9	5'-0"
#10	6'-4"

	(A)	(B)	(C)	(D)	(E)	(F)	(G)	(H)
NB	815.93	815.99	816.06	815.93	811.88	802.00	772.00	789.00
SB	816.16	816.34	816.51	816.84	812.64	802.00	772.00	790.50

ELEVATIONS

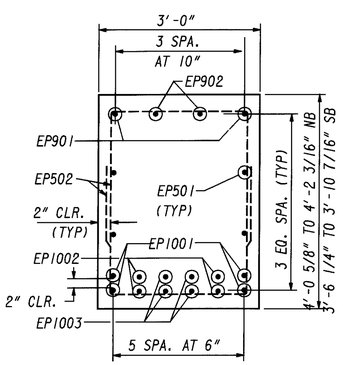

SECTION A-A

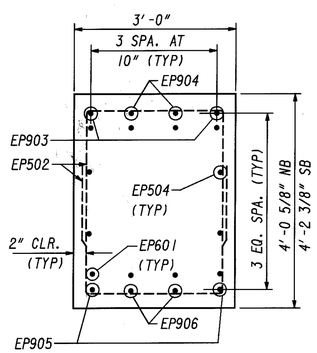

SECTION B-B

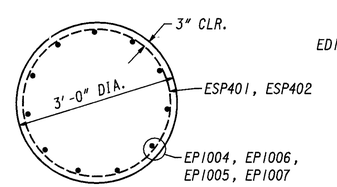

SECTION C-C

TYPICAL ALL COLUMNS

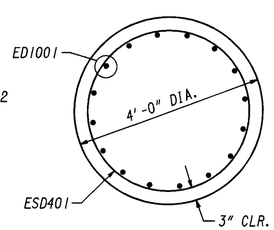

SECTION D-D

TYPICAL ALL DRILLED SHAFTS

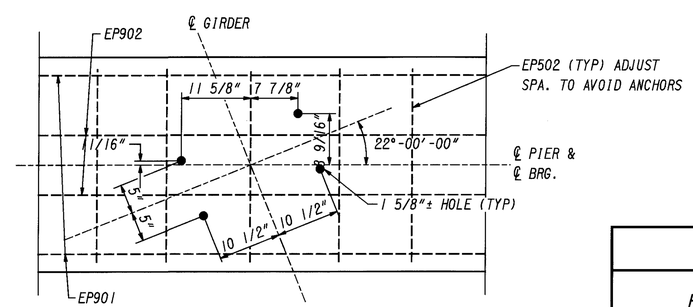

ANCHOR BOLT LAYOUT

FIXED BEARING F-300

GREINER ENGINEERING INC. - OHIO
MIDDLEBURG HTS., OHIO 44130

11/24

PIER NO.2 DETAILS

BRIDGE NO. CUY-71-0332 L&R
OVER EAST BRANCH ROCKY RIVER

DESIGNED	DRAWN	CHECKED	REVIEWED	DATE	REVISED
TSB	JLL	JMB	WRF	6-25-93	

PLOTTED BY: lmincek
PLOT SUBMITTED: 06-AUG-1998 09:57
PLOT SCALE: 1:1
PLOT DATE: 8/6/98
bp1r0200.dgn BP1R0200.DGN

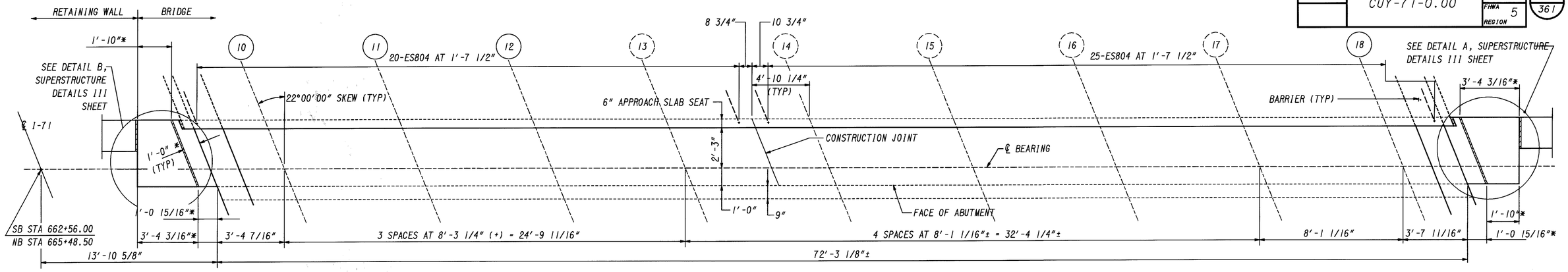

TOP OF GIRDER ELEVATIONS AT BEARING **									
NORTHBOUND FORWARD									
BEAM	10	11	12	13	14	15	16	17	18
ELEV.	823.83	823.89	823.95	823.95	824.02	824.08	823.91	823.74	823.82
SOUTHBOUND REAR									
BEAM	1	2	3	4	5	6	7	8	9
ELEV.	819.52	819.61	819.67	819.73	819.56	819.39	819.19	819.01	818.84

** ELEVATIONS SHOWN FOR EXISTING GIRDERS (13-17 & 2-6) ARE BASED ON ORIGINAL PLAN DATA AND MUST BE FIELD VERIFIED.

PLAN

FORWARD ABUTMENT NORTHBOUND SHOWN, REAR ABUTMENT SOUTHBOUND SIMILAR AND NOTED
* MEASURED TO ℄ 2" P.E.J.F.

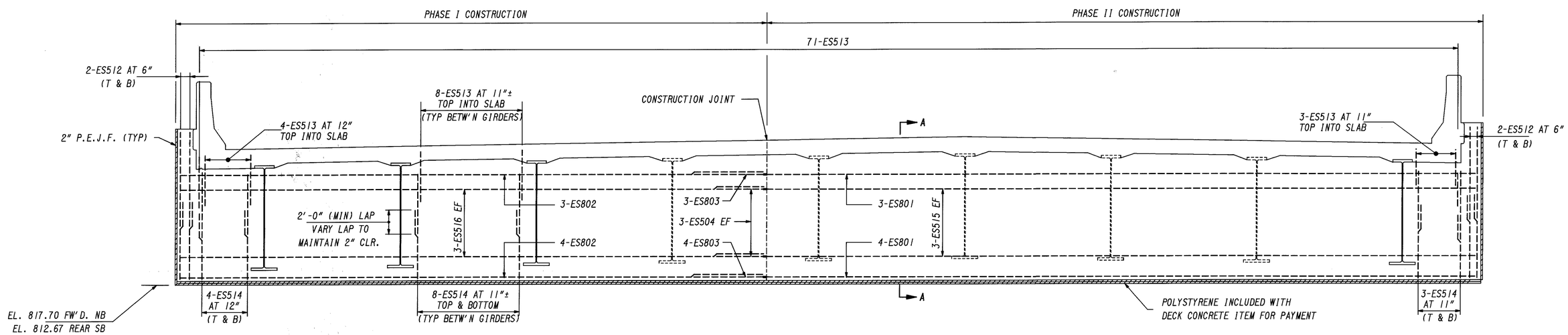

ELEVATION

FORWARD ABUTMENT NORTHBOUND SHOWN, REAR ABUTMENT SOUTHBOUND SIMILAR AND NOTED

NOTE: SEE SUPERSTRUCTURE DETAILS III SHEET FOR SECTION A-A.

GREINER ENGINEERING INC. - OHIO
MIDDLEBURG HTS., OHIO 44130

12/24

SUPERSTRUCTURE DETAILS I

BRIDGE NO. CUY-71-0332 R
OVER EAST BRANCH ROCKY RIVER

DESIGNED	DRAWN	CHECKED	REVIEWED	DATE	REVISED
TSB	JLL	JMB	WRF	7-1-93	

PLOTTED BY: lmincek
PLOT SUBMITTED: 06-AUG-1998 09:57
PLOT SCALE: 1:1
PLOT DATE: 6/8/98
WORKSPACE: bpid08459 bstr0100.dgn
MODEL: bstr0100.dgn BSTR0100.DGN

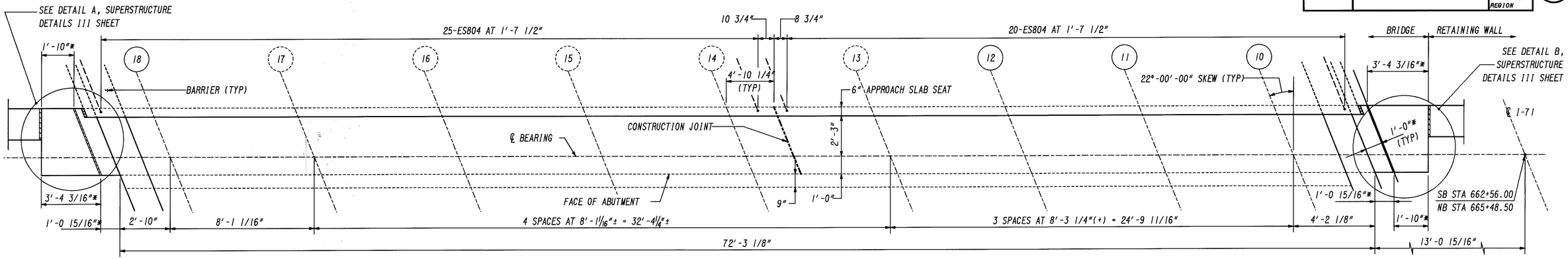

TOP OF GIRDER ELEVATIONS AT BEARING **									
NORTHBOUND REAR									
BEAM	10	11	12	13	14	15	16	17	18
ELEV.	818.61	818.67	818.74	818.84	818.91	818.97	818.80	818.63	818.60
SOUTHBOUND FORWARD									
BEAM	1	2	3	4	5	6	7	8	9
ELEV.	824.74	824.72	824.78	824.84	824.67	824.50	824.41	824.23	824.06

** ELEVATIONS SHOWN FOR EXISTING GIRDERS (13-17 & 2-6) ARE BASED ON ORIGINAL PLAN DATA AND MUST BE FIELD VERIFIED.

PLAN

REAR ABUTMENT NORTHBOUND SHOWN, FORWARD ABUTMENT SOUTHBOUND SIMILAR AND NOTED

* MEASURED TO ℄ 2" P.E.J.F.

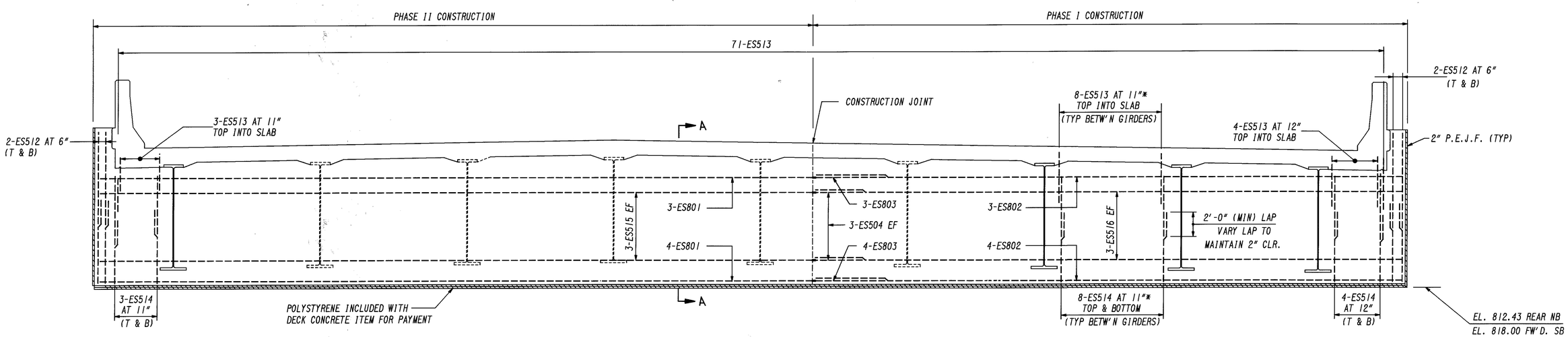

ELEVATION

REAR ABUTMENT NORTHBOUND SHOWN, FORWARD ABUTMENT SOUTHBOUND SIMILAR AND NOTED

NOTE: SEE SUPERSTRUCTURE DETAILS III SHEET FOR SECTION A-A.

GREINER ENGINEERING INC. - OHIO
MIDDLEBURG HTS., OHIO 44130

13/24

SUPERSTRUCTURE DETAILS II

BRIDGE NO. CUY-71-0332 R
OVER EAST BRANCH ROCKY RIVER

DESIGNED	DRAWN	CHECKED	REVIEWED	DATE	REVISED
TSB	JLL	JMB	WRF	7-1-93	

PLOTTED BY: lmincek
PLOTTED: 06-AUG-1998 09:58
PLOT SUBMITTED: 06-AUG-1998 09:58
bstr0200.dgn BSTR0200.DGN

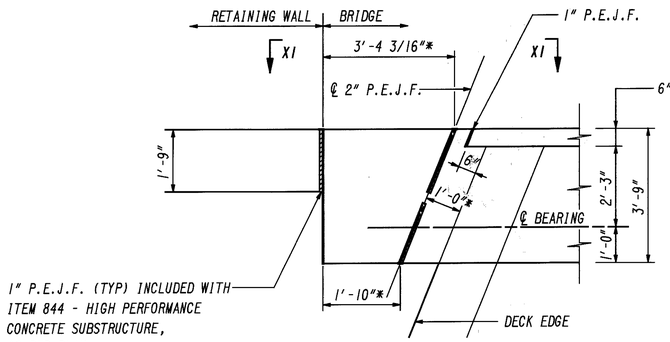

DETAIL A

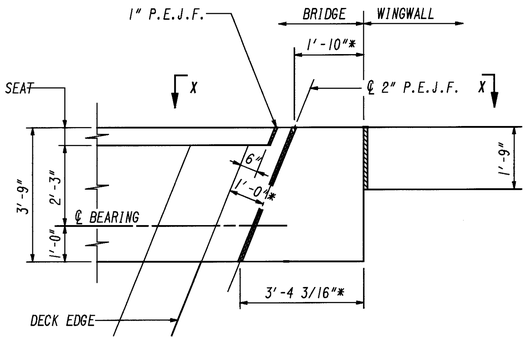

DETAIL B

* MEASURED TO ℄ 2" P.E.J.F.

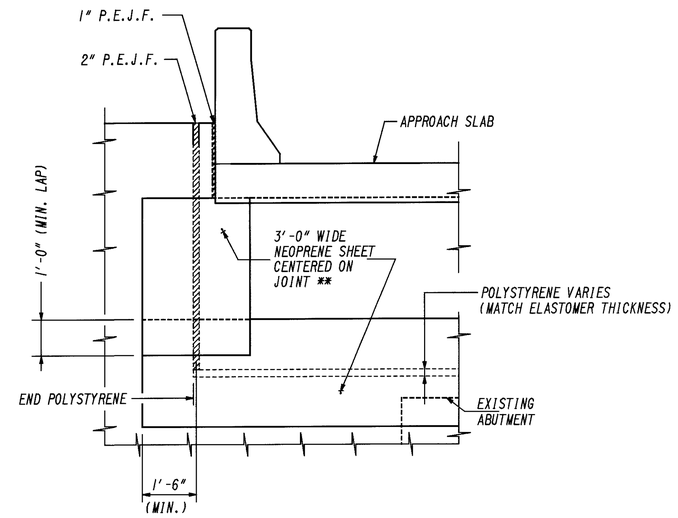

VIEW X-X (AS SHOWN)
VIEW XI-XI (OPPOSITE AS SHOWN)

** SEE GENERAL NOTES FOR ADDITIONAL INFORMATION

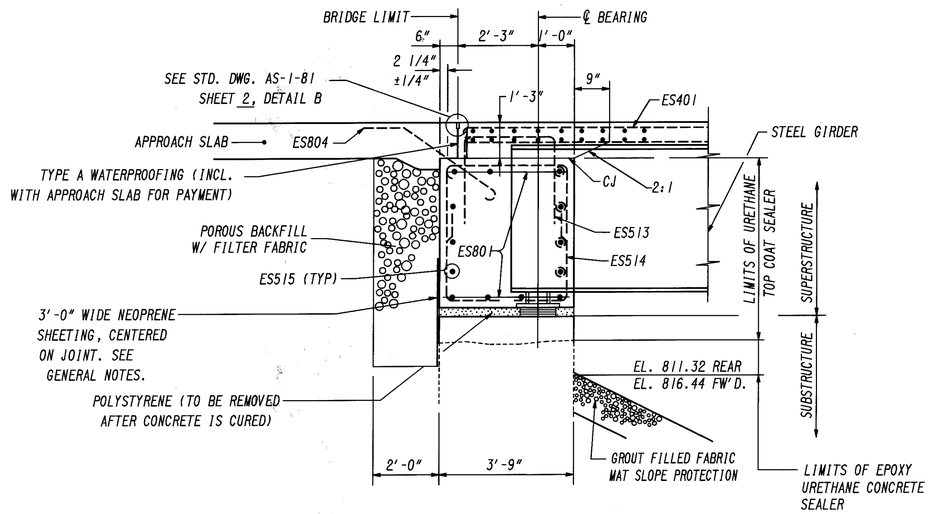

SECTION A-A

DIAPHRAGM CONCRETE ENCASING THE STRUCTURAL STEEL MEMBERS SHALL BE PLACED AT LEAST 48 HOURS BEFORE THE DECK CONCRETE IS PLACED.

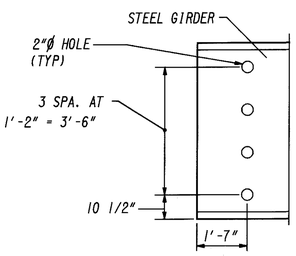

TYPICAL WEB HOLE DETAIL

GREINER ENGINEERING INC. - OHIO
MIDDLEBURG HTS., OHIO 44130

14 / 24

SUPERSTRUCTURE DETAILS III

BRIDGE NO. CUY-71-0332 L&R
OVER EAST BRANCH ROCKY RIVER

DESIGNED	DRAWN	CHECKED	REVIEWED	DATE	REVISED
TSB	JLL	JMB	WRF	6-28-93	

PLOTTED BY: lmincek
PLOT SCALE: 1:1
PLOT DATE: 06-AUG-1998 09:59
PLOT SUBMITTED: 06-AUG-1998 09:59
USER NAME: bersber
Design BDET0200.DGN
File: bridge\cuy-71-332\bdet0200.dgn
Rev: bridge\bpid08459.dgn

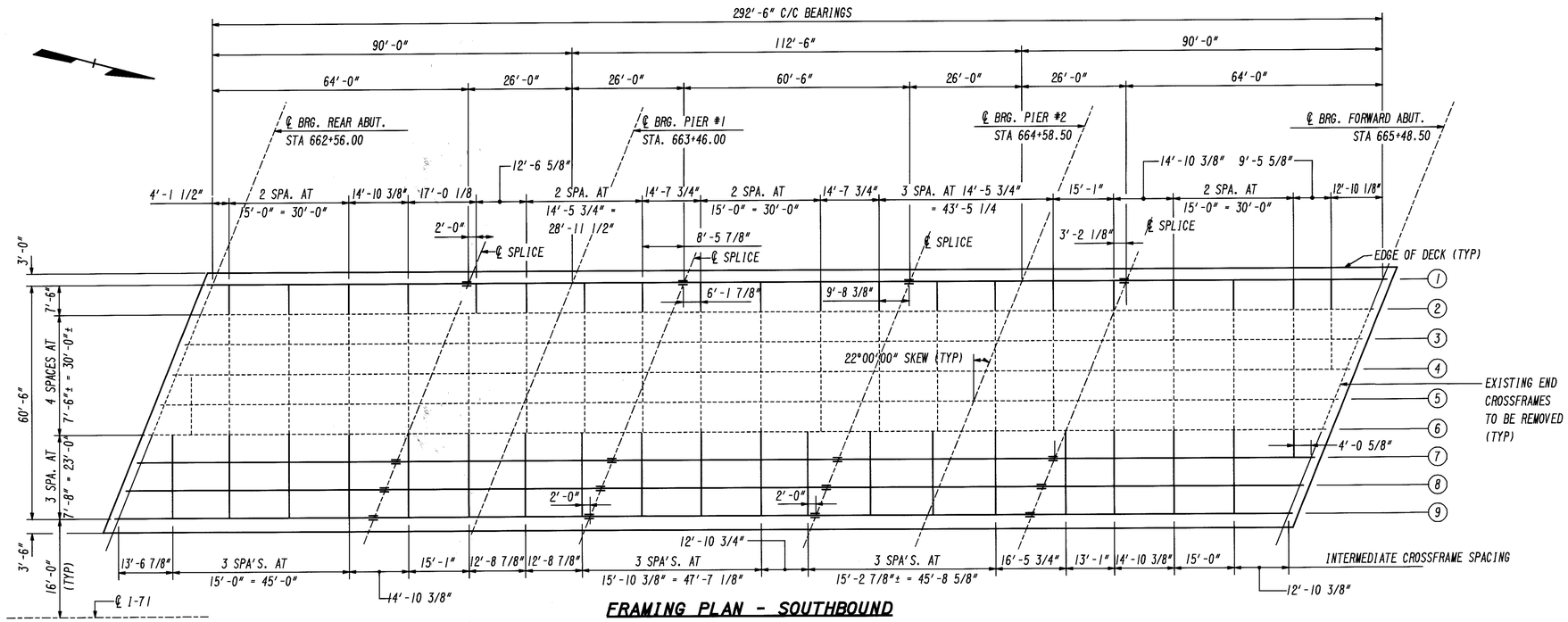

FRAMING PLAN - SOUTHBOUND

GENERAL NOTES:

1. ALL WELDS ARE TO MEET THE MINIMUM SIZE SPECIFIED IN THE AWS STRUCTURAL WELDING CODE UNLESS SPECIFIED OTHERWISE.
2. FOR FIELD SPLICE DETAILS, SEE MISCELLANEOUS DETAILS SHEET.
3. FOR CROSSFRAME DETAILS, SEE MISCELLANEOUS DETAILS SHEET.
4. FOR EXISTING GIRDER ELEVATION, SEE FRAMING PLAN - NORTHBOUND
5. FOR BEARING STIFFENER DETAILS SEE MISCELLANEOUS DETAILS SHEET.
6. WHERE A SHAPE OR PLATE IS DESIGNATED "(CVN)" THE MATERIAL SHALL MEET SPECIFIED MINIMUM NOTCH TOUGHNESS REQUIREMENTS AS SPECIFIED IN 711.01 OF THE CMS.
7. WELDED ATTACHMENT OF SUPPORTS FOR CONCRETE DECK FINISHING MACHINE MAY BE MADE TO AREAS OF THE FASCIA GIRDER FLANGES DESIGNATED "COMPRESSION". ATTACHMENTS SHALL NOT BE MADE TO AREAS DESIGNATED "TENSION". FILLET WELDS TO COMPRESSION FLANGES SHALL BE NOT CLOSER THAN 1" FROM EDGE OF FLANGE, BE NOT MORE THAN 2" LONG, AND BE NOT SMALLER THAN THE MINIMUM SIZE REQUIRED BY AASHTO.

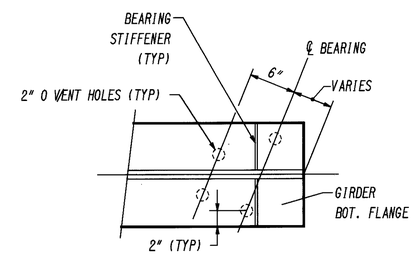

SECTION B-B

TYPICAL BOTH ENDS

CROSSFRAME CONNECTION TYPE		
BAY NO.	SIDE	CROSSFRAME TYPE
1	BM1	TYPE 1
	BM2	TYPE 2
6	BM6	TYPE 2
	BM7	TYPE 1
7	BM7	TYPE 1
	BM8	TYPE 1
8	BM8	TYPE 1
	BM9	TYPE 1

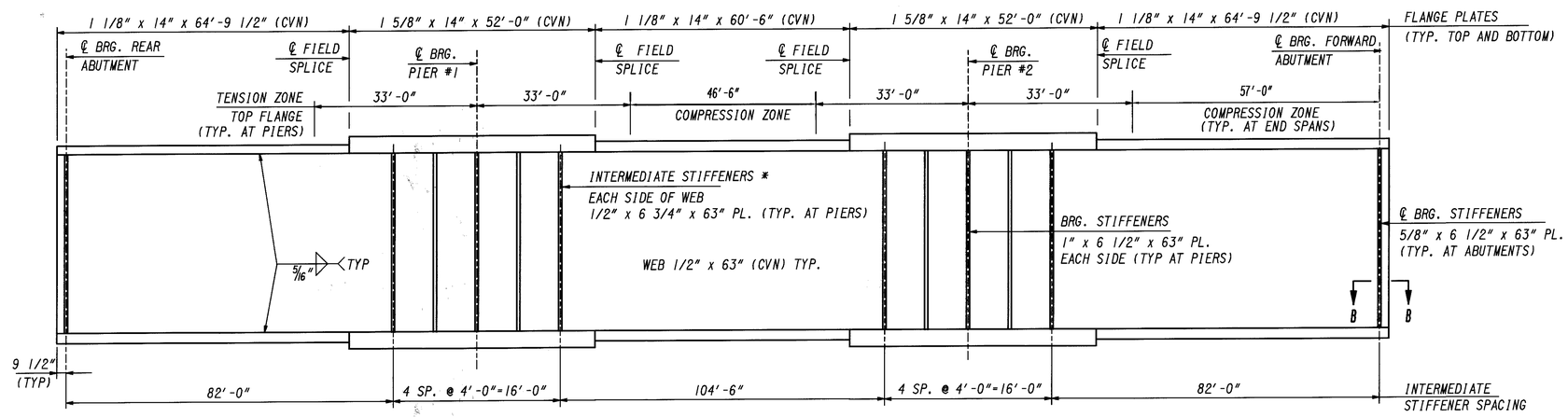

* AT GIRDERS ①, ⑦, ⑧, ⑪, ⑫ AND ⑱, OMIT STIFFENER PAIRS THAT ARE LOCATED WITHIN 6" OF CROSSFRAMES.

NEW GIRDER ELEVATION

NOT TO SCALE

GREINER ENGINEERING INC. - OHIO
MIDDLEBURG HTS., OHIO 44130

15 / 24

FRAMING PLAN - SOUTHBOUND

BRIDGE NO. CUY-71-0332 L
OVER EAST BRANCH ROCKY RIVER

DESIGNED	DRAWN	CHECKED	REVIEWED	DATE	REVISED
AMZ	JLL	JMB	WRF	6-25-93	

PLOTTED BY: lmincek PLOT SUBMITTED: 06-AUG-1998 10:00
Pid08459 Bdgn bfrp0100.dgn BFRP0100.DGN

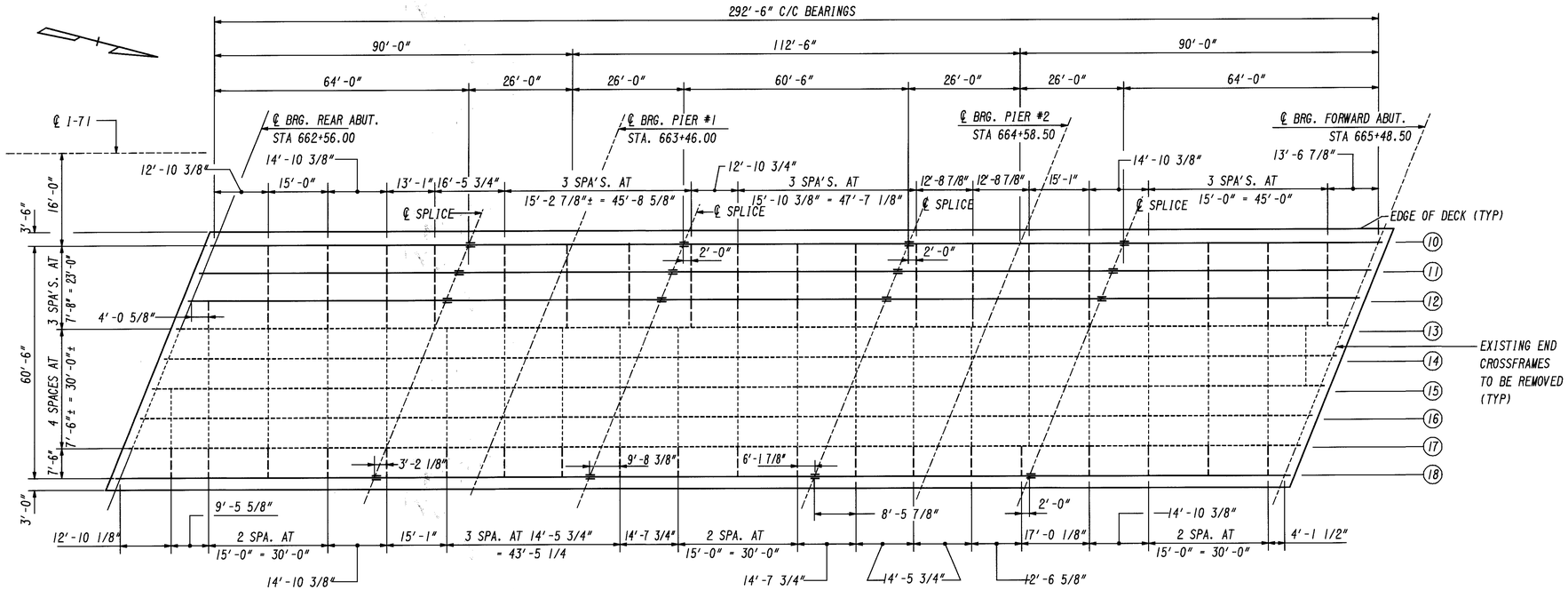

FRAMING PLAN - NORTHBOUND

GENERAL NOTES:

1. FOR CROSS FRAME DETAILS, SEE MISCELLANEOUS DETAILS SHEET.
2. FOR PROPOSED GIRDER ELEVATION, SEE FRAMING PLAN - SOUTHBOUND

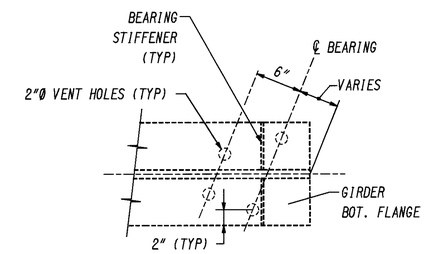

SECTION B-B

TYPICAL BOTH ENDS

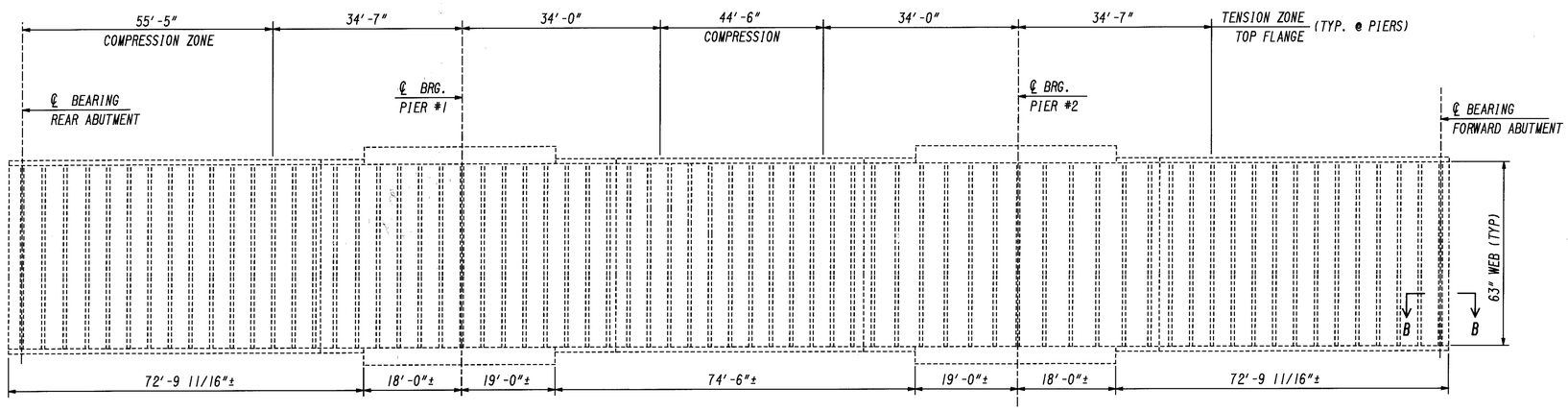

EXISTING GIRDER ELEVATION

NOT TO SCALE

* WELD EXISTING STIFFENER TOPS AT CROSSFRAMES TO COMPRESSION FLANGE. SEE MISCELLANEOUS DETAILS SHEET.

CROSSFRAME CONNECTION TYPE		
BAY NO.	SIDE	CROSSFRAME TYPE
10	BM10	TYPE 1
	BM11	TYPE 1
11	BM11	TYPE 1
	BM12	TYPE 1
12	BM12	TYPE 1
	BM13	TYPE 2
17	BM17	TYPE 2
	BM18	TYPE 1

GREINER ENGINEERING INC. - OHIO
MIDDLEBURG HTS., OHIO 44130

16 / 24

FRAMING PLAN - NORTHBOUND

BRIDGE NO. CUY-71-0332 R
OVER EAST BRANCH ROCKY RIVER

DESIGNED	DRAWN	CHECKED	REVIEWED	DATE	REVISED
AMZ	JLL	JMB	WRF	6-25-93	

PLOTTED BY: lmincek
PLOT SUBMITTED:06-AUG-1998 10:00
PLOT SCALE: 1:1
PLOT USER: werrsber
Bpid08459Bdgn Bcuy-71-332Bbfrp0200.dgn BFRP0200.DGN

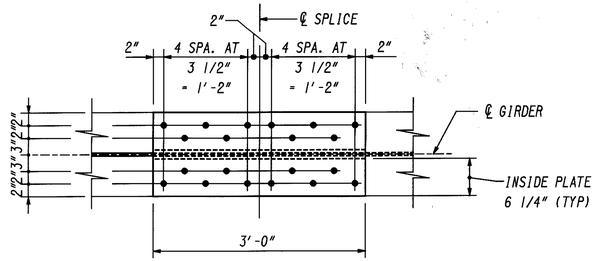

VIEW A-A

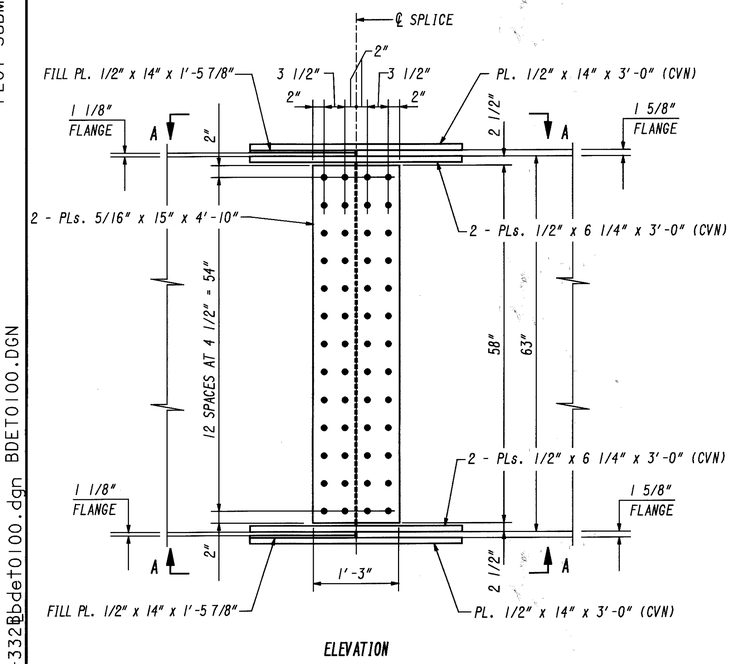

ELEVATION

FIELD SPLICE

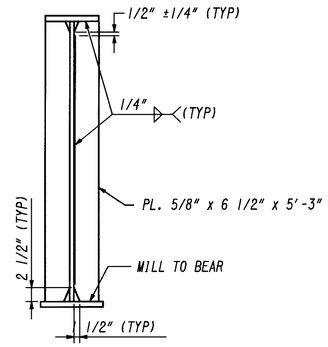

TYPICAL ABUTMENT STIFFENER

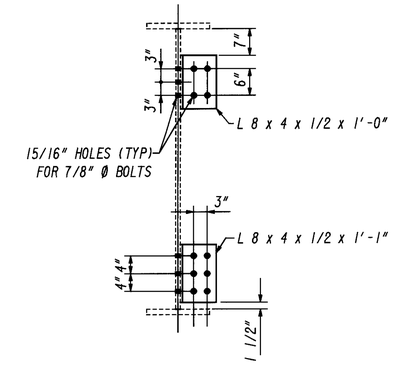

TYPE 2 CROSSFRAME CONNECTION

(AT EXISTING GIRDERS)

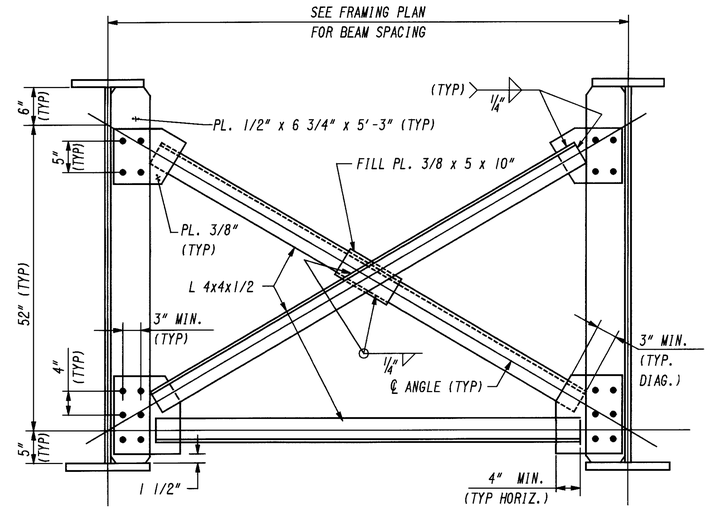

NOTE: TYPE 1 CONNECTION SHOWN

TYPICAL CROSSFRAME

NOTES:

1. WORK THIS SHEET WITH SHEETS 17 AND 18.
2. ALL COSTS ASSOCIATED WITH FIELD DRILLING OF HOLES FOR TYPE 2 CROSSFRAME CONNECTION ARE TO BE INCLUDED WITH ITEM 863 FOR PAYMENT.
3. USE MINIMUM FILLET WELD SIZE UNLESS NOTED OTHERWISE.
4. ALL BOLTS SHALL BE 1"Ø HIGH STRENGTH ASTM A-325, GALVANIZED BOLTS UNLESS NOTED OTHERWISE.

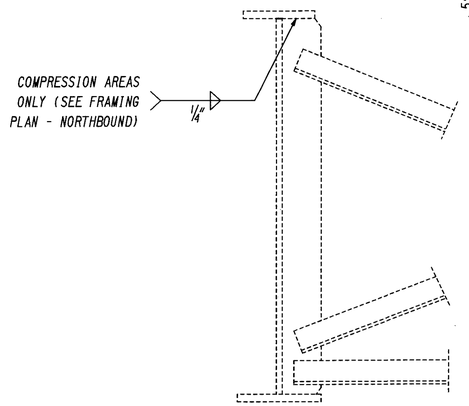

EXISTING STIFFENER RETROFIT

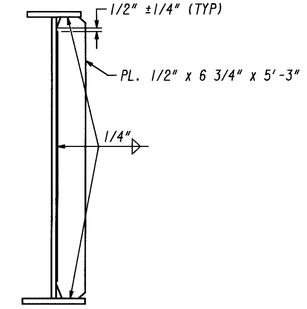

TYPICAL CONNECTION PLATES

(INTERMEDIATE STIFFENERS SIMILAR)

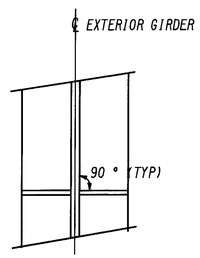

SECTION B-B

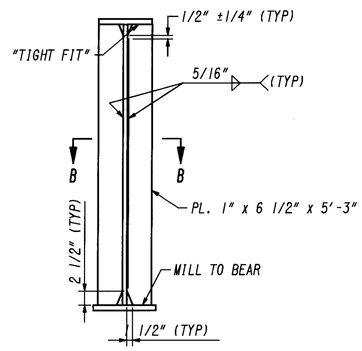

TYPICAL PIER STIFFENER

GREINER ENGINEERING INC. - OHIO
MIDDLEBURG HTS., OHIO 44130

17 / 24

MISCELLANEOUS DETAILS

BRIDGE NO. CUY-71-0332 L&R
OVER EAST BRANCH ROCKY RIVER

DESIGNED	DRAWN	CHECKED	REVIEWED	DATE	REVISED
AMZ	JLL	JMB	WRF	7-8-93	

PLOTTED BY: lmincek
PLOT SUBMITTED: 06-AUG-1998 10:01
FILE NAME: BDET0100.DGN

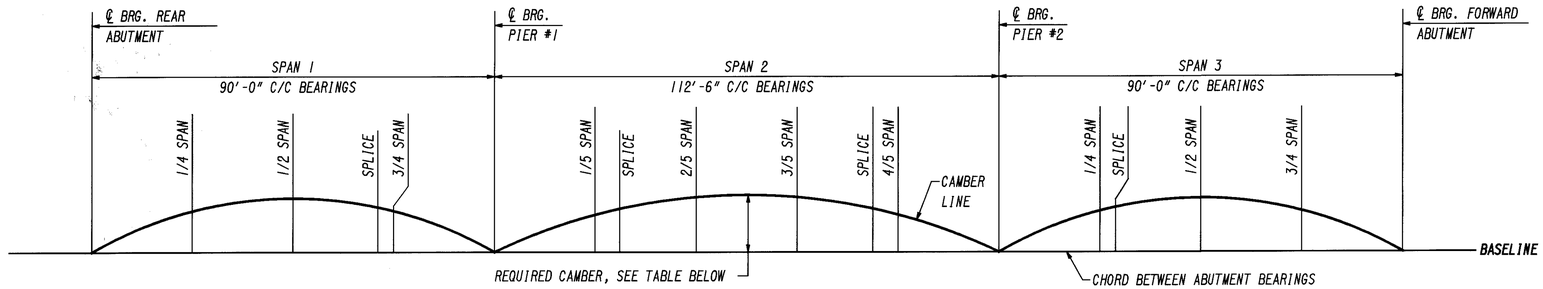

CAMBER DIAGRAM

(NEW GIRDERS ONLY)

BEAM DEFLECTION & CAMBER TABLE

	LOCATION	℄ BRG.	SPAN 1 1/4	SPAN 1 1/2	SPAN 1 SPLICE	SPAN 1 3/4	PIER 1	SPAN 2 1/5	SPAN 2 SPLICE	SPAN 2 2/5	SPAN 2 3/5	SPAN 2 SPLICE	SPAN 2 4/5	PIER 2	SPAN 3 1/4	SPAN 3 SPLICE	SPAN 3 1/2	SPAN 3 3/4	℄ BRG.
EXTERIOR BEAMS	DEFLECTION DUE TO STEEL WEIGHT	0	1/16	1/8	1/16	1/16	0	1/16	1/16	1/8	1/8	1/16	1/16	0	1/16	1/16	1/8	1/16	0
	DEFLECTION DUE TO SLAB WEIGHT	0	3/8	7/16	3/16	3/16	0	3/16	1/4	7/16	7/16	1/4	3/16	0	3/16	3/16	7/16	3/8	0
	DEFLECTION DUE TO PARAPET WEIGHT	0	1/16	1/16	0	0	0	0	0	1/16	1/16	0	0	0	0	0	1/16	1/16	0
	REQUIRED SHOP CAMBER	0	1/2	5/8	1/4	1/4	0	1/4	5/16	5/8	5/8	5/16	1/4	0	1/4	1/4	5/8	1/2	0
INTERIOR BEAMS	DEFLECTION DUE TO STEEL WEIGHT	0	1/16	1/8	1/16	1/16	0	1/16	1/16	1/8	1/8	1/16	1/16	0	1/16	1/16	1/8	1/16	0
	DEFLECTION DUE TO SLAB WEIGHT	0	5/16	3/8	3/16	3/16	0	3/16	1/4	3/8	3/8	1/4	3/16	0	3/16	3/16	3/8	5/16	0
	DEFLECTION DUE TO PARAPET WEIGHT	0	1/16	1/16	0	0	0	0	0	1/16	1/16	0	0	0	0	0	1/16	1/16	0
	REQUIRED SHOP CAMBER	0	7/16	9/16	1/4	1/4	0	1/4	5/16	9/16	9/16	5/16	1/4	0	1/4	1/4	9/16	7/16	0

NOTE: CAMBER VALUES SHOWN. DEFLECTION VALUES ARE OPPOSITE SIGN TO THOSE IN TABLE.

GREINER ENGINEERING INC. - OHIO
MIDDLEBURG HTS., OHIO 44130

18 / 24

CAMBER DIAGRAM

BRIDGE NO. CUY-71-0332 L&R
OVER EAST BRANCH ROCKY RIVER

DESIGNED	DRAWN	CHECKED	REVIEWED	DATE	REVISED
JMB	JLL	TSB	WRF	6-28-93	

PLOTTED BY: lminck
PLOT SUBMITTED: 06-AUG-1998 10:01
BCAM0100.DGN

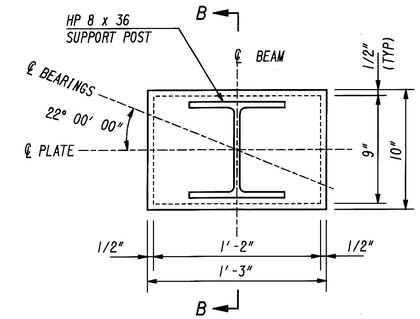

SECTION C-C

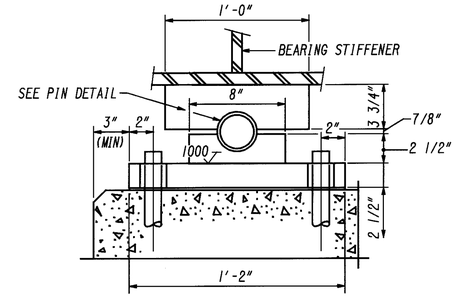

SECTION D-D

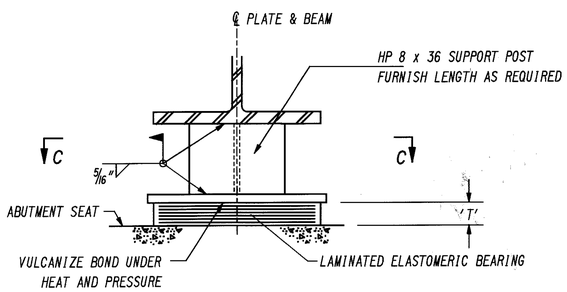

ABUTMENT BEARING DETAIL

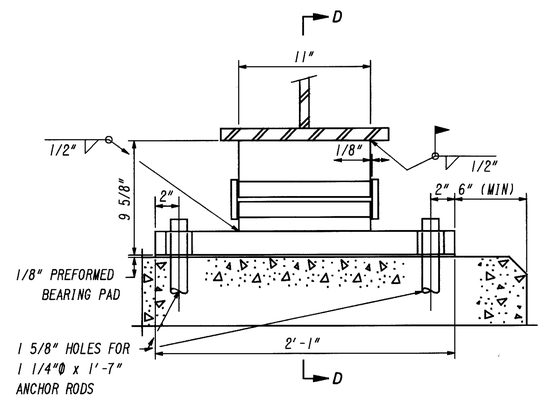

PIER 2 BEARING DETAIL

(F-300)

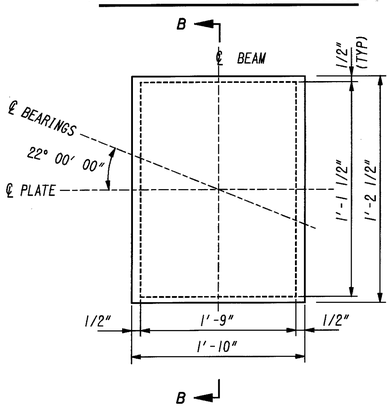

SECTION A-A

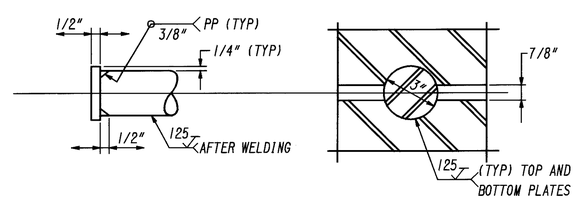

BEARING PIN DETAIL

FOR DETAILS NOT SHOWN SEE
STANDARD DRAWING FB-1-82

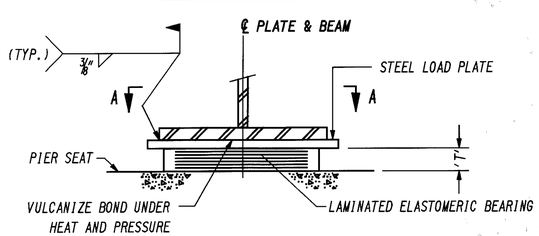

PIER 1 BEARING DETAIL

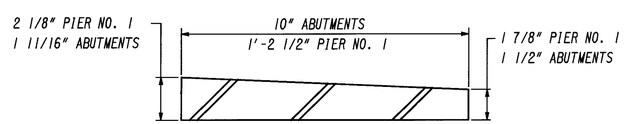

SECTION B-B

(LOAD PLATE)

LAMINATED ELASTOMERIC BEARING NOTES:

WELDING OF THE SUPPORT POST TO THE LOAD PLATE AND OF THE LOAD PLATE TO THE GIRDER SHALL BE CONTROLLED SO THAT THE PLATE TEMPERATURE AT THE ELASTOMER BONDED SURFACE DOES NOT EXCEED 300 DEGREES FAHRENHEIT AS DETERMINED BY USE OF PYROMETRIC STICKS OR OTHER TEMPERATURE MONITORING DEVICES.

STEEL FOR LOAD PLATES SHALL BE ASTM A709, GRADE 36.

THE STEEL LOAD PLATE SHALL BE BONDED BY VULCANIZATION TO THE ELASTOMER DURING THE MOLDING PROCESS.

ELASTOMERIC BEARINGS SHALL COMPLY WITH ITEM 516 AND ARTICLE 14.6.5 OF SECTION 14, BEARINGS OF THE CURRENT AASHTO SPECIFICATIONS. BEARINGS SHALL BE GRADE 3, 50 DUROMETER ELASTOMER. THE UNIT PRICE BID SHALL INCLUDE STEEL SUPPORT POSTS AND ALL OTHER MATERIALS, LABOR AND INCIDENTALS NECESSARY TO FURNISH AND INSTALL LAMINATED ELASTOMERIC BEARINGS. PAYMENT WILL BE MADE AT THE CONTRACT PRICE BID FOR THE APPROPRIATE ITEM 516 - ELASTOMERIC BEARING WITH INTERNAL LAMINATES AND LOAD PLATE (NEOPRENE), AS PER PLAN.

LAMINATED ELASTOMERIC BEARING DATA

	FORWARD ABUT.	REAR ABUT.	PIER 1
DEAD LOAD REACTION	56 K	56 K	193 K
LIVE LOAD REACTION	46 K	46 K	76 K
MAX. DESIGN LOAD	102 K	102 K	269 K
ELASTOMERIC LAYERS (INTERNAL)	3 x .26″ = .78″	7 x .26″ = 1.82″	3 x .39″ = 1.17″
ELASTOMERIC LAYERS (EXTERNAL)	2 x .19″ = .38″	2 x .19″ = .38″	2 x .28″ = .56″
STEEL LAMINATES (14 GA.)	4 x .0747″ = .30″	8 x .0747″ = .60″	4 x .0747″ = .30″
TOTAL THICKNESS (T)	1.46″	2.80″	2.03″
LOAD PLATE AT CENTERLINE	1.594″	1.594″	2.000″

(50 DUROMETER ELASTOMER)

GREINER ENGINEERING INC. - OHIO
MIDDLEBURG HTS., OHIO 44130

19/24

BEARING DETAILS

BRIDGE NO. CUY-71-0332 L&R
OVER EAST BRANCH ROCKY RIVER

DESIGNED	DRAWN	CHECKED	REVIEWED	DATE	REVISED
TSB	JLL	JMB	WRF	6-30-93	

PLOTTED BY: lmincek
PLOT SUBMITTED:06-AUG-1998 10:02
BBRG0100.DGN

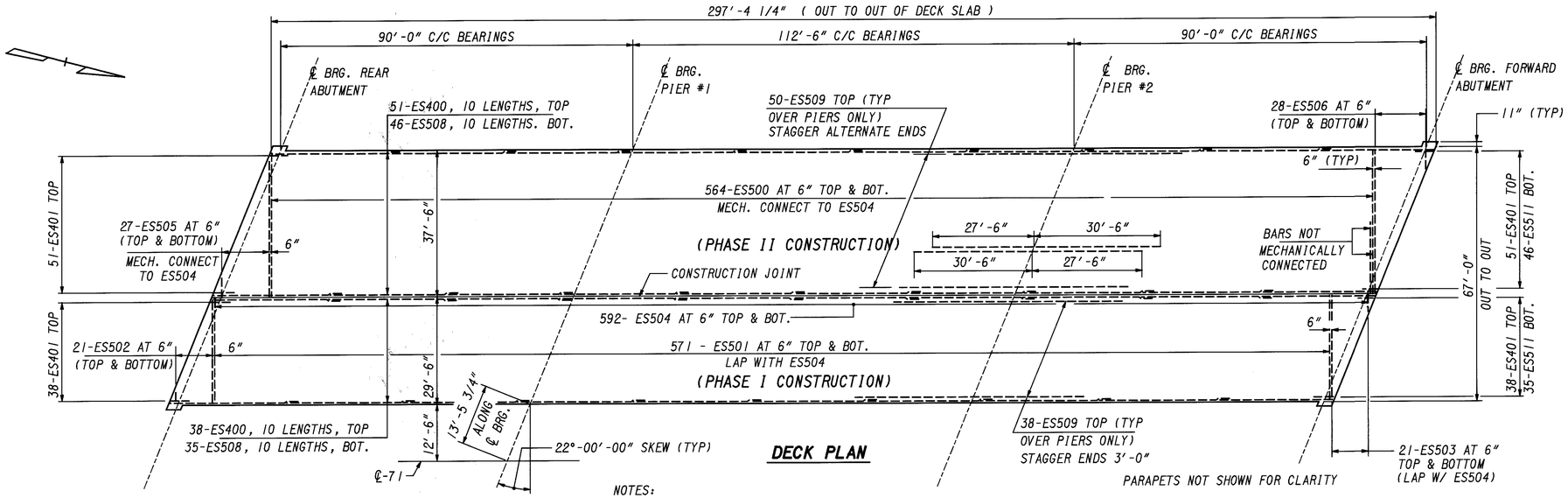

DECK PLAN

NOTES:

1. THE DISTANCE SHOWN FROM THE TOP OF THE DECK SLAB TO THE BOTTOM OF THE TOP FLANGE IS THE THEORETICAL DESIGN DIMENSION INCLUDING THE DESIGN HAUNCH THICKNESS OF 4 1/4". THE QUANTITY OF DECK CONCRETE TO BE PAID FOR SHALL BE BASED ON THIS DIMENSION MINUS THE DESIGN HAUNCH THICKNESS, EVEN THOUGH DEVIATION FROM IT MAY BE NECESSARY BECAUSE THE TOP FLANGE OF THE GIRDER MAY NOT HAVE THE EXACT CAMBER OR CONFORMATION REQUIRED TO PLACE IT PARALLEL TO THE FINISHED GRADE. DEDUCTION SHALL BE MADE FOR VOLUME OF ENCASED STEEL PLATES AS PER 511.18.
2. A HAUNCH WIDTH OF 9 INCHES SHALL BE USED FOR COMPUTING QUANTITY OF CONCRETE. HOWEVER, THE HAUNCH WIDTH MAY VARY BETWEEN 6 AND 12 INCHES.
3. FOR ABBREVIATION LEGEND SEE GENERAL NOTES.

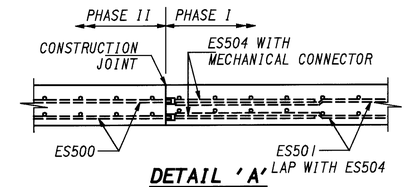

DETAIL 'A'

(SOUTHBOUND DECK SHOWN, NORTHBOUND DECK SIMILAR)

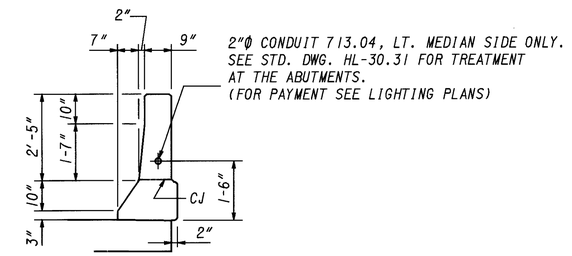

TYPICAL PARAPET DETAIL

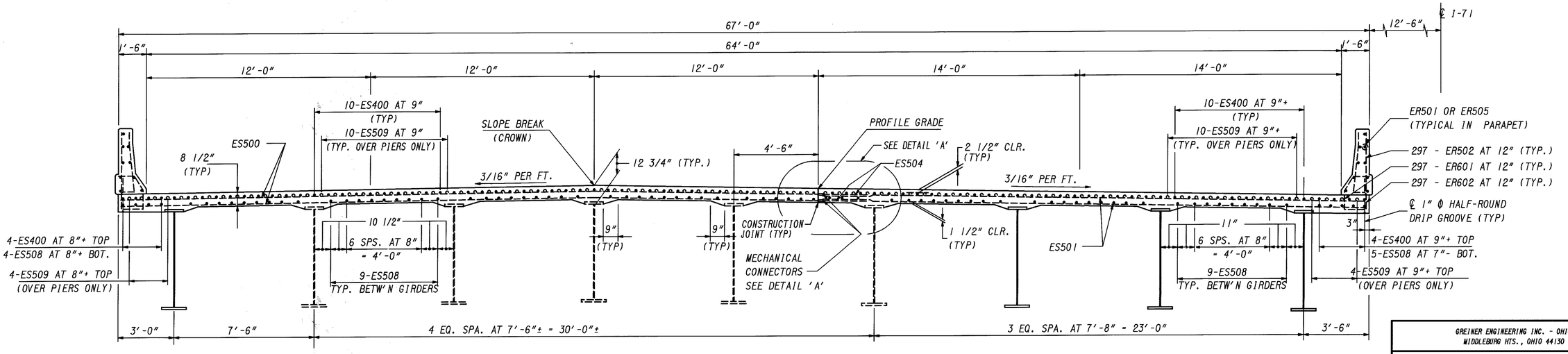

TRANSVERSE SECTION

MINIMUM LAP SPLICE LENGTH
#4 1'-7"
#5 2'-6"

GREINER ENGINEERING INC. - OHIO
MIDDLEBURG HTS., OHIO 44130

20 / 24

SOUTHBOUND DECK PLAN

BRIDGE NO. CUY-71-0332 L
OVER EAST BRANCH ROCKY RIVER

DESIGNED	DRAWN	CHECKED	REVIEWED	DATE	REVISED
TSB	JLL	JMB	WRF	6-25-93	

PLOTTED BY:limincek
PLOT SUBMITTED:06-AUG-1998 12:14
BDEC0200.DGN

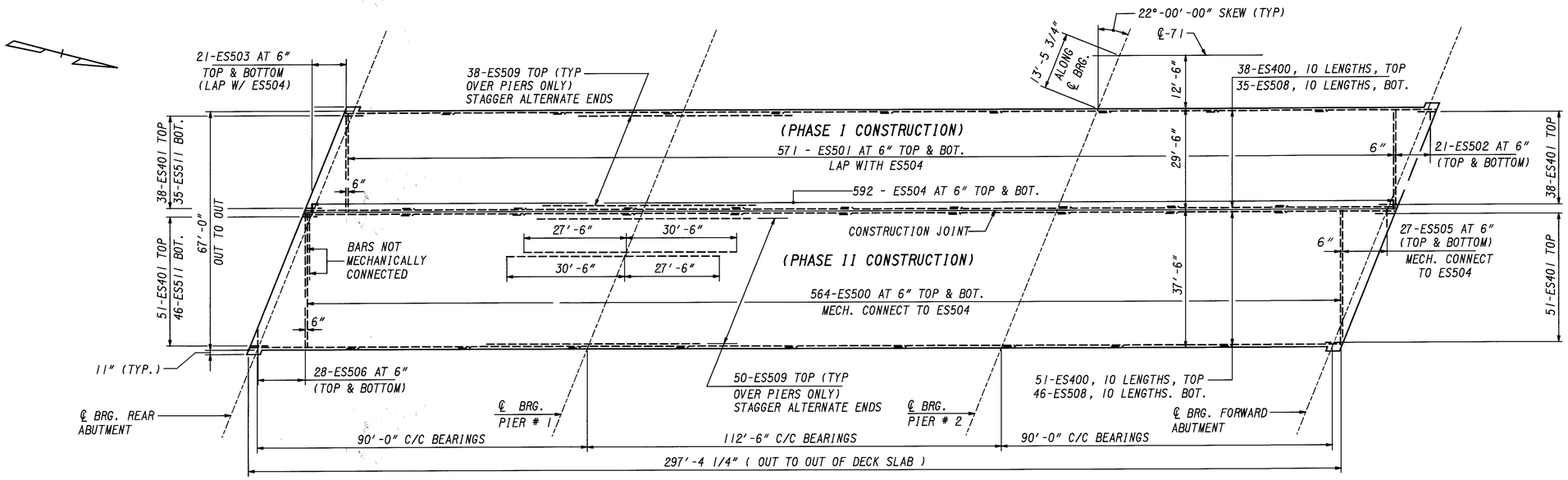

DECK PLAN

PARAPETS NOT SHOWN FOR CLARITY

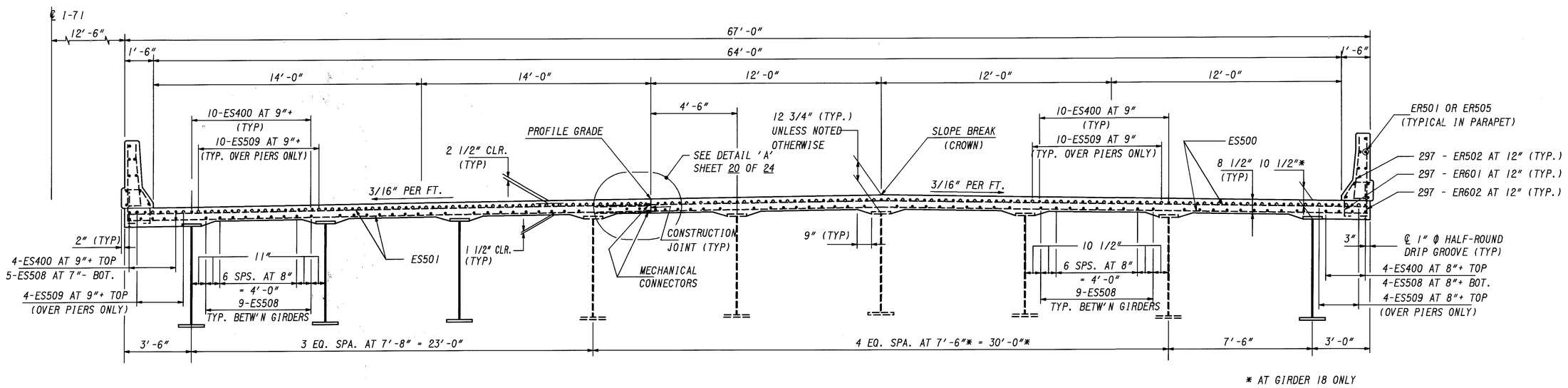

* AT GIRDER 18 ONLY

TRANSVERSE SECTION

MINIMUM LAP SPLICE LENGTH	
#4	1'-7"
#5	2'-6"

FOR ABBREVIATION LEGEND SEE GENERAL NOTES.

FOR ADDITIONAL NOTES AND DETAILS NOT SHOWN SEE SOUTHBOUND DECK PLAN.

GREIWER ENGINEERING INC. - OHIO
MIDDLEBURG HTS., OHIO 44130

21/24

NORTHBOUND DECK PLAN

BRIDGE NO. CUY-71-0332 R
OVER EAST BRANCH ROCKY RIVER

DESIGNED	DRAWN	CHECKED	REVIEWED	DATE	REVISED
TSB	JLL	JMB	WRF	6-25-93	

PLOTTED BY: lminck
PLOT SUBMITTED:06-AUG-1998 10:03
PLOT SCALE: 1:1
USER NAME: bsberg
FILE NAME: bdec0300.dgn
FILE SIZE: 1 MB
PLOT DATE: 6-25-93
BDEC0300.DGN
bdec0300.dgn
cuy-71-332R
pid08459

NOTES:
SEE CAMBER DIAGRAM SHEET FOR DEFLECTIONS DUE TO SLAB WEIGHT.

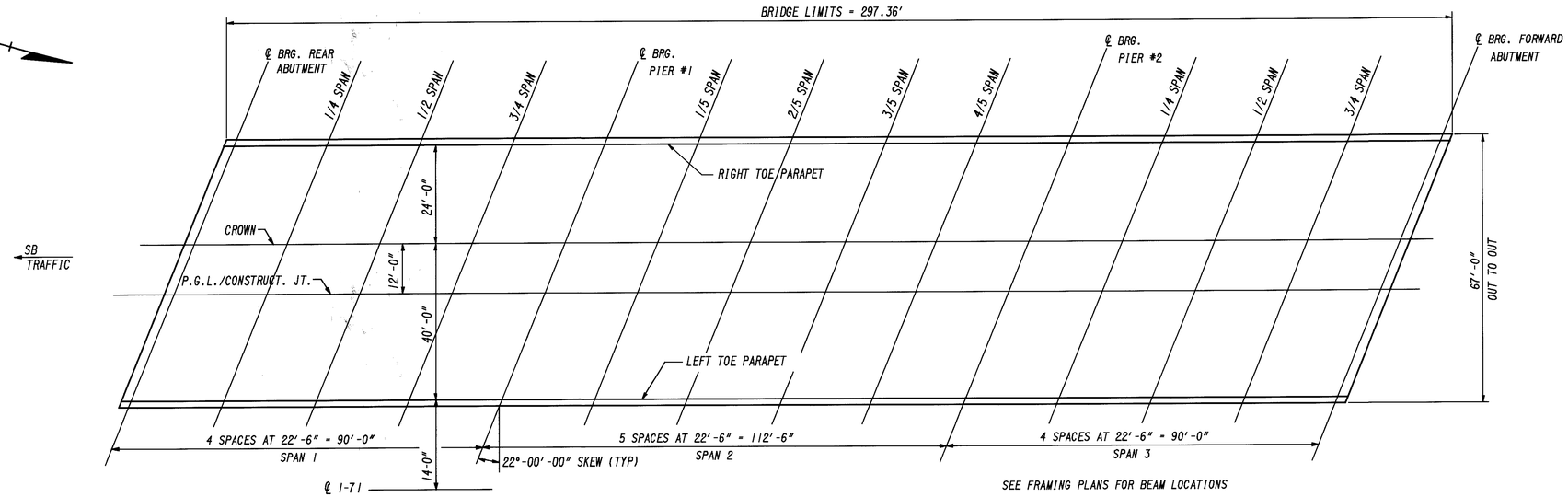

PLAN

SOUTHBOUND SHOWN, NORTHBOUND SIMILAR

SCREED ELEVATIONS *

	LOCATION	℄ BEARING	SPAN 1			℄ PIER 1	SPAN 2				℄ PIER 2	SPAN 3			℄ BEARING
			1/4 SPAN	1/2 SPAN	3/4 SPAN		1/5 SPAN	2/5 SPAN	3/5 SPAN	4/5 SPAN		1/4 SPAN	1/2 SPAN	3/4 SPAN	
SOUTHBOUND	RIGHT TOE PARAPET	820.47	820.91	821.32	821.70	822.08	822.50	822.92	823.32	823.70	824.09	824.51	824.93	825.32	825.69
	BEAM 1	820.49	820.93	821.33	821.71	822.09	822.51	822.93	823.34	823.72	824.10	824.52	824.94	825.34	825.70
	BEAM 2	820.55	820.98	821.38	821.77	822.16	822.58	822.99	823.39	823.78	824.16	824.58	824.99	825.40	825.77
	BEAM 3	820.61	821.04	821.45	821.84	822.22	822.64	823.05	823.45	823.84	824.23	824.65	825.06	825.46	825.83
	CROWN / BEAM 4	820.68	821.11	821.51	821.90	822.28	822.70	823.10	823.52	823.91	824.29	824.71	825.12	825.52	825.89
	BEAM 5	820.50	820.94	821.34	821.73	822.11	822.53	822.94	823.34	823.74	824.12	824.54	824.95	825.35	825.72
	PGE/CONSTR. JOINT	820.40	820.83	821.23	821.63	822.01	822.43	822.84	823.24	823.63	824.01	824.44	824.85	825.25	825.62
	BEAM 6	820.33	820.76	821.17	821.56	821.94	822.36	822.77	823.17	823.56	823.95	824.37	824.78	825.18	825.55
	BEAM 7	820.16	820.59	820.99	821.38	821.76	822.19	822.60	823.00	823.39	823.77	824.19	824.60	825.02	825.38
	BEAM 8	819.98	820.39	820.82	821.21	821.59	822.01	822.42	822.82	823.21	823.60	824.02	824.43	824.83	825.20
	BEAM 9	819.81	820.24	820.64	821.03	821.41	821.84	822.25	822.65	823.04	823.42	823.84	824.25	824.65	825.03
	LEFT TOE PARAPET	819.76	820.19	820.61	820.99	821.37	821.79	822.21	822.61	822.99	823.38	823.80	824.22	824.61	824.98
NORTHBOUND	LEFT TOE PARAPET	819.56	819.99	820.40	820.78	821.17	821.59	822.01	822.41	822.79	823.17	823.59	824.02	824.41	824.78
	BEAM 10	819.58	820.01	820.42	820.80	821.18	821.60	822.03	822.43	822.81	823.19	823.61	824.03	824.42	824.80
	BEAM 11	819.64	820.07	820.47	820.87	821.25	821.67	822.08	822.48	822.87	823.25	823.68	824.09	824.49	824.86
	BEAM 12	819.71	820.14	820.54	820.94	821.31	821.73	822.14	822.55	822.94	823.32	823.74	824.15	824.55	824.92
	BEAM 13	819.77	820.20	820.60	821.00	821.38	821.80	822.21	822.61	823.00	823.38	823.81	824.22	824.62	824.99
	PGE/CONSTR. JOINT	819.80	820.23	820.63	821.02	821.40	821.82	822.23	822.64	823.03	823.41	823.83	824.24	824.64	825.01
	BEAM 14	819.83	820.27	820.67	821.06	821.44	821.86	822.27	822.67	823.07	823.45	823.87	824.28	824.68	825.05
	CROWN / BEAM 15	819.90	820.33	820.73	821.12	821.50	821.92	822.34	822.74	823.13	823.51	823.93	824.34	824.74	825.12
	BEAM 16	819.73	820.16	820.56	820.95	821.33	821.75	822.16	822.57	822.96	823.34	823.76	824.17	824.57	824.94
	BEAM 17	819.55	819.99	820.39	820.78	821.16	821.58	821.99	822.39	822.79	823.17	823.59	823.99	824.40	824.77
	BEAM 18	819.38	819.81	820.23	820.61	820.99	821.41	821.83	822.23	822.61	823.00	823.42	823.84	824.23	824.60
	RIGHT TOE PARAPET	819.35	819.78	820.19	820.57	820.95	821.38	821.80	822.20	822.58	822.96	823.38	823.80	824.20	824.57

* DECK SURFACE ELEVATIONS PRIOR TO PLACEMENT OF DECK SLAB CONCRETE. ALLOWANCE HAS BEEN MADE FOR ANTICIPATED DEAD LOAD DEFLECTIONS DUE TO PLACEMENT OF THE SLAB.

GREINER ENGINEERING INC. - OHIO
MIDDLEBURG HTS., OHIO 44130

SCREED ELEVATIONS

BRIDGE NO. CUY-71-0332 L&R
OVER EAST BRANCH ROCKY RIVER

DESIGNED	DRAWN	CHECKED	REVIEWED	DATE	REVISED
JLL	JLL	TSB	WRF	6-28-93	

PLOTTED BY:jlmincek
PLOT SUBMITTED:06-AUG-1998 10:03
BDKE0100.DGN

MARK	TOTAL NO.	LENGTH	TOTAL WEIGHT	TYPE	A	B	C	D	SUPER NB NO.	SUPER NB WEIGHT	SUPER SB NO.	SUPER SB WEIGHT	REMARKS
SUPERSTRUCTURE													
ES400	1780	30'-0"	35672	STR					890	17836	890	17836	
ES401	356	10'-0"	2378	4	9'-6"				178	1189	178	1189	
ES500	2256	37'-3"	87650	53					1128	43825	1128	43825	
ES501	2284	29'-3"	69680	52					1142	34840	1142	34840	
ES502	84	28'-3"TO 3'-6"	1392	STR		STEP = 1'-3"(-)			2 SETS	696	2 SETS	696	1 SET = 21 BARS
ES503	84	28'-1"TO 3'-4"	1376	52		STEP = 1'-3"(-)			2 SETS	688	2 SETS	688	1 SET = 21 BARS
ES504	2392	2'-9"	6860	52					1196	3430	1196	3430	
ES505	108	36'-1" TO 3'-11"	2254	53		STEP = 1'-3"(-)			2 SETS	1127	2 SETS	1127	1 SET = 27 BARS
ES506	112	36'-11" TO 3'-6"	2360	STR		STEP = 1'-3"(-)			2 SETS	1180	2 SETS	1180	1 SET = 28 BARS
ES507													NOT USED
ES508	1620	30'-0"	50690	STR					810	25345	810	25345	
ES509	352	58'-0"	21294	STR					176	10647	176	10647	
ES510													NOT USED
ES511	162	18'-6"	3126	STR					81	1563	81	1563	
ES512	16	15'-11"	266	1	3'-89"	6'-3"			8	133	8	133	
ES513	284	7'-5"	2198	1	3'-2"	2'-3"			142	1099	142	1099	
ES514	568	11'-11"	7060	1	3'-8"	4'-3"			284	3530	284	3530	
ES515	24	43'-0"	1076	STR					12	538	12	538	
ES516	24	35'-10"	898	STR					12	449	12	449	
ES801	28	41'-3"	3084	53					14	1542	14	1542	
ES802	28	32'-5"	2424	STR					14	1212	14	1212	
ES803	28	4'-3"	312	52					14	156	14	156	
ES804	180	4'-9"	2284	9					90	1142	90	1142	
								SUBTOTALS		152167		152167	
RAILING													
ER501	360	30'-0"	11264	STR					180	5632	180	5632	
ER502	1188	6'-11"	8570	7					594	4285	594	4285	
ER505	36	22'-0"	826	STR					18	413	18	413	ER503 & ER504 NOT USED
ER601	1188	3'-6 1/2"	5576	6					594	2788	594	2788	
ER602	1188	2'-6 1/2"	4536	3	1'-7"	1'-1"			594	2268	594	2268	
								SUBTOTALS		15386		15386	
								TOTAL		167553		167553	

SPIRAL REINFORCEMENT MARK	TOTAL NO.	LENGTH	TOTAL WEIGHT	CORE	PITCH	SPACERS	NORTHBOUND PIER 1 NO.	NORTHBOUND PIER 1 WT.	NORTHBOUND PIER 2 NO.	NORTHBOUND PIER 2 WT.	SOUTHBOUND PIER 1 NO.	SOUTHBOUND PIER 1 WT.	SOUTHBOUND PIER 2 NO.	SOUTHBOUND PIER 2 WT.
ESP401	3	10'-1"	236	30	3	3			3	236				
ESP402	3	10'-11"	256	30	3	3							3	256
ESP403	3	15'-6"	363	30	3	3	3	363						
ESP404	3	16'-4"	382	30	3	3					3	382		
						SUBTOTAL		363		236		382		256
ESD401	6	29'-9"	970	42	3	4			3	*			3	*
ESD402	6	22'-9"	742	42	3	4	3	*			3	*		

* INCLUDE WITH DRILLED SHAFTS FOR PAYMENT

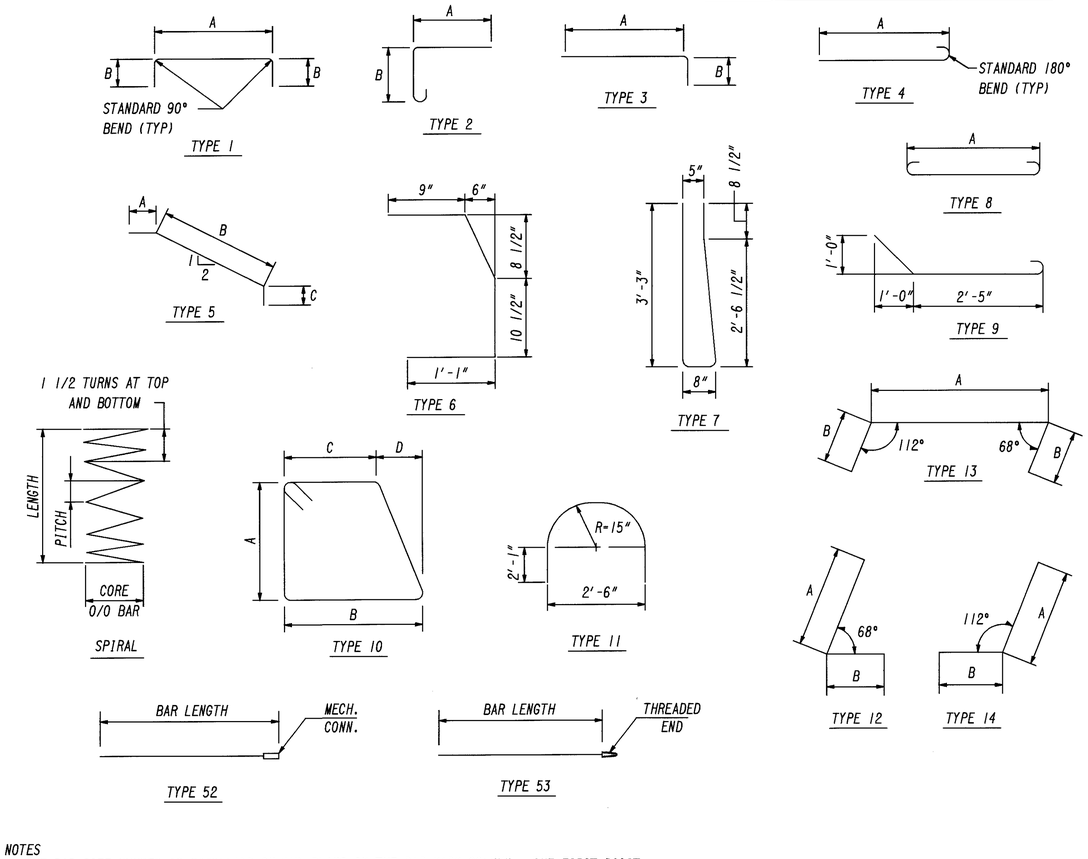

NOTES

1. THE BAR SIZE NUMBER IS SPECIFIED ON THE PLANS IN THE BAR MARK COLUMN. THE FIRST DIGIT WHERE THREE DIGITS ARE USED AND THE FIRST TWO DIGITS WHERE FOUR ARE USED INDICATES THE BAR SIZE NUMBER. FOR EXAMPLE, P601 IS A NO. 6 BAR. BAR DIMENSIONS SHOWN ARE OUT TO OUT UNLESS OTHERWISE INDICATED. R INDICATES INSIDE RADIUS. UNLESS OTHERWISE NOTED, "STD." WRITTEN IN PLACE OF A DIMENSION INDICATES A STANDARD BEND AT THE END OF THE BAR.

2. ALL REINFORCING STEEL TO BE EPOXY COATED.

3. CONCRETE SPACERS OR OTHER APPROVED NONCORROSIVE SPACING DEVICES SHALL BE USED AT SUFFICIENT INTERVALS (NEAR THE BOTTOM AND AT INTERVALS NOT EXCEEDING 10 FEET) TO ENSURE CONCENTRIC SPACING FOR THE ENTIRE CAGE LENGTH. SPACERS SHALL BE CONSTRUCTED OF APPROVED MATERIAL EQUAL IN QUALITY AND DURABILITY TO THE CONCRETE SPECIFIED FOR THE SHAFT. THE SPACERS SHALL HAVE ADEQUATE DIMENSIONS TO ENSURE A MINIMUM 3 INCH CLEAR SPACE BETWEEN THE OUTSIDE OF THE REINFORCING CAGE AND THE DESIGN DIMENSION OF THE DRILLED SHAFT OR COLUMN. CYLINDRICAL CONCRETE FEET (BOTTOM SUPPORTS) SHALL BE PROVIDED TO ENSURE THAT THE BOTTOM OF THE CAGE IS MAINTAINED AT THE PROPER DISTANCE ABOVE THE BASE.

4. SPIRAL REINFORCING BARS: THE "LENGTH" SHOWN IN THE STEEL LIST FOR THE SPIRAL BARS IS THE LENGTH OF THE SPIRAL ALONG THE AXIS OF THE SPIRAL. THREE STEEL CHANNEL, TEE OR ANGLE SPACERS, WEIGHING APPROXIMATELY 0.80 LB PER LINEAR FEET OF SPACER, SHALL BE PROVIDED FOR EACH SPIRAL UNIT. THEY SHALL BE EQUALLY SPACED ALONG THE PERIPHERY OF THE COILS. THE NUMBER OF POUNDS OF THESE SPACERS, BASED ON 2.40 LB PER LINEAR FOOT IS INCLUDED IN THE TABULATED QUANTITIES OF SPIRAL BARS.

5. ALL REINFORCING STEEL SHALL BE INCLUDED WITH THE APPROPRIATE ITEM 844 FOR PAYMENT. WEIGHTS ARE GIVEN FOR INFORMATIONAL PURPOSES ONLY.

GREINER ENGINEERING INC. - OHIO
MIDDLEBURG HTS., OHIO 44130

REINFORCING STEEL I

BRIDGE NO. CUY-71-0332 L&R
OVER EAST BRANCH ROCKY RIVER

DESIGNED	DRAWN	CHECKED	REVIEWED	DATE	REVISED
TSB	JLL	JMB	WRF	6-28-93	

PLOTTED BY: lmincek
PLOT SUBMITTED:06-AUG-1998 10:04
PLOT SCALE:1:1
PLOT DATE:
bbar0100.dgn BBAR0100.DGN

‡ NUMBER OF SETS

MARK	TOTAL NO.	LENGTH	TOTAL WEIGHT	TYPE	A	B	C	D	NORTHBOUND FOR. ABUT. NO.	NORTHBOUND FOR. ABUT. WT.	NORTHBOUND REAR ABUT. NO.	NORTHBOUND REAR ABUT. WT.	SOUTHBOUND FOR. ABUT. NO.	SOUTHBOUND FOR. ABUT. WT.	SOUTHBOUND REAR ABUT. NO.	SOUTHBOUND REAR ABUT. WT.	REMARKS
ABUTMENT REINFORCING																	
EA501	92	6'-6"	624	3	5'-8"	1'-0"							46	312	46	312	
EA502	70	12'-10"	936	10	3'-5"	2'-10"	1'-5"	1'-5"	16	214	16	214	19	254	19	254	
EA503	92	7'-0"	672	3	6'-2"	1'-0"			46	336	46	336					
EA504	184	10'-6"	2013	1	5'-9"	2'-6"			46	504	46	504	46	504	46	504	
EA505	20	2'-9"	60	52					5	15	5	15	5	15	5	15	
EA506	36	10'-10"	406	STR					8	90	10	113	8	90	10	113	
EA507	36	11'-4"	426	STR					10	118	8	95	10	118	8	95	
EA508	64	10'-7 1/2" TO 5'-0"	524	STR	STEP = 4 1/2"				1 ‡	131	1 ‡	131	1 ‡	131	1 ‡	131	1 SET = 16 BARS
EA509	16	28'-8"	480	STR					4	120	4	120	4	120	4	120	
EA510	64	5'-2"	344	1	1'-5"	2'-0"			16	86	16	86	16	86	16	86	
EA511	16	11'-6"	196	STR					4	49	4	49	4	49	4	49	
EA512	20	34'-4" TO 35'-7"	728	STR	STEP = 3 3/4"				1 ‡	182	1 ‡	182	1 ‡	182	1 ‡	182	1 SET = 5 BARS
EA513	20	44'-5" TO 43'-2"	912	53	STEP = 3 3/4"				1 ‡	228	1 ‡	228	1 ‡	228	1 ‡	228	1 SET = 5 BARS
EA514	20	14'-0"	292	STR					5	73	5	73	5	73	5	73	
EA515	204	7'-2"	1524	1	3'-5"	2'-0"			51	381	51	381	51	381	51	381	
EA516	24	12'-3" TO 2'-3"	180	STR	STEP = 2'-0"				1 ‡	45	1 ‡	45	1 ‡	45	1 ‡	45	1 SET = 6 BARS
EA517	280	5'-5"	1584	3	3'-3"	2'-4"			70	396	70	396	70	396	70	396	
EA601	8	16'-2"	200	5	1'-10"	13'-0"	1'-6"		2	50	2	50	2	50	2	50	
EA602	64	10'-7 1/2" TO 5'-0"	752	STR	STEP = 4 1/2"				1 ‡	188	1 ‡	188	1 ‡	188	1 ‡	188	1 SET = 16 BARS
EA603	92	6'-9"	932	3	5'-11"	1'-0"							46	466	46	466	
EA604	92	7'-0"	968	3	6'-2"	1'-0"			46	484	46	484					
EA605	64	5'-0"	480	STR					16	120	16	120	16	120	16	120	
EA606	24	12'-3" TO 2'-3"	260	STR	STEP = 2'-0"				1 ‡	65	1 ‡	65	1 ‡	65	1 ‡	65	1 SET = 6 BARS
EA607	184	10'-6"	2904	1	5'-9"	2'-6"			46	726	46	726	46	726	46	726	
EA608	20	10'-10"	326	STR					6	98	4	65	6	98	4	65	
EA609	20	11'-4"	340	STR					4	68	6	102	4	68	6	102	
EA610	20	15'-0"	452	STR					5	113	5	113	5	113	5	113	
EA611	8	29'-5"	354	STR							4	177	4	177			
EA612	8	28'-0"	336	STR					4	168					4	168	
EA613	8	11'-0"	132	STR							4	66	4	66			
EA614	8	12'-3"	148	STR					4	74					4	74	
EA801	80	8'-0"	1708	STR					20	427	20	427	20	427	20	427	
EA802	20	33'-10"	1806	8	32'-0"						10	903	10	903			
EA803	20	20'-1" TO 18'-1"	1020	8	18'-3" TO 16'-3"	STEP = 6"					2 ‡	510	2 ‡	510			1 SET = 5 BARS
EA804	20	20'-4"	1086	8	18'-6"				10	543					10	543	
EA805	20	31'-7" TO 33'-7"	1740	8	29'-9" TO 31'-9"	STEP = 6"			2 ‡	870					2 ‡	870	1 SET = 5 BARS
		SUBTOTAL	27848				SUBTOTALS			6964		6964		6961		6961	
RETAINING WALL REINFORCING																	
EW501	28	7'-1"	206	3	6'-3"	1'-0"			14	103	14	103					
EW502	34	11'-5"	406	STR					17	203	17	203					
EW503	60	19'-0"	1190	STR					30	595	30	595					
EW504	28	10'-6"	306	1	5'-9"	2'-6"			14	153	14	153					
EW505	6	10'-10"	68	STR					3	34	3	34					
EW601	28	7'-5"	312	3	6'-6"	1'-0"			14	156	14	156					
EW602	28	10'-6"	442	1	5'-9"	2'-6"			14	221	14	221					
EW603	34	11'-8"	596	STR					17	298	17	298					
EW604	6	11'-1"	100	STR					3	50	3	50					
EW801	20	14'-10"	792	8	13'-0"				10	396	10	396					
		TOTAL = 4418					SUBTOTALS			2209		2209					

MARK	TOTAL NO.	LENGTH	TOTAL WEIGHT	TYPE	A	B	C	D	NORTHBOUND PIER 1 NO.	NORTHBOUND PIER 1 WT.	NORTHBOUND PIER 2 NO.	NORTHBOUND PIER 2 WT.	SOUTHBOUND PIER 1 NO.	SOUTHBOUND PIER 1 WT.	SOUTHBOUND PIER 2 NO.	SOUTHBOUND PIER 2 WT.	REMARKS
PIER REINFORCEMENT																	
EP501	16	22'-11"	384	STR					4	96	4	96	4	96	4	96	
EP502	312	8'-3"	2684	1	2'-8"	3'-2"			78	671	78	671	78	671	78	671	
EP503	16	8'-1"	136	11					4	34	4	34	4	34	4	34	
EP504	16	6'-6"	108	STR					4	27	4	27	4	27	4	27	
EP601	64	4'-0"	384	STR					16	96	16	96	16	96	16	96	
EP901	8	30'-4"	824	1	22'-11"	4'-0"			2	206	2	206	2	206	2	206	
EP902	8	31'-3"	852	1	23'-10"	4'-0"			2	213	2	213	2	213	2	213	
EP903	8	10'-3"	280	3	6'-6"	4'-0"			2	70	2	70	2	70	2	70	
EP904	8	11'-2"	304	3	7'-5"	4'-0"			2	76	2	76	2	76	2	76	
EP905	8	9'-0"	244	8	6'-6"				2	61	2	61	2	61	2	61	
EP906	8	9'-11"	268	8	7'-5"				2	67	2	67	2	67	2	67	
EP1001	16	23'-3"	1600	STR					4	400	4	400	4	400	4	400	
EP1002	16	23'-9"	1636	STR					4	409	4	409	4	409	4	409	
EP1003	16	23'-11"	1648	STR					4	412	4	412	4	412	4	412	
EP1004	22	13'-0"	1231	STR							22	1231					
EP1005	11	13'-0"	615	STR							11	615					
EP1006	22	13'-3"	1254	STR											22	1254	
EP1007	11	13'-11"	659	STR											11	659	
EP1008	11	18'-6"	876	STR					11	876							
EP1009	22	18'-6"	1751	STR					22	1751							
EP1010	11	19'-5"	919	STR									11	919			
EP1011	22	18'-9"	1775	STR									22	1775			
		SUBTOTAL	20432				SUBTOTALS			5465		4684		5532		4751	
		SPIRAL SUBTOTAL	1237				SPIRAL SUBTOTAL			363		236		382		256	
		TOTAL	21669					TOTALS		5828		4920		5914		5007	
DRILLED SHAFT REINFORCEMENT																	
ED1001	96	30'-11"	‡‡	4	29'-6"						48	‡‡			48	‡‡	
ED1002	96	23'-11"	‡‡	4	22'-6"				48	‡‡			48	‡‡			
EP1012	132	10'-3"	‡‡	4	8'-10"				33	‡‡	33	‡‡	33	‡‡	33	‡‡	

‡‡ INCLUDE WITH DRILLED SHAFTS FOR PAYMENT

NOTES:
FOR NOTES AND BAR BENDING DIAGRAMS
SEE REINFORCING STEEL I.

GREINER ENGINEERING INC. - OHIO
MIDDLEBURG HTS., OHIO 44130

24/24

REINFORCING STEEL II

BRIDGE NO. CUY-71-0332 L&R
OVER EAST BRANCH ROCKY RIVER

DESIGNED	DRAWN	CHECKED	REVIEWED	DATE	REVISED
TSB	JLL	JMB	WRF	6-28-93	

PLOTTED BY: lminceck
PLOT SUBMITTED: 06-AUG-1998 10:04
PLOT SCALE: 1:1
PLOT USER: bworsber
Bridge Design BBAR0200.DGN
Rbpid08459Rdgn Rcuy-71-332Rbbar0200.dgn

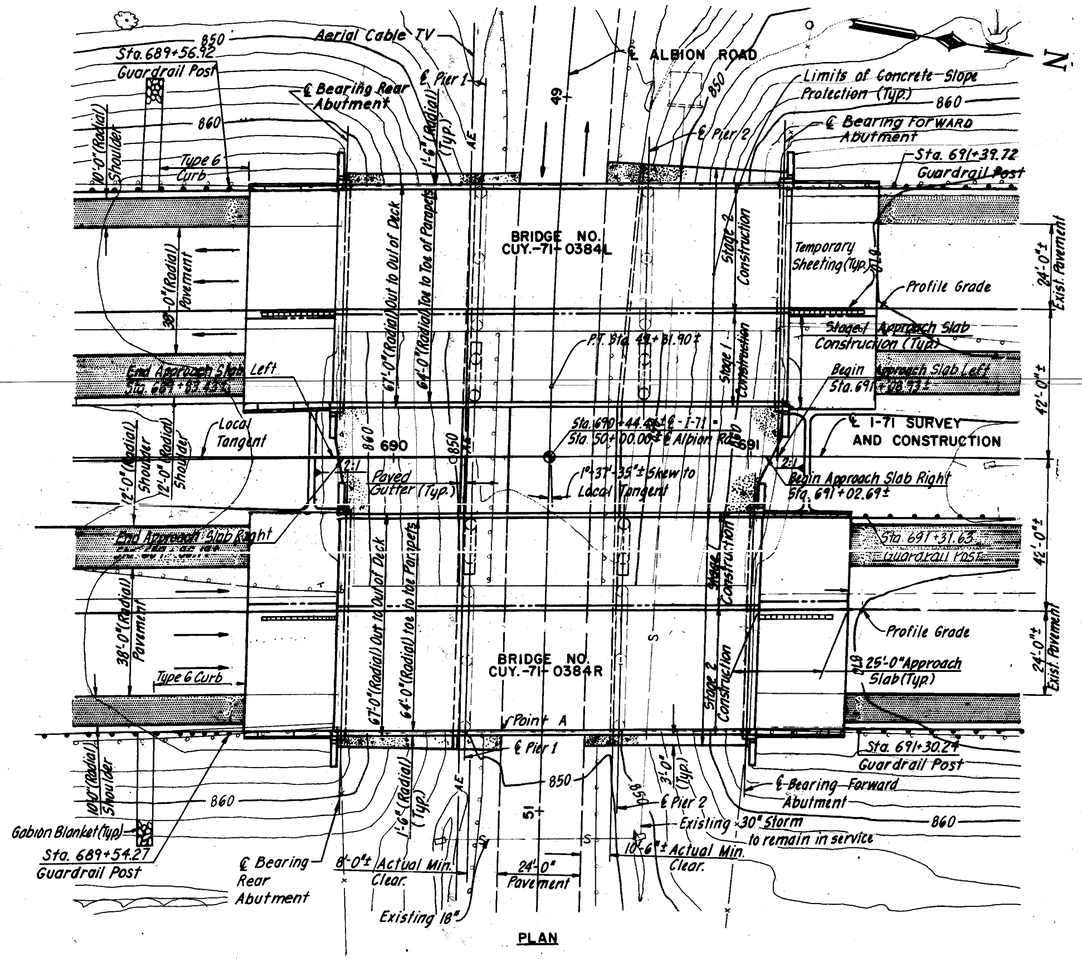

PLAN

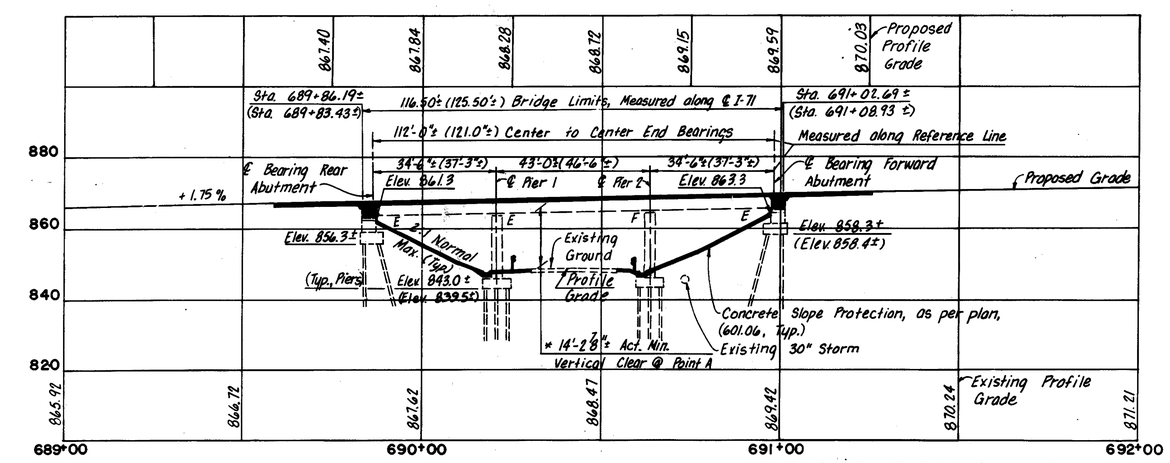

NORTHBOUND PROFILE SHOWN, SOUTHBOUND SIMILAR

Note: Parenthesis indicate values for left bridge.

CURVE DATA – ℄ I-71

P.C. Sta. 668+99.39
P.T. Sta. 694+25.28
Δ = 11°-47'-15"
Dc = 0°-28'-00" Rt.
R = 12,277.67'
L = 2,525.89'
T = 1,267.42'

CURVE DATA – ℄ ALBION ROAD

P.C. Sta. 46+68.53
P.T. Sta. 49+81.90
Δ = 10°-58'-04"
Dc = 3°-30'-00" Lt.
R = 1637.02'
L = 313.37'
T = 157.16'

TEMPORARY BENCH MARK

Sta 688+00 ℄ I-71
Top of iron pin in monument box
Elev. 861.79

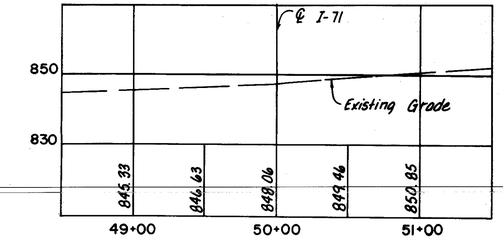

PROFILE ALBION ROAD

TRAFFIC DATA – (I-71)

1994	A.D.T.	=	36,340
	A.D.T.T.	=	2,180
2014	A.D.T.	=	45,420
	A.D.T.T.	=	2,725

* Note: 14'-6" required minimum vertical clearance. Actual minimum vertical clearance at Point A occurs at the intersection of the south pavement edge of Albion Road and the east edge of the exterior beam in the northbound roadway bridge.

EXISTING STRUCTURES

Type:	Continuous Steel Beam, with Reinforced Concrete Deck and Substructure
Spans:	34'-6"± , 43'-0"± , 34'-6"± Right 37'-3"± , 46'-6"± , 37'-3"± Left Center to Center Bearings, along reference chord
Roadway:	40'-0"± Face to Face of Parapets
Loading:	C.F.= 2000, Adequate for A.A.S.H.O. Alternate Loading
Skew:	1°-37'-35"± Left Forward to Local Tangent
Wearing Surface:	1" Latex Modified Concrete (0384R) And 1½" Dense Concrete (0384L)
Approach Slab:	AS-1-54 (25'-0" Long)
Alignment:	0°-28'-00" ± Left
Crown:	Normal, 0.0156 Ft./Ft.
Date Built:	1966
Structural File No.:	1803727 L 1803751 R

PROPOSED STRUCTURES

Proposed Work:	Widen bridge, replace concrete deck, modify, repair and extend existing substructure units and seal concrete surfaces.
Type:	Continuous Steel Beams, A36, with Reinforced Concrete Deck and Substructure
Spans:	34'-6"± , 43'-0"± , 34'-6"± Right 37'-3"± , 46'-6"± , 37'-3"± Left, Center to Center Bearings, along Reference Chord
Roadway:	64'-0" Toe to Toe of Parapets
Loading:	HS20-44 Case I and the Alternate Military Loading
Skew:	1°-37'-55"± Left Forward, to Local Tangent
Wearing Surface:	Monolithic Concrete
Approach Slab:	AS-1-81 (25'-0" Long)
Alignment:	0°-28'-00"± Right
Crown:	Normal, 0.0156 Ft./Ft.

Note: All piles shall be steel H piles HP 10x42 with an estimated pay length of 34 feet for the abutments and 22 feet for the piers.

STRUCTURE FILE NOS. 1803727L and 1803751R

EUTHENICS INC. CONSULTING ENGINEERS CLEVELAND, OHIO — 1/12

SITE PLAN
BRIDGE NO. CUY-71-0384L AND R
OVER ALBION ROAD
CUYAHOGA COUNTY STA. 689+83.43± TO STA. 691+08.93±

DESIGN	DRAWN	TRACED	CHECKED	REVIEW	DATE	REVISED
KRD	SMM	—	MEK	RAB	3-94	

PLOTTED BY: lminceek
PLOTTED ON: Wed Aug 26 08:59 1998
PLOT SUBMITTED: 06-AUG-1998 06:19
307SP07.DGN
307sp07.dgn

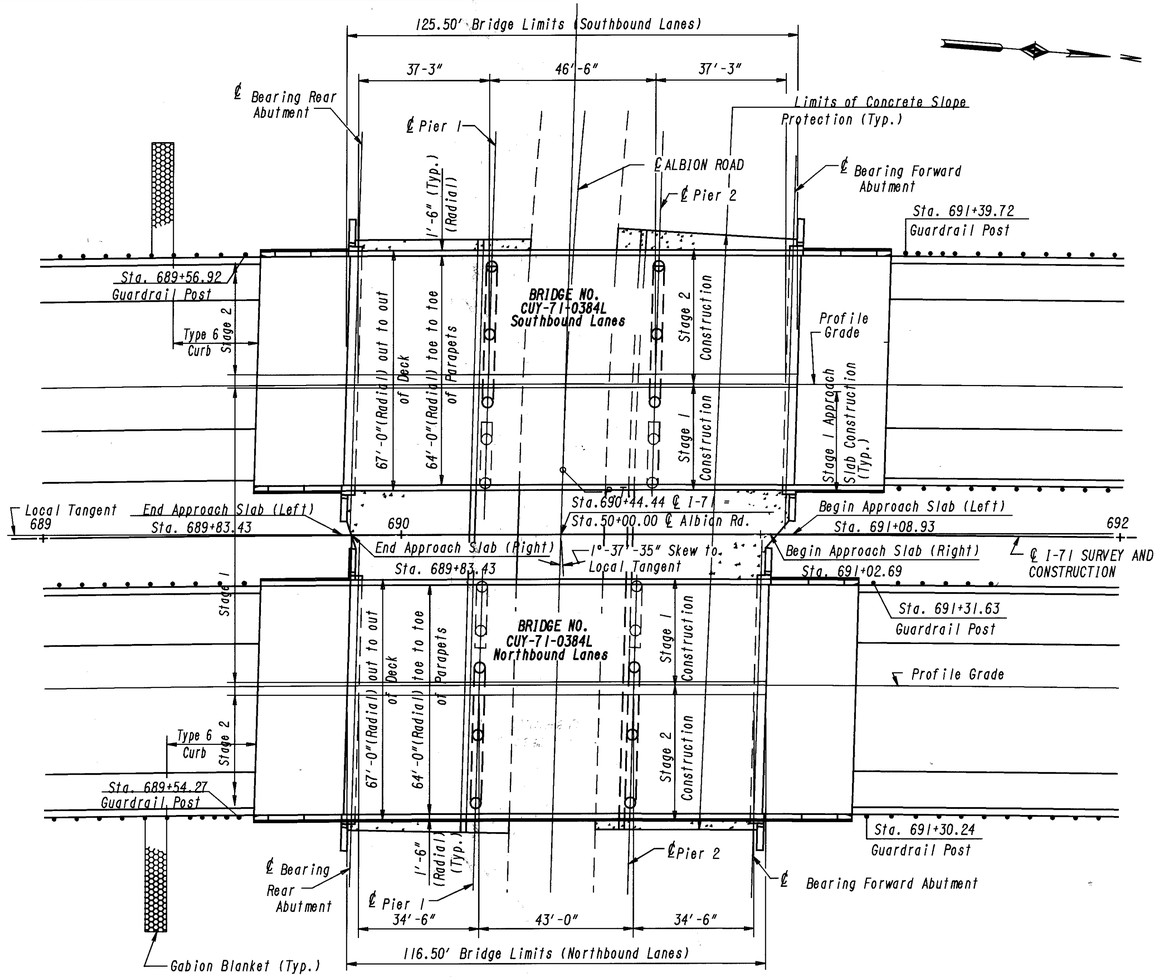

GENERAL PLAN

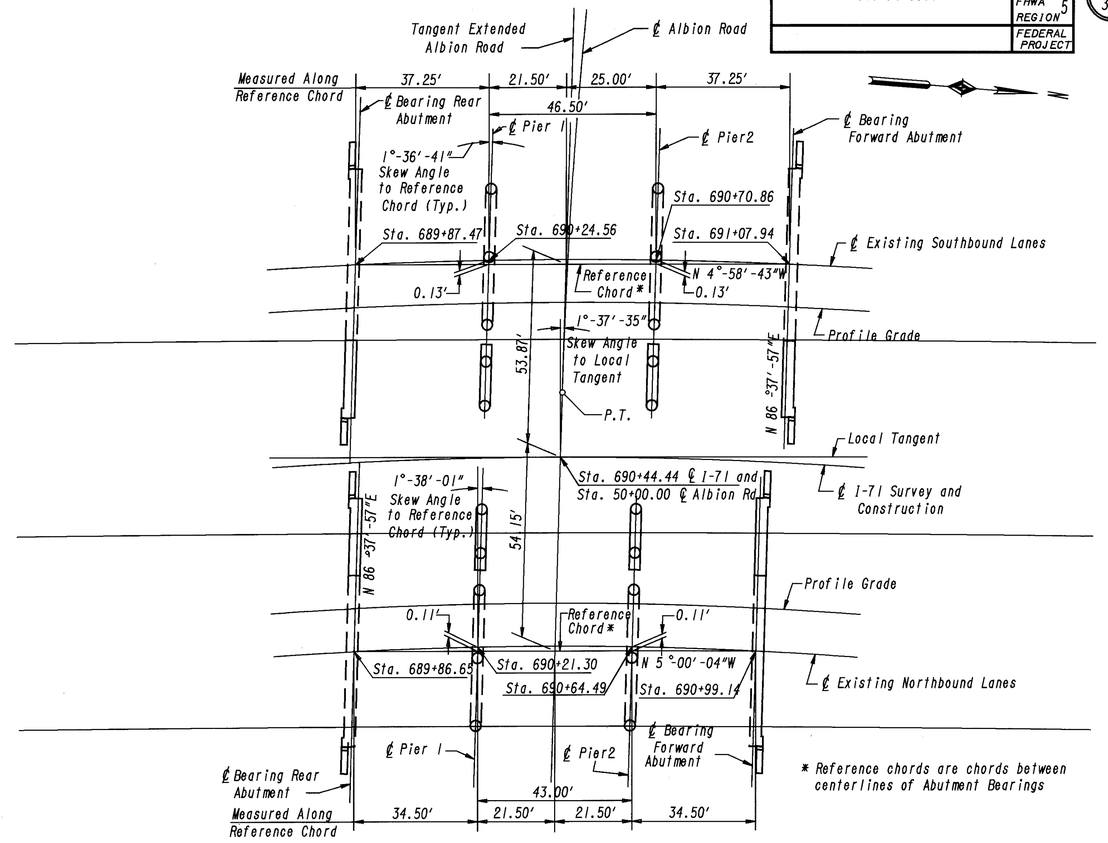

* Reference chords are chords between centerlines of Abutment Bearings

GEOMETRIC LAYOUT DIAGRAM

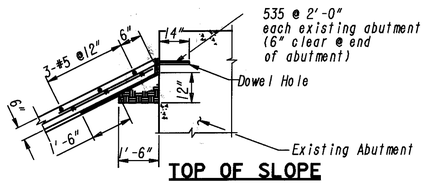

TOP OF SLOPE EXISTING ABUTMENT DETAIL

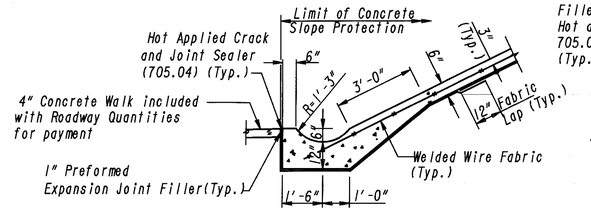

PAVED GUTTER

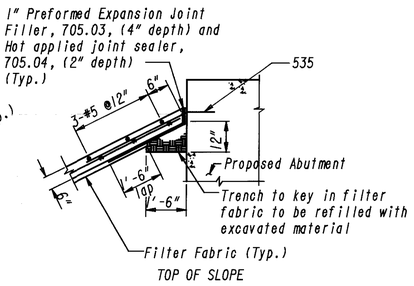

PROPOSED ABUTMENT DETAIL

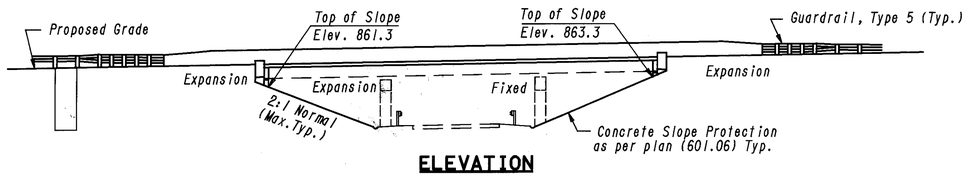

ELEVATION

CONCRETE SLOPE PROTECTION DETAIL

Notes:

Payment for removal of the existing crushed aggregate slope protection, 3-#5 @ 12", dowel holes and grout, wire fabric, geotextile fabric, preformed expansion joint filler and hot applied sealer shall be included with Item 601, Concrete Slope Protection, as per plan.

Filter fabric shall extend to the top of the joint. The fabric around the trench key shall be continuous and overlap a minimum of 18" as shown.

Welded Wire Fabric - 6x6, W4.0xW4.0 (58 lbs/100 sq ft) sheets only. Lap sheets a minimum of 1'-5" in both directions.

See sheet GN2 for further details of concrete slope protection.

EUTHENICS INC.
CONSULTING ENGINEERS
CLEVELAND, OHIO

2 / 12

GENERAL PLAN

BRIDGE NO. CUY-71-0384L AND R OVER ALBION ROAD

DESIGN	DRAWN	TRACED	CHECKED	REVIEW	DATE	REVISED
GFH	GFH	—	KRD	RAB	3-94	

PLOTTED BY: lminocek
PLOT SUBMITTED:06-AUG-1998 06:20
PLOT SCALE: 1:1
PLOT DATE: 8/6/98
307GP04.DGN
307gp04.dgn B307 384L cuy-71 B pid08459 B dgn B cuy-71 sberg B cor sberg

CUY-71-0.00	OHIO	307 / 361
	FHWA REGION 5	
	FEDERAL PROJECT	

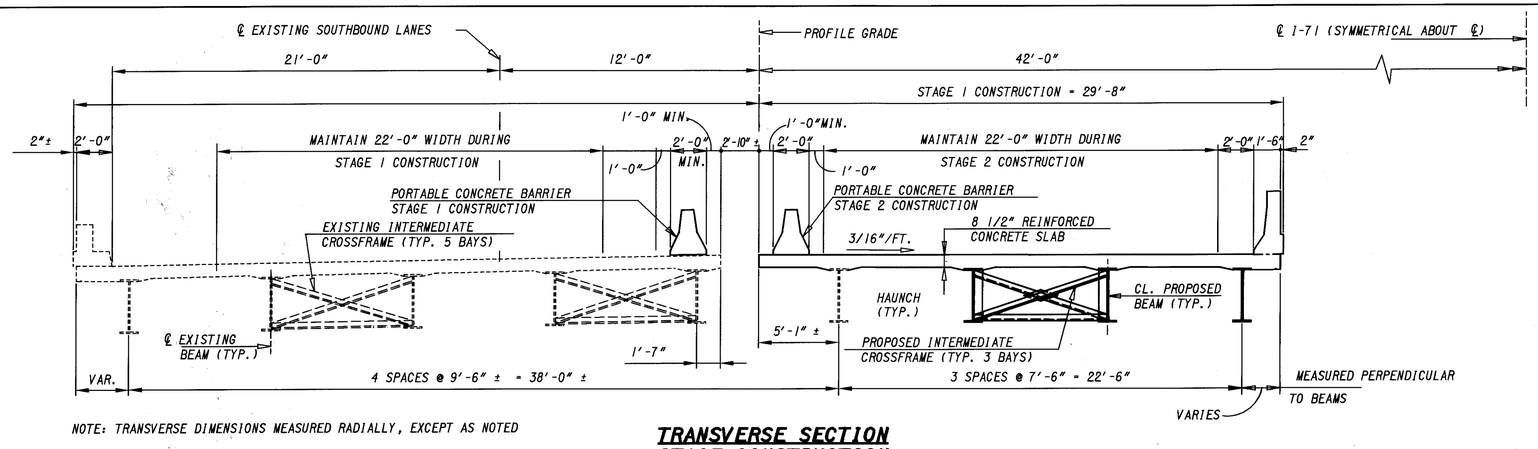

NOTE: TRANSVERSE DIMENSIONS MEASURED RADIALLY, EXCEPT AS NOTED

TRANSVERSE SECTION STAGE CONSTRUCTION

32", BRIDGE MOUNTED, PORTABLE CONCRETE BARRIER ANCHORS Δ	
MOT Stage	No. Anchors/Segment
1	3
2	3

Δ ON EXISTING DECKS, NON-TRAFFIC SIDE ANCHORS MUST BE THRU-BOLTED. ON NEW DECKS, ONLY APPROVED RESIN ANCHORS MAY BE USED.

CALC. BY: KXG DATE: 2-94 **ESTIMATED QUANTITIES** CHK'D. BY: KRD DATE: 3-94

					CUY-71-0384 L					CUY-71-0384 R					
ITEM	ITEM EXT.	TOTAL	UNIT	DESCRIPTION	ABUT-MENTS	PIER	SUPER-STRUCTURE	GENERAL	TOTAL	ABUT-MENTS	PIER	SUPER-STRUCTURE	GENERAL	TOTAL	AS PER PLAN SHEET REF.
202	11203	LUMP	LUMP	PORTIONS OF STRUCTURE REMOVED, OVER 20 FOOT SPAN, AS PER PLAN				LUMP	LUMP				LUMP	LUMP	GN 1
503	11100	LUMP	LUMP	COFFERDAMS, CRIBS AND SHEETING				LUMP	LUMP				LUMP	LUMP	
503	21101	622	CU. YD.	UNCLASSIFIED EXCAVATION, AS PER PLAN	163	148			311	163	148			311	GN 2
505	11100	LUMP	LUMP	PILE DRIVING EQUIPMENT MOBILIZATION				LUMP	LUMP				LUMP	LUMP	
507	00100	2,240	LIN. FT.	STEEL PILES HP10 X 42, FURNISHED	680	440			1120	680	440			1120	
507	00150	2,240	LIN. FT.	STEEL PILES HP10 x 42, DRIVEN	680	440			1120	680	440			1120	
507	50500	40	EACH	STEEL PILE SPLICES	10	10			20	10	10			20	
507	93301	80	EACH	STEEL POINT (OR SHOE), AS PER PLAN	20	20			40	20	20			40	GN 2
511	81400	50	POUND	CONCRETE MISC.: REPLACEMENT OF EXISTING REINFORCING STEEL*				25	25				25	25	
512	44400	7	SQ. YD.	TYPE B WATERPROOFING	3				3	4				4	
SPECIAL	51267510	439	SQ. YD.	SEALING OF CONCRETE SURFACES (EPOXY-URETHANE) (SEE PROPOSAL NOTE)	10	209			219	11	209			220	
SPECIAL	51271500	429	SQ. YD.	URETHANE TOP COAT SEALER	100	115			215	99	115			214	
514	27706	103,600	POUND	FIELD PAINTING MISC., SHOP PAINTING AND FIELD TOUCH UP OF STRUCTURAL STEEL			51,800		51,800			51,800		51,800	
516	44001	16	EACH	ELASTOMERIC BEARING WITH INTERNAL LAMINATES AND LOAD PLATE (NEOPRENE) (8 1/2" x 12" x 1.52") WITH 9 1/2" X 13" X 1 1/2" LOAD PLATE, AS PER PLAN, (SEE PROPOSAL NOTE)	8				8	8				8	11/12
516	44001	16	EACH	ELASTOMERIC BEARING WITH INTERNAL LAMINATES AND LOAD PLATE (NEOPRENE) (8 1/2" x 12" x 1.81") WITH 9 1/2" X 13" X 1 1/2" LOAD PLATE, AS PER PLAN, (SEE PROPOSAL NOTE)	8				8	8				8	11/12
516	44001	6	EACH	ELASTOMERIC BEARING WITH INTERNAL LAMINATES AND LOAD PLATE (NEOPRENE) (9 1/2" x 16" x 1.75") WITH 10 1/2" X 17" X 1 11/16" LOAD PLATE, AS PER PLAN, (SEE PROPOSAL NOTE)		3			3		3			3	11/12
516	44001	10	EACH	ELASTOMERIC BEARING WITH INTERNAL LAMINATES AND LOAD PLATE (NEOPRENE) (9 1/2" x 16" x 1.75") WITH 10 1/2" X 17" X 2 7/8" LOAD PLATE, AS PER PLAN, (SEE PROPOSAL NOTE)		5			5		5			5	11/12
516	46900	6	EACH	BEARING DEVICE, MISC., (F-150)		3			3		3			3	
516	47001	LUMP	LUMP	JACKING AND TEMPORARY SUPPORT OF SUPERSTRUCTURE, AS PER PLAN			LUMP		LUMP			LUMP		LUMP	GN 4
518	21200	166	CU. YD.	POROUS BACKFILL WITH FILTER FABRIC	83				83	83				83	
518	40001	342	LIN. FT.	6" PERFORATED CORRUGATED PLASTIC PIPE, AS PER PLAN	171				171	171				171	GN 2
518	40011	19	LIN. FT.	6" NON-PERFORATED CORRUGATED PLASTIC PIPE, INCLUDING SPECIALS, AS PER PLAN	9				9	10				10	GN 2
601	21001	1,414	SQ. YD.	CONCRETE SLOPE PROTECTION, AS PER PLAN				707	707				707	707	GN 2, 2/12, 6/12
843	50000	26	SQ. FT.	PATCHING CONCRETE STRUCTURES WITH TROWELABLE MORTAR *	7	6			13	8	5			13	
844	48001	497	CU. YD.	HIGH PERFORMANCE CONCRETE, SUPERSTRUCTURE (DECK), AS PER PLAN			249		249			248		248	GN 2
844	48020	64	CU. YD.	HIGH PERFORMANCE CONCRETE, SUPERSTRUCTURE (PARAPET)			32		32			32		32	
844	48041	484	CU. YD.	HIGH PERFORMANCE CONCRETE, SUBSTRUCTURE, AS PER PLAN	167	75			242	168	74			242	GN 3
844	49000	LUMP	LUMP	HIGH PERFORMANCE CONCRETE, TRIAL MIX				LUMP	LUMP				LUMP	LUMP	
863	10260	103,600	POUND	STRUCTURAL STEEL MEMBERS, LEVEL THREE (3)** A709, GRADE 36			51,800		51,800			51,800		51,800	

* TO BE USED AS DIRECTED BY THE ENGINEER
** FABRICATION

EUTHENICS INC. CONSULTING ENGINEERS CLEVELAND, OHIO 3/12

STAGE CONSTRUCTION AND ESTIMATED QUANTITIES

BRIDGE NO. CUY-71-0384L AND R OVER ALBION ROAD

DESIGN	DRAWN	TRACED	CHECKED	REVIEW	DATE	REVISED
KXG	GFH	—	KRD	RAB	3-94	

PLOTTED BY: jgrmovse
PLOT SCALE: 1:1
PLOT DATE: 20-AUG-1998 05:50
PLOT SUBMITTED: 20-AUG-1998 05:50
307E004.DGN

CUY-71-0.00	OHIO	308 / 361
	FHWA REGION 5	
	FEDERAL PROJECT	

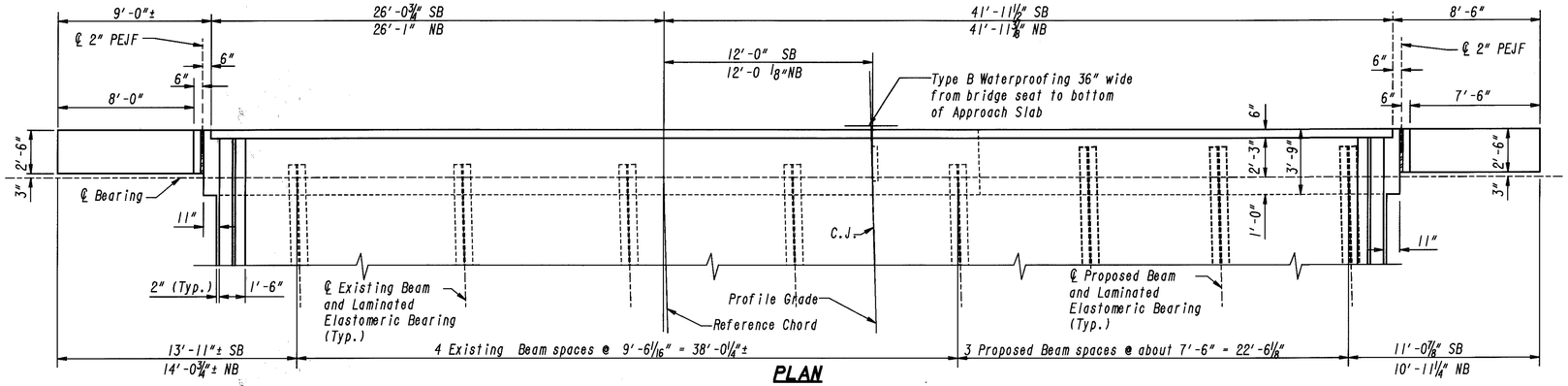

PLAN

(Northbound Shown, Southbound Similar)

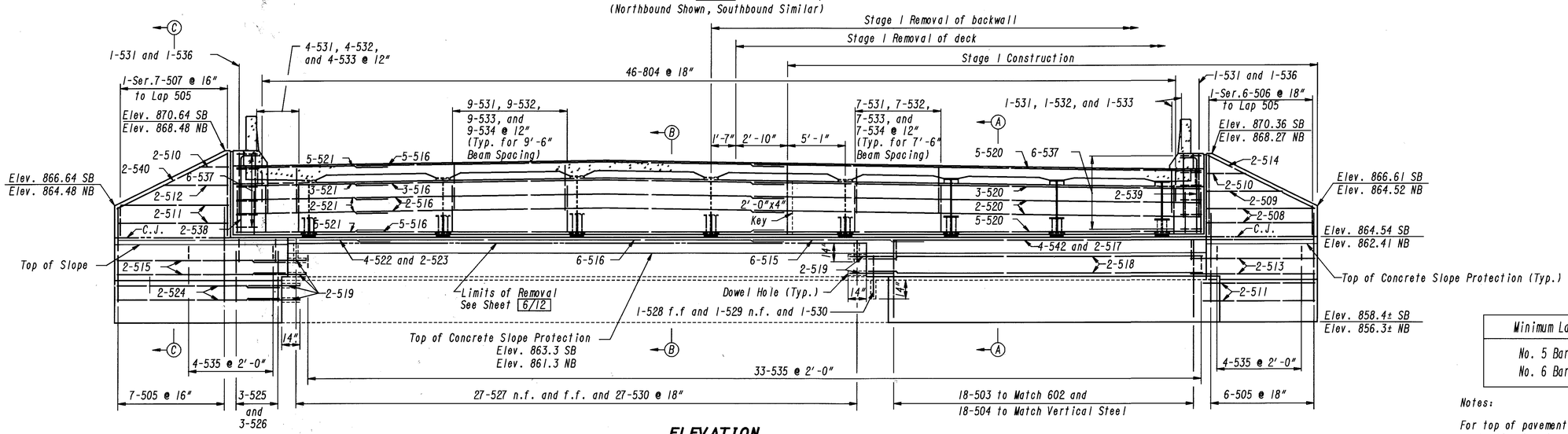

ELEVATION

(Piles Not Shown)

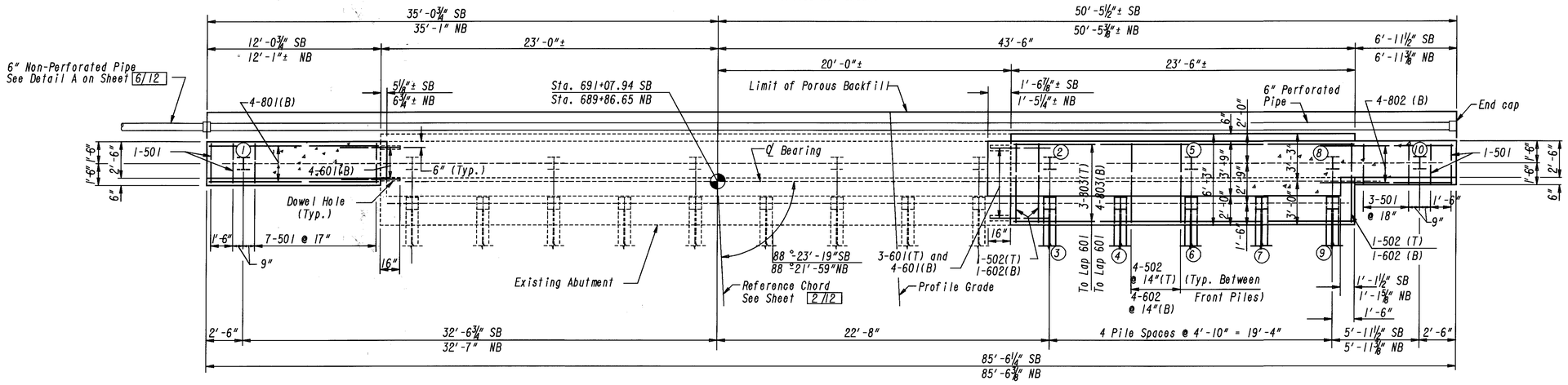

FOOTING PLAN

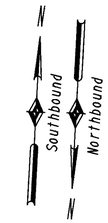

Minimum Lap Lengths
No. 5 Bar = 2'-2"
No. 6 Bar = 2'-4"

Notes:

For top of pavement elevations along centerline bearing see Deck Screed Elevations on sheet 9/12.

For Sections A-A, B-B and C-C and additional notes see sheet 6/12.

All piles are steel H Piles HP10 x 42

All battered piles shall be inclined 3 in 12 in the direction shown.

▨ - Item 519 - Patching Concrete Structure

The following abbreviations are used:

Elev. = Elevation	T = Top
(Typ.) = Typical	B = Bottom
SB = Southbound	e.f. = each face
NB = Northbound	f.f. = far face
C.J. = Construction Joint	n.f. = near face

EUTHENICS INC. CONSULTING ENGINEERS CLEVELAND, OHIO

4 / 12

SOUTHBOUND FORWARD ABUTMENT AND NORTHBOUND REAR ABUTMENT

BRIDGE NO. CUY-71-0384L AND R OVER ALBION ROAD

DESIGN	DRAWN	TRACED	CHECKED	REVIEW	DATE	REVISED
KRD	EEF	—	GFH	RAB	3-94	

PLOTTED BY: lminicek
PLOT SUBMITTED:06-AUG-1998 06:22
PLOT SCALE: 1:1
PLOT DATE: 8/6/98
USER NAME: sberg
pid08459 bdgn307abt41.dgn
307ABT41.DGN

CUY-71-0.00	OHIO	309/361
	FHWA REGION 5	
	FEDERAL PROJECT	

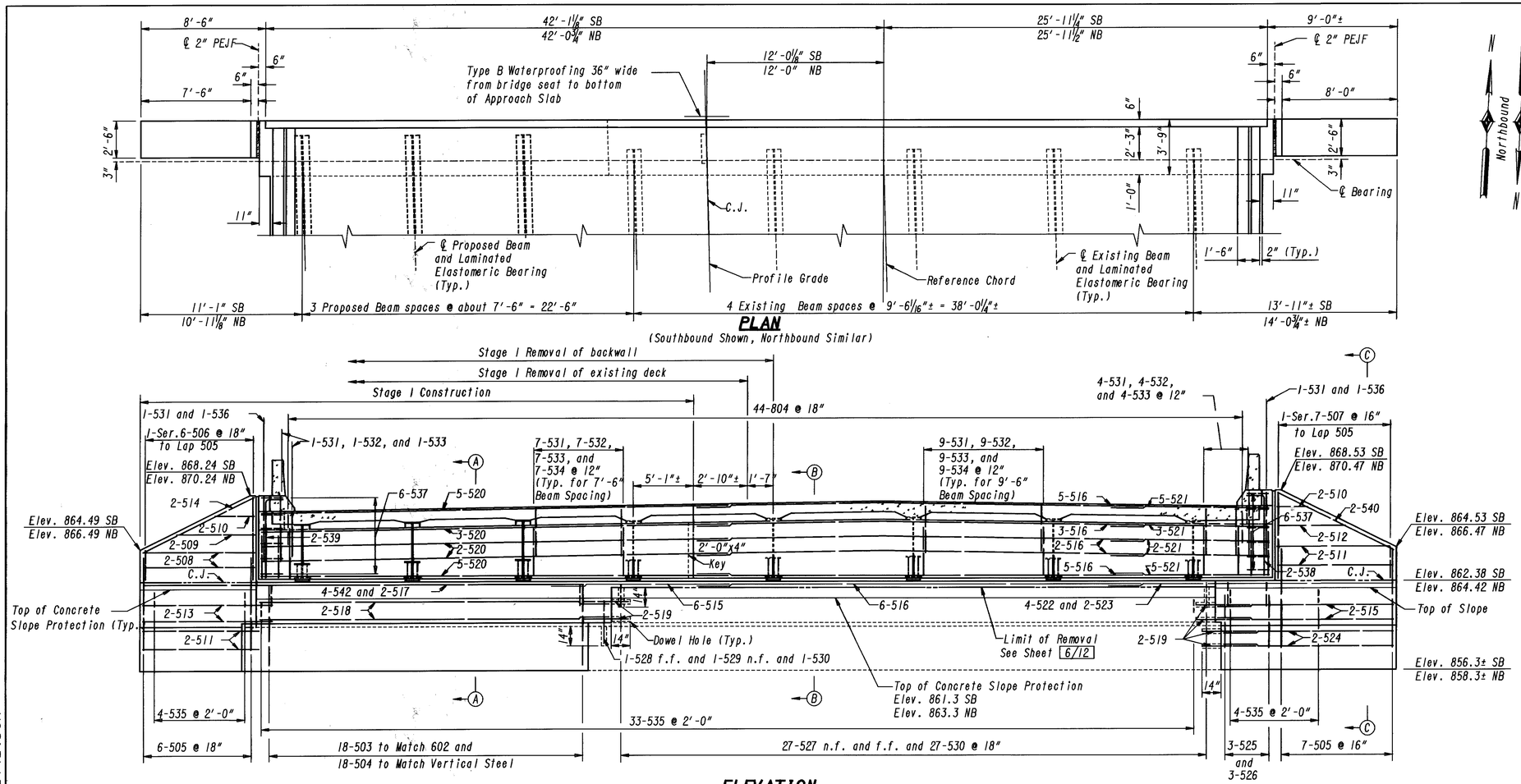

PLAN
(Southbound Shown, Northbound Similar)

ELEVATION
(Piles Not Shown)

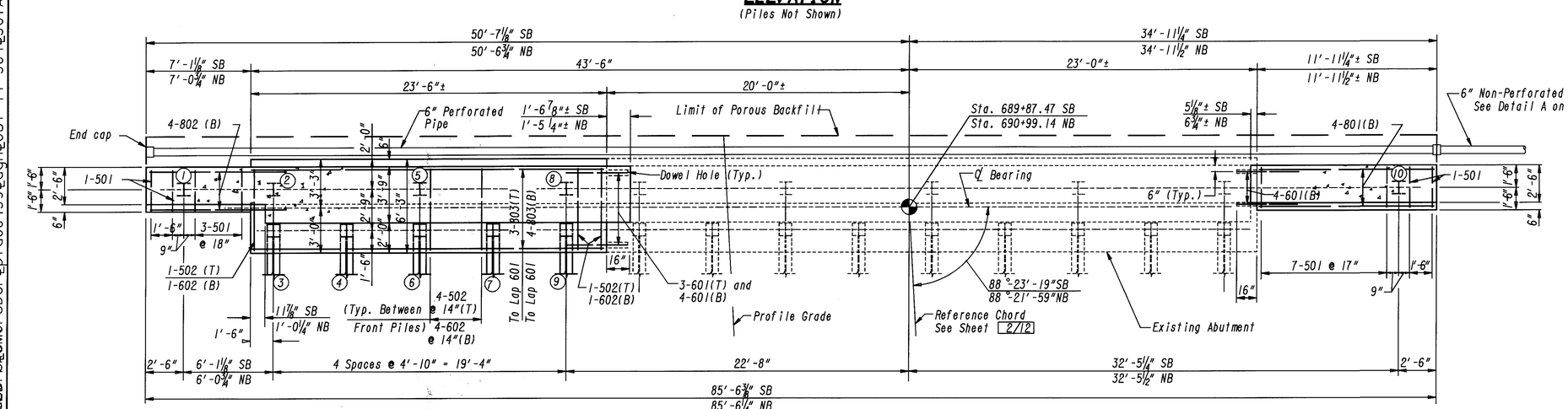

FOOTING PLAN

Minimum Lap Lengths
No. 5 Bar = 2'-2"
No. 6 Bar = 2'-4"

Notes:

For notes see sheets 6/12 and 4/12

EUTHENICS INC. CONSULTING ENGINEERS CLEVELAND, OHIO — 5/12

SOUTHBOUND REAR ABUTMENT AND NORTHBOUND FORWARD ABUTMENT

BRIDGE NO. CUY-71-0384L AND R OVER ALBION ROAD

DESIGN	DRAWN	TRACED	CHECKED	REVIEW	DATE	REVISED
KRD	EEF	—	GFH	RAB	3-94	

PLOT SUBMITTED:20-AUG-1998 05:34
PLOTTED BY:jgrmovse
PLOT SCALE:1:1
PLOT DATE:Thursday, August 20, 1998
DGN 307ABT42.DGN
CUY-71-384L307ABT42.dgn
id08459

CUY-71-0.00	OHIO	309A 361
	FHWA REGION 5	
	FEDERAL PROJECT	

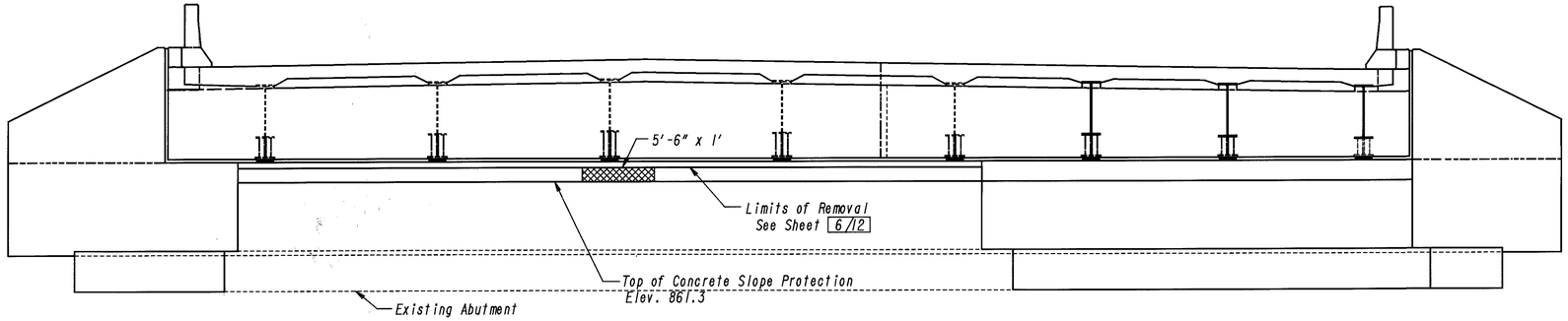

NORTHBOUND REAR ABUTMENT ELEVATION

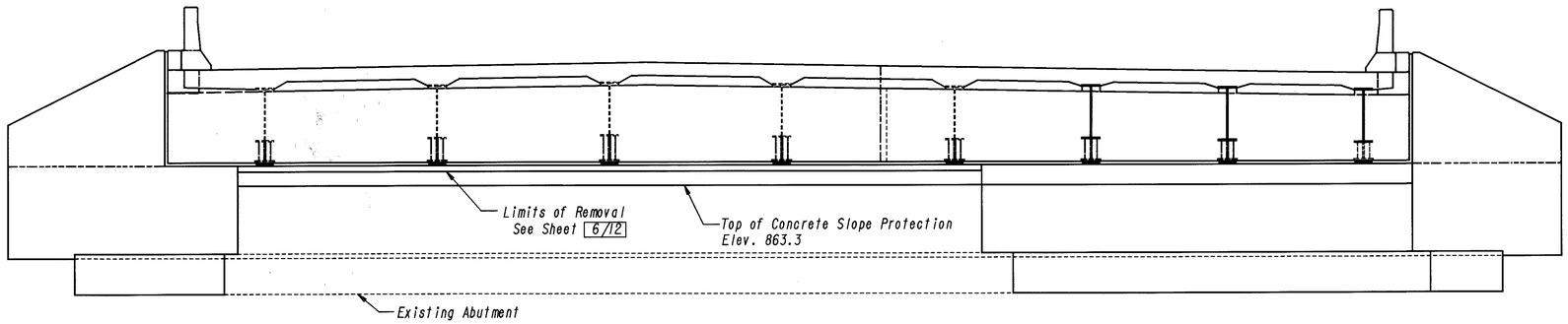

SOUTHBOUND FORWARD ABUTMENT ELEVATION

(No Patching Work Required)

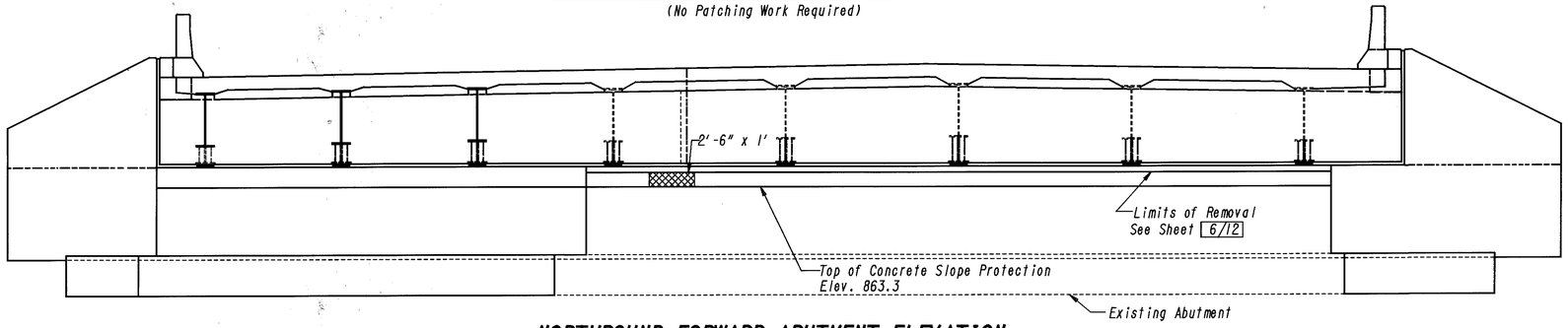

NORTHBOUND FORWARD ABUTMENT ELEVATION

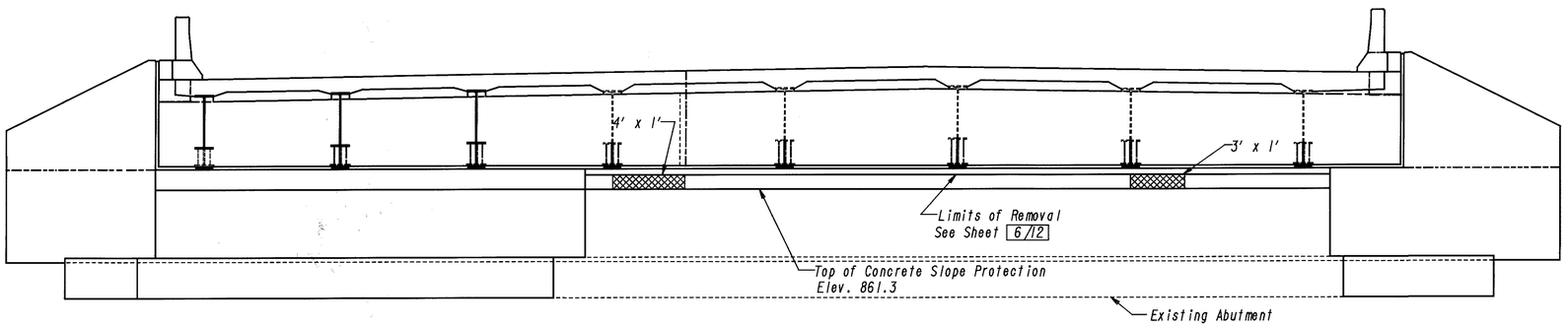

SOUTHBOUND REAR ABUTMENT ELEVATION

Note:

Item 843 - Trowelable Mortar

EUTHENICS INC.
CONSULTING ENGINEERS
CLEVELAND, OHIO

5A/12

ABUTMENT PATCHING PLAN

BRIDGE NO. CUY-71-0384L AND R
OVER ALBION ROAD

DESIGN	DRAWN	TRACED	CHECKED	REVIEW	DATE	REVISED
GFH	EEF	—	KRD	RAB	3-94	

PLOTTED BY: lminocek
PLOTTED ON: Wed Aug 06 06:35:59 1998
PLOT SUBMITTED:06-AUG-1998 06:35
PLOT SCALE: 1:1
USER NAME: lorsberpid08459
MODEL: 307pch04.dgn
MODEL: cuy-71-384R307pch04.dgn
MODEL: 307PCH04.DGN

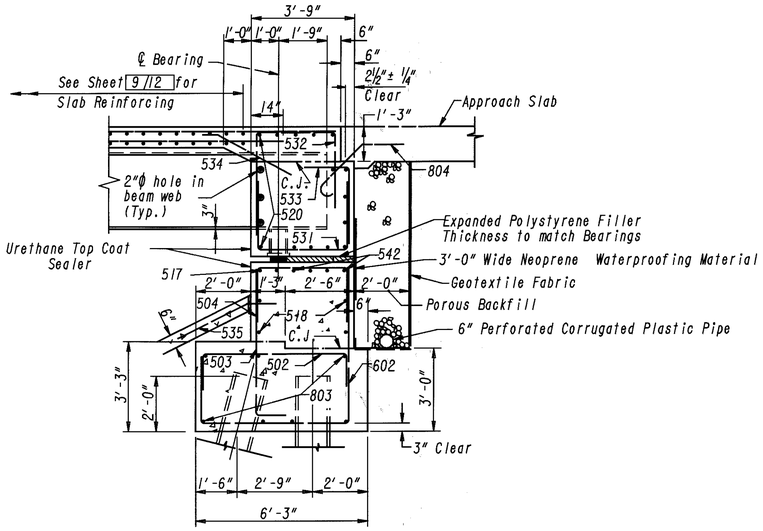

SECTION A-A

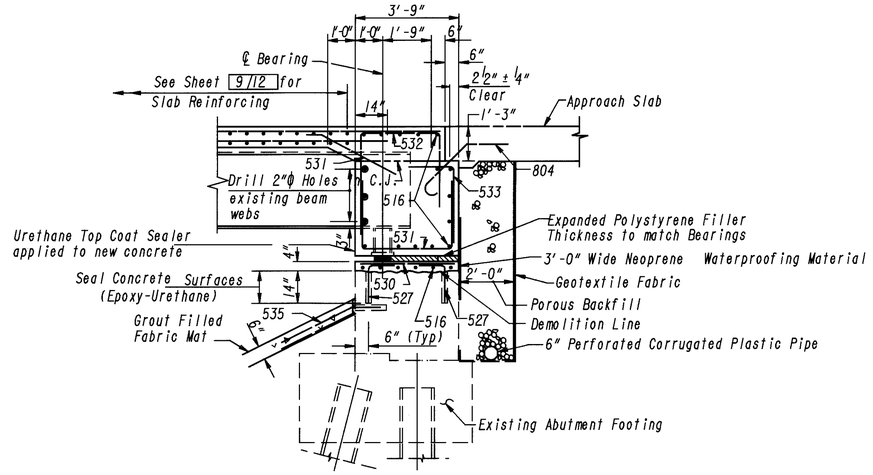

SECTION B-B

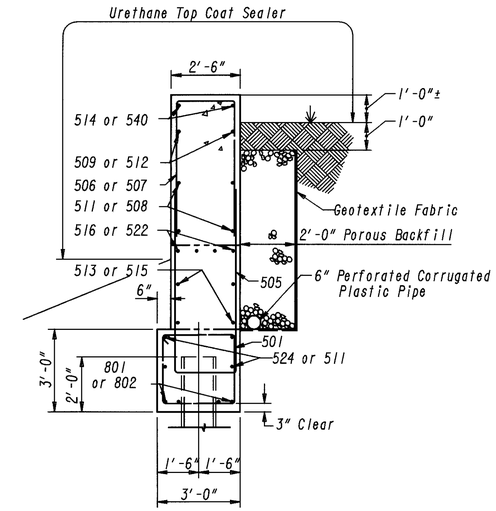

SECTION C-C

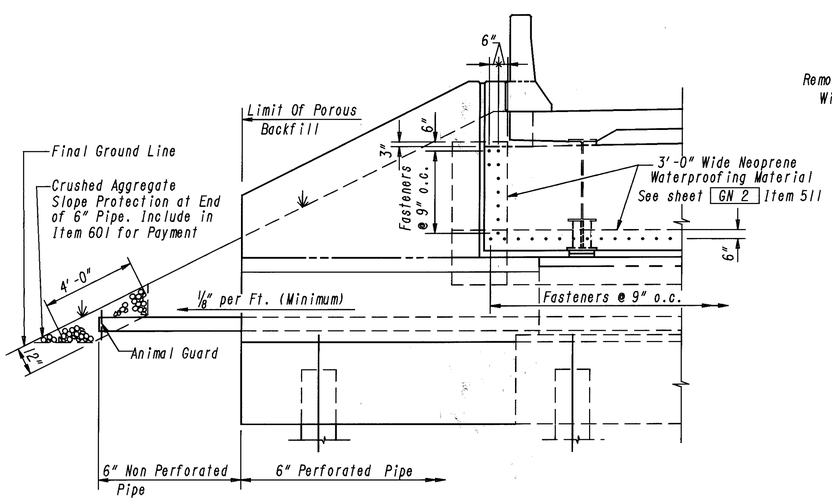

DETAIL A
(Termination of 6" Pipe)

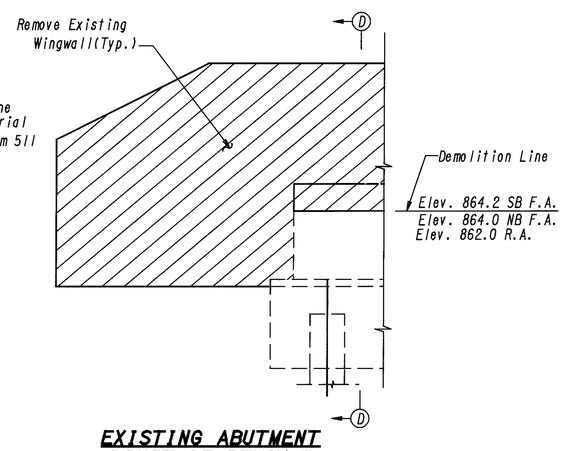

EXISTING ABUTMENT LIMIT OF REMOVAL

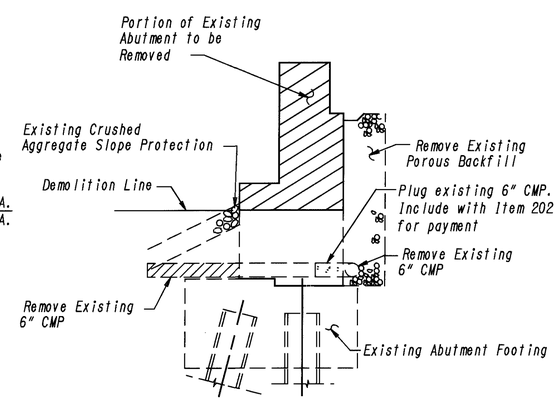

SECTION D-D

Notes:
For location of Sections A-A, B-B and C-C see sheets 4/12 and 5/12.

For Approach Slab notes and details, see Roadway Plans.

Drilling of 2"Ø holes in beam webs shall be included with Item 513 for payment.

Concrete below the approach slab seat shall be included with the abutment for payment.

All reinforcing bars shall be prefixed:
EA = Epoxy coated abutment

For reinforcement schedule see sheet 12/12.

The following abbreviations are used:

C.J. = Construction Joint	Typ. = Typical
SB = South Bound	R.A. = Rear Abutment
NB = North Bound	F.A. = Forward Abutment

Expanded polystyrene filler is to be included for payment with item 844-High performance concrete, superstructure (deck), as per plan.

Minimum Lap Lengths
No. 5 Bar = 2'-2"
No. 6 Bar = 2'-4"

EUTHENICS INC. CONSULTING ENGINEERS CLEVELAND, OHIO — 6/12

ABUTMENT SECTIONS AND DETAILS

BRIDGE NO. CUY-71-0384L AND R
OVER ALBION ROAD

DESIGN	DRAWN	TRACED	CHECKED	REVIEW	DATE	REVISED
KRD	EEF	—	GFH	RAB	3-94	

PLOTTED BY: lmincek
PLOT SUBMITTED:06-AUG-1998 06:45
PLOT SCALE: 1:1
PLOT DATE: 8/6/98
CELL: 307ASD04.DGN
Pid08459 Bdgn Bcuy-71-384B 307asd04.dgn

PIER	LANE	ELEVATION					STATION
		A	B	C	D	E	F
1	SB	864.15	864.03	863.91	859.91	839.5 ±	690+24.56
	NB	864.12	864.01	863.89	859.89	843.0 ±	690+21.30
2	SB	864.66	864.54	864.41	860.41	839.5 ±	690+70.86
	NB	864.57	864.45	864.34	860.34	843.0 ±	690+64.49

CUY-71-0.00

OHIO | FHWA REGION 5 | FEDERAL PROJECT

311/361

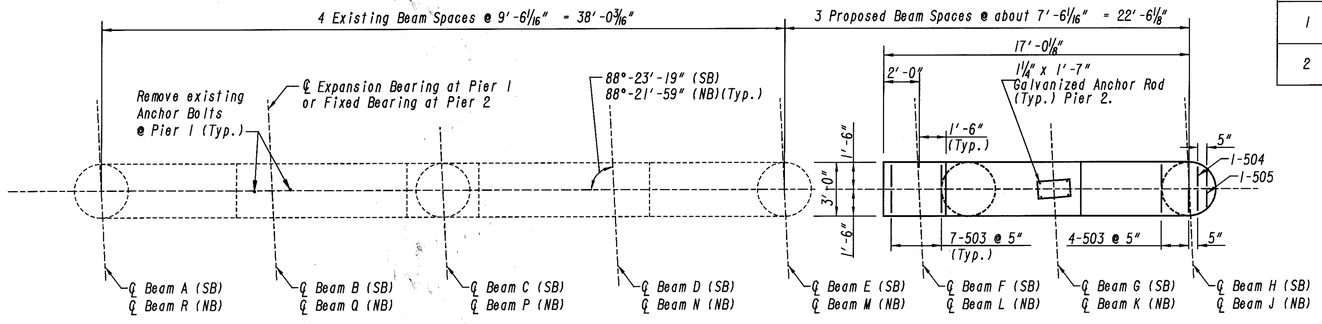

PLAN

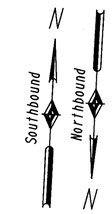

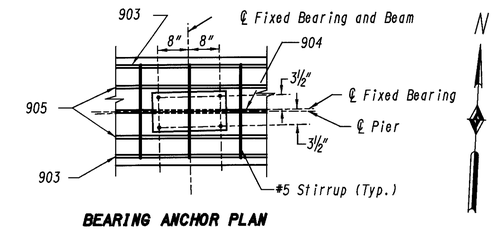

BEARING ANCHOR PLAN

Note: Bridge Seat Reinforcing: Reinforcing steel in the vicinity of the bridge seat at Pier 2 shall be accurately placed to avoid interference with the drilling of bearing anchor holes or the pre-setting of bearing anchors.

Item 843-Patching Conc. Str. with Trowelable Mortar

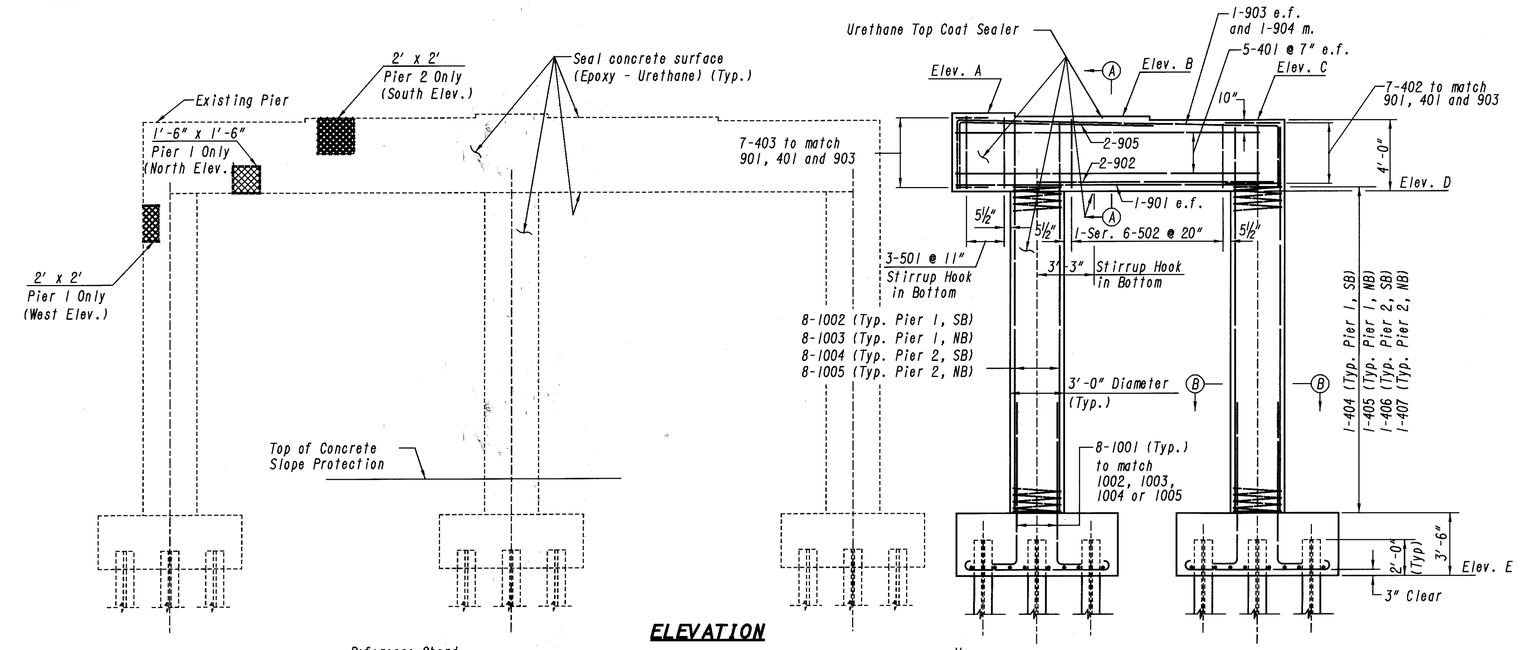

ELEVATION

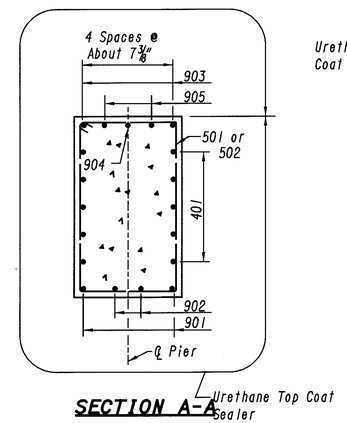

SECTION A-A

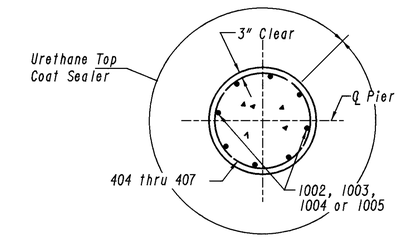

SECTION B-B

MINIMUM LAP LENGTHS
No. 4 Bar = 1'-8"
No. 10 Bar = 8'-3"

Notes:

Dimensions and reinforcement are typical for all piers , except as noted.

All piles are steel H piles HP10 x 42

All battered piles shall be inclined 3 in 12 in the direction shown.

Bearing Anchors: At the option of the Contractor, bearing anchors (or formed holes) located and supported by templates, may be cast in place.

The cap beam stirrups shall be placed with the hook on top, except as noted.

All reinforcing bars shall be prefixed EP = Epoxy Coated Pier.

For reinforcement schedule see sheet 12/12

For details of anchor rods see Ohio Standard Drawing FB-1-82.

The following abbreviations are used:

e.f. = each face	Ser. = series
m. = middle	NB = Northbound
Elev. = elevation	SB = Southbound
(Typ.) = typical	

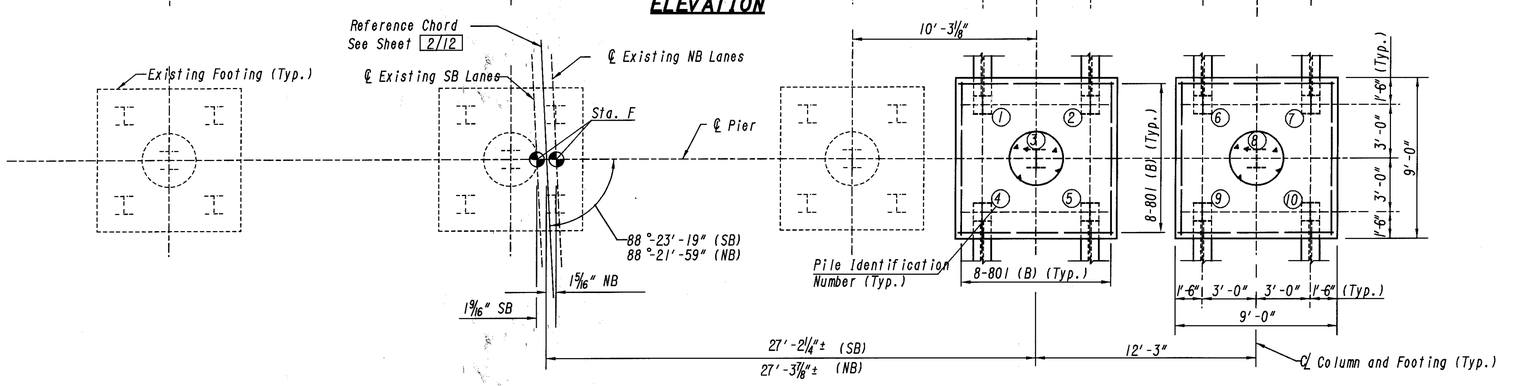

FOOTING PLAN

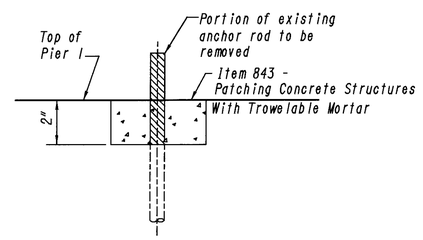

EXISTING ANCHOR ROD REMOVAL

Note: Removal of existing concrete and anchor rod shall be included for payment with Item 202-Portions of Structures Removed, As Per Plan

EUTHENICS INC. CONSULTING ENGINEERS CLEVELAND, OHIO

7 / 12

PIERS

BRIDGE NO. CUY-71-0384L AND R OVER ALBION ROAD

DESIGN	DRAWN	TRACED	CHECKED	REVIEW	DATE	REVISED
KRD	EEF	—	GFH	RAB	2-94	

PLOTTED BY: lminck
PLOT SUBMITTED: 06-AUG-1998 06:46
PLOT SCALE: 1:1
PLOT DATE: 8/6/98
PID 84598 Bcuy-71-384R307prs04.dgn

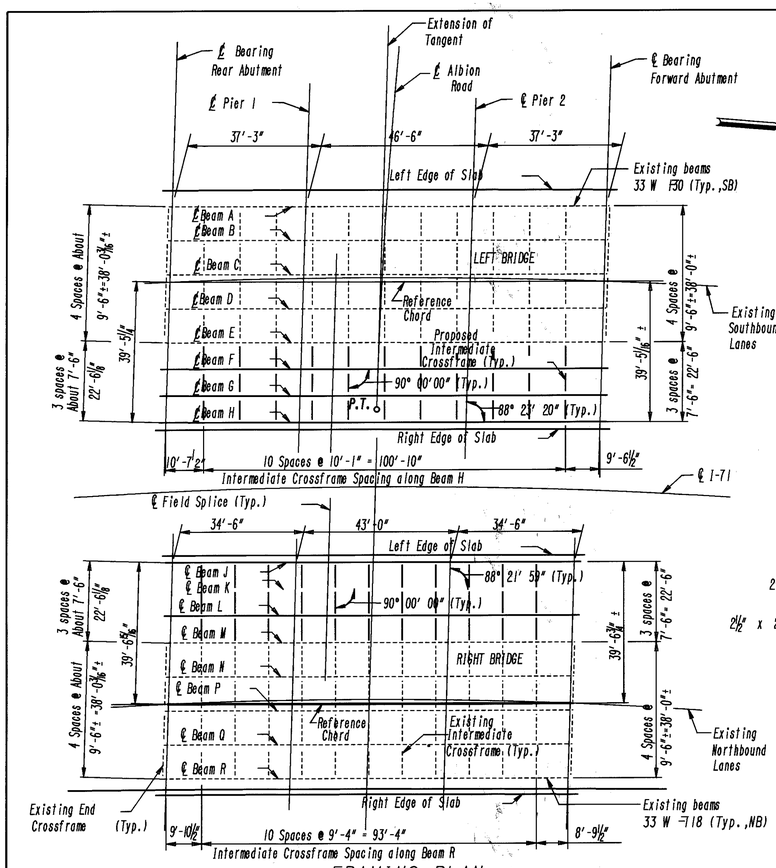

FRAMING PLAN

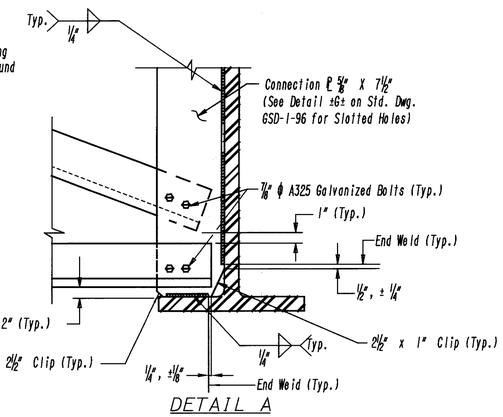

DETAIL A

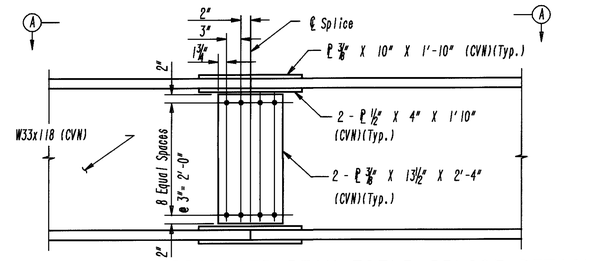

PROPOSED BEAM FIELD SPLICE DETAIL

Note: The ¼, ½ and ¾ points are measured between bearings. Horizontal offsets are measured perpendicular to ℄ beam.

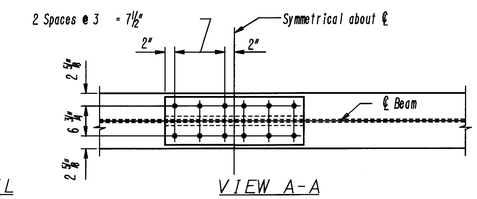

VIEW A-A

HORIZONTAL OFFSETS TO EDGE OF SLAB											
LOCATION	¼"	½"	¾"	℄ Pier 1	¼"	½"	¾"	℄ Pier 2	¼"	½"	¾"
℄ Beam A to Left Edge of Slab	4'-5⅝"	4'-6"	4'-6⅜"	4'-6⅝"	4'-6⅜"	4'-6⅛"	4'-6⅜"	4'-6½"	4'-6¼"	4'-6"	4'-5½"
℄ Beam H to Right Edge of Slab	2'-0¼"	2'-0"	1'-11⅞"	1'-11½"	1'-11¼"	1'-11⅛"	1'-11¼"	1'-11⅜"	1'-11⅝"	1'-11½"	2'-0"
℄ Beam J to Left Edge of Slab	1'-11¾"	2'-0"	2'-0⅜"	2'-0½"	2'-0⅜"	2'-0⅜"	2'-0⅜"	2'-0½"	2'-0½"	2'-0"	1'-11⅝"
℄ Beam R to Right Edge of Slab	4'-6⅜"	4'-6"	4'-5⅝"	4'-5½"	4'-5¼"	4'-5¼"	4'-5¼"	4'-5⅜"	4'-5¾"	4'-5⅛"	4'-6¼"

Note: The ¼, ½ and ¾ points are measured between bearings. Horizontal offsets are measured perpendicular to ℄ beam.

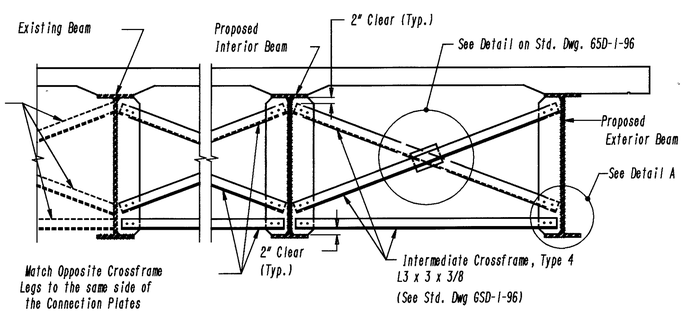

INTERMEDIATE CROSSFRAME

Notes:

Where a shape or plate is designated (CVN) the material shall meet the specified minimum notch toughness requirements as specified in 711.01 of CMS.

High strength bolts shall be 1" diameter A325 unless otherwise noted.

Welded attachment of supports for concrete deck finishing machine may be made to areas of the fascia stringer flanges designated "Compression". Attachments shall not be made to areas designated "Tension". Fillet welds to compression flanges shall be not closer than 1" from edge of flange, be not more than 2" long, and be not smaller than the minimum size required by AASHTO.

For Additional Type 4 Intermediate Crossframe Details and Notes, See ODOT Standard Drawing 65D-1-96.

For additional beam splice notes and details see Ohio Standard Drawing SD-1-69 Sheet 4 of 4.

For details of fixed bearings see Ohio Standard Drawing FB-1-82.

EXPANSION BEARINGS: Existing expansion bearings at the abutments and Pier 1 shall be removed and replaced. For details of expansion bearings see sheet 11 /12 .

The following abbreviations are used:
(Typ.) = Typical ℄ = Plate
F.S. = Field Splice
T = Tension C = Compression

DEAD LOAD DEFLECTION AND CAMBER																							
Beam	SPAN 1				SPAN 2												SPAN 3			
	1/2				F.S.				1/2				3/4				1/2			
	Stl.	Rem.D.L.	Con.	Tot.	Stl.	Rem.D.L.	Con.	Tot.	Stl.	Rem.D.L.	Con.	Tot.	Stl.	Rem.D.L.	Con.	Tot.	Stl.	Rem.D.L.	Con.	Tot.
F	0	1/16	0	1/16	0	1/16	0	1/16	0	1/8	0	1/8	0	1/16	0	1/16	0	1/16	0	1/16
G	0	1/16	0	1/16	0	1/16	0	1/16	0	1/8	0	1/8	0	1/16	0	1/16	0	1/16	0	1/16
H	0	1/16	0	1/16	0	1/16	0	1/16	0	1/8	0	1/8	0	1/16	0	1/16	0	1/16	0	1/16
J	0	1/16	0	1/16	0	1/16	0	1/16	0	1/16	0	1/16	0	1/16	0	1/16	0	1/16	0	1/16
K	0	1/16	0	1/16	0	1/16	0	1/16	0	1/16	0	1/16	0	1/16	0	1/16	0	1/16	0	1/16
L	0	1/16	0	1/16	0	1/16	0	1/16	0	1/16	0	1/16	0	1/16	0	1/16	0	1/16	0	1/16

Note: Deflections and convexities are given to the nearest 1/16 inch.
The following abbreviations are used:
Stl. = Dead load deflection due to weight of steel
Rem D.L. = Remaining dead load deflection
Con. = Convexity
Tot. = Total required camber

VERTICAL OFFSET		
BEAM	PIER 1	PIER 2
F	0	0
G	1/16	0
H,J,K,L	0	0

Note: Positive value of vertical offset indicates value below base line.

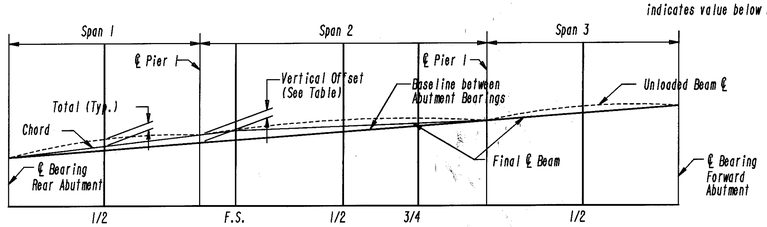

CAMBER DIAGRAM
(Typical All Proposed Beams)

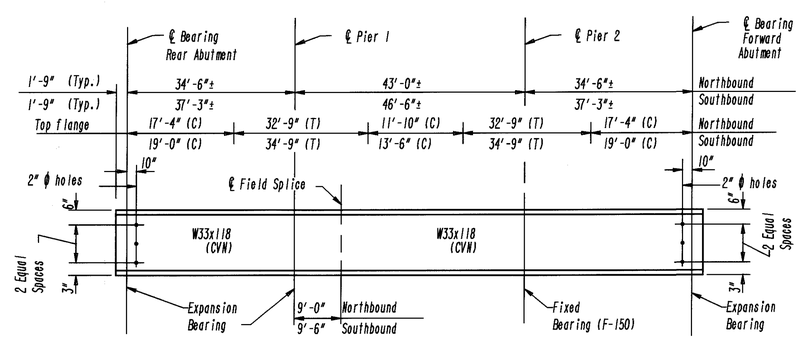

TYPICAL PROPOSED BEAM ELEVATION
(Beams F thru L)

EUTHENICS INC.
CONSULTING ENGINEERS
CLEVELAND, OHIO

8 / 12

FRAMING PLAN

BRIDGE NO. CUY-71-0384L AND R OVER ALBION ROAD

DESIGN	DRAWN	TRACED	CHECKED	REVIEW	DATE	REVISED
GFH	EEF	—	KRD	RAB	2-94	

PLOTTED BY: lmincek
PLOT SCALE: 1:1
PLOT DATE: 06-AUG-1998 06:46
PLOT SUBMITTED: 06-AUG-1998 06:46
307FP04.DGN
307fp04.dgn Bcuy-71-384L Bdgn Bpid08459 Bcorsberg

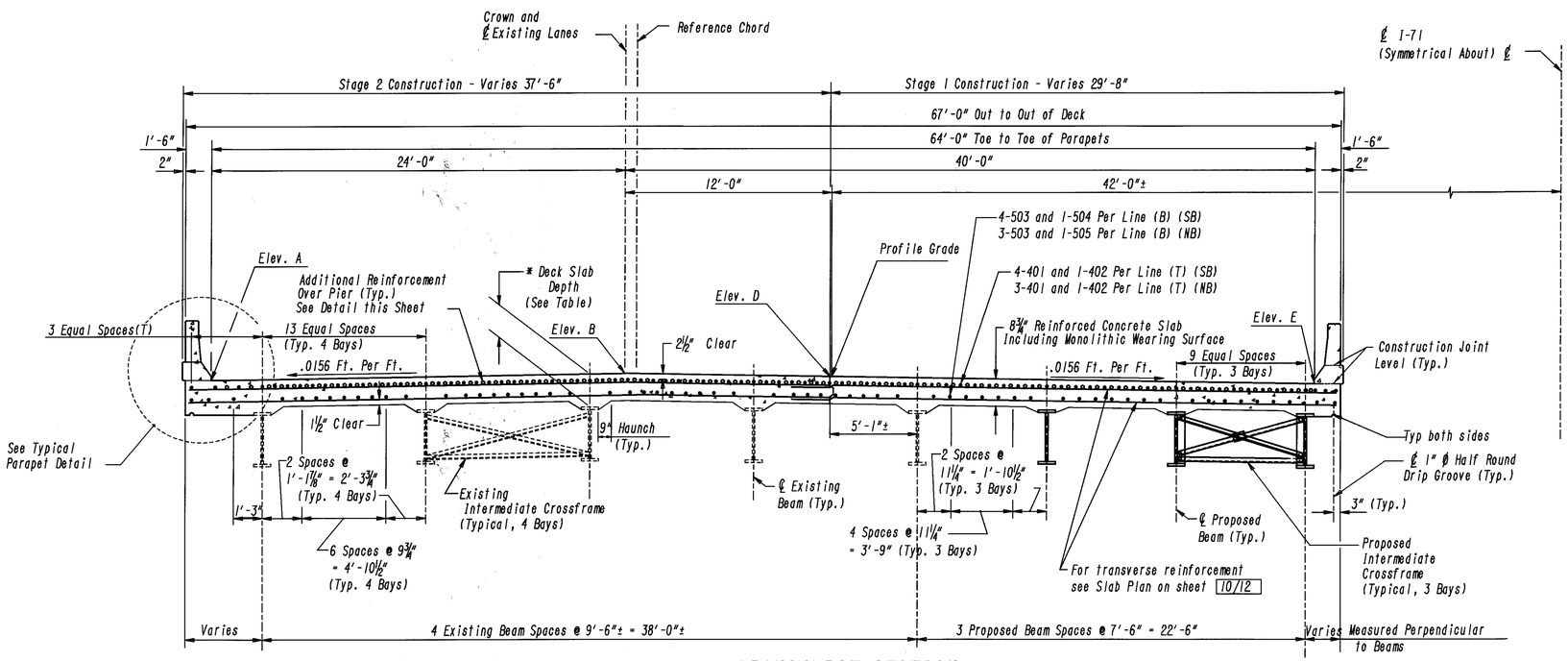

TRANSVERSE SECTION

Note:
Transverse dimensions measured radially, except as noted.

*TABLE OF DECK SLAB DEPTH (at ℄ Bearing)				
	Rear Abutment	Pier 1	Pier 2	Forward Abutment
Existing Beams	12 1/8 ±	12¾ ±	12½ ±	12¾ ±
Proposed Beams	10¾	10¾	10¾	10¾

* DECK SLAB DEPTH: The distance shown from top of deck slab to steel beam is the theoretical design dimension including the design haunch thickness of 9 inches. The quantity of deck concrete to be paid for shall be based on this dimension, minus the design haunch thickness, even though deviation for it may be necessary because the top flange of the beam may not have the exact camber or conformation required to place it parallel to the finished grade.

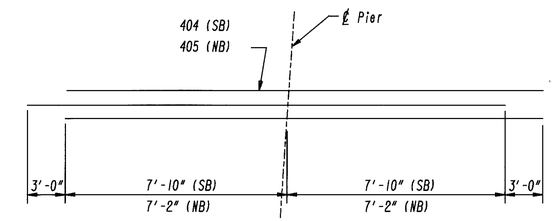

ADDITIONAL REINFORCEMENT OVER PIER

Notes:

All reinforcing bars shall be prefixed ES.

See Sheet 10/12 for Parapet Reinforcing.

The following abbreviations are used:

T = Top
B = Bottom
Min. = Minimum
Typ. = Typical
Fwd. = Forward
NB = Southbound
SB = Southbound

DECK SCREED ELEVATIONS											
		SPAN 1			SPAN 2			SPAN 3			
	Elev.	℄ Bearing Rear Abutment	1/2	℄ Bearing Pier 1	Field Splice	1/2	3/4	℄ Bearing Pier 2	1/2	℄ Bearing Fwd. Abutment	Elev.
SOUTHBOUND LANES	A	867.45	867.78	868.10	868.27	868.51	868.71	868.90	869.24	869.55	A
	B	867.81	868.14	868.46	868.63	868.87	869.07	869.27	869.60	869.92	B
	C	Not Used									C
	D	867.62	867.95	868.27	868.44	868.68	868.88	869.08	869.41	869.73	D
	E	867.16	867.49	867.81	867.98	868.23	868.43	868.63	868.96	869.28	E
	Beam										Beam
	A	867.49	867.83	868.14	868.31	868.56	868.75	868.95	869.28	869.60	A
	B	867.63	867.97	868.28	868.46	868.70	868.90	869.09	869.43	869.74	B
	C	867.78	868.11	868.43	868.60	868.84	869.04	869.24	869.57	869.89	C
	D	867.69	868.02	868.34	868.51	868.75	868.95	869.15	869.48	869.80	D
	E	867.53	867.87	868.18	868.35	868.60	868.80	868.99	869.33	869.65	E
	F	867.41	867.75	868.06	868.23	868.48	868.68	868.87	869.21	869.53	F
	G	867.29	867.62	867.94	868.11	868.36	868.56	868.75	869.09	869.41	G
	H	867.17	867.50	867.82	867.99	868.23	868.43	868.63	868.96	869.29	H
NORTHBOUND LANES	Elev.										Elev.
	A	867.41	867.72	868.01	868.18	868.40	868.59	868.77	869.08	869.38	A
	B	867.79	868.10	868.40	868.56	868.79	868.97	869.16	869.47	869.76	B
	C	Not Used									C
	D	867.60	867.91	868.21	868.37	868.60	868.78	868.97	869.28	869.57	D
	E	867.19	867.50	867.80	867.96	868.18	868.37	868.55	868.86	869.16	E
	Beam										Beam
	J	867.20	867.51	867.81	867.97	868.19	868.37	868.56	868.87	869.16	J
	K	867.31	867.62	867.92	868.08	868.30	868.49	868.67	868.98	869.28	K
	L	867.43	867.73	868.03	868.19	868.42	868.60	868.79	869.09	869.39	L
	M	867.54	867.85	868.15	868.31	868.53	868.72	868.90	869.21	869.50	M
	N	867.68	867.99	868.29	868.45	868.68	868.86	869.07	869.35	869.65	N
	P	867.76	868.07	868.37	868.53	868.75	868.94	869.12	869.43	869.73	P
	Q	867.61	867.92	868.21	868.38	868.60	868.79	868.97	869.28	869.58	Q
	R	867.46	867.76	868.06	868.22	868.45	868.63	868.82	869.13	869.43	R

Note: The top of concrete deck elevations above are those which are required before concrete is placed. Proper allowances have been made for the dead load deflections caused by the weight of the concrete.

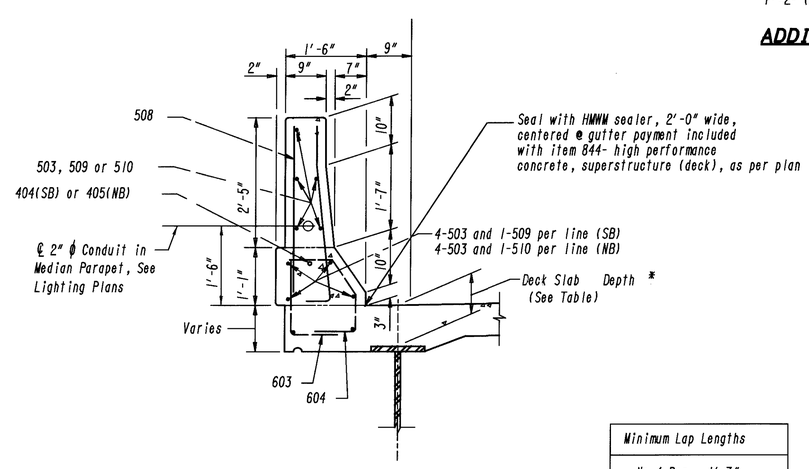

TYPICAL PARAPET DETAIL

Minimum Lap Lengths	
No.4 Bar	1'-7"
No.5 Bar	2'-6"
No.6 Bar	2'-4"

EUTHENICS INC. CONSULTING ENGINEERS CLEVELAND, OHIO

9 / 12

TRANSVERSE SECTION

BRIDGE NO. CUY-71-0384L AND R OVER ALBION ROAD

DESIGN	DRAWN	TRACED	CHECKED	REVIEW	DATE	REVISED
KRD	EEF	——	GFH	RAB	3-94	

PLOTTED BY: lmincek
PLOT SCALE: 1:1
PLOT DATE: 06-AUG-1998 07:02
PLOT SUBMITTED:06-AUG-1998 07:02
307TSX04.DGN
307ttsx04.dgn
cuy-71-384R307ttsx04.dgnBpid08459Bdgnbsberber

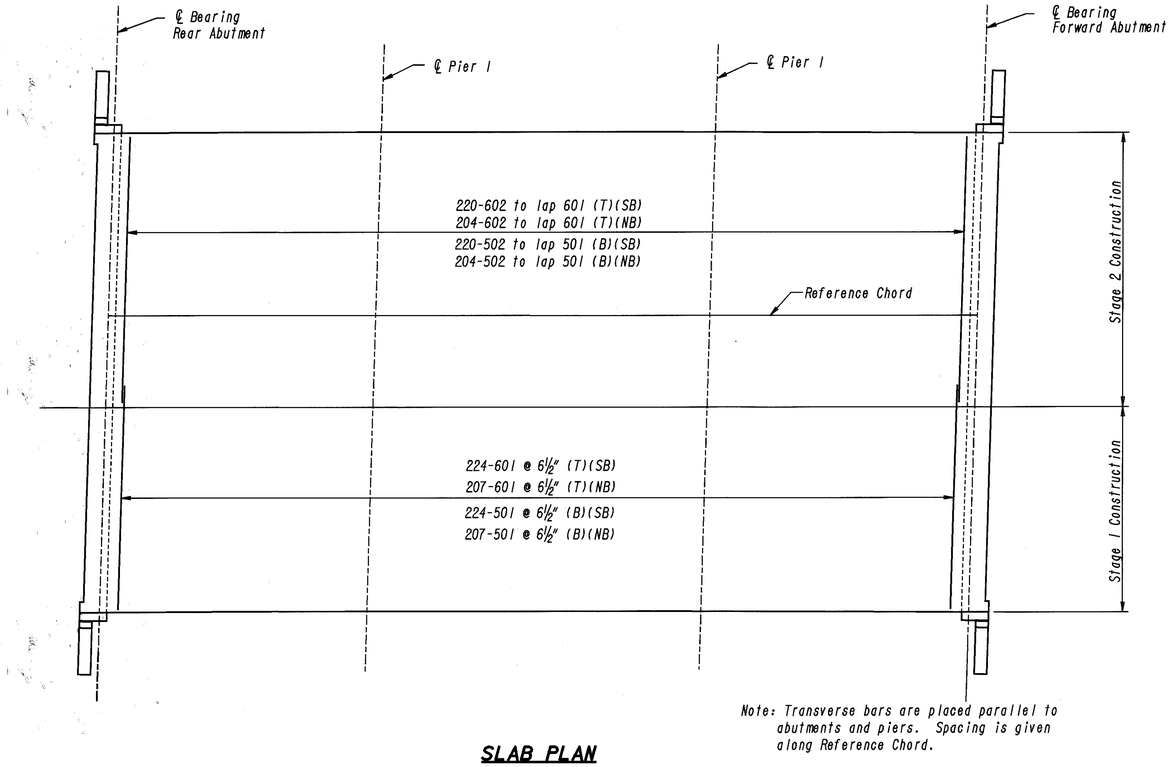

SLAB PLAN

(Southbound Shown, Northbound Similar)

Note: Transverse bars are placed parallel to abutments and piers. Spacing is given along Reference Chord.

For longitudinal reinforcing see Transverse Section on sheet 9/12.

Minimum Lap Lengths	
No.5 Bar	2'-6"
No.6 Bar	2'-4"

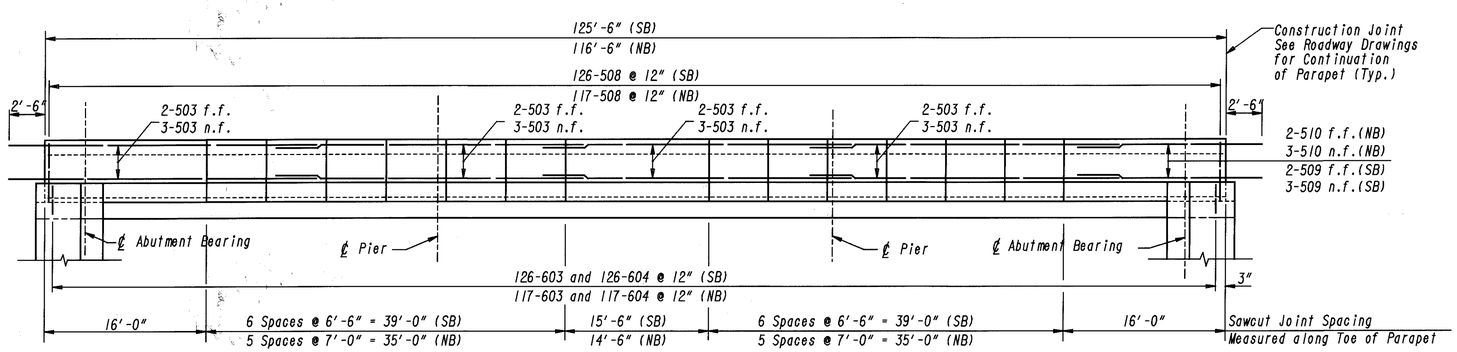

TYPICAL PARAPET ELEVATION

Notes:

Quantities of concrete and reinforcing steel for parapets are included with their appropriate items under superstructure for payment.

All reinforcing bar marks shall be prefixed ES.

The following abbreviations are used:

e.f. = each face	(NB) = Northbound
n.f. = near face	(SB) = Southbound
f.f. = far face	(T) = Top
	(B) = Bottom

For parapet sawcut joint spacing, see sheet GN4 .

EUTHENICS INC. CONSULTING ENGINEERS CLEVELAND, OHIO — 10/12

SLAB PLAN AND PARAPET ELEVATION

BRIDGE NO. CUY-0384L AND R OVER ALBION ROAD

DESIGN	DRAWN	TRACED	CHECKED	REVIEW	DATE	REVISED
KRD	EEF	—	GFH	RAB	3-94	

PLOTTED BY: lmincek
PLOT SUBMITTED: 06-AUG-1998 07:07
307PE04.DGN

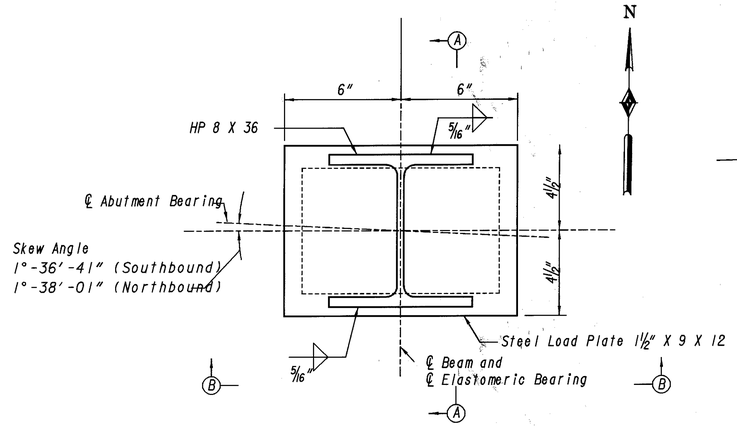

EXPANSION BEARING AT ABUTMENTS

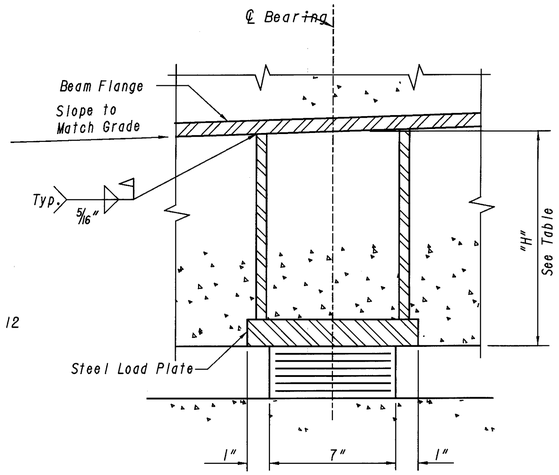

SECTION A-A

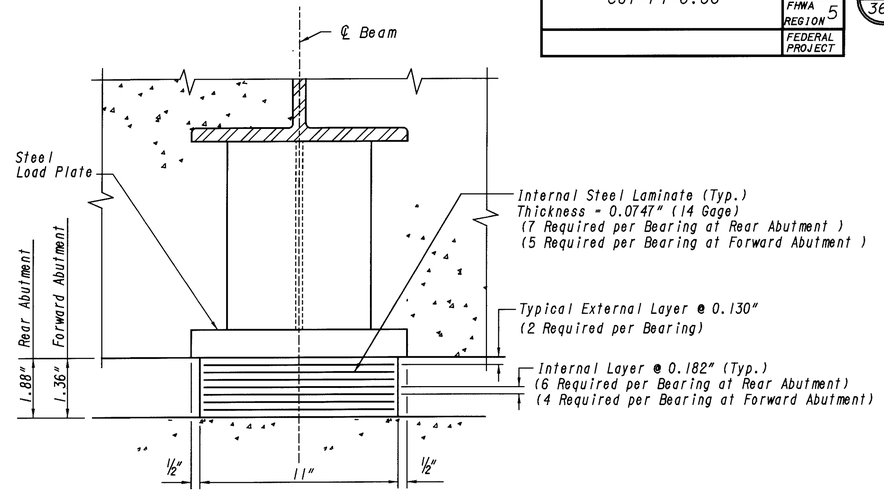

SECTION B-B

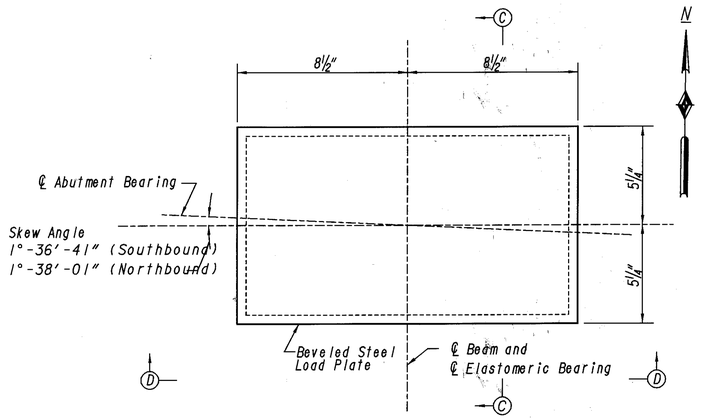

EXPANSION BEARING AT PIER I

		PEDESTAL HEIGHT "H" (Inches)							
SOUTHBOUND	BEAM	A	B	C	D	E	F	G	H
	Forward Abutment	13 3/4	15 9/16	17 3/8	16 5/16	14 5/8	14 7/8	13 7/16	12
	Rear Abutment	14 3/8	16 1/4	17 1/16	16 5/8	14 1/16	14 15/16	13 7/16	12
NORTHBOUND	BEAM	J	K	L	M	N	P	Q	R
	Forward Abutment	12	13 3/8	14 3/4	14 5/8	16 3/16	17 1/16	15 1/4	13 9/16
	Rear Abutment	12	13 3/8	14 1/16	14 5/8	16 3/8	17 1/4	15 5/16	13 5/8

LAMINATED ELASTOMERIC BEARING NOTES:
DESIGN LOADING: SERVICE LOAD REACTIONS - KIPS

	DEAD LOAD	LIVE LOAD WITHOUT IMPACT	TOTAL
ABUTMENTS:	22.9	43.9	66.8
PIER:	76.9	57.2	134.1

LAMINATED ELASTOMERIC BEARING NOTES:

WELDING OF THE SUPPORT POST TO THE LOAD PLATE AND OF THE LOAD PLATE TO THE GIRDER SHALL BE CONTROLLED SO THAT THE PLATE TEMPERATURE AT THE ELASTOMER BONDED SURFACE DOES NOT EXCEED 300 DEGREES FAHRENHEIT AS DETERMINED BY USE OF PYROMETRIC STICKS OR OTHER TEMPERATURE MONITORING DEVICES.

STEEL FOR LOAD PLATES SHALL BE ASTM A709, GRADE 36.

THE STEEL LOAD PLATE SHALL BE BONDED BY VULCANIZATION TO THE ELASTOMER DURING THE MOLDING PROCESS.

ELASTOMERIC BEARINGS SHALL COMPLY WITH ITEM 516 AND ARTICLES 18.5 THROUGH 18.10 OF SECTION 18, BEARINGS, DIVISION II - CONSTRUCTION OF THE CURRENT AASHTO SPECIFICATIONS FOR HIGHWAY BRIDGES. BEARINGS SHALL BE GRADE 3, 50 DUROMETER NEOPRENE ELASTOMER, AND SHALL BE SUBJECTED TO THE TEST REQUIREMENTS OF ARTICLE 18.7.4.5. THE BEARINGS WERE DESIGNED PER ARTICLE 14.6.6 AASHTO DIVISION I- DESIGN. THE UNIT BID SHALL INCLUDE TESTING, STEEL SUPPORT POST AND ALL OTHER MATERIALS, LABOR AND INCIDENTALS NECESSARY TO FURNISH AND INSTALL LAMINATED ELASTOMERIC BEARINGS. PAYMENT WILL BE MADE AT THE CONTRACT PRICE BID FOR THE APPROPRIATE ITEM 516 - ELASTOMERIC BEARING WITH INTERNAL LAMINATES AND LOAD PLATE (NEOPRENE), AS PER PLAN.

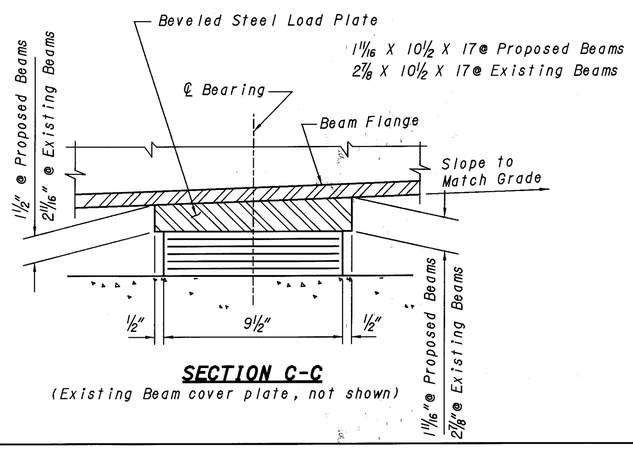

SECTION C-C
(Existing Beam cover plate, not shown)

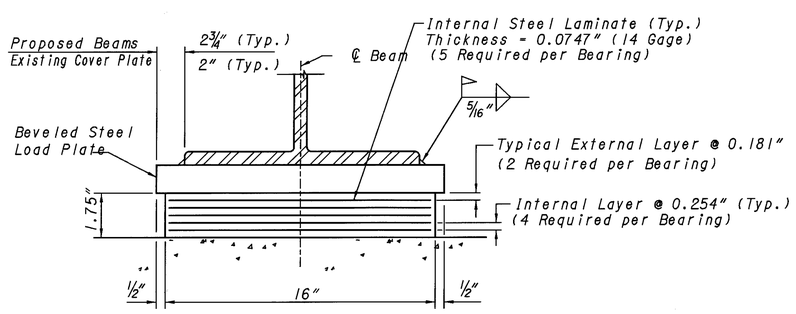

SECTION D-D
(Existing Beam cover plate, not shown)

EUTHENICS INC.
CONSULTING ENGINEERS
CLEVELAND, OHIO

11/12

LAMINATED ELASTOMERIC BEARINGS

BRIDGE NO. CUY-71-0384L AND R OVER ALBION ROAD

DESIGN	DRAWN	TRACED	CHECKED	REVIEW	DATE	REVISED
KRD	EEF	—	GFH	RAB	3-94	

PLOTTED BY: lmincek
PLOT SUBMITTED: 06-AUG-1998 07:08
307LEB04.DGN

MARK	NO.	LENGTH	TYPE	SER. INCR.	WEIGHT (LBS.)
ABUTMENTS					
EA 501	56	11'-0"	10		642
EA 502	76	9'-6"	6		753
EA 503	72	6'-3"	5		469
EA 504	72	7'-10"	6		588
EA 505	52	14'-11"	6		809
EA 506	4 Ser 6	5'-9" to 13'-3"	6	1'-6"	238
EA 507	4 Ser 6	5'-9" to 13'-9"	6	1'-4"	285
EA 508	16	7'-7"	Str		127
EA 509	8	5'-2"	Str		43
EA 510	16	2'-3"	Str		38
EA 511	32	8'-1"	Str		270
EA 512	8	5'-6"	Str		46
EA 513	16	9'-2"	Str		153
EA 514	8	8'-6"	Str		71
EA 515	40	12'-0"	Str		501
EA 516	92	30'-0"	Str		2,879
EA 517	8	24'-0"	Str		200
EA 518	16	23'-7"	Str		394
EA 519	48	3'-8"	Str		184
EA 520	68	33'-0"	Str		2,340
EA 521	68	11'-2"	Str		792
EA 522	16	19'-8"	Str		328
EA 523	8	7'-3"	Str		60
EA 524	16	11'-6"	Str		192
EA 525	12	10'-7"	6		132
EA 526	12	6'-11"	6		87
EA 527	216	2'-0"	5		451
EA 528	4	5'-0"	5		21
EA 529	4	4'-9"	5		20
EA 530	112	3'-5"	Str		399
EA 531	260	9'-2"	6		2,489
EA 532	252	9'-0"	27		2,366
EA 533	252	4'-4"	5		1,139
EA 534	228	4'-3"	9		1,011
EA 535	164	4'-2"	9		713
EA 536	8	13'-8"	6		114
EA 537	48	7'-6"	6		375
EA 538	8	6'-11"	5		58
EA 539	8	6'-8"	5		56
EA 540	8	8'-11"	Str		74
EA 541	8	11'-4"	6		95
EA 542	16	31'-4"	Str		523
EA 601	44	4'-0"	Str		264
EA 602	76	13'-4"	27		1,522
EA 801	16	11'-7"	Str		495
EA 802	16	11'-1"	Str		473
EA 803	28	23'-0"	Str		1,719
EA 804	184	4'-10"	8		2,375
				TOTAL WEIGHT	29,373*
PIERS					
EP 401	40	16'-10"	Str		450
EP 402	28	8'-8"	45		162
EP 403	28	7'-0"	6		131
EP 404	2	17'-1"	51		616
EP 405	2	13'-6"	51		490
EP 406	2	17'-7"	51		629
EP 407	2	14'-0"	51		503
EP 501	12	13'-6"	10		169
EP 502	4 Ser 6	13'-0" to 13'-4"	10	13/16"	330
EP 503	72	4'-5"	6		332
EP 504	4	4'-2"	6		17
EP 505	4	3'-8"	6		15
EP 801	128	10'-6"	1		3,588
EP 901	8	16'-10"	Str		458
EP 902	8	13'-5"	Str		365
EP 903	8	23'-6"	26		639
EP 904	4	24'-10"	26		338
EP 905	8	15'-6"	49		422
EP 1001	64	13'-5"	5		3,695
EP 1002	16	20'-7"	Str		1,417
EP 1003	16	17'-1"	Str		1,176
EP 1004	16	21'-1"	Str		1,452
EP 1005	16	17'-7"	Str		1,211
				TOTAL WEIGHT	18,305*

MARK	NO.	LENGTH	TYPE	SER. INCR.	WEIGHT (LBS.)
SUPERSTRUCTURE					
ES 401	609	30'-0"	Str		12,204
ES 402	87	11'-6"	Str		661
ES 403	87	30'-11"	Str		1,797
ES 404	172	18'-8"	Str		2,145
ES 405	172	17'-4"	Str		1,992
ES 501	424	32'-0"	Str		14,151
ES 502	424	37'-3"	Str		16,473
ES 503	578	30'-0"	Str		18,086
ES 504	62	11-4"	Str		733
ES 505	62	29'-10	Str		1,929
ES 506		Not Used			
ES 507		Not Used			
ES 508	486	6'-11"	65		3,506
ES 509	18	20'-6"	Str		385
ES 510	18	11'-6"	Str		216
ES 601	424	32'-0"	Str		20,379
ES 602	424	37'-3"	Str		23,723
ES 603	486	2'-6"	5		1,825
ES 604	486	3'-2"	43		2,312
				TOTAL WEIGHT	122,517*

BENDING DIAGRAMS

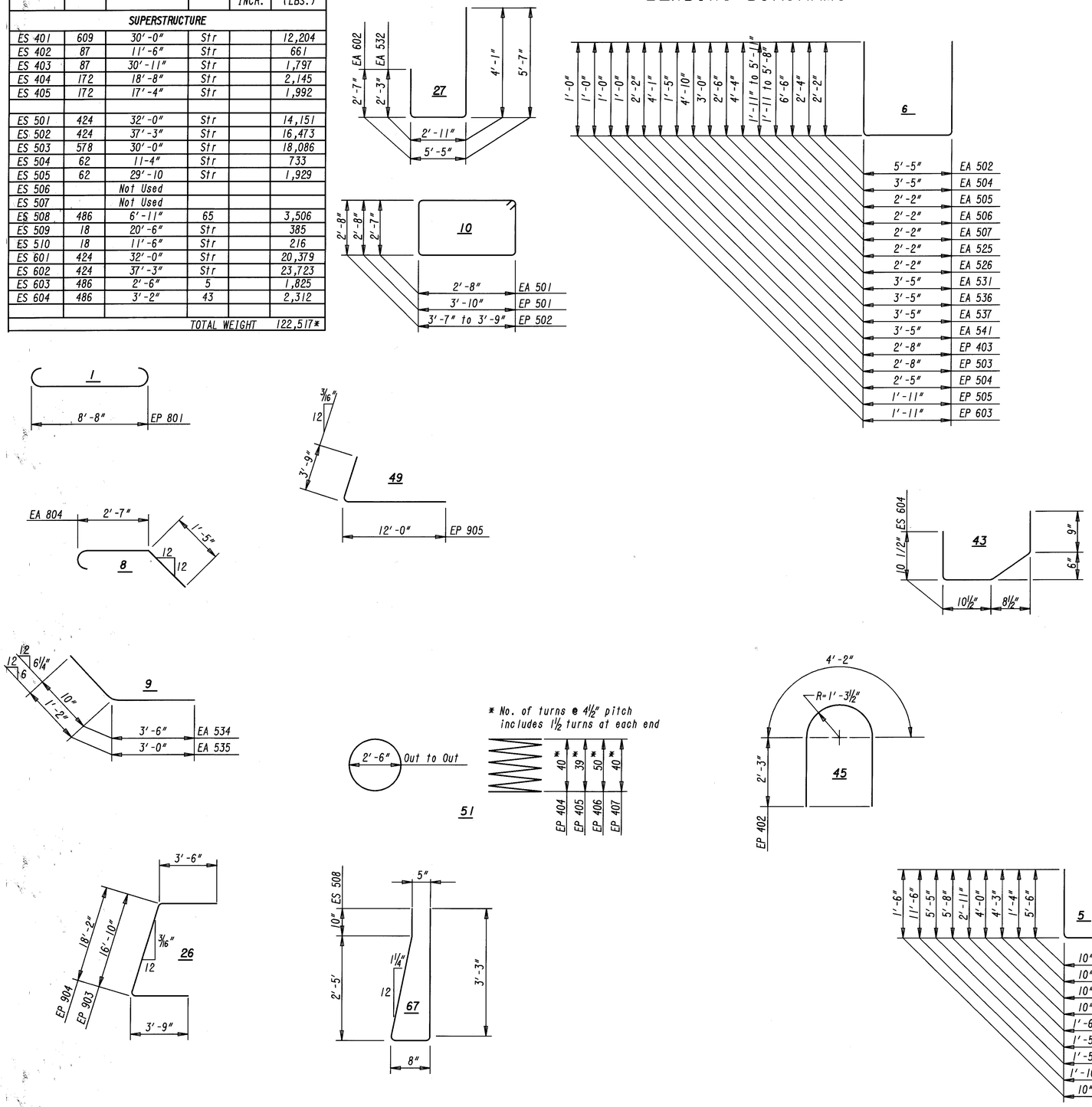

1. THE BAR SIZE NUMBER IS SPECIFIED ON THE PLANS IN THE BAR MARK COLUMN. THE FIRST DIGIT WHERE THREE DIGITS ARE USED AND THE FIRST TWO DIGITS WHERE FOUR ARE USED INDICATES THE BAR SIZE NUMBER. FOR EXAMPLE, P601 IS A NO. 6 BAR. BAR DIMENSIONS SHOWN ARE OUT TO OUT UNLESS OTHERWISE INDICATED. R INDICATES INSIDE RADIUS. UNLESS OTHERWISE NOTED, "STD." WRITTEN IN PLACE OF A DIMENSION INDICATES A STANDARD BEND AT THE END OF THE BAR.

2. ALL REINFORCING STEEL TO BE EPOXY COATED.

3. CONCRETE SPACERS OR OTHER APPROVED NONCORROSIVE SPACING DEVICES SHALL BE USED AT SUFFICIENT INTERVALS (NEAR THE BOTTOM AND AT INTERVALS NOT EXCEEDING 10 FEET) TO ENSURE CONCENTRIC SPACING FOR THE ENTIRE CAGE LENGTH. SPACERS SHALL BE CONSTRUCTED OF APPROVED MATERIAL EQUAL IN QUALITY AND DURABILITY TO THE CONCRETE SPECIFIED FOR THE SHAFT. THE SPACERS SHALL HAVE ADEQUATE DIMENSIONS TO ENSURE A MINIMUM 3 INCH CLEAR SPACE BETWEEN THE OUTSIDE OF THE REINFORCING CAGE AND THE DESIGN DIMENSION OF THE COLUMN. CYLINDRICAL CONCRETE FEET (BOTTOM SUPPORTS) SHALL BE PROVIDED TO ENSURE THAT THE BOTTOM OF THE CAGE IS MAINTAINED AT THE PROPER DISTANCE ABOVE THE BASE.

4. SPIRAL REINFORCING BARS: THE "LENGTH" SHOWN IN THE STEEL LIST FOR THE SPIRAL BARS IS THE LENGTH OF THE SPIRAL ALONG THE AXIS OF THE SPIRAL. THREE STEEL CHANNEL, TEE OR ANGLE SPACERS, WEIGHING APPROXIMATELY 0.80 LB PER LINEAR FEET OF SPACER, SHALL BE PROVIDED FOR EACH SPIRAL UNIT. THEY SHALL BE EQUALLY SPACED ALONG THE PERIPHERY OF THE COILS. THE NUMBER OF POUNDS OF THESE SPACERS, BASED ON 2.40 LB PER LINEAR FOOT IS INCLUDED IN THE TABULATED QUANTITIES OF SPIRAL BARS.

*5. ALL REINFORCING STEEL SHALL BE INCLUDED WITH THE APPROPRIATE ITEM 844 FOR PAYMENT. WEIGHTS ARE GIVEN FOR INFORMATIONAL PURPOSES ONLY.

EUTHENICS INC. CONSULTING ENGINEERS CLEVELAND, OHIO | 12/12

REINFORCEMENT SCHEDULE

BRIDGE NO. CUY-71-0384L AND R OVER ALBION ROAD

DESIGN	DRAWN	TRACED	CHECKED	REVIEW	DATE	REVISED
GFH	EEF	—	KRD	RAB	3-94	

PLOTTED BY: lmincek
PLOTTED ON: Tuesday
PLOT SCALE: 1:1
PLOT DATE: 06-AUG-1998 07:08
PLOT SUBMITTED: 06-AUG-1998 07:08
dgn 307RS04.DGN
Rpid08459Rdgn Rcuy-71-384R307rs04.dgn

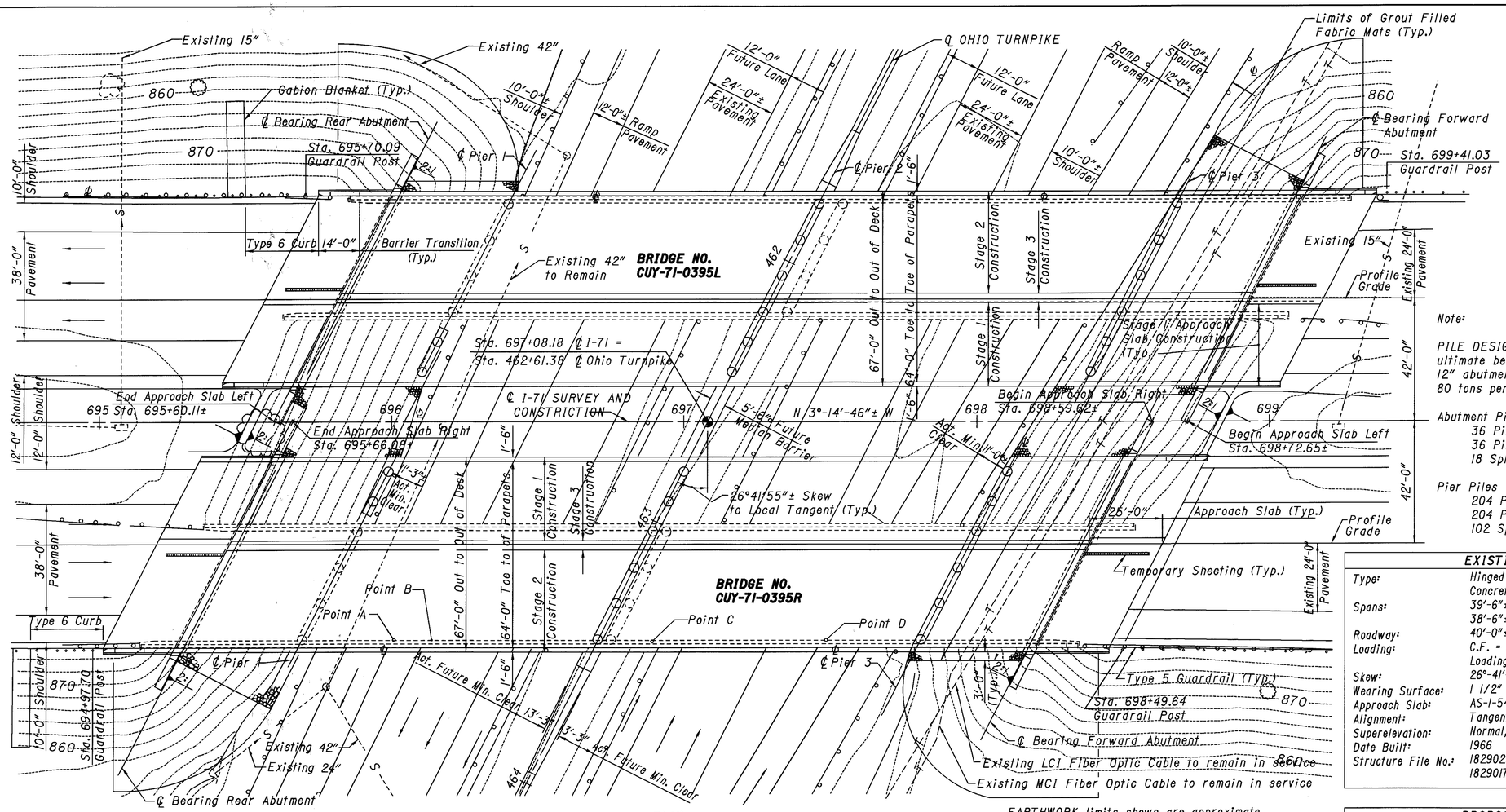

PLAN

EARTHWORK limits shown are approximate.
Actual slopes shall conform to plan cross sections

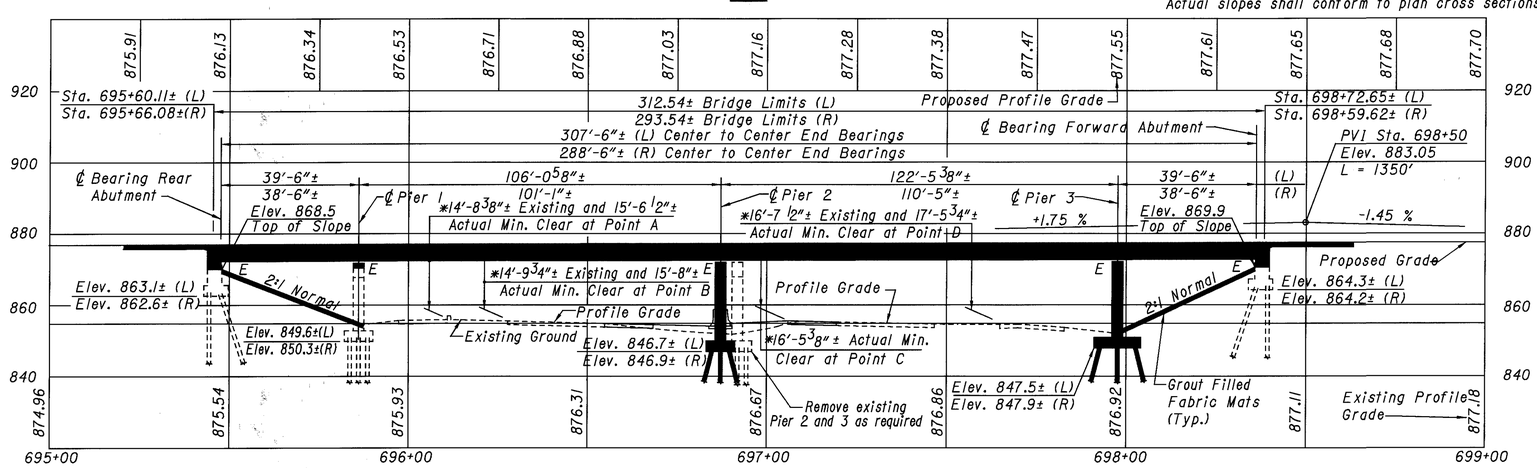

NORTHBOUND PROFILE SHOWN, SOUTHBOUND SIMILAR

TEMPORARY BENCH MARK
Sta. 694+25.27 ℄ I-71 Top of iron pin in monument box. Elev. 870.53

TRAFFIC DATA - (I-71)

1997	A.D.T.	=	37,700
	A.D.T.T.	=	2,260
2017	A.D.T.	=	46,780
	A.D.T.T.	=	2,805

Note:

PILE DESIGN LOADS (Ultimate Bearing Value): the ultimate bearing value is 70 tons per pile for the 12" abutment piles. The ultimate bearing value is 80 tons per pile for the 12" pier piles.

Abutment Piles
36 Piles 35 feet long, estimated length
36 Piles of order length 40 feet long
18 Splices

Pier Piles
204 Piles 25 feet long, estimated length
204 Piles order length 30 feet long
102 Splices

EXISTING STRUCTURE	
Type:	Hinged Steel Welded Girder with Reinforced Concrete Deck and Substructure
Spans:	39'-6"±, 114'-3"±, 114'-3"±, 39'-6"±, Left 38'-6"±, 105'-9"±, 105'-9"±, 38'-6" Right
Roadway:	40'-0"± Face to Face of Parapets
Loading:	C.F. = 2000, Adequte for A.A.S.H.O. Alternate Loading
Skew:	26°-41'-55"± Left Forward
Wearing Surface:	1 1/2" Dense Concrete
Approach Slab:	AS-1-54 (25'-0" Long)
Alignment:	Tangent
Superelevation:	Normal, 0.0156 Ft./Ft.
Date Built:	1966
Structure File No.:	1829025 Left 1829017 Right

PROPOSED STRUCTURE	
Proposed Work:	Replace Superstructure, Pier 2 and Pier 3, Modify Abutments and Pier 1 for Widened Structure
Type:	Continuous Welded A572 Steel Girder, Painted, with Reinforced Concrete Deck and Substructure
Spans:	39'-6"±, 106'-0 5/8"±, 122'-5 3/8"±, 39'-6"± Left 38'-6"±, 101'-1"±, 110'-5", 38'-6"± Right
Roadway:	64'-0" Toe to Toe of Parapets
Loading:	HS20-44 Case 1 and the Alternate Military Loading
Skew:	26°-41'-55"± Left Forward
Wearing Surface:	Monolithic Concrete
Approach Slab:	AS-1-81 (25'-0" Long)
Alignment:	Tangent
Superelevation:	Normal, 0.0156 Ft./Ft.

* Note:
15'-0" required minimum vertical clearance. Actual minimum vertical clearances occur at the intersection of the east edge of the east exterior girder for Bridge No. CUY-71-0395R and the following:
Point A - North edge of ramp
Point B - South edge of eastbound Ohio Turnpike
Point C - South edge of westbound Ohio Turnpike (Future Lane)
Point D - South edge of ramp

STRUCTURE SHEET NUMBERS 3,4 OF 22 NOT USED

DESIGN AGENCY
EUTHEMIOS INC.
CONSULTING ENGINEERS
CLEVELAND, OHIO

DATE	REVIEWED	DRAWN	DESIGNED	CUYAHOGA COUNTY
12-97	RAB	JT	RSY	Sta. 695+60.11± to 698+72.65± (L)
STRUCTURE FILE NUMBER	REVISED		CHECKED	Sta. 695+66.08± to 698+59.62± (R)
1829025 Lt., 1829017 Rt.			KRD	

SITE PLAN
BRIDGE NO. CUY-71-0395L AND R
OVER THE OHIO TURNPIKE

CUY-71-0.00

PLOTTED BY: jgrmovse
PLOTTED: Thursday, August 06, 1998 10:55
PLOT SUBMITTED:06-AUG-1998 10:55
376SP01.DGN
PLOTTED: Thursday, August 06, 1998 10:55 jgrmovse
pid08459 Bdgn B376sp01.dgn

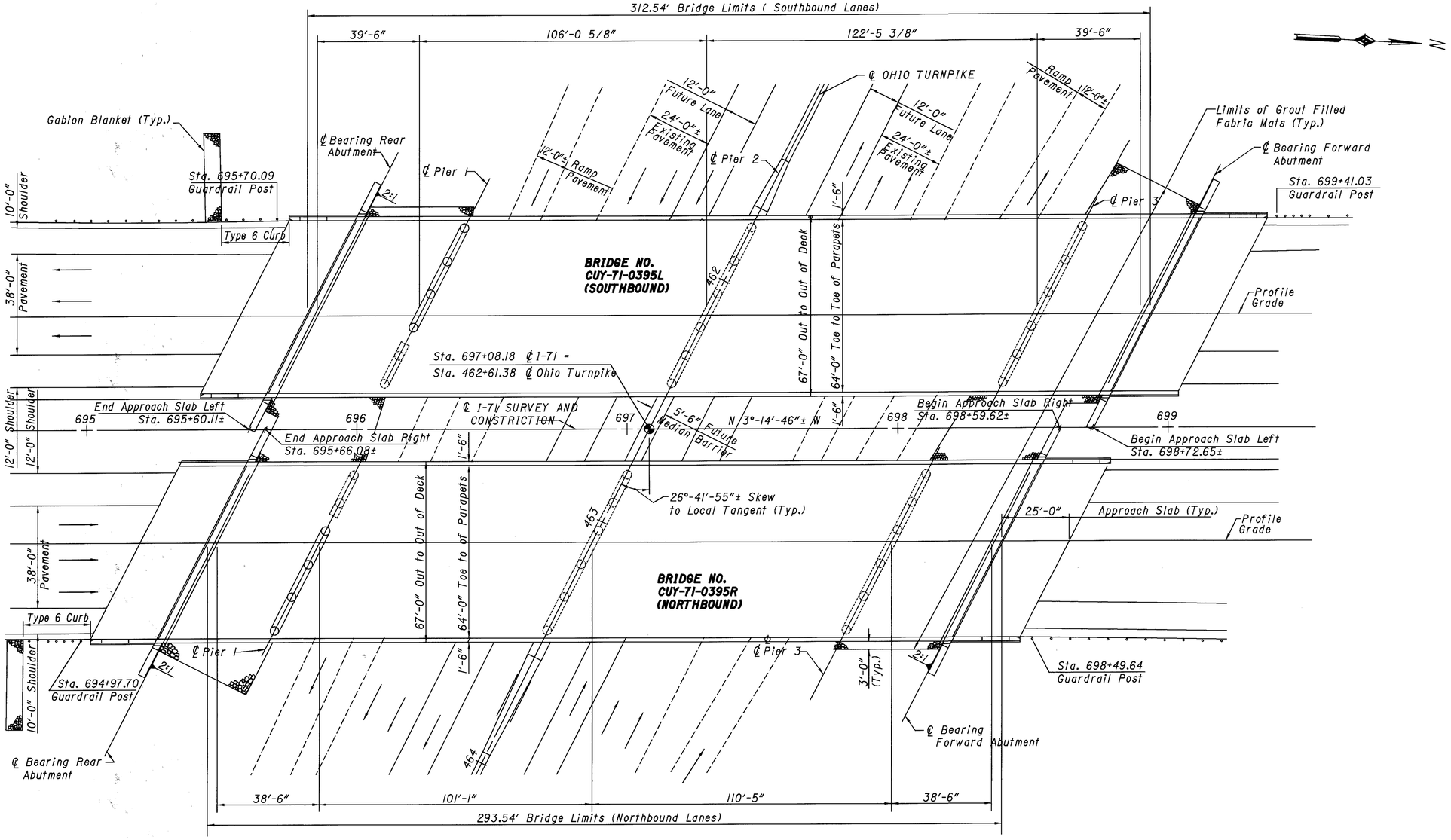

GENERAL PLAN

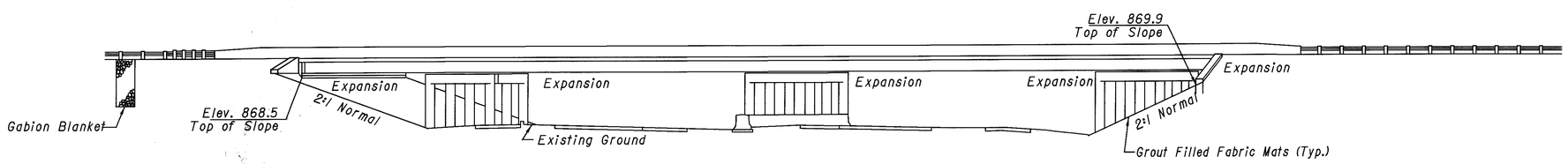

ELEVATION

STRUCTURE SHEET NUMBERS 3,4 OF 22 NOT USED

DESIGN AGENCY: EUTHERIAS INC. CONSULTING ENGINEERS CLEVELAND, OHIO

DESIGNED	DRAWN	REVIEWED	DATE
RSY	RSY	RAB	12-97
CHECKED	REVISED	STRUCTURE FILE NUMBER	
KRD		1829025 Lt., 1829017 Rt.	

GENERAL PLAN AND ELEVATION
BRIDGE NO. CUY-71-0395L AND R
OVER THE OHIO TURNPIKE

CUY-71-0.00

PLOTTED BY:jgrmovse
PLOTTED in Rbid08459Bdgn B376gp01.dgn
PLOT SUBMITTED:06-AUG-1998 11:00
376GP01.DGN

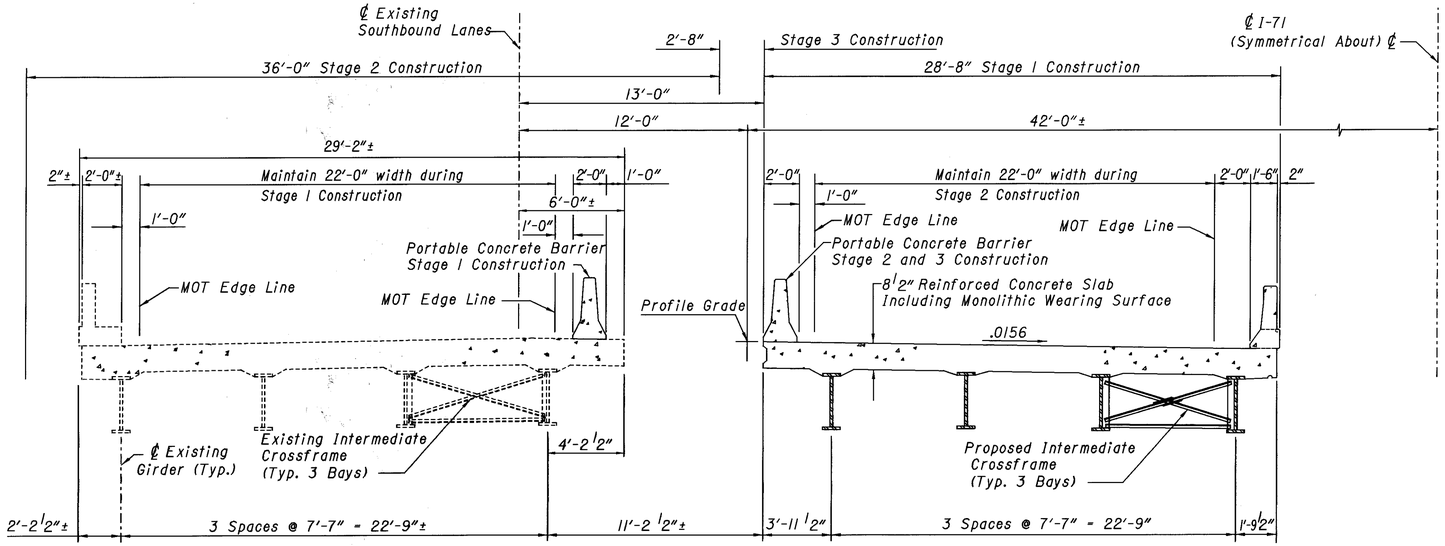

TRANSVERSE SECTION STAGE CONSTRUCTION

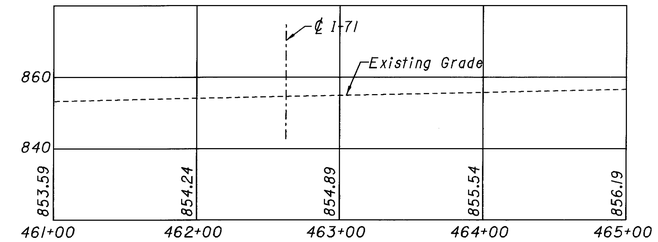

PROFILE - OHIO TURNPIKE

CALC. BY: GFH DATE: 10-97 **ESTIMATED QUANTITIES** CHK'D. BY: KRD DATE: 11-97

ITEM	ITEM EXT.	TOTAL	UNIT	DESCRIPTION	CUY-71-0395 L ABUT-MENTS	CUY-71-0395 L PIER	CUY-71-0395 L SUPER-STRUCTURE	CUY-71-0395 L GENERAL	CUY-71-0395 L TOTAL	CUY-71-0395 R ABUT-MENTS	CUY-71-0395 R PIER	CUY-71-0395 R SUPER-STRUCTURE	CUY-71-0395 R GENERAL	CUY-71-0395 R TOTAL	AS PER PLAN SHEET NUMBERS
202	11203	LUMP	LUMP	PORTIONS OF STRUCTURE REMOVED, OVER 20 FOOT SPAN, AS PER PLAN	LUMP		LUMP		LUMP	LUMP		LUMP		LUMP	GN 1
503	11100	LUMP	LUMP	COFFERDAMS, CRIBS AND SHEETING	LUMP				LUMP	LUMP				LUMP	
503	21101	1,327	CU. YD.	UNCLASSIFIED EXCAVATION, AS PER PLAN	276	387			663	277	387			664	GN 2
505	11100	LUMP	LUMP	PILE DRIVING EQUIPMENT MOBILIZATION				LUMP	LUMP				LUMP	LUMP	
507	00500	6,360	LIN. FT.	12" CAST-IN-PLACE REINFORCED CONCRETE PILES, DRIVEN	630	2,550			3,180	630	2,550			3,180	
507	00550	7,560	LIN. FT.	12" CAST-IN-PLACE REINFORCED CONCRETE PILES, FURNISHED	720	3,060			3,780	720	3,060			3,780	
507	50500	120	EACH	STEEL PILE SPLICES	9	51			60	9	51			60	
511	81400	100	LBS	CONCRETE MISC.: REPLACEMENT OF EXISTING REINFORCING STEEL				50	50				50	50	
512	33000	16	SQ. YD.	TYPE 2 WATERPROOFING	8				8	8				8	
SPECIAL	51267510	1,468	SQ. YD.	SEALING OF CONCRETE SURFACES (EPOXY-URETHANE) (SEE PROPOSAL NOTE)	136	598			734	136	598			734	
514	27706	904,587	LBS	FIELD PAINTING, MISC.: SHOP PAINTING AND FIELD TOUCH-UP OF STRUCTURAL STEEL			466,496		466,496			438,091		438,091	
516	13900	168	SQ. FT.	2" PREFORMED EXPANSION JOINT FILLER	84				84	84				84	
516	14020	364	LIN. FT.	SEMI-INTEGRAL ABUTMENT EXPANSION JOINT SEAL	182				182	182				182	
516	44100	18	EACH	ELASTOMERIC BEARING WITH INTERNAL LAMINATES AND LOAD PLATE (NEOPRENE) (13" x 20" x 2.84" WITH 14" X 21" X 2" LOAD PLATE) (SEE PROPOSAL NOTE)		9			9		9			9	
516	44100	18	EACH	ELASTOMERIC BEARING WITH INTERNAL LAMINATES AND LOAD PLATE (NEOPRENE) (9" x 14" x 2.80" WITH 10" X 15" X 1 1/2" LOAD PLATE) (SEE PROPOSAL NOTE)	9				9	9				9	
516	44100	18	EACH	ELASTOMERIC BEARING WITH INTERNAL LAMINATES AND LOAD PLATE (NEOPRENE) (12" x 19" x 2.70" WITH 13" X 20" X 2 " LOAD PLATE) (SEE PROPOSAL NOTE)		9			9		9			9	
516	44100	18	EACH	ELASTOMERIC BEARING WITH INTERNAL LAMINATES AND LOAD PLATE (NEOPRENE) (14" x 22" x 2.11" WITH 15" X 23" X 2" LOAD PLATE) (SEE PROPOSAL NOTE)		9			9		9			9	
516	44100	18	EACH	ELASTOMERIC BEARING WITH INTERNAL LAMINATES AND LOAD PLATE (NEOPRENE) (8 1/2" x 9 1/2" x 2.83" WITH 9 1/2" X 10 1/2" X 1 1/2" LOAD PLATE) (SEE PROPOSAL NOTE)	9				9	9				9	
518	21200	256	CU. YD.	POROUS BACKFILL WITH FILTER FABRIC	128				128	128				128	
518	40000	408	LIN. FT.	6" PERFORATED CORRUGATED PLASTIC PIPE	204				204	204				204	
518	40010	28	LIN. FT.	6" NON-PERFORATED CORRUGATED PLASTIC PIPE, INCLUDING SPECIALS	14				14	14				14	
601	20000	2	SQ. YD.	CRUSHED AGGREGATE SLOPE PROTECTION				1	1				1	1	
601	21100	1,864	SQ. YD.	SLOPE PROTECTION MISC.: GROUT FILLED FABRIC MATS				932	932				932	932	
843	50000	170	SQ. FT.	PATCHING CONCRETE STRUCTURES WITH TROWELABLE MORTAR	40	35			75	45	50			95	
844	48010	1,412	CU. YD.	HIGH PERFORMANCE CONCRETE, SUPERSTRUCTURE (DECK)			728		728			684		684	
844	48020	157	CU. YD.	HIGH PERFORMANCE CONCRETE, SUPERSTRUCTURE (PARAPET)			81		81			76		76	
844	48040	911	CU. YD.	HIGH PERFORMANCE CONCRETE, SUBSTRUCTURE	137	318			455	137	319			456	
863	10280	904,587	LBS	STRUCTURAL STEEL, LEVEL 4 FABRICATION (A572-50)			466,496		466,496			438,091		438,091	

32", BRIDGE MOUNTED, PORTABLE CONCRETE BARRIER ANCHORS	
MOT Stage	No. Anchors/12' Section
1	3
2 and 3	6

DESIGN AGENCY
EUTHENICS INC.
CONSULTING ENGINEERS
CLEVELAND, OHIO

REVIEWED RAB DATE 12-97 STRUCTURE FILE NUMBER 8290251 L4, 1829017 R1
DRAWN RSY REVISED
DESIGNED RSY CHECKED KRD

STAGE CONSTRUCTION AND ESTIMATED QUANTITIES
BRIDGE NO. CUY-71-0395L AND R
OVER THE OHIO TURNPIKE

CUY-71-0.00

PLOT SUBMITTED:20-AUG-1998 05:52
PLOTTED BY:jgrmovse
PLOTTED in:Power Server-Bpid08459Bdgn B376eq01.dgn
376EQ01.DGN

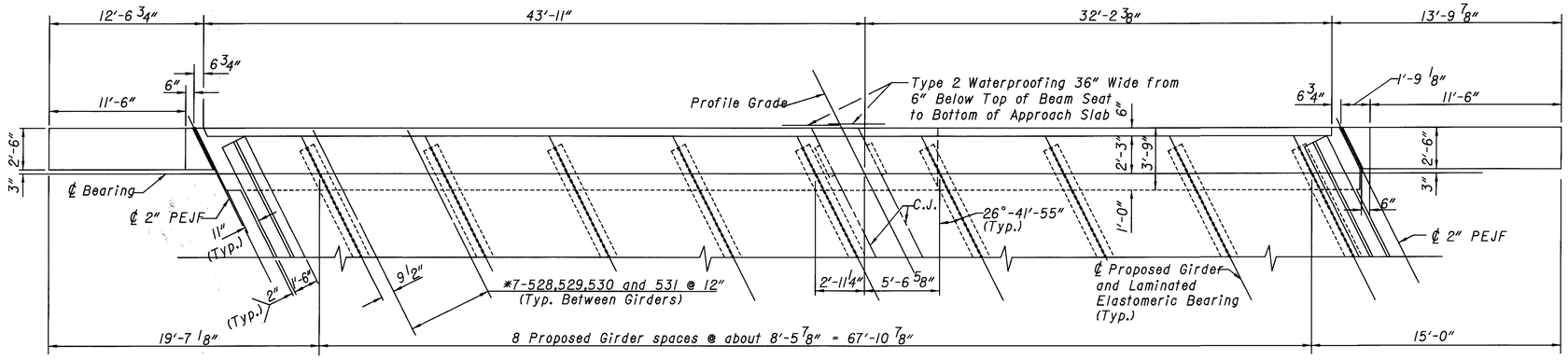

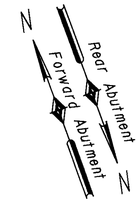

PLAN

* Reinforcing Placed Parallel to Girders

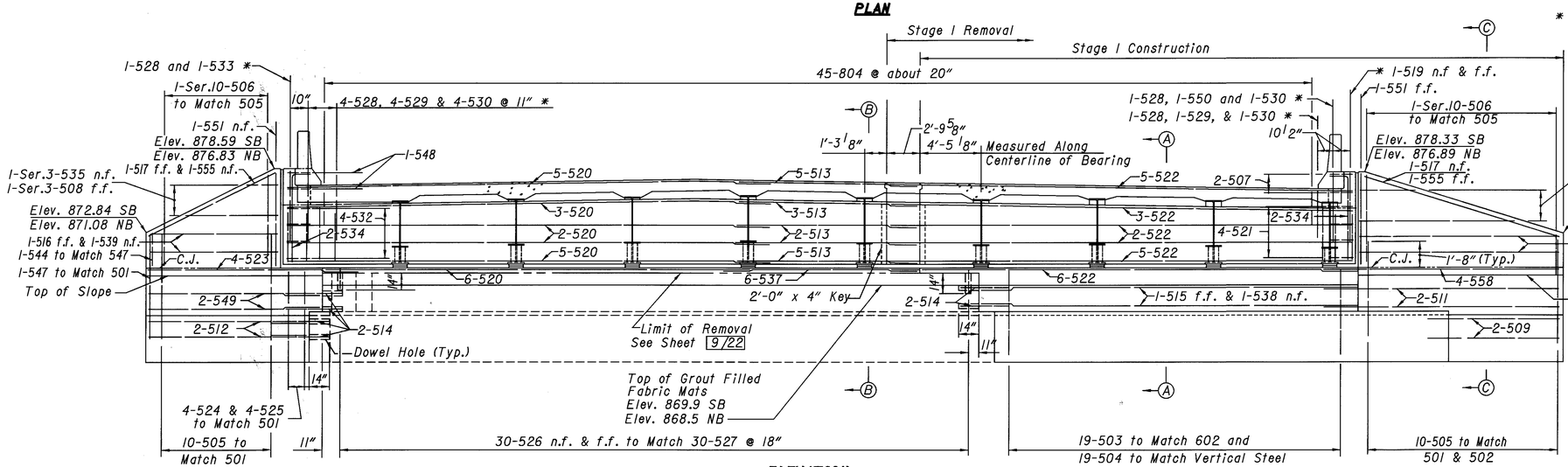

Minimum Lap Lengths
No. 5 Bar = 2'-2"
No. 6 Bar = 2'-4"
No. 8 Bar = 4'-0"

ELEVATION
(Piles Not Shown)

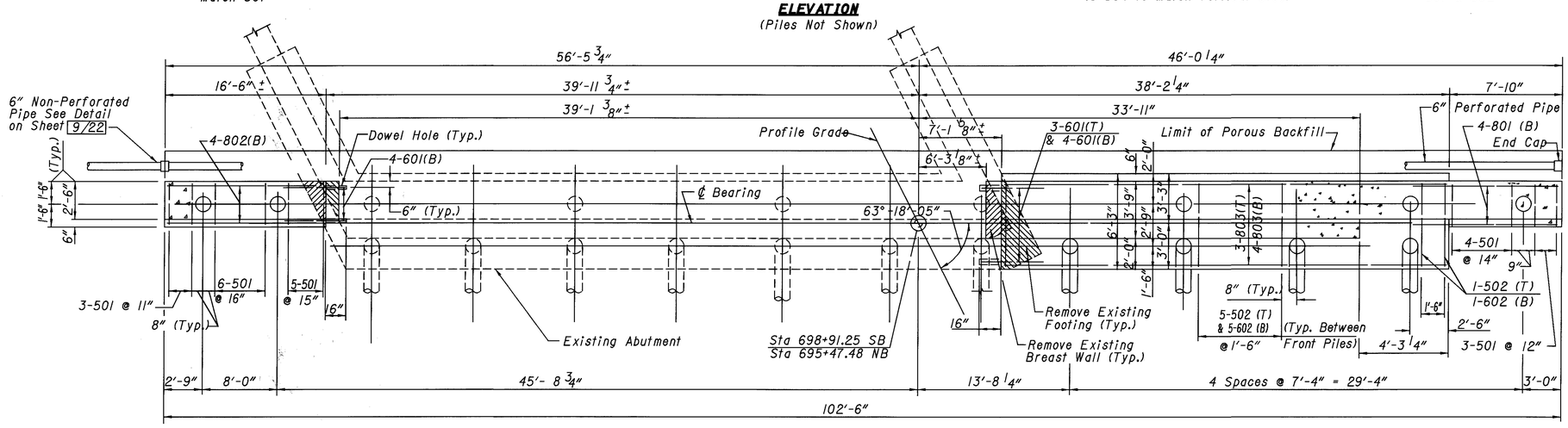

FOOTING PLAN

Notes:

For Sections A-A, B-B and C-C and additional notes see sheet 9/22.

For top of pavement elevations along centerline of bearing, see Deck Screed Elevations on on sheet 19/22 .

For location of patching areas see sheet 8/22.

All Piles are 12" cast-in-place reinforced concrete piles

All battered piles shall be inclined 3 in 12 in the direction shown.

For Pile Layout Plan and Pile Identification Numbers see sheet 10/22

The following abbreviations are used:

Elev. = Elevation	T = Top
(Typ.) = Typical	B = Bottom
SB = Southbound	e.f. = each face
NB = Northbound	f.f. = far face
C.J. = Construction Joint	
PEJF = Preformed Expansion Joint Filler	

320/361

DESIGN AGENCY
EUTHEMAES INC.
CONSULTING ENGINEERS
CLEVELAND, OHIO

REVIEWED	DATE
RAB	12-97
STRUCTURE FILE NUMBER 1829025 L1, 1829017 R1	

DRAWN	REVISED
GFH	

DESIGNED	CHECKED
GFH	KRD

SOUTHBOUND FORWARD ABUTMENT AND NORTHBOUND REAR ABUTMENT
BRIDGE NO. CUY-71-0395L AND R
OVER THE OHIO TURNPIKE

CUY-71-0.00

6/22

PLOT SUBMITTED:06-AUG-1998 11:02

376ABT01.DGN

PLOTTED BY:jgrmovse
PLOTTED:Thursday, August 06, 1998 11:02:00 AM
PLOTTED FROM:c:\projects\bridge\cuy0395l\bpid08459\bdgnfiles\376abt01.dgn

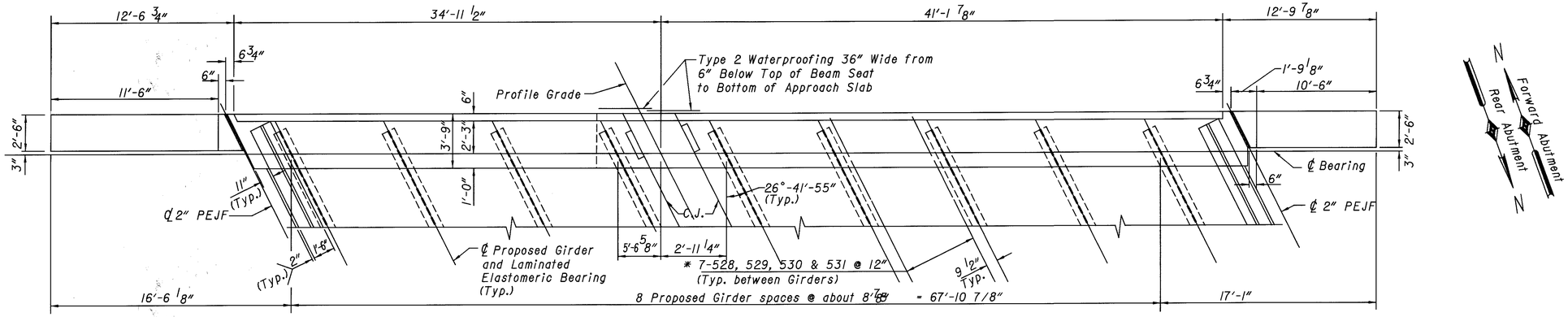

PLAN

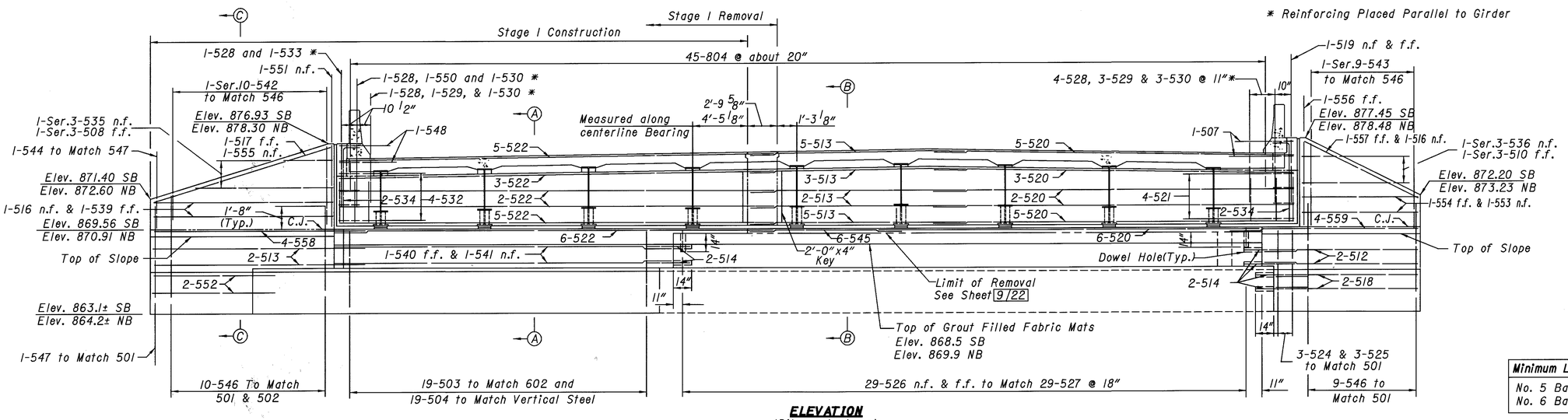

ELEVATION
(Piles not shown)

Minimum Lap Lengths
No. 5 Bar = 2'-2"
No. 6 Bar = 2'-4"

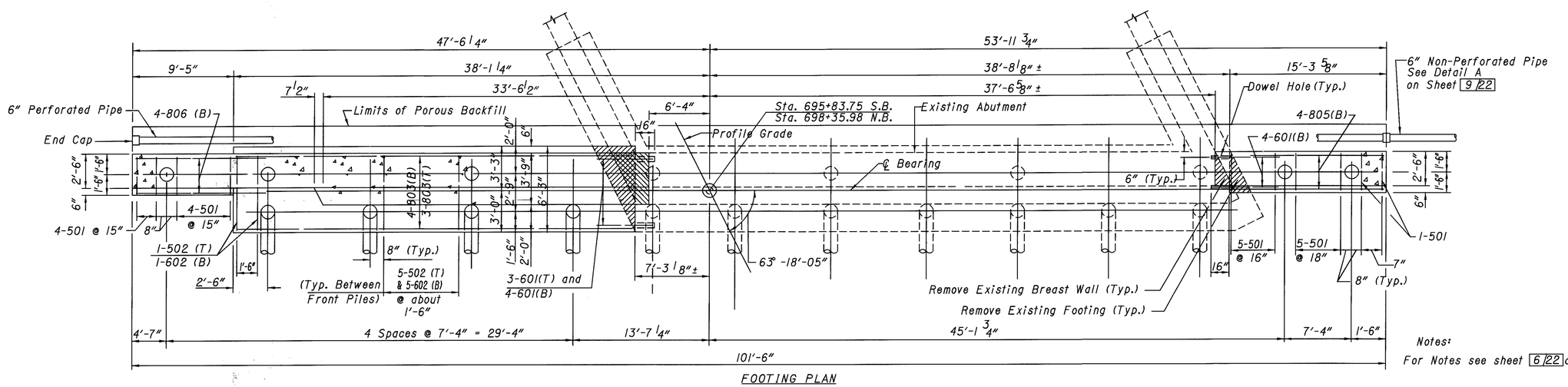

FOOTING PLAN

Notes:
For Notes see sheet 6/22 and 9/22

DESIGN AGENCY
EUTHENICS INC.
CONSULTING ENGINEERS
CLEVELAND, OHIO

DATE	REVIEWED	DRAWN	DESIGNED
12-97	RAB	GFH	GFH
STRUCTURE FILE NUMBER	REVISED	REVISED	CHECKED
1829025 Lt., 1829017 Rt.			KRD

SOUTHBOUND REAR ABUTMENT AND NORTHBOUND FORWARD ABUTMENT
BRIDGE NO. CUY-71-0395L AND R
OVER THE OHIO TURNPIKE

CUY-71-0.00

321
361

PLOTTED BY: jgrmovse
PLOTTED: FRI AUG 07 11:02 1998
PLOT SUBMITTED: 06-AUG-1998 11:02
376ABT02.DGN
PLOT SCALE: 1:1
USER: sbetorsber
Bpid08459Edgn
B376abt02.dgn

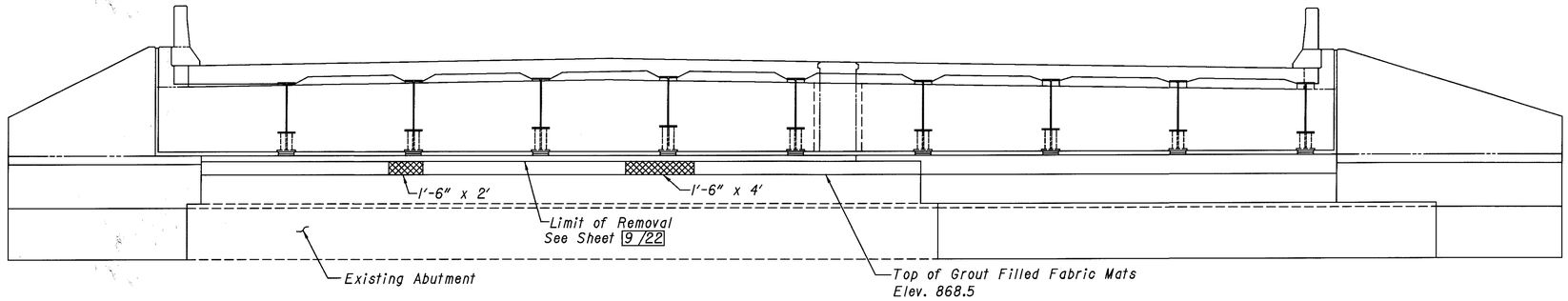

NORTHBOUND REAR ABUTMENT ELEVATION

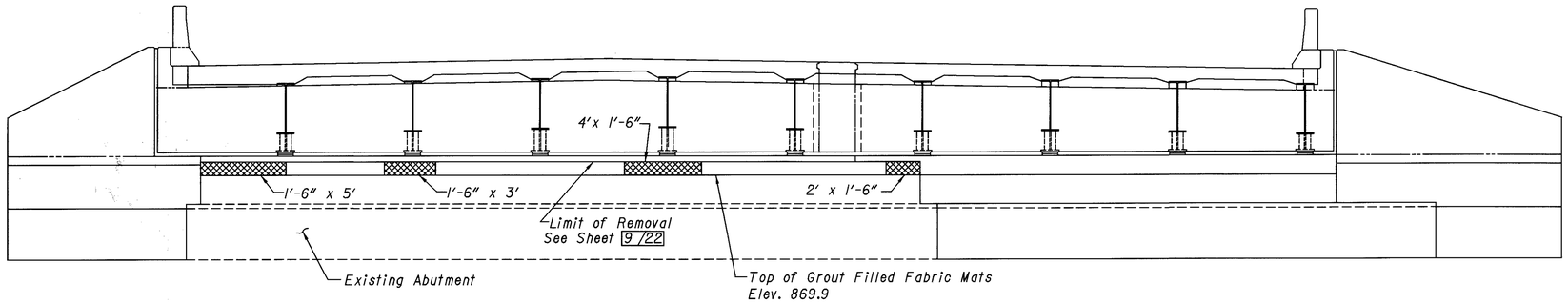

SOUTHBOUND FORWARD ABUTMENT ELEVATION

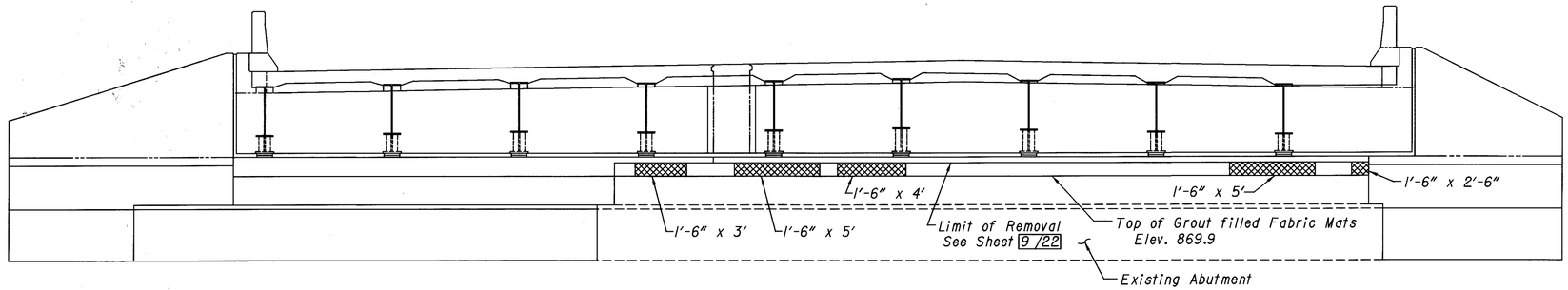

NORTHBOUND FORWARD ABUTMENT ELEVATION

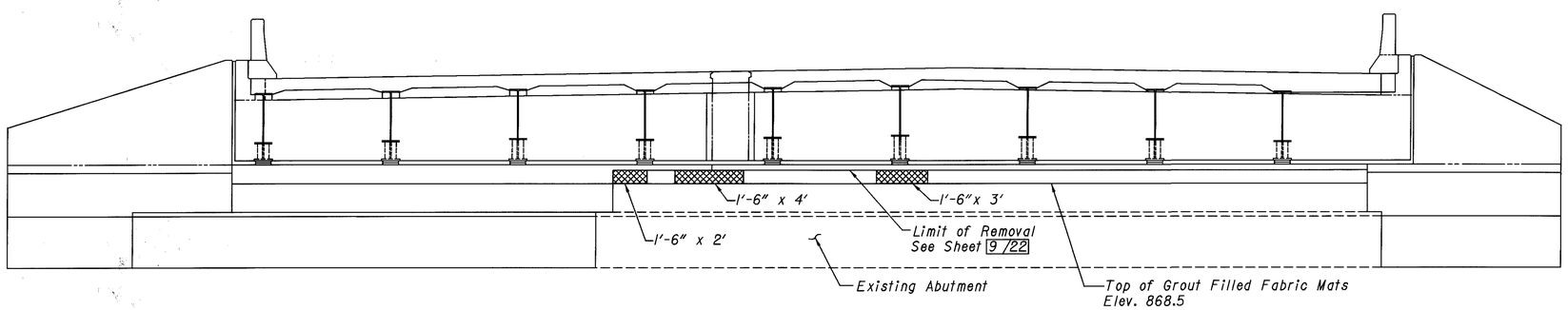

SOUTHBOUND REAR ABUTMENT ELEVATION

Note:
Item 843 - Trowelable Mortar

322/361

DESIGN AGENCY
EUTHENICS INC.
CONSULTING ENGINEERS
CLEVELAND, OHIO

DESIGNED	DRAWN	REVIEWED	DATE
GFH	GFH	RAB	12-97
CHECKED	REVISED	STRUCTURE FILE NUMBER	
KRD		1829025 Li., 1829017 Ri.	

ABUTMENT PATCHING PLAN
BRIDGE NO. CUY-71-0395L AND R
OVER THE OHIO TURNPIKE

CUY-71-0.00

8/22

PLOT SUBMITTED:06-AUG-1998 11:03
376PCH01.DGN
PLOTTED BY:jgrmovse
PLOTTED IN:C:\Temp\sbefor\sberbpid08459B.dgnB376pch01.dgn

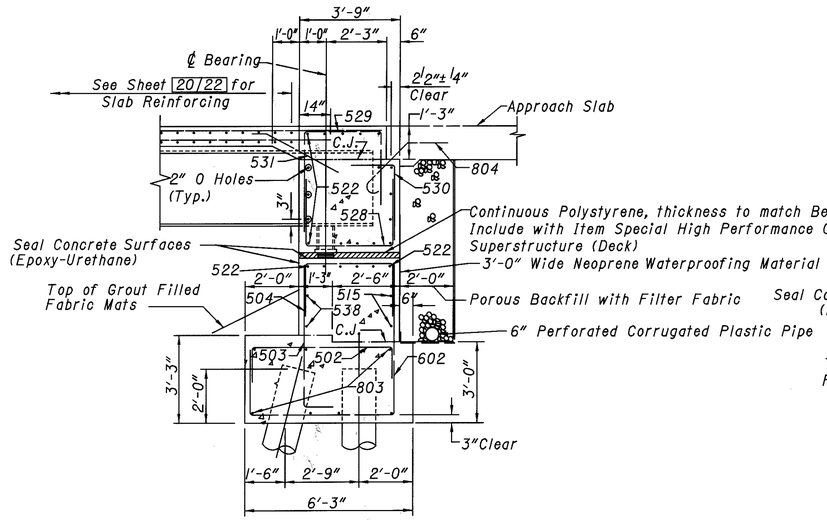

SECTION A-A

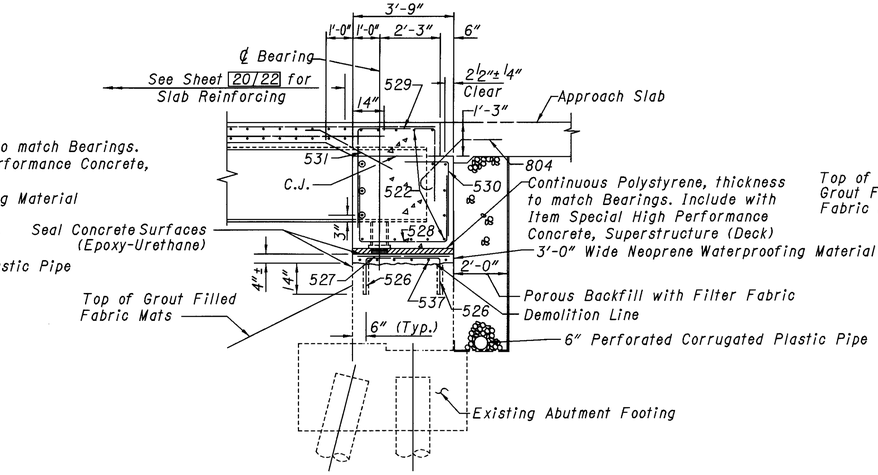

SECTION B-B

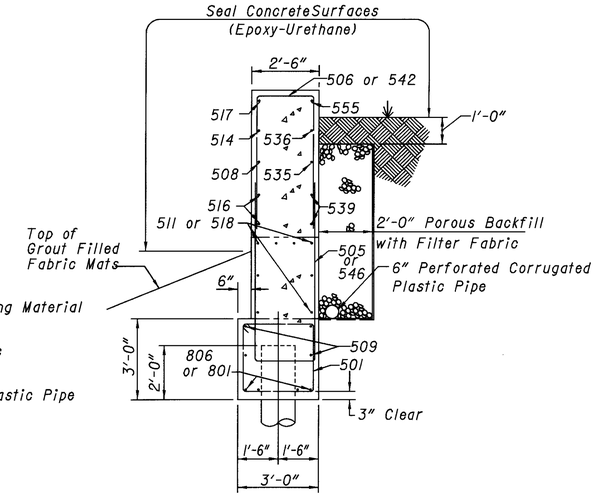

SECTION C-C

Note: Reinforcement shown for SB F.A. and NB R.A., SB R.A. and NB F.A. similar.

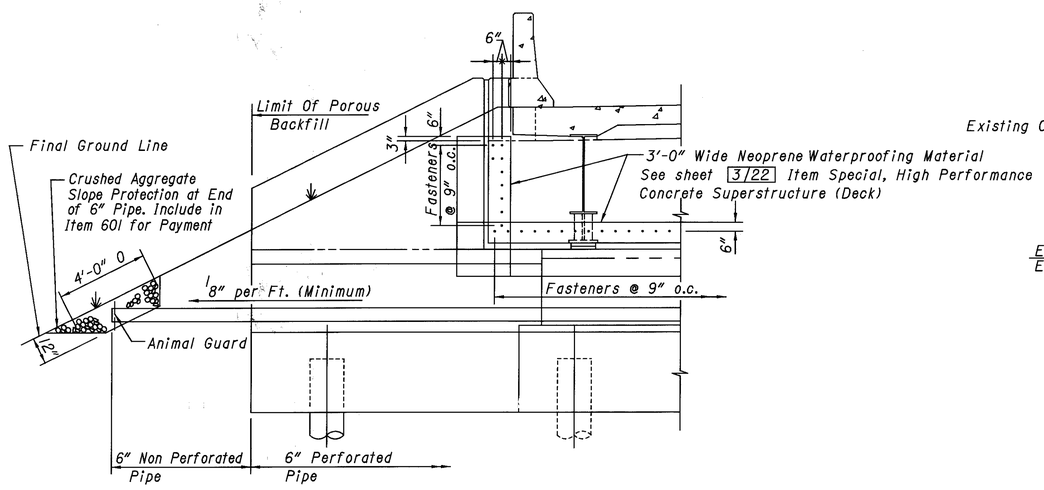

DETAIL A

(SB F.A. and NB R.A. shown, SB R.A. and NB F.A. Opposite Hand)

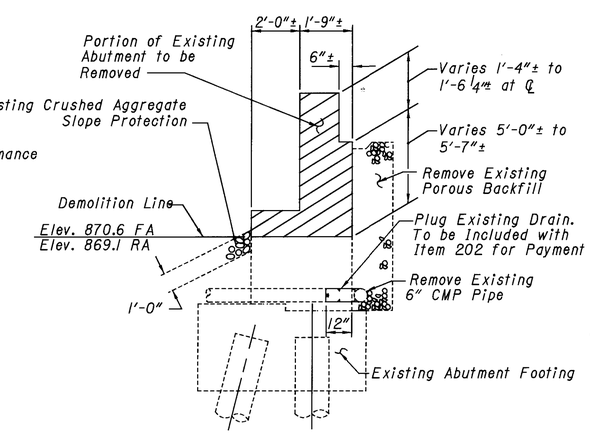

LIMITS OF REMOVAL

Minimum Lap Lengths
No. 5 Bar = 2'-2"
No. 6 Bar = 2'-4"

Notes:

For location of Sections A-A, B-B and C-C and Detail A see sheets 6/22 and 7/22 .

For Approach Slab notes and details, see Roadway Plans.

Concrete above the bridge seat shall be included with the superstructure for payment.

All reinforcing bars shall be prefixed:
EA = Epoxy coated abutment

For reinforcement schedule see sheet 22/22

The following abbreviations are used:

C.J. = Construction Joint	Typ. = Typical
SB = South Bound	R.A. = Rear Abutment
NB = North Bound	F.A. = Forward Abutment
PEJF = Preformed Expansion Joint Filler	

323/361

DESIGN AGENCY: EUTHENICS INC. CONSULTING ENGINEERS CLEVELAND, OHIO

DATE	REVIEWED	STRUCTURE FILE NUMBER
12-97	RAB	1829025 L1, 1829017 R1

DRAWN	REVISED
GFH	

DESIGNED	CHECKED
GFH	KRD

ABUTMENT SECTIONS AND DETAILS
BRIDGE NO. CUY-71-0395L AND R
OVER THE OHIO TURNPIKE

CUY-71-0.00

PLOTTED BY: jgrmovse
PLOTTED: 06-AUG-1998 11:04
PLOT SUBMITTED:06-AUG-1998 11:04
376ASD01.DGN
376asd01.dgn

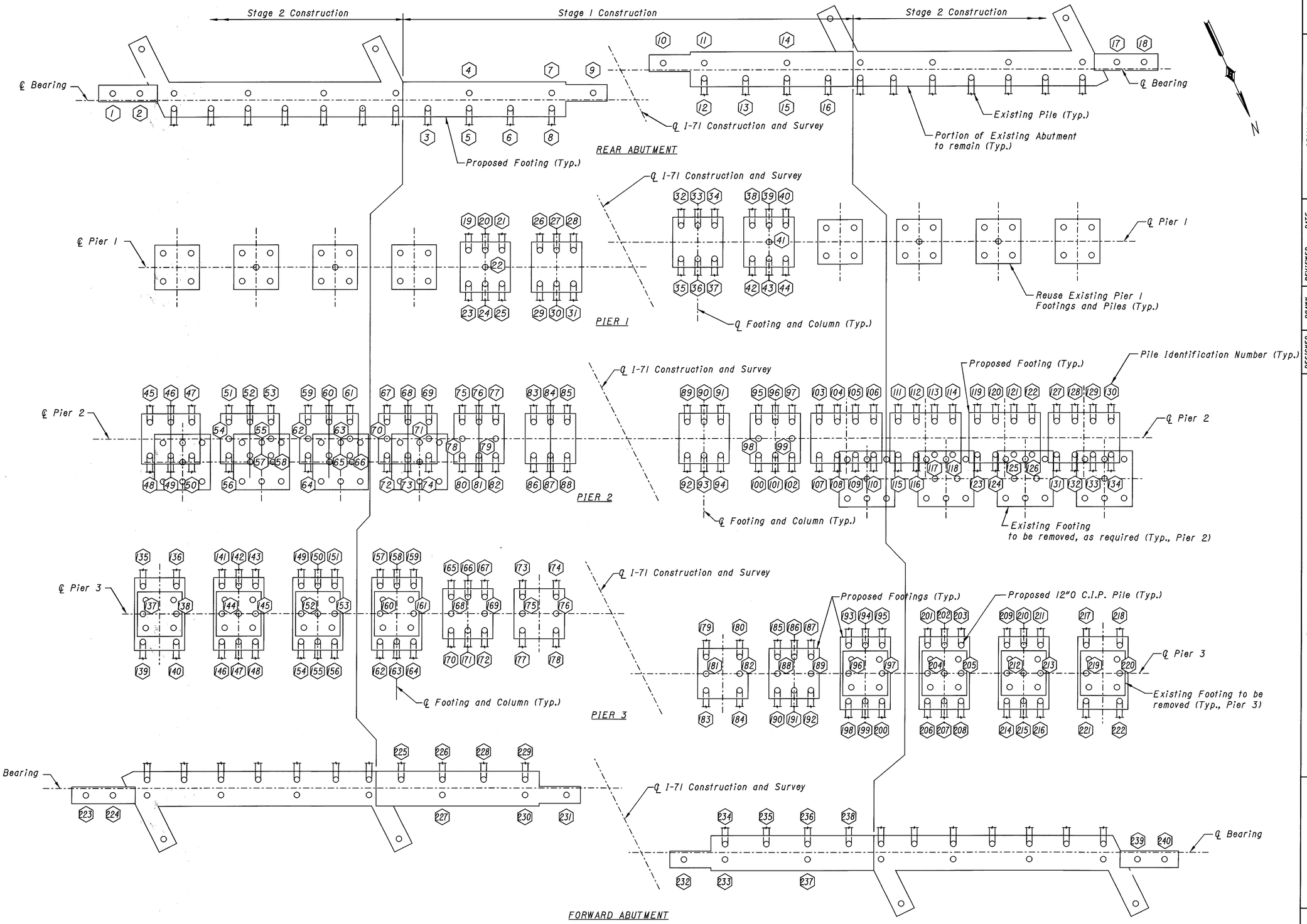

DESIGNED	GFH
DRAWN	GFH
REVIEWED	RAB
DATE	12-97
CHECKED	KRD
REVISED	
STRUCTURE FILE NUMBER	1829017 Rt.

DESIGN AGENCY
EUTHEMACS INC.
CONSULTING ENGINEERS
CLEVELAND, OHIO

PILE LAYOUT PLAN
BRIDGE NO. CUY-71-0395L AND R
OVER THE OHIO TURNPIKE

CUY-71-0.00

PLOT SUBMITTED:07-AUG-1998 10:21
376PLP01.DGN
PLOTTED BY:fkonopka
PLOTTED FROM:/usr/bin/forsberg/pid08459/dgn/b376plp01.dgn

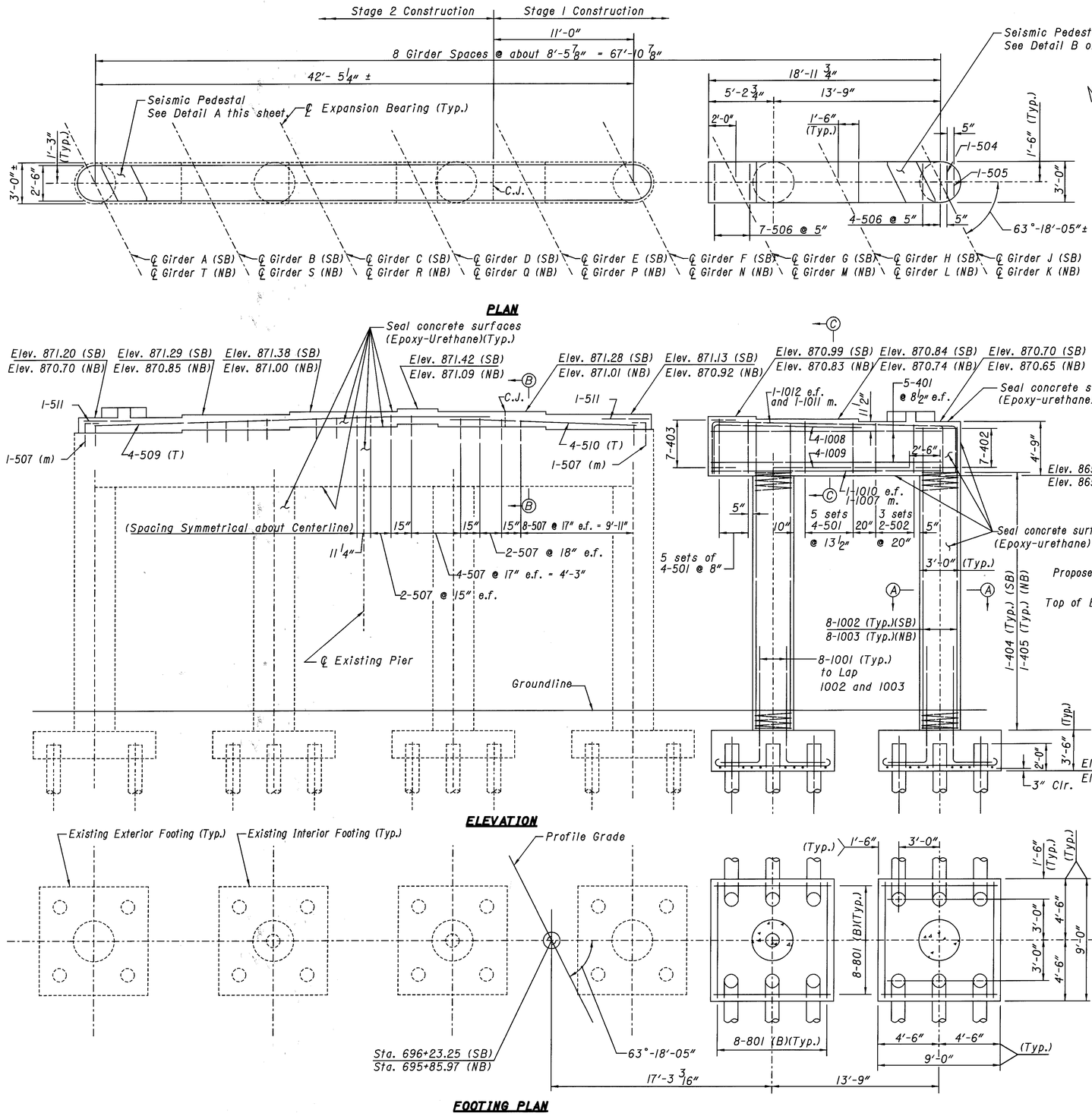

MINIMUM LAP LENGTHS
No. 4 Bar = 1'-8"
No. 5 Bar = 1'-11"
No. 10 Bar = 8'-3"

Notes:

All reinforcing bars shall be prefixed P (Pier).

For reinforcement schedule see sheet 22/22.

All piles shall be 12" O cast-in place reinforced concrete piles.

All battered piles shall be inclined 3 in 12 in the direction shown.

For Pile Layout Plan and Pile Identification Numbers see sheet 10/22.

For location of patching areas see sheet 15/22.

For Expansion Bearing details see sheet 21/22.

The following abbreviations are used:

e.f. = each face	Ser. = series
m. = middle	NB = Northbound
Elev. = elevation	SB = Southbound
(Typ.) = typical	Clr. = Clearance
C.J. = Construction Joint	
U.N. = Unless otherwise noted	

DESIGN AGENCY
EUTHEMICS INC.
CONSULTING ENGINEERS
CLEVELAND, OHIO

DATE	REVIEWED	STRUCTURE FILE NUMBER
12-97	RAB	1829017 R1
DRAWN	REVISED	
GFH		
DESIGNED	CHECKED	
GFH	KRD	

PIER I
BRIDGE NO. CUY-71-0395L AND R
OVER THE OHIO TURNPIKE

CUY-71-0.00

PLOTTED BY: jgrmovse
PLOTTED: 06-AUG-1998 11:05
PLOT SUBMITTED:06-AUG-1998 11:05
376PRS01.DGN
376prs01.dgn

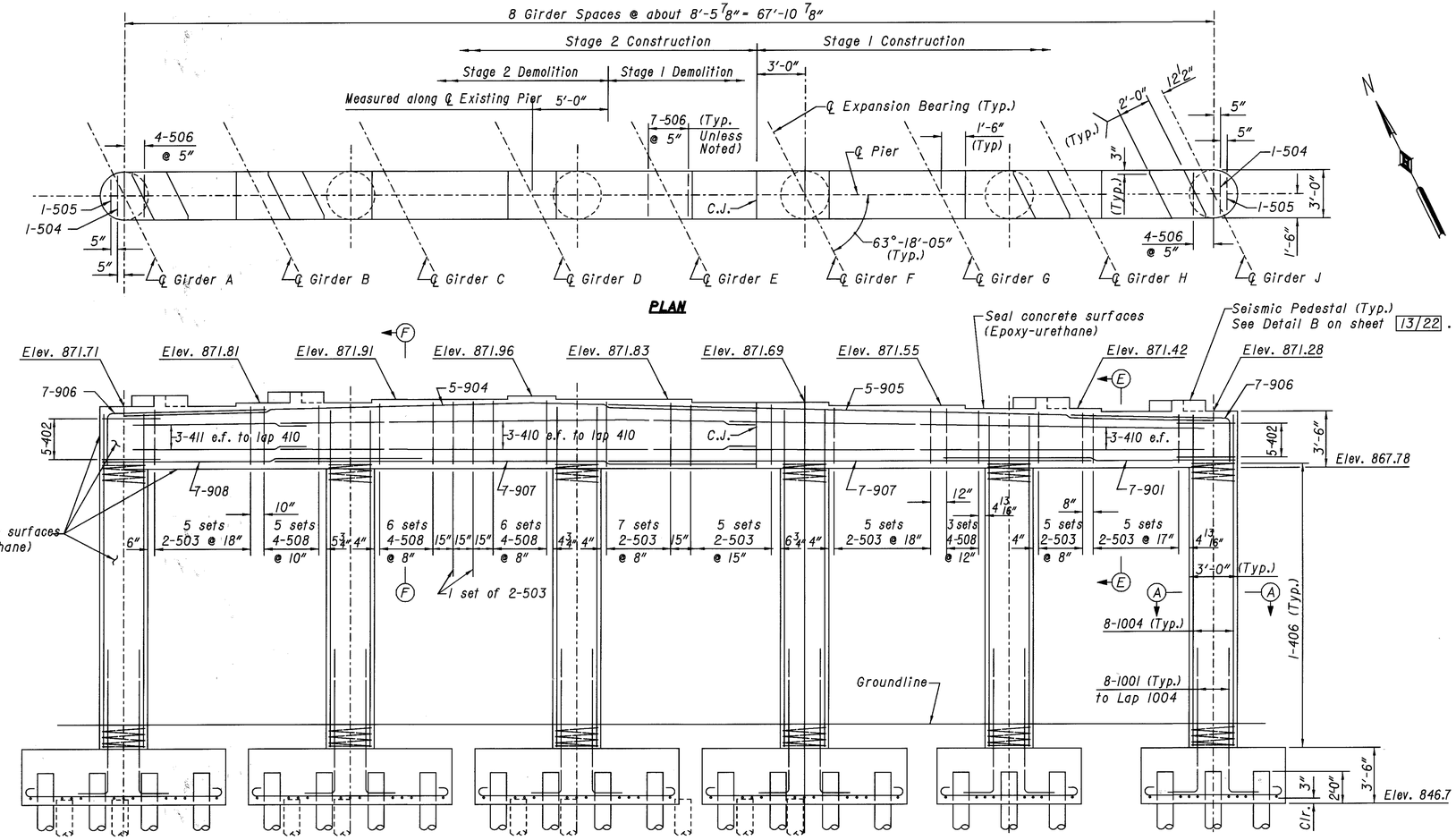

PLAN

ELEVATION

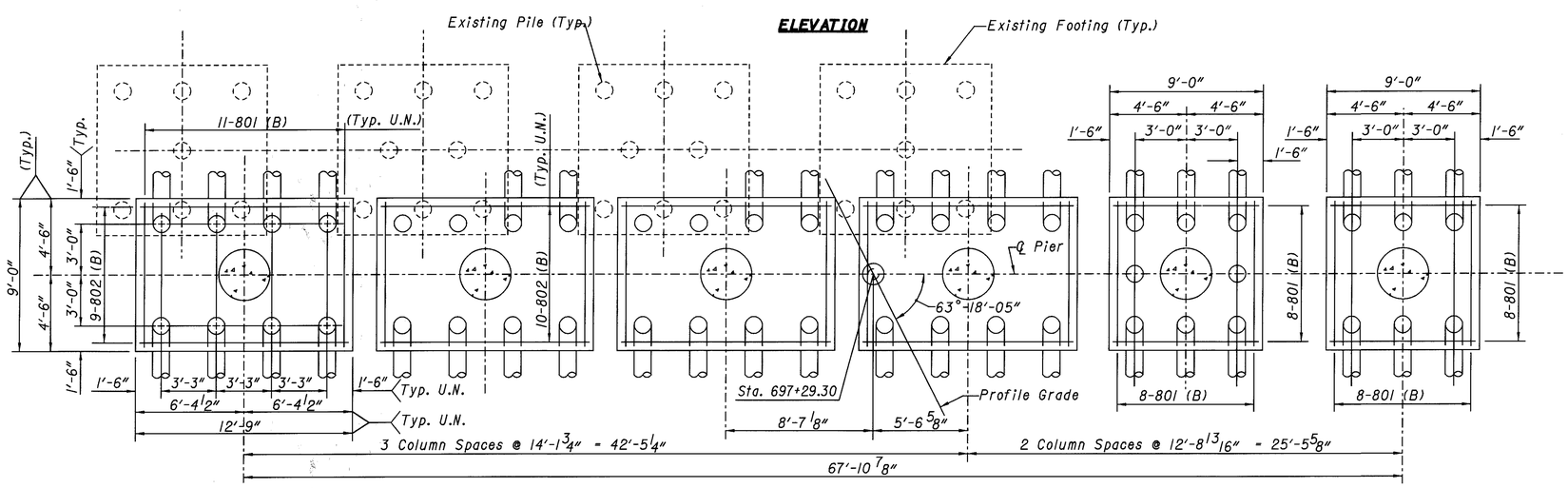

FOOTING PLAN

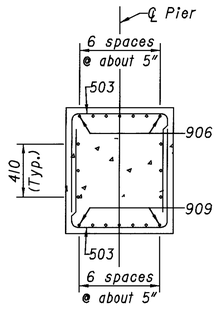

SECTION E-E

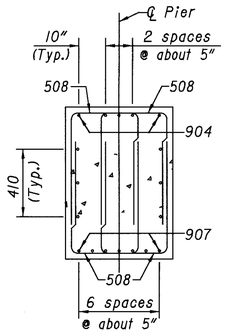

SECTION F-F

MINIMUM LAP LENGTHS
No. 4 Bar = 1'-8"
No. 5 Bar = 1'-11"
No. 9 Bar = 9'-2"
No. 10 Bar = 8'-3"

Note:

For Section A-A and additional notes see sheet 11/22.

For Pile Layout Plan and Pile Identification Numbers see sheet 10/22.

Existing footings to be removed as required. For limits of existing pile removal see Detail C on sheet 13/22.

DESIGN AGENCY: EUTHENICS INC. CONSULTING ENGINEERS, CLEVELAND, OHIO

DATE	REVIEWED	DRAWN	DESIGNED
12-97	RAB	GFH	GFH
STRUCTURE FILE NUMBER 1829017 R1	REVISED	REVISED	CHECKED KRD

PIER 2 (SOUTHBOUND)
BRIDGE NO. CUY-71-0395L AND R
OVER THE OHIO TURNPIKE

CUY-71-0.00

PLOTTED BY: jgrmovse
PLOTTED: 10-AUG-1998 11:06
PLOT SUBMITTED: 06-AUG-1998 11:06
376PR2SB.DGN
pid08459B.dgn B376pr2sb.dgn

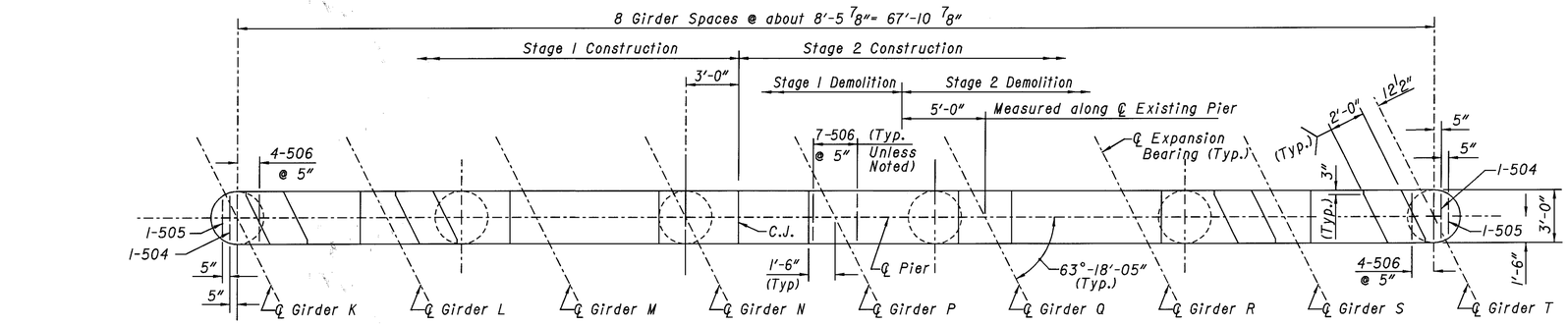

PLAN

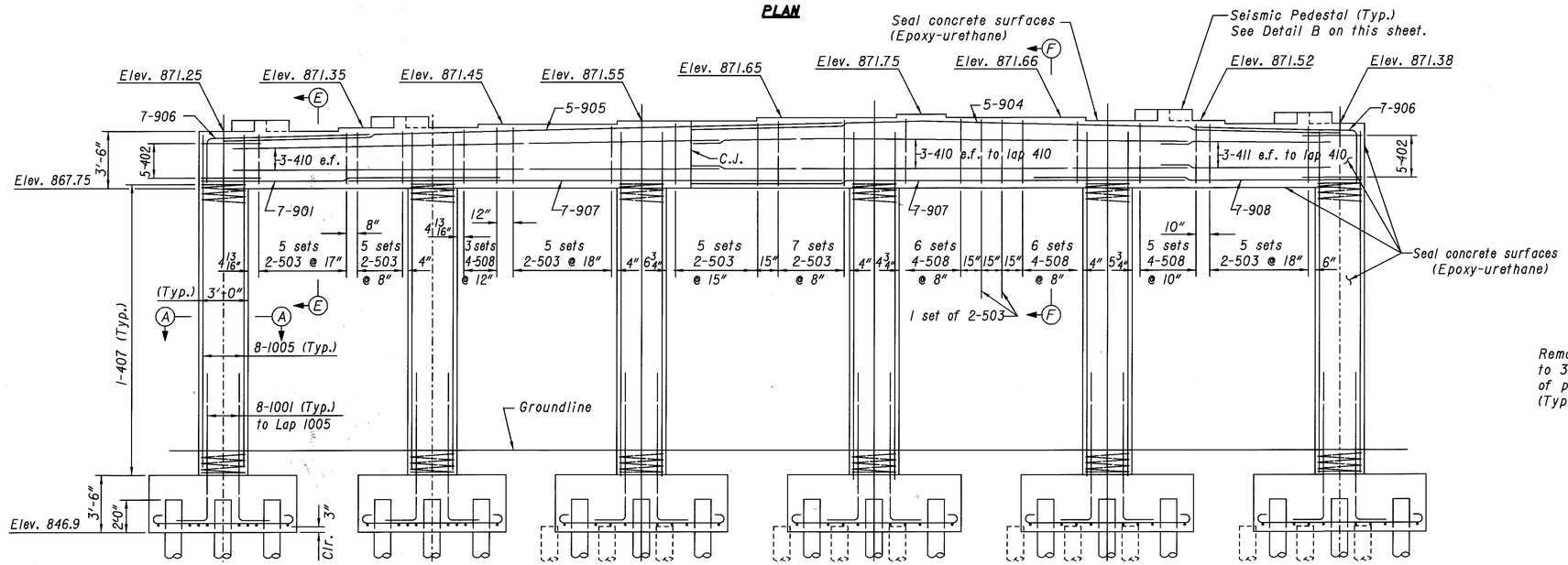

ELEVATION

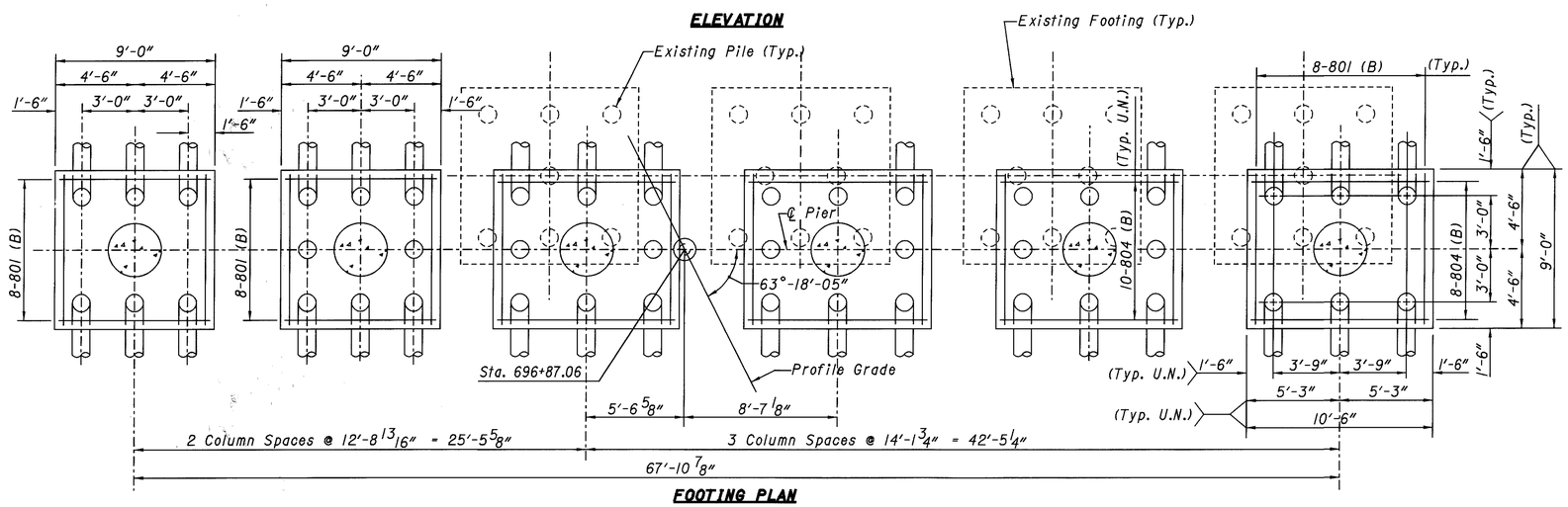

FOOTING PLAN

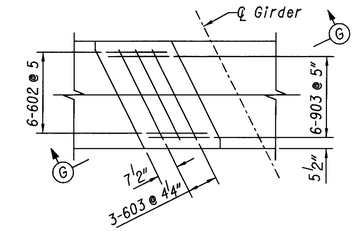

DETAIL B - SEISMIC PEDESTAL

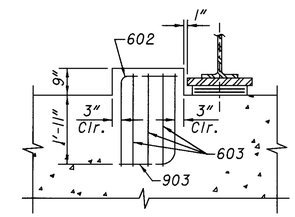

SECTION G-G

Note: Concrete cover will be 2" unless otherwise noted.

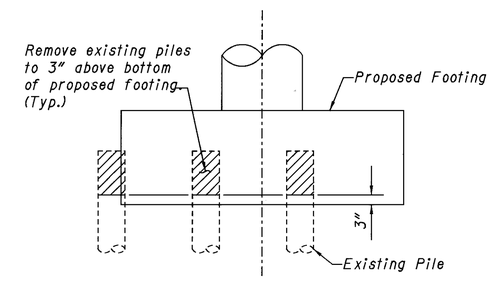

DETAIL C - REMOVAL LIMITS OF EXISTING PILES UNDER PROPOSED FOOTING

MINIMUM LAP LENGTHS
No. 4 Bar = 1'-8"
No. 5 Bar = 1'-11"
No. 9 Bar = 9'-2"
No. 10 Bar = 8'-3"

Notes:

For Section A-A and additional notes see sheet 11/22.

For Section E-E and F-F see sheet 12/22.

For Pile Layout Plan and Pile Identification Numbers see sheet 10/22.

Existing footings to be removed as required. For limits of existing pile removal see Detail C this sheet.

DESIGN AGENCY: EUTHENICS INC. CONSULTING ENGINEERS, CLEVELAND, OHIO

DATE	REVIEWED	DRAWN	DESIGNED
12-97	RAB	GFH	GFH
STRUCTURE FILE NUMBER 1829017 R1, 1829025 L1	REVISED	REVISED	CHECKED KRD

PIER 2 (NORTHBOUND)
BRIDGE NO. CUY-71-0395L AND R
OVER THE OHIO TURNPIKE

CUY-71-0.00

PLOTTED BY: jgrmovse
PLOTTED: 10-AUG-1998 10:40
PLOT SUBMITTED: 06-AUG-1998 11:07
376PR2NB.DGN
Pier 2 Beforsber Bridge 1829017R1,1829025L1,1376pr2nb.dgn

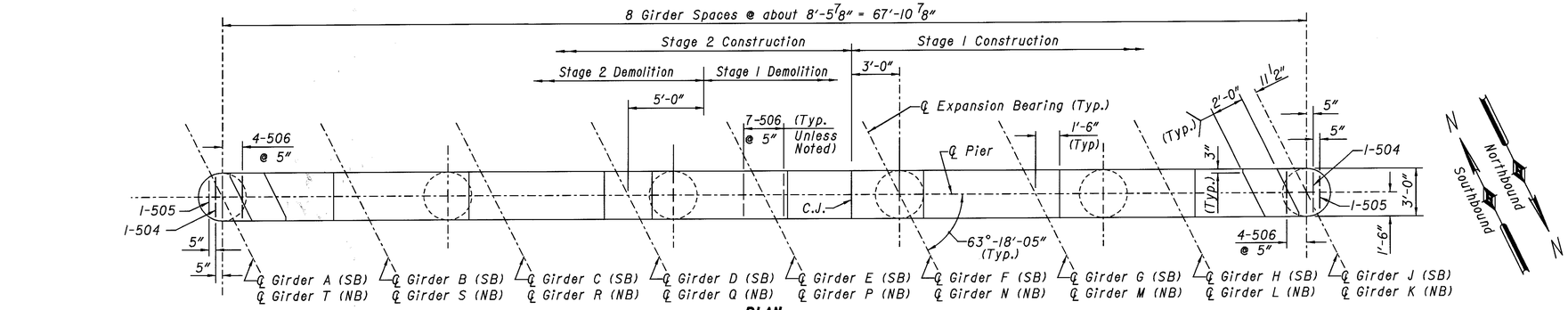

PLAN

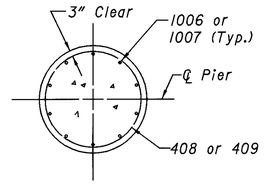

SECTION H-H

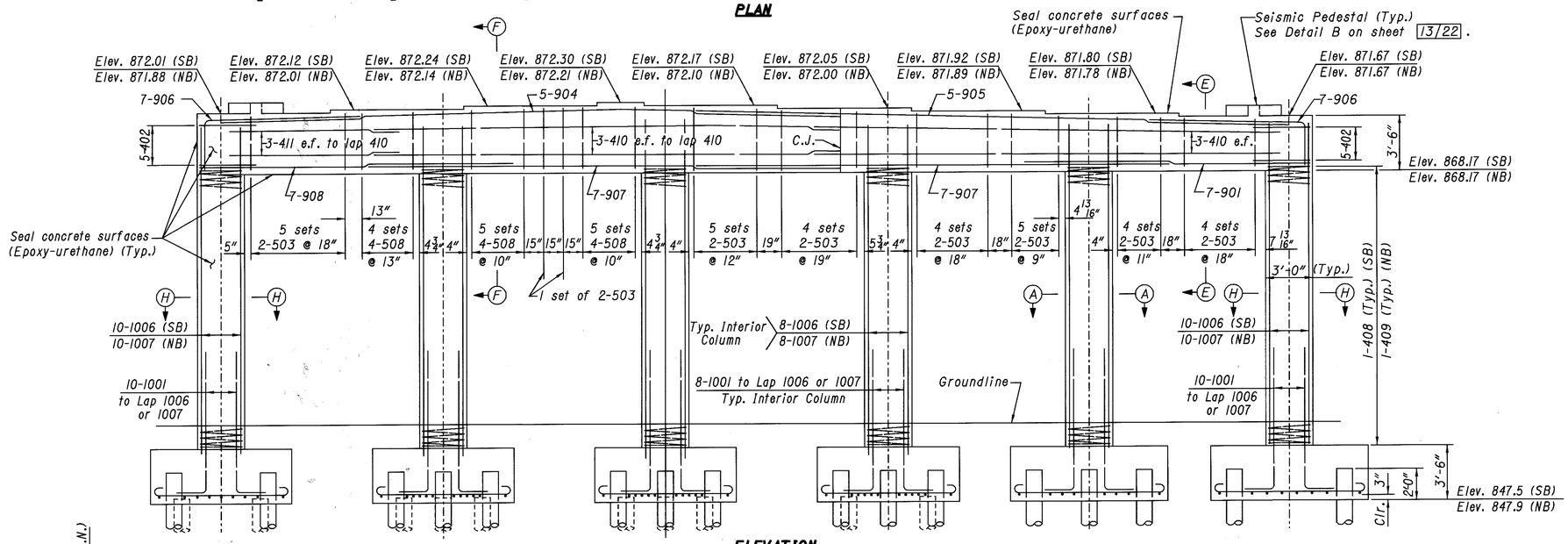

ELEVATION

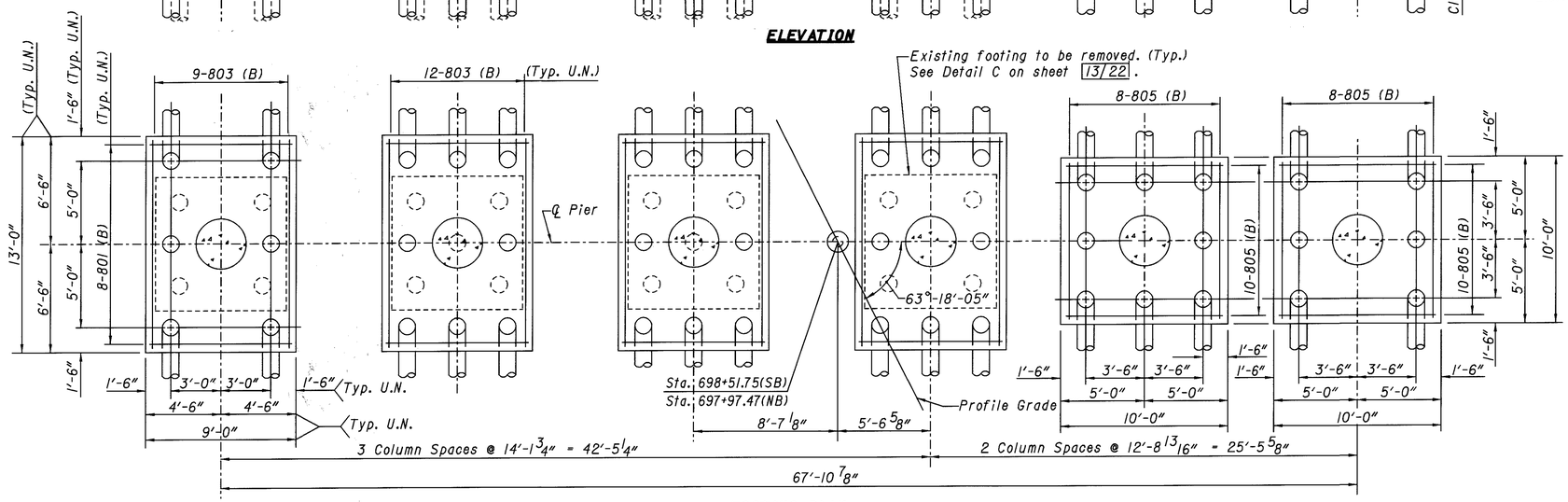

FOOTING PLAN

MINIMUM LAP LENGTHS

No. 4 Bar	= 1'-8"
No. 5 Bar	= 1'-11"
No. 9 Bar	= 9'-2"
No. 10 Bar	= 8'-3"

Note:

For Section A-A and additional notes see sheet 11/22.

For Section E-E and F-F see sheet 12/22.

For Pile Layout Plan and Pile Identification Numbers see sheet 10/22.

PIER 3
BRIDGE NO. CUY-71-0395L AND R
OVER THE OHIO TURNPIKE

CUY-71-0.00

DESIGN AGENCY: EUTHERIAS INC. CONSULTING ENGINEERS CLEVELAND, OHIO

DESIGNED	DRAWN	REVIEWED	DATE
GFH	GFH	RAB	12-97
CHECKED	REVISED	STRUCTURE FILE NUMBER	
KRD		1829025 Lt. 1829017 Rt.	

PLOTTED BY: jgrmovse
PLOTTED: 10-AUG-1998 11:07
PLOT SUBMITTED: 06-AUG-1998 11:07
376PRS03.DGN
376prs03.dgn

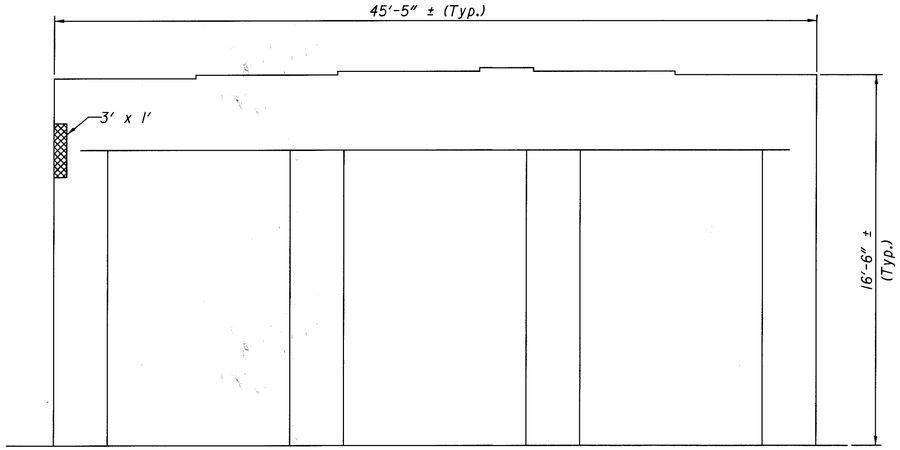

SOUTHBOUND PIER I
(South Elevation)

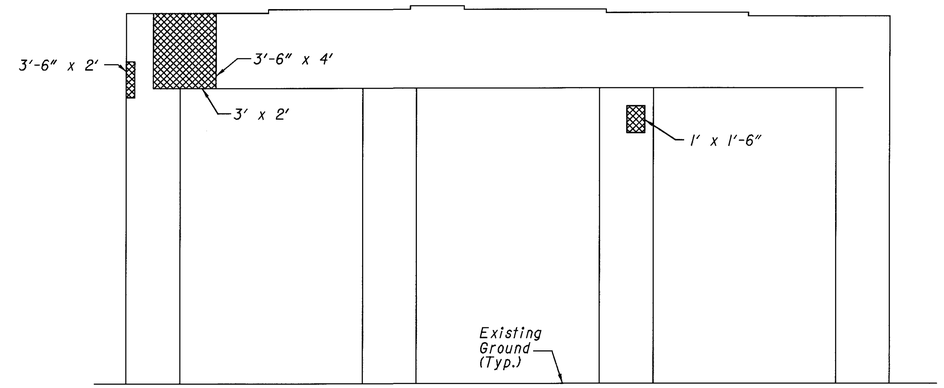

SOUTHBOUND PIER I
(North Elevation)

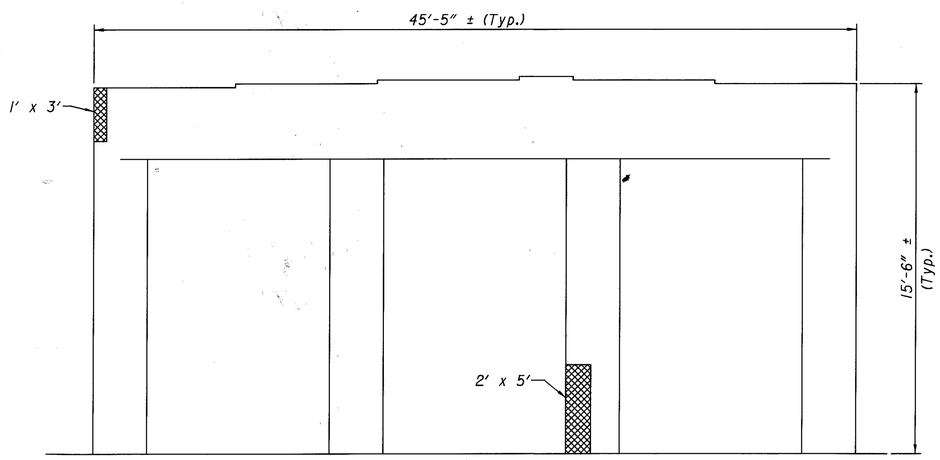

NORTHBOUND PIER I
(South Elevation)

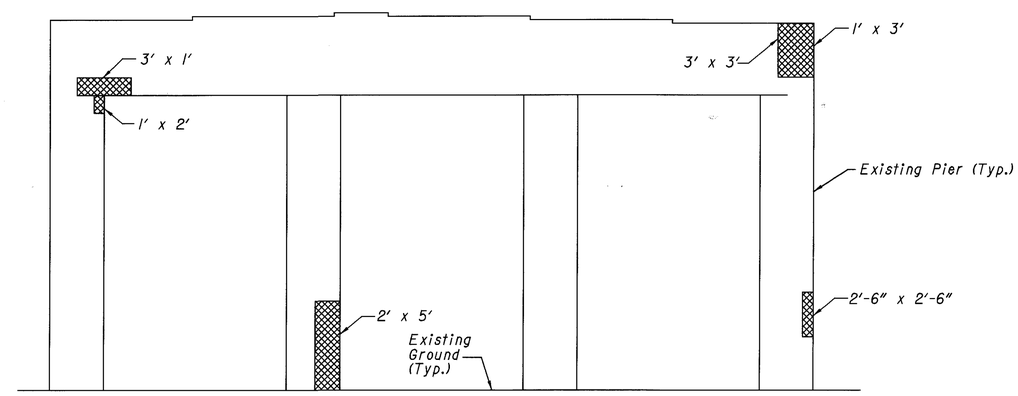

NORTHBOUND PIER I
(North Elevation)

Note:
Item 843 - Trowelable Mortar

PIER I PATCHING PLAN
BRIDGE NO. CUY-71-0395L AND R
OVER THE OHIO TURNPIKE

DESIGN AGENCY
EUTHENICS INC.
CONSULTING ENGINEERS
CLEVELAND, OHIO

DESIGNED	DRAWN	REVIEWED	DATE
RSY	RSY	KRD	12-97
CHECKED	REVISED	STRUCTURE FILE NUMBER	
GFH		1829025 L1, 1829017 R1	

CUY-71-0.00

PLOTTED BY:jgrmovse
PLOTTED FROM:Beforsber$pid08459$dgn$376pch02.dgn
376PCH02.DGN
PLOT SUBMITTED:06-AUG-1998 11:08

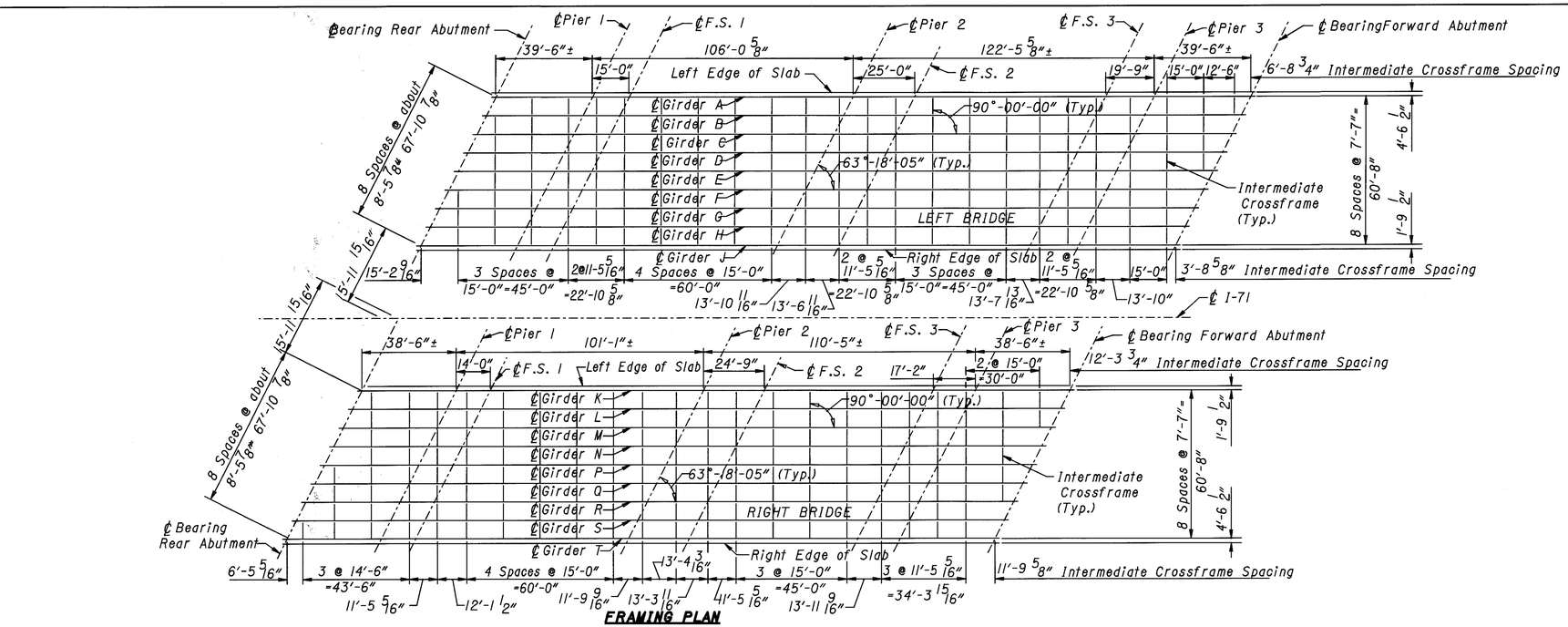

FRAMING PLAN

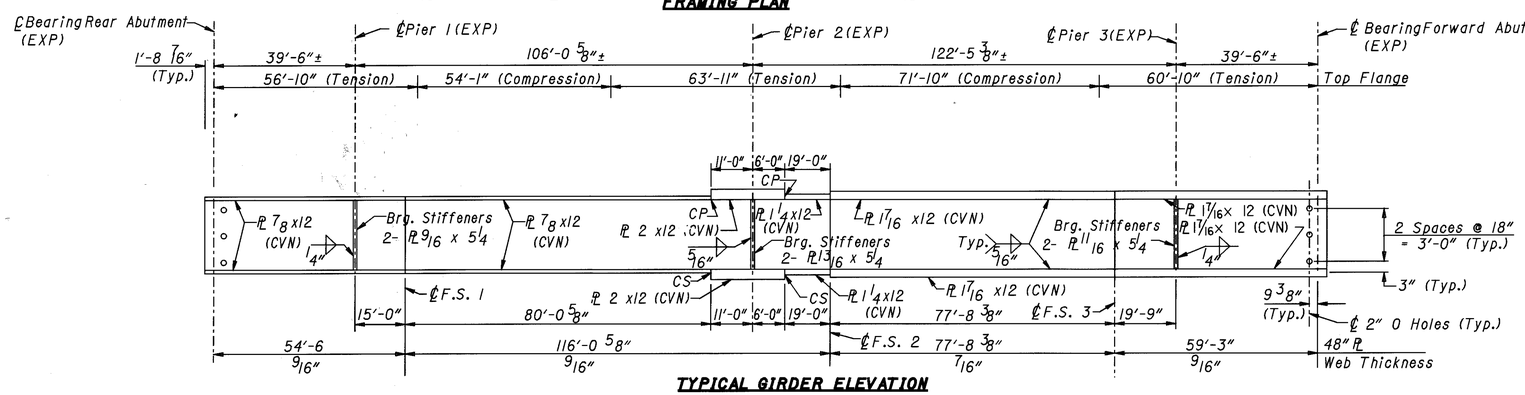

TYPICAL GIRDER ELEVATION
(SB - Left Bridge)

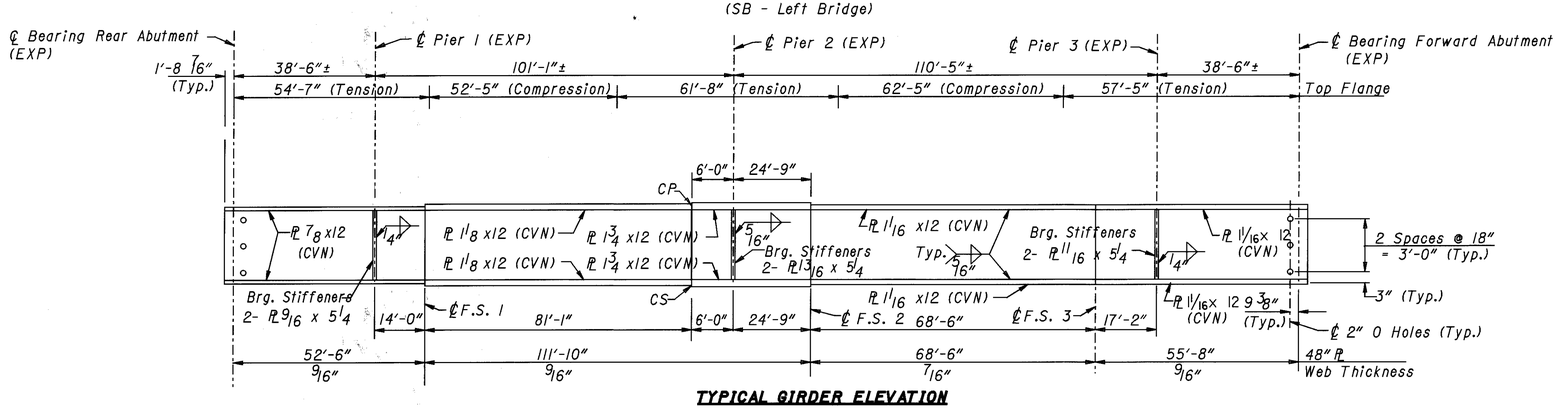

TYPICAL GIRDER ELEVATION
(NB - Right Bridge)

Notes:

Where a shape or plate is designated (CVN) the material shall meet the specified minimum notch toughness requirements as specified in 711.01.

CS- Indicates butt weld subject to compressive stresses only. This symbol should not be confused with "CP" which means complete penetration.

High strength bolts shall be 1" diameter A325 unless otherwise noted.

Welded attachment of supports for concrete deck finishing machine may be made to areas of the fascia girder flanges designated "Compression". Attachments shall not be made to areas designated "Tension". Fillet welds to compression flanges shall be not closer than 1" from edge of flange, be not more than 2" long, and be notsmaller than the minimum size required by AASHTO.

Intermediate Crossframes shall be Type 4, with Stiffener PL 5/8" x 7 1/2" and L3 x 3 x 5/16 . For details See Ohio Standard Drawing GSD-1-96, sheet 1 of 3.

Bearing stiffeners shall be as shown in the girder elevations except a PL 13/16" x 7 1/2" shall be used at crossframe connections. Bearing stiffeners with crossframes shall be welded to both flanges with the same size weld as shown for the web connection. For additional Bearing Stiffener details see Ohio Standard Drawing GSD-1-96, sheet 2 of 3.

For bearing details, see sheet 21/22.

The following abbreviations are used:

(Typ.) = Typical — F.S. = Field Splice
SB = Southbound — NB = Northbound
Brg. = Bearing — (EXP) = Expansion
T = Top
B = Bottom

DESIGN AGENCY
EUTHENICS INC.
CONSULTING ENGINEERS
CLEVELAND, OHIO

DESIGNED	DRAWN	REVIEWED	DATE
RSY	RSY	KRD	12-97
CHECKED	REVISED	STRUCTURE FILE NUMBER	
GFH	MJM	1829025 Lt. 1829017 Rt.	

FRAMING PLAN
BRIDGE NO. CUY-71-0395L AND R
OVER THE OHIO TURNPIKE

CUY-71-0.00

PLOTTED BY: jgrmovse
PLOTTED: 1998/08/06 15:09:43.00
PLOT SUBMITTED:06-AUG-1998 11:09
376FP01.DGN

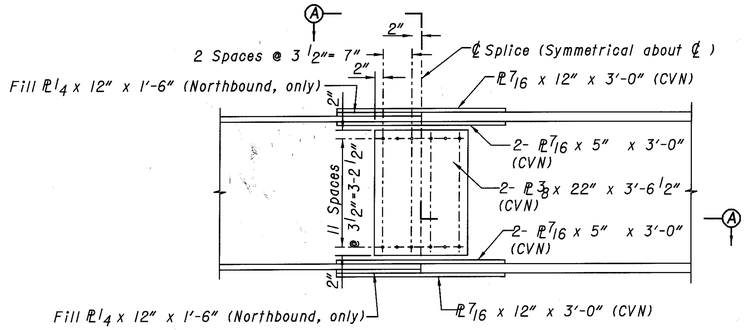

GIRDER FIELD SPLICE 1

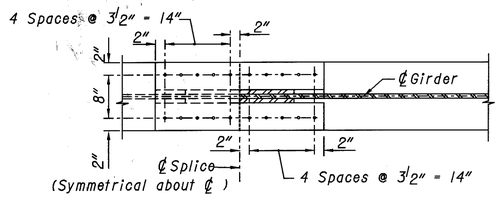

SECTION A-A

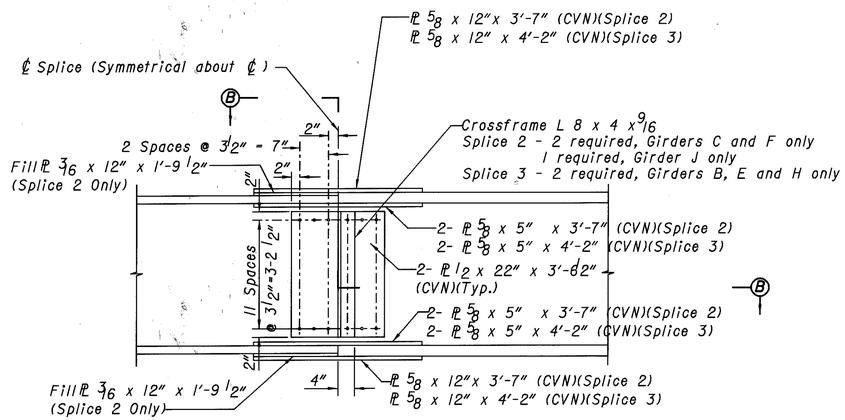

LEFT BRIDGE GIRDER FIELD SPLICES 2 & 3
(Southbound)

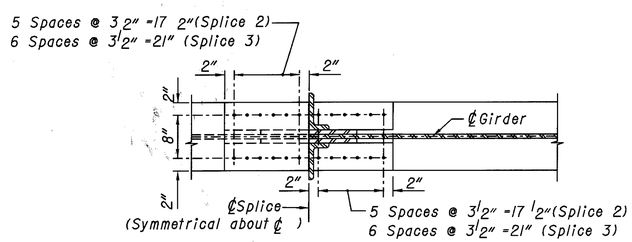

SECTION B-B

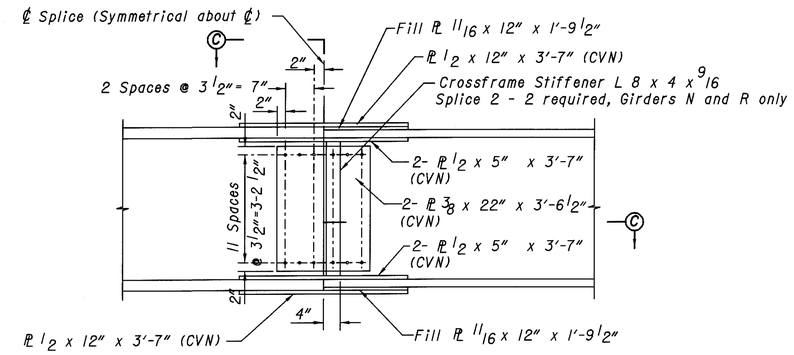

RIGHT BRIDGE GIRDER FIELD SPLICES 2 & 3
(Northbound)

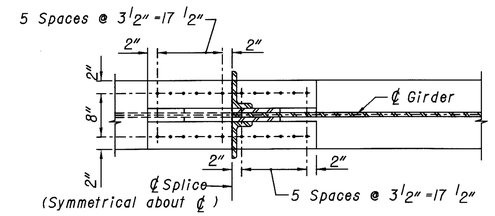

SECTION C-C

Notes:
For location of field splices and
For additional notes see sheet 16/22.

331/361

DESIGN AGENCY
EUTHEMICS INC.
CONSULTING ENGINEERS
CLEVELAND, OHIO

DESIGNED	DRAWN	REVIEWED	DATE
RSY	RSY	KRD	12-97
CHECKED	REVISED	STRUCTURE FILE NUMBER	
GFH	MJM	1829025 U, 1829017 R1.	

SUPERSTRUCTURE DETAILS
BRIDGE NO. CUY-71-0395L AND R
OVER THE OHIO TURNPIKE

CUY-71-0.00

17/22

PLOTTED BY: jgrmovse
PLOTTED: 08-06-98 11:11
PLOTTED FROM: C:\pwworking\cuy\d0845912\376ssd01.dgn
PLOTTED BY: jgrmovse
PLOTTED: 08-06-98 11:11
PLOTTED FROM: C:\pwworking\cuy\d0845912\376ssd01.dgn
PLOT SUBMITTED: 06-AUG-1998 11:11
376SSD01.DGN

DEAD LOAD DEFLECTION AND CAMBER

	Girder	SPAN 1 1/2 Stl.	Rem. D.L.	Con.	Tot.	Field Splice 1 Stl.	Rem. D.L.	Con.	Tot.	SPAN 2 1/5 Stl.	Rem. D.L.	Con.	Tot.	2/5 Stl.	Rem. D.L.	Con.	Tot.	3/5 Stl.	Rem. D.L.	Con.	Tot.	4/5 Stl.	Rem. D.L.	Con.	Tot.	Girder
SOUTH-BOUND	A	0	-1/8	1/16	-1/16	1/16	1/2	3/16	3/4	1/8	3/4	1/4	1 1/8	3/16	1 3/16	3/8	1 3/4	1/8	15/16	3/8	1 7/16	1/16	1/4	1/4	9/16	A
	B thru H	0	-1/16	1/16	0	1/16	3/8	3/16	5/8	1/8	5/8	1/4	1	3/16	1	3/8	1 9/16	1/8	13/16	3/8	1 5/16	1/16	1/4	1/4	9/16	B thru H
	J	0	-1/16	1/16	0	1/16	5/16	3/16	9/16	1/8	1/2	1/4	7/8	3/16	13/16	3/8	1 3/8	1/8	5/8	3/8	1 1/8	1/16	3/16	1/4	1/2	J

	Girder	SPAN 3 1/5 Stl.	Rem. D.L.	Con.	Tot.	Field Splice 2 Stl.	Rem. D.L.	Con.	Tot.	2/5 Stl.	Rem. D.L.	Con.	Tot.	3/5 Stl.	Rem. D.L.	Con.	Tot.	4/5 Stl.	Rem. D.L.	Con.	Tot.	Field Splice 3 Stl.	Rem. D.L.	Con.	Tot.	SPAN 4 1/2 Stl.	Rem. D.L.	Con.	Tot.	Girder
SOUTH-BOUND	A	3/16	1 1/16	5/16	1 9/16	3/16	1 1/16	3/8	1 5/8	3/8	2 1/4	1/2	3 1/8	3/8	2 3/8	1/2	3 1/4	3/16	1 5/16	5/16	1 13/16	1/8	1 1/16	5/16	1 1/2	0	-3/16	1/16	-1/8	A
	B thru H	3/16	7/8	5/16	1 3/8	3/16	15/16	3/8	1 1/2	3/8	1 7/8	1/2	2 3/4	3/8	2	1/2	2 7/8	3/16	1 1/8	5/16	1 5/8	3/16	7/8	5/16	1 3/8	-1/16	-3/16	1/16	-3/16	B thru H
	J	3/16	11/16	5/16	1 3/16	3/16	3/4	3/8	1 5/16	3/8	1 1/2	1/2	2 3/8	3/8	1 9/16	1/2	2 7/16	3/16	7/8	5/16	1 3/8	1/8	11/16	5/16	1 1/8	0	-1/8	1/16	-1/16	J

DEAD LOAD DEFLECTION AND CAMBER

	Girder	SPAN 1 1/2 Stl.	Rem. D.L.	Con.	Tot.	Field Splice 1 Stl.	Rem. D.L.	Con.	Tot.	SPAN 2 1/5 Stl.	Rem. D.L.	Con.	Tot.	2/5 Stl.	Rem. D.L.	Con.	Tot.	3/5 Stl.	Rem. D.L.	Con.	Tot.	4/5 Stl.	Rem. D.L.	Con.	Tot.	Girder
NORTH-BOUND	K	0	-1/16	1/16	0	1/16	1/4	3/16	1/2	1/8	3/8	1/4	3/4	3/16	5/8	3/8	1 3/16	1/8	1/2	3/8	1	3/16	1/8	1/4	7/16	K
	L thru S	0	-1/16	1/16	0	1/16	5/16	3/16	9/16	1/8	1/2	1/4	7/8	3/16	13/16	3/8	1 3/8	1/8	5/8	3/8	1 1/8	1/16	3/16	1/4	1/2	L thru S
	T	0	-1/16	1/16	0	1/16	3/8	3/16	5/8	1/8	9/16	1/4	15/16	3/16	15/16	3/8	1 1/2	1/8	3/4	3/8	1 1/4	1/16	1/4	1/4	9/16	T

	Girder	SPAN 3 1/5 Stl.	Rem. D.L.	Con.	Tot.	Field Splice 2 Stl.	Rem. D.L.	Con.	Tot.	2/5 Stl.	Rem. D.L.	Con.	Tot.	3/5 Stl.	Rem. D.L.	Con.	Tot.	4/5 Stl.	Rem. D.L.	Con.	Tot.	Field Splice 3 Stl.	Rem. D.L.	Con.	Tot.	SPAN 4 1/2 Stl.	Rem. D.L.	Con.	Tot.	Girder
NORTH-BOUND	K	1/8	1/2	1/4	7/8	1/8	9/16	5/16	1	1/4	1 1/16	7/16	1 3/4	1/4	1 3/16	7/16	1 7/8	1/8	11/16	1/4	1 1/16	1/8	1/2	1/4	7/8	0	-1/8	1/16	-1/16	K
	L thru S	1/8	5/8	1/4	1	1/8	3/4	5/16	1 3/16	1/4	1 3/8	7/16	2 1/16	1/4	1 7/16	7/16	2 1/8	1/8	13/16	1/4	1 3/16	1/8	5/8	1/4	1	0	-1/8	1/16	-1/16	L thru S
	T	1/8	3/4	1/4	1 1/8	1/8	7/8	5/16	1 5/16	1/4	1 5/8	7/16	2 5/16	1/4	1 3/4	7/16	2 7/16	1/8	1	1/4	1 3/8	1/8	3/4	1/4	1 1/8	0	-1/8	1/16	-1/16	T

Note: Negative values for deflections indicate deflections above chord line. Negative values of total required camber indicate values below the chord line.
Deflections and convexities are given to the nearest 1/16 inch.

The following abbreviations are used:

Stl. = Dead load deflection due to weight of steel
Rem D.L. = Remaining dead load deflection
Con. = Convexity
Tot. = Total required camber

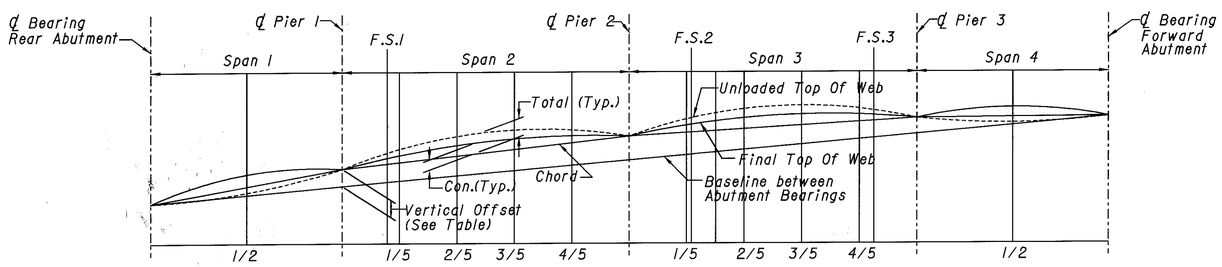

CAMBER DIAGRAM
(Typical All Girders)

VERTICAL OFFSET			
BEAM	PIER 1	PIER 2	PIER 3
A Thru J	1 1/2"	3 3/8"	1 1/2"
K Thru T	1 3/8"	2 15/16"	1 3/8"

331A
361

DESIGN AGENCY
EUTHEMIES INC.
CONSULTING ENGINEERS
CLEVELAND, OHIO

DATE	REVIEWED	DRAWN	DESIGNED
12-97	RAB	PJK	GFH
STRUCTURE FILE NUMBER		REVISED	CHECKED
1829025 LT., 1829017 RT.			KRD

DEFLECTIONS AND CAMBER
BRIDGE NO. CUY-71-0395L AND R
OVER THE OHIO TURNPIKE

CUY-71-0.00

PLOTTED BY: jgrmovse
PLOTTED: FROM: Beforsber Epid08459 Edgn B376dc01.dgn
PLOT SUBMITTED: 06-AUG-1998 11:11
376DC01.DGN

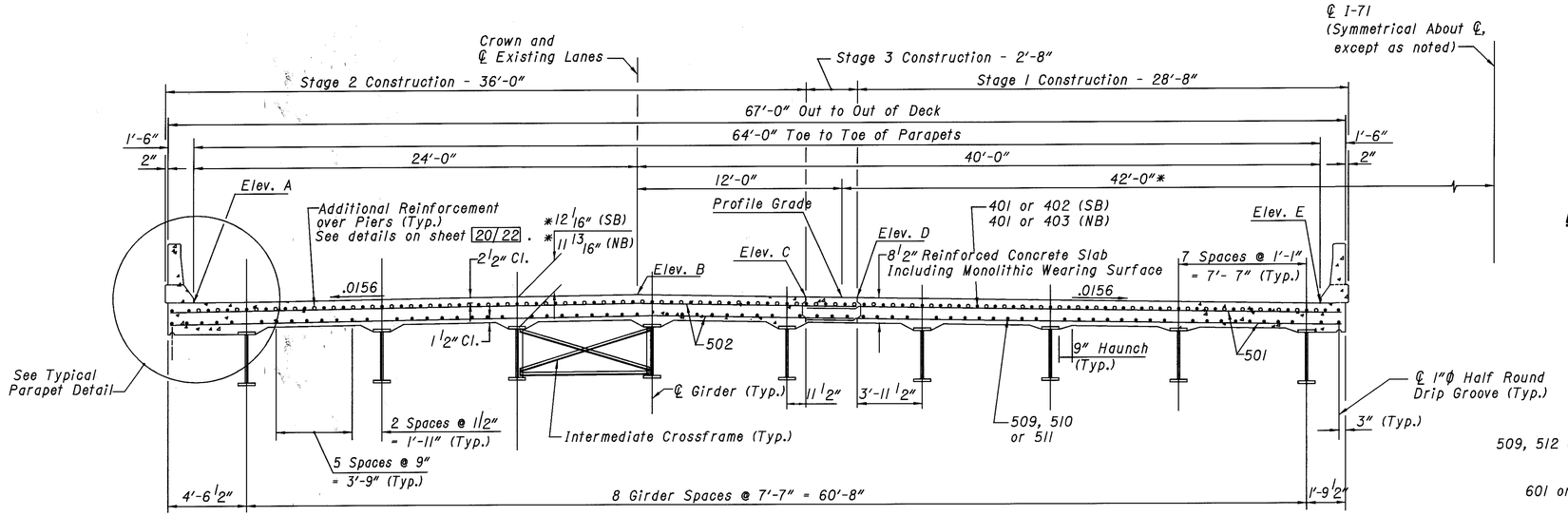

TRANSVERSE SECTION

* The distance shown from the top of the deck slab to the bottom of the top flange is the theoretical design dimension including the design haunch thickness of 2 inches. The quantity of deck concrete to be paid for shall be based upon this dimension, minus the design haunch thickness, even though deviation from it may be necessary because the top flange of the girder may not have the exact camber or conformation required to place it parallel to the finished grade. Deduction shall be made for volume of encased steel plates as per 511.18.

Minimum Lap Lengths	
No.4 Bar	1'-7"
No.5 Bar	2'-6"
No.6 Bar	2'-4"

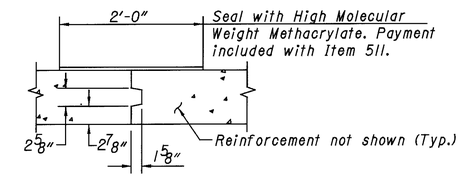

LONGITUDINAL CONSTRUCTION JOINT DETAIL

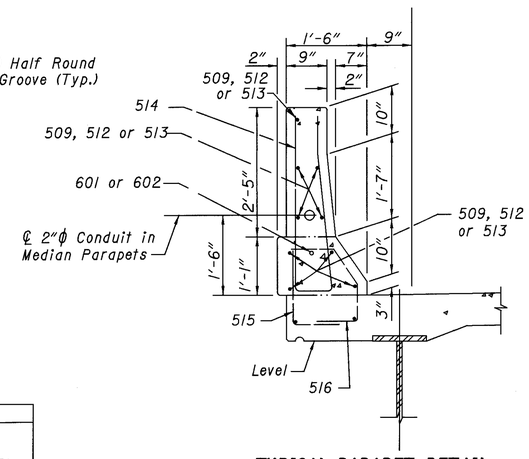

TYPICAL PARAPET DETAIL

Notes:

Intermediate cross frames shall not be permanently attached in the closure pour location until the concrete pours on both sides of the closure pour location have been completed and cured for seven days.

A haunch width of 9" shall be used for computing quantity of concrete. However, the haunch width may vary between 6 and 12 inches.

All reinforcing bars shall be prefixed S (Superstructure).

Diaphragm concrete encasing the structural member sections supported in semi-integral type abutments shall be placed at least 48 hours before the actual deck concrete is placed. For diaphragm reinforcing and details see sheet 9/22.

For reinforcement schedule see sheet 22/22.

For transverse reinforcing, parapet reinforcing, and additional superstructure reinforcing see sheet 20/22.

The following abbreviations are used:
T = Top B = Bottom
Min. = Minimum Typ. = Typical
NB = Northbound SB = Southbound
Fwd. = Forward

DECK SCREED ELEVATIONS

		SPAN 1			SPAN 2						SPAN 3							SPAN 4			
	Elev.	℄ Bearing Rear Abutment	1/2	℄ Bearing Pier 1	Field Splice 1	1/5	2/5	3/5	4/5	℄ Bearing Pier 2	1/5	Field Splice 2	2/5	3/5	4/5	Field Splice 3	℄ Bearing Pier 3	1/2	℄ Bearing Fwd. Abutment	Elev.
SOUTHBOUND LANES	A	876.36	876.49	876.63	876.77	876.82	876.99	877.08	877.12	877.18	877.36	877.37	877.54	877.61	877.57	877.55	877.49	877.49	877.51	A
	B	876.64	876.78	876.93	877.06	877.12	877.28	877.38	877.43	877.51	877.68	877.68	877.85	877.92	877.90	877.89	877.85	877.86	877.88	B
	C	876.44	876.58	876.73	876.86	876.92	877.08	877.18	877.25	877.32	877.50	877.50	877.66	877.75	877.73	877.72	877.68	877.69	877.72	C
	D	876.39	876.53	876.68	876.82	876.87	877.04	877.14	877.20	877.28	877.45	877.46	877.62	877.70	877.69	877.68	877.64	877.65	877.68	D
	E	875.86	876.01	876.16	876.30	876.35	876.51	876.63	876.71	876.80	876.96	876.97	877.12	877.21	877.22	877.21	877.19	877.21	877.24	E
	Girder																			Girder
	A	876.40	876.53	876.67	876.81	876.86	877.02	877.12	877.16	877.23	877.40	877.41	877.58	877.65	877.61	877.60	877.53	877.53	877.56	A
	B	876.49	876.62	876.76	876.89	876.95	877.11	877.20	877.26	877.33	877.50	877.50	877.66	877.73	877.71	877.69	877.65	877.65	877.67	B
	C	876.58	876.71	876.86	876.99	877.04	877.20	877.30	877.36	877.43	877.60	877.60	877.76	877.84	877.82	877.81	877.76	877.77	877.79	C
	D	876.61	876.75	876.89	877.03	877.08	877.24	877.34	877.40	877.48	877.65	877.65	877.81	877.89	877.87	877.86	877.82	877.83	877.85	D
	E	876.46	876.60	876.75	876.88	876.94	877.10	877.20	877.27	877.34	877.52	877.52	877.68	877.76	877.75	877.74	877.70	877.70	877.73	E
	F	876.31	876.46	876.61	876.74	876.80	876.96	877.07	877.13	877.21	877.38	877.39	877.55	877.64	877.62	877.61	877.57	877.58	877.61	F
	G	876.16	876.31	876.46	876.60	876.65	876.82	876.93	876.99	877.07	877.25	877.25	877.42	877.51	877.49	877.48	877.45	877.46	877.49	G
	H	876.02	876.16	876.32	876.45	876.51	876.68	876.79	876.85	876.94	877.12	877.12	877.29	877.38	877.37	877.36	877.32	877.34	877.37	H
	J	875.87	876.02	876.17	876.30	876.36	876.52	876.63	876.71	876.80	876.97	876.97	877.13	877.21	877.22	877.22	877.20	877.22	877.25	J
NORTHBOUND LANES	Elev.																			Elev.
	A	875.76	875.93	876.10	876.24	876.30	876.49	876.61	876.70	876.80	876.99	877.01	877.17	877.28	877.30	877.30	877.30	877.34	877.40	A
	B	876.25	876.41	876.57	876.70	876.76	876.93	877.06	877.15	877.25	877.41	877.44	877.58	877.68	877.71	877.71	877.71	877.75	877.80	B
	C	876.13	876.29	876.45	876.58	876.64	876.81	876.93	877.01	877.11	877.28	877.30	877.44	877.54	877.56	877.56	877.56	877.60	877.65	C
	D	876.10	876.26	876.42	876.55	876.61	876.78	876.90	876.98	877.08	877.24	877.26	877.40	877.50	877.53	877.53	877.52	877.56	877.61	D
	E	875.79	875.95	876.10	876.22	876.27	876.43	876.55	876.63	876.73	876.87	876.89	877.01	877.10	877.13	877.13	877.14	877.17	877.21	E
	Girder																			Girder
	K	875.80	875.95	876.10	876.22	876.28	876.43	876.55	876.64	876.73	876.88	876.90	877.02	877.11	877.14	877.14	877.14	877.18	877.22	K
	L	875.88	876.04	876.19	876.32	876.38	876.54	876.66	876.74	876.83	876.99	877.01	877.15	877.24	877.26	877.26	877.25	877.28	877.33	L
	M	875.97	876.12	876.28	876.41	876.47	876.63	876.75	876.83	876.93	877.09	877.11	877.25	877.34	877.37	877.36	877.36	877.39	877.44	M
	N	876.06	876.21	876.37	876.50	876.56	876.73	876.85	876.93	877.03	877.19	877.21	877.35	877.45	877.47	877.47	877.47	877.50	877.55	N
	P	876.14	876.30	876.46	876.59	876.65	876.82	876.94	877.03	877.12	877.29	877.31	877.45	877.55	877.58	877.58	877.58	877.61	877.67	P
	Q	876.23	876.39	876.55	876.68	876.74	876.91	877.04	877.12	877.22	877.39	877.41	877.55	877.66	877.68	877.68	877.68	877.72	877.78	Q
	R	876.13	876.29	876.45	876.59	876.65	876.82	876.95	877.04	877.14	877.31	877.33	877.47	877.58	877.61	877.61	877.61	877.65	877.71	R
	S	875.98	876.14	876.31	876.44	876.50	876.68	876.80	876.90	877.00	877.17	877.19	877.34	877.44	877.48	877.48	877.48	877.52	877.58	S
	T	875.82	875.99	876.16	876.30	876.36	876.55	876.67	876.76	876.86	877.04	877.07	877.22	877.33	877.36	877.35	877.35	877.39	877.45	T

Note: The top of concrete deck elevations above are those which are required before concrete is placed. Proper allowances have been made for the anticipated dead load deflections caused by the weight of the concrete.

331B
361

DESIGN AGENCY
EUTHENICS INC.
CONSULTING ENGINEERS
CLEVELAND, OHIO

DESIGNED	DRAWN	REVIEWED	DATE
GFH	GFH	RAB	12-97
CHECKED	REVISED	STRUCTURE FILE NUMBER	
KRD		1829025 L4, 1829011 R1.	

TRANSVERSE SECTION
BRIDGE NO. CUY-71-0395L AND R
OVER THE OHIO TURNPIKE

CUY-71-0.00

PLOTTED BY:jgrmovse
PLOTTED:06-AUG-1998 11:13
PLOT SUBMITTED:06-AUG-1998 11:13
376TSX01.DGN
PLOTTED FROM:C:\temp\sbforsber\pid08459\376tsx01.dgn

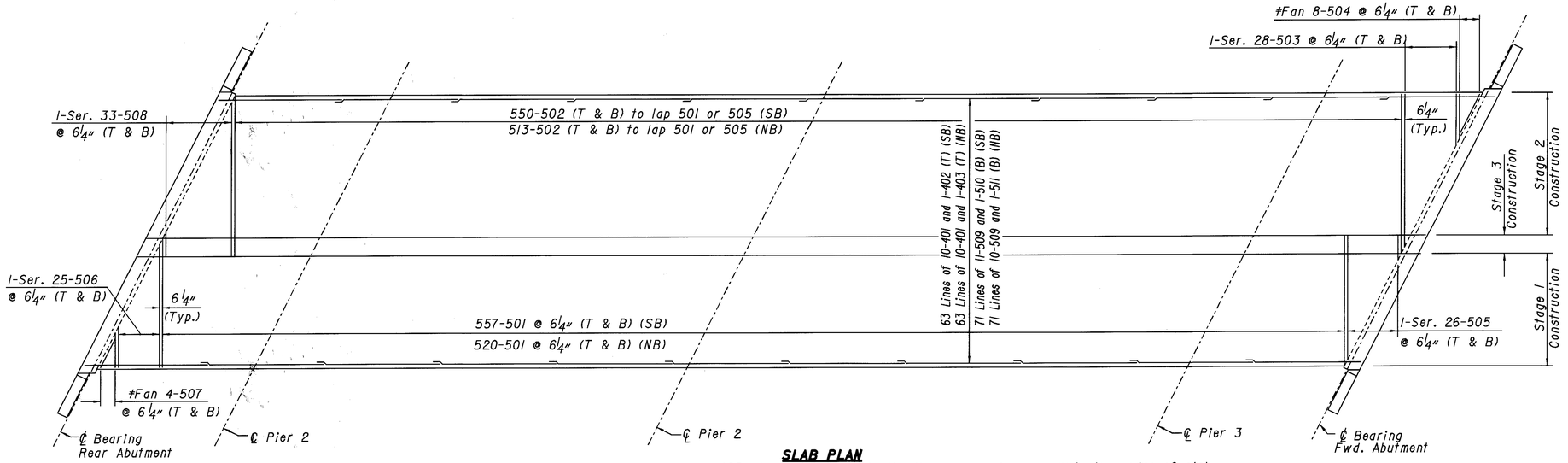

SLAB PLAN

(SB shown, NB Opposite Hand) # measured along edge of slab.

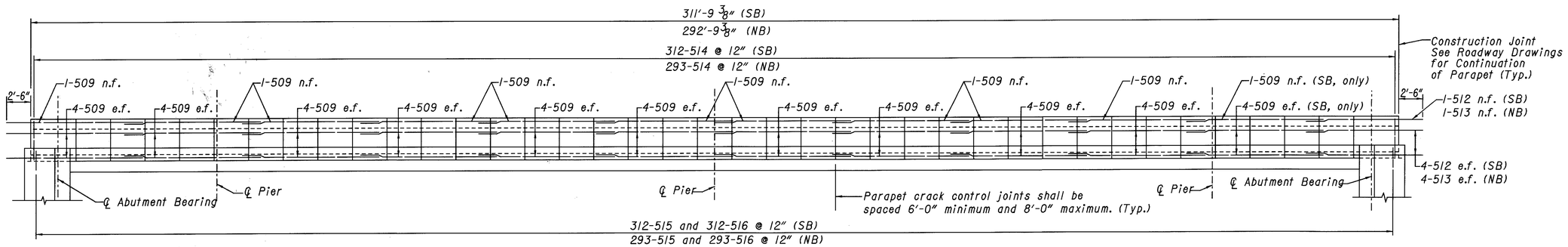

TYPICAL PARAPET ELEVATION

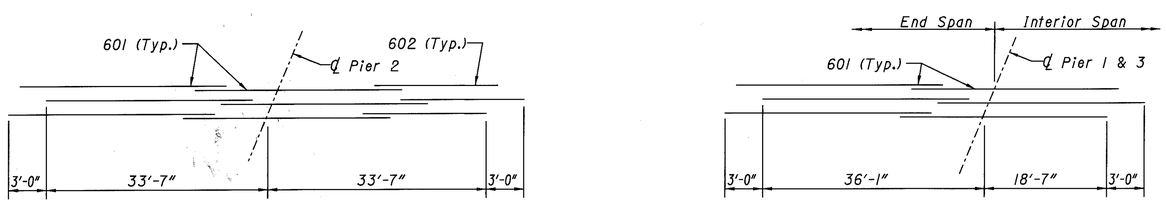

ADDITIONAL REINFORCEMENT OVER PIERS

Minimum Lap Lengths	
No.4 Bar	1'-7"
No.5 Bar	2'-6"
No.6 Bar	2'-4"

Notes:

For spacing of longitudinal reinforcing steel in the slab and placement of reinforcing steel in the parapets see sheet 19/22.

All reinforcing bars shall be prefixed S (Superstructure).

For reinforcement schedule see sheet 22/22.

The following abbreviations are used:

T = Top B = Bottom
Min. = Minimum Typ. = Typical
NB = Northbound SB = Southbound
Fwd. = Forward

331C
361

DESIGN AGENCY
EUTHEMACS INC.
CONSULTING ENGINEERS
CLEVELAND, OHIO

DESIGNED	DRAWN	REVIEWED	DATE
GFH	GFH	RAB	12-97
CHECKED	REVISED	STRUCTURE FILE NUMBER	
KRD		18290125 L4, 1829017 R1.	

SLAB PLAN AND PARAPET ELEVATION
BRIDGE NO. CUY-71-0395L AND R
OVER THE OHIO TURNPIKE

CUY-71-0.00

20/22

PLOTTED BY: jgrmovse
PLOTTED in Root: /users/efors/ber/pid08459/dgn/376pe01.dgn
PLOTTED in Root: /users/efors/ber/pid08459/dgn/B376pe01.dgn
PLOTTED: 06-AUG-1998 11:15
376PE01.DGN

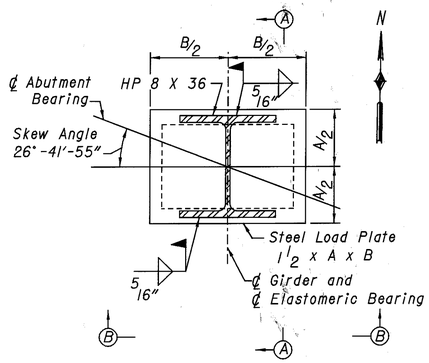

EXPANSION BEARING AT ABUTMENTS

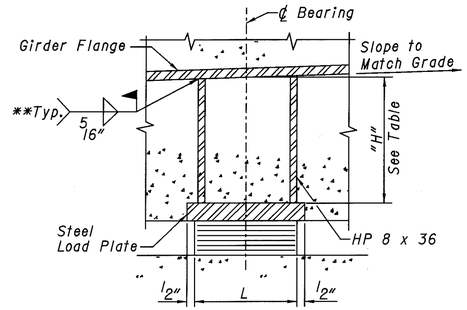

SECTION A-A

** or shop weld at the Contractor's option

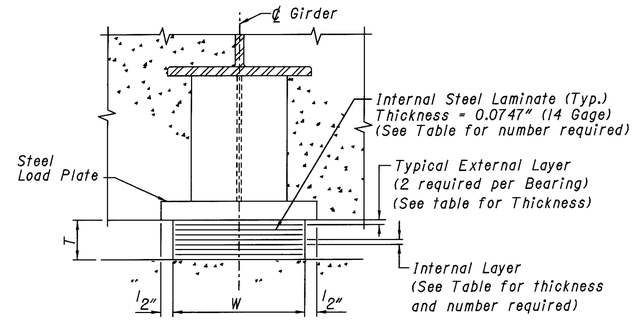

SECTION B-B

PEDESTAL HEIGHT "H" (Inches)										
SOUTHBOUND	GIRDER	A	B	C	D	E	F	G	H	J
	Rear Abutment	16 7/8	17 15/16	19	19 7/16	17 5/8	15 7/8	14 1/16	12 5/16	10 1/2
	Forward Abutment	14 3/16	15 5/8	17	17 3/4	16 5/16	14 7/8	13 7/16	11 15/16	10 1/2
NORTHBOUND	GIRDER	K	L	M	N	P	Q	R	S	T
	Rear Abutment	10 1/2	11 9/16	12 9/16	13 5/8	14 5/8	15 5/8	14 1/2	12 1/16	10 13/16
	Forward Abutment	10 1/2	11 7/8	13 3/16	14 9/16	15 7/8	17 3/16	16 3/8	14 7/8	13 5/16

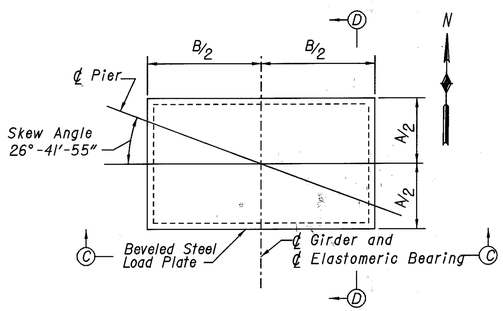

EXPANSION BEARING AT PIERS 1, 2 & 3

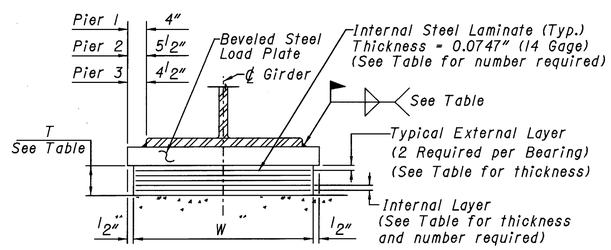

SECTION C-C

*EXPANSION BEARING DATA									
	BEARING DIMENSIONS		INTERNAL LAYERS		EXTERNAL LAYERS	STEEL LAMINATE	TOTAL THICKNESS	LOAD PLATE DIMENSION	
	L	W	NO.	THICK.	THICKNESS	NO.	T	A	B
Rear Abutment	9	14	7	0.26	0.19	8	2.80	10	15
Pier 1	12	19	5	0.35	0.25	6	2.70	13	20
Pier 2	14	22	3	0.41	0.29	4	2.11	15	23
Pier 3	13	20	5	0.37	0.27	6	2.84	14	21
Forward Abutment	8 1/2	9 1/2	8	0.23	0.16	9	2.83	9 1/2	10 1/2

* All Dimensions are in Inches

LAMINATED ELASTOMERIC BEARING NOTES:
DESIGN LOADING: SERVICE LOAD REACTIONS - KIPS

SOUTHBOUND LANE:	DEAD LOAD	LIVE LOAD WITHOUT IMPACT	TOTAL
REAR ABUTMENT	41.2	41.2	82.4
PIER 1	143.5	63.6	207.1
PIER 2	222.2	70.8	293.0
PIER 3	182.7	63.0	245.7
FORWARD ABUTMENT	26.4	41.4	67.8
NORTHBOUND LANE:			
REAR ABUTMENT	42.3	40.8	83.1
PIER 1	137.4	55.2	192.6
PIER 2	208.1	67.6	275.7
PIER 3	158.7	58.2	216.9
FORWARD ABUTMENT	33.2	41.0	74.2

ELASTOMERIC BEARINGS: SHALL COMPLY WITH ITEM 516 AND ARTICLES 18.2.5 THROUGH 18.2.8 OF SECTION 18, BEARING DEVICES, DIVISION II, CONSTRUCTION OF THE AASHTO STANDARD SPECIFICATION FOR HIGHWAY BRIDGES. BEARINGS SHALL BE GRADE 3, 50 DUROMETER ELASTOMETER, AND SHALL BE SUBJECTED TO THE LOAD TESTING REQUIREMENTS CORRESPONDING TO DESIGN METHOD "A". TESTING SHALL BE INCLUDED IN THE UNIT PRICE BID FOR THE BEARINGS EACH.

LOAD PLATE: THE STEEL LOAD PLATE (A572) SHALL BE BONDED BY VULCANIZATION TO THE ELASTOMER DURING THE MOLDING PROCESS. WELDING OF THE LOAD PLATE TO THE PEDESTAL OR SUPERSTRUCTURE SHALL BE CONTROLLED SO THAT THE PLATE TEMPERATURE AT THE ELASTOMER BONDED SURFACE SHALL NOT EXCEED 300°F AS DETERMINED BY THE USE OF PYROMETRIC STICKS OR OTHER TEMPERATURE MONITORING DEVICES.

BEARING REPOSITIONING: IF THE STEEL IS ERECTED AT AN AMBIENT TEMPERATURE HIGHER THAN 80° F OR LOWER THAN 40° F AND THE BEARING SHEAR DEFLECTION EXCEEDS 1/16 OF THE BEARING HEIGHT AT 60° F (±) 10° F, THE BEAMS SHALL BE RAISED TO ALLOW THE BEARINGS TO RETURN TO THEIR UNDEFORMED SHAPE AT 60° F (±) 10° F.

BASIS OF PAYMENT: THE UNIT PRICE BID SHALL INCLUDE ALL MATERIALS, LABOR AND INCIDENTALS NECESSARY TO FURNISH AND INSTALL LAMINATED ELASTOMERIC BEARINGS. PAYMENT FOR THE PEDESTALS SHALL BE INCLUDED WITH ITEM 513. PAYMENT WILL BE MADE AT THE CONTRACT PRICE FOR THE APPROPRIATE ITEM 516, EACH ELASTOMERIC BEARING WITH INTERNAL LAMINATES AND LOAD PLATE (NEOPRENE).

FLANGE TO LOAD WELD PLATE	
LOCATION	WELD SIZE
Pier 1 and 3	3/8"
Pier 2	1/2"

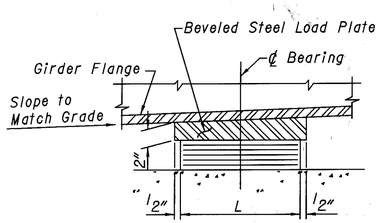

SECTION D-D

PLOT SUBMITTED:06-AUG-1998 11:16
376LEB01.DGN
PLOTTED BY: jgrmovse
PLOTTED FROM: /usr/sbeforsber/pid08459/dgn/B376leb01.dgn

331D
361

DESIGN AGENCY
EUTHEMACS INC.
CONSULTING ENGINEERS
CLEVELAND, OHIO

DESIGNED	DRAWN	REVIEWED	DATE
RSY	RSY	KRD	12-97
CHECKED	REVISED	STRUCTURE FILE NUMBER	
GFH		1829025 L1, 1829017 R1	

LAMINATED ELASTOMERIC FIXED BEARINGS
BRIDGE NO. CUY-71-0395L AND R
OVER THE OHIO TURNPIKE

CUY-71-0.00

MARK	NO.	LENGTH	TYPE	SER. INCR.
ABUTMENTS				
A 501	82	11'-0"	10	
A 502	88	9'-0"	6	
A 503	76	6'-4"	5	
A 504	76	8'-4"	6	
A 505	38	15'-11"	6	
A 506	4 Ser 10	5'-7" to 16'-1"	6	1'-2"
A 507	8	4'-11"	25	
A 508	6 Ser 3	3'-2" to 8'-10"	Str	2'-10"
A 509	8	9'-3"	Str	
A 510	2 Ser 3	4'-1" to 9'-4"	Str	2'-7½"
A 511	8	13'-8"	Str	
A 512	16	16'-2"	Str	
A 513	76	15'-11"	Str	
A 514	48	3'-6"	Str	
A 515	4	27'-4"	Str	
A 516	14	11'-7"	Str	
A 517	6	12'-8"	Str	
A 518	8	15'-0"	Str	
A 519	8	6'-9"	Str	
A 520	92	30'-0"	Str	
A 521	16	5'-6"	43	
A 522	92	34'-11"	Str	
A 523	8	19'-6"	Str	
A 524	14	10'-9"	6	
A 525	14	7'-11"	6	
A 526	236	2'-1"	5	
A 527	118	3'-5"	Str	
A 528	250	10'-4"	6	
A 529	244	10'-5"	27	
A 530	246	5'-9"	5	
A 531	224	4'-3"	9	
A 532	16	6'-11"	26	
A 533	4	14'-0"	6	
A 534	16	8'-1"	5	
A 535	6 Ser 3	4'-5" to 10'-1"	Str	2'-10"
A 536	2 Ser 3	2'-10" to 8'-1"	Str	2'-7½"
A 537	12	12'-1"	Str	
A 538	4	29'-10"	5	
A 539	12	12'-8"	Str	
A 540	4	27'-10"	Str	
A 541	4	29'-4"	9	
A 542	2 Ser 10	5'-11" to 15'-11"	6	1'-1 5/16"
A 543	2 Ser 9	5'-11" to 16'-5"	6	1'-3
A 544	4	4'-11"	6	
A 545	12	10'-5"	Str	
A 546	38	15'-7"	6	
A 547	4	14'-11"	6	
A 548	8	5'-3"	9	
A 549	8	17'-0"	Str	
A 550	4	12'-3"	27	
A 551	6	7'-1"	Str	
A 552	8	10'-11"	Str	
A 553	2	10'-8"	Str	
A 554	2	11'-10"	Str	
A 555	6	14'-1"	9	
A 556	2	7'-4"	Str	
A 557	2	12'-11"	9	
A 558	16	16'-5"	Str	
A 559	8	18'-6"	Str	
A 560	8	4'-11"	25	
A 601	44	3'-10"	Str	
A 602	88	13'-4"	27	
A 801	8	11'-11"	Str	
A 802	8	16'-2"	Str	
A 803	28	30'-8"	Str	
A 804	180	4'-10"	8	
A 805	8	14'-11"	Str	
A 806	8	13'-3"	Str	
PIERS				
P 401	20	17'-8"	Str	
P 402	47	8'-8"	45	
P 403	14	7'-0"	6	
P 404	2	13'-6"	51	
P 405	2	12'-9"	51	

MARK	NO.	LENGTH	TYPE	SER. INCR.
PIERS				
P 406	6	17'-9"	51	
P 407	6	17'-6"	51	
P 408	6	17'-5"	51	
P 409	6	17'-0"	51	
P 410	48	30'-0"	Str	
P 411	24	10'-1"	Str	
P 501	80	8'-3"	6	
P 502	12	9'-1"	6	
P 503	268	8'-5"	6	
P 504	10	4'-2"	6	
P 505	10	3'-8"	6	
P 506	250	4'-5"	6	
P 507	132	3'-4"	5	
P 508	272	7'-7"	6	
P 509	8	30'-0"	Str	
P 510	8	16'-8"	Str	
P 511	4	6'-11"	45	
P 601	6	7'-1"	6	
P 602	94	4'-0"	5	
P 603	42	7'-4"	6	
P 801	268	10'-6"	1	
P 802	39	14'-3"	1	
P 803	90	14'-6"	1	
P 804	38	12'-0"	1	
P 805	72	11'-6"	1	
P 901	28	18'-1"	Str	
P 902	10	2'-6"	Str	
P 903	84	3'-11"	5	
P 904	20	39'-5"	Str	
P 905	20	37'-8"	Str	
P 906	56	13'-5"	5	
P 907	56	30'-0"	Str	
P 908	28	20'-0"	Str	
P 1001	224	13'-9"	5	
P 1002	16	17'-5"	Str	
P 1003	16	16'-7"	Str	
P 1004	48	20'-9"	Str	
P 1005	48	20'-7"	Str	
P 1006	52	20'-4"	Str	
P 1007	54	20'-0"	Str	
P 1008	8	17'-6"	49	
P 1009	8	11'-3"	Str	
P 1010	4	18'-9"	Str	
P 1011	2	28'-0"	26	
P 1012	4	26'-6"	26	
SUPERSTRUCTURE				
S 401	1,260	30'-0"	Str	
S 402	63	28'-6"	Str	
S 403	63	9'-6"	Str	
S 501	2,154	30'-10"	Str	
S 502	2,126	38'-4"	Str	
S 503	4 Ser 28	9'-5" to 37'-5"	Str	12 7/16"
S 504	32	8'-5"	Str	
S 505	4 Ser 26	3'-11" to 29'-10"	Str	12 7/16"
S 506	4 Ser 25	5'-0" to 29'-10"	Str	12 7/16"
S 507	16	3'-11"	Str	
S 508	4 Ser 33	4'-2" to 37'-4"	Str	12 7/16"
S 509	1,869	30'-0"	Str	
S 510	71	5'-4"	Str	
S 511	71	13'-10"	Str	
S 512	18	15'-0"	Str	
S 513	18	22'-8"	Str	
S 514	1,210	7'-0"	65	
S 515	1,210	2'-3"	5	
S 516	1,210	3'-1"	43	
S 601	744	30'-0"	Str	
S 602	124	14'-10"	Str	

BENDING DIAGRAMS

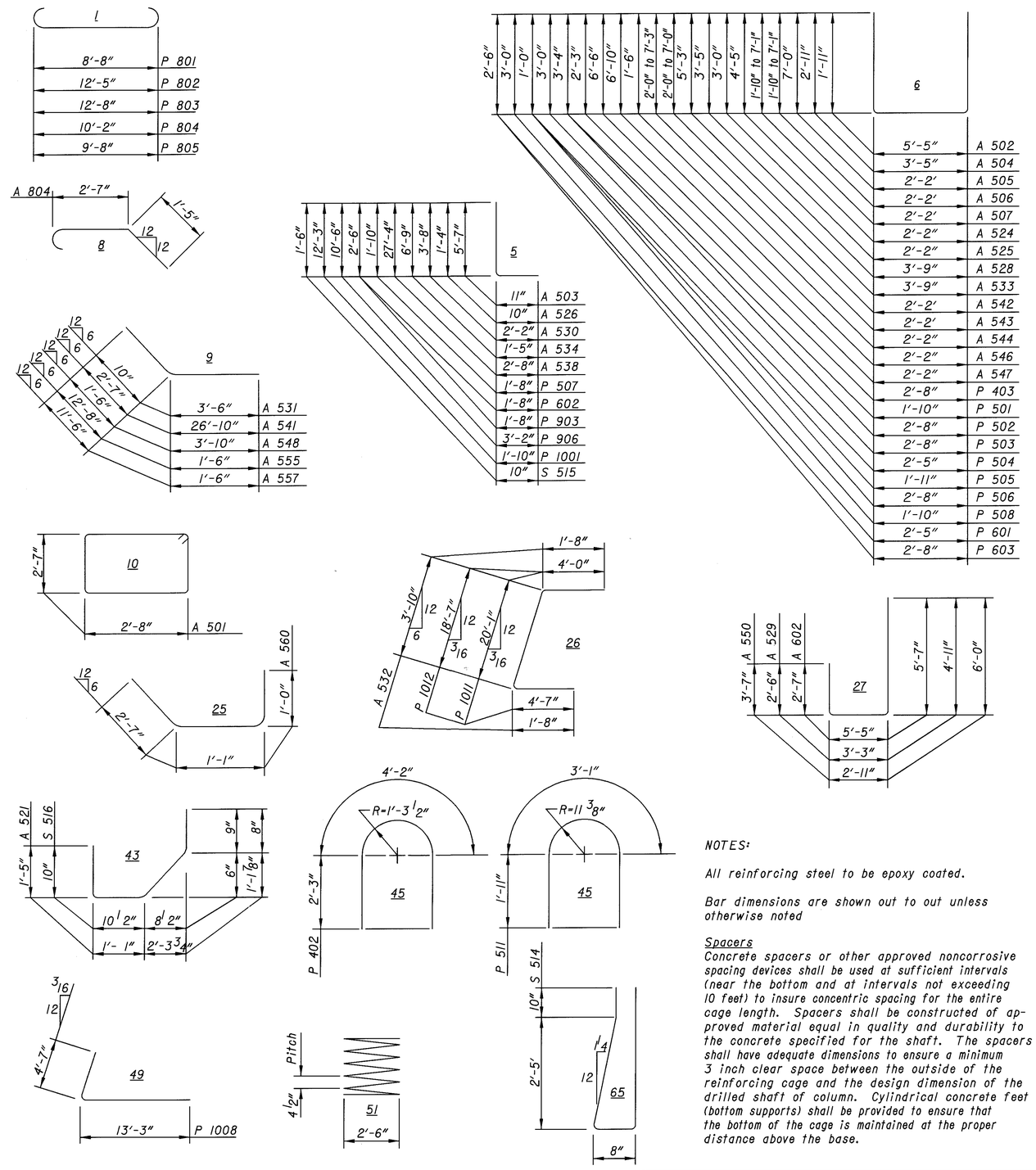

NOTES:

All reinforcing steel to be epoxy coated.

Bar dimensions are shown out to out unless otherwise noted

Spacers
Concrete spacers or other approved noncorrosive spacing devices shall be used at sufficient intervals (near the bottom and at intervals not exceeding 10 feet) to insure concentric spacing for the entire cage length. Spacers shall be constructed of approved material equal in quality and durability to the concrete specified for the shaft. The spacers shall have adequate dimensions to ensure a minimum 3 inch clear space between the outside of the reinforcing cage and the design dimension of the drilled shaft of column. Cylindrical concrete feet (bottom supports) shall be provided to ensure that the bottom of the cage is maintained at the proper distance above the base.

331E
361

DESIGN AGENCY
EUTHENICS INC.
CONSULTING ENGINEERS
CLEVELAND, OHIO

DESIGNED	DRAWN	REVIEWED	DATE
RSY	RSY	KRD	12-97
CHECKED	REVISED	STRUCTURE FILE NUMBER	
GFH		1829025 Lt. 1829017 Rt.	

REINFORCEMENT SCHEDULE
BRIDGE NO. CUY-71-0395L AND R
OVER THE OHIO TURNPIKE

CUY-71-0.00

22/22

PLOTTED BY: jgrmovse
PLOTTED: 06-AUG-1998 11:16
PLOT SUBMITTED: 06-AUG-1998 11:16
376RS01.DGN
PLOTTED FROM: /home/reforsber/pid08459/dgn/376rs01.dgn

CUY-71-0.00	OHIO	332 / 361
	FHWA REGION 5	
	FEDERAL PROJECT	

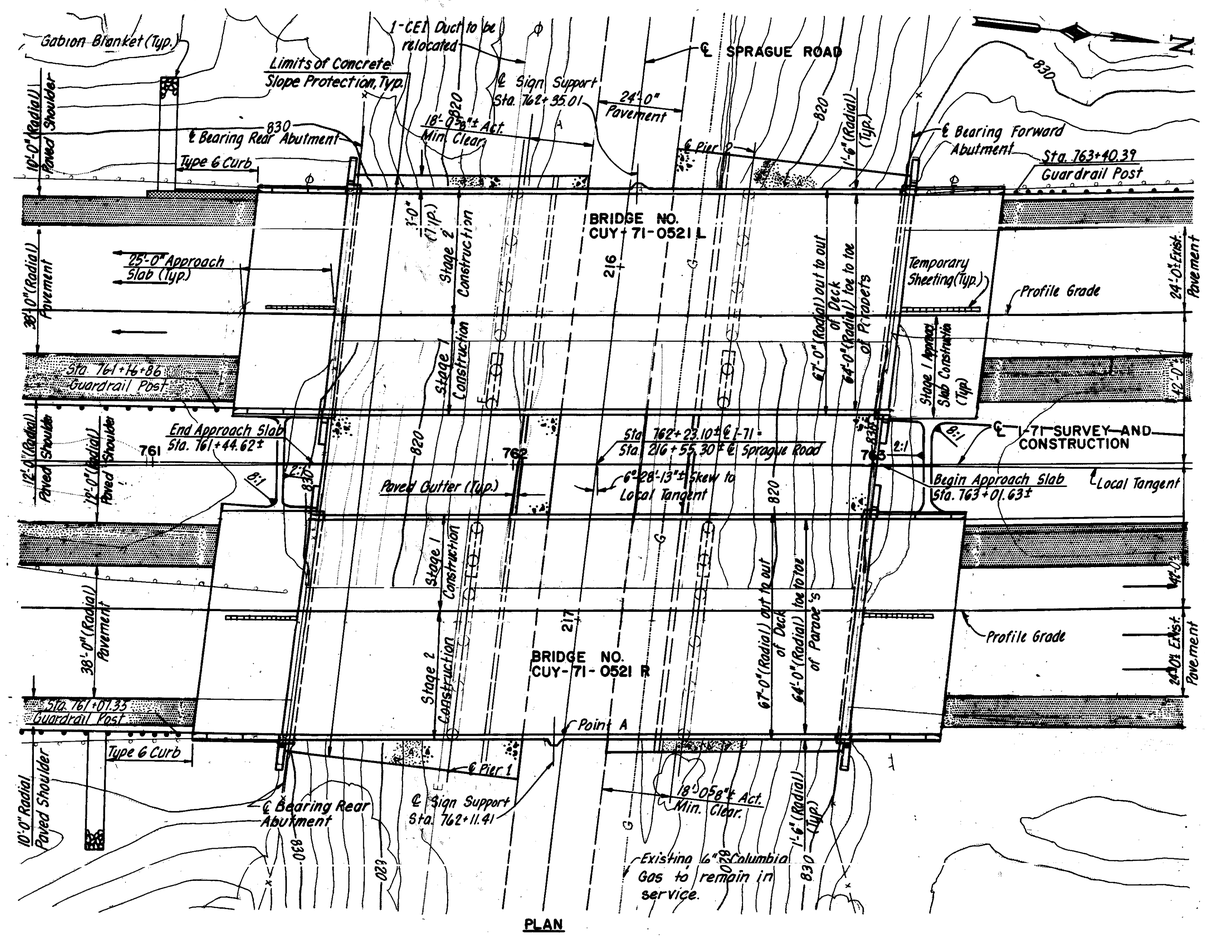

PLAN

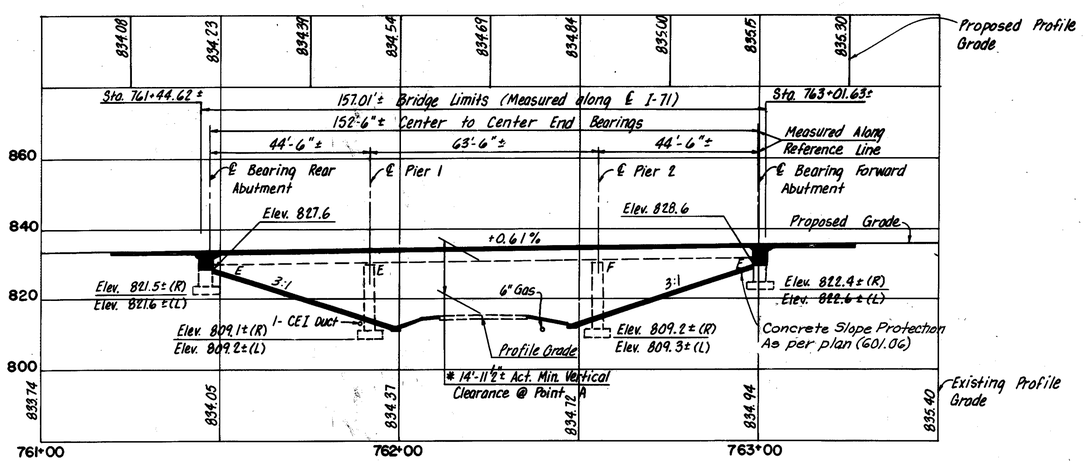

NORTHBOUND PROFILE SHOWN, SOUTHBOUND SIMILAR

TEMPORARY BENCH MARK
R.R. Spike in North Side of Power Pole (#145861), Sta. 215+08.30, 30.8' Rt. ℄ Sprague Road Elev. 815.26

CURVE DATA – ℄ I-71

P.C. Sta. 754+43.32
P.T. Sta. 773+06.18
Δ = 8°-41'-36"
Dc = 0°-28'-00" Lt.
R = 12,277.67'
L = 1,862.86'
T = 933.22'

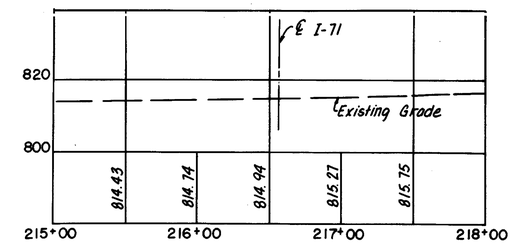

PROFILE SPRAGUE ROAD

TRAFFIC DATA – (I-71)

1994	A.D.T.	=	39,610
	A.D.T.T.	=	2,380
2014	A.D.T.	=	49,510
	A.D.T.T.	=	2,970

EXISTING STRUCTURES	
Type:	Continuous Steel Beam, with Reinforced Concrete Deck and Substructure
Spans:	44'-6"± , 63'-6"± , 44'-6"± Center to Center Bearings, along reference line
Roadway:	40'-0"± Face to Face of Parapets
Loading:	C.F.= 2000, Adequate for A.A.S.H.O. Alternate Loading
Skew:	6°-28'-13"± Left Forward to Local Tangent
Wearing Surface:	1½" Dense Concrete
Approach Slab:	AS-1-54 (25'-0" Long)
Alignment:	0°-28'-00" ± Left
Crown:	Normal, 0.0156 Ft./Ft.
Date Built:	1966
Structural File No.:	1803905 L 1803964 R

PROPOSED STRUCTURES	
Proposed Work:	Widen bridge, replace concrete deck, modify, repair and extend existing substructure units and seal concrete surfaces.
Type:	Existing Continous Steel Beams, A36, and New Continuous Steel Beams, A572 Painted, with Reinforced Concrete Deck and Substructure
Spans:	44'-6"± , 63'-6"± , 44'-6"± Center to Center Bearings, along Reference Chord
Roadway:	64'-0" Toe to Toe of Parapets
Loading:	HS20-44 Case I and the Alternate Military Loading
Skew:	6°-28'-13"± Left Forward, to Local Tangent
Wearing Surface:	Monolithic Concrete
Approach Slab:	AS-1-81 (25'-0" Long)
Alignment:	0°-28'-00"± Left
Crown:	Normal, 0.0156 Ft./Ft.

* Note: 14'-6" required minimum vertical clearance. Actual minimum vertical clearance at Point A occurs at the intersection of the centerline of Sprague Road and the east edge of the east exterior beam in the northbound Roadway Bridge.

STRUCTURE FILE NOS. 1803905L and 1803964R

EUTHENICS INC. CONSULTING ENGINEERS CLEVELAND, OHIO — 1/12

SITE PLAN

BRIDGE NO. CUY-71-0521L AND R OVER SPRAGUE ROAD

CUYAHOGA COUNTY STA. 761+44.62± TO STA. 763+01.63±

DESIGN	DRAWN	TRACED	CHECKED	REVIEW	DATE	REVISED
KRD	EEF	—	MEK	RAB	3-94	

PLOTTED BY: fkonopka
PLOTTED in Rowers: Beforsber Bpid08459Bdgn B307sp08.dgn
PLOT SUBMITTED: 06-AUG-1998 07:43
307SP08.DGN

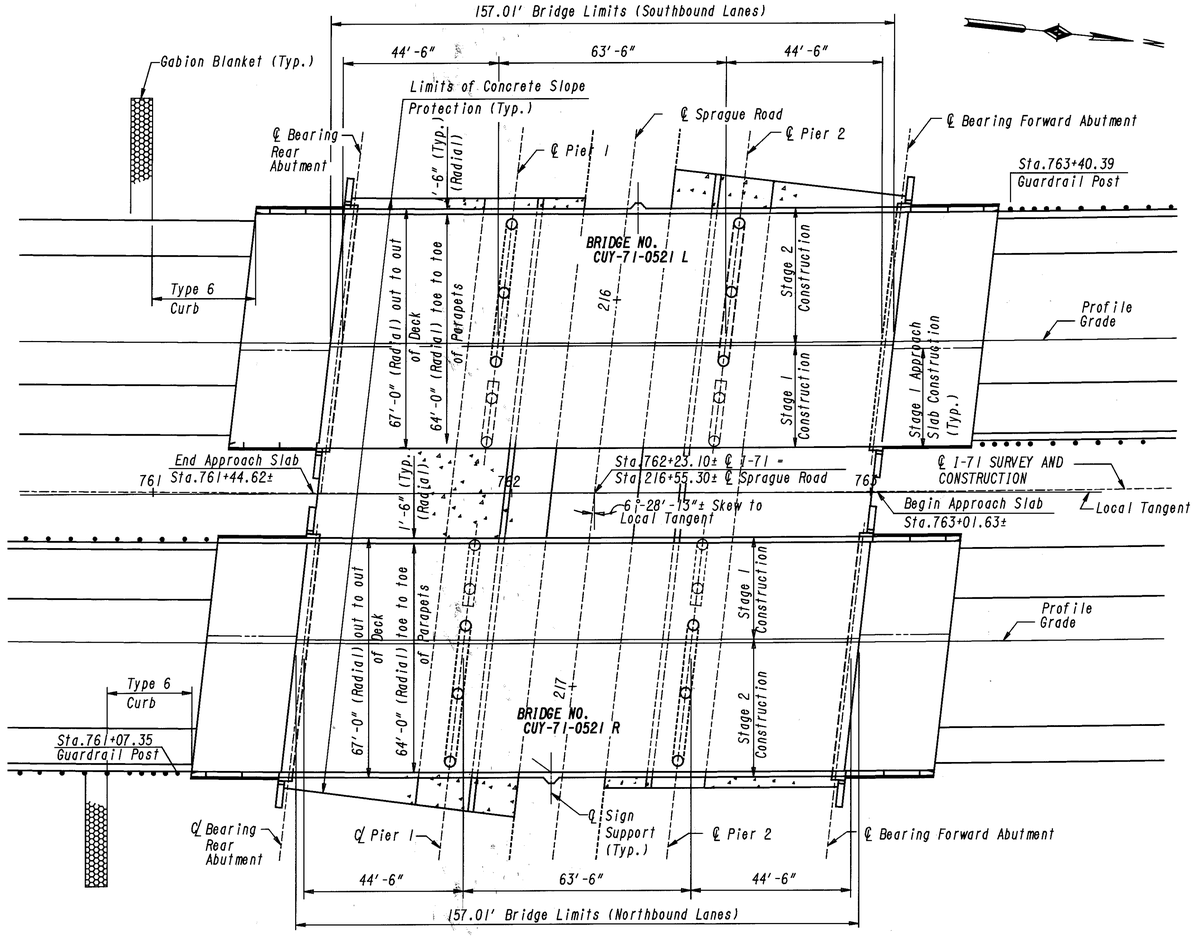

GENERAL PLAN

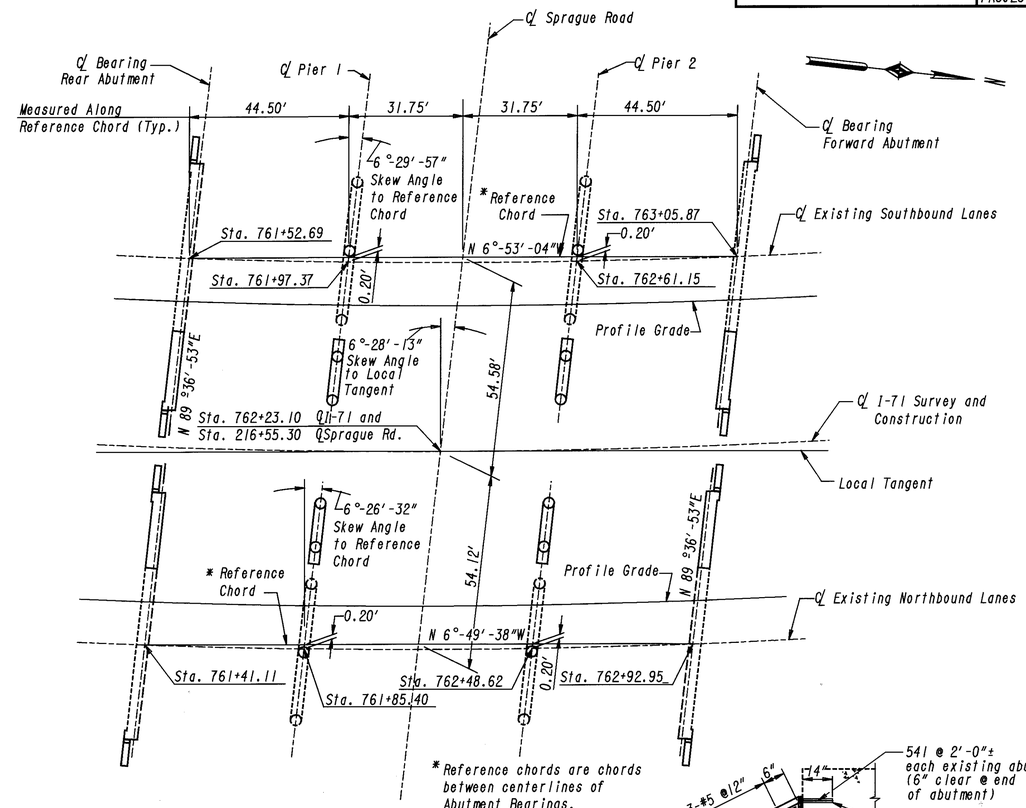

GEOMETRIC LAYOUT DIAGRAM

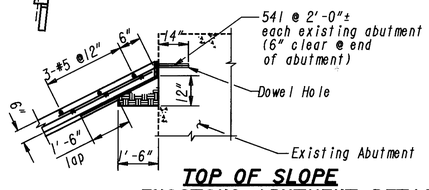

TOP OF SLOPE EXISTING ABUTMENT DETAIL

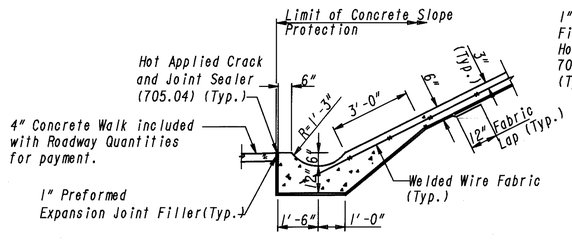

PAVED GUTTER

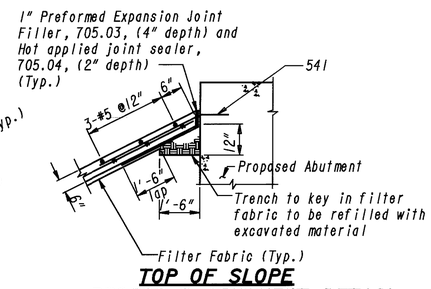

TOP OF SLOPE PROPOSED ABUTMENT DETAIL

Notes:

Payment for removal of the existing crushed aggregate slope protection, 3-#5 @ 12", wire fabric, geotextile fabric, preformed expansion joint filler, dowel holes, and grout and hot applied sealer shall be included with Item 601, Concrete Slope protection, as per plan.

Filter fabric shall extend to the top of the joint. The fabric around the trench key shall be continuous and overlap a minimum of 18" as shown.

Welded Wire Fabric - 6x6, W4.0xW4.0 (58 lbs/100 sq ft) sheets only. Lap sheets a minimum of 1'-5" in both directions.

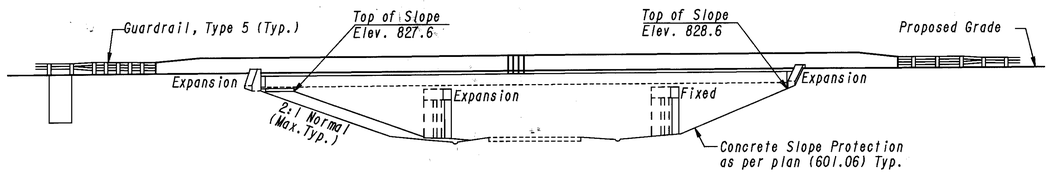

ELEVATION

CONCRETE SLOPE PROTECTION DETAILS

EUTHENICS INC. CONSULTING ENGINEERS CLEVELAND, OHIO

2/12

GENERAL PLAN

BRIDGE NO. CUY-71-0521L AND R OVER SPRAGUE ROAD

DESIGN	DRAWN	TRACED	CHECKED	REVIEW	DATE	REVISED
GFH	GFH	—	KRD	RAB	3-94	

PLOTTED BY: fKonopka
PLOT SUBMITTED:06-AUG-1998 07:44
307GP05.DGN

CUY-71-0.00	OHIO	334/361
	FHWA REGION 5	
	FEDERAL PROJECT	

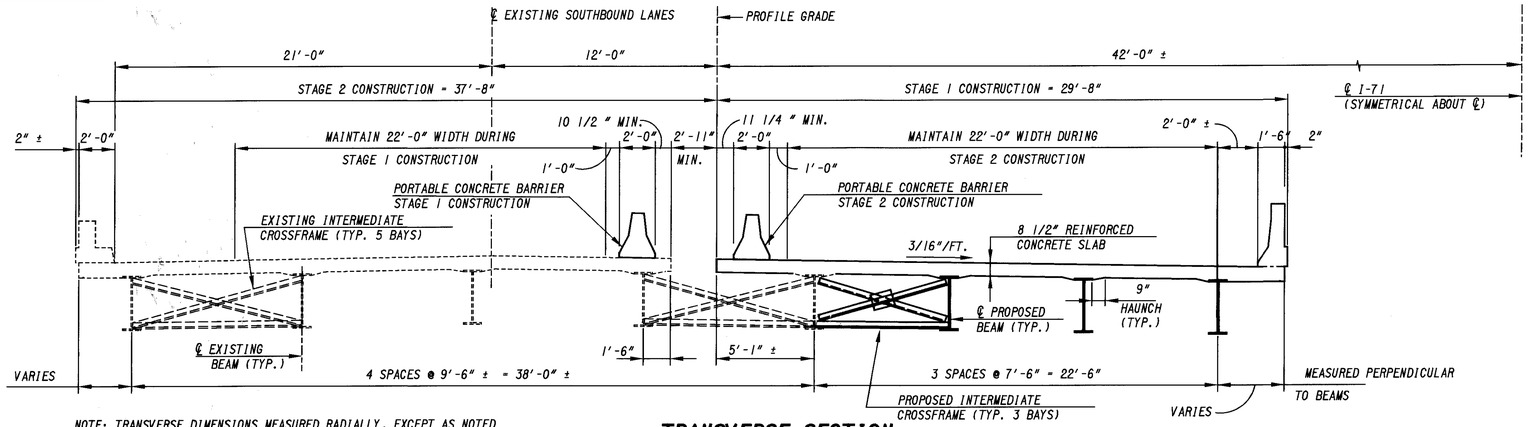

NOTE: TRANSVERSE DIMENSIONS MEASURED RADIALLY, EXCEPT AS NOTED

TRANSVERSE SECTION STAGE CONSTRUCTION

32", BRIDGE MOUNTED, PORTABLE CONCRETE BARRIER ANCHORS ▲	
MOT Stage	No. Anchors/Segment
1	6
2	6

▲ ON EXISTING DECKS, NON-TRAFFIC SIDE ANCHORS MUST BE THRU-BOLTED. ON NEW DECKS, ONLY APPROVED RESIN ANCHORS MAY BE USED.

CALC. BY: KXG DATE: 2-94 **ESTIMATED QUANTITIES** CHK'D. BY: KRD DATE: 3-94

					CUY-71-0521 L					CUY-71-0521 R					
ITEM	ITEM EXT.	TOTAL	UNIT	DESCRIPTION	ABUT-MENTS	PIER	SUPER-STRUCTURE	GENERAL	TOTAL	ABUT-MENTS	PIER	SUPER-STRUCTURE	GENERAL	TOTAL	AS PER PLAN SHEET REF.
202	11203	LUMP	LUMP	PORTIONS OF STRUCTURE REMOVED, OVER 20 FOOT SPAN, AS PER PLAN				LUMP	LUMP				LUMP	LUMP	GN1
503	11100	LUMP	LUMP	COFFERDAMS, CRIBS AND SHEETING				LUMP	LUMP				LUMP	LUMP	
503	21101	626	CU. YD.	UNCLASSIFIED EXCAVATION, AS PER PLAN	204	109			313	204	109			313	GN2
511	81400	50	POUND	CONCRETE MISC.: REPLACEMENT OF EXISTING REINFORCING STEEL ✱				25	25				25	25	
512	44400	7	SQ. YD.	TYPE B WATERPROOFING	3				3	4				4	
SPECIAL	51267510	484	SQ. YD.	SEALING OF CONCRETE SURFACES (EPOXY-URETHANE) (SEE PROPOSAL NOTE)	12	230			242	12	230			242	
SPECIAL	51271500	430	SQ. YD.	URETHANE TOP COAT SEALER	107	108			215	107	108			215	
514	27706	144,300	POUND	FIELD PAINTING MISC.: SHOP PAINTING AND FIELD TOUCH UP OF STRUCTURAL STEEL			72,150		72,150			72,150		72,150	
516	44001	16	EACH	ELASTOMERIC BEARING WITH INTERNAL LAMINATES AND LOAD PLATE (NEOPRENE) (9" x 14" x 1.64") WITH 10" X 15" X 1 1/2" LOAD PLATE, AS PER PLAN, (SEE PROPOSAL NOTE)	8				8	8				8	11/12
516	44001	6	EACH	ELASTOMERIC BEARING WITH INTERNAL LAMINATES AND LOAD PLATE (NEOPRENE) (11 1/2" x 18" x 1.99") WITH 12 1/2" X 19" X 1 9/16" LOAD PLATE, AS PER PLAN, (SEE PROPOSAL NOTE)		3			3		3			3	11/12
516	44001	10	EACH	ELASTOMERIC BEARING WITH INTERNAL LAMINATES AND LOAD PLATE (NEOPRENE) (11 1/2" x 18" x 1.99") WITH 12 1/2" X 19" X 2 9/16" LOAD PLATE, AS PER PLAN, (SEE PROPOSAL NOTE)		5			5		5			5	11/12
516	44101	16	EACH	ELASTOMERIC BEARING WITH INTERNAL LAMINATES AND LOAD PLATE (NEOPRENE) (9" x 14" x 2.25") WITH 10" X 15" X 1 1/2" LOAD PLATE, AS PER PLAN, (SEE PROPOSAL NOTE)	8				8	8				8	11/12
516	46900	6	EACH	BEARING DEVICE, MISC., (F-200)		3			3		3			3	
516	47001	LUMP	LUMP	JACKING AND TEMPORARY SUPPORT OF SUPERSTRUCTURE, AS PER PLAN			LUMP		LUMP			LUMP		LUMP	GN4
518	21200	229	CU. YD.	POROUS BACKFILL WITH FILTER FABRIC	115				115	114				114	
518	40001	353	LIN. FT.	6" PERFORATED CORRUGATED PLASTIC PIPE, AS PER PLAN	177				177	176				176	GN2
518	40011	447	LIN. FT.	6" NON-PERFORATED CORRUGATED PLASTIC PIPE, INCLUDING SPECIALS, AS PER PLAN	223				223	224				224	GN2
601	21001	1898	SQ. YD.	CONCRETE SLOPE PROTECTION, AS PER PLAN				949	949				949	949	GN2, 2/12, 6/12
843	50000	85	SQ. FT.	PATCHING CONCRETE STRUCTURES WITH TROWELABLE MORTAR ✱	35	20			55	15	15			30	
844	84448001	646	CU. YD.	HIGH PERFORMANCE CONCRETE, SUPERSTRUCTURE (DECK), AS PER PLAN			323		323			323		323	GN2
844	84448020	83	CU. YD.	HIGH PERFORMANCE CONCRETE, SUPERSTRUCTURE (PARAPET)			41		41			42		42	
844	84448041	492	CU. YD.	HIGH PERFORMANCE CONCRETE, SUBSTRUCTURE, AS PER PLAN	184	62			246	183	63			246	GN3
863	10260	144,300	POUND	STRUCTURAL STEEL MEMBERS, LEVEL THREE (3)✱✱, A709, GRADE 50			72,150		72,150			72,150		72,150	

✱ TO BE USED AS DIRECTED BY THE ENGINEER
✱✱ FABRICATION

EUTHENICS INC. CONSULTING ENGINEERS CLEVELAND, OHIO 3/12

STAGE CONSTRUCTION AND ESTIMATED QUANTITIES

BRIDGE NO. CUY-71-0521L AND R OVER SPRAGUE ROAD

DESIGN	DRAWN	TRACED	CHECKED	REVIEW	DATE	REVISED
KXG	GFH	—	KRD	RAB	3-94	

PLOT SUBMITTED:20-AUG-1998 05:38
PLOTTED BY:jgrmovse
PLOT SCALE:1:1
PLOT DATE:8/20/98
307EQ05.DGN
307eq05.dgn
Bpid08459Bcuy-71-521B307eq05.dgn

CUY-71-0.00	OHIO	335/361
	FHWA REGION 5	
	FEDERAL PROJECT	

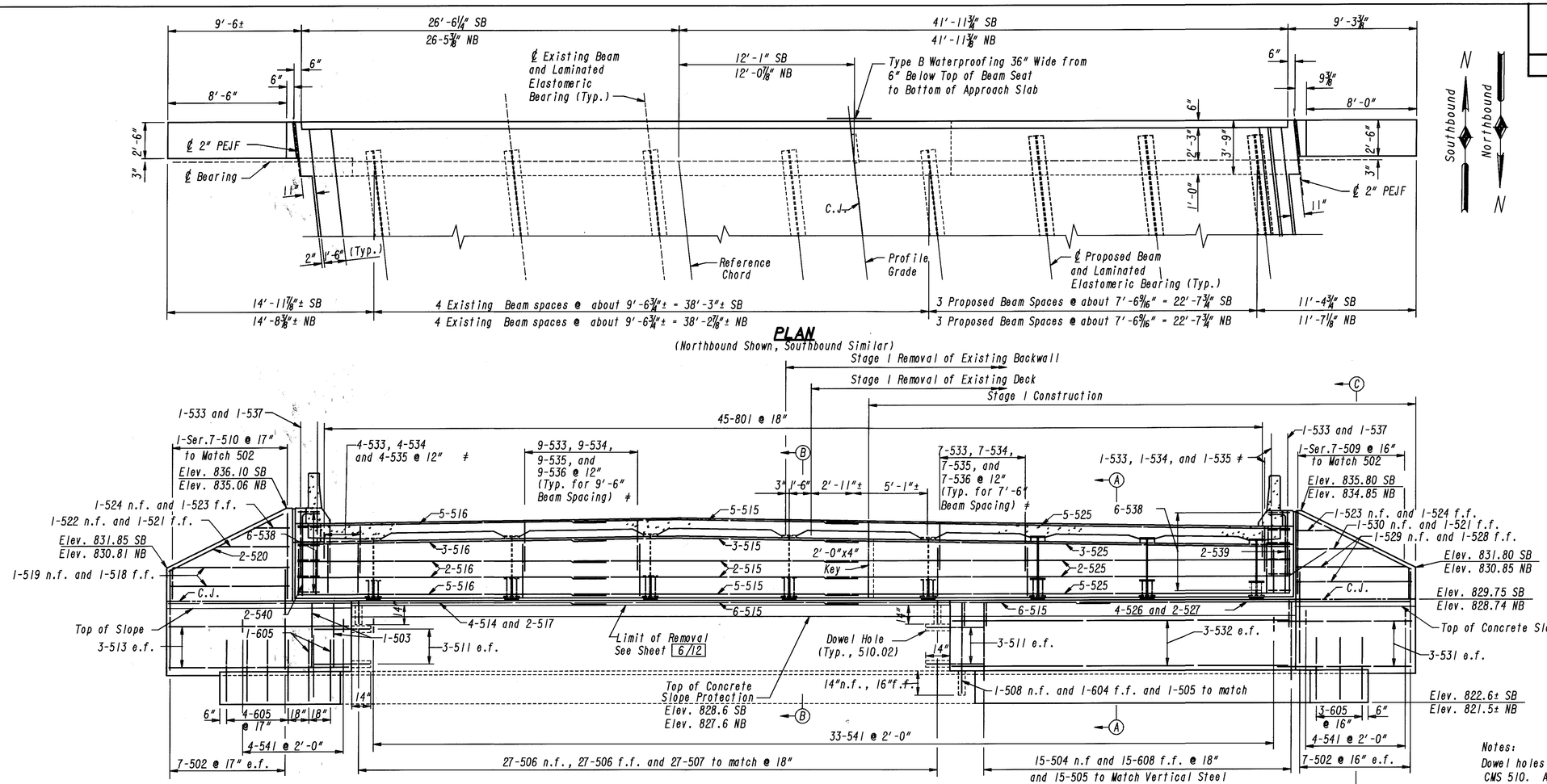

PLAN

(Northbound Shown, Southbound Similar)

ELEVATION

≠ Placed Parallel to Beams

Minimum Lap Lengths
No. 5 Bar = 2'-2"
No. 6 Bar = 2'-4"

Notes:

Dowel holes shall be placed in accordance with CMS 510. All labor, materials and installation shall be included with the appropriate Item 844 or 601 for payment.

For top of pavement elevations along centerline bearing see Deck Screed Elevations on sheet 9/12.

For Sections A-A, B-B and C-C and additional notes see sheet 6/12.

For location of patching areas see sheet 5A/12

The following abbreviations are used:

Elev. = Elevation	T = Top
(Typ.) = Typical	B = Bottom
SB = Southbound	e.f. = each face
NB = Northbound	f.f. = far face
C.J. = Construction Joint	n.f. = near face
PEJF = Preformed Expansion Joint Filler	

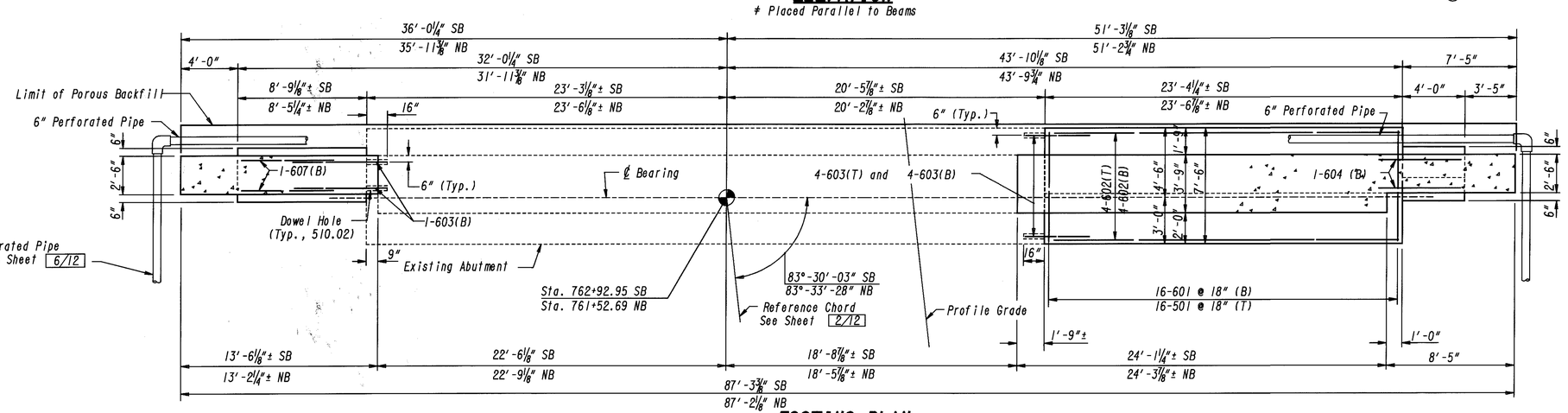

FOOTING PLAN

EUTHENICS INC. CONSULTING ENGINEERS CLEVELAND, OHIO — 4/12

SOUTHBOUND FORWARD ABUTMENT AND NORTHBOUND REAR ABUTMENT

BRIDGE NO. CUY-71-0521L AND R OVER SPRAGUE ROAD

DESIGN	DRAWN	TRACED	CHECKED	REVIEW	DATE	REVISED
GFH	EEF	—	KRD	RAB	3-94	

PLOT SUBMITTED:06-AUG-1998 07:46
PLOTTED BY:fkonopka
Pid08459 Bdgn Bcuy-71-521 B307abt51.dgn
307ABT51.DGN

CUY-71-0.00	OHIO	336/361
	FHWA REGION 5	
	FEDERAL PROJECT	

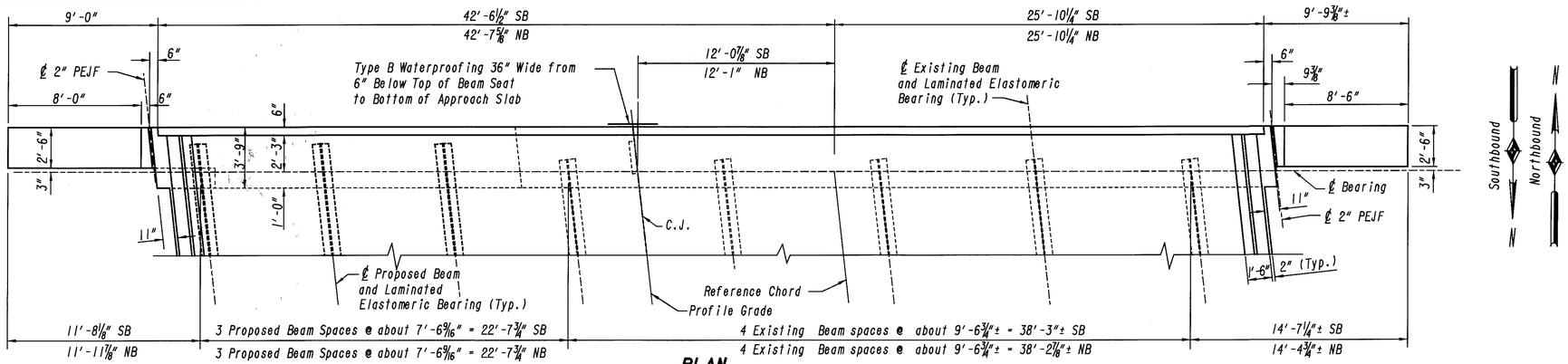

PLAN

(Southbound Shown, Northbound Similar)

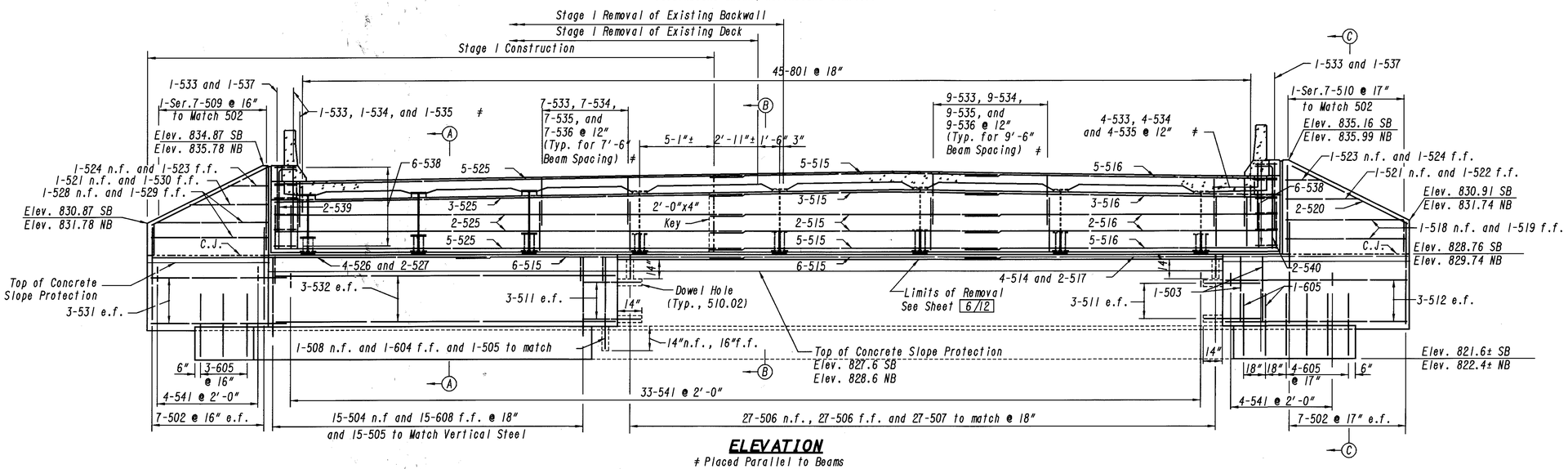

ELEVATION

≠ Placed Parallel to Beams

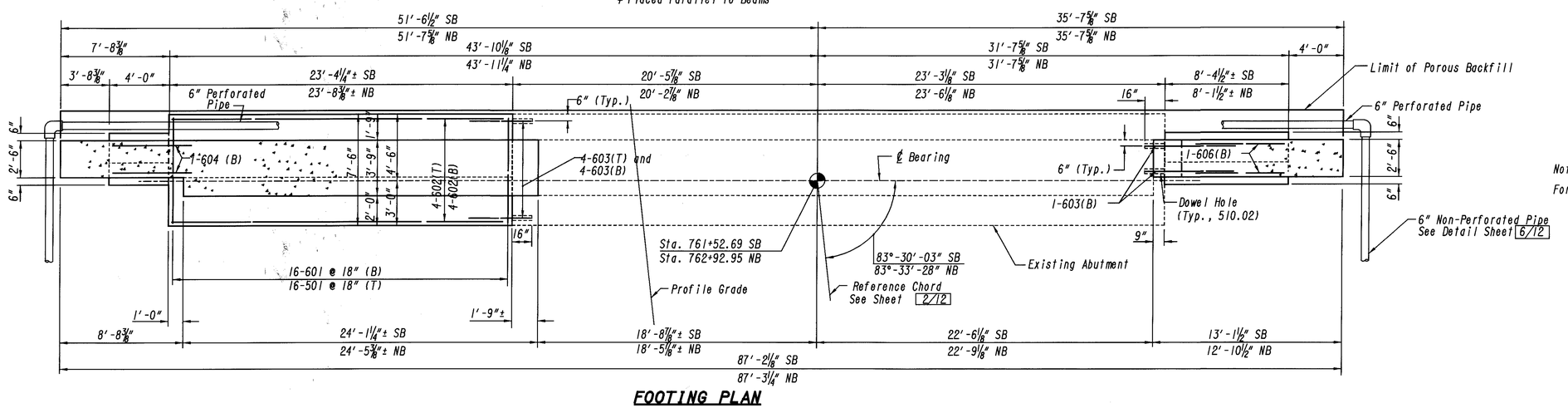

FOOTING PLAN

Minimum Lap Lengths
No. 5 Bar = 2'-2"
No. 6 Bar = 2'-4"

Notes:

For notes see sheets 6/12 and 4/12

EUTHENICS INC.
CONSULTING ENGINEERS
CLEVELAND, OHIO

5/12

NORTHBOUND FORWARD ABUTMENT AND SOUTHBOUND REAR ABUTMENT

BRIDGE NO. CUY-71-0521L AND R OVER SPRAGUE ROAD

DESIGN	DRAWN	TRACED	CHECKED	REVIEW	DATE	REVISED
GFH	EEF	—	KRD	RAB	3-94	

PLOTTED BY: fkonopka
PLOT SUBMITTED: 06-AUG-1998 07:47
Pid08459B.dgn Bcuy-71-521 B307ab-52.dgn 307AB-52.DGN

CUY-71-0.00	OHIO	337/361
	FHWA REGION 5	
	FEDERAL PROJECT	

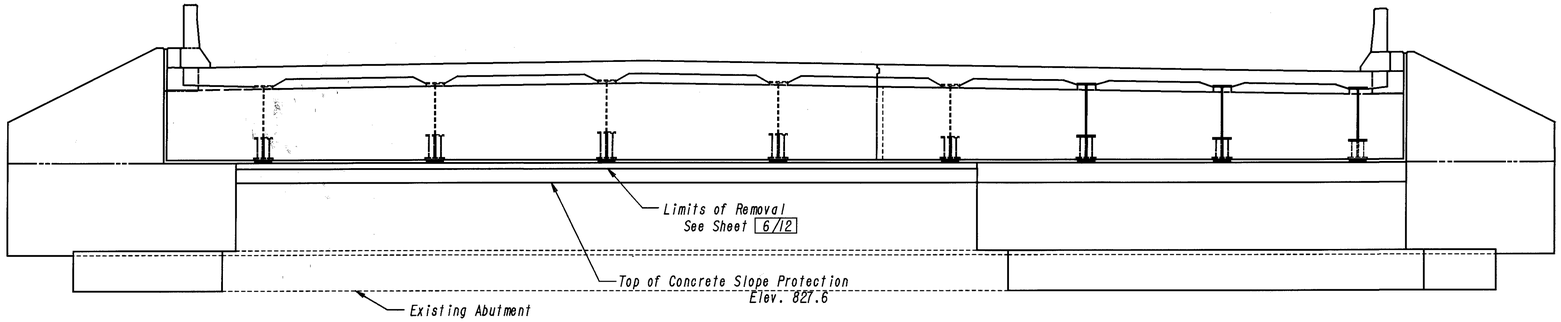

NORTHBOUND REAR ABUTMENT ELEVATION
(No Patching Work Required)

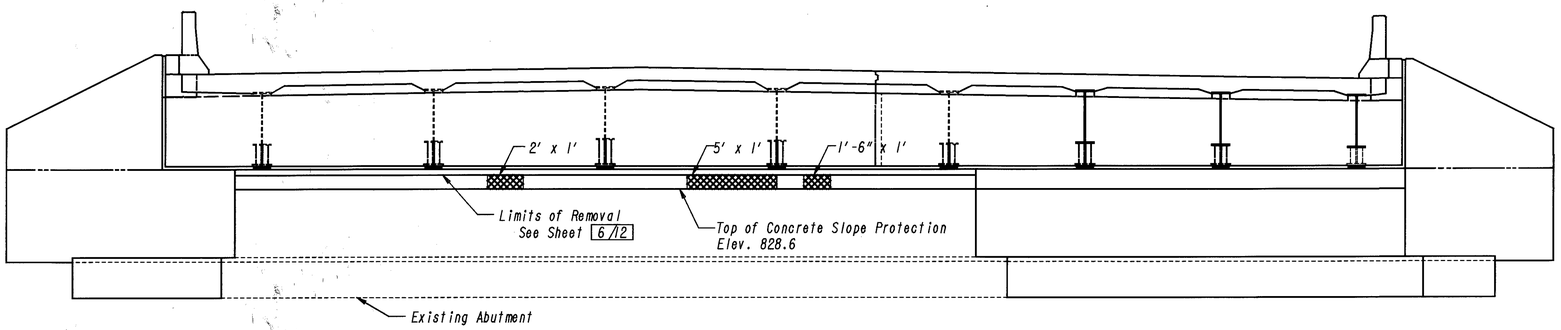

SOUTHBOUND FORWARD ABUTMENT ELEVATION

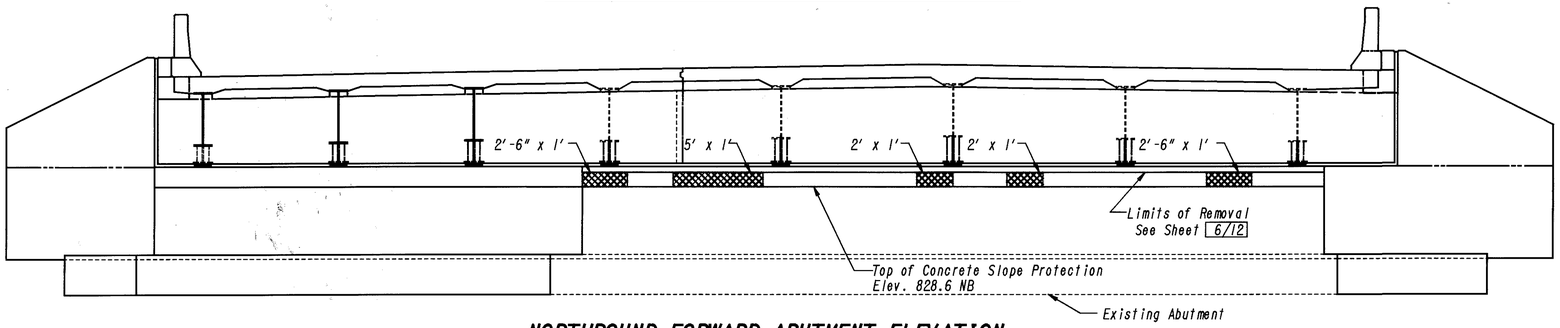

NORTHBOUND FORWARD ABUTMENT ELEVATION

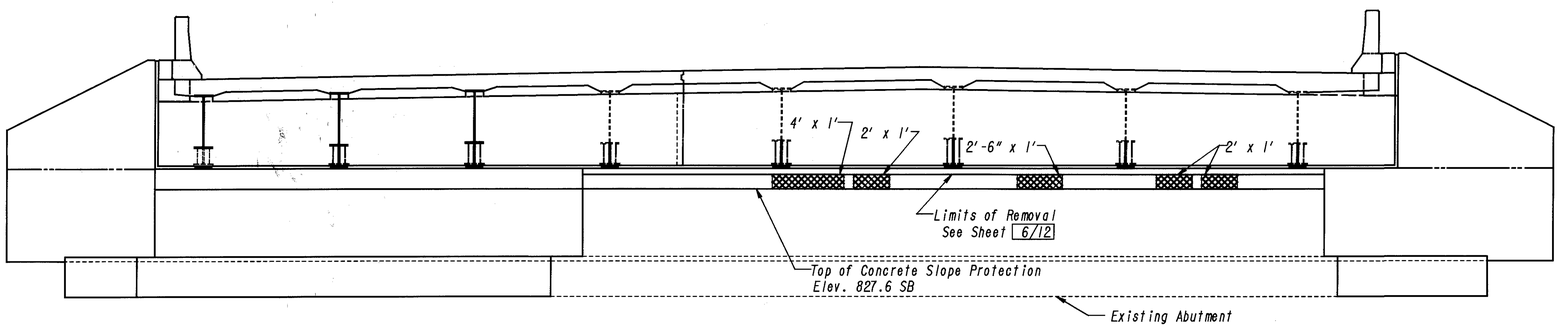

SOUTHBOUND REAR ABUTMENT ELEVATION

Note:
Item 843 - Trowelable Mortar

EUTHENICS INC.
CONSULTING ENGINEERS
CLEVELAND, OHIO

5A/12

ABUTMENT PATCHING PLAN

BRIDGE NO. CUY-71-0521L AND R
OVER SPRAGUE ROAD

DESIGN	DRAWN	TRACED	CHECKED	REVIEW	DATE	REVISED
GFH	EEF	—	KRD	RAB	12-94	

PLOTTED BY: fkonopka
PLOT SUBMITTED:06-AUG-1998 07:47
PLOT SCALE:
PLOT USER:
PLOT FILE: /usr/bin/bin/plotter -s -q -c -p -d08459B.dgn -Pcuy-71-521 B307pch51.dgn 307PCH51.DGN

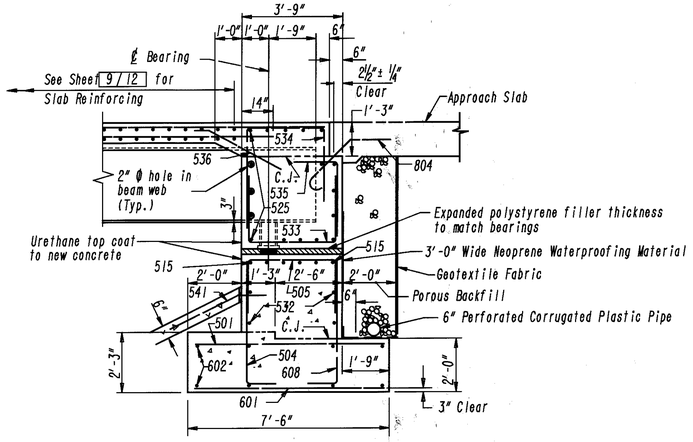

SECTION A-A

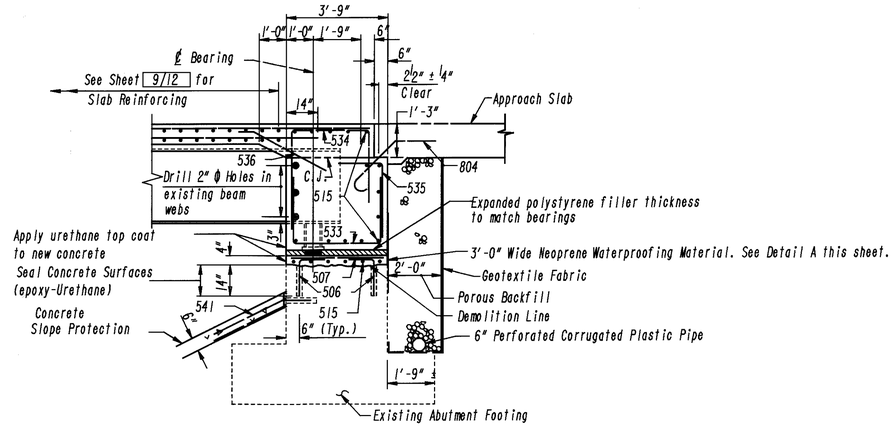

SECTION B-B

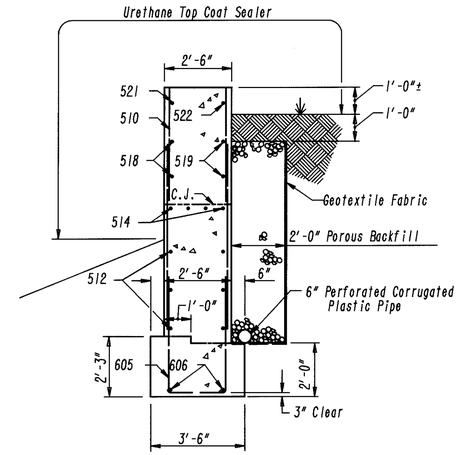

SECTION C-C

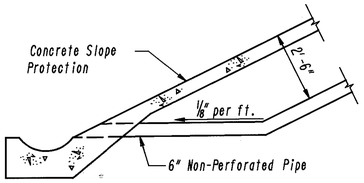

TERMINATION OF 6" PIPE AT FRONT SLOPE

Notes:

Porous backfill with filter fabric, 2 feet thick shall extend up to the plane of the subgrade, up to the bottom of the approach slab, and laterally as shown on the plans.

Expanded polystyrene filler is to be included for payment with Item 844, High Performance Concrete, Superstructure (Deck), as per plan.

For location of Sections A-A, B-B and C-C see sheets 4/12 and 5/12

For Approach Slab notes and details, see Roadway Plans.

Drilling of 2" ϕ holes in beam webs shall be included with Item 863 for payment.

Concrete below the approach slab seat shall be included with the abutment for payment.

All reinforcing bars shall be prefixed:
EA = Epoxy coated abutment

For reinforcement schedule see sheet 12/12.

The following abbreviations are used:

C.J. = Construction Joint	Typ. = Typical
SB = South Bound	R.A. = Rear Abutment
NB = North Bound	F.A. = Forward Abutment
PEJF = Preformed Expansion Joint Filler	

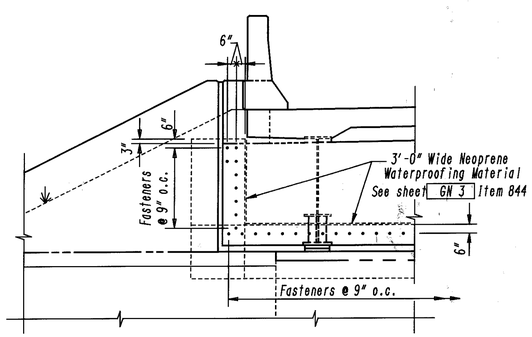

DETAIL A

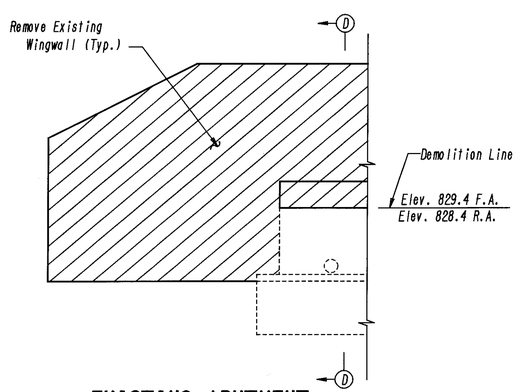

EXISTING ABUTMENT LIMIT OF REMOVAL

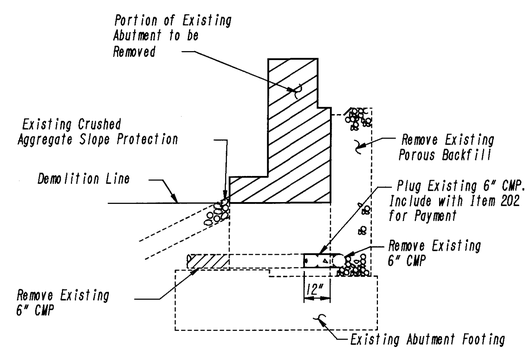

SECTION D-D

Minimum Lap Lengths
No. 5 Bar = 2'-2"
No. 6 Bar = 2'-4"

EUTHENICS INC.
CONSULTING ENGINEERS
CLEVELAND, OHIO

6/12

ABUTMENT SECTIONS AND DETAILS

BRIDGE NO. CUY-71-0521L AND R
OVER SPRAGUE ROAD

DESIGN	DRAWN	TRACED	CHECKED	REVIEW	DATE	REVISED
KRD	EEF	—	GFH	RAB	3-94	

PLOTTED BY: fkonopka
PLOTTED: 06-AUG-1998 07:48
PLOT SUBMITTED:06-AUG-1998 07:48
PLOT SCALE: 1:1
USER: rsberber
Bpid08459Bdgn Bcuy-71-521 B307asd05.dgn 307ASD05.DGN

PIER	LANE	ELEVATION A	B	C	D	E	STATION F
1	SB	830.16	830.04	829.92	825.92	809.2±	761+97.37
	NB	830.12	830.01	829.89	825.89	809.1±	761+85.40
2	SB	830.17	830.05	829.93	825.93	809.3±	762+61.15
	NB	830.13	830.02	829.91	825.91	809.2±	762+48.62

CUY-71-0.00 | OHIO | FHWA REGION 5 | FEDERAL PROJECT | 339 / 361

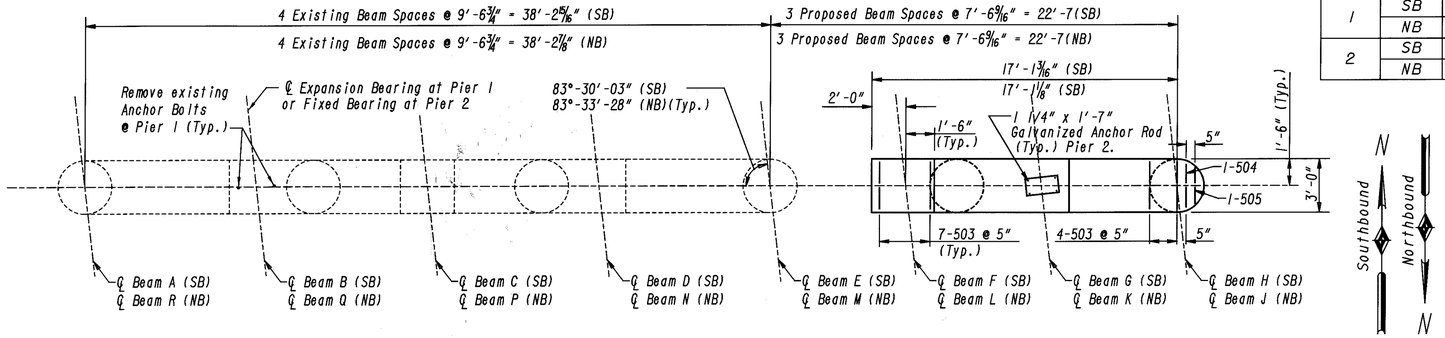

PLAN

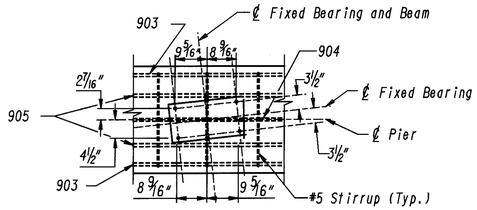

BEARING ANCHOR PLAN

Note: Bridge Seat Reinforcing: Reinforcing steel in the vicinity of the bridge seat at Pier 2 shall be accurately placed to avoid interference with the drilling of bearing anchor holes or the pre-setting of bearing anchors.

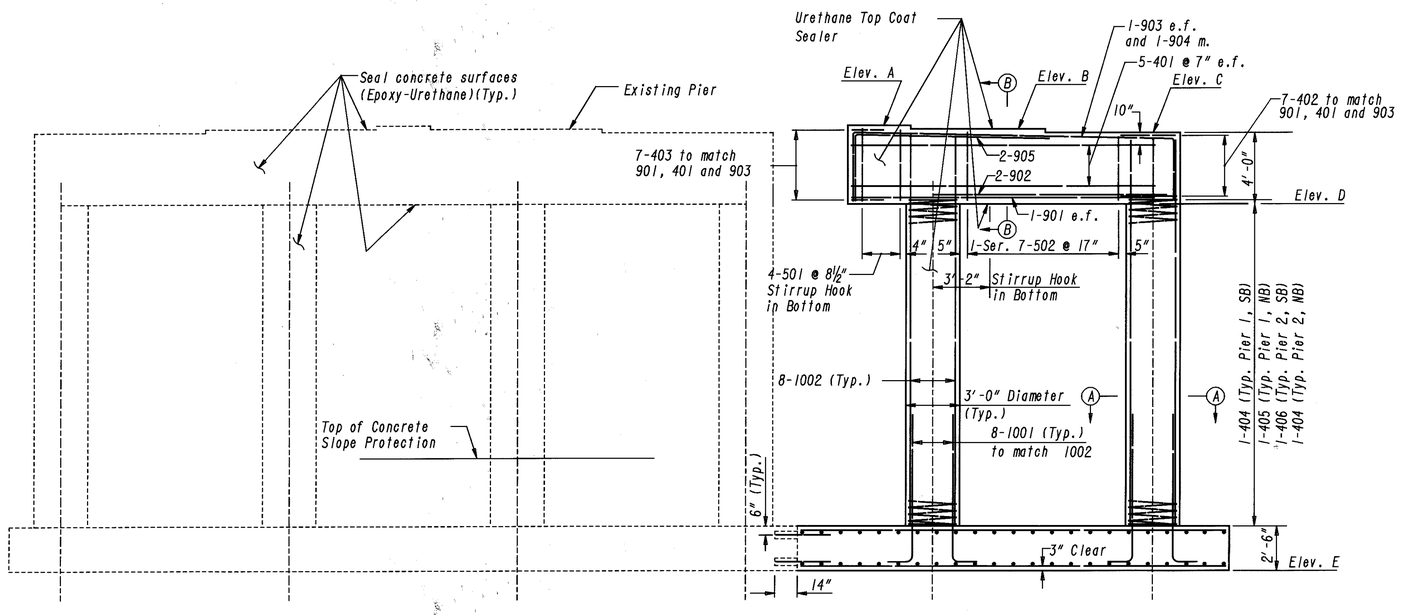

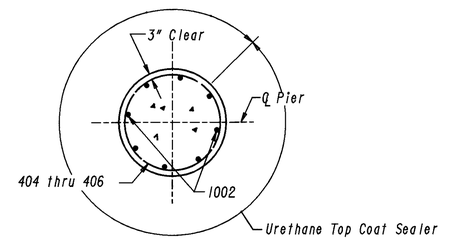

SECTION A-A

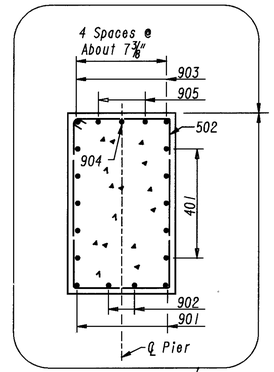

SECTION B-B

Urethane Top Coat Sealer

MINIMUM LAP LENGTHS
No. 4 Bar = 1'-8"
No. 10 Bar = 8'-3"

Notes:

Dimensions and reinforcement are typical for all piers , except as noted.

Bearing Anchors: At the option of the Contractor, bearing anchors (or formed holes) located and supported by templates, may be cast in place.

The cap beam stirrups shall be placed with the hook on top, except as noted.

All reinforcing bars shall be prefixed EP = Epoxy Coated Pier.

For location of patching areas see sheet 5A/12

For details of anchor rods see Ohio Standard Drawing FB-1-82.

The following abbreviations are used:

e.f. = each face	Ser. = series
m. = middle	NB = Northbound
Elev. = elevation	SB = Southbound
(Typ.) = typical	T = Top
	B = Bottom

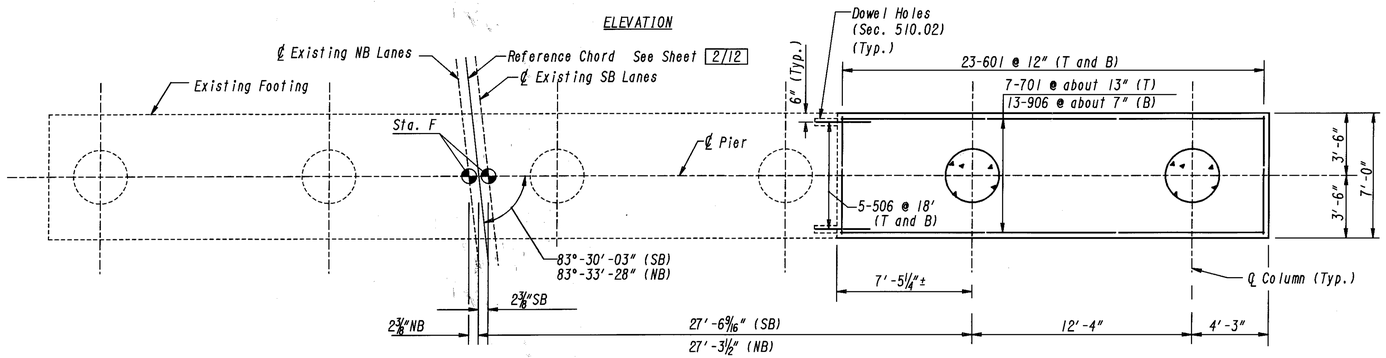

FOOTING PLAN

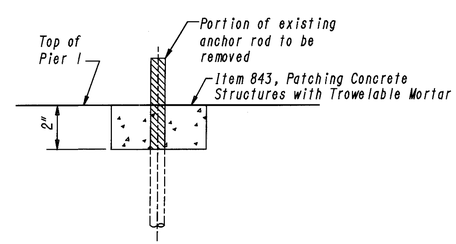

EXISTING ANCHOR ROD REMOVAL

Note: Removal of existing concrete and anchor rod shall be included for payment with Item 843 Patching Concrete Structures with Trowelable Mortar

EUTHENICS INC. CONSULTING ENGINEERS CLEVELAND, OHIO | 7 / 12

PIERS

BRIDGE NO. CUY-71-0521L AND R OVER SPRAGUE ROAD

DESIGN	DRAWN	TRACED	CHECKED	REVIEW	DATE	REVISED
KRD	EEF	—	GFH	RAB	2-94	

PLOTTED BY: fkonopka
PLOT SUBMITTED:06-AUG-1998 07:49
PLOT SCALE: 1:1
PLOT DATE: 8/6/98
USER: sberger
Pid08459 Pdgn cuy-71-521 R307prs05.dgn
307PRS05.DGN

CUY-71-0.00	OHIO	340 / 361
	FHWA REGION 5	
	FEDERAL PROJECT	

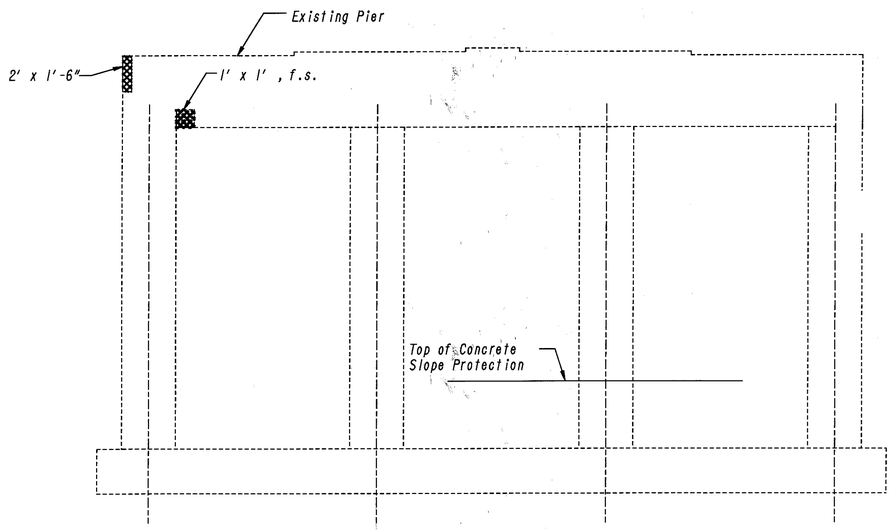

SOUTHBOUND PIER 2
(South Elevation)

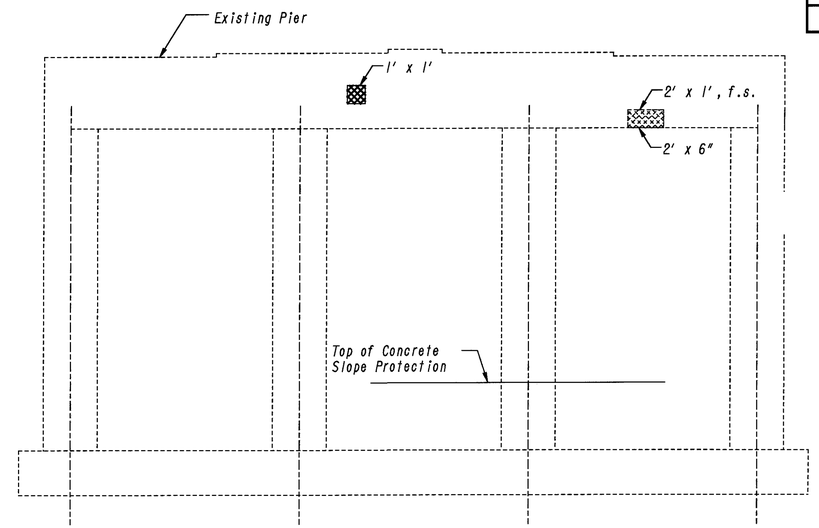

NORTHBOUND PIER 2
(South Elevation)

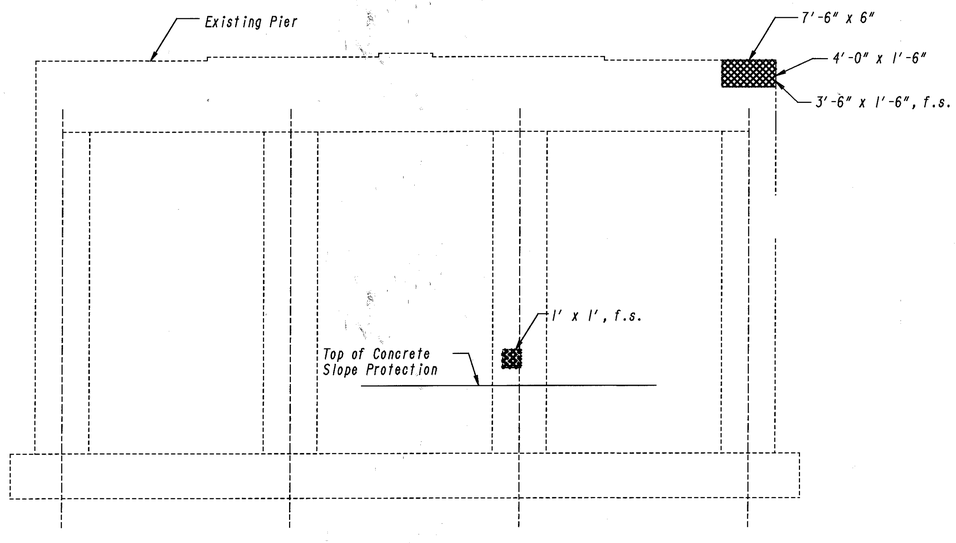

SOUTHBOUND PIER 1
(South Elevation)

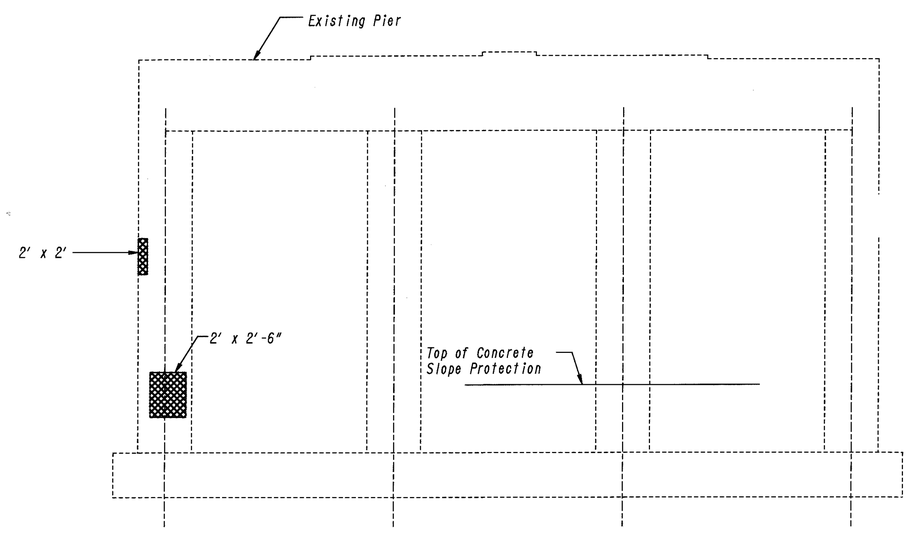

NORTHBOUND PIER 1
(South Elevation)

Note:
Item 843 - Trowelable Mortar
f.s. = far side

EUTHENICS INC.
CONSULTING ENGINEERS
CLEVELAND, OHIO

7A/12

PIER PATCHING PLAN

BRIDGE NO. CUY-71-0521L AND R
OVER SPRAGUE ROAD

DESIGN	DRAWN	TRACED	CHECKED	REVIEW	DATE	REVISED
KRD	EEF	—	GFH	RAB	11-94	

PLOTTED BY: fkonopka
PLOTTED: 06-AUG-1998 07:49
PLOT SUBMITTED: 06-AUG-1998 07:49
d08459b.dgn cuy-71-521 307pch52.dgn 307PCH52.DGN

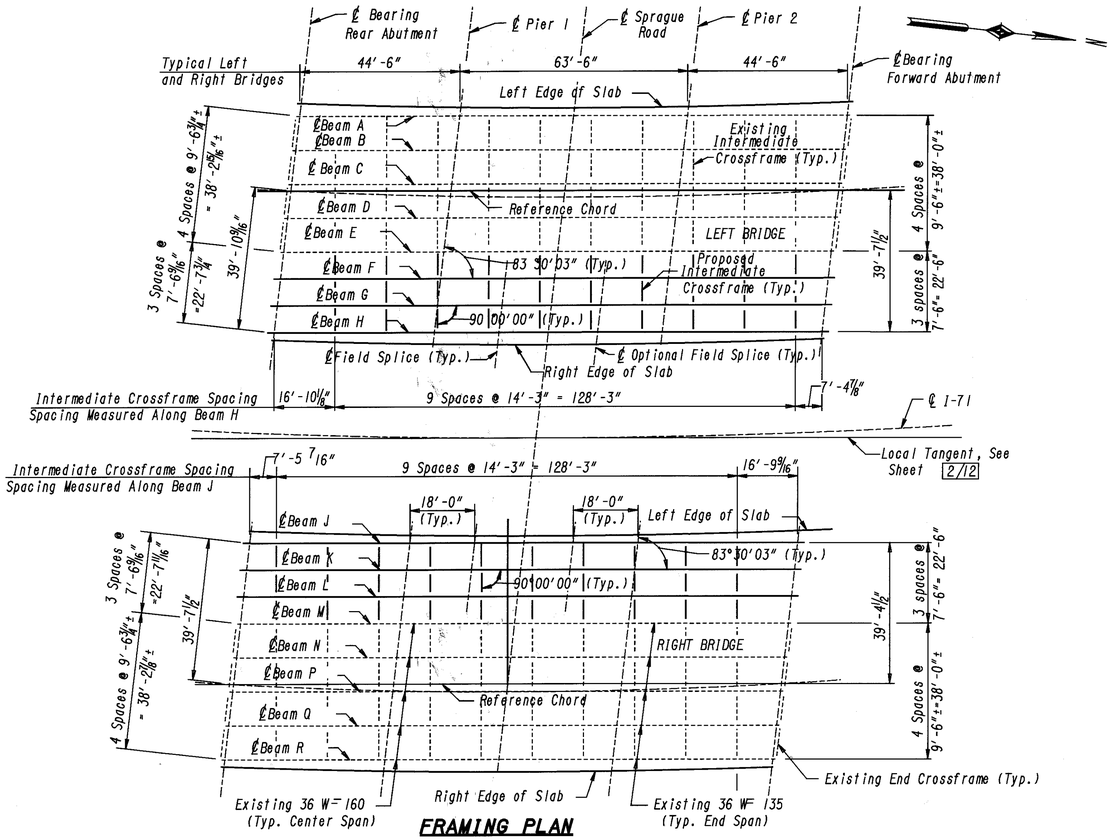

FRAMING PLAN

HORIZONTAL OFFSETS TO EDGE OF SLAB											
LOCATION	1/4	1/2	3/4	℄ Pier 1	1/4	1/2	3/4	℄ Pier 2	1/4	1/2	3/4
℄ Beam A to Left Edge of Slab	4'-6 5/8"	4'-6"	4'-5 1/2"	4'-5 1/8"	4'-4 3/4"	4'-4 5/8"	4'-4 3/8"	4'-5 1/4"	4'-5 5/8"	4'-6 1/4"	4'-6 1/8"
℄ Beam H to Right Edge of Slab	1'-11"	1'-11 3/8"	2"-0 1/4"	2'-0 3/8"	2'-1 1/8"	2'-1 3/8"	2'-1 1/4"	2'-1"	2'-0 5/8"	2'-0 1/8"	1'-11 1/2"
℄ Beam J to Left Edge of Slab	2'-0 1/2"	1'-11 1/8"	1'-1 13/8"	1'-1 1/8"	1'-10 3/4"	1'-10 5/8"	1'-10 1/8"	1'-11 1/4"	1'-10 3/4"	2'-0 3/8"	2'-1"
℄ Beam R to Right Edge of Slab	4'-5 1/8"	4'-5 3/4"	4'-6 3/8"	4'-6 3/4"	4'-7 1/8"	4'-7 3/8"	4'-7 1/4"	4'-6 1/8"	4'-6 1/2"	4'-6"	4'-5 3/8"

Note: The 1/4, 1/2 and 3/4 points are measured between bearings. Horizontal offsets are measured perpendicular to ℄ beam.

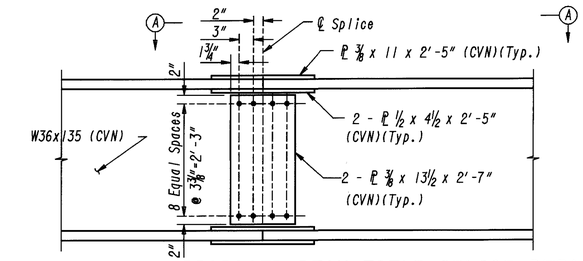

PROPOSED BEAM FIELD SPLICE DETAIL

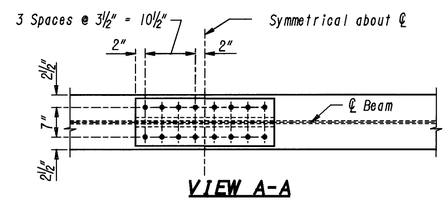

VIEW A-A

Notes:
Where a shape or plate is designated (CVN) the material shall meet the specified minimum notch toughness requirements as specified in 711.01 of CMS.

High strength bolts shall be 1" diameter A325 unless otherwise noted.

Welded attachment of supports for concrete deck finishing machine may be made to areas of the fascia stringer flanges designated "Compression". Attachments shall not be made to areas designated "Tension". Fillet welds to compression flanges shall be not closer than 1" from edge of flange, be not more than 2" long, and be not smaller than the minimum size required by AASHTO.

DEAD LOAD DEFLECTION AND CAMBER																							
Beam	SPAN 1				SPAN 2												SPAN 3			
	1/2				F.S.				1/2				Optional F.S.				1/2			
	Stl.	Rem.D.L.	Con.	Tot.	Stl.	Rem.D.L.	Con.	Tot.	Stl.	Rem.D.L.	Con.	Tot.	Stl.	Rem.D.L.	Con.	Tot.	Stl.	Rem.D.L.	Con.	Tot.
F	0	1/16	0	1/16	1/16	5/16	0	3/8	1/16	3/8	0	7/16	1/16	5/16	0	3/8	0	1/16	0	1/16
G	0	1/16	0	1/16	1/16	5/16	0	3/8	1/16	3/8	0	7/16	1/16	5/16	0	3/8	0	1/16	0	1/16
H	0	1/16	0	1/16	1/16	1/4	0	5/16	1/16	5/16	0	3/8	1/16	1/4	0	5/16	0	1/16	0	1/16
J	0	1/16	0	1/16	1/16	1/4	0	5/16	1/16	5/16	0	3/8	1/16	1/4	0	5/16	0	1/16	0	1/16
K	0	1/16	0	1/16	1/16	5/16	0	3/8	1/16	3/8	0	7/16	1/16	5/16	0	3/8	0	1/16	0	1/16
L	0	1/16	0	1/16	1/16	5/16	0	3/8	1/16	3/8	0	7/16	1/16	5/16	0	3/8	0	1/16	0	1/16

Note: Deflections and convexities are given to the nearest 1/16 inch.

The following abbreviations are used:
Stl. = Dead load deflection due to weight of steel
Rem D.L. = Remaining dead load deflection
Con. = Convexity
Tot. = Total required camber

VERTICAL OFFSET		
BEAM	PIER 1	PIER 2
F	-1/16	0
G, H	-1/16	-1/16
J	0	1/16
K, L	1/16	1/16

Note: Negative values of vertical offset indicate values above base line.

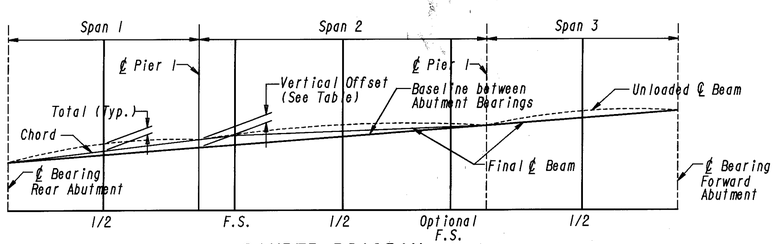

CAMBER DIAGRAM
(Typical All Proposed Beams)

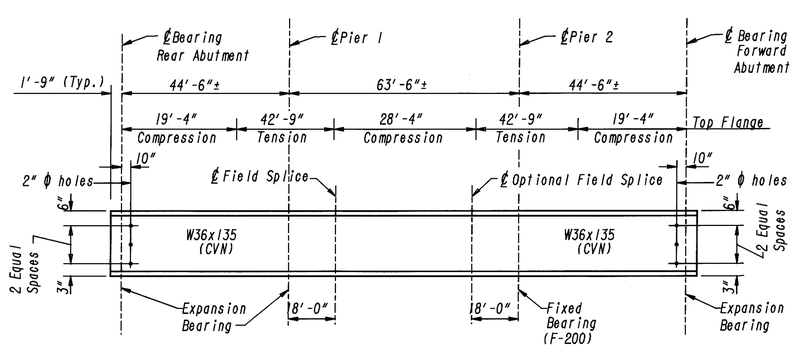

TYPICAL PROPOSED BEAM ELEVATION
(Beams F thru L)

For details of Proposed Intermediate Crossframes see sheet 10/12.

For additional beam splice notes and details see Ohio Standard Drawing SD-1-69 Sheet 4 of 4.

For details of fixed bearings see Ohio Standard Drawing FB-1-82.

EXPANSION BEARINGS: Existing expansion bearings at the abutments and Pier 1 shall be removed and replaced. For details of expansion bearings see sheet 11/12.

The following abbreviations are used:
(Typ.) = Typical PL = Plate
F.S. = Field Splice

EUTHENICS INC. CONSULTING ENGINEERS CLEVELAND, OHIO

8/12

FRAMING PLAN

BRIDGE NO. CUY-71-0521L AND R OVER SPRAGUE ROAD

DESIGN	DRAWN	TRACED	CHECKED	REVIEW	DATE	REVISED
GFH	EEF	—	KRD	RAB	3-94	

PLOTTED BY: fkonopka
PLOTTED: Tue, 06-Aug-1998 07:50
PLOT SUBMITTED: 06-AUG-1998 07:50
307FP05.DGN

CUY-71-0.00	OHIO	342 / 361
	FHWA REGION 5	
	FEDERAL PROJECT	

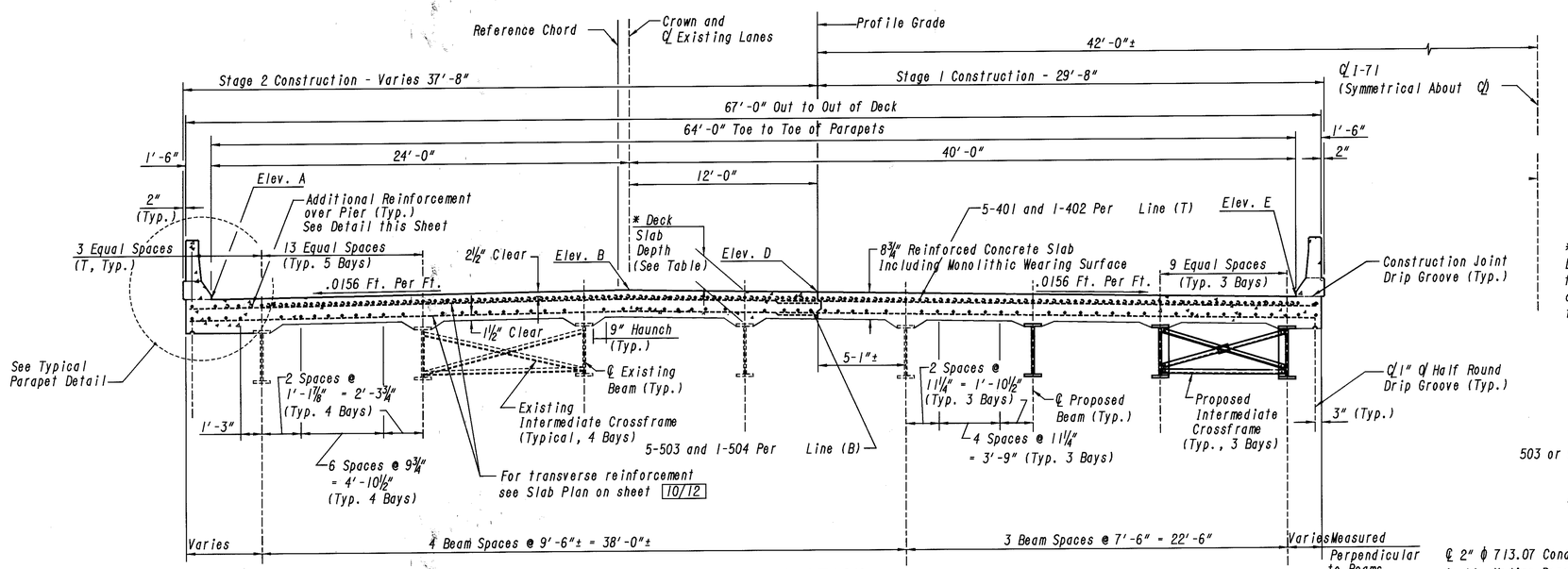

TRANSVERSE SECTION

Note:
Transverse dimensions measured radially, except as noted.

*TABLE OF DECK SLAB DEPTH (at ℄ Bearing)	Rear Abutment	Pier 1	Pier 2	Forward Abutment
Existing Beams	12⅞ ±	12¾ ±	12⅞ ±	12⅞ ±
Proposed Beams	10¾	10¾	10¾	10¾

*DECK SLAB DEPTH: The distances shown from top of the deck slab to top of the steel beams are the design dimensions. The quantity of deck concrete in each span to be paid for shall be based on the average of these slab depths at the end of each span, even though deviation from it may be necessary because the top flange of the beam may not have the exact camber or conformation required to place it parallel to the finished grade.

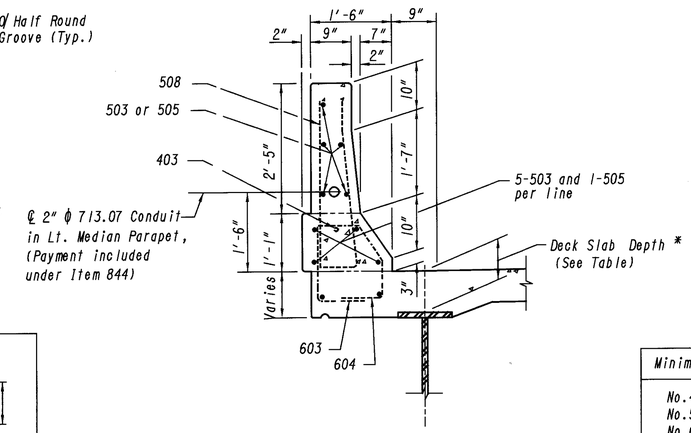

Minimum Lap Lengths	
No.4 Bar	1'-7"
No.5 Bar	2'-6"
No.6 Bar	2'-4"

TYPICAL PARAPET DETAIL

A haunch width of 9" shall be used for computing quantitiy of concrete. However, the haunch width may vary between 6 and 12 inches.

DECK SCREED ELEVATIONS											
		SPAN 1			SPAN 2			SPAN 3			
	Elev.	℄ Bearing Rear Abutment	1/2	℄ Bearing Pier 1	Field Splice	1/2	Optional F.S.	℄ Bearing Pier 2	1/2	℄ Bearing Fwd. Abutment	Elev.
SOUTHBOUND LANES	A	834.08	834.22	834.35	834.49	834.58	834.66	834.74	834.89	835.01	A
	B	834.44	834.58	834.71	834.84	834.94	835.01	835.10	835.24	835.37	B
	C	Not Used									C
	D	834.25	834.39	834.52	834.65	834.75	834.82	834.91	835.05	835.19	D
	E	833.79	833.93	834.06	834.19	834.28	834.36	834.45	834.59	834.72	E
	Beam										Beam
	A	834.12	834.27	834.39	834.53	834.62	834.70	834.78	834.93	835.06	A
	B	834.27	834.41	834.54	834.67	834.76	834.84	834.93	835.07	835.20	B
	C	834.41	834.55	834.68	834.81	834.91	834.98	835.07	835.21	835.34	C
	D	834.31	834.46	834.59	834.72	834.82	834.89	834.98	835.12	835.25	D
	E	834.16	834.31	834.43	834.57	834.66	834.74	834.82	834.96	835.09	E
	F	834.04	834.18	834.31	834.45	834.54	834.61	834.70	834.84	834.97	F
	G	833.91	834.06	834.19	834.22	834.42	834.49	834.58	834.72	834.85	G
	H	833.79	833.94	834.07	834.20	834.29	834.37	834.46	834.60	834.72	H
NORTHBOUND LANES	Elev.										Elev.
	A	833.98	834.12	834.25	834.38	834.47	834.55	834.63	834.78	834.90	A
	B	834.37	834.51	834.64	834.77	834.86	834.94	835.02	835.17	835.29	B
	C	Not Used									C
	D	834.18	834.32	834.45	834.58	834.67	834.75	834.84	834.97	835.11	D
	E	833.77	833.91	834.04	834.17	834.26	834.34	834.43	834.57	834.70	E
	Beam										Beam
	J	833.78	833.92	834.05	834.17	834.27	834.34	834.43	834.58	834.71	J
	K	833.89	834.03	834.16	834.29	834.38	834.46	834.54	834.69	834.82	K
	L	834.00	834.14	834.27	834.40	834.49	834.57	834.66	834.80	834.93	L
	M	834.11	834.26	834.38	834.51	834.61	834.68	834.77	934.91	835.04	M
	N	834.26	834.40	834.52	834.66	834.75	834.82	834.91	835.05	835.18	N
	P	834.33	834.48	834.60	834.74	834.83	834.91	834.99	835.13	835.26	P
	Q	834.18	834.32	834.45	834.58	834.68	834.75	834.84	834.98	835.10	Q
	R	834.02	834.17	834.30	834.43	834.52	834.60	834.68	834.82	834.95	R

Note: The top of concrete deck elevations above are those which are required before concrete is placed. Proper allowances have been made for the dead load deflections caused by the weight of the concrete.

REINFORCEMENT SCHEDULE SIGN SUPPORT					
MARK	NO.	LENGTH	TYPE	SER. INCR.	WEIGHT (LBS.)
S 501	4	2'-10"	6		12
S 502	4	9'-9"	64		41
S 503	7	7'-3"	16		53
S 504	4	3'-11"	Str.		16
FOR ONE SIGN SUPPORT					122

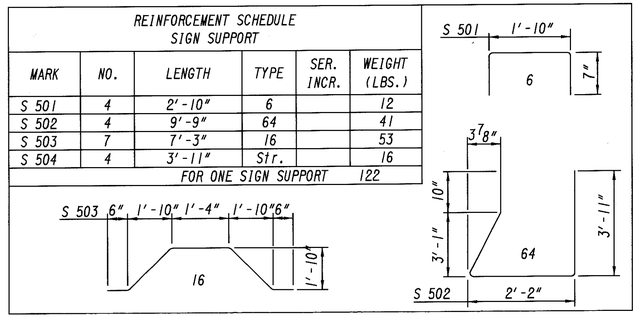

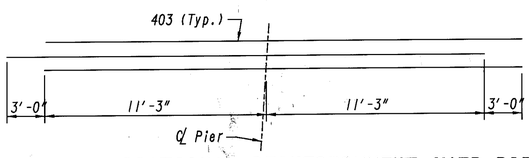

ADDITIONAL REINFORCEMENT OVER PIER

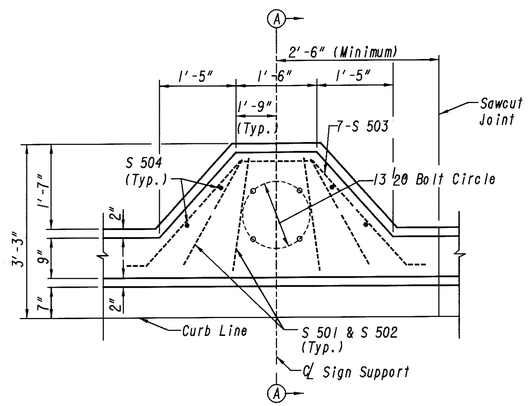

PLAN

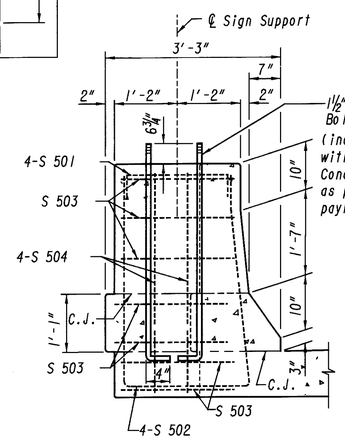

SECTION A-A

(Normal Deck and Parapet Reinforcement not Shown)

Notes:

All reinforcing bars shall be prefixed ES.

See Sheet 10/12 for parapet reinforcing.

The following abbreviations are used:
T = Top B = Bottom
Min. = Minimum Typ. = Typical
Fwd. = Forward

EUTHENICS INC.
CONSULTING ENGINEERS
CLEVELAND, OHIO

9 / 12

TRANSVERSE SECTION

BRIDGE NO. CUY-71-0521L AND R
OVER SPRAGUE ROAD

DESIGN	DRAWN	TRACED	CHECKED	REVIEW	DATE	REVISED
KRD	EEF	——	GFH	RAB	3-94	

PLOTTED BY: fkonopka
PLOTTED: 06-AUG-1998 07:50
PLOT SUBMITTED:06-AUG-1998 07:50
cuy-71-521L307ttsx05.dgn 307TSX05.DGN

CUY-71-0.00	OHIO	343/361
	FHWA REGION 5	
	FEDERAL PROJECT	

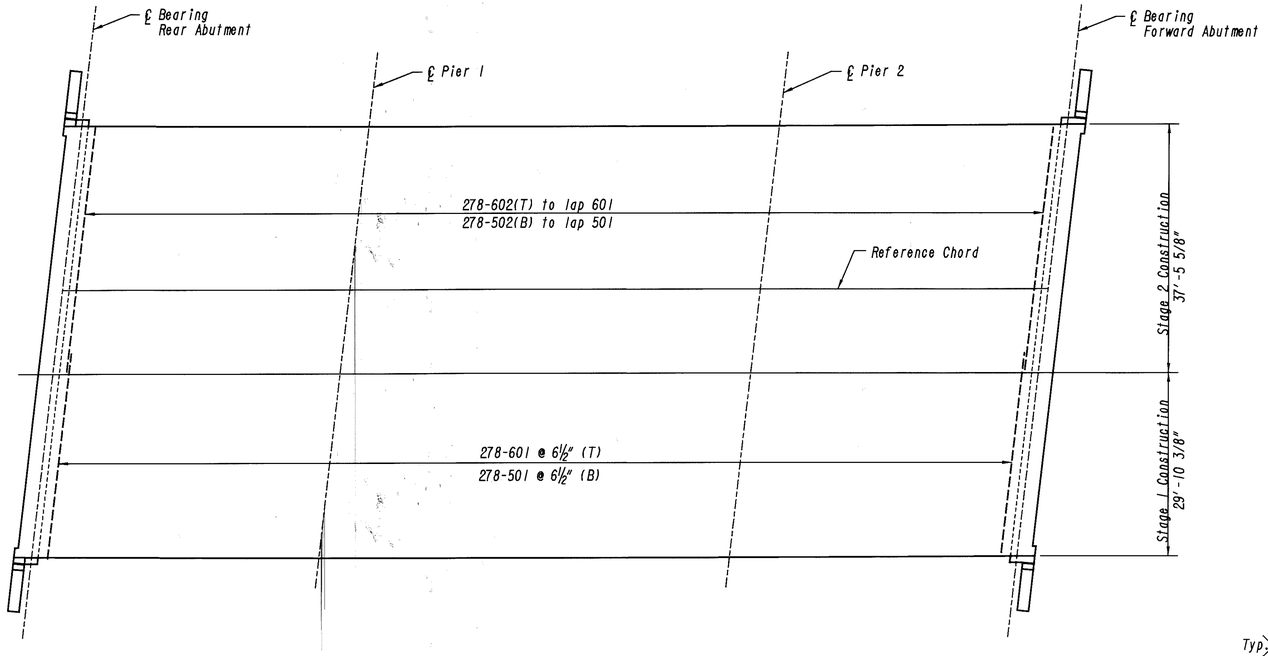

SLAB PLAN

(Southbound Shown, Northbound Similar)

Note: Transverse bars are placed parallel to abutments and piers. Spacing is given along Reference Chord.

For longitudinal reinforcing see Transverse Section on sheet 9/12.

Minimum Lap Lengths	
No.5 Bar	2'-6"
No.6 Bar	2'-4"

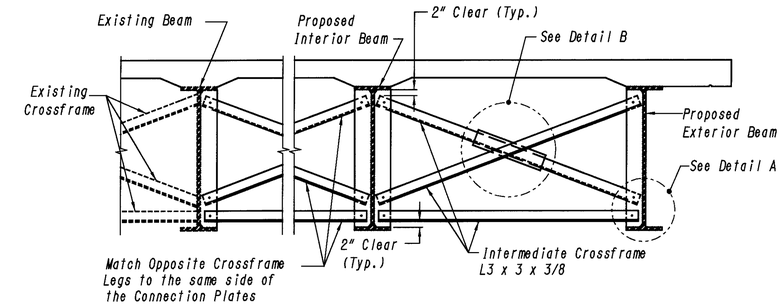

INTERMEDIATE CROSSFRAME

ERECTION BOLTS: The hole diameter in the crossframes and beam stiffeners shall be 3/16" larger than the diameter of the erection bolts. Unless replaced by permanent high strength bolts, erection bolts shall remain in place. Lock washers shall be furnished for other than fully torqued high strength erection bolts. Bolts shall be furnished as part of Item 863.

In lieu of erection bolts and at the option of the Contractor, alternative means of temporary bracing may be used subject to the approval of the Director (501.06).

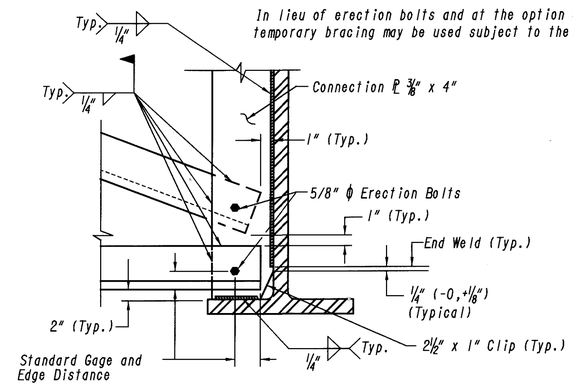

DETAIL A

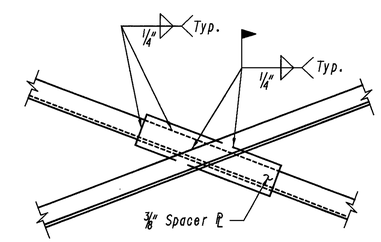

DETAIL B

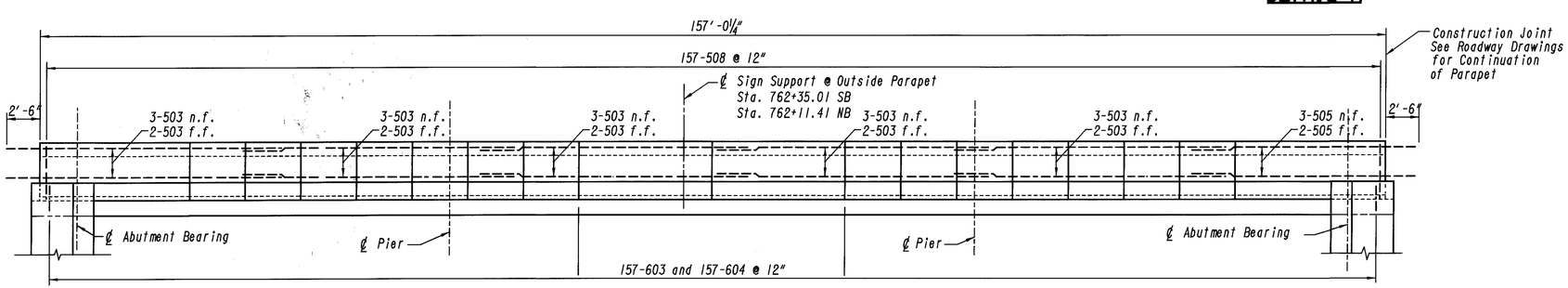

TYPICAL PARAPET ELEVATION

Notes:

Quantities of concrete and reinforcing steel for parapets are included with their appropriate items under superstructure for payment.

All reinforcing bar marks shall be prefixed ES.

For sign support details see sheet 9/12.

The following abbreviations are used:

e.f. = each face	(NB) = Northbound
n.f. = near face	(SB) = Southbound
f.f. = far face	

For parapet sawcut joint spacing, see sheet GN3.

EUTHENICS INC. CONSULTING ENGINEERS CLEVELAND, OHIO

10/12

SLAB PLAN AND PARAPET ELEVATION

BRIDGE NO. CUY-71-0521L and R OVER SPRAGUE ROAD

DESIGN	DRAWN	TRACED	CHECKED	REVIEW	DATE	REVISED
KRD	EEF	—	GFH	RAB	3-94	

PLOTTED BY: fkonopka
PLOTTED ON: Tuesday
PLOT SUBMITTED: 06-AUG-1998 07:51
307PE05.DGN
307pe05.dgn
cuy-71-521L
d08459bdgn

CUY-71-0.00	OHIO	343A / 361
	FHWA REGION 5	
	FEDERAL PROJECT	

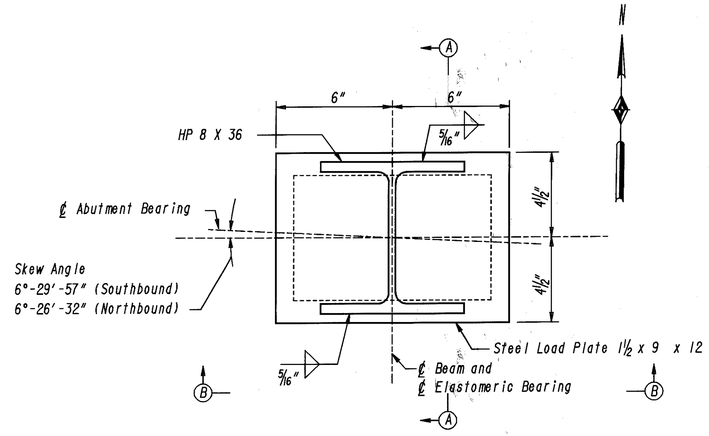

EXPANSION BEARING AT ABUTMENTS

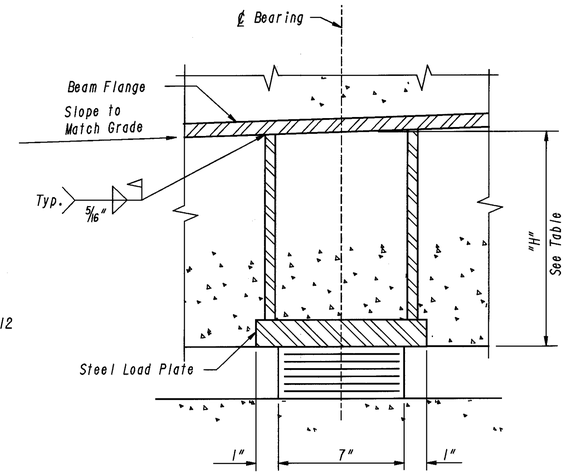

SECTION A-A

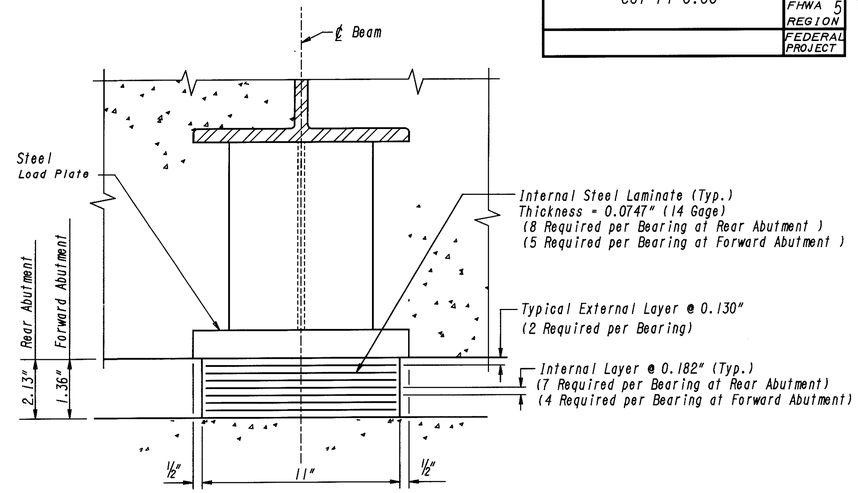

SECTION B-B

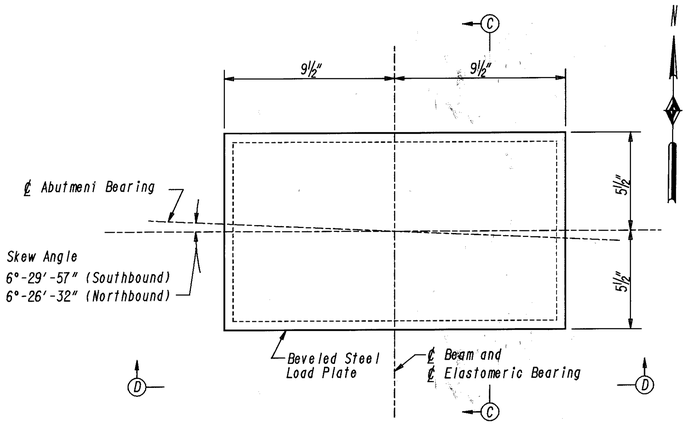

EXPANSION BEARING AT PIER 1

		PEDESTAL HEIGHT "H" (Inches)							
SOUTHBOUND	BEAM	A	B	C	D	E	F	G	H
	Forward Abutment	14 5/8	16 13/16	18 1/8	16 11/16	14 1/2	14 15/16	13 7/16	12
	Rear Abutment	13 11/16	15 3/4	17 1/2	16 5/16	14 1/16	14 15/16	13 7/16	12
NORTHBOUND	BEAM	J	K	L	M	N	P	Q	R
	Forward Abutment	12	13 3/8	14 11/16	14	16 1/16	17	15	13 1/16
	Rear Abutment	12	13 3/8	14 11/16	13 7/8	15 5/16	16 1/4	14 1/2	12 5/16

LAMINATED ELASTOMERIC BEARING NOTES:
DESIGN LOADING: SERVICE LOAD REACTIONS - KIPS

	DEAD LOAD	LIVE LOAD WITHOUT IMPACT	TOTAL
ABUTMENTS:	25.7	46.8	72.5
PIER:	101.4	52.9	160.6

LAMINATED ELASTOMERIC BEARING NOTES:

WELDING OF THE SUPPORT POST TO THE LOAD PLATE AND OF THE LOAD PLATE TO THE GIRDER SHALL BE CONTROLLED SO THAT THE PLATE TEMPERATURE AT THE ELASTOMER BONDED SURFACE DOES NOT EXCEED 300 DEGREES FAHRENHEIT AS DETERMINED BY USE OF PYROMETRIC STICKS OR OTHER TEMPERATURE MONITORING DEVICES.

STEEL FOR LOAD PLATES SHALL BE ASTM A709, GRADE 50.

THE STEEL LOAD PLATE SHALL BE BONDED BY VULCANIZATION TO THE ELASTOMER DURING THE MOLDING PROCESS.

ELASTOMERIC BEARINGS SHALL COMPLY WITH ITEM 516 AND ARTICLE 14.6.5 OF SECTION 14, BEARINGS OF THE CURRENT AASHTO SPECIFICATIONS. BEARINGS SHALL BE GRADE 3, 50 DUROMETER ELASTOMER. THE UNIT PRICE BID SHALL INCLUDE STEEL SUPPORT POSTS AND ALL OTHER MATERIALS, LABOR AND INCIDENTALS NECESSARY TO FURNISH AND INSTALL LAMINATED ELASTOMERIC BEARINGS. PAYMENT WILL BE MADE AT THE CONTRACT PRICE BID FOR THE APPROPRIATE ITEM 516 - ELASTOMERIC BEARING WITH INTERNAL LAMINATES AND LOAD PLATE (NEOPRENE), AS PER PLAN.

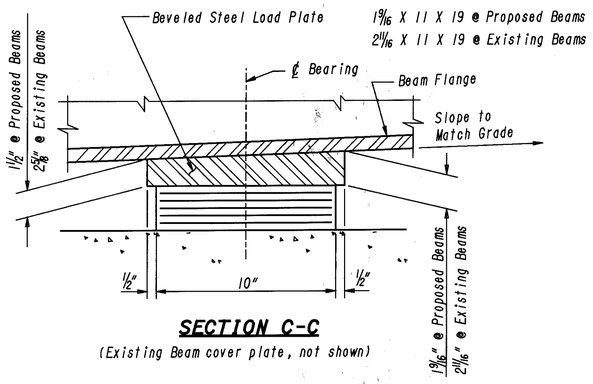

SECTION C-C

(Existing Beam cover plate, not shown)

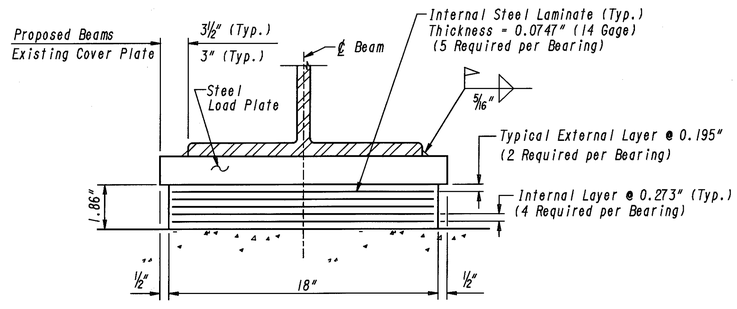

SECTION D-D

(Existing Beam cover plate, not shown)

EUTHENICS INC.
CONSULTING ENGINEERS
CLEVELAND, OHIO

11/12

LAMINATED ELASTOMERIC BEARINGS

BRIDGE NO. CUY-71-0521L AND R OVER SPRAGUE ROAD

DESIGN	DRAWN	TRACED	CHECKED	REVIEW	DATE	REVISED
KRD	EEF	—	GFH	RAB	3-94	

PLOTTED BY: fkonopka
PLOT SUBMITTED:06-AUG-1998 07:52
PLOT SCALE: 1:1
PLOT DATE: 6-AUG-98
307LEB05.DGN
307leb05.dgn Bcuy-71-521 Bid08459 Bdgn Bmorsber

MARK	NO.	LENGTH	TYPE	SER. INCR.	WEIGHT (LBS.)
ABUTMENTS					
EA 501	64	7'-2"	Str		478
EA 502	112	6'-10"	Str		798
EA 503	8	11'-0"	6		92
EA 504	60	7'-4"	5		459
EA 505	64	7'-10"	6		523
EA 506	216	2'-0"	5		451
EA 507	108	3'-5"	Str		385
EA 508	4	5'-11"	Str		25
EA 509	4 Ser 7	5'-8" to 13'-8"	6	1'-4"	282
EA 510	4 Ser 7	5'-8" to 14'-2"	6	1'-5"	290
EA 511	48	3'-8"	Str		184
EA 512	12	12'-8"	Str		159
EA 513	12	13'-0"	Str		163
EA 514	16	30'-3"	Str		505
EA 515	116	20'-0"	Str		2,420
EA 516	68	21'-0"	Str		1489
EA 517	8	17'-1"	Str		143
EA 518	16	8'-7"	Str		143
EA 519	8	8'-10"	Str		74
EA 520	8	9'-4"	Str		78
EA 521	8	5'-9"	Str		48
EA 522	4	6'-0"	Str		25
EA 523	8	2'-11"	Str		24
EA 524	8	3'-2"	Str		26
EA 525	68	33'-2"	Str		2,352
EA 526	16	25'-0"	Str		417
EA 527	8	16'-3"	Str		136
EA 528	8	8'-4"	Str		70
EA 529	8	8'-1"	Str		67
EA 530	4	5'-6"	Str		23
EA 531	24	10'-10"	Str		271
EA 532	24	23'-11"	Str		599
EA 533	260	9'-2"	6		2,486
EA 534	252	9'-6"	27		2,497
EA 535	252	4'-8"	5		1,227
EA 536	228	4'-3"	9		1,011
EA 537	8	13'-2"	6		110
EA 538	48	6'-0"	26		300
EA 539	8	6'-10"	5		57
EA 540	8	7'-1"	5		59
EA 541	164	4'-1"	9		698
EA 601	64	7'-2"	Str		689
EA 602	32	23'-0"	Str		1,105
EA 603	40	4'-3"	Str		255
EA 604	12	6'-3"	Str		113
EA 605	36	10'-6"	6		568
EA 606	4	7'-8"	Str		46
EA 607	4	8'-1"	Str		49
EA 608	60	7'-5"	5		668
EA 801	180	4'-10"	8		2,323
			TOTAL WEIGHT		27,460*
PIERS					
EP 401	40	16'-11"	Str		452
EP 402	28	8'-7"	45		161
EP 403	28	7'-0"	6		131
EP 404	4	14'-5"	51		1,032
EP 405	2	14'-6"	51		527
EP 406	2	14'-4"	51		516
EP 501	16	13'-6"	10		225
EP 502	4 Ser 7	13'-2" to 13'-4"	10	5/16	387
EP 503	72	4'-5"	6		332
EP 504	4	4'-2"	6		17
EP 505	4	3'-8"	6		15
EP 506	40	3'-0"	Str		125
EP 601	184	6'-8"	Str		1,842
EP 701	28	23'-8"	Str		1,354
EP 901	8	16'-11"	Str		460
EP 902	8	12'-4"	Str		335
EP 903	8	23'-6"	26		639
EP 904	4	24'-11"	26		339

MARK	NO.	LENGTH	TYPE	SER. INCR.	WEIGHT (LBS.)
EP 905	8	14'-6"	49		349
EP 906	52	23'-8"	Str		3,305
EP 1001	64	12'-0"	5		3,305
EP 1002	64	18'-0"	Str		4,957
			TOTAL WEIGHT		21,684*
SUPERSTRUCTURE					
ES 401	860	30'-0"	Str		17,234
ES 402	172	14'-7"	Str		1,676
ES 403	168	25'-6"	Str		2,862
ES 501	556	32'-3"	Str		18,702
ES 502	556	37'-6"	Str		21,747
ES 503	810	30'-0"	Str		25,345
ES 504	126	15'-4"	Str		2,015
ES 505	36	24'-6"	Str		920
ES 506					NOT USED
ES 507					NOT USED
ES 508	628	6'-11"	67		4,533
ES 601	556	32'-3"	Str		26,932
ES 602	556	37'-6"	Str		31,317
ES 603	628	2'-6"	5		2,358
ES 604	628	3'-2"	43		2,987
			TOTAL WEIGHT		158,628*

BENDING DIAGRAMS

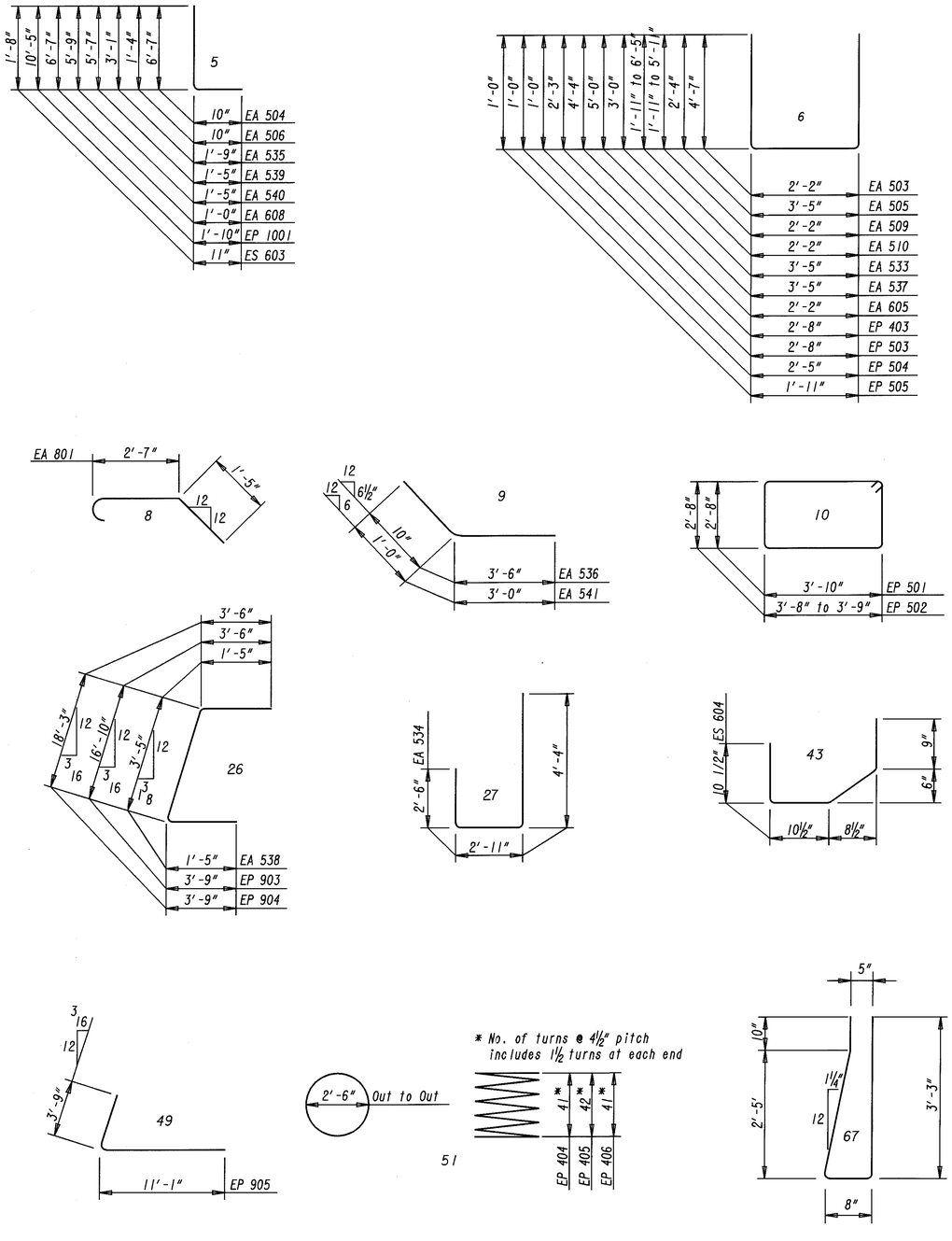

NOTES

1. THE BAR SIZE NUMBER IS SPECIFIED ON THE PLANS IN THE BAR MARK COLUMN. THE FIRST DIGIT WHERE THREE DIGITS ARE USED AND THE FIRST TWO DIGITS WHERE FOUR ARE USED INDICATES THE BAR SIZE NUMBER. FOR EXAMPLE, P601 IS A NO. 6 BAR. BAR DIMENSIONS SHOWN ARE OUT TO OUT UNLESS OTHERWISE INDICATED. R INDICATES INSIDE RADIUS. UNLESS OTHERWISE NOTED, "STD." WRITTEN IN PLACE OF A DIMENSION INDICATES A STANDARD BEND AT THE END OF THE BAR.

2. ALL REINFORCING STEEL TO BE EPOXY COATED.

3. CONCRETE SPACERS OR OTHER APPROVED NONCORROSIVE SPACING DEVICES SHALL BE USED AT SUFFICIENT INTERVALS (NEAR THE BOTTOM AND AT INTERVALS NOT EXCEEDING 10 FEET) TO ENSURE CONCENTRIC SPACING FOR THE ENTIRE CAGE LENGTH. SPACERS SHALL BE CONSTRUCTED OF APPROVED MATERIAL EQUAL IN QUALITY AND DURABILITY TO THE CONCRETE SPECIFIED FOR THE SHAFT. THE SPACERS SHALL HAVE ADEQUATE DIMENSIONS TO ENSURE A MINIMUM 3 INCH CLEAR SPACE BETWEEN THE OUTSIDE OF THE REINFORCING CAGE AND THE DESIGN DIMENSION OF THE COLUMN. CYLINDRICAL CONCRETE FEET (BOTTOM SUPPORTS) SHALL BE PROVIDED TO ENSURE THAT THE BOTTOM OF THE CAGE IS MAINTAINED AT THE PROPER DISTANCE ABOVE THE BASE.

4. SPIRAL REINFORCING BARS: THE "LENGTH" SHOWN IN THE STEEL LIST FOR THE SPIRAL BARS IS THE LENGTH OF THE SPIRAL ALONG THE AXIS OF THE SPIRAL. THREE STEEL CHANNEL, TEE OR ANGLE SPACERS, WEIGHING APPROXIMATELY 0.80 LB PER LINEAR FEET OF SPACER, SHALL BE PROVIDED FOR EACH SPIRAL UNIT. THEY SHALL BE EQUALLY SPACED ALONG THE PERIPHERY OF THE COILS. THE NUMBER OF POUNDS OF THESE SPACERS, BASED ON 2.40 LB PER LINEAR FOOT IS INCLUDED IN THE TABULATED QUANTITIES OF SPIRAL BARS.

* 5. ALL REINFORCING STEEL SHALL BE INCLUDED WITH THE APPROPRIATE ITEM 844 FOR PAYMENT. WEIGHTS ARE GIVEN FOR INFORMATIONAL PURPOSES ONLY.

CUY-71-0.00	OHIO	343B / 361
	FHWA REGION 5	
	FEDERAL PROJECT	

EUTHENICS INC.
CONSULTING ENGINEERS
CLEVELAND, OHIO

12/12

REINFORCEMENT SCHEDULE

BRIDGE NO. CUY-71-0521L AND R OVER SPRAGUE ROAD

DESIGN	DRAWN	TRACED	CHECKED	REVIEW	DATE	REVISED
GFH	EEF	—	KRD	RAB	3-94	

PLOTTED BY: fkonopka
PLOT SCALE: 1:1
PLOT DATE: 06-AUG-1998 07:52
PLOT SUBMITTED: 06-AUG-1998 07:52
cuy-71-52 B307rs05.dgn 307RS05.DGN
d08459bdgnbcuy-71-52 B307rs05.dgn
bid for sber

CUY-71-0.00	OHIO FHWA REGION 5 FEDERAL PROJECT	344 / 361

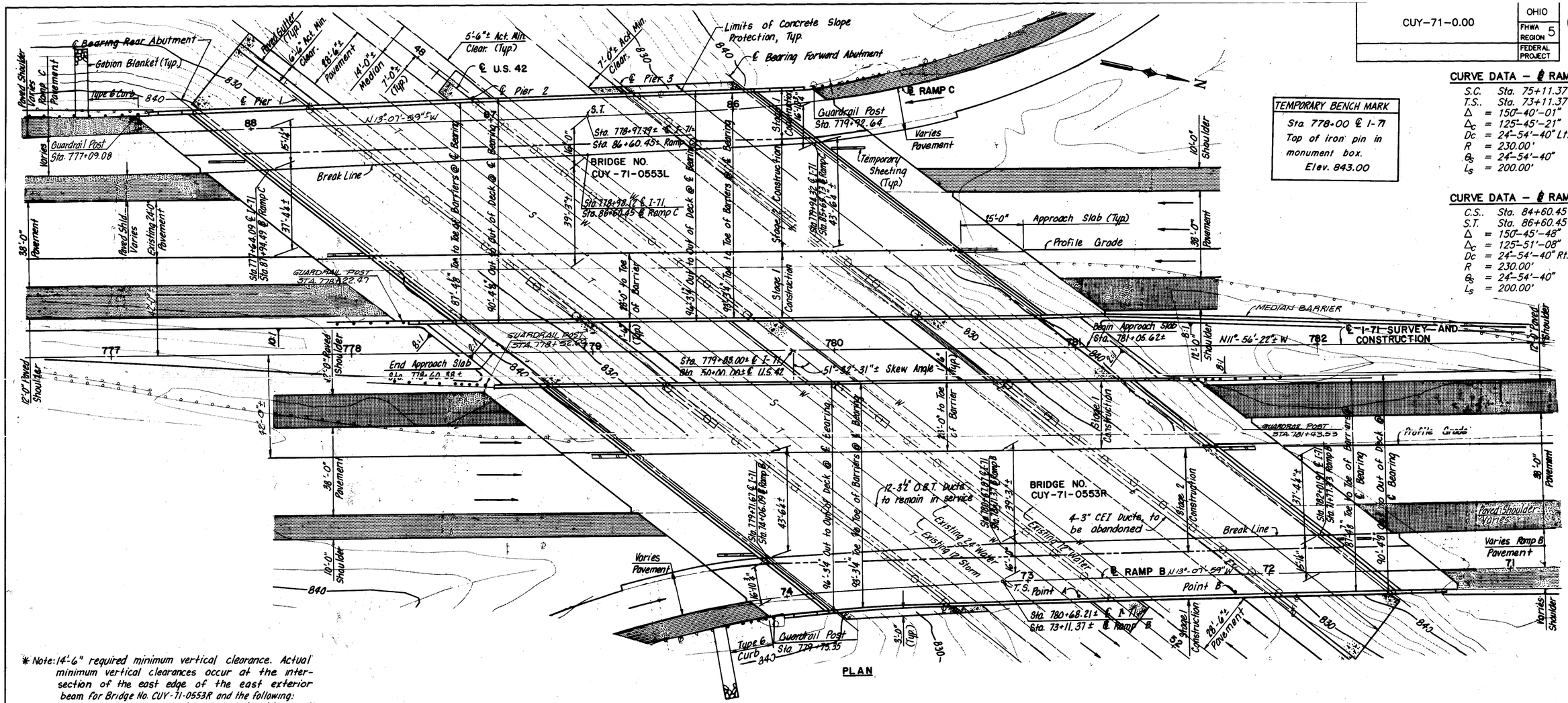

PLAN

TEMPORARY BENCH MARK
Sta. 778+00 ℄ I-71
Top of iron pin in monument box.
Elev. 843.00

CURVE DATA – ℄ RAMP–B

S.C.	Sta. 75+11.37
T.S.	Sta. 73+11.37
Δ	= 150°-40'-01"
Δ_c	= 125°-45'-21"
Dc	= 24°-54'-40" Lt.
R	= 230.00'
θ_s	= 24°-54'-40"
L_s	= 200.00'

CURVE DATA – ℄ RAMP–C

C.S.	Sta. 84+60.45
S.T.	Sta. 86+60.45
Δ	= 150°-45'-48"
Δ_c	= 125°-51'-08"
Dc	= 24°-54'-40" Rt.
R	= 230.00'
θ_s	= 24°-54'-40"
L_s	= 200.00'

* Note: 14'-6" required minimum vertical clearance. Actual minimum vertical clearances occur at the intersection of the east edge of the east exterior beam for Bridge No. CUY-71-0553R and the following:
Point A - West edge of Northbound U.S. 42
Point B - West edge of Southbound U.S. 42

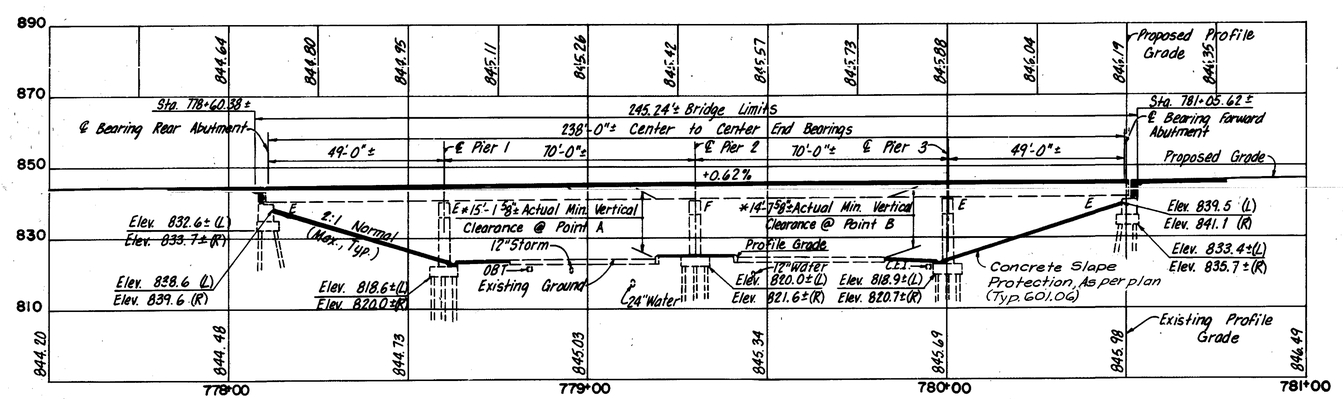

NORTH BOUND PROFILE SHOWN SOUTH BOUND SIMILAR

TRAFFIC DATA – (I–71)

1995	A.D.T.	=	76,410
	A.D.T.T.	=	4,580
2017	A.D.T.	=	105,570
	A.D.T.T.	=	6,330

UTILITIES
Existing utilities are to remain in service, except as noted.

STRUCTURE FILE NOS. 1804022L and 1804057R

EUTHENICS INC. CONSULTING ENGINEERS CLEVELAND, OHIO — 1/18

SITE PLAN
BRIDGE NO. CUY-71-0553L AND R
OVER U.S.-42
CUYAHOGA COUNTY STA. 778+60.38± TO STA. 781+05.62±

DESIGN	DRAWN	TRACED	CHECKED	REVIEW	DATE	REVISED
KRD	SMM	—	MEK	RAB	3-94	

PLOTTED BY: lminceck
PLOTTED: 1-Aug-1998 07:58
PLOT SUBMITTED:06-AUG-1998 07:58
307SP09.DGN
307sp09.dgn
Bpid08459Bdgn
Bforsber

CUY-71-0.00	OHIO	345 / 361
	FHWA REGION 5	
	FEDERAL PROJECT	

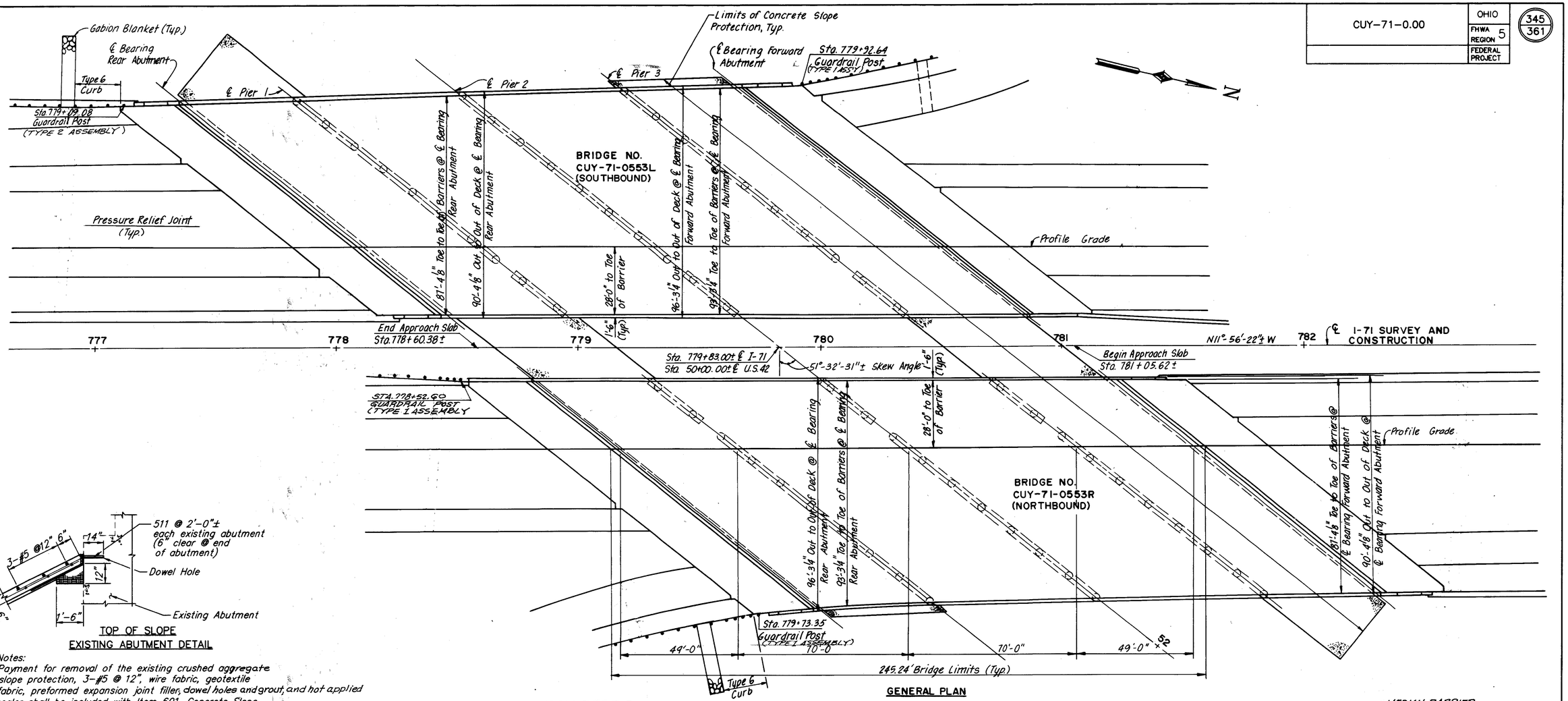

GENERAL PLAN

TOP OF SLOPE
EXISTING ABUTMENT DETAIL

Notes:
Payment for removal of the existing crushed aggregate slope protection, 3-#5 @ 12", wire fabric, geotextile fabric, preformed expansion joint filler, dowel holes and grout, and hot applied sealer shall be included with Item 601, Concrete Slope Protection, as per plan.

Filter fabric shall extend to the top of the joint. The fabric around the trench key shall be continuous and overlap a minimum of 18" as shown.

Welded Wire Fabric - 6x6, W4.0xW4.0 (58 lbs/100 sq ft) sheets only. Lap sheets a minimum of 1'-5" in both directions.

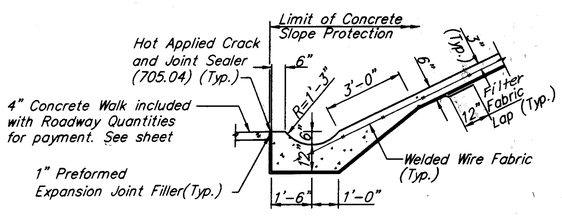

PAVED GUTTER

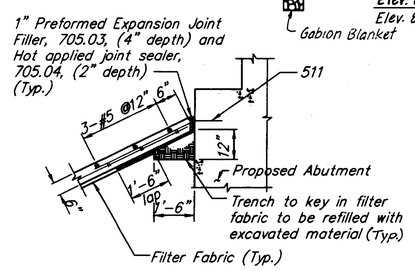

TOP OF SLOPE
PROPOSED ABUTMENT DETAIL

CONCRETE SLOPE PROTECTION AS PER PLAN (SEE NOTE ON SHEET GN2)

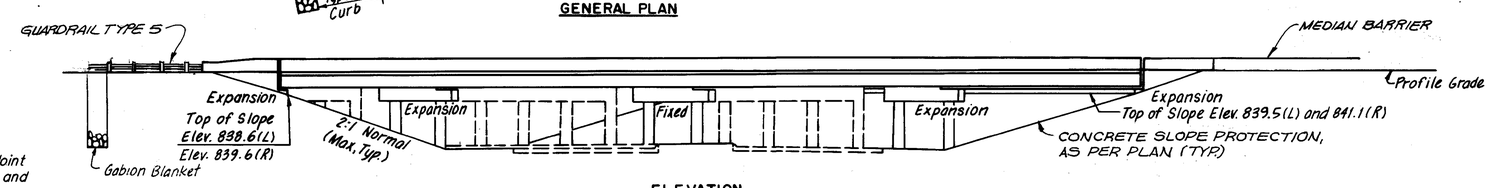

ELEVATION
(ALONG EAST SIDE OF SOUTHBOUND BRIDGE)

EUTHENICS INC.
CONSULTING ENGINEERS
CLEVELAND, OHIO

2 / 18

GENERAL PLAN AND ELEVATION

BRIDGE NO. CUY-71-0553L AND R
OVER U.S.-42

DESIGN	DRAWN	TRACED	CHECKED	REVIEW	DATE	REVISED
KRD	GFH	—	BMG	RAB	3-94	

PLOTTED BY: fkonopka
PLOT SUBMITTED: 07-AUG-1998 12:37
307GP06.DGN

CUY-71-0.00	OHIO	346/361
	FHWA REGION 5	
	FEDERAL PROJECT	

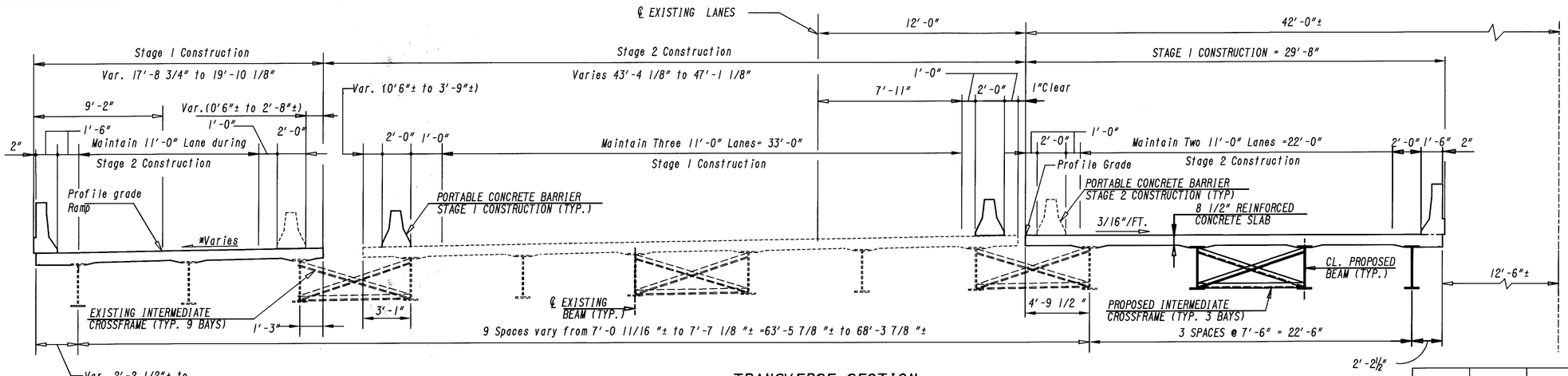

TRANSVERSE SECTION STAGE CONSTRUCTION

32", BRIDGE MOUNTED, PORTABLE CONCRETE BARRIER ANCHORS△	
MOT Stage	No. Anchors/Segment
1	4
2 (Mainline)	3 ‡
2 (Ramps)	2 ‡

△ DOUBLE THE NUMBER OF ANCHORS SHOWN WHERE DECK EDGE TO BARRIER DISTANCE IS LESS THAN 1'-0", INSTALLING AS MANY AS PRACTICAL ON THE TRAFFIC SIDE OF THE BARRIER. ON EXISTING DECKS, NON-TRAFFIC SIDE ANCHORS MUST BE THRU-BOLTED.

‡ ON NEW DECKS ONLY APPROVED RESIN ANCHORS MAY BE USED.

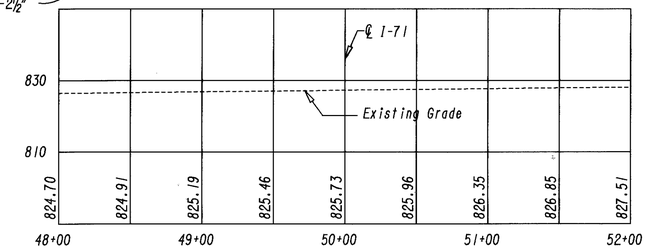

PROFILE U.S. 42

CALC. BY: KXG DATE: 3-94 **ESTIMATED QUANTITIES** CHK'D. BY: KRD DATE: 3-94

					CUY-71-0553 L					CUY-71-0553 R					
ITEM	ITEM EXT.	TOTAL	UNIT	DESCRIPTION	ABUT-MENTS	PIER	SUPER-STRUCTURE	GENERAL	TOTAL	ABUT-MENTS	PIER	SUPER-STRUCTURE	GENERAL	TOTAL	AS PER PLAN SHEET REF.
202	11203	LUMP	LUMP	PORTIONS OF STRUCTURE REMOVED, OVER 20 FOOT SPAN, AS PER PLAN				LUMP	LUMP				LUMP	LUMP	GN 1
503	11100	LUMP	LUMP	COFFERDAMS, CRIBS AND SHEETING				LUMP	LUMP				LUMP	LUMP	
503	21105	948	CU. YD.	UNCLASSIFIED EXCAVATION, INCLUDING ROCK, AS PER PLAN	319	155			474	320	154			474	GN 2
505	11100	LUMP	LUMP	PILE DRIVING EQUIPMENT MOBILIZATION				LUMP	LUMP				LUMP	LUMP	
507	00100	5,380	LIN. FT.	STEEL PILES HP10 x 42, FURNISHED	1,400	1,290			2,690	1,400	1,290			2,690	
507	00150	5,380	LIN. FT.	STEEL PILES HP10 x 42, DRIVEN	1,400	1,290			2,690	1,400	1,290			2,690	
507	50500	55	EACH	STEEL PILE SPLICES	12	15			27	13	15			28	
507	93301	110	EACH	STEEL POINT (OR SHOE), AS PER PLAN	25	30			55	25	30			55	GN 2
511	81400	50	POUND	COUNCRETE, MISC.: REPLACEMENT OF EXISTING REINFORCING STEEL *				25	25				25	25	GN 3
512	44400	15	SQ. YD.	TYPE B WATERPROOFING	8				8	7				7	
SPECIAL	51267510	1899	SQ. YD.	SEALING OF CONCRETE SURFACES (EPOXY-URETHANE) (SEE PROPOSAL NOTE)	93	856			949	94	856			950	
SPECIAL	51271500	821	SQ. YD.	URETHANE TOPCOAT SEALER	193	218			411	193	217			410	
514	27706	242,600	POUND	FIELD PAINTING, MISC.: SHOP PAINTING AND FIELD TOUCH UP OF STRUCTURAL STEEL			121,300		121,300			121,300		121,300	
516	11211	597	LIN. FT.	STRUCTURAL EXPANSION JOINT INCLUDING ELASTOMERIC STRIP SEAL, AS PER PLAN	298				298	299				299	16/18
516	44001	40	EACH	ELASTOMERIC BEARING WITH INTERNAL LAMINATES AND LOAD PLATE (NEOPRENE) (7" x 11" x 1.62") WITH 8" X 13" X 2 15/16" LOAD PLATE, AS PER PLAN, (SEE PROPOSAL NOTE)	20				20	20				20	15/18
516	44001	12	EACH	ELASTOMERIC BEARING WITH INTERNAL LAMINATES AND LOAD PLATE (NEOPRENE) (7" x 11" x 1.62") WITH 8" X 13" X 1 9/16" LOAD PLATE, AS PER PLAN, (SEE PROPOSAL NOTE)	6				6	6				6	15/18
516	44001	40	EACH	ELASTOMERIC BEARING WITH INTERNAL LAMINATES AND LOAD PLATE (NEOPRENE) (10" x 18" x 1.86") WITH 11" X 19" X 2 11/16" LOAD PLATE, AS PER PLAN (SEE PROPOSAL NOTE)		20			20		20			20	15/18
516	44001	12	EACH	ELASTOMERIC BEARING WITH INTERNAL LAMINATES AND LOAD PLATE (NEOPRENE) (10" x 18" x 1.86") WITH 11" X 19" X 1 9/16" LOAD PLATE, AS PER PLAN (SEE PROPOSAL NOTE)		6			6		6			6	15/18
516	46900	6	EACH	BEARING DEVICE, MISC.:F-200	3				3	3				3	
516	47001	LUMP	LUMP	JACKING AND TEMPORARY SUPPORT OF SUPERSTRUCTURE, AS PER PLAN			LUMP		LUMP			LUMP		LUMP	GN 4
518	21200	329	CU. YD.	POROUS BACKFILL WITH FILTER FABRIC	165				165	164				164	
518	40001	559	LIN. FT.	6" PERFORATED CORRUGATED PLASTIC PIPE, AS PER PLAN	279				279	280				280	GN 2
518	40011	376	LIN. FT.	6" NON-PERFORATED CORRUGATED PLASTIC PIPE, INCLUDING SPECIALS, AS PER PLAN	188				188	188				188	GN 2
519	11100	20	SQ. FT.	PATCHING CONCRETE STRUCTURE	10				10	10				10	
601	21001	2,882	SQ. YD.	CONCRETE SLOPE PROTECTION, AS PER PLAN				1,441	1,441				1,441	1,441	GN2,2/18
843	5000Q	700	SQ. FT.	PATCHING CONCRETE STRUCTURES WITH TROWELABLE MORTAR *	110	260			370	220	110			330	
844	48000	1,316	CU. YD.	HIGH PERFORMANCE CONCRETE, SUPERSTRUCTURE (DECK)			658		658			658		658	
844	48020	123	CU. YD.	HIGH PERFORMANCE CONCRETE, SUPERSTRUCTURE (PARAPET)			62		62			61		61	
844	48040	690	CU. YD.	HIGH PERFORMANCE CONCRETE, SUBSTRUCTURE	223	122			345	224	121			345	
863	10260	242,600	POUND	STRUCTURAL STEEL MEMBERS, LEVEL THREE (3) FABRICATION, A708 GRADE 50			121,300		121,300			121,300		121,300	

* TO BE USED AS DIRECTED BY THE ENGINEER.

EXISTING STRUCTURES

Type: Continuous Steel Beams, with Reinforced Concrete Deck and Substructure
Spans: 49'-0"±, 70'-0"±, 70'- 0"±, 49'-0"± Center to Center Bearings
Roadway: Varies
Loading: C.F. = 2000, Adequate for A.A.S.H.T.O. Alternate Loading
Skew: 51°-32'-31"± Right Forward
Wearing Surface: 1 1/2" Dense Concrete
Approach Slab: AS-1-54 (25'-0" Long)
Alignment: Tangent
Crown: Varies
Date Built: 1965
Structural File No.: 1804022 L 1804057 R

PROPOSED STRUCTURES

Proposed Work: Widen bridge, replace concrete deck, modify, repair and extend existing substructure units and seal concrete surfaces
Type: Existing continuous steel beams, A709 Gr. 36, and new continuous steel beams A709 Gr. 50, painted with reinforced concrete deck and substructure.
Spans: 49'-0"±, 70'-0"±, 70'-0"±, 49'-0"± Center to Center Bearings
Roadway: Varies
Loading: HS20-44 Case I and the Alternate Military Loading
Skew: 51°-32'-31"± Right Forward
Wearing Surface: Monolithic Concrete
Approach Slab: AS-1-81 (25'-0" Long)
Alignment: Tangent
Crown: Varies

EUTHENICS INC. CONSULTING ENGINEERS CLEVELAND, OHIO 3/18

STAGE CONSTRUCTION AND ESTIMATED QUANTITIES

BRIDGE NO. CUY-71-0553L AND R OVER U.S.-42

DESIGN	DRAWN	TRACED	CHECKED	REVIEW	DATE	REVISED
KXG	GFH	—	KRD	RAB	3-94	

PLOTTED BY: jgrmovse
PLOT DATE: 20-AUG-1998 05:54
PLOT SUBMITTED: 20-AUG-1998 05:54
307EQ06.DGN
307eq06.dgn B307eq06 cuy-71-553 B dgn B pid08459 B dgn B cuy-71-553 B 307eq06.dgn

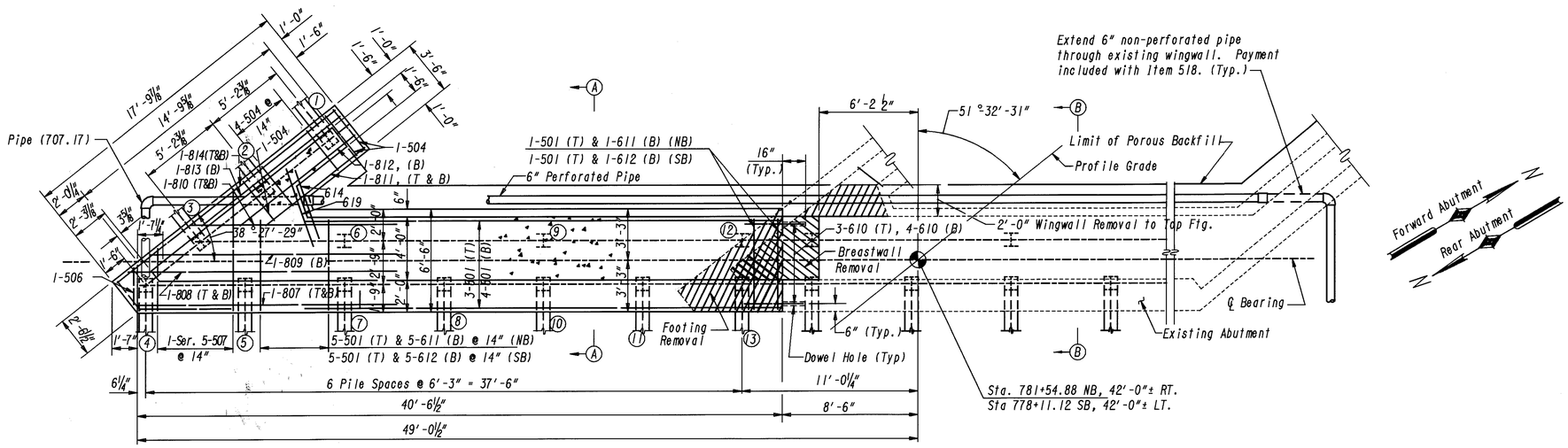

NORTHBOUND FORWARD AND SOUTHBOUND REAR ABUTMENT FOOTINGS

Minimum Lap Lengths
No. 5 Bar = 2'-2"
No. 6 Bar = 2'-4"
No. 8 Bar = 5'-9"

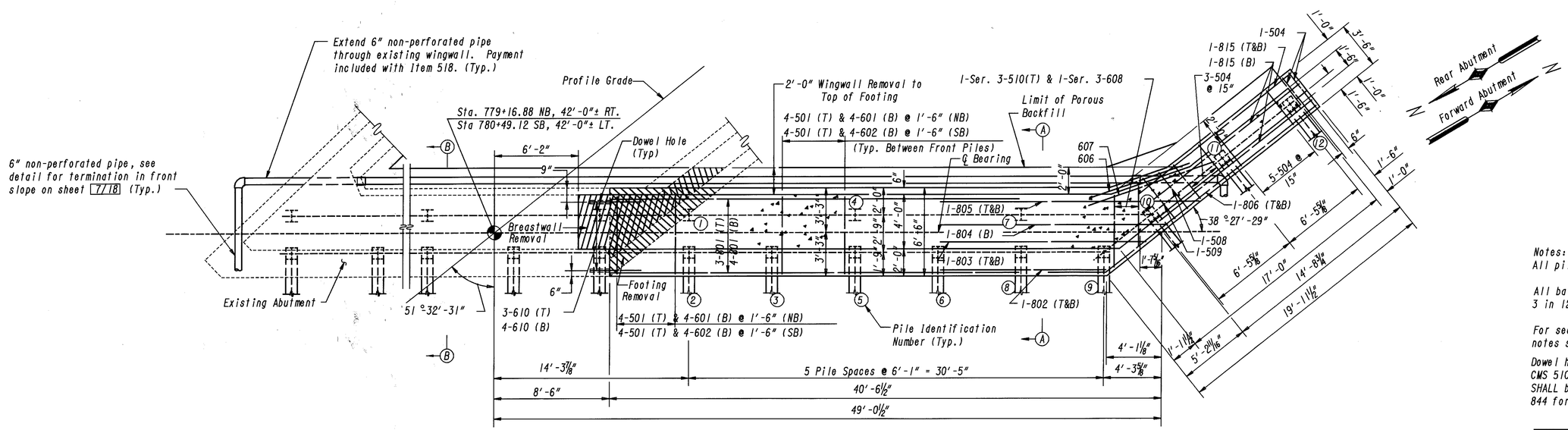

NORTHBOUND REAR AND SOUTHBOUND FORWARD ABUTMENT FOOTINGS

Notes:
All piles are steel H piles HP10x42

All battered piles shall be inclined 3 in 12 in the direction shown

For section A-A and B-B and additional notes see sheet 7/18

Dowel holes shall be placed in accordance with CMS 510. All labor, materials and installation SHALL be included with the appropriate Item 844 for payment.

EUTHENICS INC. CONSULTING ENGINEERS CLEVELAND, OHIO — 4/18

ABUTMENT FOOTINGS

BRIDGE NO. CUY-71-0553L AND R
OVER U.S.-42

DESIGN	DRAWN	TRACED	CHECKED	REVIEW	DATE	REVISED
KRD	BWG	—	BWG	RAB	3-94	

PLOTTED BY: lminck
PLOTTED: 06-AUG-1998 08:01
PLOT SUBMITTED: 06-AUG-1998 08:01
307ABF06.DGN

CUY-71-0.00	OHIO	348 / 361
	FHWA 5 REGION	
	FEDERAL PROJECT	

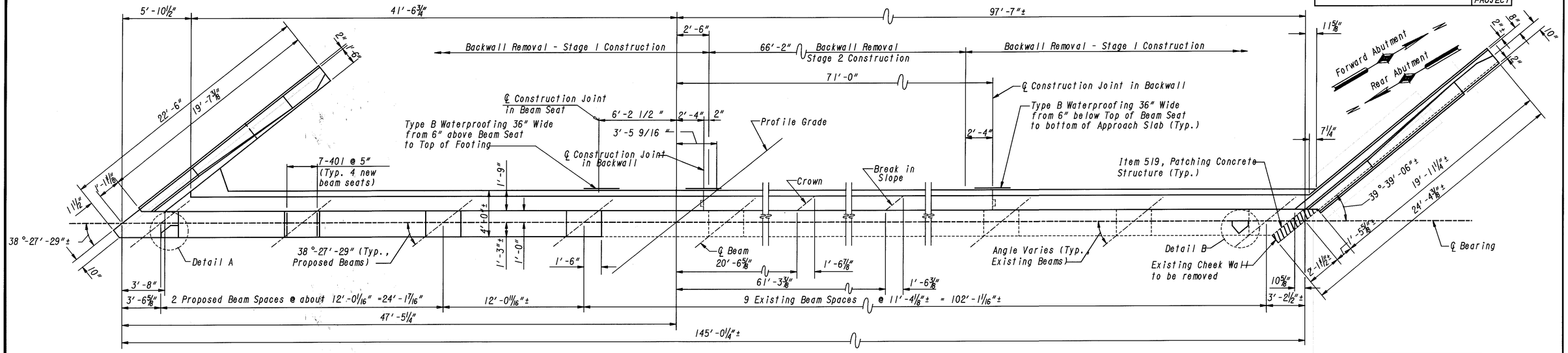

PLAN

Minimum Lap Lengths
No. 5 Bar = 2'-2"
No. 6 Bar = 2'-4"
No. 8 Bar = 5'-9"

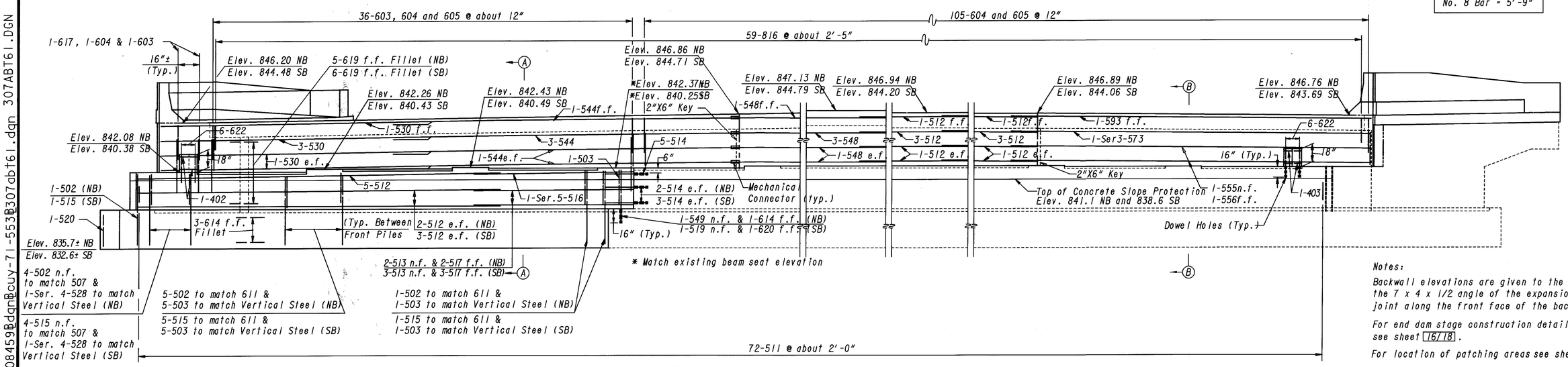

ELEVATION
(Piles not shown)

Notes:

Backwall elevations are given to the top of the 7 x 4 x 1/2 angle of the expansion joint along the front face of the backwall.

For end dam stage construction details see sheet 16/18.

For location of patching areas see sheet 6A/15

For sections A-A and B-B and additional notes see sheet 7/18

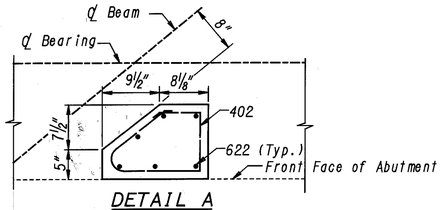

DETAIL A
(Seismic Restraint)

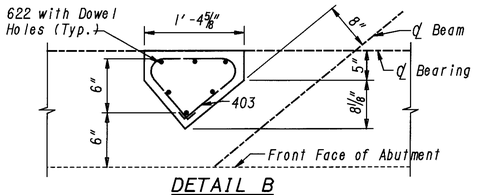

DETAIL B
(Seismic Restraint)

DOWEL HOLES: Locations are based on existing plans and may be adjusted to avoid drilling anchor bar holes through existing reinforcing steel.

EUTHENICS INC.
CONSULTING ENGINEERS
CLEVELAND, OHIO

5 / 18

NORTHBOUND FORWARD ABUTMENT AND SOUTHBOUND REAR ABUTMENT

BRIDGE NO. CUY-71-0553L AND R OVER U.S.-42

DESIGN	DRAWN	TRACED	CHECKED	REVIEW	DATE	REVISED
KRD	GFH	—	BMG	RAB	3-94	

PLOT SUBMITTED:06-AUG-1998 08:02
PLOTTED BY: lminck
307ABT61.dgn
307abt61.dgn
Cuy-71-553R
d08459Bdgn
Bridge Worksheet

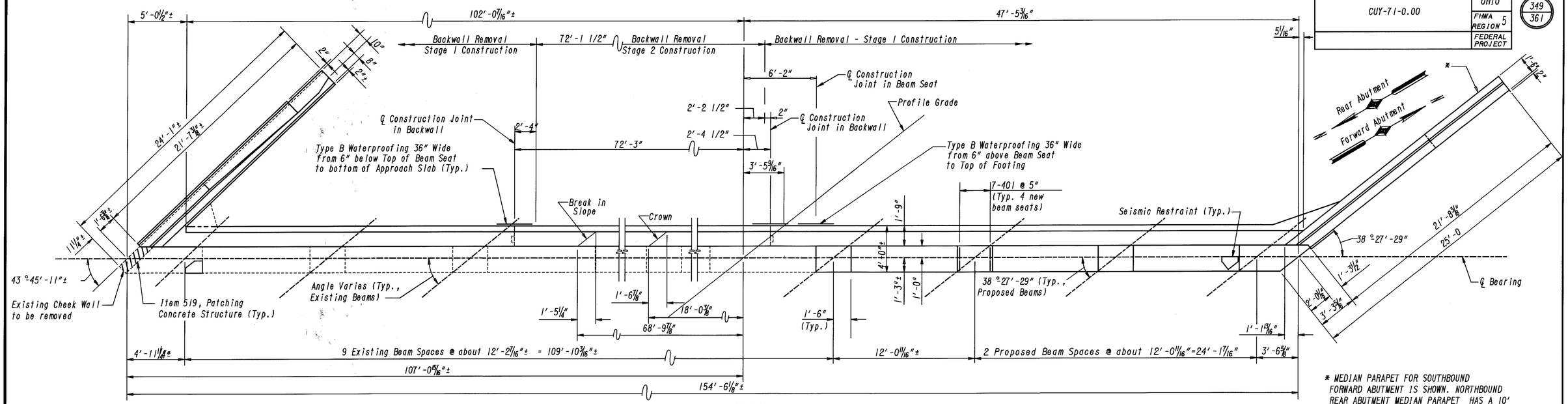

PLAN

* MEDIAN PARAPET FOR SOUTHBOUND FORWARD ABUTMENT IS SHOWN. NORTHBOUND REAR ABUTMENT MEDIAN PARAPET HAS A 10' TRANSITION TO 2'-8" HEIGHT, WITH A 4' END SECTION PER ODOT STA. DWG. BR-1.

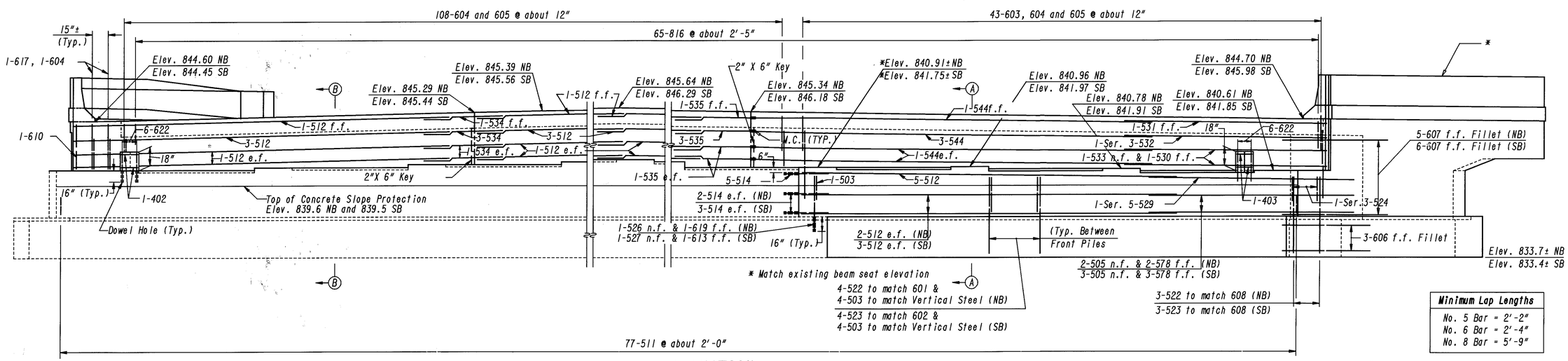

ELEVATION
(Piles not shown)

Minimum Lap Lengths
No. 5 Bar = 2'-2"
No. 6 Bar = 2'-4"
No. 8 Bar = 5'-9"

Notes:

For additional notes and details of seismic restraints see sheet 5/18

M.C. denotes Mechanical Connector

EUTHENICS INC.
CONSULTING ENGINEERS
CLEVELAND, OHIO

6 / 18

NORTHBOUND REAR AND SOUTHBOUND FORWARD ABUTMENTS

BRIDGE NO. CUY-71-0553L AND R
OVER U.S.-42

DESIGN	DRAWN	TRACED	CHECKED	REVIEW	DATE	REVISED
KRD	GFH	—	BMG	RAB	3-93	

PLOT SUBMITTED:06-AUG-1998 08:02
PLOTTED BY:lminck
PLOTTED:06-AUG-1998 08:02
307ABT62.DGN

CUY-71-0.00	OHIO	350/361
	FHWA REGION 5	
	FEDERAL PROJECT	

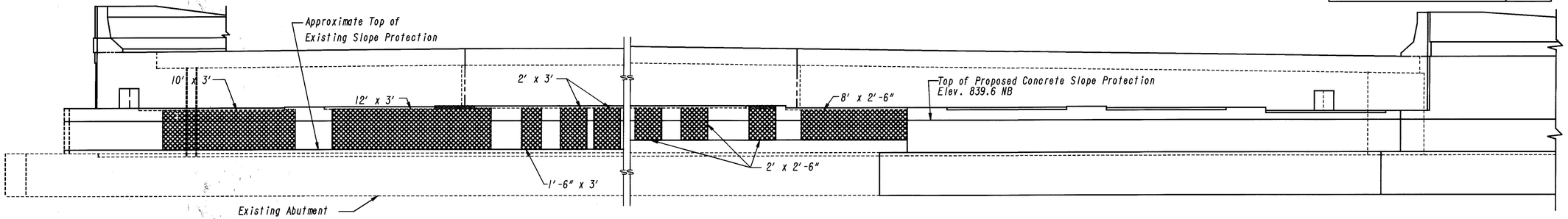

NORTHBOUND REAR ABUTMENT ELEVATION

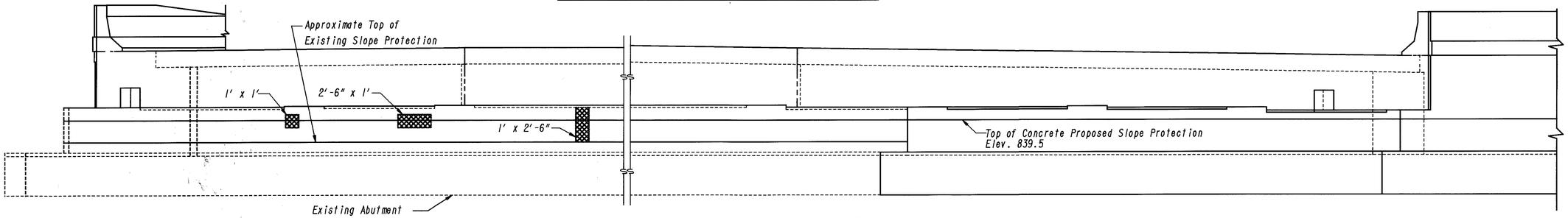

SOUTHBOUND FORWARD ABUTMENT ELEVATION

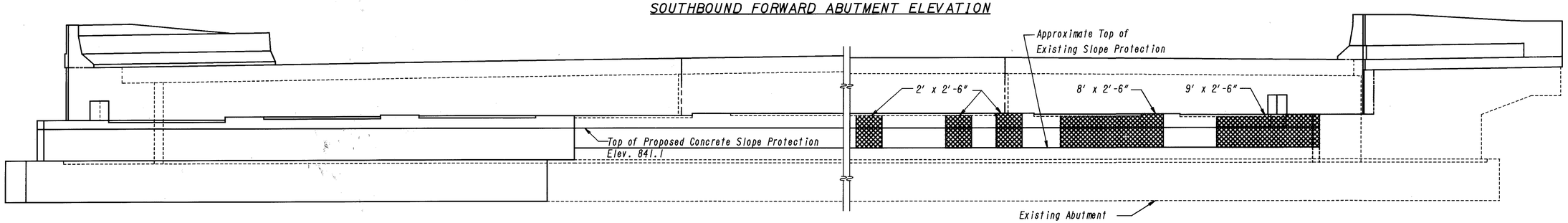

NORTHBOUND FORWARD ABUTMENT ELEVATION

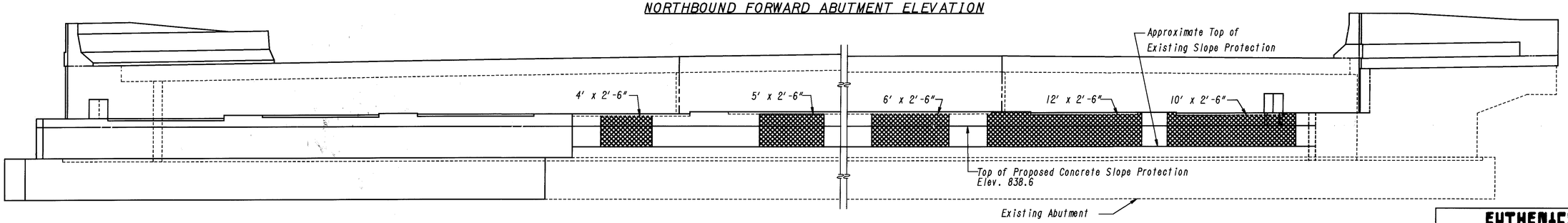

SOUTHBOUND REAR ABUTMENT ELEVATION

Note:

Item 843 - Trowelable Mortar

EUTHENICS INC.
CONSULTING ENGINEERS
CLEVELAND, OHIO

6A/18

ABUTMENT PATCHING PLAN

BRIDGE NO. CUY-71-0553L AND R
OVER U.S.-42

DESIGN	DRAWN	TRACED	CHECKED	REVIEW	DATE	REVISED
KRD	EEF	—	GFH	RAB	12-94	

PLOTTED BY: jgrmovse
PLOT SUBMITTED: 07-AUG-1998 07:55
PLOT USER: EMorsberg
Pid08459B dgnBcuy-71-553B307pch61.dgn 307PCH61.DGN

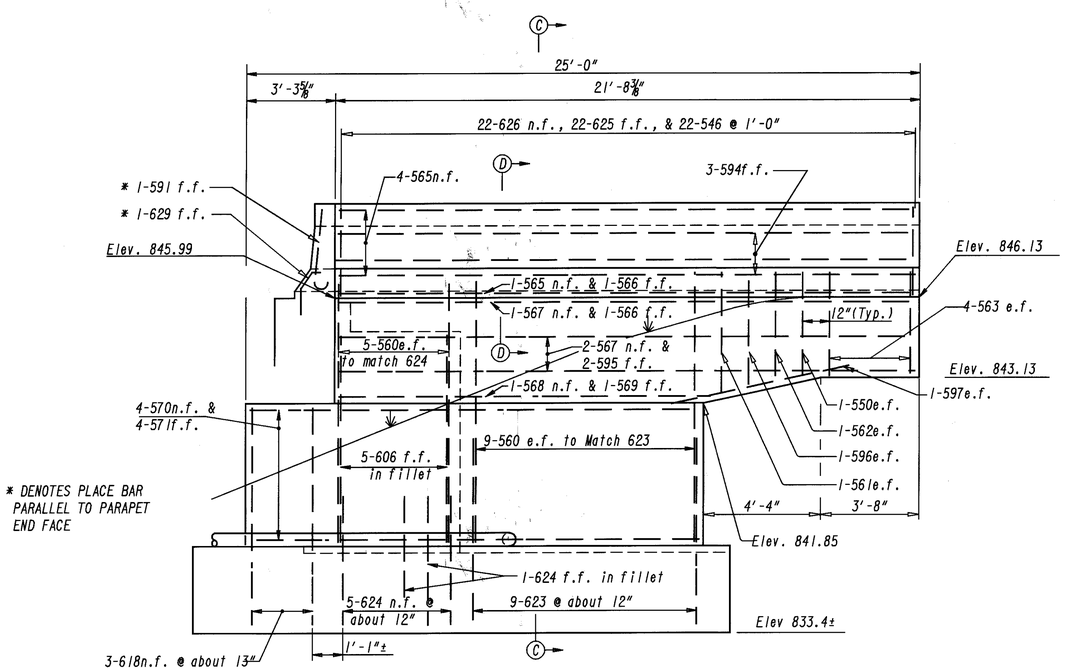

SB RIGHT FORWARD
(Piles not shown)

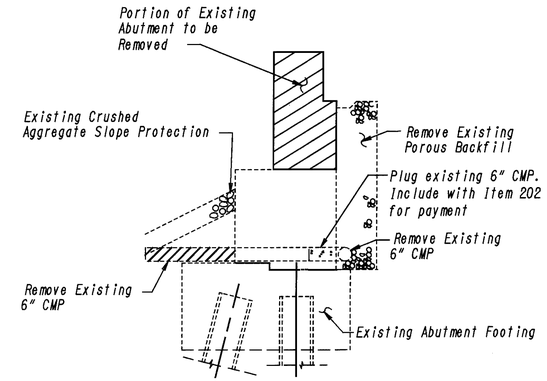

LIMITS OF REMOVAL

Minimum Lap Lengths
No. 5 Bar = 1'-11"
No. 6 Bar = 2'-4"
No. 8 Bar = 5'-9"

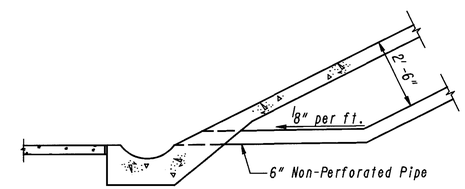

TERMINATION OF 6" PIPE AT FRONT SLOPE

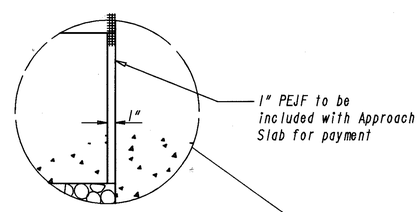

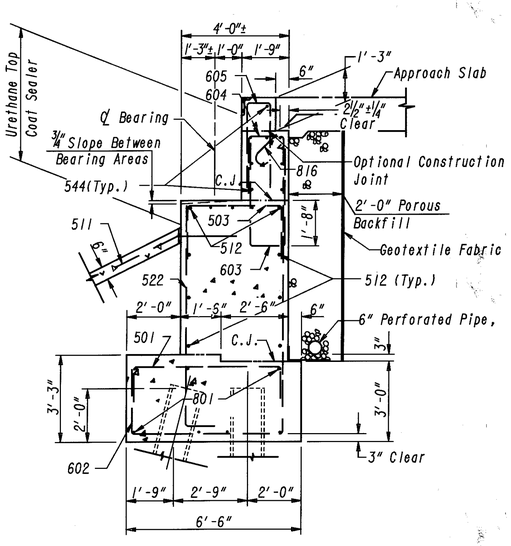

SECTION A-A

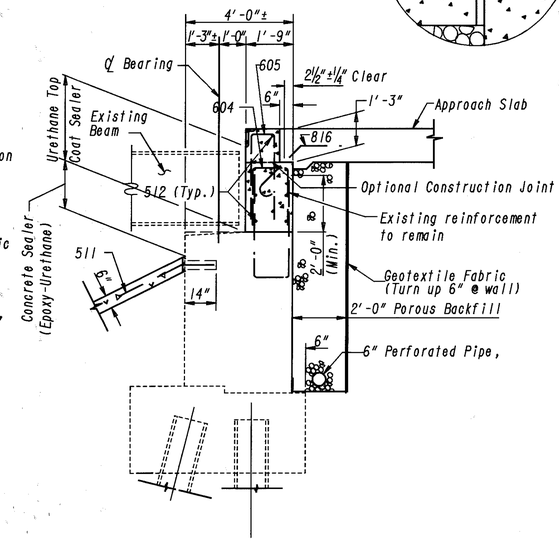

SECTION B-B

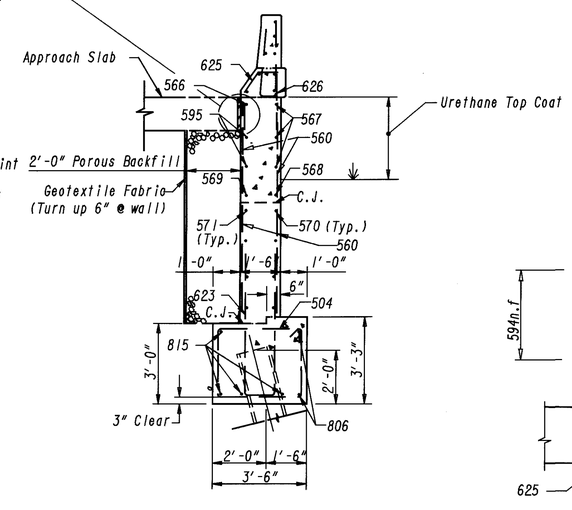

SECTION C-C
(SB RF Shown; NB LF, SB RR, and NB LR Similar)

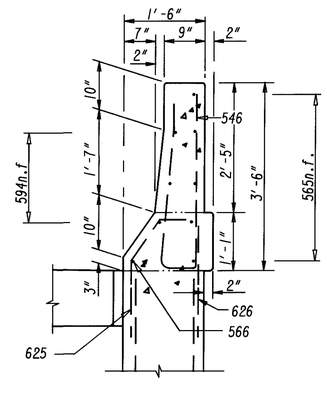

SECTION D-D

(SB FORWARD SHOWN, OTHERS SIMILAR)

Notes:

For expansion joint details at abutment, see sheet 16/18.

For location of Sections A-A and B-B see sheets 4/18, 5/18 and 6/18.

Porous backfill with filter fabric, 2, feet thick shall extend up to the plane of the subgrade, up to the bottom of the approach slab, and laterally to the ends of the wingwalls.

FOR APPROACH SLAB NOTES AND DETAILS, SEE ROADWAY PLANS. Backwall Concrete: In addition to the provisions of 511.08, backwall concrete above the optional construction joint at the approach slab seat shall not be placed until after the deck concrete in the span adjacent to the abutment has been placed.

All reinforcing bars shall be prefixed:
EA - Epoxy coated abutment

For reinforcement schedule see sheet 17/18

The following abbreviations are used:

e.f. = Each Face	Typ. = Typical
n.f. = Near Face	R.A. = Rear Abutment
f.f. = Far Face	F.A. = Forward Abutment
C.J. = Construction Joint	R.F. = Right Foward
L.F. = Left Foward	R.R. = Right Rear
L.R. = Left Rear	NB = Northbound
PEJF = Preformed Expansion Joint Filler	SB = Southbound

EUTHENICS INC. CONSULTING ENGINEERS CLEVELAND, OHIO

7/18

MEDIAN WINGWALLS AND SECTIONS

BRIDGE NO. CUY-71-0553L AND R
OVER U.S.-42

DESIGN	DRAWN	TRACED	CHECKED	REVIEW	DATE	REVISED
KRD	GFH	——	BWG	RAB	3-94	

PLOTTED BY: lmincek
PLOTTED ON: Wed Aug 05 08:04:59 1998
PLOTTED FROM: c:\projects\cuy-71-0553l\bridge\cuy-71-0553l307wws61.dgn
PLOT SUBMITTED:06-AUG-1998 08:04
307WWS61.DGN

CUY-71-0.00	OHIO	352 / 361
	FHWA 5 REGION	
	FEDERAL PROJECT	

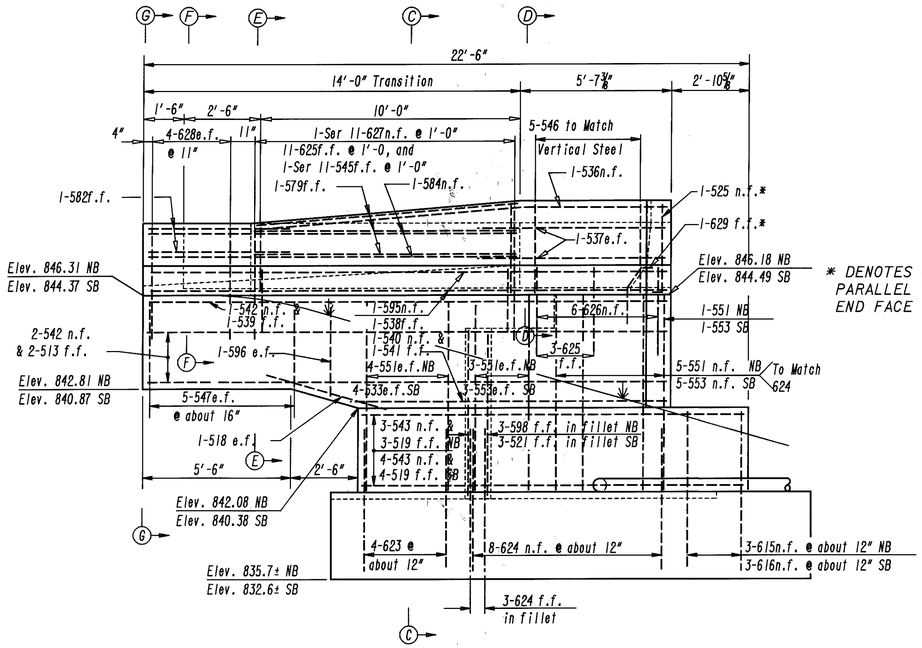

NB LEFT FORWARD AND SB RIGHT REAR
(Piles not shown)

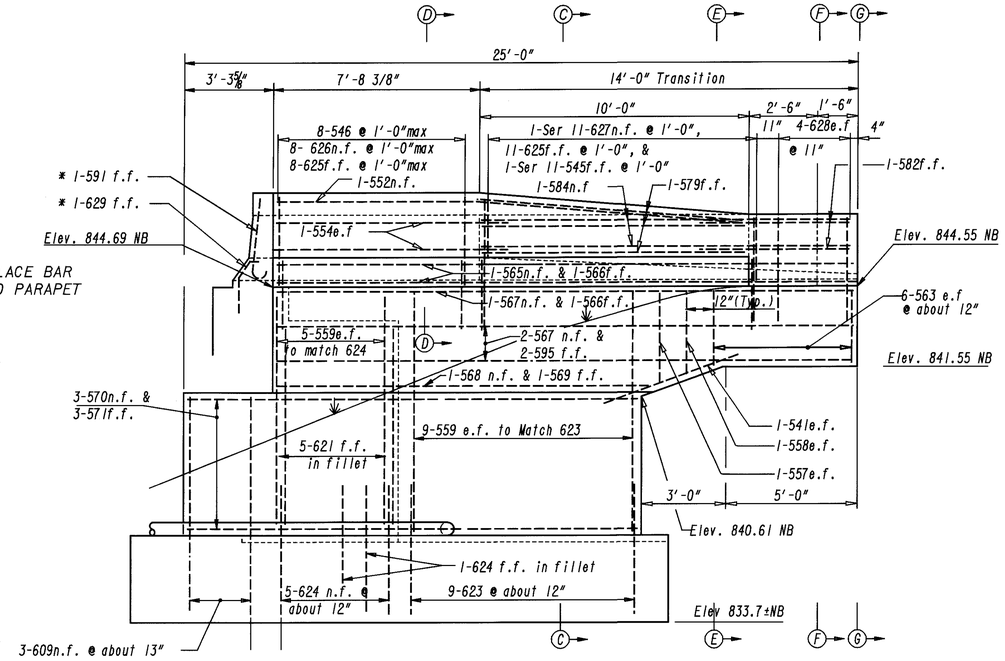

NB LEFT REAR
(Piles not shown)

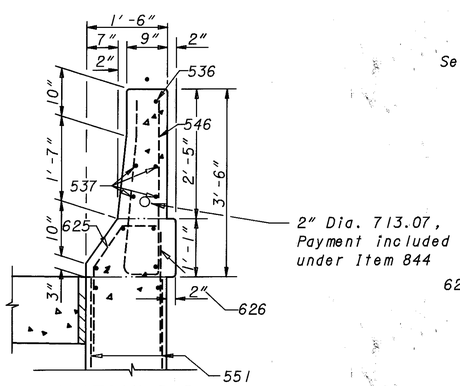

SECTION D-D

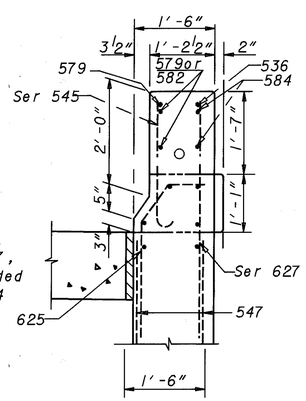

SECTION E-E

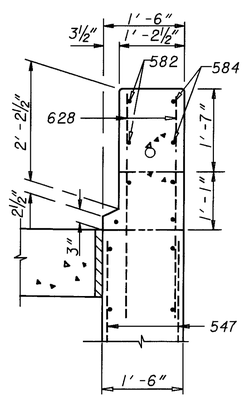

SECTION F-F

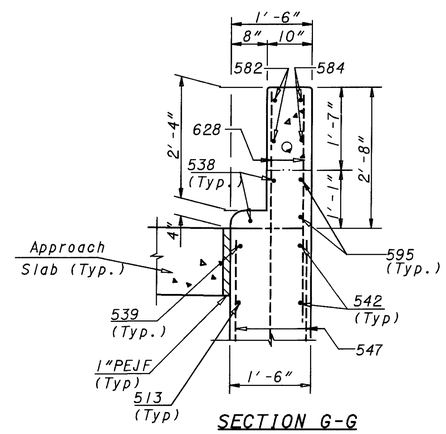

SECTION G-G

(NB Left Forward Shown; SB Right Rear and NB Left Rear Similar)

NOTES:

For Section C-C and additional notes, See Sheet 7/18 .

THIS SHEET ADDED BY URS GREINER 7-98

EUTHENICS INC.
CONSULTING ENGINEERS
CLEVELAND, OHIO

7A/18

MEDIAN WINGWALLS AND SECTIONS

BRIDGE NO. CUY-71-0553L AND R
OVER U.S.-42

DESIGN	DRAWN	TRACED	CHECKED	REVIEW	DATE	REVISED
--	--	——	--	---	---	

PLOT SUBMITTED:06-AUG-1998 08:04
PLOTTED BY:lmincek
Pid08459Bdgn307wws63.dgn

CUY-71-0.00	OHIO	353/361
	FHWA REGION 5	
	FEDERAL PROJECT	

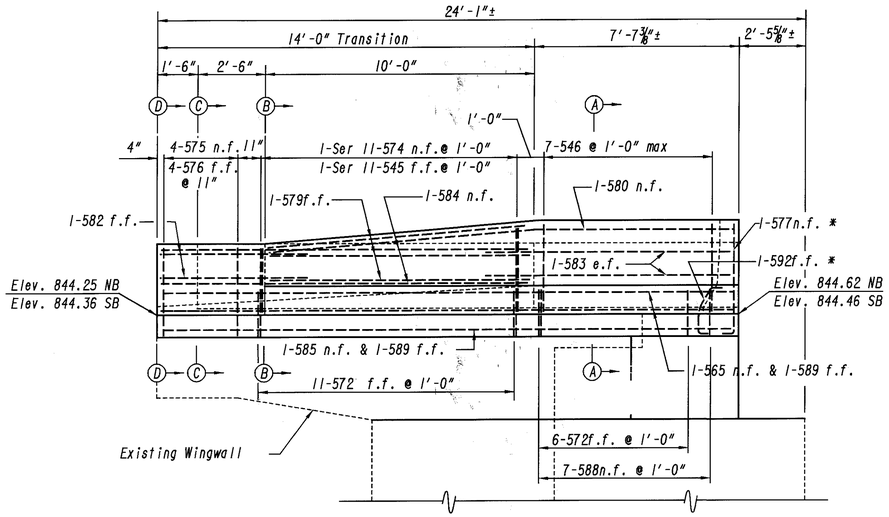

NB RIGHT REAR AND SB LEFT FORWARD

* Denotes place bar parallel to parapet end face.

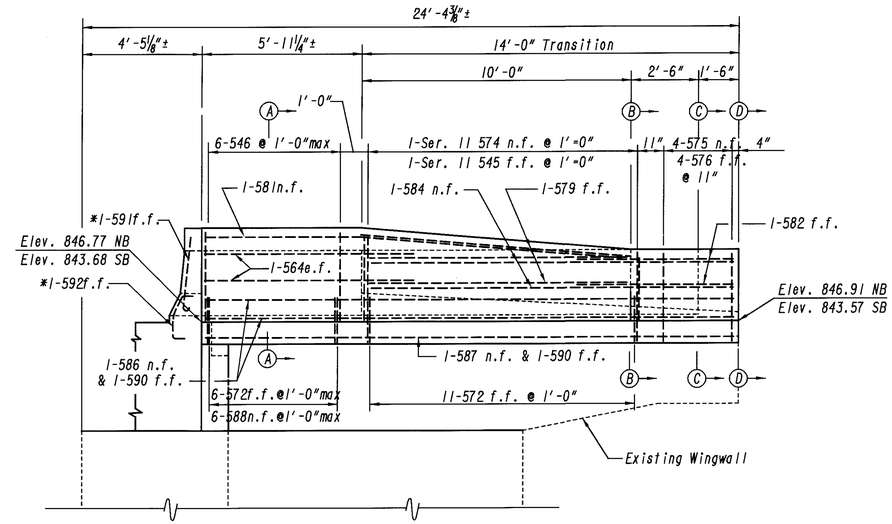

NB RIGHT FORWARD AND SB LEFT REAR

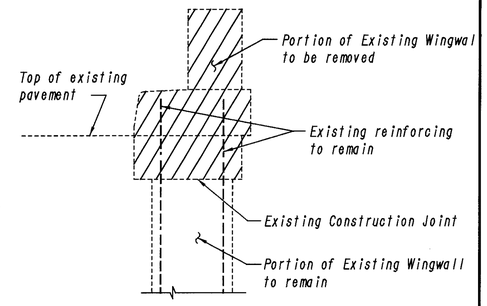

LIMITS OF REMOVAL AT EXISTING WINGWALL

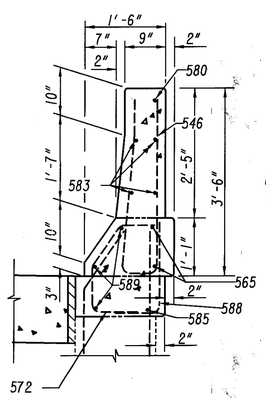

SECTION A-A

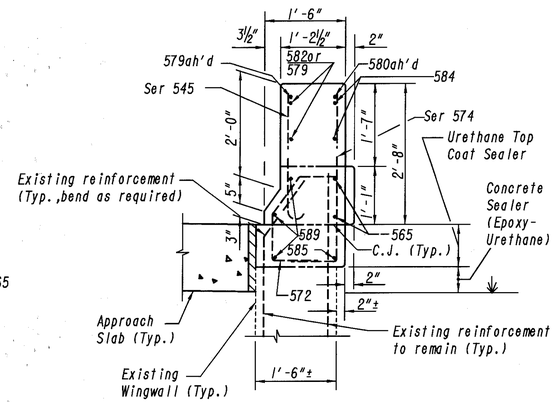

SECTION B-B

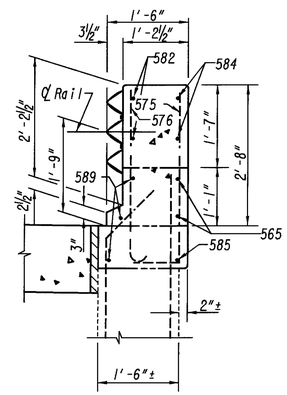

SECTION C-C

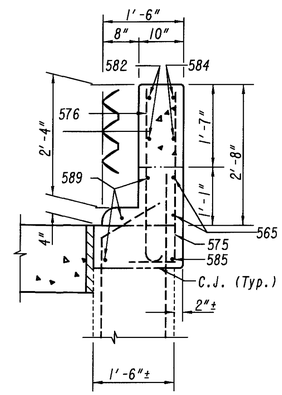

SECTION D-D

Note: Reinforcement call-outs and details are shown for NB Right Rear and SB Left Forward walls, other walls are similar.
The NB Right Forward parapet does not receive guardrail or terminal assembly.

Notes:

For additional notes see sheet 7/18.

For guardrail anchor details see ODOT Standard Drawing GR-3.1.

EUTHENICS INC. CONSULTING ENGINEERS CLEVELAND, OHIO

8/18

OUTSIDE WINGWALLS AND SECTIONS

BRIDGE NO. CUY-71-0553L AND R OVER US-42

DESIGN	DRAWN	TRACED	CHECKED	REVIEW	DATE	REVISED
KRD	GFH	—	BWG	RAB	3-94	

PLOTTED BY: lmincek
PLOTTED: 08-AUG-1998 08:05
PLOT SUBMITTED:06-AUG-1998 08:05
PLOT SCALE: 1:1
USER: rsberber
Bpid08459Bdgn Bcuy-71-553B307wws62.dgn 307WWS62.DGN

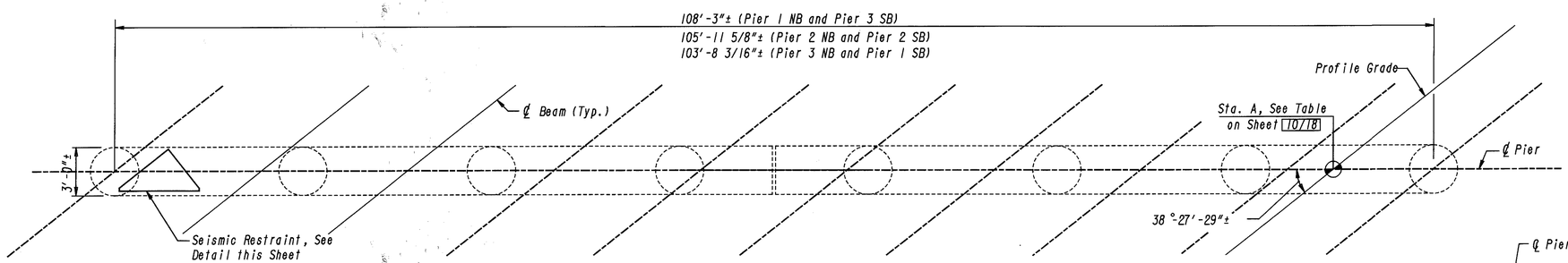

PLAN

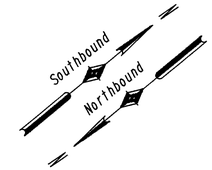

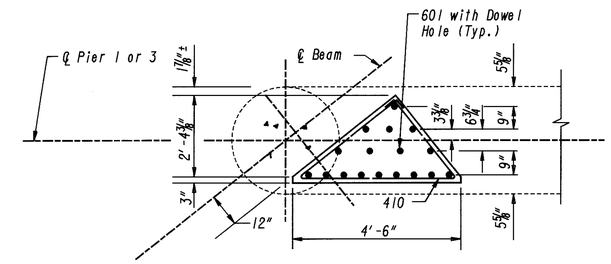

SEISMIC RESTRAINT
(Pier 1 and 3 only)

DOWEL HOLES: Locations are based on existing plans and may be adjusted to avoid drilling anchor bar holes through existing reinforcing steel.

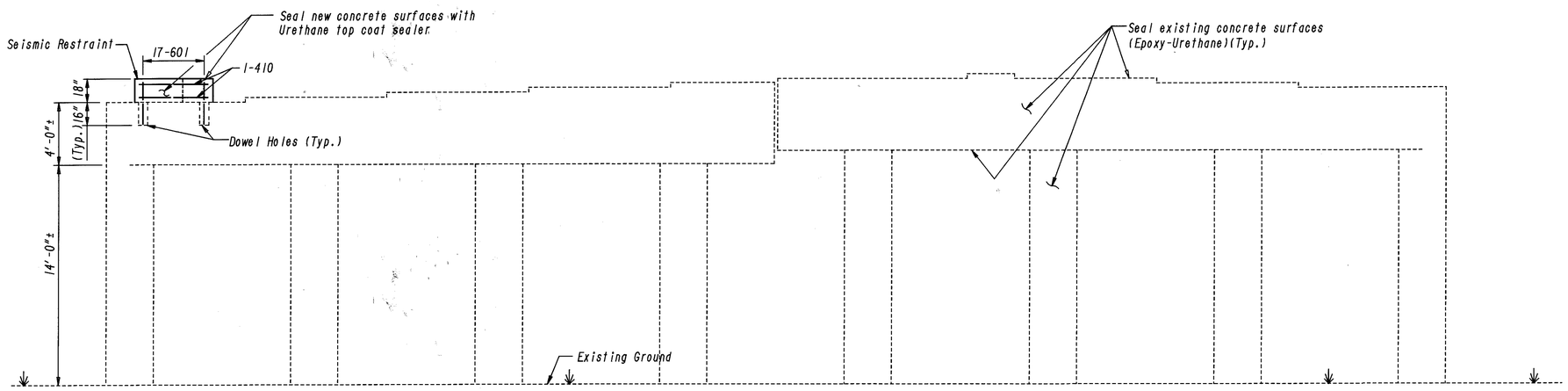

ELEVATION

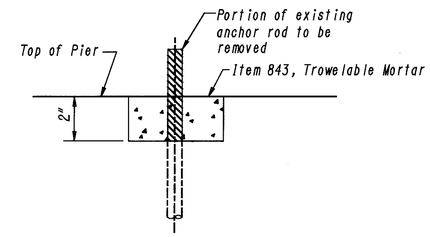

EXISTING ANCHOR ROD REMOVAL
(Pier 1 and 3 only)

Note: Removal of existing concrete and anchor rod shall be included for payment with Item 202 - Portions of Structures Removed, As Per Plan

Notes:
For location of patching areas see sheet 10A/18

Dowel holes shall be placed in accordance with CMS 510
All labor, materials and installation shall be included with the appropriate Item 844 for payment.

EUTHENICS INC.
CONSULTING ENGINEERS
CLEVELAND, OHIO

9/18

EXISTING PIERS

BRIDGE NO. CUY-71-0553L AND R
OVER U.S.-42

DESIGN	DRAWN	TRACED	CHECKED	REVIEW	DATE	REVISED
KRD	EEF	—	GFH	RAB	3-94	

PLOT SUBMITTED:06-AUG-1998 08:05
PLOTTED BY: lmincek
Pt:0BUG6 Bsmorsberg pid08459 Bdan Bcuy-71-553B307prs61.dgn 307PRS61.DGN

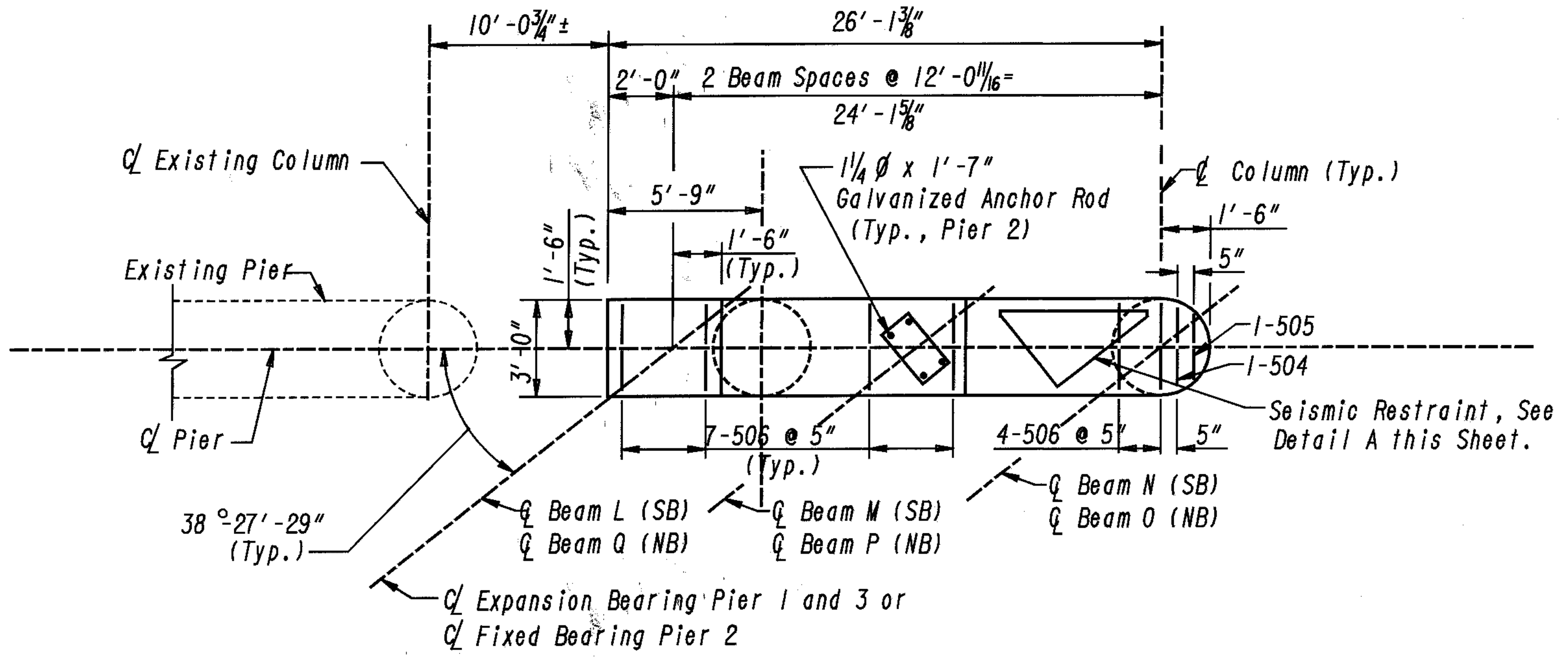

PLAN

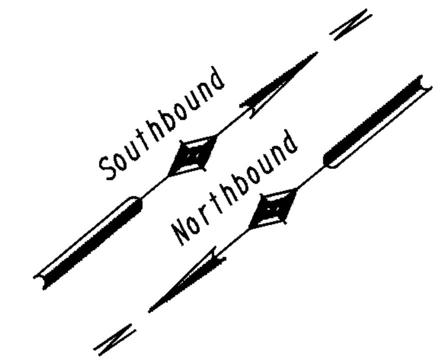

ELEVATION TABLE					
PIER	ELEV. A	ELEV. B	ELEV. C	ELEV. D	ELEV. E
SOUTHBOUND					
1	840.78	840.72	840.66	836.66	818.6±
2	840.81	840.75	840.69	836.69	820.0±
3	841.65	841.59	841.53	837.53	818.9±
NORTHBOUND					
1	841.24	841.07	840.89	836.89	820.0±
2	841.27	841.10	840.92	836.92	821.6±
3	842.11	841.93	841.76	837.76	820.7±

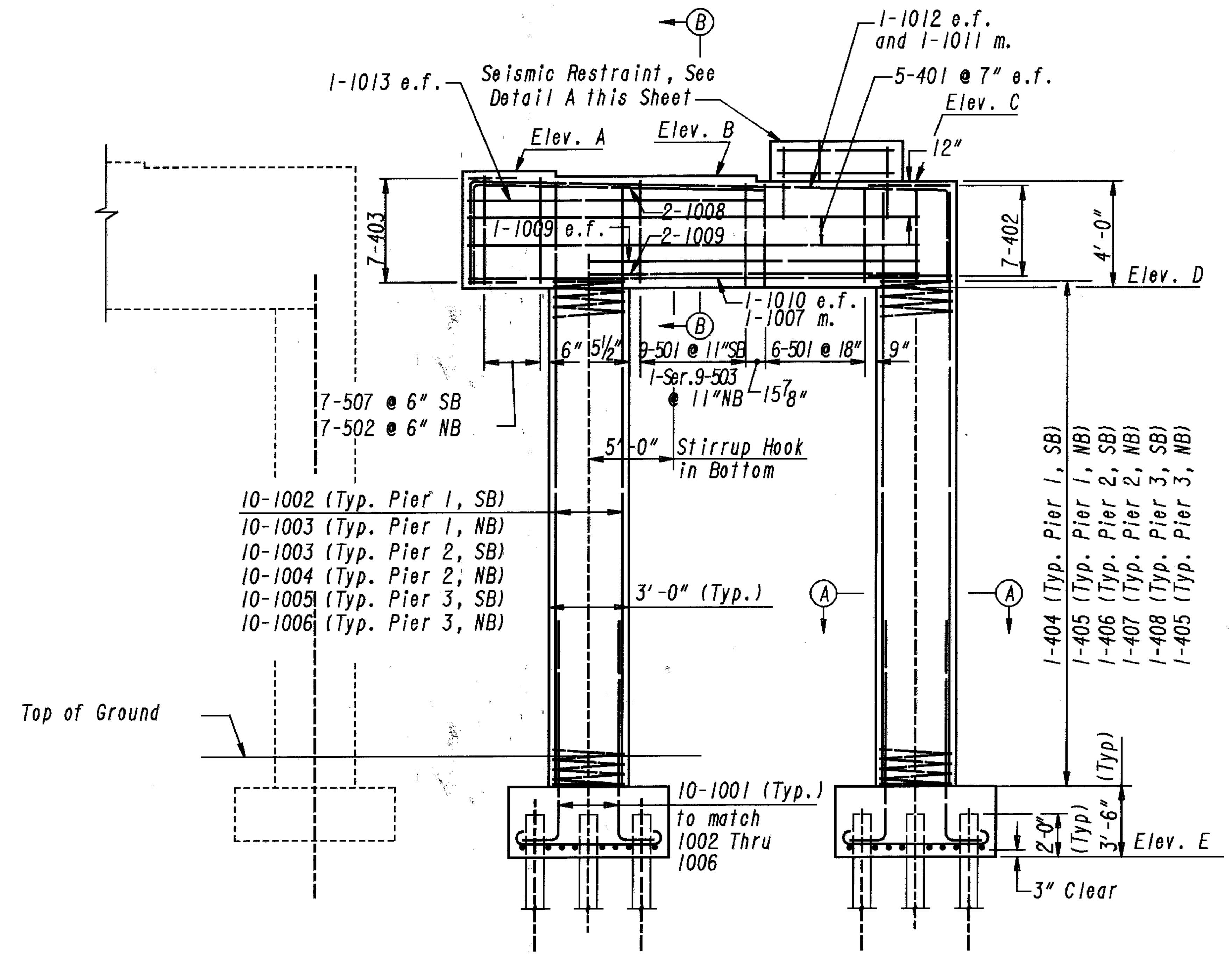

ELEVATION

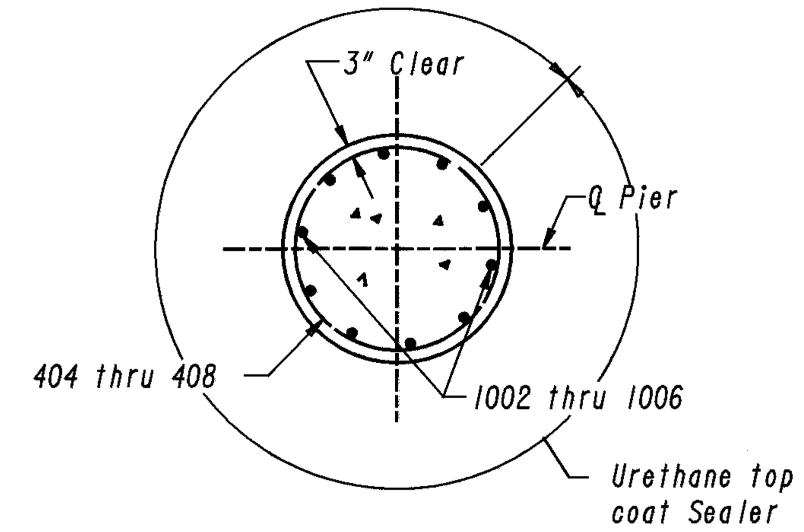

SECTION A-A

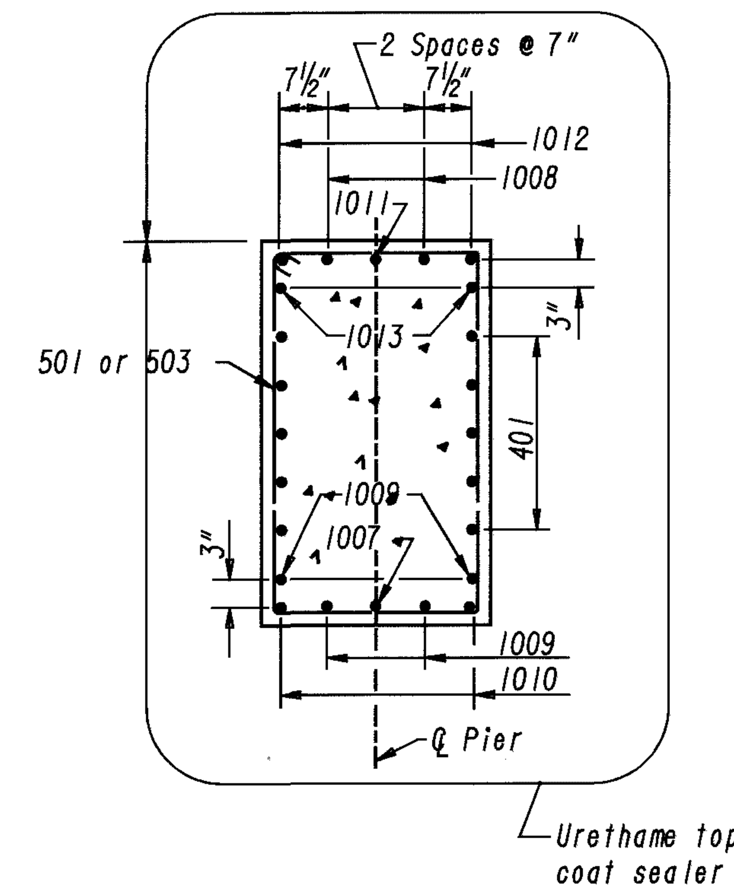

SECTION B-B

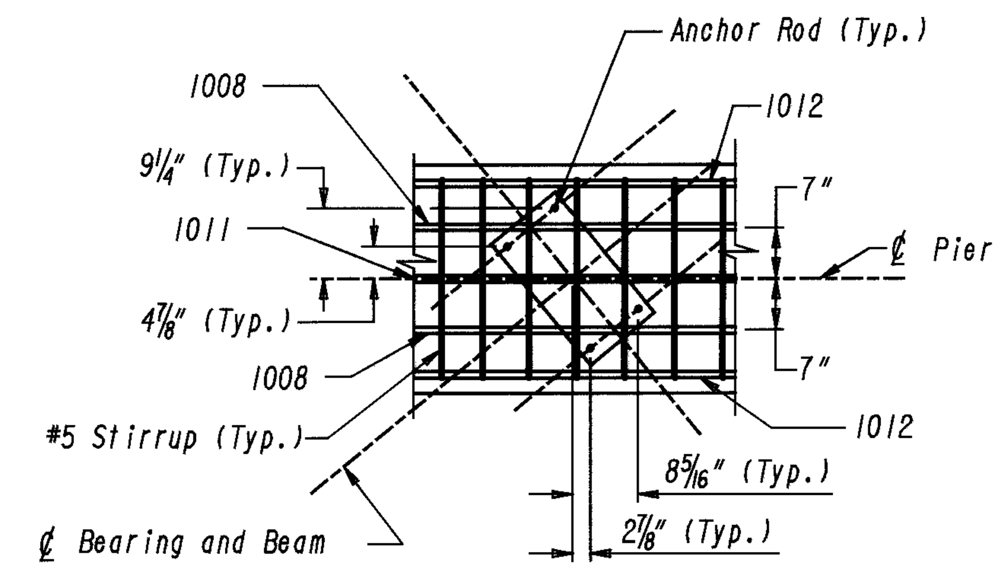

BEARING ANCHOR PLAN - PIER 2

BRIDGE SEAT REINFORCING: Reinforcing steel in the vicinity of the bridge seat shall be accurately placed to avoid interference with the drilling of bearing anchor holes or the pre-setting of bearing anchors.

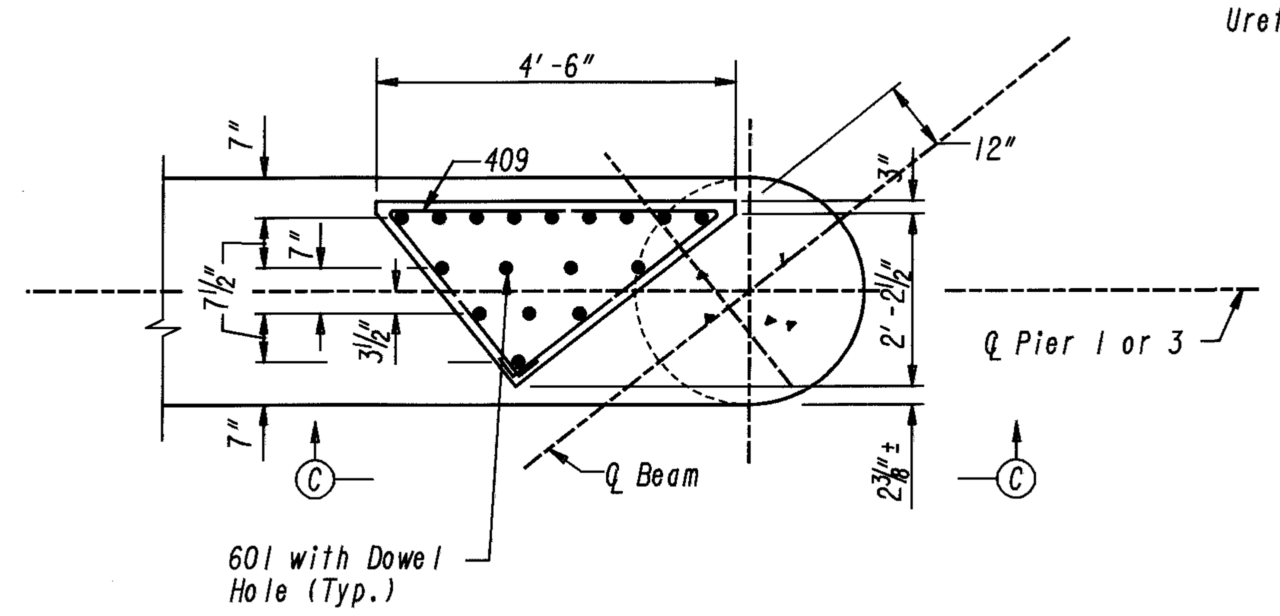

DETAIL A

(Pier 1 and 3, only)

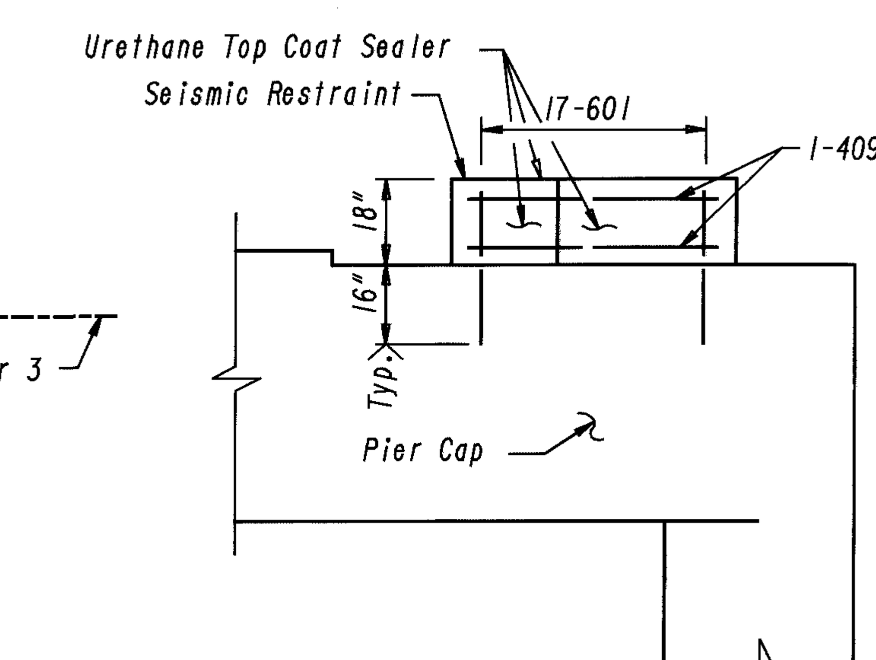

VIEW C-C

Notes:

Dimensions and reinforcement are typical for all piers, except as noted.

All piles are steel H piles HP10x42

All battered piles shall be inclined 3 in 12 in the direction shown.

Bearing Anchors: At the option of the Contractor, bearing anchors (or formed holes) located and supported by templates, may be cast in place.

The cap beam stirrups shall be placed with the hook on top, except as noted.

All reinforcing bars shall be prefixed EP = Epoxy Coated Pier.

For location of patching areas see sheet 10A/18

For reinforcement schedule see sheet 18/18.

For details of anchor rods see Ohio Standard Drawing FB-1-82.

The following abbreviations are used:

e.f. = each face	Ser. = series
m. = middle	NB = Northbound
Elev. = elevation	SB = Southbound
(Typ.) = typical	T = Top
	B = Bottom

Dowel holes shall be placed in accordance with CMS 510. All labor, materials and installation shall be included with the appropriate Item 844 for payment.

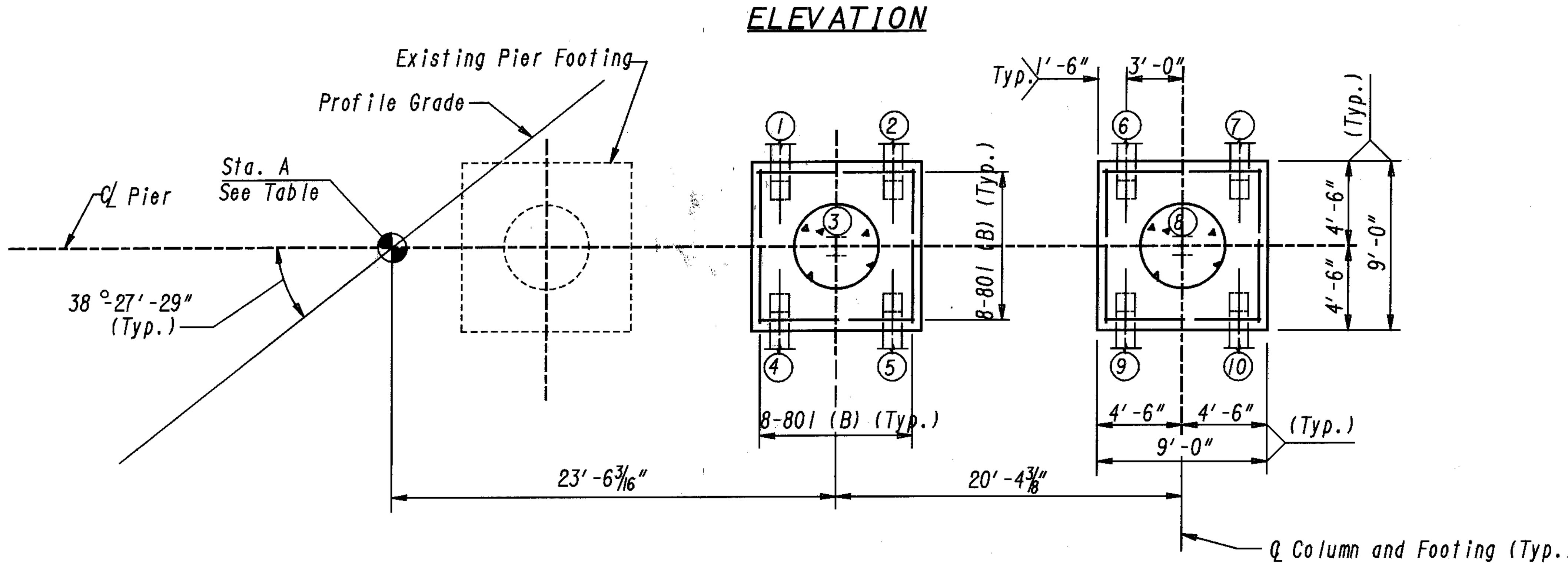

FOOTING PLAN

STATION "A"		
LOCATION	SOUTHBOUND	NORTHBOUND
Pier 1	778+60.12±	779+65.88±
Pier 2	779+30.12±	780+35.88±
Pier 3	780+00.12±	781+05.88±

All SB stations are 42'-0"± left
All NB stations are 42'-0"± rigth

MINIMUM LAP LENGTHS
No. 4 Bar = 1'-8"
No. 10 Bar = 8'-3"

EUTHENICS INC. CONSULTING ENGINEERS CLEVELAND, OHIO

10 / 18

PIERS

BRIDGE NO. CUY-71-0553L AND R OVER U.S.-42

DESIGN	DRAWN	TRACED	CHECKED	REVIEW	DATE	REVISED
KRD	EEF	—	BMG	RAB	3-94	

PLOT SUBMITTED:06-AUG-1998 08:06
307PRS62.DGN
pid08459 dgn cuy-71-553 307prs62.dgn
PLOTTED BY: lmincek

CUY-71-0.00	OHIO	356/361
	FHWA REGION 5	
	FEDERAL PROJECT	

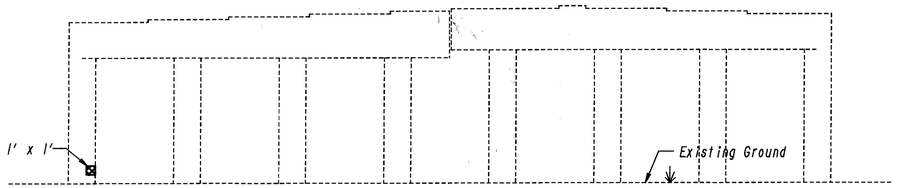

NORTHBOUND PIER 1
(North Elevation)
(No Patching Required on South Elevation)

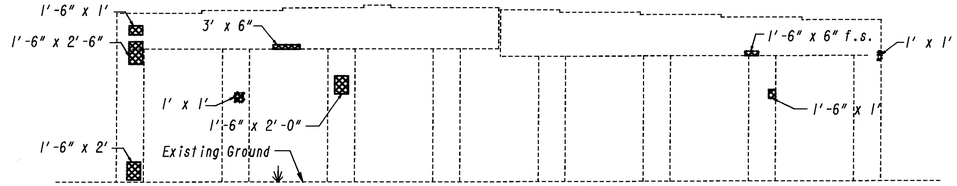

SOUTHBOUND PIER 1
(North Elevation)

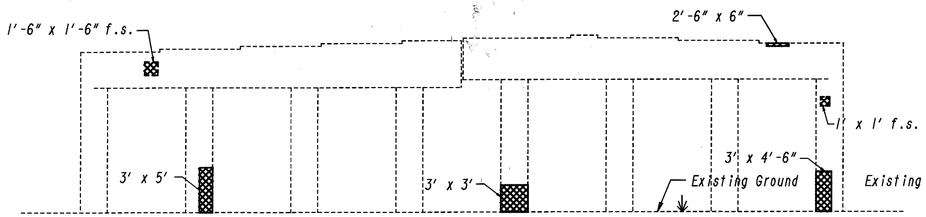

NORTHBOUND PIER 2
(North Elevation)

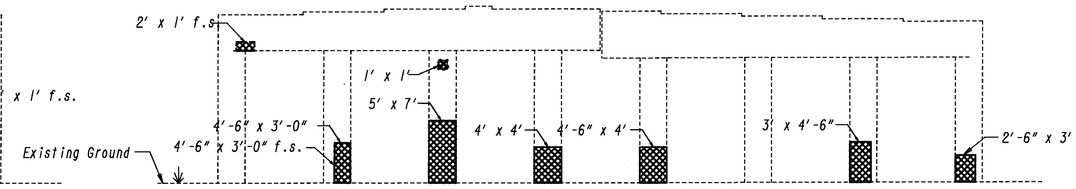

SOUTHBOUND PIER 2
(North Elevation)

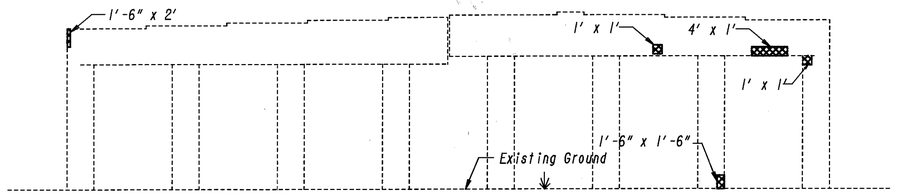

NORTHBOUND PIER 3
(North Elevation)

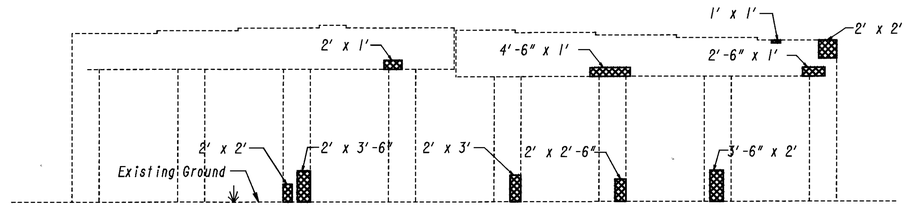

NORTHBOUND PIER 3
(South Elevation)

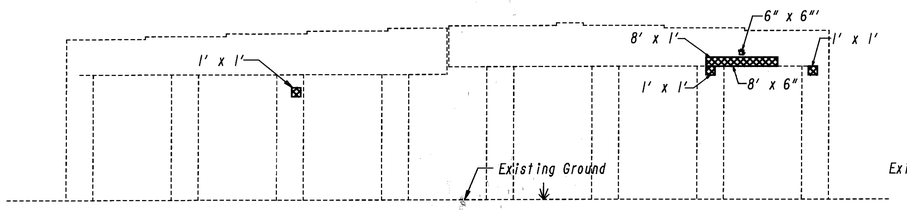

SOUTHBOUND PIER 3
(North Elevation)

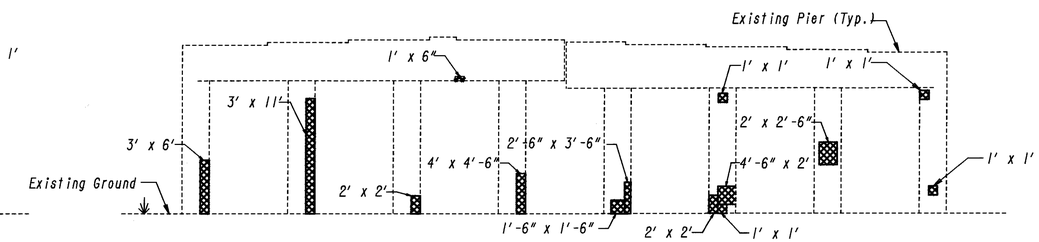

SOUTHBOUND PIER 3
(South Elevation)

Note:
Item 843 - Trowelable Mortar
f.s. = far side

EUTHENICS INC.
CONSULTING ENGINEERS
CLEVELAND, OHIO

10A/18

PIER PATCHING PLAN

BRIDGE NO. CUY-71-0553L AND R
OVER U.S.-42

DESIGN	DRAWN	TRACED	CHECKED	REVIEW	DATE	REVISED
KRD	EEF	—	GFH	RAB	12-94	

PLOT SUBMITTED:06-AUG-1998 08:06
PLOTTED BY: lminick
PLOT SCALE: 1:1
PLOT DATE: 8/6/98
USER NAME: bersberg
pid08459 pgn cuy-71-553 307pch62.dgn 307PCH62.DGN

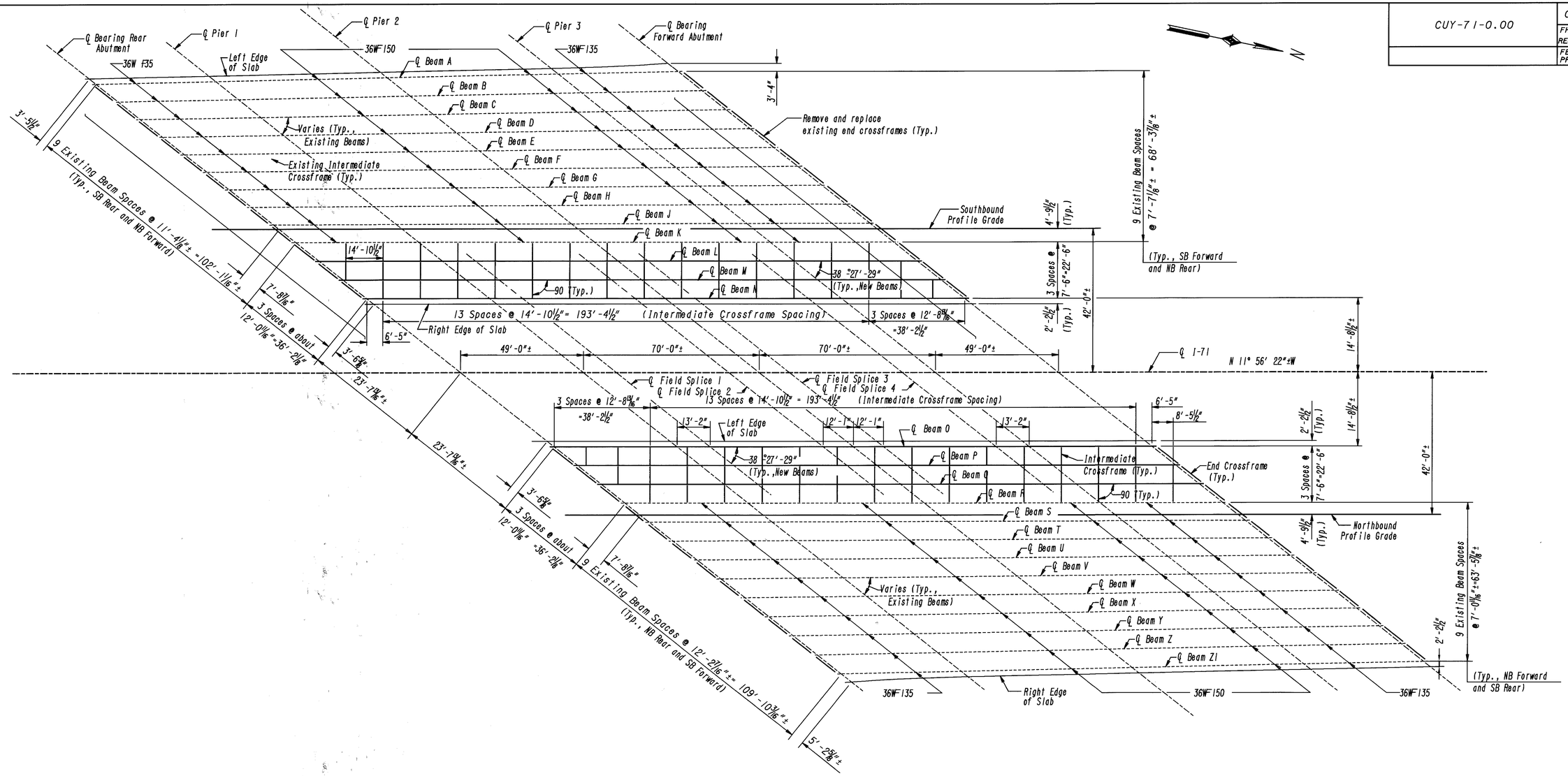

FRAMING PLAN

Notes:

For notes and details of strip seal expansion joints, see ODOT Standard Drawing EXJ-4-87 Sheets 1, 2, 4 and 5 of 5. For stage construction details see sheet 16/18

INSTALLATION OF SEAL: During installation of the support/armor for the superstructure side of the expansion joint seal, the seating of beams on bearings shall be carefully observed to assure that positive bearing is maintained. Proper vertical fit of the support/armor on the beams shall be achieved by positioning of the bevel fill plates rather than clamping force.

3" strip seal glands for bridge deck joints shall be furnished in one continuous piece for each joint.

END CROSSFRAME REMOVAL: Existing end crossframes shall be removed flush with the existing beam webs. Weld remnants shall be removed and surfaces ground smooth before attaching new crossframes.

EXPANSION BEARINGS: Existing expansion bearings at the Abutments and Piers 1 and 3 shall be removed and replaced. For expansion bearing details see sheet 15/18

For additional notes and details see sheet 12/18.

For details of proposed end crossframes, see ODOT Standard Drawing EXJ-4-87 Sheet 1 of 5. For stage construction details see sheet 16/18.

The following abbreviations are used: NB = Northbound SB = Southbound

EUTHENICS INC. CONSULTING ENGINEERS CLEVELAND, OHIO — 11/18

FRAMING PLAN

BRIDGE NO. CUY-71-0553L AND R OVER U.S.-42

DESIGN	DRAWN	TRACED	CHECKED	REVIEW	DATE	REVISED
KRD	GFH	—	BMG	RAB	3-94	

PLOTTED BY: lmincek
PLOTTED: 06-AUG-1998 08:07
PLOT SUBMITTED: 06-AUG-1998 08:07
307FP06.DGN

HORIZONTAL OFFSETS TO EDGE OF SLAB

LOCATION	℄ Bearing Rear Abutment	1/4	1/2	3/4	℄ Pier 1	1/4	1/2	3/4	℄ Pier 2	1/4	1/2	3/4	℄ Pier 3	1/4	1/2	3/4	℄ Bearing Forward Abutment
℄ Beam A to Left Edge of Slab	2'-2 1/2"	2'-2 1/2"	2'-2 1/2"	2'-2 1/2"	2'-2 1/2"	2'-2 1/2"	2'-2 1/2"	2'-2 1/2"	2'-2 1/2"	2'-2 1/2"	2'-2 1/2"	2'-2 5/8"	2'-3 1/8"	2'-4 1/2"	2'-7 1/4"	2'-11 3/4"	3'-4"
℄ Beam Z1 to Right Edge of Slab	3'-4"	2'-11 3/4"	2'-7 1/4"	2'-4 1/2"	2'-3 1/8"	2'-2 5/8"	2'-2 1/2"	2'-2 1/2"	2'-2 1/2"	2'-2 1/2"	2'-2 1/2"	2'-2 1/2"	2'-2 1/2"	2'-2 1/2"	2'-2 1/2"	2'-2 1/2"	2'-2 1/2"

Note: The 1/4, 1/2 and 3/4 points are measured between bearings.
Horizontal offsets are measured perpendicular to ℄ beam.

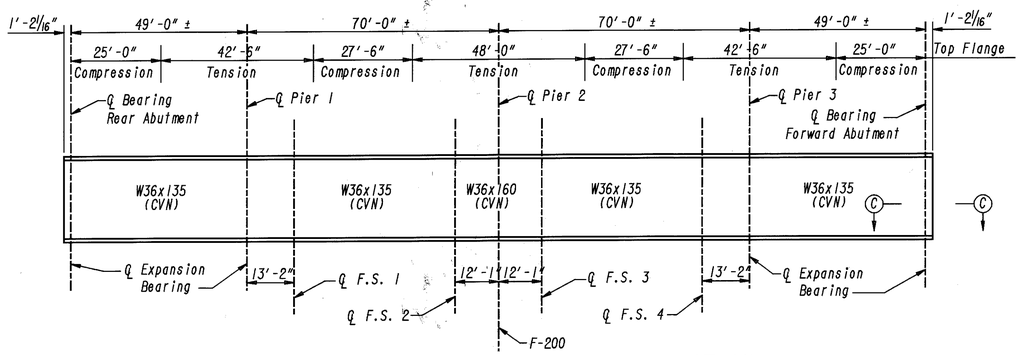

TYPICAL PROPOSED BEAM ELEVATION

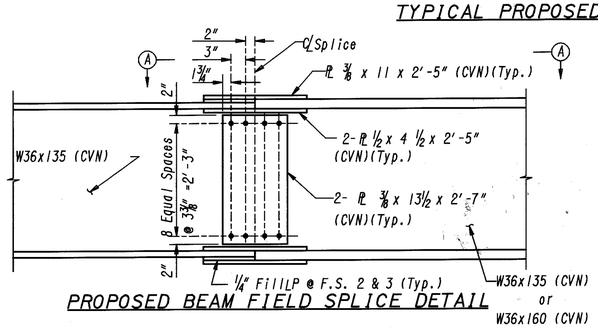

PROPOSED BEAM FIELD SPLICE DETAIL

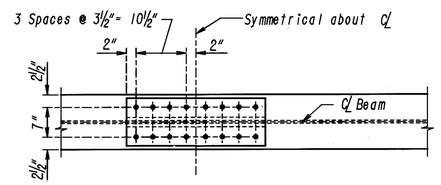

VIEW A-A

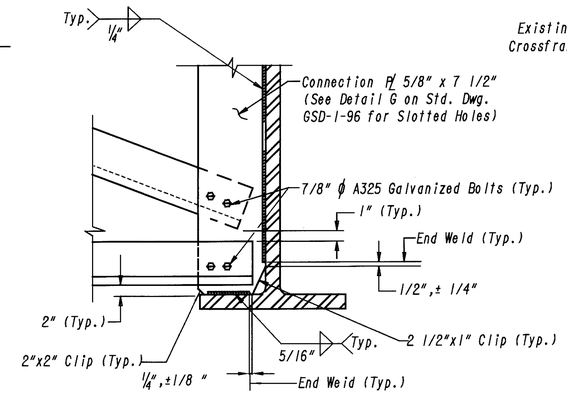

DETAIL A

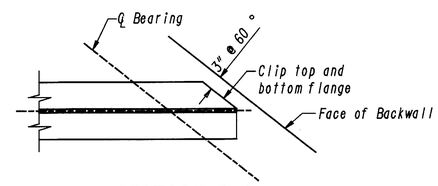

SECTION C-C

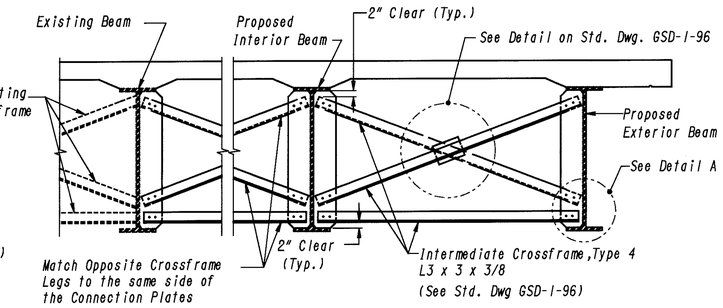

INTERMEDIATE CROSSFRAME

Notes:

All new structural steel shall be ASTM A709 grade 50, unless noted otherwise. Where a shape or plate is designated (CVN) the material shall meet the specified minimum notch toughness requirements as specified in 711.01 of CMS.

High strength bolts shall be 1" diameter A325 galvanized unless otherwise noted.

Welded attachment of supports for concrete deck finishing machine may be made to areas of the fascia stringer flanges designated "Compression". Attachments shall not be made to areas designated "Tension". Fillet welds to compression flanges shall be not closer than 1" from edge of flange, be not more than 2" long, and be not smaller than the minimum size required by AASHTO.

For Additional Type 4 Intermediate Crossframe Details and Notes, See ODOT Standard Drawing GSD-1-96.

For fixed bearing details see ODOT Standard Drawing FB-1-82.
For details of expansion bearings see sheet 15/18.

The following abbreviations are used:
(Typ.) = Typical PL = Plate
F.S. = Field Splice

DEAD LOAD DEFLECTION AND CAMBER

Beam	SPAN 1				SPAN 2												SPAN 3												SPAN 4			
	1/2				Field Splice 1				1/2				Field Splice 2				Field Splice 3				1/2				Field Splice 4				1/2			
	Stl.	Rem.D.L.	Con.	Tot.	Stl.	Rem.D.L.	Con.	Tot.	Stl.	Rem.D.L.	Con.	Tot.	Stl.	Rem.D.L.	Con.	Tot.	Stl.	Rem.D.L.	Con.	Tot.	Stl.	Rem.D.L.	Con.	Tot.	Stl.	Rem.D.L.	Con.	Tot.	Stl.	Rem.D.L.	Con.	Tot.
L,M,P,Q	0	1/8	0	1/8	0	3/16	0	3/16	1/16	7/16	0	1/2	0	1/8	0	1/8	0	1/8	0	1/8	1/16	7/16	0	1/2	0	3/16	0	3/16	0	1/8	0	1/8
N,O	0	1/8	0	1/8	0	3/16	0	3/16	1/16	3/8	0	7/16	0	1/8	0	1/8	0	1/8	0	1/8	1/16	3/8	0	7/16	0	3/16	0	3/16	0	1/8	0	1/8

Note: Deflections and convexities are given to the nearest 1/16 inch.

The following abbreviations are used:
Stl. = Dead load deflection due to weight of steel
Rem D.L. = Remaining dead load deflection
Con. = Convexity
Tot. = Total required camber

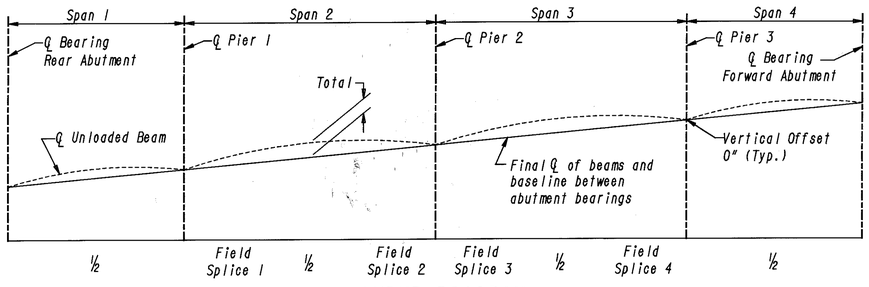

CAMBER DIAGRAM
(Typical All Proposed Beams)

EUTHENICS INC. CONSULTING ENGINEERS CLEVELAND, OHIO | 12/18

BEAM DETAILS

BRIDGE NO. CUY-71-0553L AND R
OVER U.S.-42

DESIGN	DRAWN	TRACED	CHECKED	REVIEW	DATE	REVISED
GFH	EEF	—	KRD	RAB	3-94	

PLOTTED BY: lmincek
PLOT SUBMITTED:06-AUG-1998 08:07
307BD06.DGN

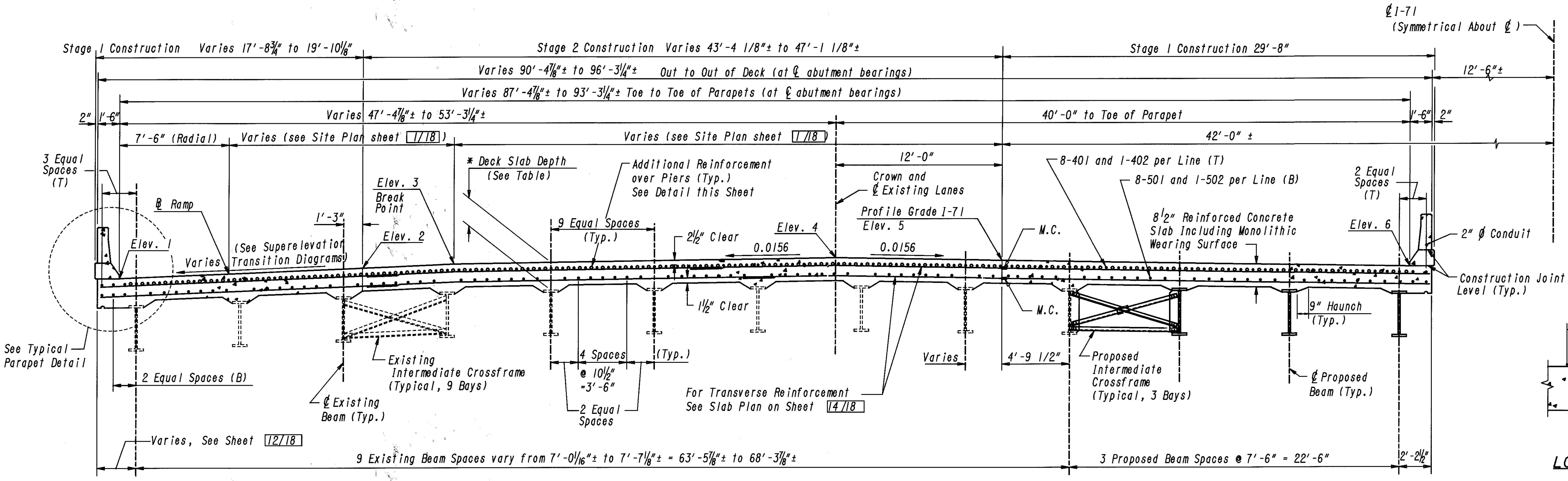

TRANSVERSE SECTION

(Southbound Lanes Shown-
Northbound Lanes Symmetric About ¢)

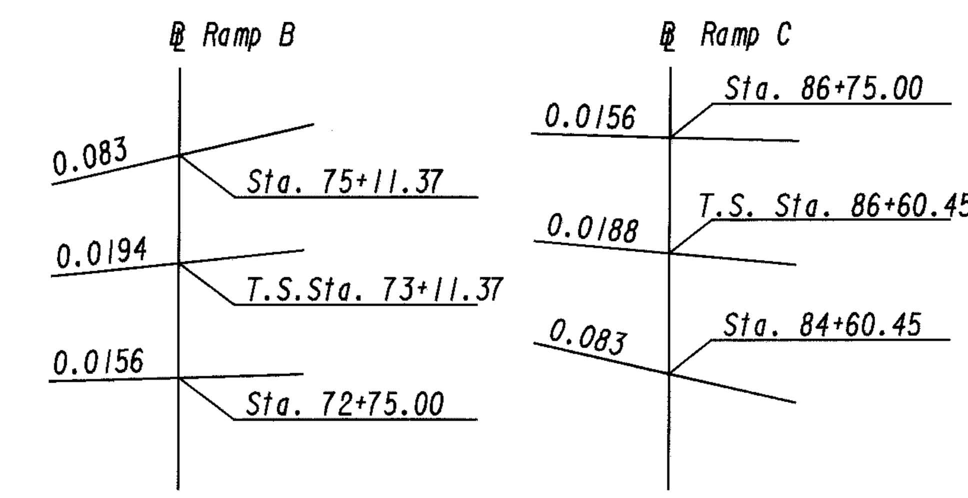

SUPERELEVATION TRANSITION DIAGRAMS

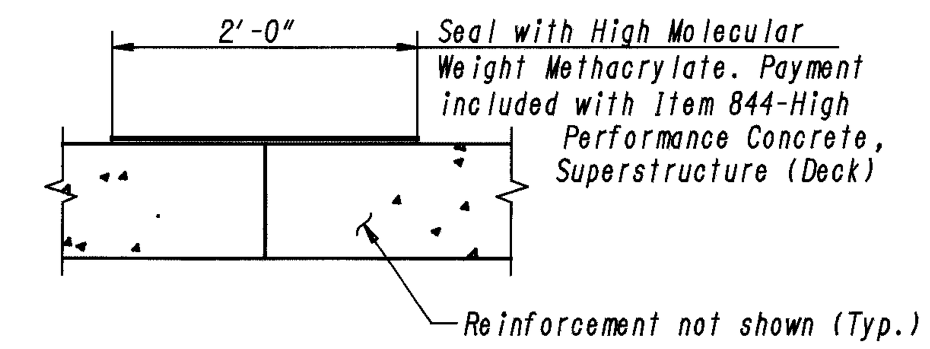

LONGITUDINAL CONSTRUCTION JOINT DETAIL

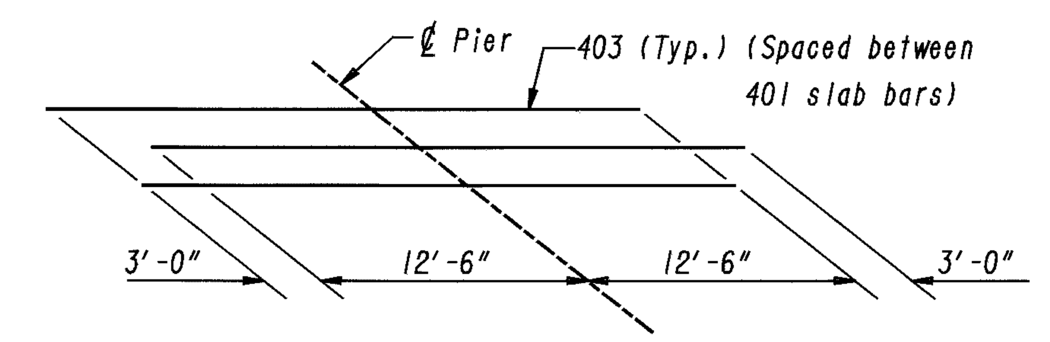

ADDITIONAL REINFORCEMENT OVER PIER

*TABLE OF DECK SLAB DEPTH (at C Bearing)					
Location	Rear Abutment	Pier 1	Pier 2	Pier 3	Forward Abutment
Existing Beams	12⅜"±	12⅝"±	12½"±	12⅝"±	12⅜"±
Proposed Beams	10¾"	10¾"	10½"	10¾"	10¾"

*DECK SLAB DEPTH: The distances shown from top of deck slab to top of steel beams are the design dimensions. The quantity of deck concrete in each span to be paid for shall be based on the averages of these slab depths at the end of each span, even though deviation from it may be necessary because the top flange of the beam may not have the exact camber or conformation required to place it parallel to the finished grade.

DECK SCREED ELEVATIONS

		SPAN 1			SPAN 2				SPAN 3				SPAN 4		
	Elev.	¢ Bearing Rear Abutment	1/2	¢ Bearing Pier 1	F.S. 1	1/2	F.S. 2	¢ Bearing Pier 2	F.S. 3	1/2	F.S. 4	¢ Bearing Pier 3	1/2	¢ Bearing Fwd. Abutment	Elev.
SOUTHBOUND LANES	1	843.71	843.85	843.98	844.07	844.21	844.32	844.38	844.45	844.59	844.57	844.54	844.51	844.46	1
	2	844.08	844.23	844.36	844.45	844.59	844.71	844.77	844.85	844.96	845.04	845.09	845.22	845.34	2
	3	844.22	844.37	844.50	844.59	844.74	844.85	844.92	844.99	845.14	845.23	845.29	845.43	845.55	3
	4	844.80	844.97	845.11	845.13	845.35	845.47	845.54	845.62	845.78	845.90	845.98	846.14	846.28	4
	5	844.71	844.87	845.01	845.11	845.27	845.38	845.45	845.53	845.70	845.81	845.88	846.04	846.18	5
	6	844.49	844.65	844.79	844.89	845.04	845.16	845.23	845.31	845.48	845.59	845.66	845.83	845.97	6
	Beam														Beam
	A	843.72	843.87	844.00	844.09	844.22	844.33	844.40	844.48	844.60	844.59	844.56	844.55	844.54	A
	B	843.88	844.03	844.17	844.26	844.39	844.51	844.57	844.64	844.76	844.77	844.78	844.83	844.88	B
	C	844.05	844.20	844.33	844.42	844.56	844.68	844.74	844.82	844.93	845.00	845.04	845.16	845.28	C
	D	844.21	844.37	844.50	844.59	844.73	844.85	844.91	844.99	845.14	845.25	845.32	845.47	845.61	D
	E	844.37	844.53	844.66	844.75	844.89	845.01	845.08	845.16	845.31	845.42	845.49	845.65	845.78	E
	F	844.54	844.69	844.83	844.92	845.06	845.18	845.25	845.33	845.48	845.60	845.67	845.83	845.96	F
	G	844.70	844.86	845.00	845.09	845.23	845.35	845.42	845.50	845.66	845.77	845.84	846.00	846.14	G
	H	844.78	844.95	845.09	845.18	845.33	845.46	845.52	845.61	845.77	845.89	845.96	846.12	846.27	H
	J	844.73	844.89	845.03	845.12	845.28	845.40	845.47	845.55	845.71	845.83	845.90	846.07	846.21	J
	K	844.67	844.83	844.98	845.07	845.22	845.34	845.41	845.49	845.65	845.77	845.84	846.01	846.15	K
	L	844.61	844.78	844.92	845.01	845.17	845.29	845.35	845.44	845.61	845.72	845.79	845.95	846.09	L
	M	844.55	844.72	844.86	844.96	845.11	845.23	845.29	845.38	845.55	845.66	845.73	845.89	846.03	M
	N	844.50	844.66	844.80	844.90	845.05	845.17	845.23	845.32	845.48	845.60	845.67	845.83	845.97	N
NORTHBOUND LANES	1	844.62	844.97	845.29	845.49	845.73	845.92	846.00	846.08	846.24	846.36	846.44	846.60	846.75	1
	2	845.24	845.42	845.59	845.70	845.89	846.04	846.12	846.22	846.37	846.49	846.59	846.73	846.88	2
	3	845.40	845.57	845.72	845.82	845.98	846.10	846.17	846.26	846.42	846.55	846.62	846.78	846.93	3
	4	845.65	845.81	845.95	846.04	846.19	846.32	846.38	846.47	846.63	846.75	846.82	846.98	847.12	4
	5	845.36	845.53	845.67	845.77	845.92	846.04	846.10	846.19	846.36	846.47	846.54	846.70	846.84	5
	6	844.71	844.87	845.01	845.11	845.26	845.38	845.45	845.53	845.69	845.81	845.88	846.04	846.18	6
	Beam														Beam
	O	844.73	844.89	845.03	845.13	845.28	845.40	845.46	845.55	845.71	845.83	845.90	846.06	846.20	O
	P	844.90	845.07	845.21	845.30	845.46	845.58	845.64	845.73	845.89	846.01	846.07	846.24	846.38	P
	Q	845.08	845.24	845.38	845.48	845.63	845.75	845.81	845.90	846.07	846.18	846.25	846.41	846.55	Q
	R	845.25	845.42	845.56	845.65	845.80	845.92	845.99	846.07	846.23	846.35	846.42	846.59	846.73	R
	S	845.43	845.59	845.73	845.82	845.97	846.10	846.16	846.24	846.40	846.52	846.59	846.75	846.89	S
	T	845.61	845.77	845.91	846.00	846.15	846.27	846.33	846.41	846.57	846.69	846.76	846.92	847.06	T
	U	845.60	845.76	845.91	846.00	846.15	846.28	846.34	846.43	846.59	846.71	846.78	846.95	847.09	U
	V	845.54	845.70	845.85	845.94	846.09	846.22	846.29	846.37	846.53	846.65	846.73	846.89	847.03	V
	W	845.48	845.65	845.79	845.88	846.04	846.16	846.23	846.31	846.48	846.60	846.67	846.83	846.98	W
	X	845.42	845.59	845.73	845.82	845.98	846.10	846.17	846.26	846.42	846.54	846.61	846.78	846.92	X
	Y	845.20	845.39	845.56	845.68	845.88	846.02	846.11	846.21	846.36	846.49	846.56	846.72	846.87	Y
	Z	844.91	845.17	845.41	845.56	845.81	845.97	846.06	846.15	846.30	846.43	846.50	846.66	846.81	Z
	Z1	844.68	844.98	845.31	845.49	845.74	845.92	846.00	846.09	846.24	846.37	846.44	846.61	846.75	Z1

Note: The top of concrete deck elevations above are those which are required before concrete is placed.
Proper allowances have been made for the anticipated dead load deflections caused by the weight of the concrete.

Minimum Lap Lengths	
No.4 Bar	1'-7"
No.5 Bar	2'-6"
No.5 Bar	2'-4"

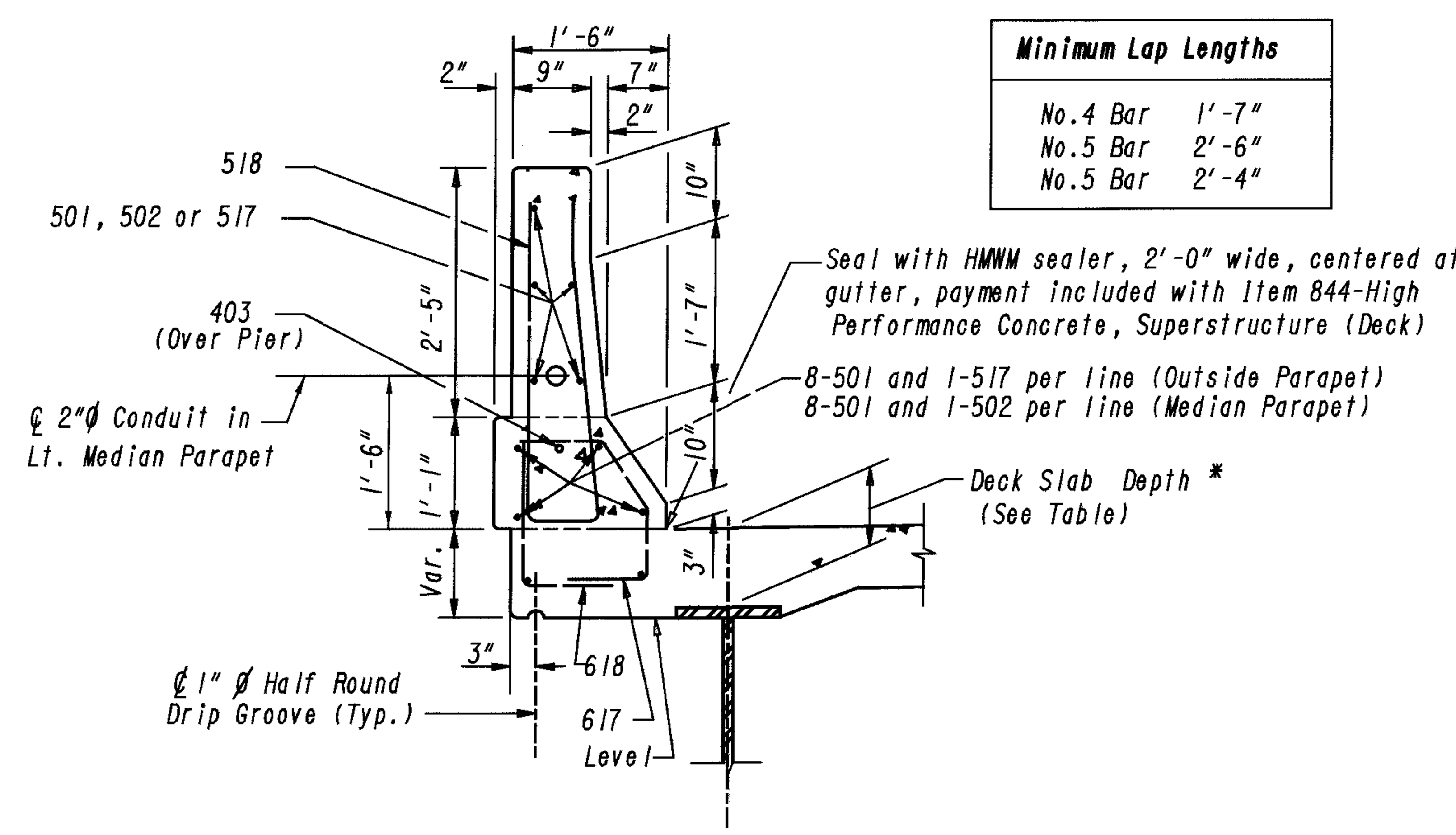

TYPICAL PARAPET DETAIL

Notes:

A haunch width of 9" shall be used for computing quantity of concrete. However, the haunch width may vary between 6 and 12 inches.

All reinforcing bars shall be prefixed ES.

2"Ø 713.07 conduit in med. parapet to be included with Item 844 High Performance Concrete, Superstructure (Parapet) for payment.

For reinforcing schedule see sheet 18/18.

For parapet reinforcing see sheet 14/18.

For expansion joint details see sheet 16/18.

The following abbreviations are used:
T = Top B = Bottom
Min. = Minimum Typ. = Typical
Fwd. = Forward M.C.. = Mechanical Connector

EUTHENICS INC.
CONSULTING ENGINEERS
CLEVELAND, OHIO

13 / 18

TRANSVERSE SECTION

BRIDGE NO. CUY-71-0553L AND R
OVER U.S.- 42

DESIGN	DRAWN	TRACED	CHECKED	REVIEW	DATE	REVISED
KRD	GFH	——	BMG	RAB	3-94	

PLOT SUBMITTED:06-AUG-1998 08:08
307TSX06.DGN
PLOTTED BY: lmincek

CUY-71-0.00	OHIO	359A / 361
	FHWA 5 REGION	
	FEDERAL PROJECT	

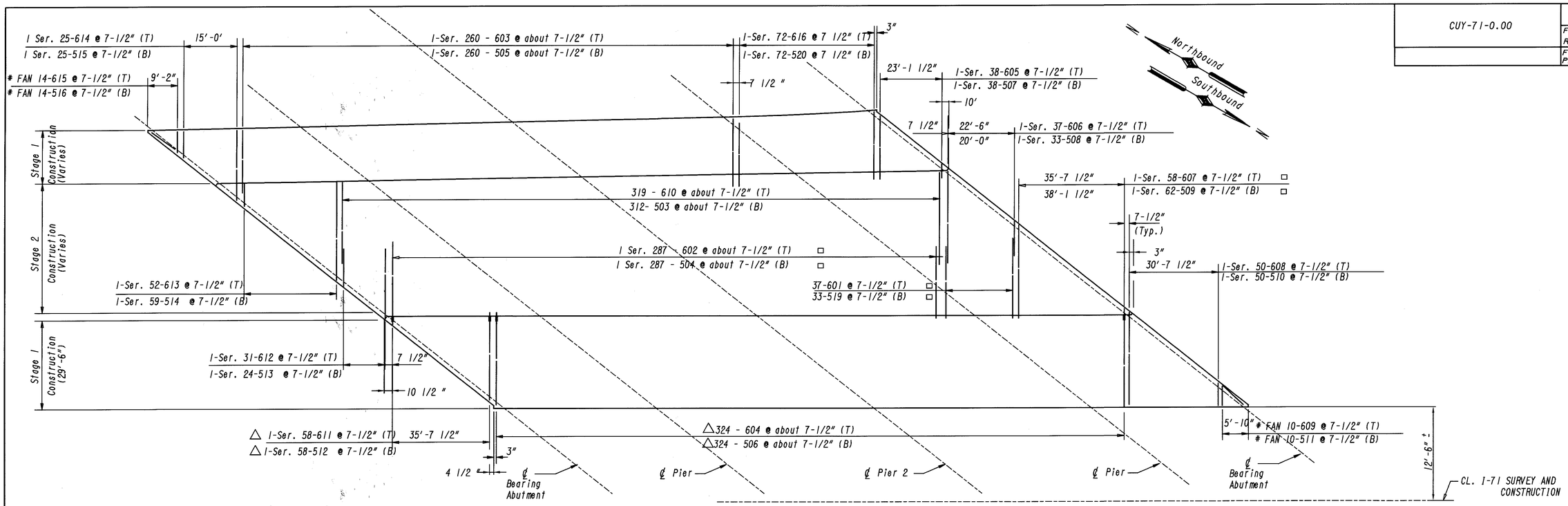

SLAB PLAN

Showing transverse reinforcement (For placement of longitudinal slab bars, see typical section on sheet 13 / 18.)

Note: All transverse reinforcement is perpendicular to and spaced along the centerline of I-71.

\# spacing measured along the edge of slab

△ denotes bars threaded at one end with mechanical connectors.

□ denotes bars threaded at one end.

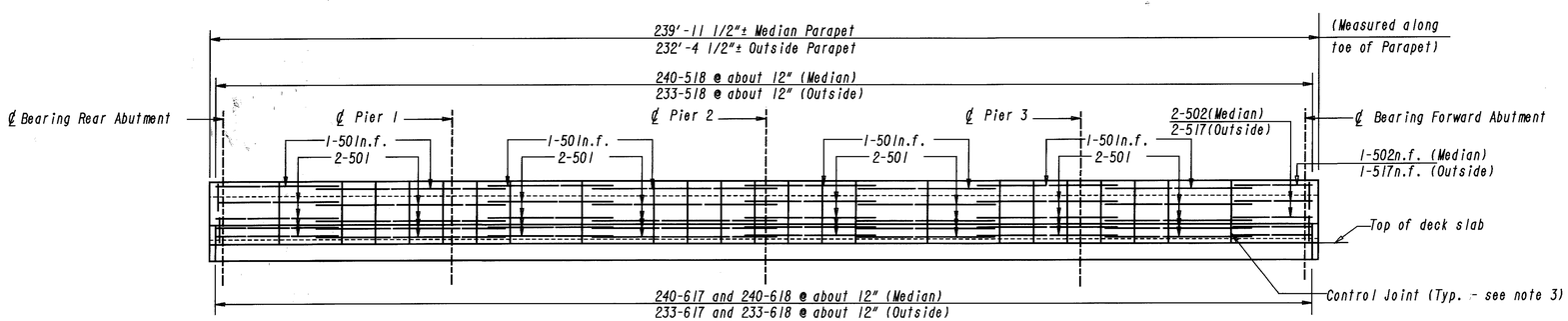

PARAPET ELEVATION

(Left Median or Right Outside Parapet shown, Right Median and Left Outside Parapet, opposite hand.)

(Also add 1-403 bar in parapet over each pier- see detail on sheet 13/18.)

Notes:

1. All reinforcing bar marks shall be prefixed ES.
2. The following abbreviations are used:
   e.f. = each face (NB) = Northbound
   n.f. = near face (SB) = Southbound
   f.f. = far face
3. For control joint construction and joint spacing requirements, see "Construction of Bridge Railing" note on sheet GN 2.

MINIMUM LAP LENGTHS
No. 4 Bar = 1'-7"
No. 5 Bar = 2'-6"
No. 6 Bar = 2'-4"

EUTHENICS INC. CONSULTING ENGINEERS CLEVELAND, OHIO

14 / 18

SLAB PLAN AND PARAPET ELEVATION

BRIDGE NO. CUY-71-0553L and R OVER U.S.-42

DESIGN	DRAWN	TRACED	CHECKED	REVIEW	DATE	REVISED
KRD	RBK	—	GFH	RAB	3-94	

PLOTTED BY: lminoek
PLOT SCALE: 1:1
PLOT DATE: 06-AUG-1998 08:09
PLOT SUBMITTED:06-AUG-1998 08:09
Dgn: 307PE06.DGN
Dgn: 307pe06.dgn
Dgn: Cuy-71-553L
Dgn: pid08459
Dgn: rorsberb

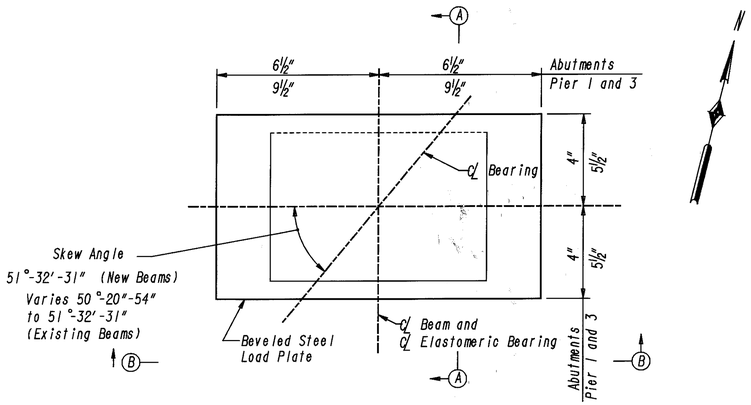

EXPANSION BEARING

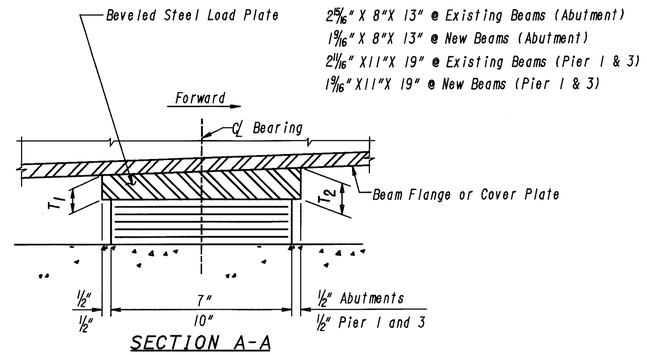

SECTION A-A

Note: See table for Load Plate thickness

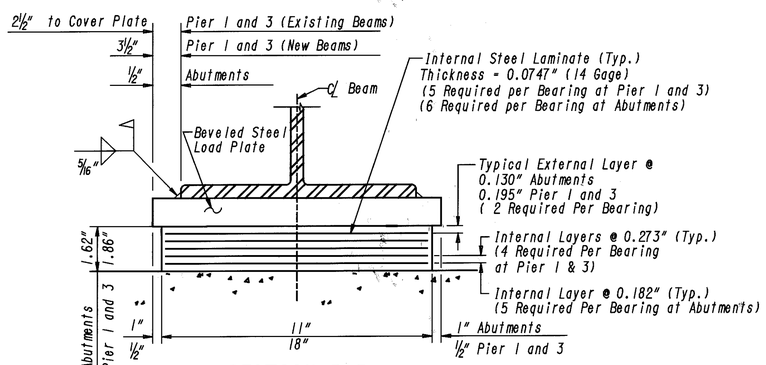

SECTION B-B

LOAD PLATE THICKNESS				
Location	ABUTMENT		PIER 1 AND 3	
	T_1	T_2	T_1	T_2
Existing Beams	2 7/8"	2 5/16"	2 5/8"	2 11/16"
New Beams	1½"	1 9/16"	1½"	1 9/16"

LAMINATED ELASTOMERIC BEARING NOTES:
DESIGN LOADING: SERVICE LOAD REACTIONS - KIPS

	DEAD LOAD	LIVE LOAD WITHOUT IMPACT	TOTAL
ABUTMENTS:	27.2	38.0	65.2
PIER 1 AND 3:	101.1	50.7	151.8

ELASTOMER: THE ELASTOMER SHALL BE 50 DUROMETER NEOPRENE, GRADE 3.

LOAD PLATE: THE STEEL LOAD PLATE (A708 GRADE 50) SHALL BE BONDED BY VULCANIZATION TO THE ELASTOMER DURING THE MOLDING PROCESS. WELDING OF THE LOAD PLATE TO THE SUPERSTRUCTURE SHALL BE CONTROLLED SO THAT THE PLATE TEMPERATURE AT THE ELASTOMER BONDED SURFACE SHALL NOT EXCEED 300 F AS DETERMINED BY THE USE OF PYROMETRIC STICKS OR OTHER TEMPERATURE MONITORING DEVICES.

BEARING REPOSITIONING: IF DECK CONCRETE IS PLACED IS AT AN AMBIENT TEMPERATURE HIGHER THAN 80° F OR LOWER THAN 40° F AND THE BEARING SHEAR DEFLECTION EXCEEDS ONE-SIXTH OF THE BEARING HEIGHT AT 60° F (± 10° F), THE BEAMS SHALL BE RAISED TO ALLOW THE BEARINGS TO RETURN TO THEIR UNDEFORMED SHAPE AT 60° F (± 10° F).

THE STEEL LOAD PLATE SHALL BE PAINTED THE SAME AS THE SUPERSTRUCTURE STEEL IN ACCORDANCE WITH ITEM 514, WITH PAYMENT INCLUDED IN THE BEARING ITEM.

ELASTOMERIC BEARINGS SHALL COMPLY WITH ITEM 516 AND ARTICLES 18.5 THROUGH 18.10 OF SECTION 18, BEARINGS, DIVISION II - CONSTRUCTION OF THE AASHTO STANDARD SPECIFICATIONS FOR HIGHWAY BRIDGES. BEARINGS SHALL BE SUBJECTED TO THE TEST REQUIREMENTS OF ARTICLE 18.7.4.5. THE BEARINGS WERE DESIGNED PER ARTICLE 14.6.6 OF AASHTO DIVISION I DESIGN.

BASIS OF PAYMENT: THE UNIT PRICE BID SHALL INCLUDE ALL MATERIALS, LABOR, TESTING, PAINTING, AND INCIDENTALS NECESSARY TO FURNISH AND INSTALL LAMINATED ELASTOMERIC EXPANSION BEARINGS. PAYMENT WILL BE MADE AT THE CONTRACT PRICE FOR THE APPROPRIATE ITEM 516, EACH, ELASTOMERIC BEARING WITH INTERNAL LAMINATES AND LOAD PLATE (NEOPRENE), AS PER PLAN

EUTHENICS INC. CONSULTING ENGINEERS CLEVELAND, OHIO | 15/18

LAMINATED ELASTOMERIC EXPANSION BEARINGS

BRIDGE NO. CUY-71-0553L AND R
OVER U.S.-42

DESIGN	DRAWN	TRACED	CHECKED	REVIEW	DATE	REVISED
KRD	GFH	—	BMG	RAB	3-94	

PLOTTED BY: lmincek
PLOT SUBMITTED: 06-AUG-1998 08:10
PLOT SCALE: 1:1
PLOT DATE: 1998/08/06
PLOT NAME: pid08459b.dgn
PLOT FILE: cuy-71-553b307leb06.dgn
PLOT DRIVER: 307LEB06.DGN

CUY-71-0.00	OHIO	359C / 361
	FHWA REGION 5	
	FEDERAL PROJECT	

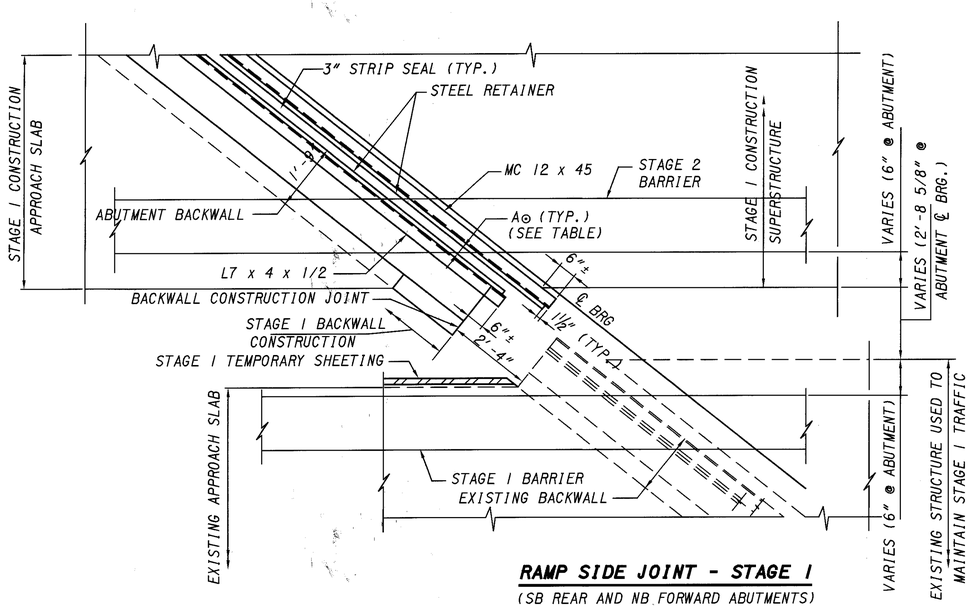

RAMP SIDE JOINT - STAGE 1
(SB REAR AND NB FORWARD ABUTMENTS)

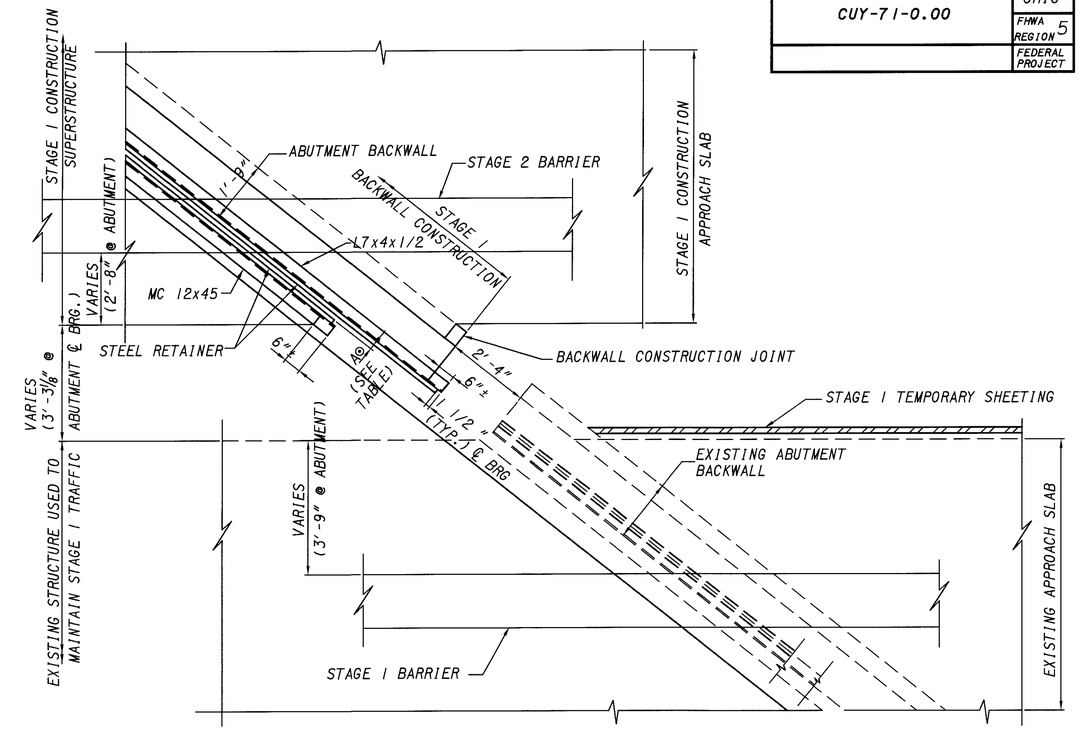

RAMP SIDE JOINT - STAGE 1
(SB FORWARD AND NB REAR ABUTMENTS)

DIMENSION A⊙ 3" STRIP SEAL GLAND	
90°	1 1/2"
80°	1 9/16"
70°	1 5/8"
60°	1 11/16"
50°	1 11/16"
40°	1 3/4"
30°	1 13/16"

NOTE: FOR ADDITIONAL NOTES AND DETAILS SEE ODOT STANDARD DRAWING EXJ-4-87 SHEETS 1, 2, 4 AND 5 OF 5.

NOTES

1. A COMPLETE PENETRATION BUT WELD SHALL BE PROVIDED AT JOINTS IN EXPANSION JOINT ANGLES OF THE SEAL ARMOR.
2. A PARTIAL PENETRATION BUTT WELD SHALL BE PROVIDED AROUND THE OUTER PERIPHERY OF ABUTTING SURFACES OF THE RETAINER, BUT NOT IN THE AREA IN CONTACT WITH THE GLAND.
3. JOINT SEAL GLAND SHALL BE INSTALLED IN ONE CONTINUOUS PIECE AFTER COMPLETION OF END DAM INSTALLATION.

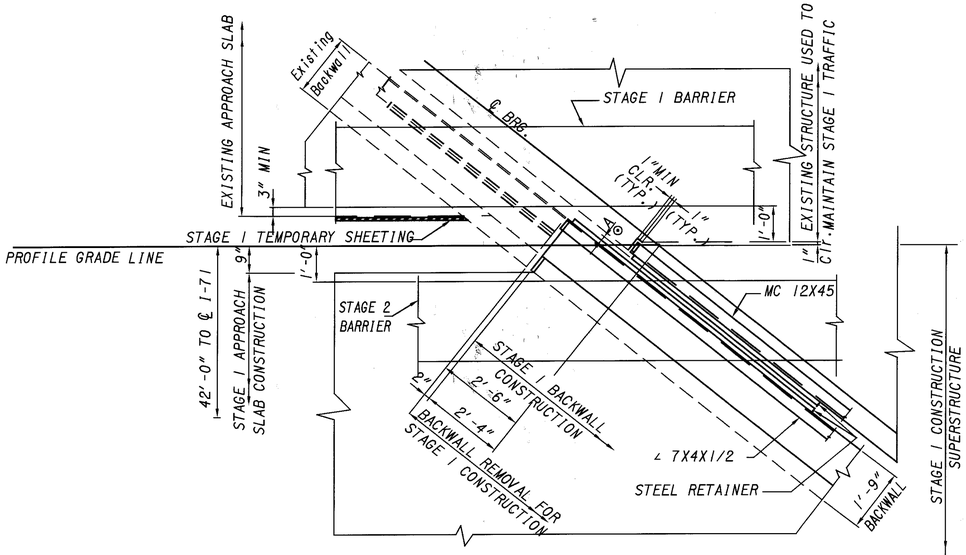

MEDIAN SIDE JOINT - STAGE 1
(SB REAR & NB FORWARD ABUTMENTS)

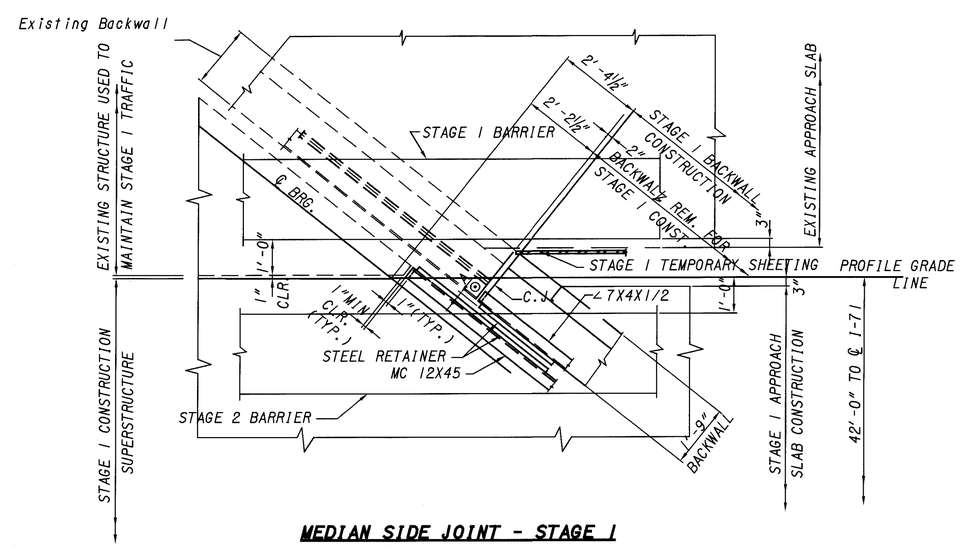

MEDIAN SIDE JOINT - STAGE 1
(SB FORWARD & NB REAR ABUTMENTS)

EUTHENICS INC.
CONSULTING ENGINEERS
CLEVELAND, OHIO

16/18

NORTHBOUND REAR AND SOUTHBOUND FORWARD ABUTMENTS

BRIDGE NO. CUY-71-0553L AND R OVER U.S.-42

DESIGN	DRAWN	TRACED	CHECKED	REVIEW	DATE	REVISED
KRD	GFH	—	BMG	RAB	3-93	

PLOTTED BY: lminceck
PLOTTED ON: Tuesday
PLOT SUBMITTED: 06-AUG-1998 08:11
307EXJ01.DGN

MARK	NO.	LENGTH	TYPE	SER. INCR.	WEIGHT (LBS.)
ABUTMENTS					
EA 401	112	3'-9"	6		281
EA 402	8	4'-1"	55		22
EA 403	8	3'-11"	66		21
EA 501	102	9'-9"	6		1037
EA 502	32	6'-5"	5		214
EA 503	106	8'-9"	6		967
EA 504	34	12'-1"	10		428
EA 505	5	11'-11"	Str		62
EA 506	2	10'-3"	10		21
EA 507	2 Ser 5	13'-5" to 20'-9"	10	1'-10"	178
EA 508	2	12'-5"	10		26
EA 509	2	13'-3"	10		28
EA 510	2 Ser 3	8'-5" to 9'-4"	6	5 1/2"	56
EA 511	298	3'-11"	9		1217
EA 512	120	30'-0"	Str		3,755
EA 513	9	13'-5"	Str		126
EA 514	40	3'-6"	Str		146
EA 515	32	7'-9"	5		259
EA 516	2 Ser 5	9'-9" to 13'-5"	Str	11"	121
EA 517	5	9'-9"	Str		51
EA 518	4	4'-9"	Str		20
EA 519	8	5'-6"	Str		46
EA 520	2	3'-6"	5		7
EA 521	3	7'-3"	Str		23
EA 522	27	6'-11"	5		195
EA 523	27	8'-6"	5		239
EA 524	2 Ser 3	8'-3" to 8'-9"	6	3"	53
EA 525	2	4'-0"	5		8
EA 526	1	5'-1"	Str		5
EA 527	1	6'-3"	Str		7
EA 528	2 Ser 4	5'-8" to 8'-4"	6	10 1/2"	58
EA 529	2 Ser 5	11'-11" to 16'-3"	Str	1'-1"	147
EA 530	20	20'-4"	Str		424
EA 531	8	19'-8"	Str		164
EA 532	2 Ser 3	18'-9" to 20'-4"	Str	9 1/2"	122
EA 533	4	18'-9"	Str		78
EA 534	16	8'-4"	Str		139
EA 535	16	10'-4"	53		172
EA 536	2	15'-5"	19		32
EA 537	8	7'-4"	Str		61
EA 538	4	18'-0"	Str		75
EA 539	2	16'-7"	Str		35
EA 540	2	13'-9"	49		29
EA 541	4	5'-10"	Str		24
EA 542	6	21'-4"	49		134
EA 543	7	16'-8"	25		122
EA 544	32	30'-0"	52		1,001
EA 545	7Ser 11	3'-0" to 3'-10"	2	1"	274
EA 546	66	6'-10"	67		470
EA 547	20	3'-1"	Str		64
EA 548	16	13'-0"	53		217
EA 549	1	4'-5"	Str		5
EA 550	2	2'-9"	Str		6
EA 551	19	7'-0"	Str		139
EA 552	1	17'-6"	19		18
EA 553	19	8'-4"	Str		165
EA 554	4	10'-1"	Str		42
EA 555	4	30'-4"	Str		127
EA 556	4	31'-10"	Str		133
EA 557	2	3'-3"	Str		7
EA 558	2	2'-11"	Str		6
EA 559	28	7'-6"	Str		219
EA 560	28	9'-2"	Str		268
EA 561	2	3'-8"	Str		7
EA 562	2	3'-0"	Str		6
EA 563	20	2'-7"	Str		54
EA 564	8	8'-11"'	Str		74
EA 565	11	21'-3"	Str		244
EA 566	5	22'-6"	Str		117
EA 567	6	23'-1"	9		144
EA 568	2	15'-5"	9		32
EA 569	2	11'-4"	Str		24
EA 570	7	18'-9"	9		137
EA 571	7	11'-1"	Str		81
EA 572	68	3'-3"	43		231
EA 573	2 Ser 3	30'-4" to 31'-10"	Str	9"	195
EA 574	4 Ser 11	3'-10" to 4'-8"	5	1"	195
EA 575	16	3'-10"	5		64

MARK	NO.	LENGTH	TYPE	SER. INCR.	WEIGHT (LBS.)
ABUTMENTS					
EA 576	16	3'-7"	2		60
EA 577	2	4'-8"	5		10
EA 578	5	16'-3"	Str		85
EA 579	21	10'-0"	Str		219
EA 580	2	17'-5"	19		36
EA 581	2	15'-9"	19		33
EA 582	14	6'-1"	64		89
EA 583	8	9'-4"	Str		78
EA 584	14	13'-10"	Str		202
EA 585	2	23'-4"	49		49
EA 586	4	19'-7"	Str		82
EA 587	2	21'-8"	9		45
EA 588	26	2'-4"	5		69
EA 589	6	20'-2"	Str		126
EA 590	6	20'-6"	Str		128
EA 591	4	3'-10"	2		16
EA 592	4	3'-4"	43		14
EA 593	2	31'-3"	Str		65
EA 594	3	21'-10"	Str		68
EA 595	8	19'-3"	Str		161
EA 596	6	3'-5"	Str		21
EA 597	2	7'-10"	Str		16
EA 598	3	6'-0"	Str		19
EA 601	24	14'-4"	27		517
EA 602	24	15'-11"	27		574
EA 603	162	9'-9"	6		2,372
EA 604	592	6'-5"	6		5,706
EA 605	584	5'-11"	6		5,190
EA 606	11	7'-9"	Str		128
EA 607	11	9'-9"	Str		161
EA 608	2 Ser 3	12'-1" to 13'-0"	27	5 1/2"	113
EA 609	3	7'-3"	5		33
EA 610	30	3'-8"	Str		165
EA 611	27	13'-9"	27		558
EA 612	27	15'-2"	27		615
EA 613	1	6'-6"	Str		10
EA 614	7	4'-7"	Str		48
EA 615	3	6'-7"	5		30
EA 616	3	8'-2"	5		37
EA 617	8	7'-9"	6		93
EA 618	3	8'-10"	5		40
EA 619	12	5'-0"	Str		90
EA 620	1	5'-9"	Str		9
EA 621	5	6'-3"	Str		47
EA 622	48	2'-8"	Str		192
EA 623	26	11'-6"	6		449
EA 624	36	6'-2"	5		333
EA 625	69	3'-9"	60		389
EA 626	42	2'-10"	Str		179
EA 627	3 Ser 11	4'-6" to 5'-4"	Str	1"	244
EA 628	24	4'-6"	Str		162
EA 629	4	3'-11"	60		24
EA 801	28	30'-0"	Str		2,243
EA 802	4	12'-4"	Str		132
EA 803	4	15'-1"	Str		161
EA 804	2	16'-8"	Str		89
EA 805	4	19'-0"	Str		203
EA 806	4	25'-2"	9		269
EA 807	4	16'-4"	Str		174
EA 808	4	16'-10"	Str		180
EA 809	2	15'-6"	Str		83
EA 810	4	12'-11"	Str		138
EA 811	4	7'-11"	Str		85
EA 812	2	9'-2"	Str		49
EA 813	2	11'-1"	Str		59
EA 814	4	25'-0"	25		267
EA 815	8	14'-3"	Str		304
EA 816	248	4'-10"	8		3,200
			TOTAL WEIGHT		44,036

BENDING DIAGRAMS

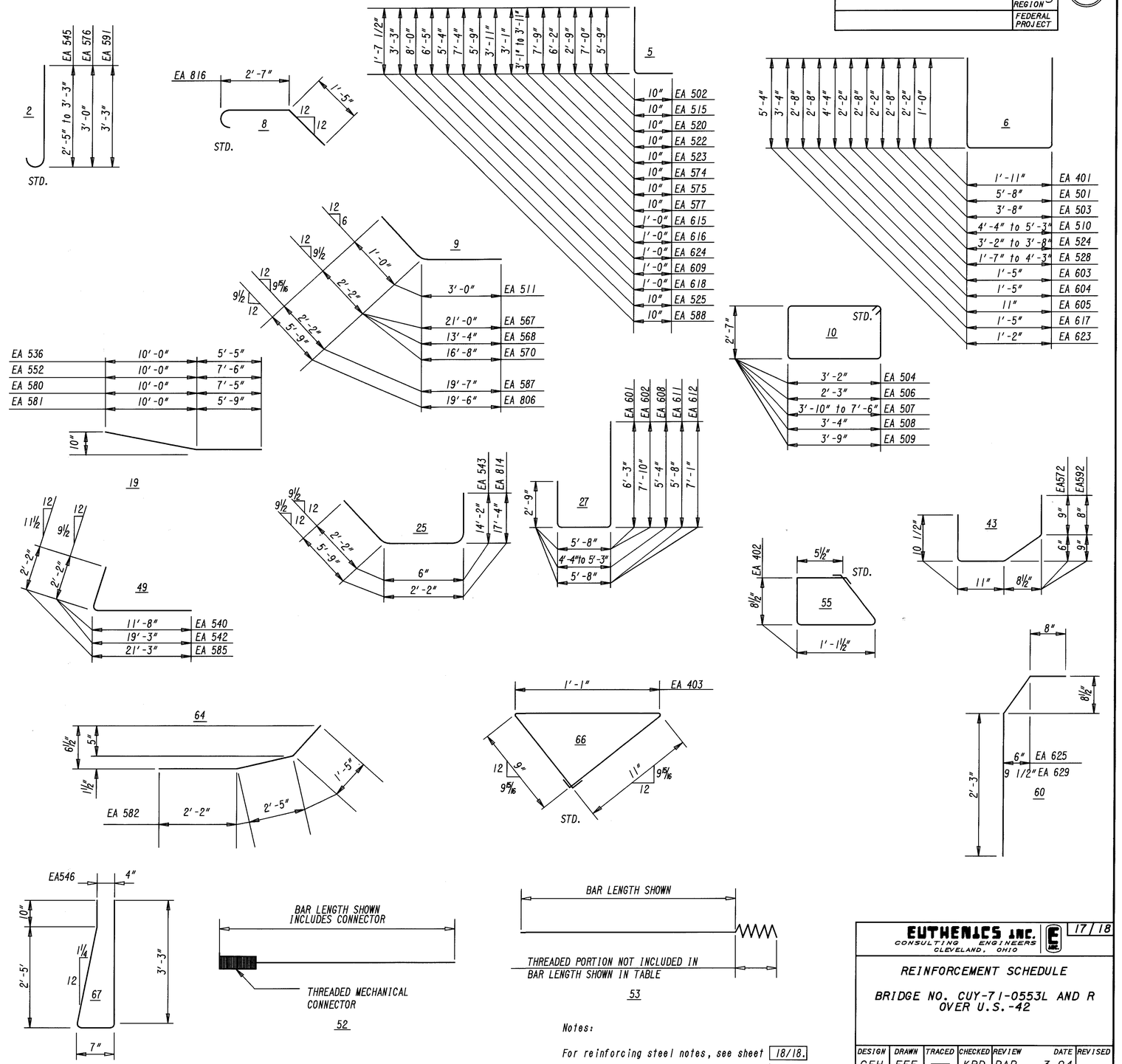

Notes:

For reinforcing steel notes, see sheet 18/18.

CUY-71-0.00	OHIO	359D 361
	FHWA REGION 5	
	FEDERAL PROJECT	

EUTHENICS INC. CONSULTING ENGINEERS CLEVELAND, OHIO

17/18

REINFORCEMENT SCHEDULE

BRIDGE NO. CUY-71-0553L AND R OVER U.S.-42

DESIGN	DRAWN	TRACED	CHECKED	REVIEW	DATE	REVISED
GFH	EEF	—	KRD	RAB	3-94	

PLOTTED BY: lmincek
PLOT SUBMITTED: 06-AUG-1998 08:12
307RS61.DGN
PLOT SCALE: 1:1
PLOT DATE: 6-AUG-1998
USERNAME: csberber
pid08459 pdgn cuy-71-553L 307rs61.dgn

MARK	NO.	LENGTH	TYPE	SER. INCR.	WEIGHT (LBS.)
PIERS					
EP 401	60	26'-0"	Str		1,042
EP 402	42	8'-8"	45		243
EP 403	42	7'-0"	6		196
EP 404	2	14'-9"	51		529
EP 405	4	13'-8"	51		981
EP 406	2	13'-5"	51		489
EP 407	2	12'-1"	51		463
EP 408	2	15'-4"	51		554
EP 409	8	11'-1"	66		59
EP 410	8	11'-9"	66		63
EP 501	63	13'-2"	10		865
EP 502	21	13'-10"	10		303
EP 503	3 Ser 9	13'-2" to 13'-6"	10	1/2"	375
EP 504	6	4'-2"	6		26
EP 505	6	3'-8"	6		23
EP 506	108	4'-5"	6		498
EP 507	21	13'-4"	10		292
EP 601	136	2'-8"	Str		545
EP 801	192	11'-6"	1		5,895
EP 1001	120	13'-0"	5		6,713
EP 1002	20	18'-3"	Str		1,571
EP 1003	40	17'-0"	Str		2,926
EP 1004	20	15'-6"	Str		1,334
EP 1005	20	18'-9"	Str		1,614
EP 1006	20	17'-3"	Str		1,485
EP 1007	6	27'-3"	Str		704
EP 1008	12	17'-3"	49		891
EP 1009	24	20'-5"	Str		2,108
EP 1010	12	26'-0"	Str		1,343
EP 1011	6	33'-11"	26		876
EP 1012	12	32'-8"	26		1,687
EP 1013	12	13'-10"	Str		714
			*TOTAL WEIGHT		37,383

MARK	NO.	LENGTH	TYPE	SER. INCR.	WEIGHT (LBS.)
SUPERSTRUCTURE					
ES 401	1824	30'-0"	Str		36,553
ES 402	228	13'-0"	Str		1,980
ES 403	672	28'-0"	Str		12,569
ES 501	1712	30'-0"	Str		53,568
ES 502	196	20'-4"	Str		4,157
ES 503	624	28'-8"	Str		18,657
ES 504	2 Ser 287	18'-1" to 21'-0"	53	1/8"	11,699
ES 505	2 Ser 260	20'-6" to 21'-4"	Str	1/16"	11,344
ES 506	648	29'-4"	52		19,825
ES 507	2 Ser 38	3'-8" to 22'-5"	Str	6 1/16"	1034
ES 508	2 Ser 33	5'-0" to 20'-8"	Str	5 7/8"	883
ES 509	2 Ser 62	6" to 30'-9"	53	5 15/16"	2,021
ES 510	2 Ser 50	5'-3" to 29'-1"	Str	5 13/16"	1,790
ES 511	20	4'-9"	Str		99
ES 512	2 Ser 58	6" to 28'-9"	52	5 15/16"	1,769
ES 513	2 Ser 24	6'-9" to 18'-1"	Str	5 15/16"	622
ES 514	2 Ser 59	2'-8" to 32'-1"	Str	6 1/16"	2,138
ES 515	2 Ser 25	7'-7" to 20'-0"	Str	6 3/16"	719
ES 516	28	7'-1"	Str		207
ES 517	18	12'-9"	Str		239
ES 518	946	6'-10"	67		6,742
ES 519	66	29'-0"	53		1,996
ES 520	2 Ser 72	21'-4" to 22'-8"	Str	1/4"	3,304
ES 601	74	23'-10"	53		2,649
ES 602	2 Ser 287	21'-9" to 24'-8"	53	1/8"	20,009
ES 603	2 Ser 260	20'-4" to 21'-2"	Str	1/16"	16,207
ES 604	648	29'-4"	52		28,550
ES 605	2 Ser 38	3'-6" to 22'-3"	Str	6 1/16"	1,470
ES 606	2 Ser 37	8'-0" to 25'-8"	Str	5 7/8"	1,871
ES 607	2 Ser 58	6" to 28'-9"	53	5 15/16"	2,548
ES 608	2 Ser 52	5'-3" to 29'-1"	Str	5 13/16"	2,578
ES 609	20	4'-9"	Str		143
ES 610	638	24'-10"	Str		23,797
ES 611	2 Ser 58	6" to 28'-9"	52	5 15/16"	2,548
ES 612	2 Ser 31	6'-10" to 21'-9"	Str	5 15/16"	1,331
ES 613	2 Ser 52	2'-8" to 28'-6"	Str	6 1/16"	2,434
ES 614	2 Ser 25	7'-7" to 20'-0"	Str	6 3/16"	1,036
ES 615	28	7'-1"	Str		298
ES 616	2 Ser 72	21'-2" to 22'-6"	Str	1/4"	4,722
ES 617	946	3'-1"	43		4,381
ES 618	946	2'-2"	5		3,079
			*TOTAL WEIGHT		313,566

BENDING DIAGRAMS

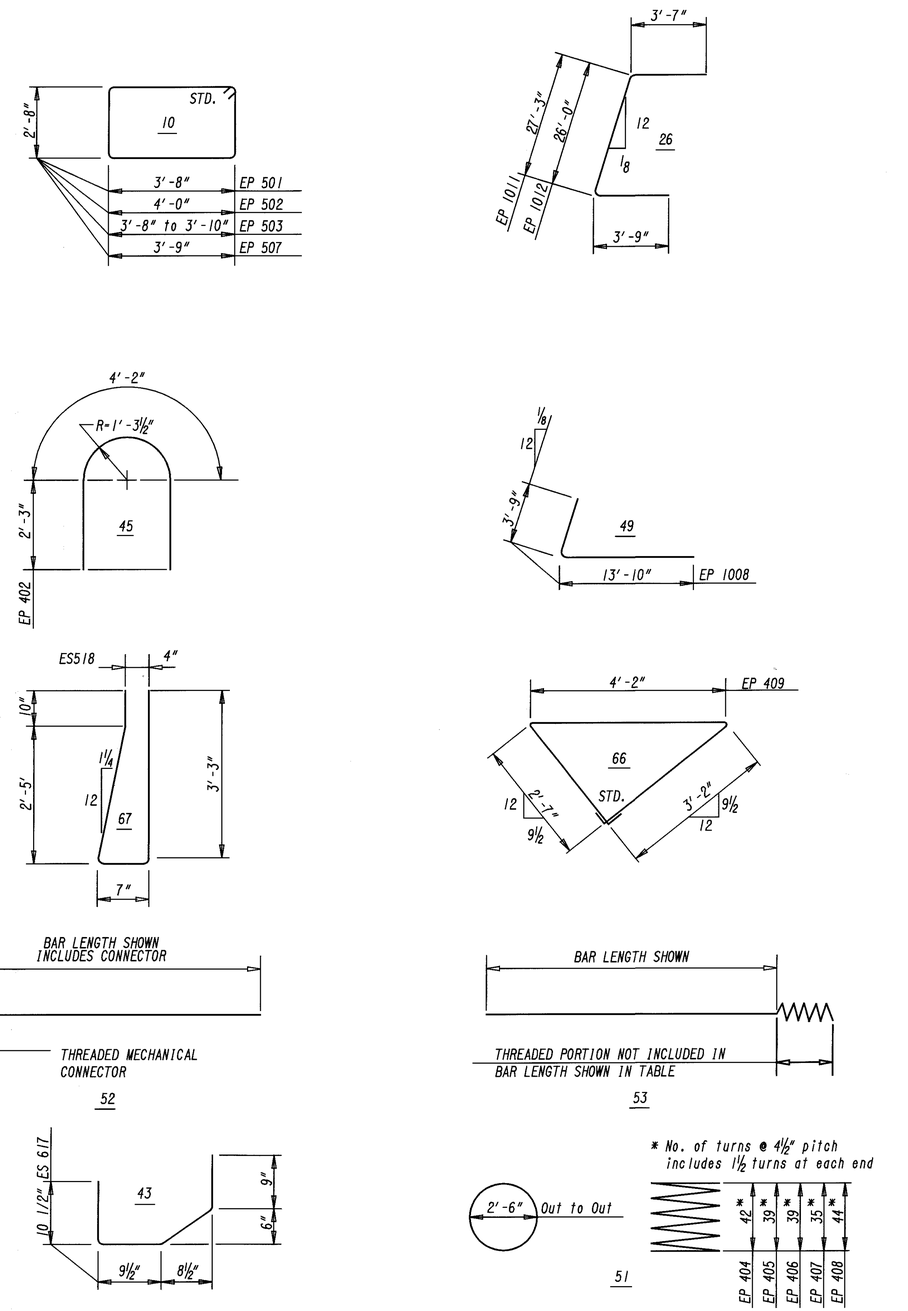

NOTES

1. THE BAR SIZE NUMBER IS SPECIFIED ON THE PLANS IN THE BAR MARK COLUMN. THE FIRST DIGIT WHERE THREE DIGITS ARE USED AND THE FIRST TWO DIGITS WHERE FOUR ARE USED INDICATES THE BAR SIZE NUMBER. FOR EXAMPLE, P601 IS A NO. 6 BAR. BAR DIMENSIONS SHOWN ARE OUT TO OUT UNLESS OTHERWISE INDICATED. R INDICATES INSIDE RADIUS. UNLESS OTHERWISE NOTED, "STD." WRITTEN IN PLACE OF A DIMENSION INDICATES A STANDARD BEND AT THE END OF THE BAR.

2. ALL REINFORCING STEEL TO BE EPOXY COATED.

3. CONCRETE SPACERS OR OTHER APPROVED NONCORROSIVE SPACING DEVICES SHALL BE USED AT SUFFICIENT INTERVALS (NEAR THE BOTTOM AND AT INTERVALS NOT EXCEEDING 10 FEET) TO ENSURE CONCENTRIC SPACING FOR THE ENTIRE CAGE LENGTH. SPACERS SHALL BE CONSTRUCTED OF APPROVED MATERIAL EQUAL IN QUALITY AND DURABILITY TO THE CONCRETE SPECIFIED FOR THE COLUMN. THE SPACERS SHALL HAVE ADEQUATE DIMENSIONS TO ENSURE A MINIMUM 3 INCH CLEAR SPACE BETWEEN THE OUTSIDE OF THE REINFORCING CAGE AND THE DESIGN DIMENSION OF THE COLUMN. CYLINDRICAL CONCRETE FEET (BOTTOM SUPPORTS) SHALL BE PROVIDED TO ENSURE THAT THE BOTTOM OF THE CAGE IS MAINTAINED AT THE PROPER DISTANCE ABOVE THE BASE.

4. SPIRAL REINFORCING BARS: THE "LENGTH" SHOWN IN THE STEEL LIST FOR THE SPIRAL BARS IS THE LENGTH OF THE SPIRAL ALONG THE AXIS OF THE SPIRAL. THREE STEEL CHANNEL, TEE OR ANGLE SPACERS, WEIGHING APPROXIMATELY 0.80 LB PER LINEAR FEET OF SPACER, SHALL BE PROVIDED FOR EACH SPIRAL UNIT. THEY SHALL BE EQUALLY SPACED ALONG THE PERIPHERY OF THE COILS. THE NUMBER OF POUNDS OF THESE SPACERS, BASED ON 2.40 LB PER LINEAR FOOT IS INCLUDED IN THE TABULATED QUANTITIES OF SPIRAL BARS.

*5. ALL REINFORCING STEEL SHALL BE INCLUDED WITH THE APPROPRIATE ITEM 844 FOR PAYMENT. WEIGHTS ARE GIVEN FOR INFORMATIONAL PURPOSES ONLY.

CUY-71-0.00	OHIO	359E 361
	FHWA REGION 5	
	FEDERAL PROJECT	

EUTHENICS INC. CONSULTING ENGINEERS CLEVELAND, OHIO

18/18

REINFORCEMENT SCHEDULE

BRIDGE NO. CUY-71-0553L AND R OVER U.S.-42

DESIGN	DRAWN	TRACED	CHECKED	REVIEW	DATE	REVISED
GFH	EEF	—	KRD	RAB	3-94	

PLOTTED BY: lmincek
PLOT SUBMITTED: 06-AUG-1998 08:13
dgn 307RS62.DGN
B307rs62.dgn
Bcuy-71-553
Bdgn
Bpid08459
Bmorsber

PLOT SUBMITTED: 07-AUG-1998 12:11
PLOTTED FROM: i:\users\eforsber\pid08459\dgn\rw1.dgn
RW1.DGN

CUYAHOGA COUNTY	OHIO	360
CUY-71-0.00	FHWA REGION 5	361
	FEDERAL PROJECT	1 / 2

PROPERTY MAP
CUY-71-0.00
CITY OF STRONGSVILLE
CUYAHOGA COUNTY

NOT TO SCALE

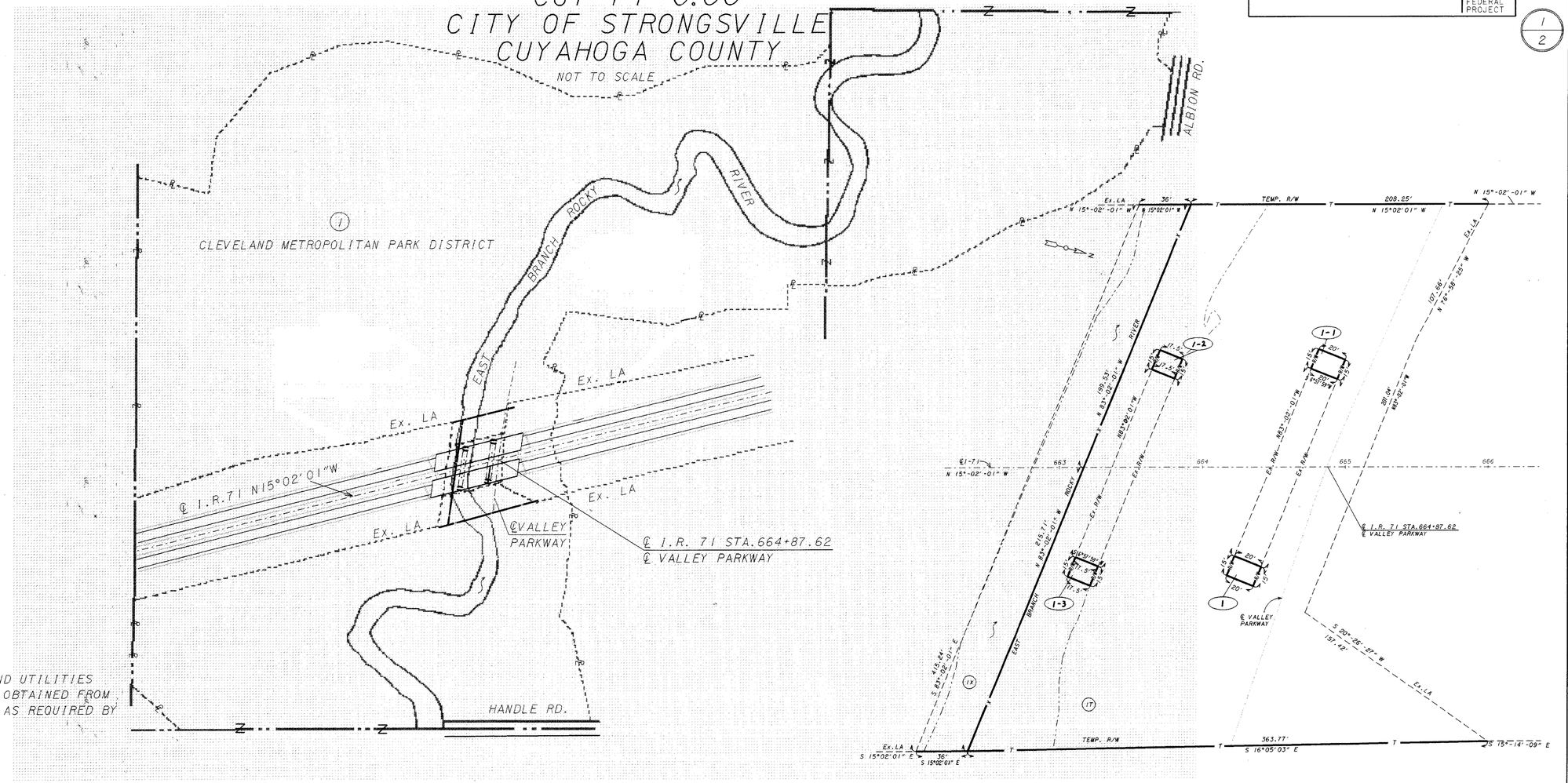

UTILITIES

LITEL TELECOMMUNICATIONS CORPORATION
4650 LAKEHURST COURT
DUBLIN, OHIO 43017
PHONE: (614)785-6277

AMERITECH
13630 LORAIN AVE.
CLEVELAND, OHIO 44111
PHONE: (216)476-6136

THE LOCATION OF UNDERGROUND UTILITIES SHOWN ON THE PLANS ARE AS OBTAINED FROM THE OWNERS OF THE UTILITY AS REQUIRED BY SECTION 153.64 O.R.C.

SUMMARY OF ADDITIONAL RIGHT OF WAY

PARCEL NO.	OWNER	SHEET NO.	OWNERS RECORD BOOK	OWNERS RECORD PAGE	AUDITOR'S PARCEL	RECORD AREA(Ac.)	TOTAL P.R.O.	GROSS TAKE	P.R.O. IN TAKE	NET TAKE	STRUCTURE	NET RESIDUE LEFT	NET RESIDUE RIGHT	TYPE FUND	REMARKS AND PERSONALTY	AS ACQUIRED BOOK	AS ACQUIRED PAGE
1	CLEVELAND METROPOLITAN	2	4003	603	396-26-1			300 S.F.	0	300 S.F.							
1-1	PARK DISTRICT							300 S.F.	0	300 S.F.							
1-2								262 S.F.	0	262 S.F.							
1-3								262 S.F.	0	262 S.F.							
1T								83481 S.F.	6470 S.F.	77011 S.F.					BRIDGE RECONSTRUCTION		
1X								13860 S.F.	0	13860 S.F.					CHANNEL EASEMENT		

TOTAL NUMBER OF :
1 OWNERSHIPS
TOTAL TAKES
0 OWNERSHIPS WITH STRUCTURES INVOLVED
OWNERSHIPS WITH "P" ITEMS

NOTE: ALL TEMPORARY PARCELS TO BE OF 18 MONTHS DURATION.

REV.	DATE	DESCRIPTION
2	8-8-94	CHANGED FROM WD TO EASMENT
1	7-12-94	REV. SUMMARY, ADDED LABELS TO THE INTERSECTIONS OF THE ℄, AND DISTANCES ON THE Ex. LA, ADDED EDGE OF RIVER

DATE OF COMPLETION

CUYAHOGA COUNTY CUY-71-0.00	OHIO	361 / 361
	FHWA REGION 5	2 / 2
	FEDERAL PROJECT	

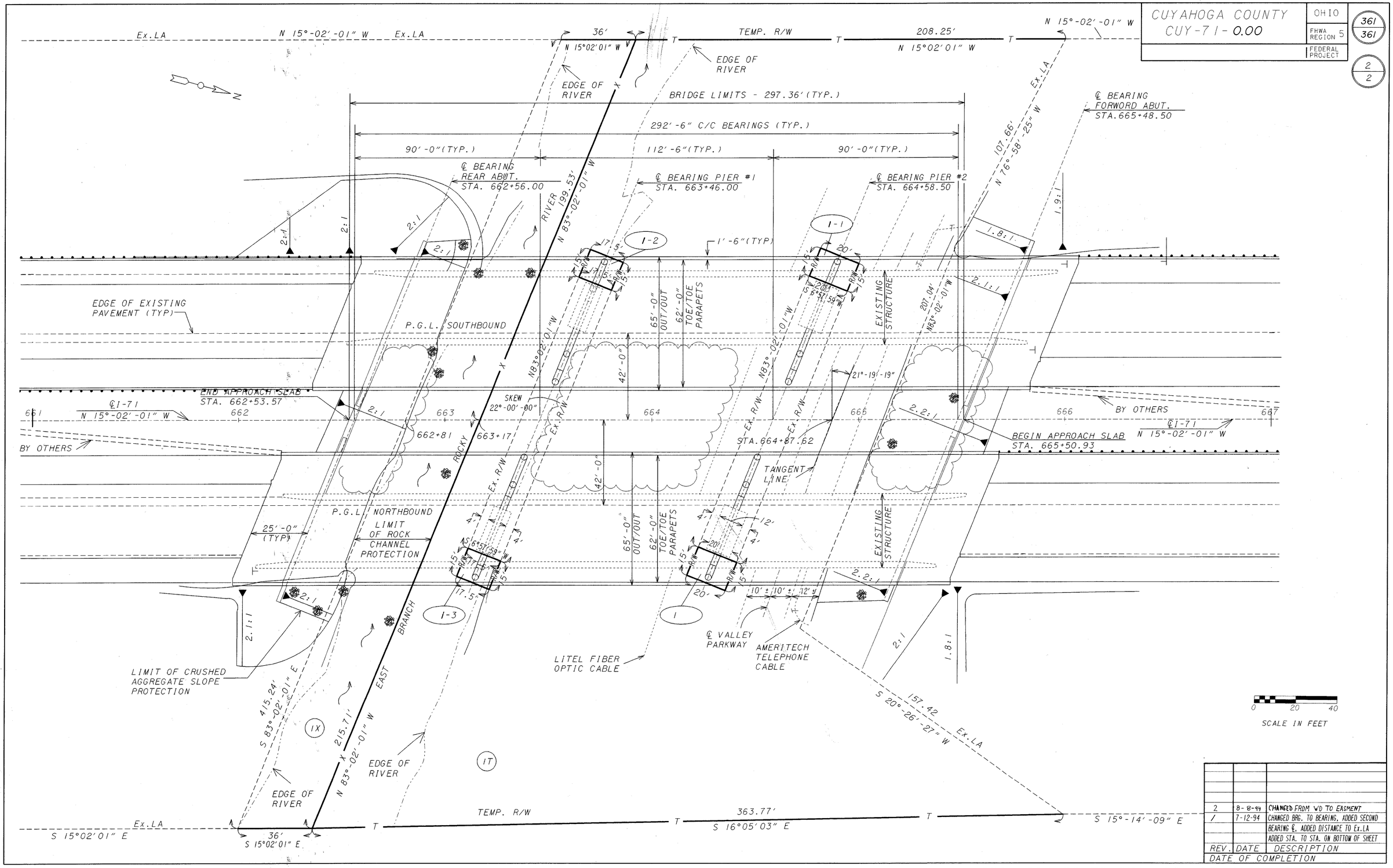

REV.	DATE	DESCRIPTION
2	8-8-94	CHANGED FROM WD TO EASMENT
1	7-12-94	CHANGED BRG. TO BEARING, ADDED SECOND BEARING ℄, ADDED DISTANCE TO Ex.LA ADDED STA. TO STA. ON BOTTOM OF SHEET

DATE OF COMPLETION

STA. 661+00 TO STA. 667+00 RIGHT OF WAY PLAN

PLOTTED FROM: i:\users\eforsber\pid08459\dgn\rw2.dgn
PLOT SUBMITTED: 07-AUG-1998 12:11
RW2.DGN