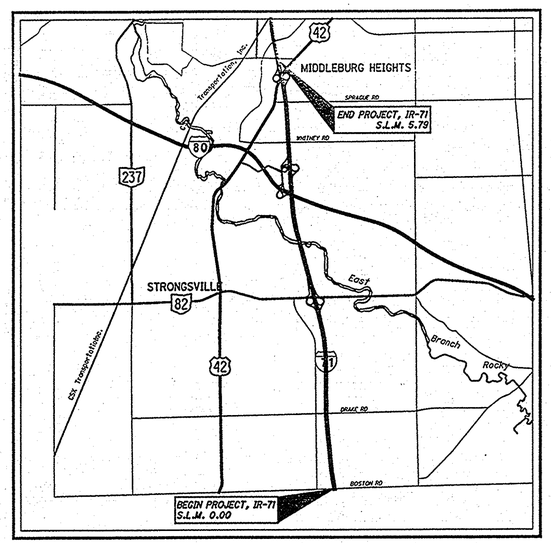

LOCATION MAP

LATITUDE: 41°18'30" LONGITUDE: 81°48'00"

SCALE IN MILES

0 1 2 3 4

N

PORTION TO BE IMPROVED
INTERSTATE HIGHWAY
FEDERAL ROUTES
STATE ROUTES
COUNTY & TOWNSHIP ROADS
OTHER ROADS

STATE OF OHIO
DEPARTMENT OF TRANSPORTATION

CUY-71-0.00

CITY OF STRONGSVILLE
CITY OF MIDDLEBURG HEIGHTS
CUYAHOGA COUNTY

INDEX OF SHEETS:

Title Sheet	1
Typical Sections	2-6
General Notes	7-10
Maintenance of Traffic Notes	11-15
General Summary	16
Subsummaries	
Pavement Subsummaries	17-18
Pavement Markings Subsummaries	19-20
General Plans	21-36
Pavement Details	37
Pavement Marking Details	38

DESIGN DESIGNATION

	S.L.M. 0.00-2.57	S.L.M. 2.57-3.95	S.L.M. 3.95-5.52	S.L.M. 5.52-5.73
CURRENT ADT (2017)	60000	92000	92000	103000
DESIGN YEAR ADT (2037)	66000	101000	101000	112000
DESIGN HOURLY VOLUME (2037)	5900	9100	9100	10000
DIRECTIONAL DISTRIBUTION	0.58	0.64	0.63	0.58
TRUCKS (24 HOUR B&C)	0.07	0.04	0.05	0.05
DESIGN SPEED	65 MPH	65 MPH	65 MPH	65 MPH
LEGAL SPEED	60 MPH	60 MPH	60 MPH	60 MPH

DESIGN FUNCTIONAL CLASSIFICATION:
URBAN INTERSTATE
NHS PROJECT ..... YES

DESIGN EXCEPTIONS

SHOULDER WIDTH
APPROVAL DATE: JULY 17, 2015

UNDERGROUND UTILITIES

CONTACT BOTH SERVICES TWO WORKING DAYS **BEFORE YOU DIG.**

OHIO Utilities Protection SERVICE — Call Before You Dig 1-800-362-2764
(Non-members must be called directly)

OIL & GAS PRODUCERS UNDERGROUND PROTECTION SERVICE
1-800-925-0988

PLAN PREPARED BY:
ODOT DISTRICT 12
PLANNING & ENGINEERING
5500 TRANSPORTATION BLVD.
GARFIELD HEIGHTS, OH 44125

ENGINEERS SEAL:

STATE OF OHIO — ERIC M. KALLIO — E-59990 — REGISTERED PROFESSIONAL ENGINEER

SIGNED: Eric M. Kallio
DATE: 12-15-15

STANDARD CONSTRUCTION DRAWINGS								SUPPLEMENTAL SPECIFICATIONS		SPECIAL PROVISIONS
BP-3.1	7/18/14	MT-95.30	7/18/14	TC-41.20	10/18/13			800	1/15/16	
BP-9.1	7/19/13	MT-95.50	10/16/15	TC-41.30	10/18/13			806	3/2/15	
		MT-98.10	7/18/14	TC-41.40	10/18/13			821	4/20/12	
		MT-98.11	7/18/14	TC-42.20	10/18/13			832	1/17/14	
		MT-98.20	7/18/14	TC-52.10	10/18/13			875	1/17/14	
		MT-98.22	7/18/14	TC-52.20	7/18/14			921	4/20/12	
		MT-98.28	7/18/14	TC-65.10	1/17/14					
		MT-99.20	7/19/13	TC-65.11	7/18/14					
		MT-105.10	7/19/13	TC-71.10	1/17/14					
				TC-72.20	7/18/14					

PROJECT DESCRIPTION

THIS PROJECT CONSISTS OF THE RESURFACING OF 5.79 MILES OF IR-71 FROM SLM 0.00 (COUNTY LINE) TO SLM 5.79 (FOWLES RD) IN STRONGSVILLE AND MIDDLEBURG HEIGHTS IN CUYAHOGA COUNTY.

PROJECT EARTH DISTURBED AREA:	N/A (MAINTENANCE PROJECT)
ESTIMATED CONTRACTOR EARTH DISTURBED AREA:	N/A (MAINTENANCE PROJECT)
NOTICE OF INTENT EARTH DISTURBED AREA:	N/A (MAINTENANCE PROJECT)

LIMITED ACCESS

THIS IMPROVEMENT IS ESPECIALLY DESIGNED FOR THROUGH TRAFFIC AND HAS BEEN DECLARED A LIMITED ACCESS HIGHWAY OR FREEWAY BY ACTION OF THE DIRECTOR IN ACCORDANCE WITH THE PROVISIONS OF SECTION 5511.02 OF THE OHIO REVISED CODE.

2013 SPECIFICATIONS

THE STANDARD SPECIFICATIONS OF THE STATE OF OHIO, DEPARTMENT OF TRANSPORTATION, INCLUDING CHANGES AND SUPPLEMENTAL SPECIFICATIONS LISTED IN THE PROPOSAL SHALL GOVERN THIS IMPROVEMENT.

I HEREBY APPROVED THESE PLANS AND DECLARE THAT THE MAKING OF THIS IMPROVEMENT WILL NOT REQUIRE THE CLOSING TO TRAFFIC OF THE HIGHWAY AND THAT PROVISIONS FOR THE MAINTENANCE AND SAFETY OF TRAFFIC WILL BE AS SET FORTH ON THE PLANS AND ESTIMATES.

UNDER AUTHORITY OF SECTION 4511.21, DIVISION (H) OF THE OHIO REVISED CODE, THE REVISED PRIMA FACIE SPEED LIMITS AS INDICATED HEREIN ARE DETERMINED TO BE REASONABLE AND SAFE, AND ARE HEREBY ESTABLISHED FOR THE DURATION OF THIS PROJECT. THE PRIMA FACIE SPEED LIMIT OF LIMITS HEREBY ESTABLISHED SHALL BECOME EFFECTIVE WHEN APPROPRIATE SIGNS GIVING NOTICE THEREOF ARE ERECTED.

APPROVED _____
DATE 12-14-15 DISTRICT DEPUTY DIRECTOR

APPROVED _____
DATE 12-4-15 DIRECTOR, DEPARTMENT OF TRANSPORTATION

FEDERAL PROJECT NO. E150(252)

PID NO. 85508

CONSTRUCTION PROJECT NO.

RAILROAD INVOLVEMENT NONE

CUY-71-0.00

CUY - IR 71-00.00
160138 PID - 85508
Dist 12 3/24/2016
Contract Proposal Available @ www.contracts.dot.state.oh.us/home
I:\PROJECTS\CUY\85508\Design\Roadway\Sheets\85508GT001.dgn 11-4-2015 1:19PM dbrauer

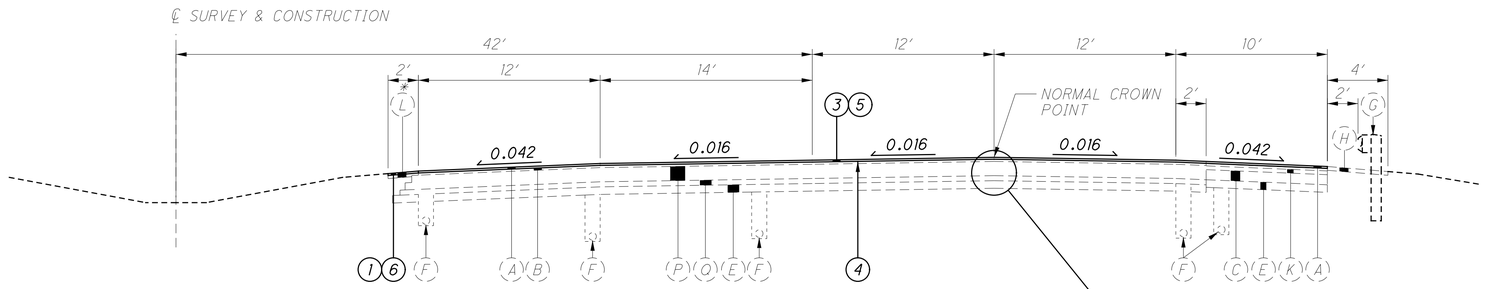

NORMAL SECTION - I.R. 71

SOUTHBOUND

STA. 490+00 TO STA. 539+66
STA. 541+71.50 TO STA. 545+19.45 (BACK)
STA. 545+28.30 (AHEAD) TO STA. 597+46.65
STA. 613+98 TO STA. 621+09.41
STA. 630+09.41 TO STA. 637+45.27
STA. 646+45.27 TO STA. 661+28.57
STA. 666+75.93 TO STA. 689+58.43
STA. 691+33.93 TO STA. 695+35.11
STA. 714+97 TO STA. 716+50
STA. 720+50 TO STA. 724+90.01
STA. 737+50 TO STA. 761+19.62
STA. 763+26.63 TO STA. 763+97.86

NORTHBOUND

STA. 490+00 TO STA. 539+66
STA. 541+71.50 TO STA. 545+19.45 (BACK)
STA. 545+28.30 (AHEAD) TO STA. 602+71.33
STA. 611+71.33 TO STA. 619+53.50
STA. 651+00 TO STA. 661+28.57
STA. 666+75.93 TO STA. 689+61.19
STA. 691+27.69 TO STA. 695+41.08
STA. 698+84.62 TO STA. 699+62.97
STA. 708+62.97 TO STA. 715+61
STA. 731+69.18 TO STA. 761+19.62
STA. 772+02.95 TO STA. 778+35.38

* - SEE MEDIAN GUARDRAIL NORMAL SECTION, THIS SHEET, FOR MEDIAN GUARDRAIL LOCATIONS

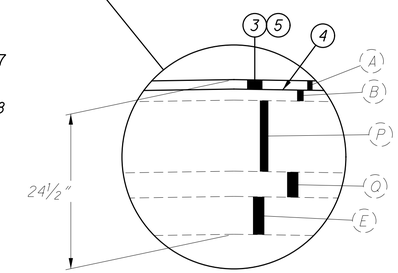

PAVING DETAIL

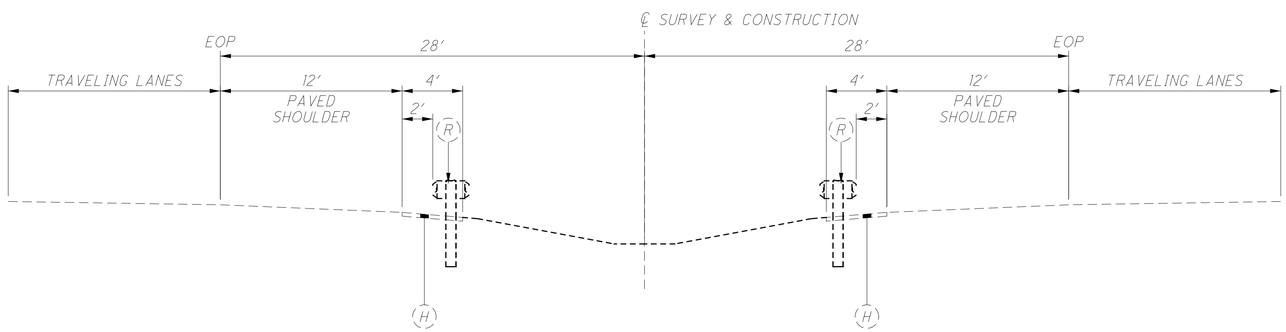

MEDIAN GUARDRAIL NORMAL SECTION

SOUTHBOUND

STA. 487+66 TO STA. 539+66
STA. 583+00 TO STA. 653+50
STA. 654+53.57 TO STA. 662+28.57
STA. 668+11.19 TO STA. 689+61.19
STA. 702+00 TO STA. 726+00
STA. 738+00 TO STA. 743+00
STA. 744+00 TO STA. 761+25
STA. 766+60.38 TO STA. 778+35.38

NORTHBOUND

STA. 541+71.50 TO STA. 581+96.50
STA. 698+84.62 TO STA. 703+84.62
STA. 725+00 TO STA. 739+00

EXISTING LEGEND

- (A) 1½″ ASPHALT CONCRETE SURFACE COURSE
- (B) 1¾″ ASPHALT CONCRETE INTERMEDIATE COURSE
- (C) POROUS BASE COURSE
- (D) 10″ CONCRETE BASE
- (E) AGGREGATE BASE
- (F) UNDERDRAIN
- (G) GUARDRAIL, TYPE 5
- (H) ASPHALT UNDER GUARDRAIL
- (I) TYPE D JOINT, AS PER BP2.1M
- (J) CONCRETE MEDIAN
- (K) WATERPROOFED AGGREGATE BASE (3″ MAINLINE, 6″ RAMP)
- (L) COMPACTED AGGREGATE
- (M) CURB
- (N) 9″ CONCRETE BASE
- (O) CONCRETE BARRIER
- (P) 11¼″ BITUMINOUS AGGREGATE BASE
- (Q) 4″ ASPHALT TREATED FREE DRAINING BASE
- (R) GUARDRAIL, TYPE 5MR

PROPOSED LEGEND

1. ITEM 209 - LINEAR GRADING, AS PER PLAN
2. ITEM 442 - ASPHALT CONCRETE SURFACE COURSE, 12.5MM, TYPE A, (446), AS PER PLAN, 1½″
3. ITEM 254 - PAVEMENT PLANING, ASPHALT CONCRETE, AS PER PLAN, 1½″
4. ITEM SPECIAL - TACK COAT, TRACKLESS TACK
5. ITEM 806 - ASPHALT CONCRETE SURFACE COURSE, 12.5MM, TYPE A, AS PER PLAN, 1½″
6. ITEM 617 - COMPACTED AGGREGATE, AS PER PLAN
7. ITEM 618 - RUMBLE STRIPS, (ASPHALT CONCRETE), AS PER PLAN

RUMBLE STRIP DETAIL

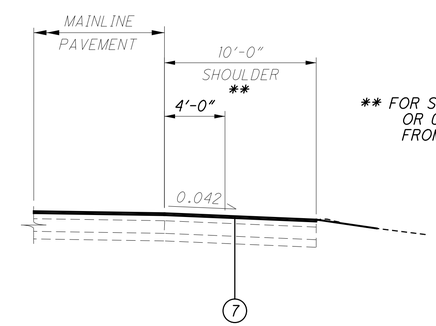

** FOR SHOULDER WIDTHS 10′-0″ OR GREATER, MODIFY OFFSET FROM SCD BP-9.1

TYPICAL SECTIONS

CUY-71-0.00

I:\PROJECTS\CUY\85508\Design\Roadway\Sheets\85508CY001.dgn 14-DEC-2015 1:19PM dbrauer

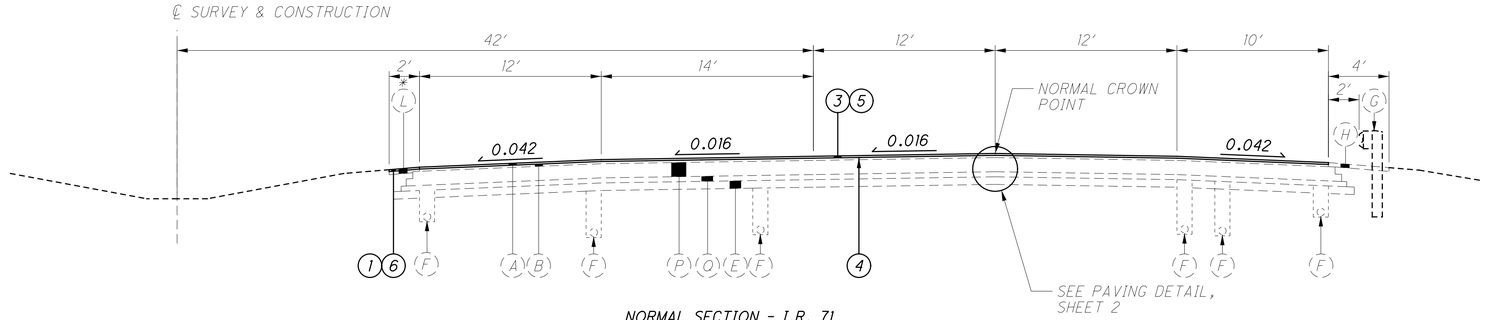

NORMAL SECTION - I.R. 71

* - SEE MEDIAN GUARDRAIL NORMAL SECTION, SHEET 2, FOR MEDIAN GUARDRAIL LOCATIONS

SOUTHBOUND

STA. 485+00 TO STA. 490+00
STA. 661+28.57 TO STA. 662+28.57
STA. 665+75.93 TO STA. 666+75.93
STA. 716+50 TO STA. 720+50
STA. 733+90.01 TO STA. 737+50

NORTHBOUND

STA. 485+00 TO STA. 490+00
STA. 661+28.57 TO STA. 662+28.57
STA. 665+75.93 TO STA. 666+75.93

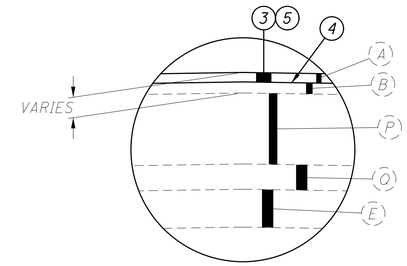

PAVING DETAIL

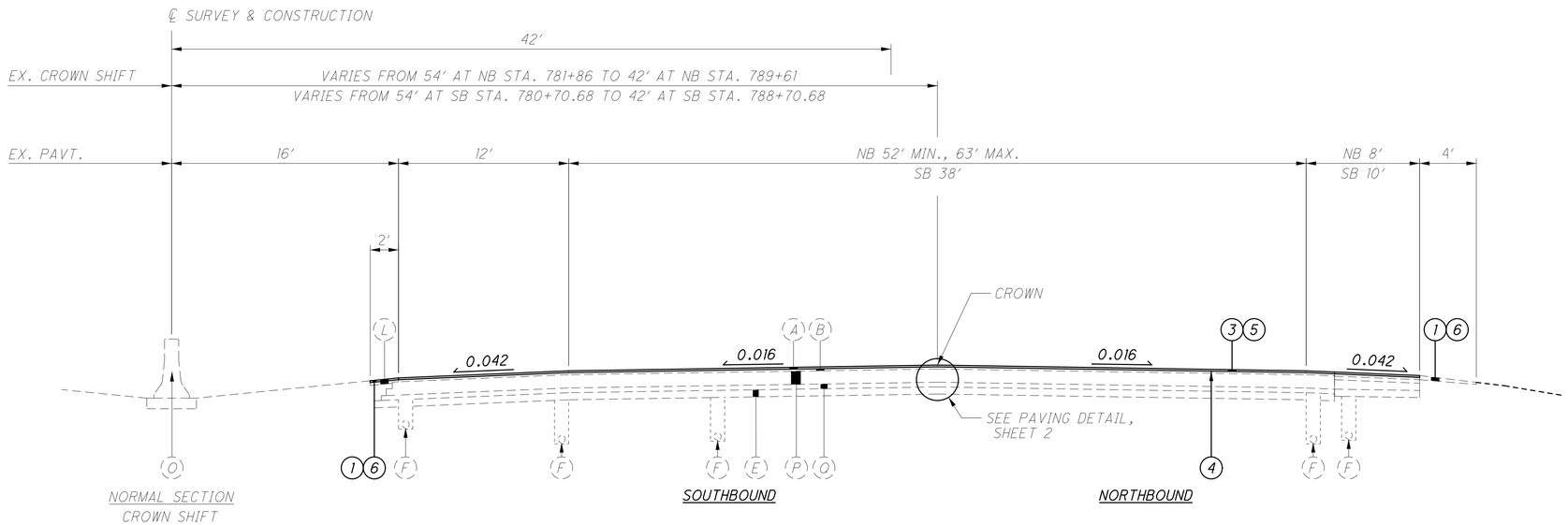

NORMAL SECTION
CROWN SHIFT

SOUTHBOUND

STA 781+30.62 TO STA 789+00

NORTHBOUND

STA 781+30.62 TO STA 789+00

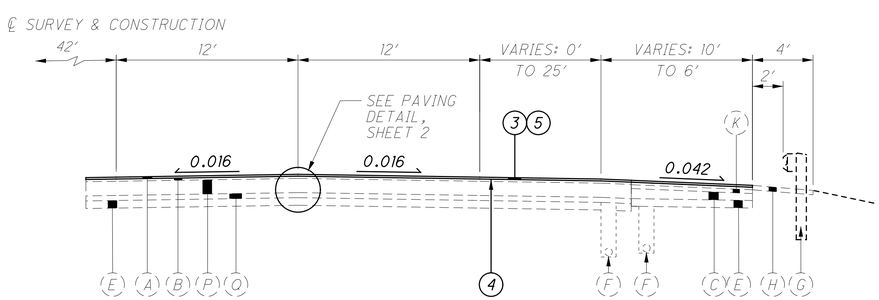

SOUTHBOUND

STA. 597+46.65 TO STA. 609+46.65
STA. 624+50± TO STA. 630+09.41
STA. 640+85± TO STA. 646+45.27
STA. 698+97.65 TO STA. 710+89.05
STA. 728+30± TO STA. 730+50
STA. 763+97.86 TO STA. 775+97.86

NORTHBOUND

STA. 602+71.33 TO STA. 608+45±
STA. 626+00 TO STA. 633+32
STA. 639+00 TO STA. 651+00
STA. 699+62.97 TO STA. 705+22±
STA. 719+69.18 TO STA. 731+69.18
STA. 763+26.63 TO STA. 768+85±

SPEED CHANGE LANES

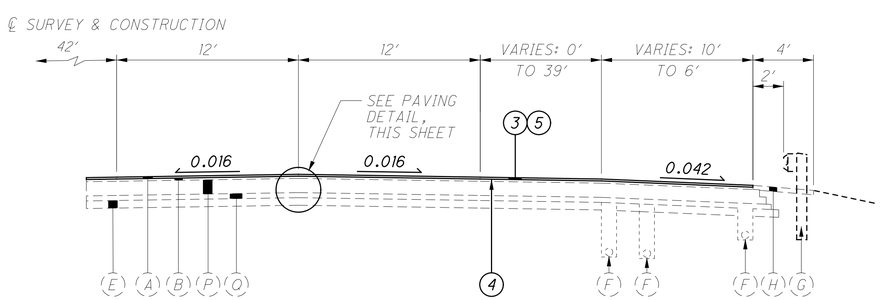

SOUTHBOUND

STA. 730+50 TO STA. 733+90.01

NORTHBOUND

STA. 621+00 TO STA. 626+00
STA. 717+00 TO STA. 719+69.18

SEE SHEET 2 FOR LEGEND

TYPICAL SECTIONS

CUY-71-0.00

I:\PROJECTS\CUY\85508\Design\Roadway\Sheets\85508CY002.dgn 14-DEC-2015 1:19PM dbrauer

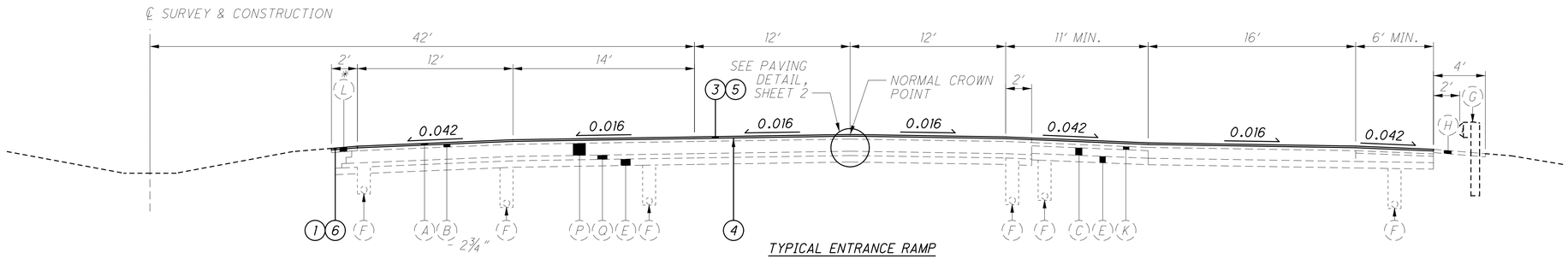

TYPICAL ENTRANCE RAMP

SOUTHBOUND

NORTHBOUND

✱ - SEE MEDIAN GUARDRAIL NORMAL SECTION, SHEET 2, FOR MEDIAN GUARDRAIL LOCATIONS

STA. 710+89.05 TO STA. 714+97

STA. 715+61 TO STA. 717+00

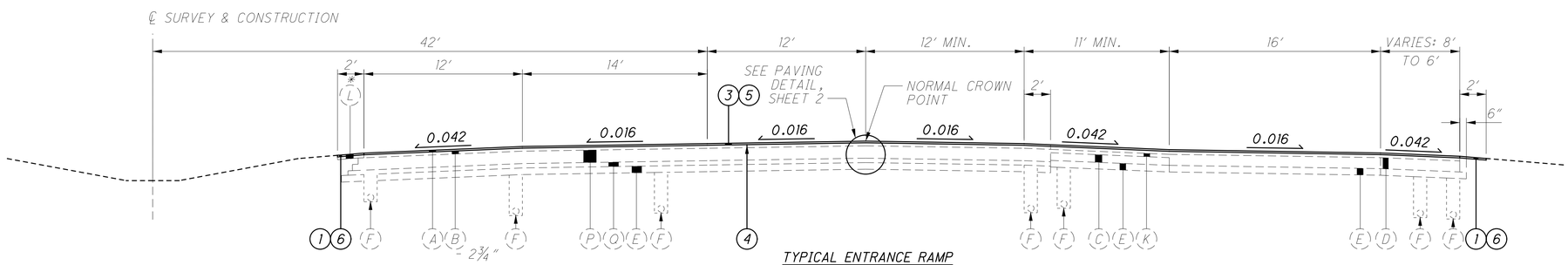

TYPICAL ENTRANCE RAMP

SOUTHBOUND

NORTHBOUND

✱ - SEE MEDIAN GUARDRAIL NORMAL SECTION, SHEET 2, FOR MEDIAN GUARDRAIL LOCATIONS

STA. 609+46.65 TO STA. 613+98
STA. 775+97.86 TO STA. 778+35.38

STA. 619+53.50 TO STA. 621+00
STA. 633+32 TO STA. 639+00

SEE SHEET 2 FOR LEGEND

TYPICAL SECTIONS

CUY-71-0.00

I:\PROJECTS\CUY\85508\Design\Roadway\Sheets\85508CY003.dgn 14-DEC-2015 1:19PM dbrauer

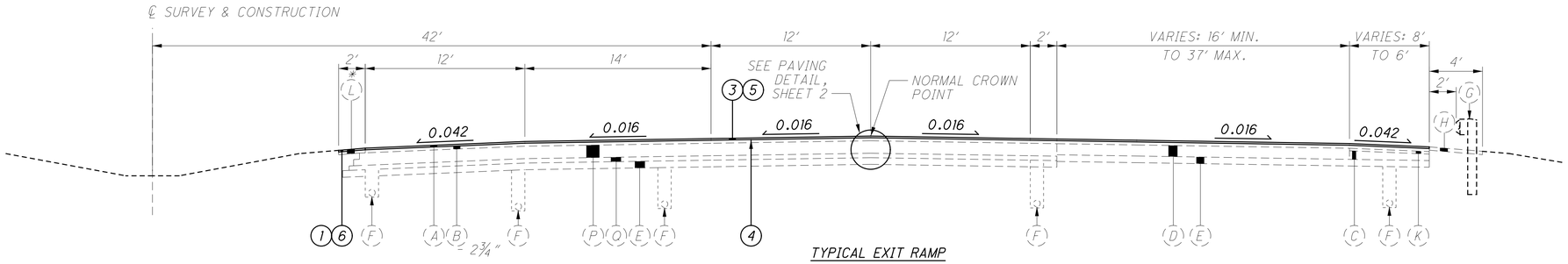

TYPICAL EXIT RAMP

SOUTHBOUND

NORTHBOUND

* - SEE MEDIAN GUARDRAIL NORMAL SECTION, SHEET 2, FOR MEDIAN GUARDRAIL LOCATIONS

STA. 621+09.41 TO STA. 622+09.41
STA. 637+45.27 TO STA. 638+45.27
STA. 724+90.01 TO STA. 728+30±

STA. 610+71.33 TO STA. 611+71.33
STA. 705+22± TO STA. 708+62.97
STA. 771+02.95 TO STA. 772+02.95

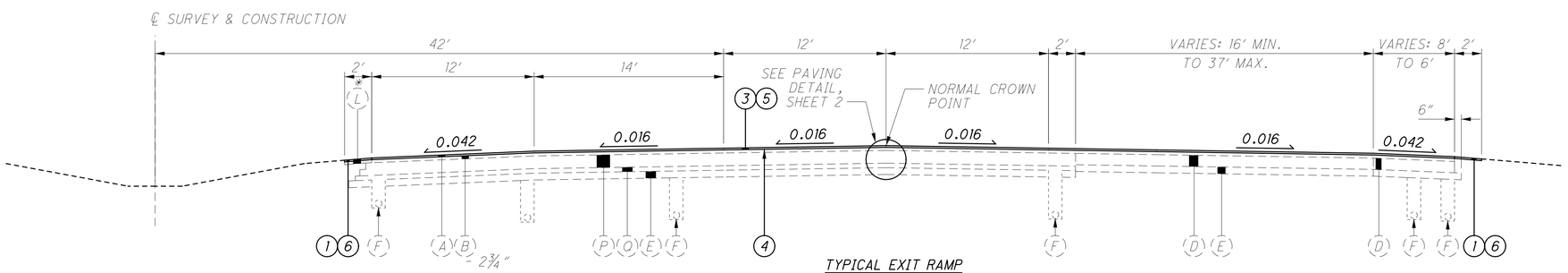

TYPICAL EXIT RAMP

SOUTHBOUND

NORTHBOUND

* - SEE MEDIAN GUARDRAIL NORMAL SECTION, SHEET 2, FOR MEDIAN GUARDRAIL LOCATIONS

STA. 622+09.41 TO STA. 624+50±
STA. 638+45.27 TO STA. 640+85±

STA. 608+45± TO STA. 610+71.33
STA. 768+85± TO STA. 771+02.95

SEE SHEET 2 FOR LEGEND

TYPICAL SECTIONS

CUY-71-0.00

I:\PROJECTS\CUY\85508\Design\Roadway\Sheets\85508CY004.dgn 14-DEC-2015 1:19PM dbrauer

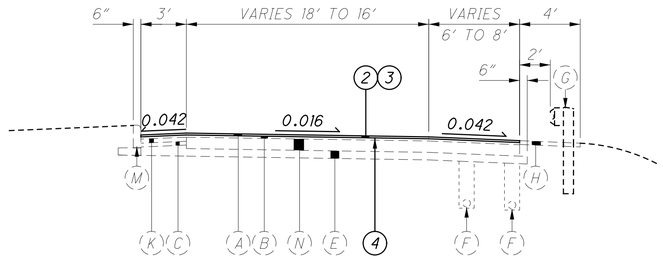

RAMP SECTION WITH TYPE 6 CURB

S.R. 82 INTERCHANGE

RAMP A STA. 110+71.06 TO STA. 111+71.06
RAMP C STA. 115+59.44 TO STA. 116+59.44
RAMP F STA. 137+46.93 TO STA. 138+46.93

U.S. 42 INTERCHANGE

RAMP A STA. 71+04.59 TO STA. 72+04.59
RAMP D STA. 87+72.34 TO STA. 88+72.34

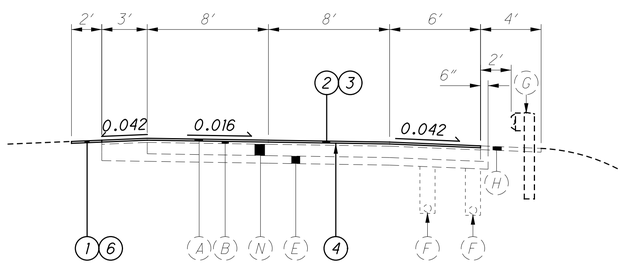

NORMAL RAMP SECTION

S.R. 82 INTERCHANGE

RAMP D STA. 124+30 TO STA. 124+50
RAMP E STA. 127+04.29 TO STA. 133+32
RAMP F STA. 136+30 TO STA. 137+46.93

U.S. 42 INTERCHANGE

RAMP C STA. 81+50 TO STA. 85+50

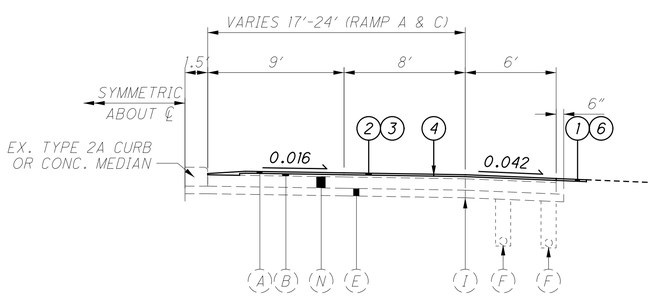

NORMAL RAMP SECTION WITH CONCRETE MEDIAN OR INTEGRAL CONCRETE CURB

S.R. 82 INTERCHANGE

RAMP A STA. 115+00 TO STA. 120+85
RAMP C STA. 121+00 TO STA. 124+5.85
RAMP D STA. 119+60 TO STA. 124+30

U.S. 42 INTERCHANGE

RAMP B STA. 78+26 TO STA. 79+55.5
RAMP C STA. 80+16 TO STA. 81+50

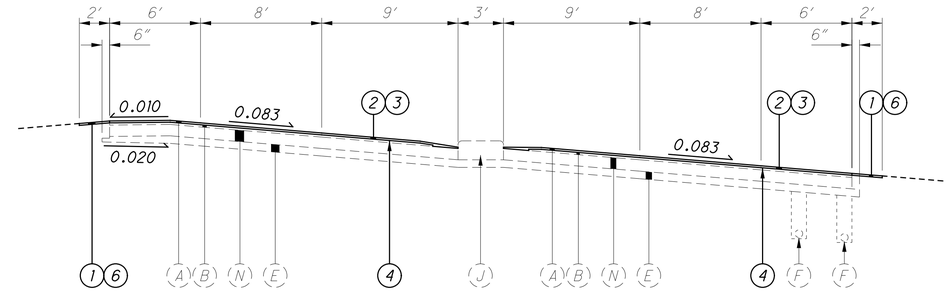

SUPERELEVATED RAMP SECTION WITH CONCRETE MEDIAN OR INTEGRAL CONCRETE CURB

U.S. 42 INTERCHANGE

RAMP A STA. 79+45.5 TO STA. 84+29
RAMP B STA. 79+55.5 TO STA. 84+25
RAMP C STA. 75+17 TO STA. 80+16

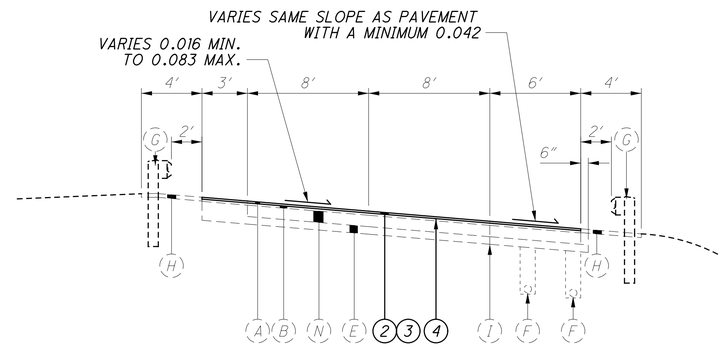

NORMAL RAMP SECTION

S.R. 82 INTERCHANGE

RAMP A STA. 111+71.06 TO STA. 115+00
RAMP C STA. 116+59.44 TO STA. 121+00
RAMP D STA. 113+96.65 TO STA. 119+60
RAMP E STA. 123+93 TO STA. 127+04.29

U.S. 42 INTERCHANGE

RAMP A STA. 72+04.59 TO STA. 79+45.5
RAMP A STA. 84+29 TO STA. 86+10.20
RAMP B STA. 74+12 TO STA. 78+26
RAMP B STA. 84+25 TO STA. 85+88.15
RAMP C STA. 73+00 TO STA. 75+17
RAMP D STA. 83+55.24 TO STA. 87+72.34

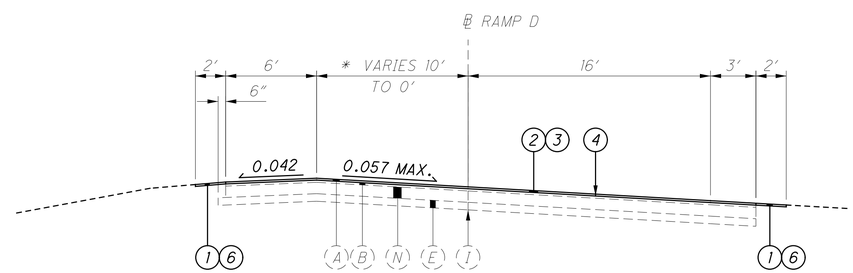

U.S. 42 INTERCHANGE

RAMP D STA. 80+25.00 TO STA. 83+55.24

* STA. 80+55.24 TO STA. 83+55.24

SEE SHEET 2 FOR LEGEND

TYPICAL SECTIONS

CUY-71-0.00

I:\PROJECTS\CUY\85508\Design\Roadway\Sheets\85508GY005.dgn 14-DEC-2015 1:19PM dbrauer

GENERAL

Project Description

This project consists of the resurfacing of 5.79 miles of IR-71 from SLM 0.00 (County Line) to SLM 5.79 (Fowles Rd) in Strongsville and Middleburg Heights in Cuyahoga County.

Existing Typical Sections

Existing typical sections have been taken from the records and are believed to represent the existing pavement, but the State of Ohio does not guarantee the accuracy of the same.

For further information in regard to the existing typical sections, the contractor shall refer to the previous construction plans.

These plans may be reviewed at the

Ohio Department Transportation
District 12 Office
5500 Transportation Boulevard
Garfield Heights, Ohio 44125

Contingency Quantities

The contractor shall not order materials or perform work for items designated by plan note to be used "as directed by the engineer" unless authorized by the engineer. The actual work locations and quantities used for such items shall be incorporated into the final change order governing completion of this project.

Equipment and Material Storage

In order to provide for the safety of the traveling public the Contractor's attention is directed to 614.03. In addition the following provisions shall apply:

1. Any removed items shall not be stored on the right of way for more than thirty (30) days.
2. The storage of equipment, materials, and vehicles within the highway right of way will be permitted. The number of areas and exact locations shall be approved by the Engineer.
3. All disturbed areas shall be returned to their original condition at no expense to the state.

Cooperation Between Contractors

The contractor shall cooperate and coordinate operations with the contractors on other projects that may be in force during the life of the contract. In particular, ODOT project CUY-82-3.56 Safety (PID 99435) will be active during the life of the contract. No waiver of any provisions of 105.07 of the 2013 Construction and Material Specifications is intended.

Work Limits

The work limits shown on these plans are for physical construction only. The installation and operation of all temporary traffic control and temporary traffic control devices required by these plans shall be provided by the contractor whether inside or outside these work limits.

Right Of Way

All work shall be performed within the existing right of way or easements.

Plan Sheet Stationing

The roadway was not surveyed prior to the preparation of these plans. Stationing was provided to prepare plan sheets and calculate pavement and pavement marking quantities.

Staging Areas

There are no specific areas given in the plans for the Contractor to use as a staging area(s). If the Contractor wants to use an area(s) for staging, regardless if it falls within the project limits or not, the Contractor is to contact Jill Powers at 216-584-2195 at District 12 in order to apply for a permit per Section 107.02 of the CMS.

If a permit is granted, all conditions of the permit shall be met in addition to the requirements of 104.04 of the CMS, at no additional cost to the State. If the Project Engineer deems that all the conditions of the permit were not met, then 10% of the Contract bid amount for mobilization shall be withheld until all the conditions of the permit are satisfied.

Item 619 – Field Office, Type B, As Per Plan

A Type B Field Office is required for this project. The following revisions to equipment supplied with the Type B Field Office, as specified in Table 619.02-1, Field Office, shall apply:

- The copier supplied must meet the requirements of copier supplied with the Type C Field Office.
- The broadband internet connection must meet a minimum download speed of 10MB per second and a minimum upload speed of 5MB per second.

All other field office items supplied shall meet the requirements of a Type B, Field Office.

Item 619 – Field Office, Type B, As Per Plan ..... **6 Months**

Item 623 - Construction Layout Stakes and Surveying, As Per Plan

In addition to the requirements of the CMS, this item of work will include the following additional requirements.

An Ohio professional surveyor shall determine the minimum vertical clearances of all existing and new bridges within the project limits after completion of all the work, but prior to final acceptance of the project. At a minimum, measurements shall be taken along the centerline of each fascia beam at the edge of shoulders, edge lines, lane lines, and crown of the roadway below. The measurements shall be documented on the ODOT vertical clearance survey form. The form shall bear the stamp or seal of the Ohio professional surveyor who has taken the measurements. The Ohio professional surveyor shall submit the completed form to the Project Engineer and the district bridge maintenance engineer prior to final acceptance of the project.

Payment for all of the above work shall be at the unit price bid for Item 623 – Construction Layout Stakes, As Per Plan, which shall include all labor, equipment, materials and incidentals necessary to complete the above work.

Protection of Right-of-Way Landscaping

Prior to beginning work, the Contractor, the Project Engineer and a representative of the maintaining agency will review and record all landscaping items within the right-of-way (both within and outside the construction limits). A record of this review will be kept in the Project Engineer's files. Prior to final acceptance, a final review of landscaping items will be made.

Constrict all activities, equipment storage and staging to within the construction limits. Unless otherwise identified in the plans or proposal, the construction limits are identified as 30 feet from the edge of pavement.

Submit a written request to the Project Engineer to use any area outside these limits. The document submitted must clearly identify the area and explain the proposed use and restoration of the area. Use of these areas for disposal of waste material and construction debris, excavation of borrow material and placement of portable plants is prohibited. The request must be approved, in writing, before the Contractor has permission to use the area.

Any items damaged beyond the construction limits, as defined above, will be replaced in kind or as approved by the Project Engineer.

I:\PROJECTS\CUY\85508\Design\Roadway\Sheets\85508GN001.dgn 14-DEC-2015 1:19PM dbrauer

Utilities

The following utilities and owners are located within the work limits of this project. The Ohio Department of Transportation has used the best available information to determine the utility companies serving this area, but cannot guarantee the utility company list is complete.

Ohio Department of Transportation
District 12 – Roadway Services
5500 Transportation Blvd.
Garfield Heights, OH 44125
Attn: Tony Toth
Phone: 216-584-2220

City of Cleveland
Division of Water
1201 Lakeside Ave.
Cleveland, OH 44114
Attn: Andrew Krawczyk
Phone: 216-664-2444, Ext. 5520

AT&T Ohio
13630 Lorain Ave., 2nd Floor
Cleveland, OH 44111
Attn: James Janis
Phone: 216-476-6142

Columbia Gas of Ohio
7080 Fry Rd.
Middleburg Heights, OH 44130
Attn: Dan Suren
Phone: 440-891-2428

Buckeye Pipeline Co.
5002 Buckeye Rd.
Emmaus, PA 18049
Attn: Donald Samala
Phone: 484-232-4303

Ohio Edison
730 South Ave.
Youngstown, OH 44646
Attn: William Speece
Phone:330-740-7635

The Illuminating Company
6896 Miller Road
Brecksville, OH 44141
Attn: Ted Rader
Phone: 440-546-8738

MCI-Worldcom
120 Ravine St.
Akron, OH 44303
Attn: Al Guest
Phone: 330-253-8267

Litel Telecommunications Corp.
4650 Lakehurst Court
Dublin, OH 43017
Attn: Daniel Niese
Phone: 614-798-6000

Cablevision
14300 South Industrial
Maple Heights, OH 44137
Phone: 216-663-4003

City of Strongsville
16099 Foltz Parkway
Strongsville, OH 44129
Attn: Ken Mikula
Phone: 440-580-3120

City of Middleburg Heights
7017 Pearl Road
Cleveland, OH 44130
Attn: Michael Mackay
Phone: 440-886-4500

City of Brunswick
4095 Center Road
Brunswick, OH 44212
Attn: Ryan Cummins
Phone: 330-558-6880

Ohio Turnpike Commission
Administration Building
682 Prospect Street
Berea, OH 44017
Phone: 440-234-2081

There are no underground utilities shown on this plan. The nature of the work required by this project will not affect any known underground utilities that exist under or adjacent to the work area.

Roadway and Erosion Control

Item 209 – Linear Grading, As Per Plan

This item of work shall consist of grading along the outside edge of the paved shoulder to eliminate high spots and provide positive sheet flow off the pavement and shoulder into roadside ditches or drainage structures. This item is not intended to be used to excavate a uniform depth to place Item 617 – Compacted Aggregate, As Per Plan.

Any debris collected shall be removed and disposed of as specified in Section 105.16 & 105.17 of the Construction and Material Specifications.

Payment for the above work shall be made at the unit bid price for Item 209, Station, Linear Grading, As Per Plan and shall include all labor, tools, equipment and materials necessary to perform this item of work.

The following estimated quantity has been carried to the General Summary for use as directed by the Engineer:

Item 209 – Linear Grading, As Per Plan……..... **675 Stations**

Drainage

Review of Drainage Facilities

Before any work is started on the project and again before final acceptance by the State, representatives of the State and the Contractor, along with local representatives, shall make an inspection of all existing sewers which are to remain in service and which may be affected by the work. The condition of the existing conduits and their appurtenances shall be determined from field observations. Records of the inspection shall be kept in writing by the State.

All new conduits, inlets, catch basins and manholes constructed as part of the project shall be free of all foreign matter and in a clean condition before the project will be accepted by the State.

All existing sewers inspected initially by the above mentioned parties shall be maintained and left in a condition reasonably comparable to that determined by the original inspection. Any change in the condition resulting from the Contractor's operations shall be corrected by the Contractor to the satisfaction of the Engineer.

Payment for all operations described above shall be included in the contract price for the pertinent 611 drainage items.

Castings Adjusted to Grade, As Per Plan

All castings, within the asphalt overlay section, shall be adjusted to the finished roadway elevation by the Contractor. The time between adjusting the castings and resurfacing shall be kept to an absolute minimum. No adjusting rings shall be permitted.

The following estimated quantities have been carried to the General Summary:

Item 611 – Catch Basin Adjusted to Grade, As Per Plan…….. **4 Each**

Item Special – Miscellaneous Metal

Existing castings may prove to be unsuitable for reuse, as determined by the Engineer. It shall be the Contractor's responsibility to provide the castings of the required type, size, and strength (heavy duty) for the particular structure in question. All materials must meet Item 611 of the CMS and shall have the prior approval of the Engineer.

The Contractor is cautioned to use extreme care in the removal, storage, and replacement of all existing castings. Castings damaged by the negligence of the Contractor, as determined by the Engineer, shall be replaced with the proper new castings at the expense of the Contractor.

The Contractor shall not order materials until authorized by the Engineer, and if none are needed, the item shall be non-performed.

The following estimated quantity has been carried to the General Summary for use as directed by the Engineer:

Item Special – Miscellaneous Metal…….. **1000 Lbs**

I:\PROJECTS\CUY\85508\Design\Roadway\Sheets\85508GN002.dgn 14-DEC-2015 1:20PM dbrauer

Pavement

Profile and Alignment

Place the proposed pavement to follow the alignment of the existing pavement. Place the proposed asphalt concrete with a uniform thickness as shown on the typical sections.

Planing Requirements

The duration of time between planing the asphalt and placing the asphalt overlay shall be kept to a minimum. In no instance shall this time exceed 7 calendar days. The time limit shall begin on the first day of planing and shall continue based on calendar days, minus any weather days, until completion of the asphalt concrete surface course. This is to ensure that the potential degradation of the exposed pavement due to traffic is kept to a minimum. This requirement applies to both mainline and ramps alike.

Asphalt Concrete Surface Course Sealing Requirements

In addition to the gutter sealing requirements specified in SCD BP-3.1 and C&MS 401.15, after completion of the surface course, the contractor shall use a certified 702.01 PG binder to seal the following locations:

- All castings including but not limited to monuments, manholes, water valves, catch basins, curb inlets.
- Butt joints and feather joints including bridge approaches.
- Forward joint for driveway asphalt and trailing joint when butting to existing asphalt drive.
- Perimeter of all pavement repairs or other asphalt inlays when pavement repairs/inlays are not overlaid with an asphalt concrete surface course.
- All cold longitudinal joints between paved shoulders and guardrail asphalt.

The material used shall be a certified 702.01 PG binder. The width of the sealer shall be 2-3 inches.

Any additional costs associated with the work identified in this note shall be included in the appropriate asphalt concrete surface course item of work.

Longitudinal Joints (Flexible Pavement)

Longitudinal joints between a pavement lane and adjoining shoulder or speed change lane, and between a speed change lane and the adjoining shoulder shall be made the same day. All longitudinal joints shall be hot with the exception of one cold joint per roadway. Locate the cold joint along the centerline or a lane line. Longitudinal joint locations shall be as approved by the Engineer. Each ramp shall have a maximum of one longitudinal cold joint located approximately halfway across the ramp.

Item 251 – Partial Depth Pavement Repair, As Per Plan A

This item shall be used for the repair of unsound, cold patch, or pop-out areas of longitudinal joints as directed by the Engineer. The work shall be performed after the milling operation and prior to resurfacing. The depth of the repair shall be 3" below the top of the planed asphalt surface. All repairs shall be flush with the planed surface so that a smooth surface course is achieved. Corrective measures if needed will be the responsibility of the contractor at no additional cost to ODOT. See sheet 37 for details.

The following estimated quantity has been carried to the General Summary:

Item 251 – Partial Depth Pavement Repair, As Per Plan A..... **650 Sq Yd**

Item 251 – Partial Depth Pavement Repair, As Per Plan B

This item shall be used for the repair of unsound, cold patch, or pop-out areas of transverse joints and cracks as directed by the Engineer. The work shall be performed after the milling operation and prior to resurfacing. The depth of the repair shall be 3" below the top of the planed asphalt surface. All repairs shall be flush with the planed surface so that a smooth surface course is achieved. Corrective measures if needed will be the responsibility of the contractor at no additional cost to ODOT. See sheet 37 for details.

The following estimated quantity has been carried to the General Summary:

Item 251 – Partial Depth Pavement Repair, As Per Plan B..... **1550 Sq Yd**

Item 254 – Pavement Planing, Asphalt Concrete, As Per Plan

This item shall be used to remove the existing asphalt overlay full width at an average depth of 1-1/2" as specified in the plans on IR-71. Areas which have transverse wedges (butt joints) are to be removed in two passes as required for maintaining traffic. No additional payment shall be made for the second pass.

Item Special - Tack Coat, Trackless Tack

Description: This work consists of preparing and treating a paved surface with a trackless tack asphalt emulsion.

Furnish materials according to the Department's approved list.

Meet all requirements of Item 407 – Tack Coat in the Construction and Materials Specifications required by the contract except as noted below.

Material: Meet all properties of the approved manufacturer's trackless tack specification requirements on file with the laboratory at the time of placement.

Acceptance and Sampling of Materials: Supply certified test data to the Engineer and to the District Test Lab demonstrating the trackless tack supplied was tested for and meets all material properties shown on the Department's approved list.

During construction, ODOT personnel will sample from the distributor and supply to the District Test Lab a minimum of one quart of trackless tack for every 25,000 gallons used on the project. The Contractor is responsible for supplying the proper plastic quart sampling container. Clearly mark on the sample the manufacturer's name, Project Number and the words "TRACKLESS TACK".

Equipment: Follow manufacturer's recommendations for correct distributor settings. Thoroughly clean all equipment if previously used material charge is different than the proposed material.

Application of Asphalt Material: Uniformly apply the trackless tack with a distributor according to the manufacturer's instructions. If trackless tack is stored for an extended period of time prior to application, agitate or gently circulate the material.

Ensure all nozzles and spray patterns are identical to one another along the distributor spray bar. Place the angle of the nozzle at a 15 to 30 degree angle to the spray bar axis to maximize overlap or as recommended by the nozzle manufacturer. Contact the manufacturer's representative for required spray nozzle size and distributor and nozzle settings.

Apply at a rate of 0.04 to 0.1 gallons per square yard. Do not dilute trackless tack. Recommended application temperature is 160°F to 180°F. Do not exceed 180°F.

The Engineer will approve the quantity, rate of application, temperature, distributor settings, and areas to be treated before application of the trackless tack coat. The Engineer will determine the actual application in gallons per square yard by a check on the project.

Performance of Trackless Tack: Determine the time to set for the material to become trackless. The Engineer will report any issues with excessive time to set, or after set issues with stickiness or pickup of the tack to the District Testing Engineer and New Product Engineer, Brad Young 614-351-2882.

If the certified test data fails to meet the lab testing criteria, or field samples fail to meet the lab test criteria, or the trackless tack fails to perform satisfactorily in the field as noted above, the Contractor will be required to replace and supply another approved trackless tack product for the remainder of the project at no additional cost to the Department.

Any failing trackless tack product will be removed from the Department's approved list.

Item 806 – Asphalt Concrete Surface Course, 12.5mm, Type A, As Per Plan

The coarse virgin aggregate for this item shall be limited to a blend of air cooled blast furnace slag (ACBFS) and limestone. The Contractor shall use a minimum 60% of ACBFS with limestone comprising the remaining percentage. At least 50% of fine virgin aggregate for this item shall be limited to ACBFS.

Table 442.02-2 applies except No. 4 sieve requirements are 52 to 62 Total Percent Passing.

When ACBFS is used for a fraction of the coarse aggregate, provide a total asphalt binder content greater than or equal to 6.2 percent. If ACBFS makes up 100% of the coarse aggregate, apply the binder content requirements of C&MS 442.

Use a PG76-22M binder for this item.

I:\PROJECTS\CUY\85508\Design\Roadway\Sheets\85508GN003.dgn 14-DEC-2015 1:20PM dlbrauer

Item 442 – Asphalt Concrete Surface Course, 12.5mm, Type A (442), As Per Plan

The coarse virgin aggregate and at least 50% of fine virgin aggregate for this item shall be limited to air cooled blast furnace slag (ACBFS).

Table 442.02-2 applies except No. 4 sieve requirements are 52 to 62 Total Percent Passing.

Use a PG 76-22M binder for this item.

Item 617 – Compacted Aggregate, As Per Plan

This item shall be used to place compacted aggregate at a variable depth only where needed to fill in low spots along the shoulder and eliminate drop offs. Material shall be limited to reclaimed asphalt concrete pavement.

The actual depth of compacted aggregate placed will vary depending upon existing conditions. For estimating purposes, an average depth of two inches (2.0") has been used. Water, if needed, shall be applied as per 617.05 and included under Item 617 – Compacted Aggregate, As Per Plan.

The following estimated quantity has been carried to the General Summary for use as directed by the Engineer:

Item 617 – Compacted Aggregate, As Per Plan..... **835 Cu Yd**

Item 618 – Rumble Strips, (Asphalt Concrete), As Per Plan

For all freeways, the lateral position of edge line rumble strips shown in SCD BP-9.1 is revised as follows:

1. Median and Outside Shoulder Offset for shoulders less than 6': Dimension A and B are equal to 6".
2. Median and Outside Shoulder Offset for shoulders 6' to 12': Dimension A and B are equal to half the shoulder width minus 12".
3. Median and Outside Shoulder Offset for shoulders greater than 12': Dimension A and B are equal to 5'.

The following estimated quantity shall be used to construct Item 618 – Rumble Strips, (Asphalt Concrete), As Per Plan:

Item 618 – Rumble Strips, (Asphalt Concrete), As Per Plan ..... **21.96 Miles**

Item 875 – Longitudinal Joint Adhesive

The following estimated quantity shall be used on all cold longitudinal joints in the surface course placed on ramps:

Item 875 – Longitudinal Joint Adhesive..... **2400 Lbs**

Abandonment of Existing Roadway Pavement Sensor

The Project Engineer shall contact the Roadway Services Engineer (216-584-2190) five (5) working days in advance of any work (planing, pavement repairs or paving) taking place at the location of the existing roadway pavement sensor. This notice will provide the Department sufficient time to disconnect the appropriate cables to de-energize the existing pavement sensor.

The existing pavement sensor can be abandoned in place, removed as part of a pavement repair or removed during planing operations as indicated in the plans or as directed by the Project Engineer.

There are no additional costs related to the abandonment of the existing pavement sensor. Removal effort and cost as part of a pavement repair or planing operations will be incidental to that item of work.

Item Special – Misc.: Roadway Mounted Pavement Sensor, Furnished and Installed

This item shall include the furnishing and installation of one (1) VX21-2 Road Surface and Sub-Grade Temperature Probes.

The Project Engineer shall contact the Roadway Services Engineer (216-584-2190) five (5) working days prior to the installation of the new pavement sensor. This notice will provide the Department sufficient time to identify the proposed location (exact lane and distance from the bridge or weather station) for the new sensor. Note that the sensor will be positioned in the center lane of the designated lane and shall be installed in a location that complies with ODOT preferences and manufacturer recommendations.

Maintenance of traffic for pavement sensor installation shall be done in accordance with the requirements of this plan, Item 614 – Maintaining Traffic and the OMUTCD.

All materials and installation methods shall conform to the manufacturer specifications. The VX21 pavement sensors are manufactured by M.H. Corbin Inc., 8420 Estates Court, Plain City, OH 43064 (800-380-1718 or 614-873-5216).

Item Special – Misc.: Roadway Mounted Pavement Sensor, Furnished and Installed..... **1 Each**

Item Special – Misc.: Weather Station and Roadway Mounted Pavement Sensor Commissioning

This item shall be used to test and calibrate the existing weather station (RPU) and the new roadway mounted pavement sensor to insure all components are properly installed, functional, communicate wirelessly as designed and operate in accordance with the manufacturer's specifications.

Item Special – Misc.: Weather Station and Roadway Mounted Pavement Sensor Commissioning..... **1 Each**

Traffic Control

ODOT Automatic Traffic Recorder Site

The Contractor is advised that multiple automatic traffic recording (ATR) sites are located on IR-71 within the project limits. ATR Site #577 is located near Sta. 689+00± approximately 0.02 miles south of the Albion Rd. overpass. A second ATR site is located near Sta. 789+00± approximately 0.21 miles north of the Pearl Rd. underpass.

The ODOT Project Engineer shall contact the Office of Technical Services, attention Lindsey Pflum, (614) 752-4057, prior to pavement operations and upon completion of the overlay. The Department will restore operation of the ATR sites.

Permanent Pavement Markings on Bridges

Proposed pavement markings on bridges shall be placed on top of existing markings.

Raised Pavement Markers

Install raised pavement markers for lane lines at a spacing of eighty feet (80') center-to-center.

Item 621 – Raised Pavement Marker Removed

This item shall include the removal and disposal of existing RPMs.

The following estimated quantity has been carried to the General Summary:

Item 621 – Raised Pavement Marker Removed ..... **2100 Each**

Item 630 - Pavement Marking Misc.: Wrong Way Arrow

This item shall consist of installing a wrong way arrow on exit ramps to discourage drivers from traveling the wrong direction. See sheet 38 for dimensions and location details.

I:\PROJECTS\CUY\85508\Design\Roadway\Sheets\85508GN004.dgn 14-DEC-2015 1:20PM dbrauer

Maintenance of Traffic

General

It is the responsibility of the Contractor to provide through vehicular access in both directions at all times throughout the project area. The project shall be constructed in phases in order to minimize traffic disruption and inconvenience to the general public. The Contractor shall be responsible for providing all equipment, materials and manpower needed to adequately maintain traffic as provided for in the plans and specifications.

The Contractor is reminded that, in the conduct of this project, the sequence of operations shall be planned in a fashion which minimizes the number of lane reductions and/or lane width reductions required to maintain traffic through the project.

Permitted lane closures shall be as shown on the "Schedule of Through Lanes to be Maintained" table. The time limits shown in this table shall be adhered to or road user costs will be assessed.

Construction Sequence

No permanent maintenance of traffic zones are detailed in these plans. Traffic shall be maintained in accordance to the "Schedule of Through Lanes to be Maintained" note. All work zone closures shall comply with the appropriate Standard Construction Drawings.

Prior to opening all lanes to normal traffic, the Contractor shall ensure that the pavement is in a drivable condition with no potholes or dust and that all longitudinal drop-offs greater that 1-1/2" and transverse drop-offs are ramped as per the "Maintaining Traffic and Sequence of Operations" note.

Maintenance of Traffic Control Zones

The Contractor shall be responsible to maintain the signs, drums or cones specified in the Standard Construction Drawings. When the Contractor is notified of deficiencies, he shall correct the deficiencies as soon as possible, preferably within 12 hours and no later than 24 hours. If any noted deficiencies are not corrected within 24 hours the Engineer shall deduct one day pay for Item 614 – Maintaining Traffic, not as a penalty but as road user costs. The Contractor shall be subject to these road user costs for each and every day that these provisions are not met. All costs for maintaining the work zones as described above shall be included under Item 614 – Maintaining Traffic.

Suspension of Work

If the Contractor fails to comply with the provisions for traffic control as set forth in these plans or with provisions of the OMUTCD, the Engineer shall suspend work until the Contractor complies with the necessary requirements.

Payment

All work and traffic control devices shall be in accordance with CMS 614 and other applicable portions of the specifications, as well as the Ohio Manual of Uniform Traffic Control Devices. Payment for all labor, equipment, and materials shall be included in the lump sum contract price for Item 614 – Maintaining Traffic unless separately itemized in the plans.

Lane Closure Restrictions for 2016 Republican National Convention

No long term lane closures, short term lane closures, or shoulder closures will be permitted at any time beginning Sunday, July 10 through Sunday, July 24, 2016.

No planed surfaces shall be left open to traffic including traffic lanes, shoulders and ramps between Sunday, July 10 and Sunday, July 24, 2016.

Road User Costs – Short Term Lane Closures

Short term lane closures are those which are permitted by the "Schedule of Through Lanes to be Maintained" table. These times shall not be revised without prior approval from the District 12 Work Zone Traffic Control Engineer.

If short term lane closures are in place outside the specified times, the Contractor will be assessed road user costs in the amount of $100.00 per minute for each minute the lane remains closed past the specified time.

Short term lane closures shall only be implemented when work is being continuously performed. The closure shall be removed as soon as possible after work has stopped.

Schedule of Through Lanes to be Maintained

IR-71 Mainline		
Section	**Permitted Lane Reductions**	
	One Lane Closure	**Two Lane Closures**
IR-71 NB & SB: County Line to Pearl Rd 3 Lanes	Weekdays 10:00am – 12:00pm 7:00pm – 6:00am Weekends 7:00pm Fri – 6:00am Mon	Weekdays 8:00pm – 6:00am Weekends 8:00pm Fri – 10:00am Sat 8:00pm Sat – 12:00pm Sun 8:00pm Sun – 6:00am Mon

IR-71 Ramps		
Location	**Permitted Ramp Closures, Lane Reductions**	
	Short Term Closure	**Partial Width Closure (maintain one 11' lane)**
One-Lane Ramps	9:00pm – 5:00am ♦	7:00pm – 6:00am
Two-Lane Ramps	Not Permitted	7:00pm – 6:00am

♦Each ramp shall be closed for a maximum of two (2) separate times using an approved detour. Any closure shall be as directed by the Engineer.

Shoulder closures shall only be allowed at the times specified for lane closures.

Any roadway not listed shall not have any lane closures on weekdays from 6:30am to 9:00am and 3:00pm to 6:00pm. Contact Dennis O'Neil, District 12 Work Zone Traffic Manager, at (216) 584-2204 if there are any questions.

Ramp Closures for Resurfacing

The Contractor may close one ramp at a time at each location for milling, partial depth pavement repairs, or resurfacing. Closures for ramps scheduled for repairs and resurfacing shall be limited according to the days of the week and hours shown in the "Schedule of Through Lanes to be Maintained" table.

The motoring public shall be given advance warning of closures at least 72 hours in advance through the use of either a ground mounted flat sheet sign or a portable changeable message sign. A LEO with patrol car (paid for separately) shall be used for each ramp closure and be present for the entire closure time.

Freeway entrance ramps shall be closed with a PCMS suggesting a recommended detour.

Freeway exit ramps shall be closed with a PCMS routing traffic to the next exit and a second PCMS indicating a U-turn at the exit, unless directed differently by the Project Engineer.

For ramp closures, one or two additional PCMS units will be needed as described above. These will be in addition to the PCMS units specified in the plans and shall be included for payment in Item 614 – Maintaining Traffic.

Alternate Methods

If the Contractor so elects, he may submit alternate methods for the maintenance of traffic, provided the intent of the provisions is followed and no additional inconvenience to the traveling public results there from. No alternate plan shall be placed into effect until approval has been granted, in writing, by the Director.

All items proposed for use under these provisions must comply with current Department standards for their use when the plan detail, Standard Construction Drawing or other bid document governing their use is not provided as part of the bid package.

Construction Traffic

All construction traffic shall use acceptable truck routes to access the construction area. Use of local residential streets is strictly prohibited unless allowed in writing by the local enforcement authorities.

Contractor's Equipment – Operation and Storage

Vehicles and equipment must always move with, not across or against, the flow of traffic. Vehicles and other equipment must not park or stop except within designated work areas; and shall not enter and leave work areas in a manner which will be hazardous to, or interfere with normal traffic flow.

Personal vehicles are not permitted to park within the right-of-way except in specific areas designated by the Engineer.

Equipment, vehicles and materials shall not be stored or parked within 30 feet of the traveled way unless 6 feet behind PCB or guardrail.

All work vehicles and equipment entering the work zone more than once a day must be equipped with at least one flashing, rotating, or oscillating amber light that is visible in all directions of traffic for at least one quarter of a mile, day or night.

I:\PROJECTS\CUY\85508\Design\Roadway\Sheets\85508MN001.dgn 14-DEC-2015 1:20PM dbrauer

Maintaining Traffic – General Provisions

1. Traffic shall be maintained in accordance with the "Schedule of Through Lanes to be Maintained." The Contractor shall set up and operate his equipment in such a manner as to minimize encroachment upon the traveled width of pavement

2. The Contractor shall notify the Engineer, the responsible law enforcement agency and the Ohio Department of Transportation, District 12 Public Information Officer ((216) 584-2007) not less than 24 hours prior to a scheduled disruption of traffic.

3. Nighttime work shall be permitted in accordance with these plans and notes. The Contractor shall provide flood lighting of the work area in accordance with CMS 401.15 in order to assure the safest conditions during nighttime work. A lighting plan for nighttime operations shall be presented to and approved by the Engineer.

4. The Contractor shall furnish, erect and maintain all warning and information signs necessary for maintaining traffic. The sign faces shall be reflectorized with type G sheeting complying with the requirements of CMS 730.19. The Contractor shall determine what signs are needed and advise the Engineer two weeks in advance of his detailed plans. See the OMUTCD and standard drawings for the minimum signage required.

5. Traffic control devices shall be set up prior to the start of construction and shall be properly maintained during the time special conditions exist. They shall remain in place only as long as they are needed and shall be immediately removed thereafter. Where operations are performed in stages, there shall be in place only those devices that apply to the condition present during the stage in progress. All signs with messages which do not apply during a certain period shall be covered or set aside out of the view of traffic.

6. Placement of final roadway pavement markings and raised pavement markers shall be accomplished in accordance with the "Schedule of Through Lanes to be Maintained." The Contractor shall provide 2 shadow vehicles as per MT-99.20 following the pavement marking equipment. The shadow vehicles shall travel 500' apart with the remote vehicle traveling on the shoulder (left or right as applicable) where usable shoulder is available. The first shadow vehicle in a traffic lane shall be equipped with a truck mounted attenuator meeting NCHRP 350 requirements. Each shadow vehicle shall have a yellow flashing beacon plus 48" construction warning signs mounted on the back facing traffic with standard type messages advising motorists of the work ahead, advisory warning speed, and which lane is closed.

7. During non-working periods, open excavations shall be delineated with warning flashers and/or other approved devices as deemed appropriate by the Engineer.

8. Existing signs located within the road work areas which are necessary for interim or permanent traffic control shall be removed and re-erected in locations as approved by the Engineer.

9. No stoppage of traffic shall occur without law enforcement personnel at each location to direct traffic.

10. Whenever a total closure is implemented, the Contractor shall provide a portable changeable message sign from ODOT's pre-approved list. It shall be placed 1.5 miles to 2 miles in advance of the closure or as directed by the Engineer.

11. For any operation not specifically mentioned in these plans, the traffic shall be maintained in accordance with the OMUTCD.

Holiday Closures

No work shall be performed and all existing lanes shall be open to traffic during the following designated holidays or events:

Christmas	New Years	Mother's Day
Memorial Day	Fourth of July	Easter
Labor Day	Thanksgiving	

The period of time that the lanes are to be open depends on the day of the week on which the holiday or event falls. The following schedule shall be used to determine this period:

Day of the Week	Times All Lanes Must Be Open to Traffic
Sunday	12:00 Noon Friday through 12:00 Noon Monday
Monday	12:00 Noon Friday through 12:00 Noon Tuesday
Tuesday	12:00 Noon Monday through 12:00 Noon Wednesday
Wednesday	12:00 Noon Tuesday through 12:00 Noon Thursday
Thursday	12:00 Noon Wednesday through 12:00 Noon Monday
Friday	12:00 Noon Thursday through 12:00 Noon Monday
Saturday	12:00 Noon Friday through 12:00 Noon Monday

No extensions of time shall be granted for delays in material deliveries, unless such delays are industry-wide, or for labor strikes, unless such strikes are area-wide.

Should the Contractor fail to meet any of these requirements, the Contractor shall be assessed a disincentive in the amount of $125 for each minute the above described lane closure restrictions are violated.

Maintaining Traffic and Sequence of Operations

All asphalt concrete operations shall be conducted in a manner that will assure minimum danger and inconvenience to highway users. The procedure for the removal or placement of any existing or proposed asphalt course shall be such that no greater than 1-1/2" discontinuity in the elevation of the traveled surface shall be exposed to traffic.

Traffic shall not be permitted to cross any partial-width removal or resurfacing joint during the actual removal or paving operation except as necessary. Any partial-width longitudinal joints with a discontinuity greater than 1-1/2" which must be exposed to traffic shall be ramped using Item 614 – Asphalt Concrete for Maintaining Traffic at a rate not steeper than 6:1.

Temporary transverse removal or paving joints which must be exposed to traffic shall be ramped using Item 614 – Asphalt Concrete for Maintaining Traffic at a rate not to exceed 1" in 10'.

For removal of existing overlays, a transition may be planed into the existing overlay and may be substituted for the asphalt ramps previously described.

Whenever traffic is subject to partial width removals or overlays prior to full width completion, the Contractor shall provide W8-11-48 "UNEVEN LANES" signs (dual sign installation). Placement shall be as directed by the Engineer and included in the lump sum payment for Item 614 – Maintaining Traffic.

Whenever any part of the traveled surface is closed, the motorists shall be warned and diverted by the Contractor through the use of a flashing arrow, in addition to those provisions set forth in the OMUTCD, the Traffic Engineering Manual and the applicable Standard Construction Drawings.

Truck Mounted Attenuator

When the Contractor is setting short term work zones and the shoulders (right or left shoulder) are less than 10 feet in width and are on a road with speeds 45 mph or higher, a Truck Mounted Attenuator (TMA) must trail the operation of setting the advance warning signs up or taking them down. This same truck must have a Type B flashing arrow panel mounted on it facing the rear of the truck.

The TMA must meet NCHRP 350 TL-3 criteria. The manufacturer's specification must be followed concerning the size of the truck and the connections to the TMA.

Floodlighting

Floodlighting of the work site for operations conducted during nighttime periods shall be accomplished so that the lights do not cause glare to the drivers on the roadway. To ensure the adequacy of the floodlight placement, the Contractor and the Engineer shall drive through the work site each night when the lighting is in place and operative prior to commencing any work. If glare is detected, the light placement and shielding shall be adjusted to the satisfaction of the Engineer before work proceeds.

Payment for all labor, equipment and materials shall be included in the lump sum contract price for Item 614 – Maintaining Traffic.

Major Work Items

The following major work items will require traffic maintenance which shall be incorporated into the Contractor's sequence of operations.

A. Removal of existing RPMs
B. Planing of asphalt concrete
C. Completion of partial depth pavement repairs
D. Placing of asphalt concrete
E. Placing proposed pavement markings and raised pavement markers
F. Placing of rumble strips

Item 614 – Asphalt Concrete for Maintaining Traffic, As Per Plan

This item shall be used to provide temporary asphalt ramps for transverse discontinuities. Ramping shall be placed at the rate of 1" per 10' or to be used as directed by the Engineer.

Remove temporary asphalt ramps as part of this item. Materials shall be removed prior to the placement of the next course of asphalt.

Item 614 – Asphalt Concrete for Maintaining Traffic..... **50 Cu Yd**

I:\PROJECTS\CUY\85508\Design\Roadway\Sheets\85508MN002.dgn 14-DEC-2015 1:20PM dbrauer

Item 614 – Work Zone Pavement Markings

The following estimated quantities have been carried to the General Summary to be used as directed by the Engineer for work zone pavement markings per the requirements of CMS 614.04 and 614.11. Place temporary markings at the same locations as the proposed permanent pavement markings.

Place work zone edge lines, lane lines and dotted lines at a width of 6". All other temporary marking widths shall be as given in CMS 614 or 641.

After the planing is completed, use the following temporary markings:

Item 614 – Work Zone Lane Line, Class I,
642 Paint, As Per Plan, 6" ..... **23.6 Mile**
Item 614 – Work Zone Edge Line, Class I,
642 Paint, As Per Plan, 6" ..... **27.77 Mile**
Item 614 – Work Zone Channelizing Line, Class 1, 642 Paint ..... **14536 Ft**
Item 614 – Work Zone Dotted Line, Class 1,
642 Paint, As Per Plan, 6" ..... **10511 Ft**
Item 614 – Work Zone Stop Line, Class 1, 642 Paint ..... **199 Ft**
Item 614 – Work Zone Crosswalk Line, Class 1, 642 Paint ..... **452 Ft**
Item 614 – Work Zone Arrow, Class 1, 642 Paint ..... **43 Each**

After the surface course is placed, use the following temporary markings:

Item 614 – Work Zone Lane Line, Class III, 642 Paint, ... **23.6 Mile**
Item 614 – Work Zone Edge Line, Class III, 642 Paint, ... **27.77 Mile**
Item 614 – Work Zone Channelizing Line, Class III, 642 Paint ..... **14536 Ft**
Item 614 – Work Zone Dotted Line, Class III, 642 Paint, ... **10511 Ft**
Item 614 – Work Zone Stop Line, Class III, 642 Paint ..... **199 Ft**
Item 614 – Work Zone Crosswalk Line, Class III, 642 Paint ..... **452 Ft**
Item 614 – Work Zone Arrow, Class III, 642 Paint ..... **43 Each**

Permanent Pavement Markings

After placing the surface course, the Contractor may place permanent pavement markings instead of placing work zone pavement markings, which shall be non-performed at these locations.

Item 614 – Portable Changeable Message Signs, As Per Plan

The Contractor shall furnish, install, maintain and remove, when no longer needed, a changeable message sign. The sign shall be of a type shown on a list of approved PCMS units available on the Office of Materials Management web page. The list contains Class A and B units with minimum legibility distances of 800 feet and 650 feet, respectively.

Each sign shall be trailer-mounted and equipped with a functional dimming mechanism, to dim the sign during darkness, and a tamper and vandal proof enclosure. Each sign shall be provided with appropriate training and operation instructions to enable on-site personnel to operate and troubleshoot the unit. The sign shall also be capable of being powered by an electrical service drop from a local utility company. The PCMS shall be delineated in accordance with CMS 614.03.

Placement, operation, maintenance and all activation of the signs by the Contractor shall be as directed by the Engineer. The PCMS shall be located in a highly visible position yet protected from traffic. The Contractor shall, at the direction of the Engineer, relocate the PCMS to improve visibility or accommodate changed conditions. When not in use, the PCMS shall be turned off. Additionally, when not in use for extended periods of time, the PCMS shall be turned away from all traffic.

The Engineer shall be provided access to each sign unit and shall be provided with appropriate training and operation instructions to enable ODOT personnel to operate and troubleshoot the unit, and to revise sign messages, if necessary.

All messages to be displayed on the sign will be provided by the Engineer. A list of all required pre-programmed messages will be given to the Contractor at the project preconstruction conference. The sign shall have the capability to store up to 99 messages. Message memory or pre-programmed displays shall not be lost as a result of power failures to the on-board computer. The sign legend shall be capable of being changed in the field. Three-line presentation formats with up to six message phases shall be supported. PCMS format shall permit the complete message for each phase to be read at least twice.

The PCMS shall contain an accurate clock and programming logic which will allow the sign to be activated, deactivated or messages changed automatically at different times of the day for different days of the week.

The PCMS unit shall be maintained in good working order by the Contractor in accordance with the provisions of CMS 614.07. The Contractor shall, prior to activating the unit, make arrangements, with an authorized service agent for the PCMS, to assure prompt service in the event of failure. Any failure shall not result in the sign being out of service for more than 12 hours, including weekends. Failure to comply may result in an order to stop work and open all traffic lanes and/or in the Department taking appropriate action to safely control traffic. The entire cost to control traffic, accrued by the Department due to the Contractor's noncompliance, will be deducted from moneys due, or to become due the Contractor on his contract.

The Contractor shall be responsible for 24-hour-per-day operation and maintenance of these signs on the project for the duration of the phases when the plan requires their use.

Payment for the above described item shall be at the contract unit price. Payment shall include all labor, materials, equipment, fuels, lubricating oils, software, hardware and incidentals to perform the above described work.

The estimated quantity provides for two PCMS units at 90 days each.

The following estimated quantity has been carried to the General Summary:

Item 614 – Portable Changeable Message Sign,
As Per Plan ..... **180 Days**

Item 614 – Law Enforcement Officer with Patrol Car for Assistance

Use of Law Enforcement Officers (LEOs) by contractors other than the uses specified below will not be permitted at project cost. LEOs should not be used where the OMUTCD intends that flaggers be used.

In addition to the requirements of CMS 614 and the latest edition of the OMUTCD, a uniformed LEO with an official patrol car (car with top-mounted emergency flashing lights and complete markings of the appropriate law enforcement agency) shall be provided for the following traffic control tasks:

- During the entire advance preparation and closure sequence where complete blockage of traffic is required.
- During a traffic signal installation when impacting the normal function of the signal or the flow of traffic or when traffic needs to be directed through an energized traffic signal contrary to the signal display (e.g., directing motorists through a red light).

In addition to the requirement of CMS 614 and the OMUTCD, a uniformed LEO with an official patrol car (car with top-mounted emergency flashing lights and complete markings of the appropriate law enforcement agency) should be provided for the following traffic control tasks as approved by the Engineer:

- For lane closures: during initial set-up periods, tear down periods, substantial shifts of a closure point or when new lane closure arrangements are initiated for long-term lane closures/shifts (for the first and last day of major changes in traffic control setup).

In general, LEOs should be positioned in advance of and on the same side as the lane restriction or at the point of road closure, and to manually control traffic movements through intersections in work zones.

LEOs should not forgo their traffic control responsibilities to apprehend motorists for routine traffic violations. However, if a motorist's actions are considered to be reckless, then pursuit of the motorist is appropriate.

The LEOs work at the direction of the Contractor. The Contractor is responsible for securing the services of the LEOs with the appropriate agencies and communicating the intentions of the plans with respect to duties of the LEOs. The Engineer shall have final control over the LEOs' duties and placement, and will resolve any issues that may arise between the two parties.

The LEO shall report in to the Contractor prior to the start of the shift, in order to receive instructions regarding specific work assignments during his/her shift. The LEO is expected to stay at the project site for the entire duration of his/her shift. The LEO shall report to the Contractor at the end of his/her shift. Once the LEO has completed the duties described above and still has time remaining on his/her shift, the LEO may be asked to patrol through the work zone (with flashing lights off) or be placed at a location to deter motorists from speeding. Should it be necessary to leave the project site, the LEO shall notify the Engineer. The Contractor shall provide the LEO with a two-way communication device which shall be returned to the Contractor at the end of his/her shift.

LEOs (with patrol car) required by the traffic maintenance tasks above shall be paid for on a unit price (hourly) basis under Item 614, Law Enforcement Officer (With Patrol Car) for Assistance. The following estimated quantities have been carried to the General Summary.

Item 614 – Law Enforcement Officer
With Patrol Car for Assistance ..... **500 Hours**

The hours paid shall include any minimum show-up time required by the law enforcement agency involved.

Any additional costs (administrative or otherwise) incurred by the Contractor to obtain the services of an LEO are included with the bid price for Item 614, Law Enforcement Officer with Patrol Car for Assistance.

I:\PROJECTS\CUY\85508\Design\Roadway\Sheets\85508MN003.dgn 14-DEC-2015 1:20PM dbrauer

Item 614 - Worksite Traffic Supervisor

Subject to approval of the Engineer, the Contractor shall employ and identify (someone other than the superintendent) a certified Worksite Traffic Supervisor (WTS) before starting work in the field. The WTS shall be certified from one of the following organizations:

1. American Traffic Safety Service Association (ATSSA), phone number 1-800-272-8772, certified Traffic Control Supervisor (TCS).

2. National Highway Institute, Design and Operation of Work Zone Traffic Control, phone number 1-703-235-0528.

3. The Ohio Contractors Association, Traffic Control Supervisor (OCA/TCS) work zone class, only if taken after May 5, 2004, phone number 1-800-229-1388.

4. Ohio Laborers' Training, Traffic Control Supervisors Class, phone number 1-740-599-7915.

A copy of each WTSs certification and 24-hour contact information shall be provided to the Engineer at the preconstruction conference. If the designated WTS will not be available full time (24/7) the Contractor may designate an alternate WTS to be available when the primary is off duty. Each WTS shall have a current WTS certification (with an expiration date no more than 5 years from the date of issue) from any of the approved organizations.

The WTS position has the responsibility of monitoring traffic control deficiencies for the entire work zone. The duties of the WTS are as follows:

1. Be available on a 24-hour per day basis, and be able to be on site for all emergency traffic control needs within one hour of notification by police or project staff and be prepared to effect corrective measures immediately on existing work zone traffic control devices.

2. Attend preconstruction and all project meetings where traffic control management is discussed.

3. Be available for meetings or discussions with the Engineer upon request or within 36 hours.

4. Coordinate a Traffic Incident Management meeting each year before construction work begins with ODOT and the Safety Forces that will respond to incidents on the project. Items to be discussed will be the:

    a. Traffic Incident Management Plan (TIMP);
    b. Emergency Response and Notification;
    c. Project work/phasing concerns (e.g., ramp closures); and
    d. Responders concerns.

5. Be aware of, and coordinate if necessary, all traffic control operations, including those of subcontractors and suppliers.

6. Coordinate project activities with all Law Enforcement Officers (LEOs). A WTS shall also be the main contact person with the LEOs while they are on the project.

7. Coordinate meetings with ODOT personnel, LEOs and other applicable entities before each plan phase switch to discuss work zone traffic control.

8. Ensure compliance with the contract documents for signs, barricades, temporary concrete barrier, pavement markings, portable message signs, and other traffic control devices on a daily basis; and facilitate any corrective action necessary.

9. Notify the Contractor of the need for cleaning and maintenance of all traffic control devices, including the covering and removal of inapplicable signs.

10. Inspect, evaluate, propose necessary modifications to, and document the effectiveness of, the traffic control devices and/or traffic operations on a DAILY BASIS (7 days a week). In addition, a weekly night inspection of the work zone setup for daytime work operations; and one daytime inspection per week for nighttime projects. This shall include (but not be limited to) documentation on the following project events:

    a. Initial traffic control setup (day and night review).
    b. Daily traffic control setup and removal.
    c. When construction staging causes a change in the traffic control setup.
    d. Crash occurrences within the construction area.
    e. Removal of traffic control devices at the end of a phase or project.
    f. All other emergency traffic control needs.

11. Complete the Department approved Long Term Inspection form (CA-D-8) after each inspection as required in #10 and submit it to the Engineer the following work day. These reports shall include a checklist of all traffic control maintenance items to be reviewed. A copy of the form will be provided at the pre-construction meeting. Any deficiencies observed shall be noted, along with recommended corrective actions and the dates by which such corrections were, or will be, completed. A copy of this document can be found in current revision of the Department of Transportation Construction Inspection Forms Manual.

12. Verify that all flagging operations are being conducted per the Ohio Manual of Uniform Traffic Control Devices.

13. Have copies of the ODOT Temporary Traffic Control Manual and applicable standards and specifications included in the contract documents available at all times on the project.

14. Identify and contact all possible response personnel; preplan and keep an updated roster with phone numbers:

    a. Federal, State, and local transportation agencies (Traffic Management Center);
    b. Regional, county or local 911 dispatch; and
    c. Towing and recovery providers.

15. Comply with the provisions of OMUTCD Chapter 6I, Control of Traffic Through Traffic Incident Management Areas.

16. Propose a response/action plan to:

    a. Establish alternate route plans per the provided ODOT Playbook;
    b. Remove traffic demand from impacted roadway(s);
    c. Divert traffic to routes that can accommodate demands;
    d. Detour traffic away from sensitive areas (such as schools, hospitals, etc.);
    e. Discuss methods of determining a staging area for responders within or near the construction zone; and
    f. Discuss methods of developing ingress and egress sites within the construction zone.

The response/action plan shall be submitted to ODOT for acceptance before the Contractor's first day of work.

17. Perform, at a minimum, the following functions in incident detection and verification:

    a. Call 911/ notify Traffic Management Center and provide the following:
        I. Location – including milepost number and direction of travel.
        II. Number and type of vehicles involved.
        III. Estimated extent of damage or injury.
        IV. Estimated number of patients involved.
        V. Any potential hazardous conditions.
        VI. The placard number on any hazardous materials placard from a safe distance.

    b. Initiate traffic management/provide traffic control.
    c. Assist motorist with disabled vehicles.
    d. Recommend roadway repair needs.
    e. Provide repair resources.

18. Attend post-incident debriefings if required.

The Department will deduct the prorated daily amount of the unit price bid for the WTS for any day on which the Contractor fails to perform the duties set forth above. Should the Contractor's failure to perform any of the duties described above result in a maintenance of traffic safety issue, the Department will deduct the prorated daily amount for Item 614 Maintenance of Traffic from the Contractor's next scheduled estimate.

In addition to the plan requirements for Worksite Traffic Supervisor, complete a department-approved inspection form for each day a work zone speed zone is implemented. In the inspection report, note the disposition of all existing and work zone speed limit signing, including the actual times that the work zone speed limit signs were in place each day. Submit these daily inspection reports to the Engineer at least as often as the weekly inspection reports required in Item 10 of the Work Zone Supervisor plan note.

If three or more failures to perform the duties set forth above occur, the WTS shall be immediately removed from the work in accordance with C&MS 108.05.

The following estimated quantity has been carried to the General Summary for the Worksite Traffic Supervisor:

Item 614 – Worksite Traffic Supervisor ..... **4 Months**

I:\PROJECTS\CUY\85508\Design\Roadway\Sheets\85508MN004.dgn 14-DEC-2015 1:20PM dbrauer

Item 630 – Signing Misc.: Additional Signs, Ground Mounted, As Directed by the Engineer

When additional signing is needed to maintain traffic, the Contractor shall furnish the sign or signs as directed by the Engineer. These signs shall be ground mounted and meet all the specifications of the plan, proposal and current year CMS.

Payment for this item shall include, but not be limited to, the cost to furnish and erect the sign, including driving posts or other approved methods of sign support, maintaining the sign and removal of the sign.

This item of work shall be used to provide signs that are beyond the requirements of the signage detailed in the Standard Construction Drawings and the OMUTCD.

The following estimated quantity has been carried to the General Summary to be used as directed by the Engineer:

Item 630 – Signing Misc.: Additional Signs, Ground Mounted, As Directed by the Engineer ..... **300 Sq Ft**

Covering of Ground-Mounted Signs--General

When required by other items or incidentally to Item 614 – Maintaining Traffic, cover existing ground-mounted signs with plywood or OSB blanks (1/2" minimum thickness) covering 80% of the sign area and all of the sign legend. The use of low quality materials such as duct tape and black plastic is not permitted.

Item 614 Maintaining Traffic – Work Zone Speed Zone Signs for Freeway Resurfacings

A Work Zone Speed Zone is an approved speed limit revision to be implemented on this project to enhance the safety of both workers and motorists within the limits of active work zones. Work Zone Speed Zones are temporary in nature and will be in effect only during the times which lane closures are in place.

Implementation of Work Zone Speed Zones is required for all operations requiring the closure of one or more lanes to perform items of work detailed in the plans, except for lane closures needed to install pavement markings and raised pavement markers.

The District Speed Zone Coordinator will retain the official Work Zone Speed Limit Revision and justification report. The Project Engineer will retain all records furnished by the Worksite Traffic Supervisor indicating what signs were in place on every day that Work Zone Speed Zones were in place.

Furnish, install, maintain, cover during suspension of work, and subsequently remove Work Zone Speed Limit (R2-1) (50 mph speed limit) signs and supports within the work limits in accordance with the following requirements:

Cover or remove any existing speed limit signs within active work zone speed zones. Restore existing speed limit signs once lane closures are no longer in place.

Erect or uncover Work Zone Speed Limit signs no more than one hour before the start of work requiring lane closures. Remove or cover Speed Reduction and Work Zone Speed Limit signs and restore existing speed limit signs no later than one hour once lane closures are no longer in place.

Erect Speed Reduction (Speed Zone Ahead symbol) signs (W3-5) approximately 1250' in advance of the first Work Zone Speed Limit signs. Provide a dual installation where inside shoulder is greater than 5'.

Erect the first Work Zone Speed Limit signs approximately 500' in advance of a lane closure as depicted in SCD MT-95.30. Provide a dual installation where inside shoulder is greater than 5'. Repeat Work Zone Speed Limit signs every 1 mile for 60 and 55 mph zones and every one-half mile for 50 mph and 45 mph zones. Erect a Work Zone Speed Limit sign immediately after each open entrance ramp within the zone.

Erect signs indicating the resumption of the statutory speed limit at the end of the lane closure. Provide a dual installation. The Contractor may use signs and supports in used, but good condition, provided the signs meet current ODOT specifications. Sign faces shall be retro-reflectorized with Type G sheeting complying with the requirements of CMS 730.19.

Mount Work Zone Speed Limit signs on two No. 3 posts in accordance with Item 630, unless mounted on a temporary sign support per SCD MT 105.10.

Observe all requirements of the OMUTCD for Work Zone speed limit and related sign sizes, placement, supports, etc with two exceptions: 1) expressway size speed limit signs may be used on freeways and expressways, if necessary; 2) the height of signs mounted on portable supports should be the height required for ground-mounted signs but shall not be more than 1 foot lower than the height required by the OMUTCD, or as directed by the Engineer. Portable supports should not be used for more than 3 consecutive days.

Provide Work Zone Speed Limit signs and supports and cover, remove, and restore existing Speed Limit or Minimum Speed Limit signs incidental to Item 614 Maintaining Traffic.

The following table provides details on work zone speed zones approved for use on this project.

WZSZ Revision Number	County & Route	SLM		Phase/ Part & Direction	Approved Speed Limit (mph)	Specific Warranting Conditions and Factors
		From	To			
WZ-65183	CUY-71	Varies[A]	Varies[A]	All	50 MPH	Lane closures necessary to improve highway.

[A]The begin and end point of the WZSZ will vary within the project limits based on where lane reductions are in place to perform work required by the plans.

Item 614 Work Zone Increased Penalties Sign

R11-H5A-48 signs shall be furnished, erected, and maintained in good condition and/or replaced as necessary and subsequently removed by the Contractor. Signs shall be mounted at the appropriate offsets and elevations as prescribed by the Ohio Manual of Uniform Traffic Control Devices. They shall be maintained on supports meeting current safety criteria.

Uncover or place Work Zone Increased Penalties signs once the pavement surface is under construction for overlay removal, pavement repair, and placement of intermediate and surface courses. Uncover or place increased penalties signs no more than four hours before the actual start of work. Do not cover signs when lanes are re-opened to traffic subject to the provisions of the "Schedule of Through Lanes to be Maintained." Cover or remove signs between October 15 and April 1 each year. Remove signs once all work requiring lane closures is complete.

The signs shall be dual mounted. The first sign shall be placed between the Road Work Ahead (W20-1) sign and the next sign in the sequence. Signs shall be erected on each entrance ramp and every 2 miles (3 kilometers) through the construction work limits.

The Contractor may use signs and supports in used, but good condition provided the signs meet current ODOT specifications. Sign faces shall be reflectorized with Type G sheeting complying with the requirements of CMS 730.19.

Work Zone Increased Penalties signs and supports will be measured as the number of sign installations, including the sign and necessary supports. If a sign and support combination is removed and re-erected at another location as directed by the Engineer, it shall be considered another unit.

Payment for accepted quantities, complete, in place will be made at the contract unit price. Payment shall be full compensation for all materials, labor, incidentals and equipment for furnishing, erecting, maintaining, covering during suspension of work, and removal of the sign and support.

Item 614 - Work Zone Increased Penalties Sign..... **20 Each**

I:\PROJECTS\CUY\85508\Design\Roadway\Sheets\85508MN005.dgn 14-DEC-2015 1:20PM dbrauer

SHEET NUMBER												PARTICIPATION		ITEM	ITEM EXT	GRAND TOTAL	UNIT	DESCRIPTION	SEE SHEET NO.
7	8	9	10	12	13	14	15	17	18	19	20	01/IMS/PV							
																		ROADWAY	
	675											675		209	60201	675	STA	LINEAR GRADING, AS PER PLAN	8
			1									1		SPECIAL	69098000	1	EACH	MISC.: ROADWAY MOUNTED PAVEMENT SENSOR, FURNISHED AND INSTALLED	10
			1									1		SPECIAL	69098000	1	EACH	MISC.: WEATHER STATION AND ROADWAY MOUNTED PAVEMENT SENSOR COMMISSIONING	10
																		EROSION CONTROL	
												1000		832	30000	1000	EACH	EROSION CONTROL	
																		DRAINAGE	
	4											4		611	98631	4	EACH	CATCH BASIN ADJUSTED TO GRADE, AS PER PLAN	8
	1000											1000		611	99820	1000	LB	SPECIAL - MISCELLANEOUS METAL	
																		PAVEMENT	
		650										650		251	01001	650	SY	PARTIAL DEPTH PAVEMENT REPAIR, AS PER PLAN A	9
		1550										1550		251	01001	1550	SY	PARTIAL DEPTH PAVEMENT REPAIR, AS PER PLAN B	9
								361836	79744			441580		254	01001	441580	SY	PAVEMENT PLANING, ASPHALT CONCRETE, AS PER PLAN	9
								36184	7976			44160		SPECIAL	40720500	44160	GAL	TACK COAT, TRACKLESS TACK	9
									1091			1091		442	10001	1091	CY	ASPHALT CONCRETE SURFACE COURSE, 12.5 MM, TYPE A (446), AS PER PLAN	10
			835									835		617	10101	835	CY	COMPACTED AGGREGATE, AS PER PLAN	10
			21.96									21.96		618	40601	21.96	MILE	RUMBLE STRIPS, (ASPHALT CONCRETE), AS PER PLAN	10
								15078	2234			17312		806	00101	17312	CY	ASPHALT CONCRETE SURFACE COURSE, 12.5MM, TYPE A, AS PER PLAN	9
			2400									2400		875	10000	2400	LB	LONGITUDINAL JOINT ADHESIVE	
																		TRAFFIC CONTROL	
										1877	232	2109		621	00100	2109	EACH	RPM	
			2100									2100		621	54000	2100	EACH	RAISED PAVEMENT MARKER REMOVED	
											1668	1668		644	00400	1668	FT	CHANNELIZING LINE, 8"	
											199	199		644	00500	199	FT	STOP LINE	
											452	452		644	00600	452	FT	CROSSWALK LINE	
											34	34		644	00700	34	FT	TRANSVERSE/DIAGONAL LINE	
											43	43		644	01300	43	EACH	LANE ARROW	
											14	14		644	20800	14	FT	YIELD LINE	
											5	5		644	50100	5	EACH	PAVEMENT MARKING, MISC.: WRONG WAY ARROW	10
										23.23	4.54	27.77		646	10010	27.77	MILE	EDGE LINE, 6"	
										23.28	0.32	23.6		646	10110	23.6	MILE	LANE LINE, 6"	
										12868		12868		646	10310	12868	FT	CHANNELIZING LINE, 12"	
										150		150		646	10620	150	FT	CHEVRON MARKING	
										9782	729	10511		646	20504	10511	FT	DOTTED LINE, 6"	
																		MAINTENANCE OF TRAFFIC	
					500							500		614	11110	500	HOUR	LAW ENFORCEMENT OFFICER WITH PATROL CAR FOR ASSISTANCE	
						4						4		614	11500	4	MNTH	WORKSITE TRAFFIC SUPERVISOR	
							20					20		614	12484	20	EACH	WORK ZONE INCREASED PENALTIES SIGN	
				50								50		614	13001	50	CY	ASPHALT CONCRETE FOR MAINTAINING TRAFFIC, AS PER PLAN	12
					180							180		614	18401	180	DAY	PORTABLE CHANGEABLE MESSAGE SIGN, AS PER PLAN	13
					23.6							23.6		614	20101	23.6	MILE	WORK ZONE LANE LINE, CLASS I, 642 PAINT, AS PER PLAN	13
					23.6							23.6		614	20550	23.6	MILE	WORK ZONE LANE LINE, CLASS III, 642 PAINT	
					27.77							27.77		614	22101	27.77	MILE	WORK ZONE EDGE LINE, CLASS I, 642 PAINT, AS PER PLAN	13
					27.77							27.77		614	22350	27.77	MILE	WORK ZONE EDGE LINE, CLASS III, 642 PAINT	
					14536							14536		614	23200	14536	FT	WORK ZONE CHANNELIZING LINE, CLASS I, 642 PAINT	
					14536							14536		614	23680	14536	FT	WORK ZONE CHANNELIZING LINE, CLASS III, 642 PAINT	
					10511							10511		614	24201	10511	FT	WORK ZONE DOTTED LINE, CLASS I, 642 PAINT, AS PER PLAN	13
					10511							10511		614	24610	10511	FT	WORK ZONE DOTTED LINE, CLASS III, 642 PAINT	
					199							199		614	26200	199	FT	WORK ZONE STOP LINE, CLASS I, 642 PAINT	
					199							199		614	26610	199	FT	WORK ZONE STOP LINE, CLASS III, 642 PAINT	
					452							452		614	27200	452	FT	WORK ZONE CROSSWALK LINE, CLASS I, 642 PAINT	
					452							452		614	27620	452	FT	WORK ZONE CROSSWALK LINE, CLASS III, 642 PAINT	
					43							43		614	30200	43	EACH	WORK ZONE ARROW, CLASS I, 642 PAINT	
					43							43		614	30650	43	EACH	WORK ZONE ARROW, CLASS III, 642 PAINT	
							300					300		630	97800	300	SF	SIGNING, MISC.: ADDITIONAL SIGNS, GROUND MOUNTED, AS DIRECTED BY THE ENGINEER	15
												LS		SPECIAL	10830000	LS		CPM PROGRESS SCHEDULE SHORT DURATION PROJECTS	
												LS		614	11000	LS		MAINTAINING TRAFFIC	
6												6		619	16011	6	MNTH	FIELD OFFICE, TYPE B, AS PER PLAN	7
LS												LS		623	10001	LS		CONSTRUCTION LAYOUT STAKES AND SURVEYING, AS PER PLAN	7
												LS		624	10000	LS		MOBILIZATION	

CALCULATED DAB
CHECKED EMK

GENERAL SUMMARY

CUY-71-0.00

I:\PROJECTS\CUY\85508\Design\Roadway\Sheets\85508GG001.dgn 14-DEC-2015 1:20PM dbrauer

PLAN SPLIT NO.	STATION TO STATION		LENGTH	BEGIN WIDTH	ENDING WIDTH	AVERAGE WIDTH	AREA	254 PAVEMENT PLANING, ASPHALT CONCRETE, AS PER PLAN, 1-1/2"	SPECIAL TACK COAT, TRACKLESS TACK	806 ASPHALT CONCRETE SURFACE COURSE, 12.5MM, TYPE A, AS PER PLAN	442 ASPHALT CONCRETE SURFACE COURSE, 12.5 MM, TYPE A (446), AS PER PLAN
			FT.	FT.	FT.	FT.	SY	SY	GAL	CY	CY
	IR-71 NORTHBOUND										
1	485+00.00	539+66.00	5466.00	60.0	60.0	60.0	36440.00	36440.00	3644.00	1518.33	
	BRIDGE NO. CUY-71-0100 R										
1	541+71.50	545+19.45	347.95	60.0	60.0	60.0	2319.67	2319.67	231.97	96.65	
	STA. 545+19.45 BK = STA. 545+28.30 AH										
1	545+28.30	602+71.33	5743.03	60.0	60.0	60.0	38286.87	38286.87	3828.69	1595.29	
1	602+71.33	603+71.33	100.00	60.0	70.0	65.0	722.22	722.22	72.22	30.09	
1	603+71.33	606+65.00	293.67	70.0	70.0	70.0	2284.10	2284.10	228.41	95.17	
1	606+65.00	608+45.00	180.00	70.0	76.0	73.0	1460.00	1460.00	146.00	60.83	
1	608+45.00	610+71.33	226.33	76.0	97.0	86.5	2175.28	2175.28	217.53	90.64	
1	610+71.33	611+71.33	100.00	64.0	60.0	62.0	688.89	688.89	68.89	28.70	
1	611+71.33	622+20.00	1048.67	60.0	60.0	60.0	6991.13	6991.13	699.11	291.30	
1	622+20.00	623+62.73	142.73	84.0	81.0	82.5	1308.36	1308.36	130.84	54.52	
1	623+62.73	624+21.70	58.97	81.0	80.0	80.5	527.45	527.45	52.75	21.98	
1	624+21.70	624+71.70	50.00	80.0	81.0	80.5	447.22	447.22	44.72	18.63	
1	624+71.70	626+00.00	128.30	81.0	78.0	79.5	1133.32	1133.32	113.33	47.22	
1	626+00.00	633+32.00	732.00	78.0	63.0	70.5	5734.00	5734.00	573.40	238.92	
1	633+32.00	635+50.00	218.00	99.0	88.0	93.5	2264.78	2264.78	226.48	94.37	
1	635+50.00	636+00.00	50.00	88.0	89.0	88.5	491.67	491.67	49.17	20.49	
1	636+00.00	639+00.00	300.00	89.0	83.0	86.0	2866.67	2866.67	286.67	119.44	
1	639+00.00	650+04.00	1104.00	83.0	60.0	71.5	8770.67	8770.67	877.07	365.44	
1	650+04.00	651+00.00	96.00	60.0	60.0	60.0	640.00	640.00	64.00	26.67	
1	651+00.00	662+28.57	1128.57	60.0	60.0	60.0	7523.80	7523.80	752.38	313.49	
	BRIDGE NO. CUY-71-0332 R										
1	665+75.93	689+61.19	2385.26	60.0	60.0	60.0	15901.73	15901.73	1590.17	662.57	
	BRIDGE NO. CUY-71-0384 R										
1	691+27.69	695+41.08	413.39	60.0	60.0	60.0	2755.93	2755.93	275.59	114.83	
	BRIDGE NO. CUY-71-0395 R										
1	698+84.62	699+62.97	78.35	60.0	60.0	60.0	522.33	522.33	52.23	21.76	
1	699+62.97	700+62.97	100.00	60.0	70.0	65.0	722.22	722.22	72.22	30.09	
1	700+62.97	703+08.24	245.27	70.0	70.0	70.0	1907.66	1907.66	190.77	79.49	
1	703+08.24	705+22.00	213.76	70.0	76.0	73.0	1733.83	1733.83	173.38	72.24	
1	705+22.00	707+62.97	240.97	76.0	93.5	84.8	2269.13	2269.13	226.91	94.55	
1	707+62.97	708+62.97	100.00	64.0	60.0	62.0	688.89	688.89	68.89	28.70	
1	708+62.97	715+61.00	698.03	60.0	60.0	60.0	4653.53	4653.53	465.35	193.90	
1	715+61.00	717+00.00	139.00	92.0	84.5	88.3	1362.97	1362.97	136.30	56.79	
1	717+00.00	719+69.18	269.18	84.5	83.0	83.8	2504.87	2504.87	250.49	104.37	
1	719+69.18	730+73.18	1104.00	83.0	60.0	71.5	8770.67	8770.67	877.07	365.44	
1	730+73.18	731+69.18	96.00	60.0	60.0	60.0	640.00	640.00	64.00	26.67	
1	731+69.18	761+19.62	2950.44	60.0	60.0	60.0	19669.60	19669.60	1966.96	819.57	
	BRIDGE NO. CUY-71-0521 R										
	TOTALS, LEFT COLUMN							187,180	18,718	7,800	

PLAN SPLIT NO.	STATION TO STATION		LENGTH	BEGIN WIDTH	ENDING WIDTH	AVERAGE WIDTH	AREA	254 PAVEMENT PLANING, ASPHALT CONCRETE, AS PER PLAN, 1-1/2"	SPECIAL TACK COAT, TRACKLESS TACK	806 ASPHALT CONCRETE SURFACE COURSE, 12.5MM, TYPE A, AS PER PLAN	442 ASPHALT CONCRETE SURFACE COURSE, 12.5 MM, TYPE A (446), AS PER PLAN
			FT.	FT.	FT.	FT.	SQ. YD.	SY	GAL	CY	CY
	IR-71 NORTHBOUND										
1	763+26.63	764+02.92	76.29	60.0	70.0	65.0	550.98	550.98	55.10	22.96	
1	764+02.92	768+85.00	482.08	70.0	70.0	70.0	3749.51	3749.51	374.95	156.23	
1	768+85.00	771+02.95	217.95	70.0	97.0	83.5	2022.09	2022.09	202.21	84.25	
1	771+02.95	772+02.95	100.00	64.0	60.0	62.0	688.89	688.89	68.89	28.70	
1	772+02.95	778+35.38	632.43	60.0	60.0	60.0	4216.20	4216.20	421.62	175.68	
	BRIDGE NO. CUY-71-0553 R										
1	781+30.62	783+68.14	237.52	85.9	83.0	84.4	2228.07	2228.07	222.81	92.84	
1	783+68.14	792+26.82	858.68	83.0	61.5	72.3	6893.29	6893.29	689.33	287.22	
	IR-71 SOUTHBOUND										
1	485+00.00	539+66.00	5466.00	60.0	60.0	60.0	36440.00	36440.00	3644.00	1518.33	
	BRIDGE NO. CUY-71-0100 L										
1	541+71.50	545+19.45	347.95	60.0	60.0	60.0	2319.67	2319.67	231.97	96.65	
	STA. 545+19.45 BK = STA. 545+28.30 AH										
1	545+28.30	597+46.65	5218.35	60.0	60.0	60.0	34789.00	34789.00	3478.90	1449.54	
1	597+46.65	598+42.65	96.00	60.0	60.0	60.0	640.00	640.00	64.00	26.67	
1	598+42.65	609+46.65	1104.00	60.0	83.0	71.5	8770.67	8770.67	877.07	365.44	
1	609+46.65	609+96.65	50.00	83.0	82.0	82.5	458.33	458.33	45.83	19.10	
1	609+96.65	613+98.00	401.35	82.0	96.0	89.0	3968.91	3968.91	396.89	165.37	
1	613+98.00	621+09.41	711.41	60.0	60.0	60.0	4742.73	4742.73	474.27	197.61	
1	621+09.41	622+09.41	100.00	60.0	64.0	62.0	688.89	688.89	68.89	28.70	
1	622+09.41	624+18.85	209.44	95.0	76.0	85.5	1989.68	1989.68	198.97	82.90	
1	624+18.85	624+68.85	50.00	76.0	75.0	75.5	419.44	419.44	41.94	17.48	
1	624+68.85	626+64.14	195.29	75.0	70.0	72.5	1573.17	1573.17	157.32	65.55	
1	626+64.14	629+09.41	245.27	70.0	70.0	70.0	1907.66	1907.66	190.77	79.49	
1	629+09.41	630+09.41	100.00	70.0	60.0	65.0	722.22	722.22	72.22	30.09	
1	630+09.41	637+45.27	735.86	60.0	60.0	60.0	4905.73	4905.73	490.57	204.41	
1	637+45.27	638+45.27	100.00	60.0	64.0	62.0	688.89	688.89	68.89	28.70	
1	638+45.27	643+00.00	454.73	97.0	70.0	83.5	4218.88	4218.88	421.89	175.79	
1	643+00.00	645+45.27	245.27	70.0	70.0	70.0	1907.66	1907.66	190.77	79.49	
1	645+45.27	646+45.27	100.00	70.0	60.0	65.0	722.22	722.22	72.22	30.09	
1	646+45.27	662+28.57	1583.30	60.0	60.0	60.0	10555.33	10555.33	1055.53	439.81	
	BRIDGE NO. CUY-71-0332 L										
1	665+75.93	689+58.43	2382.50	60.0	60.0	60.0	15883.33	15883.33	1588.33	661.81	
	BRIDGE NO. CUY-71-0384 L										
1	691+33.93	695+35.11	401.18	60.0	60.0	60.0	2674.53	2674.53	267.45	111.44	
	BRIDGE NO. CUY-71-0395 L										
1	698+97.65	699+85.05	87.40	60.0	60.0	60.0	582.67	582.67	58.27	24.28	
1	699+85.05	710+89.05	1104.00	60.0	83.0	71.5	8770.67	8770.67	877.07	365.44	
1	710+89.05	714+97.00	407.95	83.0	92.0	87.5	3966.18	3966.18	396.62	165.26	
	TOTALS, RIGHT COLUMN							174,656	17,466	7,278	
	TOTALS, LEFT COLUMN							187,180	18,718	7,800	
	TOTALS CARRIED TO SHEET 18							361,836	36,184	15,078	

CALCULATED DAB
CHECKED EMK

PAVEMENT SUBSUMMARY

CUY-71-0.00

I:\PROJECTS\CUY\85508\Design\Roadway\Sheets\85508GS001.dgn 14-DEC-2015 1:20PM dbrauer

PLAN SPLIT NO.	STATION TO STATION		LENGTH	BEGIN WIDTH	ENDING WIDTH	AVERAGE WIDTH	AREA	254 PAVEMENT PLANING, ASPHALT CONCRETE, AS PER PLAN, 1-1/2"	SPECIAL TACK COAT, TRACKLESS TACK	806 ASPHALT CONCRETE SURFACE COURSE, 12.5MM, TYPE A, AS PER PLAN	442 ASPHALT CONCRETE SURFACE COURSE, 12.5 MM, TYPE A (446), AS PER PLAN
			FT.	FT.	FT.	FT.	SQ. YD.	SY	GAL	CY	CY
	IR-71 SOUTHBOUND										
1	714+97.00	724+90.01	993.01	60.0	60.0	60.0	6620.07	6620.07	662.01	275.84	
1	724+90.01	725+90.01	100.00	60.0	64.0	62.0	688.89	688.89	68.89	28.70	
1	725+90.01	726+77.51	87.50	94.0	88.0	91.0	884.72	884.72	88.47	36.86	
1	726+77.51	730+44.74	367.23	88.0	70.0	79.0	3223.46	3223.46	322.35	134.31	
1	730+44.74	732+90.01	245.27	70.0	70.0	70.0	1907.66	1907.66	190.77	79.49	
1	732+90.01	733+90.01	100.00	70.0	60.0	65.0	722.22	722.22	72.22	30.09	
1	733+90.01	761+19.62	2729.61	60.0	60.0	60.0	18197.40	18197.40	1819.74	758.23	
	BRIDGE NO. CUY-71-0521 L										
1	763+26.63	763+97.86	71.23	60.0	60.0	60.0	474.87	474.87	47.49	19.79	
1	763+97.86	764+93.86	96.00	60.0	60.0	60.0	640.00	640.00	64.00	26.67	
1	764+93.86	775+97.86	1104.00	60.0	83.0	71.5	8770.67	8770.67	877.07	365.44	
1	775+97.86	778+35.38	237.52	83.0	84.5	83.8	2210.26	2210.26	221.03	92.09	
	BRIDGE NO. CUY-71-0533 L										
1	781+30.62	787+70.68	640.06	60.0	60.0	60.0	4267.07	4267.07	426.71	177.79	
1	787+70.68	788+70.68	100.00	60.0	64.0	62.0	688.89	688.89	68.89	28.70	
1	788+70.68	791+11.65	240.97	97.0	75.6	86.3	2310.63	2310.63	231.06	96.28	
1	791+11.65	792+49.87	138.22	75.6	70.8	73.2	1124.19	1124.19	112.42	46.84	
	SR-82 INTERCHANGE										
	RAMP A										
1	110+71.06	111+71.06	100.00	27.0	25.0	26.0	288.89	288.89	28.89		12.04
1	111+71.06	115+00.00	328.94	25.0	25.0	25.0	913.72	913.72	91.37		38.07
1	115+00.00	120+85.00	585.00	25.0	31.0	28.0	1820.00	1820.00	182.00		75.83
	RAMP B (NO WORK)										
	RAMP C										
1	115+59.44	121+00.00	540.56	25.0	25.0	25.0	1501.56	1501.56	150.16		62.57
1	121+00.00	124+13.00	313.00	25.0	31.0	28.0	973.78	973.78	97.38		40.57
	RAMP D										
1	113+96.65	119+60.00	563.35	25.0	25.0	25.0	1564.86	1564.86	156.49		65.20
1	119+60.00	124+30.00	470.00	23.0	23.0	23.0	1201.11	1201.11	120.11		50.05
1	124+30.00	124+50.00	20.00	25.0	25.0	25.0	55.56	55.56	5.56		2.32
	RAMP E										
1	123+93.00	133+32.00	939.00	25.0	25.0	25.0	2608.33	2608.33	260.83		108.68
	RAMP F										
1	136+30.00	137+46.93	116.93	28.0	25.0	26.5	344.29	344.29	34.43		14.35
1	137+46.93	138+46.93	100.00	25.0	27.0	26.0	288.89	288.89	28.89		12.04
	TOTALS, LEFT COLUMN							64,292	6,430	2,198	482

PLAN SPLIT NO.	STATION TO STATION		LENGTH	BEGIN WIDTH	ENDING WIDTH	AVERAGE WIDTH	AREA	254 PAVEMENT PLANING, ASPHALT CONCRETE, AS PER PLAN, 1-1/2"	SPECIAL TACK COAT, TRACKLESS TACK	806 ASPHALT CONCRETE SURFACE COURSE, 12.5MM, TYPE A, AS PER PLAN	442 ASPHALT CONCRETE SURFACE COURSE, 12.5 MM, TYPE A (446), AS PER PLAN
			FT.	FT.	FT.	FT.	SQ. YD.	SY	GAL	CY	CY
	SR-42 INTERCHANGE										
	RAMP A										
1	71+04.60	72+04.60	100.00	27.0	25.0	26.0	288.89	288.89	28.89		12.04
1	72+04.60	79+45.50	740.90	25.0	25.0	25.0	2058.06	2058.06	205.81		85.75
1	79+45.50	83+55.86	410.36	23.0	23.0	23.0	1048.70	1048.70	104.87		43.70
1	83+55.86	85+31.07	175.21	23.0	45.0	34.0	661.90	661.90	66.19		27.58
1	85+31.07	86+50.00	118.93	24.5	23.0	23.8	313.84	313.84	31.38		13.08
	RAMP B										
1	74+12.00	79+05.50	493.50	25.0	25.0	25.0	1370.83	1370.83	137.08		57.12
1	79+05.50	83+42.11	436.61	23.0	23.0	23.0	1115.78	1115.78	111.58		46.49
1	83+42.11	84+21.25	79.14	23.0	45.0	34.0	298.97	298.97	29.90		12.46
1	84+21.25	86+50.00	228.75	25.0	25.0	25.0	635.42	635.42	63.54		26.48
	RAMP A-B										
1	84+44.45	85+07.94	63.49	20.0	20.0	20.0	141.09	141.09	14.11		5.88
1	85+07.94	85+87.51	79.57	38.0	41.0	39.5	349.22	349.22	34.92		14.55
	RAMP C										
1	72+50.00	75+02.62	252.62	25.0	25.0	25.0	701.72	701.72	70.17		29.24
1	75+02.62	76+06.57	103.95	48.0	23.0	35.5	410.03	410.03	41.00		17.08
1	76+06.57	81+24.04	517.47	23.0	23.0	23.0	1322.42	1322.42	132.24		55.10
1	81+24.04	85+20.00	395.96	25.0	25.0	25.0	1099.89	1099.89	109.99		45.83
	RAMP D										
1	80+25.00	83+55.24	330.24	34.0	25.0	29.5	1082.45	1082.45	108.25		45.10
1	83+55.24	87+72.34	417.10	25.0	25.0	25.0	1158.61	1158.61	115.86		48.28
1	87+72.34	88+72.34	100.00	25.0	27.0	26.0	288.89	288.89	28.89		12.04
	RAMP C-D										
1	73+71.94	74+97.83	125.89	20.0	17.0	18.5	258.77	258.77	25.88		10.78
	MEDIAN CROSSOVERS										
1	582+50.00		80.00	32.0	32.0	32.0	284.44	284.44	28.44	11.85	
1	654+00.00		72.00	32.0	32.0	32.0	256	256	25.6	10.67	
1	743+50.00		86.00	32.0	32.0	32.0	305.78	305.78	30.58	12.74	
	TOTALS, RIGHT COLUMN							15,452	1,546	36	609
	TOTALS, LEFT COLUMN							64,292	6,430	2,198	482
	TOTALS, SHEET 17							361,836	36,184	15,078	0
	TOTALS CARRIED TO GENERAL SUMMARY							441,580	44,160	17,312	1,091

CALCULATED DAB
CHECKED EMK

PAVEMENT SUBSUMMARY

CUY-71-0.00

I:\PROJECTS\CUY\85508\Design\Roadway\Sheets\85508GS002.dgn 14-DEC-2015 1:20PM dbrauer

PLAN SPLIT NO.	LOCATION	STATION FROM	STATION TO	LENGTH FOOT	646 EDGE LINE, 6", WHITE FT	646 EDGE LINE, 6", YELLOW FT	646 LANE LINE, 6" MILE	646 CHANNELIZING LINE, 12" FT	646 CHEVRON MARKING FT	646 DOTTED LINE, 6" FT		644 CHANNELIZING LINE, 8" FT	644 STOP LINE FT	644 CROSSWALK LINE FT	644 TRANSVERSE/DIAGONAL LINE FT	644 LANE ARROW EACH	644 YIELD LINE FT	644 PAVEMENT MARKING, MISC.: WRONG WAY ARROW EACH	621 RPM (WHITE) EACH	621 RPM (WHITE/RED) EACH	621 RPM (YELLOW/RED) EACH
1	NORTHBOUND IR-71	485+00.00	545+19.45	6,019	6,019	6,019	12038												151		
		STA. 545+19.45 BK = STA. 545+28.30 AH																			
1		545+28.30	602+71.33	5,743	5,743	5,743	11,486												144		
1		602+71.33	608+11.00	540	540	540	1,080			540									14		
1		608+11.00	610+71.33	260	260	260	520	520											7	13	
1		610+71.33	622+20.00	1,149	882	1,149	2,298	267											29		
1		622+20.00	626+33.00	413	413	413	826	826											11	21	
1		626+33.00	633+32.00	699	699	699	1,398			699									18		
1		633+32.00	635+62.73	231	231	231	462	462		231									6	12	
1		635+62.73	640+29.00	466	466	466	932	932											12	24	
1		640+29.00	651+00.00	1,071	1,071	1,071	2142			1,071									27		
1		651+00.00	699+62.97	4,863	4,863	4,863	9726												122		
1		699+62.97	704+83.37	520	520	520	1040			520									13		
1		704+83.37	707+62.97	280	280	280	560	560	85										7	14	
1		707+62.97	715+61.00	798	798	798	1596												20		
1		715+61.00	722+75.00	714	714	714	1,428	1,428											18	36	
1		722+75.00	731+69.18	894	894	894	1,788			894									23		
1		731+69.18	763+02.95	3,134	3,134	3,134	6,268												79		
1		763+02.95	768+44.18	541	541	541	1,082			541									14		
1		768+44.18	771+02.95	259	259	259	518	518											7	13	
1		771+02.95	779+18.48	816	816	816	1,632												21		
1		779+18.48	779+52.85	34	34	34	68	34											1	1	
1		779+52.85	785+63.00	610	610	610	1,220	1,220											16	31	
1		785+63.00	792+26.82	664	664	664	1,328			664									17		
1	SOUTHBOUND IR-71	485+00.00	545+19.45	6,019	6,019	6019	12038												151		
		STA. 545+19.45 BK = STA. 545+28.30 AH																			
1		545+28.30	597+46.65	5,218	5,218	5218	10436												131		
1		597+46.65	606+88.00	941	941	941	1882			941									24		
1		606+88.00	613+98.00	710	710	710	1420	1420											18	36	
1		613+98.00	622+09.41	811	811	811	1622												21		
1		622+09.41	626+54.00	445	445	445	890	890											12	23	
1		626+54.00	630+09.41	355	355	355	710			355									9		
1		630+09.41	638+45.27	836	836	836	1672												21		
1		638+45.27	641+25.00	280	280	280	560	560											7	14	
1		641+25.00	646+45.27	520	520	520	1040			520									13		
1		646+45.27	698+89.05	5244	5244	5244	10488												132		
1		698+89.05	709+01.00	1012	1012	1012	2024			1012									26		
1		709+01.00	714+97.00	596	596	596	1192	1192											15	30	
1		714+97.00	725+90.01	1093	1093	1093	2186												28		
1		725+90.01	728+30.26	240	240	240	480	480	65										6	12	
1		728+30.26	733+90.01	560	560	560	1120			560									14		
1		733+90.01	763+97.86	3008	3,008	3008	6016												76		
1		763+97.86	774+94.00	1,096	1,096	1,096	2,192			1,096									28		
1		774+94.00	780+16.86	523	523	523	1046	1046											14	27	
1		780+16.86	780+47.52	31	31	31	62	31											1	1	
1		780+47.52	788+70.68	823	823	823	1646												21		
1		788+70.68	791+11.65	241	241	241	482	482											7	13	
1		791+11.65	792+49.87	138	138	138	276			138									4		
SUBTOTALS					61191	61458	122916	12868	150	9782									1556	321	
TOTALS CARRIED TO GENERAL SUMMARY					23.23 MI		23.28 MI	12868	150	9782									1877		

CALCULATED DAB
CHECKED EMK

PAVEMENT MARKING SUBSUMMARY

CUY-71-0.00

I:\PROJECTS\CUY\85508\Design\Roadway\Sheets\85508GS003.dgn 14-DEC-2015 1:20PM dbrauer

PLAN SPLIT NO.	LOCATION	STATION FROM	STATION TO	LENGTH	646 EDGE LINE, 6", WHITE	646 EDGE LINE, 6", YELLOW	646 LANE LINE, 6"	646 CHANNELIZING LINE, 12"	646 CHEVRON MARKING	646 DOTTED LINE, 6"		644 CHANNELIZING LINE, 8"	644 STOP LINE	644 CROSSWALK LINE	644 TRANSVERSE/DIAGONAL LINE	644 LANE ARROW	644 YIELD LINE	644 PAVEMENT MARKING, MISC.: WRONG WAY ARROW	621 RPM (WHITE)	621 RPM (WHITE/RED)	621 RPM (YELLOW/RED)
				FOOT	FT	FT	MILE	FT	FT	FT		FT	FT	FT	FT	EACH	FT	EACH	EACH	EACH	EACH
	SR-82 INTERCHANGE																				
1	RAMP A	110+71.06	120+85.00	1,014	1,014	1,014												1			13
1		120+85.00	123+03.00	218	218	218						218				7				6	3
1		123+03.00	123+54.56	52						99			47	126							
	RAMP B (NO WORK)																				
1	RAMP C	115+59.44	124+13.00	854	854	854												1			11
1		124+13.00	126+09.00	196	196	196	196									6			3		3
1		126+09.00	127+11.19	102						101			33	70							
1	RAMP D	113+96.65	126+10.41	1214	1214	1214								110							16
1	RAMP E	121+08.33	122+98.00	190	190							144		52						4	
1		122+98.00	133+33.08	1035	1,035	1035															13
1	RAMP F	122+82.76	124+58.60	176						331			48	94							
1		124+58.60	132+40.00	781	781	781	781					781				21			10	20	10
1		132+40.00	138+46.93	607	607	607												1			8
	US-42 INTERCHANGE																				
1	RAMP A	71+04.60	85+31.08	1426	1426	1426						39						1		2	18
1		85+31.08	86+32.36	101	101	101											14				2
1		86+32.36	86+74.71	42	42																
1	RAMP B	74+24.60	84+07.26	983	983	983															13
1		84+07.26	86+02.15	195	195	195															3
1		86+02.15	87+00.00	98	98							74								3	
1	Ramp A-B	84+29.39	85+07.94	79	79	79															2
1		85+07.94	85+71.51	64	128	128							16								2
1		85+71.51	86+25.86	54						92											
1	RAMP C	72+19.75	73+45.99	126	126							92								4	
1		73+45.99	75+23.16	177	177	177															3
1		75+23.16	85+13.34	990	990	990															13
1	RAMP D	73+39.46	73+75.00	36	112					37			31								
1		73+75.00	73+95.00	20	36	20						20	24		19					2	2
1		73+95.00	75+45.00	150	200	150						300			15	9				8	2
1		75+45.00	77+25.00	180	180	180	360												5		3
1		77+25.00	79+80.09	255	255	255	255												4		4
		STA. 79+80.09 BK = STA. 79+55.24 AH																			
1		79+55.24	80+25.00	70	70	70	70												2		2
1		80+25.00	88+75.91	851	851	851												1			11
1	RAMP C-D	73+40.66	73+77.25	37						69											
1		73+77.25	75+19.30	142	142	142															2
SUBTOTALS					12300	11666	1662			729		1668	199	452	34	43	14	5	24	49	159
TOTALS CARRIED TO GENERAL SUMMARY					4.54 MI		0.32 MI			729		1668	199	452	34	43	14	5	232		

CALCULATED DAB
CHECKED EMK

PAVEMENT MARKING SUBSUMMARY

CUY-71-0.00

I:\PROJECTS\CUY\85508\Design\Roadway\Sheets\8550SGS004.dgn 14-DEC-2015 1:20PM dbrauer

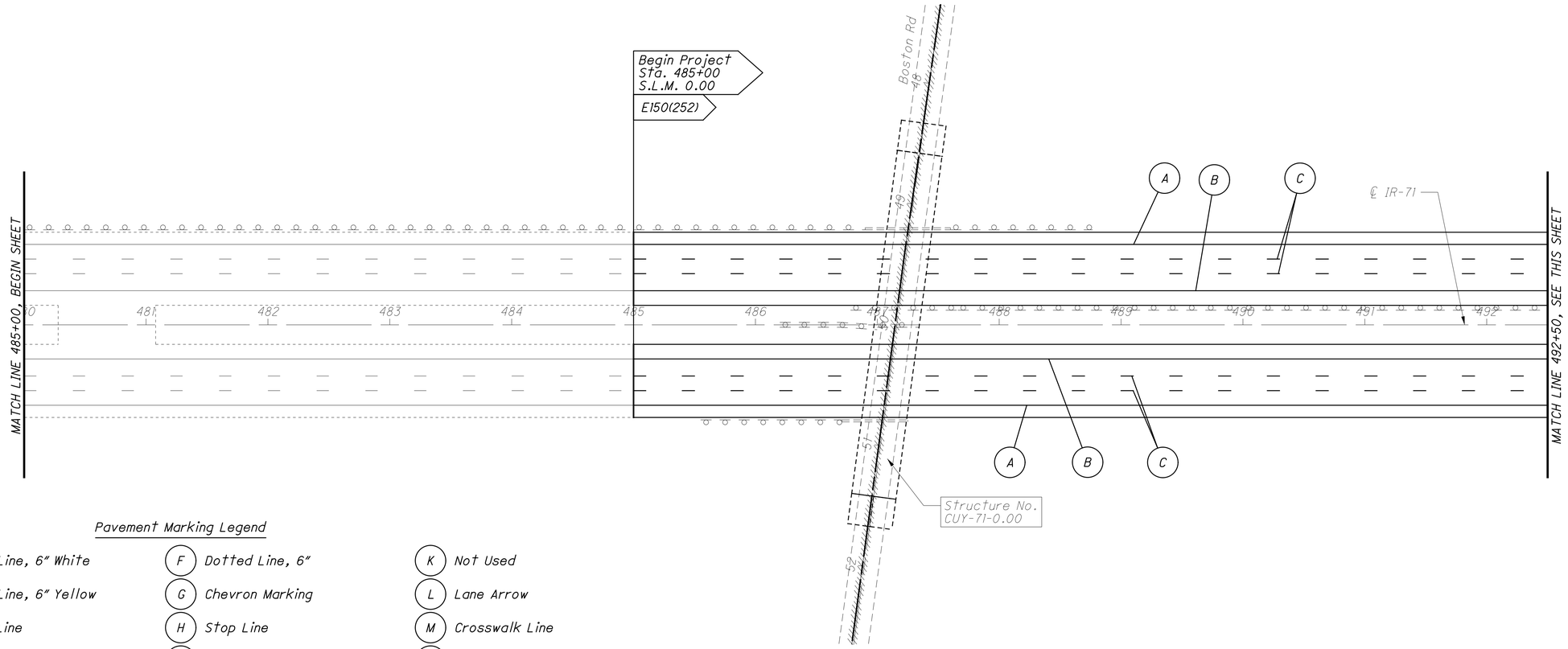

Pavement Marking Legend

(A) Edge Line, 6" White	(F) Dotted Line, 6"	(K) Not Used
(B) Edge Line, 6" Yellow	(G) Chevron Marking	(L) Lane Arrow
(C) Lane Line	(H) Stop Line	(M) Crosswalk Line
(D) Channelizing Line, 12"	(I) Yield Line	(N) Transverse/Diagonal Line
(E) Channelizing Line, 8"	(J) Pavement Marking Misc.: Wrong Way Arrow	

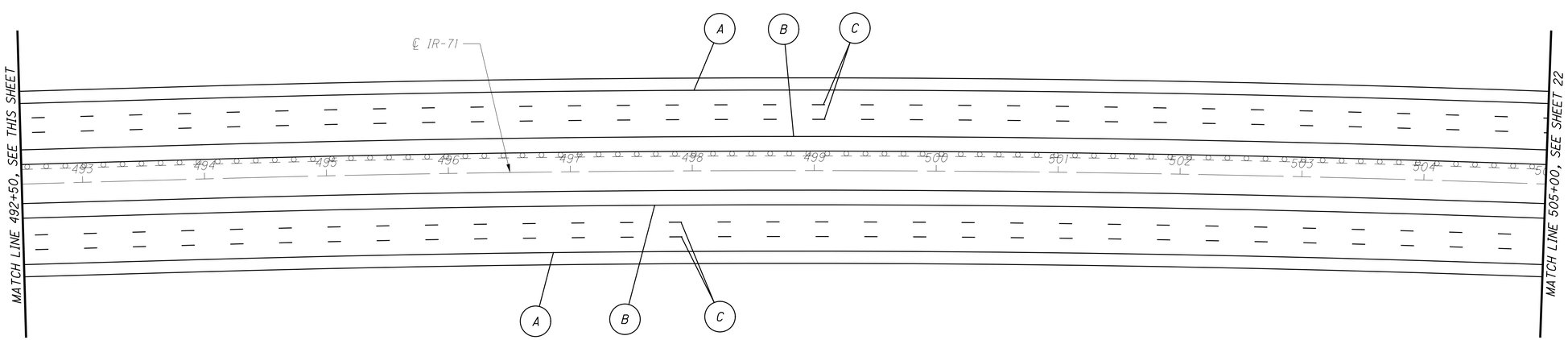

HORIZONTAL SCALE IN FEET
0 25 50 100

CALCULATED DAB
CHECKED EMK

GENERAL PLAN SHEET
IR-71, STA. 485+00 TO STA. 505+00

CUY-71-0.00

I:\PROJECTS\CUY\85508\Design\Roadway\Sheets\85508GP001.dgn 14-DEC-2015 1:20PM dbrauer

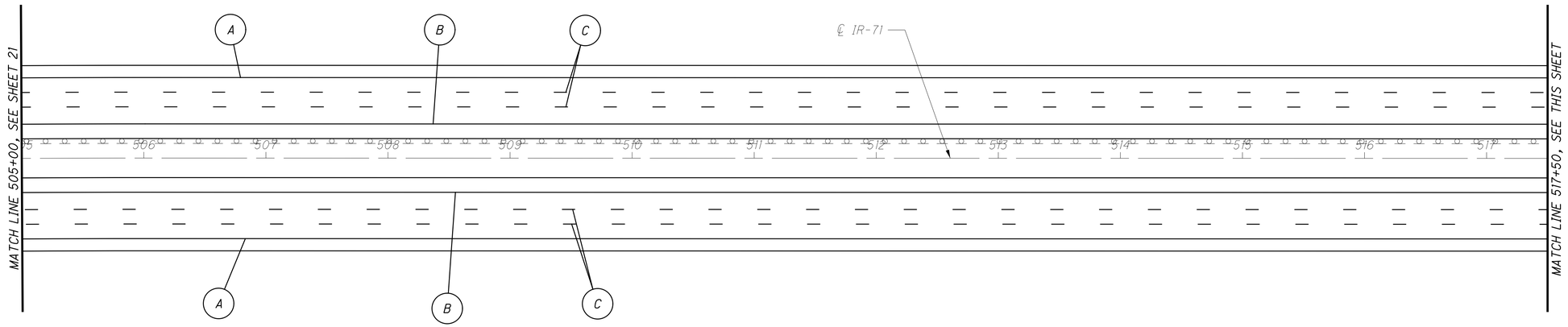

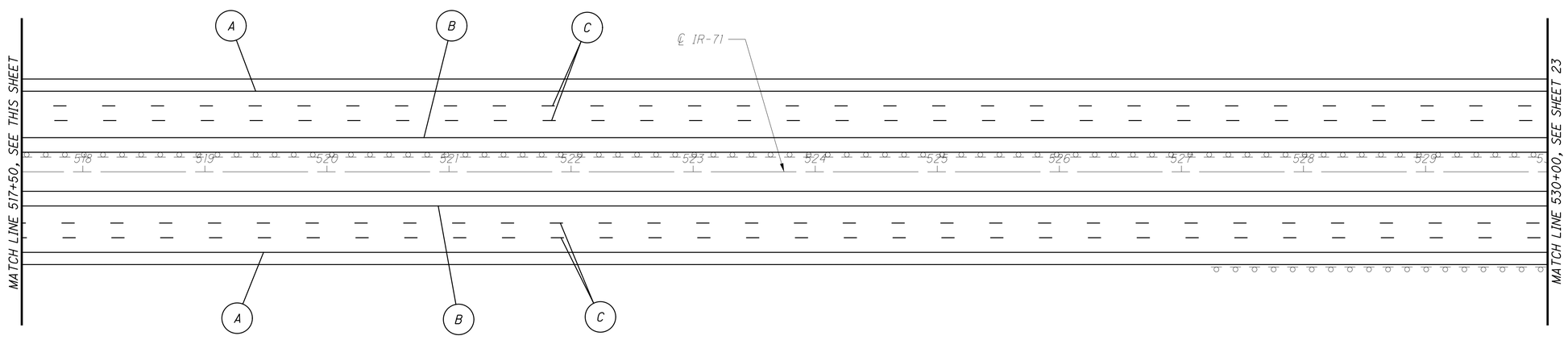

For Pavement Marking Legend, See Sheet 21

HORIZONTAL SCALE IN FEET
0 25 50 100

CALCULATED DAB
CHECKED EMK

GENERAL PLAN SHEET
IR-71, STA. 505+00 TO STA. 530+00

CUY-71-0.00

I:\PROJECTS\CUY\85508\Design\Roadway\Sheets\85508GP002.dgn 14-DEC-2015 1:20PM dbrauer

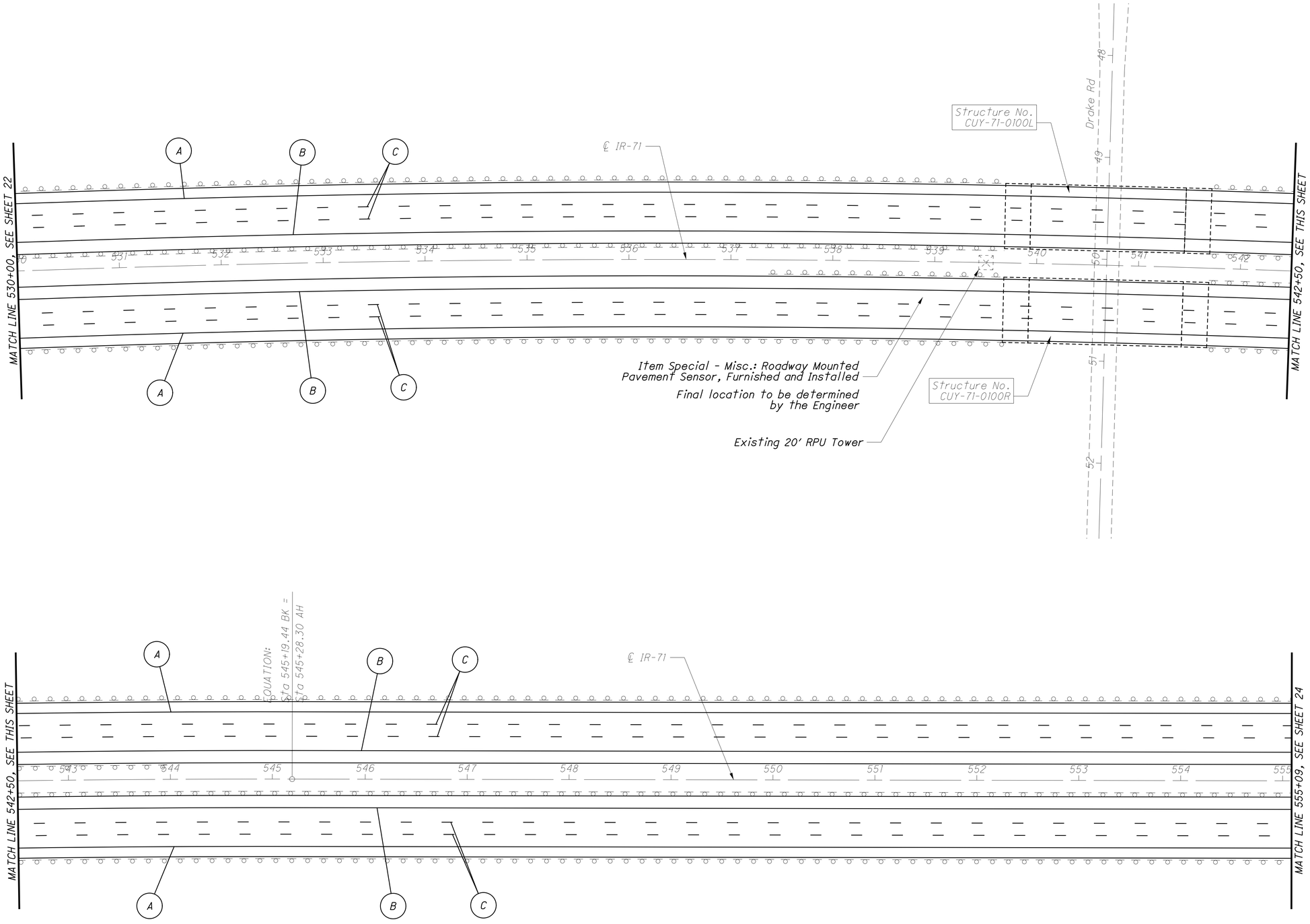

For Pavement Marking Legend, See Sheet 21

HORIZONTAL SCALE IN FEET
0 25 50 100

CALCULATED DAB
CHECKED EMK

GENERAL PLAN SHEET
IR-71, STA. 530+00 TO STA. 555+09

CUY-71-0.00

I:\PROJECTS\CUY\85508\Design\Roadway\Sheets\85508GP003.dgn 14-DEC-2015 1:21PM dbrauer

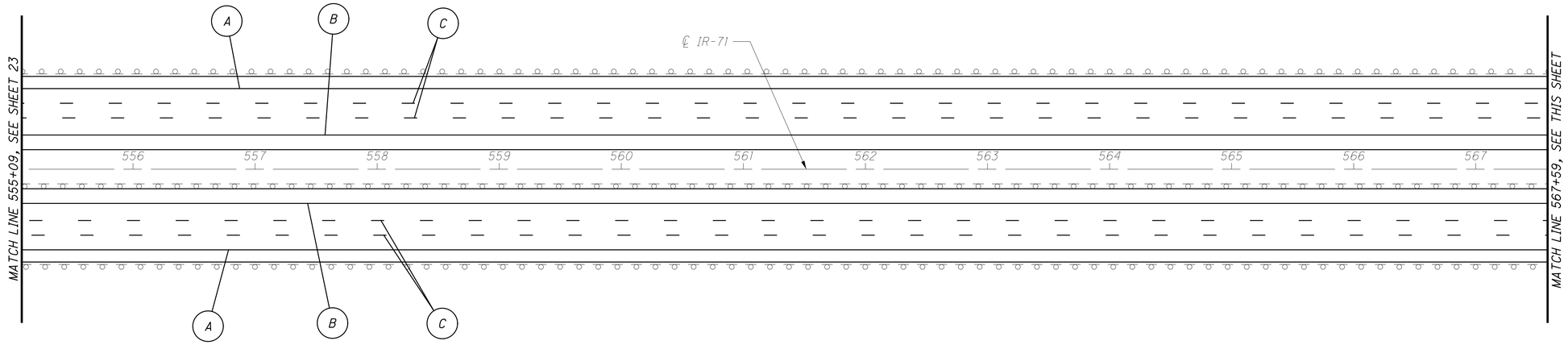

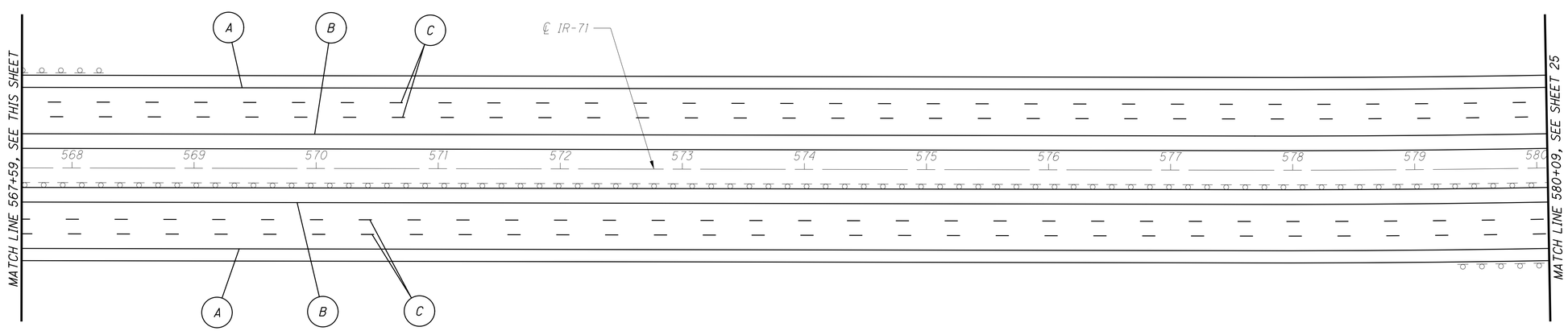

For Pavement Marking Legend, See Sheet 21

N

HORIZONTAL SCALE IN FEET
0 25 50 100

CALCULATED DAB
CHECKED EMK

GENERAL PLAN SHEET
IR-71, STA. 555+09 TO STA. 580+09

CUY-71-0.00

I:\PROJECTS\CUY\85508\Design\Roadway\Sheets\85508GP004.dgn 14-DEC-2015 1:21PM dbrauer

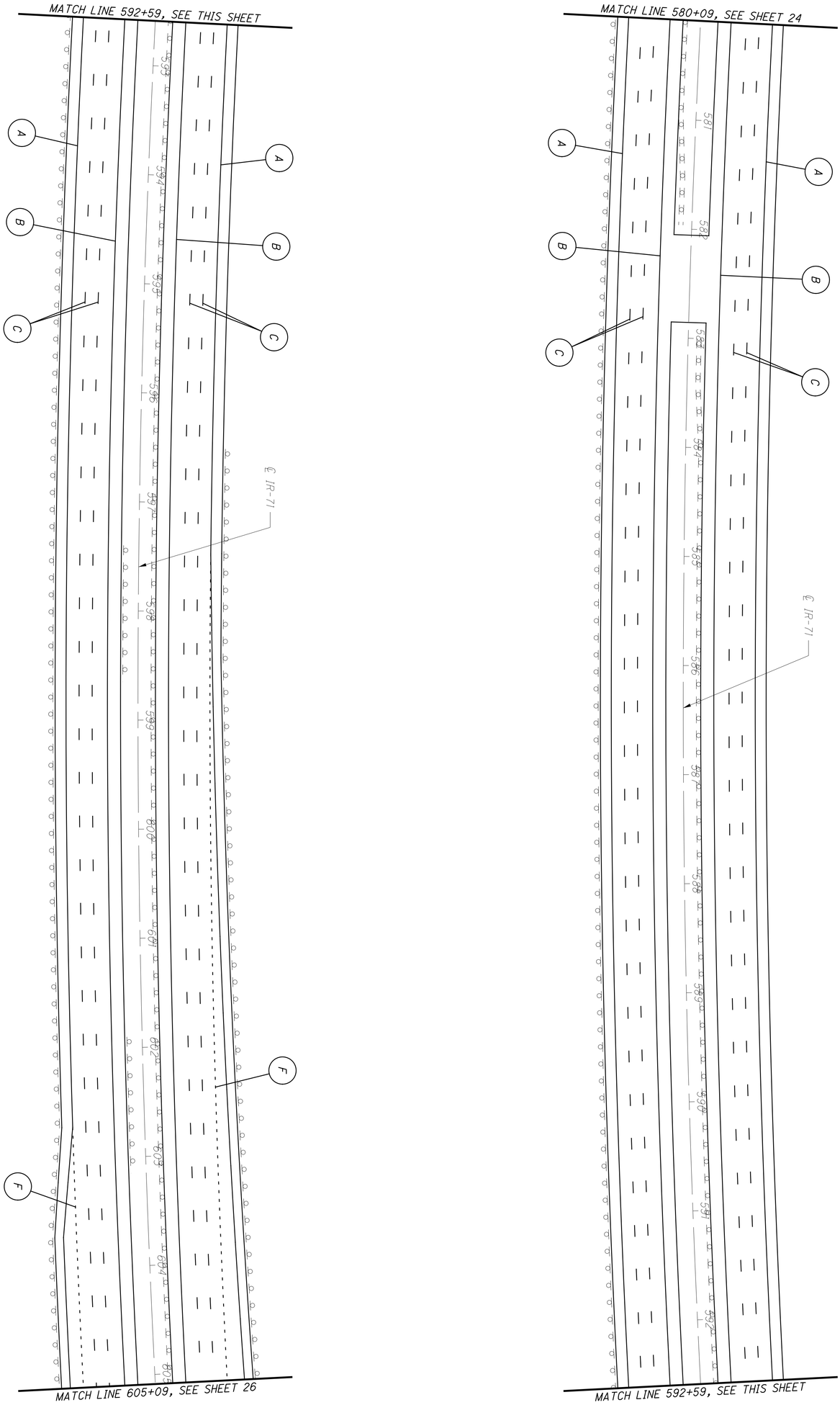

For Pavement Marking Legend, See Sheet 21

25 / 38	CUY-71-0.00	GENERAL PLAN SHEET IR-71, STA. 580+09 TO STA. 605+09	CALCULATED DAB CHECKED EMK	0 25 50 100 HORIZONTAL SCALE IN FEET

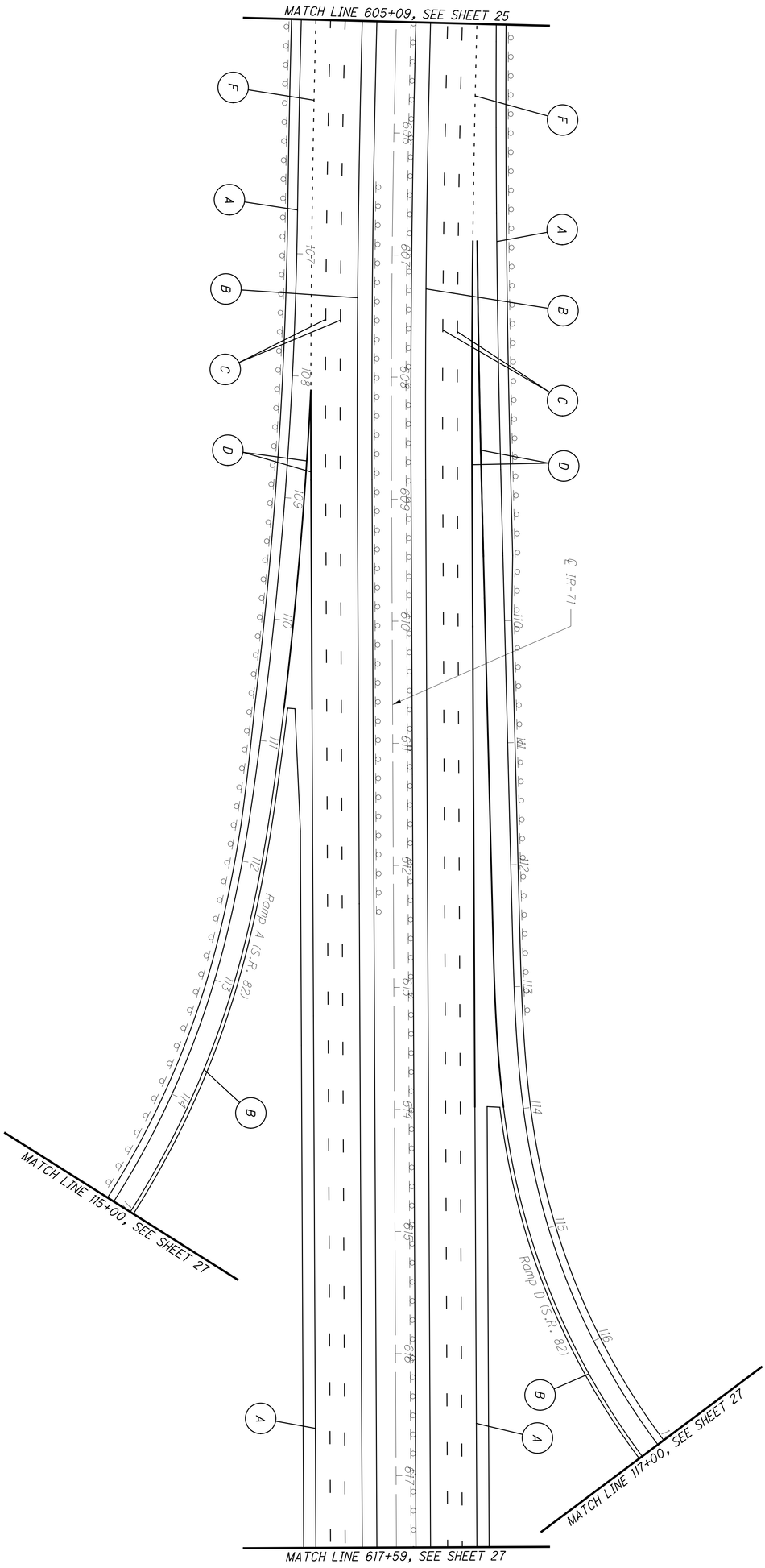

For Pavement Marking Legend, See Sheet 21

26 / 38	CUY-71-0.00	GENERAL PLAN SHEET IR-71, STA. 605+09 TO STA. 617+59	CALCULATED DAB CHECKED EMK	0 25 50 100 HORIZONTAL SCALE IN FEET

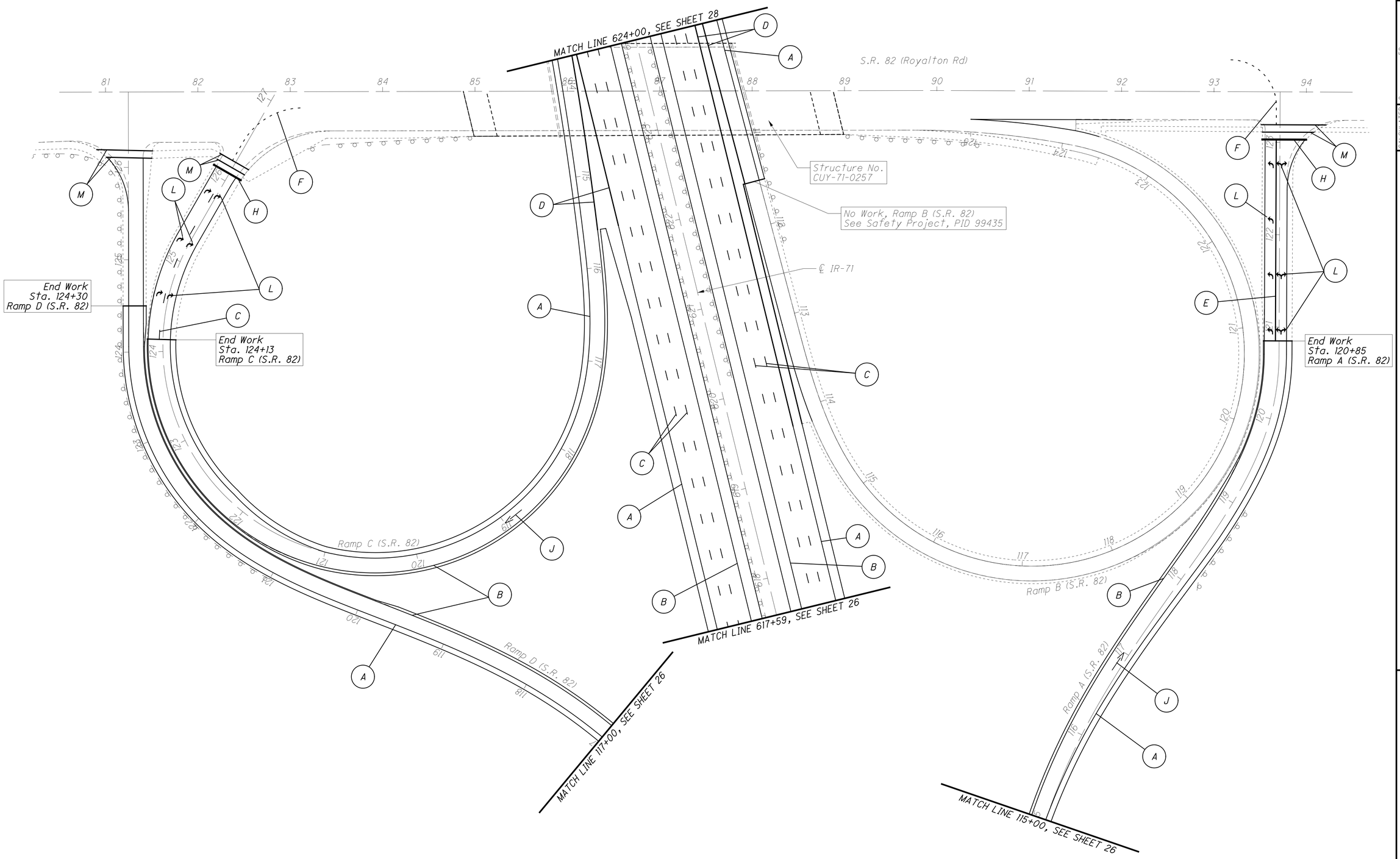

For Pavement Marking Legend, See Sheet 21

HORIZONTAL SCALE IN FEET 0 25 50 100

CALCULATED DAB
CHECKED EMK

GENERAL PLAN SHEET
IR-71, STA. 617+59 TO STA. 624+00

CUY-71-0.00

I:\PROJECTS\CUY\85508\Design\Roadway\Sheets\85508GP007.dgn 14-DEC-2015 1:21PM dbrauer

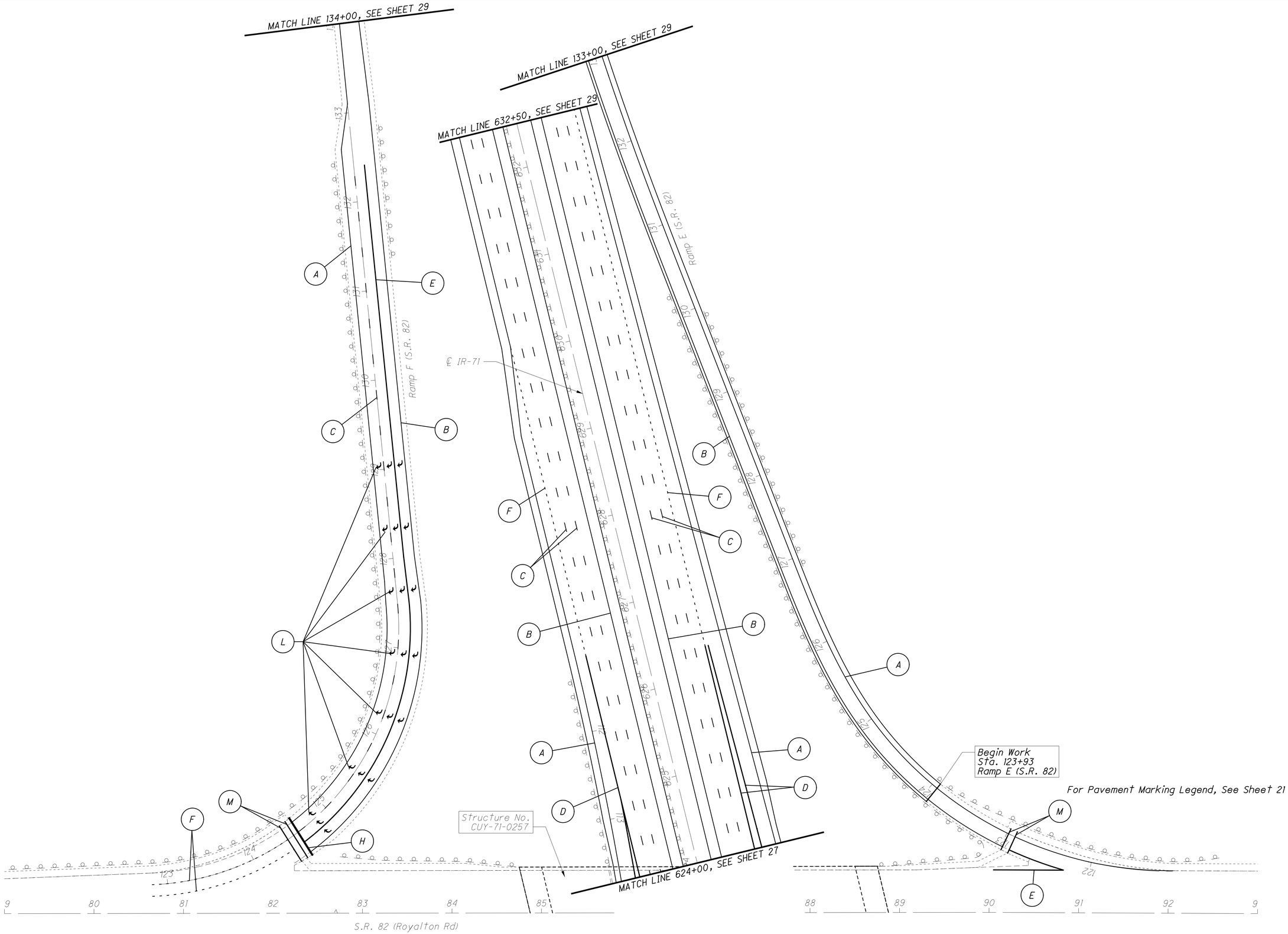

HORIZONTAL SCALE IN FEET
0 25 50 100

CALCULATED DAB
CHECKED EMK

GENERAL PLAN SHEET
IR-71, STA. 624+00 TO STA. 632+50

CUY-71-0.00

I:\PROJECTS\CUY\85508\Design\Roadway\Sheets\85508GP008.dgn 14-DEC-2015 1:21PM dbrouer

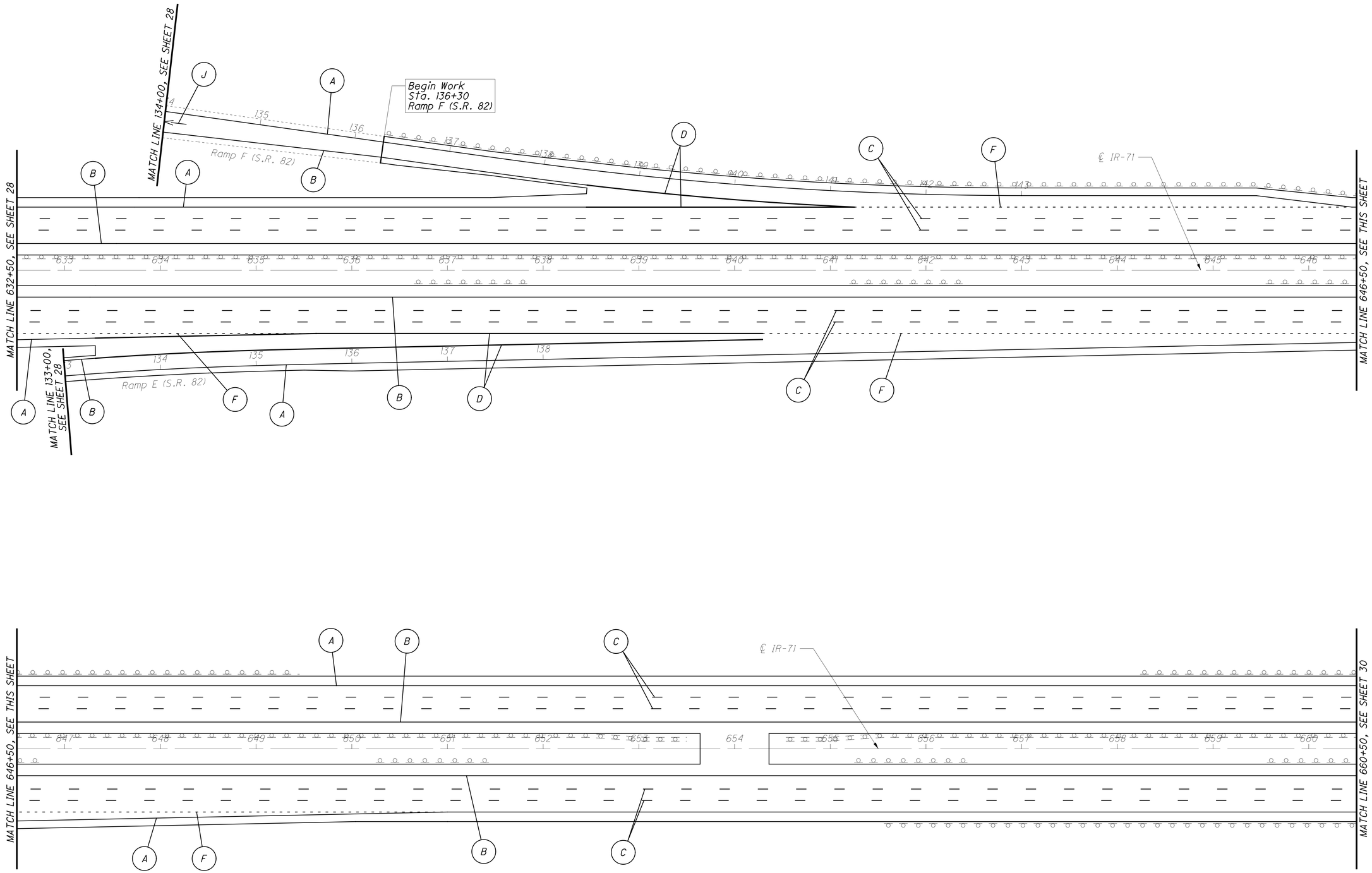

For Pavement Marking Legend, See Sheet 21

N

HORIZONTAL SCALE IN FEET
0 25 50 100

CALCULATED DAB
CHECKED EMK

GENERAL PLAN SHEET
IR-71, STA. 632+50 TO STA. 660+50

CUY-71-0.00

I:\PROJECTS\CUY\85508\Design\Roadway\Sheets\85508GP009.dgn 14-DEC-2015 1:21PM dbrauer

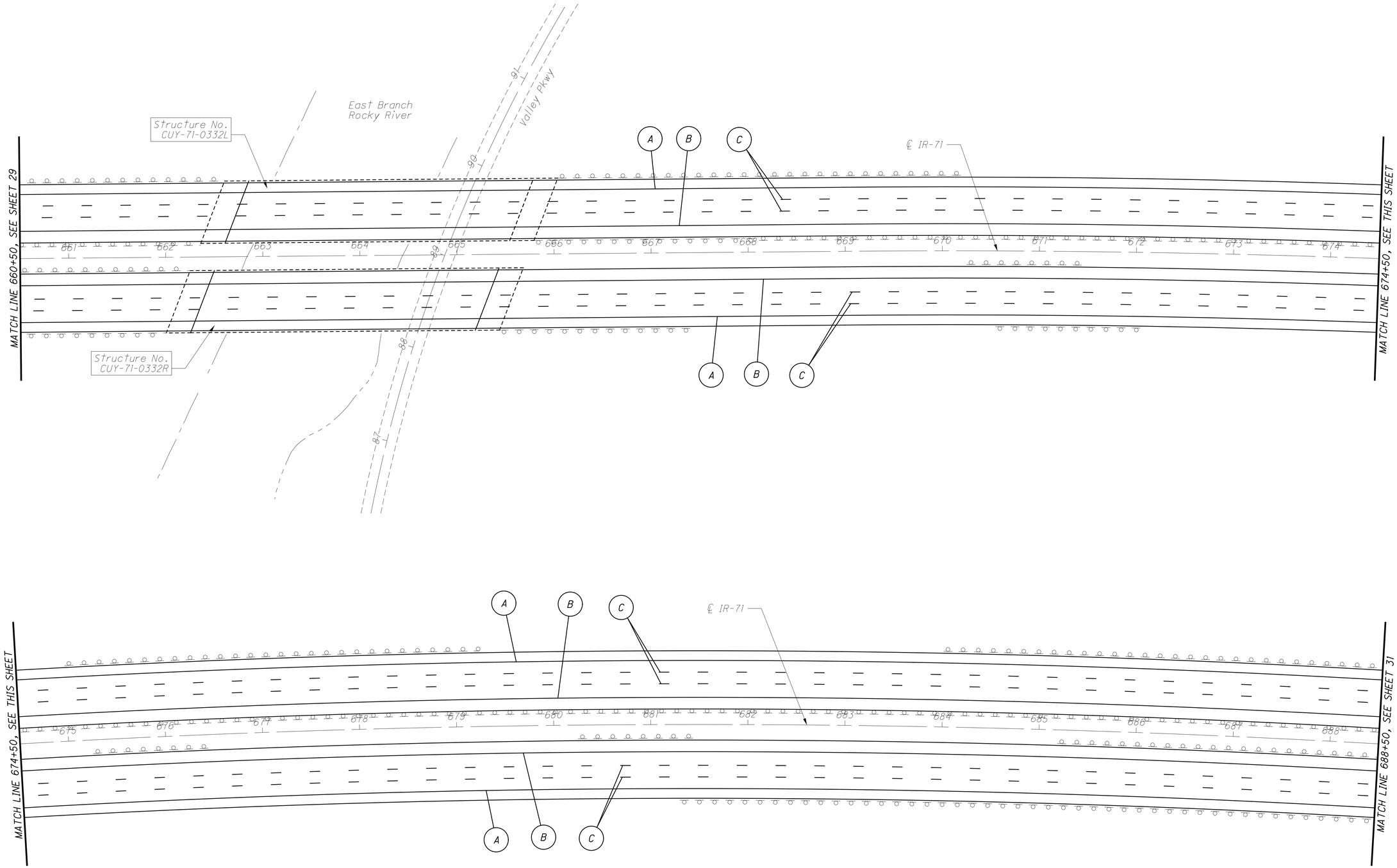

For Pavement Marking Legend, See Sheet 21

HORIZONTAL SCALE IN FEET
0 25 50 100

CALCULATED DAB
CHECKED EMK

GENERAL PLAN SHEET
IR-71, STA. 660+50 TO STA. 688+50

CUY-71-0.00

I:\PROJECTS\CUY\85508\Design\Roadway\Sheets\85508GP010.dgn 14-DEC-2015 1:21PM dbrauer

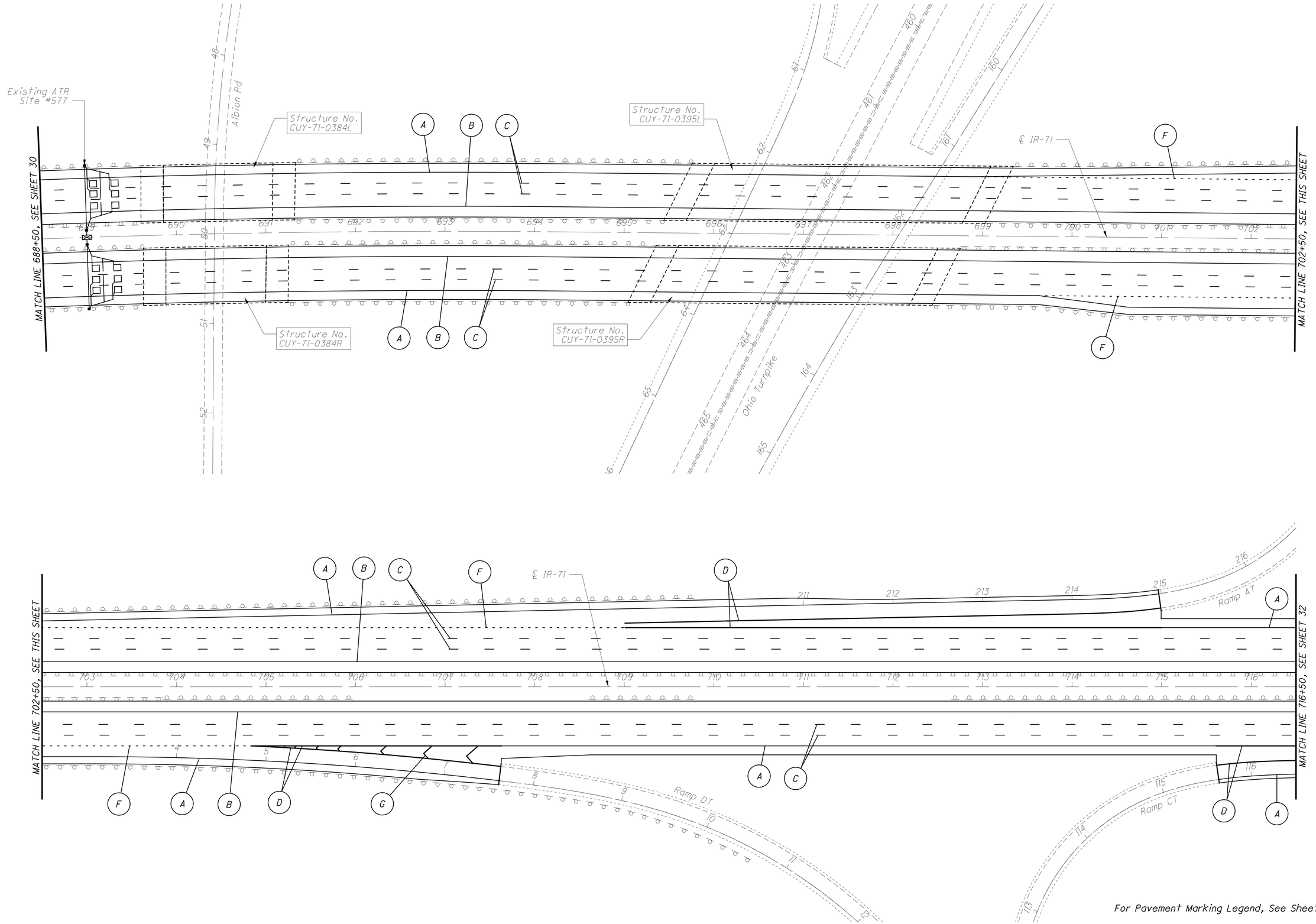

For Pavement Marking Legend, See Sheet 21

HORIZONTAL SCALE IN FEET 0 25 50 100

CALCULATED DAB
CHECKED EMK

GENERAL PLAN SHEET
IR-71, STA. 688+50 TO STA. 716+50

CUY-71-0.00

I:\PROJECTS\CUY\85508\Design\Roadway\Sheets\85508GP011.dgn 14-DEC-2015 1:21PM dbrauer

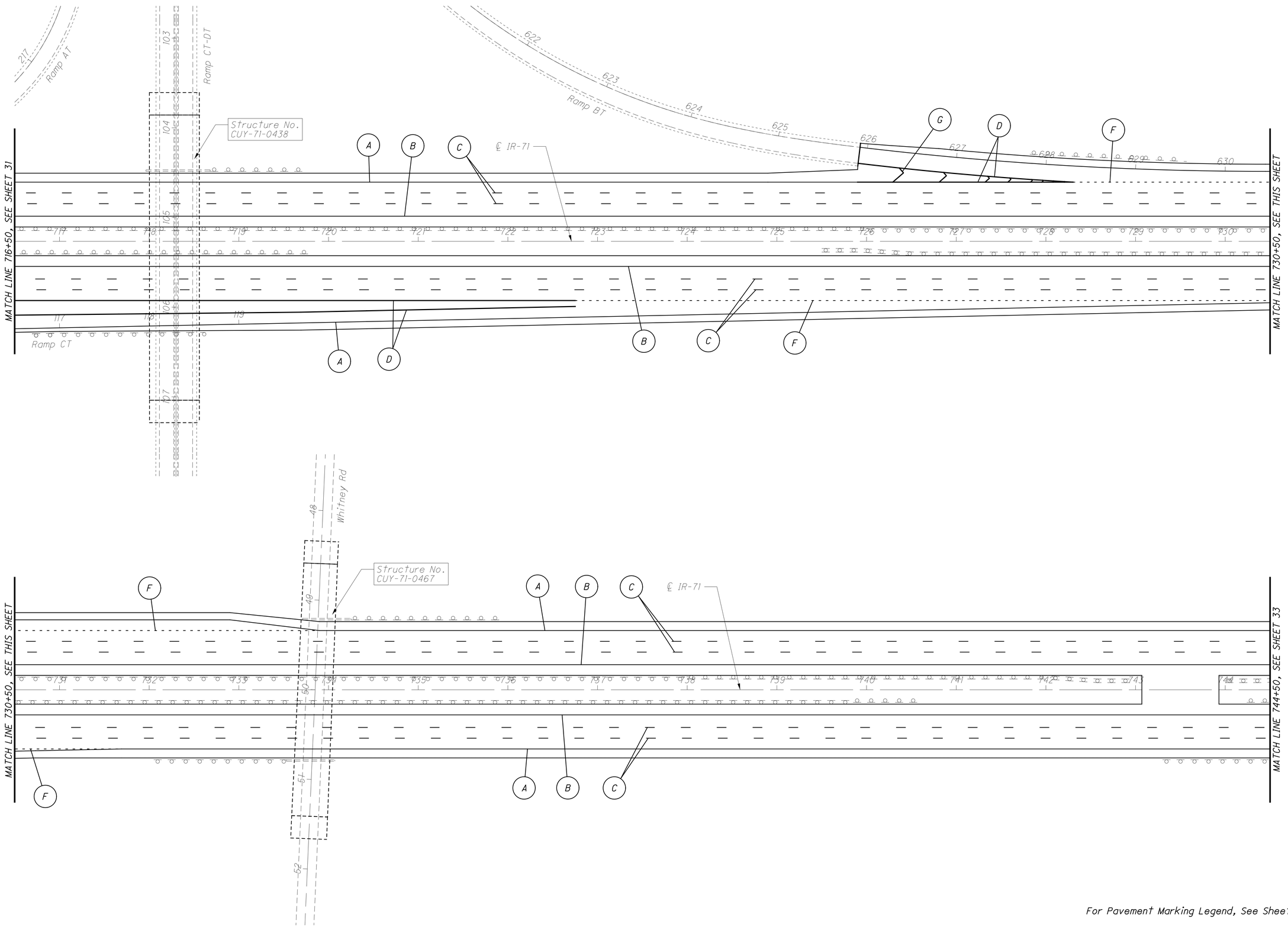

For Pavement Marking Legend, See Sheet 21

HORIZONTAL SCALE IN FEET
0 25 50 100

CALCULATED DAB
CHECKED EMK

GENERAL PLAN SHEET
IR-71, STA. 716+50 TO STA. 744+50

CUY-71-0.00

I:\PROJECTS\CUY\85508\Design\Roadway\Sheets\85508GP012.dgn 14-DEC-2015 1:21PM dbrauer

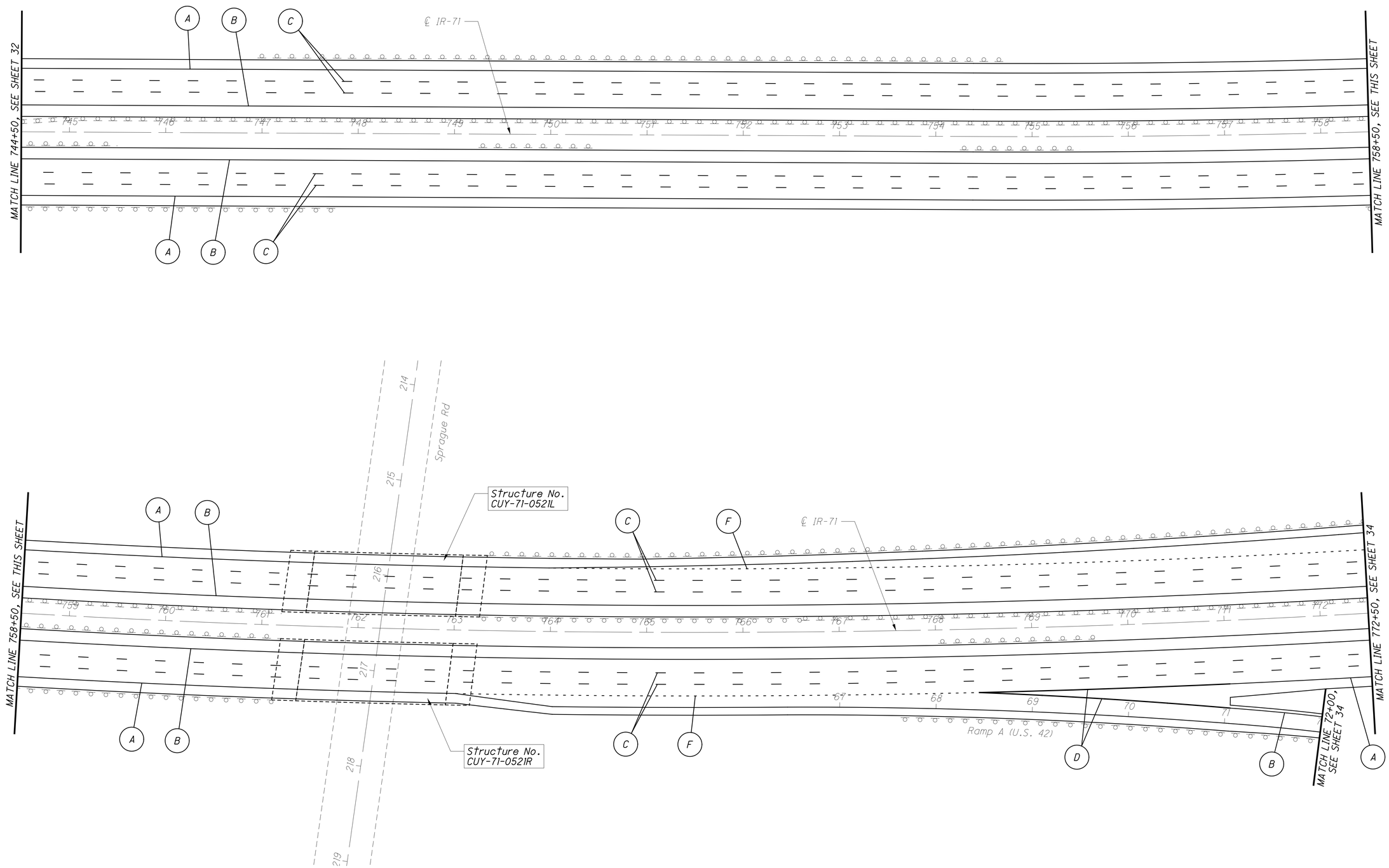

For Pavement Marking Legend, See Sheet 21

HORIZONTAL SCALE IN FEET
0 25 50 100

CALCULATED DAB
CHECKED EMK

GENERAL PLAN SHEET
IR-71, STA. 744+50 TO STA. 772+50

CUY-71-0.00

I:\PROJECTS\CUY\85508\Design\Roadway\Sheets\85508GP013.dgn 14-DEC-2015 1:21PM dbrauer

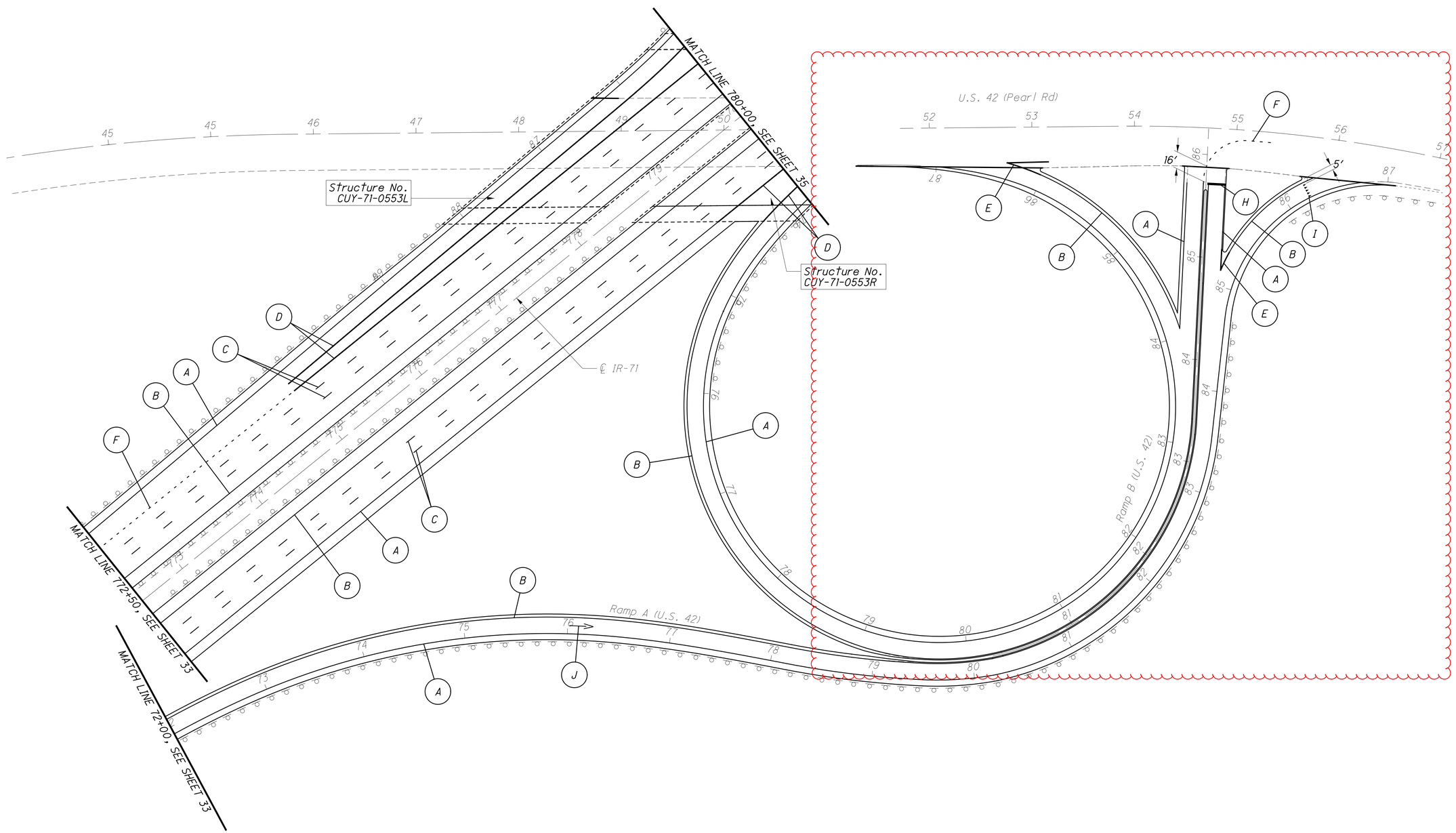

For Pavement Marking Legend, See Sheet 21

HORIZONTAL SCALE IN FEET
0 25 50 100

CALCULATED DAB
CHECKED EMK

GENERAL PLAN SHEET
IR-71, STA. 772+50 TO STA. 780+00

CUY-71-0.00

I:\PROJECTS\CUY\85508\Design\Roadway\Sheets\85508GP014.dgn 14-DEC-2015 1:21PM dbrauer

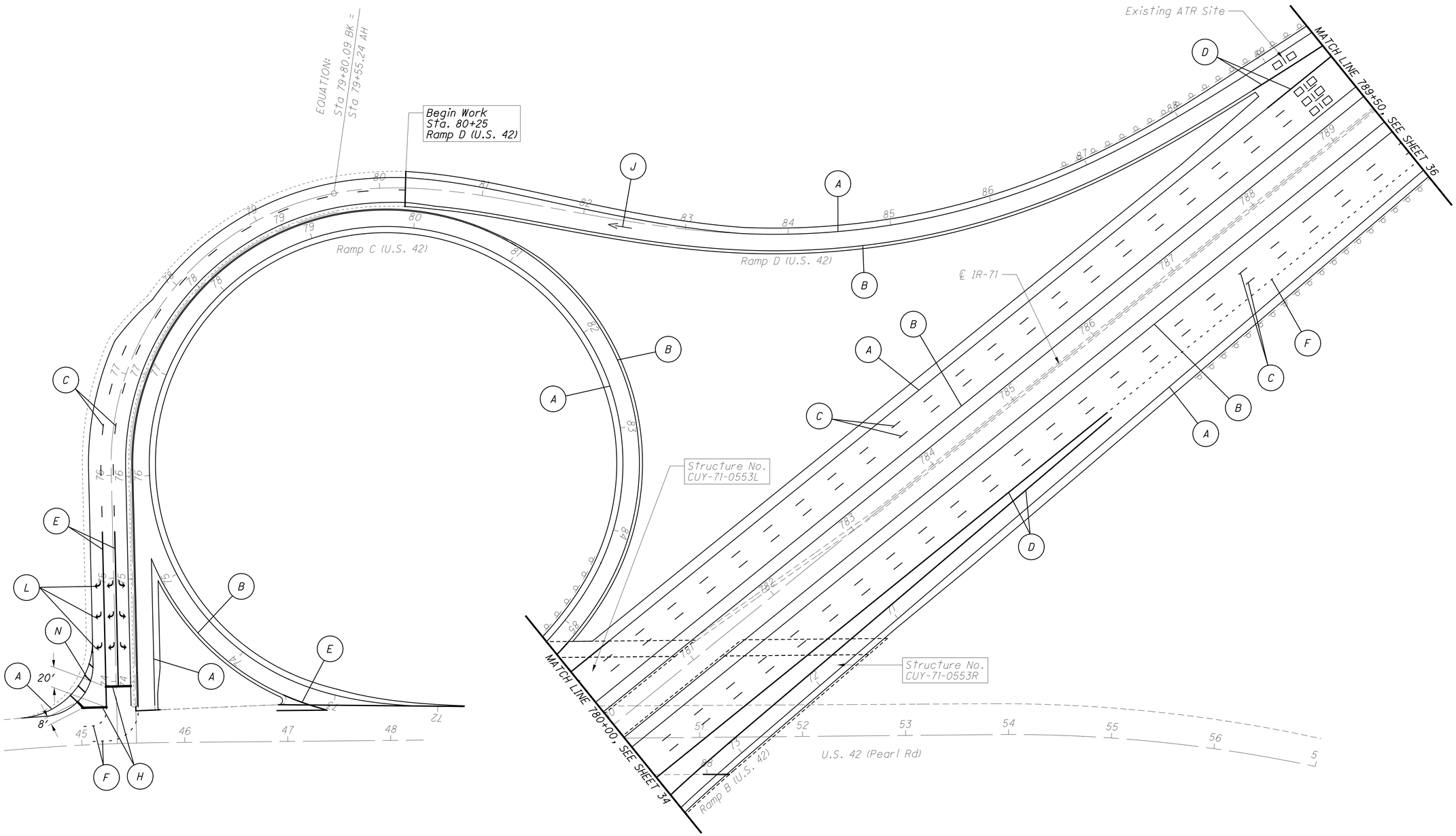

For Pavement Marking Legend, See Sheet 21

HORIZONTAL SCALE IN FEET
0 25 50 100

CALCULATED DAB
CHECKED EMK

GENERAL PLAN SHEET
IR-71, STA. 780+00 TO STA. 789+50

CUY-71-0.00

I:\PROJECTS\CUY\85508\Design\Roadway\Sheets\85508GP015.dgn 14-DEC-2015 1:21PM dbrauer

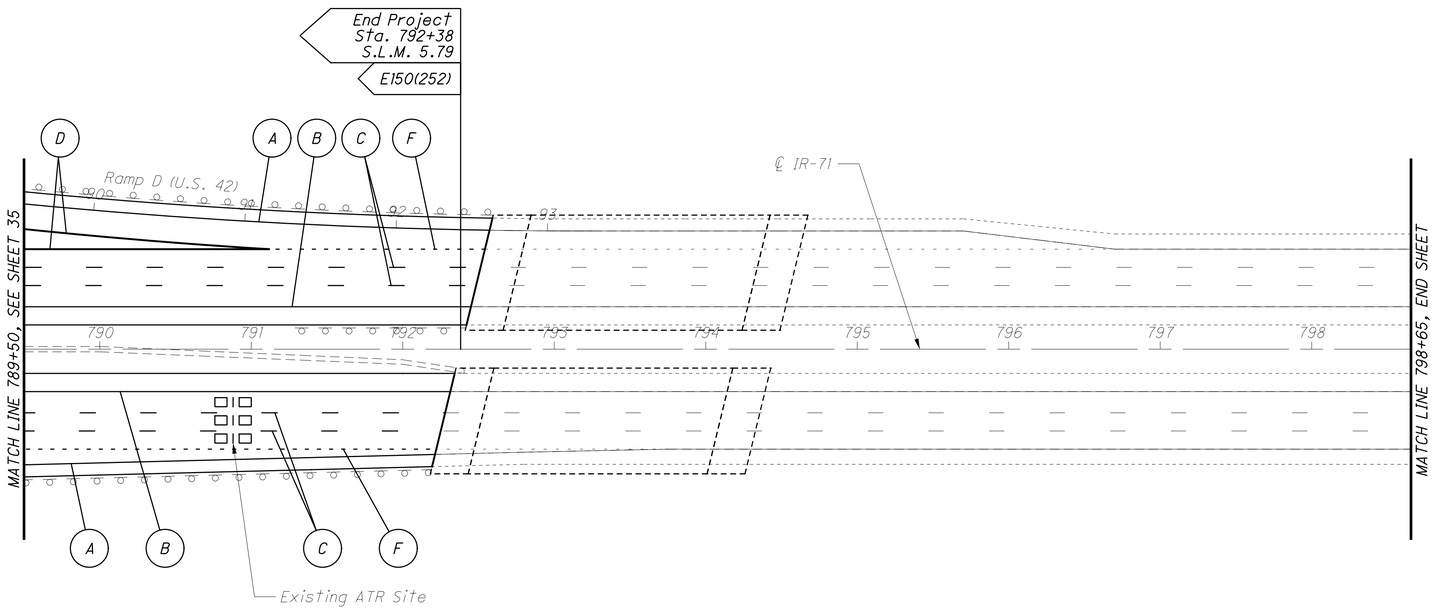

For Pavement Marking Legend, See Sheet 21

HORIZONTAL SCALE IN FEET
0 25 50 100

CALCULATED DAB
CHECKED EMK

GENERAL PLAN SHEET
IR-71, STA. 789+50 TO STA. 798+65

CUY-71-0.00

I:\PROJECTS\CUY\85508\Design\Roadway\Sheets\85508GP016.dgn 14-DEC-2015 1:21PM dbrauer

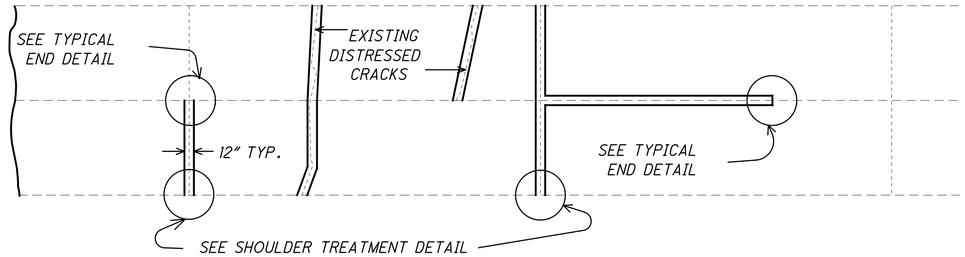

PARTIAL DEPTH JOINT OR CRACK REPAIR

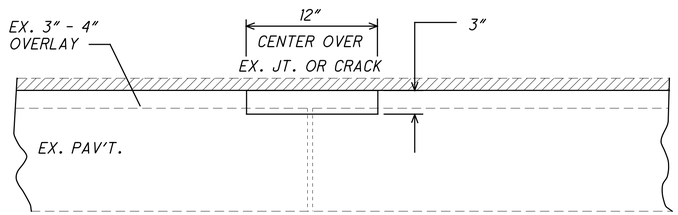

ITEM 251 - PARTIAL DEPTH PAV'T REPAIR

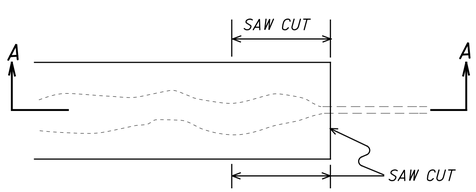

DISTRESSED JOINT-PLAN VIEW

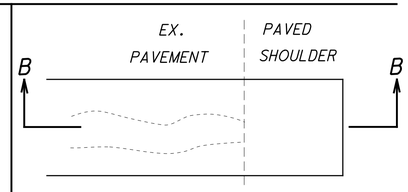

DISTRESSED JOINT-PLAN VIEW

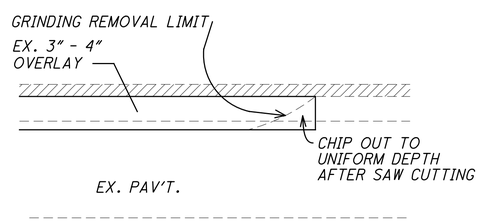

SECTION A-A

TYPICAL END DETAIL

NO SEPARATE PAYMENT WILL BE MADE FOR THESE SAW CUTS

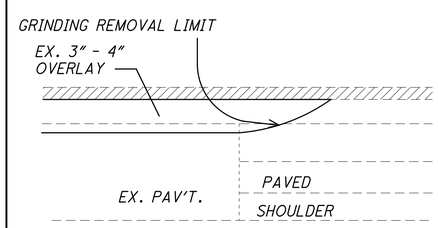

SECTION B-B

SHOULDER TREATMENT DETAIL

MEASURED QUANTITY SHALL NOT INCLUDE THE PAVED SHOULDER AREA

SEE GENERAL NOTES ON SHEET NO. 9 FOR ADDITIONAL INFORMATION.

✳ - STRAIGHT GRADE - THE ASPHALT TRANSITIONS SHALL BE CONSIDERED UNACCEPTABLE IF THE FINAL GRADE VARIES FROM THE DESIRED STRAIGHT GRADE BY GREATER THAN 3/8 INCHES ANYWHERE THROUGHOUT THE LENGTH OF THE TRANSITION. THIS TOLERANCE IS REDUCED TO 1/4 INCH FOR THE FIRST 5 FEET ADJACENT TO AN EXPANSION JOINT.

PAYMENT WILL BE HELD FOR 1 C.Y. OF ASPHALT PER FOOT OF PAVING WIDTH AT EACH TRANSITION LOCATION UNTIL THE TRANSITION IS SHOWN TO BE ACCEPTABLE. THE CONTRACTOR IS TO PROVIDE THE NECESSARY SURVEY WORK TO SHOW THAT THESE STRAIGHT GRADES ARE MET ALONG EACH EDGE LINE AND LANE LINE.

ALL UNACCEPTABLE ASPHALT TRANSITIONS SHALL BE REPAIRED AT THE CONTRACTORS EXPENSE. THE REPAIR METHOD SHALL BE AS FOLLOWS:

A. DETERMINE FINAL GRADE LINE BY EXTENDING A STRAIGHT LINE FROM THE TOP OF THE BRIDGE END DAM JOINT TO A POINT 75' AWAY ON THE TOP OF RESURFACING.

B. REMOVE ASPHALT CONCRETE EXACTLY 1.5" BELOW THE FINAL GRADE.

C. PLACE ITEM 407 - TACK COAT, TRACKLESS TACK AND ITEM 806 - ASPHALT CONCRETE, TO DESIRED GRADE.

D. SURVEY TRANSITION TO VERIFY THAT THE REPAIR IS WITHIN THE ALLOWABLE TOLERANCE.

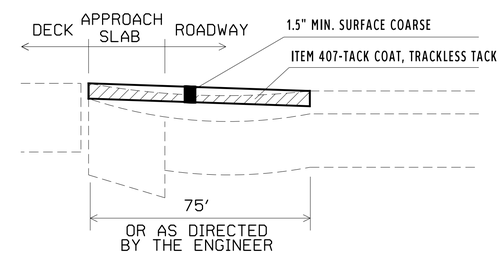

CORRECTION OF UNACCEPTABLE ASPHALT TRANSITIONS

CALCULATED EMK
CHECKED LDH

PAVEMENT DETAILS

CUY-71-0.00

I:\PROJECTS\CUY\85508\Design\Roadway\Sheets\85508GA001.dgn 14-DEC-2015 1:21PM dbrauer

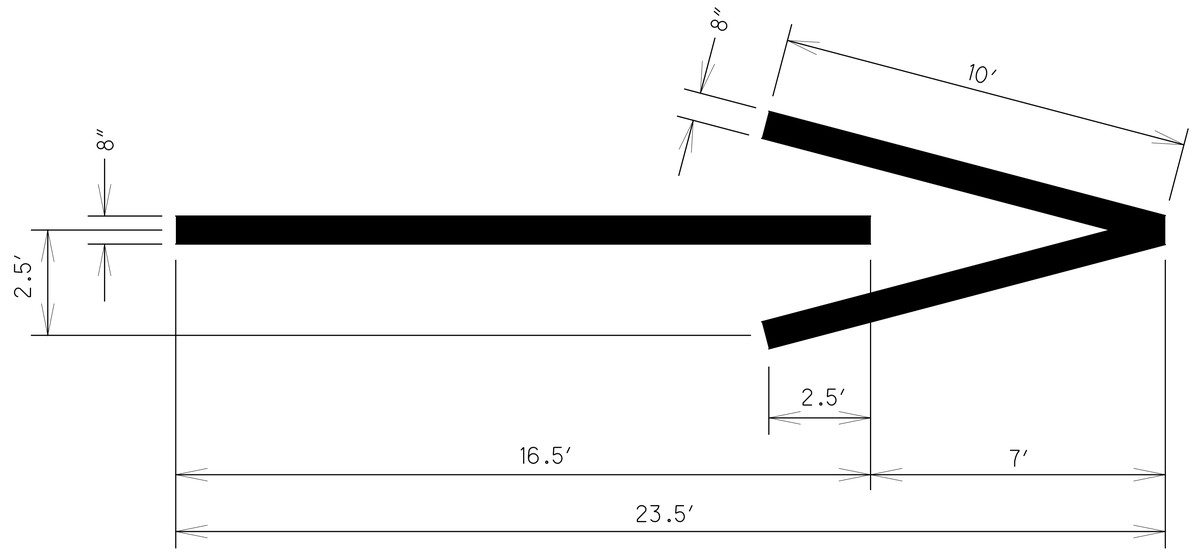

WRONG WAY ARROW

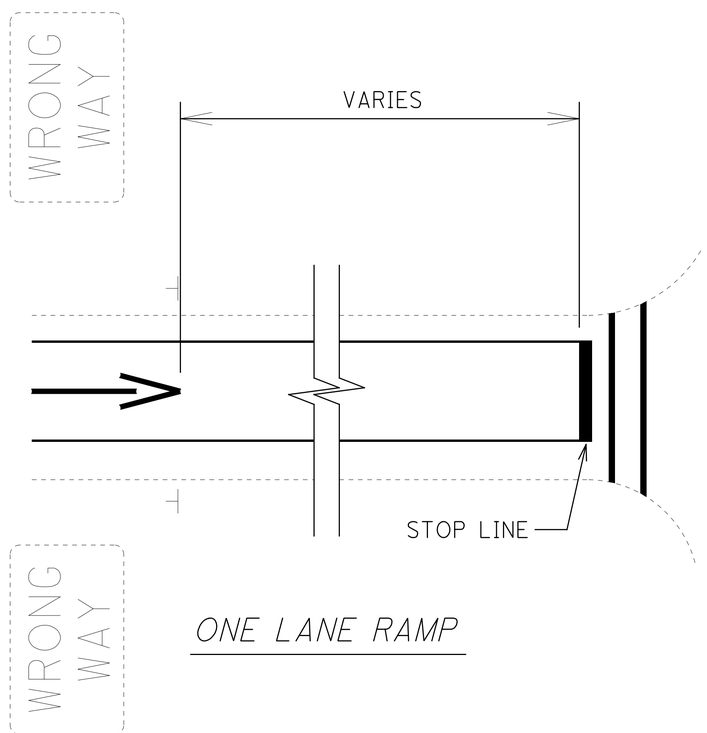

ONE LANE RAMP

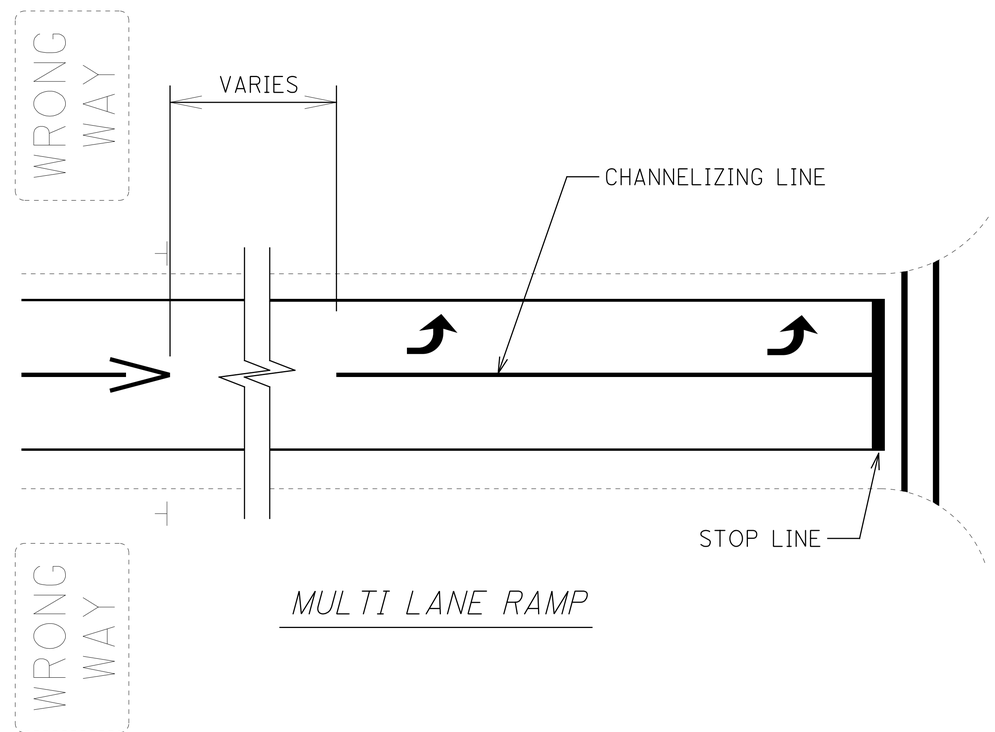

MULTI LANE RAMP

CALCULATED DAB
CHECKED EMK

PAVEMENT MARKING DETAILS
WRONG WAY ARROW

CUY-71-0.00

I:\PROJECTS\CUY\85508\Design\Roadway\Sheets\85508TM001.dgn 14-DEC-2015 1:21PM dbrauer