STATE OF OHIO
DEPARTMENT OF TRANSPORTATION

DEL-229-6.84

VILLAGE OF ASHLEY
OXFORD TOWNSHIP
DELAWARE COUNTY

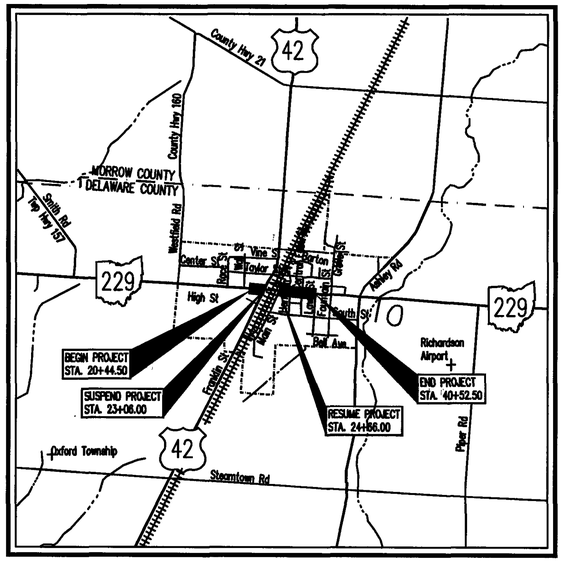

LOCATION MAP

LATITUDE: N40°24'32" LONGITUDE: W82°57'20"

SCALE IN MILES

0 2000 4000 6000 8000

N

PORTION TO BE IMPROVED
STATE & FEDERAL ROUTES
OTHER ROADS

DESIGN DESIGNATION

CURRENT ADT (2003)	3,540
DESIGN YEAR ADT (2023)	4,920
DESIGN HOURLY VOLUME (2023)	492
DIRECTIONAL DISTRIBUTION	50%
TRUCKS (24 HOUR B&C)	510
DESIGN SPEED	35mph
LEGAL SPEED	25mph

DESIGN FUNCTIONAL CLASSIFICATION – RURAL MAJOR COLLECTOR

DESIGN EXCEPTIONS

DESIGN FEATURE	APPROVAL DATES	SHEET NUMBERS
NONE		

UNDERGROUND UTILITIES
TWO WORKING DAYS
BEFORE YOU DIG
CALL 1-800-362-2764 (TOLL FREE)
OHIO UTILITIES PROTECTION SERVICE
NON-MEMBERS
MUST BE CALLED DIRECTLY

Plan Prepared By:

FLOYD BROWNE ASSOCIATES, INC.
FBA
1065 Fairington Drive
Sidney, Ohio
937-492-7636
e-mail: fba@fbainc.com

ENGINEER'S SEAL:

STATE OF OHIO
JOY FRANCES RODENBURGH
E-67064
REGISTERED
PROFESSIONAL ENGINEER

SIGNED: Joy Francis Rodenburgh
DATE: 8-19-04

INDEX OF SHEETS:

TITLE SHEET	1
SCHEMATIC PLAN	2
TYPICAL SECTIONS	3
GENERAL NOTES	4
MAINTENANCE OF TRAFFIC PLAN	5–11
GENERAL SUMMARY	12–12A
CALCULATIONS	13
DEMOLITION PLANS	14–18
ROADWAY PLAN AND PROFILES	19–26
MEZZANINE PLANS	27–29
ROADWAY CROSS SECTIONS	30–32
DETAILS	33–33A,B,C
TRAFFIC CONTROL PLANS	34–35
LIGHTING PLANS	36–37
RIGHT-OF-WAYS PLANS	38–43

STANDARD CONSTRUCTION DRAWINGS

								SPECIAL PROVISIONS	SUPPLEMENTAL SPECIFICATIONS	
BP-3.1	7-16-04								802	7-19-02
BP-4.1	7-16-04	MT-101.60	10-18-02						832	4-17-04
BP-5.1	7-28-00	MT-105.10	10-18-02						833	2-12-03
BP-7.1	7-28-00	MT-105.11	10-18-02						908	4-18-03
RM-2.1	4-18-03	MT-110.30	10-18-02							
CB-1.1	7-19-02									
MH-1.2	7-19-02									
DM-1.4	7-19-02									
TC-41.20	1-19-01									
TC-52.10	4-20-01									
TC-52.20	4-20-01									
TC-71.10	4-19-02									
TC-73.10	1-19-01									

PROJECT DESCRIPTION

Enhancement of streetscape along State Route 229 (High Street) in the Village of Ashley. This work will consist of replacement of existing walks and curb in the down-town commercial area. Walks will be replaced using decorative brick, decorative lighting and made handicap accessible. Outside of the downtown commercial area, existing curb, drive aprons, and minor sidewalk improvements will be constructed.

2002 SPECIFICATIONS

The standard specifications of the State of Ohio, Department of Transportation, including changes and supplemental specifications listed in the proposal shall govern this improvement.

PROJECT EARTH DISTURBING ACTIVITIES

Project Earth Disturbed Area = 0.149 ac.
Estimated Contractor Earth Distrubed Area = N/A*
Notice of Intent Earth Distrubed Area = N/A*

* This project meets the definition of a "Maintenance" project as described in the Location and Design Manual, Volume 2, Section 1112.2.

I hereby approve these plans and declare that the making of this improvement will not require the closing to traffic of the highway except for drives as described on sheet 5 and as shown on sheets 6–11 and that provisions for the maintenance and safety of traffic will be as set forth on the plans and estimates.

Certified By:
Bruce S. Bish Date 10-15-2004
Ohio Department of Transportation

Approved Wayne D. Lockhart
Date 8-26 Mayor, Village of Ashley

Approved Jack R. Marchbanks
Date 10/15/04 District Deputy Director

Approved Gordon Proctor
Date 11-12-04 Director, Department of Transportation

FEDERAL PROJECT NO.	STATE JOB NO.	PID NO.	CONSTRUCTION PROJECT NO.	RAILROAD INVOLVEMENT
G020(095)		21035		NONE

DEL-229-6.84

DEL - SR 229-6.84
050013 PID - 21035
Dist 6 1/12/2005
Jul 29, 2004 3:12:58 PM G:\FBA\Ashley 9623\9623-09\Drawings\FINAL CDs\TITLE.dwg

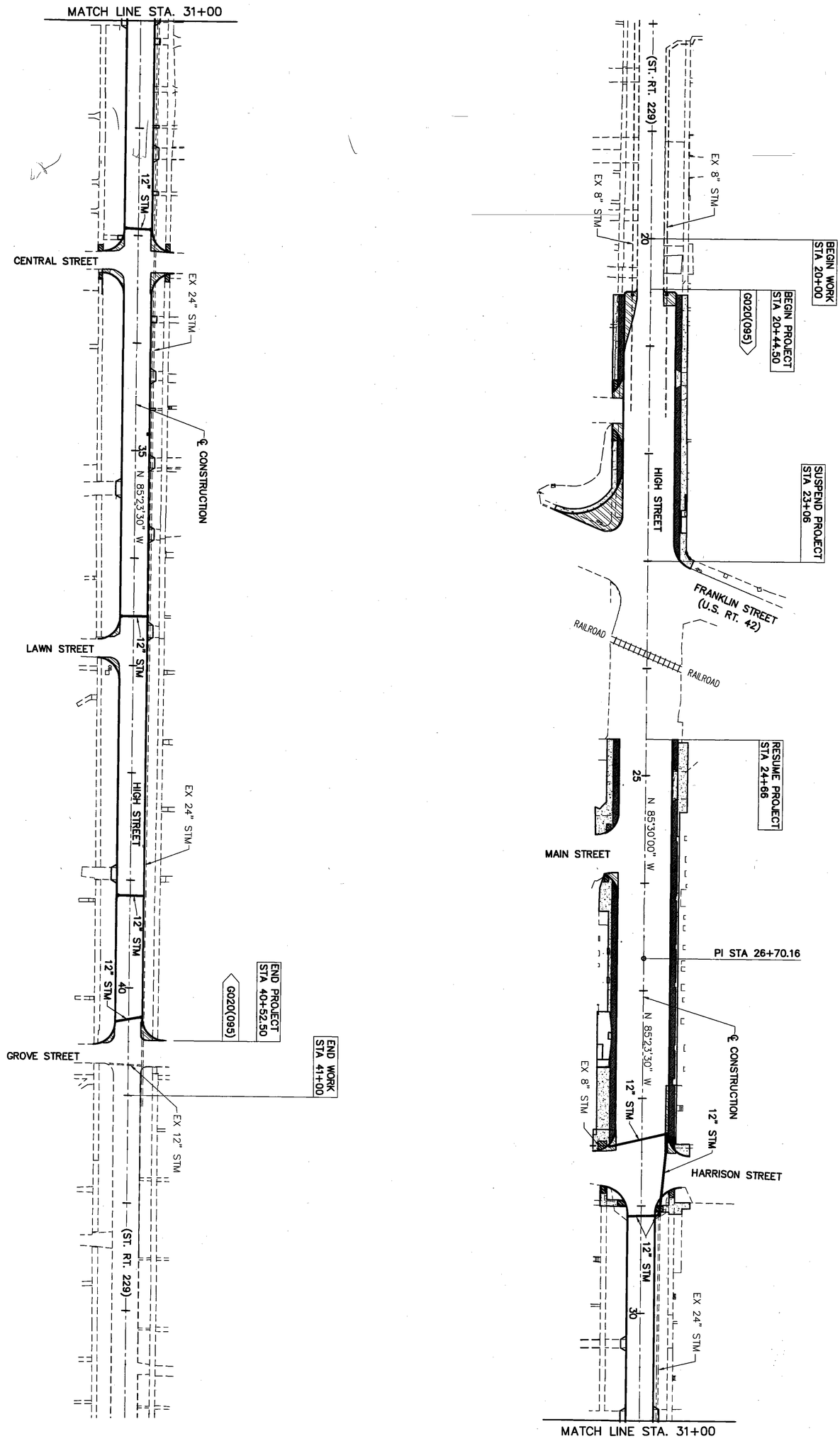

2 / 43	DEL-229-6.84	SCHEMATIC PLAN	P.I.D. NO. 21035	STATE JOB NO.	FEDERAL PROJECT NO. G020(095)	0 25 50 100 HORIZONTAL SCALE IN FEET

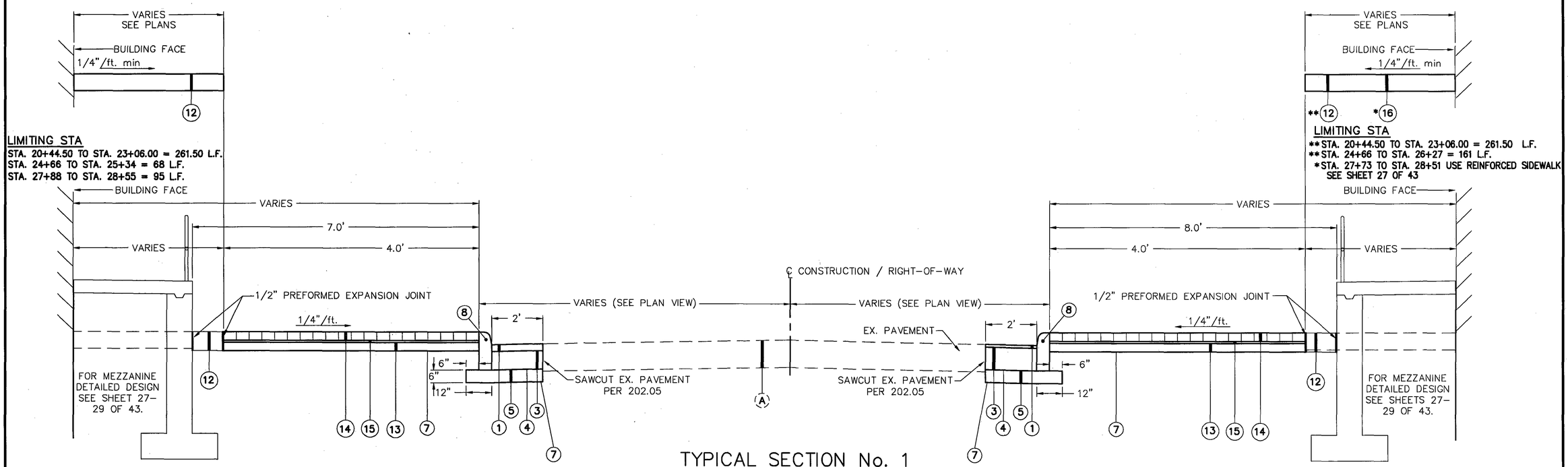

TYPICAL SECTION No. 1
(DOWNTOWN COMMERCIAL AREA)

LIMITING STA

STATION 20+44.50 TO STATION 23+06.00 = 261.50 L.F.
STATION 24+66.00 TO STATION 28+82.63 = 416.63 L.F.

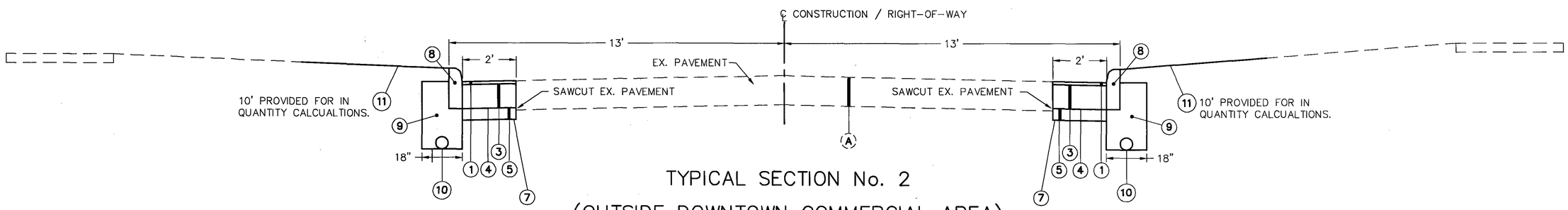

TYPICAL SECTION No. 2
(OUTSIDE DOWNTOWN COMMERCIAL AREA)

LIMITING STA

STATION 28+82.63 TO STATION 40+52.50 = 1,169.87 L.F.

LEGEND:

1. ITEM 448, 1 1/2" ASPHALT CONCRETE SURFACE COURSE, TYPE 1, PG64-22
2. NOT USED
3. ITEM 301, 10 1/2" ASPHALT CONCRETE BASE, PG64-22
4. ITEM 408, PRIME COAT (0.40 GAL/SQ.YD.)
5. ITEM 304, 6" AGGREGATE BASE
6. NOT USED
7. ITEM 204, SUBGRADE COMPACTION
8. ITEM 609, TYPE 6 CURB, AS PER PLAN
9. ITEM 304, 41" AGGREGATE BASE
10. ITEM 603, 6" CONDUIT, TYPE E, 707.32, AS PER PLAN
11. ITEM 659, SEEDING AND MULCHING, CLASS 1
12. ITEM 608, 4" CONCRETE WALK
13. ITEM 304, 4" AGGREGATE BASE
14. ITEM 608, WALKWAY MISC.: BRICK WALK
15. ITEM 608, WALKWAY MISC.: 2" LIMESTONE SCREENINGS, 703.10
16. ITEM 608, 6" CONCRETE WALK, AS PER PLAN

(A) EXISTING PAVEMENT △

△ EX. PAVEMENT PER DELAWARE COUNTY S.H. 587 SEC. ASHLEY (PT.) DATED 1946:
STA 20+44.50± TO 29+00±
ASPHALT CONC. ON GRAVEL BASE
STA 29+00± TO 40+52.50±
ASPHALT CONC. ON BRICK, SAND CUSHION AND GRAVEL BASE

SYMBOL LEGEND:

- ITEM 608, 4" HARRINGBONE PATTERN BRICK WALK
- ITEM 608, 4" CONCRETE WALK
- CONCRETE DRIVE
  ITEM 451, 6" REINFORCED CONC. PAVEMENT
- FULL DEPTH PAVEMENT REPLACEMENT
  ITEM 448, 1½" ASPHALT CONC. SURFACE, TYPE 1, PG64-22
  ITEM 301 10½" ASPHALT CONC. BASE, PG64-22
  ITEM 408, PRIME COAT (0.40 GAL/CU.YD.)
  ITEM 304, 6" AGGREGATE BASE
  ITEM 203, SUBGRADE COMPACTION
- ITEM 608, CURB RAMP

TYPICAL SECTION

DEL-229-6.84

Jul 29, 2004 3:08:20 PM G:\FBA\Ashley 8623\8623-03\Drawings\FINAL CDs\TYPICALS.dwg

ELEVATION DATUM

ALL ELEVATIONS ARE BASED ON U.S.G.S. DATUM.

SPECIFICATIONS

OHIO DEPARTMENT OF TRANSPORTATION CONSTRUCTION AND MATERIAL SPECIFICATIONS (ODOT CMS) DATED JANUARY 1, 2002, SHALL GOVERN UNLESS OTHERWISE MODIFIED HEREIN. OHIO DEPARTMENT OF TRANSPORTATION CONSTRUCTION INSPECTION MANUAL OF PROCEDURES (ODOT CIMP) DATED 2002 SHALL GOVERN FIELD OPERATIONS AS NOTED HEREIN. IN ALL CASES THE MORE STRINGENT REQUIREMENT SHALL GOVERN IF CONFLICTS ARISE.

UNDERGROUND UTILITIES

UNDERGROUND UTILITY LOCATIONS SHOWN ON THE PLANS WERE OBTAINED FROM UTILITY OWNERS AS REQUIRED BY SECTION 153.64, OHIO REVISED CODE. EXISTING UTILITIES ARE SHOWN IN THEIR APPROXIMATE LOCATIONS ACCORDING TO AVAILABLE DATE. THE CONTRACTOR WILL BE RESPONSIBLE FOR FIELD LOCATION OF ALL EXISITNG UTILITIES PRIOR TO CONSTRUCTION AND WILL BE RESPONSIBLE FOR ANY DAMAGE DONE TO THEM. THE CONTRACTOR SHALL CONTACT OHIO UTILITIES PROTECTION SERVICE (1-800-362-2764) 48 HOURS PRIOR TO CONSTRUCTION.

UTILITIES

LISTED BELOW ARE ALL UTILITIES LOCATED WITHIN THE PROJECT CONSTRUCTION LIMITS TOGETHER WITH THEIR RESPECTIVE OWNERS:

ASHLEY SEWER & WATER
VILLAGE HALL
101 E. HIGH ST.
ASHLEY, OHIO 43003
(740) 747-2889

TIME WARNER COMMUNICATIONS
1266 DUBLIN ROAD
COLUMBUS, OHIO 43215
(614) 481-5263

OHIO EDISON
1040 S. PROSPECT ST.
MARION, OHIO 43302
(740) 382-7120

COLUMBIA GAS OF OHIO, INC.
1120 WEST FOURTH STREET
MANSFIELD, OHIO 44906
(419) 528-1137

VERIZON
550 LEADER STREET
MARION, OHIO 43302
(740) 383-0551

UTILITY INTERFERENCE

THE CONTRACTOR SHALL NOTIFY THE UTILITY COMPANY INVOLVED IF CONFLICTS OCCUR BETWEEN PROPOSED CONSTRUCTION AND EXISTING UTILITIES. ALL WORK FOR PUBLIC OR PRIVATE UTILITIES WILL BE DONE AT THE EXPENSE OF EACH UTILITY OWNER, UNLESS OTHERWISE NOTED ON THESE PLANS. THE CONTRACTOR SHALL NOTIFIY ALL PUBLIC SERVICE CORPORATIONS (PSC) OWNING FACILITIES WITHIN THE PROJECT CONSTRUCTION AREA AT LEAST (7) SEVEN DAYS BEFORE BREAKING GROUND. THIS NOTIFICATION WILL EXTEND TO ANY AFFECTED PSC, WHETHER SHOWN OR NOT.

OWNER AND ENGINEER

THE TERM "OWNER" AS USED HEREIN SHALL APPLY TO THE VILLAGE OF ASHLEY.

THE TERM "ENGINEER" AS USED HEREIN SHALL APPLY TO THE OHIO DEPARTMENT OF TRANSPORTATION, PROVIDING CONSTRUCTION PHASE SERVICES.

CONSTRUCTION MEANS AND METHODS

THE CONTRACTOR IS RESPONSIBLE FOR ALL CONSTRUCTION MEANS AND METHODS. THIS WILL INCLUDE, BUT NOT LIMITED TO:

- PROTECTION OF EXISTING UTILITIES.
- PROTECTION OF THE WORK AND MATERIALS TO BE INCORPORATED INTO THE WORK.
- CONTROL OF DAMAGES TO EXISTING FEATURES.
- DEFINITION AND IMPLEMENTATION OF ALL JOB SITE SAFETY REQUIREMENTS.
- TESTING TO ENSURE QUALITY CONTROL.
- MAINTENANCE OF UNINTERRUPTED PEDESTRIAN AND VEHICULAR TRAFFIC.
- SITE CLEANUP AND PROPER DISPOSAL OF ALL CONSTRUCTION DEBRIS.

MONUMENTS, PROPERTY CORNERS AND BENCH MARKS

THE CONTRACTOR SHALL PRESERVE AND PROTECT ALL HORIZONTAL AND VERTICAL CONTROL POINTS. ALL DAMAGED OR LOST SURVEY MONUMENTATION WILL BE REPLACED AT THE CONTRACTOR'S EXPENSE.

CONTINGENCY QUANTITIES

THE CONTRACTOR SHALL NOT ORDER MATERIALS OR PERFORM WORK FOR ITEMS DESIGNATED BY PLAN NOTE TO BE USED "AS DIRECTED BY THE ENGINEER" UNLESS AUTHORIZED BY THE ENGINEER. THE ACTUAL WORK LOCATIONS AND QUANTITIES USED FOR SUCH ITEMS SHALL BE INCORPORATED INTO THE FINAL CHANGE ORDER GOVERNING COMPLETION OF THIS PROJECT.

CONSTRUCTION NOISE

ACTIVITIES AND LAND USE ADJACENT TO THIS PROJECT MAY BE AFFECTED BY CONSTRUCTION NOISE. IN ORDER TO MINIMIZE ANY ADVERSE CONSTRUCTION NOISE IMPACTS, ANY POWER-OPERATED CONSTRUCTION-TYPE DEVICE SHALL NOT BE OPERATED BETWEEN THE HOURS OF 9:00 PM AND 7:00 AM. IN ADDITION, ANY SUCH DEVICE SHALL NOT BE OPERATED AT ANY TIME IN SUCH A MANNER THAT THE NOISE CREATED SUBSTANTIALLY EXCEEDS THE NOISE CUSTOMARILY AND NECESSARILY ATTENDANT TO THE REASONABLE AND EFFICIENT PERFORMANCE OF SUCH EQUIPMENT.

WORK LIMITS

THE WORK LIMITS SHOWN ON THESE PLANS ARE FOR PHYSICAL CONSTRUCTION ONLY. THE INSTALLATION AND OPERATION OF ALL TEMPORARY TRAFFIC CONTROL AND TEMPORARY TRAFFIC CONTROL DEVICES REQUIRED BY THESE PLANS SHALL BE PROVIDED BY THE CONTRACTOR WHETHER INSIDE OR OUTSIDE THESE WORK LIMITS.

PAVEMENT RESTORATION FOR DRAINAGE STRUCTURE INSTALLATIONS

THE FOLLOWING QUANTITY HAS BEEN PROVIDED FOR PAVEMENT RESTORATION FOLLOWING INSTALLATION OF ITEM 604 DRAINAGE STRUCTURES.

ITEM 301 ASPHALT CONCRETE BASE, PG64-22 40 CU.YDS.

THE ABOVE QUANTITY IS BASED ON A 301 THICKNESS OF 18 INCHES AND A WIDTH OF TWO FEET AROUND THE PERIMETER OF THE DRAINAGE STRUCTURE.

PROVIDE ANY MATERIALS USED OUTSIDE THE LIMITS STATED ABOVE AT NO ADDITIONAL COST.

CONTROL OF SPILLS

SPILLS OF FUEL, OILS, CHEMICALS OR OTHER MATERIALS WHICH COULD POSE A THREAT TO THE GROUNDWATER SHALL BE CLEANED UP IMMEDIATELY BY THE CONTRACTOR. IF THE SPILL IS A REPORTABLE AMOUNT, THE CONTRACTOR SHOULD CONTACT THE VILLAGE OF ASHLEY FIRE DEPARTMENT FOR CLEAN-UP OF THE SPILL. USE OF CHEMICALS AND REFUELING ACTIVITIES SHALL BE CAREFULLY CONTROLLED TO MINIMIZE THE POTENTIAL FOR SPILLS.

ITEM 608, WALKWAY MISC.: 1½" BLACK ALUMINUM TUBULAR RAILING, AS PER PLAN

THIS WORK CONSISTS OF FURNISHING, CONSTRUCTING, COATING, AND ERECTING THE TYPE OF RAILING SPECIFIED. THIS WORK ALSO CONSISTS OF PROVIDING AND GALVANIZING STRUCTURAL POSTS, ANCHORS AND CONNECTIONS.

CONTRACTOR SHALL USE AN ALUMINUM ALLEY CONFORMING TO 711.20 FOR ALUMINUM RAILING.

THE RAILING SHALL BE BLACK IN COLOR. THE COLOR SHALL BE FUSED INTO MATERIAL AND NOT PAINTED.

THE RAILING SHALL BE MEASURED BY THE NUMBER OF FEET, INCLUDING END POSTS.

ITEM 608, WALKWAY MISC.: EXTERIOR BASEMENT ACCESS REMOVAL, AS PER PLAN

THE EXTERIOR BASEMENT ACCESS IS LOCATED AT STA. 26+75 LEFT. THIS ACCESS IS TO BE FILLED IN AND ELIMINATED PER DETAIL ON SHEET 27.

PAYMENT FOR ITEM 608, WALKWAY, MISC.: EXTERIOR BASEMENT ACCESS REMOVAL, AS PER PLAN SHALL BE PAID AT THE CONTRACT EACH BID PRICE AND SHALL INCLUDE ALL LABOR, MATERIAL AND EQUIPMENT REQUIRED TO COMPLETE THIS ITEM OF WORK.

ITEM 659, SEEDING AND MULCHING

SEEDING AND MULCHING SHALL BE APPLIED TO ALL AREAS OF EXPOSED SOIL BETWEEN THE RIGHT-OF-WAY LINES, AND WITHIN THE CONSTRUCTION LIMITS FOR AREAS OUTSIDE THE RIGHT-OF- WAY LINES COVERED BY WORK AGREEMENT OR SLOPE EASEMENT. QUANTITY CALCULATIONS FOR SEEDING AND MULCHING ARE BASED ON THESE LIMITS.

ITEM SPECIAL, 690 CONCRETE CLASS C, 499, HIGH EARLY STRENGTH, AS PER PLAN

MEZZANINE WALL AND WALKWAY TO BE CONSTRUCTED USING HIGH EARLY STRENGTH CONCRETE, AND LOW STRENGTH MORTAR BACKFILL PER DRAWING DETAILS. HIGH EARLY STRENGTH CONCRETE TO REACH MODULUS OF RUPTURE OF 500 PSI WITHIN THREE (3) DAYS. CONTRACTOR IS TO MAINTAIN VEHICULAR AND PEDESTRIAN TRAFFIC AT ALL TIMES. ACCESS TO ALL BUSINESSES IS TO BE PROVIDED AT ALL TIMES. CONTRACTOR SHOULD BE ADVISED OF THESE REQUIREMENTS AND PLAN CONSTRUCTION ACCORDINGLY.

ALL REINFORCING BAR AND SUPPORT IRON USED TO COMPLETE THIS PORTION OF WORK SHALL BE INCLUDED IN THE UNIT PRICE FOR ITEM SPECIAL 690, CLASS C CONCRETE, 511.07, AS PER PLAN.

ITEM SPECIAL - 690 MAILBOX REMOVED AND RESET, AS PER PLAN

THIS WORK SHALL CONSIST OF FURNISHING AND ERECTING MAILBOX SUPPORTS AND ANY ASSOCIATED MOUNTING HARDWARE IN ACCORDANCE WITH PLAN DETAILS, AND ATTACHING AN OWNER-SUPPLIED MAILBOX AT LOCATIONS SPECIFIED IN THE PLAN, OR OTHERWISE ESTABLISHED BY THE ENGINEER.

WOOD POSTS SHALL BE NOMINAL 4" BY 4" [100 mm BY 100 mm] SQUARE OR 4 ½" [115 mm] DIAMETER ROUND, AND CONFORM TO 710.14. STEEL POSTS SHALL BE NOMINAL PIPE SIZE 2" I.D. [60.3 mm] O.D. , AND CONFORM TO AASHTO M 181.

HARDWARE (PLATES, SCREWS, BOLTS, ETC.) SHALL BE COMMERCIAL-GRADE GALVANIZED STEEL.

POSTS SHALL BE SET PER THE FIRST PARAGRAPH OF 606.03, AND SHALL IN NO INSTANCE BE ENCASED IN CONCRETE. SUPPORT HARDWARE SHALL ACCOMMODATE EITHER A SINGLE OR A DOUBLE MAILBOX INSTALLATION, AND NO MORE THAN TWO BOXES MAY BE MOUNTED ON A SINGLE POST.

THE MAILBOX SHALL BE SECURELY AND NEATLY ATTACHED BY THE CONTRACTOR TO THE NEW SUPPORT. THE CONTRACTOR SHALL FURNISH ALL NECESSARY ATTACHMENT HARDWARE (NUTS, BOLTS, PLATES, SPACERS, AND WASHERS) AS NECESSARY TO ACCOMMODATE THE COMPLETE INSTALLATION. IN THE ABSENCE OF A NEW BOX SUPPLIED BY THE OWNER, THE CONTRACTOR SHALL SALVAGE THE EXISTING BOX AND PLACE IT ON THE NEW SUPPORT. DUE CARE SHALL BE EXERCISED IN SUCH AN OPERATION, AND THE CONTRACTOR SHALL BE RESPONSIBLE FOR REPAIRING OR REPLACING ANY BOX DAMAGED BY IMPROPER HANDLING ON HIS PART, AS JUDGED AND DIRECTED BY THE ENGINEER. THE CONTRACTOR SHALL BE RESPONSIBLE FOR COORDINATING WITH THE LOCAL POST MASTER REGARDING THE TIMING OF THE MOVEMENT OF ANY MAILBOX TO A NEW LOCATION.

PAYMENT UNDER THIS ITEM SHALL BE LIMITED TO FINAL PERMANENT INSTALLATIONS. TEMPORARY INSTALLATIONS SHALL BE IN ACCORDANCE WITH 107.10. HOWEVER, THE SAME MATERIAL AND SIZE LIMITATIONS AS FOR PERMANENT INSTALLATIONS SHALL APPLY.

MAILBOX SUPPORTS, COMPLETE IN PLACE, WILL BE PAID FOR AT THE CONTRACT UNIT PRICE PER EACH, FOR ITEM SPECIAL MAILBOX SUPPORT SYSTEM, (SINGLE).

ITEM SPECIAL, 690 BENCHES, BIKE RACKS, TRASH CANS, AS PER PLAN

BENCHES, BIKE RACKS, AND TRASH CANS HAVE BEEN SELECTED FROM KEYSTONE RIDGE DESIGNS, INC., OF BUTLER, PA (1.800.284.8208). THE FOLLOWING MODEL NUMBERS HAVE BEEN PROVIDED FOR REFERENCE. CONTRACTOR MAY USE AN EQUAL SUBSTITUTE IF APPROVED BY VILLAGE.

ITEM SPECIAL, 690, MISC. BENCHES: (4 EACH)
ARTISAN FLAT BENCH AR16
McCONNELL FLAT BENCH MC16
OR EQUAL

ITEM SPECIAL, 690 BICYCLE RACK: (1 EACH)
READING BIKE RACK RE-104
READING BIKE RACK RE-108
OR EQUAL

ITEM SPECIAL, 680 TRASH RECEPTACLES: (4 EACH)
ARTISAN 32 GALLON LITTER RECEPTACLE AR3-32
McCONNELL LITTER RECEPTACLE MC3-32
OR EQUAL

LOCATION OF BENCHES AND RECEPTACLES TO BE DETERMINED BY VILLAGE UPON COMPLETION OF MEZZANINE AND SIDEWALK CONSTRUCTION. BIKE RACKS ARE TO BE PLACED NEAR WHIPPLES ICE CREAM STAND.

MEZZANINE

THE MEZZANINE IS TO BE CONSTRUCTED IN THE DOWNTOWN TO PROVIDE HANDICAPPED ACCESS TO LOCAL BUSINESSES. THE STATIONING FOR THE MEZZANINE IS 25+34 TO 27+88 LEFT AND 26+27 TO 27+73 RIGHT. FOR MEZZANINE DETAILS, SEE SHEETS 27-28.

PAYMENT FOR THE MEZZANINE IS BROKEN-DOWN AS FOLLOWS:

ITEM 608, WALKWAY MISC.: 1-1/2" BLACK ALUMINUM TUBULAR RAILING, AS PER PLAN

ITEM 613, LOW STRENGTH MORTAR BACKFILL

ITEM SPECIAL, ITEM 690, CLASS C CONCRETE 499. HIGH EARLY STRENGTH, AS PER PLAN. THIS ITEM IS USED TO CONSTRUCT THE FOUNDATION, MEZZANINE AND SIDEWALK. ALL REINFORCING STEEL AND SUPPORT IRON USED TO COMPLETE THE MEZZANINE AND WALK SHALL BE INCLUDED IN THE UNIT PRICE FOR THIS ITEM.

CHECKED JFR

GENERAL NOTES

DEL-229-6.84

Jul 29, 2004 3:05:46 PM G:\FBA\Ashley 8623\8623-00\Drawings\FINAL CDs\GEN NOTES.dwg

ITEM 614, MAINTAINING TRAFFIC (VEHICULAR)

A MINIMUM OF ONE LANE IN EACH DIRECTION SHALL BE MAINTAINED AT ALL TIMES BY USE OF THE EXISTING PAVEMENT EXCEPT AS NOTED IN THESE PLANS.

LENGTH AND DURATION OF LANE RESTRICTIONS SHALL BE AT THE APPROVAL OF THE ENGINEER. IT IS THE INTENT TO MINIMIZE THE IMPACT TO THE TRAVELING PUBLIC. LANE RESTRICTIONS OVER SEGMENTS OF THE PROJECT IN WHICH NO WORK IS ANTICIPATED WITHIN A REASONABLE TIME FRAME, AS DETERMINED BY THE ENGINEER, SHALL NOT BE PERMITTED. THE LEVEL OF UTILIZATION OF MAINTENANCE OF TRAFFIC DEVICES SHALL BE COMMENSURATE WITH WORK IN PROGRESS.

VEHICULAR ACCESS TO LOCAL BUSINESSES SHALL BE MAINTAINED AT ALL TIMES.

ALL TEMPORARY TRAFFIC CONTROL DEVICES SHALL BE FURNISHED, ERECTED, MAINTAINED, AND REMOVED BY THE CONTRACTOR IN ACCORDANCE WITH THE MOST CURRENT EDITION OF THE OHIO MANUAL OF UNIFORM TRAFFIC CONTROL DEVICES.

CONSTRUCTION OPERATIONS SHALL NOT BEGIN UNTIL ALL TEMPORARY TRAFFIC CONTROLS ARE IN PLACE AND APPROVED BY THE ENGINEER.

THE CONTRACTOR SHALL, PRIOR TO PLACING TEMPORARY MARKINGS, REMOVE ALL EXISTING MARKINGS VISIBLE TO THE TRAVELING PUBLIC DURING DAYLIGHT OR NIGHTTIME HOURS.

STEADY BURNING TYPE C LIGHTS SHALL BE REQUIRED ON ALL DRUMS IN USE AT NIGHT.

CONSTRUCTION SIGNS SHALL NOT CONFLICT WITH NOR OBSTRUCT EXISTING TRAFFIC CONTROL SIGNS. CONSTRUCTIONS SIGNS SHALL BE MOUNTED ON THEIR OWN POSTS.

THE CONTRACTOR SHALL BE RESPONSIBLE FOR THE REINSTALLATION AND/OR REPLACEMENT OF ALL PERMANENT TRAFFIC CONTROL DEVICES DAMAGED OR REMOVED DURING THE CONSTRUCTION. PERMANENT TRAFFIC CONTROL NO LONGER IN CONFLICT WITH TEMPORARY TRAFFIC CONTROL SHALL BE REPLACED IMMEDIATELY.

ALL PERMANENT TRAFFIC CONTROLS NOT IN CONFLICT WITH THE TEMPORARY TRAFFIC CONTROLS SHALL BE MAINTAINED THROUGHOUT THIS PROJECT BY THE CONTRACTOR. PERMANENT TRAFFIC CONTROLS MAY BE TEMPORARILY RELOCATED, AS APPROVED BY THE ENGINEER. THE CONTRACTOR SHALL ASSUME ALL LIABILITY FOR MISSING, DAMAGED, AND IMPROPERLY PLACED SIGNS.

INGRESS AND EGRESS SHALL BE MAINTAINED TO ALL RESIDENTIAL AND COMMERCIAL PROPERTIES. DRIVEWAY CLOSURES MAY BE NECESSARY TO ENABLE WORK ON OR IN FRONT OF A DRIVE. THE CONTRACTOR SHALL GIVE THE PROPERTY OWNER NOTIFICATION 48 HOURS IN ADVANCE OF CLOSURE. CLOSURE IS PERMITTED ONLY DURING WORK HOURS AND ACCESS MUST BE RETURNED AT THE END OF EACH WORKING DAY. PROPERTIES WITH MULTIPLE DRIVES MAY HAVE ONE OF THE DRIVES CLOSED AT A TIME, WHILE WORK IS PERFORMED IN THE AREA OF THE CLOSED DRIVE.

THE CONTRACTOR SHALL PROVIDE A CONTACT PERSON AND PHONE NUMBER TO ODOT FOR 24 HOUR MAINTENANCE SERVICE.

BACKFILL OR PLATE TRENCHES DURING NON-WORKING HOURS.

A COPY OF THE APPROVED MAINTENANCE OF TRAFFIC PLAN SHALL BE SUBMITTED FOR COORDINATION TO THE FIRE DEPARTMENT, POLICE DEPARTMENT, VILLAGE OF ASHELY, ODOT, AND SCHOOLS WITHIN THE AREA PRIOR TO CONSTRUCTION BY THE CONTRACTOR. ACCESS FOR MAIL AND EMERGENCY SERVICES SHALL BE MAINTAINED AT ALL TIMES.

ALL TRENCHES WITHIN THE RIGHT-OF-WAY SHALL BE BACKFILLED OR SECURELY PLATED DURING NON-WORKING HOURS. THE CONTRACTOR SHALL INCLUDE IN HIS/HER BASE BID FOR ITEM 614-MAINTAINING TRAFFIC, STEEL PLATES TO MAINTAIN TRAFFIC AT ALL TIMES WHERE OPEN TRENCHES ARE REQUIRED.

ALL WORK AND TRAFFIC CONTROL DEVICES SHALL BE IN ACCORDANCE WITH 614 AND OTHER APPLICABLE PORTIONS OF THE SPECIFICATIONS, AS WELL AS THE OHIO MANUAL OF UNIFORM TRAFFIC CONTROL DEVICES. PAYMENT FOR ALL LABOR, EQUIPMENT, AND MATERIALS SHALL BE INCLUDED IN THE LUMP SUM CONTRACT PRICE FOR 614, MAINTAINING TRAFFIC, UNLESS SEPARATELY ITEMIZED IN THE PLAN.

TRENCH FOR WIDEINING

TRENCH EXCAVATION FOR BASE WIDENING SHALL BE ONLY ON ONE SIDE OF THE PAVEMENT AT A TIME. THE OPEN TRENCH SHALL BE ADEQUATELY MAINTAINED AND PROTECTED WITH DRUMS AT ALL TIMES. PLACEMENT OF PROPOSED SUBBASE AND BASE MATERIAL SHALL FOLLOW AS CLOSELY AS POSSIBLE BEHIND EXCAVATION OPERATIONS. THE LENGTH OF WIDENING TRENCH WHICH IS OPEN AT ANY ONE TIME SHALL BE HELD TO A MINIMUM AND SHALL AT ALL TIMES BE SUBJECT TO APPROVAL OF THE ENGINEER.

OVERNIGHT TRENCH CLOSING

THE BASE WIDENING SHALL BE COMPLETED TO A DEPTH OF NO MORE THAN 5 INCHES BELOW THE EXISTING PAVEMENT BY THE END OF EACH WORK DAY. NO TRENCH SHALL BE LEFT OPEN OVERNIGHT EXCEPT FOR A SHORT LENGTH (25 FEET OR LESS) OF A WORK SECTION AR THE END OF THE TRENCH. IN CASE WORK MUST BE SUSPENDED BECAUSE OF INCLEMENT WEATHER OR OTHER REASONS, THE TRENCH FOR THE UNCOMPLETED BASE WIDENING SHALL BE BACKFILLED AT THE DIRECTION OF THE ENGINEER.

CONSTRUCTION INITIATION

THE CONTRACTOR SHALL ADVISE THE DISTRICT OFFICE OF COMMUNICATIONS AT 740.363.1251, EXT. 469 OR BY FAX AT 740.369.7437 AND THE DISTRICT TRAFFIC MANAGEMENT ENGINEER AT 740.363.1251, EXT. 323, FOURTEEN (14) DAYS PRIOR TO THE START OF CONSTRUCTION ACTIVITIES. THE CONTRACTOR WILL IMMEDIATELY INFORM THE DISTRICT OFFICE OF COMMUNICATIONS AND DISTRICT TRAFFIC MANAGEMENT ENGINEER OF ANY AND ALL DELAYS AND/OR CHANGES REGARDING THE CONSTRUCTION PROJECT. THE PROJECT ENGINEER WILL PROVIDE CLARIFICATION FOR ANY QUESTIONS ABOUT THIS NOTIFICATION REQUIREMENT.

ALTERNATE METHODS

IF THE CONTRACTOR SO ELECTS, HE MAY SUBMIT ALTERNATE METHODS FOR THE MAINTENANCE OF TRAFFIC, PROVIDED THE INTENT OF THE ABOVE PROVISIONS ARE FOLLOWED AND NO ADDITIONAL INCONVENIENCE TO THE TRAVELING PUBLIC RESULTS THEREFROM. NO ALTERNATE PLAN SHALL BE PLACED INTO EFFECT UNTIL APPROVAL HAS BEEN GRANTED, IN WRITING, BY THE ENGINEER.

ITEM 614 - LAW ENFORCEMENT OFFICER WITH PATROL CAR

IN ADDITION TO THE REQUIREMENTS OF 614 AND THE OHIO MANUAL OF UNIFORM TRAFFIC CONTROL DEVICES (OMUTCD), A UNIFORMED LAW ENFORCEMENT OFFICER AND PATROL CAR WITH WORKING TOP MOUNTED EMERGENCY FLASHING LIGHTS SHALL BE PROVIDED FOR CONTROLLING TRAFFIC FOR THE FOLLOWING TASKS:

- DURING THE ENTIRE ADVANCE PREPARATION AND CLOSURE SEQUENCE WHERE COMPLETE BLOCKAGE OF TRAFFIC IS REQUIRED
- DURING A TRAFFIC SIGNAL INSTALLATION

LAW ENFORCEMENT OFFICERS (L.E.O.'S) SHOULD NOT BE USED WHERE THE OMUTCD INTENDS THAT FLAGGERS BE USED. THE L.E.O.'S ARE CONSIDERED TO BE EMPLOYED BY THE CONTRACTOR AND THE CONTRACTOR SHALL BE RESPONSIBLE FOR THEIR ACTIONS. ALTHOUGH THEY ARE EMPLOYED BY THE CONTRACTOR, THE PROJECT ENGINEER SHALL HAVE CONTROL OVER THEIR PLACEMENT. THE OFFICIAL PATROL CAR SHALL BE A PUBLIC SAFETY VEHICLE AS REQUIRED BY THE OHIO REVISED CODE. THE CONTRACTOR SHALL MAKE ARRANGEMENTS FOR THESE SERVICES WITH THE DELAWARE COUNTY SHERIFF'S OFFICE.

LAW ENFORCEMENT OFFICERS WITH PATROL CAR REQUIRED BY THE TRAFFIC MAINTENANCE TASKS ABOVE SHALL BE PAID FOR ON A UNIT PRICE (HOURLY) BASIS UNDER ITEM 614 - LAW ENFORCEMENT OFFICER WITH PATROL CAR. THE FOLLOWING ESTIMATED QUANTITIES HAVE BEEN CARRIED TO THE GENERAL SUMMARY:

ITEM 614, LAW ENFORCEMENT OFFICER W/PATROL CAR 30 HRS

THE HOURS PAID SHALL INCLUDE MINIMUM SHOW-UP TIME REQUIRED BY THE LAW ENFORCEMENT AGENCY INVOLVED.

IF THE CONTRACTORS WISH TO UTILIZE L.E.O.'S FOR FLAGGING AND TRAFFIC CONTROL OTHER THAN FOR THAT REQUIRED IN THESE PLANS, THEY MAY DO SO AT THEIR OWN EXPENSE. PAYMENT FOR THE EXCESS ABOVE THE CONTRACT REQUIREMENTS WILL BE INCLUDED UNDER ITEM 614 MAINTAINING TRAFFIC.

SEQUENCE OF CONSTRUCTION

THE FOLLOWING IS A SUGGESTED SEQUENCE OF CONSTRUCTION FOR THIS PROJECT.

TEMPORARY PAVEMENT MARKINGS SHALL BE IN PLACE BEFORE SHIFTING TRAFFIC.

PHASE I

STAGE A - MEZZANINE WORK ON THE NORTH SIDE OF SR229
-INSTALL APPROPRIATE PEDESTRIAN MOT SIGNAGE INDICATING PEDESTRIAN ACCESS IS MAINTAINED AS DESCRIBED BELOW
-CONSTRUCT MEZZANINE IN FRONT OF THE BUSINESSES
-MAINTAIN PEDESTRIAN ACCESS AS DESCRIBED ON THIS SHEET

STAGE B - ROADWAY WORK ON THE NORTH SIDE OF SR229
-INSTALL DRUMS, SIGNAGE, AND PAVEMENT MARKINGS
-REMOVE EXISTING CURB, SIDEWALKS, CURB RAMPS, ETC.
-CONSTRUCT NEW PAVEMENT ITEMS, CURB, SIDEWALKS, CURB RAMPS, DRAINAGE ITEMS, ETC.
-TWO WAY VEHICULAR TRAFFIC TO BE MAINTAINED AT ALL TIMES
-PEDESTRIAN TRAFFIC IN THE COMMERCIAL/BUSINESS DISTRICT AREA SHALL BE MAINTAINED VIA THE COMPLETED MEZZANINE
-TOTAL CLOSURE OF THE SIDEWALK IN THE RESIDENTIAL AREA IS PERMITTED. APPROPRIATE SIGNAGE SHALL BE IN PLACE.

PHASE II

STAGE A - MEZZANINE WORK ON THE SOUTH SIDE OF SR229
-INSTALL APPROPRIATE PEDESTRIAN MOT SIGNAGE INDICATING PEDESTRIAN ACCESS IS MAINTAINED AS DESCRIBED BELOW
-CONSTRUCT MEZZANINE IN FRONT OF THE BUSINESSES
-MAINTAIN PEDESTRIAN ACCESS AS SHOWN IN THESE PLANS

STAGE B - ROADWAY WORK ON SOUTH SIDE OF SR229
-INSTALL DRUMS, SIGNAGE, AND PAVEMENT MARKINGS
-REMOVE EXISTING CURB, SIDEWALKS, CURB RAMPS, ETC.
-CONSTRUCT NEW PAVEMENT ITEMS, CURB, SIDEWALKS, CURB RAMPS, DRAINAGE ITEMS, ETC.
-TWO WAY VEHICULAR TRAFFIC TO BE MAINTAINED AT ALL TIMES
-PEDESTRIAN TRAFFIC IN THE COMMERCIAL/BUSINESS DISTRICT AREA SHALL BE MAINTAINED VIA THE COMPLETES MEZZANINE
-TOTAL CLOSURE OF THE SIDEWALK IN THE RESIDENTIAL AREA IS PERMITTED. APPROPRIATE SIGNAGE SHALL BE IN PLACE.

MEZZANINE CONSTRUCTION

ACCESS TO THE BUSINESSES SHALL BE MAINTAINED VIA REAR ENTRANCES OR TEMPORARY STEPS. THE TEMPORARY STEP DESIGN SHALL BE APPROVED BY THE ENGINEER. THE CONTRACTOR SHALL WORK WITH EACH INDIVIDUAL BUSINESS OWNER TO DETERMINE WHICH METHOD IS TO BE UTILIZED.

THE CONTRACTOR MAY CHOOSE TO CONSTRUCT THE MEZZANINE IN PHASES IN ORDER TO MINIMIZE THE NUMBER OF TEMPORARY STEP STRUCTURES.

THE CONTRACTOR MAY PERFORM CONSTRUCTION ACTIVITIES DURING NON-BUSINESS HOURS. HOWEVER, HEAVY MACHINERY SHALL NOT BE OPERATED BETWEEN THE HOURS OF 9:00 PM TO 7:00 AM.

IF A PROPERTY IS VACANT THEN THE CONTRACTOR IS NOT REQUIRED TO MAINTAIN ACCESS.

THE MEZZANINE RAMPS AND RAILINGS SHALL BE CONSTRUCTED DURING THE "A" PHASE OF THE PROJECT. IT THE INTENT TO UTILIZE THE COMPLETED MEZZANINE FOR PEDESTRIAN USAGE DURING THE "B" PHASE. THE FINAL MEZZANINE STEPS WILL BE CONSTRUCTED DURING THE "B" PHASES.

PEDESTRIAN ACCESS

TEMPORARY STEPS AND STEEL GRATING SHALL BE USED TO ENSURE ACCESS TO BUSINESSES DURING CONSTRUCTION. CONTRACTOR SHALL USE McNICHOLS GRIP STRUT PLANK GRATING OR EQUIVALENT.

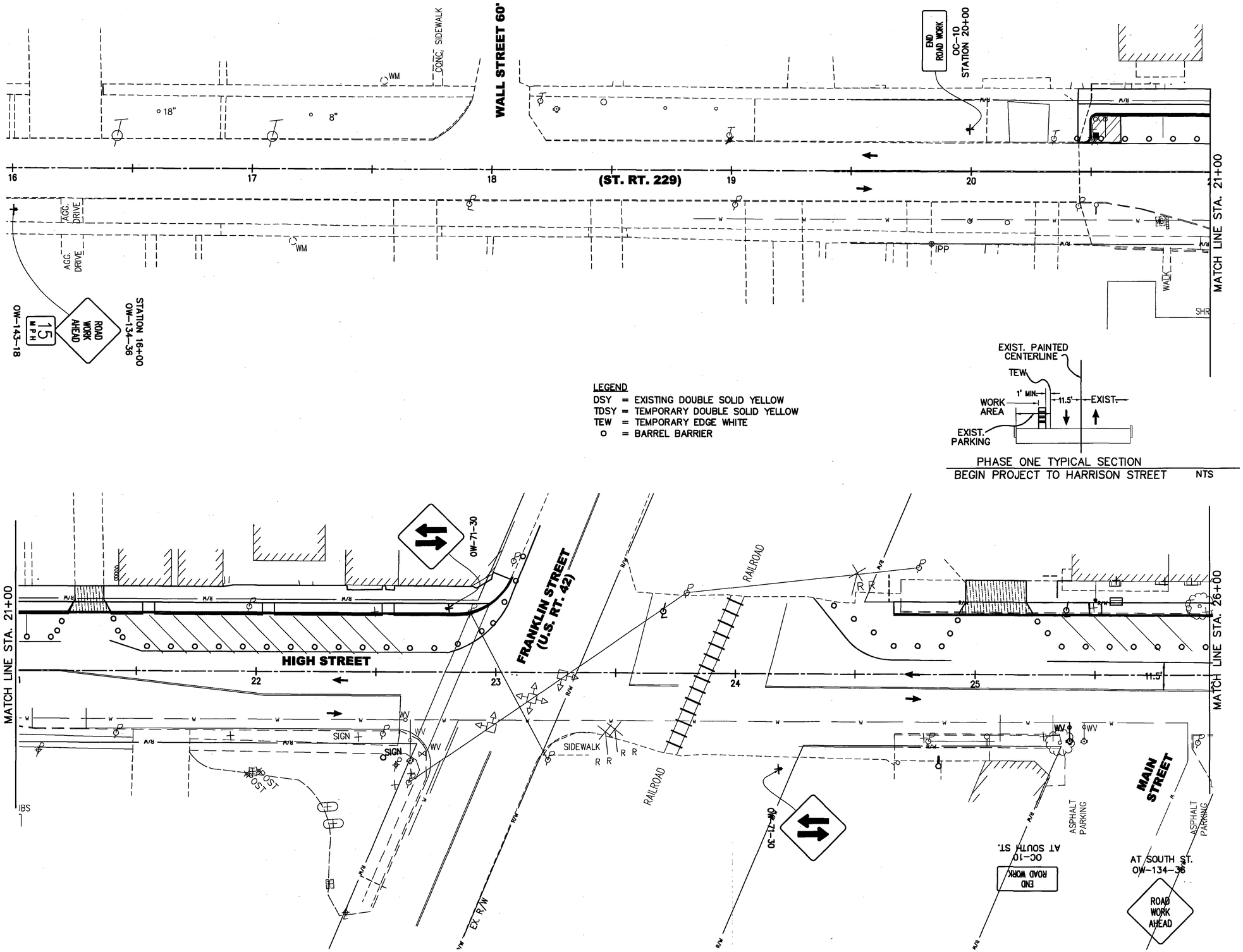

N

HORIZONTAL SCALE IN FEET
0 10 20 40

DESIGNED JAT
CHECKED JFR

MAINTENANCE OF TRAFFIC - PHASE ONE

DEL-229-6.84

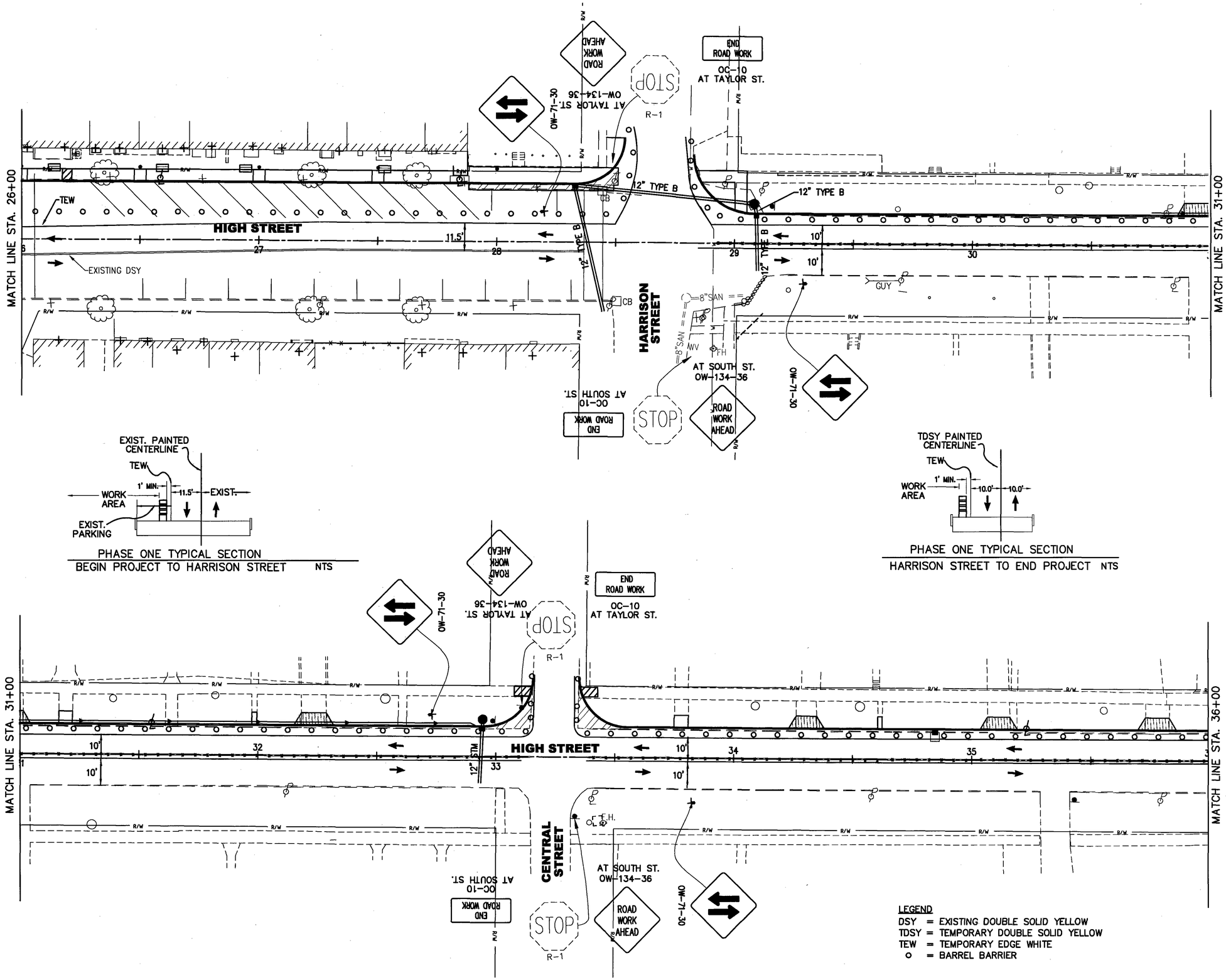

HORIZONTAL SCALE IN FEET
0 10 20 40

DESIGNED JAT
CHECKED JFR

MAINTENANCE OF TRAFFIC - PHASE ONE

DEL-229-6.84

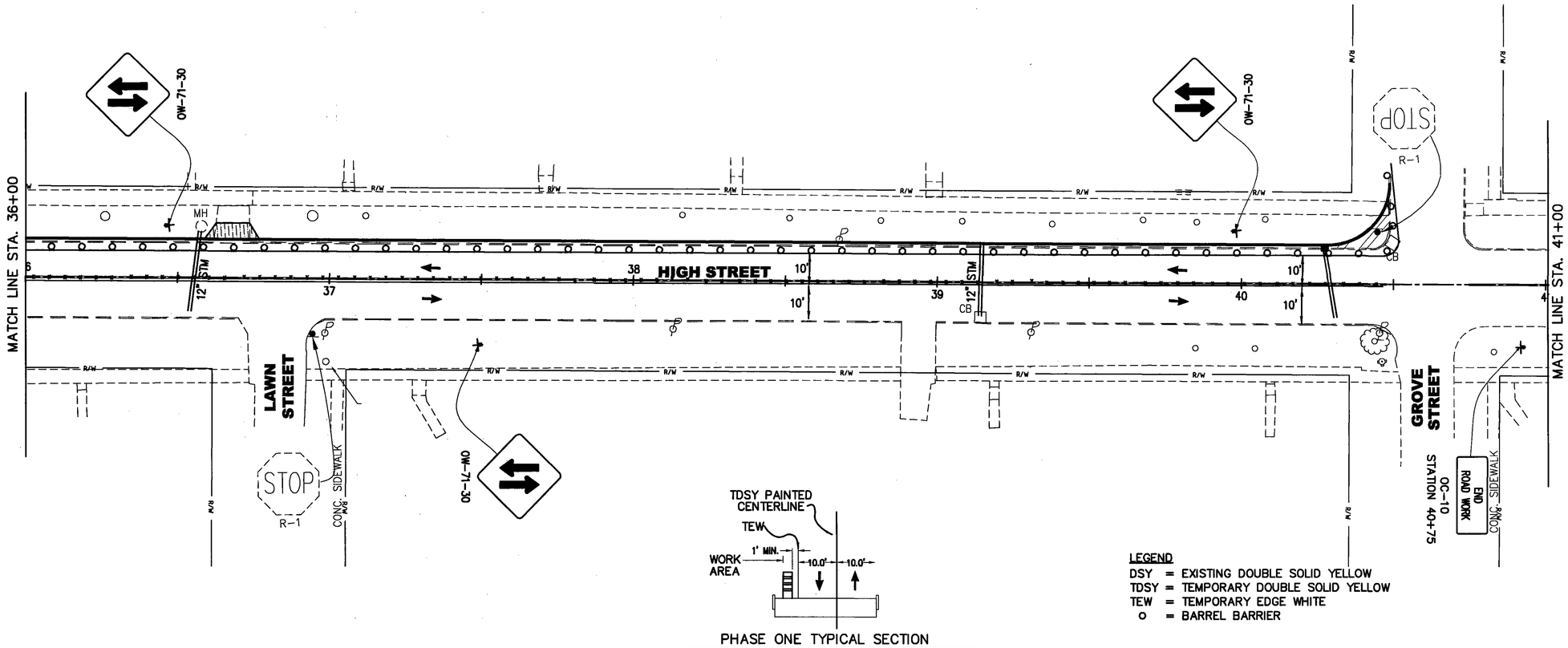

PHASE ONE TYPICAL SECTION
HARRISON STREET TO END PROJECT NTS

LEGEND
DSY = EXISTING DOUBLE SOLID YELLOW
TDSY = TEMPORARY DOUBLE SOLID YELLOW
TEW = TEMPORARY EDGE WHITE
o = BARREL BARRIER

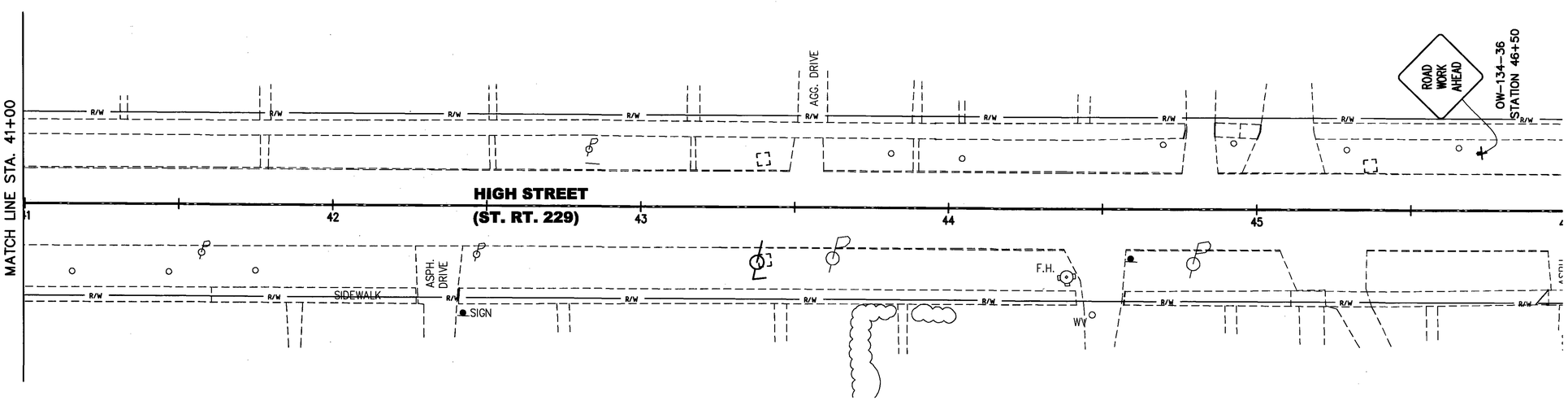

N

0 10 20 40
HORIZONTAL SCALE IN FEET

DESIGNED JAT
CHECKED JFR

MAINTENANCE OF TRAFFIC - PHASE ONE

DEL-229-6.84

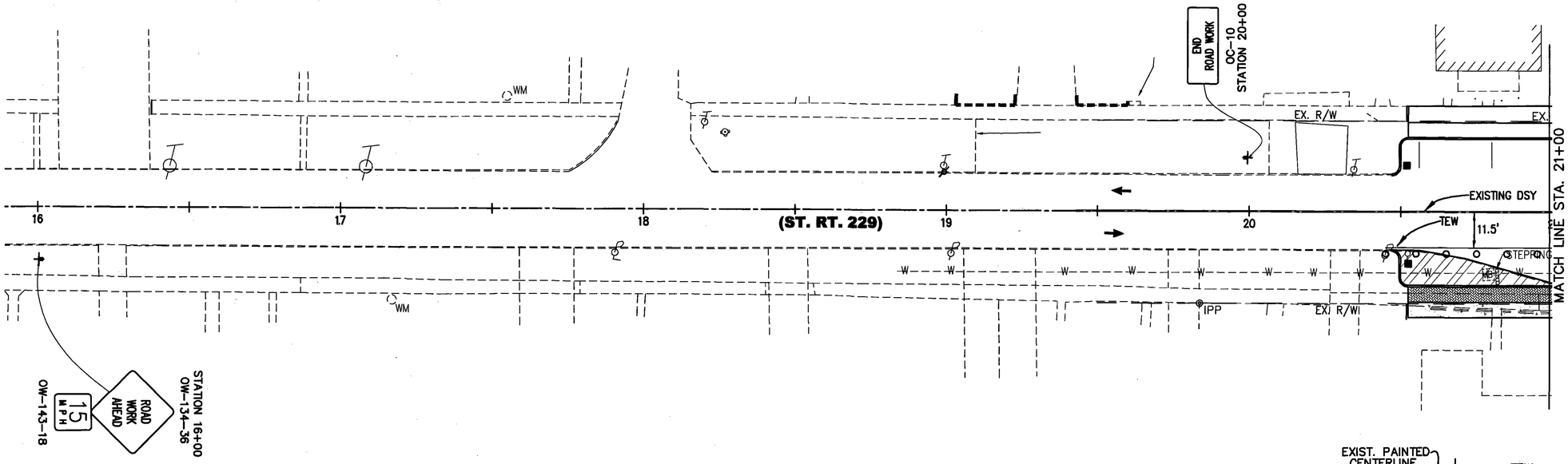

LEGEND
DSY = EXISTING DOUBLE SOLID YELLOW
TDSY = TEMPORARY DOUBLE SOLID YELLOW
TEW = TEMPORARY EDGE WHITE
o = BARREL BARRIER

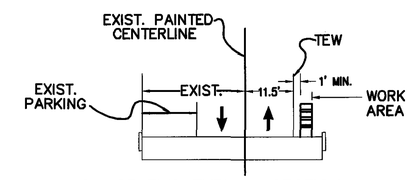

PHASE TWO TYPICAL SECTION
BEGIN PROJECT TO HARRISON STREET NTS

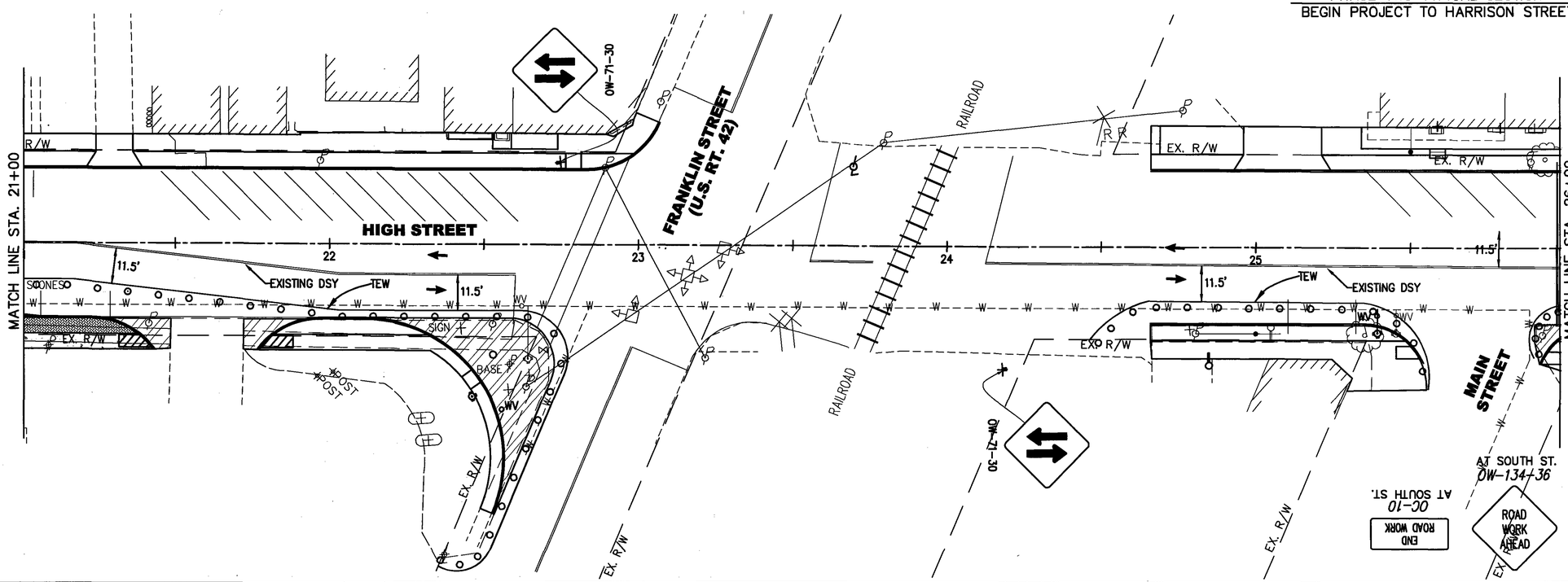

HORIZONTAL SCALE IN FEET
0 10 20 40

DESIGNED JAT
CHECKED JFR

MAINTENANCE OF TRAFFIC - PHASE TWO

DEL-229-6.84

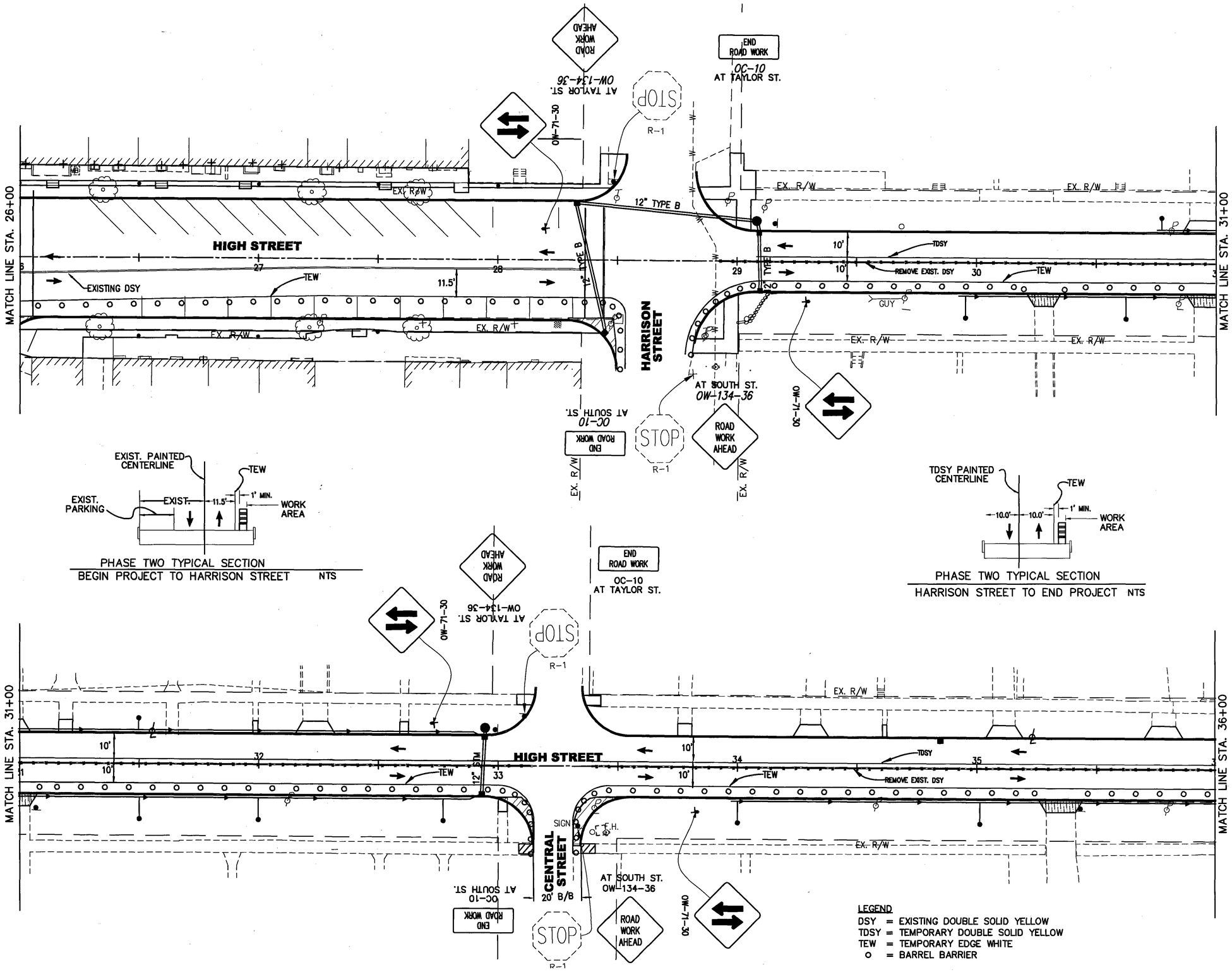

HORIZONTAL SCALE IN FEET 0 10 20 40

DESIGNED JAT CHECKED JFR

MAINTENANCE OF TRAFFIC - PHASE TWO

DEL-229-6.84

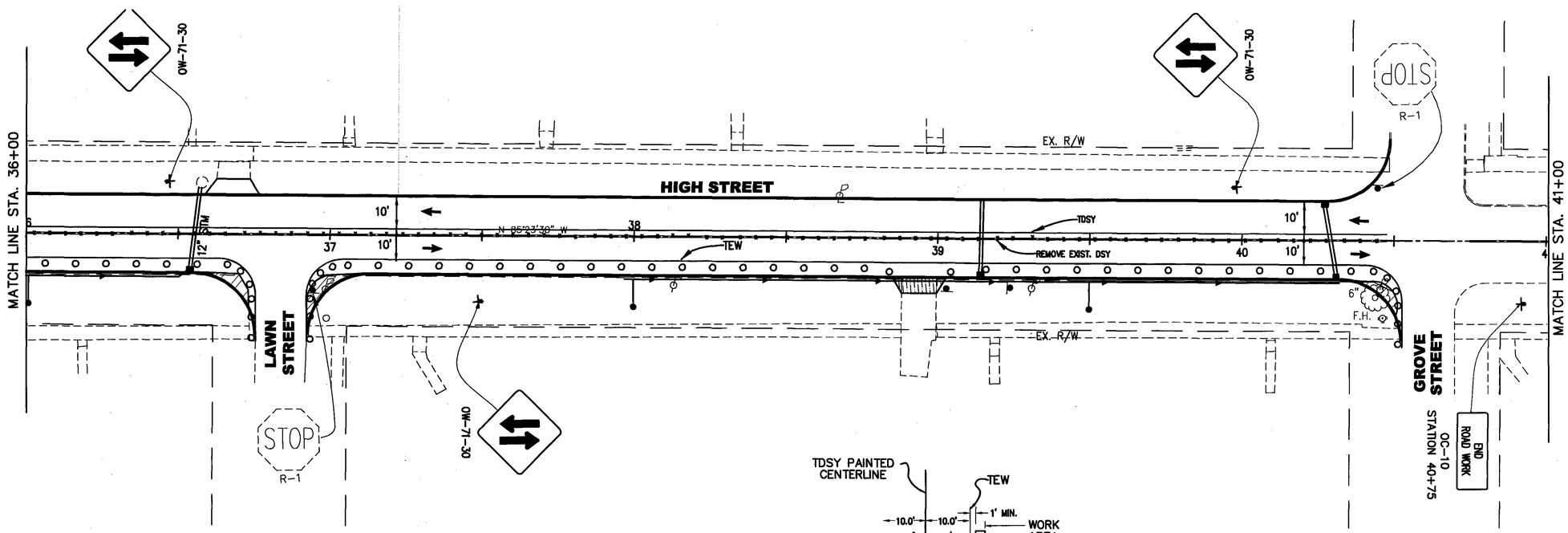

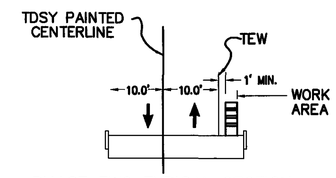

PHASE TWO TYPICAL SECTION
HARRISON STREET TO END PROJECT NTS

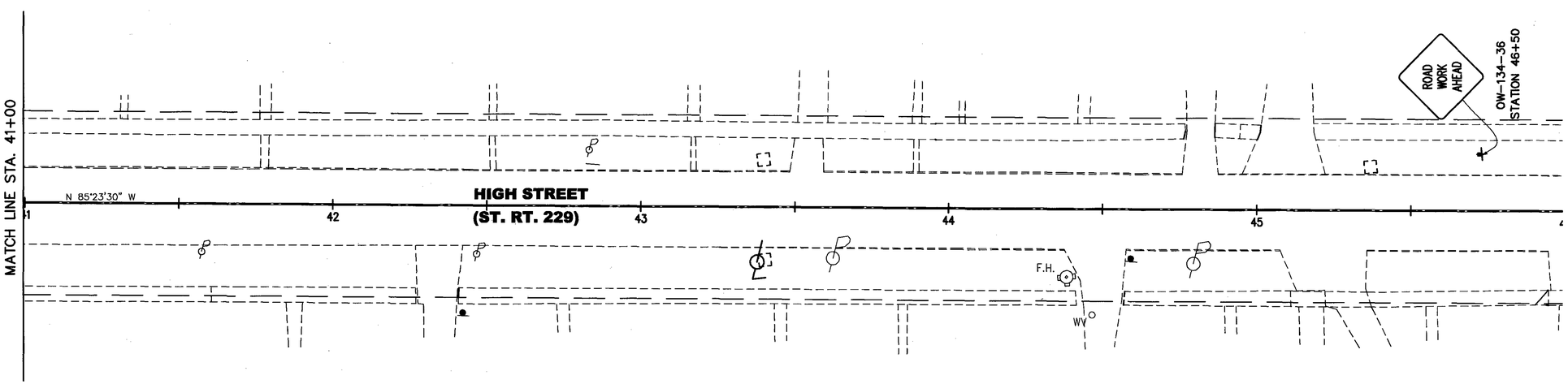

LEGEND
DSY = EXISTING DOUBLE SOLID YELLOW
TDSY = TEMPORARY DOUBLE SOLID YELLOW
TEW = TEMPORARY EDGE WHITE
o = BARREL BARRIER

N

0 10 20 40
HORIZONTAL SCALE IN FEET

DESIGNED JAT
CHECKED JFR

MAINTENANCE OF TRAFFIC - PHASE TWO

DEL-229-6.84

SHEET NUMBER 4	5	6	13	14	15	19	20	21	34	36	ITEM	ITEM EXT.	GRAND TOTAL	UNIT	DESCRIPTION	SEE SHEET NO.
															ROADWAY	
											201	11000	LUMP		CLEARING AND GRUBBING	
				932	285						202	23000	1217	SQ YD	PAVEMENT REMOVED	
				507							202	24000	507	SQ YD	BRICK BASE REMOVED	
				12,874							202	30000	12,874	SQ FT	WALK REMOVED	
				116							202	30200	116	FT	STEPS REMOVED	
				3464	402						202	32000	3866	FT	CURB REMOVED	
				65							202	34900	65	FT	PIPE REMOVED	
				1							202	58000	1	EACH	MANHOLE REMOVED	
				5	2						202	58100	7	EACH	CATCH BASIN REMOVED	
				3							202	75400	3	EACH	LIGHT POLE REMOVED	
				40							202	98200	40	FT	REMOVAL MISC.: LANDSCAPE TIMBERS	
			520	197	16						203	10000	733	CU YD	EXCAVATION	
			1039			262	44				204	10000	1345	SQ YD	SUBGRADE COMPACTION – 18" DEEP	
						5758	2300				608	10000	8058	SQ FT	4" CONCRETE WALK	
						980					608	13001	980	SQ FT	6" CONCRETE WALK, AS PER PLAN	
						25					608	40001	25	FT	CONCRETE STEPS, TYPE A, AS PER PLAN	
						9					608	41000	9	FT	CONCRETE STEPS, TYPE B	
						14	4				608	49001	18	EACH	CURB RAMP, AS PER PLAN	4
						2352	392				608	98000	2744	SQ FT	WALKWAY MISC.: BRICK WALK	22
						440					608	98100	440	FT	WALKWAY MISC.: 1–1/2" BLACK ALUMINUM TUBULAR RAILING, AS PER PLAN	27,33
						1					608	98200	1	EACH	WALKWAY, MISC.; EXTERIOR BASEMENT ACCESS REMOVAL, AS PER PLAN	27
				2							SPECIAL	69050350	2	EACH	MAILBOX REMOVED AND RESET	4
															EROSION CONTROL	
			2917								659	00500	2917	SQ YD	SEEDING AND MULCHING, CLASS 1	
			0.30								659	20000	0.30	TON	COMMERCIAL FERTILIZER	
			3								659	35000	3	M GAL	WATER	
											832	30000	1000	EACH	EROSION CONTROL	
															DRAINAGE	
						311	813				603	01401	1124	FT	6" CONDUIT, TYPE E, 707.32, AS PER PLAN	
						20					603	01800	20	FT	8" CONDUIT, TYPE B	
						161	83	25			603	04400	269	FT	12" CONDUIT, TYPE B	
						6	5	2			604	04500	13	EACH	CATCH BASIN, No. 2–2B	
				1							604	09000	1	EACH	CATCH BASIN ADJUSTED TO GRADE	
						1	1				604	31500	2	EACH	MANHOLE, No. 3	
						98					613	41200	98	CU YD	LOW STRENGTH MORTAR BACKFILL	
						1	11				SPECIAL	69098000	12	EACH	MISC.: HDPE YARD DRAIN	33
															PAVEMENT	
40			303								301	46000	343	CU YD	ASPHALT CONCRETE BASE, PG 64–22	
			173			103	139				304	20000	415	CU YD	AGGREGATE BASE	
			416								408	10000	416	GALLON	PRIME COAT	
			3247								409	30000	3247	FT	SAWING AND SEALING ASPHALT CONCRETE PAVEMENT JOINTS	
			43								448	47020	43	CU YD	ASPHALT CONCRETE SURFACE COURSE, TYPE 1, PG64–22	
						514	340	347			451	10001	1201	SQ YD	6" REINFORCED CONCRETE PAVEMENT, AS PER PLAN	33
						2216	1503				609	26001	3719	FT	CURB, TYPE 6, AS PER PLAN	33
															WATER WORK	
				2							638	10600	2	EACH	FIRE HYDRANT AND GATE VALVE REMOVED AND RESET	
				1							638	10800	1	EACH	VALVE BOX ADJUSTED TO GRADE	

CALCULATED JAT
CHECKED JFR

GENERAL SUMMARY

DEL-229-6.84

SHEET NUMBER 4	5	10	11	14	15	19	20	21	34	36	ITEM	ITEM EXT.	GRAND TOTAL	UNIT	DESCRIPTION	SEE SHEET NO.
															LIGHTING	
										11	625	10481	11	EACH	LIGHT POLE, DECORATIVE, AS PER PLAN	
										11	625	14501	11	EACH	LIGHT POLE FOUNDATION, AS PER PLAN	
										763	625	25102	763	FT	CONDUIT, 1", 725.05	
										657	625	25302	657	FT	CONDUIT, 1 1/2", 725.05	
										18	625	25402	18	FT	CONDUIT, 2", 725.05	
										76	625	25920	76	FT	CONDUIT MISC.: 1", PVC COATED RIGID STL.	
										24	625	25920	24	FT	CONDUIT MISC.: 1 1/2", PVC COATED RIGID STL.	
										12	625	25920	12	FT	CONDUIT MISC.: 2", PVC COATED RIGID STL.	
										11	625	27551	11	EACH	LUMINAIRE, DECORATIVE, AS PER PLAN	
										1464	625	29000	1464	FT	TRENCH	
										11	625	29901	11	EACH	JUNCTION BOX, AS PER PLAN	
										11	625	32000	11	EACH	GROUND ROD	
										66	625	98000	66	EACH	LIGHTING MISC.: #10 WIRE CONNECTIONS	
										8	625	98000	8	EACH	LIGHTING MISC.: #6 WIRE CONNECTIONS	
										1	625	98000	1	EACH	LIGHTING MISC.: CONTROL PANEL	
										1	625	98000	1	EACH	LIGHTING MISC.: POWER DISTRIBUTION PANEL	
										11	625	98000	11	EACH	LIGHTING MISC.: SINGLE 20 AMP DUPLEX RECPT.	
										2	625	98000	2	EACH	LIGHTING MISC.: SINGLE 50 AMP RECPT.	
										4954	625	98100	4954	FT	LIGHTING MISC.: #10 THHN STRANDED WIRE	
										1650	625	98100	1650	FT	LIGHTING MISC.: #6 THHN STRANDED WIRE	
										210	625	98100	210	FT	LIGHTING MISC.: 4/0 XHHN STRANDED WIRE	
															TRAFFIC CONTROL	
				21	2						630	85100	23	EACH	REMOVAL OF GROUND MOUNTED SIGN AND RE-ERECTION	
									0.09		642	00240	0.09	MILE	CENTERLINE	
									20		642	00490	20	FT	STOP LINE	
									312		642	00590	312	FT	CROSSWALK LINE	
									779		642	01190	779	FT	PARKING LOT STALL MARKING	
									4		642	01700	4	EACH	HANDICAP SYMBOL MARKING	
									1471		642	30000	1471	FT	REMOVAL OF PAVEMENT MARKING	
															LANDSCAPING	
1											SPECIAL	69050560	1	EACH	BIKE RACK	4
4											SPECIAL	69098000	4	EACH	BENCHES	4
4											SPECIAL	69098000	4	EACH	TRASH RECEPTACLES	4
															MAINTENANCE OF TRAFFIC	
	30										614	11100	30	HOUR	LAW ENFORCEMENT OFFICER WITH PATROL CAR	
		0.19	0.01								614	21100	0.20	MILE	WORK ZONE CENTERLINE, CLASS I, 642 PAINT	
															STRUCTURES	
						76					SPECIAL	69098700	76	CU YD	CLASS C CONCRETE, 511.07, AS PER PLAN	4
											614	11000	LUMP		MAINTAINING TRAFFIC	
											619	16000	6	MONTH	FIELD OFFICE, TYPE A	
											623	10000	LUMP		CONSTRUCTION LAYOUT STAKES	
											624	10000	LUMP		MOBILIZATION	

CALCULATED JAT
CHECKED JFR

GENERAL SUMMARY

DEL-229-6.84

ITEM 203 – EXCAVATION

FROM ITEM 204, SUBGRADE COMPACTION, 18" DEEP = 1,039 S.Y.
1,039 S.Y. x 1.5/3 = 519.5 C.Y.

TOTAL CARRIED TO GENERAL SUMMARY: 520 C.Y.

ITEM 204 – SUBGRADE COMPACTION – 18" DEEP

STA. 20+44.50 TO STA. 23+06.00 AND STA. 24+66.00 TO STA. 28+82.63 FROM TYPICAL SECTION No. 1

STA. 20+62.5 TO 22+83.5 (LEFT) =	221.0	
STA. 21+07.0 TO 21+23.2 (RIGHT) =	16.2	
STA. 21+96.9 TO 22+11.4 (RIGHT) =	14.5	
STA. 24+66.0 TO 28+34.0 (LEFT) =	368.0	
STA. 24+66.0 TO 28+29.5 (RIGHT) =	363.5	
	983.2 FT	983.2 x 2 x 1/9 = 218.5 S.Y.
AT RADII AND IRREGULAR AREAS BY CAD MEASUREMENT = 2,265.7 S.F.		2,265.7 x 1/9 = 251.7 S.Y.
		470.2 S.Y.

STA. 28+82.63 TO STA. 40+42.50 FROM TYPICAL SECTION No. 2

STA. 29+08.1 TO 32+95.3 (LEFT) =	387.2	
STA. 29+07.3 TO 32+94.2 (RIGHT) =	386.9	
STA. 33+55.3 TO 40+28.3 (LEFT) =	673.0	
STA. 33+54.7 TO 36+55.1 (RIGHT) =	300.4	
STA. 37+13.0 TO 40+32.0 (RIGHT) =	319.0	
	2,066.5 FT	2,066.5 x 2 x 1/9 = 459.2 S.Y.
AT RADII AND IRREGULAR AREAS BY CADD MEASUREMENT = 987.8 S.F.		987.8 x 1/9 = 109.8 S.Y.
		569.0 S.Y.

TOTAL FROM TYPICAL SECTION No. 1 =	470.2 S.Y.
TOTAL FROM TYPICAL SECTION No. 2 =	569.0 S.Y.
	1,039.2 S.Y.

TOTAL CARRIED TO GENERAL SUMMARY: 1,039 S.Y.

ITEM 301 – ASPHALT CONCRETE BASE, PG64–22

FROM ITEM 204, SUBGRADE COMPACTION, 18" DEEP = 1,039 S.Y.

1,039 S.Y. x 10.5/36 = 303.0 C.Y.

TOTAL CARRIED TO GENERAL SUMMARY: 303 C.Y.

ITEM 304 – AGGREGATE BASE

FROM ITEM 204, SUBGRADE COMPACTION, 18" DEEP = 1,039 S.Y.
1,039 S.Y. x 6/36 = 173.2 C.Y.

TOTAL CARRIED TO GENERAL SUMMARY: 173 C.Y.

ITEM 408 – PRIME COAT

(0.40 GAL/SQ.YD.)

FROM ITEM 204, SUBGRADE COMPACTION, 18" DEEP = 1,039 S.Y.

1,039 S.Y. x 0.40 = 415.6 GAL.

TOTAL CARRIED TO GENERAL SUMMARY: 416 GAL.

ITEM 409 – SAWING AND SEALING ASPHALT CONCRETE PAVEMENT JOINTS

STATION 20+47 TO STATION 40+52.50 = 3,247 FT (CAD CALCULATED)

TOTAL CARRIED TO GENERAL SUMMARY: 3,247 FT

ITEM 448 – ASPHALT CONC. SURFACE COURSE, TYPE 1, PG64–22

FROM ITEM 204, SUBGRADE COMPACTION, 18" DEEP = 1,039 S.Y.

1,039 S.Y. x 1.50/36 = 43.3 C.Y.

TOTAL CARRIED TO GENERAL SUMMARY: 43 C.Y.

ITEM 659 – SEEDING AND MULCHING, CLASS ONE

26,250 S.F. (CAD CALCULATED)

SEEDING AND MULCHING:
5 POUNDS PER 1,000 SQUARE FOOT
26,250 S.F. / 9 = 2,916.7 S.Y. TOTAL CARRIED TO GENERAL SUMMARY: 2,917 S.Y.

COMMERCIAL FERTILIZER:
20 POUNDS PER 1,000 SQUARE FOOT
((26,250/1,000) x 20)/2,000= 0.3 TON TOTAL CARRIED TO GENERAL SUMMARY: 0.30 TON

WATER:
120 GALLONS PER 1,000 SQUARE FOOT
((26,250/1,000)x120)/1000=3.15 M GAL TOTAL CARRIED TO GENERAL SUMMARY: 3 M GAL

CALCULATED JAT CHECKED JFR

CALCULATIONS

DEL-229-6.84

SHEET No.	REFER. No.	LOCATION	STATION FROM	STATION TO	SIDE	202 PAVEMENT REMOVED SQ YD	202 BRICK BASE REMOVED SQ YD	202 WALK REMOVED (CAD CALCULATED) SQ FT	202 STEPS REMOVED FT	202 CURB REMOVED FT	202 PIPE REMOVED FT	202 MANHOLE REMOVED EACH	202 CATCH BASIN REMOVED EACH	202 LIGHT POLE REMOVED EACH	202 REMOVAL MISC.: LANDSCAPE TIMBERS FT	203 EXCAVATION (CAD CALCULATED) CU YD	604 CATCH BASIN ADJUSTED TO GRADE EACH	630 REMOVAL OF GROUND MOUNTED SIGN AND RE-ERECTION EACH	638 FIRE HYDRANT AND GATE VALVE REMOVED AND RESET EACH	638 VALVE BOX ADJUSTED TO GRADE EACH	SPEC MAILBOX REMOVED AND RESET EACH
16	R-1	HIGH ST.	20+54		LT								1								
16	R-2	HIGH ST.	20+50	23+06	LT					275								2			
16	R-3	HIGH ST.	20+50	20+64	LT	16															
16	R-4	HIGH ST.	20+50	23+06	LT			2350													
16	R-5	HIGH ST.	22+62		LT				4												
16	R-6	HIGH ST.	21+30		LT	143															
16	R-7	HIGH ST.	20+50	21+08	RT								1			35					1
16	R-8	HIGH ST.	20+53	21+49	RT			429													
16	R-9	HIGH ST.	20+58	20+98	RT										40						
16	R-10	HIGH ST.	21+23	21+96	RT											14					
16	R-11	HIGH ST.	21+81	22+39	RT			256										1			
16	R-12	S.W. CORNER HIGH/FRANKLIN	22+11	22+75	RT											55		4	1	1	
16	R-13	S.W. CORNER HIGH/FRANKLIN			RT			57													
16	R-14	HIGH ST.	20+44	22+75	RT					295											
16	R-15	HIGH ST.	24+66	25+39	RT			663		289								1			
16	R-51	HIGH ST.	25+09		LT	371															
16	R-16	HIGH ST.	24+66	28+52	LT			4319	76					3				8			1
16	R-17	HIGH ST.	24+66	28+52	LT					386											
16	R-18	HIGH ST.	27+89	28+52	LT											21					
16	R-19	HIGH ST.	28+45	29+10	LT						65		1								
16	R-20	HIGH ST.	25+39	25+56	RT											17			1		
16	R-21	HIGH ST.	25+91	26+10	RT											5					
16	R-22	HIGH ST.	25+91	28+45	RT			4335	36									3			
16	R-23	HIGH ST.	25+91	28+45	RT					280											
16	R-24	HIGH ST.	28+52		RT								1								
16	R-25	HIGH ST.	28+30	28+45	RT											5					
16	R-26	HIGH ST.	28+87	29+13	LT							1				10					
16	R-27	HIGH ST.	28+87	29+13	LT			245													
16	R-28	HIGH ST.	28+87	29+13	RT											13	1	1			
16	R-29	HIGH ST.	28+87	29+00	RT			103													
16 & 17	R-30	HIGH ST.	29+13	33+12	LT					439											
16 & 17	R-31	HIGH ST.	29+13	33+12	RT					439											
16,17&18	R-62	HIGH ST.	29+00	40+52.5	RT/LT		507														
17	R-32	HIGH ST.	30+28		RT	55															
17	R-33	HIGH ST.	30+95		LT	76															
17	R-34	HIGH ST.	30+97		RT	83															
17	R-35	HIGH ST.	31+19		LT			29													
17	R-36	HIGH ST.	31+98		LT			11													
17	R-37	HIGH ST.	32+24		LT	67															
17	R-38	HIGH ST.	32+61		LT			18													
17	R-39	HIGH ST.	33+02		RT			19													
17	R-40	HIGH ST.	32+95	33+15	LT											5					
17	R-41	HIGH ST.	32+95	33+15	RT											4					
17	R-42	HIGH ST.	33+35	33+55	LT											6					
17	R-43	HIGH ST.	33+32	33+55	RT											7		1			
17 & 18	R-44	HIGH ST.	33+35	40+32	LT					747											
17	R-45	HIGH ST.	33+78		LT			30													
17	R-46	HIGH ST.	34+31		LT	59															
17	R-47	HIGH ST.	34+62		LT			10													
17	R-48	HIGH ST.	34+84		LT								1								
17	R-49	HIGH ST.	33+55	36+69	RT					314											
17	R-50	HIGH ST.	35+11		LT	62															
	TOTALS CARRIED TO GENERAL SUMMARY					932	507	12,874	116	3,464	65	1	5	3	40	197	1	21	2	1	2

DESIGNED JAT
CHECKED JFR

DEMOLITION SUB-SUMMARY

DEL-229-6.84

SHEET No.	REFER. No.	LOCATION	STATION FROM	STATION TO	SIDE	202 PAVEMENT REMOVED SQ YD	202 BRICK BASE REMOVED SQ YD	202 WALK REMOVED (CAD CALCULATED) SQ FT	202 STEPS REMOVED EACH	202 CURB REMOVED FT	202 PIPE REMOVED FT	202 MANHOLE REMOVED EACH	202 CATCH BASIN REMOVED EACH	202 LIGHT POLE REMOVED EACH	202 REMOVAL MISC.: LANDSCAPE TIMBERS FT	203 EXCAVATION (CAD CALCULATED) CU YD	604 CATCH BASIN ADJUSTED TO GRADE EACH	630 REMOVAL OF GROUND MOUNTED SIGN AND RE-ERECTION EACH	638 FIRE HYDRANT AND GATE VALVE REMOVED AND RESET EACH	638 VALVE BOX ADJUSTED TO GRADE EACH	SPEC MAILBOX REMOVED AND RESET EACH
17	R-51	HIGH ST.	35+35		RT	76															
17	R-52	HIGH ST.	35+78		LT	65															
17	R-53	HIGH ST.	36+68		LT	72															
17	R-54	HIGH ST.	36+62	36+75	RT											3					
17	R-55	HIGH ST.	36+94	37+14	RT											4		1			
17 & 18	R-56	HIGH ST.	37+00	40+32	RT					402											
17	R-57	HIGH ST.	38+94		RT	72															
17	R-58	HIGH ST.	39+14		RT								1								
18	R-59	HIGH ST.	40+28	40+49	LT											6		1			
18	R-60	HIGH ST.	40+50		LT								1								
18	R-61	HIGH ST.	40+38	40+52	RT											3					
TOTALS CARRIED TO GENERAL SUMMARY						285	0	0	0	402	0	0	2	0	0	16	0	2	0	0	0

DESIGNED JAT
CHECKED JFR

DEMOLITION SUB-SUMMARY

DEL-229-6.84

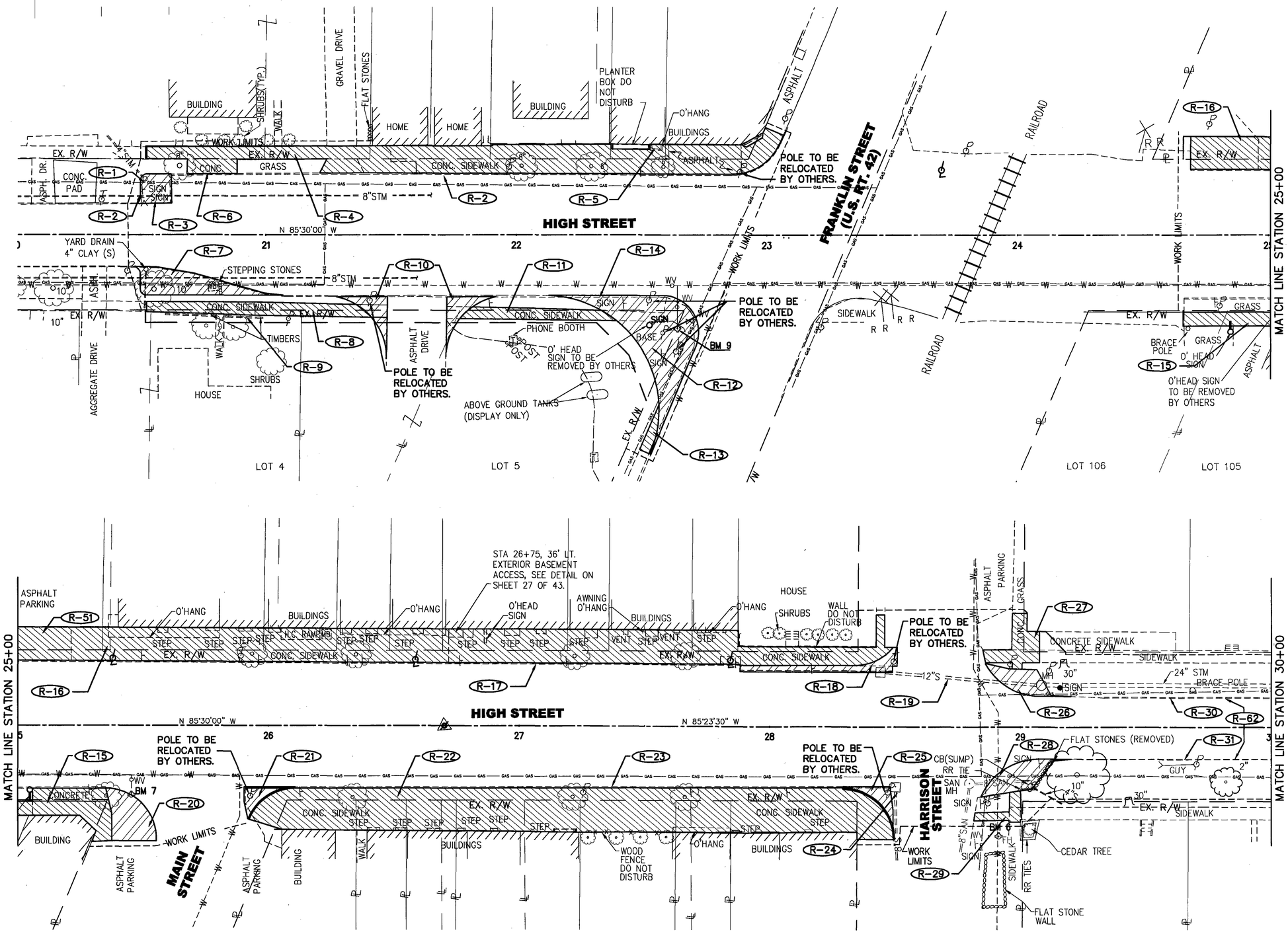

DEMOLITION PLAN - HIGH STREET
STA. 20+00 TO STA. 30+00

DEL-229-6.84

DESIGNED JAT
CHECKED JFR

HORIZONTAL SCALE IN FEET 0 10 20 40

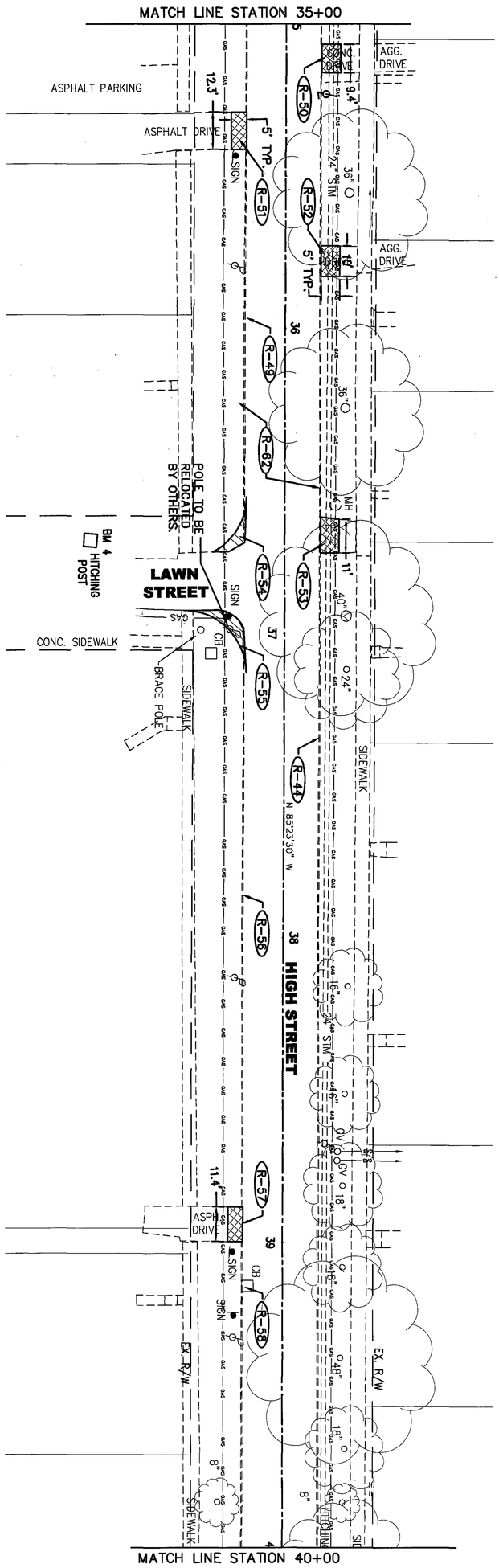

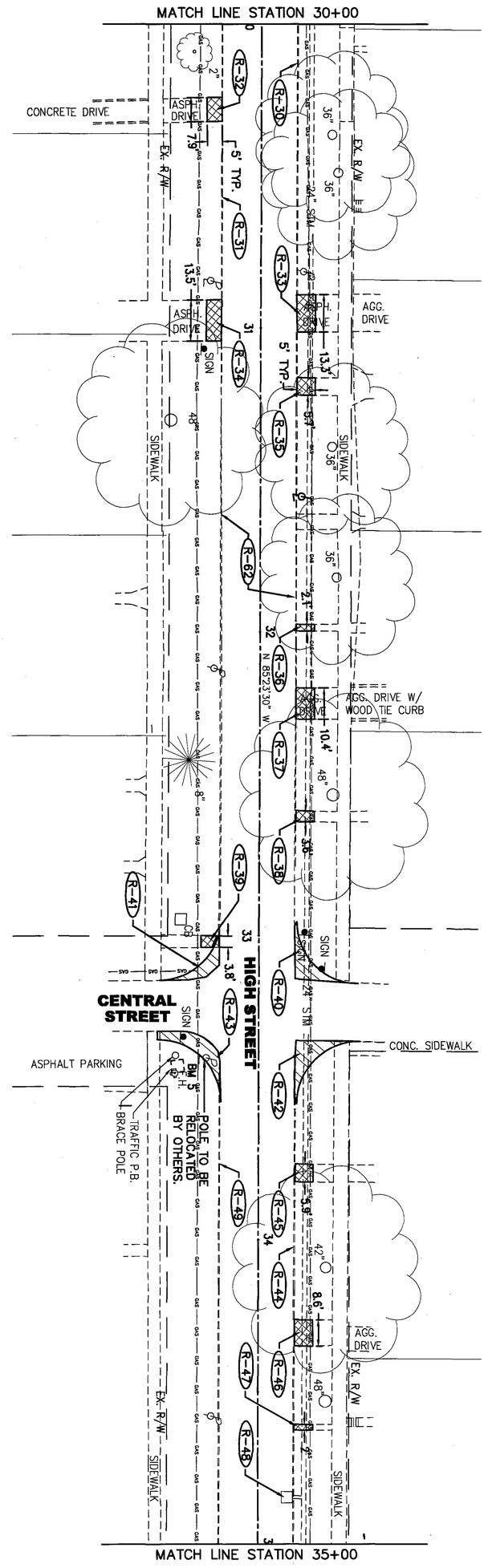

17 / 43	**DEL-229-6.84**	**DEMOLITION PLAN - HIGH STREET** **STA. 30+00 TO STA. 40+00**	DESIGNED JAT CHECKED JFR	0 10 20 40 HORIZONTAL SCALE IN FEET

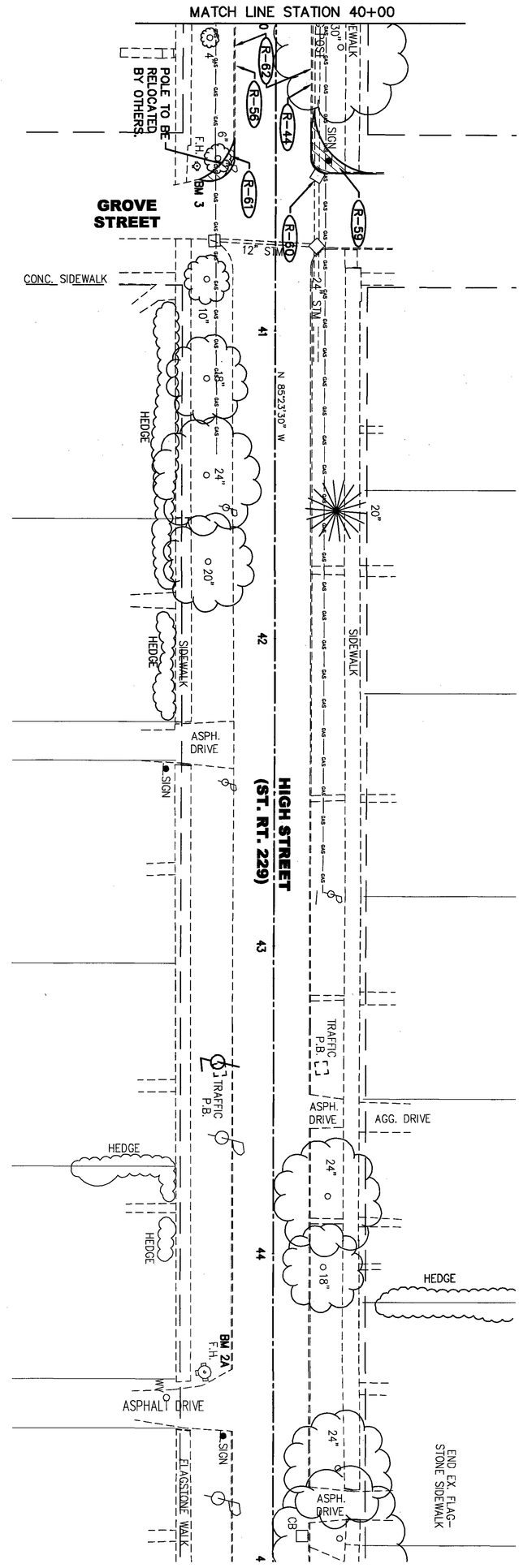

18 / 43	DEL-229-6.84	**DEMOLITION PLAN - HIGH STREET** **STA. 40+00 TO STA. 45+00**	DESIGNED JAT CHECKED JFR	0 10 20 40 HORIZONTAL SCALE IN FEET

SHEET No.	REFER. No.	LOCATION	STATION FROM	STATION TO	SIDE	204 SUBGRADE COMPACTION, 18" DEEP (SQ YD)	304 AGGREGATE BASE (CU YD)	451 6" REINFORCED CONCRETE PAVEMENT (SQ YD)	603 6" CONDUIT, TYPE E, 707.32, AS PER PLAN (FT)	603 8" CONDUIT, TYPE B (FT)	603 12" CONDUIT, TYPE B (FT)	604 CATCH BASIN, No. 2-2B (EACH)	604 MANHOLE, No. 3 (EACH)	608 4" CONCRETE WALK (SQ FT)	608 6" CONCRETE WALK, AS PER PLAN (SQ FT)	608 CONCRETE STEPS, TYPE A, AS PER PLAN (FT)	608 CONCRETE STEPS, TYPE B (FT)	608 CURB RAMP, AS PER PLAN (EACH)	608 WALKWAY MISC.: BRICK WALK (SQ FT)	608 WALKWAY MISC.: 1-1/2" BLACK ALUMINUM TUBULAR RAILING (FT)	608 WALKWAY MISC.: EXTERIOR BASEMENT ACCESS REMOVAL (EACH)	609 CURB, TYPE 6, AS PER PLAN (FT)	613 LOW STRENGTH MORTAR BACKFILL (CU YD)	SPECIAL SPECIAL-MISC.: HDPE YARD DRAIN (EACH)	SPECIAL CONCRETE CLASS C, AS PER PLAN (CU YD)
22	C-1	HIGH ST.	22+80		LT													1							
22	C-2	HIGH ST.	20+44.50	23+06	LT		5			10												276			
22	C-3	HIGH ST.	20+44.50	21+49	RT		2															125			
22	C-4	HIGH ST.	21+41		RT													1							
22	C-5	HIGH ST.	21+81		RT													1							
22	C-6	HIGH ST.	21+72.3	22+52.8	RT		3															141			
22	C-7	HIGH ST.	22+47		RT													1							
22 & 23	C-8	HIGH ST.	24+66	28+54	LT		7															400			
22 & 23	C-13	HIGH ST.	24+66	25+56	RT		2															95			
22	D-1	HIGH ST.	20+52		LT							1													
22	D-2	HIGH ST.	20+52		RT					10		1													
22	DR-1	HIGH ST.	21+30.20		LT			143																	
22 & 23	DR-2	HIGH ST.	25+08.6		LT			371																	
22	M-1	HIGH ST.	22+52.8	22+73.8	LT									110						27			4		3
22	W-1	HIGH ST.	20+50.50	23+06	LT									1600											
22	W-2	HIGH ST.	20+50.50	22+99	LT	134	15												1206						
22	W-3	HIGH ST.	20+52.50	21+38	RT	45	5												403						
22	W-4	HIGH ST.	20+52.50	21+42.94	RT									440											
22	W-5	HIGH ST.	21+82.1	22+32	RT	21	2												190						
22	W-6	HIGH ST.	21+77.2	22+52.9	RT									519											
22	W-7	HIGH ST.	24+66	24+95	LT	16	2												143						
22 & 23	W-8	HIGH ST.	24+66	25+48	RT	46	5												410						
22 & 23	W-9	HIGH ST.	24+66	25+56	LT									410											
22 & 23	W-16	HIGH ST.	24+66	25+51	RT									205											
23	B-1	HIGH ST.	26+75		LT																1				
23	C-9	HIGH ST.	26+20		LT													1							
23	C-10	HIGH ST.	26+20		RT													1							
23	C-11	HIGH ST.	25+52		RT													1							
23	C-12	HIGH ST.	25+93		RT													1							
23	C-14	HIGH ST.	28+45		LT													1							
23	C-15	HIGH ST.	25+92	28+67	RT		5															275			
23	C-16	HIGH ST.	28+83		LT													1							
23	C-17	HIGH ST.	29+03		LT													1							
23	C-18	HIGH ST.	28+98		RT													1							
23	C-19	HIGH ST.	28+82		RT													1							
23 & 24	C-20	HIGH ST.	28+83	33+16	LT																	452			
23 & 24	C-21	HIGH ST.	28+83	33+16	RT																	452			
23	C-29	HIGH ST.	28+45		RT													1							
23	C-30	HIGH ST.	25+59		LT											6									
23	C-31	HIGH ST.	26+14		LT											4									
23	C-32	HIGH ST.	26+59		LT											5									
23	C-35	HIGH ST.	26+64		RT												3								
23	C-36	HIGH ST.	26+90		RT												3								
23	C-33	HIGH ST.	26+94		LT											6									
23	C-37	HIGH ST.	27+42		RT											4									
23	C-34	HIGH ST.	27+53		LT												3								
23	D-3	HIGH ST.	28+38		LT/RT						55														
23	D-4	HIGH ST.	28+33	29+08	LT						76														
23	D-5	HIGH ST.	29+09		LT/RT						25														
23 & 24	D-6	HIGH ST.	29+93	32+94	RT		48		301																
23	D-7	HIGH ST.	29+96		RT		2		10															1	
23	D-28	HIGH ST.	28+33		LT							1													
23	D-29	HIGH ST.	28+45		RT							1													
23	D-30	HIGH ST.	29+09		LT							1													
23	D-31	HIGH ST.	29+09		RT							1													
23	D-34	HIGH ST.	29+08		LT						5		1												
23	M-2	HIGH ST.	25+34	27+88	LT									1448	980					272			59		57
23	M-3	HIGH ST.	26+27	27+73	RT									1026						141			35		16
	TOTALS CARRIED TO GENERAL SUMMARY					262	103	514	311	20	161	6	1	5758	980	25	9	14	2352	440	1	2216	98	1	76

DESIGNED JAT
CHECKED JFR

ROADWAY SUB-SUMMARY

DEL-229-6.84

SHEET No.	REFER. No.	LOCATION	STATION FROM	STATION TO	SIDE		204 SUBGRADE COMPACTION, 18" DEEP (SQ YD)	304 AGGREGATE BASE (CU YD)	451 6" REINFORCED CONCRETE PAVEMENT (SQ YD)	603 6" CONDUIT, TYPE E, 707.32, AS PER PLAN (FT)	603 8" CONDUIT, TYPE B (FT)	603 12" CONDUIT, TYPE B (FT)	604 CATCH BASIN, No. 2-2B (EACH)	604 MANHOLE, No. 3 (EACH)	608 4" CONCRETE WALK (SQ FT)	608 6" CONCRETE WALK, AS PER PLAN (SQ FT)	608 CONCRETE STEPS, TYPE A, AS PER PLAN (FT)	608 CONCRETE STEPS, TYPE B (FT)	608 CURB RAMP, AS PER PLAN (EACH)	608 WALKWAY MISC.: BRICK WALK (SQ FT)	608 WALKWAY MISC.: 1-1/2" BLACK ALUMINUM TUBULAR RAILING (FT)	608 WALKWAY MISC.: EXTERIOR BASEMENT ACCESS REMOVAL (EACH)	609 CURB, TYPE 6, AS PER PLAN (FT)	613 LOW STRENGTH MORTAR BACKFILL (CU YD)	SPECIAL SPECIAL-MISC.: HDPE YARD DRAIN (EACH)	SPECIAL CONCRETE CLASS C, AS PER PLAN (CU YD)
23	W-10	HIGH ST.	25+62	26+12	LT										100											
23	W-11	HIGH ST.	26+17	26+56	LT										80											
23	W-12	HIGH ST.	26+61	26+92	LT										62											
23	W-13	HIGH ST.	26+97	27+50	LT										106											
23	W-14	HIGH ST.	27+55	27+82	LT										64											
23	W-15	HIGH ST.	27+88	28+55	LT										224											
23	W-17	HIGH ST.	25+98	28+43	RT		44	5												392						
23	W-18	HIGH ST.	25+91	27+20	RT										625											
23	W-19	HIGH ST.	27+73	28+50	RT										401											
23	W-20	HIGH ST.	28+83	29+08	LT										308											
23	W-21	HIGH ST.	28+82	29+02	RT										215											
24	C-22	HIGH ST.	33+10		LT														1							
24	C-23	HIGH ST.	33+10		RT														1							
24	C-24	HIGH ST.	33+55		RT														1							
24	C-25	HIGH ST.	33+55		LT														1							
24,25,26	C-26	HIGH ST.	33+34	40+52.5	LT																		743			
24 & 25	C-27	HIGH ST.	33+35	36+75	RT																		371			
24	D-8	HIGH ST.	30+70	32+94	LT			36		224																
24	D-9	HIGH ST.	32+94		LT							5		1												
24	D-10	HIGH ST.	32+94		LT/RT							25														
24	D-11	HIGH ST.	30+75		LT			1		6															1	
24	D-12	HIGH ST.	31+50		LT			1		6															1	
24	D-13	HIGH ST.	30+63		RT			2		10															1	
24	D-14	HIGH ST.	31+50		RT			2		10															1	
24	D-15	HIGH ST.	32+00		RT			2		10															1	
24	D-16	HIGH ST.	32+77		RT			2		10															1	
24	D-17	HIGH ST.	34+85		LT								1													
24 & 25	D-18	HIGH ST.	33+98	36+54	RT			41		256																
24	D-19	HIGH ST.	34+00		RT			2		10															1	
24 & 25	D-20	HIGH ST.	35+00		RT			2		10															1	
24	D-32	HIGH ST.	32+93		RT								1													
24	D-33	HIGH ST.	32+94		LT								1													
24	DR-3	HIGH ST.	30+28.2		RT				55																	
24	DR-4	HIGH ST.	30+95		LT				76																	
24	DR-5	HIGH ST.	30+97		RT				83																	
24	DR-6	HIGH ST.	32+24		LT				67																	
24	DR-7	HIGH ST.	34+30.5		LT				59																	
24	W-25	HIGH ST.	31+19		LT										29											
24	W-26	HIGH ST.	31+99		LT										11											
24	W-28	HIGH ST.	32+61		LT										18											
24	W-29	HIGH ST.	33+01		RT										17											
24	W-30	HIGH ST.	33+61.5		LT										30											
24	W-32	HIGH ST.	34+61.5		LT										10											
25 & 26	C-28	HIGH ST.	36+92	40+52	RT																		389			
25	D-21	HIGH ST.	36+00		RT			2		10															1	
25	D-22	HIGH ST.	36+54		LT/RT							28	1													
25 & 26	D-23	HIGH ST.	38+00	40+31	RT			37		231																
25	D-24	HIGH ST.	38+00		RT			2		10															1	
25	D-25	HIGH ST.	39+50		RT			2		10															1	
25	D-26	HIGH ST.	39+14		RT/LT							25	1													
TOTALS CARRIED TO GENERAL SUMMARY							44	139	340	813	0	83	5	1	2300	0	0	0	4	392	0	0	1503	0	11	0

DESIGNED JAT
CHECKED JFR

ROADWAY SUB-SUMMARY

DEL-229-6.84

SHEET No.	REFER. No.	LOCATION	STATION FROM	STATION TO	SIDE		204 SUBGRADE COMPACTION, 18" DEEP (SQ YD)	304 AGGREGATE BASE (CU YD)	451 6" REINFORCED CONCRETE PAVEMENT (SQ YD)	603 6" CONDUIT, TYPE E, 707.32, AS PER PLAN (FT)	603 8" CONDUIT, TYPE B (FT)	603 12" CONDUIT, TYPE B (FT)	604 CATCH BASIN, No. 2-2B (EACH)	604 MANHOLE, No. 3 (EACH)	608 4" CONCRETE WALK (SQ FT)	608 6" CONCRETE WALK, AS PER PLAN (SQ FT)	608 CONCRETE STEPS, TYPE A, AS PER PLAN (FT)	608 CONCRETE STEPS, TYPE B (FT)	608 CURB RAMP, AS PER PLAN (EACH)	608 WALKWAY MISC.: BRICK WALK (SQ FT)	608 WALKWAY MISC.: 1-1/2" BLACK ALUMINUM TUBULAR RAILING (FT)	608 WALKWAY MISC.: EXTERIOR BASEMENT ACCESS REMOVAL (EACH)	609 CURB, TYPE 6, AS PER PLAN (FT)	613 LOW STRENGTH MORTAR BACKFILL (CU YD)	SPECIAL SPECIAL-MISC.: HDPE YARD DRAIN (EACH)	SPECIAL CONCRETE CLASS C, AS PER PLAN (CU YD)
25	DR-8	HIGH ST.	35+11		LT				62																	
25	DR-9	HIGH ST.	35+35		RT				76																	
25	DR-10	HIGH ST.	35+78		LT				65																	
25	DR-11	HIGH ST.	36+68		LT				72																	
25	DR-12	HIGH ST.	38+94		RT				72																	
26	D-27	HIGH ST.	40+29		LT/RT							25														
26	D-35	HIGH ST.	40+27		LT								1													
26	D-36	HIGH ST.	40+31		RT								1													
TOTALS CARRIED TO GENERAL SUMMARY							0	0	347	0	0	25	2	0	0	0	0	0	0	0	0	0	0	0	0	0

DESIGNED JAT
CHECKED JFR

ROADWAY SUB-SUMMARY

DEL-229-6.84

NAME	ODOT TYPE	STATION	GRATE	INVERT
D-1	2-2-B	20+52, 15' Lt.	984.90	982.2±
D-2	2-2-B	20+52, 17' Rt.	984.80	982.1±

IN AREAS WHERE WORK LIMITS ARE NOT LABELED, CONTRACTOR IS TO ASSUME THE PROPOSED HIGHWAY EASEMENT TO BE EQUIVALENT TO WORK LIMITS.

BENCHMARKS

BM 9 ELEV. 989.00
N.E. CAP BOLT OF HYDRANT @ THE S.W. CORNER OF HIGH ST. (229) & US 42

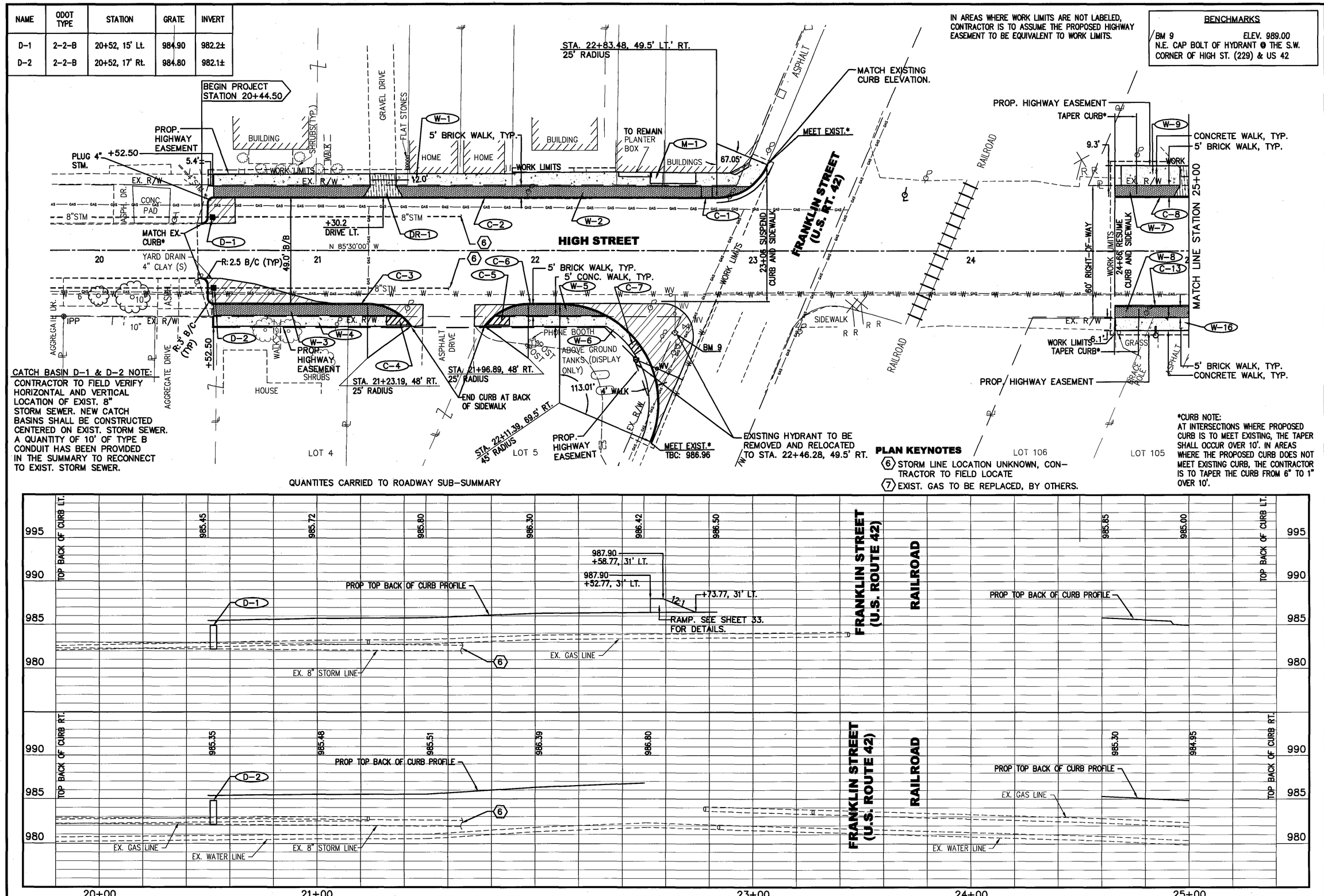

CATCH BASIN D-1 & D-2 NOTE:
CONTRACTOR TO FIELD VERIFY HORIZONTAL AND VERTICAL LOCATION OF EXIST. 8" STORM SEWER. NEW CATCH BASINS SHALL BE CONSTRUCTED CENTERED ON EXIST. STORM SEWER. A QUANTITY OF 10' OF TYPE B CONDUIT HAS BEEN PROVIDED IN THE SUMMARY TO RECONNECT TO EXIST. STORM SEWER.

QUANTITES CARRIED TO ROADWAY SUB-SUMMARY

PLAN KEYNOTES

(6) STORM LINE LOCATION UNKNOWN, CONTRACTOR TO FIELD LOCATE
(7) EXIST. GAS TO BE REPLACED, BY OTHERS.

*CURB NOTE:
AT INTERSECTIONS WHERE PROPOSED CURB IS TO MEET EXISTING, THE TAPER SHALL OCCUR OVER 10'. IN AREAS WHERE THE PROPOSED CURB DOES NOT MEET EXISTING CURB, THE CONTRACTOR IS TO TAPER THE CURB FROM 6" TO 1" OVER 10'.

N

0 10 20 40
HORIZONTAL SCALE IN FEET

DESIGNED JAT
CHECKED JFR

PLAN AND PROFILE - HIGH STREET STA. 20+00 TO STA. 25+00

DEL-229-6.84

NAME	ODOT TYPE	STATION	GRATE	INVERT
D-28	2-2-B	28+33, 24' Lt.	981.50	977.17
D-29	2-2-B	28+45, 30' Rt.	980.70	977.45
D-34	MH No. 3	29+08, 17' Lt.	981.25	976.98±
D-30	2-2-B	29+09, 12' Lt.	980.65	977.48
D-31	2-2-B	29+09, 12' Rt.	980.85	977.60

CONTRACTOR TO FIELD VERIFY HORIZONTAL AND VERTICAL LOCATION OF EXIST. 24" STORM SEWER. A QUANTITY OF 10FT OF 24" STORM SEWER HAS BEEN PROVIDED IN THE GENERAL SUMMARY FOR CONNECTION OF EACH PROPOSED CATCH BASIN.

IN AREAS WHERE WORK LIMITS ARE NOT LABELED, CONTRACTOR IS TO ASSUME THE PROPOSED HIGHWAY EASEMENT TO BE EQUIVALENT TO WORK LIMITS.

BENCHMARKS

BM 7 ELEV. 986.52
EAST CAP BOLT OF HYDRANT @ THE S.W. CORNER OF HIGH ST. (229) & MAIN ST.

BM 6 ELEV. 983.32
N.E. CAP BOLT OF HYDRANT @ THE S.E. CORNER OF HIGH ST. (229) & HARRISON ST.

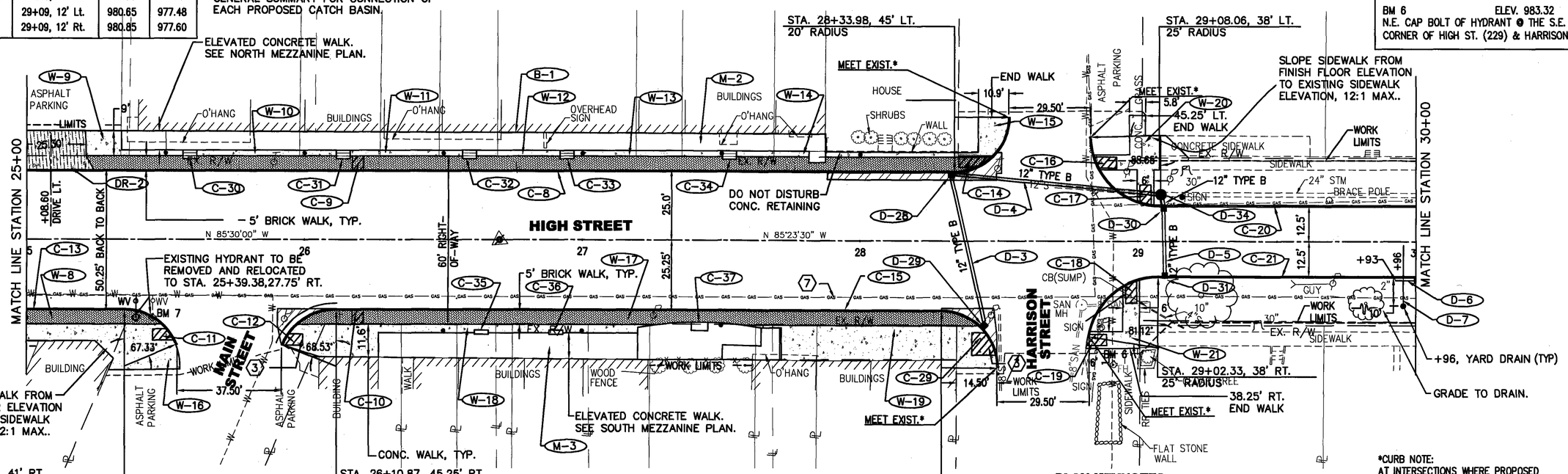

PLAN KEYNOTES

(6) STORM LINE LOCATION UNKNOWN, CONTRACTOR TO FIELD LOCATE

(7) EXIST. GAS TO BE REPLACED, BY OTHERS.

*CURB NOTE:
AT INTERSECTIONS WHERE PROPOSED CURB IS TO MEET EXISTING, THE TAPER SHALL OCCUR OVER 10'. IN AREAS WHERE THE PROPOSED CURB DOES NOT MEET EXISTING CURB, THE CONTRACTOR IS TO TAPER THE CURB FROM 6" TO 1" OVER 10'.

QUANTITES CARRIED TO ROADWAY SUB-SUMMARY

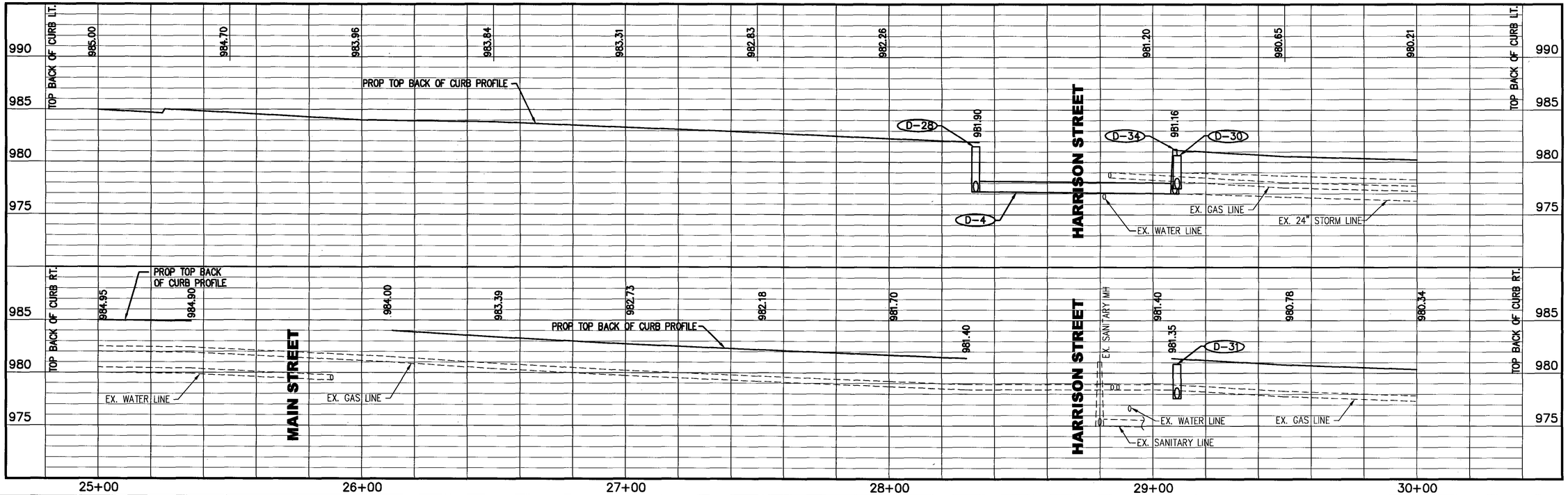

HORIZONTAL SCALE IN FEET 0 10 20 40

DESIGNED
CHECKED

PLAN AND PROFILE - HIGH STREET
STA. 25+00 TO STA. 30+00

DEL-229-6.84

NAME	ODOT TYPE	STATION	GRATE	INVERT
D-9	MH No. 3	32+94.5, 15.7' Lt.	978.35	974.10±
D-33	2-2-B	32+94, 12' Lt.	977.70	974.20
D-17	2-2-B	34+84.6, 12' Lt.	976.00	971.75
D-32	2-2-B	32+93, 12' Rt.	977.70	974.45

CONTRACTOR TO FIELD VERIFY HORIZONTAL AND VERTICAL LOCATION OF EXIST. 24" STORM SEWER. A QUANTITY OF 10FT OF 24" STORM SEWER HAS BEEN PROVIDED IN THE GENERAL SUMMARY FOR CONNECTION OF EACH PROPOSED CATCH BASIN.

BENCHMARKS

BM 5 ELEV. 979.59
N.E. CAP BOLT OF HYDRANT @ THE S.E. CORNER OF HIGH ST. (229) & CENTRAL ST.

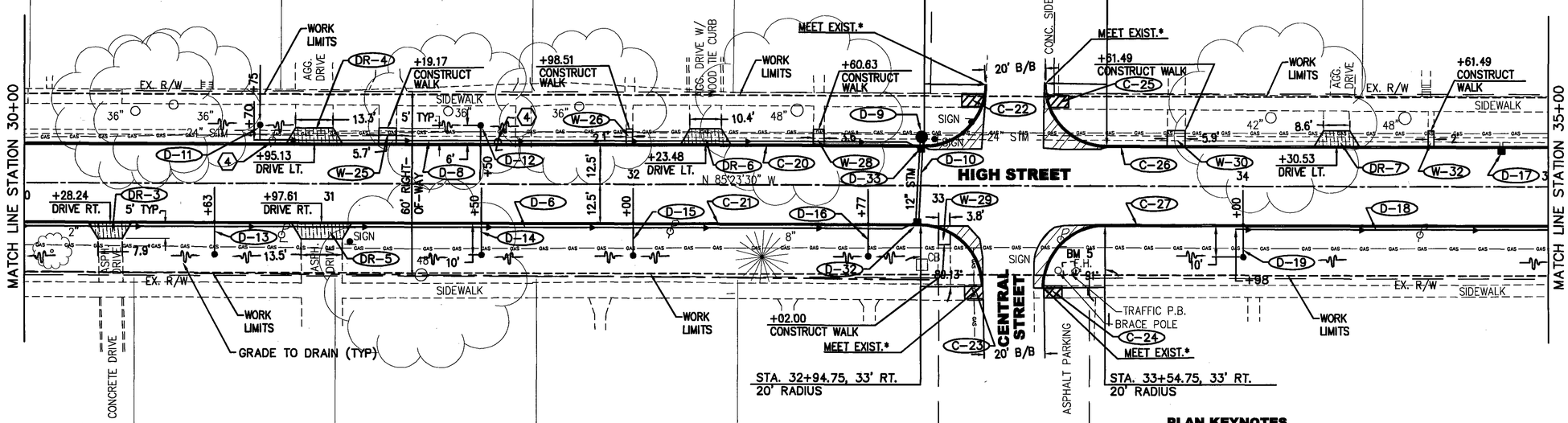

PLAN KEYNOTES

4. POLE TO BE RELOCATED BY OTHERS
6. STORM LINE LOCATION UNKNOWN, CONTRACTOR TO FIELD LOCATE
7. EXIST. GAS TO BE REPLACED, BY OTHERS.

*CURB NOTE:
AT INTERSECTIONS WHERE PROPOSED CURB IS TO MEET EXISTING, THE TAPER SHALL OCCUR OVER 10'. IN AREAS WHERE THE PROPOSED CURB DOES NOT MEET EXISTING CURB, THE CONTRACTOR IS TO TAPER THE CURB FROM 6" TO 1" OVER 10'.

QUANTITES CARRIED TO ROADWAY SUB-SUMMARY

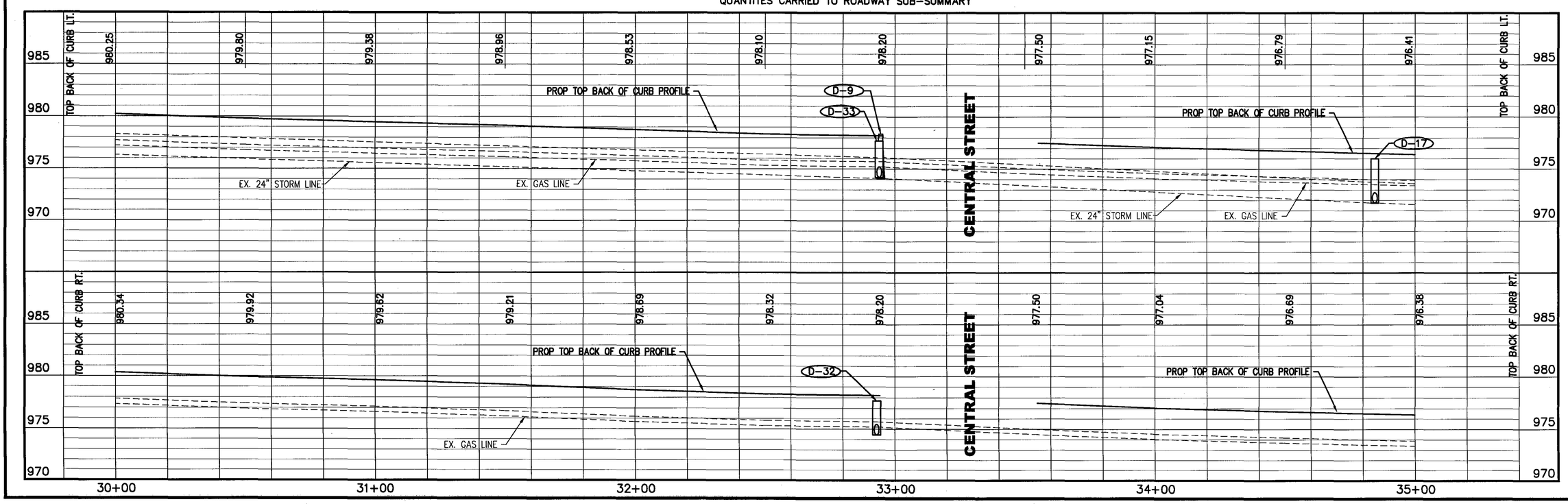

PLAN AND PROFILE - HIGH STREET
STA. 30+00 TO STA. 35+00

DEL-229-6.84

DESIGNED JAT CHECKED JFR

HORIZONTAL SCALE IN FEET 0 10 20 40

NAME	ODOT TYPE	STATION	GRATE	INVERT
D-22	2-2-B	36+54, 12' Rt.	974.80	971.55
D-26	2-2-B	39+14, 12' Rt.	972.60	969.35

CONTRACTOR TO FIELD VERIFY HORIZONTAL AND VERTICAL LOCATION OF EXIST. 24" STORM SEWER. A QUANTITY OF 10FT OF 24" STORM SEWER HAS BEEN PROVIDED IN THE GENERAL SUMMARY FOR CONNECTION OF EACH PROPOSED CATCH BASIN.

BENCHMARKS

BM 4 ELEV. 979.09
TOP CENTER OF CONC. HITCHING POST ON W. SIDE OF LAWN ST. 50'± SOUTH OF HIGH ST. (229)

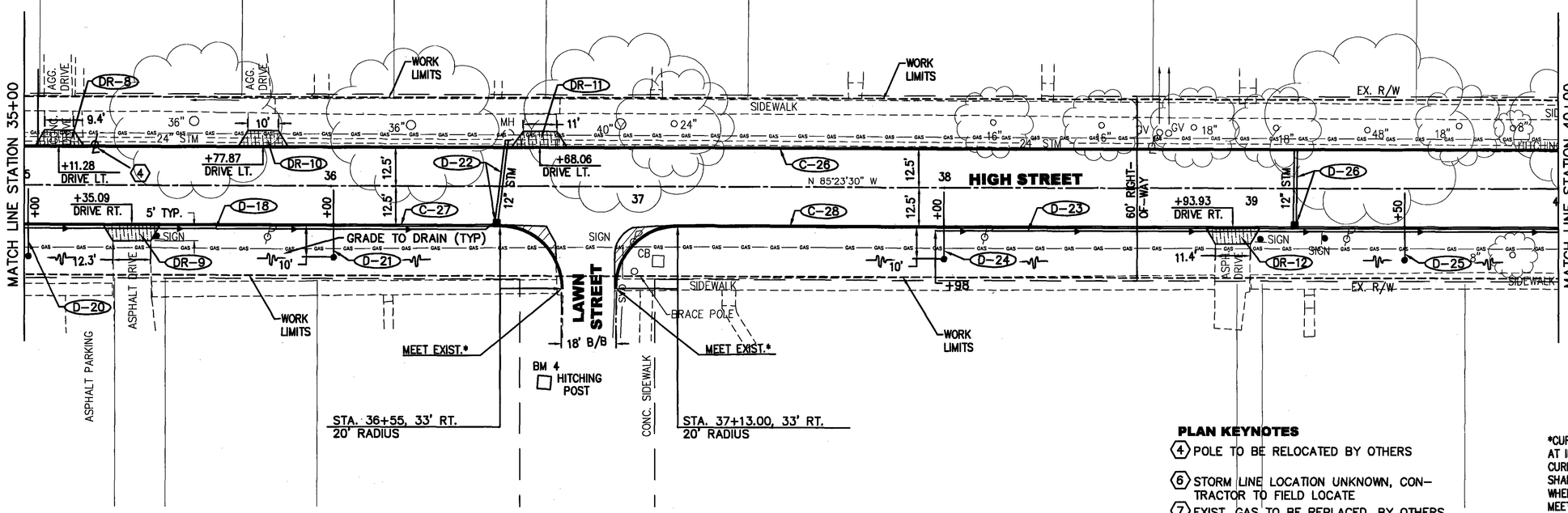

PLAN KEYNOTES

(4) POLE TO BE RELOCATED BY OTHERS

(6) STORM LINE LOCATION UNKNOWN, CONTRACTOR TO FIELD LOCATE

(7) EXIST. GAS TO BE REPLACED, BY OTHERS.

*CURB NOTE:
AT INTERSECTIONS WHERE PROPOSED CURB IS TO MEET EXISTING, THE TAPER SHALL OCCUR OVER 10'. IN AREAS WHERE THE PROPOSED CURB DOES NOT MEET EXISTING CURB, THE CONTRACTOR IS TO TAPER THE CURB FROM 6" TO 1" OVER 10'.

QUANTITES CARRIED TO ROADWAY SUB-SUMMARY

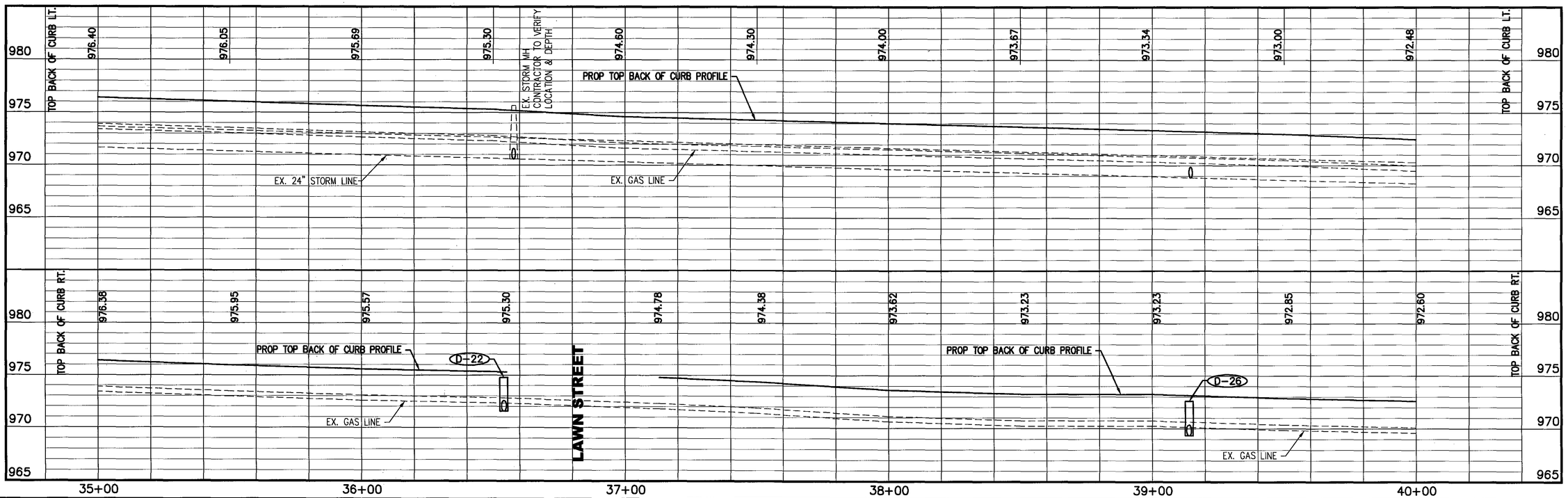

HORIZONTAL SCALE IN FEET 0 10 20 40

DESIGNED JAT CHECKED JFR

PLAN AND PROFILE - HIGH STREET STA. 35+00 TO STA. 40+00

DEL-229-6.84

NAME	ODOT TYPE	STATION	GRATE	INVERT
D-35	2-2-B	40+27, 12' Lt.	971.65	968.10
D-36	2-2-B	40+31, 12' Rt.	971.60	968.35

CONTRACTOR TO FIELD VERIFY HORIZONTAL AND VERTICAL LOCATION OF EXIST. 24" STORM SEWER. A QUANTITY OF 10FT OF 24" STORM SEWER HAS BEEN PROVIDED IN THE GENERAL SUMMARY FOR CONNECTION OF EACH PROPOSED CATCH BASIN.

BENCHMARKS

BM 3 ELEV. 974.05
N.E. CAP BOLT OF HYDRANT ⊙ THE S.W. CORNER HIGH ST. (229) & GROVE ST.

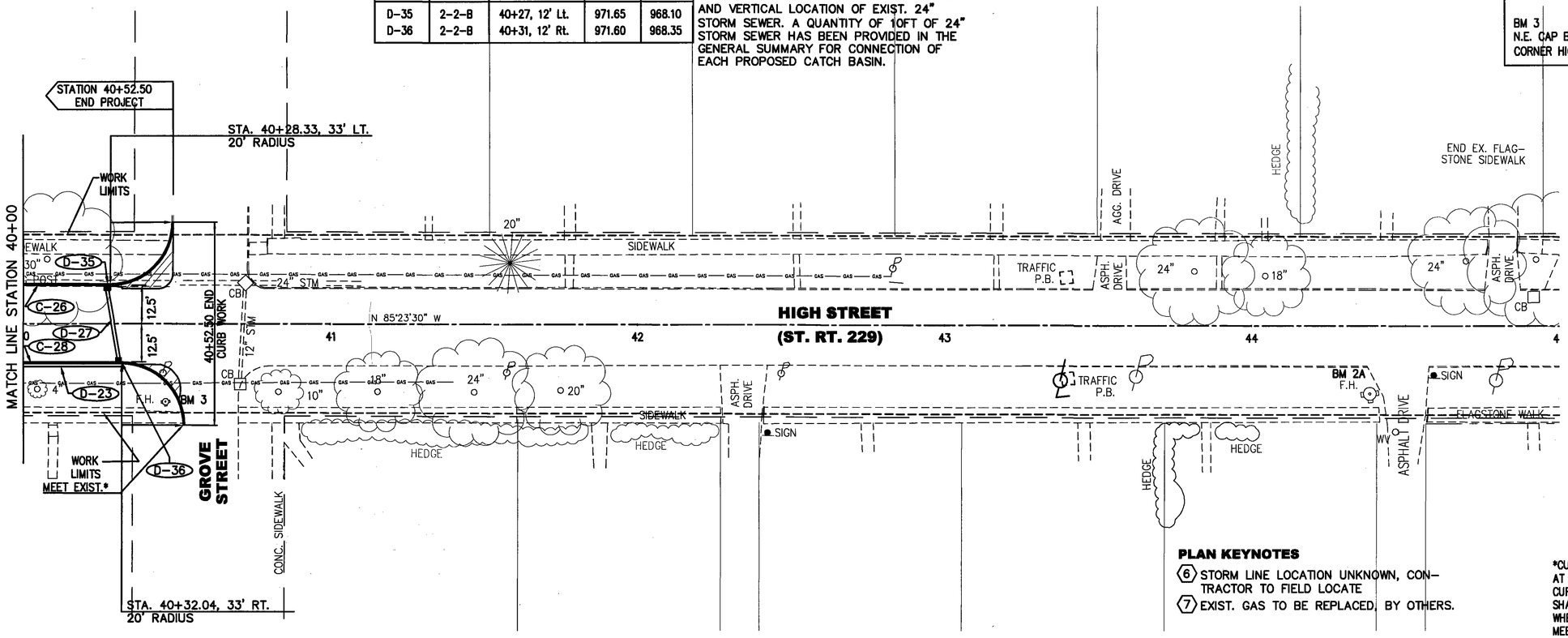

PLAN KEYNOTES

6 STORM LINE LOCATION UNKNOWN, CONTRACTOR TO FIELD LOCATE

7 EXIST. GAS TO BE REPLACED, BY OTHERS.

*CURB NOTE:
AT INTERSECTIONS WHERE PROPOSED CURB IS TO MEET EXISTING, THE TAPER SHALL OCCUR OVER 10'. IN AREAS WHERE THE PROPOSED CURB DOES NOT MEET EXISTING CURB, THE CONTRACTOR IS TO TAPER THE CURB FROM 6" TO 1" OVER 10'.

QUANTITES CARRIED TO ROADWAY SUB-SUMMARY

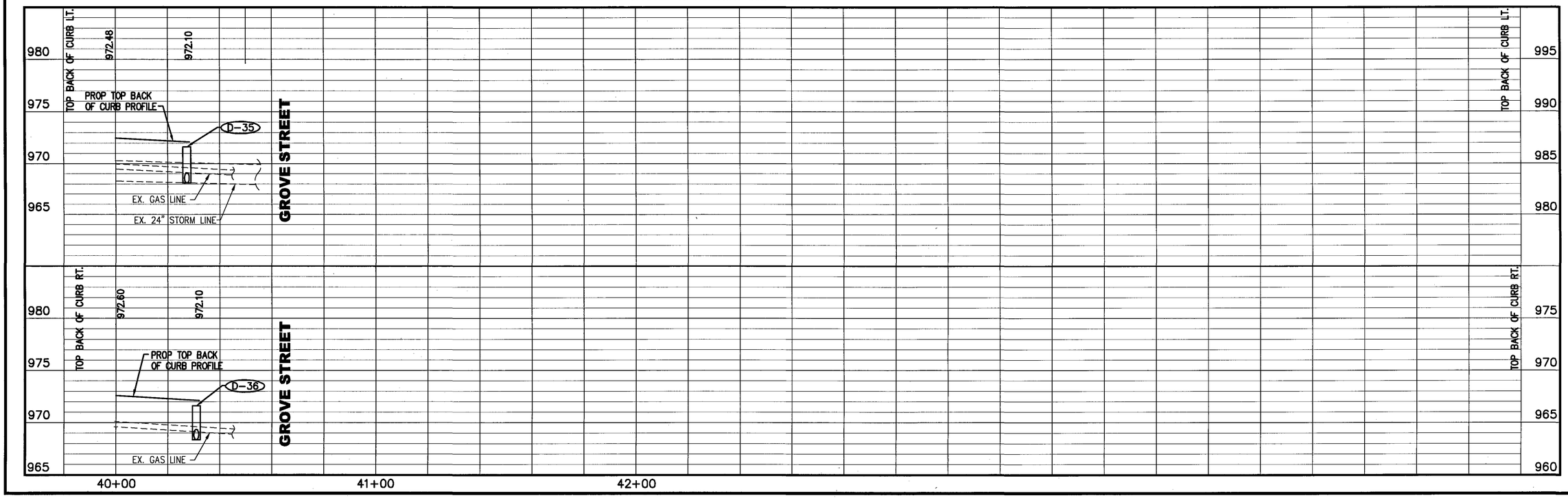

N

0 10 20 40
HORIZONTAL SCALE IN FEET

DESIGNED JAT
CHECKED JFR

PLAN AND PROFILE - HIGH STREET
STA. 40+00 TO STA. 45+00

DEL-229-6.84

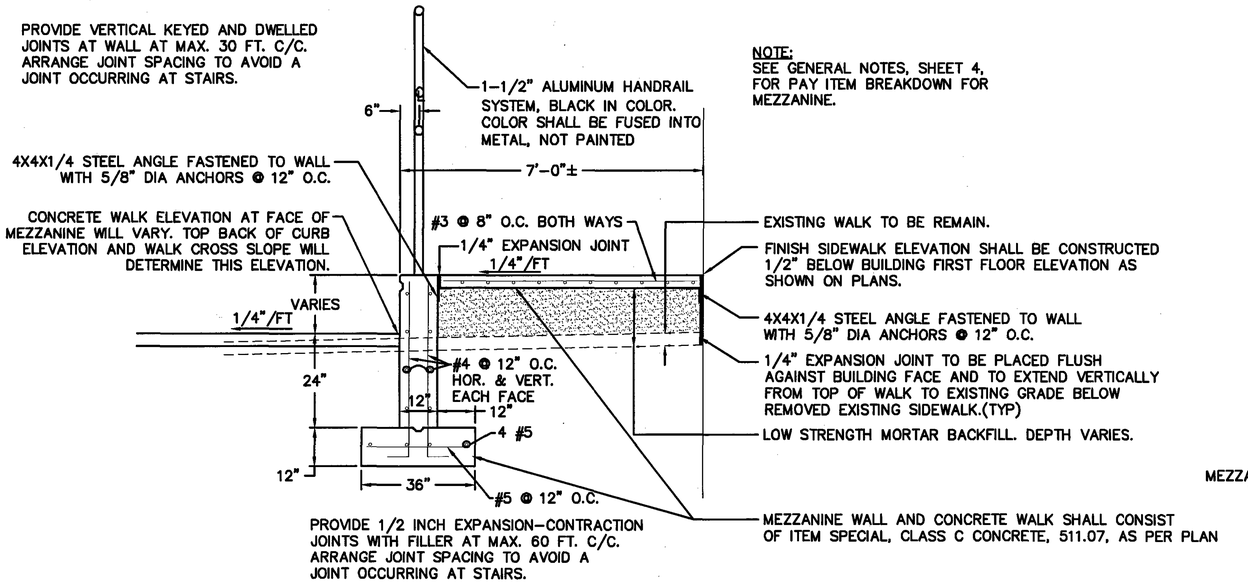

NOTE:
SEE GENERAL NOTES, SHEET 4, FOR PAY ITEM BREAKDOWN FOR MEZZANINE.

MEZZANINE WALL DETAIL - STA. 25+34 TO STA. 27+88 LEFT

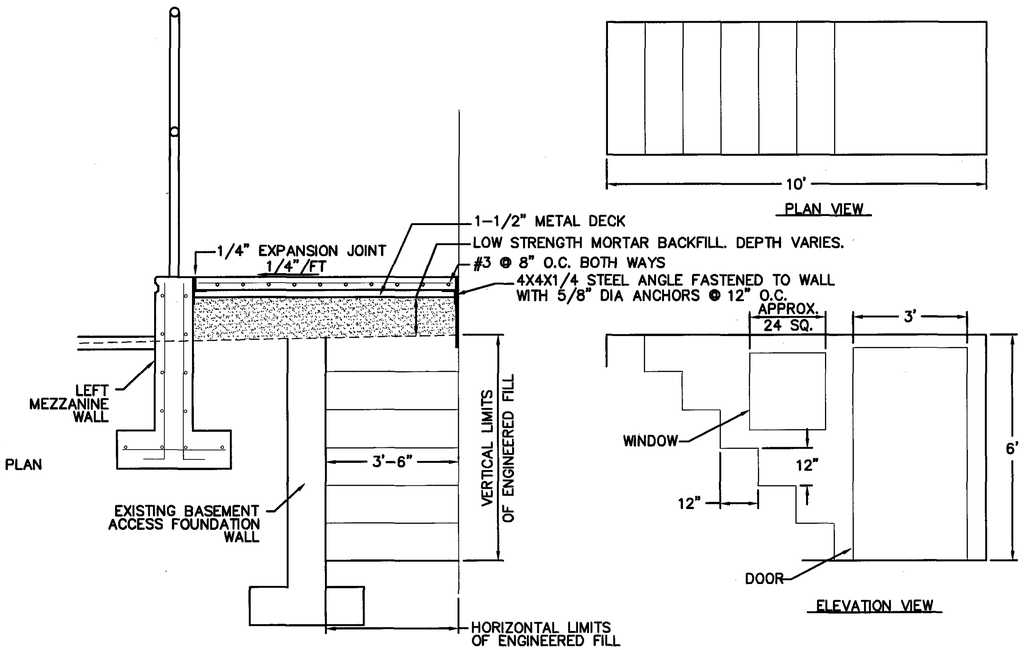

NOTE:
① DOOR AND WINDOW OPENINGS SHALL BE COVERED WITH A 1/4" STEEL PLATE AND FASTENED TO THE FOUNDATION WALLS WITH 5/8" DIA. ANCHORS @ 12" ON CENTER, PRIOR TO PLACEMENT OF ENGINEERED FILL.
② SEE GENERAL NOTES, SHEET 4, FOR PAY ITEM BREAKDOWN.

EXTERIOR BASEMENT ACCESS DETAIL STATION 26+75 (LEFT)

NTS

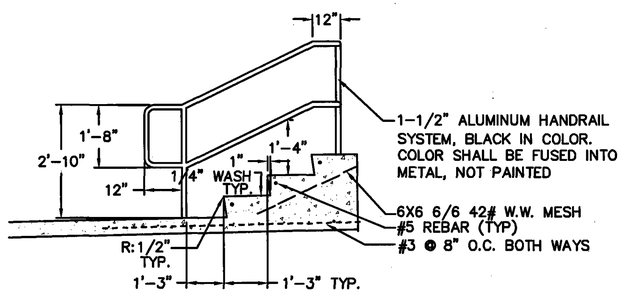

STAIRS SECTION

NTS

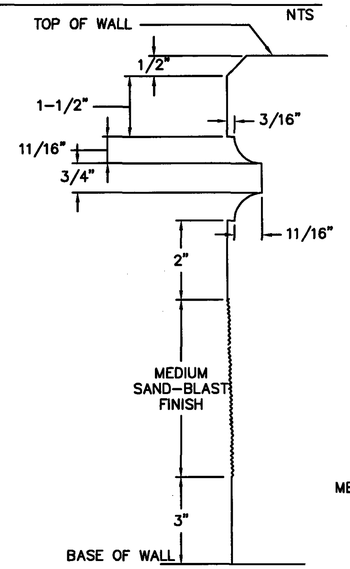

WALL REVEAL DETAIL

NTS

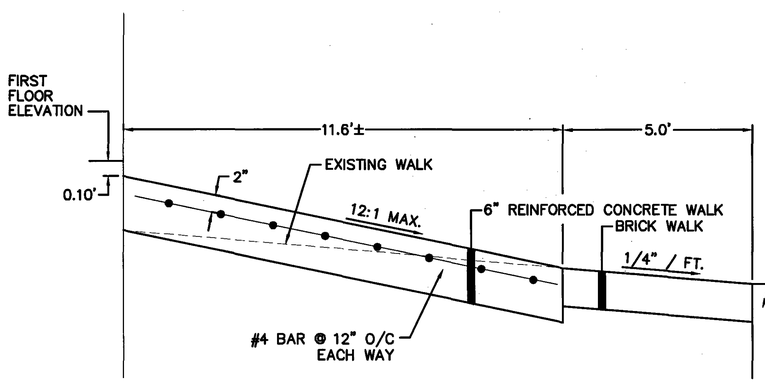

PAYMENT FOR ITEM 608, 6" REINFORCED CONCRETE WALK, AS PER PLAN SHALL BE PAID AT THE CUBIC YARD BID PRICE AND SHALL INCLUDE ALL LABOR, MATERIAL AND EQUIPMENT REQUIRED TO COMPLETE THIS ITEM OF WORK.

ITEM 608, 6" REINFORCED CONCRETE WALK, AS PER PLAN (SOUTH MEZZANINE AT HARRISON ST.) STA. 27+73 TO STA. 28+51 RIGHT

NTS

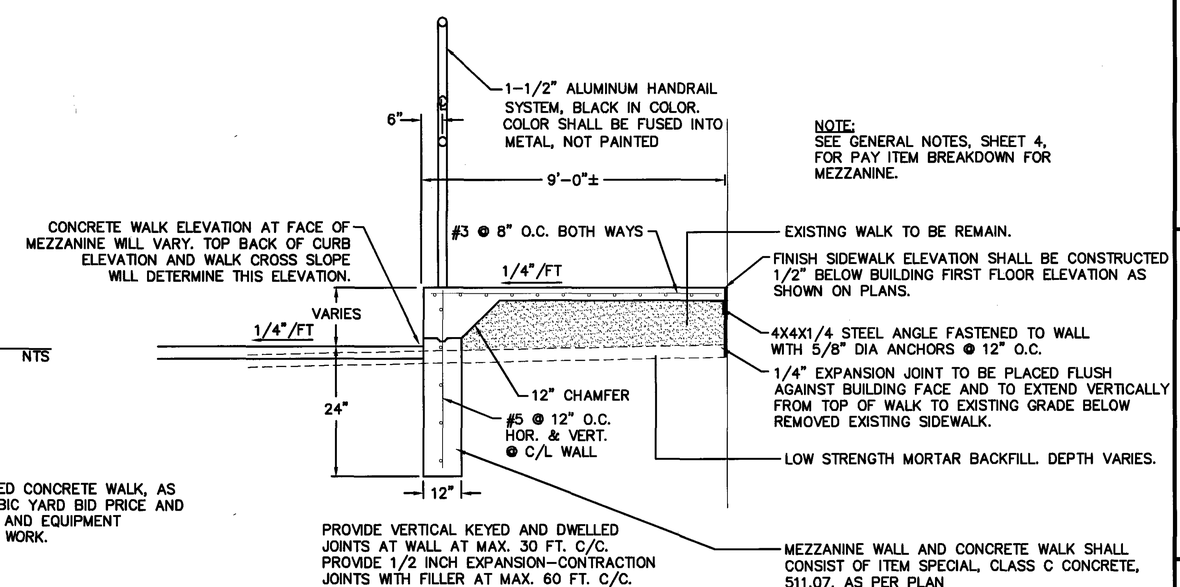

NOTE:
SEE GENERAL NOTES, SHEET 4, FOR PAY ITEM BREAKDOWN FOR MEZZANINE.

MEZZANINE WALL DETAIL - STA. 26+27 TO STA. 27+73 RIGHT

NTS

DESIGNED JAT CHECKED JFR

MEZZANINE DETAILS

DEL-229-6.84

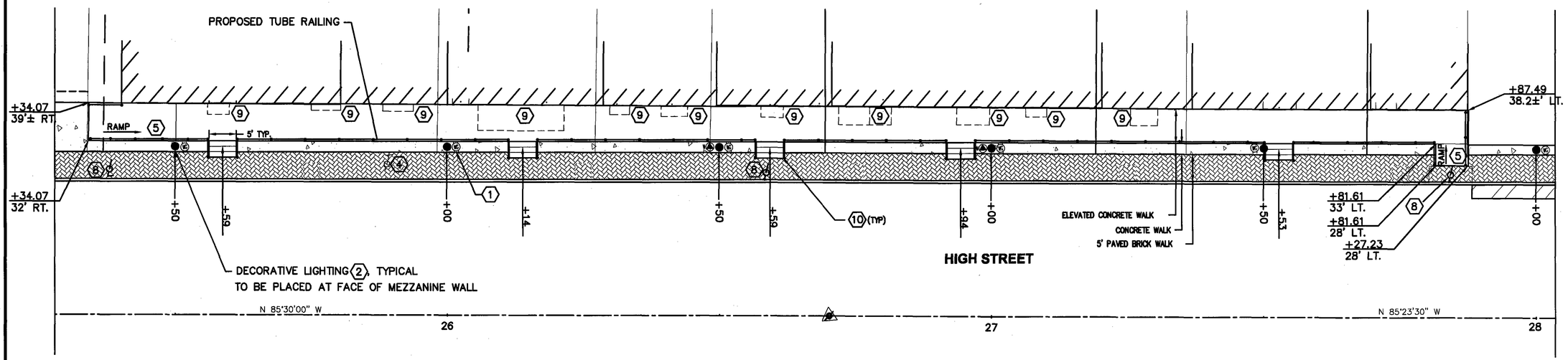

PLAN KEYNOTES

1. WEATHERPROOF DUPLEX RECEPTACLE, SEE LIGHTING PLAN
2. DECORATIVE LIGHT, SEE LIGHTING PLAN
3. CURB RAMP
4. POLE TO BE RELOCATED, BY OTHERS
5. A.D.A. ACCESS RAMP
6. NOT USED
7. NOT USED
8. POLE REMOVED.
9. STEP REMOVED.
10. STEPS, SEE DETAIL ON SHEET 27.

F.F.E. = FINISHED FLOOR ELEVATION

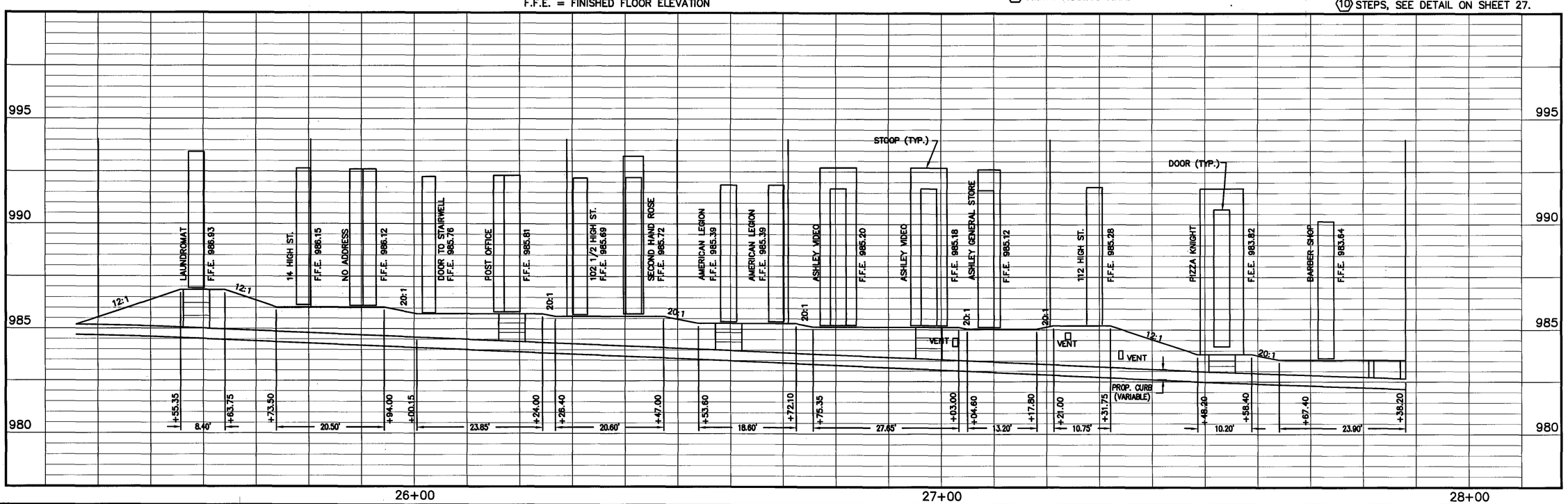

HORIZONTAL SCALE IN FEET
0 5 10 20

DESIGNED JAT
CHECKED JFR

DOWNTOWN MEZZANINE PLAN
NORTH SIDE OF HIGH STREET

DEL-229-6.84

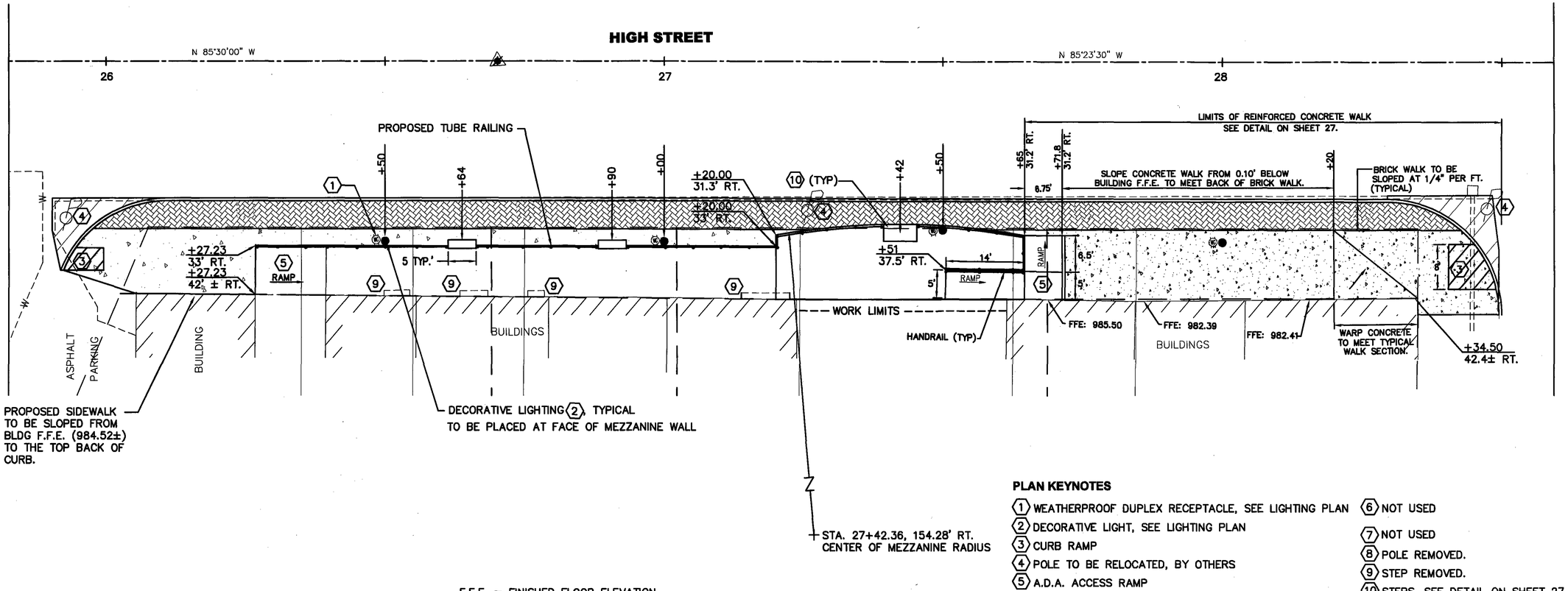

PLAN KEYNOTES

1. WEATHERPROOF DUPLEX RECEPTACLE, SEE LIGHTING PLAN
2. DECORATIVE LIGHT, SEE LIGHTING PLAN
3. CURB RAMP
4. POLE TO BE RELOCATED, BY OTHERS
5. A.D.A. ACCESS RAMP
6. NOT USED
7. NOT USED
8. POLE REMOVED.
9. STEP REMOVED.
10. STEPS, SEE DETAIL ON SHEET 27.

F.F.E. = FINISHED FLOOR ELEVATION

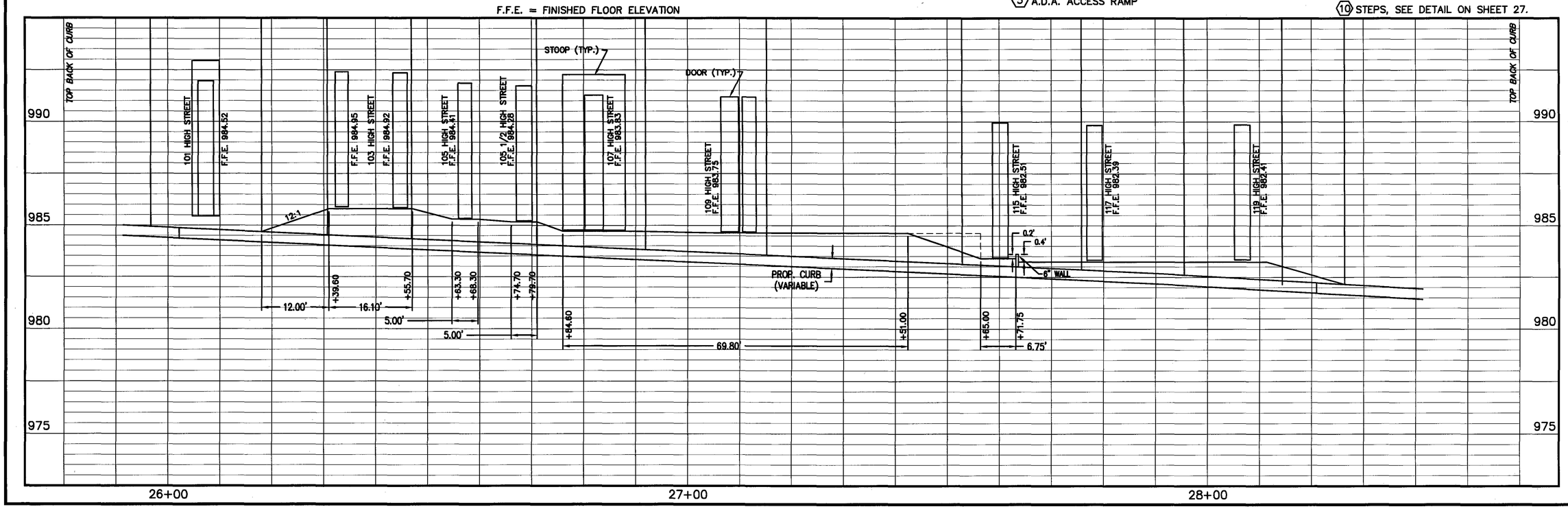

N

0 5 10 20
HORIZONTAL SCALE IN FEET

DESIGNED JAT
CHECKED JFR

DOWNTOWN MEZZANINE PLAN
SOUTH SIDE OF HIGH STREET

DEL-229-6.84

SEEDING	
END WIDTH	SQ. YDS.

END AREA	
CUT	FILL

VOLUME	
CUT	FILL

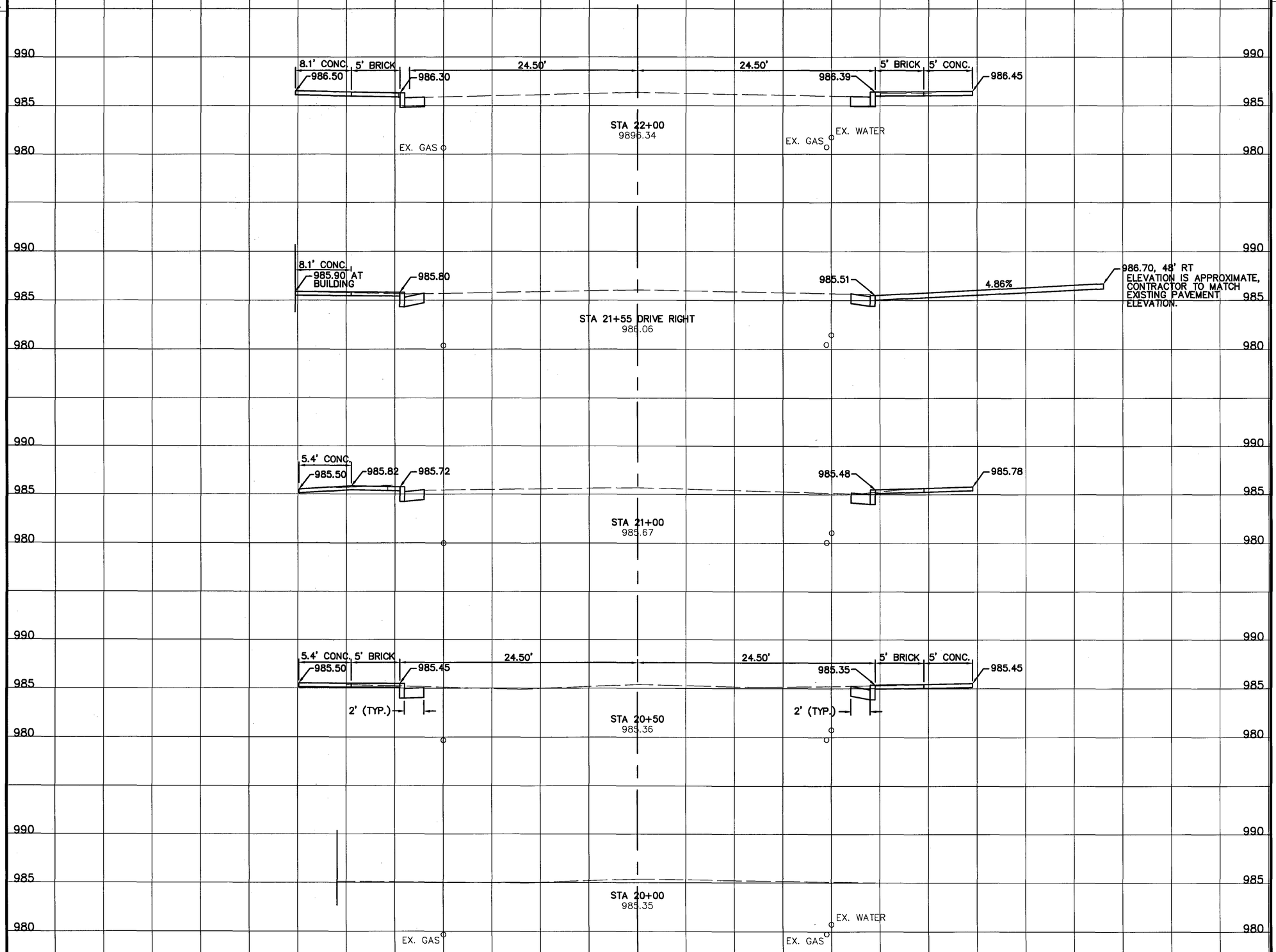

DESIGNED JAT
CHECKED JFR

CROSS SECTIONS - STATE ROUTE 229
STA. 20+00 TO STA. 22+00

DEL-229-6.84

SEEDING	
END WIDTH	SQ. YDS.

END AREA	
CUT	FILL

VOLUME	
CUT	FILL

DESIGNED JAT
CHECKED JFR

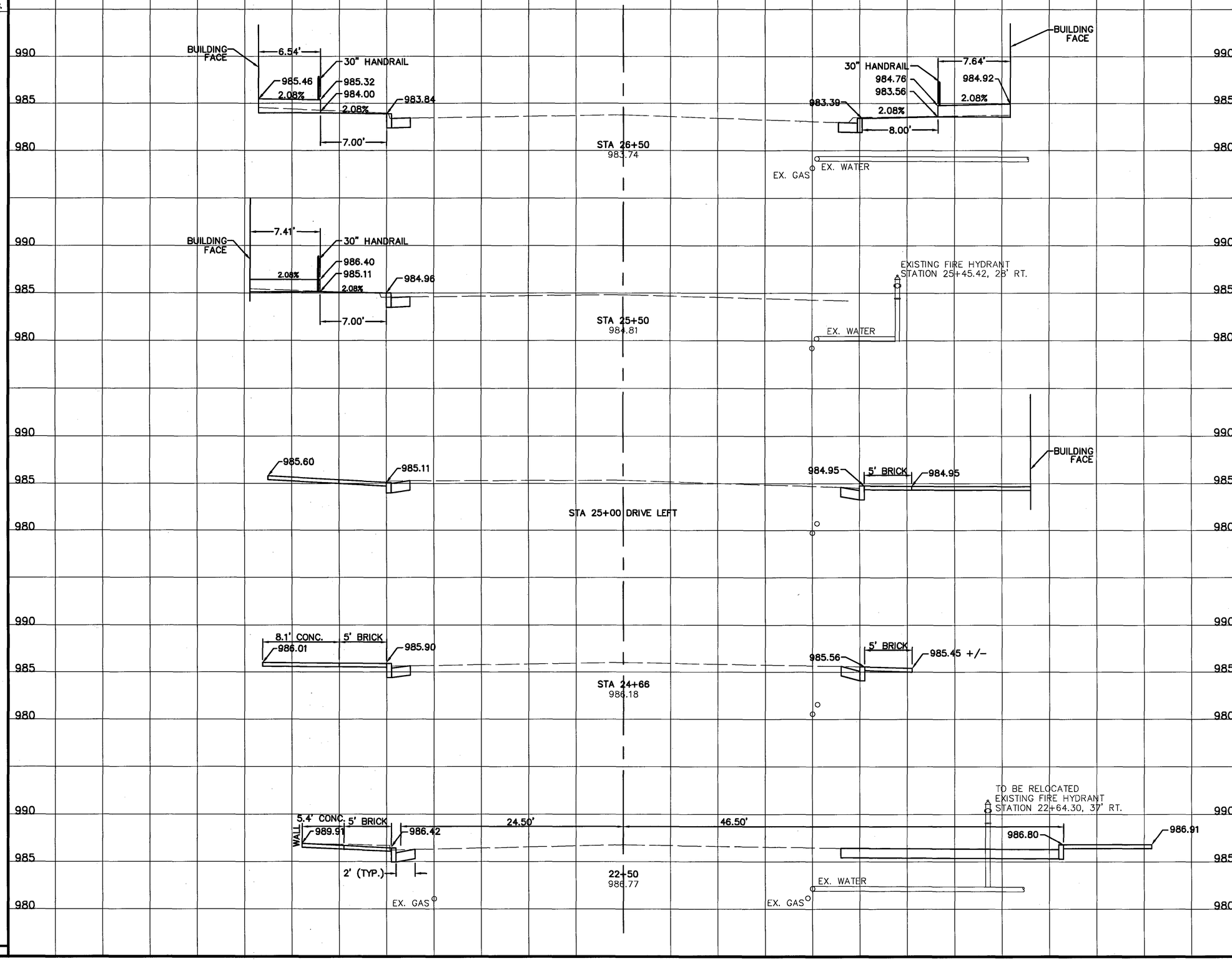

CROSS SECTIONS - STATE ROUTE 229
STA.22+50 TO STA. 26+50

DEL-229-6.84

SEEDING	
END WIDTH	SQ. YDS.

END AREA	
CUT	FILL

VOLUME	
CUT	FILL

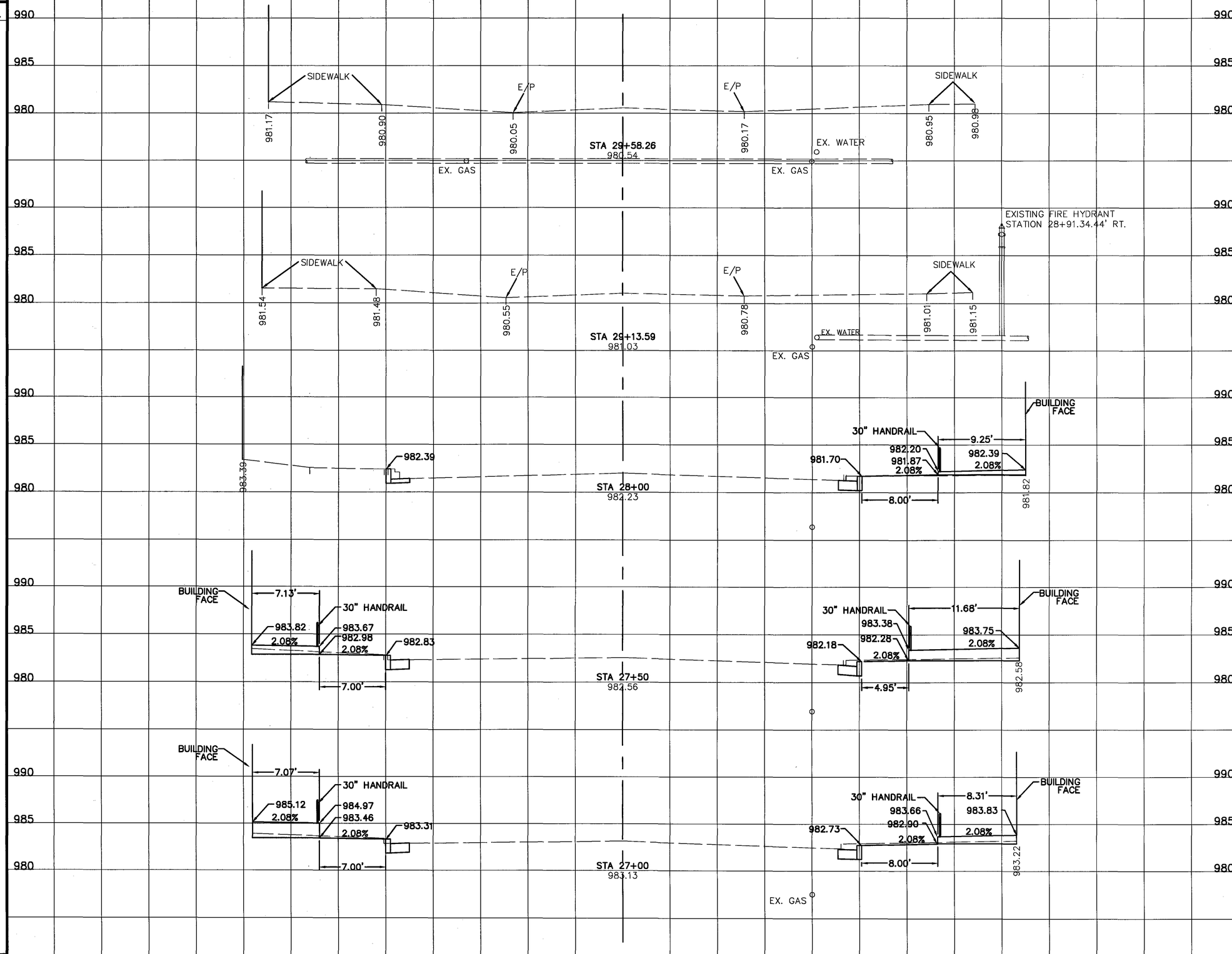

DESIGNED JAT
CHECKED JFR

CROSS SECTIONS - STATE ROUTE 229
STA. 27+00 TO STA. 29+58.26

DEL-229-6.84

DRAIN BASINS SHALL BE ONE OF THE FOLOWING OR EQUAL:

ADS 12" DRAIN BASIN W/ SQ. GRATE
ADVANCED DRAINAGE SYSTEMS
330 RIVERSIDE DR.
COLUMBUS, OHIO 43221
1.800.821.6710

12"X6" PVC IN-LINE DRAIN W/ SQ. GRATE
HANCOR
1888.367.7473

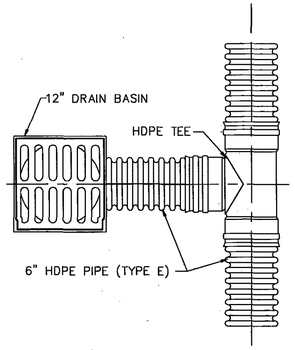

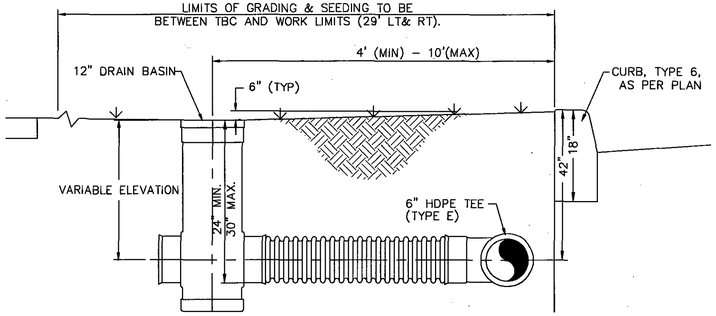

ITEM 690 SPECIAL, MISC.: HDPE YARD DRAIN, AS PER PLAN

PAYMENT FOR ITEM 690 SPECIAL, MISC.: HDPE YARD DRAIN, AS PER PLAN SHALL BE PAID AT THE EACH BID PRICE AND SHALL INCLUDE ALL LABOR, MATERIAL AND EQUIPMENT REQUIRED TO COMPLETE THIS ITEM OF WORK.

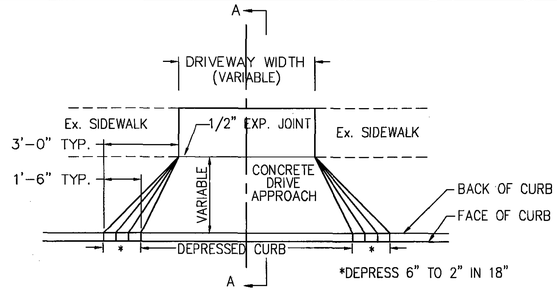

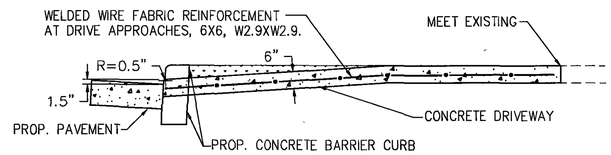

SECTION A–A

ITEM 451, 6" REINFORCED CONCRETE PAVEMENT, AS PER PLAN

PAYMENT FOR ITEM 451, 6" REINFORCED CONCRETE PAVEMENT, AS PER PLAN SHALL BE PAID AT THE CUBIC YARD BID PRICE AND SHALL INCLUDE ALL LABOR, MATERIAL AND EQUIPMENT REQUIRED TO COMPLETE THIS ITEM OF WORK.

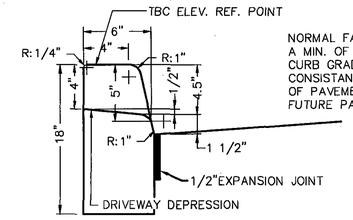

NORMAL FACE OF CURB EXPOSURE TO BE A MIN. OF 4.5" AND A MAX. OF 7". CURB GRADE HAS BEEN SET TO ASSURE A CONSISTANT GRADE TO REDUCE THE AMOUNT OF PAVEMENT GRINDING NEEDED FOR ANY FUTURE PAVING OPERATIONS.

NOTES:

1. CONTRACTION JOINTS TO BE PLACED AT 10 FT. INTERVALS.
2. PRE-MOLDED EXPANSION JOINTS ARE REQUIRED TO ISOLATE DRIVE APPROACHES, SERVICE WALKS, CURB RAMPS AND AT 50 FT. INTERVALS.
3. APPLY WHITE PIGMENTED CURING COMPOUND IMMEDIATELY AFTER FINISHING SURFACES.

ITEM 609, CURB, TYPE 6, AS PER PLAN

PAYMENT FOR ITEM 609, CURB, TYPE 6, AS PER PLAN SHALL BE PAID AT THE FOOT BID PRICE AND SHALL INCLUDE ALL LABOR, MATERIAL AND EQUIPMENT REQUIRED TO COMPLETE THIS ITEM OF WORK.

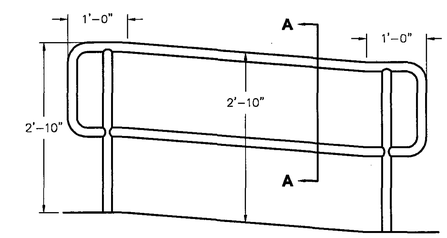

TYPICAL HANDICAP RAMP ELEVATION

BK-405
MOUNTING FLANGE FOR
1 1/2" PIPE

SEE TYP. HANDICAP RAMP ELEVATION DETAIL FOR RAILING TERMINATIONS.

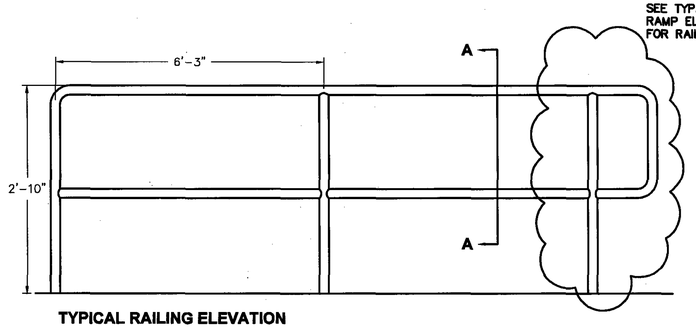

TYPICAL RAILING ELEVATION

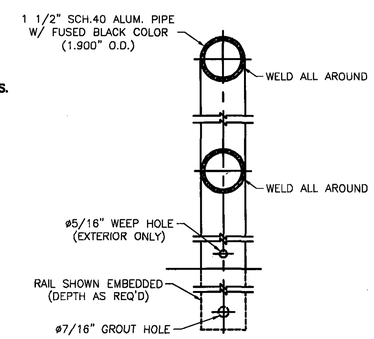

CROSS SECTION A-A

ITEM 608, WALKWAY MISC.: 1-1/2" BLACK ALUMINUM TUBULAR RAILING, AS PER PLAN

PAYMENT FOR ITEM 608, WALKWAY MISC.: 1–½" BLACK ALUMINUM RAILING, AS PER PLAN SHALL BE PAID AT THE FOOT BID PRICE AND SHALL INCLUDE ALL LABOR, MATERIAL AND EQUIPMENT REQUIRED TO COMPLETE THIS ITEM OF WORK.

CALCULATED JAT
CHECKED JFR

DETAILS

DEL-229-6.84

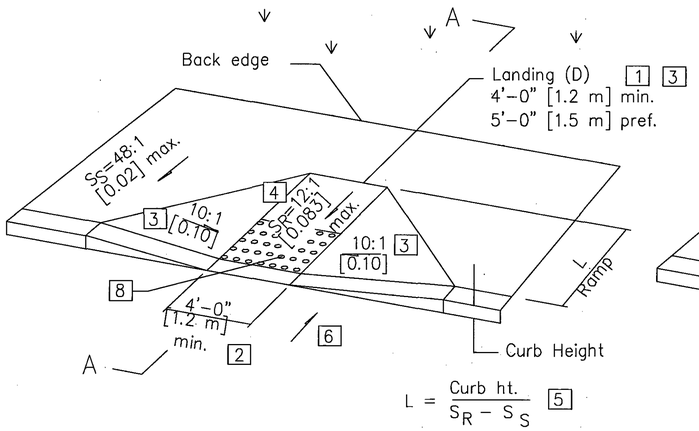

$$L = \frac{\text{Curb ht.}}{S_R - S_S} \quad 5$$

See Sht. 33C for SECTION A–A

PERPENDICULAR CURB RAMP DETAIL

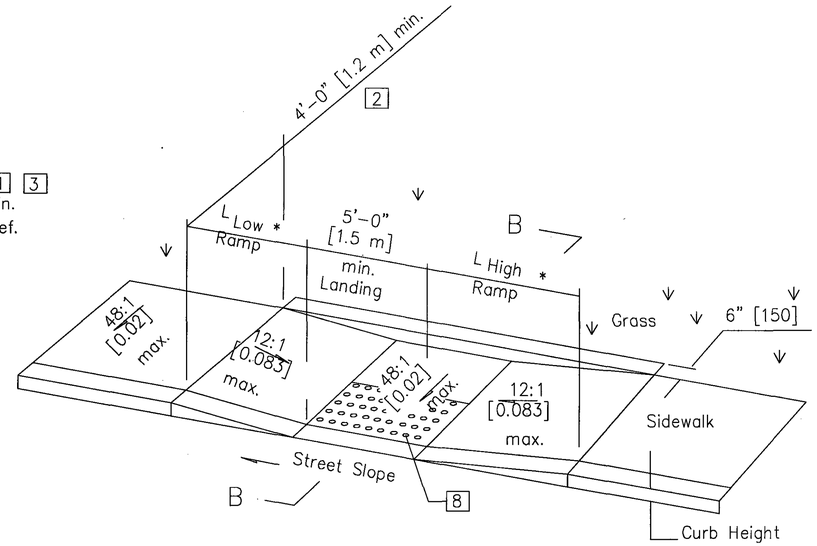

See Sht. 33C for SECTION B–B

PARALLEL CURB RAMP DETAIL (DOUBLE)

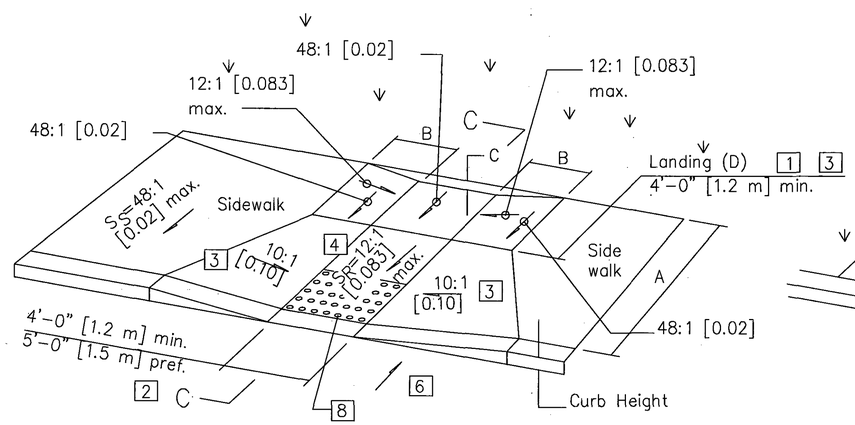

See Sht. 33C for SECTION C–C

COMBINED CURB RAMP DETAIL

$B = C / 0.083$

$C = [\text{Curb ht.} + A(S_S)] - [(A-D)S_R + (0.02)]$

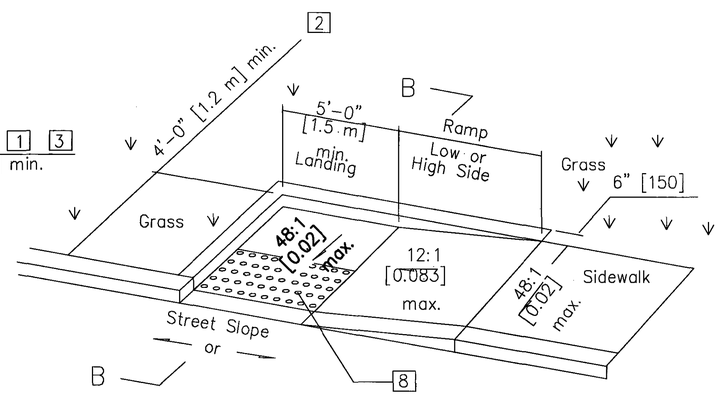

See Sht. 33C for SECTION B–B

PARALLEL CURB RAMP DETAIL (SINGLE)

Street Slope	Ramp Length @ 1"/ft [0.083]	
	$L_{LOW\ SIDE}$ *	$L_{HIGH\ SIDE}$ *
0.01	5'-5" [1.6 m]	6'-10" [2.1 m]
0.02	4'-10" [1.5 m]	7'-11" [2.4 m]
0.03	4'-5" [1.3 m]	9'-5" [2.9 m]
0.04	4'-1" [1.2 m]	11'-8" [3.6 m]
0.05	3'-9" [1.1 m]	15'-2" [4.6 m]

* Measured along the back of a 6" [150] high curb.

$$L_{HIGH} = \frac{\text{Curb ht.}}{0.083 - \text{Street Slope}} \quad 7$$

$$L_{LOW} = \frac{\text{Curb ht.}}{0.083 + \text{Street Slope}} \quad 7$$

LEGEND

1. May be reduced to 3'-0" [915] in existing sidewalks if the landing is unconstrained along the back edge.
2. May be reduced to 3'-4" [1.02 m] in existing sidewalks to better fit the walk configuration or where site conditions are restricted by narrow walks, pole foundations, drainage inlets, etc. The width may be tapered.
3. Where landing width (D) has been reduced to 3'-0" [915] the flared sides shall have a maximum slope of 12:1 [0.083].

   Flared sides are not required where the edges of a curb ramp are protected by landscaping or other barriers to travel by wheel chair users or pedestrians across the edge of the curb ramp. However, if the flared sides are used in these areas, they may be of any slope.
4. The slope of the ramp toward the curb is preferred to be 12:1 [0.083] or flatter related to the horizontal, but the maximum slope shall be 12:1 [0.083] relative to the existing or proposed walk slope.

   In existing sidewalks, where the maximum ramp slope (S_R) is not feasible, it may be reduced as follows:

   A) 10:1 [0.10] for a max. rise of 6" [150],
   B) 8:1 [0.125] for a max. rise of 3" [75],
   C) 6:1 [0.167] over a max. run of 2'-0" [610] for historic areas where a flatter slope is not feasible.
5. The minimum length of a perpendicular ramp is 6' [2.0 m] from the back of a 6" [150] curb and may be increased where feasible to obtain a flatter ramp slope or to better blend with the walk configuration.
6. Gutter counter slopes at the foot of perpendicular curb ramps should not exceed 20:1 [0.05] over a distance of 2'-0" [610] from the curb.
7. Dimensions derived by equation are nominal. Construct ramps to meet required slopes and existing conditions.
8. Detectable Warnings (truncated domes) are to be installed in the location shown. Dimensions of the domes are 24" [610] from the back of the curb by the width of the ramp. See NOTES on sheet 33C.

CALCULATED | CHECKED

CURB RAMPS WITH TRUNCATED DOMES

DEL-229-6.84

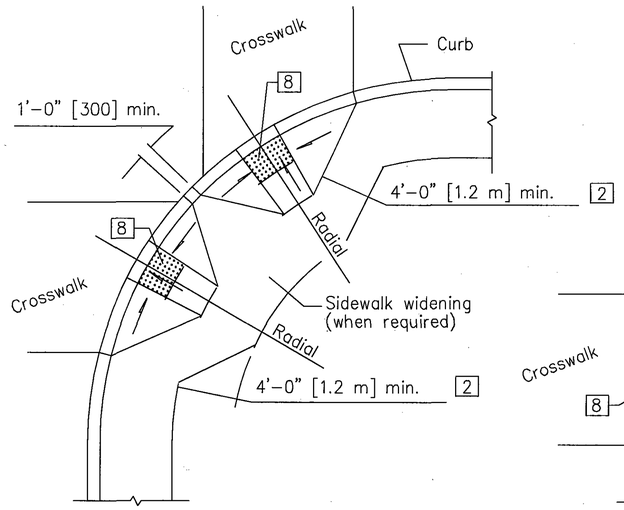

DESIGN A
PERPENDICULAR RAMP

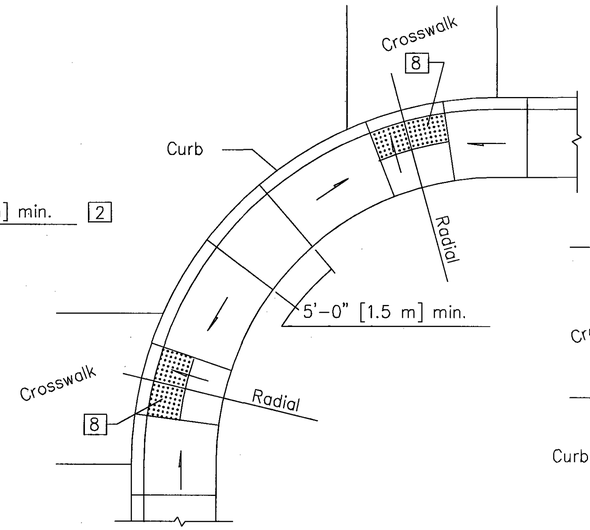

DESIGN B
PARALLEL RAMP

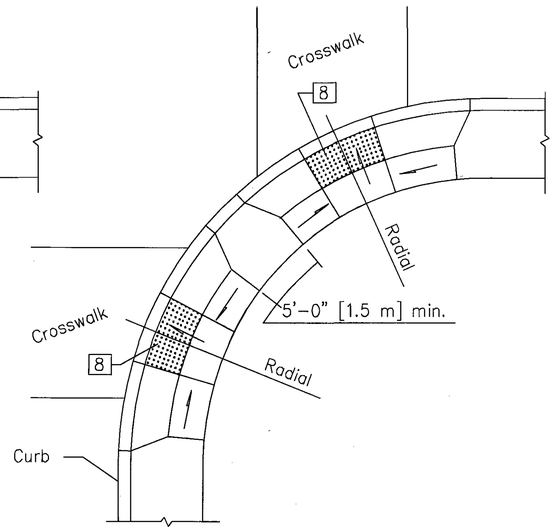

DESIGN C
COMBINATION RAMP

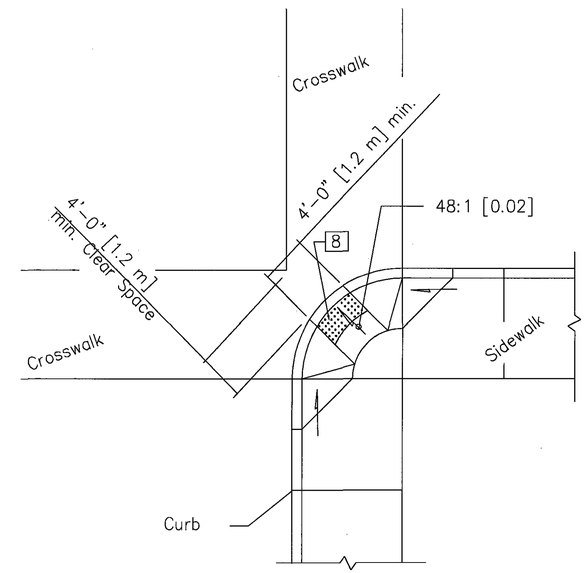

DESIGN D
DIAGONAL RAMP

Use in existing walks only and when site constraints prohibit other designs. The diagonal ramp may be perpendcular, parallel or combination.

Avoid using where curb radii are less than 20'–0" [6.0 m].

CORNER CURB RAMP DESIGNS

(See Curb Ramp Details on Sht. 33A for additional requirements.)

For LEGEND, See sheet 33A.

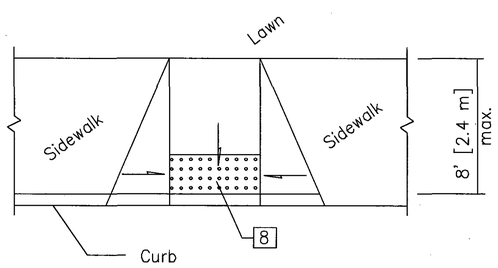

DESIGN E
PERPENDICULAR RAMP

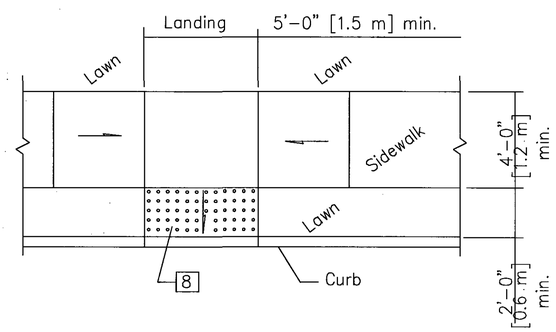

DESIGN F
PARALLEL RAMP

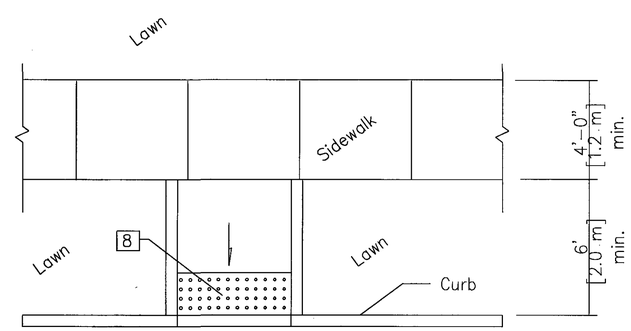

DESIGN G
PERPENDICULAR RAMPS
w/o FLARES

MID BLOCK CURB RAMP DESIGNS

(See Curb Ramp Details on Sht. 33A for additional requirements.)

CALCULATED
CHECKED

CURB RAMPS WITH TRUNCATED DOMES

DEL-229-6.84

NOTES

SURFACE TEXTURE: Texture of concrete surfaces shall be obtained by coarse brooming transverse to the ramp slopes and shall be rougher than adjacent walk.

TRUNCATED DOMES: Install detectable warnings (truncated domes) for a distance of 24" [610] from the back of the curb for the entire width of the ramp opening as shown on details on Sheet 1.

Pavers will meet ASTM C 902 Class SX, Type 1, or C 936, or C 1272 Type R.

Acceptable manufacturers and products are:

1) Whitacre–Greer Fireproofing Company,
   1400 S. Mahoning Ave, Alliance, OH, 44601, (800) WG PAVER
   ADA Paver, 4"x8"x2–1/4", Clear Red (Rustic) #30.
2) Hanover Architectural Products,
   240 Bender Rd., Hanover, PA. 17331, (717) 637–0500
   Detectable Warning Paver, 12"x12"x2", or 24"x24"x2",
   Red or Quarry Red.
3) Endicott Clay Products,
   PO Box 17, Fairbury, NE, 68352, (402) 729–5804
   Handicap Detectable Warning Paver,
   4"x8"x2–1/4", Red Blend.

Pavers will laid on top of a 4" [100] unreinforced concrete base. Setting bed and joints to be mortared in accordance with manufacturer's instruction, or with a maximum ?" [13] thick bed of latex modified cement mortar. Mortar joints to a width not greater than ?" [4] and not less than ?" [1.5]. Pavers shall not be directly touching each other unless they have spacing bars.

Mortared joints are to be flush with top surface and struck so as to give a smooth surface. Pavers shall be laid such that joints are level with adjoining joints so as to provide a smooth transition from brick to brick and brick to concrete surface.

The surface of any two adjacent units should not differ by more than ?" [3] in height. Bricks shall be placed in a running bond pattern. Face of all brick shall be clean of cement and protected so as to avoid chipping during constructionn.

EXPANSION JOINTS: shall be provided in the curb ramp as extensions of walk joints and consistent with Item 608.03 requirements for a new concrete walk. A ?" [13] Item 705.03 expansion joint filler shall be provided around the edge of ramps built in existing concrete walk. Lines shown on this drawing indicate the ramp edge and slope changes and are not necessarily joint lines.

PAYMENT: Walk and curb, Items 608 and 609, shall be measured through the curb ramp area paid for under their respective Items. Item 608 – Curb Ramp, As Per Plan, Each constructed in new curb and walk shall include the cost of any additional materials and installation (including truncated domes), grading, forming and finishing. Item 608 – Curb Ramp. As Per Plan, Square Foot [Meter], constructed in existing curb and walk shall include the cost of furnishing and installing all materials (including truncated domes), grading, forming, and finishing of the curb and walk of the curb ramp. Removal of existing curb and walk shall be paid for under Item 202.

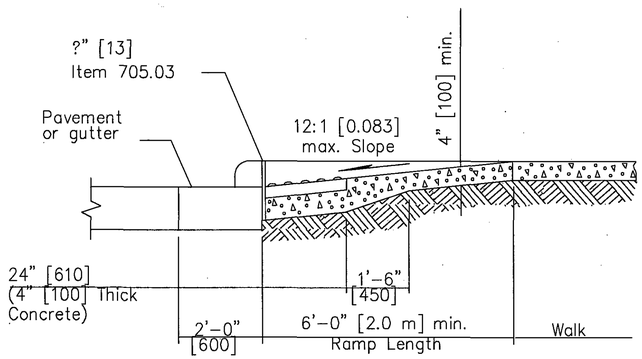

SECTION A–A
NORMAL DETAIL
See Sheet 33A.
(Gutter shown)

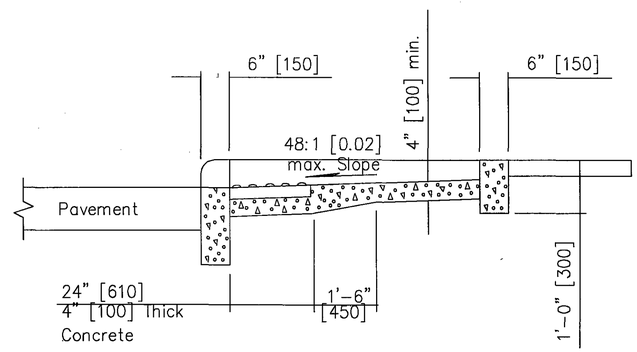

SECTION B–B
See Sheet 33A.

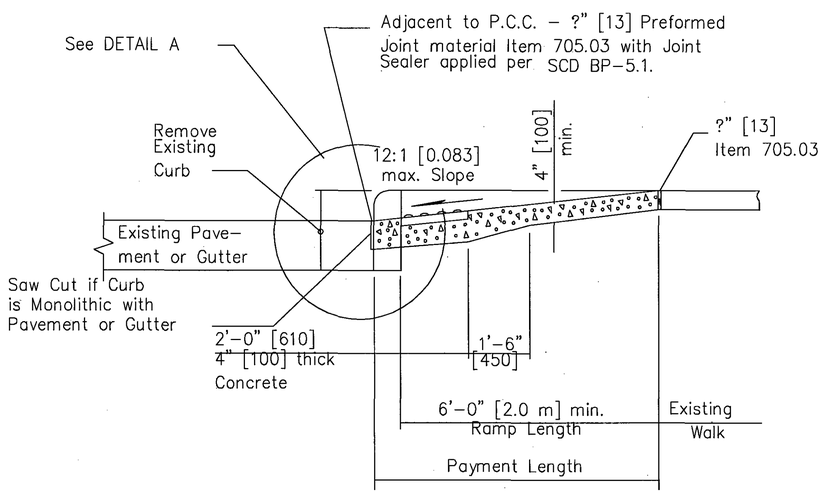

SECTION A–A
EXISTING WALK DETAIL
See Sheet 33A.

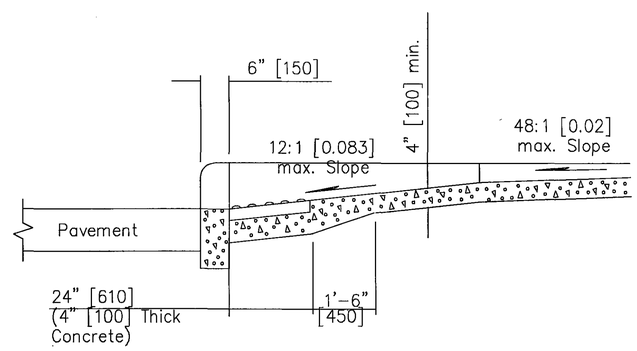

SECTION C–C
See Sheet 33A.

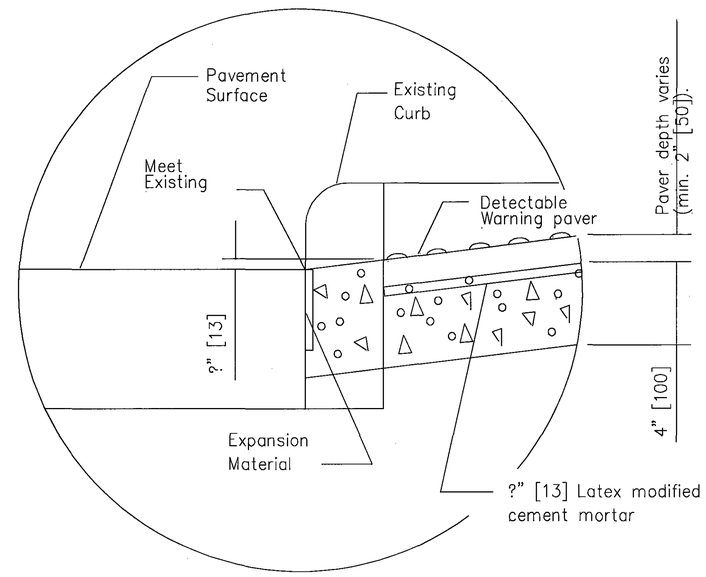

DETAIL A

CALCULATED
CHECKED

CURB RAMPS WITH TRUNCATED DOMES

DEL-229-6.84

SHEET No.	REFER. No.	LOCATION	STATION FROM	STATION TO	SIDE	642 CENTERLINE MILE	642 STOP LINE FT	642 CROSSWALK LINE FT	642 PARKING LOT STALL MARKING FT	642 HANDICAP SYMBOL MARKING EACH	642 REMOVAL OF PAVEMENT MARKING FT
35	CL-1	HIGH STREET	20+44	22+13	RT	0.03					166
35	CL-2	HIGH STREET	24+80	28+05	RT	0.06					325
35	CW-1	HIGH STREET	22+69		LT&RT			150			
35	CW-2	HIGH STREET	26+20		LT&RT			100			100
35	CW-3	HIGH STREET	28+40		LT&RT						100
35	CW-4	HIGH STREET	29+00		LT&RT			62			
35	HC-1	HIGH STREET	22+50		LT					1	
35	HC-2	HIGH STREET	26+40		LT					1	
35	HC-3	HIGH STREET	26+57		LT					1	
35	HC-4	HIGH STREET	26+36		RT					1	
35	PS-1	HIGH STREET	20+73	21+23	LT				23		24
35	PS-2	HIGH STREET	21+44	22+61	LT				264		264
35	PS-3	HIGH STREET	20+63	21+23	RT				32		32
35	PS-4	HIGH STREET	24+66	25+26	RT				32		32
35	PS-5	HIGH STREET	25+36	25+90	LT				80		80
35	PS-6	HIGH STREET	26+29	28+06	LT				260		260
35	PS-7	HIGH STREET	26+25	28+05	RT				88		88
35	SL-1	HIGH STREET	22+13		RT		20				
TOTALS CARRIED TO GENERAL SUMMARY						0.09	20	312	779	4	1471

DESIGNED JAT
CHECKED JFR

SIGN AND PAVEMENT MARKING SUB-SUMMARY

DEL-229-6.84

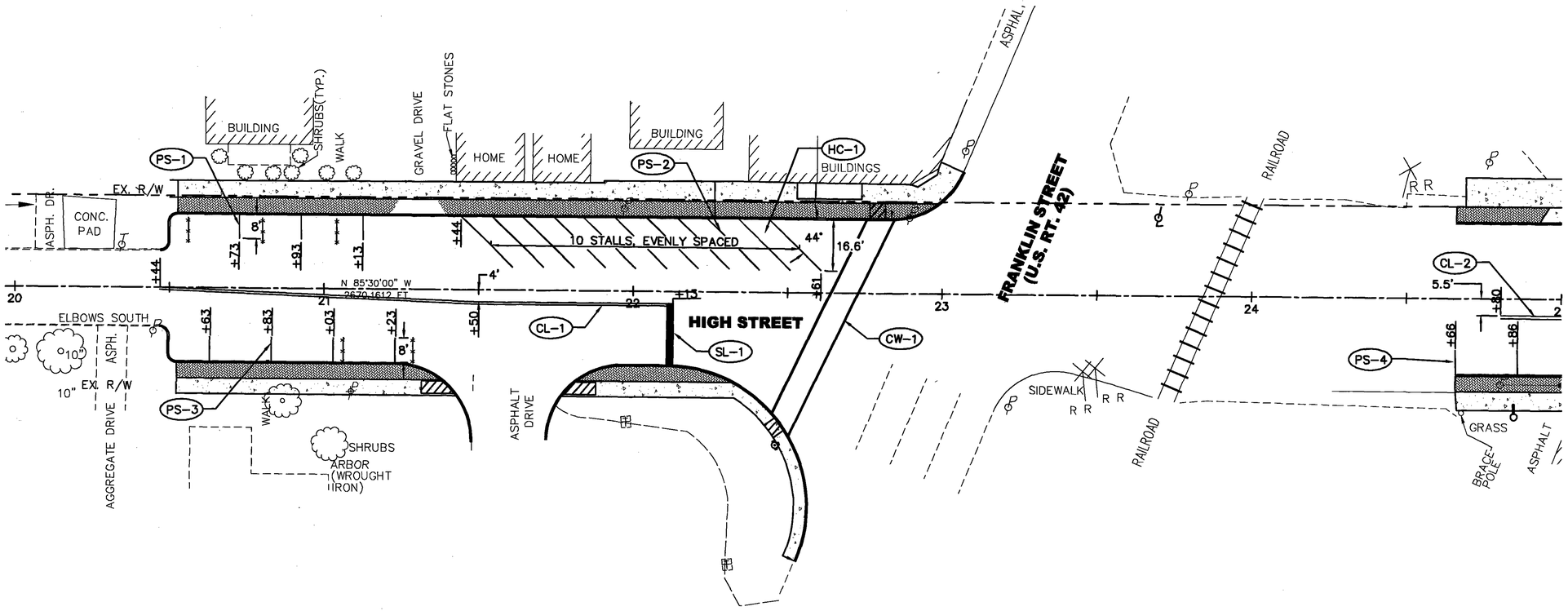

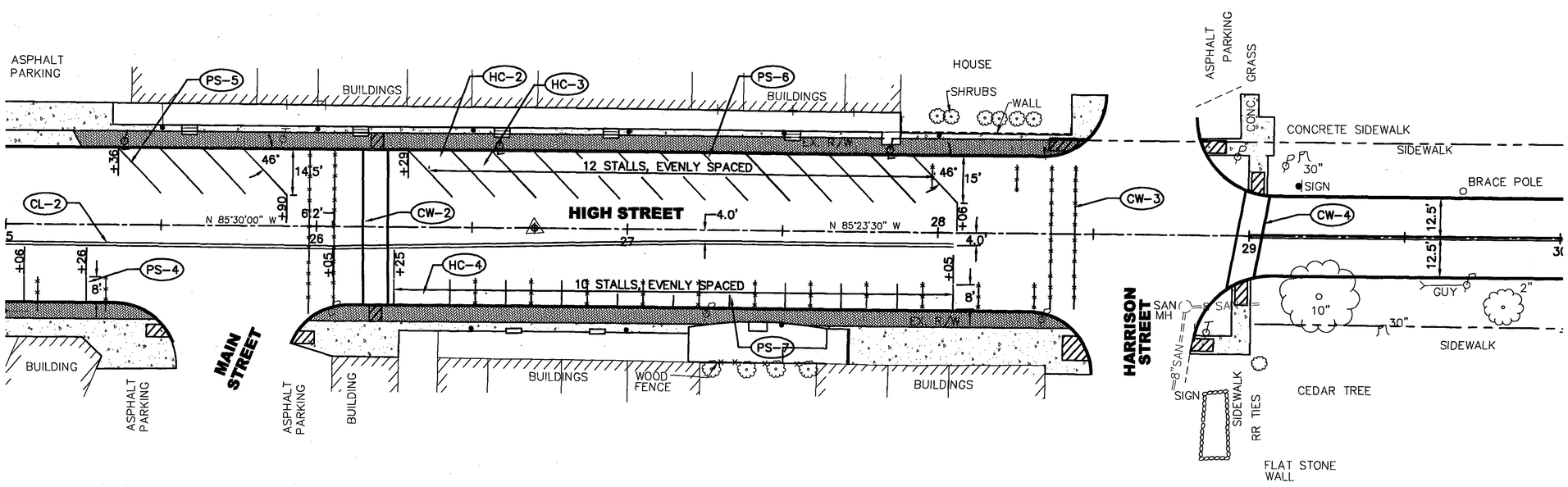

QUANTITES CARRIED TO SIGN AND PAVEMENT SUB-SUMMARY

N

0 10 20 40
HORIZONTAL SCALE IN FEET

DESIGNED JAT
CHECKED JFR

SIGNING AND PAVEMENT MARKING PLAN

DEL-229-6.84

SHEET No.	REFER. No.	LOCATION	STATION FROM	STATION TO	SIDE	LIGHT POLE, DECORATIVE, AS PER PLAN (EACH)	LIGHT POLE FOUNDATION, AS PER PLAN (EACH)	CONDUIT, 1", 725.05 (FT)	CONDUIT, 1 1/2", 725.05 (FT)	CONDUIT, 2", 725.05 (FT)	CONDUIT, MISC.: 1", PVC COATED RIGID STL. (FT)	CONDUIT, MISC.: 1 1/2", PVC COATED RIGID STL. (FT)	CONDUIT, MISC.: 2", PVC COATED RIGID STL. (FT)	LUMINAIRE, DECORATIVE, AS PER PLAN (EACH)	TRENCH (FT)	JUNCTION BOX, AS PER PLAN (EACH)	GROUND ROD (EACH)	LIGHTING MISC.: #10 WIRE CONNECTIONS (EACH)	LIGHTING MISC.: #6 WIRE CONNECTIONS (EACH)	LIGHTING MISC.: CONTROL PANEL (EACH)	LIGHTING MISC.: POWER DISTRIBUTION PANEL (EACH)	LIGHTING MISC.: SINGLE 20 AMP DUPLEX RECPT. (EACH)	LIGHTING MISC.: SINGLE 50 AMP RECPT. (EACH)	LIGHTING MISC.: #10 THHN STRANDED WIRE (FT)	LIGHTING MISC.: #6 THHN STRANDED WIRE (FT)	LIGHTING MISC.: 4/0 XHHN STRANDED WIRE (FT)
															625											
37	C-1	HIGH STREET	25+00	26+05	RT			104			8				108											
37	C-2	HIGH STREET	25+25	26+05	RT				93			8			108											
37	C-3	HIGH STREET	25+50	26+05	LT&RT			100			8				107											
37	C-4	HIGH STREET	25+50	28+00	LT			250							250											
37	C-5	HIGH STREET	25+50	26+05	LT&RT				104			8			108											
37	C-6	HIGH STREET	25+52	28+00	LT				250						250											
37	C-7	HIGH STREET	25+92	26+05	RT					18			12		22											210
37	C-8	HIGH STREET	26+05	28+00	RT				210			8			210											
37	C-9	HIGH STREET	26+05	28+00	RT			254			8				257											
37	E-1	HIGH STREET	25+00		RT						4				4	1		3				1		324		
37	E-2	HIGH STREET	25+50		LT						4				4	1		3				1		216		
37	E-3	HIGH STREET	26+00		LT						4				4	1		3				1		316		
37	E-4	HIGH STREET	26+50		RT						8				4	1		3	4			1	1	416	622	
37	E-5	HIGH STREET	26+50		LT						4				4	1		3				1		126		
37	E-6	HIGH STREET	27+00		RT						8				4	1		3	4			1	1	516	1028	
37	E-7	HIGH STREET	27+00		RT						4				4	1		3				1		226		
37	E-8	HIGH STREET	27+50		RT						4				4	1		3				1		616		
37	E-8	HIGH STREET	27+50		LT						4				4	1		3				1		326		
37	E-9	HIGH STREET	28+00		RT						4				4	1		3				1		1071		
37	E-9	HIGH STREET	28+00		LT						4				4	1		3				1		636		
37	L-1	HIGH STREET	25+00		RT	1	1	5						1			1	3						15		
37	L-2	HIGH STREET	25+50		LT	1	1	5						1			1	3						15		
37	L-3	HIGH STREET	26+00		LT	1	1	5						1			1	3						15		
37	L-4	HIGH STREET	26+50		LT&RT	2	2	10						2			2	6						30		
37	L-5	HIGH STREET	27+00		LT&RT	2	2	10						2			2	6						30		
37	L-6	HIGH STREET	27+50		LT&RT	2	2	10						2			2	6						30		
37	L-7	HIGH STREET	28+00		LT&RT	2	2	10						2			2	6						30		
37	SLCP-1	HIGH STREET	26+04		RT															1						
37	PDP-1	HIGH STREET	26+04		RT																1					
TOTALS CARRIED TO GENERAL SUMMARY						11	11	763	657	18	76	24	12	11	1464	11	11	66	8	1	1	11	2	4954	1650	210

DESIGNED JAT
CHECKED JFR

LIGHTING PLAN SUB-SUMMARY

DEL-229-6.84

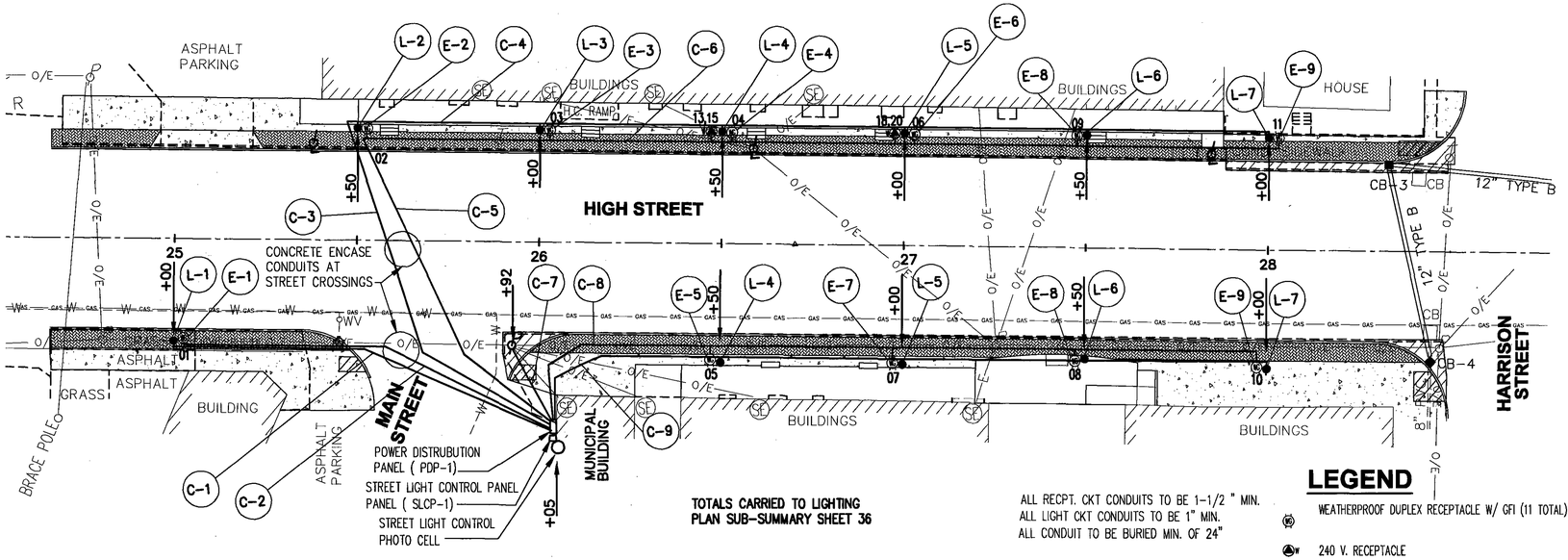

PROPOSED LIGHTING PLAN

TOTALS CARRIED TO LIGHTING PLAN SUB-SUMMARY SHEET 36

ALL RECPT. CKT CONDUITS TO BE 1-1/2 " MIN.
ALL LIGHT CKT CONDUITS TO BE 1" MIN.
ALL CONDUIT TO BE BURIED MIN. OF 24"

LEGEND

- WEATHERPROOF DUPLEX RECEPTACLE W/ GFI (11 TOTAL)
- 240 V. RECEPTACLE
- NEW LIGHT POLES

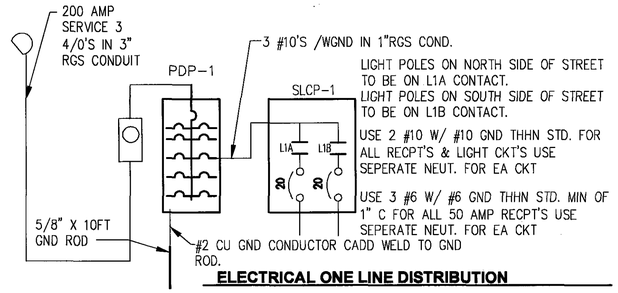

ELECTRICAL ONE LINE DISTRIBUTION

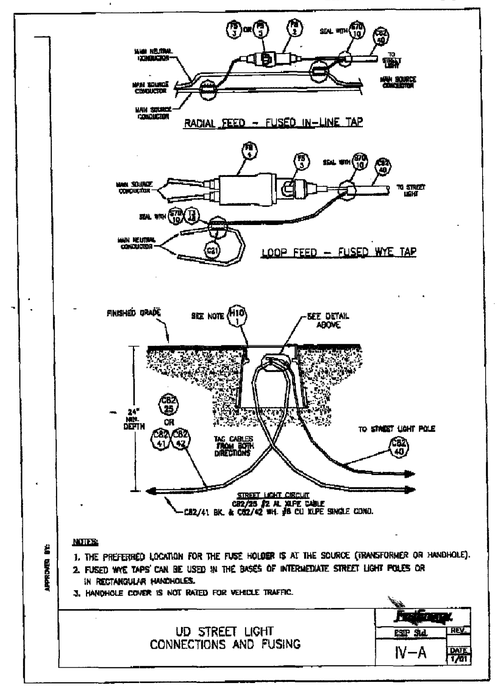

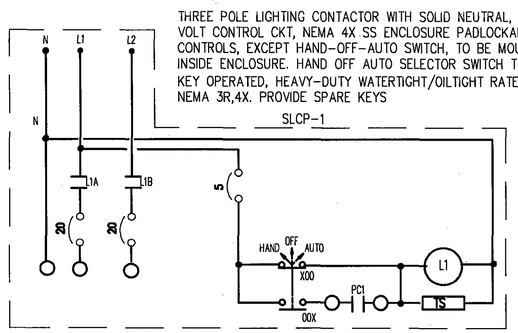

LIGHT POLES ON NORTH SIDE OF STREET TO BE ON L1A CONTACT.

LIGHT POLES ON SOUTH SIDE OF STREET TO BE ON L1B CONTACT.

PC-1 120 VOLT PHOTO CELL, MOUNT 10 FT. ABOVE CONTROL PANEL, ORIENTATION TO THE NORTH.

TS – TRANSIENT SUPPRESSOR

STREET LIGHT CONTROL CIRCUIT DETAIL

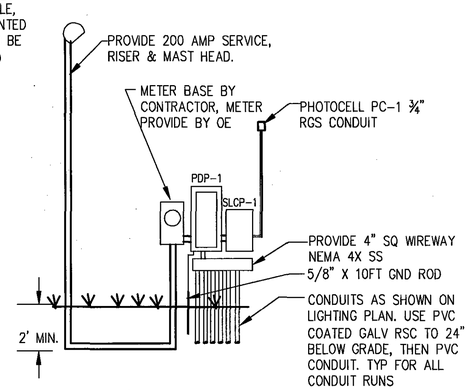

ELECTRICAL DISTRUBUTION DETAIL

LOCATION:	AHSLEY STREET LIGHTING								
LIGHTING PANEL LOADS				120/240 1Ph		3W WITH GND			
PANEL:	PDP-1								
Circuit No.	BKR Size	Circuit	L1	L2	L1	L2	Circuit No.	BKR Size	Circuit
1	20	STREET RECPT E1	1920		1920		2	20	STREET RECPT E2
3	20	STREET RECPT E3		1920		1920	4	20	STREET RECPT E4
5	20	STREET RECPT E5	1920		1920		6	20	STREET RECPT E6
7	20	STREET RECPT E7		1920		1920	8	20	STREET RECPT E8 LT
9	20	STREET RECPT E8 RT	1920		1920		10	20	STREET RECPT E9 LT
11	20	STREET RECPT E9 RT		1920			12	20	SPARE
13	50-2P	STREET 240 V RECPT E4		4800			14	20	SPARE
15	"	"	4800				16	20	SPARE
17	30-2P	STREET LIGHT CP*		1296	4800		18	50-2P	STREET 240 V RECPT E6
19	"	"	1080			4800	20	"	"
		Load	11640	11655	10680	6640			
		LOAD L1	22320	VA					
		LOAD L2	20495	VA					
		TOTAL LOAD	42.70	KVA					

LOCATION: DOWNTOWN LIGHTING PANEL
MAIN BREAKER: 200A MAIN C/B, 200A CU BUS
VOLTAGE / PHASE: 120/240V, 1PH, 3W
SERVICE ENTRANCE RATED, 22KAIC

* HID RATED

PANEL TO BE RATED NEMA 4X SS W/ LOCKABLE DOOR

CH BR2024BC200RG
SQ-D Q0120M200RB
SIEMENS W2040B1200CU
OR EQUAL

POWER DISTRUBTION PANEL (PDP-1)

FIRST ENERGY (FE) APPROVED MATERIALS LIST FOR OHIO EDISON ESIP

A40 FOUNDATION, POWER INSTALLED, 6"– 13" BOLT FE ID #32920903
A.B. CHANCE CAT. #XT112-0352
DIXIE CAT. #D-1201-0016
OR EQUAL

B32/4 BOLT, ANCHOR, GALVANIZED – SET OF THREE 3/4" DIA X 20" LGTH w/NUTS
FE ID #93300623
UNION METAL PART #311173R
OR EQUAL

C42/1 CONTROL, PHOTOELECTRIC, BLACK-120V FE ID #32914723
ALR/TYCO ELECTRONICS CAT. #2060NPA-BK
DTL/T&B CAT. #DP120-1.5-TMBK
FISHER-PIERCE CAT. #7671BMCBD
LUMATROL/PRECISION CAT. #L120-1.5-PBT-BL

C29 CONDUIT 3/4" FLEX FE ID #23742263

C82/40 CONDUCTOR 2/C #10 UF SOLID COPPER FE ID #20117003

F8/2 FUSEHOLDER-STRAIGHT 600V #12-#4 SOLID, #10-#4 STRANDED FE ID #29910473
HOMAC CAT. #SLK-M (ONLY KNOWN MANUFACTURER)

F8/4 FUSEHOLDER-WYE 600V #10-#4 LINE #14-#6 LOAD CU. FE ID #29910983
BUCHANAN CAT. #82S-ADB1-C
HOMAC CAT. #FYU-M
OR EQUAL

F5/3 FUSE – 600 VOLT, 10 AMP FE ID #40512312
BUSSMAN CAT. #KTK-10
SHAWMUT FERRAZ CAT. #ATM-10
OR EQUAL

F30/3 FORM CONCRETE ROUND 3' X 18" DIA X 0.2" WALL-FE ID #61921453

H10/2 HANDHOLE – 13" X 24" X 15" FE ID #36510453
FARGO CAT. #B-125-AGR-OE
PENN-CELL PLASTICS CAT. #PE-20-HDXM
OR EQUAL

L15/100 LAMP – 100W ANSI CODE S54 FE ID #45630503
GENERAL ELECTRIC CAT. #LU100
PHILLIPS CAT. #C100S54
SYLVANIA CAT. #LU100

L22/302 LUMINAIRE ACORN – FE ID #32324941
COOPER LIGHTING CAT. #ANG10SR2XXU0015
(ONLY KNOWN MANUFACTURER)
GLOBE-FE ID #32131453 FORMED PLASTICS CAT. #FP 109
GLOBE-FE ID #32132693 FORMED PLASTICS CAT. #FP-118-8 1/8

P14/120 POST-FLUTED FIBERGLASS – 12' FE ID #32513103
MAINSTREET LIGHTING CAT. #FF-802B
SHAKESPEARE CAT. #AP17-12FS1101

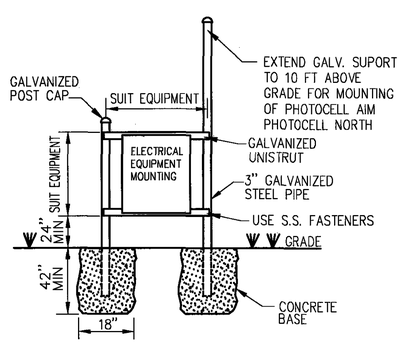

CONTROL PANEL MOUNTING DETAIL

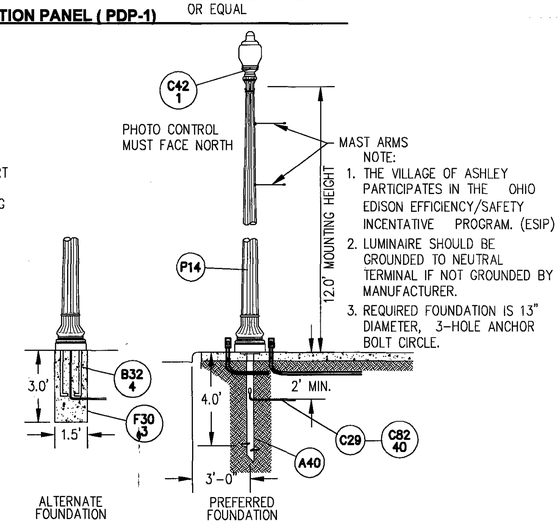

DECORATIVE STREET LIGHT DETAIL, AS PER PLAN

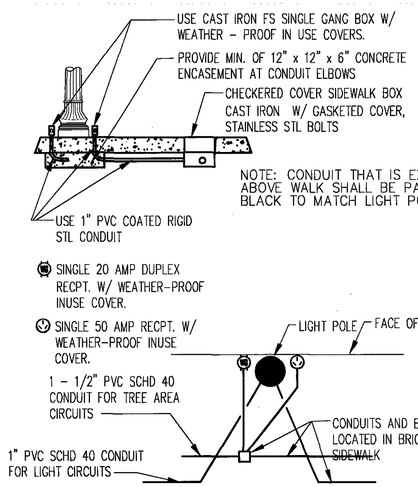

LIGHT POLE AND RECEPTACLE CONDUITS LAYOUT DETAIL

HORIZONTAL SCALE IN FEET 0 10 20 40

DESIGNED JAT
CHECKED JFR

LIGHTING PLAN

DEL-229-6.84

DEL-229-6.84

SECTION 1, TOWN 6, RANGE 18, U.S. MILITARY LANDS
VILLAGE OF ASHLEY, DELAWARE COUNTY, OHIO

SCANNED
BY: Dale Mead
DATE: 12-9-03 ARCHIVE#: 061065

RECEIVED _____, 20____
AT _____ AM PM
CABINET _____ SLIDE _____
FEE: _____
DELAWARE COUNTY RECORDER

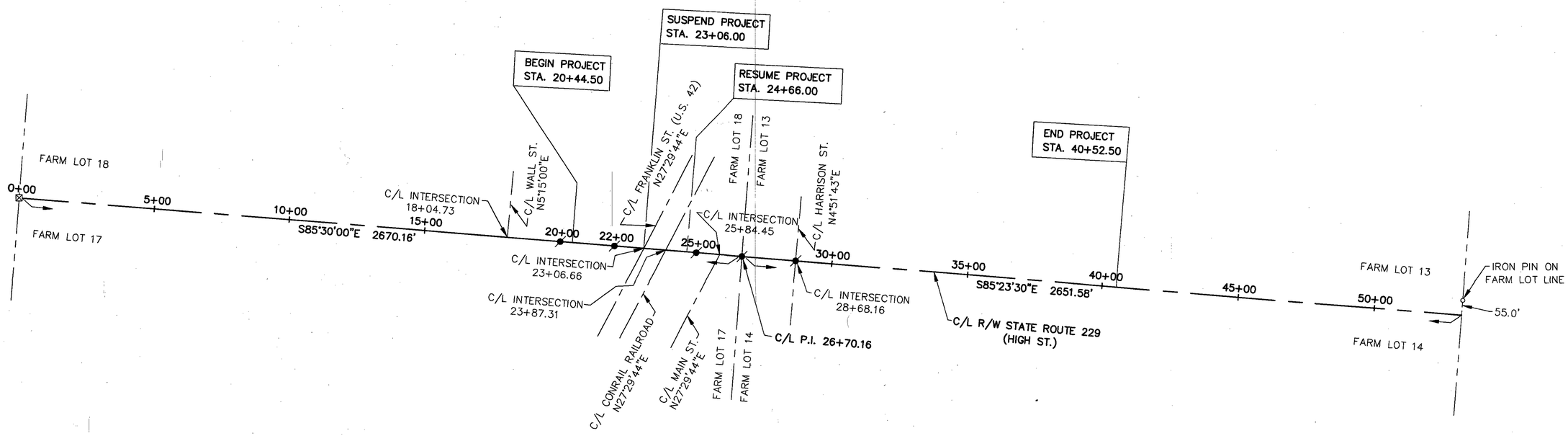

BASIS FOR BEARING

BEARING ON CENTERLINE OF EXISTING RIGHT-OF-WAY SHOWN HEREON ARE BASED ON THE O.D.O.T. NORTON-MARENGO-MT. VERNON ROAD S.H. 587 SEC. ASHLEY (P.T.) PLANS, DATED 1946. SOUTH 85°30'00" EAST IS THE BEARING ESTABLISHED ON CENTERLINE OF S.R. 229 (HIGH ST.) FROM THE WEST LINE OF THE VILLAGE OF ASHLEY TO THE INTERSECTION OF U.S. RTE. 42 (FRANKLIN ST.)

BASIS OF EXISTING C/L AND R/W WIDTH

CENTERLINE AND RIGHT-OF-WAY WIDTH WERE ESTABLISHED BY USING THE ORIGINAL SUBDIVISION PLATS OF THE VILLAGE OF ASHLEY. REFERENCE IS MADE TO THE FOLLOWING:

PLAT BOOK 1, PAGE 45
PLAT BOOK 1, PAGE 51
PLAT BOOK 1, PAGE 67
PLAT BOOK 2, PAGE 306

OF THE RECORDS OF DELAWARE COUNTY, OHIO. RIGHT-OF-WAY WIDTH ON HIGH STREET ESTABLISHED AT 60.0 FEET

℄ MONUMENTS AND REFERENCE MONUMENTS TO BE SET				
STATION	DIST. FROM C/L		C/L MONUMENT	RIGHT OF WAY MONUMENT
	LEFT	RIGHT		
20+00.00			1	
20+52.00	35'			1
20+52.00		35'		1
22+00.00			1	
22+00.00	36'			1
22+00.00		35'		1
22+32.00		35'		1
22+51.76		66'		1
24+25.73		36.20'		1
24+57.74	39.25'			1
25+00.00			1	
25+33.88	39'			1
26+02.56		41.80'		1
P.I. 26+70.16			1	
28+34.97		42.40'		1
28+35.30	31.85'			1
28+68.16			1	

MONUMENT LEGEND

- ● 3/4" REBAR W/ALUM. CAP STAMPED O.D.O.T. (SET)
- MAG NAIL (SET)
- ○ IRON PIN (FOUND)
- IRON PIPE (FOUND)
- ⊠ MONUMENT BOX (FOUND)
- RAILROAD SPIKE (FOUND)

I HEREBY CERTIFY THAT THIS PLAT IS A TRUE DELINEATION OF A SURVEY MADE FOR THE OHIO DEPARTMENT OF TRANSPORTATION IN 2002 BY FLOYD BROWNE ASSOCIATES, INC.

THE ESTABLISHMENT OF THE PROPERTY LINES AND EXISTING RIGHT OF WAY LINES SHOWN ON THIS PLAN AS OF THIS DATE WAS PERFORMED BY MARK B. STUDEBAKER, P.S. #7074 AND REVIEWED & REVISED BY ME.

Christopher S. Harmon August 21, 2003
CHRISTOPHER S. HARMON, P.S. #7988 DATE

STATE OF OHIO
CHRISTOPHER S. HARMON
S-7988
REGISTERED
PROFESSIONAL SURVEYOR

SCALE IN FEET
0 200 400

P.I.D. NO. 21035

R/W DESIGNER TMK
R/W REVIEWER MBS

CENTERLINE PLAT

DEL-229-6.84

1/6

38/43

Aug 20, 2003 3:21:54 PM G:\FBA\Ashley 8623\8623-09\Drawings\RIGHT_OF_WAY\CL_MAP.DWG

DEL-229-6.84

SECTION 1, TOWN 6, RANGE 18, U.S. MILITARY LANDS
VILLAGE OF ASHLEY, DELAWARE COUNTY, OHIO

UTILITIES

ASHLEY SEWER & WATER
VILLAGE HALL
101 E. HIGH ST.
ASHLEY, OHIO 43003
(740) 747-2889

COLUMBIA GAS OF OHIO
1120 WEST FOURTH STREET
MANSFIELD, OHIO 44906
(419) 528-1114

OHIO EDISON
1040 S. PROSPECT ST.
MARION, OHIO 43302
(740) 382-7120

TIME WARNER COMMUNICATIONS
1266 DUBLIN ROAD
COLUMBUS, OHIO 43215
(614) 481-5263

VERIZON
550 LEADER STREET
MARION, OHIO 43302
(740) 383-0527

THE LOCATION OF THE UNDERGROUND UTILITIES SHOWN ON THE PLANS ARE OBTAINED FROM THE OWNERS OF THE UTILITIES AS REQUIRED BY SECTION 153.64 O.R.C.

PROPERTY OWNERS

1 — LARRY WIGTON (1-SH) (1-T)
2 — DEAN W. BARTLETT & LINDA L. BARTLETT (2-SH) (2-T)
3 — WILMA J. SARGENT (3-SH)
4 — ELLA JACOBS (4-SH)
5 — MICHAEL T. GIBSON (5-SH) (5-T)
6 — JUANITA J. NEWMAN (6-SH)
7 — DCB CORPORATION (7-SH)
8 — MARION LANDMARK, INC. (8-SH) (8-T)
9 — GARRIE K. & KATHY D. NOLTING (9-SH)
10 — CLYDE C. KELTNER POST No. 518, DEPARTMENT OF OHIO, AMERICAN LEGION (10-SH)
11 — LARRY M. GALE & PENNY LEE GALE (11-SH)
12 — JOHN A. SCHUMACHER & SYLVIA A. SCHUMACHER (12-SH)
13 — GARY HUBBARD & TRUDY A. HUBBARD (13-SH)
14 — GARY A. BUECHEL & CHRISTOPHER J. BUECHEL (14-SH)
15 — CLAUDE A. HIGGINS & HELEN LUCILLE HIGGINS (15-SH)
16 — GEORGE M. HARMON & LISA L. HARMON (16-SH)
17 — BEVERLY A. PRIDDY & FREDERICK M. CRIST (17-T)
18 — R.B. POWERS COMPANY (18-SH)
19 — MARCIA SUE JOHNSTON, TRUSTEE (19-SH)
20 — MARCIA SUE JOHNSTON, TRUSTEE (20-SH) (20-T)
21 — THOMAS E. PRICE (21-SH)
22 — VILLAGE OF ASHLEY (22-SH)
23 — STEPHEN A. WHIPPLE (23-SH) (23-T)
24 — 1/2 BENNETT DISTRIBUTING, INC. (24-SH) (24-T)
1/2 NEWSOM MARKETING, INC.
25 — HAROLD J. HALL JR. & ESTHER F. HALL (25-SH)
26 — CLYDE C. KELTNER POST No. 518, AMERICAN LEGION, INC. (26-SH)
27 — GARY A. BUECHEL & CHRISTOPHER J. BUECHEL (27-SH)
28 — WILMA J. SARGENT (28-SH)
29 — GARY E. HUBBARD & TRUDY A. HUBBARD (29-SH)

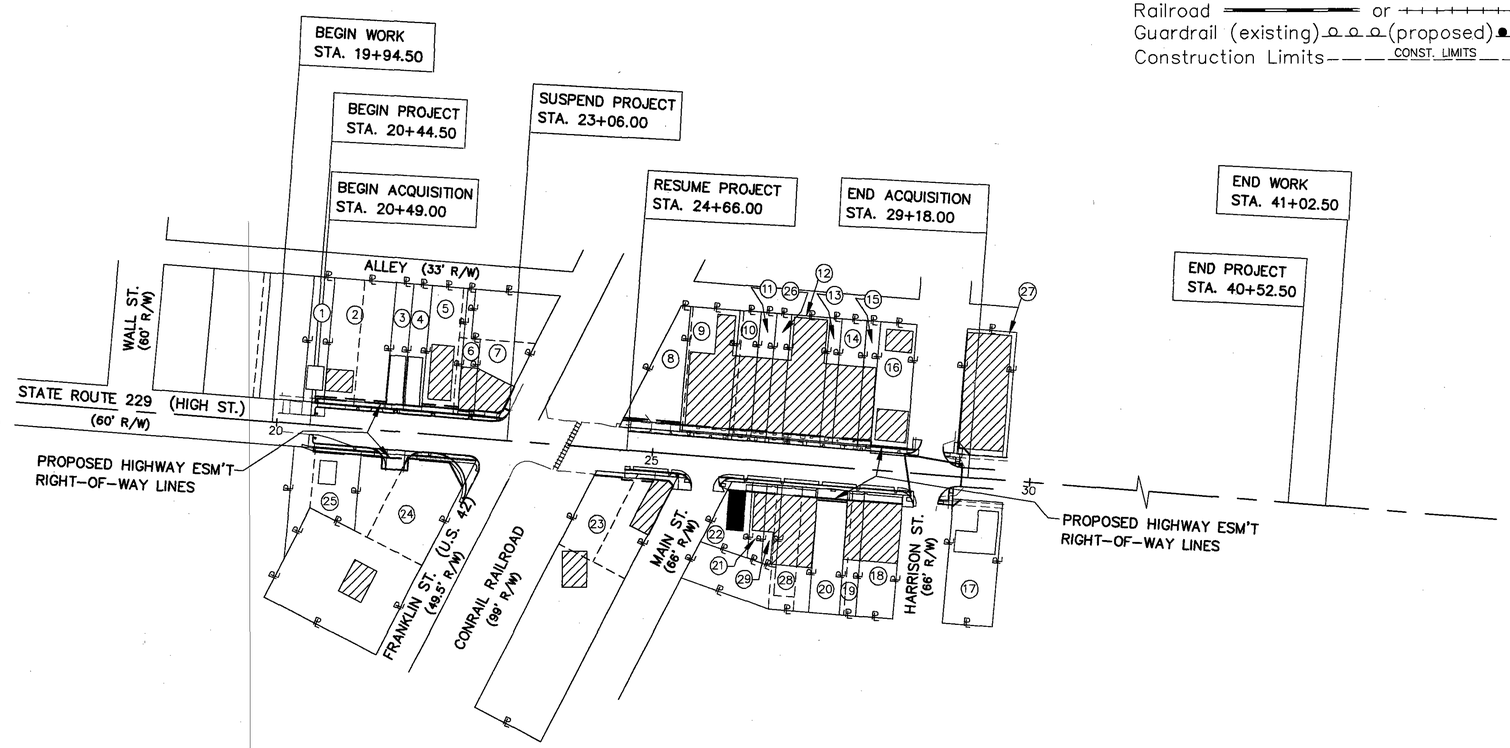

CONVENTIONAL SIGNS

County Line
Township Line
Section Line
Corporation Line or
Fence Line (existing) (proposed)
Center Line 353+00
Trees, Stumps, (to be removed)
Utility Poles: Telephone, Power, Light
Limited Access (only) LA
Right of Way (only) R/W
Limited Access & Right of Way L.A. R/W
Existing Right of Way EX. R/W
Property Line (in existing fence)
Railroad or
Guardrail (existing) (proposed)
Construction Limits CONST. LIMITS

N

SCALE IN FEET 0 100 200

P.I.D. NO. 21035

R/W DESIGNER THK
R/W REVIEWER MBS

STRUCTURE KEY

COMMERCIAL BUILDING
RESIDENTIAL BUILDING
MUNICIPAL BUILDING

ACQUISITION KEY

(1-SH) STANDARD HIGHWAY EASEMENT
(1-T) TEMPORARY EASEMENT

BASIS OF EXISTING C/L AND R/W WIDTH

CENTERLINE AND RIGHT-OF-WAY WIDTH WERE ESTABLISHED BY USING THE ORIGINAL SUBDIVISION PLATS OF THE VILLAGE OF ASHLEY. REFERENCE IS MADE TO THE FOLLOWING:

PLAT BOOK 1, PAGE 45
PLAT BOOK 1, PAGE 51
PLAT BOOK 1, PAGE 67
PLAT BOOK 2, PAGE 306

OF THE RECORDS OF DELAWARE COUNTY, OHIO. RIGHT-OF-WAY WIDTH ON HIGH STREET ESTABLISHED AT 60.0 FEET

REV.	DATE	DESCRIPTION

DATE COMPLETED

PROPERTY MAP

DEL-229-6.84

2 / 6

39 / 43

Aug 20, 2003 3:25:39 PM G:\FBA\Ashley 8623\8623-09\Drawings\RIGHT_OF_WAY\Prop_map.dwg

TOTAL NUMBER OF:

29 OWNERSHIPS — 0 OWNERSHIPS WITH STRUCTURES INVOLVED
36 PARCELS — 0 OWNERSHIPS WITH "P" ITEMS
0 TOTAL TAKES

NET RESIDUE = RECORD AREA – TOTAL PRO – NET TAKE

PARCEL NO.	OWNER	SHEET NO.	OWNERS RECORD	AUDITORS PARCEL	RECORD AREA(AC)	TOTAL P.R.O.	GROSS TAKE	P.R.O. IN TAKE	NET TAKE	STRUCTURE	NET RESIDUE LEFT	NET RESIDUE RIGHT	TYPE FUND	REMARKS AND PERSONALTY	AS ACQUIRED BOOK	AS ACQUIRED PAGE
1–SH	LARRY WIGTON	5	DB. 626, PG. 437	6181 310 901 2000	0.102	0	0.001	0	0.001	NONE	0.101		TE21			
1–T							0.001		0.001					TO CONSTRUCT SIDEWALK		
2–SH	DEAN W. BARTLETT & LINDA L. BARTLETT	5	DB. 491, PG. 465	6181 310 901 3000	0.148	0	0.004	0	0.004		0.144					
				6181 310 901 4000	0.159	0	0.005	0	0.005		0.154					
	GRAND TOTAL				0.307	0	0.009	0	0.009		0.298					
2–T							0.006		0.006					TO CONSTRUCT SIDEWALK		
3–SH	WILMA J. SARGENT	5	DB. 494, PG. 69	6181 310 901 5000	0.091	0	0.003	0	0.003		0.088					
4–SH	ELLA JACOBS	5	DB. 565, PG. 713	6181 310 901 6000	0.095	0	0.003	0	0.003		0.092					
5–SH	MICHAEL T. GIBSON	5	DB. 670, PG. 542	6181 310 901 7000	0.125	0	0.006	0	0.006		0.119					
				6181 310 901 7001	0.057	0	0.001	0	0.001		0.056					
	GRAND TOTAL				0.182	0	0.007	0	0.007		0.175					
5–T							0.003		0.003					TO CONSTRUCT SIDEWALK		
6–SH	JUANITA J. NEWMAN	5	DB. 541, PG. 516	6181 310 901 8000	0.06	0	0.002	0	0.002		0.058			RECORD AREA CALCULATED, OVERHANG ENCROACHMENT		
7–SH	DCB CORPORATION	5	DB. 460, PG. 749	6181 310 901 9000	0.27	0	0.005	0	0.005		0.265			RECORD AREA CALCULATED		
8–SH	MARION LANDMARK, INC.	5 & 6	DB. 573, PG. 750	6181 311 000 4000	0.193	0	0.016	0	0.016		0.177					
8–T							0.005		0.005					TO CONSTRUCT SIDEWALK		
9–SH	GARRIE K. & KATHY D. NOLTING	6	OR. 338, PG. 773	6181 311 000 5000	0.198	0	0.013	0	0.013		0.185			OVERHANG ENCROACHMENT		
10–SH	CLYDE C. KELTNER POST No. 518, DEPARTMENT OF OHIO, AMERICAN LEGION	6	DB. 193, PG. 489	6181 311 000 7000	0.110	0	0.006	0	0.006		0.104					
11–SH	LARRY M. GALE & PENNY LEE GALE	6	DB. 545, PG. 455	6181 311 000 8000	0.080	0	0.004	0	0.004		0.076			OVERHANG ENCROACHMENT		
12–SH	JOHN A. SCHUMACHER & SYLVIA A. SCHUMACHER	6	OR. 207, PG. 1017	6181 311 001 0000	0.182	0	0.010	0	0.010		0.172			SIGN ENCROACHMENT		
13–SH	GARY HUBBARD & TRUDY A. HUBBARD	6	DB. 526, PG. 245	6181 311 001 1000	0.064	0	0.003	0	0.003		0.061					
14–SH	GARY A. BUECHEL & CHRISTOPHER J. BUECHEL	6	DB. 638, PG. 811	6181 311 001 2000	0.125	0	0.006	0	0.006		0.119			AWNING OVERHANG ENCROACHMENT		
15–SH	CLAUDE A. HIGGINS & HELEN LUCILLE HIGGINS	6	DB. 415, PG. 610	6181 311 001 3000	0.072	0	0.003	0	0.003		0.069			OVERHANG ENCROACHMENT		
16–SH	GEORGE M. HARMON & LISA L. HARMON	6	DB. 570, PG. 551	6181 311 001 4000	0.182	0	0.002	0	0.002		0.180					
17–T	BEVERLY A. PRIDDY & FREDERICK M. CRIST	6	DB. 638, PG. 807	6181 311 500 6000	0.250		0.001		0.001					TO CONSTRUCT SIDEWALK		
18–SH	R.B. POWERS COMPANY	6	DB. 320, PG. 640	6181 311 600 1000	0.189	0	0.014	0	0.014			0.175				
19–SH	MARCIA SUE JOHNSTON, TRUSTEE	5	DB. 610, PG. 226	6181 311 600 2000	0.083	0	0.006	0	0.006			0.077		OVERHANG ENCROACHMENT		
20–SH	MARCIA SUE JOHNSTON, TRUSTEE	6	OR. 267, PG. 338	6181 311 600 3000	0.07	0	0.005	0	0.005			0.065		RECORD AREA CALCULATED		
				6181 311 600 4000	0.081	0	0.007	0	0.007			0.074				
	GRAND TOTAL				0.151	0	0.012	0	0.012			0.139				
20–T							0.003		0.003					TO CONSTRUCT SIDEWALK		
21–SH	THOMAS E. PRICE	6	DB. 493, PG. 383	6181 311 600 8000	0.055	0	0.006	0	0.006			0.049				
22–SH	VILLAGE OF ASHLEY	6	DB. 411, PG. 594	6181 311 600 9000	0.092	0	0.008	0	0.008			0.084				
23–SH	STEPHEN A. WHIPPLE	5 & 6	DB. 664, PG. 405	6181 311 700 1000	0.118	0	0.008	0	0.008			0.110		SIGN ENCROACHMENT		
				6181 311 700 2000	0.642	0	0.008	0	0.008			0.634				
	GRAND TOTAL				0.760	0	0.016	0	0.016			0.744				
23–T							0.003		0.003	NONE			TE21	TO CONSTRUCT SIDEWALK		

NOTE: UNDER NO CIRCUMSTANCES ARE TEMPORARY EASEMENTS TO BE USED FOR STORAGE OF MATERIAL OR EQUIPMENT BY THE CONTRACTOR UNLESS NOTED OTHERWISE.

NOTE: ALL TEMPORARY PARCELS TO BE OF 12 MONTHS DURATION

REV.	DATE	DESCRIPTION

FIELD REVIEW BY — DATE
OWNERSHIP VERIFIED BY — DATE
DATE COMPLETED

FEDERAL PROJECT NO. TE21 G020 0 095
STATE JOB NO. 46290 (0)
P.I.D. NO. 21035
R/W DESIGNER TMK
R/W REVIEWER MBS

SUMMARY OF ADDITIONAL RIGHT OF WAY (PARCELS 1-23)

DEL-229-6.84

Aug 20, 2003 3:28:11 PM G:\FBA\ashley 8623\8623-09\Drawings\RIGHT_OF_WAY\SUMMARY.DWG

TOTAL NUMBER OF:

29 OWNERSHIPS
36 PARCELS
0 TOTAL TAKES

0 OWNERSHIPS WITH STRUCTURES INVOLVED
0 OWNERSHIPS WITH "P" ITEMS

NET RESIDUE = RECORD AREA – TOTAL PRO – NET TAKE

PARCEL NO.	OWNER	SHEET NO.	OWNERS RECORD	AUDITORS PARCEL	RECORD AREA(AC)	TOTAL P.R.O.	GROSS TAKE	P.R.O. IN TAKE	NET TAKE	STRUC-TURE	NET RESIDUE LEFT	NET RESIDUE RIGHT	TYPE FUND	REMARKS AND PERSONALTY	AS ACQUIRED BOOK	AS ACQUIRED PAGE
24–SH	1/2 – BENNETT DISTRIBUTING, INC.	5	DB. 575, PG. 329	6181 311 802 4000	0.37	0	0.029	0	0.029	NONE		0.341	TE21	RECORD AREA CALCULATED		
	1/2 – NEWSOM MARKETING, INC.															
24–T																
							0.012		0.012					TO CONSTRUCT DRIVEWAY		
25–SH	HAROLD J. HALL JR. & ESTHER F. HALL	5	DB. 655, PG. 621	6181 311 802 2000	0.26	0	0.007	0	0.007			0.253		RECORD AREA CALCULATED		
26–SH	CLYDE C. KELTNER POST No. 518,	6	DB. 444, PG. 535	6181 311 000 9000	0.080	0	0.004	0	0.004		0.076			OVERHANG ENCROACHMENT		
	AMERICAN LEGION, INC.															
27–SH	GARY A. BUECHEL & CHRISTOPHER J. BUECHEL	6	DB. 440, PG. 144	6181 311 100 8000	0.250	0	0.003	0	0.003		0.247			AWNING OVERHANG ENCROACHMENT		
28–SH	WILMA J. SARGENT	6	DB. 494, PG. 69	6181 311 600 5000	0.069	0	0.006	0	0.006			0.063				
				6181 311 600 6000	0.087	0	0.008	0	0.008			0.079				
	GRAND TOTAL				0.156	0	0.014	0	0.014			0.142				
29–SH	GARY E. HUBBARD & TRUDY A. HUBBARD	6	DB. 505, PG. 166	6181 311 600 7000	0.067	0	0.006	0	0.006	NONE		0.061	TE21			

NOTE: ALL TEMPORARY PARCELS TO BE OF 12 MONTHS DURATION

NOTE: UNDER NO CIRCUMSTANCES ARE TEMPORARY EASEMENTS TO BE USED FOR STORAGE OF MATERIAL OR EQUIPMENT BY THE CONTRACTOR UNLESS NOTED OTHERWISE.

REV.	DATE	DESCRIPTION

FIELD REVIEW BY DATE
OWNERSHIP VERIFIED BY DATE
DATE COMPLETED

FEDERAL PROJECT NO. TE21 G020 0 095
STATE JOB NO. 46290 (0)
P.I.D. NO. 21035
R/W DESIGNER THK
R/W REVIEWER MBS

SUMMARY
OF ADDITIONAL RIGHT OF WAY (PARCELS 24-29)

DEL-229-6.84

Aug 20, 2003 3:30:24 PM G:\FBA\ashley 8623\8623-09\Drawings\RIGHT_OF_WAY\SUMMARY.DWG

DEL-229-6.84

SECTION 1, TOWN 6, RANGE 18, U.S. MILITARY LANDS
VILLAGE OF ASHLEY, DELAWARE COUNTY, OHIO

(*) = POTENTIAL ENCROACHMENT

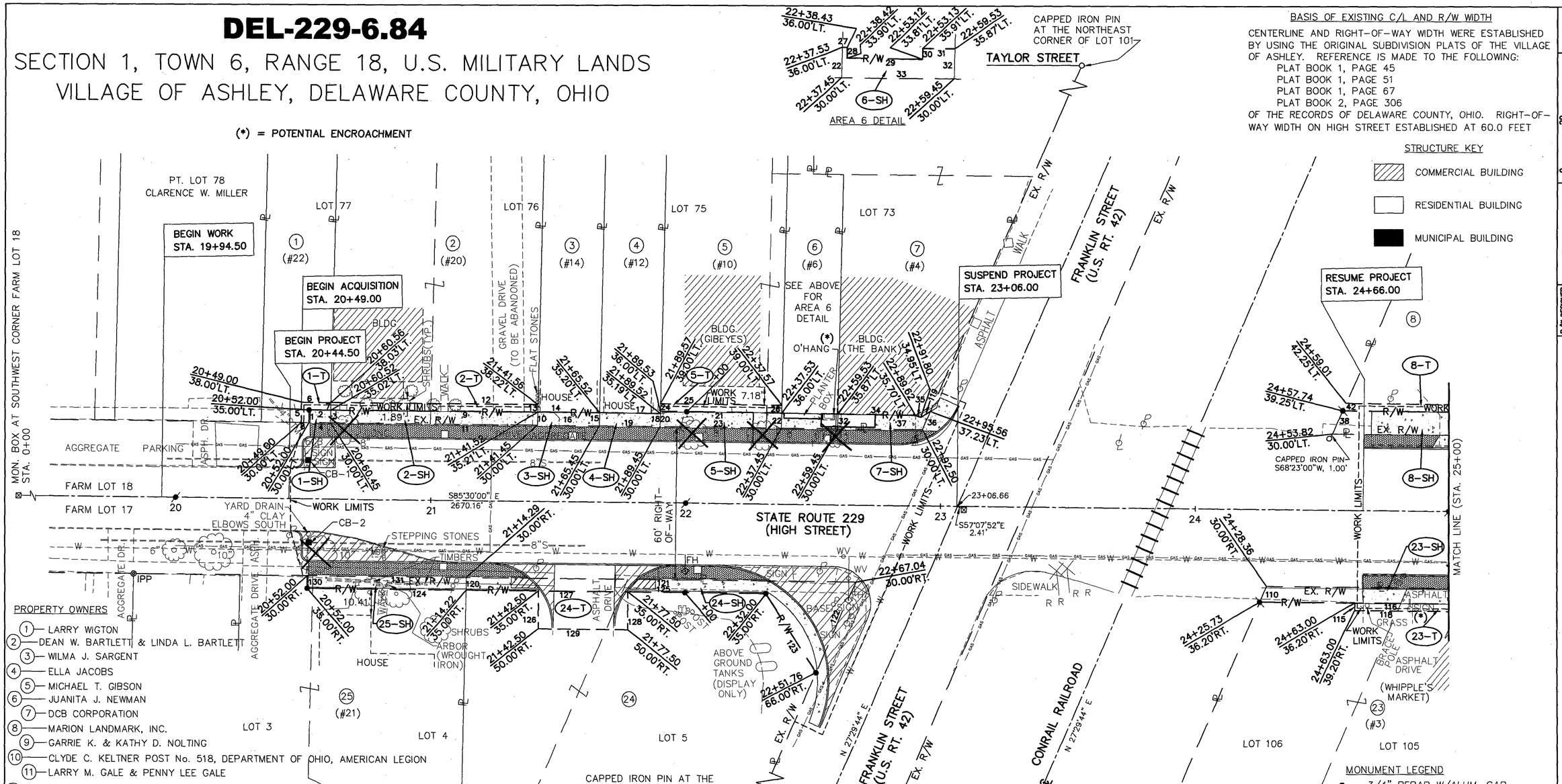

BASIS OF EXISTING C/L AND R/W WIDTH

CENTERLINE AND RIGHT-OF-WAY WIDTH WERE ESTABLISHED BY USING THE ORIGINAL SUBDIVISION PLATS OF THE VILLAGE OF ASHLEY. REFERENCE IS MADE TO THE FOLLOWING:
PLAT BOOK 1, PAGE 45
PLAT BOOK 1, PAGE 51
PLAT BOOK 1, PAGE 67
PLAT BOOK 2, PAGE 306
OF THE RECORDS OF DELAWARE COUNTY, OHIO. RIGHT-OF-WAY WIDTH ON HIGH STREET ESTABLISHED AT 60.0 FEET

STRUCTURE KEY
- COMMERCIAL BUILDING
- RESIDENTIAL BUILDING
- MUNICIPAL BUILDING

PROPERTY OWNERS
1. LARRY WIGTON
2. DEAN W. BARTLETT & LINDA L. BARTLETT
3. WILMA J. SARGENT
4. ELLA JACOBS
5. MICHAEL T. GIBSON
6. JUANITA J. NEWMAN
7. DCB CORPORATION
8. MARION LANDMARK, INC.
9. GARRIE K. & KATHY D. NOLTING
10. CLYDE C. KELTNER POST No. 518, DEPARTMENT OF OHIO, AMERICAN LEGION
11. LARRY M. GALE & PENNY LEE GALE
12. JOHN A. SCHUMACHER & SYLVIA A. SCHUMACHER
13. GARY HUBBARD & TRUDY A. HUBBARD
14. GARY A. BUECHEL & CHRISTOPHER J. BUECHEL
15. CLAUDE A. HIGGINS & HELEN LUCILLE HIGGINS
16. GEORGE M. HARMON & LISA L. HARMON
17. BEVERLY A. PRIDDY & FREDERICK M. CRIST
18. R.B. POWERS COMPANY
19. MARCIA SUE JOHNSTON, TRUSTEE
20. MARCIA SUE JOHNSTON, TRUSTEE
21. THOMAS E. PRICE
22. VILLAGE OF ASHLEY
23. STEPHEN A. WHIPPLE
24. 1/2 BENNETT DISTRIBUTING, INC. 1/2 NEWSOM MARKETING, INC.
25. HAROLD J. HALL JR. & ESTHER F. HALL
26. CLYDE C. KELTNER POST No. 518, AMERICAN LEGION, INC.
27. GARY A. BUECHEL & CHRISTOPHER J. BUECHEL
28. WILMA J. SARGENT
29. GARY E. HUBBARD & TRUDY A. HUBBARD

BEARINGS & DISTANCES

(1) N4°30'00"E, 5.00'
(2) S85°37'59"E, 8.52'
(3) S5°15'00"W, 5.02'
(4) N85°30'00"W, 8.45'
(5) N4°30'00"E, 8.00'
(6) S85°37'59"E, 11.56'
(7) S5°15'00"W, 3.01'
(8) N85°30'00"W, 3.00'
(9) S85°37'59"E, 81.00'
(10) S5°15'00"W, 5.21'
(11) N85°30'00"W, 81.00'
(12) S85°37'59"E, 81.00'
(13) S5°15'00"W, 3.01'
(14) S85°28'49"E, 24.00'
(15) S5°15'00"W, 5.20'
(16) N85°30'00"W, 24.00'
(17) S85°28'49"E, 24.00'
(18) S5°15'00"W, 5.19'
(19) N85°30'00"W, 24.00'
(20) N5°15'00"E, 6.00'
(21) S85°30'00"E, 48.00'
(22) S5°15'00"W, 6.00'
(23) N85°30'00"W, 48.00'
(24) N5°15'00"E, 3.00'
(25) S85°30'00"E, 48.00'
(26) S5°15'00"W, 3.00'
(27) S85°09'53"E, 0.90'
(28) S4°50'07"W, 2.10'
(29) S85°09'53"E, 14.70'
(30) N4°50'07"E, 2.10'
(31) S85°09'53"E, 6.40'
(32) S5°15'00"W, 5.87'
(33) N85°30'00"W, 22.00'
(34) S85°09'53"E, 30.09'
(35) S66°34'00"E, 2.31'
(36) S27°28'02"W, 7.85'
(37) N85°30'00"W, 33.05'
(38) N27°28'02"E, 10.05'
(39) S85°18'43"E, 76.14'
(40) S5°15'00"W, 9.00'
(41) N85°30'00"W, 79.94'
(42) N27°28'02"E, 3.26'
(43) S85°18'43"E, 74.91'
(44) S5°15'00"W, 3.00'
(45) N85°30'00"W, 0.73'
(46) S85°16'49"E, 64.35'
(47) S5°15'00"W, 8.75'
(48) N85°30'00"W, 64.35'
(49) S85°16'49"E, 29.03'
(50) S5°15'00"W, 8.64'
(51) N85°30'00"W, 29.03'
(52) S85°16'49"E, 21.16'
(53) S5°15'00"W, 8.56'
(54) N85°30'00"W, 21.16'
(55) S85°16'49"E, 21.16'
(56) S5°15'00"W, 8.48'
(57) N85°30'00"W, 21.16'
(58) S85°16'49"E, 49.72'
(59) S4°51'42"W, 8.38'
(60) N85°23'30"W, 49.04'
(61) S85°16'49"E, 16.27'
(62) S4°51'42"W, 8.35'
(63) N85°23'30"W, 16.27'
(64) S85°16'49"E, 33.50'
(65) S4°51'42"W, 8.29'
(66) N85°23'30"W, 33.50'
(67) S85°16'49"E, 18.00'
(68) S4°51'42"W, 8.25'
(69) N85°23'30"W, 18.00'
(70) N4°51'42"E, 1.85'
(71) S85°23'30"E, 48.35'
(72) S4°51'42"W, 1.85'
(73) N85°23'30"W, 48.35'
(74) N4°51'42"E, 16.70'
(75) S40°16'28"E, 1.83'
(76) S4°56'38"W, 7.37'
(77) S85°12'39"E, 7.41'
(78) S40°16'28"E, 11.30'
(79) N85°23'30"W, 16.71'
(80) S85°23'30"E, 10.00'
(81) S49°44'06"W, 14.17'
(82) N4°51'42"E, 10.00'
(83) N4°51'42"E, 12.57'
(84) S85°23'30"E, 50.40'
(85) S4°51'42"W, 12.40'
(86) N85°35'22"W, 50.40'
(87) N4°51'42"E, 12.65'
(88) S85°23'30"E, 22.00'
(89) N85°35'22"W, 22.00'
(90) N4°51'42"E, 12.75'
(91) S85°23'30"E, 39.80'
(92) N85°32'08"W, 39.80'
(93) N4°51'42"E, 3.00'
(94) S85°32'08"E, 37.00'
(95) S4°51'42"W, 3.00'
(96) N85°32'08"W, 37.00'
(97) N4°51'42"E, 12.41'
(98) S85°23'30"E, 47.79'
(99) N84°58'41"W, 47.79'
(100) N4°33'15"E, 12.23'
(101) S85°30'00"E, 15.15'
(102) S85°23'30"E, 4.85'
(103) N84°58'41"W, 19.94'
(104) N4°33'15"E, 12.05'
(105) S85°30'00"E, 20.00'
(106) N84°58'41"W, 20.00'
(107) N27°29'44"E, 12.82'
(108) S85°30'00"E, 27.41'
(109) N85°03'29"W, 32.41'
(110) N27°29'44"E, 6.74'
(111) S85°30'00"E, 107.52'
(112) S27°29'44"W, 13.04'
(113) N41°48'21"W, 8.40'
(114) N85°30'00"W, 98.98'
(115) N4°30'00"E, 3.00'
(116) S85°30'00"E, 41.60'
(117) S27°45'59"W, 3.27'
(118) N85°30'00"W, 40.31'
(119) N63°14'15"E, 4.40'
(120) N5°15'00"E, 5.00'
(121) S85°30'00"E, 152.75'
(122) S27°29'44"W, 39.11'
(123) N28°00'45"W, 36.76'
(124) N85°30'00"W, 62.22'
(125) N85°30'00"W, 117.78'
(126) N4°30'00"E, 15.00'
(127) S85°30'00"E, 35.00'
(128) S4°30'00"W, 15.00'
(129) N85°30'00"W, 35.00'
(130) N4°30'00"E, 5.00'
(131) S85°30'00"E, 62.29'

MONUMENT LEGEND
- 3/4" REBAR W/ALUM. CAP STAMPED O.D.O.T. (SET)
- MAG NAIL (SET)
- IRON PIN (FOUND)
- IRON PIPE (FOUND)
- MONUMENT BOX (FOUND)
- RAILROAD SPIKE (FOUND)

NOTE:
IN AREAS WHERE WORK LIMITS ARE NOT LABELED, THE CONTRACTOR IS TO FOLLOW THE NEW HIGHWAY EASEMENT LINE AS THE EQUIVALENT OF A WORK LIMIT.

REV.	DATE	DESCRIPTION

DATE COMPLETED

HORIZONTAL SCALE IN FEET 0 20 40

P.I.D. NO. 21035

R/W DESIGNER TMK
R/W REVIEWER MBS

RIGHT OF WAY PLAN
STA. 19+50 TO STA. 25+00

DEL-229-6.84

5 / 6

42 / 43

Aug 20, 2003 3:35:08 PM G:\FBA\Ashley 8623\8623-09\Drawings\RIGHT_OF_WAY\Plan.dwg

DEL-229-6.84

SECTION 1, TOWN 6, RANGE 18, U.S. MILITARY LANDS
VILLAGE OF ASHLEY, DELAWARE COUNTY, OHIO

STRUCTURE KEY

- COMMERCIAL BUILDING
- RESIDENTIAL BUILDING
- MUNICIPAL BUILDING

(*) = POTENTIAL ENCROACHMENT

BASIS OF EXISTING C/L AND R/W WIDTH

CENTERLINE AND RIGHT-OF-WAY WIDTH WERE ESTABLISHED BY USING THE ORIGINAL SUBDIVISION PLATS OF THE VILLAGE OF ASHLEY. REFERENCE IS MADE TO THE FOLLOWING:
PLAT BOOK 1, PAGE 45
PLAT BOOK 1, PAGE 51
PLAT BOOK 1, PAGE 67
PLAT BOOK 2, PAGE 306
OF THE RECORDS OF DELAWARE COUNTY, OHIO. RIGHT-OF-WAY WIDTH ON HIGH STREET ESTABLISHED AT 60.0 FEET

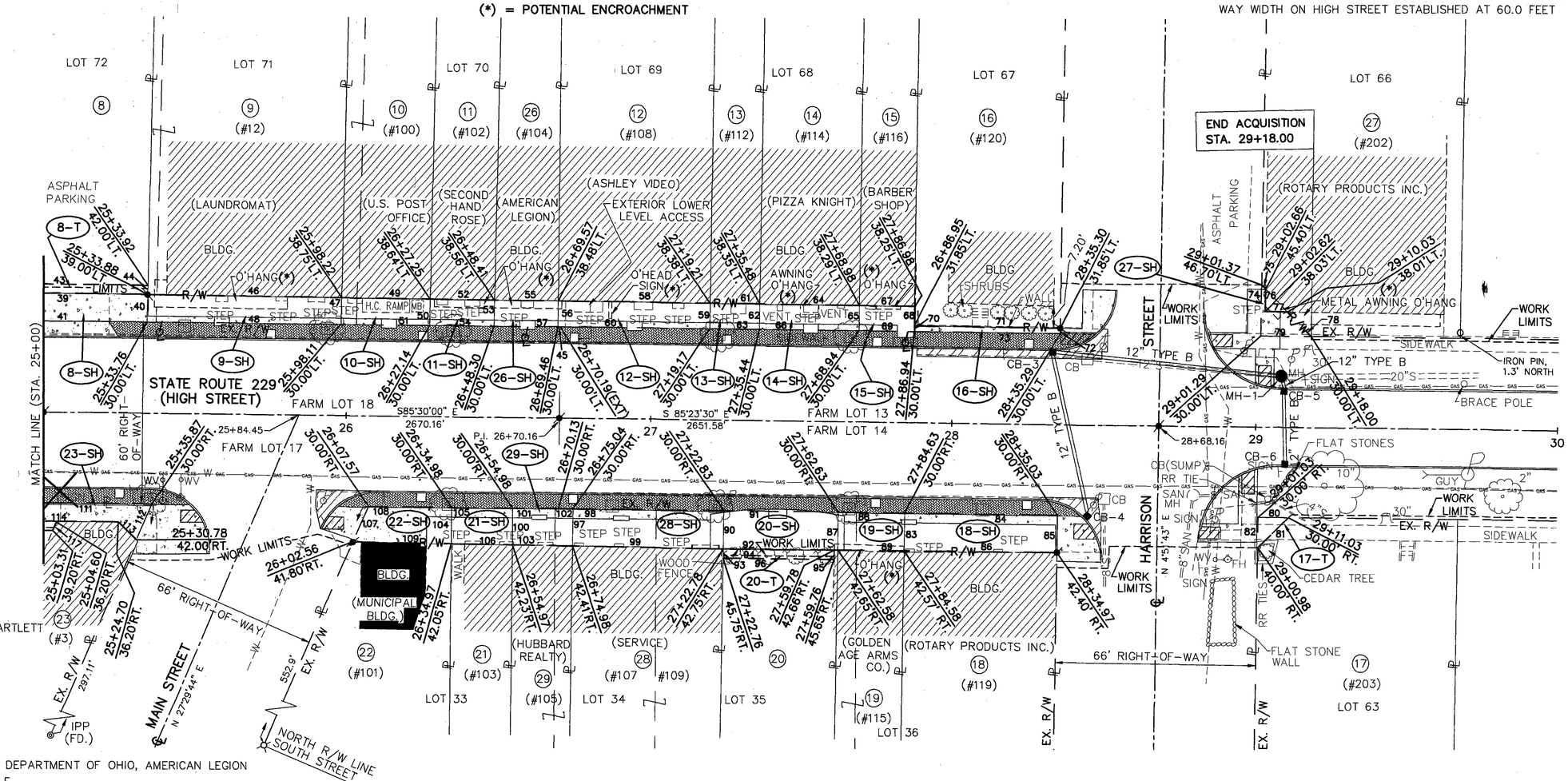

PROPERTY OWNERS

1. LARRY WIGTON
2. DEAN W. BARTLETT & LINDA L. BARTLETT
3. WILMA J. SARGENT
4. ELLA JACOBS
5. MICHAEL T. GIBSON
6. JUANITA J. NEWMAN
7. DCB CORPORATION
8. MARION LANDMARK, INC.
9. GARRIE K. & KATHY D. NOLTING
10. CLYDE C. KELTNER POST No. 518, DEPARTMENT OF OHIO, AMERICAN LEGION
11. LARRY M. GALE & PENNY LEE GALE
12. JOHN A. SCHUMACHER & SYLVIA A. SCHUMACHER
13. GARY HUBBARD & TRUDY A. HUBBARD
14. GARY A. BUECHEL & CHRISTOPHER J. BUECHEL
15. CLAUDE A. HIGGINS & HELEN LUCILLE HIGGINS
16. GEORGE M. HARMON & LISA L. HARMON
17. BEVERLY A. PRIDDY & FREDERICK M. CRIST
18. R.B. POWERS COMPANY
19. MARCIA SUE JOHNSTON, TRUSTEE
20. MARCIA SUE JOHNSTON, TRUSTEE
21. THOMAS E. PRICE
22. VILLAGE OF ASHLEY
23. STEPHEN A. WHIPPLE
24. 1/2 BENNETT DISTRIBUTING, INC.
    1/2 NEWSOM MARKETING, INC.
25. HAROLD J. HALL JR. & ESTHER F. HALL
26. CLYDE C. KELTNER POST No. 518, AMERICAN LEGION, INC.
27. GARY A. BUECHEL & CHRISTOPHER J. BUECHEL
28. WILMA J. SARGENT
29. GARY E. HUBBARD & TRUDY A. HUBBARD

BEARINGS & DISTANCES

(1) N4°30'00"E, 5.00'
(2) S85°37'59"E, 8.52'
(3) S51°5'00"W, 5.02'
(4) N85°30'00"W, 8.45'
(5) N4°30'00"E, 8.00'
(6) S85°37'59"E, 11.56'
(7) S51°5'00"W, 3.01'
(8) N85°30'00"W, 3.00'
(9) S85°37'59"E, 81.00'
(10) S51°5'00"W, 5.21'
(11) N85°30'00"W, 81.00'
(12) S85°37'59"E, 81.00'
(13) S51°5'00"W, 3.01'
(14) S85°28'49"E, 24.00'
(15) S51°5'00"W, 5.20'
(16) N85°30'00"W, 24.00'
(17) S85°28'49"E, 24.00'
(18) S51°5'00"W, 5.19'
(19) N85°30'00"W, 24.00'
(20) N51°5'00"E, 6.00'
(21) S85°30'00"E, 48.00'
(22) S51°5'00"W, 6.00'
(23) N85°30'00"W, 48.00'
(24) N51°5'00"E, 3.00'
(25) S85°30'00"E, 48.00'
(26) S51°5'00"W, 3.00'
(27) S85°09'53"E, 0.90'
(28) S4°50'07"W, 2.10'
(29) S85°09'53"E, 14.70'
(30) N4°50'07"E, 2.10'
(31) S85°09'53"E, 6.40'
(32) S51°5'00"W, 5.87'
(33) N85°30'00"W, 22.00'
(34) S85°09'53"E, 30.09'
(35) S66°34'00"E, 2.31'
(36) S27°28'02"W, 7.85'
(37) N85°30'00"W, 33.05'
(38) N27°28'02"E, 10.05'
(39) S85°18'43"E, 76.14'
(40) S51°5'00"W, 9.00'
(41) N85°30'00"W, 79.94'
(42) N27°28'02"E, 3.26'
(43) S85°18'43"E, 74.91'
(44) S51°5'00"W, 3.00'
(45) N85°30'00"W, 0.73'
(46) S85°16'49"E, 64.35'
(47) S51°5'00"W, 8.75'
(48) N85°30'00"W, 64.35'
(49) S85°16'49"E, 29.03'
(50) S51°5'00"W, 8.64'
(51) N85°30'00"W, 29.03'
(52) S85°16'49"E, 21.16'
(53) S51°5'00"W, 8.56'
(54) N85°30'00"W, 21.16'
(55) S85°16'49"E, 21.16'
(56) S51°5'00"W, 8.48'
(57) N85°30'00"W, 21.16'
(58) S85°16'49"E, 49.72'
(59) S4°51'42"W, 8.38'
(60) N85°23'30"W, 49.04'
(61) S85°16'49"E, 16.27'
(62) S4°51'42"W, 8.35'
(63) N85°23'30"W, 16.27'
(64) S85°16'49"E, 33.50'
(65) S4°51'42"W, 8.29'
(66) N85°23'30"W, 33.50'
(67) S85°16'49"E, 18.00'
(68) S4°51'42"W, 8.25'
(69) N85°23'30"W, 18.00'
(70) N4°51'42"E, 1.85'
(71) S85°23'30"E, 48.35'
(72) S4°51'42"W, 1.85'
(73) N85°23'30"W, 48.35'
(74) N4°51'42"E, 16.70'
(75) S40°16'28"E, 1.83'
(76) S4°56'38"W, 7.37'
(77) S85°12'39"E, 7.41'
(78) S40°16'28"E, 11.30'
(79) N85°23'30"W, 16.71'
(80) S85°23'30"E, 10.00'
(81) S49°44'06"W, 14.17'
(82) N4°51'42"E, 10.00'
(83) N4°51'42"E, 12.57'
(84) S85°23'30"E, 50.40'
(85) S4°51'42"W, 12.40'
(86) N85°35'22"W, 50.40'
(87) N4°51'42"E, 12.65'
(88) S85°23'30"E, 22.00'
(89) N85°35'22"W, 22.00'
(90) N4°51'42"E, 12.75'
(91) S85°23'30"E, 39.80'
(92) N85°32'08"W, 39.80'
(93) N4°51'42"E, 3.00'
(94) S85°32'08"E, 37.00'
(95) S4°51'42"W, 3.00'
(96) N85°32'08"W, 37.00'
(97) N4°51'42"E, 12.41'
(98) S85°23'30"E, 47.79'
(99) N84°58'41"W, 47.79'
(100) N4°33'15"E, 12.23'
(101) S85°30'00"E, 15.15'
(102) S85°23'30"E, 4.85'
(103) N84°58'41"W, 19.94'
(104) N4°33'15"E, 12.05'
(105) S85°30'00"E, 20.00'
(106) N84°58'41"W, 20.00'
(107) N27°29'44"E, 12.82'
(108) S85°30'00"E, 27.41'
(109) N85°03'29"W, 32.41'
(110) N27°29'44"E, 6.74'
(111) S85°30'00"E, 107.52'
(112) S27°29'44"W, 13.04'
(113) N41°48'21"W, 8.40'
(114) N85°30'00"W, 98.98'
(115) N4°30'00"E, 3.00'
(116) S85°30'00"E, 41.60'
(117) S27°45'59"W, 3.27'
(118) N85°30'00"W, 40.31'
(119) N63°14'15"E, 4.40'
(120) N5°15'00"E, 5.00'
(121) S85°30'00"E, 152.75'
(122) S27°29'44"W, 39.11'
(123) N28°00'45"W, 36.76'
(124) N85°30'00"W, 62.22'
(125) N85°30'00"W, 117.78'
(126) N4°30'00"E, 15.00'
(127) S85°30'00"E, 35.00'
(128) S4°30'00"W, 15.00'
(129) N85°30'00"W, 35.00'
(130) N4°30'00"E, 5.00'
(131) S85°30'00"E, 62.29'

MONUMENT LEGEND

- ● 3/4" REBAR W/ALUM. CAP STAMPED O.D.O.T. (SET)
- MAG NAIL (SET)
- ○ IRON PIN (FOUND)
- IRON PIPE (FOUND)
- MONUMENT BOX (FOUND)
- RAILROAD SPIKE (FOUND)

NOTE:
IN AREAS WHERE WORK LIMITS ARE NOT LABELED, THE CONTRACTOR IS TO FOLLOW THE NEW HIGHWAY EASEMENT LINE AS THE EQUIVALENT OF A WORK LIMIT.

REV.	DATE	DESCRIPTION
DATE COMPLETED		

HORIZONTAL SCALE IN FEET 0 20 40

P.I.D. NO. 21035

R/W DESIGNER TMK
R/W REVIEWER MBS

RIGHT OF WAY PLAN
STA. 25+00 TO STA. 30+00

DEL-229-6.84

6 / 6

43 / 43