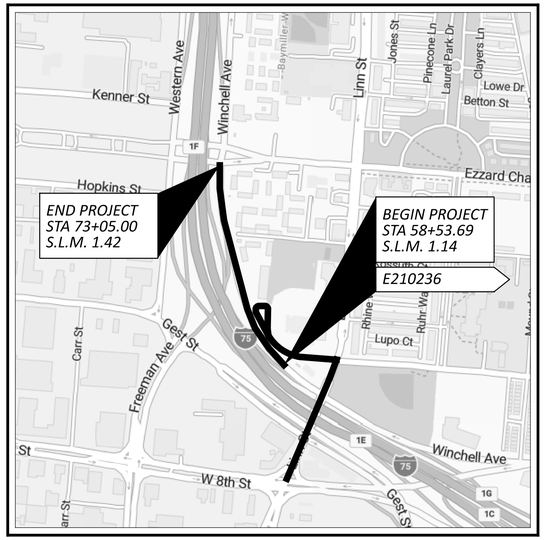

LOCATION MAP

LATITUDE: N 39°06'34" LONGITUDE: W 84°31'54"

PORTION TO BE IMPROVED ----------

STATE OF OHIO
DEPARTMENT OF TRANSPORTATION

HAM-IR 75-1.05

CITY OF CINCINNATI
HAMILTON COUNTY

INDEX OF SHEETS:

TITLE SHEET ____ *P.1*
SCHEMATIC PLAN ____ *P.2 - P.3*
TYPICAL SECTIONS ____ *P.4 - P.10*
GENERAL NOTES ____ *P.11 - P.13, P.13A, P.14*
MAINTENANCE OF TRAFFIC ____ *P.15 - P.58*
GENERAL SUMMARY ____ *P.59 - P.66*
SUBSUMMARIES ____ *P.67 - P.72*
CALCULATIONS ____ *P.73 - P.74*
PROJECT SITE PLAN ____ *P.75 - P.77*
PLAN & PROFILES:
SIDE ROADS:
COURT ST ____ *P.78 - P.81*
LINN ST ____ *P.82 - P.83*
WINCHELL AVE ____ *P.84 - P.85*
RAMP V ____ *P.86 - P.89*
CROSS SECTIONS:
SIDE ROADS:
EARTHWORK SUBSUMMARY ____ *P.90*
COURT ST ____ *P.91 - P.99*
LINN ST ____ *P.100 - P.106*
WINCHELL AVE ____ *P.107 - P.122*
RAMP V ____ *P.123 - P.137*
SUPERELEVATION TABLES ____ *P.138*
INTERCHANGE DETAILS ____ *P.139 - P.142*
MEDIAN DETAILS ____ *P.143*
INTERSECTION DETAILS ____ *P.144 - P.147*
DRIVEWAY DETAILS ____ *P.148 - P.149*
WALK DETAILS ____ *P.150 - P.151*
STORM SEWER TABLES & PROFILES ____ *P.152 - P.163*
RETAINING WALLS:
WALL 2 ____ *P.164 - P.191*
WALL 4 ____ *P.193 - P.202*
SANITARY SEWER DETAILS ____ *P.203 - P.204*
TRAFFIC CONTROL:
SIGNING & PAVEMENT MARKINGS:
SUBSUMMARIES ____ *P.205 - P.207*
COURT ST ____ *P.208 - P.209*
LINN ST ____ *P.210 - P.213*
WINCHELL AVE ____ *P.214 - P.215*
RAMP V ____ *P.216 - P.219*
LIGHTING ____ *P.220, P.220A, P.221 - P.230*
NOISE WALL DETAILS ____ *P.231 - P.242*
STRUCTURES OVER 20'
HAM-75-0104 (LINN ST over IR75) ____ *P.243 - P.305, P.305A, P.306 - P. 307, P.307A, P.307B, P.307C, P.307D, P.307E, P.308 - P.330*
HAM-75-0123E (PED BRIDGE over WINCHELL) ____ *P.331 - P.352*
AESTHETIC ENHANCEMENT PLAN ____ *P.353, P.365 - P.373*
NOT USED ____ *P.354 - P.364*
SOIL PROFILES ____ *P.374 - P.415*
NOT USED ____ *P.416 - P.421*

FEDERAL PROJECT NUMBER

NONE

RAILROAD INVOLVEMENT

NONE

PROJECT DESCRIPTION

RECONSTRUCT AND WIDEN THE LINN ST BRIDGE OVER IR 75. RECONSTRUCT WINCHELL AVE AND RAMP V FROM NORTH OF LINN ST BRIDGE TO SOUTH OF EZZARD CHARLES ALONG WITH THE CUL-DE-SAC WEST COURT ST.

EARTH DISTURBED AREAS

PROJECT EARTH DISTURBED AREA: *6.66 ACRES*
ESTIMATED CONTRACTOR EARTH DISTURBED AREA: *1.00 ACRES*
NOTICE OF INTENT EARTH DISTURBED AREA: *N/A (NOI NOT REQUIRED)*

** ALL DRAINAGE FLOWS TO EXISTING COMBINED SEWERS.*

2023 SPECIFICATIONS

THE STANDARD SPECIFICATIONS OF THE STATE OF OHIO, DEPARTMENT OF TRANSPORTATION, INCLUDING SUPPLEMENTAL SPECIFICATIONS LISTED IN THE PLANS AND CHANGES LISTED IN THE PROPOSAL SHALL GOVERN THIS IMPROVEMENT.

I HEREBY APPROVE THESE PLANS AND DECLARE THAT THE MAKING OF THIS IMPROVEMENT WILL REQUIRE THE CLOSING TO TRAFFIC OF THE HIGHWAY AND THAT DETOURS WILL BE PROVIDED AS INDICATED ON SHEET P.52 - P.58.

DISTRICT DEPUTY DIRECTOR

Douglas A. Gruver, P.E.

DIRECTOR, DEPARTMENT OF TRANSPORTATION

Pamela Boratyn

DESIGN DESIGNATION

SEE SHEET P.2

ADA DESIGN WAIVERS

NONE REQUIRED

DESIGN EXCEPTIONS

NONE REQUIRED

UNDERGROUND UTILITIES
Contact Two Working Days Before You Dig
OHIO811.org Before You Dig
OHIO811, 8-1-1, or 1-800-362-2764
(Non members must be called directly)

PLAN PREPARED BY:

B&N burgessniple.com

AMERICAN STRUCTUREPOINT INC.

Palmer ENGINEERING

8350 E. KEMPER ROAD
SUITE B
CINCINNATI, OH 45249
(513) 469-1600

FINAL TRACINGS
MAY 8, 2025

STANDARD CONSTRUCTION DRAWINGS													*SUPPLEMENTAL SPECIFICATIONS*		*SPECIAL PROVISIONS*
ODOT								*CITY OF CINCINNATI*							
BP-3.1	*1/19/24*	*MGS-5.3*	*7/15/16*	*VPF-1-24*	*1/17/25*	*MT-98.30*	*7/16/21*	*TC-61.30*	*7/19/24*	*C101*	*8/23/24*	*ES-2-2*	*8/28/07*	*800-2023*	*7/18/25*	
BP-3.2	*1/18/19*	*MGS-6.1*	*1/19/18*			*MT-99.20*	*4/19/19*	*TC-65.10*	*1/17/14*	*C102*	*8/23/24*	*ES-7-1*	*7/23/04*	*807*	*1/17/25*	
BP-4.1	*7/19/13*			*HL-10.11*	*7/21/23*	*MT-99.30*	*1/17/20*	*TC-65.11*	*1/17/25*	*C103*	*8/23/24*	*ES-7-2*	*9/15/04*	*808*	*7/19/24*	
BP-5.1	*1/17/25*	*MH-3*	*7/19/24*	*HL-10.12*	*7/21/23*	*MT-99.60*	*7/19/24*	*TC-71.10*	*4/21/23*	*C112*	*8/23/24*	*ES-7-3*	*9/15/04*	*809*	*7/18/25*	
BP-6.1	*7/19/13*			*HL-10.13*	*1/20/23*	*MT-101.60*	*1/17/25*	*TC-72.20*	*1/17/25*	*C116*	*8/23/24*	*ES-7-4*	*9/15/04*	*813*	*7/21/23*	
BP-7.1	*1/17/25*	*RM-2.1*	*7/19/13*	*HL-30.31*	*1/17/25*	*MT-101.70*	*7/19/24*	*TC-73.20*	*1/17/25*	*C117*	*8/23/24*	*ES-10-3*	*3/01/05*	*821*	*4/20/12*	
		RM-3.1	*7/20/18*	*HL-50.21*	*7/15/22*	*MT-101.75*	*7/21/23*	*TC-74.10*	*7/21/23*	*C119*	*8/23/24*			*825*	*7/19/24*	
CB-2-2A, 2B, 2C	*7/19/24*	*RM-4.2*	*4/17/20*	*HL-60.11*	*7/21/17*	*MT-101.80*	*1/17/20*	*TC-83.20*	*7/19/24*	*C120*	*8/23/24*	*26999*	*01/2003*	*829*	*1/20/17*	
CB-6	*7/19/24*	*RM-4.3*	*1/17/25*	*HL-60.12*	*7/21/23*	*MT-101.90*	*7/17/20*	*TC-85.10*	*1/19/24*	*C121*	*8/23/24*	*49007*	*3/13/89*	*832*	*7/18/25*	
		RM-4.4	*7/19/24*			*MT-102.10*	*7/21/23*			*C122*	*8/23/24*	*49010*	*4/13/21*	*840*	*1/17/25*	
DM-1.1	*1/17/25*	*RM-4.5*	*1/17/25*	*MT-95.30*	*7/19/19*	*MT-102.30*	*10/16/15*			*C123*	*8/23/24*	*49011*	*4/13/21*	*851*	*1/17/25*	
DM-1.3	*7/18/14*	*RM-4.6*	*7/19/13*	*MT-95.31*	*7/19/19*	*MT-103.10*	*7/18/25*			*C125*	*8/23/24*	*49013*	*4/13/21*	*873*	*4/16/21*	
DM-4.3	*1/15/16*	*RM-5.2*	*7/19/24*	*MT-95.32*	*4/19/19*	*MT-104.10*	*1/19/24*			*C126*	*8/23/24*	*49016*	*4/13/21*	*878*	*1/21/22*	
DM-4.4	*1/15/16*			*MT-95.45*	*7/21/23*	*MT-105.10*	*1/17/20*					*49038*	*4/13/21*	*894*	*4/16/21*	
		AS-1-15	*1/20/23*	*MT-95.50*	*7/21/17*	*MT-110.10*	*7/19/13*			*ES-1-0*	*8/29/07*	*49041*	*4/13/21*	*896*	*7/21/17*	
I-3C, 3C1	*1/17/25*	*AS-2-15*	*7/21/23*	*MT-98.10*	*1/17/20*					*ES-1-1*	*7/19/04*	*120362*	*1/08/14*	*905*	*1/17/25*	
		EXJ-4-87	*1/19/24*	*MT-98.11*	*1/17/20*	*TC-41.20*	*10/18/13*			*ES-2-1*	*8/29/07*			*908*	*1/17/25*	
MGS-1.1	*1/17/25*	*GSD-1-19*	*7/19/24*	*MT-98.20*	*4/19/19*	*TC-41.30*	*4/21/23*							*913*	*4/16/21*	
MGS-2.1	*1/17/25*	*NBS-1-09*	*1/17/25*	*MT-98.22*	*1/17/20*	*TC-42.20*	*10/18/13*			*METROPOLITAN SEWER DISTRICT (MSDGC)*				*921*	*7/19/24*	
MGS-3.1	*1/19/18*	*PSBD-2-07*	*7/20/18*	*MT-98.28*	*1/17/20*	*TC-52.10*	*10/18/13*			*49005*	*08/2011*	*49056*	*12/2010*	*929*	*7/21/23*	
MGS-4.5	*1/18/13*	*TVPF-1-18*	*1/17/25*	*MT-98.29*	*1/17/20*	*TC-52.20*	*1/15/21*			*49048*	*12/2010*	*61307*	*10/2023*	*996*	*7/21/23*	

ENGINEER'S SEAL:
AMERICAN STRUCTUREPOINT, INC
FOR ALL ROADWAY SHEETS
STATE OF OHIO · LUKE Z. STUTLER · E-86344 · PROFESSIONAL ENGINEER · REGISTERED

ENGINEER'S SEAL:
PALMER ENGINEERING
FOR MAINTENANCE OF TRAFFIC SHEETS
STATE OF OHIO · DANIEL PAUL FICKER · E-63916 · PROFESSIONAL ENGINEER · REGISTERED

ENGINEER'S SEAL:
PALMER ENGINEERING
FOR WALL 02, WALL 04 SHEETS & STRUCTURES OVER 20' (HAM-75-0123E)
STATE OF OHIO · BRONSON J FUNKE · E-61820 · PROFESSIONAL ENGINEER · REGISTERED

ENGINEER'S SEAL:
BURGESS & NIPLE
FOR NOISE WALL 05 & 06 SHEETS
STATE OF OHIO · STEVEN CHARLES SMITH · E-54439 · PROFESSIONAL ENGINEER · REGISTERED

ENGINEER'S SEAL:
AMERICAN STRUCTUREPOINT, INC
FOR LIGHTING PLANS
STATE OF OHIO · ELIZABETH M. SCHNEIDER · E-77942 · PROFESSIONAL ENGINEER · REGISTERED

ENGINEER'S SEAL:
BURGESS & NIPLE
FOR STRUCTURES OVER 20' (HAM-75-0104)
STATE OF OHIO · BRADLEY EVAN STIFFLER · E-67083 · PROFESSIONAL ENGINEER · REGISTERED

TITLE SHEET

DESIGN AGENCY
AMERICAN STRUCTUREPOINT INC.

DESIGNER LZS
REVIEWER KAM 03/03/25
PROJECT ID 122048
SHEET P.1 TOTAL P.421

HAM-IR 75-1.05

MODEL: Sheet PAPERSIZE: 34x22 (in.) DATE: 8/28/2025 TIME: 10:55:39 AM PLTDRV: OHDOT_PDF.pltcfg PENTBL: OHDOT_Pen.tbl USER: WORKSPACE: OHDOTCEv02 WORKSET: I22048 PRODUCT: OpenRoadsDesigner 10.12.02.4
pw:\\ohiodot-pw.bentley.com:ohiodot-pw-02\Documents\01 Active Projects\District 08\Hamilton\122048\403-Engineering_StructurePoint\Roadway\Sheets\122048_GT301.dgn

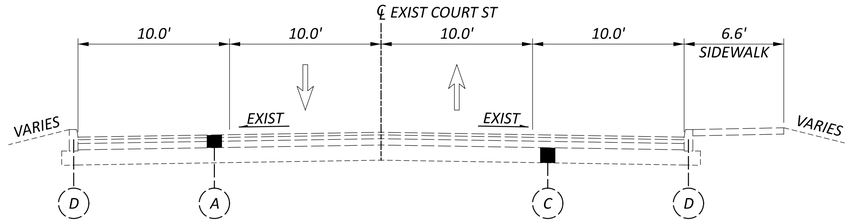

EXISTING TYPICAL SECTION - COURT ST

STA 4+00.00

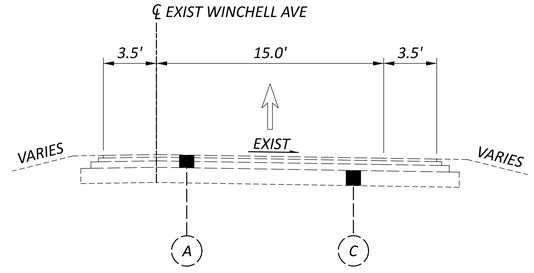

EXISTING TYPICAL SECTION - WINCHELL AVE

STA 29+00.00

LEGEND

1. ITEM 442 - 1-1/2" ASPHALT CONCRETE SURFACE COURSE, 12.5MM, TYPE A (447)
2. ITEM 442 - 2" ASPHALT CONCRETE SURFACE COURSE, 12.5MM,TYPE A (448)
3. ITEM 442 - 1-3/4" ASPHALT CONCRETE INTERMEDIATE COURSE, 12.5MM, TYPE A (446)
4. ITEM 407 - NON-TRACKING TACK COAT (0.055 GAL/SY)
5. ITEM 302 - 3" ASPHALT CONCRETE BASE, PG64-22, (449)
6. ITEM 302 - 5" ASPHALT CONCRETE BASE, PG64-22, (449)
7. ITEM 302 - 8-1/2" ASPHALT CONCRETE BASE (2 EQUAL LIFTS WITH ITEM 407 BETWEEN LIFTS)
8. ITEM 304 - 6" AGGREGATE BASE
9. ITEM 206 - 14" CEMENT STABILIZED SUBGRADE
10. ITEM 609 - CURB, MISC.: TYPE S-1 CURB (CINCINNATI)
11. ITEM 609 - 6" CONCRETE MEDIAN
12. ITEM 608 - 5" CONCRETE WALK
13. ITEM 606 - GUARDRAIL, TYPE MGS
14. ITEM 622 - CONCRETE BARRIER, SINGLE SLOPE, TYPE C
15. ITEM 622 - CONCRETE BARRIER, SINGLE SLOPE, TYPE D
16. ITEM 659 - SEEDING AND MULCHING
17. ITEM 609 - CURB, MISC.: TYPE B-1 CURB (CINCINNATI)
18. ITEM 204 - EXCAVATION OF SUBGRADE, 12 INCHES DEEP,
    ITEM 204 - GRANULAR MATERIAL, TYPE C,
    ITEM 204 - GEOTEXTILE FABRIC
19. ITEM 204 - PROOF ROLLING
20. ITEM 607 - FENCE MISC.: WOOD FENCE
21. ITEM 452 - 10" NON-REINFORCED CONCRETE PAVEMENT, CLASS QC1P WITH QC/QA
22. ITEM 609 - CURB, MISC.: TYPE P-1 CURB (CINCINNATI)
23. ITEM 257 - DIAMOND GRINDING PORTLAND CEMENT CONCRETE PAVEMENT
24. ITEM 605 - 6" SHALLOW PIPE UNDERDRAINS WITH GEOTEXTILE FABRIC

A. EXISTING 5.5"± ASPHALT CONCRETE
B. EXISTING 10"± CONCRETE PAVEMENT
C. EXISTING 6"± AGGREGATE BASE
D. EXISTING CURB

TYPICAL SECTIONS

DESIGN AGENCY
AMERICAN STRUCTUREPOINT INC.

DESIGNER
LZS

REVIEWER
KAM 03/03/25

PROJECT ID
122048

SHEET P.4 TOTAL P.421

HAM-IR 75-1.05

MODEL: Sheet PAPERSIZE: 34x22 (in.) DATE: 8/28/2025 TIME: 10:10:22 AM PLTDRV: OHDOT_PDF.pltcfg PENTBL: OHDOT_Pen.tbl USER: WORKSPACE: OHDOTCEv02 WORKSET: 122048 PRODUCT: OpenRoadsDesigner 10.12.02.4
pw:\\ohiodot-pw.bentley.com:ohiodot-pw-02\Documents\01 Active Projects\District 08\Hamilton\122048\403-Engineering_StructurePoint\Roadway\Sheets\122048_GY301.dgn

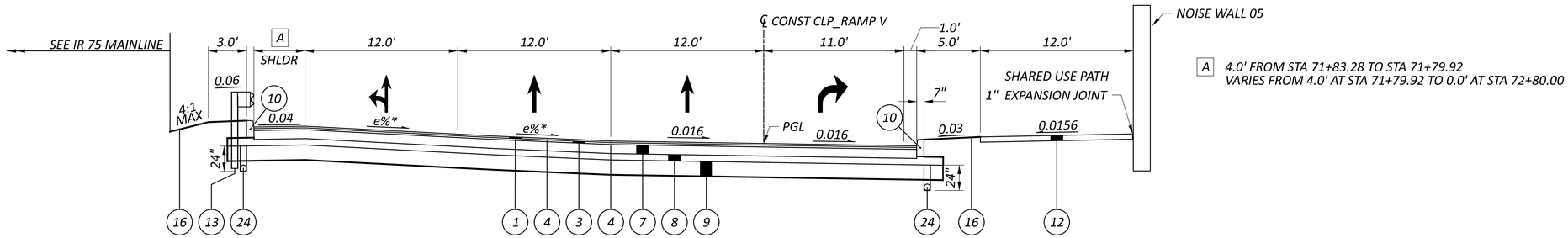

A 4.0' FROM STA 71+83.28 TO STA 71+79.92
VARIES FROM 4.0' AT STA 71+79.92 TO 0.0' AT STA 72+80.00

SUPERELEVATION SECTION - RAMP V

STA 71+83.28 TO STA 73+00.00

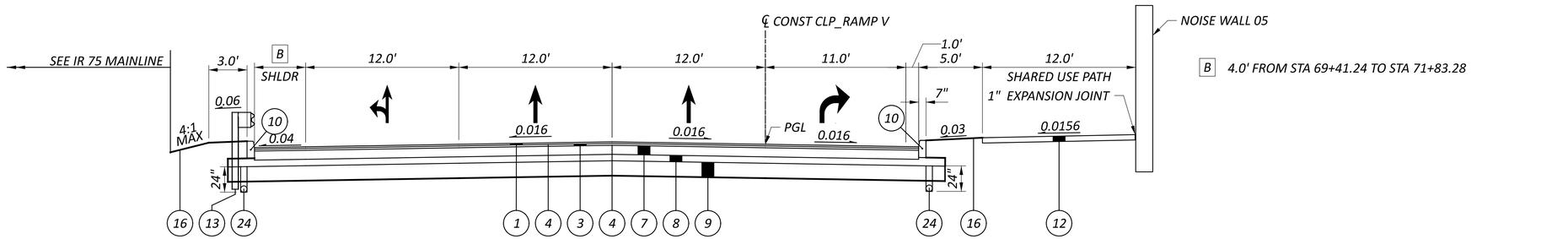

B 4.0' FROM STA 69+41.24 TO STA 71+83.28

NORMAL SECTION - RAMP V

STA 69+41.24 TO STA 71+83.28

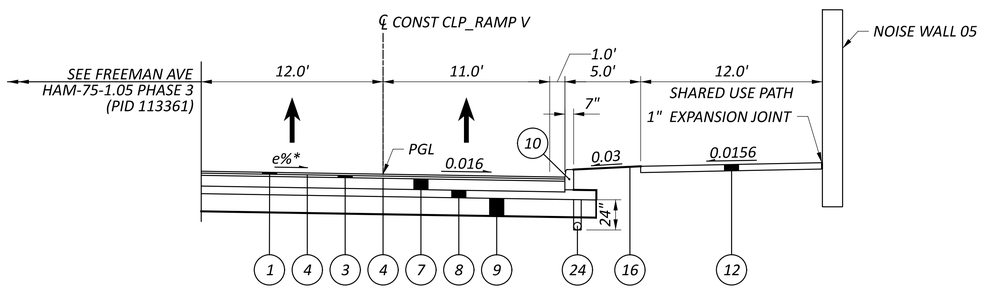

SUPERELEVATION SECTION - RAMP V

STA 66+92.54 TO STA 69+41.24

NOTES:

** FOR SUPERELEVATION RATES SEE SHEET P.138*

1. FOR LEGEND, SEE SHEET P.4
2. FOR CURB DETAILS, SEE SHEET P.6
3. FOR RETAINING WALL 02 DETAILS, SEE SHEETS P.164 - P.191
4. FOR RETAINING WALL 04 DETAILS, SEE SHEETS P.193 - P.202
5. FOR NOISE WALL DETAILS, SEE SHEETS P.231 - P.241

TYPICAL SECTIONS

DESIGN AGENCY
STRUCTUREPOINT LLC

DESIGNER LZS
REVIEWER KAM 03/03/25
PROJECT ID 122048
SHEET P.10 TOTAL P.421

HAM-IR 75-1.05

MODEL: Sheet PAPERSIZE: 34x22 (in.) DATE: 8/28/2025 TIME: 10:10:45 AM PLTDRV: OHDOT_PDF.pltcfg PENTBL: OHDOT_Pen.tbl USER: WORKSPACE: OHDOTCEv02 WORKSET: I22048 PRODUCT: OpenRoadsDesigner 10.12.02.4
pw:\\ohiodot-pw.bentley.com:ohiodot-pw-02\Documents\01 Active Projects\District 08\Hamilton\122048\403-Engineering_StructurePoint\Roadway\Sheets\122048_GY373.dgn

ENDANGERED BAT HABITAT REMOVAL

THIS PROJECT IS LOCATED WITHIN THE KNOWN HABITAT RANGES OF THE FEDERALLY LISTED AND PROTECTED INDIANA BAT, AND NORTHERN LONG-EARED BAT. NO TREES SHALL BE REMOVED UNDER THIS PROJECT FROM APRIL 1 THROUGH SEPTEMBER 30. ALL NECESSARY TREE REMOVAL SHALL OCCUR FROM OCTOBER 1 THROUGH MARCH 31. THIS REQUIREMENT IS NECESSARY TO AVOID AND MINIMIZE IMPACTS TO THESE SPECIES AS REQUIRED BY THE ENDANGERED SPECIES ACT (ESA). FOR THE PURPOSES OF THIS NOTE, A TREE IS DEFINED AS: A LIVE, DYING, OR DEAD WOODY PLANT, WITH A TRUNK 3 INCHES OR GREATER IN DIAMETER AT A HEIGHT OF 4.5 FEET ABOVE THE GROUND SURFACE, AND WITH A MINIMUM HEIGHT OF 13 FEET.

REVIEW OF DRAINAGE FACILITIES

PRIOR TO THE START OF WORK AND AGAIN BEFORE FINAL ACCEPTANCE, PERFORM AN INSPECTION WITH REPRESENTATIVES OF THE DEPARTMENT, CONTRACTOR AND LOCALS OF ALL EXISTING DRAINAGE FACILITIES THAT ARE TO REMAIN IN SERVICE WHICH MAY BE AFFECTED BY THE WORK. THE CONDITION OF THE EXISTING CONDUITS AND THEIR APPURTENANCES IS DETERMINED FROM FIELD OBSERVATIONS. RECORDS OF THE INSPECTION ARE MAINTAINED BY THE DEPARTMENT.

THE METROPOLITAN SEWER DISTRICT OF GREATER CINCINNATI (MSDGC) REQUIRES PRE AND POST CONSTRUCTION INSPECTION VIDEOS OF ALL MSDGC OWNED CONDUITS AND FACILITIES, SEE "REQUIREMENTS OF PACP/LACP CCTV AND MANHOLE SEWER INSPECTIONS" NOTE FOR SPECIFICATIONS.

CONFIRM ALL EXISTING SEWERS INSPECTED INITIALLY BY THE ABOVE-MENTIONED PARTIES ARE MAINTAINED AND LEFT IN A CONDITION COMPARABLE TO THAT DETERMINED BY THE ORIGINAL INSPECTION. THE CONTRACTOR IS RESPONSIBLE TO CORRECT ANY CHANGE IN THE CONDITION RESULTING FROM THEIR OPERATIONS AS DIRECTED AND APPROVED BY THE ENGINEER.

PAYMENT FOR ALL OPERATIONS DESCRIBED ABOVE IS INCLUDED IN THE CONTRACT PRICE FOR THE PERTINENT 611 CONDUIT ITEMS.

ITEM SPECIAL - FILL AND PLUG EXISTING CONDUIT

THIS ITEM SHALL CONSIST OF THE CONSTRUCTION OF BULKHEADS IN AN EXISTING CONDUIT AND FILLING THE AREA THUS SEALED OFF WITH ITEM 613, SAND OR OTHER MATERIAL APPROVED BY THE ENGINEER.

BULKHEADS SHALL BE LOCATED AT THE LIMITS OF THE AREA TO BE FILLED AS INDICATED ON THE PLANS. THE BULKHEADS SHALL CONSIST OF BRICK OR CONCRETE MASONRY WITH A MINIMUM THICKNESS OF 12 INCHES.

THE FILL MATERIAL SHALL BE PUMPED INTO PLACE, OR PLACED BY OTHER MEANS APPROVED BY THE ENGINEER, SO THAT, AFTER SETTLEMENT, AT LEAST 90 PERCENT OF THE CROSS-SECTIONAL AREA OF THE CONDUIT, FOR ITS ENTIRE LENGTH, SHALL BE FILLED. THE LENGTH OF FILLED AND PLUGGED CONDUIT TO BE PAID FOR SHALL BE THE ACTUAL NUMBER OF FEET (MEASURED ALONG THE CENTERLINE OF EACH CONDUIT FROM OUTER FACE TO OUTER FACE OF BULKHEADS) FILLED AND PLUGGED AS DESCRIBED ABOVE.

IN LIEU OF FILLING AND PLUGGING THE EXISTING CONDUIT, THE PIPE MAY BE REMOVED. THE LENGTH, MEASURED AS PROVIDED ABOVE, SHALL BE PAID FOR AT THE CONTRACT PRICE PER FOOT FOR, ITEM SPECIAL, FILL AND PLUG EXISTING CONDUIT.

ITEM 204 - PROOF ROLLING

THE FOLLOWING QUANTITY IS PROVIDED IN THE GENERAL SUMMARY TO ADDRESS LOCATIONS REQUIRING PROOF ROLLING.

ITEM 204 - PROOF ROLLING	5 HOUR.

CROSSINGS AND CONNECTIONS TO EXISTING PIPES AND UTILITIES

WHERE PLANS PROVIDE FOR A PROPOSED CONDUIT TO BE CONNECTED TO, OR CROSS OVER OR UNDER AN EXISTING SEWER OR UNDERGROUND UTILITY, THE CONTRACTOR SHALL LOCATE THE EXISTING PIPES OR UTILITIES BOTH AS TO LINE AND GRADE BEFORE STARTING TO LAY THE PROPOSED CONDUIT.

IF IT IS DETERMINED THAT THE ELEVATION OF THE EXISTING CONDUIT, OR EXISTING APPURTENANCE TO BE CONNECTED, DIFFERS FROM THE PLAN ELEVATION OR RESULTS IN A CHANGE IN THE PLAN CONDUIT SLOPE, THE ENGINEER SHALL BE NOTIFIED BEFORE STARTING CONSTRUCTION OF ANY PORTION OF THE PROPOSED CONDUIT WHICH WILL BE AFFECTED BY THE VARIANCE IN THE EXISTING ELEVATIONS.

IF IT IS DETERMINED THAT THE PROPOSED CONDUIT WILL INTERSECT AN EXISTING SEWER OR UNDERGROUND UTILITY IF CONSTRUCTED AS SHOWN ON THE PLAN, THE ENGINEER SHALL BE NOTIFIED BEFORE STARTING CONSTRUCTION OF ANY PORTION OF THE PROPOSED CONDUIT WHICH WOULD BE AFFECTED BY THE INTERFERENCE WITH AN EXISTING FACILITY.

PAYMENT FOR ALL THE OPERATIONS DESCRIBED ABOVE SHALL BE INCLUDED IN THE CONTRACT PRICE FOR THE PERTINENT 611 CONDUIT ITEM.

PAVEMENT RESTORATION FOR PIPE INSTALLATIONS AND/OR REMOVALS

THE FOLLOWING QUANTITY HAS BEEN PROVIDED FOR PAVEMENT RESTORATION FOLLOWING INSTALLATION AND/OR REMOVAL OF PIPES.

ITEM 302 - ASPHALT CONCRETE BASE, PG64-22	15 CU. YDS.

THE ABOVE QUANTITY IS BASED ON A 302 THICKNESS OF 6 INCHES AND A PAVEMENT RESTORATION WIDTH THAT INCLUDES THE TRENCH WIDTH PLUS TWO FEET ON EACH SIDE OF THE TRENCH.

PROVIDE ANY MATERIALS USED OUTSIDE THE LIMITS STATED ABOVE AT NO ADDITIONAL COST.

PAVEMENT RESTORATION FOR DRAINAGE STRUCTURE INSTALLATIONS

THE FOLLOWING QUANTITY IS PROVIDED FOR PAVEMENT RESTORATION FOLLOWING INSTALLATION OF ITEM 611, DRAINAGE STRUCTURES.

ITEM 302, ASPHALT CONCRETE BASE, PG64-22	15 CU. YDS.

THE ABOVE QUANTITY IS BASED ON A 302 THICKNESS OF 6 INCHES AND A WIDTH OF TWO FEET AROUND THE PERIMETER OF THE DRAINAGE STRUCTURE.

PROVIDE ANY MATERIALS USED OUTSIDE THE LIMITS STATED ABOVE AT NO ADDITIONAL COST.

EXISTING SUBSURFACE DRAINAGE

PROVIDE UNOBSTRUCTED OUTLETS FOR ALL EXISTING UNDERDRAINS OR AGGREGATE DRAINS ENCOUNTERED DURING CONSTRUCTION.

PROVIDE AN OUTLET PER STANDARD CONSTRUCTION DRAWING DM-1.1 FOR ALL UNDERDRAINS THAT OUTLET TO A SLOPE. UNDERDRAINS THAT CAN BE CONNECTED TO THE NEW OR EXISTING UNDERDRAINS AT THE END OF THE PROJECT LIMITS AS WELL AS ALL NECESSARY BENDS OR BRANCHES REQUIRED FOR CONNECTION ARE INCLUDED IN THE BASIS OF PAYMENT FOR UNCLASSIFIED PIPE UNDERDRAINS.

THE FOLLOWING ESTIMATED QUANTITIES HAVE BEEN INCLUDED IN THE GENERAL SUMMARY FOR THE WORK NOTED ABOVE:

ITEM 611, 6" CONDUIT, TYPE F	100 FT.
ITEM 605, 6" UNCLASSIFIED PIPE UNDERDRAINS	100 FT.

ITEM 202 - ANCHOR ASSEMBLY REMOVED, TYPE A, AS PER PLAN

WHERE DESIGNATED, EXISTING ANCHOR ASSEMBLIES INCLUDING ALL POSTS AND HARDWARE SHALL BE REMOVED. THIS ITEM SHALL ALSO INCLUDE THE REMOVAL OF THE ENTIRE CONCRETE ANCHOR AND CONCRETE ENCASEMENT. ALL HOLES LEFT AFTER REMOVAL OF ASSEMBLIES AND POSTS SHALL BE FILLED WITH GRANULAR MATERIAL AS DIRECTED BY THE ENGINEER. PAYMENT SHALL INCLUDE ALL NECESSARY LABOR AND EQUIPMENT REQUIRED TO PERFORM THE WORK AS INDICATED ABOVE. PAYMENT SHALL BE AT THE UNIT BID PRICE.

ITEM 203 - EMBANKMENT, AS PER PLAN

PLACE AND COMPACT EMBANKMENT MATERIAL IN 6 INCH LIFTS FOR THE CONTRUCTION OF THE APPROACH EMBANKMENT BETWEEN STATIONS 104+50 TO 111+00, ALONG ℄ CONST CLP_LINN.

ITEM 606 - ANCHOR ASSEMBLY, MGS TYPE E

THIS ITEM SHALL CONSIST OF FURNISHING AND INSTALLING GUARDRAIL END TERMINALS FOR TYPE MGS GUARDRAIL AS LISTED ON ROADWAY ENGINEERING'S WEB PAGE UNDER ROADSIDE SAFETY DEVICES FOR APPROVED GUARDRAIL END TREATMENTS. INSTALLATION SHALL BE AT THE LOCATIONS SPECIFIED IN THE PLANS, IN ACCORDANCE WITH THE MANUFACTURER'S SPECIFICATIONS.

THE FACE OF THE TYPE E IMPACT HEAD SHALL BE COVERED WITH REBOUNDABLE RETROREFLECTIVE SHEETING, PER CMS 730.191.

REFER TO THE MANUFACTURER'S INSTRUCTIONS REGARDING THE INSTALLATION OF, AND THE GRADING AROUND THE FOUNDATION TUBES AND GROUND STRUT. THE TOP OF ANY FOUNDATION TUBE SHOULD BE LESS THAN 4 INCHES ABOVE THE GROUND. THE PLACEMENT OF THE FOUNDATION TUBES SHOULD BE AN APPROPRIATE DEPTH BELOW THE LEVEL LINE IN ORDER TO MAINTAIN THE FINISHED GUARDRAIL HEIGHT OF 31 INCHES FROM THE EDGE OF THE SHOULDER.

ON-SITE GRADING IS REQUIRED IF THE TOP OF THE FOUNDATION TUBES OR TOP OF THE GROUND STRUT DOES PROJECT MORE THAN 4 INCHES ABOVE THE GROUND LINE.

PAYMENT FOR THE ABOVE WORK SHALL BE MADE AT THE UNIT PRICE BID FOR ITEM 606, ANCHOR ASSEMBLY, MGS TYPE E, EACH, AND SHALL INCLUDE ALL LABOR, TOOLS, EQUIPMENT AND MATERIALS NECESSARY TO CONSTRUCT A COMPLETE AND FUNCTIONAL ANCHOR ASSEMBLY SYSTEM, INCLUDING ALL RELATED TRANSITIONS, REFLECTIVE SHEETING, HARDWARE, GRADING, EMBANKMENT AND EXCAVATION NOT SEPARATELY SPECIFIED, AS REQUIRED BY THE MANUFACTURER.

ITEM 606 - IMPACT ATTENUATOR, TYPE 2 (UNIDIRECTIONAL)

THIS ITEM SHALL CONSIST OF FURNISHING AND INSTALLING ANY OF THE TYPE 2 IMPACT ATTENUATORS AS LISTED ON THE OFFICE OF ROADWAY ENGINEERING'S WEB PAGE (REFER TO THE POSTED SHOP DRAWINGS FOR THE MOST CURRENT APPROVED PRODUCT MODELS). WHEN BI-DIRECTIONAL DESIGNS ARE SPECIFIED, THE CONTRACTOR SHALL SUPPLY APPROPRIATE TRANSITIONS.

PAYMENT FOR THE ABOVE WORK SHALL BE MADE AT THE UNIT PRICE BID FOR ITEM 606, IMPACT ATTENUATOR, TYPE 2 (UNIDIRECTIONAL) (35 MPH), EACH, AND SHALL INCLUDE ALL LABOR, TOOLS, EQUIPMENT AND MATERIALS NECESSARY TO CONSTRUCT A COMPLETE AND FUNCTIONAL IMPACT ATTENUATOR SYSTEM, INCLUDING ALL RELATED BACKUPS/BACKSTOPS, TRANSITIONS, HARDWARE AND GRADING, NOT SEPARATELY SPECIFIED, AS REQUIRED BY THE MANUFACTURER. INSTALLATION SHALL BE AT THE LOCATIONS SPECIFIED IN THE PLANS, IN ACCORDANCE WITH THE MANUFACTURER'S SPECIFICATIONS.

ITEM 607 - FENCE, MISC.: WOOD FENCE (RM-5.2)

THIS ITEM SHALL CONSIST OF CONSTRUCTING A WOOD BIKEWAY RAILING ACCORDING TO STANDARD CONSTRUCTION DRAWING RM-5.2 AT THE LOCATIONS SPECIFIED ON THE PLANS. ALL LABOR, EQUIPMENT, MATERIALS, AND INCIDENTALS REQUIRED TO PERFORM THIS WORK SHALL BE INCLUDED IN THE UNIT PRICE BID FOR ITEM 607, FENCE, MISC.: WOOD FENCE.

ITEM 608 - WALKWAY, MISC.: 12"CONCRETE WALK

THIS ITEM SHALL CONSIST OF FURNISHING AND INSTALLING A 1'-0" WIDE BY 14'-7"LONG AND 12"THICK CONCRETE WALK FOR THE RAILING LEADING UP TO THE REAR ABUTMENT OF THE LINN STREET BRIDGE. THE THICKENED WALK SHALL BE INSTALLED AT THE LOCATIONS NOTED BELOW:

STA. 105+28.62 TO STA. 105+43.28, 43.50' RT
STA. 105+44.79 TO STA. 105+59.37, 43.50' LT

ALL LABOR, EQUIPMENT, MATERIALS, AND INCIDENTALS REQUIRED TO PERFORM THIS WORK SHALL BE INCLUDE IN THE UNIT PRICE BID FOR ITEM 608, WALKWAY, MISC.: 12"CONCRETE WALK.

REMOVAL OF EXISTING PAVEMENT MARKINGS

THE CONTRACTOR SHALL REMOVE ALL EXISTING PAVEMENT MARKINGS ON REMAINING PAVEMENT THAT CONFLICT WITH THE PROPOSED MARKINGS SHOWN ON THE SIGNING AND PAVEMENT MARKING PLANS.

THE FOLLOWING ESTIMATED QUANTITIES HAVE BEEN INCLUDED IN THE GENERAL SUMMARY FOR THE WORK NOTED ABOVE:

ITEM 644, PAVEMENT MARKING REMOVED	300 FT
ITEM 644, PAVEMENT MARKING REMOVED	5 EACH
ITEM 644, PAVEMENT MARKING REMOVED	0.45 MILES

NOISE WALL INSTALLATION

THE CONTRACTOR SHALL SCHEDULE THE INSTALLATION OF THE PROPOSED NOISE WALL ALONG WINCHELL AVE (ADJACENT TO THE QUEENSGATE BALLFIELD) TO OCCUR NEAR THE END OF PROJECT, ADHERING TO THE COMPLETION DATES SHOWN ON THE INCENTIVE/DISINCENTIVE CONTRACT TABLE SHOWN ON SHEET P.19.

ITEM 202 - REMOVAL, MISC.: RETAINING WALL

THE CONTRACTOR SHALL REMOVE THE EXISTING RETAINING WALL, INCLUDING THE FOOTING. THE EXISTING PILING SHALL BE CUT DOWN TO 2 FOOT BELOW THE PROPOSED SUBGRADE. DISPOSE OF ALL MATERIAL PER 105.17.

ALL LABOR, EQUIPMENT, MATERIALS, AND INCIDENTALS REQUIRED TO PERFORM THIS WORK SHALL BE INCLUDE IN THE UNIT PRICE BID FOR ITEM 202 - REMOVAL MISC.: RETAINING WALL.

GENERAL NOTES

DESIGN AGENCY
AMERICAN STRUCTUREPOINT INC.

DESIGNER LZS
REVIEWER KAM 03/03/25
PROJECT ID 122048
SHEET P.12 TOTAL P.421

HAM-IR 75-1.05

MODEL: Sheet PAPERSIZE: 34x22 (in.) DATE: 8/28/2025 TIME: 10:10:56 AM PLTDRV: OHDOT_PDF.pltcfg PENTBL: OHDOT_Pen.tbl USER: WORKSPACE: OHDOTCEv02 WORKSET: I22048 PRODUCT: OpenRoadsDesigner 10.12.02.4
pw:\\ohiodot-pw.bentley.com:ohiodot-pw-02\Documents\01 Active Projects\District 08\Hamilton\122048\403-Engineering_StructurePoint\Roadway\Sheets\122048_GN302.dgn
OHDOTCEv02.dgn

FULL DEPTH PAVEMENT WEDGE TO FREEMAN AVE

A FULL DEPTH PAVEMENT WEDGE SHALL BE CONSTRUCTED TO PROVIDE A TEMPORARY CONNECTION BETWEEN FREEMAN AVE AND RAMP V/WINCHELL, UNTIL THE RECONSTRUCTION OF FREEMAN AVE AS PART OF THE HAM-75-1.05 PHASE 3 PROJECT (PID 113361). THIS SHALL OCCUR BETWEEN STA 66+92.54 AND 69+41.24 (℄ CONST CLP_RAMP V), AS NOTED IN THE PLAN AND PROFILE SHEETS. THIS FULL DEPTH WEDGE SHALL MATCH THE PAVEMENT BUILDUP OF RAMP V/WINCHELL AVE, ESTIMATED QUANTITIES FOR THE PAVEMENT HAVE BEEN PROVIDED IN THE PAVEMENT CALCULATIONS. THIS FULL DEPTH WEDGE SHALL BE CONSTRUCTED TO PROVIDE A MINIMUM 10.0-FT WIDE TRAVEL LANE. TAPER THE FULL DEPTH WEDGE PER ODOT STANDARD CONSTRUCTION DRAWING BP-3.1.

IN ADDITION TO THE PAVEMENT QUANTITIES THE FOLLOWING ESTIMATED QUANTITIES HAVE BEEN INCLUDED IN THE GENERAL SUMMARY TO BE USED IF NECESSARY FOR THE WORK NOTED ABOVE:

ITEM 202 - CONCRETE MEDIAN REMOVED	45 SY
ITEM 202 - CURB REMOVED	249 FT
ITEM 202 - GUARDRAIL REMOVED	139 FT
ITEM 606 - GUARDRAIL, TYPE MGS	100 FT
ITEM 606 - ANCHOR ASSEMBLY, MGS TYPE E (MASH 2016)	1 EACH
ITEM 606 - IMPACT ATTENUATOR, TYPE 2 (UNIDIRECTIONAL)	1 EACH
ITEM 609 - CURB MISC.: TYPE S-1 CURB (CINCINNATI)	249 FT
ITEM 622 - PORTABLE BARRIER, ANCHORED	640 FT

PROVIDE ANY MATERIALS USED OUTSIDE THE LIMITS STATED ABOVE AT NO ADDITIONAL COST.

ITEM SPECIAL - PIPE CLEANOUT

THIS WORK CONSISTS OF REMOVING SEDIMENT AND DEBRIS FROM THE EXISTING DRAINAGE CONDUITS SPECIFIED IN THE PLANS. DISPOSE OF ALL MATERIAL PER 105.16 AND 105.17. CLEAN OUT TO THE APPROVAL OF THE ENGINEER.

CLEANOUT OF THE PIPE IS PAID FOR AT THE UNIT PRICE BID FOR ITEM SPECIAL, PIPE CLEANOUT. THIS PRICE INCLUDES THE COST FOR MATERIAL, EQUIPMENT, LABOR, AND ALL INCIDENTALS REQUIRED TO COMPLETE THE CLEANOUT.

THE FOLLOWING ESTIMATED QUANTITIES HAVE BEEN INCLUDED IN THE GENERAL SUMMARY FOR THE WORK NOTED ABOVE:

ITEM SPECIAL, PIPE CLEANOUT, 24" AND UNDER	1000 FT
ITEM SPECIAL, PIPE CLEANOUT, 27" TO 48"	215 FT
ITEM SPECIAL, PIPE CLEANOUT, OVER 48"	900 FT

ITEM 611 - CONDUIT, TYPE B/C, AS PER PLAN

USE 703.11 STRUCTURAL BACKFILL TYPE 1 OR 613 LOW STRENGTH MORTAR AS STRUCTURAL BACKFILL FOR ALL TYPE A AND B FLEXIBLE CONDUITS 12-INCH DIAMETER AND LARGER. DETAIL THE SELECTED CONDUIT MATERIAL AND STRUCTURAL BACKFILL IN THE 611 INSTALLATION PLAN PER 611.04 B.

ITEM 611 - CONDUIT, TYPE B/C, AS PER PLAN (CINCINNATI)

ALL TYPE A AND B CONDUITS 12-INCH DIAMETER AND LARGER SHALL BE REINFORCED CONCRETE PIPE WITH CONTROLLED LOW STRENGTH MATERIAL (CLSM) BACKFILL. THIS ITEM SHALL CONFORM TO THE CITY OF CINCINNATI STANDARDS AND SHALL BE IN ACCORDANCE WITH THE MOST RECENT VERSION OF THE CITY OF CINCINNATI SUPPLEMENT TO STATE OF OHIO DEPARTMENT OF TRANSPORTATION CONSTRUCTION AND MATERIAL SPECIFICATION SECTION 603.

ITEM 442 - ASPHALT CONCRETE, MISC.: FULL-DEPH 448 TYPE 1 HOT-MIX ASPHALT PER CINCINNATI ITEM 627 DRIVEWAYS

THIS ITEM SHALL CONFORM TO THE CITY OF CINCINNATI STANDARDS FOR 627 ASPHALT CONCRETE, TYPE 1 AND SHALL BE IN ACCORDANCE WITH THE MOST RECENT VERSION OF THE CITY OF CINCINNATI SUPPLEMENT TO STATE OF OHIO DEPARMENT OF TRANSPORTATION CONSTRUCTION AND MATERIAL SPECIFICATION SECTION 627.

ITEM 609 - CURB, MISC.: TYPE B-1 CURB (CINCINNATI)

THIS ITEM SHALL CONSIST OF A 7" WIDE CITY OF CINCINNATI TYPE B-1 BATTERED CONCRETE CURB, ADHERING TO THE CITY OF CINCINNATI DEPARTMENT OF PUBLIC WORKS DIVISION OF ENGINEERING STANDARD DRAWING ACCESSION NO. C101.

ITEM 609 - CURB, MISC.: TYPE P-1 CURB (CINCINNATI)

THIS ITEM SHALL CONSIST OF A 7" WIDE CITY OF CINCINNATI TYPE P-1 BATTERED CONCRETE CURB, ADHERING TO THE CITY OF CINCINNATI DEPARTMENT OF PUBLIC WORKS DIVISION OF ENGINEERING STANDARD DRAWING ACCESSION NO. C102.

ITEM 609 - CURB, MISC.: TYPE S-1 CURB (CINCINNATI)

THIS ITEM SHALL CONSIST OF A 7" WIDE CITY OF CINCINNATI TYPE S-1 BATTERED CONCRETE CURB, ADHERING TO THE CITY OF CINCINNATI DEPARTMENT OF PUBLIC WORKS DIVISION OF ENGINEERING STANDARD DRAWING ACCESSION NO. C103.

ITEM 611 - CATCH BASIN, MISC.: COMBINATION INLET (CI)

THIS ITEM SHALL CONSIST OF A CITY OF CINCINNATI COMBINATION INLET (CI) ADHERING TO THE CITY OF CINCINNATI'S STORMWATER MANAGEMENT UTILITY (SMU) STANDARD DRAWING ACCESSION NO. 49016.

ITEM 611 - CATCH BASIN, MISC.: DOUBLE GUTTER INLET MH (DGIMH)

THIS ITEM SHALL CONSIST OF A CITY OF CINCINNATI DOUBLE GUTTER INLET MANHOLE (DGIMH) ADHERING TO THE CITY OF CINCINNATI'S STORMWATER MANAGEMENT UTILITY (SMU) STANDARD DRAWING ACCESSION NO. 49010.

ITEM 611 - MANHOLE, MISC.: STANDARD MANHOLE, TYPE B

THIS ITEM SHALL CONSIST OF A CITY OF CINCINNATI STANDARD MANHOLE TYPE B ADHERING TO THE CITY OF CINCINNATI'S STORMWATER MANAGEMENT UTILITY (SMU) STANDARD DRAWING ACCESSION NO. 49038.

ITEM 611 - INLET, MISC.: DITCH INLET

THIS ITEM SHALL CONSIST OF A CITY OF CINCINNATI COMBINATION INLET (CI) ADHERING TO THE CITY OF CINCINNATI'S STORMWATER MANAGEMENT UTILITY (SMU) STANDARD DRAWING ACCESSION NO. 49023.

ITEM 611 - 6", SLOTTED DRAIN, TYPE 1

THIS ITEM CONSISTS OF 6 INCH DIAMETER SLOTTED DRAIN ALUMINUM COATED STEEL CONDUIT 707.01 WITH 6 INCH TRAPEZOIDAL GALVANIZED SOLID BAR GRATE AS APPROVED BY THE ENGINEER. ALL COSTS FOR LABOR AND MATERIALS, INCLUDING TYPE 2 BEDDING, AND BACKFILLING AS DETAILED ON STANDARD CONSTRUCTION DRAWING DM-1.3 IS INCLUDED IN THE PRICE BID PER FT FOR ITEM 611, 6" SLOTTED DRAIN,TYPE 1 .

ITEM 108 - CPM PROGRESS SCHEDULE, AS PER PLAN

IN ADDITION TO THE REQUIREMENTS OF PROPOSAL NOTE 107, THE FOLLOWING ITEMS SHALL APPLY:

- THE CONTRACTOR SHALL INCLUDE THE UTILITY OWNERS RELOCATION TIME FRAMES WITHIN THE SCHEDULE.

- COORDINATE ALL PROJECT WORK AND UTILITY WORK WITH THE AFFECTED UTILITY OWNERS.

ITEM 619 - FIELD OFFICE, AS PER PLAN

THE CONTRACTOR SHALL ENTER INTO A LEASE AGREEMENT FOR A FIELD OFFICE AT LONGWORTH HALL LOCATED AT 700 W PETE ROSE WAY, CINCINNATI, OHIO 45203 FOR DEPARTMENT PERSONNEL. THE DEPARTMENT SHALL APPROVE OF THE SPACE PRIOR TO THE EXECUTION OF THE LEASE. THE LEASE SHALL BE EXECUTED WITHIN THIRTY (30) CALENDAR DAYS OF THE DATE THE CONTRACT IS SIGNED AND THE SPACE AVAILABLE FOR DEPARTMENT USE WITHIN FORTY-FIVE (45) CALENDAR DAYS OF THE DATE THE CONTRACT IS SIGNED. FAILURE TO MEET THE AFOREMENTIONED TIME FRAMES SHALL RESULT IN A DISINCENTIVE IN THE AMOUNT OF $1000 PER CALENDAR DAY FOR EACH CALENDAR DAY THE REQUIREMENTS ARE NOT MET. IN ADDITION, THE CONTRACTOR SHALL PROVIDE THE FOLLOWING:

- MAINTAIN ALL UTILITY SERVICES (E.G., ELECTRIC, SECURITY, TELEPHONE, WATER) FOR THE DURATION OF THE PROJECT.

- INTERNET SERVICE CONNECTION - PROVIDE A FIBER OR CABLE BROADBAND INTERNET CONNECTION CAPABLE OF MINIMUM DOWNLOAD SPEEDS AS FOLLOWS: 500 MBPS DOWNLOAD 50 MBPS UPLOAD - NETWORK LATENCY LESS THAN 50 MILLISECONDS.

- ONE MULTI-FUNCTION COPIER THAT IS SETUP FOR SCANNING, PRINTING AND COPYING. PLEASE SEE C&MS TABLE 619.02-1 FOR DETAILS.

-TEN (10) EACH DELUXE HIGH BACK SWIVEL OFFICE CHAIRS WITH ARMS.

- WATER SERVICE CONSISTING OF:
  - SIXTY (60) GALLONS (I.E. 12 FIVE GALLON CONTAINERS) OF PURIFIED WATER PER MONTH.
  - WATER DISPENSER CAPABLE OF COOLING AND HEATING THE FIVE GALLON WATER CONTAINERS.

- THESE ITEMS SHALL BE PROVIDED WITHIN FORTY-FIVE (45) CALENDAR DAYS OF THE DATE THE CONTRACT IS SIGNED. FAILURE TO PROVIDE THE ITEMS WITHIN THE STATED TIME SHALL RESULT IN A DISINCENTIVE IN THE AMOUNT OF $1000 PER CALENDAR DAY FOR EACH CALENDAR DAY THE ITEMS ARE NOT PROVIDED.

- ALL ITEMS MUST BE APPROVED BY THE DEPARTMENT PRIOR TO EXECUTION AND/OR ORDERING.

COMPENSATION: THE DEPARTMENT WILL FURNISH ITEM 619 EACH, FIELD OFFICE WITH AN AMOUNT IN THE PROPOSAL TO PAY FOR THE FIELD OFFICE. THE FIXED AMOUNT SHOWN IN THE PROPOSAL IS INCLUDED (AS ANY OTHER BID ITEMS) IN THE TOTAL BID AMOUNT. THIS FIXED AMOUNT IS THE DEPARTMENT'S ESTIMATE OF THE TOTAL COST OF FIELD OFFICE FOR THE PROJECT. IF THE FIELD OFFICE EXCEEDS THIS AMOUNT, THE FIELD OFFICE WILL STILL BE PAID AT INVOICE SUPPORTED ACTUAL COSTS. THE PAYMENT DUE WILL BE DEDUCTED FROM ITEM 619 EACH, FIELD OFFICE. C&MS TABLE 104.02-2 DOES NOT APPLY TO REDUCTIONS IN THIS CONTRACT ITEM.

BASIS OF PAYMENT: THE CONTRACTOR WILL BE COMPENSATED FOR THE INVOICE SUPPORTED ACTUAL COSTS. THE DEPARTMENT WILL NOT PAY A PERCENT MARKUP ON THESE COSTS.

GENERAL NOTES

DESIGN AGENCY
AMERICAN STRUCTUREPOINT INC.

DESIGNER LZS

REVIEWER KAM 03/03/25

PROJECT ID 122048

SHEET P.13 TOTAL P.421

HAM-IR 75-1.05

MODEL: Sheet PAPERSIZE: 34x22 (in.) DATE: 8/28/2025 TIME: 10:11:09 AM PLTDRV: OHDOT_PDF.pltcfg PENTBL: OHDOT_Pen.tbl USER: WORKSPACE: OHDOTCEv02 WORKSET: I22048 PRODUCT: OpenRoadsDesigner 10.12.02.4
pw:\\ohiodot-pw.bentley.com:ohiodot-pw-02\Documents\01 Active Projects\District 08\Hamilton\122048\403-Engineering_StructurePoint\Roadway\Sheets\122048_GN303.dgn

REQUIREMENTS OF PACP/LACP CCTV AND MANHOLE SEWER INSPECTIONS

MSD CONFORMS TO THE NATIONAL ASSOCIATION OF SEWER SERVICE COMPANIES' (NASSCO) PIPELINE ASSESSMENT CERTIFICATION PROGRAM (PACP), LATERAL ASSESSMENT CERTIFICATION PROGRAM (LACP), AND MANHOLE INSPECTION UTILIZING MSD INSPECTION FORMS. THESE INSPECTIONS WILL BE MAINTAINED WITHIN MSD'S LIBRARY OF SEWER INSPECTIONS AND IT IS IMPERATIVE THAT THEY MEET ALL APPROPRIATE MSD REQUIREMENTS. ALL PACP AND LACP CCTV WORK TO BE PERFORMED VIA THIS CONTRACT SHALL THEREFORE CONFORM TO ALL CURRENT NASSCO STANDARDS EXCEPT WHERE SPECIFICALLY INSTRUCTED OTHERWISE BY THE MSDGC PROGRAM MANAGER (PM). THESE STANDARDS INCLUDE BUT ARE NOT LIMITED TO: SPEED OF CAMERA TRAVEL, CENTERING OF CAMERA IN PIPE, CODING OF DEFECTS/STRUCTURAL FEATURES/OBSERVATIONS, PANNING OF DEFECTS/STRUCTURAL FEATURES, CAMERA LIGHTING, HEADER INFORMATION, FLOW CONTROL, AND REVERSAL INSPECTIONS. MSD GIS STANDARDS AND DESIGNATIONS SHALL APPLY FOR HEADER INFORMATION INCLUDING, BUT NOT LIMITED TO: MANHOLE NUMBERS, ASSET ID NUMBERS, CITYWORKS®WORK ORDER NUMBERS, BUILDING SEWER NAMES AND IDENTIFICATION, AND PREVIOUSLY UNDOCUMENTED MANHOLES.

ALL PACP AND LACP CCTV WORK TO BE PERFORMED VIA THIS WORK ORDER SHALL BE CARRIED OUT UTILIZING A COLOR PAN AND TILT ROTATING HEAD CAMERA SPECIFICALLY DESIGNED AND CONSTRUCTED FOR SEWER INSPECTION. ALL CCTV WORK SHALL BE RECORDED ENTIRELY IN DIGITAL MP4 FORMAT ENCODED WITH A FILE COMPRESSION OF HIGH EFFICIENCY VIDEO CODING (HEVC OR H.265) (OTHER FORMATS NEED MSDGC PM APPROVAL) WITH AN APPROPRIATE PACP/LACP DATABASE FILE (NASSCO PACP/LACP V7.0 CERTIFIED ACCESS DATABASE HAVING COMPATIBILITY WITH PIPETECH® PIPELINE INSPECTION SOFTWARE), AND ALL VIDEO MUST BE CONTINUOUSLY METERED.

THE PERSON CODING THE PIPELINE INSPECTION MUST BE NASSCO PACP AND LACP CERTIFIED WITH A MINIMUM OF THREE YEARS OF FULL-TIME EXPERIENCE CODING DEFECTS USING THE NASSCO STANDARD. PACP AND LACP CERTIFICATION NUMBERS MUST BE PROVIDED TO MSDGC AND PROOF OF EXPERIENCE MUST BE DEMONSTRATED BY DOCUMENTATION SUCH AS A RESUME WITH REFERENCES.

<u>ROBOTIC PACP/LACP & MANHOLE INSPECTION</u>

THE CONTRACTOR SHALL BE RESPONSIBLE FOR:

1. *CONDUCTING A FINAL MANHOLE-TO-MANHOLE (MH-MH), TELEVISING OF THE MAINLINE SEWER SECTION TO EVALUATE THE CONDITION OF THE SEWER AFTER ALL APPROPRIATE CLEANING, TRIMMING, GRINDING, AND FLUSHING HAS BEEN PERFORMED. IN THE EVENT AN INSPECTION CANNOT BE COMPLETED FROM ONE SET-UP DUE TO A STRUCTURAL OR MAINTENANCE DEFECT, THE INSPECTOR SHALL PERFORM A REVERSE INSPECTION FROM AN ADDITIONAL SET-UP THE SAME DAY. THE INSPECTOR SHALL SUBMIT TWO INSPECTION REPORTS AS THE FINAL INSPECTION. THIS FINAL TELEVISING SHALL BE IN PACP AND SHALL FOLLOW ALL PACP V 7.0 STANDARDS.*

2. *EMPLOYING VARIOUS FLOW CONTROL METHODS AS APPROPRIATE TO ENSURE VISIBILITY OF THE ENTIRE CIRCUMFERENCE OF THE SEWER.*

3. *CONDUCTING A FINAL TELEVISING OF EACH INDIVIDUAL BUILDING SEWER FROM THE MAIN SEWER LINE TO THE PUBLIC RIGHT OF WAY DESIGNATION OR SEWER EASEMENT LIMIT. UNLESS OTHERWISE DIRECTED BY MSD PERSONNEL, THE EASEMENT LIMIT SHOULD BE ASSUMED TO BE A MINIMUM OF 10'. THIS FINAL TELEVISING SHALL BE IN LACP AND SHALL FOLLOW ALL LACP V7.0 STANDARDS. IF A FULL MAINLINE TO RIGHT OF WAY OR EASEMENT INSPECTION IS UNABLE TO BE COMPLETED DUE TO AN OBSTRUCTION OF ANY SORT, SAID OBSTRUCTION MUST BE LOCATED AND REPORTED TO THE MSD PM IMMEDIATELY.*

REQUIREMENTS OF PACP/LACP CCTV AND MANHOLE SEWER INSPECTIONS (CONTINUED)

4. *ROBOTIC LACP INSPECTION SHALL BE DONE FROM THE MAIN SEWER OR AVAILABLE CLEANOUT OR ACCESS POINT. THE CONTRACTOR SHALL USE ROBOTIC TECHNOLOGY TO PUSH OR "LAUNCH"THE LATERAL CAMERA INTO THE BUILDING SEWER FROM THE MAINLINE. THE VAST MAJORITY OF BUILDING SEWERS ARE 6 INCHES IN DIAMETER AND ARE MADE OF VARIOUS MATERIALS. IF THE CONTRACTOR IS UNABLE TO PERFORM AN INSPECTION OF THE LATERAL DUE TO DEBRIS, ROOTS OR OTHER OBSTACLES IN THE BUILDING SEWER LATERAL, THEY SHALL CONTACT THE MSD PM FOR DIRECTION.*

<u>WALK THROUGH PACP/LACP INSPECTION (MANNED ENTRY)</u>

THE CONTRACTOR SHALL BE RESPONSIBLE FOR:

1. *THE OPERATOR ENTERING INTO LARGE DIAMETER SEWERS IN ORDER TO CONDUCT A FINAL MANHOLE-TO-MANHOLE (MH-MH) TELEVISING OF THE SEWER TO EVALUATE THE CONDITION OF THE SEWER AFTER ALL APPROPRIATE CLEANING, TRIMMING GRINDING, AND FLUSHING HAS BEEN PERFORMED. THE FINAL TELEVISING SHALL BE IN PACP AND SHALL FOLLOW ALL PAC V7.0 STANDARDS. THE CONTRACTOR MAY UTILIZE ROBOTIC EQUIPMENT TO PERFORM A PACP INSPECTION IN PIPE SIZES GREATER THAN 60 INCHES AT THE DIRECTION/APPROVAL OF THE MSD PM.*

2. *ALL MAN ENTRY INTO THE SEWER WILL FOLLOW THE CONTRACTOR'S HEALTH AND SAFETY PLAN WITH REGARDS TO CONFINED SPACE ENTRY.*

3. *CONDUCTING A FINAL TELEVISING OF EACH INDIVIDUAL BUILDING SEWER FROM THE MAIN SEWER LINE TO THE PUBLIC RIGHT OF WAY DESIGNATION OR SEWER EASEMENT LIMIT. THIS FINAL TELEVISING SHALL BE IN LACP AND SHALL FOLLOW ALL LACP V7.0 STANDARDS. IF A FULL MAINLINE TO RIGHT OF WAY OR SEWER EASEMENT INSPECTION IS UNABLE TO BE COMPLETED DUE TO AN OBSTRUCTION OF ANY SORT, SAID OBSTRUCTION MUST BE REPORTED TO THE MSD PM IMMEDIATELY.*

THE CONTRACTOR SHALL SUBMIT WORK IN THE FORMAT REQUIRED BY MSDGC AND SHALL FOLLOW GUIDELINES FROM THE MSDGC PROJECT P M. IN ORDER TO CONTINUE IMPROVING THE UPLOADING OF DATA AND SUBMITTALS, THE MSDGC PM MAY UPDATE THE REQUIREMENTS AT ANY TIME, BUT WILL GIVE THE CONTRACTOR SUFFICIENT ACCESS TO MSD'S PROGRAMS AS NEEDED.

<u>SUBMITTAL OF WORK TO MSDGC</u>

WORK COMPLETED AND SUBMITTED TO MSDGC SHALL FOLLOW THE SPECIFICATIONS DETAILED IN THE SUBSECTIONS BELOW.

<u>REQUIREMENTS OF ALL PACP AND LACP CCTV SUBMITTALS AND MANHOLE INSPECTION SUBMITTALS</u>

ALL SUBMITTALS OF PACP AND LACP INSPECTIONS SHALL CONFORM TO THE FOLLOWING SPECIFICATIONS:

1. *EACH SUBMITTAL THE PACP/LACP DATABASE FILE AND ITS CORRESPONDING VIDEO FILES SHALL CONTAIN WORK FROM ONLY 1 (ONE) INSPECTOR AND ONLY 1 (ONE) CCTV WORK CATEGORY FROM THE LIST BELOW:*
   a. *SANITARY AND/OR COMBINED MAINLINE SEWER INSPECTIONS (PACP)*
   b. *SANITARY AND/OR COMBINED BUILDING SEWER INSPECTIONS (LACP)*
   c. *STORM MAINLINE SEWER INSPECTIONS (PACP)*
   d. *STORM BUILDING SEWER INSPECTIONS (LACP)*

REQUIREMENTS OF PACP/LACP CCTV AND MANHOLE SEWER INSPECTIONS (CONTINUED)

2. *EACH SUBMITTAL SHALL BE ASSIGNED A UNIQUE TRACKING IDENTIFIER*
   a. *IN THE EVENT THAT A SUBMITTAL IS REJECTED AS UNACCEPTABLE, THE MSD PM SHALL DIRECT THE CONTRACTOR WHETHER TO REUSE THE ORIGINAL OR TO ASSIGN A NEW TRACKING IDENTIFIER.*

3. *EACH SUBMITTAL SHALL INCLUDE INSPECTIONS FROM ONLY ONE CALENDAR MONTH.*

4. *EACH PACP VIDEO FILE MUST BE IN STANDARD *.MP4 FORMAT AND NAMED AS DESCRIBED BELOW:*

   a. *[MONTH]_[DAY]_[YEAR]-[HOUR]_[MINUTE]_[AM/PM]-[INSPECTOR NAME]-[WORK ORDER NUMBER].MP4*
   b. *E.G., "1_03_2012-11_23_AM-M LONGMIRE-411032.MP4"*

5. *EACH LACP VIDEO FILE MUST BE IN STANDARD *.MP4 FORMAT AND NAMED AS DESCRIBED BELOW:*

   a. *[MONTH]_[DAY]_[YEAR]-[HOUR]_[MINUTE]_[AM/PM]-[INSPECTOR NAME]-[ADDRESS]_[STREET]-[WORK ORDER NUMBER].MP4*
   b. *E.G., "1_02_2012-07_51_PM-E SCHNEIDER-842 SUNDERLAND DR-405623.MP4"*

6. *EACH MANHOLE INSPECTION SHALL FOLLOW THE FORMAT PROVIDED BY MSD UTILIZING THEIR MANHOLE INSPECTION FORM.*

7. *ALL PACP, LACP AND MANHOLE INSPECTIONS MUST BE SUBMITTED WITHIN FOURTEEN (14) CALENDAR DAYS OF THE DATE OF WORK.*

8. *IN THE CASE OF REJECTION OF A WHOLE OR ANY PART OF A SUBMITTAL, CONTRACTOR SHALL HAVE FOURTEEN (14) CALENDAR DAYS FROM THE DATE OF NOTIFICATION OF SAID REJECTION TO ADDRESS, CORRECT, AND/OR RE-PERFORM AND THEN RE-SUBMIT SAID WORK TO MSDGC.*

GENERAL NOTES

HAM-IR 75-1.05

MODEL: Sheet PAPERSIZE: 34x22 (in.) DATE: 8/20/2025 TIME: 11:19:56 AM PLTDRV: OHDOT_PDF.pltcfg PENTBL: OHDOT_Pen.tbl USER: WORKSPACE: OHDOTCEv02 WORKSET: I220048 PRODUCT: OpenRoadsDesigner 10.12.02.4
pw:\\ohiodot-pw.bentley.com:ohiodot-pw-02\Documents\01 Active Projects\District 08\Hamilton\122048\403-Engineering_StructurePoint\Roadway\Sheets\122048_GN305.dgn

DESIGN AGENCY
AMERICAN STRUCTUREPOINT INC.

DESIGNER LZS

REVIEWER KAM 03/03/25

PROJECT ID 122048

SHEET P.13A | TOTAL P.421

PROJECT ENVIRONMENTAL COMMITMENTS

A SPILL PREVENTION CONTROL AND COUNTERMEASURES PLAN THAT IS ACCEPTABLE TO KYTC, ODOT, AND THE KENTUCKY DEPARTMENT FOR ENVIRONMENTAL PROTECTION WILL BE PREPARED FOR THE PROJECT. THIS PLAN WILL DEFINE, AT MINIMUM, PROTOCOLS FOR THE MANAGING, HANDLING, AND DISPOSING OF OIL SPILLS, INCLUDING CONTACT WITH EMERGENCY RESPONSE PERSONNEL, SAFETY DATA SHEETS, AND COPIES OF AGREEMENTS WITH AGENCIES THAT WOULD BE PART OF A SPILL-RESPONSE EFFORT. THE PLAN WILL ALSO OUTLINE COMMUNICATION PROTOCOLS TO ENSURE PROPER AND TIMELY NOTIFICATION OF NEARBY PUBLIC DRINKING WATER SUPPLIES IN THE EVENT OF A SPILL, INCLUDING THE SOURCE WATER PROTECTION ZONES FOR THE LOUISVILLE WATER COMPANY (KY0560258) AND THE NORTHERN KENTUCKY WATER DISTRICT (KY0590220).

IF PREVIOUSLY UNIDENTIFIED HISTORIC PROPERTIES, OR UNANTICIPATED EFFECTS ON KNOWN HISTORIC PROPERTIES, ARE DISCOVERED AFTER COMPLETION OF THE SECTION 106 PROCESS, ODOT AND KYTC SHALL FOLLOW THE UNANTICIPATED DISCOVERY PLANS FOR THEIR RESPECTIVE STATES, AS DESCRIBED IN APPENDIX A OF THE PROGRAMMATIC AGREEMENT AMONG FHWA, ODOT, KYTC, THE OHIO SHPO, THE KENTUCKY SHPO, AND THE CITY OF COVINGTON IMPLEMENTING SECTION 106 OF THE NATIONAL HISTORIC PRESERVATION ACT FOR THE BRENT SPENCE BRIDGE CORRIDOR PROJECT.

THE OHIO STATE HISTORIC PRESERVATION OFFICER (SHPO) AND OHIO SECTION 106 CONSULTING PARTIES WILL BE GIVEN AN OPPORTUNITY TO REVIEW AND COMMENT ON FINAL DESIGN PLANS.

IN COORDINATION WITH THE CITY OF CINCINNATI AND THE OHIO AESTHETICS SUBCOMMITTEE, ODOT HAS ESTABLISHED AN AESTHETIC DESIGN CHECKLIST FOR PHASES I AND II OF THE PROJECT. POTENTIAL CHANGES TO AESTHETIC FEATURES WILL BE COORDINATED AND CONFIRMED WITH THE CITY OF CINCINNATI AND THE OHIO AESTHETICS SUBCOMMITTEE AT THE COMPLETION OF EACH DESIGN STAGE REVIEW IN ACCORDANCE WITH ODOT'S AESTHETIC DESIGN GUIDELINES.

DURING CONSTRUCTION, VEHICULAR, BICYCLE, AND AMERICANS WITH DISABILITIES ACT-COMPLIANT PEDESTRIAN ACCESS TO NEIGHBORHOODS AND COMMUNITY FACILITIES WILL BE MAINTAINED THROUGH PROVISION OF ALTERNATE ROUTES OF ENTRY. WHERE SIDEWALKS, WALKWAYS, OR SHOULDERS MUST BE TEMPORARILY CLOSED TO FACILITATE CONSTRUCTION, SAFE PEDESTRIAN PASSAGE WILL ALWAYS BE MAINTAINED ON ONE SIDE OF THE ROADWAY, UNLESS OTHER TEMPORARY PEDESTRIAN ACCOMMODATIONS ARE PROVIDED. CONSTRUCTION ZONE PEDESTRIAN ACCESS WILL BE MAINTAINED IN ACCORDANCE WITH THE ACCESSIBILITY GUIDELINES FOR PEDESTRIAN FACILITIES IN THE PUBLIC RIGHT-OF-WAY AS PUBLISHED IN FEDERAL REGISTER VOLUME 88 PAGE 53604 (88 FR 53604). A MAINTENANCE OF TRAFFIC (MOT) PLAN WILL BE DEVELOPED AND IMPLEMENTED TO MAINTAIN TRAFFIC OPERATION THROUGH THE CORRIDOR AND MINIMIZE DISRUPTION TO THE SURROUNDING COMMUNITIES. THE MOT PLAN WILL BE COORDINATED WITH THE REGIONAL INCIDENT MANAGEMENT TASK FORCE.

DURING DESIGN DEVELOPMENT, IN ADDITION TO EVALUATING PARAMETERS SUCH AS COST, SCHEDULE, ACCESS, TRAFFIC IMPACTS, SAFETY, RISK, ETC., KYTC AND ODOT WILL ALSO CONSIDER CONSTRUCTION NOISE ABATEMENT IN AREAS WHERE NOISE SENSITIVE RECEPTORS ARE PRESENT, INCLUDING:

- FOUNDATION TYPE SELECTION: DIFFERENT FOUNDATION TYPES HAVE VARYING EFFECTS ON THE INTENSITY AND DURATION OF CONSTRUCTION NOISE (E.G., PILING VERSUS CAST-IN-PLACE CONCRETE SHAFTS).

- INSTALLATION METHODOLOGY: THE SAME FEATURE OF WORK CAN BE ACHIEVED IN A VARIETY OF WAYS AND PLANNED FOR IN THE DESIGN PHASE. THIS COULD INVOLVE USING MECHANICAL OR CHEMICAL SPLITTING AS MEANS OF DEMOLITION VERSUS THE USE OF EXPLOSIVES OR DRILLING AND SETTING A RETAINING WALL VERSUS DRIVING SOLDIER PILES.

- STORAGE AND STAGING AREAS: IDENTIFICATION OR ACQUISITION OF LOCATIONS/PROPERTIES THAT PROVIDE SEPARATION FROM SENSITIVE RECEPTORS. THIS COULD BE BY PROXIMITY OR BY THE USE OF EXISTING BARRIERS.

PROJECT ENVIRONMENTAL COMMITMENTS (CONTINUED)

- PHASING OF WORK: CONSIDERATION OF HOW WORK IS PHASED CAN HAVE A PROMINENT IMPACT ON THE DURATION FOR WHICH A NOISE SENSITIVE RECEPTOR IS EXPOSED TO CONSTRUCTION NOISE FROM A PARTICULAR FEATURE OF WORK. THIS CONCEPT IS ESPECIALLY EVIDENT WHEN DEALING WITH A RECEPTOR LIKE A SCHOOL THAT IS OUT OF SESSION DURING THE SUMMER. PHASING THE PROJECT TO ALLOW/FACILITATE ALL HIGH DECIBEL WORK TO BE COMPLETED AT ONCE AND DURING THIS WINDOW NOT ONLY REDUCES, BUT ELIMINATES, THIS IMPACT.

- PERMANENT NOISE BARRIERS: CONSIDERATION WILL BE GIVEN TO THE FEASIBILITY OF CONSTRUCTING PERMANENT NOISE BARRIERS THAT ARE NEEDED FOR NOISE ABATEMENT OF THE PROJECT'S FINAL CONFIGURATION EARLIER IN THE PROJECT TO HELP MITIGATE TEMPORARY CONSTRUCTION NOISE.

- INCENTIVES: THERE ARE PROVISIONS TO ESTABLISH SCHEDULE-BASED INCENTIVES. THESE INCENTIVES COULD BE USED TO HELP MINIMIZE THE DURATION OF OVERALL CONSTRUCTION NOISE.

IMPACTS OF THE MOT PLAN ON PUBLIC TRANSPORTATION WILL BE EVALUATED. THE DESIGN-BUILD TEAM WILL DEVELOP MEASURES TO MAINTAIN EXISTING SERVICES TO PROVIDE SAFE, REASONABLE, AND EFFICIENT ACCESS TO GOODS AND SERVICES UNLESS OTHER TEMPORARY ACCOMMODATIONS ARE PROVIDED.

TEMPORARY CONSTRUCTION DETOURS AND HAUL ROUTES WILL BE EVALUATED IN A WAY TO LIMIT THE IMPACT CREATED BY REDIRECTED TRAFFIC THROUGH COMMUNITY SENSITIVE AREAS AND NEAR NOISE SENSITIVE RECEPTORS TO THE EXTENT PRACTICABLE. IN ADDITION TO OFFICIAL ROUTES, ALTERNATE ROUTES THAT MAY ALSO BE USED WILL ALSO BE EVALUATED TO MINIMIZE HEAVY TRUCK TRAFFIC ON RESIDENTIAL STREETS.

THE AVAILABILITY OF NIGHT-TIME AND WEEKEND WORK WILL BE EVALUATED IN CONJUNCTION WITH PERMITTED LANE CLOSURE MAPS DURING THE DEVELOPMENT OF THE MOT PLAN.

THE MOT PLAN AND THE PROJECT COMMUNICATIONS PLAN WILL INCLUDE PROVISIONS FOR COMMUNICATING WITH TRUCKING COMPANIES AND MAPPING SERVICES TO NOTIFY THEM OF DETOURS AND DELAY INFORMATION RELATED TO THE PROJECT.

THE MOT PLAN WILL EVALUATE AVAILABLE TRAVEL LANES ON THE MAINLINE INTERSTATE DURING CONSTRUCTION TO REDUCE THE POTENTIAL THAT THE PROJECT WILL INDUCE TRAFFIC DIVERSION SIMILAR TO THAT EXPERIENCED DURING RECENT CLOSURES AND RESTRICTIONS ON THE EXISTING BRENT SPENCE BRIDGE.

A PROJECT INCIDENT MANAGEMENT PLAN WILL BE DEVELOPED TO MINIMIZE DIVERSION RESULTING FROM INCIDENTS OCCURRING WITHIN THE PROJECT LIMITS DURING CONSTRUCTION TO THE EXTENT PRACTICABLE. THE CITY OF CINCINNATI AND THE NORTHERN KENTUCKY CITIES ALONG THE CORRIDOR, INCLUDING FORT MITCHELL, FORT WRIGHT, PARK HILLS, AND COVINGTON, WILL BE GIVEN THE OPPORTUNITY TO PARTICIPATE ACTIVELY IN THE DEVELOPMENT OF THE INCIDENT MANAGEMENT PLAN.

ODOT WILL PROVIDE THE CITY OF CINCINNATI AN OPPORTUNITY TO REVIEW AND COMMENT ON THE PROJECT MOT PLAN AND INCIDENT MANAGEMENT PLAN AS THEY ARE DEVELOPED. ODOT WILL WORK DIRECTLY WITH THE CITY OF CINCINNATI DEPARTMENT OF TRANSPORTATION AND ENGINEERING (DOTE) TO ENSURE THAT ALL RELEVANT AGENCIES WITHIN THE CITY HAVE AN OPPORTUNITY TO REVIEW AND PROVIDE INPUT INTO ALL ASPECTS OF MOT PLANNING, MOT AND INCIDENT MANAGEMENT PLAN DEVELOPMENT, AND CONSTRUCTION PERIOD OPERATIONS AFFECTING THE CITY.

THE CONSTRUCTION DOCUMENTS, IN CONCERT WITH THE MOT PLAN, WILL INCLUDE APPROPRIATE PROVISIONS FOR THE DESIGN-BUILD TEAM/CONTRACTOR TO INSTALL AND UTILIZE VARIABLE ELECTRONIC MESSAGE BOARDS AT KEY LOCATIONS WITHIN THE CITY OF COVINGTON (E.G., PIKE AND RUSSELL, EIGHTH AND RUSSELL, SEVENTEENTH AND SCOTT) AND THE CITY OF CINCINNATI, AS NEEDED, DURING CONSTRUCTION.

PROJECT ENVIRONMENTAL COMMITMENTS (CONTINUED)

ODOT WILL WORK TO ENSURE THAT THE CONSTRUCTION DOCUMENTS REQUIRE THE CONTRACTOR, WORKING THROUGH ODOT'S PROJECT MANAGER AND THE CINCINNATI DOTE, TO COORDINATE THE LOCATION AND PLACEMENT OF VARIABLE ELECTRONIC MESSAGE BOARDS. THE CONSTRUCTION DOCUMENTS ALSO MAY CONTAIN OTHER MEANS OF INFORMING AND NOTIFYING THE PUBLIC OF TRAFFIC CHANGES, AS APPROPRIATE.

DURING CONSTRUCTION, A PROJECT WEBSITE WILL PROVIDE REGULAR PROJECT UPDATES REGARDING MAINTENANCE OF TRAFFIC PLANS, CURRENT TRAFFIC PATTERNS, UPCOMING CHANGES, ETC. THE WEBSITE WILL PROVIDE AN EMAIL ADDRESS AND PHONE NUMBER FOR THE PUBLIC TO CONTACT THE CONTRACTOR'S DESIGNATED REPRESENTATIVE WITH QUESTIONS, CONCERNS, OR COMPLAINTS REGARDING ONGOING OR PLANNED CONSTRUCTION ACTIVITIES. INFORMATION ABOUT CONSTRUCTION SEQUENCING, PROJECT HIGHLIGHTS, AND CONSTRUCTION SCHEDULES WILL ALSO BE SHARED WITH THE PUBLIC THROUGH SOCIAL MEDIA, E-NEWSLETTERS, LOCAL MEDIA, PRESENTATIONS TO LOCAL GROUPS, AND VIRTUAL PROJECT UPDATES. ALL COMPLAINTS WILL BE INVESTIGATED BY PROJECT PERSONNEL. KYTC AND ODOT WILL DEVELOP REPORTING PROTOCOLS TO ENSURE THAT THE CONTRACTOR RESPONDS TO THE INQUIRIES IN A TIMELY MANNER AND KEEPS KYTC AND ODOT INFORMED OF COMMUNITY QUESTIONS AND CONCERNS.

THE PROJECT PLANS SHALL CONTAIN REQUIREMENTS TO ENSURE COMPLIANCE WITH ALL APPLICABLE STATE NOISE STANDARDS AND LOCAL NOISE ORDINANCES. THE CONTRACTOR, WORKING THROUGH THE KYTC AND ODOT PROJECT MANAGERS, SHALL BE REQUIRED TO COMMUNICATE AND COORDINATE WITH THE COVINGTON PROJECT DIRECTOR REGARDING NOISE ABATEMENT MEASURES WITHIN THE CITY OF COVINGTON AND THE CINCINNATI DOTE REGARDING NOISE ABATEMENT MEASURES WITHIN THE CITY OF CINCINNATI. SUCH MEASURES MAY INCLUDE LIMITING CONSTRUCTION ACTIVITIES AND CREWS AND CONSTRUCTION NOISE DURING SPECIFIC TIMES OF DAY, DAYS OF THE WEEK, NUMBER OF CONSECUTIVE HOURS OR DAYS, AND SPECIAL EVENTS AND LIMITING ACTIVITIES THAT CREATE HIGH LEVELS OF CONSTRUCTION NOISE, SUCH AS PILE DRIVING AND BLASTING, TO CERTAIN TIMES OF DAY TO THE EXTENT PRACTICABLE.

ODOT WILL WORK WITH THE CITY OF CINCINNATI TO CONDUCT BEFORE/AFTER SURVEYS OF OTHER ROADWAYS IMPACTED BY INCREASED TRAFFIC DURING CONSTRUCTION. ODOT WILL RESTORE THOSE ROADWAYS TO PRE-CONSTRUCTION CONDITIONS ONCE THE PROJECT IS COMPLETE.

CONTRACTORS SHALL COMPLY WITH ALL APPLICABLE U.S. ENVIRONMENTAL PROTECTION AGENCY (USEPA) DIESEL EMISSION REQUIREMENTS. CONTRACTORS WILL UTILIZE CONSTRUCTION EQUIPMENT THAT MEETS USEPA TIER 4 DIESEL ENGINE STANDARDS TO THE GREATEST EXTENT PRACTICABLE.

ALL DIESEL-POWERED CONSTRUCTION EQUIPMENT WILL USE ULTRA-LOW SULFUR DIESEL FUEL.

CONTRACTORS WILL SCHEDULE AND CONDUCT ACTIVITIES AND EMPLOY APPROPRIATE PROTECTION TECHNIQUES TO MINIMIZE IMPACTS TO AIR QUALITY AND PREVENT HAZARDOUS OR OBJECTIONABLE AIR QUALITY CONDITIONS, PARTICULARLY FOR DRILLING, CUTTING, GRINDING, ABRASIVE BLASTING, OR SIMILAR ACTIVITIES TO THE EXTENT PRACTICABLE.

THE BURNING OF ANY MATERIALS WILL NOT BE PERMITTED ON THE CONSTRUCTION SITE.

CONTRACTORS WILL DEVELOP AND IMPLEMENT A DUST CONTROL PLAN THAT INCLUDES PROACTIVE MEASURES TO PREVENT DISCHARGE OF DUST INTO THE ATMOSPHERE. THE PLAN WILL BE APPROVED BY KYTC AND ODOT AND WILL DEFINE ROLES AND RESPONSIBILITIES FOR IMPLEMENTATION AND MONITORING FOR COMPLIANCE. EXPECTATIONS AND TIMELINES ESTABLISHED IN THE DUST CONTROL PLAN WILL BE IN ACCORDANCE WITH KYTC'S STANDARD SPECIFICATIONS AND ODOT'S CONSTRUCTION AND MATERIAL SPECIFICATIONS ITEM 616, DUST CONTROL.

PROJECT ENVIRONMENTAL COMMITMENTS (CONTINUED)

THE FOLLOWING MEASURES WILL BE EMPLOYED TO PROTECT SENSITIVE RECEPTORS SUCH AS PARKS, HOSPITALS, SCHOOLS, DAY CARE FACILITIES, BUILDING FRESH AIR OR VENTILATION INTAKES, OLDER ADULT HOUSING, AND CONVALESCENT FACILITIES FROM IMPACTS OF DIESEL EXHAUST FUMES:

- DIESEL-POWERED ENGINES WILL BE LOCATED AWAY FROM BUILDING AIR CONDITIONERS AND WINDOWS TO THE GREATEST EXTENT PRACTICABLE.

- EXPOSURE TO DIESEL EXHAUST WITHIN 50 FEET OF SENSITIVE RECEPTORS WILL BE MINIMIZED IN TERMS OF CONCENTRATION AND TIME TO THE GREATEST EXTENT PRACTICABLE.

- IDLING TIME FOR DIESEL-POWERED EQUIPMENT WILL BE MINIMIZED TO THE GREATEST EXTENT PRACTICABLE.

- DIGITAL SIGNS SUCH AS ARROW PANELS AND VARIABLE ELECTRONIC MESSAGE BOARDS WILL USE SOLAR POWER TO THE GREATEST EXTENT PRACTICABLE.

- THE PROJECT STAFF WILL BE EDUCATED ON THE NOISE SENSITIVE RECEPTORS. THIS WILL INCLUDE NOT ONLY THEIR LOCATION, BUT ALSO THE TYPE (RESIDENT, SCHOOL, BUSINESS, ETC.), HOURS OF OPERATION, AND ANY PRIOR CONCERNS COMMUNICATED.

THE PROJECT STAFF WILL BE EDUCATED ON THE NOISE SENSITIVE RECEPTORS. THIS WILL INCLUDE NOT ONLY THEIR LOCATION, BUT ALSO THE TYPE (RESIDENT, SCHOOL, BUSINESS, ETC.), HOURS OF OPERATION, AND ANY PRIOR CONCERNS COMMUNICATED.

MOTORIZED CONSTRUCTION EQUIPMENT WILL BE EQUIPPED WITH AN APPROPRIATE, WELL-MAINTAINED MUFFLER AND WILL INCLUDE SILENCERS ON BOTH AIR INTAKES AND AIR EXHAUST WHEN REASONABLE. CONTRACTORS WILL HAVE AN ESTABLISHED MAINTENANCE PROGRAM FOR THEIR EQUIPMENT FLEET AND WILL ENSURE THAT NECESSARY MAINTENANCE/REPAIRS ARE PERFORMED BEFORE PUTTING EQUIPMENT INTO SERVICE. EQUIPMENT WILL ALSO BE PULLED OUT OF SERVICE TO ADDRESS DEFICIENCIES IDENTIFIED DURING OPERATION. WHEN NOISE SENSITIVE RECEPTORS ARE PRESENT, SPECIFIC ATTENTION WILL BE GIVEN TO THE MUFFLER SYSTEMS ON ALL COMBUSTION ENGINES, AS THAT IS OFTEN A PRIMARY SOURCE OF CONSTRUCTION NOISE.

TO THE GREATEST EXTENT PRACTICABLE, CONSTRUCTION EQUIPMENT AND VEHICLES CARRYING ROCK, CONCRETE, OR OTHER MATERIALS WILL UTILIZE DESIGNATED ROUTES THAT WILL CAUSE THE LEAST DISTURBANCE TO NOISE SENSITIVE RECEPTORS.

WHERE PRACTICABLE, EXISTING FEATURES WILL BE UTILIZED TO MINIMIZE THE IMPACTS OF CONSTRUCTION NOISE ON NOISE SENSITIVE RECEPTORS. SUCH FEATURES WILL INCLUDE BRIDGES, BERMS, RETAINING WALLS, AND BUILDINGS. TEMPORARY FEATURES ALREADY NECESSARY FOR PERFORMING THE WORK, SUCH AS STOCKPILES AND TOOL TRAILERS, MAY ALSO BE STRATEGICALLY UTILIZED TO ASSIST IN THIS EFFORT. WHERE NECESSARY, TEMPORARY FEATURES, SUCH AS HAY BALES, WILL BE CONSTRUCTED SPECIFICALLY TO MINIMIZE CONSTRUCTION NOISE WHERE NOISE SENSITIVE RECEPTORS ARE PRESENT.

WHERE NOISE SENSITIVE RECEPTORS ARE PRESENT, SPECIFIC CONSIDERATION WILL BE GIVEN TO THE SELECTION OF EQUIPMENT TO BE UTILIZED. THIS MAY INCLUDE THE AGE OF THE EQUIPMENT AS NEWER EQUIPMENT TYPICALLY EMPLOYS NEW TECHNOLOGY WITH RESPECT TO EMISSIONS AND NOISE, IF SHIELDING OR ENGINE ENCLOSURES ARE STANDARD, SIZE APPROPRIATENESS, AND POWER SOURCE (GAS/DIESEL, ELECTRIC/SOLAR, PNEUMATIC, HYDRAULIC).

MODEL: Sheet PAPERSIZE: 34x22 (in.) DATE: 8/28/2025 TIME: 11:20:39 AM PLTDRV: OHDOT_PDF.pltcfg PENTBL: OHDOT_Pen.tbl USER: WORKSPACE: OHDOTCEv02 WORKSET: 122048 PRODUCT: OpenRoadsDesigner 10.12.02.4
pw:\\ohiodot-pw.bentley.com:ohiodot-pw-02\Documents\01 Active Projects\District 08\Hamilton\122048\403-Engineering_StructurePoint\Roadway\Sheets\122048_GN304.dgn

ITEM 614, WORK ZONE SPEED LIMIT SIGN

THE CONTRACTOR SHALL FURNISH, INSTALL, MAINTAIN, COVER DURING SUSPENSION OF WORK, AND SUBSEQUENTLY REMOVE WORK ZONE SPEED LIMIT (R2-1) (45 MPH SPEED LIMIT) SIGNS AND SUPPORTS WITHIN THE WORK LIMITS IN ACCORDANCE WITH THE FOLLOWING REQUIREMENTS:

THE CONTRACTOR SHALL COVER OR REMOVE ANY EXISTING SPEED LIMIT SIGNS WITHIN THE REDUCED SPEED ZONE(S). THESE SIGNS SHALL BE RESTORED DURING SUSPENSION OR TERMINATION OF THE REDUCED SPEED LIMIT. THE EXPENSE OF COVERING OR REMOVAL AND RESTORATION OF EXISTING SPEED LIMIT OR MINIMUM SPEED LIMIT SIGNS SHALL BE INCLUDED IN THE PAY ITEM FOR THE WORK ZONE SPEED LIMIT SIGNS.

THE WORK ZONE SPEED LIMIT SIGNS MAY BE ERECTED OR UNCOVERED NO MORE THAN FOUR HOURS BEFORE THE ACTUAL START OF WORK THAT CAUSES THE WARRANTING CONDITION(S) TO OCCUR. THE SIGNS SHALL BE REMOVED OR COVERED NO LATER THAN FOUR HOURS FOLLOWING REMOVAL OF THE WARRANTING CONDITION(S), OR SOONER AS DIRECTED BY THE ENGINEER. TEMPORARY SIGN COVERING AND UNCOVERING DUE TO TEMPORARY REMOVAL OF WARRANTING CONDITION(S) SHALL BE GUIDED BY THE FOUR-HOUR LIMITATIONS STATED ABOVE. CONSTRUCTION AND MATERIAL SPECIFICATIONS ITEM 614, PARAGRAPH 614.02(B), INDICATES THAT THE TWO DIRECTIONS OF A DIVIDED HIGHWAY ARE CONSIDERED SEPARATE HIGHWAY SECTIONS. THEREFORE, IF THE WORK ON A MULTI-LANE DIVIDED HIGHWAY IS LIMITED TO ONLY ONE DIRECTION, A SPEED REDUCTION IN THE DIRECTION OF THE WORK DOES NOT AUTOMATICALLY CONSTITUTE A SPEED REDUCTION IN THE OPPOSITE DIRECTION. A SPEED LIMIT REDUCTION IN THE OPPOSITE DIRECTION, IN SUCH CASE, IS APPROPRIATE ONLY IF CONDITIONS ARE EXPECTED TO HAVE AN IMPACT ON THE DIRECTIONAL TRAFFIC FLOW, AS DIRECTED BY THE ENGINEER.

THE CONTRACTOR SHALL ERECT A WORK ZONE SPEED LIMIT SIGN IN ADVANCE OF THE WARRANTING CONDITION, AS DETAILED IN THE PLANS OR AS DIRECTED BY THE ENGINEER. THE SIGN SHALL BE MOUNTED ON BOTH SIDES OF A DIRECTIONAL ROADWAY OF DIVIDED HIGHWAYS. THE FIRST WORK ZONE SPEED LIMIT SIGN SHALL BE PLACED APPROXIMATELY 500 FEET IN ADVANCE OF THE LANE REDUCTION, SHIFT TAPER, OR OTHER ROADWAY OR SHOULDER RESTRICTION THAT WARRANTED THE WORK ZONE SPEED ZONE. ON UNDIVIDED HIGHWAYS THE SIGN SHALL BE MOUNTED ON THE RIGHT SIDE, APPROXIMATELY 250 FEET IN ADVANCE OF SUCH RESTRICTIONS. THE SIGN SHALL BE REPEATED EVERY 1 MILE FOR 60 AND 55 MPH ZONES AND EVERY ONE-HALF MILE FOR 50 MPH AND 45 MPH ZONES. THESE SIGNS SHALL ALSO BE ERECTED IMMEDIATELY AFTER EACH OPEN ENTRANCE RAMP WITHIN THE ZONE.

THE SPEED LIMIT REDUCTION SHALL BE LIMITED TO ONLY THE PORTION OF THE PROJECT AND THE WORK THAT WARRANTED THE WORK ZONE SPEED LIMIT REDUCTION.

SPEED REDUCTION (SPEED ZONE AHEAD SYMBOL) SIGNS (W3-5) SHALL BE ERECTED IN ADVANCE OF THE SPEED REDUCTION, APPROXIMATELY 1250 FEET ON MULTI-LANE HIGHWAYS AND 500 FEET ON TWO-LANE HIGHWAYS.

A SIGN(S) TO INDICATE THE RESUMPTION OF THE STATUTORY SPEED LIMIT SHALL BE ERECTED AT THE END OF ANY REDUCED SPEED ZONE. THE CONTRACTOR MAY USE SIGNS AND SUPPORTS IN USED, BUT GOOD CONDITION, PROVIDED THE SIGNS MEET CURRENT ODOT SPECIFICATIONS. SIGN FACES SHALL BE RETROREFLECTORIZED WITH TYPE G SHEETING COMPLYING WITH THE REQUIREMENTS OF C&MS 730.19. WORK ZONE SPEED LIMIT SIGNS SHALL BE MOUNTED ON TWO ITEM 630, GROUND MOUNTED SUPPORTS, NO. 3 POSTS, UNLESS MOUNTED ON A TEMPORARY SIGN SUPPORT PER SCD MT 105.10. WORK ZONE SPEED LIMIT AND RELATED SIGN SIZES, PLACEMENT, SUPPORTS, ETC SHALL BE PER THE OMUTCD, WITH TWO EXCEPTIONS: 1) EXPRESSWAY SIZE SPEED LIMIT SIGNS MAY BE ON FREEWAYS AND EXPRESSWAYS, IF NECESSARY; 2) THE HEIGHT OF SIGNS MOUNTED ON PORTABLE SUPPORTS SHOULD BE THE HEIGHT REQUIRED FOR GROUND-MOUNTED SIGNS BUT SHALL NOT BE MORE THAN 1 FOOT LOWER THAN THE HEIGHT REQUIRED BY THE OMUTCD, OR AS DIRECTED BY THE ENGINEER. PORTABLE SUPPORTS SHOULD NOT BE USED FOR A DURATION OF MORE THAN 3 DAYS.

WORK ZONE SPEED LIMIT SIGNS AND SUPPORTS WILL BE MEASURED AS THE NUMBER OF SIGN INSTALLATIONS, INCLUDING THE SIGNS AND NECESSARY SUPPORTS. IF A SIGN AND SUPPORT COMBINATION IS REMOVED AND REERECTED AT ANOTHER LOCATION WITHIN THE PROJECT DUE TO CHANGES IN THE SPEED ZONE AS DETAILED IN THE PLANS OR AS DIRECTED BY THE ENGINEER, IT SHALL BE CONSIDERED ANOTHER UNIT.

PAYMENT FOR ACCEPTED QUANTITIES, COMPLETE IN PLACE, WILL BE MADE AT THE CONTRACT UNIT PRICE. PAYMENT SHALL BE FULL COMPENSATION FOR ALL MATERIALS, LABOR, INCIDENTALS AND EQUIPMENT FOR FURNISHING, ERECTING, MAINTAINING, COVERING DURING SUSPENSION OF WORK, AND REMOVING THE SIGNS AND SUPPORTS. SPEED LIMIT SIGNING FOR THE POINT OF RESUMPTION OF THE STATUTORY SPEED LIMIT SHALL BE PAID FOR AS WORK ZONE SPEED LIMIT SIGNS. THE FOLLOWING ESTIMATED QUANTITY HAS BEEN CARRIED TO THE GENERAL SUMMARY.

ITEM 614, WORK ZONE SPEED LIMIT SIGN 12 EACH
ITEM 614, SPEED ZONE AHEAD SYMBOL SIGN 6 EACH

THE FOLLOWING TABLE PROVIDES DETAILS ON WORK ZONE SPEED ZONES APPROVED FOR USE ON THIS PROJECT:

WZSZ REVISION NUMBER(S)	COUNTY-ROUTE-SECTION(S)	DIRECTION(S)
WZ-45130-A	HAM-75 SLM 1.00 TO SLM 2.00	NB/SB

WORK ZONE INCREASED PENALTIES SIGN (R11-H5A)

R11-H5A-48 SIGNS SHALL BE FURNISHED, ERECTED, AND MAINTAINED IN GOOD CONDITION AND/OR REPLACED AS NECESSARY AND SUBSEQUENTLY REMOVED BY THE CONTRACTOR. SIGNS SHALL BE MOUNTED AT THE APPROPRIATE OFFSETS AND ELEVATIONS AS PRESCRIBED BY THE OHIO MANUAL OF UNIFORM TRAFFIC CONTROL DEVICES. THEY SHALL BE MAINTAINED ON SUPPORTS MEETING CURRENT SAFETY CRITERIA.

THE SIGNS MAY BE ERECTED OR UNCOVERED NO MORE THAN FOUR HOURS BEFORE THE ACTUAL START OF WORK.
THE SIGNS SHALL BE REMOVED OR COVERED NO LATER THAN FOUR HOURS FOLLOWING RESTORATION OF ALL LANES TO TRAFFIC WITH NO RESTRICTIONS, OR SOONER AS DIRECTED BY THE ENGINEER. TEMPORARY SIGN COVERING AND UNCOVERING DUE TO TEMPORARY LANE RESTORATIONS SHALL BE GUIDED BY THE FOUR-HOUR LIMITATIONS STATED ABOVE. SUCH LANE RESTORATIONS SHOULD BE EXPECTED TO REMAIN IN EFFECT FOR 30 OR MORE CONSECUTIVE CALENDAR DAYS, SUCH AS DURING WINTER SHUT-DOWNS.

THE SIGNS ON THE MAINLINE SHALL BE DUAL MOUNTED UNLESS NOT PHYSICALLY POSSIBLE. THE FIRST SIGN SHALL BE PLACED BETWEEN THE ROAD WORK AHEAD (W20-1) SIGN AND THE NEXT SIGN IN THE SEQUENCE. SIGNS SHALL BE ERECTED ON EACH ENTRANCE RAMP AND EVERY 2 MILES THROUGH THE CONSTRUCTION WORK LIMITS. SIGNS ON THE MAINLINE SHALL BE R11-H5A-48. SIGNS USED ON THE RAMPS SHALL BE R11-H5A-24. R11-H5A-24 SIGNS MAY BE USED IN THE MEDIAN IN LIEU OF R11-H5A-48 SIGNS IF IT IS NOT PHYSICALLY POSSIBLE TO PROVIDE R11-H5A-48 SIGNS IN THE MEDIAN.

THE R11-H5A-48 SIGNS SHALL BE MOUNTED ON 2 NO. 3 POSTS WHEN LOCATED WITHIN CLEAR ZONES.

THE CONTRACTOR MAY USE SIGNS AND SUPPORTS IN USED, BUT GOOD, CONDITION PROVIDED THE SIGNS MEET CURRENT ODOT SPECIFICATIONS.

WORK ZONE INCREASED PENALTIES SIGNS AND SUPPORTS WILL BE MEASURED AS THE NUMBER OF SIGN INSTALLATIONS, INCLUDING THE SIGN AND NECESSARY SUPPORTS. IF A SIGN AND SUPPORT COMBINATION IS REMOVED AND REERECTED AT ANOTHER LOCATION AS DIRECTED BY THE ENGINEER, IT SHALL BE CONSIDERED ANOTHER UNIT.

PAYMENT FOR ACCEPTED QUANTITIES, COMPLETE, IN PLACE WILL BE MADE AT THE CONTRACT UNIT PRICE. PAYMENT SHALL BE FULL COMPENSATION FOR ALL MATERIALS, LABOR, INCIDENTALS AND EQUIPMENT FOR FURNISHING, ERECTING, MAINTAINING, COVERING DURING SUSPENSION OF WORK, AND REMOVAL OF THE SIGN AND SUPPORT.

ITEM 614, WORK ZONE INCREASED PENALTIES SIGN
7 EACH (SEE PLANS FOR LOCATIONS)

FLOODLIGHTING

FLOODLIGHTING OF THE WORK SITE FOR OPERATIONS CONDUCTED DURING NIGHTTIME PERIODS SHALL BE ACCOMPLISHED SO THAT THE LIGHTS DO NOT CAUSE GLARE TO THE DRIVERS ON THE ROADWAY. TO ENSURE THE ADEQUACY OF THE FLOODLIGHT PLACEMENT, THE CONTRACTOR AND THE ENGINEER SHALL DRIVE THROUGH THE WORK SITE EACH NIGHT WHEN THE LIGHTING IS IN PLACE AND OPERATIVE PRIOR TO COMMENCING ANY WORK. IF GLARE IS DETECTED, THE LIGHT PLACEMENT AND SHIELDING SHALL BE ADJUSTED TO THE SATISFACTION OF THE ENGINEER BEFORE WORK PROCEEDS.

PAYMENT FOR ALL LABOR, EQUIPMENT AND MATERIALS SHALL BE INCLUDED IN THE LUMP SUM CONTRACT PRICE FOR ITEM 614, MAINTAINING TRAFFIC.

ITEM 614, WORK ZONE IMPACT ATTENUATOR FOR 24" WIDE HAZARDS (UNIDIRECTIONAL OR BIDIRECTIONAL)

THIS ITEM SHALL CONSIST OF FURNISHING AND INSTALLING A NON-GATING IMPACT ATTENUATOR. FURNISH AN IMPACT ATTENUATOR FROM THE OFFICE OF ROADWAY ENGINEERING'S APPROVED LIST FOR WORK ZONE IMPACT ATTENUATORS, FROM THE ROADWAY STANDARDS APPROVED PRODUCTS WEB PAGE.

INSTALLATION SHALL BE AT THE LOCATIONS SPECIFIED IN THE PLANS IN ACCORDANCE WITH THE MANUFACTURER'S SPECIFICATIONS.

THE CONTRACTOR SHALL REPAIR OR REPLACE A DAMAGED UNIT WITHIN 24 HOURS OF A DAMAGING IMPACT.

WHEN BIDIRECTIONAL DESIGNS ARE SPECIFIED, THE CONTRACTOR SHALL SUPPLY APPROPRIATE TRANSITIONS.

WHEN GATING IMPACT ATTENUATORS ARE DESIRED, THE CONTRACTOR SHALL SUBMIT DOCUMENTATION TO THE ENGINEER FOR ACCEPTANCE.

THE COST FOR THE ADDITIONAL BARRIER REQUIRED FOR A GATING IMPACT ATTENUATOR SHALL BE INCLUDED IN THE COST OF THE GATING IMPACT ATTENUATOR.

PAYMENT FOR THE ABOVE WORK SHALL BE MADE AT THE UNIT PRICE BID AND SHALL INCLUDE ALL LABOR, TOOLS, EQUIPMENT AND MATERIALS NECESSARY TO CONSTRUCT AND MAINTAIN A COMPLETE AND FUNCTIONAL IMPACT ATTENUATOR SYSTEM, INCLUDING ALL RELATED BACKUPS, TRANSITIONS, LEVELING PADS, HARDWARE AND GRADING, NOT SEPARATELY SPECIFIED, AS REQUIRED BY THE MANUFACTURER.

DELINEATION OF PORTABLE AND PERMANENT BARRIER

BARRIER REFLECTORS AND OBJECT MARKERS SHALL BE INSTALLED ON ALL PORTABLE BARRIER (PB) USED FOR TRAFFIC CONTROL; AND, ON PERMANENT CONCRETE BARRIER (INCLUDING BRIDGE PARAPETS) LOCATED WITHIN 5 FEET OF THE EDGE OF THE ADJACENT TRAVEL LANE.

BARRIER REFLECTORS SHALL CONFORM TO C&MS 626, EXCEPT THAT THE SPACING SHALL BE AS PER TRAFFIC SCD MT-101.70. OBJECT MARKERS AND THEIR INSTALLATION SHALL CONFORM TO C&MS 614.03 AND SCD MT-101.70. WHEN THE PB CONTAINS GLARE SCREEN, ONE SET OF THREE VERTICAL STRIPES OF SHEETING SHALL BE CONSIDERED EQUIVALENT TO AN OBJECT MARKER, ONE-WAY.

INCREASED BARRIER DELINEATION, AS SPECIFIED HEREIN, SHALL BE INSTALLED ON ALL PB AND PERMANENT CONCRETE BARRIER LOCATED WITHIN 5 FEET OF THE EDGE OF THE TRAVELED LANE UNDER EITHER OF THE FOLLOWING CONDITIONS: ALONG TAPERS AND TRANSITION AREAS; OR ALONG CURVES (OUTSIDE ONLY) WITH DEGREE OF CURVATURE GREATER THAN OR EQUAL TO 3 DEGREES.

THE INCREASED BARRIER DELINEATION SHALL CONSIST OF EITHER DELINEATION PANELS OR THE TRIPLE STACKING OF WORK ZONE BARRIER REFLECTORS.

DELINEATION PANELS SHALL CONSIST OF PANELS OF DELINEATION, APPROXIMATELY 34 INCHES LONG AND 6 INCHES WIDE AND SHALL BE "CRIMPED." PANELS SHALL BE INSTALLED AND SPACED PER TRAFFIC SCD MT-101.70.

TRIPLE-STACKED BARRIER REFLECTORS SHALL CONSIST OF ALIGNING THREE BARRIER REFLECTORS VERTICALLY, AT LOCATIONS WHERE A SINGLE BARRIER REFLECTOR WOULD BE OTHERWISE ATTACHED. THERE SHALL BE NO OPEN SPACE BETWEEN THE ADJACENT BARRIER REFLECTORS. THE TRIPLE-STACKED BARRIER REFLECTORS SHALL CONFORM TO C&MS 626, EXCEPT THAT THEY SHALL BE SPACED AND ALIGNED PER TRAFFIC SCD MT-101.70.

SEE ESTIMATED QUANTITIES FOR THE FOLLOWING ITEMS CARRIED TO THE GENERAL SUMMARY:

- ITEM 614, BARRIER REFLECTOR, TYPE 1 (ONE-WAY OR BI-DIRECTIONAL) , EACH
- ITEM 614, OBJECT MARKER, (ONE-WAY OR BI-DIRECTIONAL), EACH
- ITEM 614, INCREASED BARRIER BELINEATION, FEET

PAYMENT SHALL BE FULL COMPENSATION FOR ALL MATERIAL, LABOR, INCIDENTALS AND EQUIPMENT NECESSARY FOR FURNISHING, INSTALLING, MAINTAINING AND REMOVING EACH OF THE ABOVE ITEMS.

ALONG RUNS OF INCREASED BARRIER DELINEATION WHERE THIS ITEM IS PROVIDED, THE QUANTITY SHALL BE MEASURED AS THE ENTIRE LENGTH OF THE RUN OF INCREASED BARRIER DELINEATION, INCLUDING THE SPACES BETWEEN THE INDIVIDUAL DELINEATION PANELS OR STACKS OF BARRIER REFLECTORS.

CONSTRUCTION INGRESS AND EGRESS

THE CONSTRUCTION INGRESS AND EGRESS SHOWN REPRESENT A POSSIBLE SCENARIO TO BE EVALUATED BY THE CONTRACTOR. THE CONTRACTOR SHALL COMPLY WITH THE CONTRACT REQUIREMENTS INCLUDING, BUT NOT LIMITED TO, SCD MT 103.10 (7/18/2025), SUPPLEMENTAL SPECIFICATION 829 (1/20/2017), AND THE WORKSITE TRAFFIC SUPERVISOR. INGRESS AND EGRESS SHALL PROVIDE A SAFE MEANS OF INTERACTION BETWEEN PROJECT RELATED VEHICLES AND THE TRAVELING PUBLIC BY PROVIDING DEDICATED AREAS OUTSIDE THE TRAVELED LANES FOR THE DECELERATION AND ACCELERATION OF PROJECT VEHICLES. THE WORKSITE TRAFFIC SUPERVISOR SHALL SUBMIT A CONSTRUCTION INGRESS AND EGRESS PLAN FOR REVIEW BY THE DEPARTMENT AT LEAST FOURTEEN CALENDAR DAYS PRIOR TO THE START OF WORK.

ADDM' NO.	DATE	DESCRIPTION
1	09/01/25	ADDED NOTE

DATE COMPLETED

GENERAL NOTES - MAINTENANCE OF TRAFFIC

DESIGN AGENCY
Palmer ENGINEERING
8350 E. KEMPER ROAD
SUITE B
CINCINNATI, OH 45249
(513) 469-1600

DESIGNER DPF
REVIEWER DCJ 12/20/24
PROJECT ID 122048
SHEET P.16 TOTAL P. 421

HAM-IR75-1.05

MODEL: Sheet - 2 PAPERSIZE: 34x22 (in.) DATE: 8/27/2025 TIME: 1:24:07 PM PLTDRV: OHDOT_PDF.pltcfg PENTBL: OHDOT_Pen.tbl USER: swalker@palmernet.com WORKSPACE: OHDOTCEv02 WORKSET: 122048 PRODUCT: OpenRoadsDesigner 24.00.00.205
pw:\\ohiodot-pw.bentley.com:ohiodot-pw-02\Documents\01 Active Projects\District 08\Hamilton\122048\402-Engineering_PalmerEngineering\MOT\Sheets\122048_MN001.dgn

ITEM 614, LAW ENFORCEMENT OFFICER (WITH PATROL CAR) FOR ASSISTANCE DURING CONSTRUCTION OPERATIONS

USE OF LAW ENFORCEMENT OFFICERS (LEOS) BY CONTRACTORS OTHER THAN THE USES SPECIFIED BELOW SHALL NOT BE PERMITTED AT PROJECT COST NOR TIME COMPENSATION. LEOS SHOULD NOT BE USED WHERE THE OMUTCD INTENDS THAT FLAGGERS BE USED.

IN ADDITION TO THE REQUIREMENTS OF C&MS 614 AND THE OMUTCD, A UNIFORMED LEO WITH AN OFFICIAL PATROL CAR (CAR WITH TOP-MOUNTED EMERGENCY FLASHING LIGHTS AND COMPLETE MARKINGS OF THE APPROPRIATE LAW ENFORCEMENT AGENCY) SHALL BE PROVIDED FOR THE FOLLOWING TRAFFIC CONTROL TASKS:

- DURING THE ENTIRE ADVANCE PREPARATION AND CLOSURE SEQUENCE WHERE COMPLETE BLOCKAGE OF TRAFFIC IS REQUIRED.
- DURING A TRAFFIC SIGNAL INSTALLATION WHEN IMPACTING THE NORMAL FUNCTION OF THE SIGNAL OR THE FLOW OF TRAFFIC, OR WHEN TRAFFIC NEEDS TO BE DIRECTED THROUGH AN ENERGIZED TRAFFIC SIGNAL CONTRARY TO THE SIGNAL DISPLAY (E.G., DIRECTING MOTORISTS THROUGH A RED LIGHT).
- DURING PERIODS WHERE TRAFFIC NEEDS TO BE DIRECTED CONTRARY TO A TRAFFIC CONTROL DEVICE (FLAGGER, SIGN [E.G. STOP SIGN, STREET OR HIGHWAY SIGNS, ETC], SIGNAL OR OTHER DEVICE USED TO REGULATE, WARN OR GUIDE TRAFFIC). TRAFFIC IN THIS INSTANCE INCLUDES VEHICULAR, PEDESTRIAN AND/OR SHARED USE PATH USERS.

IN ADDITION TO THE REQUIREMENT OF C&MS 614 AND THE OMUTCD, A UNIFORMED LEO WITH AN OFFICIAL PATROL CAR (CAR WITH TOP-MOUNTED EMERGENCY FLASHING LIGHTS AND COMPLETE MARKINGS OF THE APPROPRIATE LAW ENFORCEMENT AGENCY) SHOULD BE PROVIDED FOR THE FOLLOWING TRAFFIC CONTROL TASKS AS APPROVED BY THE ENGINEER:

- FOR LANE CLOSURES THAT MEET ALL OF THE CRITERIA LISTED BELOW: DURING INITIAL SET-UP PERIODS, TEAR DOWN PERIODS, SUBSTANTIAL SHIFTS OF A CLOSURE POINT OR WHEN NEW LANE CLOSURE ARRANGEMENTS ARE INITIATED FOR LONG-TERM LANE CLOSURES/SHIFTS (FOR THE FIRST AND LAST DAY OF MAJOR CHANGES IN TRAFFIC CONTROL SETUP).

o CRITERIA
ON A MULTI-LANE DIVIDED INTERSTATE, OTHER FREEWAY OR EXPRESSWAY; AND,
AN AUTHORIZED SPEED LIMIT OF 45 MPH OR GREATER THAT IS IN EFFECT AT THE TIME OF THE OPERATION; AND,
AADT OF 50,000 (OR AADT OF 30,000 WITH 25% OR HIGHER PERCENT TRUCKS)

IN GENERAL, LEOS SHOULD BE POSITIONED IN ADVANCE OF AND ON THE SAME SIDE AS THE LANE RESTRICTION (OR AT THE POINT OF ROAD CLOSURE), AND TO MANUALLY CONTROL TRAFFIC MOVEMENTS THROUGH SIGNALIZED INTERSECTIONS AND/OR IN CONTRARY TO OTHER TRAFFIC CONTROL DEVICES IN WORK ZONES.

LEOS SHOULD NOT FORGO THEIR TRAFFIC CONTROL RESPONSIBILITIES TO APPREHEND MOTORISTS FOR ROUTINE TRAFFIC VIOLATIONS. HOWEVER, IF A MOTORIST'S ACTIONS ARE CONSIDERED TO BE RECKLESS, THEN PURSUIT OF THE MOTORIST IS APPROPRIATE.

THE LEOS WORK AT THE DIRECTION OF THE CONTRACTOR. THE CONTRACTOR IS RESPONSIBLE FOR SECURING THE SERVICES OF THE LEOS WITH THE APPROPRIATE AGENCIES AND COMMUNICATING THE INTENTIONS OF THE PLANS WITH RESPECT TO DUTIES OF THE LEOS. THE ENGINEER SHALL HAVE FINAL CONTROL OVER THE LEOS'S DUTIES AND PLACEMENT, AND WILL RESOLVE ANY ISSUES THAT MAY ARISE BETWEEN THE TWO PARTIES.

ENSURE PROVIDED LEOS HAVE BEEN TRAINED APPROPRIATE TO THE JOB DECISIONS THEY ARE REQUIRED TO MAKE WHILE ON THE PROJECT, IN ACCORDANCE WITH C&MS 614.03.THE LEO SHALL REPORT IN TO THE CONTRACTOR PRIOR TO THE START OF THE SHIFT, IN ORDER TO RECEIVE INSTRUCTIONS REGARDING SPECIFIC WORK ASSIGNMENTS DURING HIS/HER SHIFT. THE LEO IS EXPECTED TO STAY AT THE PROJECT SITE FOR THE ENTIRE DURATION OF HIS/HER SHIFT. THE LEO SHALL REPORT TO THE CONTRACTOR AT THE END OF HIS/HER SHIFT. SHOULD IT BE NECESSARY TO LEAVE THE PROJECT SITE, THE LEO SHALL NOTIFY THE ENGINEER. THE CONTRACTOR SHALL PROVIDE THE LEO WITH A TWO-WAY COMMUNICATION DEVICE THAT SHALL BE RETURNED TO THE CONTRACTOR AT THE END OF HIS/HER SHIFT.

LEOS (WITH PATROL CAR) REQUIRED BY THE TRAFFIC MAINTENANCE TASKS ABOVE SHALL BE PAID FOR ON A UNIT PRICE (HOURLY) BASIS UNDER ITEM 614, LAW ENFORCEMENT OFFICER (WITH PATROL CAR) FOR ASSISTANCE. THE FOLLOWING ESTIMATED QUANTITIES HAVE BEEN CARRIED TO THE GENERAL SUMMARY.

ITEM 614, LAW ENFORCEMENT OFFICER WITH PATROL CAR FOR ASSISTANCE 1000 HOURS

THE HOURS PAID SHALL INCLUDE ANY MINIMUM SHOW-UP TIME REQUIRED BY THE LAW ENFORCEMENT AGENCY INVOLVED. ANY ADDITIONAL COSTS (ADMINISTRATIVE OR OTHERWISE) INCURRED BY THE CONTRACTOR TO OBTAIN THE SERVICES OF AN LEO ARE INCLUDED WITH THE BID UNIT PRICE FOR ITEM 614, LAW ENFORCEMENT OFFICER WITH PATROL CAR FOR ASSISTANCE.

PERMITTED LANE CLOSURE SCHEDULE (PLCS)

SHORT-TERM LANE CLOSURES ARE THOSE WHICH ARE PERMITTED BY THE PERMITTED LANE CLOSURE NOTE. THESE TIMES SHALL NOT BE REVISED WITHOUT PRIOR APPROVAL FROM THE DISTRICT 8 WORK ZONE TRAFFIC CONTROL ENGINEER. SHORT TERM LANE CLOSURES SHALL ONLY BE IMPLEMENTED WHEN WORK IS BEING CONTINUOUSLY PERFORMED IN THE LANE. THE CLOSURE SHALL BE REMOVED AS SOON AS POSSIBLE AFTER WORK HAS STOPPED. PERMITTED LANE CLOSURES SHALL ONLY BE ALLOWED DURING THE TIMES SPECIFIED IN THE PERMITTED LANE CLOSURE TIMES AND UNAUTHORIZED LANE USE TABLE BELOW. NO LANE OR SHOULDER CLOSURE SHALL BE IN PLACE WHEN NO WORK IS BEING PERFORMED.

MAINTAINING TRANSIT OPERATIONS

TRANSIT FACILITIES ARE LOCATED WITHIN THE PROJECT LIMITS AND ARE AFFECTED BY THE PROPOSED WORK AND/OR THE MAINTENANCE OF TRAFFIC. TRANSIT OPERATIONS SHALL BE MAINTAINED AT ALL TIMES. INVITE THE BELOW LISTED TRANSIT AGENCY CONTACT(S) TO THE PRECONSTRUCTION MEETING AND PROVIDE THEM WITH THE PROJECT SCHEDULE INCLUDING UPDATES RELATIVE TO TRANSIT IMPACTS.

SORTA/METRO
- BRIAN MESSER: BMESSER@GO-METRO.COM
- KIM WYATT: KWYATT@GO-METRO.COM
- PAUL JOHNSON: PJOHNSON@GO-METRO.COM
- SCHEDULING@GO-METRO.COM
- BUSSTOPS@GO-METRO.COM

COORDINATION WITH THE TRANSIT AGENCY IS REQUIRED. PROVIDE NOTIFICATION AT LEAST 14 CALENDAR DAYS IN ADVANCE TO ALLOW THE TRANSIT AGENCY TO IMPLEMENT ANY CHANGES TO THE TRANSIT OPERATIONS AS DESCRIBED BELOW:
*BUS ROUTE 27 (LINN ST, BOTH DIRECTIONS)

1	09/01/25	MODIFIED TABLE AND NOTE
ADDM' NO.	DATE	DESCRIPTION
DATE COMPLETED		

PERMITTED LANE CLOSURE TIMES AND UNAUTHORIZED LANE USE TABLE

LOCATION	DIRECTION	EX. NO. OF THRU LANES		1 LANE CLOSED		2 LANES CLOSED		3 LANES CLOSED		15 MINUTE SHORT DURATION COMPLETE CLOSURES	COMPLETE CLOSURE	TIME UNIT	DISINCENTIVE PER LANE PER TIME UNIT
				WEEKDAY	WEEKEND	WEEKDAY	WEEKEND	WEEKDAY	WEEKEND				
IR-75	SB	4	RIGHT LANES CLOSED	11PM(FRI 12MID.) - 5AM	11PM(SAT 12MID.) - 6AM	11PM(FRI 12MID.) - 5AM	11PM(FRI 12MID.) - 6AM	12MID - 4AM	12MID(SAT 1AM) - 6AM	12AM - 4AM	11PM - 5AM	1 MINUTE	$380
			LEFT LANES CLOSED	8:30PM -6AM	7PM - 8:30AM	10PM(FRI 11PM) - 5AM	9:30PM - 7:30AM	12MID - 4AM	12MID(SAT 1AM) - 6AM				
IR-75	NB	2		11PM - 5AM	11PM - 7AM	NOT APPLICABLE		NOT APPLICABLE		12AM - 4AM	11PM - 5AM	1 MINUTE	$755
RAMP ME (FROM I-71 SB)	NB	2		8PM - 6AM	8PM - 7AM	NOT APPLICABLE		NOT APPLICABLE		12AM - 4AM	NOT ALLOWED	1 MINUTE	$280
RAMPS	BOTH			NOT APPLICABLE		NOT APPLICABLE		NOT APPLICABLE		NOT ALLOWED	10PM - 5AM	1 MINUTE	$100
CITY STREETS	BOTH	1		ANYTIME; MAINTAIN 1 LANE OF 2-WAY TRAFFIC		NOT APPLICABLE		NOT APPLICABLE		10PM - 5AM			
CITY STREETS	BOTH	2 OR MORE		8AM - 4PM & 7PM TO 6AM	7PM-8AM	NOT APPLICABLE		NOT APPLICABLE		10PM - 5AM	NOT ALLOWED	1 MINUTE	$100

NOTES:
1. NO CLOSURES 2 HOURS BEFORE TO 30 MINUTES AFTER THE START TIME OF EVENTS AT GREAT AMERICAN BALL PARK, PAUL BROWN STADIUM, OR HERITAGE BANK ARENA. THIS RESTRICTION ALSO APPLIES TO ANY OTHER LOCAL VENUE REACHING AN ATTEDANCE OF 20,000+.
2. NO CLOSURES FROM 30 MINUTES BEFORE THE SCHEDULED FINISH TIME TO 2 HOURS AFTER EVENTS AT GREAT AMERICAN BALL PARK, PAYCOR STADIUM, OR HERITAGE BANK ARENA. THIS RESTRICTION ALSO APPLIES TO ANY OTHER LOCAL VENUE REACHING AN ATTEDANCE OF 20,000+.
3. NO SHORT TERM SHOULDER CLOSURES BETWEEN THE HOURS OF 6 AM TO 9 AM AND 3 PM TO 7 PM MONDAY THROUGH FRIDAY.
4. RAMPS ARE PERMITTED TO BE CLOSED OVERNIGHT FOR MOT TRAFFIC SWITCHES AND WHEN PERFORMING WORK WITHIN THE RAMP ACCELERATION/DECELERATION LANE ONLY. ONLY ONE RAMP IS PERMITTED TO BE CLOSED AT A TIME.

GENERAL NOTES - MAINTENANCE OF TRAFFIC

DESIGN AGENCY
Palmer ENGINEERING
8350 E. KEMPER ROAD
SUITE B
CINCINNATI, OH 45249
(513) 469-1600

DESIGNER DPF
REVIEWER DCJ 12/20/24
PROJECT ID 122048
SHEET P.18 TOTAL P. 421

HAM-IR75-1.05

MODEL: Sheet - 4 PAPERSIZE: 34x22 (in.) DATE: 8/27/2025 TIME: 1:25:13 PM PLTDRV: OHDOT_PDF.pltcfg PENTBL: OHDOT_Pen.tbl USER: swalker@palmernet.com WORKSPACE: OHDOTCEv02 WORKSET: 122048 PRODUCT: OpenRoadsDesigner 24.00.00.205
pw:\\ohiodot-pw.bentley.com:ohiodot-pw-02\Documents\01 Active Projects\District 08\Hamilton\122048\402-Engineering_PalmerEngineering\MOT\Sheets\122048_MN001.dgn

NOTIFICATION OF TRAFFIC RESTRICTIONS

THROUGHOUT THE DURATION OF THE PROJECT, THE CONTRACTOR SHALL NOTIFY THE PROJECT ENGINEER IN WRITING OF ALL TRAFFIC RESTRICTIONS AND UPCOMING MAINTENANCE OF TRAFFIC CHANGES. THE CONTRACTOR SHALL ENSURE THE WRITTEN NOTIFICATION IS SUBMITTED IN A TIMELY MANNER TO ALLOW THE PROJECT ENGINEER TO MEET THE REQUIRED TIME FRAMES SET FORTH IN THE TABLE BELOW TO INFORM THE SPECIAL HAULING PERMITS SECTION (HAULING.PERMITS@DOT.OHIO.GOV) AND THE DISTRICT PUBLIC INFORMATION OFFICE (PIO). IN ADDITION, THE FOLLOWING LOCAL OFFICIALS SHALL RECEIVE NOTIFICATION:

CHRIS KELLY, CITY OF CINCINNATI:
CHRIS.KELLY@CINCINNATI-OH.GOV

CURTIS HINES
CURTIS.HINES@CINCINNATI-OH.GOV

THIS NOTIFICATION SHALL BE RECEIVED BY THE PROJECT ENGINEER PRIOR TO THE PHYSICAL SETUP OF ANY APPLICABLE SIGNS OR MESSAGE BOARDS.

INFORMATION SHOULD INCLUDE, BUT IS NOT LIMITED TO, ALL CONSTRUCTION ACTIVITIES THAT IMPACT OR INTERFERE WITH TRAFFIC AND SHALL LIST THE SPECIFIC LOCATION, TYPE OF WORK, ROAD STATUS, DATE AND TIME OF RESTRICTION, DURATION OF RESTRICTION, NUMBER OF LANES MAINTAINED, NUMBER OF LANES CLOSED, MINIMUM VERTICAL CLEARANCE, MINIMUM WIDTH OF DRIVABLE PAVEMENT, DETOUR ROUTES, IF APPLICABLE, AND ANY OTHER INFORMATION REQUESTED BY THE PROJECT ENGINEER.

NOTIFICATION TIME FRAME TABLE

ITEM	DURATION OF CLOSURE	NOTIFICATION DUE TO DISTRICT 8 PIO	SIGN DISPLAYED TO PUBLIC
RAMP & ROAD CLOSURES	>=2 WEEKS	21 CALENDAR DAYS PRIOR TO CLOSURE	14 CALENDAR DAYS PRIOR TO CLOSURE
	> 12 HOURS &< 2 WEEKS	14 CALENDAR DAYS PRIOR TO CLOSURE	7 CALENDAR DAYS PRIOR TO CLOSURE
	<=12 HOURS	4 CALENDAR DAYS PRIOR TO CLOSURE	2 CALENDAR DAYS PRIOR TO CLOSURE
LANE CLOSURES & RESTRICTIONS	>=2 WEEKS	14 CALENDAR DAYS PRIOR TO CLOSURE	
	< 2 WEEKS	5 CALENDAR DAYS PRIOR TO CLOSURE	
START OF CONSTRUCTION & TRAFFIC PATTERN CHANGES	N/A	14 CALENDAR DAYS PRIOR TO IMPLEMENTATION	

ANY UNFORESEEN CONDITIONS NOT SPECIFIED IN THE PLANS REQUIRING TRAFFIC RESTRICTIONS SHALL ALSO BE REPORTED TO THE PROJECT ENGINEER USING THE NOTIFICATION TIME TABLE.

COORDINATION AND COOPERATION BETWEEN CONTRACTORS

THE CONTRACTOR IS ADVISED THAT COORDINATION AND COOPERATION WILL BE REQUIRED WITH CONTRACTORS AND MULTIPLE ONGOING ODOT AND LOCAL PROJECTS IN THE AREAS ADJACENT TO AND OVERLAPPING WITH THIS PROJECT. THE COORDINATION AND COOPERATION WILL BE MORE INVOLVED THAN TYPICAL PRACTICE. CONTACT INFORMATION FOR ALL CONTRACTORS SHALL BE PROVIDED AT THE PRE-CONSTRUCTION MEETING.

THE PROJECTS REQUIRING COORDINATION AND COOPERATION, INCLUDE BUT ARE NOT LIMITED TO:

- ODOT BRENT SPENCE BRIDGE, PID 116649
- METROPOLITAN SEWER DISTRICT PROJECT 10142950 - EAST BRANCH OHIO RIVER INTERCEPTOR (EBORI) EXTENSION PROJECT (LAUNCH PIT AT WESTERN AVE/GEST STREET/SB I-75 ON RAMP)
- CITY OF CINCINNATI – LINN ST ROAD DIET

A GENERAL OVERVIEW OF THE COORDINATION WITH PID 116649 AND THE EBORI IS OUTLINED IN THE PHASING DESCRIPTION ON SHEET P.13. THE SPECIFICS ARE DETAILED IN THIS NOTE.

PHASE 1 (SHEETS P.46 - P.47):
CONTRACTOR SHALL COORDINATE MOBILIZATION WITH THE CONTRACTOR FOR THE METROPOLITAN SEWER DISTRICT EBORI PROJECT AND SETUP OF MOT AT THE LAUNCH PIT SITE AT WESTERN AVE/GEST STREET/SB I-75 ON RAMP. IF THE MOT FOR EBORI IS SETUP PRIOR TO MOBILIZATION FOR THIS PROJECT, THE CONTRACTOR SHALL ASSUME RESPONSIBILITY FOR WORK SITE TRAFFIC SUPERVISION, WORK ZONE PAVEMENT MARKINGS AND SIGNAGE. THE PORTABLE BARRIER PLACED BY THE EBORI CONTRACTOR WILL REMAIN AND BE MAINTAINED INCLUDING CONSTRUCTION ACCESS POINTS. IF THE EBORI LAUNCH PIT SITE IS STILL ACTIVE AT THE CONCLUSION OF THIS PROJECT, THE EORBI CONTRACTOR WILL REASSUME RESPONSIBILITY FOR WORK SITE TRAFFIC SUPERVISION, WORK ZONE PAVEMENT MARKINGS AND SIGNAGE.

PHASE 2 (NORTHBOUND I-75):
BY THE DATE REQUIRED IN THE DISINCENTIVE CONTRACT TABLE FOR THE COMPLETION OF PHASE 1 (DEMOLITION OF THE ENTIRE EXISTING BRIDGE HAM-75-0150, PROPOSED FORWARD ABUTMENT AND PROPOSED PIER #2 AND PORTION OF WALL #2), THE ENTIRETY OF NORTHBOUND I-75 WILL BE TURNED OVER TO THE CONTRACTOR FOR THE BRENT SPENCE BRIDGE (PID 116649) TO SETUP MOT. SOUTHBOUND I-75 MOT RESPONSIBILITY AND MAINTENANCE WILL REMAIN WITH THE PID 122048 CONTRACTOR. THE PID 122048 CONTRACTOR SHALL COORDINATE WITH THE CONTRACTOR FOR PID 116649 FOR THE MAINTENANCE OF THE TRAFFIC SWITCHOVER, WHICH WILL INCLUDE 9TH RAMP OPENING. THE CONTRACTOR IS ADVISED THAT INDIVIDUAL PORTABLE BARRIER RUNS FOR PID 122048 MAY NEED TO BE REMOVED IN SEPARATE OPERATIONS TO FACILITATE SWITCHOVER. IT IS EXPECTED THAT THE PORTABLE BARRIER ON THE NORTHBOUND LEFT SHOULDER WILL NEED TO BE REMOVED BEFORE THE SWITCHOVER AND PORTABLE BARRIER ON THE RIGHT SHOULDER WILL BE REMOVED AFTER THE SWITCHOVER. SIGNING WILL NEED TO BE REMOVED OR COVERED AT THE TIME OF SWITCHOVER.

PHASE 3 (SOUTHBOUND I-75):
BY THE DATE REQUIRED IN THE DISINCENTIVE CONTRACT TABLE FOR THE COMPLETE OPENING OF LINN STREET BRIDGE TO ALL PEDESTRIAN AND VEHICULAR TRAFFIC, THE ENTIRETY OF SOUTHBOUND I-75 WILL BE TURNED OVER TO THE CONTRACTOR FOR THE BRENT SPENCE BRIDGE (PID 116649) TO SETUP MOT. THE PID 122048 CONTRACTOR SHALL COORDINATE WITH THE CONTRACTOR FOR PID 116649 FOR THE MAINTENANCE OF THE TRAFFIC SWITCHOVER. THE CONTRACTOR IS ADVISED THAT INDIVIDUAL PORTABLE BARRIER RUNS FOR PID 122048 MAY NEED TO BE REMOVED IN SEPARATE OPERATIONS TO FACILITATE SWITCHOVER

DETOUR ROUTES:
THE FOLLOWING DETOUR ROUTES WILL BE REQUIRED TO CONTINUE OPERATION DURING THE BRENT SPENCE BRIDGE, PID 116649 AT THE CONCLUSION OF HIS PROJECT:
SHEET P.56 - WESTERN AVE TO I-75 S.
SHEET P.57 - EASTBOUND GEST STREET
SHEET P.58 - WESTBOUND GEST STREET

THE CONTRACTOR(S) ON PID 116649 (BRENT SPENCE BRIDGE) SHALL ASSUME MAINTENANCE OF THE DETOURS AFTER THIS PROJECT. INSPECTION OF THE SIGNAGE AND BARRICADES BY REPRESENTATIVES OF THE CONTRACTOR, ODOT AND THE BRENT SPENCE BRIDGE WILL TAKE PLACE AT THIS TIME. THE CONTRACTOR FOR PID 122048 CAN CHOOSE TO REMOVE AND RETAIN THE SIGNAGE AND BARRICADES, OR UNDER SEPARATE AGREEMENT, ALLOW THE BRENT SPENCE BRIDGE CONTRACTOR TO RETAIN AND ASSUME CONTROL AND MAINTENANCE OF THE DETOURS, ANY DEFICIENCIES FOUND IN THE SIGNAGE AND BARRICADES FROM THIS INSPECTION SHALL BE CORRECTED BY THE CONTRACTOR. A SUMMARY OF SIGNAGE AND BARRICADES TRANSFERRED TO BRENT SPENCE BRIDGE CONTRACTOR SHALL BE PROVIDED TO THE ENGINEER AND WILL INCLUDE DOCUMENTATION OF CORRECTIVE ACTIONS NECESSARY TO CORRECT DEFICIENCIES FOUND IN THE INSPECTION

ADDITIONAL PROJECTS:
THE CONTRACTOR SHALL COORDINATE ALL WORK AND MOT WITH THE ENGINEER & CONTRACTOR(S) FOR ALL ADJACENT PROJECTS. IN THE EVENT OF A CONFLICT, WORK AND MOT ON ALL ADJACENT PROJECTS GOVERN AND CONTROL. RESEQUENCING OF WORK, ETC DUE TO CONFLICTS COMES AT NO ADDITIONAL COST TO THE DEPARTMENT OR TIME TO THE PROJECT.

VERTICAL CLEARANCE

ANY WORK (FALSEWORK, TRAFFIC PROTECTION, CONTAINMENT, ETC. OVER LIVE TRAFFIC BY THE CONTRACTOR THAT REDUCES THE EXISTING VERTICAL CLEARANCE IS PROHIBITED UNLESS 30 DAYS ADVANCED NOTICE IS PROVIDED WITH NEW PROPOSED VERTICAL CLEARANCES. THE CONTRACTOR SHALL PROVIDE FIELD MEASUREMENTS BEFORE ALLOWING TRAFFIC UNDERNEATH. NO WORK OVER TRAFFIC SHALL OCCUR WITH A VERTICAL CLEARANCE LESS THAN 14'-0". LOWERING THE VERTICAL CLEARANCE DURING CONSTRUCTION IS CONSIDERED THE CONTRACTOR'S MEANS AND METHODS OF ACCOMPLISHING THE WORK, AND THEREFORE THE STATE IS NOT RESPONSIBLE FOR ANY DAMAGE FROM VEHICULAR IMPACTS THAT MAY RESULT AS PER 107.10.

IF ANY WORK IS TO OCCUR THAT REDUCES THE EXISTING VERTICAL CLEARANCE, THEN THE FOLLOWING ADVANCE WARNING SIGNS SHALL BE INSTALLED A MINIMUM OF 2 WEEKS PRIOR TO PERFORMING SUCH WORK. SIGNING SHALL BE AS DETAILED IN THE OHIO MANUAL OF UNIFORM TRAFFIC CONTROL DEVICES (OMUTCD) OF THE TYPE AND LOCATION AS FOLLOWS:

- W12-2-48 SIGN DUAL MOUNTED AT OR WITHIN 100 FEET OF THE BRIDGE IN EACH DIRECTION.
- W12-2-48 SIGN WITH W16-2AP-30 PLAQUE (1000 FT) DUAL MOUNTED 1000 FEET BEFORE THE BRIDGE IN EACH DIRECTION (NORTHBOUND WILL BE TRIPLE MOUNTED).
- W12-2-48 SIGN WITH W16-3AP-30 PLAQUE (1 MILE) DUAL MOUNTED AT THE 2.0 MILE MARKER SOUTHBOUND; W16-3AP-30 PLAQUE (1/2 MILE) AT THE 0.32 MILE MARKER NORTHBOUND I-75; W16-3AP-30 PLAQUE (3/4 MILE) SINGLE MOUNTED OVERHEAD/OVERLAY ABOVE 3RD STREET ON THE RAMP FROM SOUTHBOUND I-71.
- THE HEIGHT LISTED ON THE W12-2 SIGN SHALL BE 3" LOWER THAN THE ACTUAL TEMPORARY VC.

DRUM REQUIREMENTS

IN ADDITION TO THE REQUIREMENTS OF THE PLANS, SPECIFICATION AND PROPOSAL, DRUMS FURNISHED BY THE CONTRACTOR SHALL BE NEW AND UNUSED AT THE TIME OF ARRIVAL ON THE PROJECT. ANY DRUMS BROUGHT ON THE PROJECT, WHICH HAVE PREVIOUSLY BEEN USED ELSEWHERE, WILL NOT BE ACCEPTED.

PAYMENT FOR DRUMS SHALL BE INCLUDED IN THE LUMP SUM PRICE BID FOR MAINTAINING TRAFFIC UNLESS SEPARATELY ITEMIZED.

COORDINATION BETWEEN CONTRACTORS

COORDINATION WILL BE REQUIRED WITH ADJACENT ODOT AND LOCAL PROJECTS. THERE WILL BE MULTIPLE ONGOING PROJECTS IN THE AREA, INCLUDING BUT NOT LIMITED TO:
ODOT BRENT SPENCE BRIDGE, PID 116649

METROPOLITIAN SEWER DISTRICT PROJECT 10142950 - EAST BRANCH OHIO RIVER INTERCEPTOR (EBORI) EXTENSION PROJECT (LAUNCH PIT AT WESTERN AVE/GEST STREET/SB I-75 ON RAMP)

THE CONTRACTOR SHALL COORDINATE ALL WORK AND MOT WITH THE ENGINEER & CONTRACTOR(S) FOR ALL ADJACENT PROJECTS. IN THE EVENT OF A CONFLICT, WORK AND MOT ON ALL ADJACENT PROJECTS GOVERN AND CONTROL. RESEQUENCING OF WORK, ETC DUE TO CONFLICTS COMES AT NO ADDITIONAL COST TO THE DEPARTMENT OR TIME TO THE PROJECT.

CITY OF CINCINNATI DOTE

- IF PROJECT ACTIVITIES ARE PERFORMED IN CITY OF CINCINNATI RIGHT OF WAY, OR WILL IMPACT LOCAL ROADS, THEN THE CONTRACTORS MUST APPLY FOR A CITY PERMIT.

- PERMITS: A CITY OF CINCINNATI DOTE PERMIT IS REQUIRED PRIOR TO THE ODOT CONTRACTOR COMMENCING WORK INSIDE THE CITY'S RIGHT OF WAY. PERMITS WILL BE AT "NO COST" AND REQUIRE DOTE'S GENERAL PERMIT TO BE APPLIED FOR.

- THE CITY OF CINCINNATI'S CITIZENS AND BUSINESSES HOST MANY MAJOR EVENTS THAT MAY AFFECT TRANSPORTATION ASSETS WITHIN THE PROJECT LIMITS. CITY ISSUED PERMITS MAY REQUIRE MAJOR EVENT WORK RESTRICTIONS ON THE CONTRACTOR'S ACTIVITIES. THE CITY MAINTAINS A LIST OF KNOWN MAJOR EVENTS AT THE FOLLOWING WEBSITE: HTTP://CINCINNATI-OH.GOV/POLICE/SPECIAL EVENTS-REGULATIONS-AUCTIONS/EVENT-PERMITS/ .

PATCHING RUMBLE STRIPS

THE CONTRACTOR SHALL MILL THE EXISTING RUMBLE STRIPS A WIDTH OF 3 FEET AT 1 ½ INCH DEPTH AND PAVE WITH 1 ½ INCH ITEM 448 ASPHALT CONCRETE SURFACE COURSE, TYPE 1. PAYMENT FOR ALL MATERIALS, LABOR AND EQUIPMENT SHALL BE INCLUDED FOR PAYMENT UNDER ITEM 614 MAINTAINING TRAFFIC, MISC.: RUMBLE STRIP MILLED/FILLED

THE FOLLOWING QUANTITIES HAVE BEEN CARRIED TO THE GENERAL SUMMARY:

ITEM 614 MAINTAINING TRAFFIC, MISC.: RUMBLE STRIP MILLED/FILLED - 1,400 FT.

INCENTIVE/DISINCENTIVE CONTRACT TABLE

DESCRIPTION OR LOCATION OF CRITICAL WORK	COMPLETION DATE	TIME PERIOD	DISINCENTIVE $ PER TIME PERIOD	INCENTIVE $ PER TIME PERIOD	MAX INCENTIVE $
COMPLETION OF PHASE 1; DEMOLITION OF THE ENTIRE EXISTING BRIDGE HAM-75-0150, PROPOSED FORWARD ABUTMENT AND PROPOSED PIER #2 AND SOILDER PILE PORTION OF WALL #2 (TO STA. 3+80.14)	8/15/2026	DAY	$25,000	$33,000	$1,000,000
COMPLETION OF BRIDGE HAM-75-0150 PROPOSED SUPERSTRUCTURE FRAMING AND REMOVAL OF TEMPORARY STEEL SUPPORT	2/15/2027	DAY	$25,000	$25,000	$500,000
OPENING OF LINN STREET BRIDGE TO ALL PEDESTRIAN AND VEHICULAR TRAFFIC	8/15/2027	DAY	$25,000	$25,000	$500,000

ADDM' NO.	DATE	DESCRIPTION
1	09/01/25	NOTES AND TABLE MODIFIED, NOTE REMOVED
	DATE COMPLETED	

GENERAL NOTES - MAINTENANCE OF TRAFFIC

DESIGN AGENCY
Palmer ENGINEERING
8350 E. KEMPER ROAD
SUITE B
CINCINNATI, OH 45249
(513) 469-1600

DESIGNER DPF
REVIEWER DCJ 12/20/24
PROJECT ID 122048
SHEET P.19 TOTAL P. 421

HAM-IR75-1.05

MODEL: Sheet - 5 PAPERSIZE: 34x22 (in.) DATE: 8/27/2025 TIME: 1:22:44 PM PLTDRV: OHDOT_PDF.pltcfg PENTBL: OHDOT_Pen.tbl USER: swalker@palmernet.com WORKSPACE: OHDOTCEv02 WORKSET: 122048 PRODUCT: OpenRoadsDesigner 24.00.00.205
pw:\\ohiodot-pw.bentley.com:ohiodot-pw-02\Documents\01 Active Projects\District 08\Hamilton\122048\402-Engineering_Palmer\Engineering\MOT\Sheets\122048_MN001.dgn

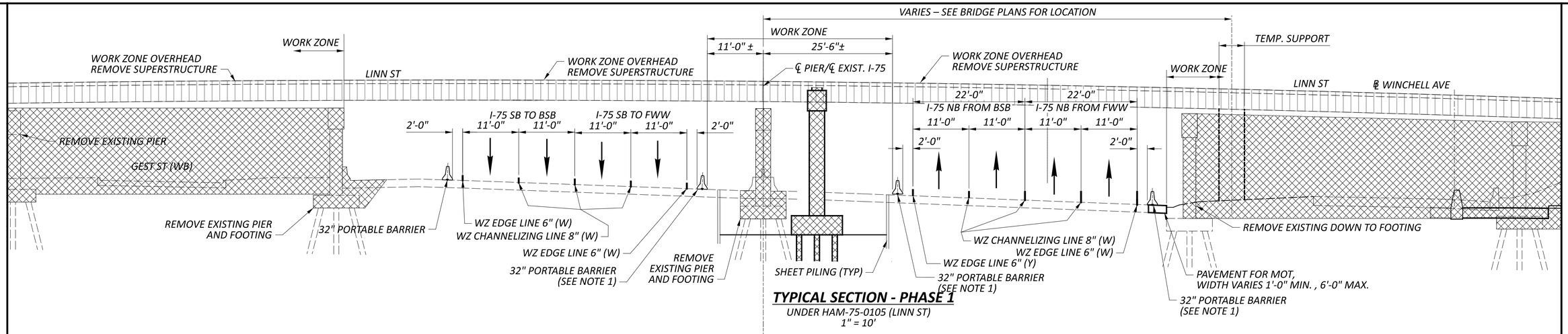

TYPICAL SECTION - PHASE 1

UNDER HAM-75-0105 (LINN ST)
1" = 10'

NOTE

1. SEE PLAN SHEET P.30 FOR LOCATIONS OF ANCHORED BARRIER.

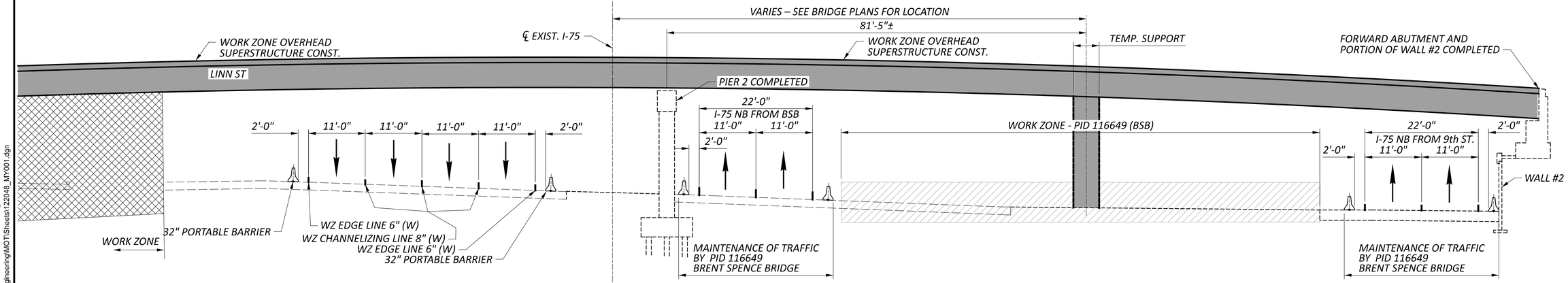

TYPICAL SECTION - PHASE 2

UNDER HAM-75-0105 (LINN ST) - STEEL ERECTION PHASE
1" = 10'

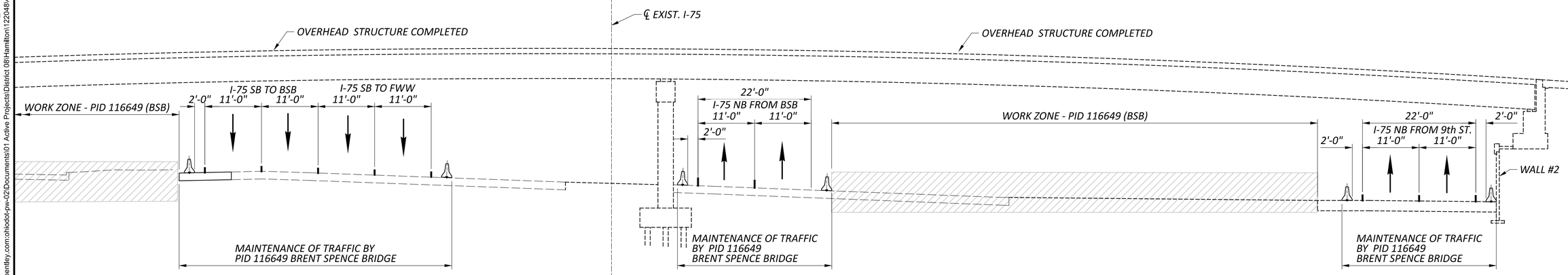

TYPICAL SECTION - PHASE 3

UNDER HAM-75-0105 (LINN ST) - BRIDGE COMPLETED AND OPEN TO TRAFFIC
1" = 10'

MAINTENANCE OF TRAFFIC TYPICAL SECTIONS

ADDM' NO.	DATE	DESCRIPTION
1	09/01/25	ADDED NOTE, MODIFIED ANNOTATION
DATE COMPLETED		

DESIGN AGENCY
Palmer ENGINEERING
8350 EAST KEMPER ROAD
SUITE B
CINCINNATI, OH 45249
(513) 469-1600

DESIGNER DPF
REVIEWER DCJ 12/20/24
PROJECT ID 122048
SHEET P.24 TOTAL P. 421

HAM-IR75-1.05

MODEL: Sheet PAPERSIZE: 34x22 (in.) DATE: 8/27/2025 TIME: 1:26:23 PM PLTDRV: OHDOT_PDF.pltcfg PENTBL: OHDOT_Pen.tbl USER: swalker@palmernet.com WORKSPACE: OHDOTCEv02 WORKSET: I122048 PRODUCT: OpenRoadsDesigner 24.00.00.205
pw:\\ohiodot-pw.bentley.com:ohiodot-pw-02\Documents\01 Active Projects\District 08\Hamilton\122048402-Engineering_PalmerEngineering\MOT\Sheets\122048_MY001.dgn

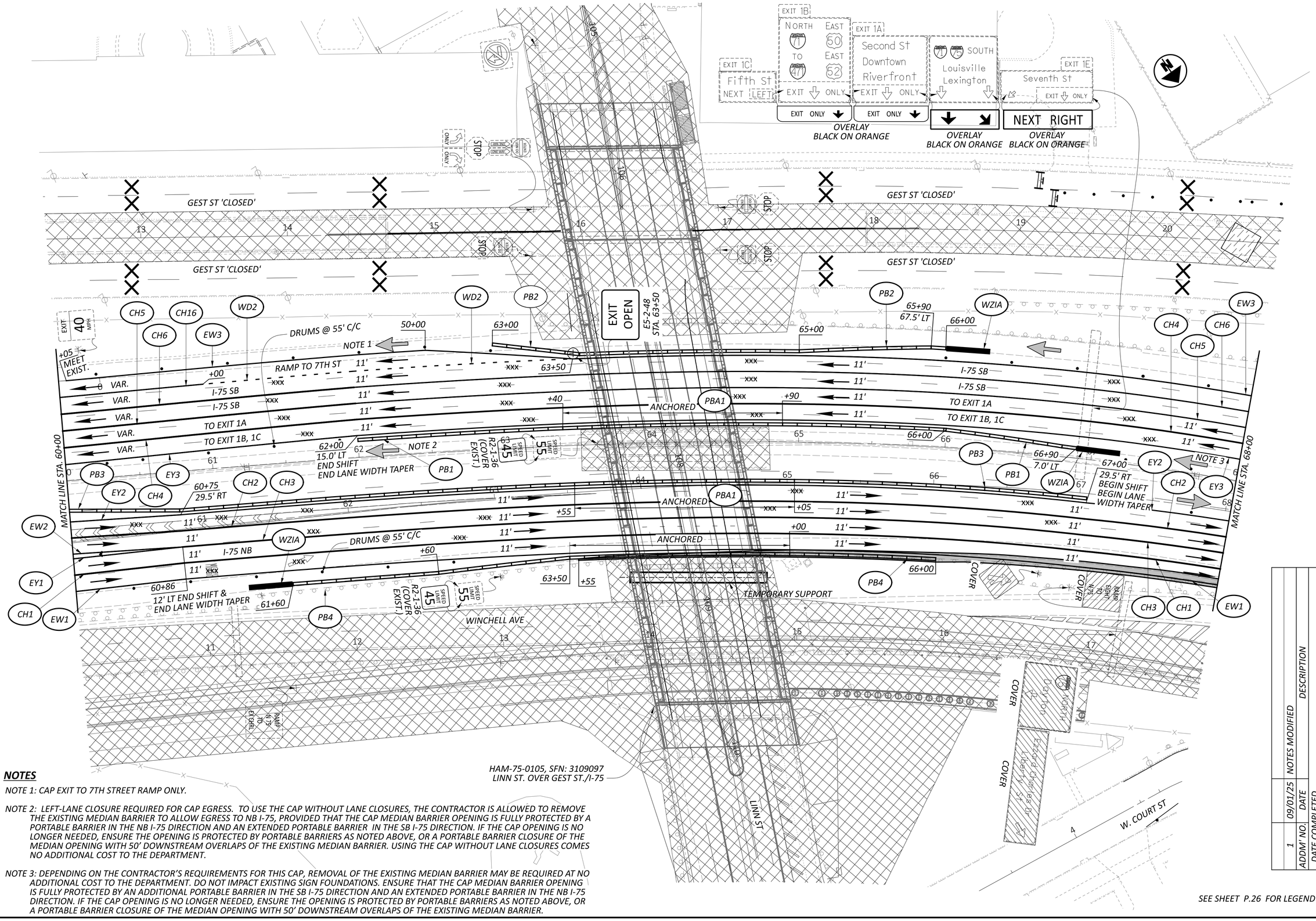

NOTES

NOTE 1: CAP EXIT TO 7TH STREET RAMP ONLY.

NOTE 2: LEFT-LANE CLOSURE REQUIRED FOR CAP EGRESS. TO USE THE CAP WITHOUT LANE CLOSURES, THE CONTRACTOR IS ALLOWED TO REMOVE THE EXISTING MEDIAN BARRIER TO ALLOW EGRESS TO NB I-75, PROVIDED THAT THE CAP MEDIAN BARRIER OPENING IS FULLY PROTECTED BY A PORTABLE BARRIER IN THE NB I-75 DIRECTION AND AN EXTENDED PORTABLE BARRIER IN THE SB I-75 DIRECTION. IF THE CAP OPENING IS NO LONGER NEEDED, ENSURE THE OPENING IS PROTECTED BY PORTABLE BARRIERS AS NOTED ABOVE, OR A PORTABLE BARRIER CLOSURE OF THE MEDIAN OPENING WITH 50' DOWNSTREAM OVERLAPS OF THE EXISTING MEDIAN BARRIER. USING THE CAP WITHOUT LANE CLOSURES COMES NO ADDITIONAL COST TO THE DEPARTMENT.

NOTE 3: DEPENDING ON THE CONTRACTOR'S REQUIREMENTS FOR THIS CAP, REMOVAL OF THE EXISTING MEDIAN BARRIER MAY BE REQUIRED AT NO ADDITIONAL COST TO THE DEPARTMENT. DO NOT IMPACT EXISTING SIGN FOUNDATIONS. ENSURE THAT THE CAP MEDIAN BARRIER OPENING IS FULLY PROTECTED BY AN ADDITIONAL PORTABLE BARRIER IN THE SB I-75 DIRECTION AND AN EXTENDED PORTABLE BARRIER IN THE NB I-75 DIRECTION. IF THE CAP OPENING IS NO LONGER NEEDED, ENSURE THE OPENING IS PROTECTED BY PORTABLE BARRIERS AS NOTED ABOVE, OR A PORTABLE BARRIER CLOSURE OF THE MEDIAN OPENING WITH 50' DOWNSTREAM OVERLAPS OF THE EXISTING MEDIAN BARRIER.

HAM-75-0105, SFN: 3109097
LINN ST. OVER GEST ST./I-75

NO.	DATE	DESCRIPTION
1	09/01/25	NOTES MODIFIED

SEE SHEET P.26 FOR LEGEND

HORIZONTAL SCALE IN FEET
0 15 30 60

MAINTENANCE OF TRAFFIC
IR 75 - PHASE 1

DESIGN AGENCY
Palmer ENGINEERING
8350 E. KEMPER ROAD
SUITE B
CINCINNATI, OH 45249
(513) 469-1600

DESIGNER DPF
REVIEWER DCJ 12/20/24
PROJECT ID 122048
SHEET P.30 TOTAL P. 421

HAM-IR75-1.05

MODEL: CLX_I81 - Plan 5 [Sheet] PAPERSIZE: 34x22 (in.) DATE: 8/27/2025 TIME: 1:27:55 PM PLTDRV: OHDOT_PDF.pltcfg PENTBL: OHDOT_Pen.tbl USER: swalker@palmernet.com WORKSPACE: OHDOTCEv02 WORKSET: 122048 PRODUCT: OpenRoadsDesigner 24.00.00.205
pw:\\ohiodot-pw.bentley.com:ohiodot-pw-02\Documents\01 Active Projects\District 08\Hamilton\122048\402 Engineering_PalmerEngineering\MOT\Sheets\122048_MP001.dgn

MAINTENANCE OF TRAFFIC
IR 75 - PHASE 2

HORIZONTAL SCALE IN FEET
0 15 30 60

EXIT 1B
NORTH 71 TO 471
EAST 50 EAST 52
EXIT ONLY

EXIT 1A
Second St
Downtown
Riverfront
EXIT ONLY

71 75 SOUTH
Louisville
Lexington

EXIT 1C
Fifth St
NEXT LEFT
EXIT ONLY

EXIT 1E
Seventh St
EXIT ONLY

OVERLAY BLACK ON ORANGE
EXIT ONLY
EXIT ONLY
NEXT RIGHT

GEST ST 'CLOSED'
STOP
EXIT OPEN
E5-2-48
STA. 63+50
LOT
108
109
110
111
112
113
114
115
116
117

EXIT 40 MPH
CH5
CH16
CH6
EW3
WD2
PB2
WZIA3
CH4
EY3
PB1
WZIA2

SEE NOTE 1
SEE NOTE 2
SEE NOTE 3

RAMP TO 7TH ST
I-75 SB
TO EXIT 1A
TO EXIT 1B, 1C
VAR.
11'

SPEED LIMIT 55
SPEED LIMIT 45
R2-1-36 (COVER EXIST.)

MATCH LINE STA. 60+00
MATCH LINE STA. 68+00

I-75 NB M.O.T. BY OTHERS
I-75 NB
TEMPORARY SUPPORT

RAMP FROM 9th ST
RAMP N 75 TO EX CH
RAMP EIGHTH TO N 75
RAMP A/9th ST M.O.T. BY OTHERS

NORTH
Davton
Ezzard Charles Dr
Liberty St
LINN ST
W. COURT ST

HAM-75-0105, SFN: 3109097
LINN ST. OVER GEST ST./I-75

NOTE 1: CAP EXIT TO 7TH STREET RAMP ONLY.

NOTE 2: LEFT-LANE CLOSURE REQUIRED FOR CAP EGRESS. TO USE THE CAP WITHOUT LANE CLOSURES, THE CONTRACTOR IS ALLOWED TO REMOVE THE EXISTING MEDIAN BARRIER TO ALLOW EGRESS TO NB I-75, PROVIDED THAT THE CAP MEDIAN BARRIER OPENING IS FULLY PROTECTED BY A PORTABLE BARRIER IN THE NB I-75 DIRECTION AND AN EXTENDED PORTABLE BARRIER IN THE SB I-75 DIRECTION. IF THE CAP OPENING IS NO LONGER NEEDED, ENSURE THE OPENING IS PROTECTED BY PORTABLE BARRIERS AS NOTED ABOVE, OR A PORTABLE BARRIER CLOSURE OF THE MEDIAN OPENING WITH 50' DOWNSTREAM OVERLAPS OF THE EXISTING MEDIAN BARRIER. USING THE CAP WITHOUT LANE CLOSURES COMES NO ADDITIONAL COST TO THE DEPARTMENT.

NOTE 3: CAP IS FOR PIER ACCESS FOR BEAM ERECTION AND BEARINGS AND OTHER WORK TO PIER THAT WAS BUILT IN PHASE 1. IF AN OPENING IN THE EXISTING MEDIAN BARRIER WAS USED FOR THE CAP IN PHASE 1, ENSURE IT IS FULLY PROTECTED BY AN ADDITIONAL PORTABLE BARRIER IN THE SB I-75 DIRECTION AND AN EXTENDED PORTABLE BARRIER IN THE NB I-75 DIRECTION, OR A PORTABLE BARRIER CLOSURE OF THE MEDIAN OPENING WITH 50' DOWNSTREAM OVERLAPS OF THE EXISTING MEDIAN BARRIER.

SEE SHEET P.26 FOR LEGEND

NO.	DATE	DESCRIPTION
1	09/01/25	ADDED NOTES, ADDED ANNOTATION

DESIGN AGENCY
Palmer ENGINEERING
8350 E. KEMPER ROAD
SUITE B
CINCINNATI, OH 45249
(513) 469-1600

DESIGNER DPF
REVIEWER DCJ 12/20/24
PROJECT ID 122048
SHEET P.38 TOTAL P. 421

HAM-IR75-1.05

MODEL: CLX_I81 - Plan 5 [Sheet] PAPERSIZE: 34x22 (in.) DATE: 8/27/2025 TIME: 1:20:02 PM PLTDRV: OHDOT_PDF.pltcfg PENTBL: OHDOT_Pen.tbl USER: swalker@palmernet.com WORKSPACE: OHDOTCEv02 WORKSET: 122048 PRODUCT: OpenRoadsDesigner 24.00.00.205
pw:\\ohiodot-pw.bentley.com:ohiodot-pw-02\Documents\01 Active Projects\District 08\Hamilton\122048\402-Engineering_PalmerEngineering\MOT\Sheets\122048_MP002.dgn

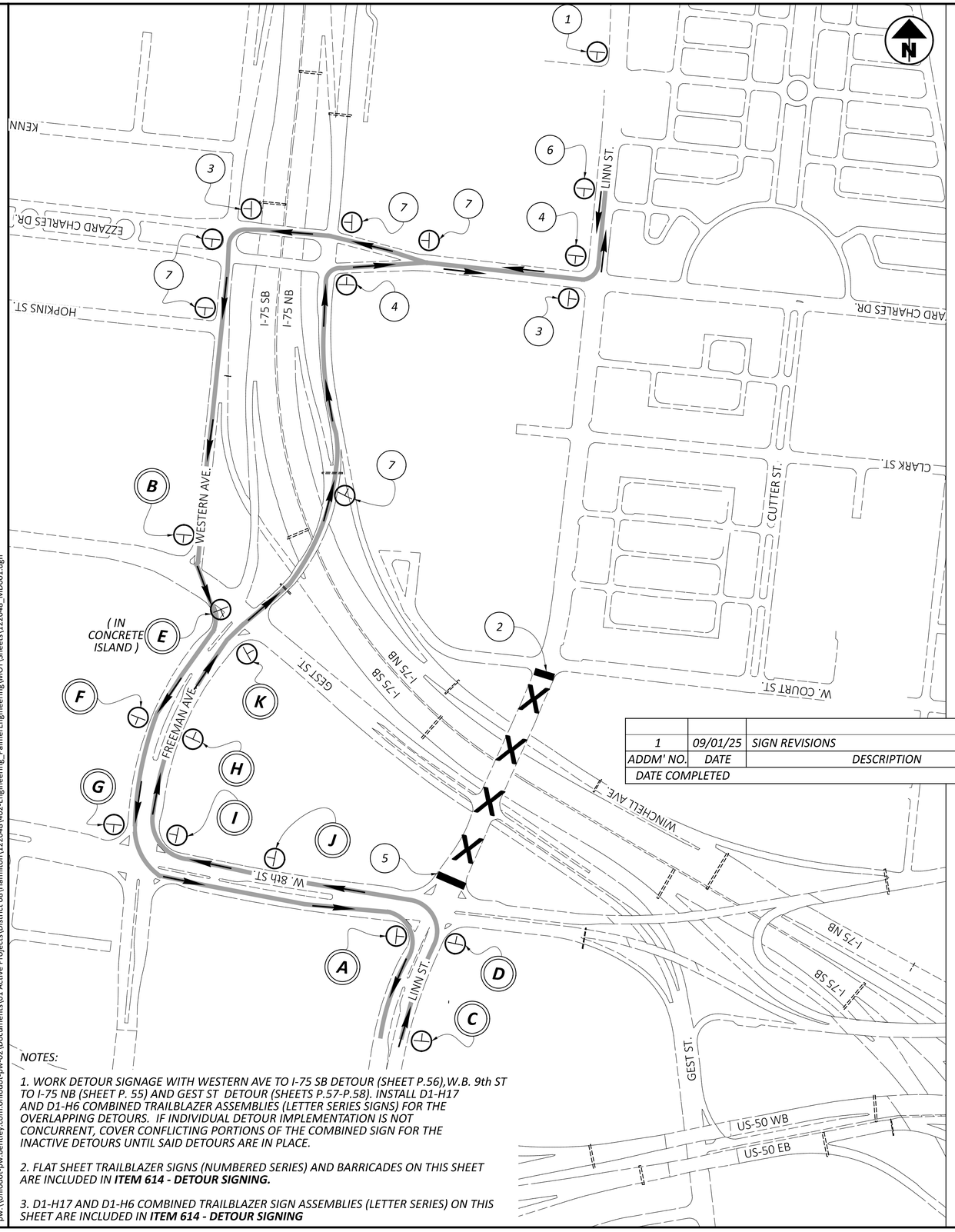

1	09/01/25	SIGN REVISIONS
ADDM' NO.	DATE	DESCRIPTION
DATE COMPLETED		

NOTES:

1. WORK DETOUR SIGNAGE WITH WESTERN AVE TO I-75 SB DETOUR (SHEET P.56),W.B. 9th ST TO I-75 NB (SHEET P. 55) AND GEST ST DETOUR (SHEETS P.57-P.58). INSTALL D1-H17 AND D1-H6 COMBINED TRAILBLAZER ASSEMBLIES (LETTER SERIES SIGNS) FOR THE OVERLAPPING DETOURS. IF INDIVIDUAL DETOUR IMPLEMENTATION IS NOT CONCURRENT, COVER CONFLICTING PORTIONS OF THE COMBINED SIGN FOR THE INACTIVE DETOURS UNTIL SAID DETOURS ARE IN PLACE.

*2. FLAT SHEET TRAILBLAZER SIGNS (NUMBERED SERIES) AND BARRICADES ON THIS SHEET ARE INCLUDED IN **ITEM 614 - DETOUR SIGNING.***

*3. D1-H17 AND D1-H6 COMBINED TRAILBLAZER SIGN ASSEMBLIES (LETTER SERIES) ON THIS SHEET ARE INCLUDED IN **ITEM 614 - DETOUR SIGNING***

1



W20-1-24

2

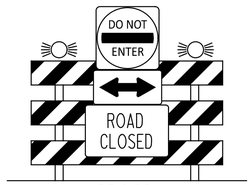

R5-1-36
W1-7-48
R11-2-48
TYPE 9 BARRICADE
PER MT 101.60

3

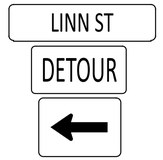

D3-1-36
M4-8-30
M6-1-30

4

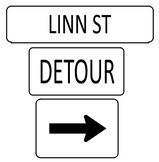

D3-1-36
M4-8-30
M6-1-30

5

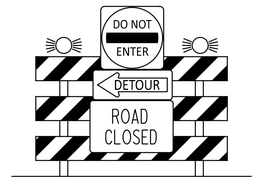

R5-1-36
M4-10L-48
R11-2-48
TYPE 9 BARRICADE
PER MT 101.60

6



D3-1-36
M4-8-30
M5-1-30

7

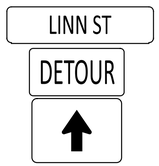

D3-1-36
M4-8-30
M6-3-30

A

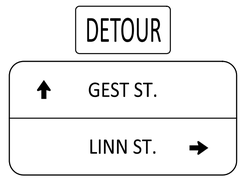

M4-8-30
D1-H6-VAR.

B

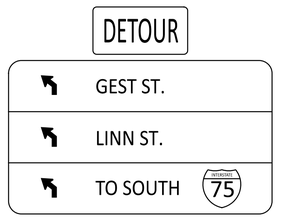

M4-8-30
D1-H17-VAR.

C

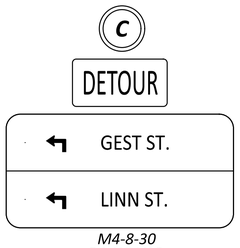

M4-8-30
D1-H6-VAR.

D

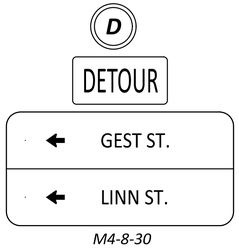

M4-8-30
D1-H6-48

E

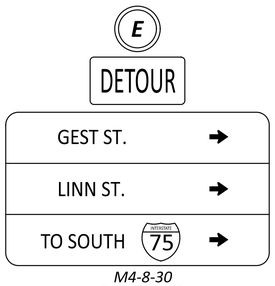

M4-8-30
D1-H17-VAR.

F

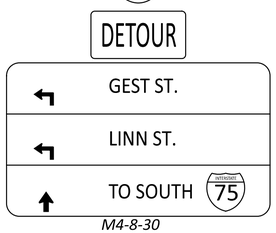

M4-8-30
D1-H17-VAR.

G

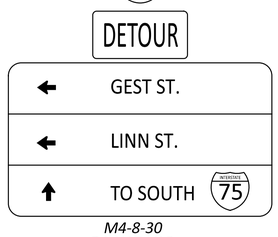

M4-8-30
D1-H17-VAR.

H

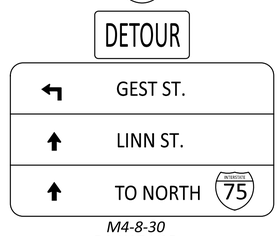

M4-8-30
D1-H17-VAR.

I

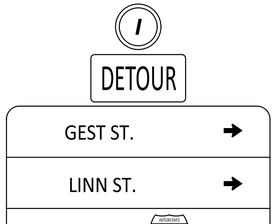

M4-8-30
D1-H17-VAR.

J

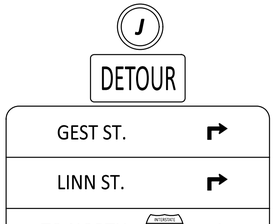

M4-8-30
D1-H17-VAR.

K

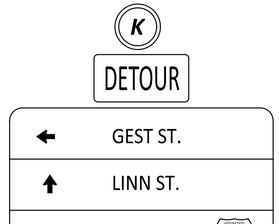

M4-8-30
D1-H17-VAR.

HORIZONTAL SCALE IN FEET
0 100 200 400

DETOUR PLAN
LINN STREET

HAM-IR75-1.05

MODEL: Sheet PAPERSIZE: 34x22 (in.) DATE: 8/27/2025 TIME: 1:30:57 PM PLTDRV: OHDOT_PDF.pltcfg PENTBL: OHDOT_Pen.tbl USER: swalker@palmernet.com WORKSPACE: OHDOTCEv02 WORKSET: 122048 PRODUCT: OpenRoadsDesigner 24.00.00.205
pw:\\ohiodot-pw.bentley.com:ohiodot-pw-02\Documents\01 Active Projects\District 08\Hamilton\122048\402-Engineering_PalmerEngineering\MOT\Sheets\122048_MD001.dgn

DESIGN AGENCY
Palmer ENGINEERING
8350 E. KEMPER ROAD
SUITE B
CINCINNATI, OH 45249
(513) 469-1600

DESIGNER DPF
REVIEWER DCJ 12/20/24
PROJECT ID 122048
SHEET P.52 TOTAL P. 421

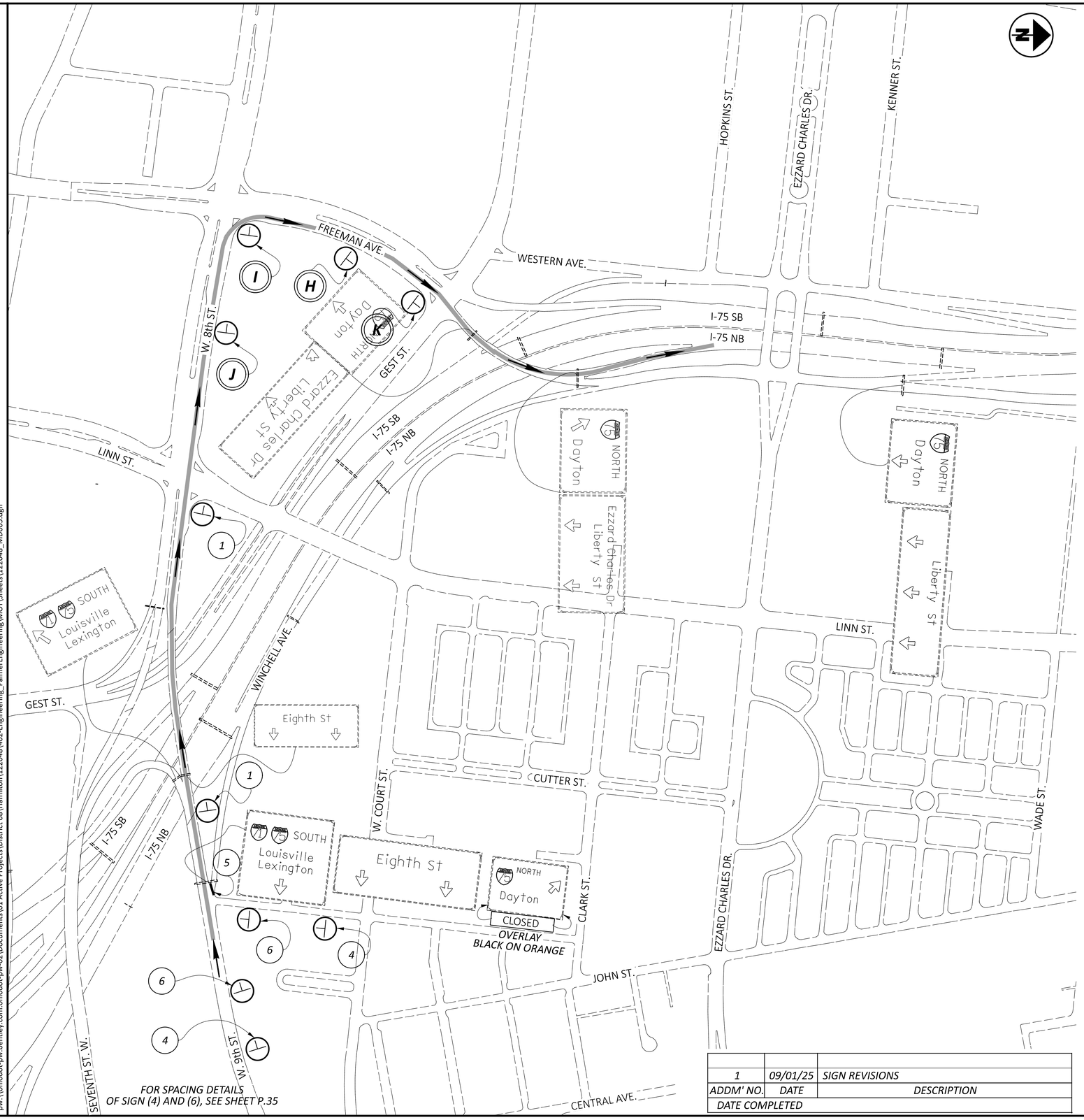

1

DETOUR
NORTH
INTERSTATE 75

M4-8-24
M3-1-24
M1-1-24-2
M6-3-21

2

DETOUR
NORTH
INTERSTATE 75

M4-8-24
M3-1-24
M1-1-24-2
M5-1-21

3

DETOUR
NORTH
INTERSTATE 75

M4-8-24
M3-1-24
M1-1-24-2
M5-2-21

4

ROAD WORK AHEAD

W20-1-30

5

ROAD CLOSED

R11-2-48
TYPE 3 BARRICADE
PER MT 101.60

6

RAMP CLOSED AHEAD

E5-H2f-48

H

DETOUR

GEST ST.
LINN ST.
TO NORTH 75

M4-8-30
D1-H17-VAR.

I

DETOUR

GEST ST.
LINN ST.
TO NORTH 75

M4-8-30
D1-H17-VAR.

J

DETOUR

GEST ST.
LINN ST.
TO NORTH 75

M4-8-30
D1-H17-VAR.

K

DETOUR

GEST ST.
LINN ST.
TO NORTH 75

M4-8-30
D1-H17-VAR.

NOTES:

1. WORK DETOUR SIGNAGE WITH LINN ST DETOUR (SHEET P.52), W.B. 9th ST TO I-75 NB (SHEET P. 55) AND GEST ST DETOUR (SHEETS P.57-P.58). INSTALL D1-H17 AND D1-H6 COMBINED TRAILBLAZER ASSEMBLIES (LETTER SERIES SIGNS) FOR THE OVERLAPPING DETOURS. IF INDIVIDUAL DETOUR IMPLEMENTATION IS NOT CONCURRENT, COVER CONFLICTING PORTIONS OF THE COMBINED SIGN FOR THE INACTIVE DETOURS UNTIL SAID DETOURS ARE IN PLACE.

*2. FLAT SHEET TRAILBLAZER SIGNS (NUMBERED SERIES) AND BARRICADES ON THIS SHEET ARE INCLUDED IN **ITEM 614 - DETOUR SIGNING.***

*3. D1-H17 AND D1-H6 COMBINED TRAILBLAZER SIGN ASSEMBLIES (LETTER SERIES) ON THIS SHEET ARE INCLUDED IN **ITEM 614 - DETOUR SIGNING***

1	09/01/25	SIGN REVISIONS
ADDM' NO.	DATE	DESCRIPTION
DATE COMPLETED		

HORIZONTAL SCALE IN FEET
0 100 200 400

DETOUR PLAN
W.B. 9th ST. TO I-75 N.B.

HAM-IR75-1.05

MODEL: Sheet PAPERSIZE: 34x22 (in.) DATE: 8/27/2025 TIME: 1:32:09 PM PLTDRV: OHDOT_PDF.pltcfg PENTBL: OHDOT_Pen.tbl USER: swalker@palmernet.com WORKSPACE: OHDOTCEv02 WORKSET: 122048 PRODUCT: OpenRoadsDesigner 24.00.00.205
pw:\\ohiodot-pw.bentley.com:ohiodot-pw-02\Documents\01 Active Projects\District 08\Hamilton\122048\402-Engineering_PalmerEngineering\MOT\Sheets\122048_MD005.dgn

DESIGN AGENCY
Palmer ENGINEERING
8350 E. KEMPER ROAD
SUITE B
CINCINNATI, OH 45249
(513) 469-1600

DESIGNER DPF
REVIEWER DCJ 12/20/24
PROJECT ID 122048
SHEET P.55 TOTAL P. 421

MODEL: Sheet PAPERSIZE: 34x22 (in.) DATE: 8/27/2025 TIME: 1:33:38 PM PLTDRV: OHDOT_PDF.pltcfg PENTBL: OHDOT_Pen.tbl USER: swalker@palmernet.com WORKSPACE: WORKSPACE: OHDOTCEv02 WORKSET: 122048 PRODUCT: OpenRoadsDesigner 24.00.00.205
pw:\\ohiodot-pw.bentley.com:ohiodot-pw-02\Documents\01 Active Projects\District 08\Hamilton\122048\402-Engineering_PalmerEngineering\MOT\Sheets\122048_MD006.dgn

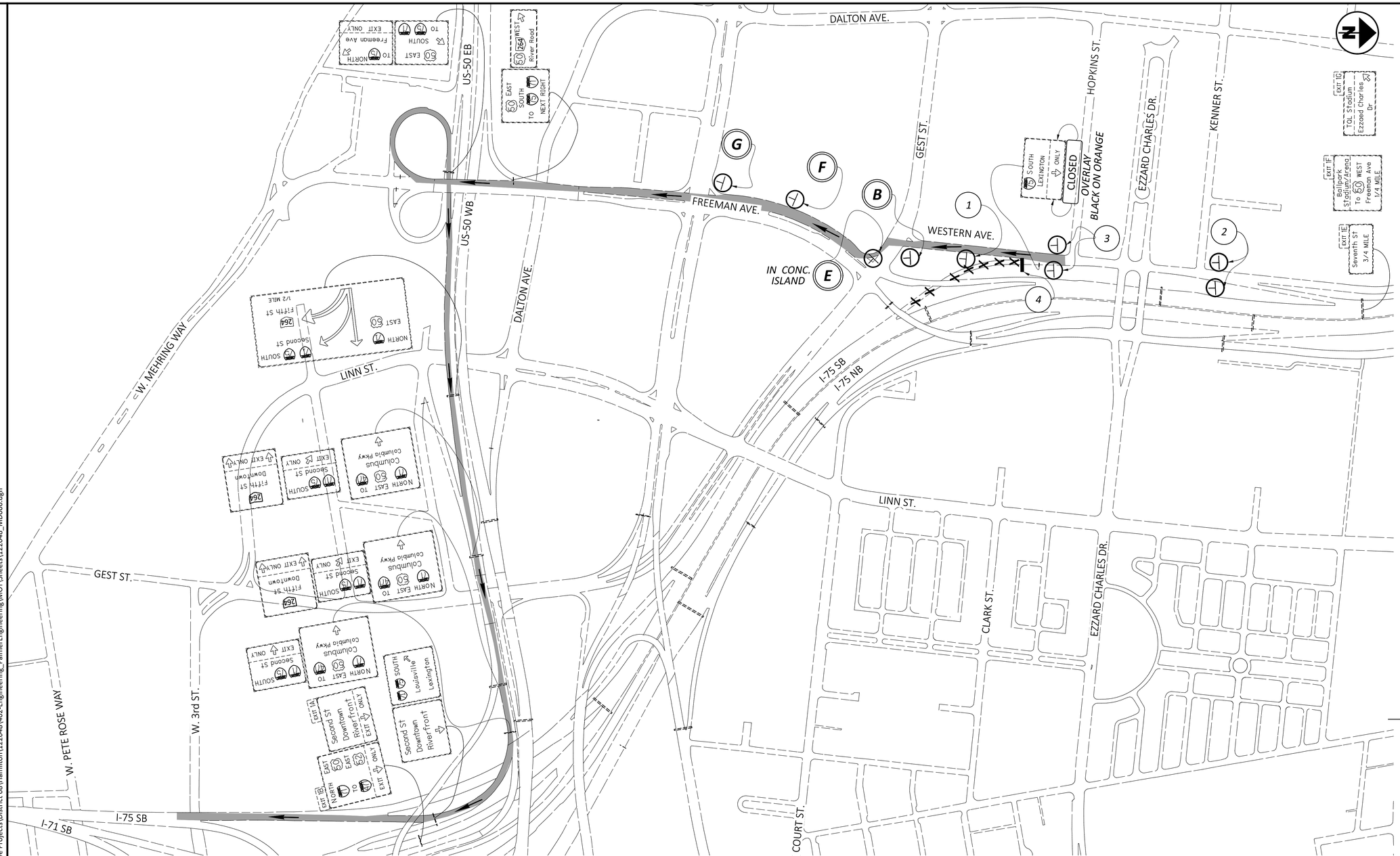

1
DETOUR
SOUTH
INTERSTATE
75

M4-8-24
M1-1-24-2
M3-3-24
M5-1L-21

2
RAMP CLOSED AHEAD

E5-H2f-48

3
RAMP CLOSED

E5-H2e-48

4
ROAD CLOSED

R11-2-48
TYPE 3 BARRICADE
PER MT 101.60

B
DETOUR
GEST ST.
LINN ST.
TO SOUTH 75

M4-8-30
D1-H17-VAR.

E
DETOUR
GEST ST.
LINN ST.
TO SOUTH 75

M4-8-30
D1-H17-VAR.

F
DETOUR
GEST ST.
LINN ST.
TO SOUTH 75

M4-8-30
D1-H17-VAR.

G
DETOUR
GEST ST.
LINN ST.
TO SOUTH 75

M4-8-30
D1-H17-VAR.

NOTES:

1. WORK DETOUR SIGNAGE WITH LINN ST DETOUR (SHEET P.52), WESTERN AVE TO I-75 SB DETOUR (SHEET P.56) AND GEST ST DETOUR (SHEETS P.57-P.58). INSTALL D1-H17 AND D1-H6 COMBINED TRAILBLAZER ASSEMBLIES (LETTER SERIES SIGNS) FOR THE OVERLAPPING DETOURS. IF INDIVIDUAL DETOUR IMPLEMENTATION IS NOT CONCURRENT, COVER CONFLICTING PORTIONS OF THE COMBINED SIGN FOR THE INACTIVE DETOURS UNTIL SAID DETOURS ARE IN PLACE.

2. ALL SIGNAGE AND BARRICADES ON THIS SHEET ARE INCLUDED IN ***ITEM 614 - DETOUR SIGNING***

HORIZONTAL SCALE IN FEET
0 125 250 500

DETOUR PLAN - PHASE 1B
WESTERN AVE TO I-75 S.B.

1	09/01/25	SIGN REVISIONS
ADDM' NO.	DATE	DESCRIPTION
DATE COMPLETED		

DESIGN AGENCY
Palmer ENGINEERING
8350 EAST KEMPER ROAD
SUITE B
CINCINNATI, OH 45249
(513) 469-1600

DESIGNER DPF
REVIEWER DCJ 12/20/24
PROJECT ID 122048
SHEET P.56 TOTAL P. 421

NOTES:

1. WORK DETOUR SIGNAGE WITH LINN ST DETOUR (SHEET P.52), AND WESTERN TO I-75 SB DETOUR (SHEET P.56). INSTALL D1-H17 AND D1-H6 COMBINED TRAILBLAZER ASSEMBLIES (LETTER SERIES SIGNS) FOR THE OVERLAPPING DETOURS. IF INDIVIDUAL DETOUR IMPLEMENTATION IS NOT CONCURRENT, COVER CONFLICTING PORTIONS OF THE COMBINED SIGN FOR THE INACTIVE DETOURS UNTIL SAID DETOURS ARE IN PLACE.

2. ALL SIGNAGE AND BARRICADES ON THIS SHEET ARE INCLUDED IN **ITEM 614 - DETOUR SIGNING**

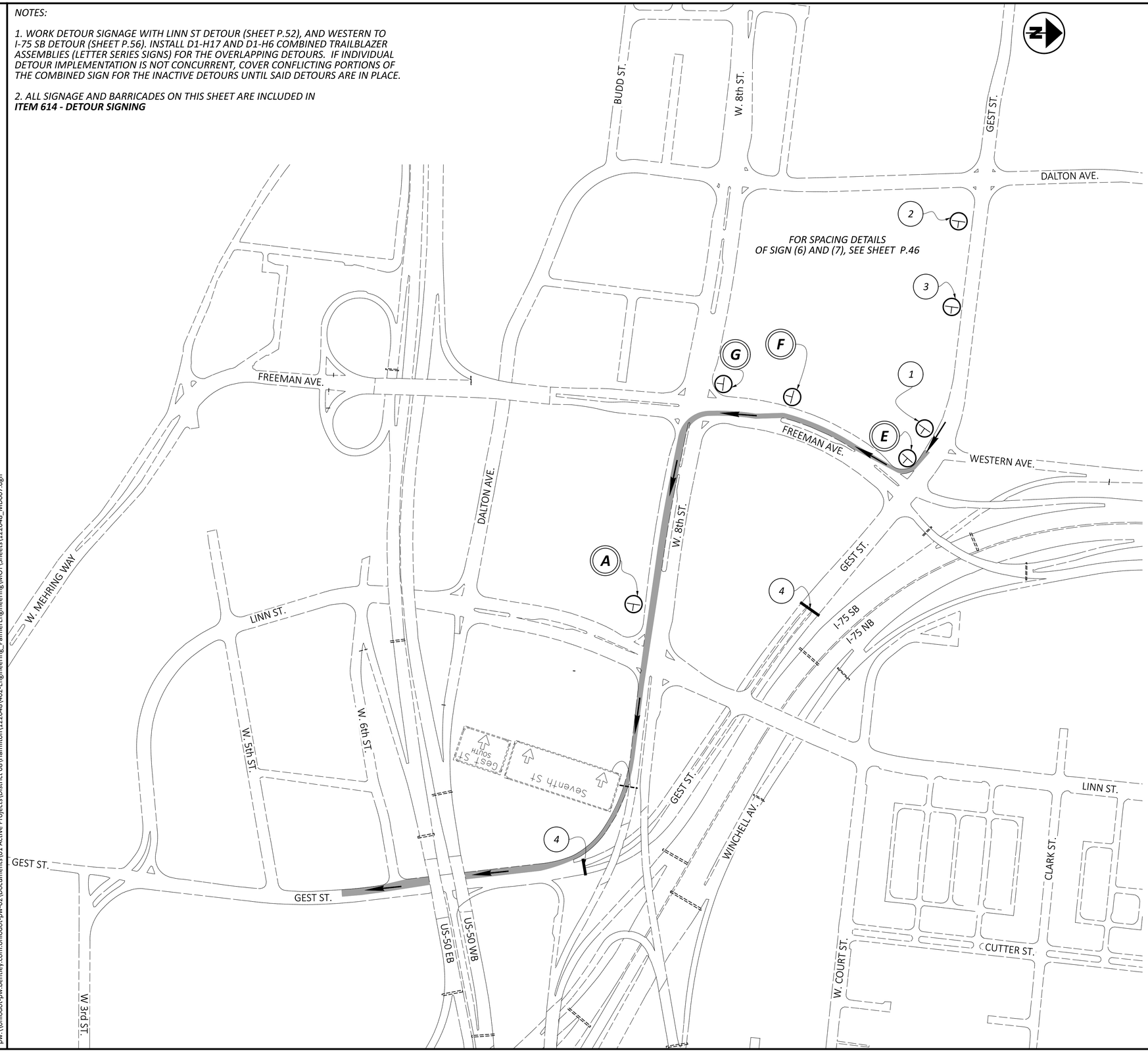

1

Gest St.
DETOUR

D3-1-36
M4-8-30
M5-1-30
STA. 30+00

2

ROAD WORK AHEAD

W20-1-36
STA. 34+00

3

Gest St.
ROAD CLOSED AHEAD
1000 FEET

D3-1-36
W20-3-36
W16-2P-18
STA. 33+00

4

ROAD CLOSED

R11-2-48
TYPE 3 BARRICADE
PER MT 101.60

A

DETOUR
GEST ST. ←
LINN ST. →

M4-8-30
D1-H6-VAR.

E

DETOUR
GEST ST. →
LINN ST. →
TO SOUTH 75 →

M4-8-30
D1-H17-VAR.

F

DETOUR
← GEST ST.
← LINN ST.
↑ TO SOUTH 75

M4-8-30
D1-H17-VAR.

G

DETOUR
← GEST ST.
← LINN ST.
↑ TO SOUTH 75

M4-8-30
D1-H17-VAR.

HORIZONTAL SCALE IN FEET
0 125 250 500

DETOUR PLAN EASTBOUND GEST STREET

HAM-IR75-1.05

MODEL: Sheet PAPERSIZE: 34x22 (in.) DATE: 8/27/2025 TIME: 1:34:56 PM PLTDRV: OHDOT_PDF.pltcfg PENTBL: OHDOT_Pen.tbl USER: swalker@palmernet.com WORKSPACE: OHDOTCivil WORKSET: 122048 PRODUCT: OpenRoadsDesigner 24.00.00.205
pw:\\ohiodot-pw.bentley.com:ohiodot-pw-02\Documents\01 Active Projects\District 08\Hamilton\122048\02-Engineering_Palmer\Engineering\MOT\Sheets\122048_MD007.dgn

DESIGN AGENCY
Palmer ENGINEERING
8350 E. KEMPER ROAD
SUITE B
CINCINNATI, OH 45249
(513) 469-1600

DESIGNER DPF
REVIEWER DCJ 12/20/24
PROJECT ID 122048
SHEET P.57 TOTAL P. 421

ADDM' NO.	DATE	DESCRIPTION
1	09/01/25	SIGN REVISIONS

DATE COMPLETED

NOTES:

1. WORK DETOUR SIGNAGE WITH LINN ST DETOUR (SHEET P.52), AND 9TH ST TO I-75 NB DETOUR (SHEET P.55). INSTALL D1-H17 AND D1-H6 COMBINED TRAILBLAZER ASSEMBLIES (LETTER SERIES SIGNS) FOR THE OVERLAPPING DETOURS. IF INDIVIDUAL DETOUR IMPLEMENTATION IS NOT CONCURRENT, COVER CONFLICTING PORTIONS OF THE COMBINED SIGN FOR THE INACTIVE DETOURS UNTIL SAID DETOURS ARE IN PLACE.

2. ALL SIGNAGE AND BARRICADES ON THIS SHEET ARE INCLUDED IN ***ITEM 614 - DETOUR SIGNING***

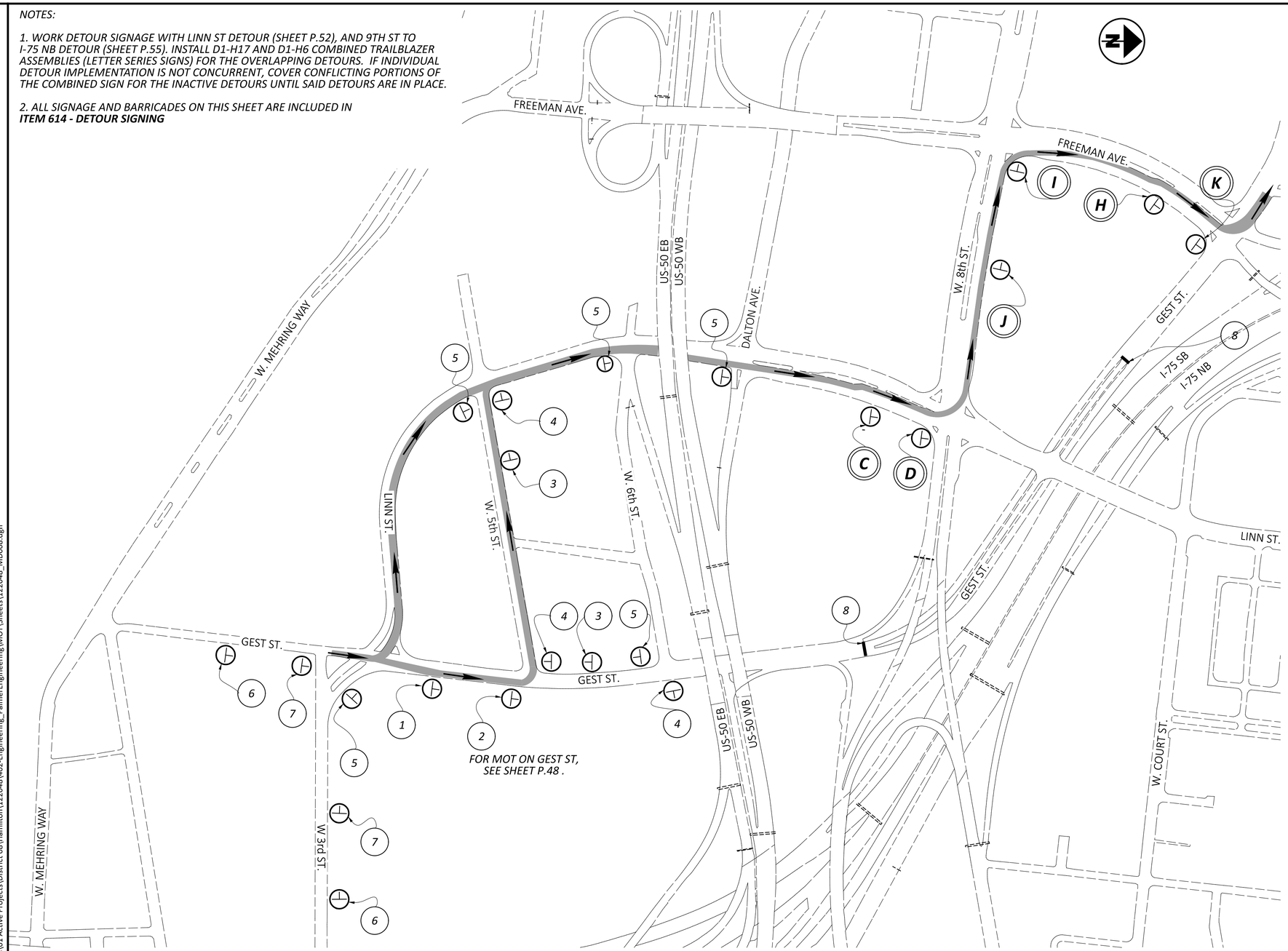

1
GEST ST
DETOUR
D3-1-36
M4-8-30
M5-1-30

2
GEST ST
DETOUR
D3-1-36
M4-8-30
M6-1-30

3
GEST ST
DETOUR
D3-1-36
M4-8-30
M5-1-30

4
GEST ST
DETOUR
D3-1-36
M4-8-30
M6-1-30

5
GEST ST
DETOUR
D3-1-36
M4-8-30
M6-1-30

6
DETOUR AHEAD
W20-2-36

7
GEST ST
ROAD CLOSED AHEAD
D3-1-36
W20-3-36

8
ROAD CLOSED
R11-2-48
TYPE 3 BARRICADE
PER MT 101.60

C
DETOUR
GEST ST.
LINN ST.
M4-8-30
D1-H6-VAR.

D
DETOUR
GEST ST.
LINN ST.
M4-8-30
D1-H6-VAR.

H
DETOUR
GEST ST.
LINN ST.
TO NORTH 75
M4-8-30
D1-H17-VAR.

I
DETOUR
GEST ST.
LINN ST.
TO NORTH 75
M4-8-30
D1-H17-VAR.

J
DETOUR
GEST ST.
LINN ST.
TO NORTH 75
M4-8-30
D1-H17-VAR.

K
DETOUR
GEST ST.
LINN ST.
TO NORTH 75
M4-8-30
D1-H17-VAR.

HORIZONTAL SCALE IN FEET
0 125 250 500

DETOUR PLAN
WESTBOUND GEST STREET

ADDM' NO.	DATE	DESCRIPTION
1	---	SIGN REVISIONS, ROUTE REVISION
DATE COMPLETED		

DESIGN AGENCY
Palmer ENGINEERING
8350 E. KEMPER ROAD
SUITE B
CINCINNATI, OH 45249
(513) 469-1600

DESIGNER DPF
REVIEWER DCJ 12/20/24
PROJECT ID 122048
SHEET P.58 TOTAL P. 421

HAM-IR75-1.05

MODEL: Sheet PAPERSIZE: 34x22 (in.) DATE: 8/27/2025 TIME: 1:36:03 PM PLTDRV: OHDOT_PDF.pltcfg PENTBL: OHDOT_Pen.tbl USER: swalker@palmernet.com WORKSPACE: OHDOTCivil3D WORKSET: 122048 PRODUCT: OpenRoadsDesigner 24.00.00.205
pw:\\ohiodot-pw.bentley.com:ohiodot-pw-02\Documents\01 Active Projects\District 08\Hamilton\122048\402-Engineering_PalmerEngineering\MOT\Sheets\122048_MD0008.dgn

SHEET NUM.										PART.			ITEM	ITEM EXT	GRAND TOTAL	UNIT	DESCRIPTION	SEE SHEET NO.
OFFICE CALCS	P.11	P.13	P.68	P.69	P.74	P.90	P.148			01/IMS	02/IMS	03/IMS						
																	ROADWAY	
										LS			201	11000	LS		CLEARING AND GRUBBING	
			9,679				144			9,268		731	202	23000	9,999	SY	PAVEMENT REMOVED	
			8,059							8,059			202	30000	8,059	SF	WALK REMOVED	
		45								45			202	30600	45	SY	CONCRETE MEDIAN REMOVED	
		249	3,302							3,551			202	32000	3,551	FT	CURB REMOVED	
			656							656			202	35100	656	FT	PIPE REMOVED, 24" DIAMETER AND UNDER	
		139	2,224							2,363			202	38000	2,363	FT	GUARDRAIL REMOVED	
			1							1			202	42001	1	EACH	ANCHOR ASSEMBLY REMOVED, TYPE A, AS PER PLAN	P.12
			1							1			202	58000	1	EACH	MANHOLE REMOVED	
			10							10			202	58100	10	EACH	CATCH BASIN REMOVED	
		1,000								1,000			SPECIAL	20270110	1,000	FT	PIPE CLEANOUT, 24" AND UNDER	P.13
		215								215			SPECIAL	20270120	215	FT	PIPE CLEANOUT, 27" TO 48"	P.13
		1,250								1,250			SPECIAL	20270130	1,250	FT	PIPE CLEANOUT OVER 48"	P.13
			1,705							1,705			202	75000	1,705	FT	FENCE REMOVED	
			440							440			202	98200	440	FT	REMOVAL MISC.: RETAINING WALL	P.12
						16,726				16,726			203	10000	16,726	CY	EXCAVATION	
						2,106				2,106			203	20000	2,106	CY	EMBANKMENT	
						653				653			203	20001	653	CY	EMBANKMENT, AS PER PLAN	P.12
					1,409					1,409			204	13000	1,409	CY	EXCAVATION OF SUBGRADE	
					1,409					1,409			204	30020	1,409	CY	GRANULAR MATERIAL, TYPE C	
					5					5			204	45000	5	HOUR	PROOF ROLLING	
					4,225					4,225			204	50000	4,225	SY	GEOTEXTILE FABRIC	
					199					199			206	10500	199	TON	CEMENT	
					6,643					6,643			206	11000	6,643	SY	CURING COAT	
					6,643					6,643			206	15020	6,643	SY	CEMENT STABILIZED SUBGRADE, 14 INCHES DEEP	
LS										LS			206	30000	LS		MIXTURE DESIGN FOR CHEMICALLY STABILIZED SOILS	
		100		450						550			606	15050	550	FT	GUARDRAIL, TYPE MGS	
		1		1						2			606	26150	2	EACH	ANCHOR ASSEMBLY, MGS TYPE E (MASH 2016)	
				1						1			606	26550	1	EACH	ANCHOR ASSEMBLY, MGS TYPE T	
				1						1			606	35002	1	EACH	MGS BRIDGE TERMINAL ASSEMBLY, TYPE 1	
		1								1			606	60022	1	EACH	IMPACT ATTENUATOR, TYPE 2 (UNIDIRECTIONAL) (35 MPH)	P.13
				104						104			607	98000	104	FT	FENCE, MISC.: WOOD FENCE	P.12
				31,812						31,812			608	12000	31,812	SF	5" CONCRETE WALK	
				754						754			608	52000	754	SF	CURB RAMP	
				54						54			608	98000	54	SF	WALKWAY, MISC.: 12" CONCRETEWALK	P.12
				194						194			622	10120	194	FT	CONCRETE BARRIER, SINGLE SLOPE, TYPE C	
				20						20			622	10160	20	FT	CONCRETE BARRIER, SINGLE SLOPE, TYPE D	
				1						1			622	25000	1	EACH	CONCRETE BARRIER END SECTION, TYPE D	
				1						1			622	25008	1	EACH	CONCRETE BARRIER, END ANCHORAGE, REINFORCED, TYPE C	
				1						1			622	25050	1	EACH	CONCRETE BARRIER, END ANCHORAGE, REINFORCED, TYPE D	
				273						273			622	41100	273	FT	PORTABLE BARRIER, UNANCHORED	
		640								640			622	41110	640	FT	PORTABLE BARRIER, ANCHORED	
LS										LS			SPECIAL	69098400	LS		CONSULTANT FOR CONCRETE QUALITY CONTROL INCLUDING TESTING AND INSPECTION	P.13
																	EROSION CONTROL	
	2									2			659	00100	2	EACH	SOIL ANALYSIS TEST	
	985									985			659	00300	985	CY	TOPSOIL	
	8,873									8,873			659	10000	8,873	SY	SEEDING AND MULCHING	
	444									444			659	14000	444	SY	REPAIR SEEDING AND MULCHING	
	444									444			659	15000	444	SY	INTER-SEEDING	
	1.31									1.31			659	20000	1.31	TON	COMMERCIAL FERTILIZER	
	1.83									1.83			659	31000	1.83	ACRE	LIME	
	49									49			659	35000	49	MGAL	WATER	
LS										LS			832	15000	LS		STORM WATER POLLUTION PREVENTION PLAN	
LS										LS			832	15002	LS		STORM WATER POLLUTION PREVENTION INSPECTIONS	
LS										LS			832	15010	LS		STORM WATER POLLUTION PREVENTION INSPECTION SOFTWARE	
55,000										55,000			832	30000	55,000	EACH	EROSION CONTROL	

GENERAL SUMMARY

HAM-IR 75-1.05

MODEL: Sheet PAPERSIZE: 34x22 (in.) DATE: 8/28/2025 TIME: 10:11:43 AM PLTDRV: OHDOT_PDF.pltcfg PENTBL: OHDOT_Pen.tbl USER: WORKSPACE: OHDOTCEv02 WORKSET: I122048 PRODUCT: OpenRoadsDesigner 10.12.02.4
pw:\\ohiodot-pw.bentley.com:ohiodot-pw-02\Documents\01 Active Projects\District 08\Hamilton\122048\403-Engineering_StructurePoint\Roadway\Sheets\122048_GG301.dgn

DESIGN AGENCY
STRUCTUREPOINT LLC
a WSP company

DESIGNER
LZS

REVIEWER
KAM 03/03/25

PROJECT ID
122048

SHEET P.59 TOTAL P.421

SHEET NUM.										PART.			ITEM	ITEM EXT	GRAND TOTAL	UNIT	DESCRIPTION	SEE SHEET NO.
OFFICE CALCS	P.12	P.13	P.69	P.71	P.72	P.74	P.148	P.149	P.203	01/IMS	02/IMS	03/IMS						
																	DRAINAGE	
					2,245					2,245			605	11100	2,245	FT	6" SHALLOW PIPE UNDERDRAINS	
	100									100			605	13300	100	FT	6" UNCLASSIFIED PIPE UNDERDRAINS	
	100				240					340			611	00510	340	FT	6" CONDUIT, TYPE F FOR UNDERDRAIN OUTLETS	
				450						450			611	04401	450	FT	12" CONDUIT, TYPE B, AS PER PLAN	P.13
				931						931			611	04401	931	FT	12" CONDUIT, TYPE B, AS PER PLAN (CINCINNATI)	P.13
				43						43			611	04601	43	FT	12" CONDUIT, TYPE C, AS PER PLAN	P.13
				96						96			611	04601	96	FT	12" CONDUIT, TYPE C, AS PER PLAN (CINCINNATI)	P.13
				287						287			611	05901	287	FT	15" CONDUIT, TYPE B, AS PER PLAN	P.13
				263						263			611	05901	263	FT	15" CONDUIT, TYPE B, AS PER PLAN (CINCINNATI)	P.13
				49						49			611	06101	49	FT	15" CONDUIT, TYPE C, AS PER PLAN (CINCINNATI)	P.13
				339						339			611	07401	339	FT	18" CONDUIT, TYPE B, AS PER PLAN	P.13
				254						254			611	07401	254	FT	18" CONDUIT, TYPE B, AS PER PLAN (CINCINNATI)	P.13
				50						50			611	07601	50	FT	18" CONDUIT, TYPE C, AS PER PLAN	P.13
				24						24			611	07601	24	FT	18" CONDUIT, TYPE C, AS PER PLAN (CINCINNATI)	P.13
				53						53			611	10401	53	FT	24" CONDUIT, TYPE B, AS PER PLAN	P.13
				268						268			611	97000	268	FT	SLOTTED DRAIN, TYPE 1, 6"	P.13
				4						4			611	98150	4	EACH	CATCH BASIN, NO. 3	
				16						16			611	98180	16	EACH	CATCH BASIN, NO. 3A	
				5						5			611	98370	5	EACH	CATCH BASIN, NO. 6	
				2						2			611	98470	2	EACH	CATCH BASIN, NO. 2-2B	
				1						1			611	98510	1	EACH	CATCH BASIN, NO. 2-3	
				9						9			611	98690	9	EACH	CATCH BASIN, MISC.: COMBINATION INLET (CI) (CINCINNATI)	P.13
				6						6			611	98690	6	EACH	CATCH BASIN, MISC.: DOUBLE GUTTER INLET MANHOLE (DGIMH) (CINCINNATI)	P.13
				1						1			611	98810	1	EACH	INLET, NO. 3C	
				1						1			611	99500	1	EACH	INLET, MISC.: DITCH INLET (DI) (CINCINNATI)	P.13
				2						2			611	99574	2	EACH	MANHOLE, NO. 3	
				3						3			611	99690	3	EACH	MANHOLE, MISC.:STANDARD MANHOLE, TYPE B (CINCINNATI)	P.13
																	PAVEMENT	
						5,537				5,537			257	10000	5,537	SY	DIAMOND GRINDING PORTLAND CEMENT CONCRETE PAVEMENT	
	30					2,197				2,227			302	56000	2,227	CY	ASPHALT CONCRETE BASE, PG64-22, (449)	P.12
						1,199				1,199			304	20000	1,199	CY	AGGREGATE BASE	
						1,148				1,148			407	20000	1,148	GAL	NON-TRACKING TACK COAT	
						265				265			442	10300	265	CY	ASPHALT CONCRETE SURFACE COURSE, 12.5 MM, TYPE A (447)	
						220				220			442	20000	220	CY	ASPHALT CONCRETE SURFACE COURSE, 12.5 MM, TYPE A (448)	
						497				497			442	10090	497	CY	ASPHALT CONCRETE INTERMEDIATE COURSE, 12.5 MM, TYPE B (446)	
							11	41		52			442	90000	52	CY	ASPHALT CONCRETE, MISC.: FULL-DEPH 448 TYPE 1 HOT-MIX ASPHALT PER CINCINNATI ITEM 627 DRIVEWAYS	P.13
							56	65		121			452	11010	121	SY	7" NON-REINFORCED CONCRETE PAVEMENT, CLASS QC 1P	
						92				92			452	14020	92	SY	10" NON-REINFORCED CONCRETE PAVEMENT, CLASS QC 1P WITH QC/QA	
						276				276			609	71000	276	SF	CONCRETE MEDIAN	
				46						46			609	98000	46	FT	CURB, MISC.: TYPE B-1 CURB (CINCINNATI)	P.13
				82						82			609	98000	82	FT	CURB, MISC.: TYPE P-1 CURB (CINCINNATI)	P.13
		100		4,098			41	154		4,393			609	98000	4,393	FT	CURB, MISC.: TYPE S-1 CURB (CINCINNATI)	P.13
LS										LS			878	25000	LS		INSPECTION AND COMPACTION TESTING OF UNBOUND MATERIALS	
																	WATER WORK	
									2	2			SPECIAL	63820500	2	EACH	VALVE BOX ADJUSTED TO GRADE (GCWW)	
									2	2			SPECIAL	63820760	2	EACH	FIRE HYDRANT REMOVED AND DISPOSED OF (GCWW)	
									1	1			SPECIAL	63820764	1	EACH	FIRE HYDRANT SERVICE LINE SHORTENED AND ADJUSTED TO GRADE (GCWW)	

GENERAL SUMMARY

DESIGN AGENCY
WSP/MAY STRUCTUREPOINT LLC

DESIGNER
LZS

REVIEWER
KAM 03/03/25

PROJECT ID
122048

SHEET P.60 TOTAL P.421

HAM-IR 75-1.05

MODEL: Sheet PAPERSIZE: 34x22 (in.) DATE: 8/28/2025 TIME: 10:11:52 AM PLTDRV: OHDOT_PDF.pltcfg PENTBL: OHDOT_Pen.tbl USER: WORKSPACE: OHDOTCEv02 WORKSET: I122048 PRODUCT: OpenRoadsDesigner 10.12.02.4
pw:\\ohiodot-pw.bentley.com:ohiodot-pw-02\Documents\01 Active Projects\District 08\Hamilton\I122048\403-Engineering_StructurePoint\Roadway\Sheets\I122048_GG302.dgn

SHEET NUM.										PART.			ITEM	ITEM EXT	GRAND TOTAL	UNIT	DESCRIPTION	SEE SHEET NO.
OFFICE CALCS				P.203	P.220	P.221	P.222			01/IMS	02/IMS	03/IMS						
																	SANITARY SEWER	
				153						153			611	04400	153	FT	12" CONDUIT, TYPE B (SANITARY SEWER)	
				103						103			611	04400	103	FT	12" CONDUIT, TYPE B (SANITARY SEWER W/CONCRETE ENCASEMENT)	
				5						5			611	99654	5	EACH	MANHOLE ADJUSTED TO GRADE (SANITARY SEWER)	
				3						3			611	99690	3	EACH	MANHOLE, MISC.: STANDARD MANHOLE, TYPE B (SANITARY SEWER)	P.12
																	LIGHTING	
						18	2			20			625	00450	20	EACH	CONNECTION, FUSED PULL APART	
						9	1			10			625	00460	10	EACH	CONNECTION, UNFUSED PULL APART	
						12	3			15			625	00480	15	EACH	CONNECTION, UNFUSED PERMANENT	
						4				4			625	10481	4	EACH	LIGHT POLE, AESTHETIC, AS PER PLAN (20' POST TOP)	
							1			1			625	10490	1	EACH	LIGHT POLE, CONVENTIONAL (AT15B40)	
						5				5			625	10491	5	EACH	LIGHT POLE, CONVENTIONAL, AS PER PLAN (35')	
						4				4			625	10614	4	EACH	LIGHT POLE ANCHOR BOLTS ON STRUCTURE	
						5	1			6			625	14100	6	EACH	LIGHT POLE FOUNDATION, 24" X 8' DEEP	
						5				5			625	17960	5	EACH	BRACKET ARM, 8'	
							1			1			625	18200	1	EACH	BRACKET ARM, 15'	
						2,655				2,655			625	22990	2,655	FT	NO. 6 AWG 600 VOLT DISTRIBUTION CABLE	
						2,959	2,022			4,981			625	23000	4,981	FT	NO. 4 AWG 600 VOLT DISTRIBUTION CABLE	
							1,200			1,200			625	23200	1,200	FT	NO. 4 AWG 2400 VOLT DISTRIBUTION CABLE	
						664				664			625	23400	664	FT	NO. 10 AWG POLE AND BRACKET CABLE	
							672			672			625	24100	672	FT	1-1/2" DUCT CABLE WITH TWO NO. 4 AWG 2400 VOLT CABLES	
							533			533			625	25301	533	FT	CONDUIT, 1-1/2", 725.04, AS PER PLAN	
						634	288			922			625	25400	922	FT	CONDUIT, 2", 725.04	
						114	82			196			625	25500	196	FT	CONDUIT, 3", 725.04	
						3	51			54			625	25802	54	FT	CONDUIT, CONCRETE ENCASED (2")	
						3				3			625	26253	3	EACH	LUMINAIRE, CONVENTIONAL, SOLID STATE (LED), AS PER PLAN, TYPE II	
						2	1			3			625	26253	3	EACH	LUMINAIRE, CONVENTIONAL, SOLID STATE (LED), AS PER PLAN, TYPE III	
						4				4			625	27403	4	EACH	LUMINAIRE, POST TOP, SOLID STATE (LED), AS PER PLAN (SUN VALLEY, 103W, TYPE III)	
							2			2			625	27503	2	EACH	LUMINAIRE, UNDERPASS, SOLID STATE (LED), AS PER PLAN (54W, CEILING MOUNTED)	
							8			8			625	27503	8	EACH	LUMINAIRE, UNDERPASS, SOLID STATE (LED), AS PER PLAN (70W, WALL MOUNTED)	
						1,062	745			1,807			625	29002	1,807	FT	TRENCH, 24" DEEP	
							1			1			625	29900	1	EACH	JUNCTION BOX	
							2			2			625	29940	2	EACH	BARRIER JUNCTION BOX	
							8			8			625	30700	8	EACH	PULL BOX, 725.08, 18"	
						2	1			3			625	30701	3	EACH	PULL BOX, 725.08, 18", AS PER PLAN	
						2				2			625	30707	2	EACH	PULL BOX, 725.08, 24", AS PER PLAN	
						5	1			6			625	32000	6	EACH	GROUND ROD	
						1	3			4			625	33000	4	EACH	STRUCTURE GROUNDING SYSTEM	
							2			2			625	34000	2	EACH	POWER SERVICE	
						1				1			625	34001	1	EACH	POWER SERVICE, AS PER PLAN	P.220
							1			1			625	37100	1	EACH	SERVICE TO UNDERPASS LIGHTING	
				LS						LS			SPECIAL	62540000	LS		MAINTAIN EXISTING LIGHTING	P.220
				2						2			SPECIAL	62540010	2	EACH	REPLACEMENT OF EXISTING LIGHTING UNIT	P.220
						1	3			4			625	75800	4	EACH	DISCONNECT CIRCUIT	

GENERAL SUMMARY

HAM-IR 75-1.05

MODEL: Sheet PAPERSIZE: 34x22 (in.) DATE: 8/28/2025 TIME: 10:12:01 AM PLTDRV: OHDOT_PDF.pltcfg PENTBL: OHDOT_Pen.tbl USER: WORKSPACE: OHDOTCEv02 WORKSET: I122048 PRODUCT: OpenRoadsDesigner 10.12.02.4
pw:\\ohiodot-pw.bentley.com:ohiodot-pw-02\Documents\01 Active Projects\District 08\Hamilton\I122048\403-Engineering_StructurePoint\Roadway\Sheets\I122048_GG303.dgn

DESIGN AGENCY
STRUCTUREPOINT LLC

DESIGNER
LZS

REVIEWER
KAM 03/03/25

PROJECT ID
122048

SHEET P.61 TOTAL P.421

SHEET NUM.										PART.			ITEM	ITEM EXT	GRAND TOTAL	UNIT	DESCRIPTION	SEE SHEET NO.
OFFICE CALCS	P.12		P.69		P.205	P.206	P.207		P.365	01/IMS	02/IMS	03/IMS						
																	TRAFFIC CONTROL	
						113				113			621	00100	113	EACH	RPM	
			10							10			626	00102	10	EACH	BARRIER REFLECTOR, TYPE 1 (ONE-WAY)	
			8							8			626	00110	8	EACH	BARRIER REFLECTOR, TYPE 2 (ONE-WAY)	
							182.4			182.4			630	02100	182.4	FT	GROUND MOUNTED SUPPORT, NO. 2 POST	
							53.4			53.4			630	03100	53.4	FT	GROUND MOUNTED SUPPORT, NO. 3 POST	
							112.4			112.4			630	06100	112.4	FT	GROUND MOUNTED SUPPORT, NO. 6 POST	
							9			9			630	08600	9	EACH	SIGN POST REFLECTOR	
							203.41			203.41			630	80100	203.41	SF	SIGN, FLAT SHEET	
							18			18			630	84900	18	EACH	REMOVAL OF GROUND MOUNTED SIGN AND DISPOSAL	
							11			11			630	86002	11	EACH	REMOVAL OF GROUND MOUNTED POST SUPPORT AND DISPOSAL	
							1			1			630	86010	1	EACH	REMOVAL OF GROUND MOUNTED POST SUPPORT AND REERECTION	
							1			1			630	87500	1	EACH	REMOVAL OF POLE MOUNTED SIGN AND DISPOSAL	
							1			1			630	97700	1	EACH	SIGNING, MISC.: GROUND MOUNTED SIGN SUPPORT, STEEL POLE (CINCINNATI)	
					0.01	0.73				0.74			644	00100	0.74	MILE	EDGE LINE, 4"	
					0.02	0.28				0.3			644	00200	0.3	MILE	LANE LINE, 4"	
					0.02	0.04				0.06			644	00300	0.06	MILE	CENTER LINE	
						1,389				1,389			644	00400	1,389	FT	CHANNELIZING LINE, 8"	
					18	47				65			644	00500	65	FT	STOP LINE	
					85					85			644	00620	85	FT	CROSSWALK LINE, 12"	
						130				130			644	00630	130	FT	CROSSWALK LINE, 24"	
						106				106			644	00720	106	FT	CHEVRON MARKING	
						10				10			644	01300	10	EACH	LANE ARROW	
					5					5			644	01500	5	FT	DOTTED LINE, 4" WHITE (2FT LONG, 6FT GAP)	
						137				137			644	01510	137	FT	DOTTED LINE, 6" WHITE (3FT LONG, 9FT GAP)	
	300									300			644	30000	300	FT	REMOVAL OF PAVEMENT MARKING	
	5									5			644	30020	5	EACH	REMOVAL OF PAVEMENT MARKING	
	0.45									0.45			644	30030	0.45	MILE	REMOVAL OF PAVEMENT MARKING	
					0.21	0.09				0.3			646	10000	0.3	MILE	EDGE LINE, 4"	
					0.04					0.04			646	10010	0.04	MILE	EDGE LINE, 6"	
					0.1					0.1			646	10100	0.1	MILE	LANE LINE, 4"	
					0.05	0.02				0.07			646	10200	0.07	MILE	CENTER LINE	
					1,595					1,595			646	10300	1,595	FT	CHANNELIZING LINE, 8"	
					75					75			646	10400	75	FT	STOP LINE	
					357					357			646	10510	357	FT	CROSSWALK LINE, 12"	
					60	65				125			646	10600	125	FT	TRANSVERSE/DIAGONAL LINE (YELLOW)	
					255					255			646	10600	255	FT	TRANSVERSE/DIAGONAL LINE (WHITE)	
					277					277			646	10620	277	FT	CHEVRON MARKING	
					11	1				12			646	20300	12	EACH	LANE ARROW	
					237					237			646	20502	237	FT	DOTTED LINE, 4" WHITE (2FT LONG, 6FT GAP)	
																	LANDSCAPING	
									1	1			SPECIAL	68043100	1	EACH	COMPLETE IRRIGATION SYSTEM (LINN STREET BRIDGE)	P.365

GENERAL SUMMARY

DESIGN AGENCY: MPEAON STRUCTUREPOINT INC.

DESIGNER: LZS

REVIEWER: KAM 03/03/25

PROJECT ID: 122048

SHEET P.62 TOTAL P.421

HAM-IR 75-1.05

MODEL: Sheet PAPERSIZE: 34x22 (in.) DATE: 8/28/2025 TIME: 10:12:10 AM PLTDRV: OHDOT_PDF.pltcfg PENTBL: OHDOT_Pen.tbl USER: WORKSPACE: OHDOTCEv02 WORKSET: I122048 PRODUCT: OpenRoadsDesigner 10.12.02.4
pw:\\ohiodot-pw.bentley.com:ohiodot-pw-02\Documents\01 Active Projects\District 08\Hamilton\I122048\403-Engineering_StructurePoint\Roadway\Sheets\I122048_GG304.dgn

SHEET NUM.										PART.			ITEM	ITEM EXT	GRAND TOTAL	UNIT	DESCRIPTION	SEE SHEET NO.
OFFICE CALCS				P.169		P.195		P.236		01/IMS	02/IMS	03/IMS						
																	RETAINING WALLS (WALL 02)	
				LS						LS			503	11101	LS		COFFERDAMS AND EXCAVATION BRACING, AS PER PLAN	P.170
				LS						LS			503	21301	LS		UNCLASSIFIED EXCAVATION, AS PER PLAN	P.167
				813						813			507	00400	813	FT	STEEL PILES, MISC.: SOLDIER PILES, W27X178	P.167
				179						179			507	00400	179	FT	STEEL PILES, MISC.: SOLDIER PILES, W27X258	P.167
				176,174						176,174			509	26000	176,174	LB	GALVANIZED STEEL REINFORCEMENT	
				1,677						1,677			510	10000	1,677	EACH	DOWEL HOLES WITH NONSHRINK, NONMETALLIC GROUT	
				723						723			511	46012	723	CY	CLASS QC1 CONCRETE WITH QC/QA, RETAINING/WINGWALL NOT INCLUDING FOOTING	
				123						123			511	46510	123	CY	CLASS QC1 CONCRETE, FOOTING	
				475						475			511	53010	475	CY	CLASS QC1 CONCRETE, MISC.: SHAFT CAP WITH QC/QA	P.167
				288						288			511	53010	288	CY	CLASS QC1 CONCRETE, MISC.: MOMENT SLAB WITH QC/QA	P.167
				2,229						2,229			512	10000	2,229	SY	SEALING OF CONCRETE SURFACES	
				2,229						2,229			512	10001	2,229	SY	SEALING OF CONCRETE SURFACES, AS PER PLAN	P.167
				10						10			512	33000	10	SY	TYPE 2 WATERPROOFING	
				574						574			513	20001	574	EACH	WELDED STUD SHEAR CONNECTORS, AS PER PLAN	P.167
				488						488			516	13600	488	SF	1" PREFORMED EXPANSION JOINT FILLER	
				810						810			517	76300	810	FT	RAILING, MISC.: TEXAS RAILING	P.167
				237						237			518	20000	237	SY	PREFABRICATED GEOCOMPOSITE DRAIN	
				160						160			518	21200	160	CY	POROUS BACKFILL WITH GEOTEXTILE FABRIC	
				72						72			518	39900	72	FT	4" NON-PERFORATED CORRUGATED PLASTIC PIPE, INCLUDING SPECIALS	
				1,010						1,010			518	40000	1,010	FT	6" PERFORATED CORRUGATED PLASTIC PIPE	
				80						80			518	40010	80	FT	6" NON-PERFORATED CORRUGATED PLASTIC PIPE, INCLUDING SPECIALS	
				807						807			524	94803	807	FT	DRILLED SHAFTS, 42" DIAMETER, ABOVE BEDROCK, AS PER PLAN	P.167
				181						181			524	94903	181	FT	DRILLED SHAFTS, 48" DIAMETER ABOVE BEDROCK, AS PER PLAN	P.168
				5,260						5,260			524	94915	5,260	FT	DRILLED SHAFTS, 60" DIAMETER, ABOVE BEDROCK, AS PER PLAN	P.168
				LS						LS			SPECIAL	53000200	LS		STRUCTURES: PRECONSTRUCTION CONDITION SURVEY	P.167
				288						288			SPECIAL	53051010	288	SF	RETAINING WALL, PRECAST CONCRETE LAGGING	P.168
				2,104						2,104			SPECIAL	53051020	2,104	SF	RETAINING WALL, TIMBER LAGGING	P.167
				809						809			607	39901	809	FT	VANDAL PROTECTION FENCE, 6' STRAIGHT, COATED FABRIC, AS PER PLAN	P.168
				8,401						8,401			840	26050	8,401	SF	AESTHETIC SURFACE TREATMENT	P.168
				12						12			894	10000	12	EACH	THERMAL INTEGRITY PROFILING (TIP) TEST	P.168
																	RETAINING WALLS (WALL 04)	
						LS				LS			503	21300	LS		UNCLASSIFIED EXCAVATION	
						1,872				1,872			507	00400	1,872	FT	STEEL PILES, MISC.: SOLDIER PILES, W33x387	P.194
						13,404				13,404			509	26000	13,404	LB	GALVANIZED STEEL REINFORCEMENT	
						8				8			510	10000	8	EACH	DOWEL HOLES WITH NONSHRINK, NONMETALLIC GROUT	
						82				82			511	53010	82	CY	CLASS QC1 CONCRETE, MISC.: SHAFT CAP & COLLAR	P.194
						28				28			511	53010	28	CY	CLASS QC1 CONCRETE, MISC.: MOMENT SLAB	P.194
						245				245			512	10000	245	SY	SEALING OF CONCRETE SURFACES	
						245				245			512	10001	245	SY	SEALING OF CONCRETE SURFACES, AS PER PLAN	P.194
						28				28			513	20001	28	EACH	WELDED STUD SHEAR CONNECTORS, AS PER PLAN	P.194
						10				10			516	13200	10	SF	1/2" PREFORMED EXPANSION JOINT FILLER	
						41				41			516	13600	41	SF	1" PREFORMED EXPANSION JOINT FILLER	
						111				111			517	76300	111	FT	RAILING, MISC.: TEXAS RAILING	P.194
						2,528				2,528			524	94915	2,528	FT	DRILLED SHAFTS, 60" DIAMETER, ABOVE BEDROCK, AS PER PLAN	P.194
						112				112			607	39900	112	FT	VANDAL PROTECTION FENCE, 6' STRAIGHT, COATED FABRIC	
																	NOISE BARRIERS	
								17,427		17,427			SPECIAL	60610210	17,427	SF	NOISE BARRIER (REFLECTIVE)	P.234
								LS		LS			SPECIAL	69098400	LS		FORM LINER FOR NOISE BARRIER	P.234

GENERAL SUMMARY

DESIGN AGENCY
STRUCTUREPOINT LLC
MYFRAN

DESIGNER
LZS

REVIEWER
KAM 03/03/25

PROJECT ID
122048

SHEET P.63 | TOTAL P.421

HAM-IR 75-1.05

MODEL: Sheet PAPERSIZE: 34x22 (in.) DATE: 8/28/2025 TIME: 10:12:20 AM PLTDRV: OHDOT_PDF.pltcfg PENTBL: OHDOT_Pen.tbl USER: WORKSPACE: OHDOTCEv02 WORKSET: 122048 PRODUCT: OpenRoadsDesigner 10.12.02.4
pw:\\ohiodot-pw.bentley.com:ohiodot-pw-02\Documents\01 Active Projects\District 08\Hamilton\122048\403-Engineering_StructurePoint\Roadway\Sheets\122048_GG305.dgn

SHEET NUM.									PART.			ITEM	ITEM EXT	GRAND TOTAL	UNIT	DESCRIPTION	SEE SHEET NO.
OFFICE CALCS							P.249	P.250	01/IMS	02/IMS	03/IMS						
																STRUCTURE OVER 20 FOOT SPAN (HAM-75-0104) (SFN 3109098)	
							LS				LS	202	11003	LS		STRUCTURE REMOVED, OVER 20 FOOT SPAN, AS PER PLAN	P.245
							634				634	202	22900	634	SY	APPROACH SLAB REMOVED	
							LS				LS	202	30204	LS		STEPS REMOVED	
							27			27		203	20001	27	CY	EMBANKMENT, AS PER PLAN	P.245
							864			864		203	35111	864	CY	GRANULAR MATERIAL, TYPE B, AS PER PLAN	P.248
							LS			LS		503	11101	LS		COFFERDAMS AND EXCAVATION BRACING, AS PER PLAN	P.245
							LS			LS		503	21300	LS		UNCLASSIFIED EXCAVATION	
							LS			LS		505	11100	LS		PILE DRIVING EQUIPMENT MOBILIZATION	
							4,120			4,120		507	00501	4,120	FT	12" CAST-IN-PLACE REINFORCED CONCRETE PILES, DRIVEN, AS PER PLAN	P.248A
							4,400			4,400		507	00550	4,400	FT	12" CAST-IN-PLACE REINFORCED CONCRETE PILES, FURNISHED	
							5,500			5,500		507	00601	5,500	FT	14" CAST-IN-PLACE REINFORCED CONCRETE PILES, DRIVEN, AS PER PLAN	P.248A
							5,880			5,880		507	00650	5,880	FT	14" CAST-IN-PLACE REINFORCED CONCRETE PILES, FURNISHED	
							280			280		507	92201	280	FT	PREBORED HOLES, AS PER PLAN	P.245
							502,351			502,351		509	26000	502,351	LB	GALVANIZED STEEL REINFORCEMENT	
							4,000			4,000		509	40000	4,000	LB	CONCRETE REINFORCEMENT, MISC.: ADDITIONAL GALVANIZED STEEL REINFORCEMENT FOR FOOTINGS	P.248A
							313			313		511	34463	313	CY	CLASS QC SCC CONCRETE WITH QC/QA, BRIDGE DECK (PARAPET), AS PER PLAN	P.245
							279			279		511	46513	279	CY	CLASS QC1 CONCRETE WITH QC/QA, FOOTING, AS PER PLAN	P.248A
							510			510		511	51513	510	CY	CLASS QC2 CONCRETE WITH QC/QA, SIDEWALK, AS PER PLAN	P.247
							83			83		511	53012	83	CY	CLASS QC2 CONCRETE, MISC.: RAISED MEDIAN, WITH QC/QA	P.247
							98			98		511	53012	98	CY	CLASS QC2 CONCRETE, MISC.: PLANTER WALLS, WITH QC/QA	
							1,079			1,079		511	53014	1,079	CY	CLASS QC3 CONCRETE, MISC.: BRIDGE DECK, WITH QC/QA	P.246
							237			237		511	53014	237	CY	CLASS QC3 CONCRETE, MISC.: PIER ABOVE FOOTINGS, WITH QC/QA	P.246
							155			155		511	53014	155	CY	CLASS QC3 CONCRETE, MISC.: ABUTMENT NOT INCLUDING FOOTING, WITH QC/QA	P.246
							48			48		511	81300	48	EACH	CONCRETE, MISC.: PRECAST CONCRETE PLINTHS	P.247
							3,868			3,868		512	10001	3,868	SY	SEALING OF CONCRETE SURFACES, AS PER PLAN	P.245
							2,827			2,827		512	10050	2,827	SY	SEALING OF CONCRETE SURFACES (NON-EPOXY)	
							3,868			3,868		512	10100	3,868	SY	SEALING OF CONCRETE SURFACES (EPOXY-URETHANE)	P.245
							61			61		512	33000	61	SY	TYPE 2 WATERPROOFING	
							844			844		SPECIAL	51267200	844	SY	WATERPROOFING FOR PLANTERS AREAS	P.247
							128,300			128,300		513	10261	128,300	LB	STRUCTURAL STEEL MEMBERS, LEVEL 3, AS PER PLAN	P.246
							1,275,300			1,275,300		513	10281	1,275,300	LB	STRUCTURAL STEEL MEMBERS, LEVEL 4, AS PER PLAN	P.246
							9,784			9,784		513	20000	9,784	EACH	WELDED STUD SHEAR CONNECTORS	
							15,361			15,361		514	00060	15,361	SF	FIELD PAINTING STRUCTURAL STEEL, INTERMEDIATE COAT	P.245
							15,361			15,361		514	00066	15,361	SF	FIELD PAINTING STRUCTURAL STEEL, FINISH COAT	P.245
							182			182		516	10010	182	FT	ARMORLESS PREFORMED JOINT SEAL	
							11			11		516	10011	11	FT	ARMORLESS PREFORMED JOINT SEAL, AS PER PLAN	P.248
							258			258		516	11211	258	FT	STRUCTURAL EXPANSION JOINT INCLUDING ELASTOMERIC STRIP SEAL, AS PER PLAN	P.317
							81			81		516	13000	81	SF	1/4" PREFORMED EXPANSION JOINT FILLER	
							64			64		516	13200	64	SF	1/2" PREFORMED EXPANSION JOINT FILLER	
							356			356		516	13900	356	SF	2" PREFORMED EXPANSION JOINT FILLER	
							9			9		516	44101	9	EACH	ELASTOMERIC BEARING WITH INTERNAL LAMINATES AND LOAD PLATE (NEOPRENE), AS PER PLAN (13"x12"x2.358" EXP. BEARING)	P.287
							9			9		516	44101	9	EACH	ELASTOMERIC BEARING WITH INTERNAL LAMINATES AND LOAD PLATE (NEOPRENE), AS PER PLAN (13"x12"x2.358" FIXED BEARING)	P.287
							4			4		516	44201	4	EACH	ELASTOMERIC BEARING WITH INTERNAL LAMINATES AND LOAD PLATE (NEOPRENE), AS PER PLAN (23"x18"x3.448" FIXED BEARING)	P.287
							5			5		516	44201	5	EACH	ELASTOMERIC BEARING WITH INTERNAL LAMINATES AND LOAD PLATE (NEOPRENE), AS PER PLAN (20"x15"x3.448" FIXED BEARING)	P.287
							4			4		516	44301	4	EACH	ELASTOMERIC BEARING WITH INTERNAL LAMINATES AND LOAD PLATE (NEOPRENE), AS PER PLAN (18"x14"x4.068" EXP. BEARING)	P.287
							5			5		516	44301	5	EACH	ELASTOMERIC BEARING WITH INTERNAL LAMINATES AND LOAD PLATE (NEOPRENE), AS PER PLAN (16"x13"x4.068" EXP. BEARING)	P.287
							4			4		516	44301	4	EACH	ELASTOMERIC BEARING WITH INTERNAL LAMINATES AND LOAD PLATE (NEOPRENE), AS PER PLAN (19"x16"x4.068" EXP. BEARING)	P.287
							5			5		516	44301	5	EACH	ELASTOMERIC BEARING WITH INTERNAL LAMINATES AND LOAD PLATE (NEOPRENE), AS PER PLAN (17"x13"x4.068" EXP. BEARING)	P.287
							29			29		517	76300	29	FT	RAILING, MISC.: SIDEWALK RAILING AT REAR ABUTMENT MSE WALLS	P.287
							276			276		518	20000	276	SY	PREFABRICATED GEOCOMPOSITE DRAIN	
							65			65		518	21201	65	CY	POROUS BACKFILL WITH GEOTEXTILE FABRIC, AS PER PLAN	P.246
							767			767		518	39800	767	FT	4" PERFORATED CORRUGATED PLASTIC PIPE	
							89			89		518	62100	89	FT	STRUCTURE DRAINAGE, MISC.: NEOPRENE TROUGH AND DRAINAGE OUTLETS	P.322
							4			4		523	20000	4	EACH	DYNAMIC LOAD TESTING	
							4			4		523	20500	4	EACH	RESTRIKE	
							602			602		526	30011	602	SY	REINFORCED CONCRETE APPROACH SLABS WITH QC/QA (T=17"), AS PER PLAN	P.245
								180		180		526	90030	180	FT	TYPE C INSTALLATION	
								LS		LS		SPECIAL	53000200	LS		STRUCTURES: TEMPORARY SUPPORTS FOR GIRDERS	P.245
								728		728		SPECIAL	53013000	728	SF	FORM LINER: STRUCTURES: SCREEN WALLS	P.248A

GENERAL SUMMARY

HAM-IR 75-1.05

MODEL: Sheet PAPERSIZE: 34x22 (in.) DATE: 8/28/2025 TIME: 10:12:29 AM PLTDRV: OHDOT_PDF.pltcfg PENTBL: OHDOT_Pen.tbl USER: WORKSPACE: OHDOTCEv02 WORKSET: I122048 PRODUCT: OpenRoadsDesigner 10.12.02.4
pw:\\ohiodot-pw.bentley.com:ohiodot-pw-02\Documents\01 Active Projects\District 08\Hamilton\I122048\403-Engineering_StructurePoint\Roadway\Sheets\I122048_GG306.dgn

DESIGN AGENCY: STRUCTUREPOINT LLC (A WEIDLEINGER ASSOCIATES COMPANY)

DESIGNER: LZS

REVIEWER: KAM 03/03/25

PROJECT ID: 122048

SHEET: P.64 | TOTAL: P.421

SHEET NUM.										PART.			ITEM	ITEM EXT	GRAND TOTAL	UNIT	DESCRIPTION	SEE SHEET NO.
OFFICE CALCS					P.250		P.333			01/IMS	02/IMS	03/IMS						
																	STRUCTURE OVER 20 FOOT SPAN (HAM-75-0104) (SFN 3109098) (CONTINUED)	
					LS						LS		SPECIAL	53014000	LS		STRUCTURAL SURVEY AND MONITORING OF VIBRATION	P.246
					69						69		601	21001	69	SY	CONCRETE SLOPE PROTECTION, AS PER PLAN	P.262
					500						500		605	13301	500	FT	6" UNCLASSIFIED PIPE UNDERDRAINS, AS PER PLAN	P.246
					20						20		605	98300	20	EACH	UNDERDRAINS, MISC.: CLEANOUT	P.314
					4						4		605	98300	4	EACH	UNDERDRAINS, MISC.: DRAINAGE OUTLET AT ABUTMENT	P.314
					2						2		605	98300	2	EACH	UNDERDRAINS, MISC.: DRAINAGE OUTLET AT PIER 1	P.314
					384						384		608	40001	384	FT	CONCRETE STEPS, TYPE A, AS PER PLAN	P.267
					284						284		659	00301	284	CY	TOPSOIL, AS PER PLAN	P.248
					21						21		661	00500	21	CY	MULCH	
					2						2		SPECIAL	69098000	2	EACH	BRIDGE PILASTER LETTERS	P.248
					2						2		SPECIAL	69098000	2	EACH	BRIDGE PILASTER STORY PANELS	P.248A
					48						48		SPECIAL	69098000	48	EACH	PLANTER POTS	P.247
					6,010						6,010		840	20000	6,010	SF	MECHANICALLY STABILIZED EARTH WALL	
					3,033						3,033		840	21000	3,033	CY	WALL EXCAVATION	
					717						717		840	22000	717	SY	FOUNDATION PREPARATION	
					3,283						3,283		840	23000	3,283	CY	SELECT GRANULAR BACKFILL	
					665						665		840	25010	665	FT	6" DRAINAGE PIPE, PERFORATED	
					60						60		840	25020	60	FT	6" DRAINAGE PIPE, NON-PERFORATED	
					420						420		840	26000	420	FT	CONCRETE COPING	
					2,812						2,812		840	26050	2,812	SF	AESTHETIC SURFACE TREATMENT	P.245
					5						5		840	27000	5	DAY	ON-SITE ASSISTANCE	
					LS						LS		840	28000	LS		SGB INSPECTION AND COMPACTION TESTING	
																	STRUCTURE OVER 20 FOOT SPAN (HAM-75-0123E) (SFN 3109152)	
							LS					LS	202	11002	LS		STRUCTURE REMOVED, OVER 20 FOOT SPAN	
							LS				LS		503	11100	LS		COFFERDAMS AND EXCAVATION BRACING	
							LS				LS		503	21300	LS		UNCLASSIFIED EXCAVATION	
							LS				LS		505	11100	LS		PILE DRIVING EQUIPMENT MOBILIZATION	
							420				420		507	00501	420	FT	12" CAST-IN-PLACE REINFORCED CONCRETE PILES, DRIVEN, AS PER PLAN	P.332
							450				450		507	00550	450	FT	12" CAST-IN-PLACE REINFORCED CONCRETE PILES, FURNISHED	
							7,757				7,757		509	26000	7,757	LB	GALVANIZED STEEL REINFORCEMENT	
							16				16		511	31611	16	CY	CLASS QC2 CONCRETE, SUPERSTRUCTURE, AS PER PLAN	P.332
							10				10		511	34448	10	CY	CLASS QC2 CONCRETE, BRIDGE DECK (PARAPET)	
							41				41		511	43510	41	CY	CLASS QC1 CONCRETE, ABUTMENT INCLUDING FOOTING	
							470				470		512	10001	470	SY	SEALING OF CONCRETE SURFACES, AS PER PLAN	P.332
							6				6		512	33000	6	SY	TYPE 2 WATERPROOFING	
							6				6		515	12040	6	EACH	PRESTRESSED CONCRETE COMPOSITE BOX BEAM BRIDGE MEMBERS, LEVEL 1, CB21-36 (62'-9" Long)	
							33				33		516	13200	33	SF	1/2" PREFORMED EXPANSION JOINT FILLER	
							32				32		516	13600	32	SF	1" PREFORMED EXPANSION JOINT FILLER	
							23				23		516	13900	23	SF	2" PREFORMED EXPANSION JOINT FILLER	
							28				28		516	14020	28	FT	SEMI-INTEGRAL ABUTMENT EXPANSION JOINT SEAL	
							26				26		516	31010	26	FT	2" DEEP JOINT SEALER	
							12				12		516	43100	12	EACH	ELASTOMERIC BEARING WITH INTERNAL LAMINATES ONLY (NEOPRENE) (8.5"x8"x1.564")	
							166				166		517	76302	166	EACH	RAILING, MISC.:PEDESTRIAN ADA COMPLIANT RAILING	P.332
							4				4		518	21200	4	CY	POROUS BACKFILL WITH GEOTEXTILE FABRIC	
							23				23		518	40000	23	FT	6" PERFORATED CORRUGATED PLASTIC PIPE	P.336
							130				130		518	40011	130	FT	6" NON-PERFORATED CORRUGATED PLASTIC PIPE, INCLUDING SPECIALS, AS PER PLAN	P.332
							6				6		601	21000	6	SY	CONCRETE SLOPE PROTECTION	
							131				131		607	39911	131	FT	VANDAL PROTECTION FENCE, 8' STRAIGHT, COATED FABRIC, AS PER PLAN	P.332
							131				131		SPECIAL	60740000	131	FT	VANDAL PROTECTION FENCE, 12' STRAIGHT, COATED FABRIC	P.332
							1,279				1,279		608	13000	1,279	SF	6" CONCRETE WALK	
							470				470		608	98000	470	SF	WALKWAY, MISC.: 10" CONCRETE WALK	P.337
							1				1		625	33000	1	EACH	STRUCTURE GROUNDING SYSTEM	
							3,589				3,589		840	20000	3,589	SF	MECHANICALLY STABILIZED EARTH WALL	
							595				595		840	21000	595	CY	WALL EXCAVATION	
							220				220		840	22000	220	SY	FOUNDATION PREPARATION	
							752				752		840	23000	752	CY	SELECT GRANULAR BACKFILL	
							111				111		840	23050	111	CY	NATURAL SOIL	

DESIGN AGENCY
STRUCTUREPOINT LLC
DESIGNER
REVIEWER
KAM 03/03/25
PROJECT ID
122048
SHEET P.65 TOTAL P.421

HAM-IR 75-1.05
MODEL: Sheet PAPERSIZE: 34x22 (in.) DATE: 8/28/2025 TIME: 10:12:40 AM PLTDRV: OHDOT_PDF.pltcfg PENTBL: OHDOT_Pen.tbl USER: WORKSPACE: OHDOTCEv02 WORKSET: 122048 PRODUCT: OpenRoadsDesigner 10.12.02.4
pw:\\ohiodot-pw.bentley.com:ohiodot-pw-02\Documents\01 Active Projects\District 08\Hamilton\122048\403-Engineering_StructurePoint\Roadway\Sheets\122048_GG307.dgn

SHEET NUM.											PART.			ITEM	ITEM EXT	GRAND TOTAL	UNIT	DESCRIPTION	SEE SHEET NO.
OFFICE CALCS	P.15	P.16	P.17	P.18	P.19	P.20	P.21	P.22	P.23	P.333	01/IMS	02/IMS	03/IMS						
																		STRUCTURE OVER 20 FOOT SPAN (HAM-75-0123E) (SFN 3109152) (CONTINUED)	
										298		298		840	25010	298	FT	6" DRAINAGE PIPE, PERFORATED	
										29		29		840	25020	29	FT	6" DRAINAGE PIPE, NON-PERFORATED	
										293		293		840	26000	293	FT	CONCRETE COPING	
										3,589		3,589		840	26050	3,589	SF	AESTHETIC SURFACE TREATMENT	
										5		5		840	27000	5	DAY	ON-SITE ASSISTANCE	
										LS		LS		840	28000	LS		SGB INSPECTION AND COMPACTION TESTING	
																		MAINTENANCE OF TRAFFIC	
					600						600			253	01001	600	SY	PAVEMENT REPAIR, AS PER PLAN, PERFORMED IN 2026	P.17
					600						600			253	01001	600	SY	PAVEMENT REPAIR, AS PER PLAN, PERFORMED IN 2027	P.17
					200						200			253	01001	200	SY	PAVEMENT REPAIR, AS PER PLAN, PERFORMED IN 2028	P.17
								360			360			607	39994	360	FT	TEMPORARY VANDAL FENCE, TYPE B	
				1,000							1,000			614	11110	1,000	HOUR	LAW ENFORCEMENT OFFICER WITH PATROL CAR FOR ASSISTANCE	
							2,270		150		2,420			614	11630	2,420	FT	INCREASED BARRIER DELINEATION	
							5	1	1		7			614	12380	7	EACH	WORK ZONE IMPACT ATTENUATOR, 24" WIDE HAZARDS, (UNIDIRECTIONAL)	
		6									6			614	12410	6	EACH	SPEED ZONE AHEAD SYMBOL SIGN	
											LS			614	12420	LS		DETOUR SIGNING	
		12									12			614	12470	12	EACH	WORK ZONE SPEED LIMIT SIGN	
		7									7			614	12484	7	EACH	WORK ZONE INCREASED PENALTIES SIGN	
	10										10			614	12500	10	EACH	REPLACEMENT SIGN	
	100										100			614	12600	100	EACH	REPLACEMENT DRUM	
							1,594				1,594			614	12801	1,594	EACH	WORK ZONE RAISED PAVEMENT MARKER, AS PER PLAN	P.15
							44	13	3		60			614	13310	60	EACH	BARRIER REFLECTOR, TYPE 1, 1-WAY	
								9			9			614	13310	9	EACH	BARRIER REFLECTOR, TYPE 1, 2-WAY	
							44	13	3		60			614	13350	60	EACH	OBJECT MARKER, ONE WAY	
								9			9			614	13360	9	EACH	OBJECT MARKER, TWO WAY	
					1,400						1,400			614	18030	1,400	FT	MAINTAINING TRAFFIC, MISC.:, RUMBLE STRIP MILLED/FILLED	P.17
			32								32			614	18601	32	SNMT	PORTABLE CHANGEABLE MESSAGE SIGN, AS PER PLAN	P.15
							2.74				2.74			614	22056	2.74	MILE	WORK ZONE EDGE LINE, CLASS I, 6", 807 PAINT	
								1.42	0.12		1.54			614	22110	1.54	MILE	WORK ZONE EDGE LINE, CLASS I, 6", 642 PAINT	
	1.4										1.4			614	22336	1.4	MILE	WORK ZONE EDGE LINE, CLASS I, 6", 648	
							18,622				18,622			614	23110	18,622	FT	WORK ZONE CHANNELIZING LINE, CLASS I, 12", 807 PAINT	
								2,126			2,126			614	23210	2,126	FT	WORK ZONE CHANNELIZING LINE, CLASS I, 12", 642 PAINT	
	9,300										9,300			614	23150	9,300	FT	WORK ZONE CHANNELIZING LINE, CLASS I, 12", 648	
							1,925				1,925			614	24102	1,925	FT	WORK ZONE DOTTED LINE, CLASS I, 6", 807 PAINT	
	690										690			614	24142	690	FT	WORK ZONE DOTTED LINE, CLASS I, 6", 648	
								623	403		1,026			614	24202	1,026	FT	WORK ZONE DOTTED LINE, CLASS I, 6", 642 PAINT	
							507				507			614	25000	507	FT	WORK ZONE TRANSVERSE/DIAGONAL LINE, CLASS I	
							4	14			18			614	30200	18	EACH	WORK ZONE ARROW, CLASS I, 642 PAINT	
											LS			615	10000	LS		ROADS FOR MAINTAINING TRAFFIC	
									262		262			615	20000	262	SY	PAVEMENT FOR MAINTAINING TRAFFIC, CLASS A	
	8										8			616	10000	8	MGAL	WATER	
							1,820	650			2,470			622	41100	2,470	FT	PORTABLE BARRIER, UNANCHORED	
							450	450	150		1,050			622	41110	1,050	FT	PORTABLE BARRIER, ANCHORED	
			12								12			829	00100	12	SNMT	WORK ZONE EGRESS WARNING SYSTEM	
			84								84			896	00010	84	SNMT	PORTABLE NON-INTRUSIVE TRAFFIC SENSOR, CLASS I	
			12								12			896	00021	12	SNMT	PORTABLE CHANGEABLE MESSAGE SIGN, AS PER PLAN	P.15
																		INCIDENTALS	
LS											LS			108	XXXXX	LS		CPM PROGRESS SCHEDULE, AS PER PLAN	P.13
LS											LS			614	11000	LS		MAINTAINING TRAFFIC	
1											1			619	XXXXX	1	EACH	FIELD OFFICE, AS PER PLAN	P.13
LS											LS			623	10000	LS		CONSTRUCTION LAYOUT STAKES AND SURVEYING	
LS											LS			624	10000	LS		MOBILIZATION	

GENERAL SUMMARY

HAM-IR 75-1.05

DESIGN AGENCY: MPEAON STRUCTUREPOINT INC.

DESIGNER: LZS

REVIEWER: KAM 03/03/25

PROJECT ID: 122048

SHEET: P.66 TOTAL: P.344

MODEL: Sheet PAPERSIZE: 34x22 (in.) DATE: 8/28/2025 TIME: 10:12:49 AM PLTDRV: OHDOT_PDF.pltcfg PENTBL: OHDOT_Pen.tbl USER: WORKSPACE: OHDOTCEv02 WORKSET: I22048 PRODUCT: OpenRoadsDesigner 10.12.02.4
pw:\\ohiodot-pw.bentley.com:ohiodot-pw-02\Documents\01 Active Projects\District 08\Hamilton\I122048\403-Engineering_StructurePoint\Roadway\Sheets\I122048_GG308.dgn

REFERENCE NO.	SHEET NO.	ALIGNMENT	STATION FROM	STATION TO	SIDE		202 PAVEMENT REMOVED	202 WALK REMOVED	202 CURB REMOVED	202 PIPE REMOVED, 24" AND UNDER	202 GUARDRAIL REMOVED	202 ANCHOR ASSEMBLY REMOVED, TYPE A, AS PER PLAN	202 MANHOLE REMOVED	202 CATCH BASIN REMOVED	202 FENCE REMOVED	202 REMOVAL MISC.: RETAINING WALL					
							SY	SF	FT	FT	FT	EACH	EACH	EACH	FT	FT					
R-346	87	CLP_RAMP V	59+00.00	64+50.00	RT				548												
R-347	87	CLP_RAMP V	59+80.41		RT					18				1							
R-348	87	CLP_RAMP V	60+71.94		RT					23				1							
R-349	87 & 88	CLP_RAMP V	60+54.11	66+20.45							576										
R-350	87	CLP_RAMP V	64+80.91		LT					103				1							
R-351	88	CLP_RAMP V	64+50.00	70+00.00	LT/RT		1317														
R-352	89	CLP_RAMP V	65+13.46	66+23.37	LT				109												
R-353	88 & 89	CLP_RAMP V	66+24.62	72+86.36											652						
R-354	88	CLP_RAMP V	69+06.38		RT					42				1							
R-355	88	CLP_RAMP V	69+40.86	70+00.00	LT				60												
R-356	89	CLP_RAMP V	70+00.00	73+00.00	LT/RT		1506														
R-357	89	CLP_RAMP V	70+00.00	72+92.01	LT				299												
R-358	88 & 89	CLP_RAMP V	69+40.86	72+46.24							313										
R-359	86 - 88	CLP_RAMP V	54+49.75	64+55.91				98													
R-360	86 & 87	CLP_RAMP V	58+49.59	62+93.68	RT											440					
SUBTOTALS FROM THIS SHEET							2823	98	1016	186	889	0	0	4	652	440					
SUBTOTALS FROM SHEET P.67							6856	7961	2286	470	1335	1	1	6	1053	0					
TOTALS CARRIED TO GENERAL SUMMARY							9679	8059	3302	656	2224	1	1	10	1705	440					

REMOVAL SUBSUMMARY

HAM-IR 75-1.05

MODEL: Sheet PAPERSIZE: 34x22 (in.) DATE: 8/28/2025 TIME: 10:12:58 AM PLTDRV: OHDOT_PDF.pltcfg PENTBL: OHDOT_Pen.tbl USER: WORKSPACE: OHDOTCEv02 WORKSET: I122048 PRODUCT: OpenRoadsDesigner 10.12.02.4
pw:\\ohiodot-pw.bentley.com:ohiodot-pw-02\Documents\01 Active Projects\District 08\Hamilton\I122048\403-Engineering_StructurePoint\Roadway\Sheets\I122048_GS302.dgn

DESIGN AGENCY
STRUCTUREPOINT LLC

DESIGNER
LZS

REVIEWER
KAM 03/03/25

PROJECT ID
122048

SHEET P.68 | TOTAL P.421

REFERENCE NO.	SHEET NO.	ALIGNMENT	STATION FROM	STATION TO	SIDE	611 12" CONDUIT, TYPE B, AS PER PLAN FT	611 12" CONDUIT, TYPE B, AS PER PLAN (CINCINNATI) FT	611 12" CONDUIT, TYPE C, AS PER PLAN FT	611 12" CONDUIT, TYPE C, AS PER PLAN (CINCINNATI) FT	611 15" CONDUIT, TYPE B, AS PER PLAN FT	611 15" CONDUIT, TYPE B, AS PER PLAN (CINCINNATI) FT	611 15" CONDUIT, TYPE C, AS PER PLAN (CINCINNATI) FT	611 18" CONDUIT, TYPE B, AS PER PLAN FT	611 18" CONDUIT, TYPE B, AS PER PLAN (CINCINNATI) FT	611 18" CONDUIT, TYPE C, AS PER PLAN FT	611 18" CONDUIT, TYPE C, AS PER PLAN (CINCINNATI) FT	611 24" CONDUIT, TYPE B, AS PER PLAN FT	611 CATCH BASIN, NO. 3 EACH	611 CATCH BASIN, NO. 3A EACH	611 CATCH BASIN, NO. 6 EACH	611 CATCH BASIN, NO. 2-2B EACH	611 CATCH BASIN, NO. 2-3 EACH	611 CATCH BASIN, MISC.: COMBINATION INLET (CI) (CINCINNATI) EACH	611 CATCH BASIN, MISC.: DOUBLE GUTTER INLET MANHOLE (DGIMH) (CINCINNATI) EACH	611 INLET, NO. 3C EACH	611 INLET, MISC.: DITCH INLET (DI) (CINCINNATI) EACH	611 MANHOLE, NO. 3 EACH	611 MANHOLE, MISC.: STANDARD MANHOLE, TYPE B (CINCINNATI) EACH	611 SLOTTED DRAIN, TYPE 1, 6" FT
			DRAINAGE																										
D-301	79	CLP_COURT	7+00.00	7+00.00	LT											14							1						
D-302	79	CLP_COURT	7+00.00	8+00.00	RT		32						36											1					
D-303	79 & 81	CLP_COURT	8+00.00	8+00.00	LT		35																1						
D-304	79 & 81	CLP_COURT	8+00.00	8+00.00	RT		57						97											1					
D-305	81	CLP_COURT	8+40.00	8+00.00	RT								34											1					
D-306	81	CLP_COURT	8+85.00	8+85.00	LT		20													1									
D-307	81	CLP_COURT	8+85.00	8+40.00	RT								42											1					
D-308	81	CLP_COURT	9+34.73	9+34.73	LT		20													1									
D-309	81	CLP_COURT	9+34.73	8+85.00	RT		40					49												1					
D-310	81	CLP_COURT	10+00.00	10+00.00	LT		20													1									
D-311	81	CLP_COURT	10+00.00	9+34.73	RT						65													1					
D-312	81	CLP_COURT	11+00.00	11+00.00	LT		20													1									
D-313	81	CLP_COURT	11+00.00	10+00.00	CL						98																	1	
D-314	81	CLP_COURT	11+00.00	11+00.00	LT		25																1						
D-315	81	CLP_WINCHELL	763+10.12	11+00.00	RT		149																			1			
D-316	81	CLP_WINCHELL	757+19.22	7+00.00	RT				67												1								
D-317	81	CLP_COURT	7+00.00		LT											10												1	
D-318			NOT	USED																									
D-319			NOT	USED																									
D-320			NOT	USED																									
D-321			NOT	USED																									
D-322			NOT	USED																									
D-323			NOT	USED																									
D-324	83	CLP_LINN	110+33.00	110+20.65	LT				29															1					
D-325	83	CLP_LINN	110+17.00	110+33.00	RT		38																	1					
D-326	79 & 83	CLP_LINN	111+17.00	4+73.68	LT		10																	1					
D-327	79 & 83	CLP_LINN	111+47.20	4+73.68	RT		10																	1					
D-328	82	CLP_LINN	105+35.00	105+23.16	RT		21																	1					
D-329	82	CLP_LINN	105+35.00	105+23.16	LT		21																	1					
D-330	82	CLP_LINN	105+23.16	103+48.87	CL		184																					1	
D-331			NOT	USED																									
D-332			NOT	USED																									
D-333			NOT	USED																									
D-334			NOT	USED																									
D-335			NOT	USED																									
D-336			NOT	USED																									
D-337			NOT	USED																									
D-338			NOT	USED																									
D-339			NOT	USED																									
D-340			NOT	USED																									
D-341*	84	CLP_WINCHELL	753+13.16	756+40.00	RT																								
D-342*	84	CLP_WINCHELL	756+40.00	758+55.00	RT																								
D-343	84 & 87	CLP_WINCHELL	758+55.00	760+85.00	RT		229												1										
D-344	84 & 87	CLP_WINCHELL	760+85.00	761+85.00	RT						100								1										
D-345	84 & 87	CLP_RAMP V	60+70.00	761+85.00	RT					31																1			
SUBTOTALS CARRIED TO SHEET P.71						0	931	0	96	31	263	49	0	209	0	24	0	0	2	4	1	0	9	6	1	1	0	3	0

* DRAINAGE ITEMS TO BE CONSTRUCTED AS PART OF THE BRENT SPENCE BRIDGE PROJECT (PID 116649), SHOWN FOR INFORMATION ONLY

** DRAINAGE ITEMS TO BE CONSTRUCTED AS PART OF THE HAM-IR 75-1.05 (PHASE 3) PROJECT (PID 113361), SHOWN FOR INFORMATION ONLY

DRAINAGE SUBSUMMARY

DESIGN AGENCY: STRUCTUREPOINT LLC (A WEIDLEIN COMPANY)

DESIGNER: LZS

REVIEWER: KAM 03/03/25

PROJECT ID: 122048

SHEET: P.70 | TOTAL: P.421

HAM-IR 75-1.05

MODEL: Sheet PAPERSIZE: 34x22 (in.) DATE: 8/28/2025 TIME: 10:13:07 AM PLTDRV: OHDOT_PDF.pltcfg PENTBL: OHDOT_Pen.tbl USER: WORKSPACE: OHDOTCEv02 WORKSET: I22048 PRODUCT: OpenRoadsDesigner 10.12.02.4
pw:\\ohiodot-pw.bentley.com:ohiodot-pw-02\Documents\01 Active Projects\District 08\Hamilton\I122048\403-Engineering_StructurePoint\Drainage\Sheets\I122048_DS301.dgn

DRAINAGE SUBSUMMARY

REFERENCE NO.	SHEET NO.	ALIGNMENT	STATION FROM	STATION TO	SIDE	611 12" CONDUIT, TYPE B, AS PER PLAN FT	611 12" CONDUIT, TYPE B, AS PER PLAN (CINCINNATI) FT	611 12" CONDUIT, TYPE C, AS PER PLAN FT	611 12" CONDUIT, TYPE C, AS PER PLAN (CINCINNATI) FT	611 15" CONDUIT, TYPE B, AS PER PLAN FT	611 15" CONDUIT, TYPE B, AS PER PLAN (CINCINNATI) FT	611 15" CONDUIT, TYPE C, AS PER PLAN (CINCINNATI) FT	611 18" CONDUIT, TYPE B, AS PER PLAN FT	611 18" CONDUIT, TYPE B, AS PER PLAN (CINCINNATI) FT	611 18" CONDUIT, TYPE C, AS PER PLAN FT	611 18" CONDUIT, TYPE C, AS PER PLAN (CINCINNATI) FT	611 24" CONDUIT, TYPE B, AS PER PLAN FT	611 CATCH BASIN, NO. 3 EACH	611 CATCH BASIN, NO. 3A EACH	611 CATCH BASIN, NO. 6 EACH	611 CATCH BASIN, NO. 2-2B EACH	611 CATCH BASIN, NO. 2-3 EACH	611 CATCH BASIN, MISC.: COMBINATION INLET (CI) (CINCINNATI) EACH	611 CATCH BASIN, MISC.: DOUBLE GUTTER INLET MANHOLE (DGIMH) (CINCINNATI) EACH	611 INLET, NO. 3C EACH	611 INLET, MISC.: DITCH INLET (DI) (CINCINNATI) EACH	611 MANHOLE, NO. 3 EACH	611 MANHOLE, MISC.: STANDARD MANHOLE, TYPE B (CINCINNATI) EACH	611 SLOTTED DRAIN, TYPE 1, 6" FT
D-346	85 & 87	CLP_WINCHELL	761+85.00	762+13.51	RT									28					1									
D-347	85 & 87	CLP_WINCHELL	762+13.51	62+28.00	RT									17				1										
D-348	85 & 87	CLP_WINCHELL	762+40.00	762+13.51	RT	26													1									
D-349	85 & 87	CLP_WINCHELL	763+15.00	762+40.00	RT	75													1									
D-350	85 & 87	CLP_RAMP V	62+28.00	62+40.07	RT								21							1								268
D-351	85 & 87	CLP_RAMP V	62+40.07	62+60.00	LT								20					1										
D-352	85 & 87	CLP_RAMP V	62+60.00	62+98.00	LT										40				1									
D-353	85 & 87	CLP_RAMP V	62+98.00	64+08.57	LT								140													1		
D-354	85 & 87	CLP_RAMP V	62+96.80		LT										10											1		
D-355			NOT	USED																								
D-356			NOT	USED																								
D-357	88	CLP_RAMP V	65+87.50	65+85.00	RT	25																	1					
D-358	85 & 88	CLP_RAMP V	65+85.00	67+65.00	RT	180													1									
D-359**	85 & 88	CLP_RAMP V	67+47.22	69+25.31	LT																							
D-360	85 & 88	CLP_RAMP V	67+65.00	68+25.00	RT					60									1									
D-361	88	CLP_RAMP V	68+25.00	68+75.00	RT					50									1									
D-362	88	CLP_RAMP V	68+75.00	69+25.00	RT					50									1									
D-363	88	CLP_RAMP V	69+25.00	62+72.73	RT					47									1									
D-364**	88	CLP_RAMP V	69+25.31	69+72.73	LT					49																		
D-365	88	CLP_RAMP V	69+72.73	70+25.00	LT								54					1										
D-366	88	CLP_RAMP V	62+72.73	70+25.00	RT								52					1										
D-367	89	CLP_RAMP V	70+25.00	70+25.00	RT			12													1							
D-368	89	CLP_RAMP V	70+25.00	70+25.00	LT								52						1									
D-369	89	CLP_RAMP V	70+25.00	70+72.39	RT												53		1									
D-370	89	CLP_RAMP V	70+90.00	70+72.39	RT			31											1									
D-371	89	CLP_RAMP V	71+35.00	70+90.00	RT	45													1									
D-372	89	CLP_RAMP V	72+35.00	71+35.00	RT	99													1									
SUBTOTALS FROM THIS SHEET						450	0	43	0	256	0	0	339	45	50	0	53	4	14	1	1	1	0	0	0	0	2	0	268
SUBTOTALS CARRIED FROM SHEET P.70						0	931	0	96	31	263	49	0	209	0	24	0	0	2	4	1	0	9	6	1	1	0	3	0
TOTALS CARRIED TO GENERAL SUMMARY						450	931	43	96	287	263	49	339	254	50	24	53	4	16	5	2	1	9	6	1	1	2	3	268

* DRAINAGE ITEMS TO BE CONSTRUCTED AS PART OF THE BRENT SPENCE BRIDGE PROJECT (PID 116649), SHOWN FOR INFORMATION ONLY

** DRAINAGE ITEMS TO BE CONSTRUCTED AS PART OF THE HAM-IR 75-1.05 (PHASE 3) PROJECT (PID 113361), SHOWN FOR INFORMATION ONLY

DESIGN AGENCY
MPEAN STRUCTUREPOINT INC.

DESIGNER LZS

REVIEWER KAM 03/03/25

PROJECT ID 122048

SHEET P.71 TOTAL P.421

HAM-IR 75-1.05

MODEL: Sheet PAPERSIZE: 34x22 (in.) DATE: 8/28/2025 TIME: 10:13:19 AM PLTDRV: OHDOT_PDF.pltcfg PENTBL: OHDOT_Pen.tbl USER: WORKSPACE: OHDOTCEv02 WORKSET: I22048 PRODUCT: OpenRoadsDesigner 10.12.02.4
pw:\\ohiodot-pw.bentley.com:ohiodot-pw-02\Documents\01 Active Projects\District 08\Hamilton\122048\403-Engineering_StructurePoint\Drainage\Sheets\122048_DS302.dgn

PAVEMENT CALCULATIONS

ALIGNMENT	STATION TO STATION		SIDE	LENGTH (L)	AVERAGE WIDTH (W)	SURFACE AREA (A) A=LxW	CADD AREA	204 EXCAVATION OF SUBGRADE 12"	204 GRANULAR MATERIAL, TYPE C 12"	204 PROOF ROLLING	204 GEOTEXTILE FABRIC	206 CEMENT	206 CURING COAT	206 CEMENT STABILIZED SUBGRADE, 14 INCHES DEEP	206 DIAMOND GRINDING PORTLAND CEMENT CONCRETE PAVEMENT	302 ASPHALT CONCRETE BASE, PG64-22, (449) 5"	302 ASPHALT CONCRETE BASE, PG64-22, (449) 8.5"	304 AGGREGATE BASE 6"	407 NON-TRACKING TACK COAT(0.055 GAL/SY)	442 ASPHALT CONCRETE SURFACE COURSE, 12.5 MM, TYPE A (447) 1.5"	442 ASPHALT CONCRETE SURFACE COURSE, 12.5 MM, TYPE A (448) 2"	442 ASPHALT CONCRETE INTERMEDIATE COURSE, 12.5 MM, TYPE B (446) 1.75"	452 10" NON-REINFORCED CONCRETE PAVEMENT, CLASS QC 1P WITH QC/QA 10"	609 CONCRETE MEDIAN
				FT	FT	SQ FT	SQ FT	CY	CY	HOUR	SY	TON	SY	SY	SY	CY	CY	CY	GAL	CY	CY	CY	SY	SF
CLP_COURT	5+50.00	7+81.59	LT/RT	231.59	36.00	8337.24										129			102		51	45		
					40.17	9302.97		345	345	0.52	1034													
CLP_COURT	7+81.59	8+74.08	LT/RT				2596.39									40			32		16	14		
							2983.10	110	110	0.17	331													
CLP_COURT	8+74.08	10+22.08	LT/RT	148.00	20.00	2960.00										46			36		18	16		
					24.17	3577.16		132	132	0.20	397													
CLP_COURT	10+22.08	11+71.05	LT/RT				11483.85									177			140		71	62		
							12464.31	462	462	0.69	1385													
CLP_LINN	95+54.94	102+03.21	RT				34376.10								3820									
CLP_LINN	103+03.76	104+92.58	LT/RT				15448.77								1717									
CLP_LINN	104+92.58	105+27.00	LT/RT				2458.54												30		15			
CLP_LINN	105+27.00	105+51.32	LT/RT	24.32	34.00	826.88																	92	
					38.74	942.25		35	35	0.05	105													
							109.78																	110
CLP_LINN	109+98.74	110+14.08	LT/RT	15.34	34.00	521.56										8			6		3	3		
					38.23	586.37		22	22	0.03	65													
CLP_LINN	109+98.74	110+18.50	LT/RT				166.14																	166
CLP_LINN	110+14.08	111+01.48	LT	87.4	17.00	1485.80										23			18		9	8		
					19.08	1667.59		62	62	0.09	185													
CLP_LINN	110+14.08	110+63.89	RT	49.81	22.50	1120.72										17			14		7	6		
					26.67	1328.43		49	49	0.07	148													
CLP_LINN	110+63.89	111+27.73	RT	63.84	28.00	1787.52										28			22		11	10		
					30.08	1920.31		71	71	0.11	213													
CLP_LINN	111+01.48	111+58.38	LT				1604.61									25			20		10	9		
							1726.39	64	64	0.10	192													
CLP_LINN	111+27.73	111+58.38	RT				1392.84									21			17		9	8		
							1528.53	57	57	0.08	170													
SUBTOTALS CARRIED TO SHEET P.74								1409	1409	2	4225	0	0	0	5537	514	0	0	437	0	220	181	92	276

HAM-IR 75-1.05

MODEL: Sheet PAPERSIZE: 34x22 (in.) DATE: 8/28/2025 TIME: 10:13:29 AM PLTDRV: OHDOT_PDF.pltcfg PENTBL: OHDOT_Pen.tbl USER: WORKSPACE: OHDOTCEv02 WORKSET: 122048 PRODUCT: OpenRoadsDesigner 10.12.02.4
pw:\ohiodot-pw.bentley.com:ohiodot-pw-02\Documents\01 Active Projects\District 08\Hamilton\122048403-Engineering_StructurePoint\Roadway\Sheets\122048_GC301.dgn

DESIGN AGENCY
STRUCTUREPOINT LLC

DESIGNER
LZS

REVIEWER
KAM 03/03/25

PROJECT ID
122048

SHEET P.73 | TOTAL P.421

ALIGNMENT	STATION TO STATION		SIDE	LENGTH (L)	AVERAGE WIDTH (W)	SURFACE AREA (A) A=LxW	CADD AREA	204 EXCAVATION OF SUBGRADE 12"	204 GRANULAR MATERIAL, TYPE C 12"	204 PROOF ROLLING	204 GEOTEXTILE FABRIC	206 CEMENT	206 CURING COAT	206 CEMENT STABILIZED SUBGRADE, 14 INCHES DEEP	206 DIAMOND GRINDING PORTLAND CEMENT CONCRETE PAVEMENT	302 ASPHALT CONCRETE BASE, PG64-22, (449) 5"	302 ASPHALT CONCRETE BASE, PG64-22, (449) 8.5"	304 AGGREGATE BASE 6"	407 NON-TRACKING TACK COAT(0.055 GAL/SY)	442 ASPHALT CONCRETE SURFACE COURSE, 12.5 MM, TYPE A (447) 1.5"	442 ASPHALT CONCRETE SURFACE COURSE, 12.5 MM, TYPE A (448) 2"	442 ASPHALT CONCRETE INTERMEDIATE COURSE, 12.5 MM, TYPE B (446) 1.75"	452 10" NON-REINFORCED CONCRETE PAVEMENT, CLASS QC 1P WITH QC/QA 10"	609 CONCRETE MEDIAN
				FT	FT	SQ FT	SQ FT	CY	CY	HOUR	SY	TON	SY	SY	SY	CY	CY	CY	GAL	CY	CY	CY	SY	SF
CLP_WINCHELL	758+50.00	760+75.83	LT	225.83	15.00	3387.45													21	16				
					18.00	4064.94											107		25			22		
					21.08	4761.17				0.26		16	529	529				88						
CLP_WINCHELL	760+75.83	765+30.89	LT	455.06	11.00	5005.66													61	23		27		
					14.08	6407.24				0.36		21	712	712			168	119						
CLP_RAMP V	58+53.69	59+89.23	LT/RT	135.54	16.22	2198.46				0.12		7	244	244			58	41	27	10		12		
CLP_RAMP V	59+89.23	60+84.36	LT	95.13	18.00	1712.34				0.10		6	190	190			45	32	21	8		9		
CLP_RAMP V	59+89.23	61+90.07	LT				1478.85			0.08		5	164	164			39	27	18	7		8		
CLP_RAMP V	60+84.36	61+90.07	LT	105.71	12.00	1268.52				0.07		4	141	141			33	23	16	6		7		
CLP_RAMP V	60+84.36	65+45.91	RT				3091.08			0.17		10	343	343			81	57	38	14		17		
CLP_RAMP V	61+90.07	65+45.91	LT	355.84	16.00	5693.44													70	26		31		
					18.08	6433.59				0.36		22	715	715			169	119						
CLP_RAMP V	65+45.91	66+92.54	LT/RT	146.63	27.00	3959.01													48	18		21		
					32.17	4717.09				0.26		16	524	524			124	87						
CLP_RAMP V	66+92.54	69+41.24	LT/RT	248.70	27.00	6714.90													82	31		36		
					31.58	7854.69				0.44		26	873	873			206	145						
CLP_RAMP V	66+92.54	69+41.24	LT				5032.38										132	93	62	23		27		
CLP_RAMP V	69+41.24	71+79.82	LT/RT	238.58	51.00	12167.58													149	56		66		
					56.17	13400.08				0.74		45	1489	1489			352	248						
CLP_RAMP V	71+79.82	72+80.00	LT/RT	100.18	49.00	4908.82													60	23		27		
					54.17	5426.75				0.30		18	603	603			142	100						
CLP_RAMP V	72+80.00	73+00.00	LT			732.74				0.04		2	81	81			19	14	9	3		4		
CLP_RAMP V	72+80.00	73+00.00	RT			318.02				0.02		1	35	35			8	6	4	1		2		
SUBTOTALS FROM THIS SHEET								0	0	3	0	199	6643	6643	0	0	1683	1199	711	265	0	316	0	0
SUBTOTALS CARRIED FROM SHEET P.73								1409	1409	2	4225	0	0	0	5537	514	0	0	437	0	220	181	92	276
TOTALS CARRIED TO GENERAL SUMMARY								1409	1409	5	4225	199	6643	6643	5537	2197		1199	1148	265	220	497	92	276

PAVEMENT CALCULATIONS

HAM-IR 75-1.05

MODEL: Sheet PAPERSIZE: 34x22 (in.) DATE: 8/28/2025 TIME: 10:13:40 AM PLTDRV: OHDOT_PDF.pltcfg PENTBL: OHDOT_Pen.tbl USER: WORKSPACE: OHDOTCEv02 WORKSET: I22048 PRODUCT: OpenRoadsDesigner 10.12.02.4
pw:\\ohiodot-pw.bentley.com:ohiodot-pw-02\Documents\01 Active Projects\District 08\Hamilton\I122048\403-Engineering_StructurePoint\Roadway\Sheets\I122048_GC302.dgn

DESIGN AGENCY
STRUCTUREPOINT LLC

DESIGNER
LZS

REVIEWER
KAM 03/03/25

PROJECT ID
122048

SHEET P.74 TOTAL P.421



FOR LEGEND AND PROJECT DATA SEE SHEET P.75

HORIZONTAL SCALE IN FEET
0 25 50 100

PROJECT SITE PLAN

DESIGN AGENCY
AMERICAN STRUCTUREPOINT INC.

DESIGNER
LZS

REVIEWER
KAM 03/03/25

PROJECT ID
122048

SHEET P.77 TOTAL P.421

HAM-IR 75-1.05

MODEL: Sheet PAPERSIZE: 34x22 (in.) DATE: 8/28/2025 TIME: 10:14:35 AM PLTDRV: OHDOT_PDF.pltcfg PENTBL: OHDOT_Pen.tbl USER: WORKSPACE: OHDOTCEv02 WORKSET: 122048 PRODUCT: OpenRoadsDesigner 10.12.02.4
pw:\\ohiodot-pw.bentley.com:ohiodot-pw-02\Documents\01 Active Projects\District 08\Hamilton\122048\403-Engineering_StructurePoint\Drainage\Sheets\122048_DP304.dgn

NOTE:
** DENOTES EXISTING PIPES TO BE CLEANED

FOR CURVE DATA SEE SHEET P.3
FOR SUBSUMMARIES SEE SHEETS P.67 - P.71
FOR INTERSECTION DETAILS SEE SHEET P.135
FOR DRIVE DETAILS SEE SHEETS P.148 - P.149
FOR CURB RAMP DETAILS SEE SHEET P.147
FOR RETAINING WALL 02 DETAILS SEE SHEETS P.164 - P.192

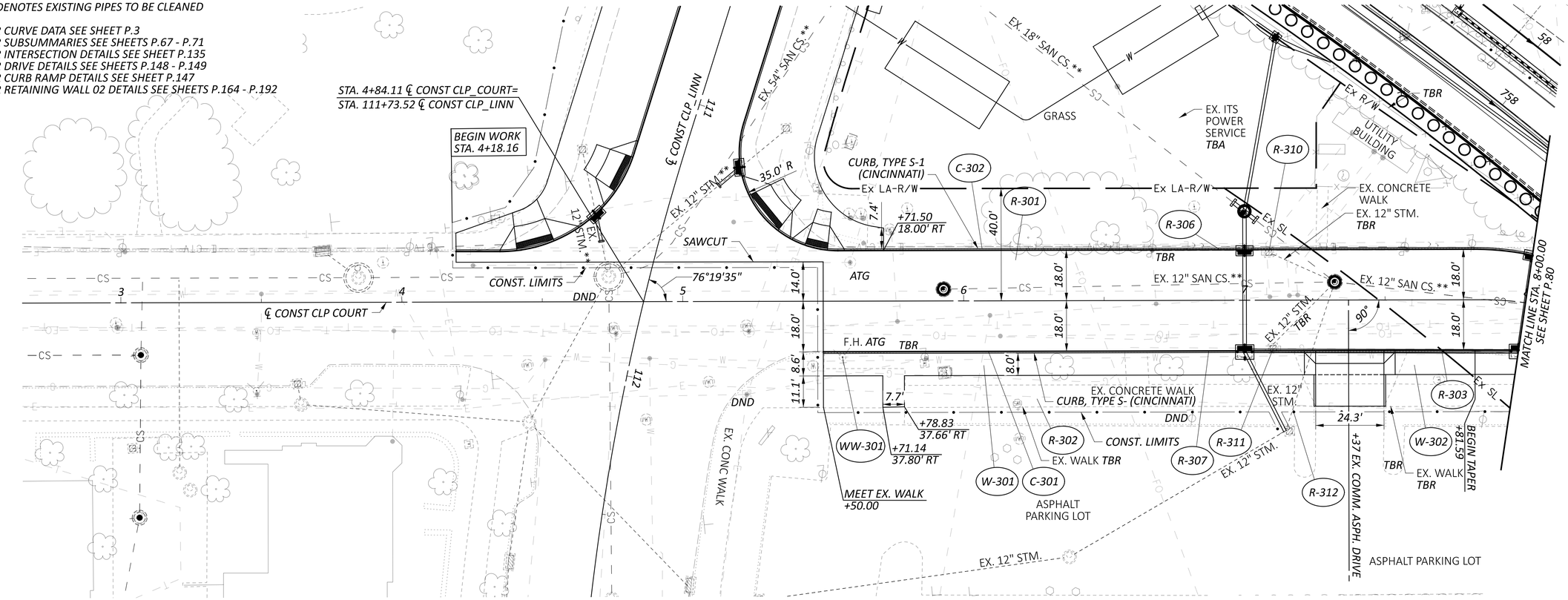

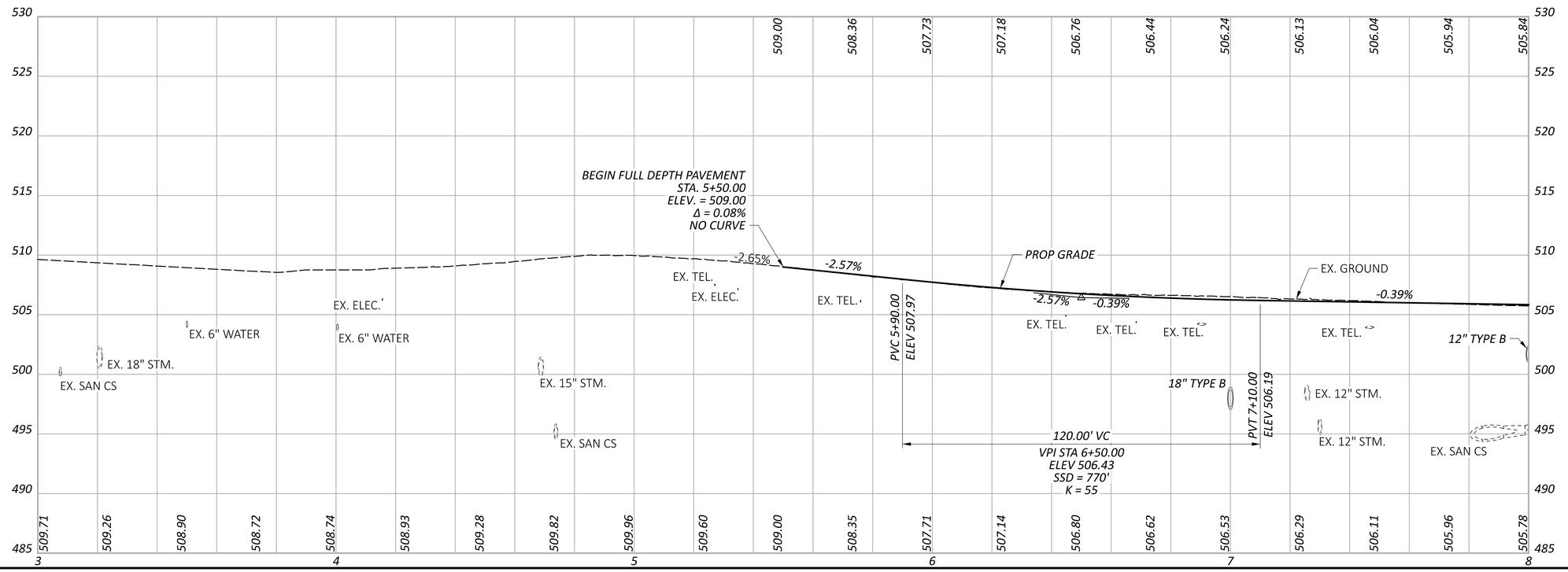

HORIZONTAL SCALE IN FEET
0 10 20 40

PLAN AND PROFILE - COURT ST
STA. 3+00.00 TO STA. 8+00.00

DESIGN AGENCY
STRUCTUREPOINT LLC

DESIGNER	LZS
REVIEWER	KAM 03/03/25
PROJECT ID	122048
SHEET	P.78
TOTAL	P.421

HAM-IR 75-1.05

MODEL: Sheet PAPERSIZE: 34x22 (in.) DATE: 8/28/2025 TIME: 10:15:10 AM USER: lstuller
pw:\\ohiodot-pw.bentley.com:ohiodot-pw-02\Documents\01 Active Projects\District 08\Hamilton\122048\403-Engineering_StructurePoint\Roadway\Sheets\122048_GP311.dgn

NOTE:
** DENOTES EXISTING PIPES TO BE CLEANED
"APP (C)" DENOTES ITEM 611 - CONDUIT, AS PER PLAN (CINCINNATI)

FOR STORM SEWER PROFILES SEE SHEETS P.154 - P.163

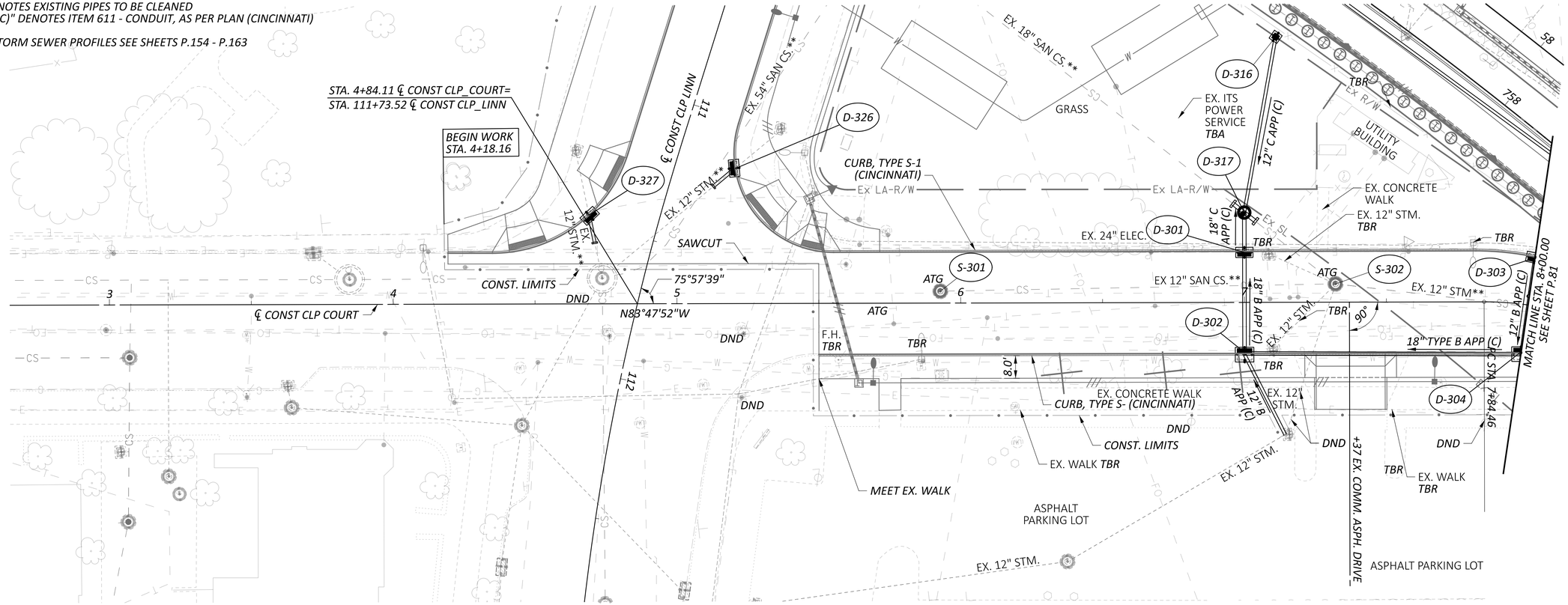

HORIZONTAL
SCALE IN FEET
0 10 20 40

DRAINAGE PLAN - COURT ST
STA. 3+00.00 TO STA. 8+00.00

DESIGN AGENCY
STRUCTUREPOINT INC.

DESIGNER
LZS

REVIEWER
KAM 03/03/25

PROJECT ID
122048

SHEET P.79 | TOTAL P.421

HAM-IR 75-1.05

MODEL: Sheet PAPERSIZE: 34x22 (in.) DATE: 8/28/2025 TIME: 10:15:39 AM USER: lstutler
pw:\\ohiodot-pw.bentley.com:ohiodot-pw-02\Documents\01 Active Projects\District 08\Hamilton\122048\403-Engineering_StructurePoint\Drainage\Sheets\122048_DP311.dgn

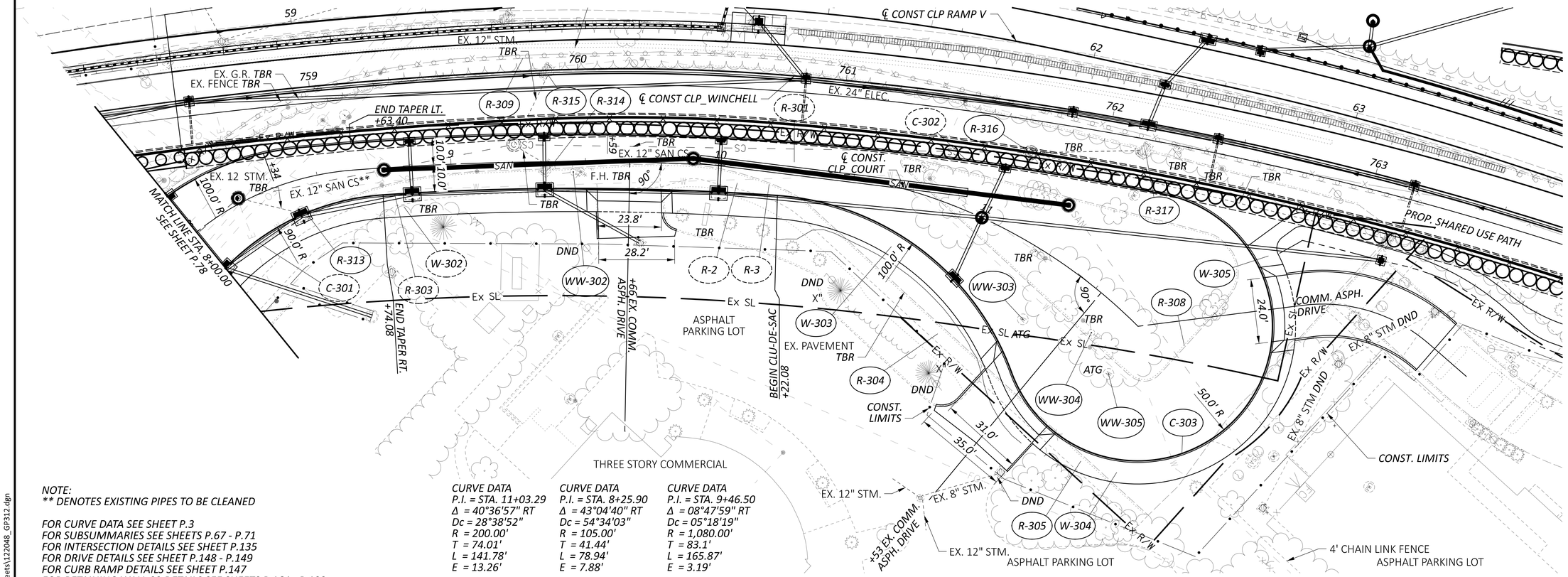

NOTE:
*** DENOTES EXISTING PIPES TO BE CLEANED*

FOR CURVE DATA SEE SHEET P.3
FOR SUBSUMMARIES SEE SHEETS P.67 - P.71
FOR INTERSECTION DETAILS SEE SHEET P.135
FOR DRIVE DETAILS SEE SHEET P.148 - P.149
FOR CURB RAMP DETAILS SEE SHEET P.147
FOR RETAINING WALL 02 DETAILS SEE SHEETS P.164 - P.192

CURVE DATA
P.I. = STA. 11+03.29
Δ = 40°36'57" RT
Dc = 28°38'52"
R = 200.00'
T = 74.01'
L = 141.78'
E = 13.26'

CURVE DATA
P.I. = STA. 8+25.90
Δ = 43°04'40" RT
Dc = 54°34'03"
R = 105.00'
T = 41.44'
L = 78.94'
E = 7.88'

CURVE DATA
P.I. = STA. 9+46.50
Δ = 08°47'59" RT
Dc = 05°18'19"
R = 1,080.00'
T = 83.1'
L = 165.87'
E = 3.19'

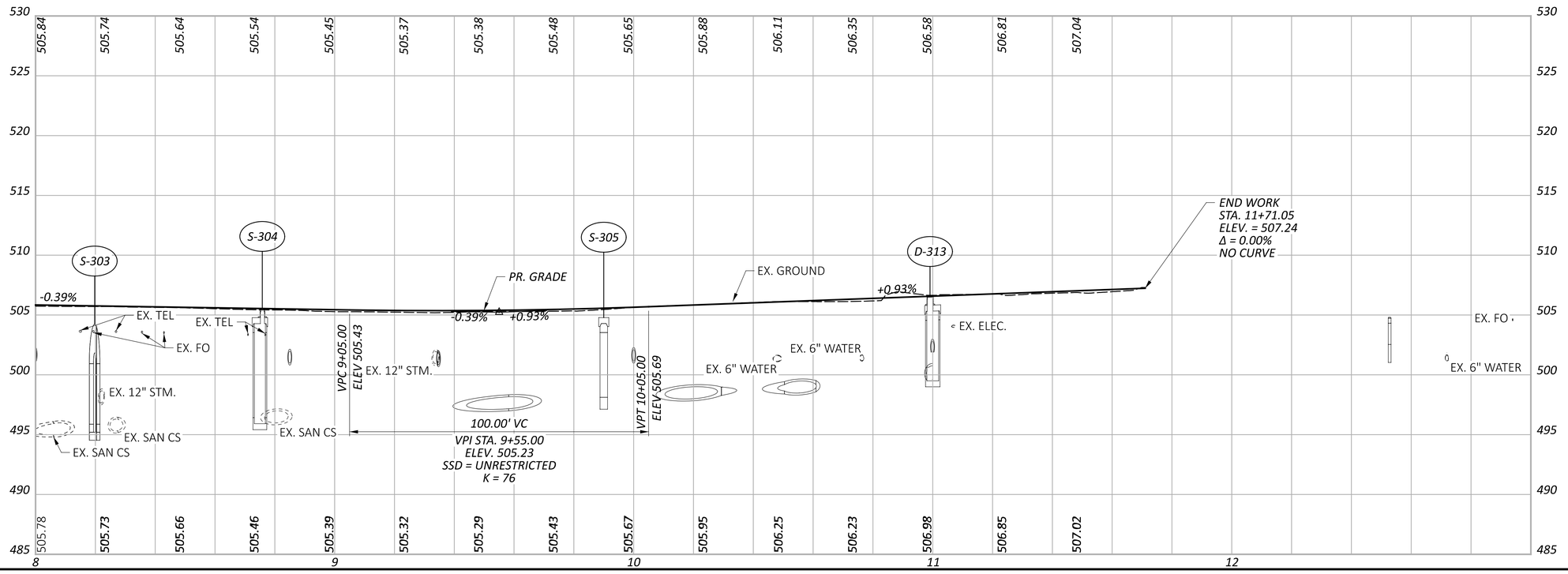

HORIZONTAL SCALE IN FEET
0 10 20 40

PLAN AND PROFILE - COURT ST
STA. 8+00.00 TO STA. 11+71.05

DESIGN AGENCY
AMERICAN STRUCTUREPOINT INC.
DESIGNER LZS
REVIEWER KAM 03/03/25
PROJECT ID 122048
SHEET P.80 TOTAL P.421

HAM-IR 75-1.05

MODEL: Sheet PAPERSIZE: 34x22 (in.) DATE: 8/28/2025 TIME: 10:16:00 AM USER: lstutler
pw:\\ohiodot-pw.bentley.com:ohiodot-pw-02\Documents\01 Active Projects\District 08\Hamilton\122048\d03-Engineering_StructurePointRoadway\Sheets\122048_GP312.dgn

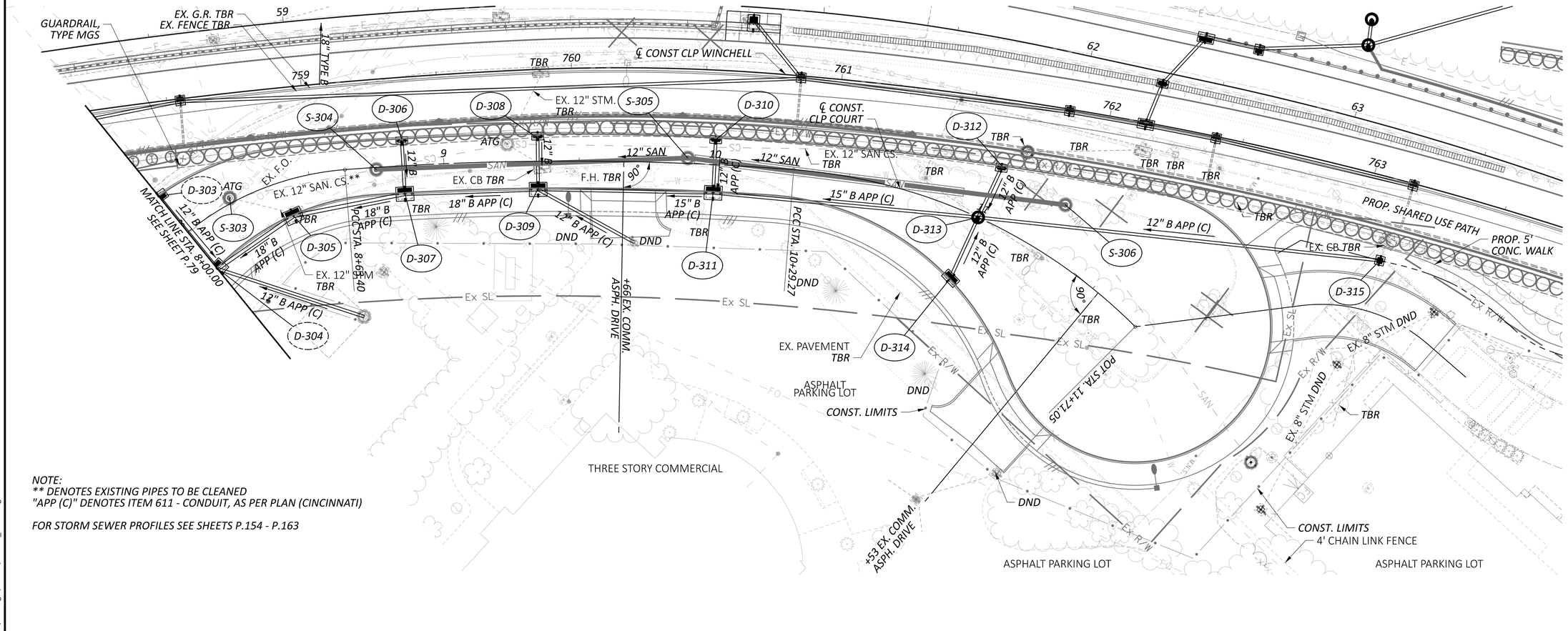

NOTE:
*** DENOTES EXISTING PIPES TO BE CLEANED*
"APP (C)" DENOTES ITEM 611 - CONDUIT, AS PER PLAN (CINCINNATI)

FOR STORM SEWER PROFILES SEE SHEETS P.154 - P.163

HORIZONTAL SCALE IN FEET
0 10 20 40

DRAINAGE PLAN - COURT ST
STA. 8+00.00 TO STA. 11+71.05

DESIGN AGENCY
AMERICAN STRUCTUREPOINT INC.

DESIGNER
LZS

REVIEWER
KAM 03/03/25

PROJECT ID
122048

SHEET P.81 | TOTAL P.421

HAM-IR 75-1.05

MODEL: Sheet PAPERSIZE: 34x22 (in.) DATE: 8/28/2025 TIME: 10:16:23 AM USER: lstutler
pw:\\ohiodot-pw.bentley.com:ohiodot-pw-02\Documents\01 Active Projects\District 08\Hamilton\122048\d03-Engineering_StructurePoint\Drainage\Sheets\122048_DP312.dgn

LEGEND

DIAMOND GRINDING PORTLAND CEMENT CONCRETE PAVEMENT

WEDGE COURSE
ITEM 442 - 2" ASPHALT CONCRETE SURFACE COURSE

BEGIN WORK STA. 102+69.35

B-301

EX. 6" WATER

EX 12" STM**

DX-1381

B-302

12" TYPE B APP (C)

DND

TBRO

S-307

CURVE DATA
P.I. = STA. 101+28.39
Δ = 02°21'12" RT
Dc = 00°57'18"
R = 6,000.00'
T = 123.23'
L = 246.43'
E = 1.27'

MULTI STORY COMMERCIAL BUILDING

PARKING GARAGE

CONST. LIMITS

+27.00
43.75' LT.

Ex LA-R/W

+46.72, 55.33 LT

R-329

W-307

R-339

D-329

R-328

C-306

EX. 12" STM

D-330

C-304

BEGIN APPROACH SLAB
STA. 105+51.32

BEGIN WEDGE COURSE
STA. 104+92.60

℄ CONST CLP_LINN

102 103 104 105 106 107

BEGIN DIAMOND GRINDING
STA. 103+03.76

PT STA. 102+51.58

ATG

12" B APP (C)

EX. 12" STM

N23°44'44"E

END APPROACH SLAB
STA. 105+81.32

BEGIN FULL DEPTH PAVEMENT
STA. 105+27.00

Ex 8" GAS

EX. 8" GAS

C-305

D-328

EX. 16" WATER

B-303

EX. 6" WATER

DND

+20.72
43.50' RT.

EX. FENCE
TBR

W-306

R-327

R-326

R-325

CONST. LIMITS

2 STORY PARKING GARAGE

R-340

OLD GEST ST UNDERPASS TBR

HAM-75-0104
SFN 3109098

W 8TH ST.

MULTI STORY HOTEL

MATCH LINE STA. 107+50.00
SEE SHEET P.83

A CURB HEIGHT TRANSITION FROM 6" TO 8"
FOR INFORMATION SEE INTERSECTION DETAILS

B TAPER ISLAND HEIGHT OVER 10.0'
PER ODOT SCD RM-3.1

FOR CURVE DATA SEE SHEET P.3
FOR SUBSUMMARIES SEE SHEETS P.67 - P.71
FOR INTERSECTION DETAILS SEE SHEETS P.134
FOR CURB RAMP DETIALS SEE SHEET P.147
FOR STORM SEWER PROFILES SEE SHEET P.154 - P.163
FOR HAM-75-0104 DETAILS SEE SHEETS P.243 - P.330

NOTE:
** DENOTES EXISTING PIPES TO BE CLEANED
"APP (C)" DENOTES ITEM 611 - CONDUIT, AS PER PLAN (CINCINNATI)

HORIZONTAL SCALE IN FEET
0 10 20 40

PLAN AND PROFILE - LINN ST
STA. 102+00.00 TO STA. 107+50.00

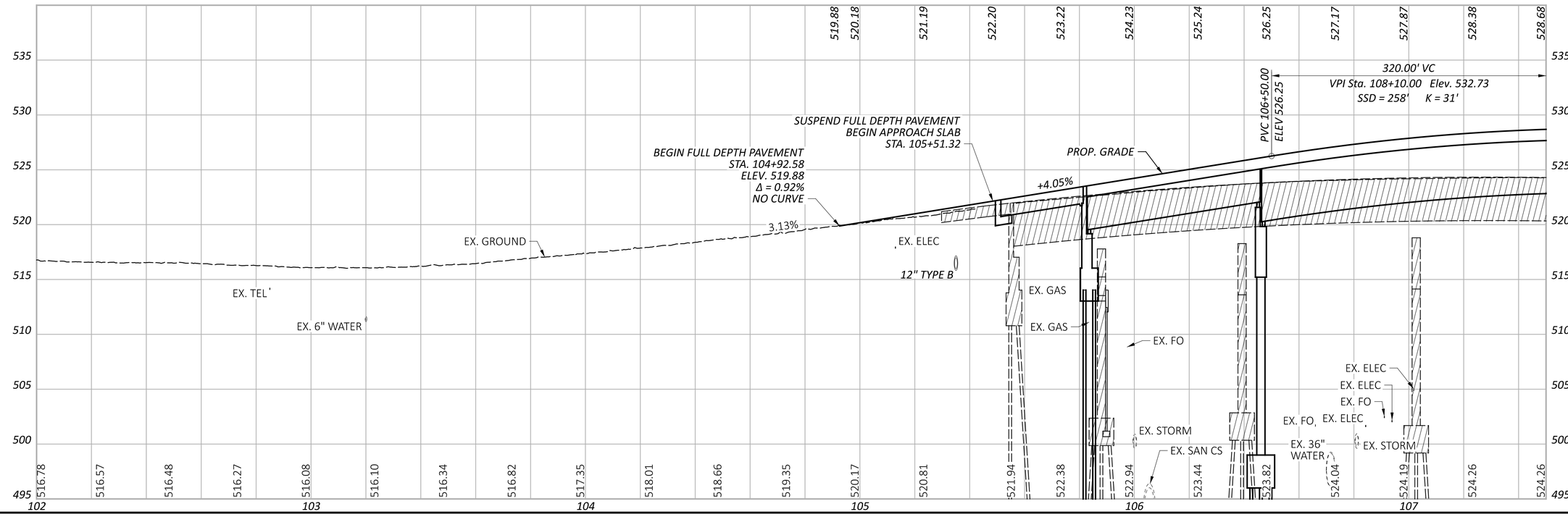

HAM-IR 75-1.05

MODEL: Sheet PAPERSIZE: 34x22 (in.) DATE: 8/28/2025 TIME: 10:17:59 AM USER: lstutler
pw:\\ohiodot-pw.bentley.com:ohiodot-pw-02\Documents\01 Active Projects\District 08\Hamilton\122048\403-Engineering_StructurePoint\Roadway\Sheets\122048_GP351.dgn

DESIGN AGENCY
STRUCTUREPOINT

DESIGNER LZS

REVIEWER KAM 03/03/25

PROJECT ID 122048

SHEET P.82 TOTAL P.421

A CURB HEIGHT TRANSITION FROM 6" TO 8"
FOR INFORMATION SEE INTERSECTION DETAILS
B TAPER ISLAND HEIGHT OVER 10.0'
PER ODOT SCD RM-3.1

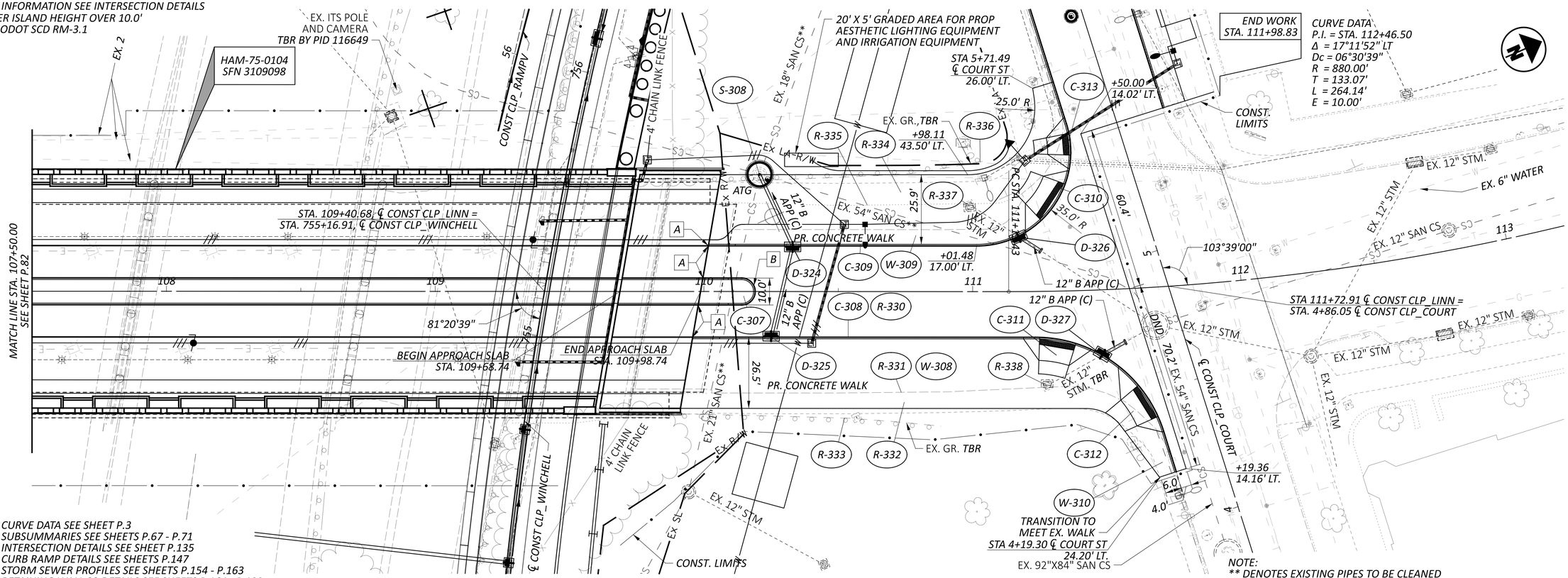

FOR CURVE DATA SEE SHEET P.3
FOR SUBSUMMARIES SEE SHEETS P.67 - P.71
FOR INTERSECTION DETAILS SEE SHEET P.135
FOR CURB RAMP DETAILS SEE SHEETS P.147
FOR STORM SEWER PROFILES SEE SHEETS P.154 - P.163
FOR RETAINING WALL 02 DETAILS SEE SHEETS P.164 - P.192
FOR HAM-75-0104 DETAILS SEE SHEETS P.243 - P.330

NOTE:
** DENOTES EXISTING PIPES TO BE CLEANED
"APP (C)" DENOTES ITEM 611 - CONDUIT, AS PER PLAN (CINCINNATI)

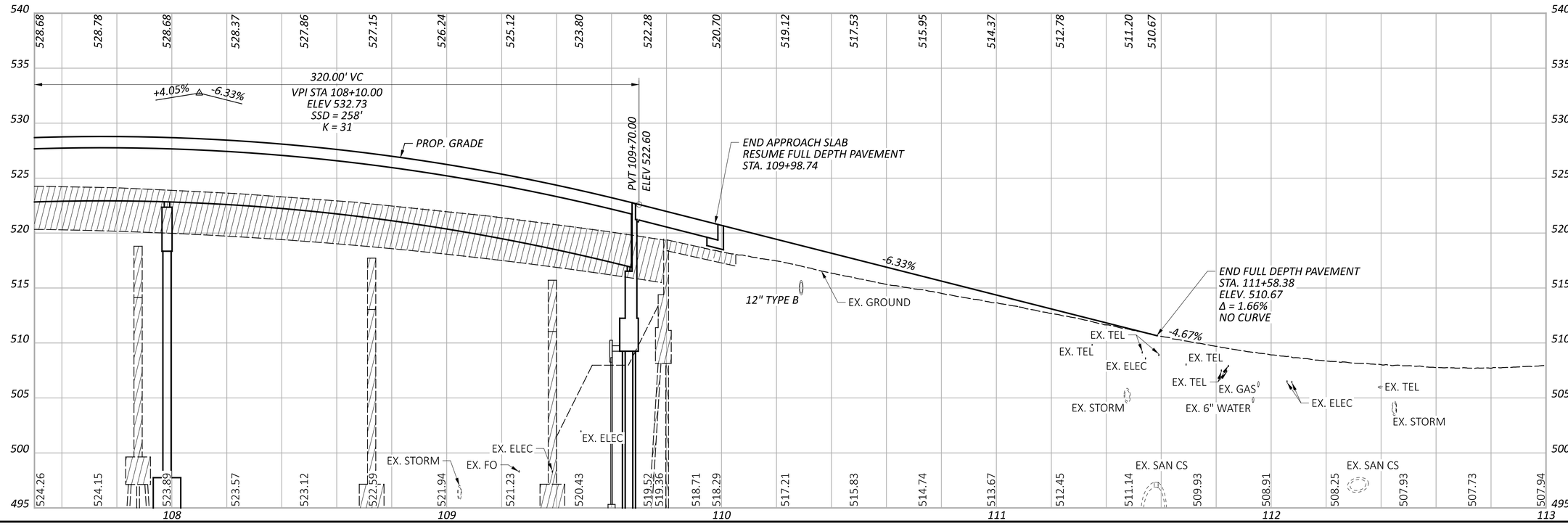

HORIZONTAL SCALE IN FEET
0 10 20 40

PLAN AND PROFILE - LINN ST
STA. 107+50.00 TO STA. 113+00.00

DESIGN AGENCY
AMERICAN STRUCTUREPOINT INC.

DESIGNER
LZS

REVIEWER
KAM 03/03/25

PROJECT ID
122048

SHEET P.83 TOTAL P.421

HAM-IR 75-1.05

MODEL: Sheet PAPERSIZE: 34x22 (in.) DATE: 8/28/2025 TIME: 10:20:06 AM USER: lstutler
pw:\\ohiodot-pw.bentley.com:ohiodot-pw-02\Documents\01 Active Projects\District 08\Hamilton\122048\403-Engineering_StructurePoint\Roadway\Sheets\122048_GP352.dgn

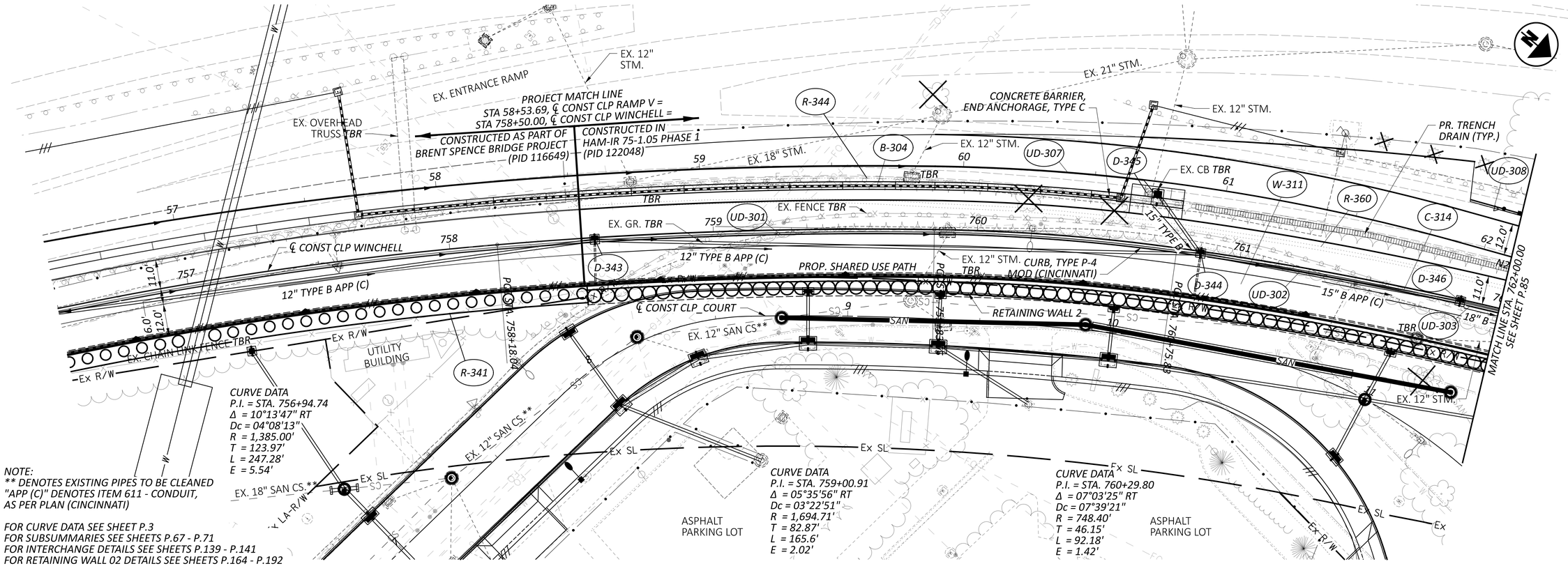

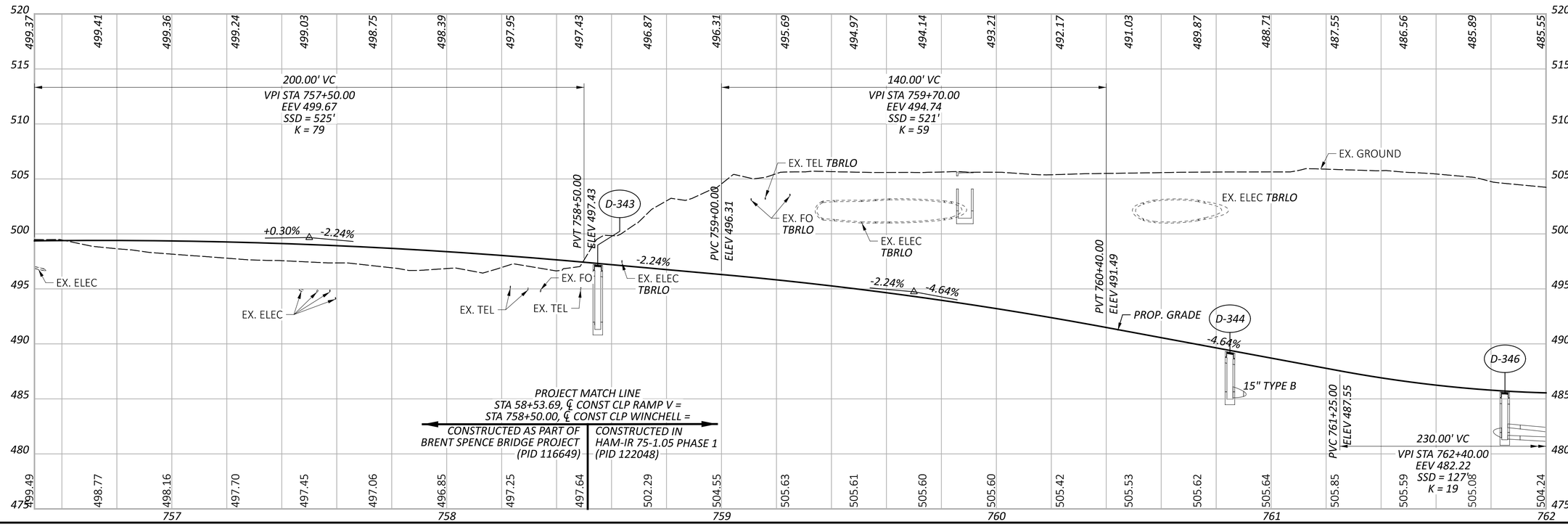

HORIZONTAL SCALE IN FEET
0 10 20 40

PLAN AND PROFILE - WINCHELL AVE
STA. 756+50.00 TO STA. 762+00.00

DESIGN AGENCY
STRUCTUREPOINT LLC

DESIGNER	CDP
REVIEWER	KAM 03/03/25
PROJECT ID	122048
SHEET	P.84
TOTAL	P.421

HAM-IR 75-1.05

MODEL: Sheet PAPERSIZE: 34x22 (in.) DATE: 8/28/2025 TIME: 10:20:36 AM USER: lstutler
pw:\\ohiodot-pw.bentley.com:ohiodot-pw-02\Documents\01 Active Projects\District 08\Hamilton\122048\403-Engineering_StructurePoint\Roadway\Sheets\122048_GP374.dgn

PLAN AND PROFILE - WINCHELL AVE
STA. 762+00.00 TO STA. 765+30.89

HORIZONTAL SCALE IN FEET
0 10 20 40

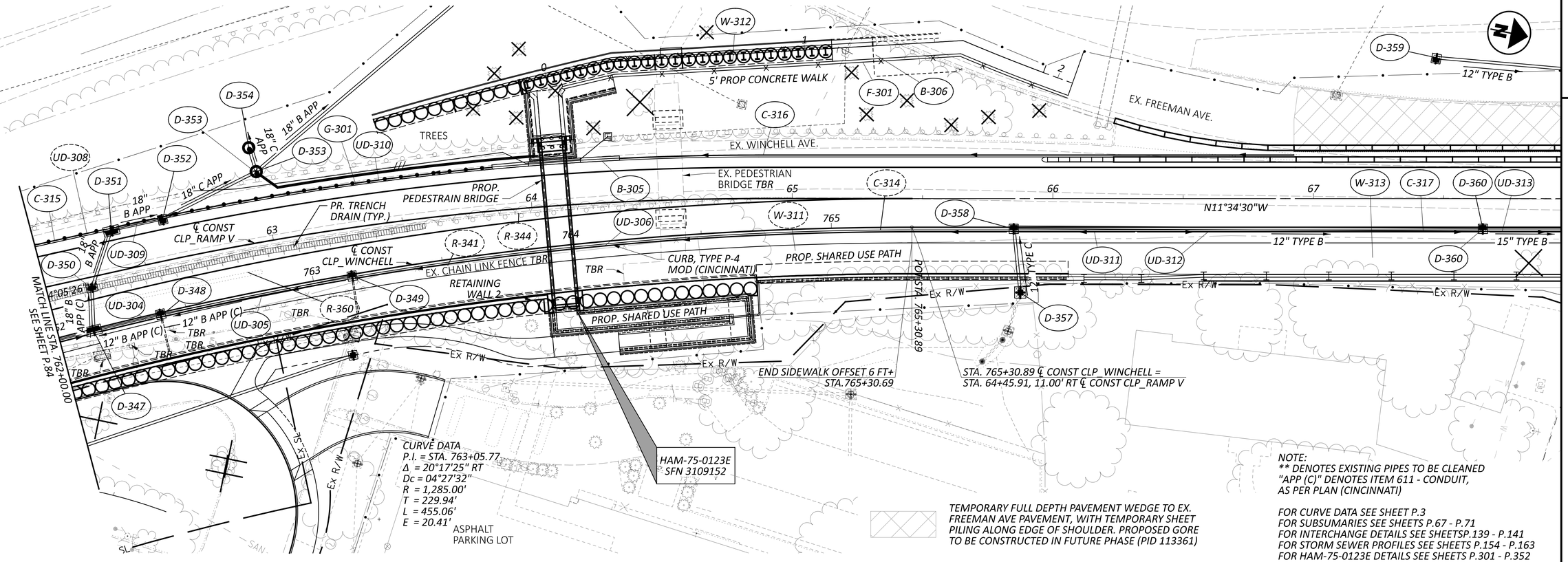

NOTE:
** DENOTES EXISTING PIPES TO BE CLEANED
"APP (C)" DENOTES ITEM 611 - CONDUIT, AS PER PLAN (CINCINNATI)

FOR CURVE DATA SEE SHEET P.3
FOR SUBSUMARIES SEE SHEETS P.67 - P.71
FOR INTERCHANGE DETAILS SEE SHEETSP.139 - P.141
FOR STORM SEWER PROFILES SEE SHEETS P.154 - P.163
FOR HAM-75-0123E DETAILS SEE SHEETS P.301 - P.352

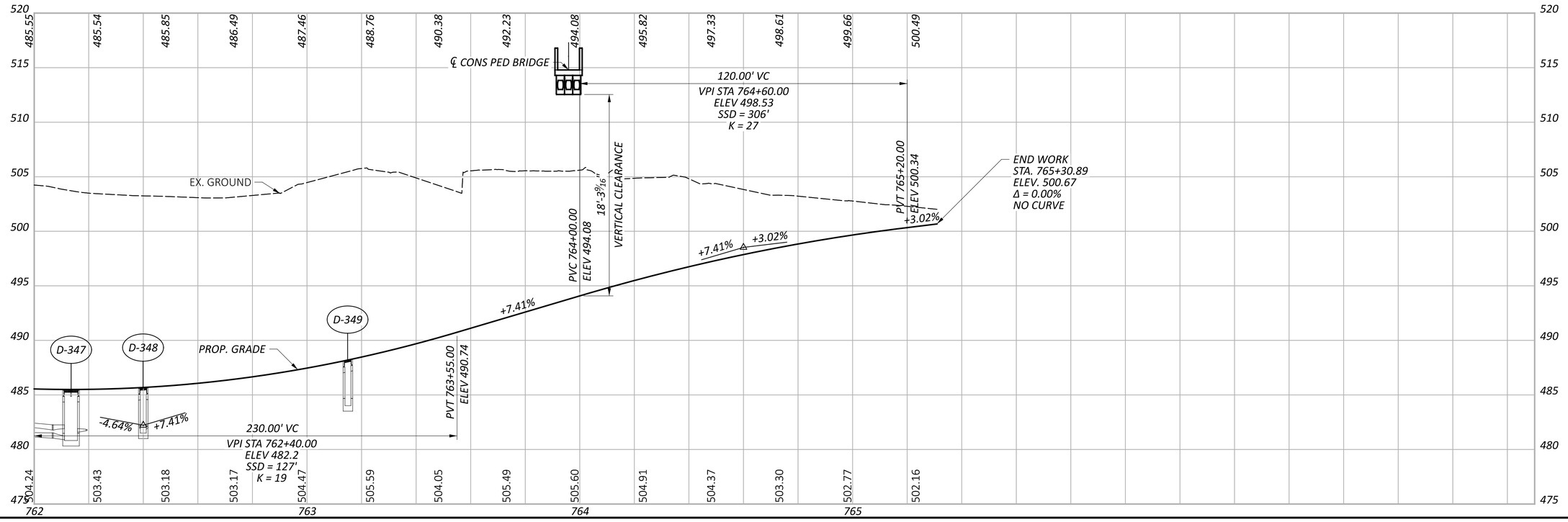

DESIGN AGENCY
WILBUR SMITH STRUCTUREPOINT INC.

DESIGNER	CDP
REVIEWER	KAM 03/03/25
PROJECT ID	122048
SHEET	P.85
TOTAL	P.421

HAM-IR 75-1.05

MODEL: Sheet PAPERSIZE: 34x22 (in.) DATE: 8/28/2025 TIME: 10:21:01 AM USER: lstutler
pw:\\ohiodot-pw.bentley.com:ohiodot-pw-02\Documents\01 Active Projects\District 08\Hamilton\122048\403-Engineering_StructurePoint\Roadway\Sheets\122048_GP375.dgn

HAM-75-0104
SFN 3109098

EX. 2" TELECOM
EX. 2" TELECOM
EX. 2" TELECOM

EX. ITS POLE AND CAMERA
TBR BY PID 116649

TBR

EX. 12" STM.

EX. 66" SAN CS.**

℄ CONST CLP_LINN

EX. WINCHELL AVE.

CONST. LIMITS

EX. GR.
TBR

D-342*

MEDIAN BARRIER, TYPE C

EX. ENTRANCE RAMP

EX. OVERHEAD SIGN TBR

PROJECT MATCH LINE
STA 58+53.69, ℄ CONST CLP RAMP V =
STA 758+50.00, ℄ CONST CLP WINCHELL =

CONSTRUCTED AS PART OF
BRENT SPENCE BRIDGE PROJECT
(PID 116649)

CONSTRUCTED IN
HAM-IR 75-1.05 PHASE 1
(PID 122048)

℄ CONST
CLP_RAMP V

CONST.
LIMITS

8.4'

RD-310

TBR

MATCH LINE STA. 59+00.00
SEE SHEET P.87

55
56
57
58
59
755
756
757
758

POT STA 55+70.77

12" B
APP (C)

12" TYPE B APP (C)

℄ CONST CLP_WINCHELL

R-360
R-342
R-343
R-341
D-343

4.0'
11.0'
12.0'

12" TYPE B
APP (C)

EX. CHAIN LINK FENCE

Ex R/W

PR. RETAINING WALL

D-341*

CURVE DATA
P.I. = STA. 57+81.04
Δ = 13°57'00" RT
Dc = 03°20'01"
R = 1,718.71'
T = 210.27'
L = 418.46'
E = 12.81'

EX. 12" STM.**

EX. 18" SAN CS.**

Ex SL

NOTE:
* DRAINAGE ITEMS TO BE CONSTRUCTED AS PART OF THE BRENT SPENCE BRIDGE PROJECT (PID 116649), SHOWN FOR INFORMATION ONLY
** DENOTES EXISTING PIPES TO BE CLEANED
"APP (C)" DENOTES ITEM 611 - CONDUIT, AS PER PLAN (CINCINNATI)

FOR CRUVE DATA SEE SHEET P.3
FOR SUBSUMMARIES SEE SHEETS P.67 - P.71
FOR INTERCHANGE DETAILS SEE SHEETS P.139 - P.141
FOR STORM SEWER PROFILES SEE SHEETS P.154 - P.163
FOR RETAINING WALL 02 DETAILS SEE SHEETS P.164 - P.192
FOR HAM-75-0104 DETAILS SEE SHEETS P.243 - P.330

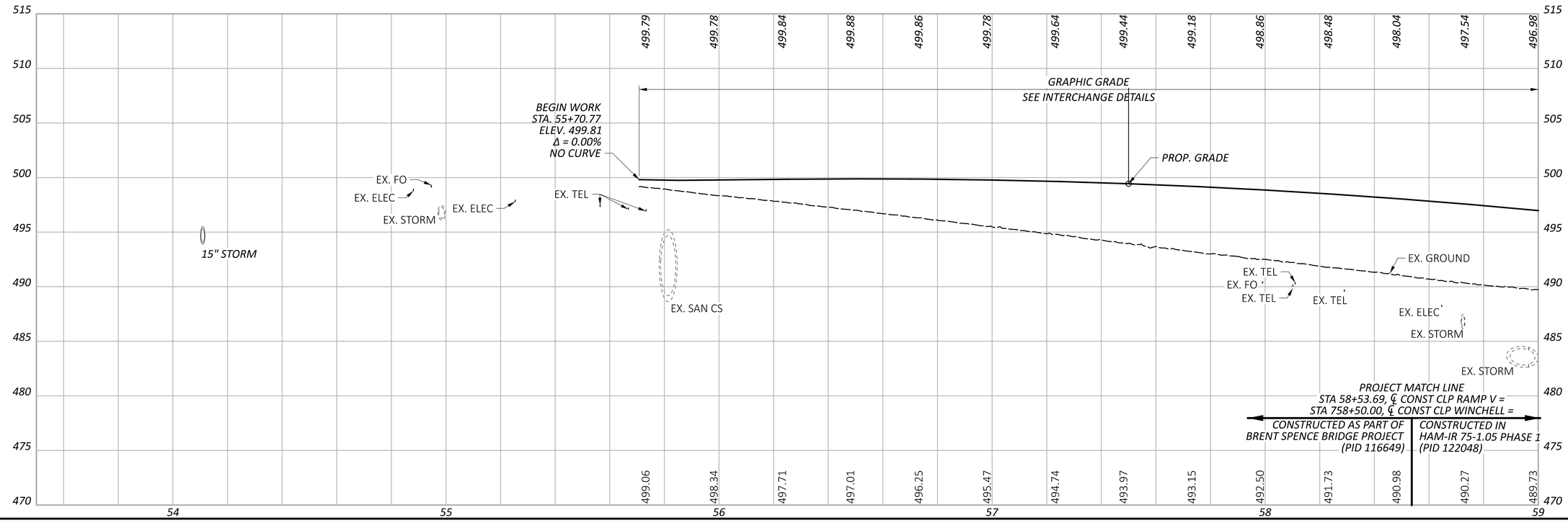

HORIZONTAL
SCALE IN FEET
0 10 20 40

PLAN AND PROFILE - RAMP V
STA. 55+70.77 TO STA. 59+00.00

HAM-IR 75-1.05

MODEL: Sheet PAPERSIZE: 34x22 (in.) DATE: 8/28/2025 TIME: 10:21:29 AM USER: lstutler
pw:\\ohiodot-pw.bentley.com:ohiodot-pw-02\Documents\01 Active Projects\District 08\Hamilton\122048\403-Engineering_StructurePoint\Roadway\Sheets\122048_GP381.dgn

DESIGN AGENCY
STRUCTUREPOINT LLC

DESIGNER
LZS

REVIEWER
KAM 03/03/25

PROJECT ID
122048

SHEET P.86 | TOTAL P.421

NOTE:
** DENOTES EXISTING PIPES TO BE CLEANED
"APP (C)" DENOTES ITEM 611 - CONDUIT, AS PER PLAN (CINCINNATI)

FOR CURVE DATA SEE SHEET P.3
FOR SUBSUMMARIES SEE SHEETS P.67 - P.71
FOR INTERCHANGE DETAILS SEE SHEETSP.139 - P.141
FOR STORM SEWER PROFILES SEE SHEETS P.154 - P.163
FOR HAM-75-0123E DETAILS SEE SHEETS P.301 - P.352

A BEGIN MGS ANCHOR ASSEMBLY, TYPE E
STA. 62+01.35, 16.00' LT

B LENGTH OF NEED LIMIT
GUARDRAIL, TYPE MGS
STA. 62+21.59, 16.00' LT

C END MGS ANCHOR ASSEMBLY, TYPE E
BEGIN GUARDRAIL, TYPE MGS
STA. 62+51.28, 16.00' LT

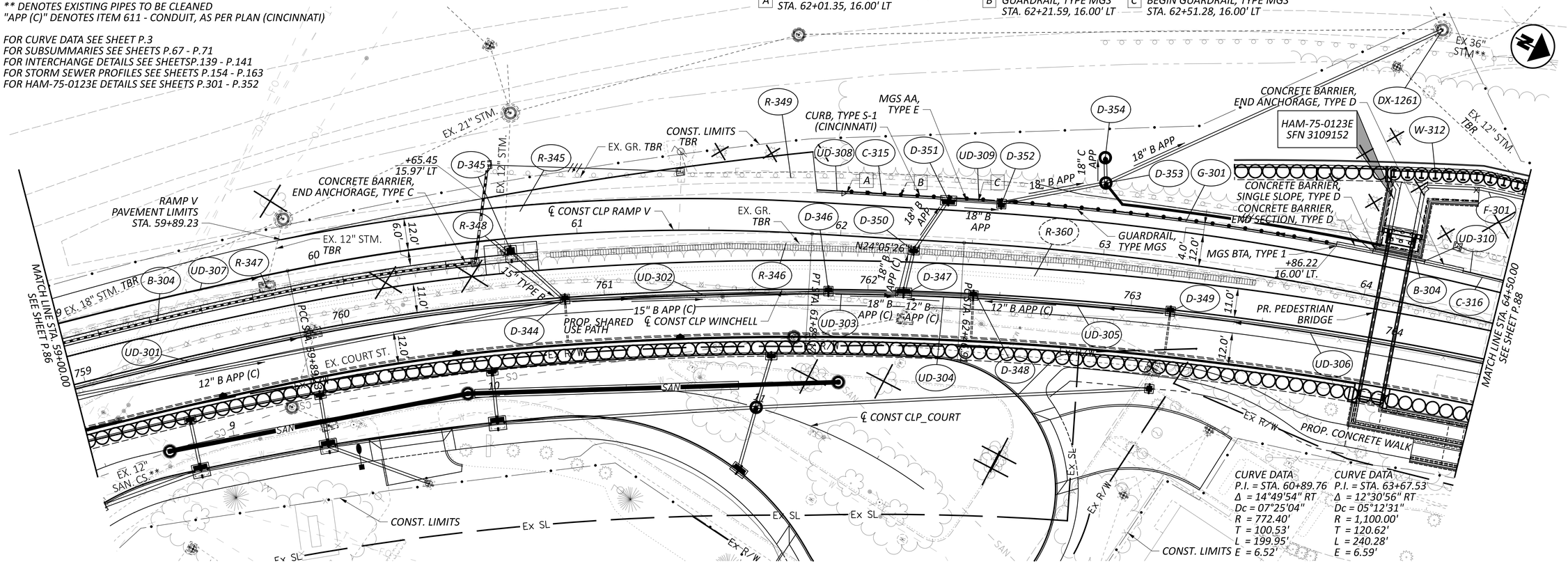

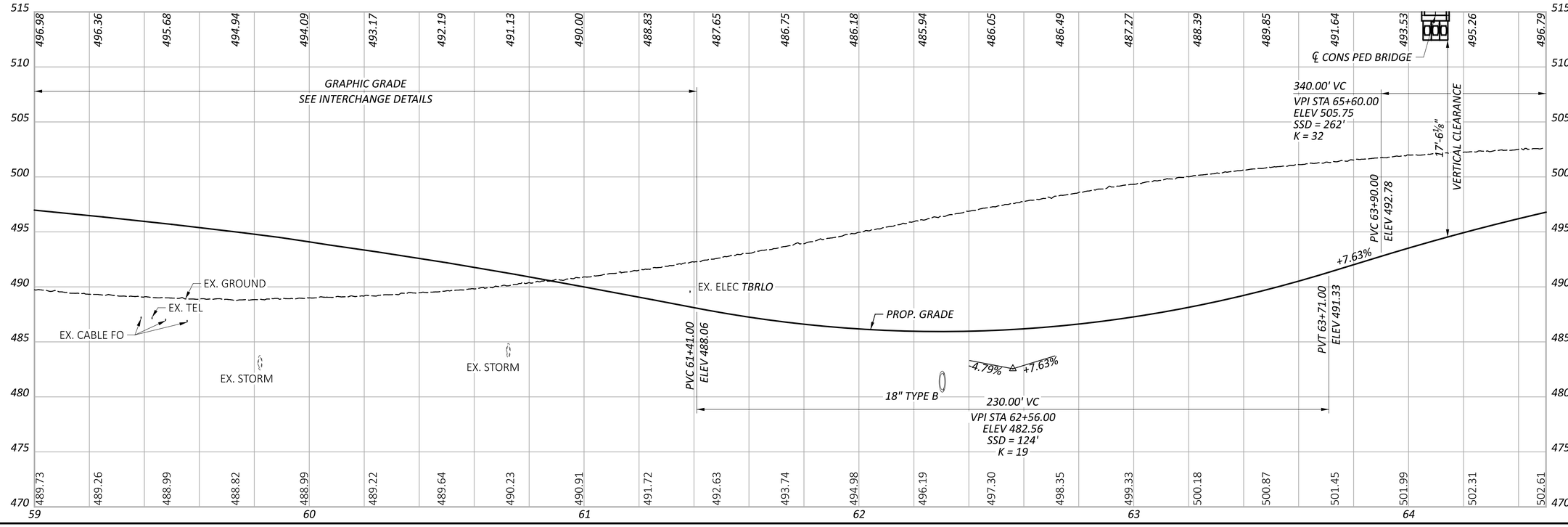

HORIZONTAL SCALE IN FEET
0 10 20 40

PLAN AND PROFILE - RAMP V
STA. 59+00.00 TO STA. 64+50.00

DESIGN AGENCY
STRUCTUREPOINT LLC

DESIGNER LZS
REVIEWER KAM 03/03/25
PROJECT ID 122048
SHEET P.87 TOTAL P.421

HAM-IR 75-1.05

MODEL: Sheet PAPERSIZE: 34x22 (in.) DATE: 8/28/2025 TIME: 10:21:53 AM USER: lstutler
pw:\\ohiodot-pw.bentley.com:ohiodot-pw-02\Documents\01 Active Projects\District 08\Hamilton\122048\403-Engineering_StructurePoint\Roadway\Sheets\122048_GP382.dgn

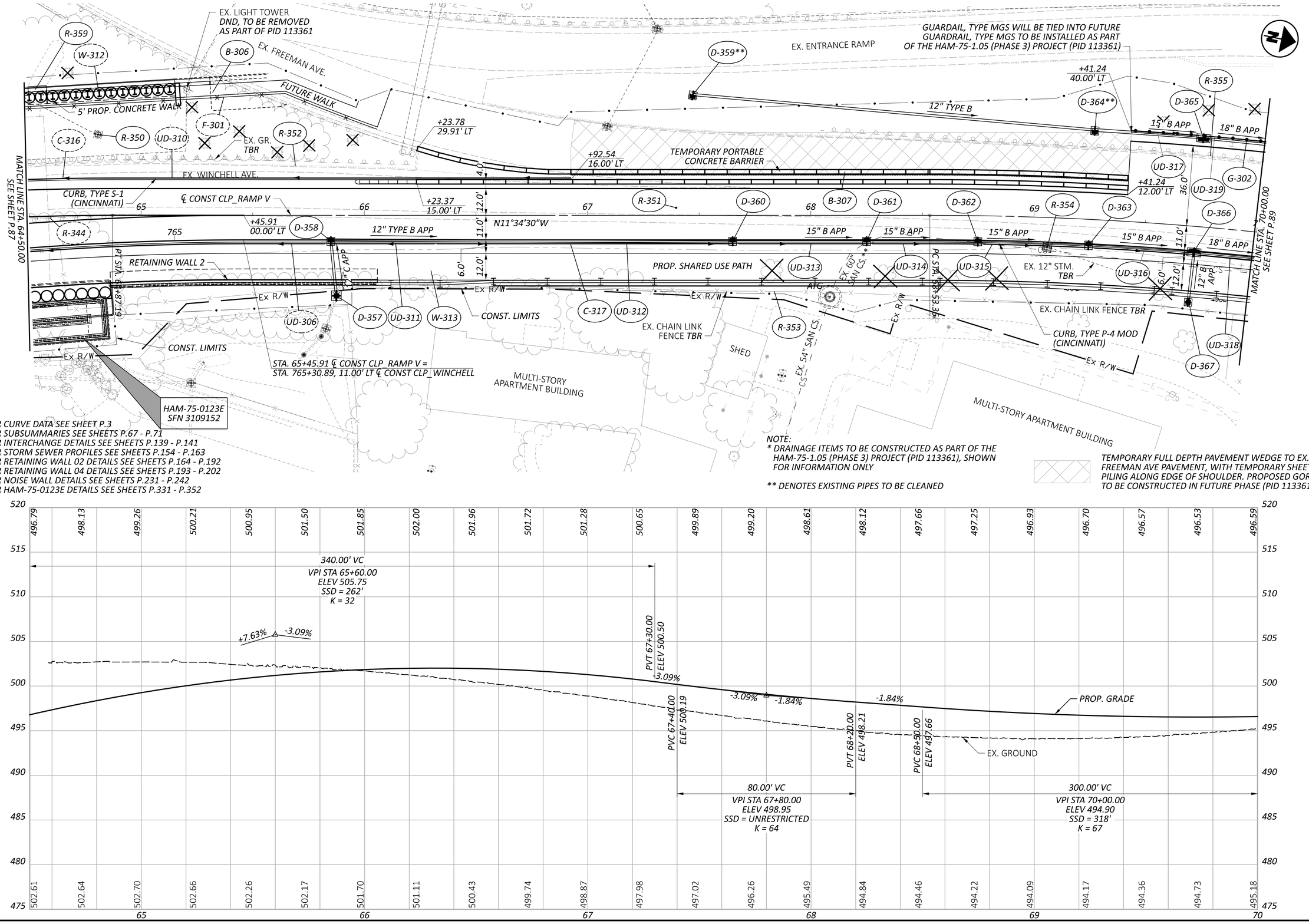

FOR CURVE DATA SEE SHEET P.3
FOR SUBSUMMARIES SEE SHEETS P.67 - P.71
FOR INTERCHANGE DETAILS SEE SHEETS P.139 - P.141
FOR STORM SEWER PROFILES SEE SHEETS P.154 - P.163
FOR RETAINING WALL 02 DETAILS SEE SHEETS P.164 - P.192
FOR RETAINING WALL 04 DETAILS SEE SHEETS P.193 - P.202
FOR NOISE WALL DETAILS SEE SHEETS P.231 - P.242
FOR HAM-75-0123E DETAILS SEE SHEETS P.331 - P.352

NOTE:
** DRAINAGE ITEMS TO BE CONSTRUCTED AS PART OF THE HAM-75-1.05 (PHASE 3) PROJECT (PID 113361), SHOWN FOR INFORMATION ONLY*

*** DENOTES EXISTING PIPES TO BE CLEANED*

TEMPORARY FULL DEPTH PAVEMENT WEDGE TO EX. FREEMAN AVE PAVEMENT, WITH TEMPORARY SHEET PILING ALONG EDGE OF SHOULDER. PROPOSED GORE TO BE CONSTRUCTED IN FUTURE PHASE (PID 113361)

HAM-IR 75-1.05

MODEL: Sheet PAPERSIZE: 34x22 (in.) DATE: 8/28/2025 TIME: 10:22:15 AM USER: lstutler
pw:\\ohiodot-pw.bentley.com:ohiodot-pw-02\Documents\01 Active Projects\District 08\Hamilton\122048\403-Engineering_StructurePoint\Roadway\Sheets\122048_GP383.dgn

HORIZONTAL SCALE IN FEET
0 10 20 40

PLAN AND PROFILE - RAMP V
STA. 64+50.00 TO STA. 70+00.00

DESIGN AGENCY
STRUCTUREPOINT LLC

DESIGNER	LZS
REVIEWER	KAM 03/03/25
PROJECT ID	122048
SHEET	P.88
TOTAL	P.421

FOR CURVE DATA SEE SHEET P.3
FOR SUBSUMMARIES SEE SHEETS P.67 - P.71
FOR STORM SEWER PROFILES SEE SHEETS P.154 - P.163
FOR NOISE WALL DETAILS SEE SHEETS P.231 - P.242

GUARDRAIL, TYPE MGS
MSG, AA TYPE T
CURB, TYPE S-1 (CINCINNATI)
+79.92 40.00' LT
+62.28 36.71' LT
+80.00 36.00' LT
EX. GR. TBR
℄ CONST CLP RAMP V
PROP. SHARED USE PATH
MATCH LINE STA. 70+00.00 SEE SHEET P.88
EX. 60" SAN CS **
EX. 60" SAN CS
18" B APP
12" B APP
24" B APP
17" CAPP
36.0'
11.0'
+00.00 23.00' RT
PI STA. 74+61.98
PC STA. 75+13.19
PT STA. 72+62.28
N04°46'57"E
N06°03'08"E
Ex R/W
Ex SL
Ex SH
EX. CONCRETE WALK DND
MULTI-STORY APARTMENT BUILDING
C-317
C-318
D-368
D-369
D-370
D-371
D-372
G-302
R-356
R-357
R-358
UD-318
UD-319
UD-320
UD-321
UD-322
UD-323
UD-324
W-313
DX-1244

CURVE DATA
P.I. = STA. 70+59.21
Δ = 16°21'27" RT
Dc = 04°00'00"
R = 1,432.40'
T = 205.87'
L = 408.94'
E = 14.72'

NOTE:
** DENOTES EXISTING PIPES TO BE CLEANED

100.00'
VPI STA 72+50.00
ELEV 501.55
SSD = 544'
K = 46

PVC 72+00.00
ELEV 500.22
PVT 73+00.00
501.78
END WORK
STA. 73+00.00
ELEV. 501.75
Δ = 0.05%
END CURVE
+2.66%
+0.47%
+0.52%
-1.84%
PROP. GRADE
EX. GROUND
EX. STORM
18" TYPE B
300.00' VC
VPI STA 70+00.00
ELEV 494.90
SSD = 318'
K = 67
PVT 71+50.00
ELEV 498.89
EX. SAN CS
EX. SAN CS

496.59 496.74 496.98 497.32 497.75 498.27 498.89 499.55 500.22 500.81 501.27 501.60 501.78
495.18 495.76 496.55 497.31 498.21 499.13 499.61 500.32 500.78 501.13 501.43 501.53 501.71 501.88 501.97 502.18 502.30 502.47 502.59 502.71 502.86 502.97 503.03
520 515 510 505 500 495 490 485 480 475
70 71 72 73 74 75

HORIZONTAL SCALE IN FEET
0 10 20 40

PLAN AND PROFILE - RAMP V STA. 70+00.00 TO STA. 75+50.00

DESIGN AGENCY
MORGAN STRUCTUREPOINT INC.
DESIGNER LZS
REVIEWER KAM 03/03/25
PROJECT ID 122048
SHEET P.89 TOTAL P.421

HAM-IR 75-1.05

MODEL: Sheet PAPERSIZE: 34x22 (in.) DATE: 8/28/2025 TIME: 10:22:36 AM USER: lstutler
pw:\\ohiodot-pw.bentley.com:ohiodot-pw-02\Documents\01 Active Projects\District 08\Hamilton\122048\v03-Engineering_StructurePoint\Roadway\Sheets\122048_GP384.dgn

MODEL: COURT - XS005 PAPERSIZE: 34x22 (in.) DATE: 8/28/2025 TIME: 10:23:02 AM PLTDRV: OHDOT_PDF.pltcfg PENTBL: OHDOT_Pen.tbl USER: WORKSPACE: OHDOTCtx02 WORKSET: 122048 PRODUCT: OpenRoadsDesigner 10.12.02.4
pw:\\ohiodot-pw.bentley.com:ohiodot-pw-02\Documents\01 Active Projects\District 08\Hamilton\122048\403-Engineering_StructurePoint\Roadway\Sheets\122048_XS311.dgn

HAM-IR 75-1.05

LEGEND

EXISTING PAVEMENT REMOVED

ITEM 204 - 12" GRANULAR MATERIAL, TYPE C

ITEM 206 - 14" CEMENT STABILIZED SUBGRADE

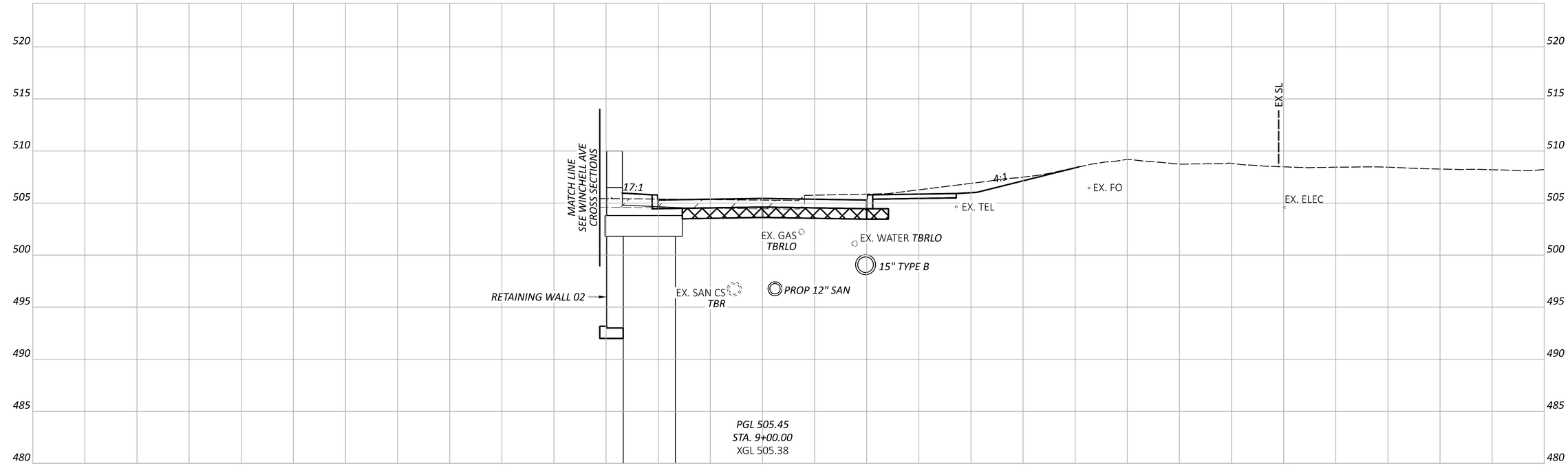

CROSS SECTIONS - COURT ST
STA. 9+00.00

DESIGN AGENCY
STRUCTUREPOINT

DESIGNER
LZS

REVIEWER
KAM 03/03/25

PROJECT ID
122048

SHEET P.95 | TOTAL P.421

LEGEND

EXISTING PAVEMENT REMOVED

ITEM 204 - 12" GRANULAR MATERIAL, TYPE C

ITEM 206 - 14" CEMENT STABILIZED SUBGRADE

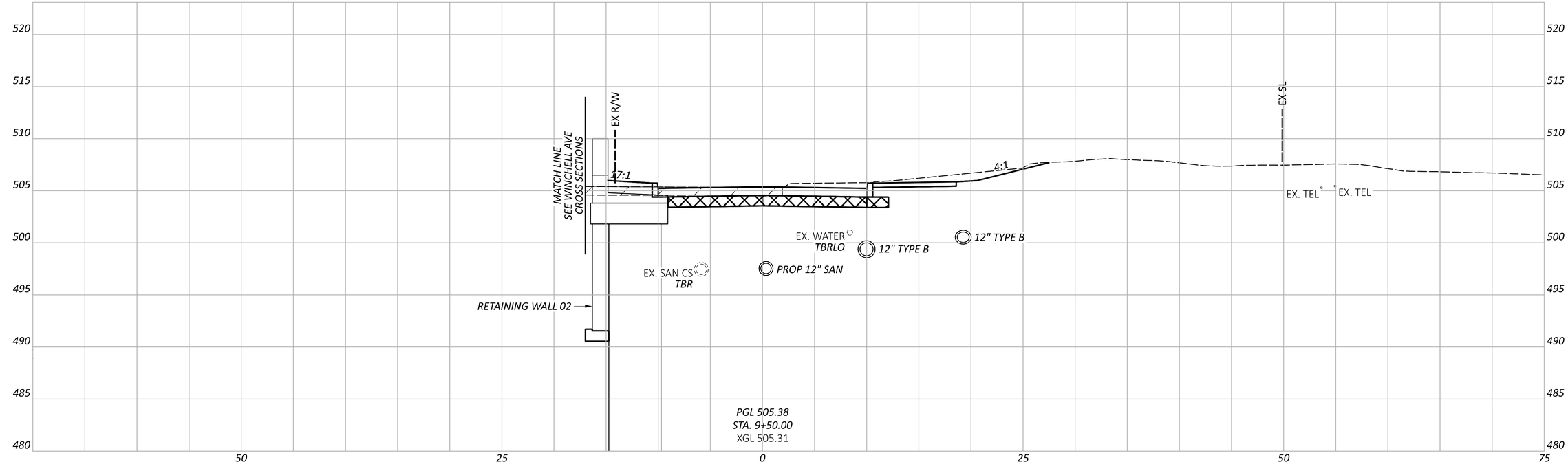

CROSS SECTIONS - COURT ST
STA. 9+50.00

DESIGN AGENCY
STRUCTUREPOINT

DESIGNER
LZS

REVIEWER
KAM 03/03/25

PROJECT ID
122048

SHEET P.96 TOTAL P.421

HAM-IR 75-1.05

MODEL: COURT - XS006 PAPERSIZE: 34x22 (in.) DATE: 8/28/2025 TIME: 10:23:29 AM PLTDRV: OHDOT_PDF.pltcfg PENTBL: OHDOT_Pen.tbl USER: WORKSPACE: OHDOTCivil02 WORKSET: 122048 PRODUCT: OpenRoadsDesigner 10.12.02.4
pw:\\ohiodot-pw.bentley.com:ohiodot-pw-02\Documents\01 Active Projects\District 08\Hamilton\122048\03-Engineering_StructurePoint\Roadway\Sheets\122048_XS311.dgn

MODEL: COURT - XS007 PAPERSIZE: 34x22 (in.) DATE: 8/28/2025 TIME: 10:23:33 AM PLTDRV: OHDOT_PDF.pltcfg PENTBL: OHDOT_Pen.tbl USER: WORKSPACE: OHDOTCivil WORKSET: 122048 PRODUCT: OpenRoadsDesigner 10.12.02.4
pw:\\ohiodot-pw.bentley.com:ohiodot-pw-02\Documents\01 Active Projects\District 08\Hamilton\122048\403-Engineering_StructurePoint\Roadway\Sheets\122048_XS311.dgn

HAM-IR 75-1.05

LEGEND

EXISTING PAVEMENT REMOVED

ITEM 204 - 12" GRANULAR MATERIAL, TYPE C

ITEM 206 - 14" CEMENT STABILIZED SUBGRADE

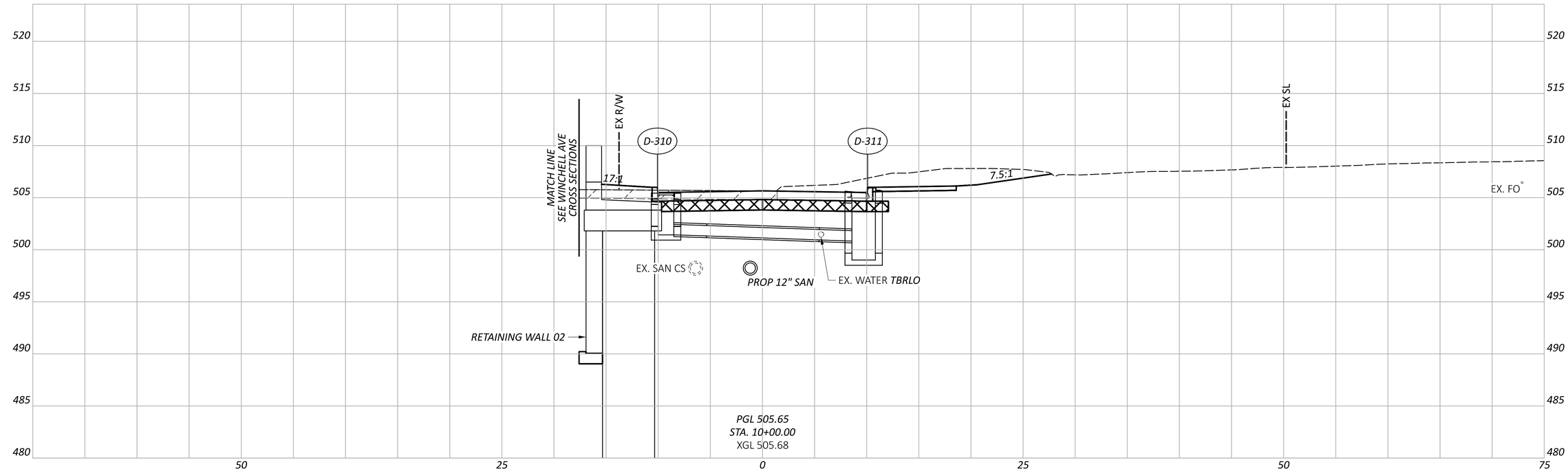

CROSS SECTIONS - COURT ST
STA. 10+00.00

DESIGN AGENCY
STRUCTUREPOINT

DESIGNER
LZS

REVIEWER
KAM 03/03/25

PROJECT ID
122048

SHEET P.97 TOTAL P.421

LEGEND

EXISTING PAVEMENT REMOVED

ITEM 204 - 12" GRANULAR MATERIAL, TYPE C

ITEM 206 - 14" CEMENT STABILIZED SUBGRADE

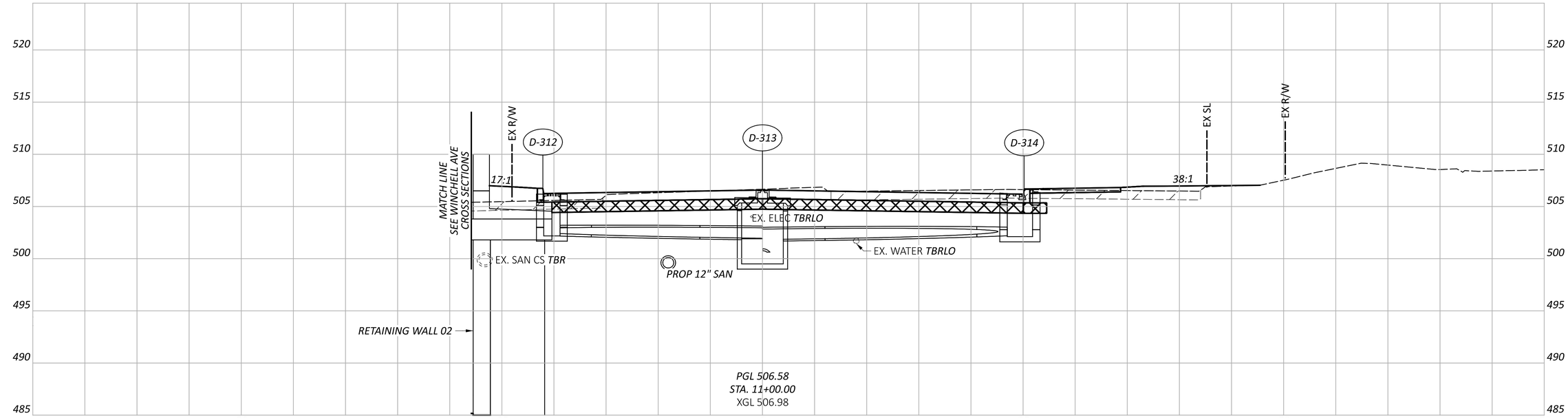

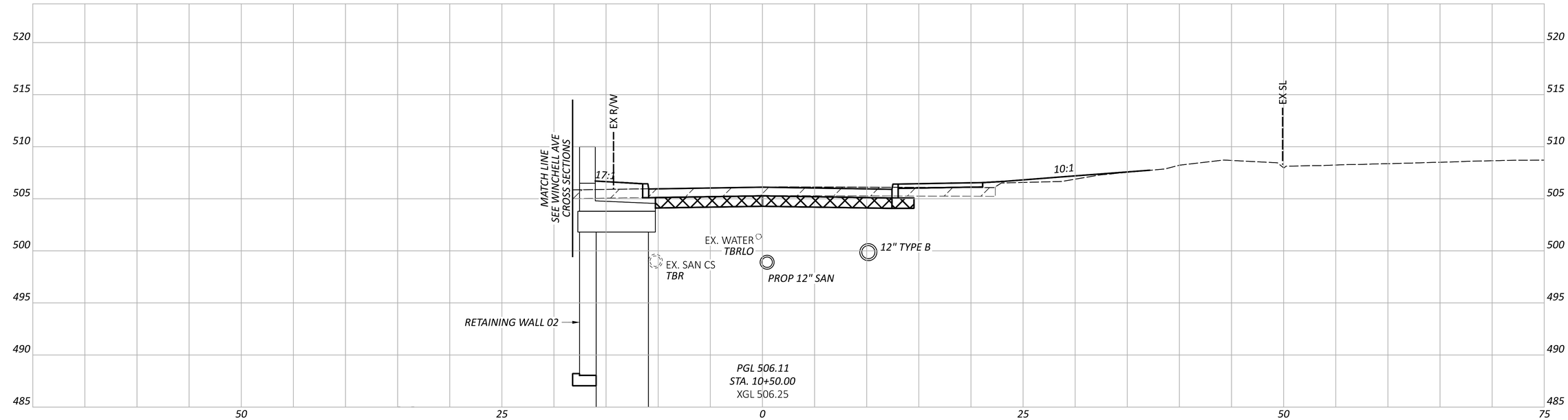

CROSS SECTIONS - COURT ST
STA. 10+50.00 TO STA. 11+00.00

HAM-IR 75-1.05

MODEL: COURT - XS008 PAPERSIZE: 34x22 (in.) DATE: 8/28/2025 TIME: 10:23:37 AM PLTDRV: OHDOT_PDF.pltcfg PENTBL: OHDOT_Pen.tbl USER: WORKSPACE: OHDOTCtx02 WORKSET: 122048 PRODUCT: OpenRoadsDesigner 10.12.4
pw:\\ohiodot-pw.bentley.com:ohiodot-pw-02\Documents\01 Active Projects\District 08\Hamilton\122048\403-Engineering_StructurePoint\Roadway\Sheets\122048_XS311.dgn

DESIGN AGENCY
STRUCTUREPOINT LLC

DESIGNER
LZS

REVIEWER
KAM 03/03/25

PROJECT ID
122048

SHEET P.98 TOTAL P.421

LEGEND

EXISTING PAVEMENT REMOVED

ITEM 204 - 12" GRANULAR MATERIAL, TYPE C

ITEM 206 - 14" CEMENT STABILIZED SUBGRADE

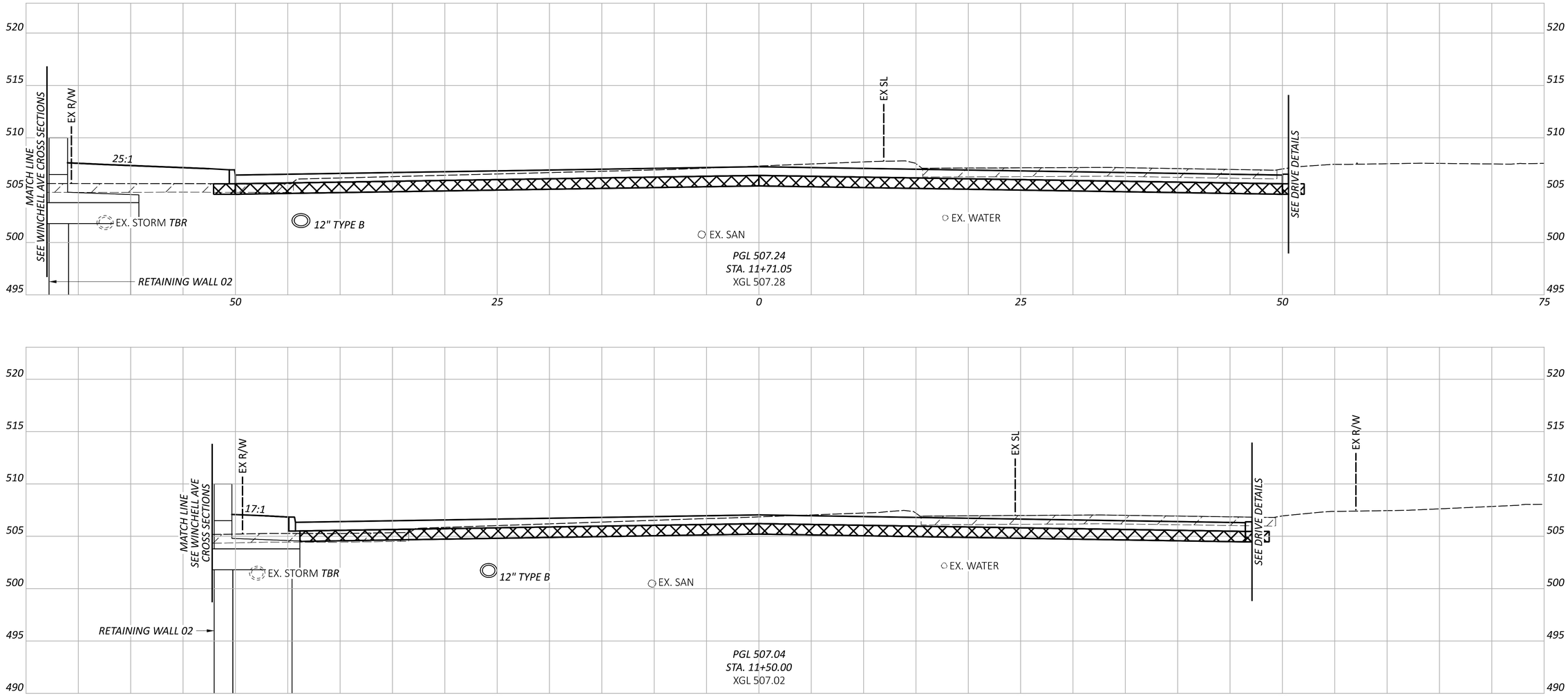

CROSS SECTIONS - COURT ST
STA. 11+50.00 TO STA. 11+71.05

HAM-IR 75-1.05

MODEL: COURT - XS009 PAPERSIZE: 34x22 (in.) DATE: 8/28/2025 TIME: 10:23:43 AM PLTDRV: OHDOT_PDF.pltcfg PENTBL: OHDOT_Pen.tbl USER: WORKSPACE: OHDOTCtx02 WORKSET: 122048 PRODUCT: OpenRoadsDesigner 10.12.02.4
pw:\\ohiodot-pw.bentley.com:ohiodot-pw-02\Documents\01 Active Projects\District 08\Hamilton\122048\403-Engineering_StructurePoint\Roadway\Sheets\122048_XS311.dgn

DESIGN AGENCY
STRUCTUREPOINT

DESIGNER LZS

REVIEWER KAM 03/03/25

PROJECT ID 122048

SHEET P.99 TOTAL P.421

MODEL: LINN - XS004 PAPERSIZE: 34x22 (in.) DATE: 8/28/2025 TIME: 10:24:11 AM PLTDRV: OHDOT_PDF.pltcfg PENTBL: OHDOT_Pen.tbl USER: WORKSPACE: OHDOTCEv02 WORKSET: 122048 PRODUCT: OpenRoadsDesigner 10.12.02.4
pw:\\ohiodot-pw.bentley.com:ohiodot-pw-02\Documents\01 Active Projects\District 08\Hamilton\122048\d03-Engineering_StructurePoint\Roadway\Sheets\122048_XS351.dgn

HAM-IR 75-1.05

LEGEND

EXISTING PAVEMENT REMOVED

ITEM 204 - 12" GRANULAR MATERIAL, TYPE C

ITEM 206 - 14" CEMENT STABILIZED SUBGRADE

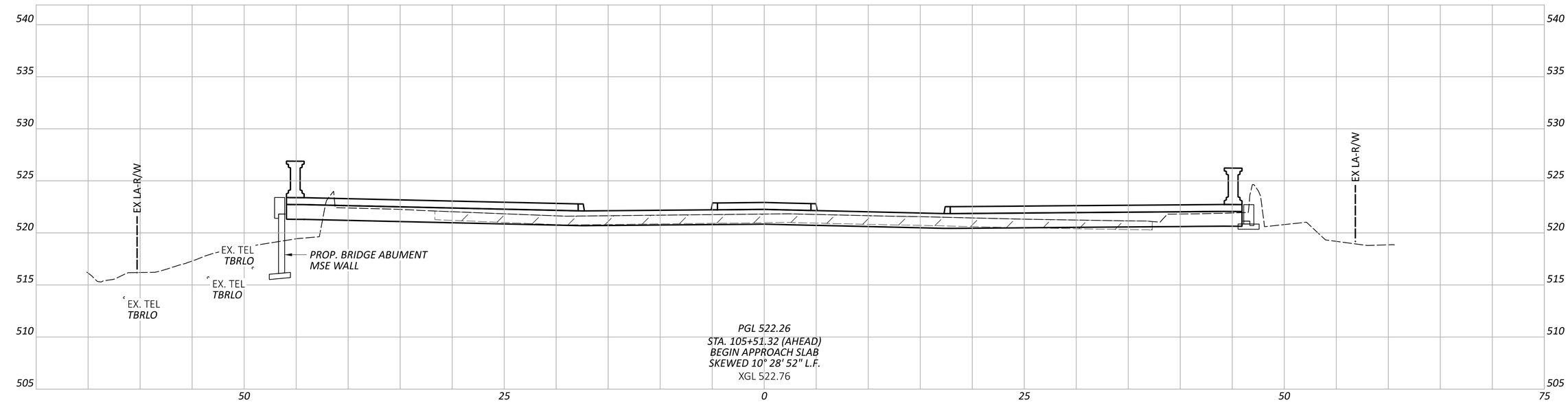

CROSS SECTIONS - LINN ST
STA. 105+51.32 (AHEAD)

DESIGN AGENCY
AMERICAN STRUCTUREPOINT INC.

DESIGNER
LZS

REVIEWER
KAM 03/03/25

PROJECT ID
122048

SHEET P.101 TOTAL P.421

LEGEND

EXISTING PAVEMENT REMOVED

ITEM 204 - 12" GRANULAR MATERIAL, TYPE C

ITEM 206 - 14" CEMENT STABILIZED SUBGRADE

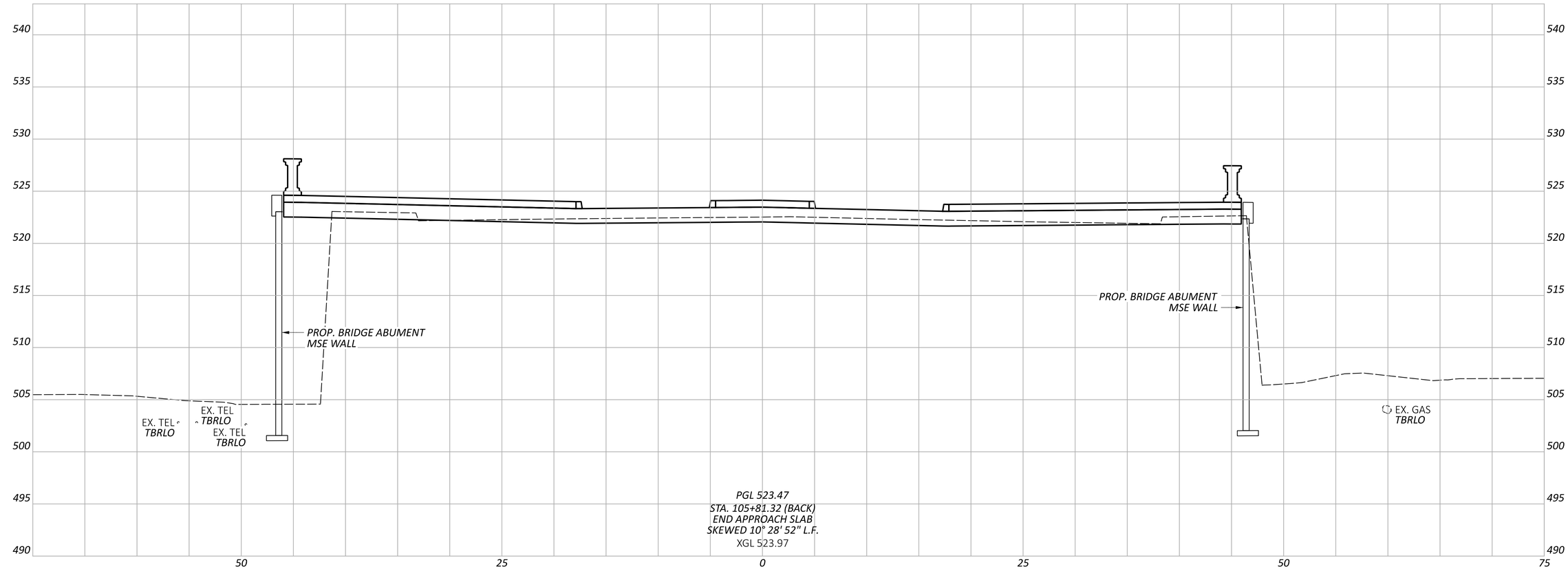

CROSS SECTIONS - LINN ST
STA. 105+81.32 (BACK)

DESIGN AGENCY
STRUCTUREPOINT LLC

DESIGNER
LZS

REVIEWER
KAM 03/03/25

PROJECT ID
122048

SHEET P.102 TOTAL P.421

HAM-IR 75-1.05

MODEL: LINN - XS005 PAPERSIZE: 34x22 (in.) DATE: 8/28/2025 TIME: 10:24:29 AM PLTDRV: OHDOT_PDF.pltcfg PENTBL: OHDOT_Pen.tbl USER: WORKSPACE: OHDOTCEv02 WORKSET: 122048 PRODUCT: OpenRoadsDesigner 10.12.02.4
pw:\\ohiodot-pw.bentley.com:ohiodot-pw-02\Documents\01 Active Projects\District 08\Hamilton\122048\403-Engineering_StructurePoint\Roadway\Sheets\122048_XS351.dgn

MODEL: LINN - XS006 PAPERSIZE: 34x22 (in.) DATE: 8/28/2025 TIME: 10:26:36 AM PLTDRV: OHDOT_PDF.pltcfg PENTBL: OHDOT_Pen.tbl USER: WORKSPACE: OHDOTCEv02 WORKSET: 122048 PRODUCT: OpenRoadsDesigner 10.12.02.4
pw:\\ohiodot-pw.bentley.com:ohiodot-pw-02\Documents\01 Active Projects\District 08\Hamilton\122048\d03-Engineering_StructurePoint\Roadway\Sheets\122048_XS351.dgn

HAM-IR 75-1.05

LEGEND

EXISTING PAVEMENT REMOVED

ITEM 204 - 12" GRANULAR MATERIAL, TYPE C

ITEM 206 - 14" CEMENT STABILIZED SUBGRADE

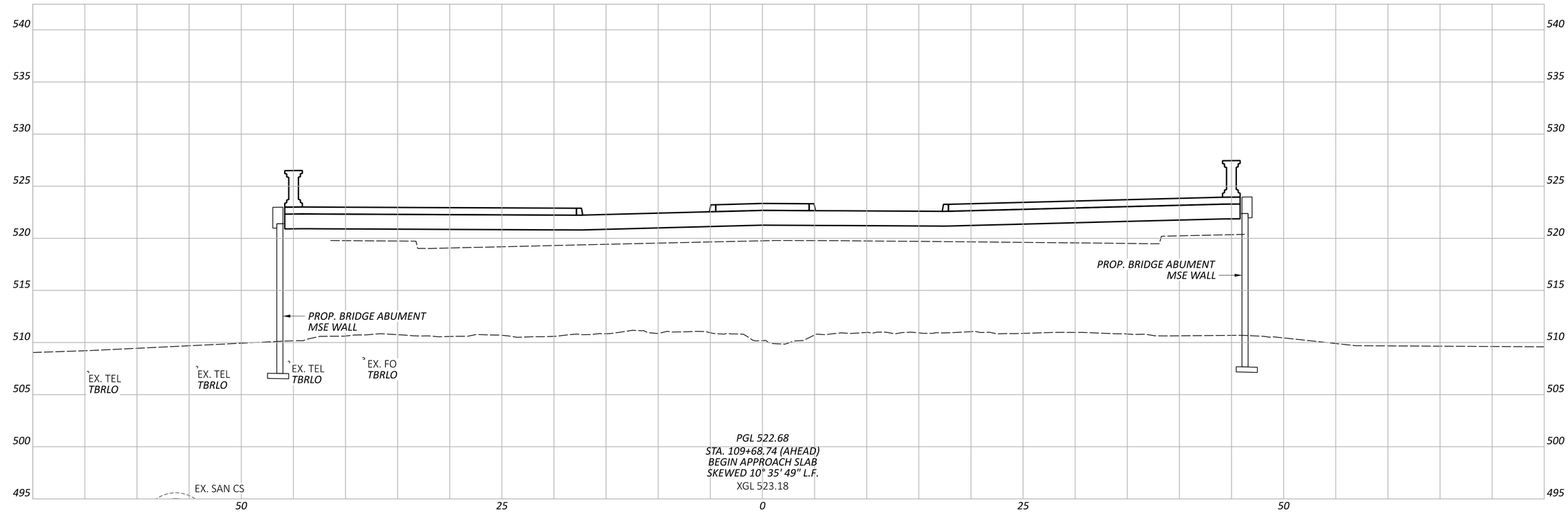

CROSS SECTIONS - LINN ST
STA. 109+68.74 (AHEAD)

DESIGN AGENCY
AMERICAN STRUCTUREPOINT INC.

DESIGNER
LZS

REVIEWER
KAM 03/03/25

PROJECT ID
122048

SHEET P.103 TOTAL P.421

LEGEND

EXISTING PAVEMENT REMOVED

ITEM 204 - 12" GRANULAR MATERIAL, TYPE C

ITEM 206 - 14" CEMENT STABILIZED SUBGRADE

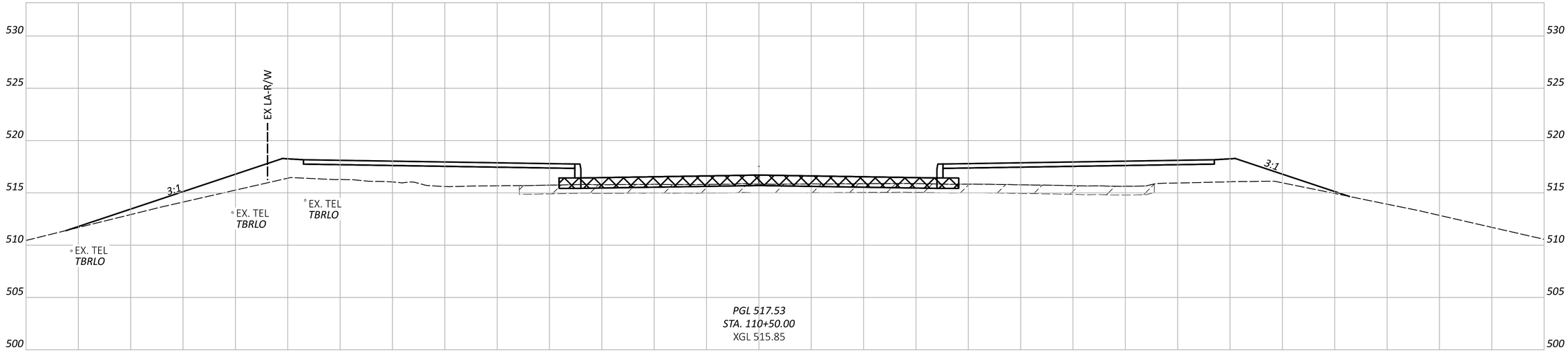

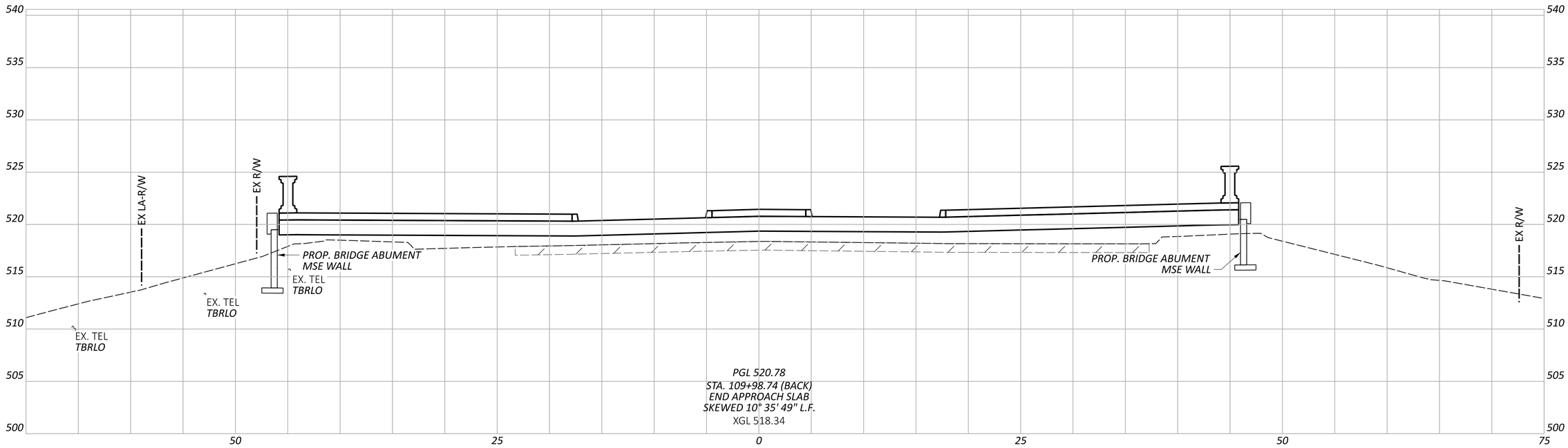

CROSS SECTIONS - LINN ST
STA. 109+98.74 (BACK) TO STA. 110+50.00

HAM-IR 75-1.05

MODEL: LINN - XS007 PAPERSIZE: 34x22 (in.) DATE: 8/28/2025 TIME: 10:26:43 AM PLTDRV: OHDOT_PDF.pltcfg PENTBL: OHDOT_Pen.tbl USER: WORKSPACE: OHDOTCEv02 WORKSET: 122048 PRODUCT: OpenRoadsDesigner 10.12.02.4
pw:\\ohiodot-pw.bentley.com:ohiodot-pw-02\Documents\01 Active Projects\District 08\Hamilton\122048\d03-Engineering_StructurePoint\Roadway\Sheets\122048_XS351.dgn

DESIGN AGENCY
STRUCTUREPOINT LLC

DESIGNER
LZS

REVIEWER
KAM 03/03/25

PROJECT ID
122048

SHEET P.104 | TOTAL P.421

LEGEND

EXISTING PAVEMENT REMOVED

ITEM 204 - 12" GRANULAR MATERIAL, TYPE C

ITEM 206 - 14" CEMENT STABILIZED SUBGRADE

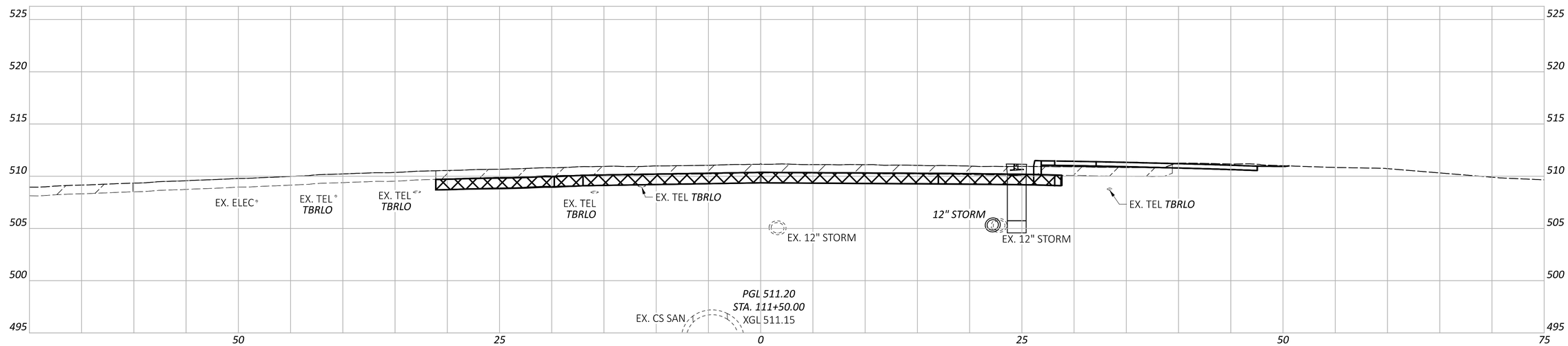

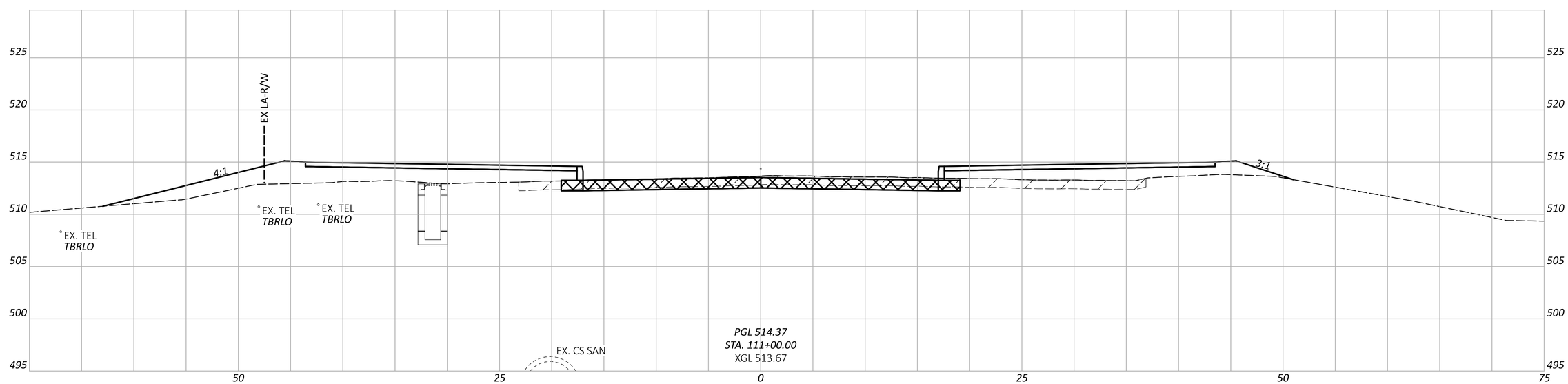

HAM-IR 75-1.05

MODEL: LINN - XS008 PAPERSIZE: 34x22 (in.) DATE: 8/28/2025 TIME: 10:26:50 AM PLTDRV: OHDOT_PDF.pltcfg PENTBL: OHDOT_Pen.tbl USER: WORKSPACE: OHDOTCEv02 WORKSET: 122048 PRODUCT: OpenRoadsDesigner 10.12.02.4
pw:\\ohiodot-pw.bentley.com:ohiodot-pw-02\Documents\01 Active Projects\District 08\Hamilton\122048\403-Engineering_StructurePoint\Roadway\Sheets\122048_XS351.dgn

CROSS SECTIONS - LINN ST
STA. 111+00.00 TO STA. 111+50.00

DESIGN AGENCY
AMERICAN STRUCTUREPOINT INC.

DESIGNER
LZS

REVIEWER
KAM 03/03/25

PROJECT ID
122048

SHEET P.105 TOTAL P.421

MODEL: WINCHELL - XS018 PAPERSIZE: 34x22 (in.) DATE: 8/28/2025 TIME: 10:27:22 AM PLTDRV: OHDOT_PDF.pltcfg PENTBL: OHDOT_Pen.tbl USER: WORKSPACE: OHDOTCEv02 WORKSET: 122048 PRODUCT: OpenRoadsDesigner 10.12.02.4
pw:\\ohiodot-pw.bentley.com:ohiodot-pw-02\Documents\01 Active Projects\District 08\Hamilton\122048\403-Engineering_StructurePoint\Roadway\Sheets\122048_XS371.dgn

HAM-IR 75-1.05

LEGEND

EXISTING PAVEMENT REMOVED

ITEM 204 - 12" GRANULAR MATERIAL, TYPE C

ITEM 206 - 14" CEMENT STABILIZED SUBGRADE

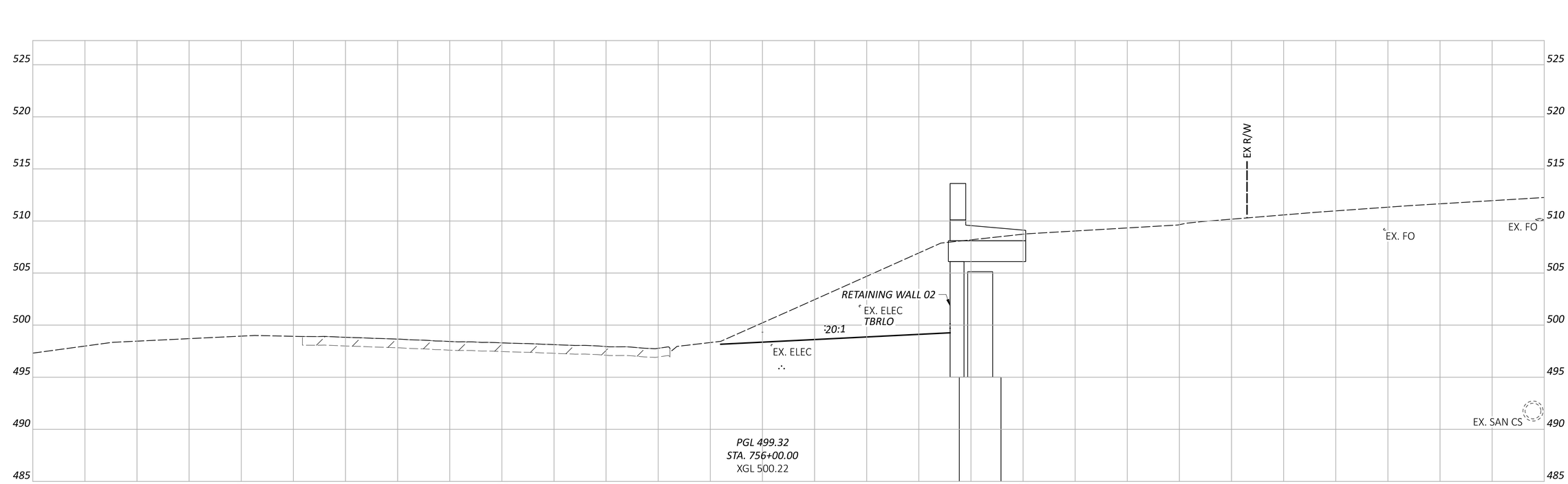

CROSS SECTIONS - WINCHELL AVE
STA. 756+00.00

DESIGN AGENCY
STRUCTUREPOINT

DESIGNER
LZS

REVIEWER
KAM 03/03/25

PROJECT ID
122048

SHEET P.107 TOTAL P.421

LEGEND

EXISTING PAVEMENT REMOVED

ITEM 204 - 12" GRANULAR MATERIAL, TYPE C

ITEM 206 - 14" CEMENT STABILIZED SUBGRADE

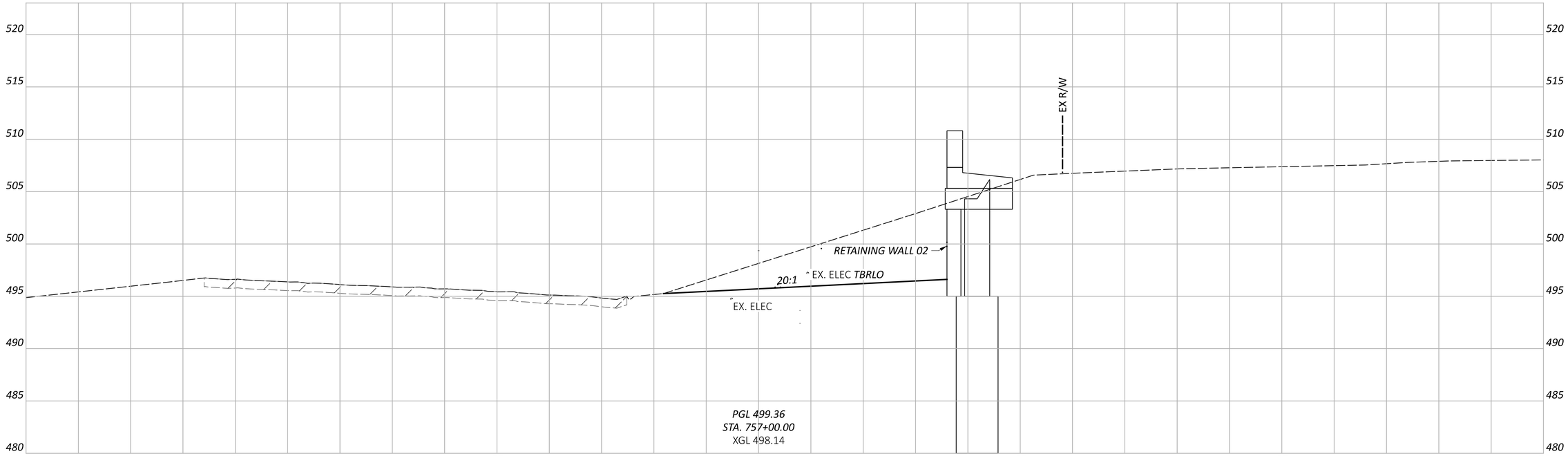

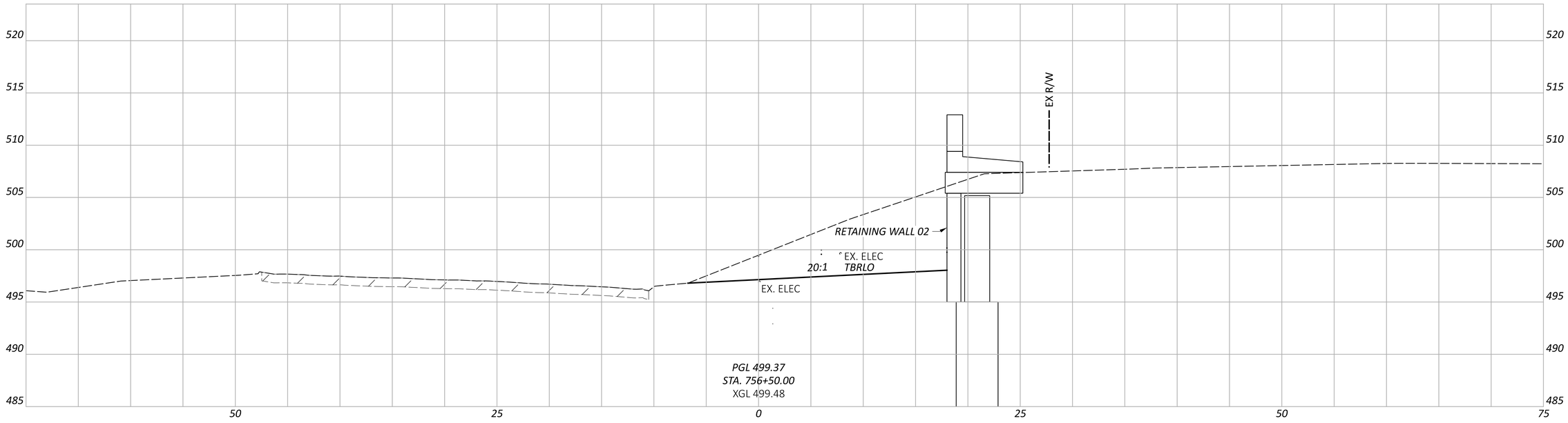

CROSS SECTIONS - WINCHELL AVE
STA. 756+50.00 TO STA. 757+00.00

DESIGN AGENCY
STRUCTUREPOINT

DESIGNER
LZS

REVIEWER
KAM 03/03/25

PROJECT ID
122048

SHEET P.108 | TOTAL P.421

HAM-IR 75-1.05

MODEL: WINCHELL - XS019 PAPERSIZE: 34x22 (in.) DATE: 8/28/2025 TIME: 10:27:39 AM PLTDRV: OHDOT_PDF.pltcfg PENTBL: OHDOT_Pen.tbl USER: WORKSPACE: OHDOTCEv02 WORKSET: 122048 PRODUCT: OpenRoadsDesigner 10.12.02.4
pw:\\ohiodot-pw.bentley.com:ohiodot-pw-02\Documents\01 Active Projects\District 08\Hamilton\122048\403-Engineering_StructurePoint\Roadway\Sheets\122048_XS371.dgn

LEGEND

EXISTING PAVEMENT REMOVED

ITEM 204 - 12" GRANULAR MATERIAL, TYPE C

ITEM 206 - 14" CEMENT STABILIZED SUBGRADE

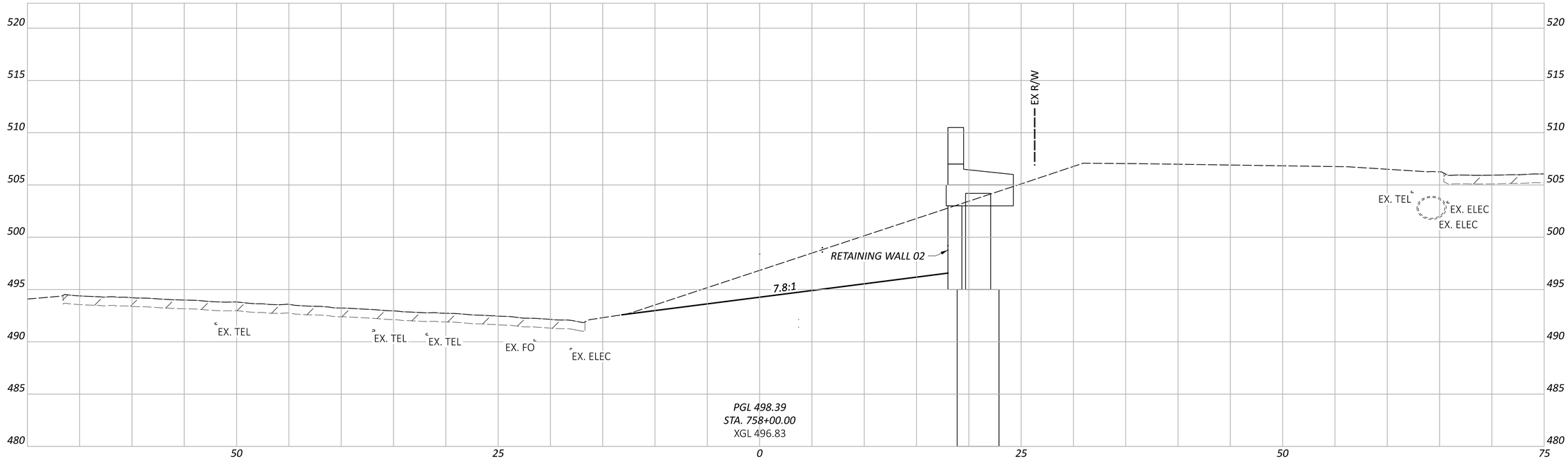

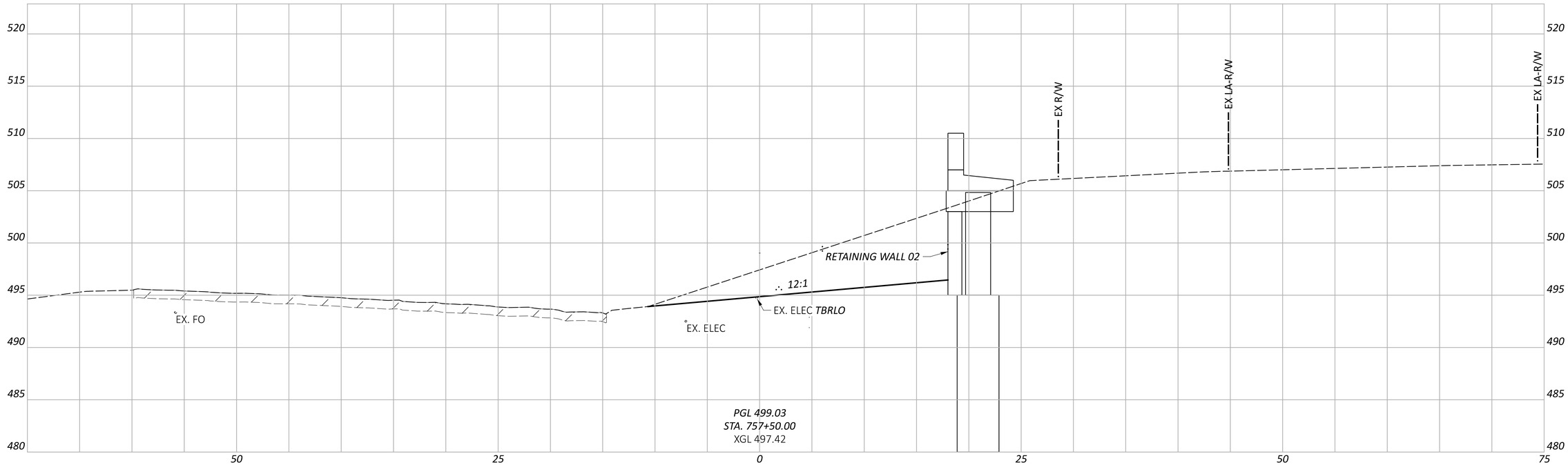

CROSS SECTIONS - WINCHELL AVE
STA. 757+50.00 TO STA. 758+00.00

DESIGN AGENCY
STRUCTUREPOINT

DESIGNER
LZS

REVIEWER
KAM 03/03/25

PROJECT ID
122048

SHEET P.109 | TOTAL P.421

HAM-IR 75-1.05

MODEL: WINCHELL - XS020 PAPERSIZE: 34x22 (in.) DATE: 8/28/2025 TIME: 10:27:57 AM PLTDRV: OHDOT_PDF.pltcfg PENTBL: OHDOT_Pen.tbl USER: WORKSPACE: OHDOTCEv02 WORKSET: 122048 PRODUCT: OpenRoadsDesigner 10.12.02.4
pw:\\ohiodot-pw.bentley.com:ohiodot-pw-02\Documents\01 Active Projects\District 08\Hamilton\122048\403-Engineering_StructurePoint\Roadway\Sheets\122048_XS371.dgn

LEGEND

EXISTING PAVEMENT REMOVED

ITEM 204 - 12" GRANULAR MATERIAL, TYPE C

ITEM 206 - 14" CEMENT STABILIZED SUBGRADE

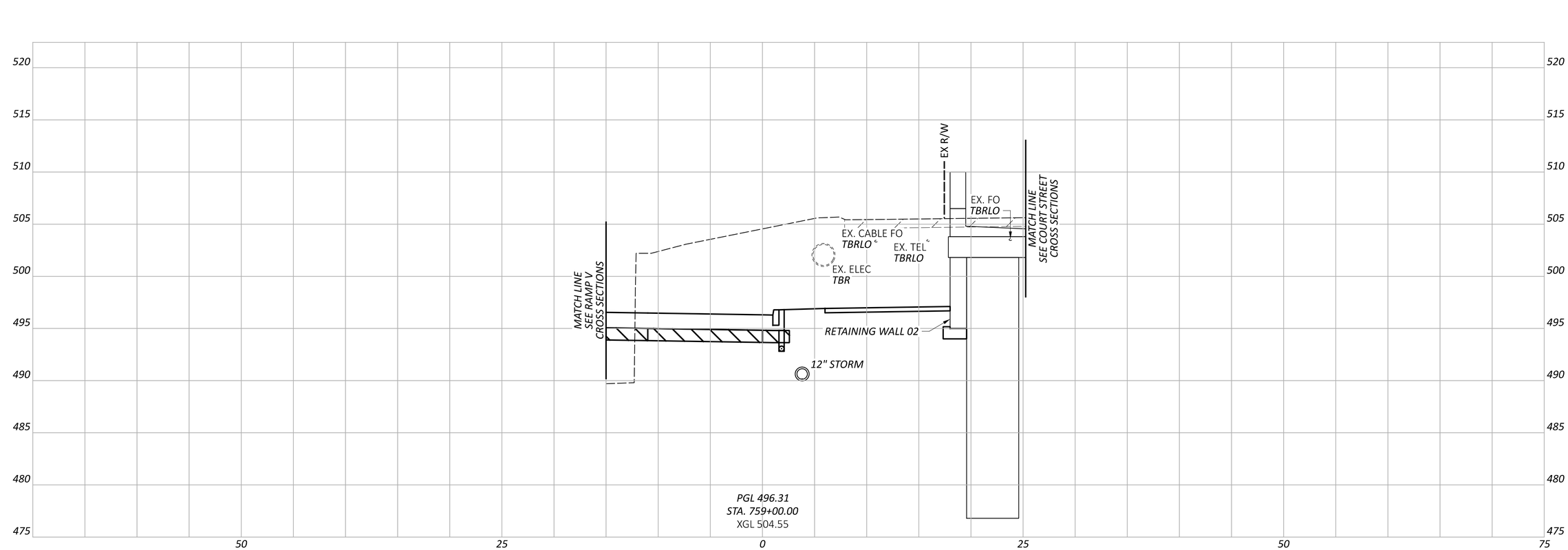

CROSS SECTIONS - WINCHELL AVE
STA. 759+00.00

DESIGN AGENCY
AMERICAN STRUCTUREPOINT INC.

DESIGNER
LZS

REVIEWER
KAM 03/03/25

PROJECT ID
122048

SHEET P.111 | TOTAL P.421

HAM-IR 75-1.05

MODEL: WINCHELL - XS022 PAPERSIZE: 34x22 (in.) DATE: 8/28/2025 TIME: 10:28:13 AM PLTDRV: OHDOT_PDF.pltcfg PENTBL: OHDOT_Pen.tbl USER: WORKSPACE: OHDOTCEv02 WORKSET: 122048 PRODUCT: OpenRoadsDesigner 10.12.02.4
pw:\\ohiodot-pw.bentley.com:ohiodot-pw-02\Documents\01 Active Projects\District 08\Hamilton\122048\03-Engineering_StructurePoint\Roadway\Sheets\122048_XS371.dgn

LEGEND

EXISTING PAVEMENT REMOVED

ITEM 204 - 12" GRANULAR MATERIAL, TYPE C

ITEM 206 - 14" CEMENT STABILIZED SUBGRADE

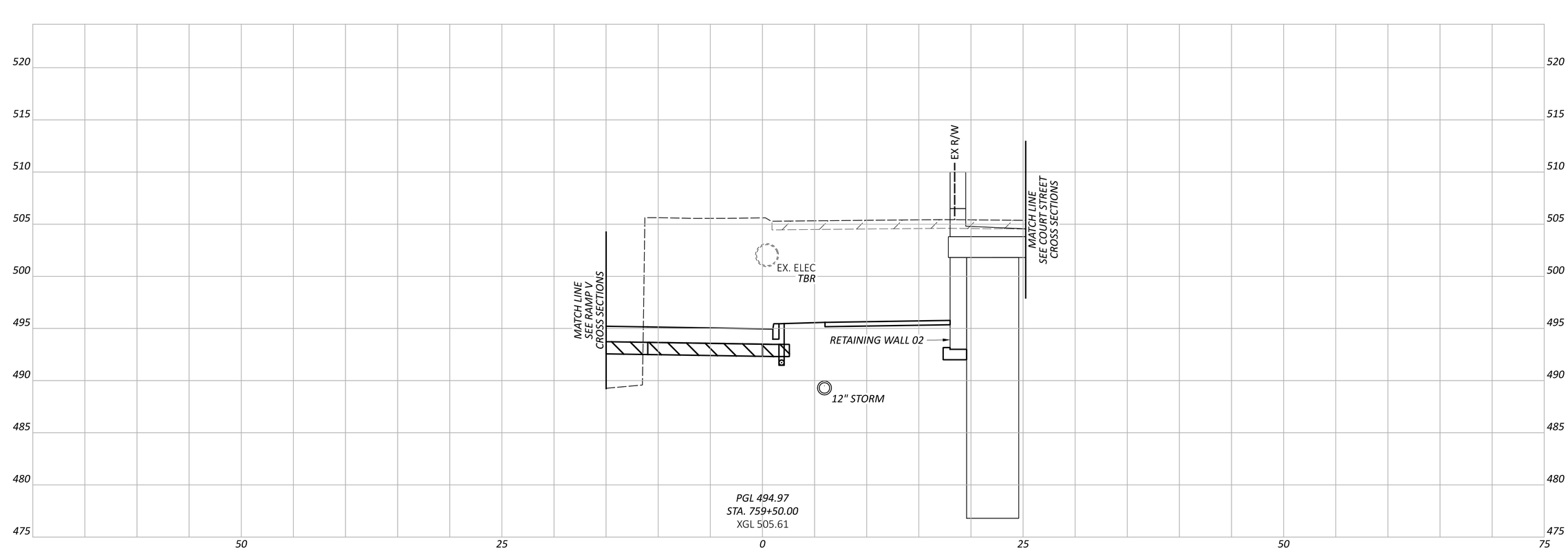

CROSS SECTIONS - WINCHELL AVE
STA. 759+50.00

HAM-IR 75-1.05

MODEL: WINCHELL - XS023 PAPERSIZE: 34x22 (in.) DATE: 8/28/2025 TIME: 10:28:22 AM PLTDRV: OHDOT_PDF.pltcfg PENTBL: OHDOT_Pen.tbl USER: WORKSPACE: OHDOTCEv02 WORKSET: 122048 PRODUCT: OpenRoadsDesigner 10.12.02.4
pw:\\ohiodot-pw.bentley.com:ohiodot-pw-02\Documents\01 Active Projects\District 08\Hamilton\122048\d03-Engineering_StructurePoint\Roadway\Sheets\122048_XS371.dgn

DESIGN AGENCY
AMERICAN STRUCTUREPOINT INC.

DESIGNER
LZS

REVIEWER
KAM 03/03/25

PROJECT ID
122048

SHEET P.112 TOTAL P.421

LEGEND

EXISTING PAVEMENT REMOVED

ITEM 204 - 12" GRANULAR MATERIAL, TYPE C

ITEM 206 - 14" CEMENT STABILIZED SUBGRADE

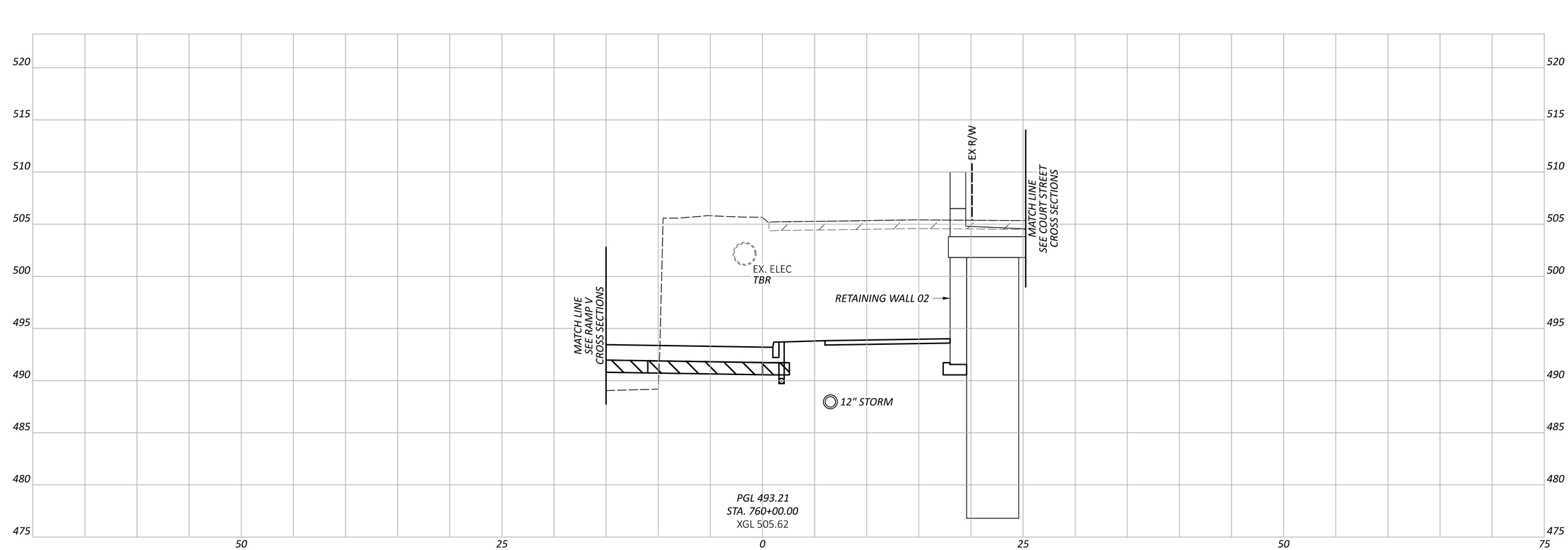

CROSS SECTIONS - WINCHELL AVE
STA. 760+00.00

DESIGN AGENCY
AMERICAN STRUCTUREPOINT INC.

DESIGNER
LZS

REVIEWER
KAM 03/03/25

PROJECT ID
122048

SHEET P.113 | TOTAL P.421

HAM-IR 75-1.05

MODEL: WINCHELL - XS024 PAPERSIZE: 34x22 (in.) DATE: 8/28/2025 TIME: 10:28:30 AM PLTDRV: OHDOT_PDF.pltcfg PENTBL: OHDOT_Pen.tbl USER: WORKSPACE: OHDOTCEv02 WORKSET: 122048 PRODUCT: OpenRoadsDesigner 10.12.02.4
pw:\\ohiodot-pw.bentley.com:ohiodot-pw-02\Documents\01 Active Projects\District 08\Hamilton\122048\d03-Engineering_StructurePoint\Roadway\Sheets\122048_XS371.dgn

LEGEND

EXISTING PAVEMENT REMOVED

ITEM 204 - 12" GRANULAR MATERIAL, TYPE C

ITEM 206 - 14" CEMENT STABILIZED SUBGRADE

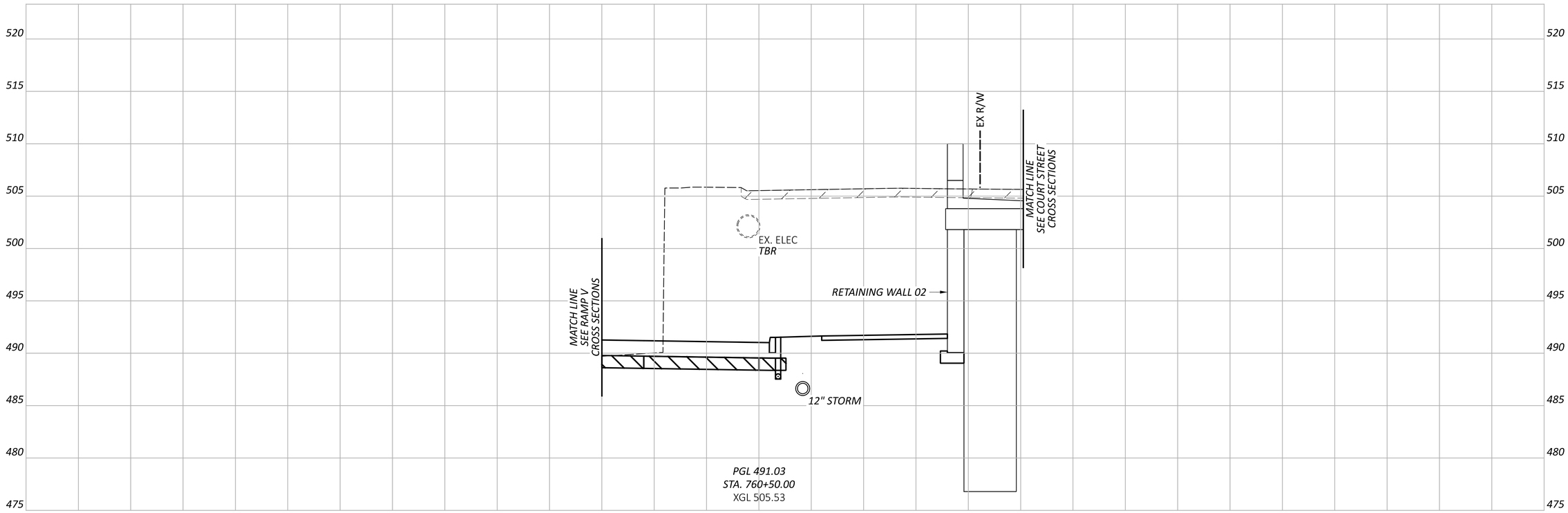

CROSS SECTIONS - WINCHELL AVE
STA. 760+50.00

DESIGN AGENCY: AMERICAN STRUCTUREPOINT INC.

DESIGNER: LZS

REVIEWER: KAM 03/03/25

PROJECT ID: 122048

SHEET: P.114 TOTAL: P.421

HAM-IR 75-1.05

MODEL: WINCHELL - XS025 PAPERSIZE: 34x22 (in.) DATE: 8/28/2025 TIME: 10:28:39 AM PLTDRV: OHDOT_PDF.pltcfg PENTBL: OHDOT_Pen.tbl USER: WORKSPACE: OHDOTCEv02 WORKSET: 122048 PRODUCT: OpenRoadsDesigner 10.12.02.4
pw:\\ohiodot-pw.bentley.com:ohiodot-pw-02\Documents\01 Active Projects\District 08\Hamilton\122048\d03-Engineering_StructurePoint\Roadway\Sheets\122048_XS371.dgn

LEGEND

EXISTING PAVEMENT REMOVED

ITEM 204 - 12" GRANULAR MATERIAL, TYPE C

ITEM 206 - 14" CEMENT STABILIZED SUBGRADE

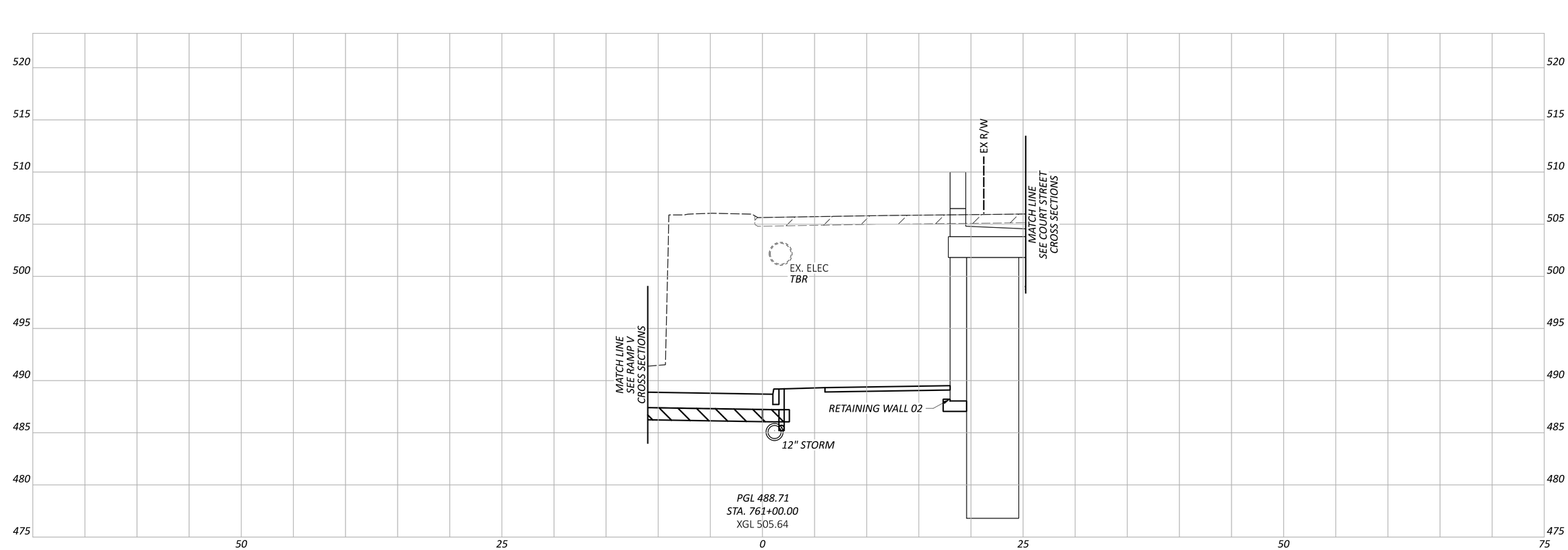

CROSS SECTIONS - WINCHELL AVE
STA. 761+00.00

HAM-IR 75-1.05

MODEL: WINCHELL - XS026 PAPERSIZE: 34x22 (in.) DATE: 8/28/2025 TIME: 10:28:46 AM PLTDRV: OHDOT_PDF.plcfg PENTBL: OHDOT_Pen.tbl USER: WORKSPACE: OHDOTCEv02 WORKSET: 122048 PRODUCT: OpenRoadsDesigner 10.12.02.4
pw:\\ohiodot-pw.bentley.com:ohiodot-pw-02\Documents\01 Active Projects\District 08\Hamilton\122048\d03-Engineering_StructurePoint\Roadway\Sheets\122048_XS371.dgn

DESIGN AGENCY
AMERICAN STRUCTUREPOINT INC.

DESIGNER
LZS

REVIEWER
KAM 03/03/25

PROJECT ID
122048

SHEET P.115 | TOTAL P.421

MODEL: WINCHELL - XS027 PAPERSIZE: 34x22 (in.) DATE: 8/28/2025 TIME: 10:28:53 AM PLTDRV: OHDOT_PDF.pltcfg PENTBL: OHDOT_Pen.tbl USER: WORKSPACE: OHDOTCEv02 WORKSET: 122048 PRODUCT: OpenRoadsDesigner 10.12.02.4
pw:\\ohiodot-pw.bentley.com:ohiodot-pw-02\Documents\01 Active Projects\District 08\Hamilton\122048\d03-Engineering_StructurePoint\Roadway\Sheets\122048_XS371.dgn

HAM-IR 75-1.05

LEGEND

EXISTING PAVEMENT REMOVED

ITEM 204 - 12" GRANULAR MATERIAL, TYPE C

ITEM 206 - 14" CEMENT STABILIZED SUBGRADE

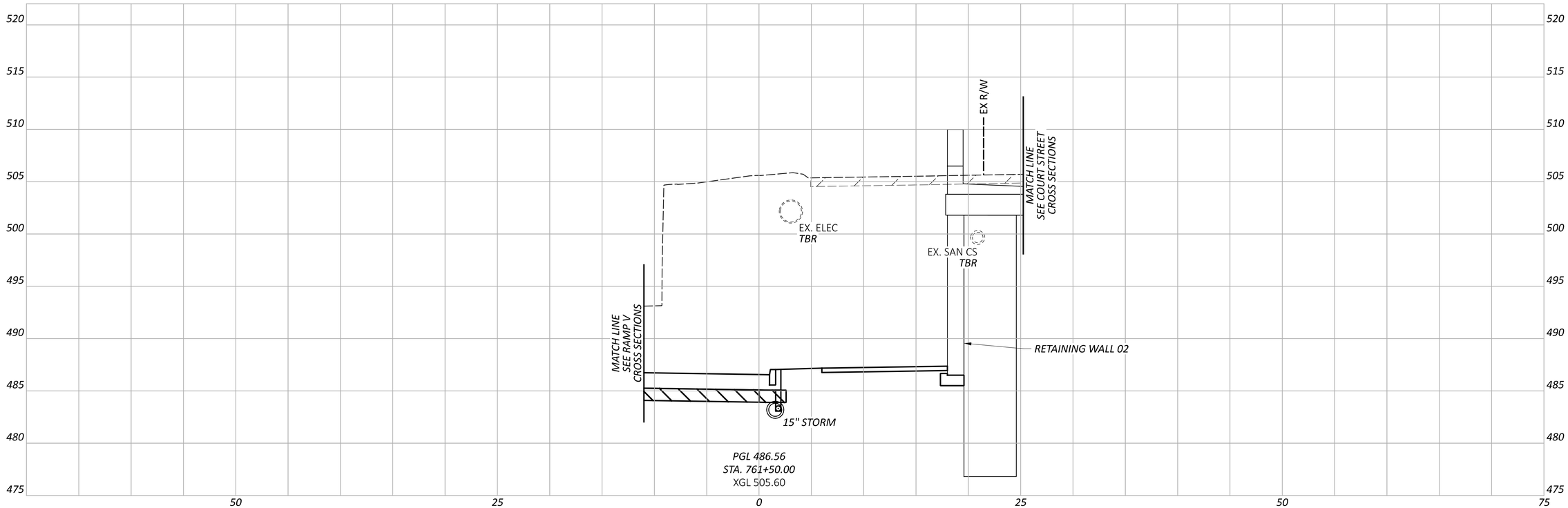

CROSS SECTIONS - WINCHELL AVE
STA. 761+50.00

DESIGN AGENCY
AMERICAN STRUCTUREPOINT INC.

DESIGNER
LZS

REVIEWER
KAM 03/03/25

PROJECT ID
122048

SHEET P.116 TOTAL P.421

LEGEND

EXISTING PAVEMENT REMOVED

ITEM 204 - 12" GRANULAR MATERIAL, TYPE C

ITEM 206 - 14" CEMENT STABILIZED SUBGRADE

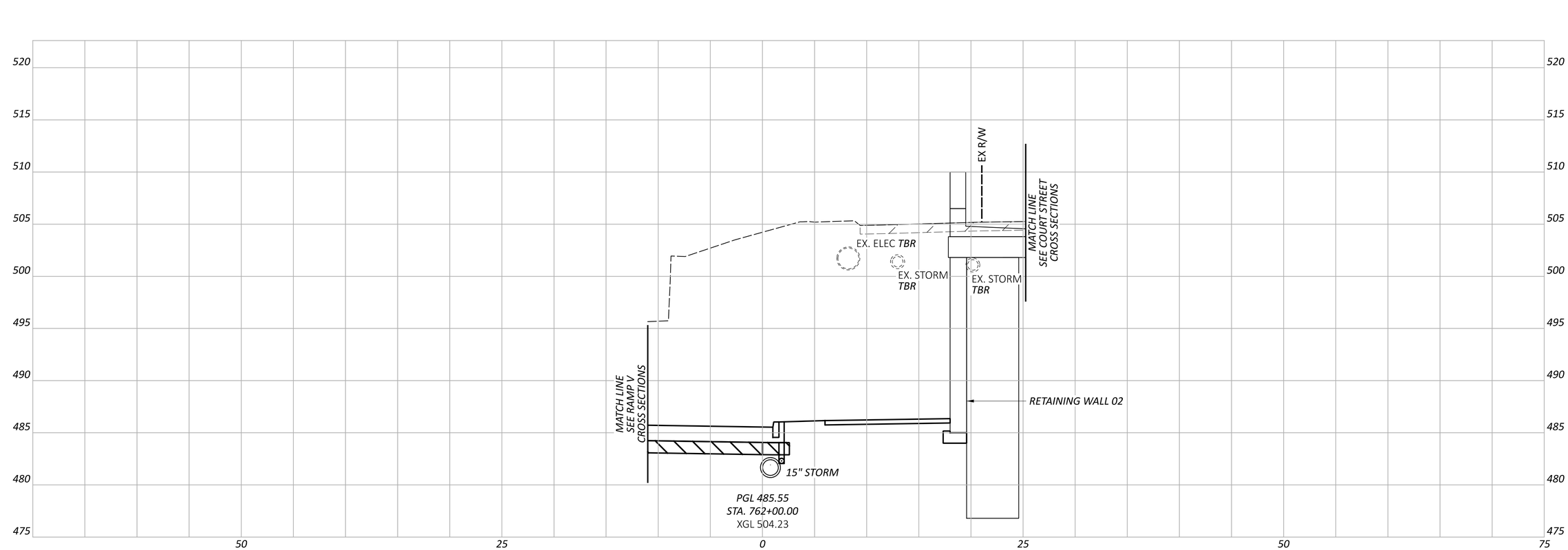

CROSS SECTIONS - WINCHELL AVE
STA. 762+00.00

HAM-IR 75-1.05

MODEL: WINCHELL - XS028 PAPERSIZE: 34x22 (in.) DATE: 8/28/2025 TIME: 10:29:00 AM PLTDRV: OHDOT_PDF.pltcfg PENTBL: OHDOT_Pen.tbl USER: WORKSPACE: OHDOTCEv02 WORKSET: 122048 PRODUCT: OpenRoadsDesigner 10.12.02.4
pw:\\ohiodot-pw.bentley.com:ohiodot-pw-02\Documents\01 Active Projects\District 08\Hamilton\122048\03-Engineering_StructurePoint\Roadway\Sheets\122048_XS371.dgn

DESIGN AGENCY
AMERICAN STRUCTUREPOINT INC.

DESIGNER
LZS

REVIEWER
KAM 03/03/25

PROJECT ID
122048

SHEET P.117 TOTAL P.421

LEGEND

EXISTING PAVEMENT REMOVED

ITEM 204 - 12" GRANULAR MATERIAL, TYPE C

ITEM 206 - 14" CEMENT STABILIZED SUBGRADE

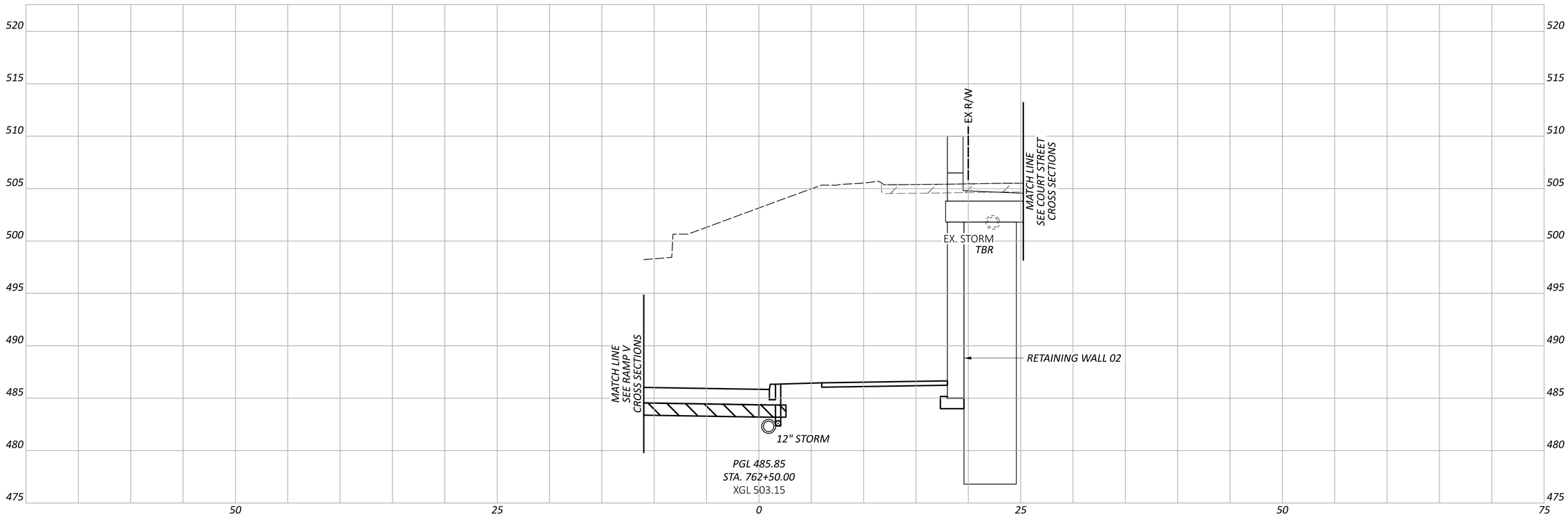

CROSS SECTIONS - WINCHELL AVE
STA. 762+50.00

HAM-IR 75-1.05

MODEL: WINCHELL - XS029 PAPERSIZE: 34x22 (in.) DATE: 8/28/2025 TIME: 10:29:07 AM PLTDRV: OHDOT_PDF.pltcfg PENTBL: OHDOT_Pen.tbl USER: WORKSPACE: OHDOTCEv02 WORKSET: 122048 PRODUCT: OpenRoadsDesigner 10.12.02.4
pw:\\ohiodot-pw.bentley.com:ohiodot-pw-02\Documents\01 Active Projects\District 08\Hamilton\122048\d03-Engineering_StructurePoint\Roadway\Sheets\122048_XS371.dgn

DESIGN AGENCY
AMERICAN STRUCTUREPOINT INC.

DESIGNER
LZS

REVIEWER
KAM 03/03/25

PROJECT ID
122048

SHEET P.118 TOTAL P.421

MODEL: WINCHELL - XS030 PAPERSIZE: 34x22 (in.) DATE: 8/28/2025 TIME: 10:29:14 AM PLTDRV: OHDOT_PDF.pltcfg PENTBL: OHDOT_Pen.tbl USER: WORKSPACE: OHDOTCEv02 WORKSET: 122048 PRODUCT: OpenRoadsDesigner 10.12.02.4
pw:\\ohiodot-pw.bentley.com:ohiodot-pw-02\Documents\01 Active Projects\District 08\Hamilton\122048\d03-Engineering_StructurePoint\Roadway\Sheets\122048_XS371.dgn

HAM-IR 75-1.05

LEGEND

EXISTING PAVEMENT REMOVED

ITEM 204 - 12" GRANULAR MATERIAL, TYPE C

ITEM 206 - 14" CEMENT STABILIZED SUBGRADE

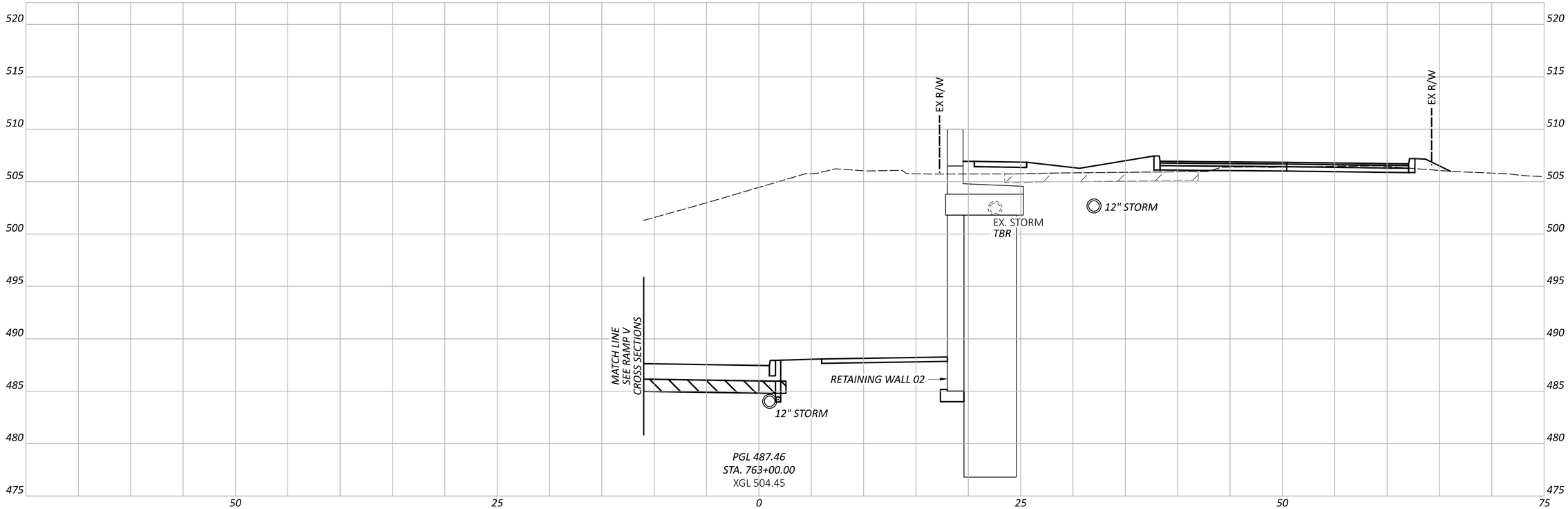

CROSS SECTIONS - WINCHELL AVE
STA. 763+00.00

DESIGN AGENCY
AMERICAN STRUCTUREPOINT INC.

DESIGNER
LZS

REVIEWER
KAM 03/03/25

PROJECT ID
122048

SHEET P.119 TOTAL P.421

LEGEND

EXISTING PAVEMENT REMOVED

ITEM 204 - 12" GRANULAR MATERIAL, TYPE C

ITEM 206 - 14" CEMENT STABILIZED SUBGRADE

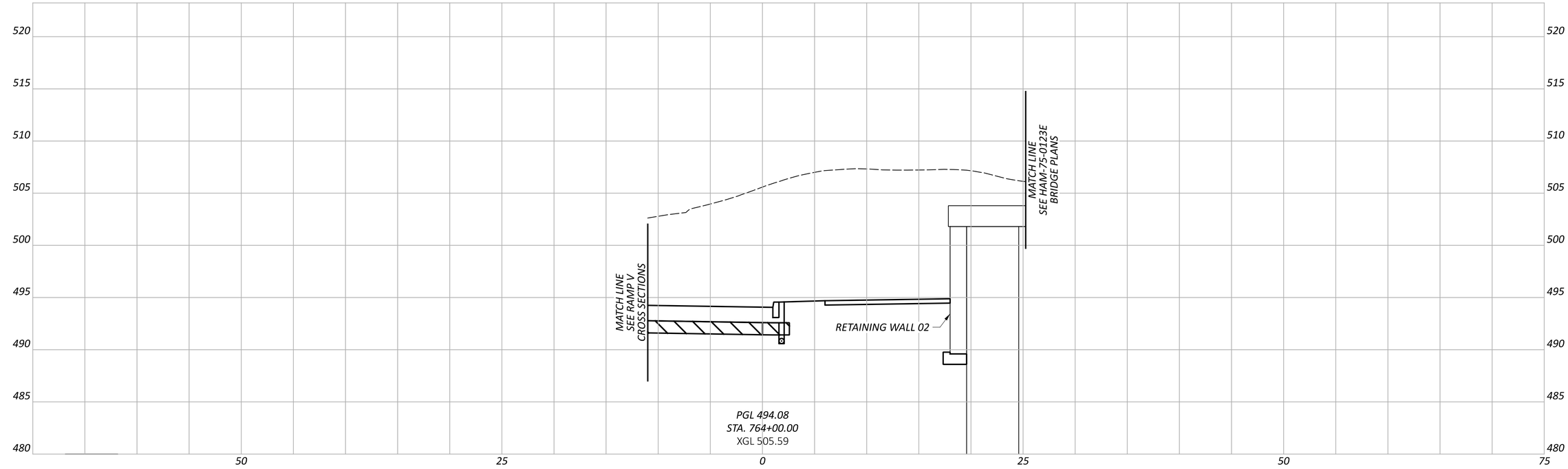

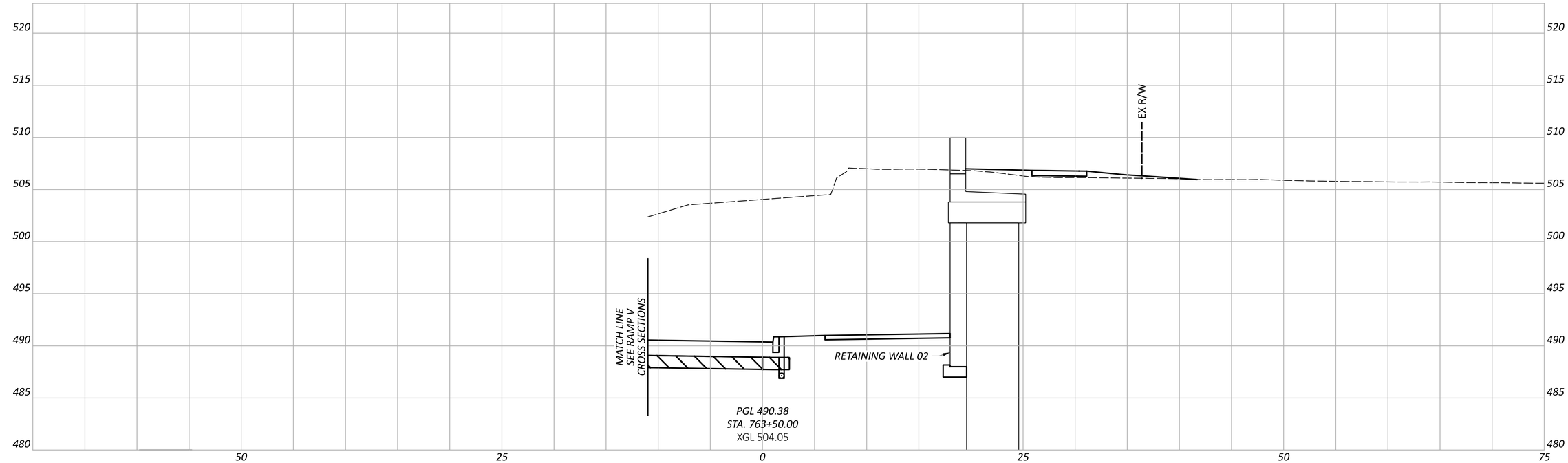

CROSS SECTIONS - WINCHELL AVE
STA. 763+50.00 TO STA. 764+00.00

HAM-IR 75-1.05

MODEL: WINCHELL - XS031 PAPERSIZE: 34x22 (in.) DATE: 8/28/2025 TIME: 10:29:21 AM PLTDRV: OHDOT_PDF.pltcfg PENTBL: OHDOT_Pen.tbl USER: WORKSPACE: OHDOTCEv02 WORKSET: 122048 PRODUCT: OpenRoadsDesigner 10.12.02.4
pw:\\ohiodot-pw.bentley.com:ohiodot-pw-02\Documents\01 Active Projects\District 08\Hamilton\122048\403-Engineering_StructurePoint\Roadway\Sheets\122048_XS371.dgn

DESIGN AGENCY
STRUCTUREPOINT INC.

DESIGNER
LZS

REVIEWER
KAM 03/03/25

PROJECT ID
122048

SHEET P.120 TOTAL P.421

LEGEND

EXISTING PAVEMENT REMOVED

ITEM 204 - 12" GRANULAR MATERIAL, TYPE C

ITEM 206 - 14" CEMENT STABILIZED SUBGRADE

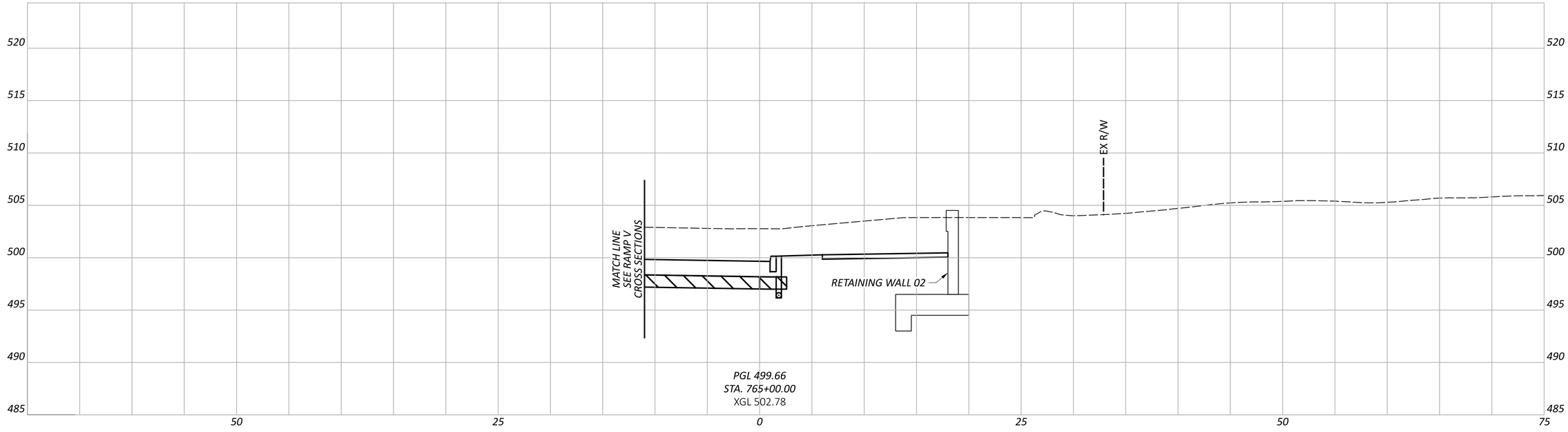

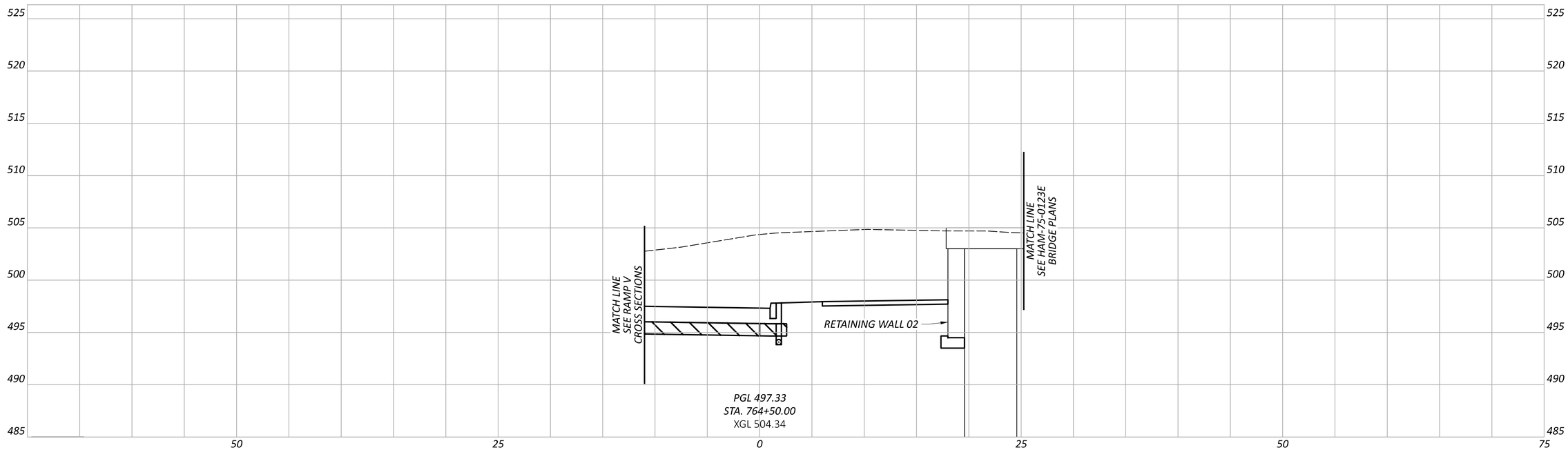

CROSS SECTIONS - WINCHELL AVE
STA. 764+50.00 TO STA. 765+00.00

HAM-IR 75-1.05

MODEL: WINCHELL - XS032 PAPERSIZE: 34x22 (in.) DATE: 8/28/2025 TIME: 10:29:31 AM PLTDRV: OHDOT_PDF.pltcfg PENTBL: OHDOT_Pen.tbl USER: WORKSPACE: OHDOTCEv02 WORKSET: 122048 PRODUCT: OpenRoadsDesigner 10.12.02.4
pw:\\ohiodot-pw.bentley.com:ohiodot-pw-02\Documents\01 Active Projects\District 08\Hamilton\122048\403-Engineering_StructurePoint\Roadway\Sheets\122048_XS371.dgn

DESIGN AGENCY
STRUCTUREPOINT INC.

DESIGNER LZS

REVIEWER KAM 03/03/25

PROJECT ID 122048

SHEET P.121 TOTAL P.421

HAM-IR 75-1.05

MODEL: WINCHELL - XS033 PAPERSIZE: 34x22 (in.) DATE: 8/28/2025 TIME: 10:29:43 AM PLTDRV: OHDOT_PDF.pltcfg PENTBL: OHDOT_Pen.tbl USER: WORKSPACE: OHDOTCEv02 WORKSET: 122048 PRODUCT: OpenRoadsDesigner 10.12.02.4
pw:\\ohiodot-pw.bentley.com:ohiodot-pw-02\Documents\01 Active Projects\District 08\Hamilton\122048\403-Engineering_StructurePoint\Roadway\Sheets\122048_XS371.dgn

LEGEND

EXISTING PAVEMENT REMOVED

ITEM 204 - 12" GRANULAR MATERIAL, TYPE C

ITEM 206 - 14" CEMENT STABILIZED SUBGRADE

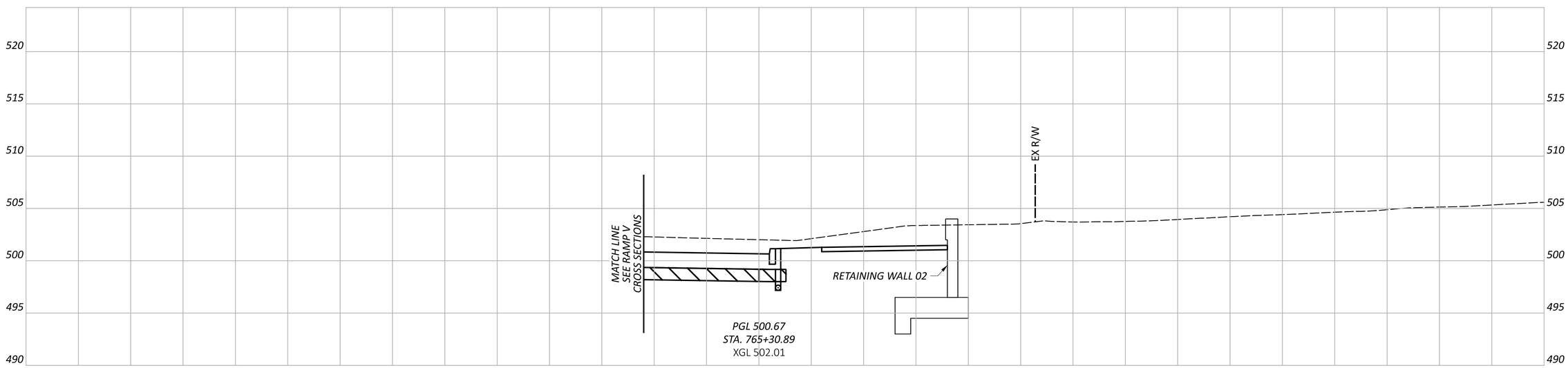

CROSS SECTIONS - WINCHELL AVE
STA. 765+30.89

DESIGN AGENCY
STRUCTUREPOINT LLC

DESIGNER
LZS

REVIEWER
KAM 03/03/25

PROJECT ID
122048

SHEET P.122 TOTAL P.421

LEGEND

EXISTING PAVEMENT REMOVED

ITEM 204 - 12" GRANULAR MATERIAL, TYPE C

ITEM 206 - 14" CEMENT STABILIZED SUBGRADE

FULL DEPTH PAVEMENT WEDGE

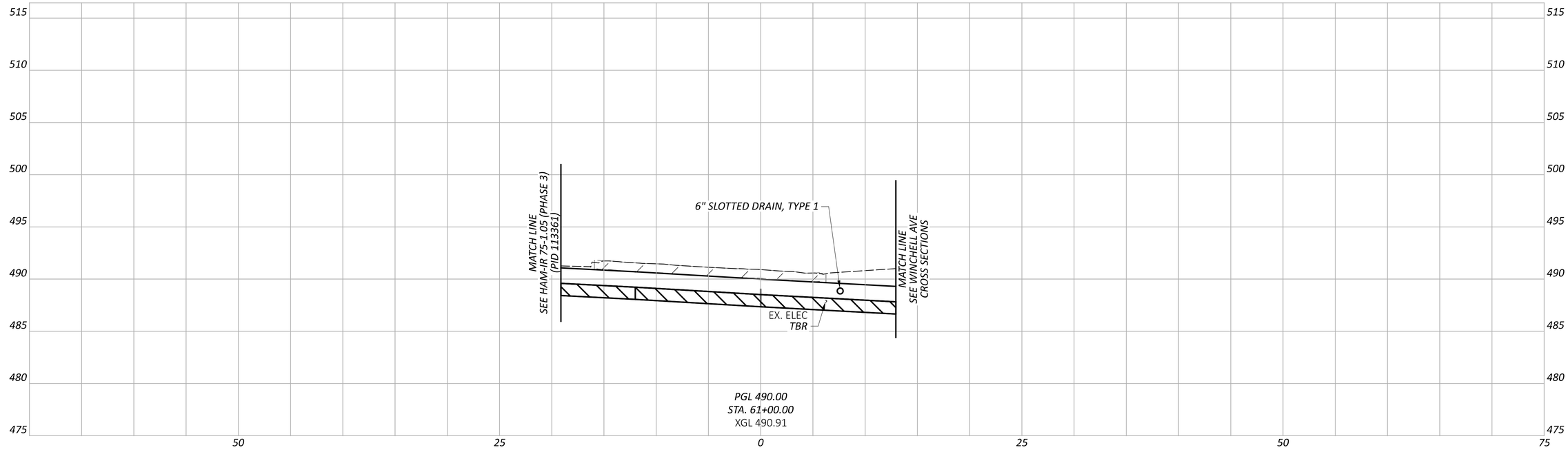

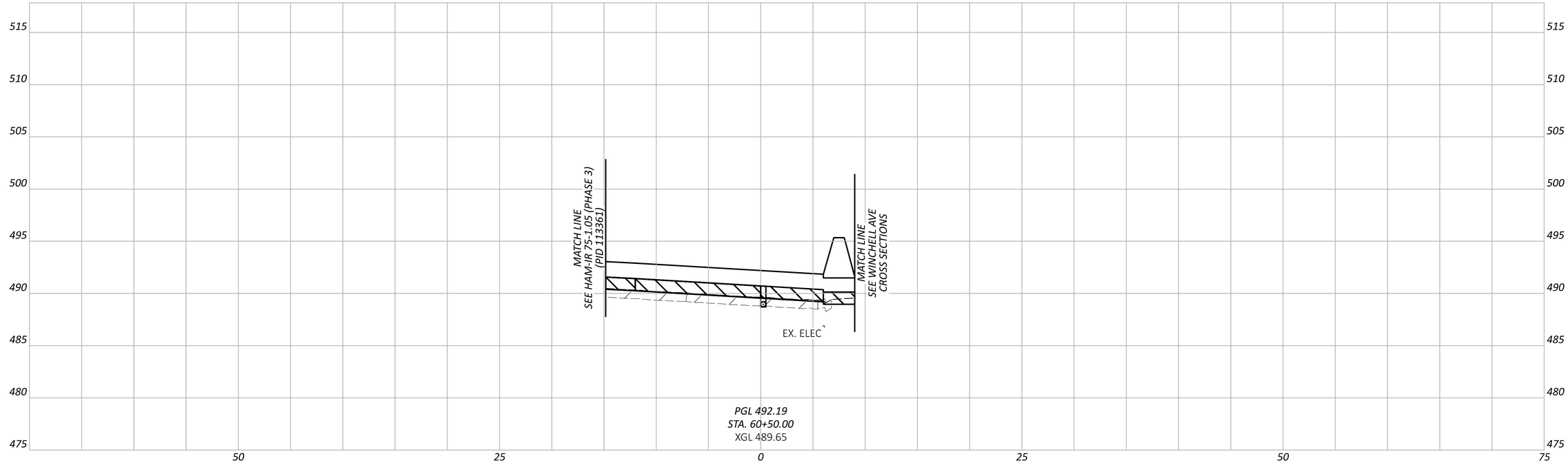

CROSS SECTIONS - RAMP V
STA. 60+50.00 TO STA. 61+00.00

HAM-IR 75-1.05

MODEL: RAMPV - XS006 PAPERSIZE: 34x22 (in.) DATE: 8/28/2025 TIME: 11:27:38 AM PLTDRV: OHDOT_PDF.pltcfg PENTBL: OHDOT_Pen.tbl USER: WORKSPACE: OHDOTCEv02 WORKSET: 122048 PRODUCT: OpenRoadsDesigner 10.12.02.4
pw:\\ohiodot-pw.bentley.com:ohiodot-pw-02\Documents\01 Active Projects\District 08\Hamilton\122048\d03-Engineering_StructurePoint\Roadway\Sheets\122048_XS381.dgn

DESIGN AGENCY
AMERICAN STRUCTUREPOINT INC.

DESIGNER
LZS

REVIEWER
KAM 03/03/25

PROJECT ID
122048

SHEET P.125 TOTAL P.421

LEGEND

EXISTING PAVEMENT REMOVED

ITEM 204 - 12" GRANULAR MATERIAL, TYPE C

ITEM 206 - 14" CEMENT STABILIZED SUBGRADE

FULL DEPTH PAVEMENT WEDGE

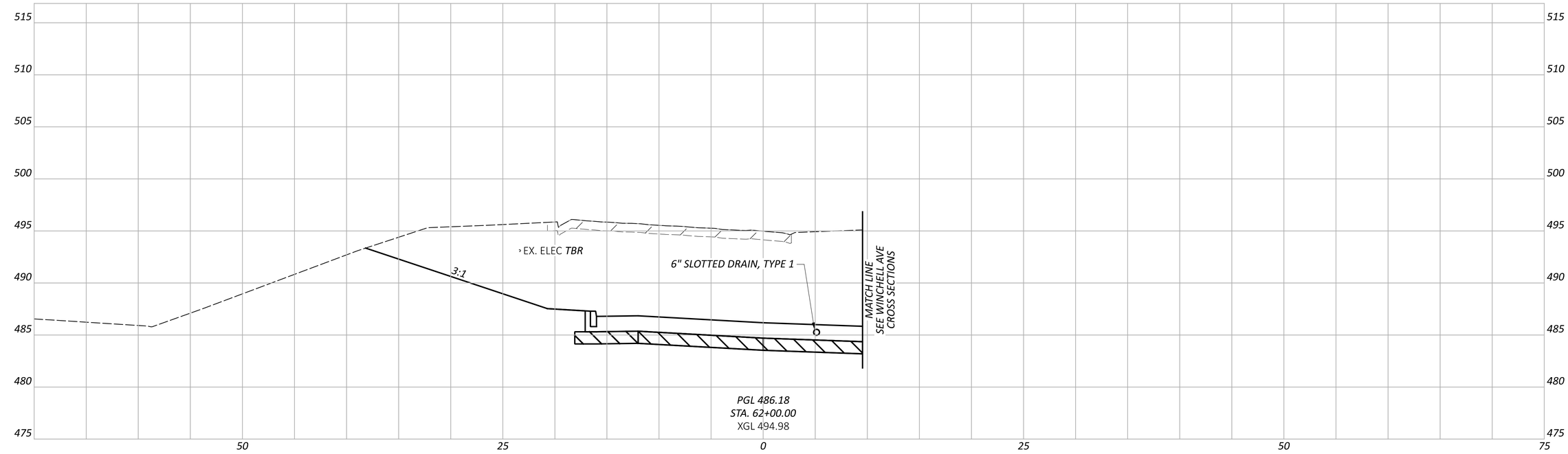

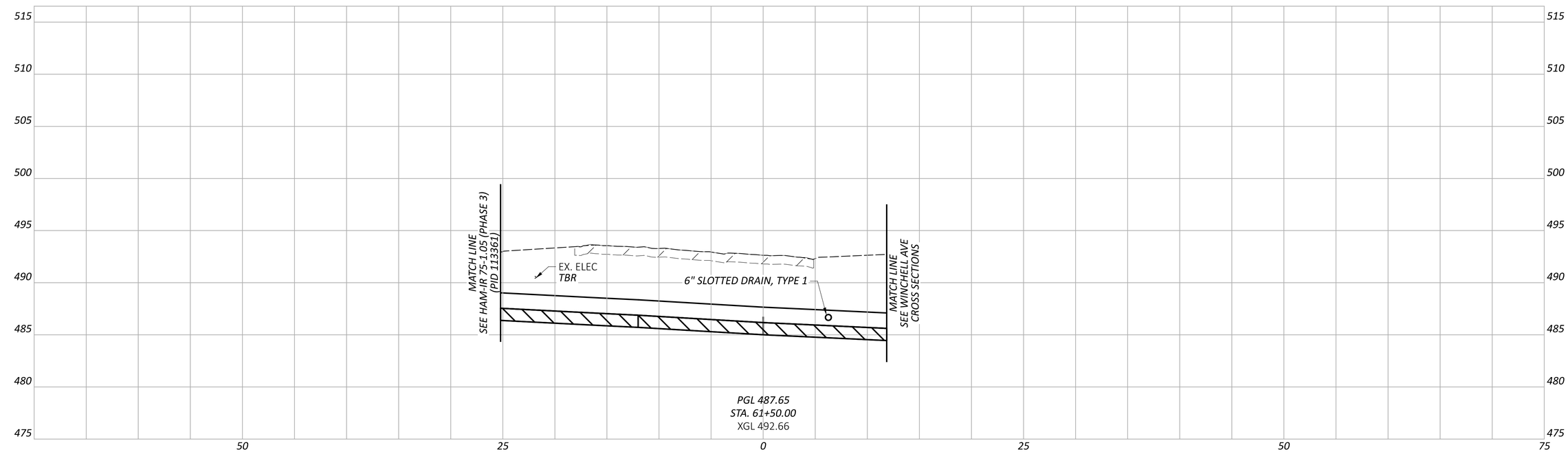

CROSS SECTIONS - RAMP V
STA. 61+50.00 TO STA. 62+00.00

HAM-IR 75-1.05

MODEL: RAMPV - XS007 PAPERSIZE: 34x22 (in.) DATE: 8/28/2025 TIME: 11:30:06 AM PLTDRV: OHDOT_PDF.pltcfg PENTBL: OHDOT_Pen.tbl USER: WORKSPACE: OHDOTCEv02 WORKSET: 122048 PRODUCT: OpenRoadsDesigner 10.12.02.4
pw:\\ohiodot-pw.bentley.com:ohiodot-pw-02\Documents\01 Active Projects\District 08\Hamilton\122048\d03-Engineering_StructurePoint\Roadway\Sheets\122048_XS381.dgn

DESIGN AGENCY
AMERICAN STRUCTUREPOINT INC.

DESIGNER
LZS

REVIEWER
KAM 03/03/25

PROJECT ID
122048

SHEET P.126 TOTAL P.421

LEGEND

EXISTING PAVEMENT REMOVED

ITEM 204 - 12" GRANULAR MATERIAL, TYPE C

ITEM 206 - 14" CEMENT STABILIZED SUBGRADE

FULL DEPTH PAVEMENT WEDGE

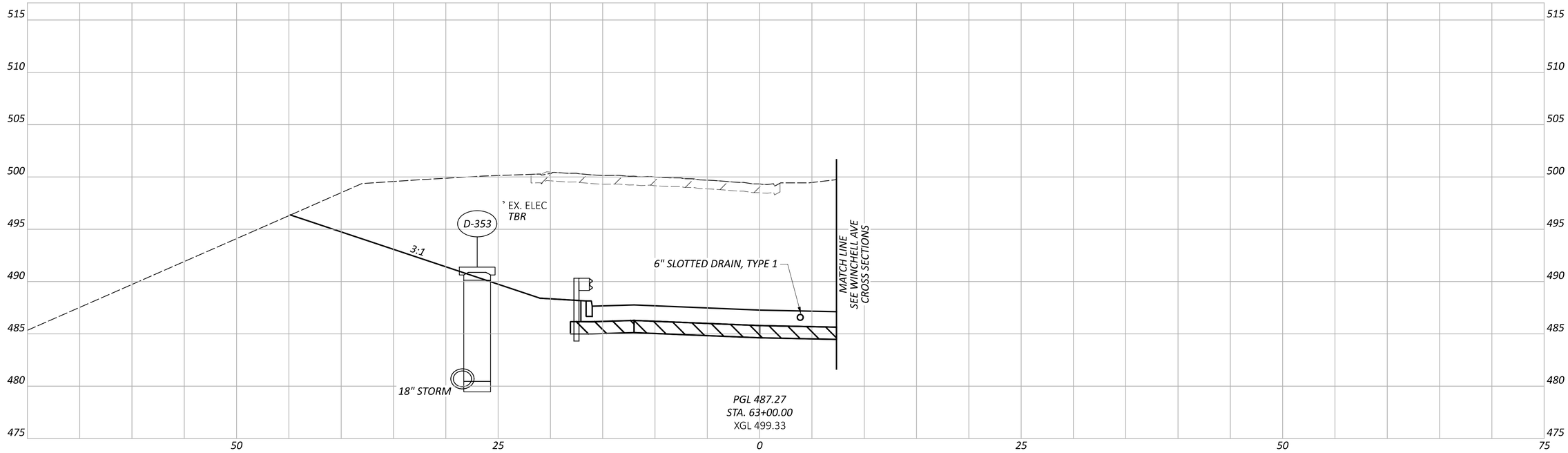

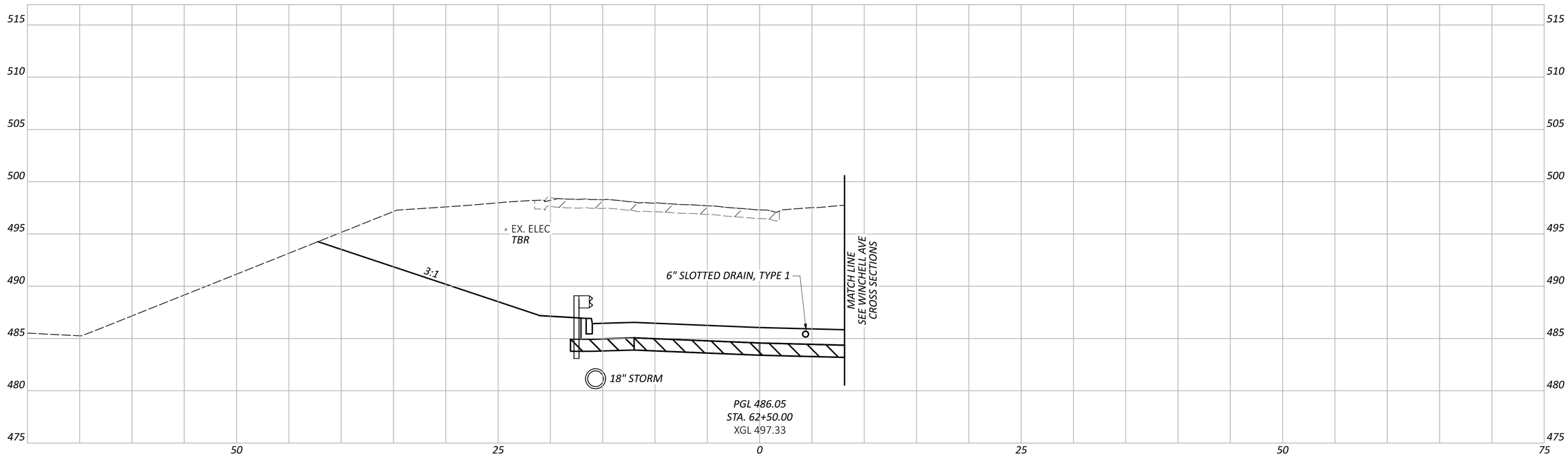

CROSS SECTIONS - RAMP V
STA. 62+50.00 TO STA. 63+00.00

HAM-IR 75-1.05

MODEL: RAMPV - XS008 PAPERSIZE: 34x22 (in.) DATE: 8/28/2025 TIME: 11:30:16 AM PLTDRV: OHDOT_PDF.pltcfg PENTBL: OHDOT_Pen.tbl USER: WORKSPACE: OHDOTCEv02 WORKSET: 122048 PRODUCT: OpenRoadsDesigner 10.12.02.4
pw:\\ohiodot-pw.bentley.com:ohiodot-pw-02\Documents\01 Active Projects\District 08\Hamilton\122048\d03-Engineering_StructurePoint\Roadway\Sheets\122048_XS381.dgn

DESIGN AGENCY
AMERICAN STRUCTUREPOINT INC.

DESIGNER
LZS

REVIEWER
KAM 03/03/25

PROJECT ID
122048

SHEET P.127 TOTAL P.421

LEGEND

EXISTING PAVEMENT REMOVED

ITEM 204 - 12" GRANULAR MATERIAL, TYPE C

ITEM 206 - 14" CEMENT STABILIZED SUBGRADE

FULL DEPTH PAVEMENT WEDGE

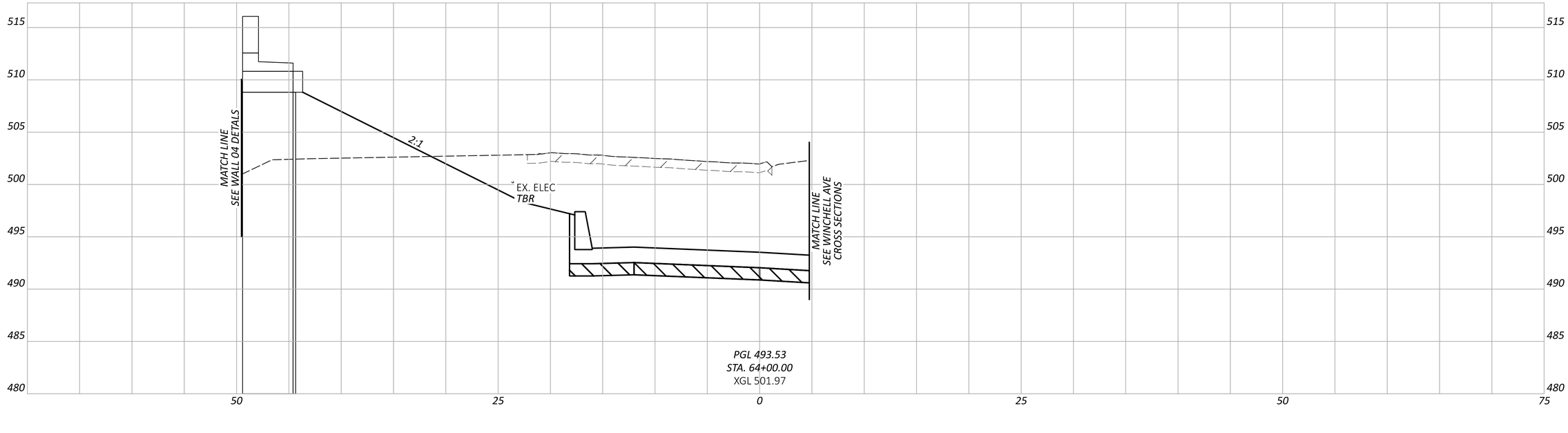

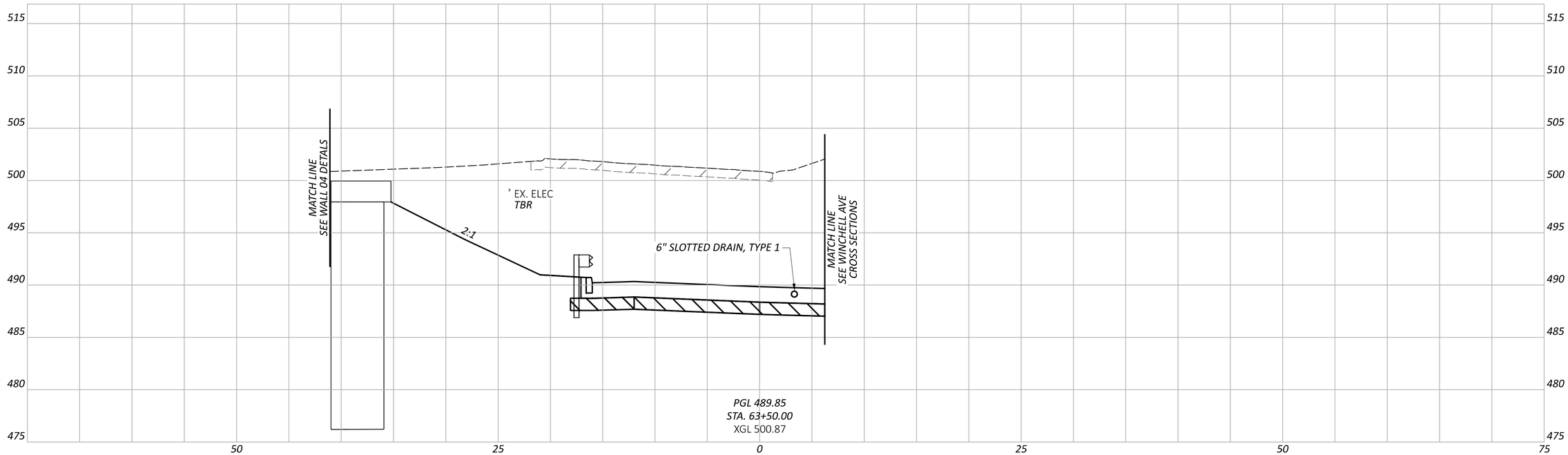

CROSS SECTIONS - RAMP V
STA. 63+50.00 TO STA. 64+00.00

DESIGN AGENCY
AMERICAN STRUCTUREPOINT INC.

DESIGNER
LZS

REVIEWER
KAM 03/03/25

PROJECT ID
122048

SHEET P.128 TOTAL P.421

HAM-IR 75-1.05

MODEL: RAMPV - XS009 PAPERSIZE: 34x22 (in.) DATE: 8/28/2025 TIME: 11:30:25 AM PLTDRV: OHDOT_PDF.pltcfg PENTBL: OHDOT_Pen.tbl USER: WORKSPACE: OHDOTCEv02 WORKSET: 122048 PRODUCT: OpenRoadsDesigner 10.12.02.4
pw:\\ohiodot-pw.bentley.com:ohiodot-pw-02\Documents\01 Active Projects\District 08\Hamilton\122048\d03-Engineering_StructurePoint\Roadway\Sheets\122048_XS381.dgn

LEGEND

EXISTING PAVEMENT REMOVED

ITEM 204 - 12" GRANULAR MATERIAL, TYPE C

ITEM 206 - 14" CEMENT STABILIZED SUBGRADE

FULL DEPTH PAVEMENT WEDGE

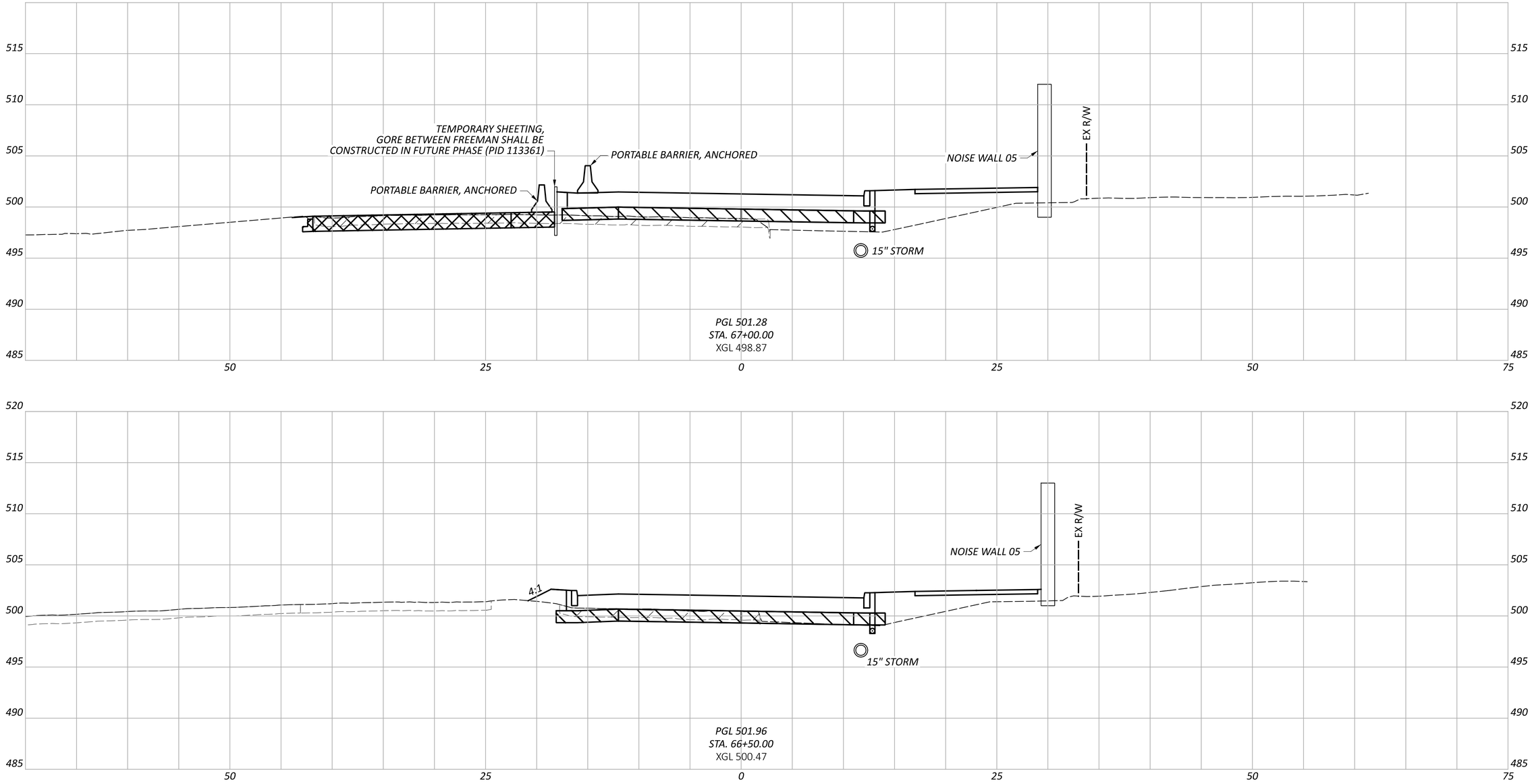

CROSS SECTIONS - RAMP V
STA. 66+50.00 TO STA. 67+00.00

HAM-IR 75-1.05

MODEL: RAMPV - XS012 PAPERSIZE: 34x22 (in.) DATE: 8/28/2025 TIME: 12:15:44 PM PLTDRV: OHDOT_PDF.pltcfg PENTBL: OHDOT_Pen.tbl USER: WORKSPACE: OHDOTCtv02 WORKSET: 122048 PRODUCT: OpenRoadsDesigner 10.12.02.4
pw:\\ohiodot-pw.bentley.com:ohiodot-pw-02\Documents\01 Active Projects\District 08\Hamilton\122048\03-Engineering_StructurePoint\Roadway\Sheets\122048_XS381.dgn

DESIGN AGENCY
STRUCTUREPOINT LLC

DESIGNER
LZS

REVIEWER
KAM 03/03/25

PROJECT ID
122048

SHEET P.131 TOTAL P.421

LEGEND

EXISTING PAVEMENT REMOVED

ITEM 204 - 12" GRANULAR MATERIAL, TYPE C

ITEM 206 - 14" CEMENT STABILIZED SUBGRADE

FULL DEPTH PAVEMENT WEDGE

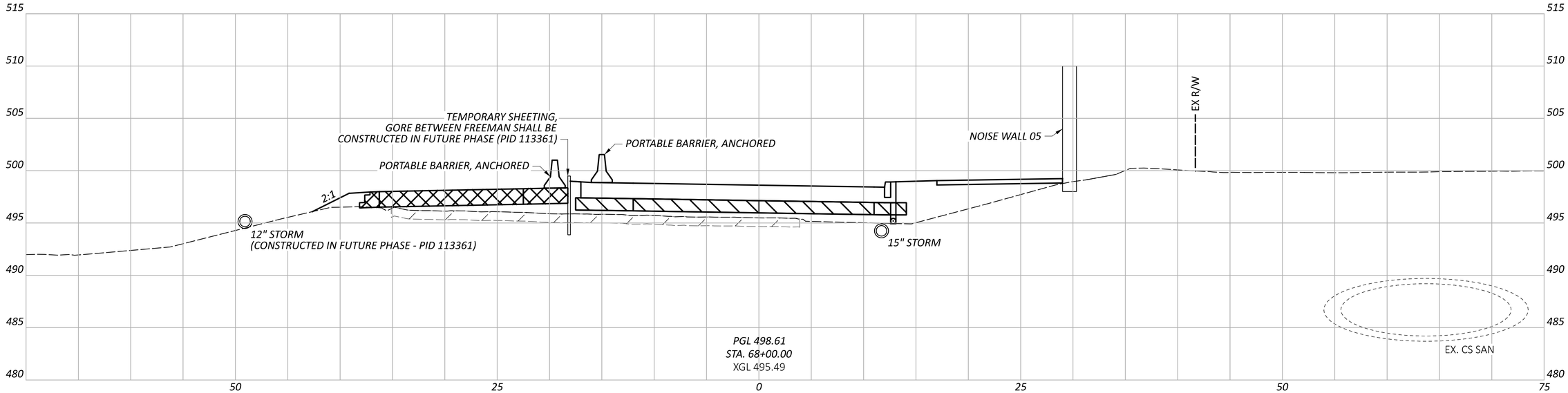

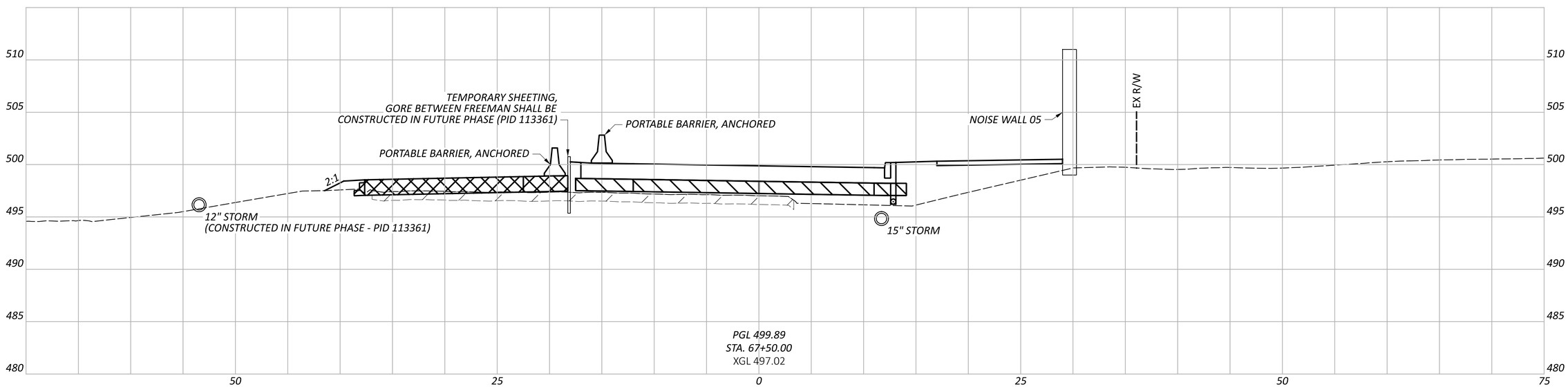

CROSS SECTIONS - RAMP V
STA. 67+50.00 TO STA. 68+00.00

DESIGN AGENCY
STRUCTUREPOINT LLC

DESIGNER
LZS

REVIEWER
KAM 03/03/25

PROJECT ID
122048

SHEET P.132 TOTAL P.421

HAM-IR 75-1.05

MODEL: RAMPV - XS013 PAPERSIZE: 34x22 (in.) DATE: 8/28/2025 TIME: 12:18:46 PM PLTDRV: OHDOT_PDF.pltcfg PENTBL: OHDOT_Pen.tbl USER: WORKSPACE: OHDOTCtv02 WORKSET: 122048 PRODUCT: OpenRoads Designer 10.12.02.4
pw:\\ohiodot-pw.bentley.com:ohiodot-pw-02\Documents\01 Active Projects\District 08\Hamilton\122048\403-Engineering_StructurePoint\Roadway\Sheets\122048_XS381.dgn

LEGEND

EXISTING PAVEMENT REMOVED

ITEM 204 - 12" GRANULAR MATERIAL, TYPE C

ITEM 206 - 14" CEMENT STABILIZED SUBGRADE

FULL DEPTH PAVEMENT WEDGE

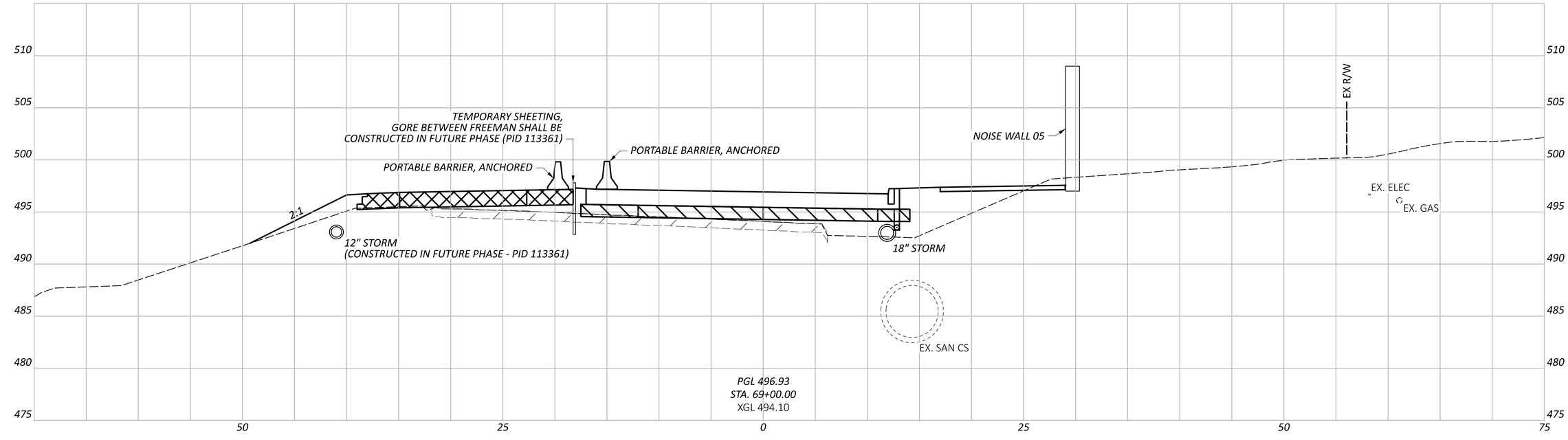

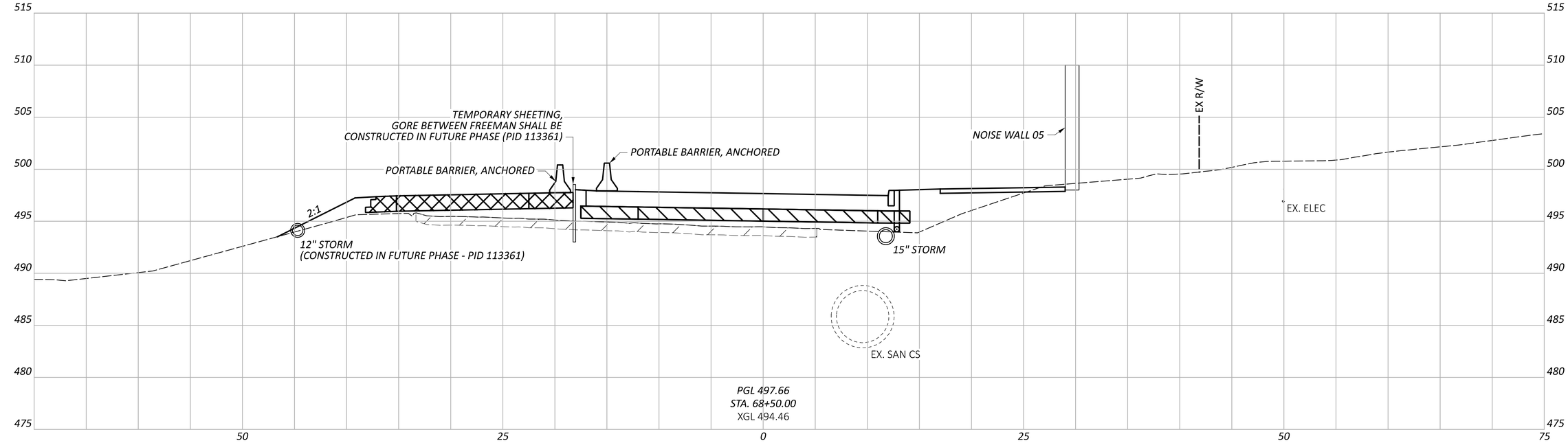

CROSS SECTIONS - RAMP V
STA. 68+50.00 TO STA. 69+00.00

DESIGN AGENCY
AMERICAN STRUCTUREPOINT INC.

DESIGNER
LZS

REVIEWER
KAM 03/03/25

PROJECT ID
122048

SHEET P.133 TOTAL P.421

HAM-IR 75-1.05

MODEL: RAMPV - XS014 PAPERSIZE: 34x22 (in.) DATE: 8/28/2025 TIME: 12:18:54 PM PLTDRV: OHDOT_PDF.pltcfg PENTBL: OHDOT_Pen.tbl USER: WORKSPACE: OHDOTCtx02 WORKSET: 122048 PRODUCT: OpenRoadsDesigner 10.12.02.4
pw:\\ohiodot-pw.bentley.com:ohiodot-pw-02\Documents\01 Active Projects\District 08\Hamilton\122048\403-Engineering_StructurePoint\Roadway\Sheets\122048_XS381.dgn

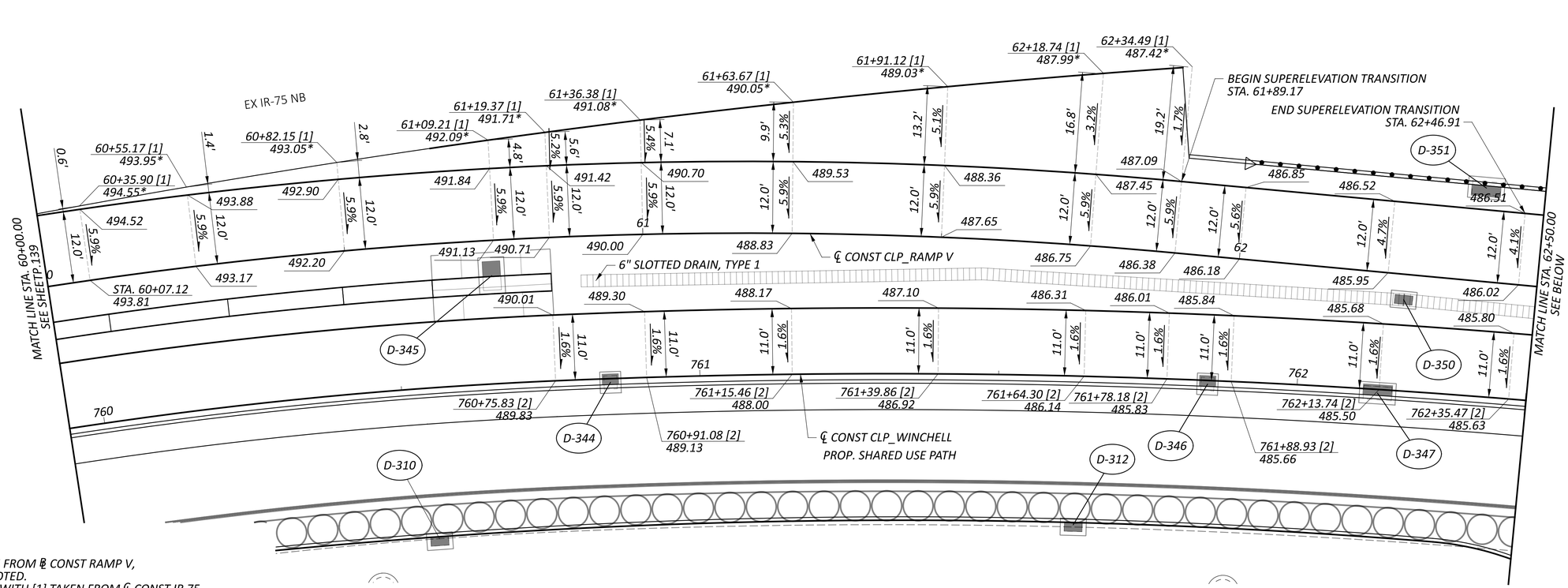

NOTES:

ALL STATIONING TAKEN FROM ℄ CONST RAMP V, UNLESS OTHERWISE NOTED.
STATIONING DENOTED WITH [1] TAKEN FROM ℄ CONST IR 75 .
STATIONING DENOTED WITH [2] TAKEN FROM ℄ CONST WINCHELL AVE.
STATIONING DENOTED WITH [3] TAKEN FROM ℄ CONST FREEMAN AVE.

ALL ELEVATIONS SHOWN AT EDGE OF PAVEMENT, UNLESS OTHERWISE NOTED.

* *ELEVATIONS ALONG IR-75 ARE SHOWN FOR INFORMATION ONLY, BASED ON FUTURE CONSTRUCTION*

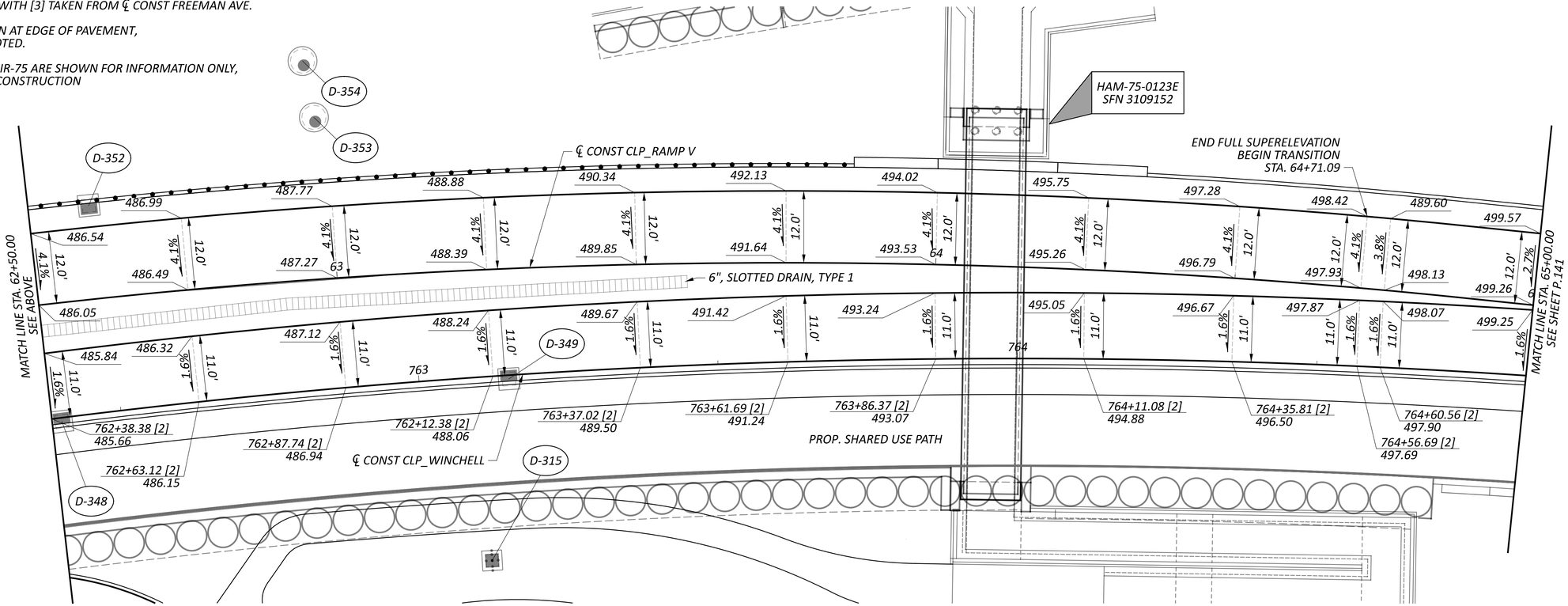

HORIZONTAL
SCALE IN FEET
0 5 10 20

GORE DETAILS
IR-75/RAMP V/WINCHELL AVE GORE

DESIGN AGENCY
AMERICAN STRUCTUREPOINT INC.

DESIGNER	LZS
REVIEWER	KAM 03/03/25
PROJECT ID	122048
SHEET	P.140
TOTAL	P.421

HAM-IR 75-1.05

MODEL: Sheet 2 PAPERSIZE: 34x22 (in.) DATE: 8/28/2025 TIME: 10:36:50 AM PLTDRV: OHDOT_PDF.pltcfg PENTBL: OHDOT_Pen.tbl USER: WORKSPACE: OHDOTCEv02 WORKSET: 122048 PRODUCT: OpenRoadsDesigner 10.12.02.4
pw:\\ohiodot-pw.bentley.com:ohiodot-pw-02\Documents\01 Active Projects\District 08\Hamilton\122048\Roadway\Sheets\122048_GI300.dgn

DRAINAGE CONDUIT DETAILS

REF NO.	CFN	LENGTH (FT)	SIZE	TYPE	SLOPE	UPSTREAM		DOWNSTREAM		NOTES
						STRUCT. REF NO	INVERT ELEV	STRUCT. REF NO	INVERT ELEV	
P-301	N/A	14.00	18"	TYPE C APP (CINCINNATI)	1.00%	D-301	497.09	D-317	496.95	
P-302	N/A	36.00	18"	TYPE B APP (CINCINNATI)	0.80%	D-302	497.38	D-301	497.09	
P-303	N/A	35.00	12"	TYPE B APP (CINCINNATI)	1.75%	D-303	501.50	D-304	500.89	
P-304	N/A	97.00	18"	TYPE B APP (CINCINNATI)	0.70%	D-304	498.06	D-302	497.38	
P-305	N/A	34.00	18"	TYPE B APP (CINCINNATI)	0.30%	D-305	498.16	D-304	498.06	
P-306	N/A	20.00	12"	TYPE B APP (CINCINNATI)	3.00%	D-306	501.28	D-307	500.68	
P-307	N/A	42.00	18"	TYPE B APP (CINCINNATI)	0.30%	D-307	498.29	D-305	498.16	
P-308	N/A	20.00	12"	TYPE B APP (CINCINNATI)	3.00%	D-308	501.15	D-309	500.55	
P-309	N/A	49.00	18"	TYPE B APP (CINCINNATI)	0.30%	D-309	498.44	D-307	498.29	
P-310	N/A	20.00	12"	TYPE B APP (CINCINNATI)	3.00%	D-310	501.43	D-311	500.83	
P-311	N/A	65.00	15"	TYPE B APP (CINCINNATI)	0.50%	D-311	499.01	D-309	498.69	
P-312	N/A	20.00	12"	TYPE B APP (CINCINNATI)	1.00%	D-312	502.18	D-313	501.98	
P-313	N/A	98.00	15"	TYPE B APP (CINCINNATI)	0.50%	D-317	499.50	D-311	499.01	
P-314	N/A	25.00	12"	TYPE B APP (CINCINNATI)	1.00%	D-314	502.11	D-313	501.86	
P-315	N/A	149.00	12"	TYPE B APP (CINCINNATI)	1.15%	D-315	502.28	D-313	500.57	
P-316	N/A	63.00	12"	TYPE C APP (CINCINNATI)	1.00%	D-316	502.16	D-317	501.53	
P-324	N/A	29.00	12"	TYPE C APP (CINCINNATI)	1.00%	D-324	514.28	S-308	513.99	
P-325	N/A	35.00	12"	TYPE B APP (CINCINNATI)	1.43%	D-325	514.78	D-324	514.28	
P-326	N/A	10.00	12"	TYPE B APP (CINCINNATI)	4.78%	D-326	506.62	MATCH EX	506.14	
P-327	N/A	10.00	12"	TYPE B APP (CINCINNATI)	7.09%	D-327	505.07	MATCH EX	505.38	
P-328	N/A	34.00	12"	TYPE B APP (CINCINNATI)	1.00%	D-328	517.26	D-330	517.05	
P-329	N/A	189.00	12"	TYPE B APP (CINCINNATI)	1.00%	D-329	517.26	D-330	517.05	
P-330	N/A	1894.00	12"	TYPE B APP (CINCINNATI)	2.25%	D-330	516.05	DX-1381	511.91	
P-1454	N/A	57.00	12"	TYPE B APP (CINCINNATI)	1.00%	DX-1454	501.62	D-304	501.05	
P-1532	N/A	32.00	12"	TYPE B APP (CINCINNATI)	6.63%	DX-1532	504.01	D-302	501.89	
P-1538	N/A	40.00	12"	TYPE B APP (CINCINNATI)	1.00%	DX-1538	500.26	D-309	499.86	

NOTES:

FOR STORM SEWER SUBSUMMARY SEE SHEETS P.70 - P.71
FOR STORM SEWER SCHEMATIC PLAN SEE SHEET P.153
FOR STORM SEWER PROFILES SEE SHEETS P.154 - P.156

DRAINAGE STRUCTURE DETAILS

REF NO.	REFERENCE ALIGNMENT	STATION	OFFSET	SIDE	TYPE	GRATE/RIM ELEV	INVERT ELEV	CONNECTED PIPES					NOTES
								REF NO.		SIZE	INVERT ELEV		
D-301	CLP_COURT	7+00.00	18.00'	LT	CI	505.89	497.09	IN	P-302	18"	497.09	N	
								OUT	P-301	18"	497.09	S	
D-302	CLP_COURT	7+00.00	18.00'	RT	DGIMH	505.89	497.38	IN	P-1532	12"	501.89	N	
								IN	P-304	18"	497.38	W	
								OUT	P-302	18"	497.38	S	
D-303	CLP_COURT	8+00.00	17.13'	RT	CI	505.50	501.50	OUT	P-303	12"	501.50	N	
D-304	CLP_COURT	8+00.00	17.07'	RT	DGIMH	505.51	498.06	IN	P-1454	12"	501.05	NW	
								IN	P-303	12"	500.89	N	
								IN	P-305	18"	498.06	W	
								OUT	P-304	18"	498.06	E	
D-305	CLP_COURT	8+40.00	12.93'	RT	DGIMH	505.41	498.16	IN	P-307	18"	498.16	NW	
								OUT	P-305	18"	498.16	E	
D-306	CLP_COURT	8+85.00	10.00'	LT	CB-6	505.28	501.28	OUT	P-306	12"	501.28	NE	
D-307	CLP_COURT	8+85.00	10.00'	RT	DGIMH	505.28	498.29	IN	P-306	12"	500.68	NW	
								IN	P-309	18"	498.29	SW	
								OUT	P-307	18"	498.29	SE	
D-308	CLP_COURT	9+34.73	10.00'	LT	CB-6	505.15	501.15	OUT	P-308	12"	501.15	NE	
D-309	CLP_COURT	9+34.73	10.00'	RT	DGIMH	505.15	498.44	IN	P-308	12"	500.55	SW	
								IN	P-1538	12"	499.86	N	
								IN	P-311	15"	498.69	NW	
								OUT	P-309	18"	498.44	SE	
D-310	CLP_COURT	10+00.00	10.00'	LT	CB-6	505.43	501.43	OUT	P-310	12"	501.43	E	
D-311	CLP_COURT	10+00.00	10.00'	RT	DGIMH	505.43	499.01	IN	P-310	12"	500.83	W	
								IN	P-313	15"	499.01	NW	
								OUT	P-311	15"	499.01	SE	
D-312	CLP_COURT	11+00.00	20.98'	LT	CB-6	506.18	502.18	OUT	P-312	12"	502.18	E	
D-313	CLP_COURT	11+00.00	0.00'	CL	MH, B	506.58	499.50	IN	P-312	12"	501.98	E	
								IN	P-314	12"	501.86	W	
								IN	P-315	12"	500.57	N	
								OUT	P-313	15"	499.50	S	
D-314	CLP_COURT	11+00.00	25.01'	RT	CI	506.11	502.11	OUT	P-314	12"	502.11	W	
D-315	CLP_WINCHELL	763+10.12	30.67'	RT	DI	506.03	502.28	OUT	P-315	12"	502.28	S	
D-316	CLP_WINCHELL	757+20.00	29.00'	RT	CB-2-2B	505.25	502.16	OUT	P-317	12"	502.16	N	
D-317	CLP_COURT	7+00.00	31.68'	LT	MH, B	507.66	492.72	IN	P-316	12"	501.53	S	
								IN	P-301	18"	496.95	N	
								IN	EX PIPE	18"	492.72	NW	
								OUT	EX PIPE	18"	492.72	SE	
D-324	CLP_LINN	110+33.00	17.00'	LT	CI	518.28	514.28	IN	P-325	12"	514.28	SE	
								OUT	P-324	12"	514.28	W	
D-325	CLP_LINN	110+25.00	17.00'	RT	CI	518.78	514.78	OUT	P-325	12"	514.78	NE	
D-326	CLP_LINN	111+17.00	20.58'	LT	CI	512.90	506.62	OUT	P-326	12"	506.62	NE	
D-327	CLP_LINN	111+47.20	24.28'	RT	CI	511.14	505.07	OUT	P-327	12"	505.07	N	
D-328	CLP_LINN	105+35.00	17.00'	RT	CI	521.26	517.26	OUT	P-328	12"	517.26	SW	
D-329	CLP_LINN	105+35.00	17.00'	LT	CI	521.26	517.26	OUT	P-329	12"	517.26	SE	
D-330	CLP_LINN	105+23.00	0.00'	CL	MH, B	521.11	516.05	IN	P-328	12"	517.05	NE	
								IN	P-329	12"	517.05	NW	
								OUT	P-330	12"	516.05	SW	
DX-1381	CLP_LINN	103+50.50	64.17'	LT	EX INLET	514.72	511.91	IN	P-329	12"	511.91	NE	
								OUT	EX PIPE	12"	511.91	SW	EX. TO REMAIN
DX-1454	CLP_COURT	8+66.43	54.63'	RT	EX MH	507.03	501.62	IN	EX PIPE	12"	501.66	W	EX. TO REMAIN
								OUT	EX PIPE	12"	501.62	S	TBR
								OUT	P-1454	12"	501.62	S	
DX-1532	CLP_COURT	7+14.26	46.63	RT	EX INLET	507.43	504.01	IN	EX PIPE	12"	504.85	NE	EX. TO REMAIN
								OUT	EX PIPE	12"	504.01	SE	TBR
								OUT	P-1532	12"	504.01	SE	
DX-1538	CLP_COURT	9+70.70	29.62'	RT	EX INLET	505.73	500.26	IN	EX PIPE	12"	500.26	N	EX. TO REMAIN
								OUT	EX PIPE	12"	500.26	S	TBR
								OUT	P-1538	12"	500.26	S	
S-308	CLP_LINN	110+20.65	43.60'	LT	MH ATG	520.03	489.80	IN	P-324	12"	513.99	E	
								IN	EX PIPE	18"	490.78	NW	EX. TO REMAIN
								IN	EX PIPE	21"	490.60	SE	EX. TO REMAIN
								IN	EX PIPE	54"	490.17	NE	EX. TO REMAIN
								OUT	EX PIPE	66"	489.80	SW	EX. TO REMAIN

STORM SEWER DATA TABLES

DESIGN AGENCY
AMERICAN STRUCTUREPOINT INC.

DESIGNER LZS
REVIEWER KAM 03/03/25
PROJECT ID 122048
SHEET P.152 TOTAL P.421

HAM-IR 75-1.05

MODEL: Sheet PAPERSIZE: 34x22 (in.) DATE: 8/28/2025 TIME: 10:37:12 AM PLTDRV: OHDOT_PDF.pltcfg PENTBL: OHDOT_Pen.tbl USER: WORKSPACE: OHDOTCEv02 WORKSET: I22048 PRODUCT: OpenRoadsDesigner 10.12.02.4
pw:\\ohiodot-pw.bentley.com:ohiodot-pw-02\Documents\01 Active Projects\District 08\Hamilton\122048\403-Engineering_StructurePoint\Drainage\Sheets\122048_DD301.dgn

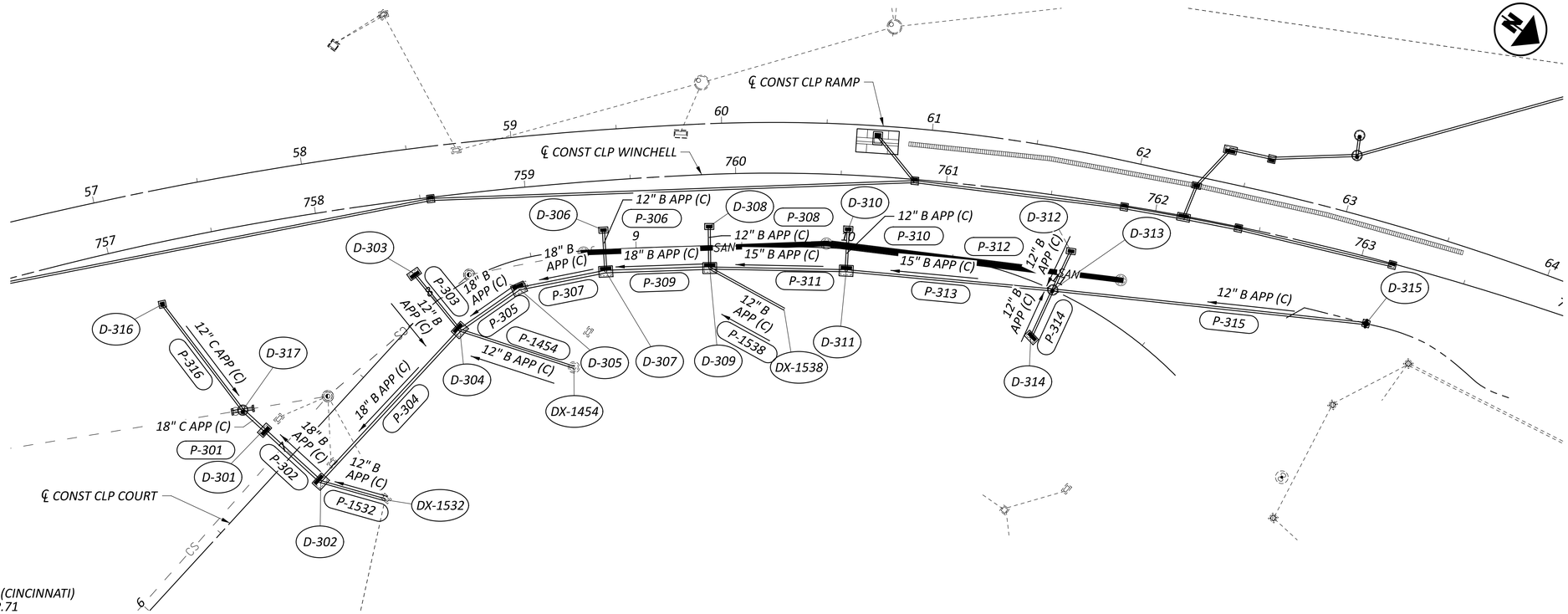

HORIZONTAL SCALE IN FEET
0 15 30 60

STORM SEWER SCHEMATIC

HAM-IR 75-1.05

DESIGN AGENCY
AMERICAN STRUCTUREPOINT INC.

DESIGNER	LZS
REVIEWER	KAM 03/03/25
PROJECT ID	122048
SHEET	P.153
TOTAL	P.421

MODEL: Sheet PAPERSIZE: 34x22 (in.) DATE: 8/28/2025 TIME: 10:37:26 AM PLTDRV: OHDOT_PDF.pltcfg PENTBL: OHDOT_Pen.tbl USER: WORKSPACE: OHDOTCEv02 WORKSET: 122048 PRODUCT: OpenRoadsDesigner 10.12.02.4
pw:\\ohiodot-pw.bentley.com:ohiodot-pw-02\Documents\01 Active Projects\District 08\Hamilton\122048\Engineering_StructurePoint\Drainage\Sheets\122048_DD302.dgn

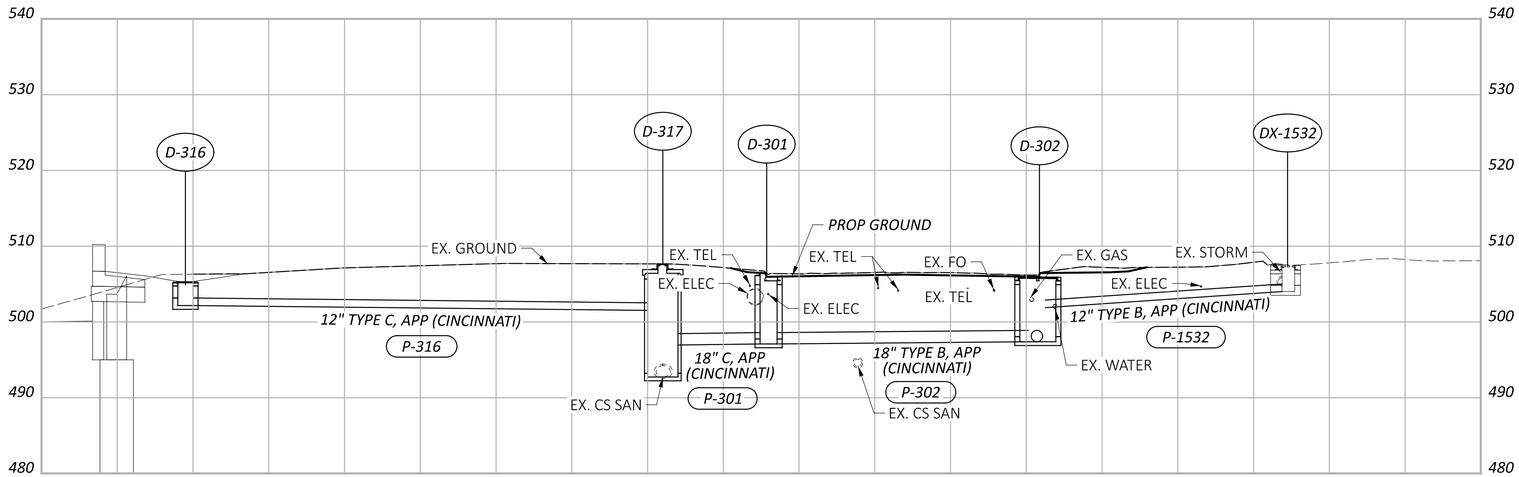

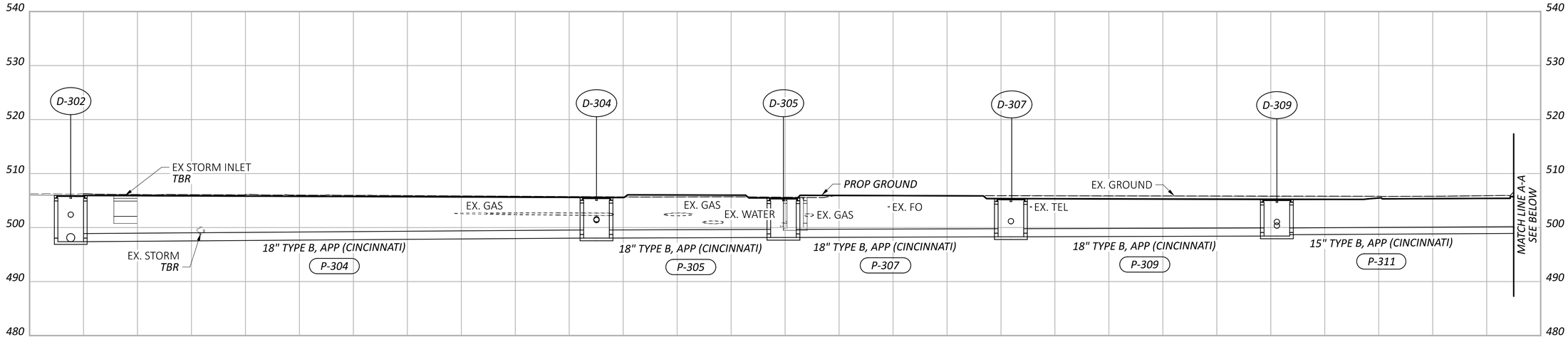

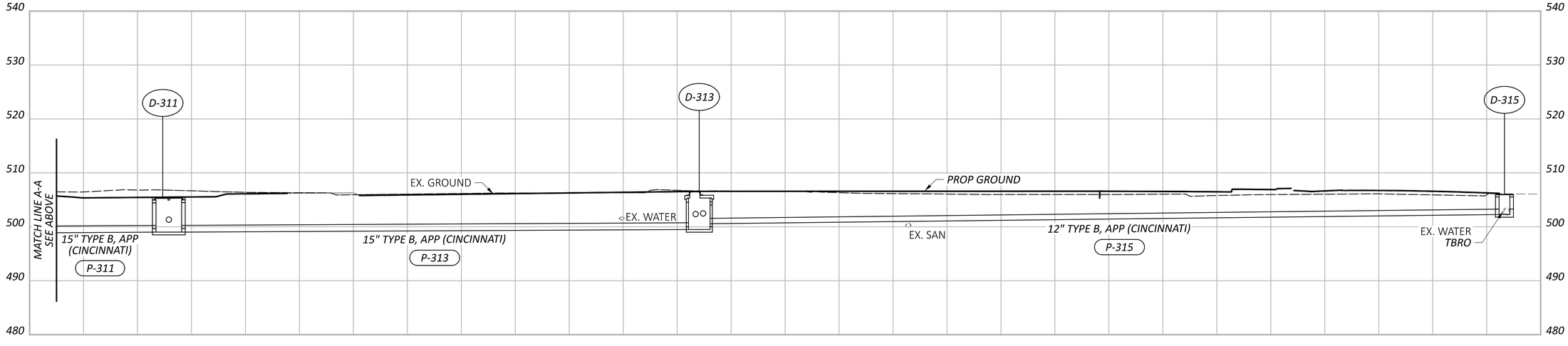

HORIZONTAL SCALE IN FEET
0 50 100 200

STORM SEWER PROFILES
LOCAL STREETS

DESIGN AGENCY
AMERICAN STRUCTUREPOINT INC.

DESIGNER	LZS
REVIEWER	KAM 03/03/25
PROJECT ID	122048
SHEET	P.154
TOTAL	P.421

HAM-IR 75-1.05

MODEL: Sheet 01 PAPERSIZE: 34x22 (in.) DATE: 8/28/2025 TIME: 10:37:52 AM PLTDRV: OHDOT_PDF.pltcfg PENTBL: OHDOT_Pen.tbl USER: WORKSPACE: OHDOTCEv02 WORKSET: pw:\\ohiodot-pw.bentley.com:ohiodot-pw-02\Documents\01 Active Projects\District 08\Hamilton\122048\03-Engineering_StructurePoint\Drainage\Sheets\122048_DF301.dgn

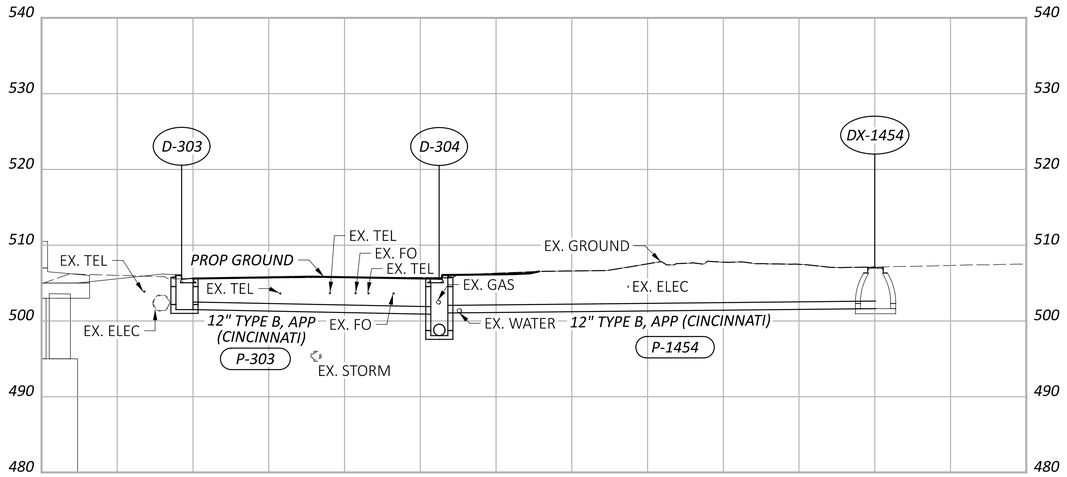

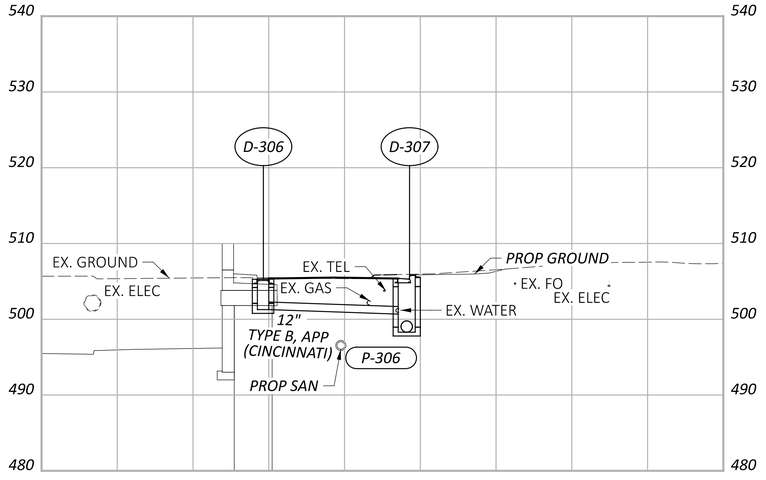

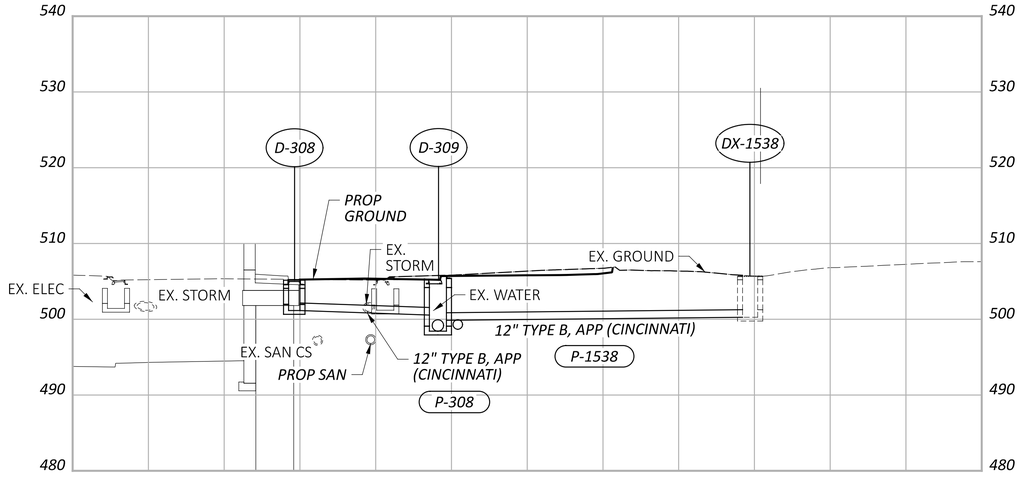

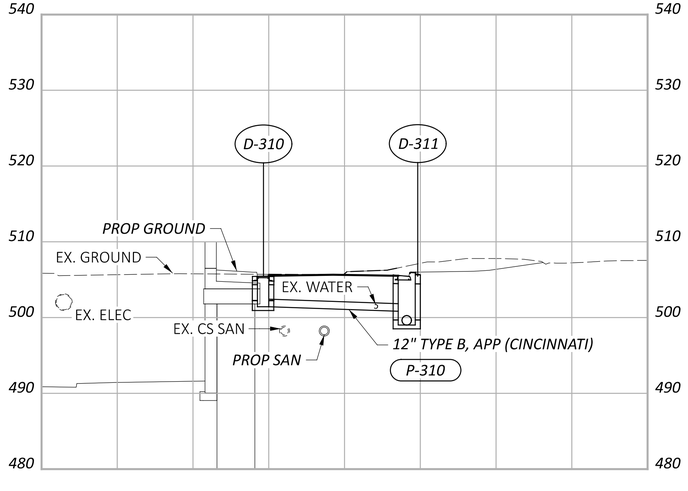

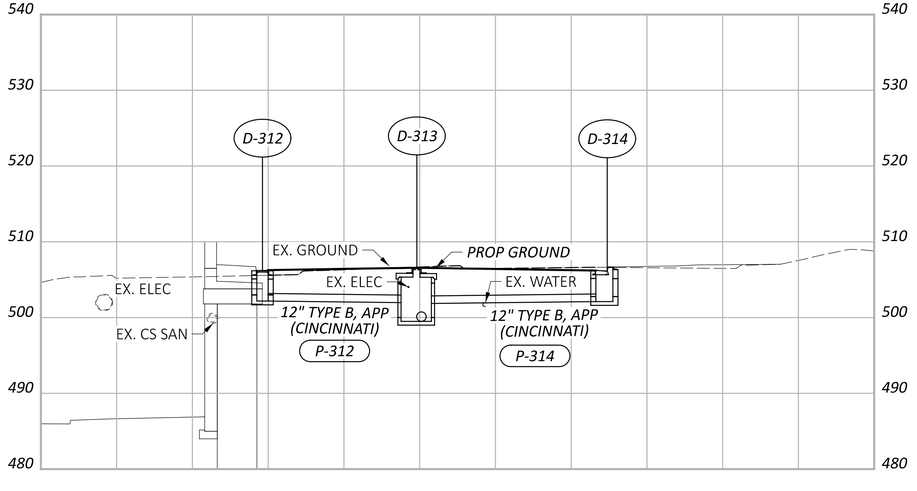

HORIZONTAL SCALE IN FEET
0 50 100 200

STORM SEWER PROFILES
LOCAL STREETS

DESIGN AGENCY
AMERICAN STRUCTUREPOINT INC.

DESIGNER
LZS

REVIEWER
KAM 03/03/25

PROJECT ID
122048

SHEET P.155 TOTAL P.421

HAM-IR 75-1.05

MODEL: Sheet 02 PAPERSIZE: 34x22 (in.) DATE: 8/28/2025 TIME: 10:40:11 AM PLTDRV: OHDOT_PDF.pltcfg PENTBL: OHDOT_Pen.tbl USER: WORKSPACE: OHDOTCEv02 WORKSET: pw:\\ohiodot-pw.bentley.com:ohiodot-pw-02\Documents\01 Active Projects\District 08\Hamilton\122048\03-Engineering_StructurePoint\Drainage\Sheets\122048_DF301.dgn

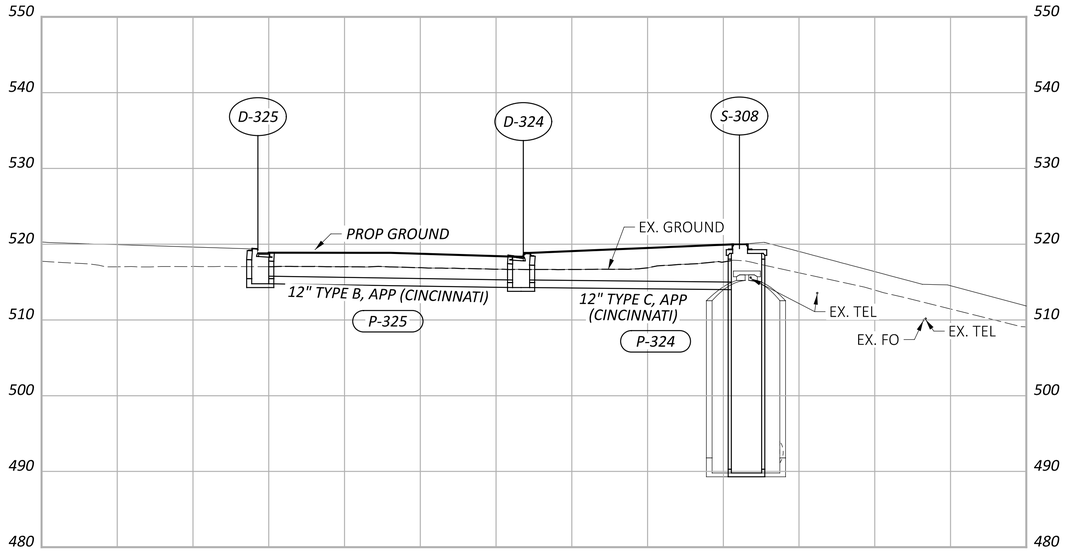

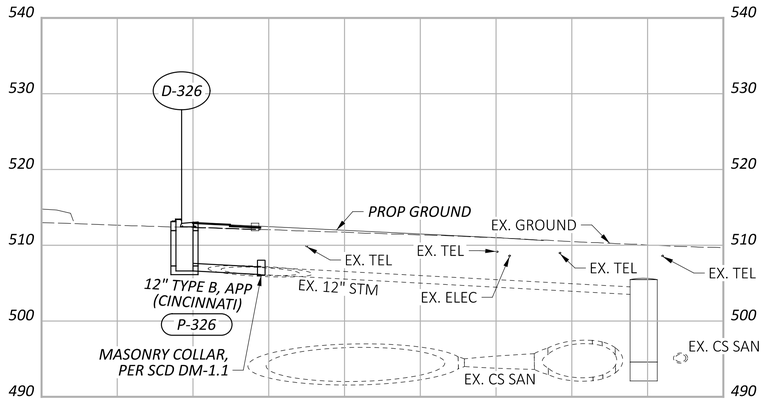

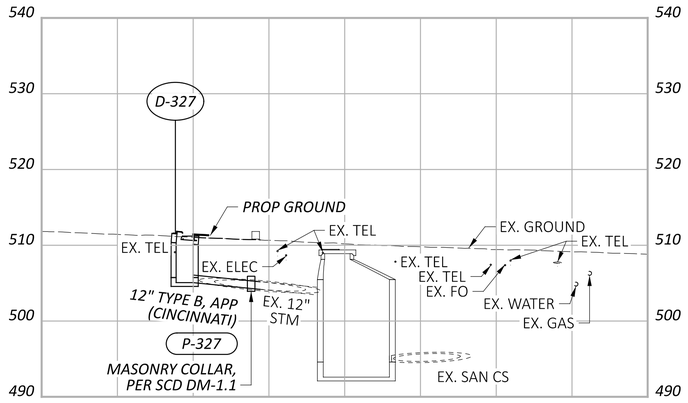

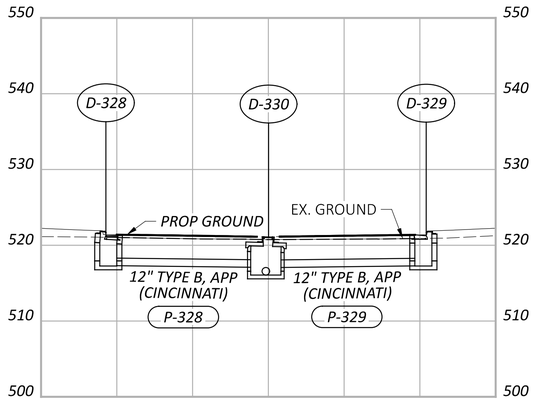

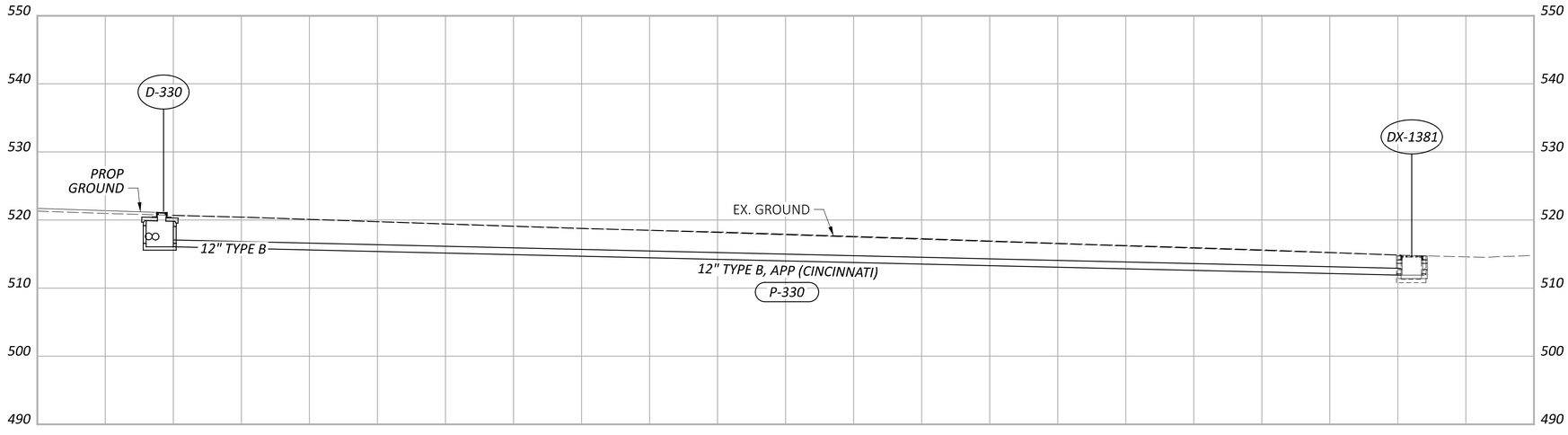

HORIZONTAL SCALE IN FEET
0 50 100 200

STORM SEWER PROFILES LOCAL STREETS

DESIGN AGENCY
STRUCTUREPOINT LLC

DESIGNER
LZS

REVIEWER
KAM 03/03/25

PROJECT ID
122048

SHEET P.156 TOTAL P.421

HAM-IR 75-1.05

MODEL: Sheet 01 PAPERSIZE: 34x22 (in.) DATE: 8/28/2025 TIME: 10:40:29 AM PLTDRV: OHDOT_PDF.pltcfg PENTBL: OHDOT_Pen.tbl USER: WORKSPACE: OHDOTCEv02 WORKSET: 122048 PRODUCT: OpenRoadsDesigner 10.12.02.4
pw:\\ohiodot-pw.bentley.com:ohiodot-pw-02\Documents\01 Active Projects\District 08\Hamilton\122048\M03-Engineering_StructurePoint\Drainage\Sheets\122048_DF302.dgn

DRAINAGE CONDUIT DETAILS

REF NO.	CFN	LENGTH (FT)	SIZE	TYPE	SLOPE	UPSTREAM		DOWNSTREAM		NOTES
						STRUCT. REF NO	INVERT ELEV	STRUCT. REF NO	INVERT ELEV	
P-341*	N/A	27.00	12"	TYPE B APP (CINCINNATI)	2.00%	D-341	495.08	D-342	494.54	
P-342*	N/A	215.00	12"	TYPE B APP (CINCINNATI)	1.50%	D-342	494.54	D-343	491.32	
P-343	N/A	229.00	12"	TYPE B APP (CINCINNATI)	2.66%	D-343	491.32	D-344	485.22	
P-344	N/A	100.00	15"	TYPE B APP (CINCINNATI)	3.69%	D-344	484.97	D-346	481.29	
P-345	1998216	31.00	15"	TYPE B APP	4.56%	D-345	486.39	D-344	484.97	
P-346	N/A	28.00	18"	TYPE B APP (CINCINNATI)	0.76%	D-346	481.04	D-347	480.82	
P-347	N/A	17.00	18"	TYPE B APP (CINCINNATI)	0.88%	D-347	480.82	D-350	480.67	
P-348	N/A	26.00	12"	TYPE B APP (CINCINNATI)	1.00%	D-348	481.51	D-347	481.25	
P-349	N/A	75.00	12"	TYPE B APP (CINCINNATI)	3.35%	D-349	484.02	D-348	481.51	
P-350	1998217	21.00	18"	TYPE B APP	0.88%	D-350	480.67	D-351	480.49	
P-351	1998218	20.00	18"	TYPE B APP	0.88%	D-351	480.49	D-352	480.31	
P-352	N/A	40.00	18"	TYPE C APP	0.88%	D-352	480.31	D-353	479.96	
P-353	1998222	140.00	18"	TYPE B APP	0.88%	D-353	479.96	DX-1261	478.73	
P-354	N/A	10.00	18"	TYPE C APP	1.00%	D-353	479.96	D-354	479.86	

NOTES:

"APP (C)" DENOTES ITEM 611 - CONDUIT, AS PER PLAN (CINCINNATI)
FOR STORM SEWER SUBSUMMARY SEE SHEETS P.70 - P.71
FOR STORM SEWER PROFILES SEE SHEETS P.158 - P.160

* DRAINAGE ITEMS TO BE CONSTRUCTED AS PART OF THE BRENT SPENCE BRIDGE PROJECT (PID 116649), SHOWN FOR INFORMATION ONLY

DRAINAGE STRUCTURE DETAILS

REF NO.	REFERENCE ALIGNMENT	STATION	OFFSET	SIDE	TYPE	GRATE/RIM ELEV	INVERT ELEV	CONNECTED PIPES					NOTES
								REF NO.		SIZE	INVERT ELEV		
D-341*	CLP_WINCHELL	756+13.16	1.00'	RT	CB-3	499.08	495.08	IN	UD	6"	495.93	SE	(PID 116649)
								IN	UD	6"	495.93	NE	
								OUT	P-341	12"	495.08	NW	
D-342*	CLP_WINCHELL	756+40.00	1.00'	RT	CB-3A	499.11	494.54	IN	UD	6"	495.96	NW	(PID 116649)
								IN	P-341	12"	494.54	SE	
								OUT	P-342	12"	494.54	NW	
D-343	CLP_WINCHELL	758+55.00	1.00'	RT	CB-3A	497.1	491.32	IN	UD	6"	493.95	SE	
								IN	P-342	12"	491.32	SE	
								OUT	P-343	12"	491.32	NW	
D-344	CLP_WINCHELL	760+85.00	1.00'	RT	CB-3A	489.22	484.97	IN	NPCPP	6"	487.10	E	
								IN	UD	6"	486.07	SE	
								IN	P-343	12"	485.22	SE	
								IN	P-345	15"	484.97	S	
								OUT	P-344	15"	484.97	NW	
D-345	CLP_RAMP V	60+74.36	6.00'	RT	I-3C	490.64	486.39	IN	UD	6"	487.49	S	
								OUT	P-345	15"	486.39	N	
D-346	CLP_WINCHELL	761+85.00	1.00'	RT	CB-3A	485.54	481.04	IN	UD	6"	482.39	SE	
								IN	P-344	15"	481.29	SE	
								OUT	P-346	18"	481.04	NW	
D-347	CLP_WINCHELL	762+13.51	1.00'	RT	CB-3	485.32	480.82	IN	UD	6"	482.17	SE	
								IN	UD	6"	482.17	NW	
								IN	P-348	12"	481.25	NW	
								IN	P-346	18"	480.82	SE	
								OUT	P-347	18"	480.82	W	
D-348	CLP_WINCHELL	762+40.00	1.00'	RT	CB-3A	485.51	481.51	IN	NPCPP	6"	483.40	E	
								IN	UD	6"	482.36	NW	
								IN	P-349	12"	481.51	NW	
								OUT	P-348	12"	481.51	S	
D-349	CLP_WINCHELL	763+15.00	1.00'	RT	CB-3A	488.02	484.02	IN	UD	6"	484.87	NW	
								IN	NPCPP	6"	484.20	E	
								OUT	P-349	12"	484.02	S	
D-350	CLP_RAMP V	62+28.00	4.25'	RT	CB-6	485.81	480.67	IN	S-DRAIN	6"	485.81	N	
								IN	S-DRAIN	6"	485.81	S	
								IN	P-347	18"	480.67	E	
								OUT	P-350	18"	480.67	W	
D-351	CLP_RAMP V	62+40.07	16.00'	LT	CB-3	486.21	480.49	IN	UD	6"	483.06	N	
								IN	UD	6"	483.06	S	
								IN	P-350	18"	480.49	E	
								OUT	P-351	18"	480.49	NW	
D-352	CLP_RAMP V	62+60.00	16.00'	LT	CB-3A	486.40	480.31	IN	UD	6"	483.25	N	
								IN	P-351	18"	480.31	S	
								OUT	P-352	18"	480.31	NW	
D-353	CLP_RAMP V	62+98.00	27.00'	LT	MH-3	492.13	479.96	IN	P-352	18"	479.96	SE	
								OUT	P-353	18"	479.96	NW	
D-354	CLP_RAMP V	62+96.80	36.51'	LT	MH-3	493.47	479.86	IN	P-354	18"	479.86	E	
DX-1261	CLP_RAMP V	64+08.57	104.23'	LT	EX MH	484.64	475.94	IN	P-353	18"	478.73	SE	
								IN	EX PIPE	15"	479.42	SE	EX. TO REMAIN
								IN	EX PIPE	18"	479.17	SW	EX. TO REMAIN
								IN	EX PIPE	24"	477.79	S	EX. TO REMAIN
								OUT	EX PIPE	36"	475.94	N	EX. TO REMAIN

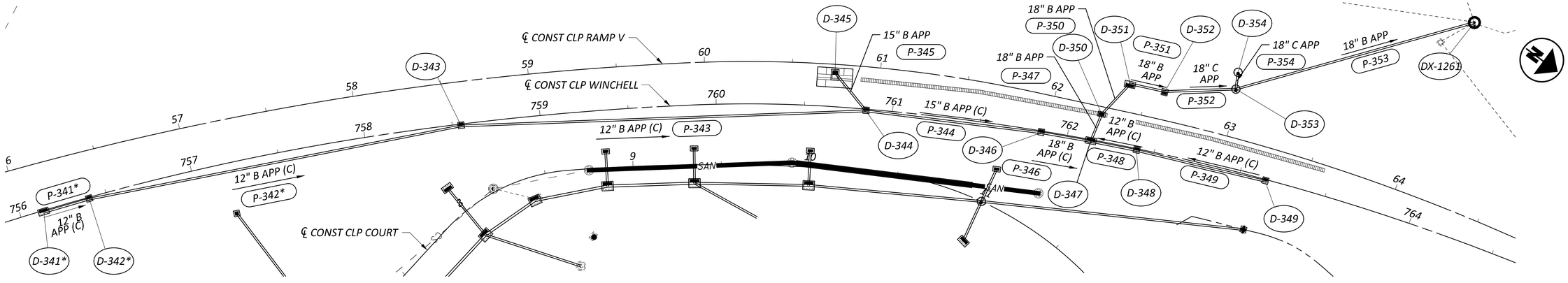

HORIZONTAL SCALE IN FEET
0 15 30 60

STORM SEWER SCHEMATIC AND DATA TABLES

HAM-IR 75-1.05

DESIGN AGENCY: WSP/PB STRUCTUREPOINT LLC
DESIGNER: LZS
REVIEWER: KAM 03/03/25
PROJECT ID: 122048
SHEET P.157 | TOTAL P.421

MODEL: Sheet PAPERSIZE: 34x22 (in.) DATE: 8/28/2025 TIME: 10:40:48 AM PLTDRV: OHDOT_PDF.pltcfg PENTBL: OHDOT_Pen.tbl USER: WORKSPACE: OHDOTCEv02 WORKSET: 122048 PRODUCT: OpenRoadsDesigner 10.12.02.4
pw:\\ohiodot-pw.bentley.com:ohiodot-pw-02\Documents\01 Active Projects\District 08\Hamilton\122048\03-Engineering_StructurePoint\Drainage\Sheets\122048_DD304.dgn

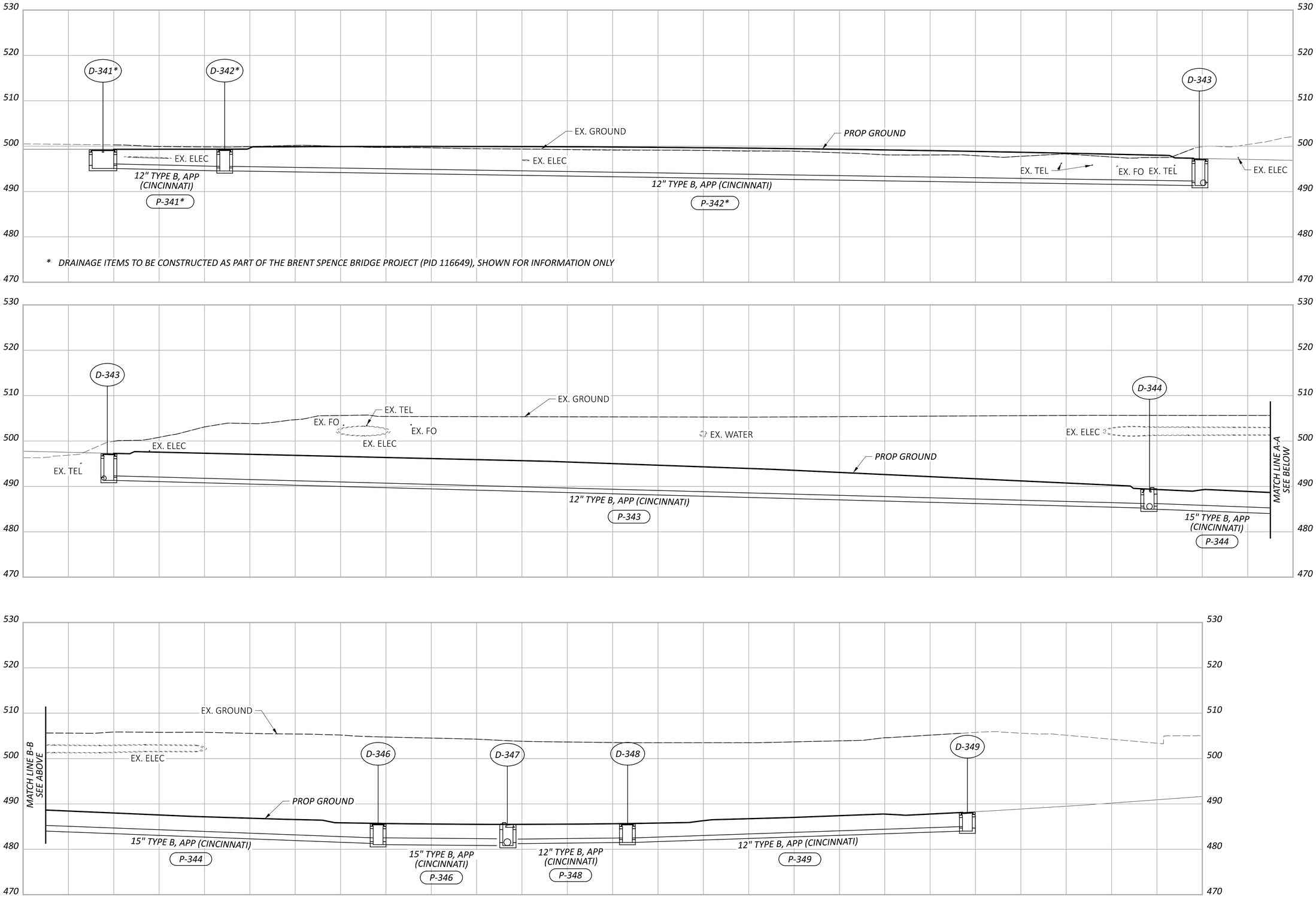

HORIZONTAL SCALE IN FEET
0 50 100 200

STORM SEWER PROFILES
LOCAL STREETS

DESIGN AGENCY
AMERICAN STRUCTUREPOINT INC.

DESIGNER
LZS

REVIEWER
KAM 03/03/25

PROJECT ID
122048

SHEET P.158 TOTAL P.421

HAM-IR 75-1.05

MODEL: Sheet 01 PAPERSIZE: 34x22 (in.) DATE: 8/28/2025 TIME: 10:41:16 AM PLTDRV: OHDOT_PDF.pltcfg PENTBL: OHDOT_Pen.tbl USER: WORKSPACE: OHDOTCEv02 WORKSET: 122048 PRODUCT: OpenRoadsDesigner 10.12.02.4
pw:\\ohiodot-pw.bentley.com:ohiodot-pw-02\Documents\01 Active Projects\District 08\Hamilton\122048\403-Engineering_StructurePoint\Drainage\Sheets\122048_DF304.dgn

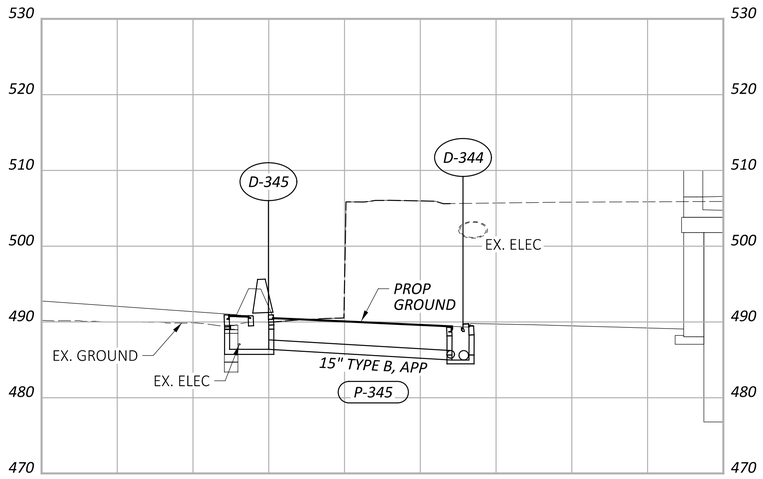

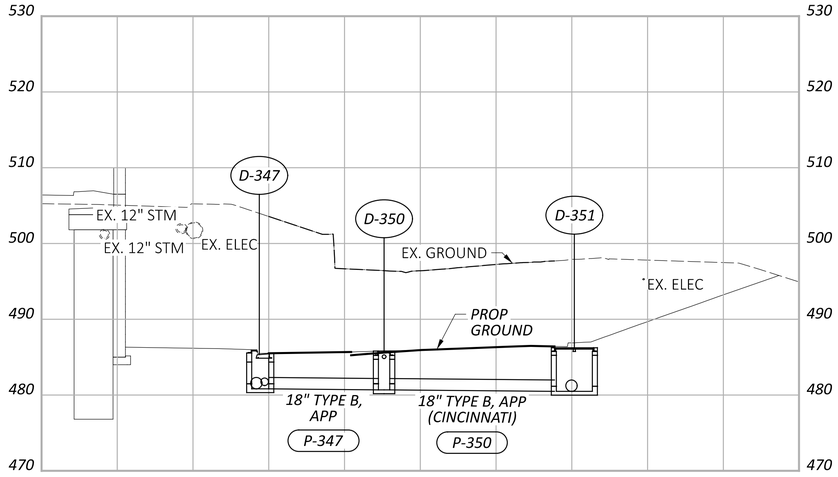

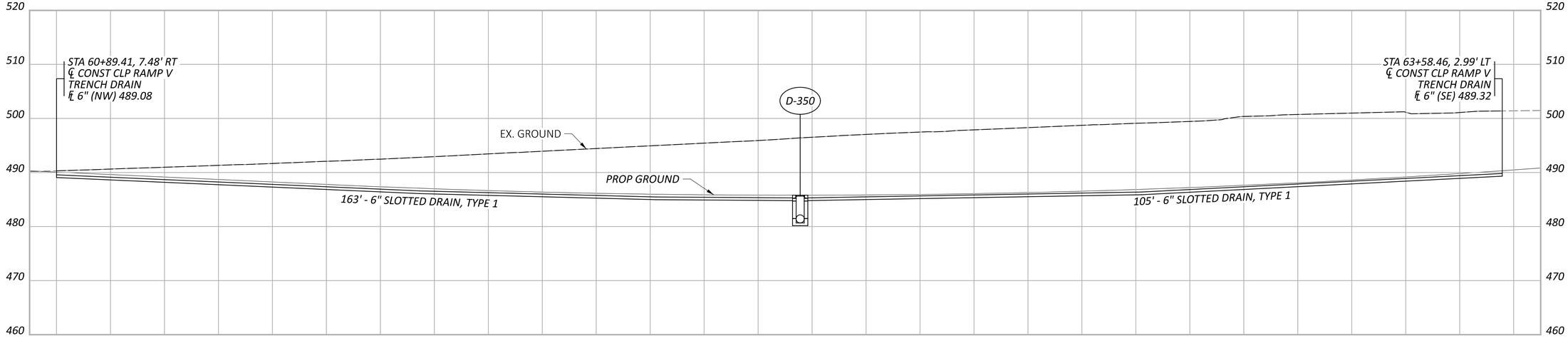

HORIZONTAL SCALE IN FEET
0 50 100 200

STORM SEWER PROFILES
LOCAL STREETS

DESIGN AGENCY
AMERICAN STRUCTUREPOINT INC.

DESIGNER
LZS

REVIEWER
KAM 03/03/25

PROJECT ID
122048

SHEET P.159 TOTAL P.421

HAM-IR 75-1.05

MODEL: Sheet 02 PAPERSIZE: 34x22 (in.) DATE: 8/28/2025 TIME: 10:41:22 AM PLTDRV: OHDOT_PDF.pltcfg PENTBL: OHDOT_Pen.tbl USER: WORKSPACE: OHDOTCEv02 WORKSET: pw:\\ohiodot-pw.bentley.com:ohiodot-pw-02\Documents\01 Active Projects\District 08\Hamilton\122048\03-Engineering_StructurePoint\Drainage\Sheets\122048_DF304.dgn

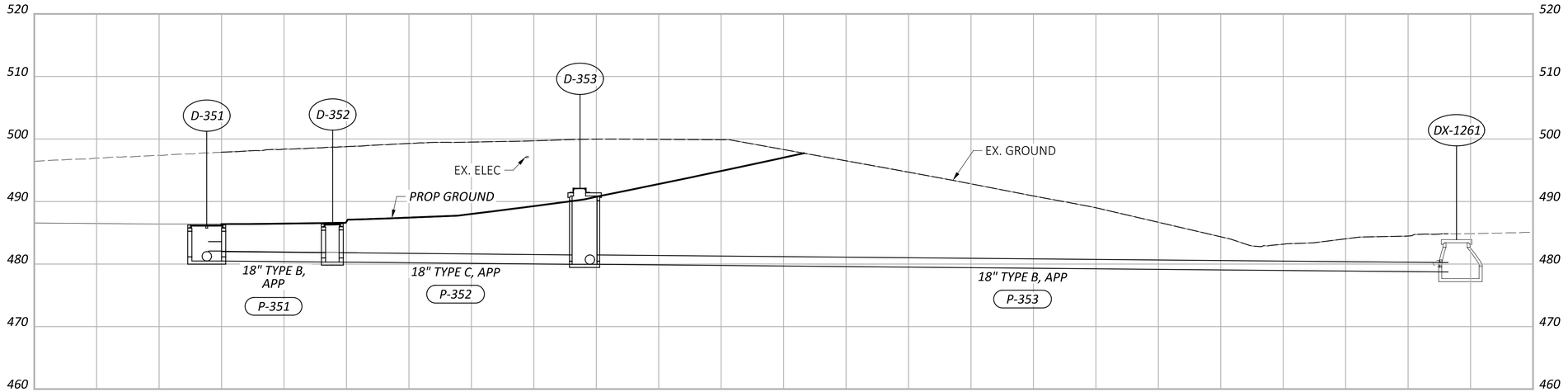

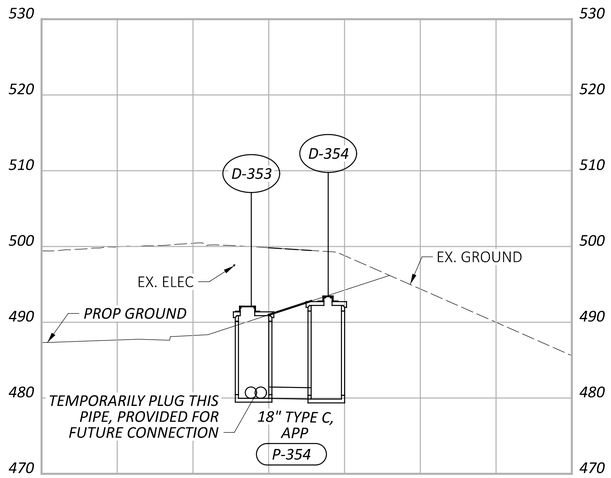

NOTES:

STRUCTURE D-354 IS PROVIDED FOR FUTURE CONNECTION

HORIZONTAL SCALE IN FEET
0 50 100 200

STORM SEWER PROFILES
LOCAL STREETS

DESIGN AGENCY
WESTERN STRUCTUREPOINT INC.

DESIGNER LZS

REVIEWER KAM 03/03/25

PROJECT ID 122048

SHEET P.160 TOTAL P.421

HAM-IR 75-1.05

MODEL: Sheet 03 PAPERSIZE: 34x22 (in.) DATE: 8/28/2025 TIME: 10:41:25 AM PLTDRV: OHDOT_PDF.pltcfg PENTBL: OHDOT_Pen.tbl USER: WORKSPACE: OHDOTCEv02 WORKSET: 122048 PRODUCT: OpenRoadsDesigner 10.12.02.4
pw:\\ohiodot-pw.bentley.com:ohiodot-pw-02\Documents\01 Active Projects\District 08\Hamilton\122048\403-Engineering_StructurePoint\Drainage\Sheets\122048_DF304.dgn

DRAINAGE CONDUIT DETAILS

REF NO.	CFN	LENGTH (FT)	SIZE	TYPE	SLOPE	UPSTREAM		DOWNSTREAM		NOTES
						STRUCT. REF NO	INVERT ELEV	STRUCT. REF NO	INVERT ELEV	
P-357	N/A	25.00	12"	TYPE C APP	7.75%	D-357	499.24	D-358	497.30	
P-358	1998229	180.00	12"	TYPE B APP	1.78%	D-358	497.30	D-360	494.10	
P-359**	1998231	181.00	12"	TYPE B APP	2.00%	D-359**	495.70	D-364**	492.07	
P-360	1998232	60.00	15"	TYPE B APP	1.00%	D-360	493.85	D-361	493.25	
P-361	1998227	50.00	15"	TYPE B APP	1.22%	D-361	493.25	D-362	492.64	
P-362	1998234	50.00	15"	TYPE B APP	1.09%	D-362	492.64	D-363	492.09	
P-363	1998230	47.00	15"	TYPE B APP	1.00%	D-363	492.09	D-366	491.62	
P-634	1998236	49.00	15"	TYPE B APP	0.55%	D-364**	491.82	D-365	491.55	
P-365	1998233	54.00	18"	TYPE B APP	5.50%	D-365	491.30	D-368	491.01	
P-366	1998221	52.00	18"	TYPE B APP	1.00%	D-366	491.37	D-369	490.85	
P-367	N/A	22.00	12"	TYPE C APP	0.59%	D-367	492.26	D-366	492.13	
P-368	1998239	52.00	18"	TYPE B APP	0.55%	D-368	491.01	D-369	490.72	
P-369	N/A	53.00	24"	TYPE C APP	1.00%	D-369	490.35	DX-1244	489.82	
P-370	N/A	31.00	12"	TYPE C APP	0.92%	D-370	493.21	DX-1244	492.93	
P-371	1998237	45.00	12"	TYPE B APP	2.09%	D-371	494.15	D-370	493.21	
P-372	1998238	99.00	12"	TYPE B APP	2.54%	D-372	496.66	D-371	494.15	

NOTES:

"APP (C)" DENOTES ITEM 611 - CONDUIT, AS PER PLAN (CINCINNATI)
FOR STORM SEWER SUBSUMMARY SEE SHEETS P.70 - P.71
FOR STORM SEWER PROFILES SEE SHEETS P.162 - P.163

** DRAINAGE ITEMS TO BE CONSTRUCTED AS PART OF THE HAM-IR 75-1.05 (PHASE 3) PROJECT (PID 113361), SHOWN FOR INFORMATION ONLY

DRAINAGE STRUCTURE DETAILS

REF NO.	REFERENCE ALIGNMENT	STATION	OFFSET	SIDE	TYPE	GRATE/RIM ELEV	INVERT ELEV	CONNECTED PIPES				NOTES
								REF NO.		SIZE	INVERT ELEV	
D-357	CLP_RAMP V	65+87.50	36.03'	RT	CB-2-3	503.24	499.24	IN	DX-51657	12"	499.70 E	EXISTING PIPE
								OUT	P-357	12"	499.7 W	
D-358	CLP_RAMP V	65+85.00	12.00'	RT	CB-3A	501.30	497.30	IN	UD	6"	498.15 N	
								IN	P-357	12"	497.30 E	
								OUT	P-358	12"	497.30 N	
D-359**	CLP_RAMP V	67+47.22	54.08'	LT	CB-3A	499.60	495.70	IN	UD	6"	496.45 S	(PID 113361)
								OUT	P-359**	12"	495.70 N	
D-360	CLP_RAMP V	67+65.00	12.00'	RT	CB-3A	499.10	493.85	IN	UD	6"	495.95 S	
								IN	P-358	12"	494.10 S	
								OUT	P-360	15"	493.85 N	
D-361	CLP_RAMP V	68+25.00	12.00'	RT	CB-3A	497.76	493.25	IN	UD	6"	494.61 S	
								IN	P-360	15"	493.25 S	
								OUT	P-361	15"	493.25 N	
D-362	CLP_RAMP V	68+75.00	12.00'	RT	CB-3A	496.89	492.64	IN	UD	6"	493.74 S	
								IN	P-361	15"	492.64 S	
								OUT	P-362	15"	492.64 N	
D-363	CLP_RAMP V	69+25.00	12.00'	RT	CB-3A	496.34	492.09	IN	UD	6"	493.19 S	
								IN	P-362	15"	492.09 S	
								OUT	P-363	15"	492.09 N	
D-364**	CLP_RAMP V	69+25.31	40.09'	LT	CB-3A	496.19	491.82	IN	UD	6"	493.04 S	(PID 113361)
								IN	P-359**	12"	492.07 S	
								OUT	P-364	15"	491.82 N	
D-365	CLP_RAMP V	69+72.73	40.00'	LT	CB-3	496.01	491.30	IN	UD	6"	492.86 S	
								IN	UD	6"	492.86 N	
								IN	P-364	15"	491.55 S	
								OUT	P-365	18"	491.30 N	
D-366	CLP_RAMP V	62+72.73	12.00'	RT	CB-3	496.17	491.37	IN	UD	6"	493.02 S	
								IN	UD	6"	493.02 N	
								IN	P-367	12"	492.13 E	
								IN	P-363	15"	491.62 S	
								OUT	P-366	18"	491.37 N	
D-367	CLP_RAMP V	69+71.99	34.15'	RT	CB-2-2B	496.26	492.26	OUT	P-367	12"	492.26 W	
D-368	CLP_RAMP V	70+25.00	40.00'	LT	CB-3A	496.22	491.01	IN	UD	6"	493.07 N	
								IN	P-365	18"	491.01 S	
								OUT	P-368	18"	491.01 E	
D-369	CLP_RAMP V	70+25.00	12.00'	RT	CB-3A	496.38	490.35	IN	UD	6"	493.23 N	
								IN	P-366	18"	490.85 S	
								IN	P-368	18"	490.72 W	
								OUT	P-369	24"	490.35 NE	
D-370	CLP_RAMP V	70+90.00	12.00'	RT	CB-3A	497.21	493.21	IN	UD	6"	494.06 N	
								IN	P-371	12"	493.21 N	
								OUT	P-370	12"	493.21 SE	
D-371	CLP_RAMP V	71+35.00	12.00'	RT	CB-3A	498.15	494.15	IN	UD	6"	495.00 N	
								IN	P-372	12"	494.15 N	
								OUT	P-371	12"	494.15 S	
D-372	CLP_RAMP V	72+35.00	12.00'	RT	CB-3A	500.66	496.66	IN	UD	6"	497.51 N	
								OUT	P-372	12"	496.66 S	
DX-1244	CLP_RAMP V	70+73.11	37.37'	RT	EX MH	497.50	483.67	IN	P-370	12"	492.93 NW	
								IN	P-369	24"	489.82 SE	
								IN	EX PIPE	60"	483.67 E	EX TO REMAIN
								OUT	EX PIPE	60"	483.67 W	EX TO REMAIN

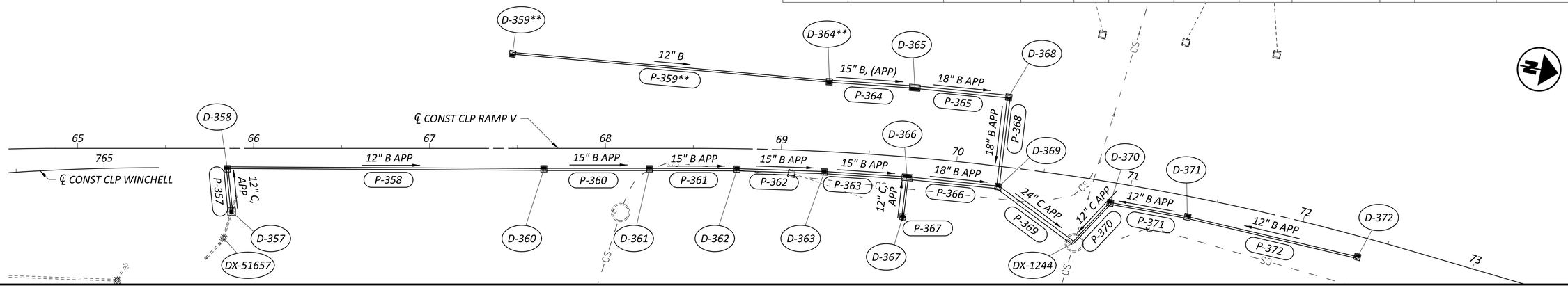

HORIZONTAL SCALE IN FEET
0 15 30 60

STORM SEWER SCHEMATIC AND DATA TABLES

DESIGN AGENCY: STRUCTUREPOINT LLC
DESIGNER: LZS
REVIEWER: KAM 03/03/25
PROJECT ID: 122048
SHEET: P.161 TOTAL: P.421

HAM-IR 75-1.05

MODEL: Sheet PAPERSIZE: 34x22 (in.) DATE: 8/28/2025 TIME: 10:41:43 AM PLTDRV: OHDOT_PDF.pltcfg PENTBL: OHDOT_Pen.tbl USER: WORKSPACE: OHDOTCEv02 WORKSET: 122048 PRODUCT: OpenRoadsDesigner 10.12.02.4
pw:\\ohiodot-pw.bentley.com:ohiodot-pw-02\Documents\01 Active Projects\District 08\Hamilton\122048\03-Engineering_StructurePoint\Drainage\Sheets\122048_DD305.dgn

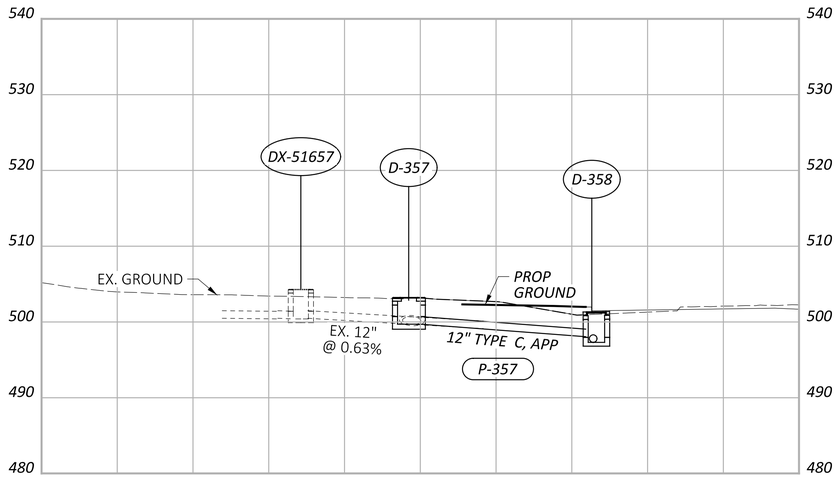

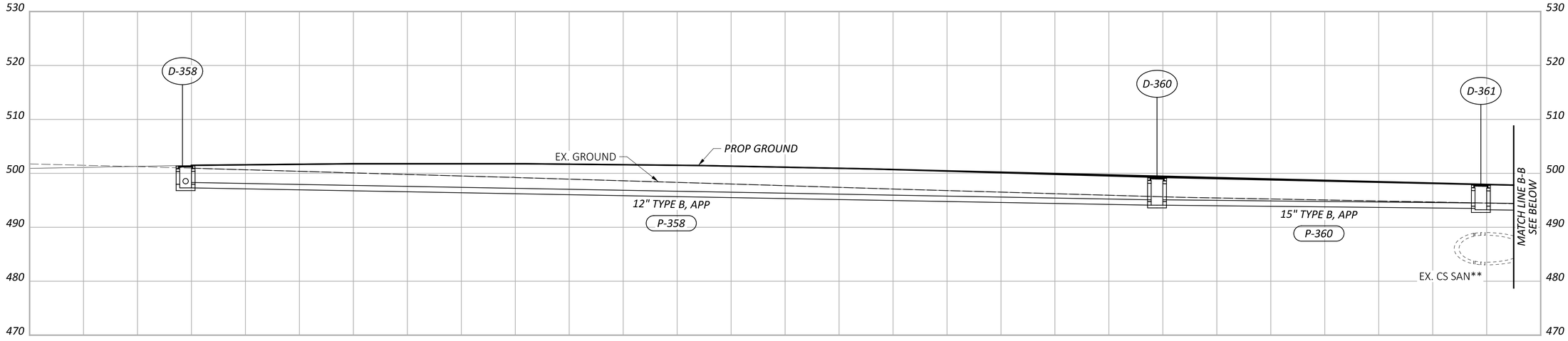

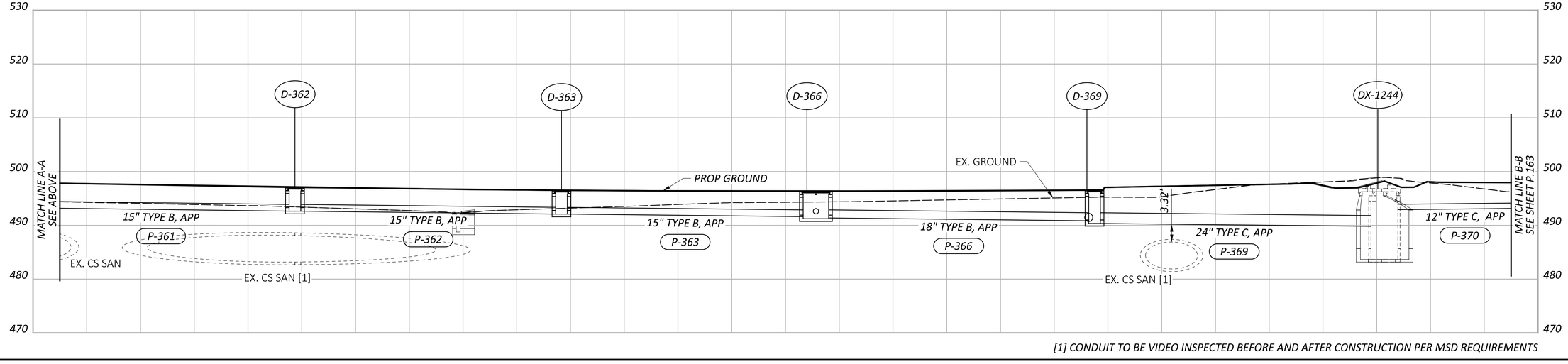

[1] CONDUIT TO BE VIDEO INSPECTED BEFORE AND AFTER CONSTRUCTION PER MSD REQUIREMENTS

HORIZONTAL SCALE IN FEET
0 50 100 200

STORM SEWER PROFILES
LOCAL STREETS

HAM-IR 75-1.05

MODEL: Sheet 01 PAPERSIZE: 34x22 (in.) DATE: 8/28/2025 TIME: 10:42:14 AM PLTDRV: OHDOT_PDF.pltcfg PENTBL: OHDOT_Pen.tbl USER: WORKSPACE: OHDOTCEv02 WORKSET: 122048 PRODUCT: OpenRoadsDesigner 10.12.02.4
pw:\\ohiodot-pw.bentley.com:ohiodot-pw-02\Documents\01 Active Projects\District 08\Hamilton\122048\d03-Engineering_StructurePoint\Drainage\Sheets\122048_DF305.dgn

DESIGN AGENCY
STRUCTUREPOINT INC.

DESIGNER LZS
REVIEWER KAM 03/03/25
PROJECT ID 122048
SHEET P.162 TOTAL P.421

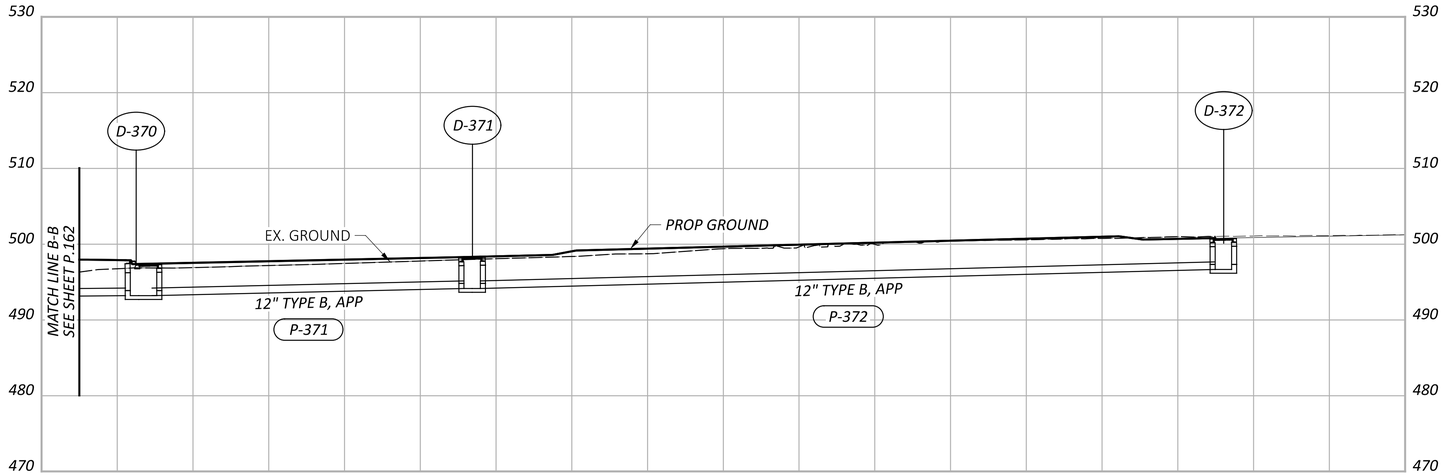

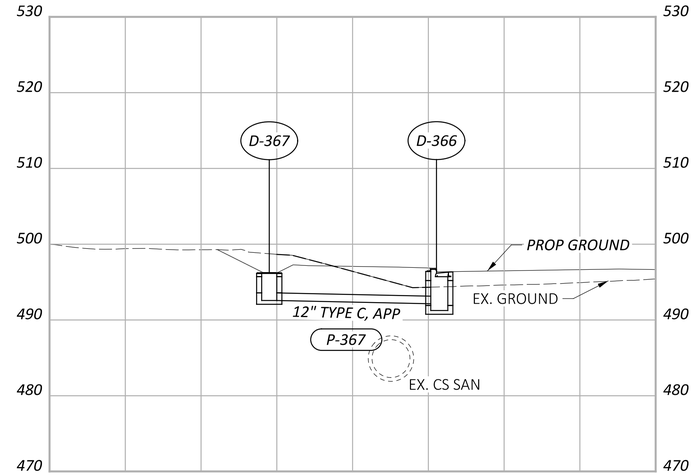

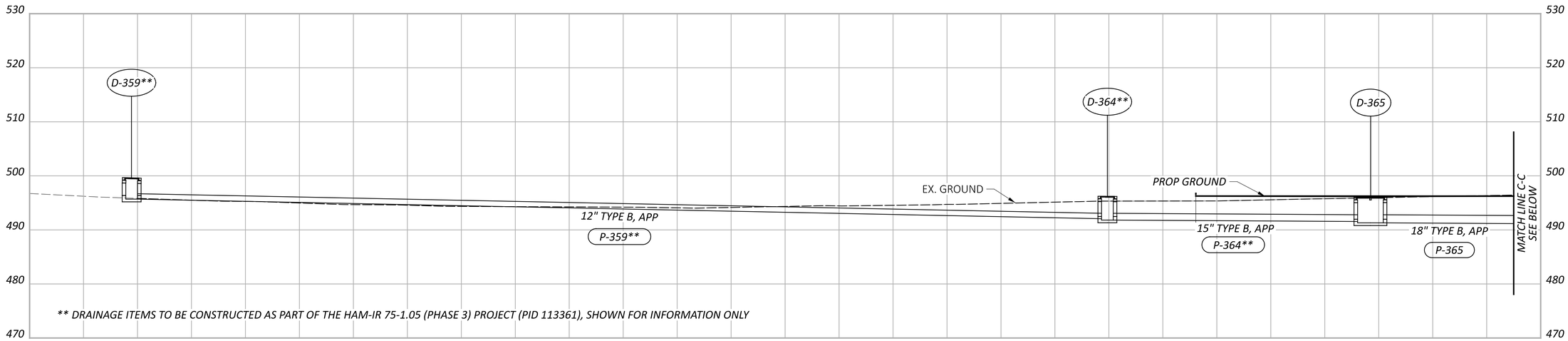

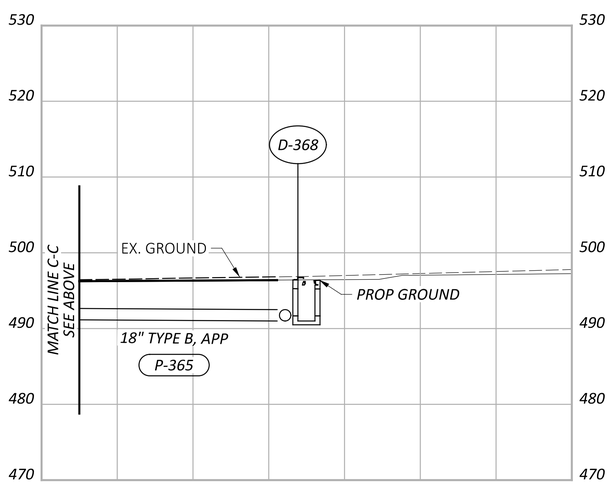

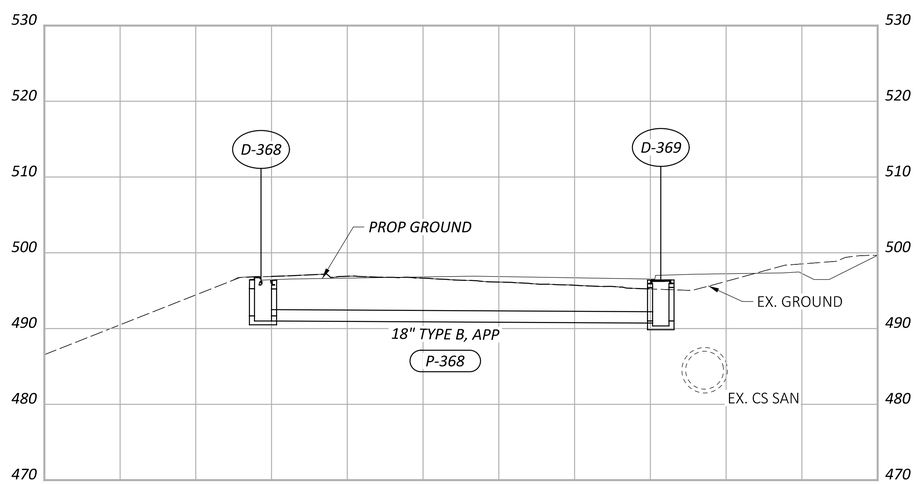

HORIZONTAL SCALE IN FEET
0 50 100 200

STORM SEWER PROFILES LOCAL STREETS

HAM-IR 75-1.05

MODEL: Sheet 02 PAPERSIZE: 34x22 (in.) DATE: 8/28/2025 TIME: 10:44:31 AM PLTDRV: OHDOT_PDF.pltcfg PENTBL: OHDOT_Pen.tbl USER: WORKSPACE: OHDOTCEv02 WORKSET: 122048 PRODUCT: OpenRoadsDesigner 10.12.02.4
pw:\\ohiodot-pw.bentley.com:ohiodot-pw-02\Documents\01 Active Projects\District 08\Hamilton\122048\03-Engineering_StructurePoint\Drainage\Sheets\122048_DF305.dgn

DESIGN AGENCY
STRUCTUREPOINT LLC

DESIGNER LZS

REVIEWER KAM 03/03/25

PROJECT ID 122048

SHEET P.163 TOTAL P.421

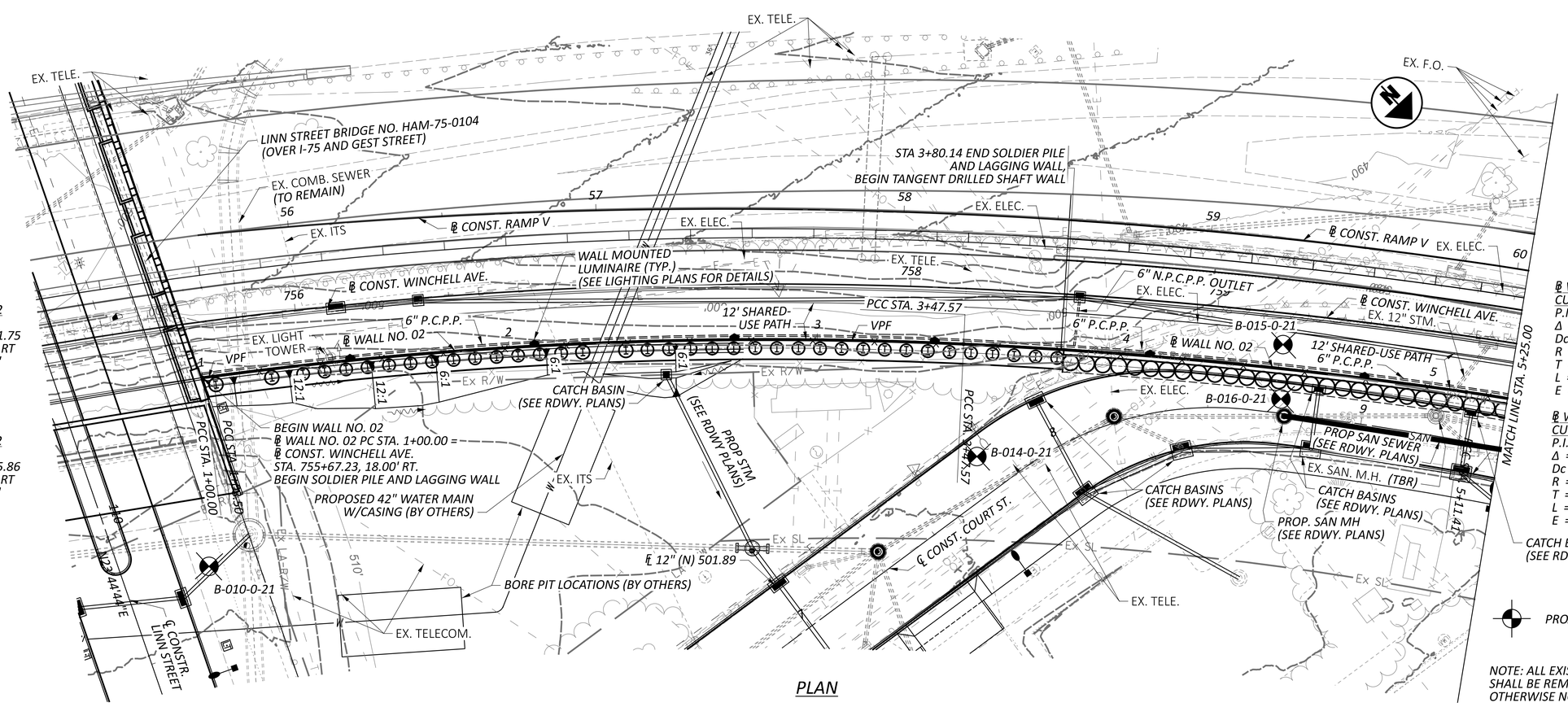

PLAN

℄ WALL NO. 02
CURVE DATA
P.I. = STA. 1+01.75
Δ = 00°07'23" RT
Dc = 03°30'49"
R = 1,630.62'
T = 1.75'
L = 3.5'
E = 0'

℄ WALL NO. 02
CURVE DATA
P.I. = STA. 2+25.86
Δ = 10°13'47" RT
Dc = 04°11'29"
R = 1,367.00'
T = 122.36'
L = 244.07'
E = 5.47'

℄ WALL NO. 02
CURVE DATA
P.I. = STA. 4+29.55
Δ = 05°35'56" RT
Dc = 03°25'02"
R = 1,676.71'
T = 81.99'
L = 163.85'
E = 2'

℄ WALL NO. 02
CURVE DATA
P.I. = STA. 5+56.45
Δ = 07°03'25" RT
Dc = 07°50'40"
R = 730.40'
T = 45.04'
L = 89.96'
E = 1.39'

LEGEND

PROJECT BORING LOCATION

NOTE: ALL EXISTING UTILITIES AND SEWERS SHALL BE REMOVED OR RELOCATED UNLESS OTHERWISE NOTED.

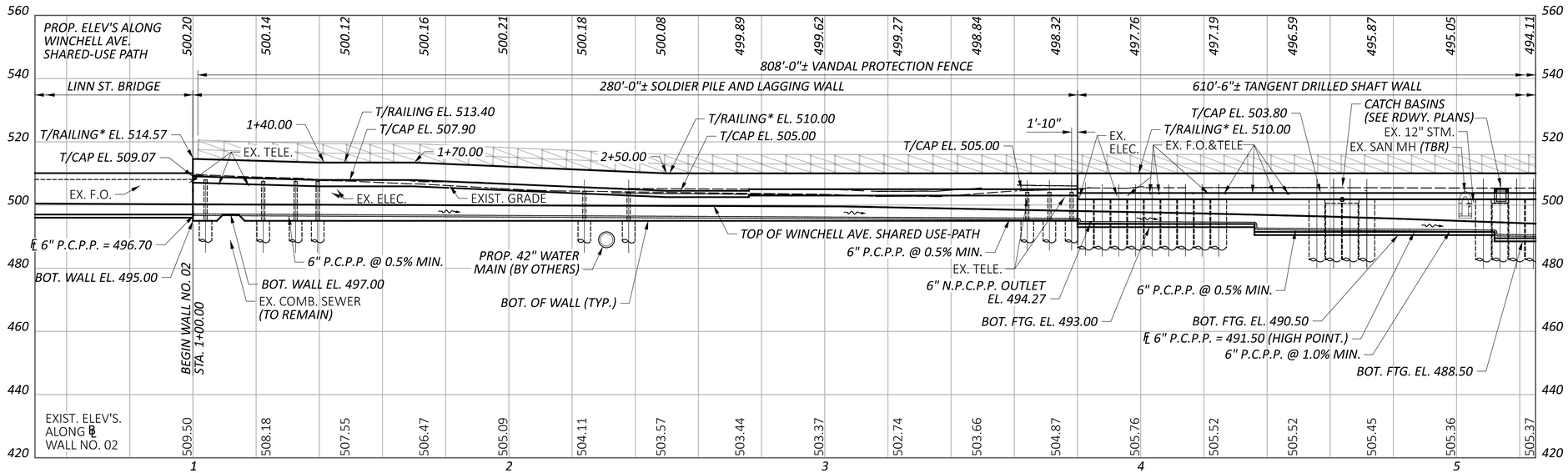

PROFILE ALONG ℄ WALL NO. 02

PLAN AND PROFILE 1 OF 3
RETAINING WALL NO. 02 ALONG WINCHELL AVE.
STA. 1+00.00 TO STA. 5+25.00

DESIGN AGENCY		
Palmer ENGINEERING 8350 E. KEMPER ROAD SUITE B CINCINNATI, OH 45249 (513) 469-1600		
DESIGNER	RJB	
REVIEWER	BJF 04/10/25	
PROJECT ID	122048	
SUBSET 1	TOTAL 29	
SHEET P.164	TOTAL P.421	

1	09/01/25	SHEET REVISIONS
ADDM' NO.	DATE	DESCRIPTION
DATE COMPLETED		

HAM-IR75-1.05

MODEL: WALL2 - Sheet 1 PAPERSIZE: 34x22 (in.) DATE: 8/27/2025 TIME: 11:31:43 AM PLTDRV: OHDOT_PDF.pltcfg PENTBL: OHDOT_Pen.tbl USER: swalker@palmernet.com WORKSPACE: OHDOTCivil02 WORKSET: 122048 PRODUCT: OpenRoadsDesigner 24.00.00.205
pw:\\ohiodot-pw.bentley.com:ohiodot-pw-02\Documents\01 Active Projects\District 08\Hamilton\122048\402-Engineering_PalmerEngineering\Structures\Wall_002\Sheets\122048_002_WP001.dgn

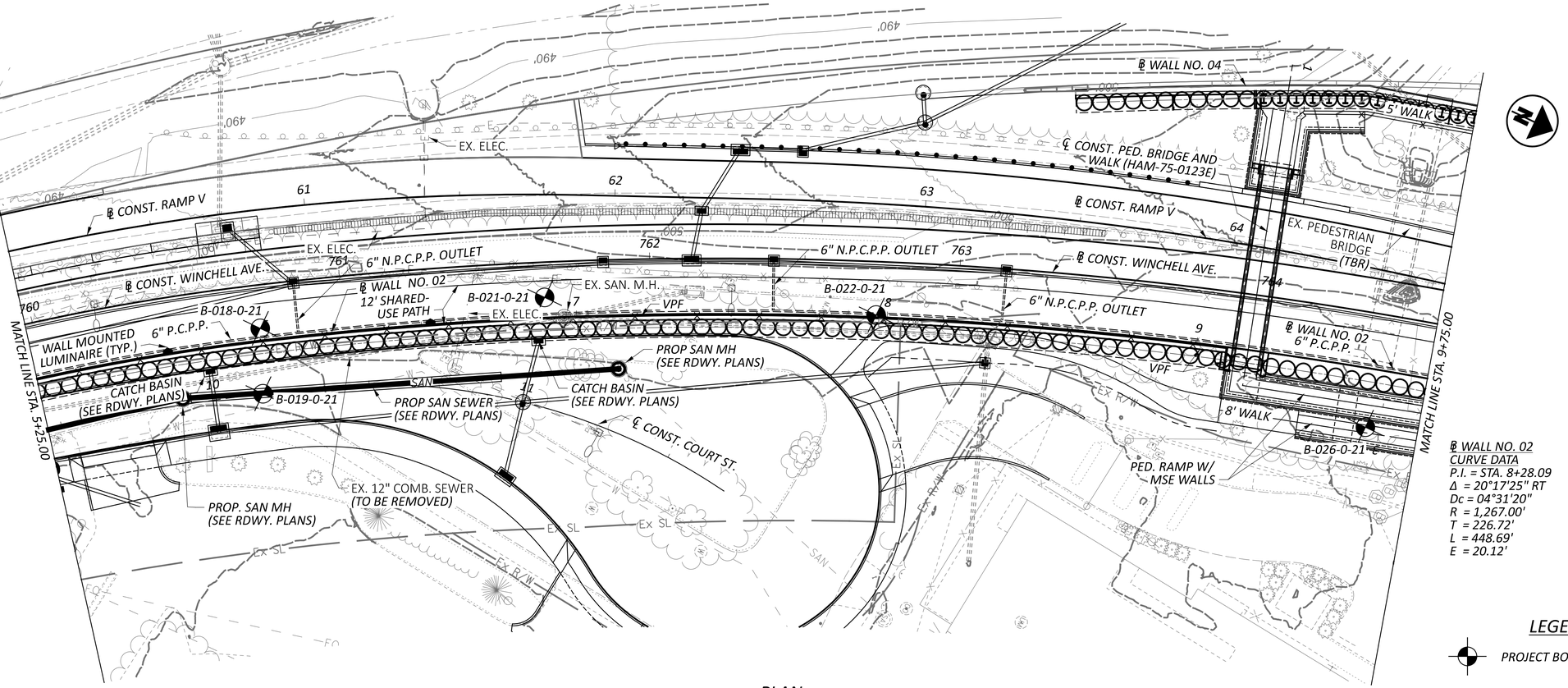

PLAN

℄ WALL NO. 02
CURVE DATA
P.I. = STA. 5+56.45
Δ = 07°03'25" RT
Dc = 07°50'40"
R = 730.40'
T = 45.04'
L = 89.96'
E = 1.39'

℄ WALL NO. 02
CURVE DATA
P.I. = STA. 6+10.12
Δ = 43°17'55" RT
Dc = 03°30'49"
R = 1,630.62'
Ls = 0.00'
Θs = 00°00'00"
LT = 0.00'
ST = 0.00'
Lc = 3.50'
Ts = 510.12'
Es = 77.93'
Emax =
T.S. =
S.C. = 1+00.00
C.S. = 1+03.50
S.T. =

℄ WALL NO. 02
CURVE DATA
P.I. = STA. 8+28.09
Δ = 20°17'25" RT
Dc = 04°31'20"
R = 1,267.00'
T = 226.72'
L = 448.69'
E = 20.12'

LEGEND

PROJECT BORING LOCATION

NOTE: ALL EXISTING UTILITIES AND SEWERS SHALL BE REMOVED OR RELOCATED UNLESS OTHERWISE NOTED.

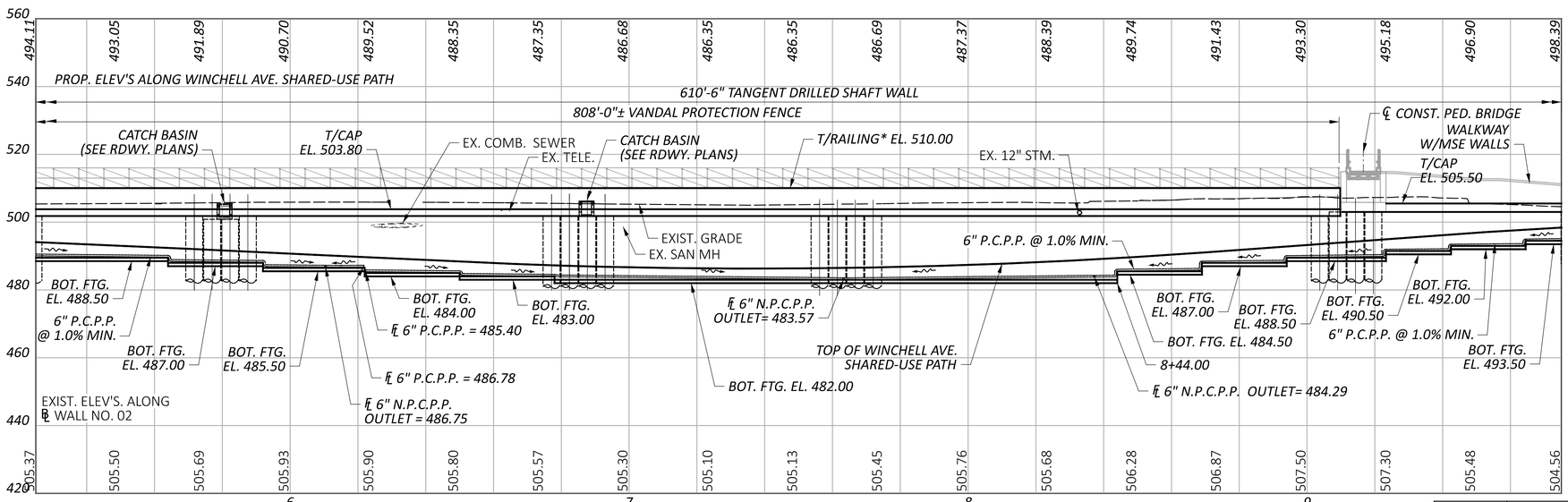

PROFILE ALONG ℄ WALL NO. 02

* DENOTES 42" AESTHETIC TEXAS C412 RAILING

1	09/01/25	SHEET REVISIONS
ADDM' NO.	DATE	DESCRIPTION
DATE COMPLETED		

PLAN AND PROFILE 2 OF 3
RETAINING WALL NO. 02 ALONG WINCHELL AVE.
STA. 5+25.00 TO STA. 9+75.00

DESIGN AGENCY
Palmer ENGINEERING
8350 E. KEMPER ROAD
SUITE B
CINCINNATI, OH 45249
(513) 469-1600

DESIGNER RJB
REVIEWER BJF 04/10/25
PROJECT ID 122048
SUBSET 2 TOTAL 29
SHEET P.165 TOTAL P.421

HAM-IR75-1.05

MODEL: WALL2 - Sheet 2 PAPERSIZE: 34x22 (in.) DATE: 8/27/2025 TIME: 11:32:12 AM PLTDRV: OHDOT_PDF.pltcfg PENTBL: OHDOT_Pen.tbl USER: swalker@palmernet.com WORKSPACE: OHDOTCivil02 WORKSET: 122048 PRODUCT: OpenRoadsDesigner 24.00.00.205
pw:\\ohiodot-pw.bentley.com:ohiodot-pw-02\Documents\01 Active Projects\District 08\Hamilton\122048\402 Engineering_PalmerEngineering\Structures\Wall_002\Sheets\122048_002_WP001.dgn

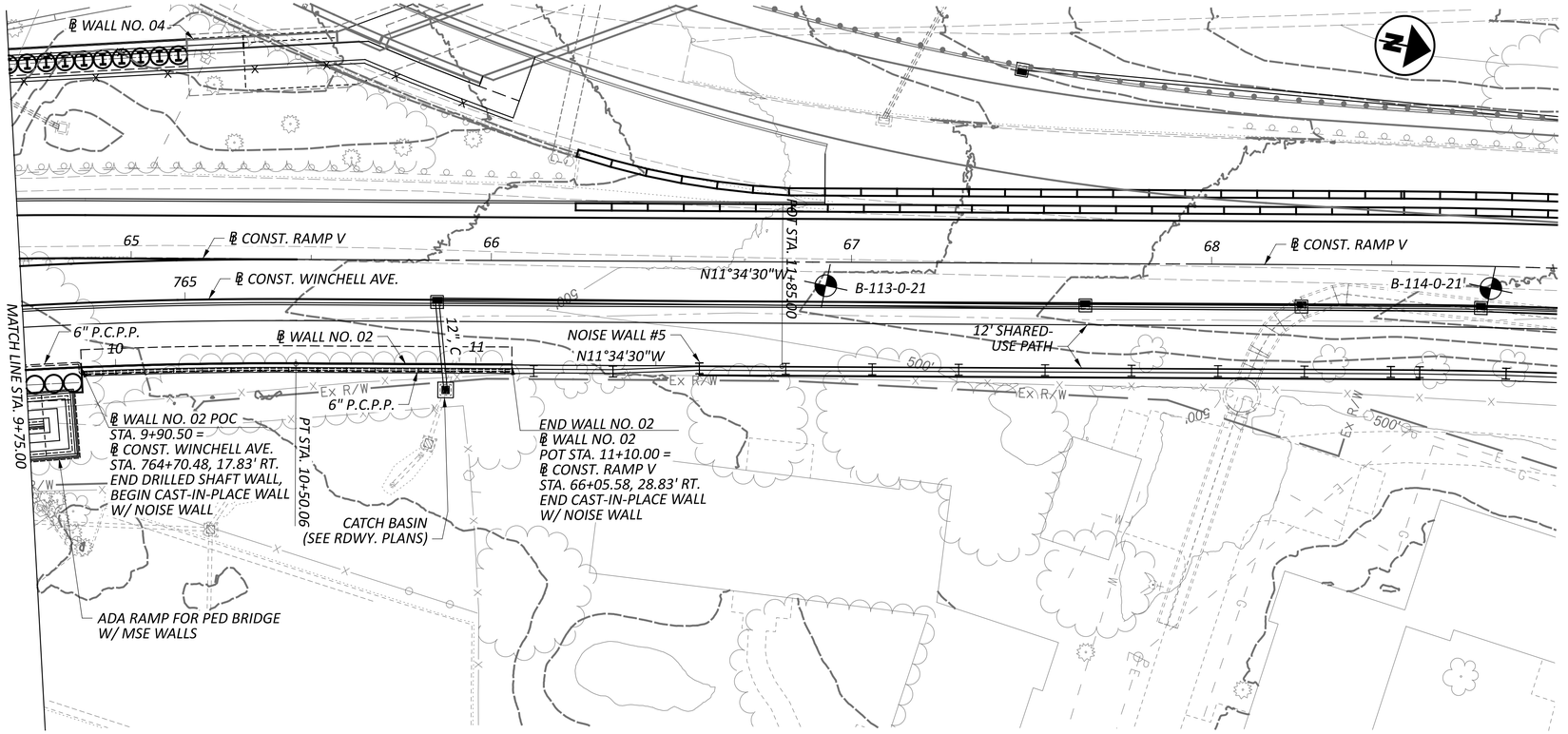

℄ WALL NO. 02
CURVE DATA
P.I. = STA. 8+28.09
Δ = 20°17'25" RT
Dc = 04°31'20"
R = 1,267.00'
T = 226.72'
L = 448.69'
E = 20.12'

PLAN

LEGEND

PROJECT BORING LOCATION

NOTE: ALL EXISTING UTILITIES AND SEWERS SHALL BE REMOVED OR RELOCATED UNLESS OTHERWISE NOTED.

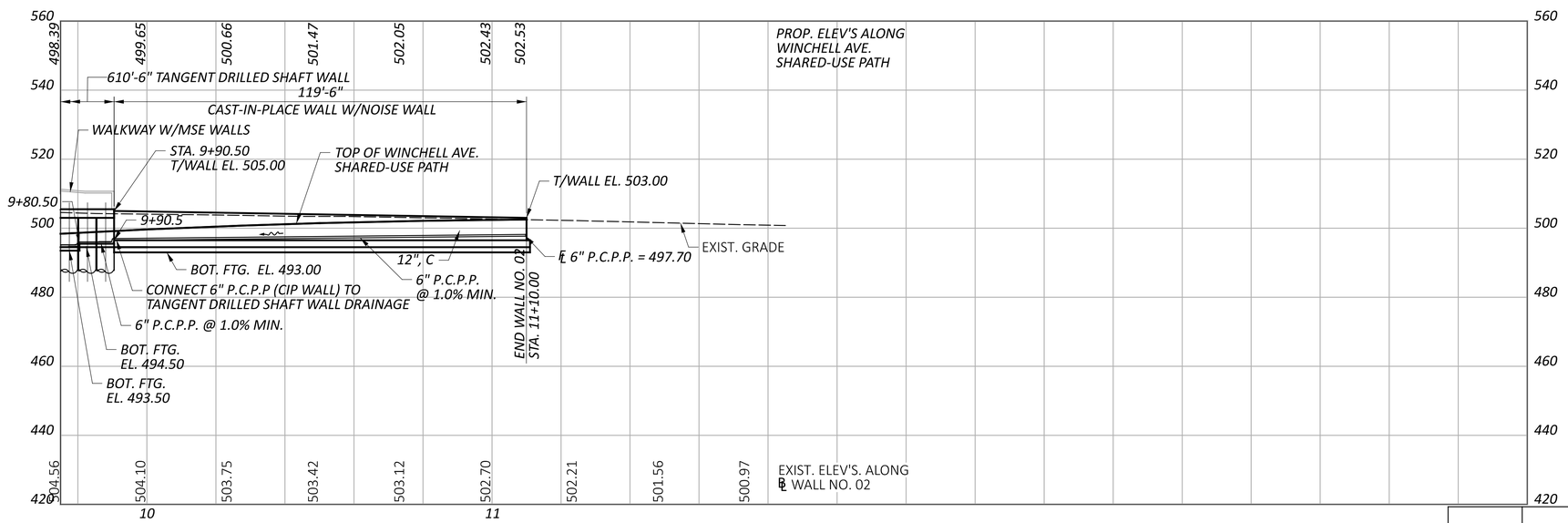

PROFILE ALONG ℄ WALL NO. 02

ADDM' NO.	DATE	DESCRIPTION
1	09/01/25	SHEET REVISIONS
DATE COMPLETED		

PLAN AND PROFILE 3 OF 3
RETAINING WALL NO. 02 ALONG WINCHELL AVE.
STA. 9+75.00 TO END

DESIGN AGENCY
Palmer ENGINEERING
8350 E. KEMPER ROAD
SUITE B
CINCINNATI, OH 45249
(513) 469-1600

DESIGNER	RJB
REVIEWER	BJF 04/10/25
PROJECT ID	122048
SUBSET / TOTAL	3 / 29
SHEET / TOTAL	P.166 / P.421

HAM-IR75-1.05

MODEL: WALL2 - Sheet 3 PAPERSIZE: 34x22 (in.) DATE: 8/27/2025 TIME: 11:32:16 AM PLTDRV: OHDOT_PDF.pltcfg PENTBL: OHDOT_Pen.tbl USER: swalker@palmernet.com WORKSPACE: OHDOTCivil02 WORKSET: 122048 PRODUCT: OpenRoadsDesigner 24.00.00.205
pw:\\ohiodot-pw.bentley.com:ohiodot-pw-02\Documents\01 Active Projects\District 08\Hamilton\122048\402-Engineering_PalmerEngineering\Structures\Wall_002\Sheets\122048_002_WP001.dgn

STANDARD DRAWINGS AND SUPPLEMENTAL SPECIFICATIONS

REFER TO THE FOLLOWING STANDARD BRIDGE DRAWINGS:

VPF-1-24 REVISED 7/19/24

REFER TO THE FOLLOWING SUPPLEMENTAL SPECIFICATION:
800 REVISED 7/19/24
894 REVISED 4/16/21

DESIGN SPECIFICATIONS

THIS STRUCTURE CONFORMS TO THE 9TH EDITION OF THE "LRFD BRIDGE DESIGN SPECIFICATIONS" ADOPTED BY THE AMERICAN ASSOCIATION OF STATE HIGHWAY AND TRANSPORTATION OFFICIALS, 2020 AND THE ODOT BRIDGE DESIGN MANUAL, 2020.

DESIGN ASSUMPTIONS

SOIL UNIT WEIGHT, Y = 120 pcf
ANGLE OF INTERNAL FRICTION, ϕ 30°

DESIGN DATA

CONCRETE CLASS QC1 - COMPRESSIVE STRENGTH 4.0 KSI
(CONCRETE FACING, COPING, WALL CAP AND MOMENT SLAB, CIP WALL AND FOOTING)

CONCRETE CLASS QC SCC - WITH 1" MAX. AGGREGATE SIZE - COMPRESSIVE STRENGTH 4.5 KSI (TEXAS C412 RAILING)

CONCRETE CLASS QC5, WITH 1" MAX. AGGREGATE SIZE - COMPRESSIVE STRENGTH 4.5 KSI (DRILLED SHAFTS)

GALVANIZED STEEL REINFORCEMENT - MIN. YIELD STRENGTH - 60 KSI

GALVANIZED STEEL SOLDIER PILES – ASTM A572 - YIELD STRENGTH 50 KSI

FOUNDATION BEARING RESISTANCE

THE SPREAD FOOTINGS OF THE CAST-IN-PLACE SECTION OF WALL 02, AS DESIGNED, PRODUCE A MAXIMUM SERVICE LIMIT STATE BEARING PRESSURE OF (3.7) KIPS PER SQUARE FOOT AND A MAXIMUM STRENGTH LIMIT STATE BEARING PRESSURE OF (5.1) KIPS PER SQUARE FOOT. THE FACTORED BEARING RESISTANCE IS (12.5) KIPS PER SQUARE FOOT.

LATERALLY LOADED DRILLED SHAFTS, 60" TANGENT DRILLED SHAFT WALL - SHAFTS 38-137 AND 142-153

THE MAXIMUM FACTORED LATERAL LOAD AND BENDING MOMENT TO BE SUPPORTED BY EACH DRILLED SHAFT ARE 116 KIPS, AND 989 KIP-FEET, RESPECTIVELY. THESE LOADS PRODUCE A MAXIMUM FACTORED BENDING MOMENT OF 1,573 KIP-FEET, AND A MAXIMUM FACTORED SHEAR OF 120 KIPS, WITHIN THE DRILLED SHAFT.

ITEM 503 - UNCLASSIFIED EXCAVATION, AS PER PLAN

THIS ITEM INCLUDES ANY WALL EXCAVATION OUTSIDE THE EXCAVATION REQUIRED FOR THE ROADWAY FROM THE PROPOSED ROADWAY SURFACE TO THE BOTTOM OF THE WALL FACING.

ITEM SPECIAL - STRUCTURE: PRECONSTRUCTION CONDITION SURVEY

BEFORE PILE DRIVING BEGINS, CONDUCT A CONDITION SURVEY OF ALL EXISTING BUILDINGS, STRUCTURES, SEWERS AND UTILITIES WITHIN 200-FT OF THE PILE DRIVING WORK. THE PURPOSE OF THE SURVEY IS TO DOCUMENT THE CONDITION OF THE BUILDINGS, STRUCTURES, OR UTILITIES PRIOR TO PILE DRIVING, SO THAT CLAIMS OF DAMAGE CAUSED BY THE PILE DRIVING CAN BE VERIFIED.

RETAIN AN EXPERIENCED VIBRATION SPECIALIST TO PERFORM OR SUPERVISE THE CONDITION SURVEY. USE A VIBRATION SPECIALIST THAT MEETS THE QUALIFICATION REQUIREMENTS FOR VIBRATION MONITORING.

RECORD THE CONDITION OF EXISTING STRUCTURES, SEWERS AND BUILDING MATERIALS, USING WRITTEN TEXT, PHOTOGRAPHS, AND VIDEO RECORDINGS. INSPECT INTERIOR WALLS, CEILINGS, AND FLOORS THAT ARE ACCESSIBLE. INSPECT THE EXTERIOR OF THE BUILDING THAT IS VISIBLE FROM GROUND LEVEL. ALSO RECORD THE LOCATION, SIZE, AND TYPE OF ALL CRACKS AND OTHER STRUCTURAL DEFICIENCIES.

IF OWNERS, OR OCCUPANTS, FAIL TO ALLOW ACCESS TO THE PROPERTY FOR THE PRECONSTRUCTION CONDITION SURVEY, SEND A CERTIFIED LETTER TO THE OWNER OR OCCUPANT. DOCUMENT THE NOTIFICATION EFFORT AND THE CERTIFIED LETTER IN THE REPORT.

SUBMIT THREE COPIES OF THE REPORT TO THE ENGINEER THAT SUMMARIZES THE PRECONSTRUCTION CONDITION OF THE BUILDINGS, STRUCTURES, AND UTILITIES, AND THAT IDENTIFIES AREAS OF CONCERN.

THE DEPARTMENT WILL PAY FOR THIS ITEM AT THE CONTRACT LUMP SUM PRICE FOR ITEM SPECIAL - STRUCTURE: PRECONSTRUCTION CONDITION SURVEY.

ITEM SPECIAL - RETAINING WALL: TIMBER LAGGING

THIS WORK CONSISTS OF FURNISHING AND PLACING TIMBER LAGGING BETWEEN THE SOLDIER PILES BELOW THE EXISTING GROUND SURFACE. FURNISH TIMBER LAGGING CONSISTING OF CONSTRUCTION GRADE, UNTREATED HARDWOOD WITH A MAXIMUM THICKNESS OF 6". TO PERMIT DRAINAGE, PROVIDE 1/4 TO 1/2-INCH SPACES BETWEEN LAGGING BOARDS USING 3/8-INCH SPACER BLOCKS OR OTHER MEANS ACCEPTABLE TO THE ENGINEER.

ITEM 507 - STEEL PILES, MISC.: SOLDIER PILES, W27X258
ITEM 507 - STEEL PILES, MISC.: SOLDIER PILES, W27X178

THIS WORK CONSISTS OF FURNISHING AND PLACING STEEL SOLDIER PILES INTO DRILLED HOLES. FURNISH SOLDIER PILES CONSISTING OF STRUCTURAL STEEL MEMBERS THAT MEET THE PLAN REQUIREMENTS AND CONFORM TO ASTM A572, GRADE 50 IN ACCORDANCE WITH C&MS 711.01. GALVANIZE SOLDIER PILES AS SHOWN ON THE PLANS AND IN ACCORDANCE WITH C&MS 711.02. DO NOT FIELD WELD OR SPLICE STEEL SOLDIER PILES.

THE DEPARTMENT WILL MEASURE SOLDIER PILES ALONG THE AXIS OF THE SOLDIER PILE FROM THE TOP OF WALL ELEVATION TO THE BOTTOM OF THE DRILLED SHAFT, AS DETERMINED BY THE ENGINEER. THE DEPARTMENT WILL PAY FOR SOLDIER PILES AT THE CONTRACT UNIT PRICE PER FOOT FOR ITEM 507, STEEL PILES, MISC.: SOLDIER PILES, W27X258 AND ITEM 507, STEEL PILES, MISC.: SOLDIER PILES, W27X178.

THE CONTRACTOR IS REQUIRED TO CONTACT THE METROPOLITAN SEWER DISTRICT OF GREATER CINCINNATI TO ACCURATELY LOCATE THE EXISTING 66" SANITARY SEWER LINE PRIOR TO INSTALLATION OF SHAFTS AT LOCATIONS 1 AND 2.

THE CONTRACTOR IS REQUIRED TO CONTACT GREATER CINCINNATI WATER WORKS TO ACCURATELY LOCATE THE PROPOSED 42" WATER MAIN PRIOR TO INSTALLATION OF SHAFTS AT LOCATION 16 AND 17.

SHAFTS AT LOCATIONS 1, 2, 16, AND 17 SHALL BE CASED TO AVOID LOSS OF FILL AROUND UTILITY LINES AND THE CASING SHALL BE LEFT IN PLACE.

COSTS ASSOCIATED WITH THE ADDITIONAL REQUIREMENTS STATED IN THIS NOTE (LOCATING SEWER AND FURNISHING AND PLACING CASING) SHALL BE INCLUDED IN THE APPLICABLE ITEM 507 - STEEL PILES, MISC. PAY ITEM.

ITEM 512 - SEALING OF CONCRETE SURFACES, AS PER PLAN, (PERMANENT GRAFFITI PROTECTION)

APPLY A PERMANENT GRAFFITI COATING QUALIFIED ACCORDING TO S1083 THAT IS COMPATIBLE WITH THE CONCRETE SEALER OVER WHICH IT IS APPLIED. APPLY THE GRAFFITI COATING IN ACCORDANCE WITH THE MANUFACTURER'S PRINTED INSTRUCTIONS.

GRAFFITI PROTECTION SHALL BE APPLIED TO ALL SURFACES SEALED WITH EPOXY URETHANE SEALANT. GRAFFITI PROTECTION SHALL HAVE A CLEAR FINISH.

ITEM 512 - SEALING OF CONCRETE SURFACES (EPOXY-URETHANE)

SEAL SURFACES OF THE CAST-IN-PLACE CONCRETE WALL FACING, PILASTERS, RAILING AND COPING AS SHOWN IN THE PLANS WITH AN EPOXY URETHANE SEALER ACCORDING TO C&MS 512. COLOR SHALL BE LIGHT NEUTRAL (FEDERAL STD. #17778).

ITEM 513 - WELDED STUD SHEAR CONNECTORS, AS PER PLAN

WELD HEADED STEEL STUDS TO THE FLANGES OF THE SOLDIER PILE TO CONNECT THE CAST-IN-PLACE CONCRETE WALL FACING TO THE SOLDIER PILE. ATTACH HEADED STUDS ACCORDING TO C&MS 513.22 AND AS SHOWN IN THE PLANS. THE CONTRACTOR MAY ATTACH THE STUDS EITHER BEFORE PLACING THE SOLDIER PILE IN THE DRILLED HOLE OR AFTER EXCAVATING IN FRONT OF THE WALL. PROTECT THE HEADED STUDS FROM DAMAGE UNTIL THE CONCRETE WALL FACING IS POURED. REPAIR OR REPLACE DAMAGED HEADED STUDS AT NO EXPENSE TO THE DEPARTMENT.

ITEM 517 - RAILING MISC.: TEXAS C412 RAILING

THIS WORK CONSISTS OF FURNISHING AND PLACING TEXAS C412 RAIL CONCRETE RAILING AS SPECIFIED IN THE PLANS.

ARCHITECTURAL FORMLINER IS NOT PERMITTED TO CREATE THE SHAPE OF THE RAILING.

USE CONCRETE CLASS QC SCC CONCRETE.

PAYMENT FOR THIS ITEM WILL BE ON A LINEAR FOOT BASIS. THE APPROXIMATE AVERAGE RAILING AREA PER FOOT OF TEXAS RAILING IS 8.7 SQ FT.

ITEM 524 - DRILLED SHAFTS, 42" DIAMETER ABOVE BEDROCK, AS PER PLAN

THIS WORK CONSISTS OF FURNISHING AND INSTALLING DRILLED SHAFTS FOR SOLDIER PILE WALLS. THE DRILLED SHAFTS ARE REINFORCED WITH SOLDIER PILES INSTEAD OF REINFORCING STEEL CAGES. THE SOLDIER PILES EXTEND ABOVE THE TOP OF THE DRILLED SHAFT. FURNISH AND INSTALL THE DRILLED SHAFTS ACCORDING TO C&MS 524 EXCEPT AS MODIFIED AND SUPPLEMENTED BELOW.

EXCAVATE THE HOLE FOR THE DRILLED SHAFT WITHIN 3 INCHES OF THE PLAN LOCATION. PLACE THE SOLDIER PILE WITHIN THE HOLE SO IT IS VERTICAL. PLACE THE SOLDIER PILE SO THAT THE FLANGES ARE PARALLEL TO THE CENTERLINE OF THE ROW OF DRILLED SHAFTS. DO NOT ALLOW THE ORIENTATION OF THE FLANGES TO VARY BY MORE THAN 10 DEGREES. SUPPORT THE SOLDIER PILE SO THAT IT DOES NOT MOVE DURING CONCRETE PLACEMENT. VERTICAL ALIGNMENT TOLERANCE SHALL BE ± 1/8" PER FOOT OF DEPTH.

CHECK THE POSITION, THE VERTICAL ALIGNMENT AND ORIENTATION OF THE SOLDIER PILE IMMEDIATELY AFTER CONCRETE PLACEMENT. MAKE CORRECTIONS AS NECESSARY TO MEET THE ABOVE TOLERANCES.

FILL THE HOLE ABOVE THE CONCRETE TO THE EXISTING GROUND SURFACE WITH ITEM 613 LOW STRENGTH MORTAR BACKFILL (LSM). LSM BACKFILL SHALL BE INCIDENTAL TO THIS ITEM.

REMOVE CONCRETE AND LSM AS NECESSARY FROM AROUND THE SOLDIER PILE IN ORDER TO PLACE THE LAGGING. WAIT AT LEAST 12 HOURS AFTER PLACING CONCRETE BEFORE PLACING LAGGING.

THE DEPARTMENT WILL MEASURE DRILLED SHAFTS ABOVE BEDROCK, AS PER PLAN, ALONG THE AXIS OF THE DRILLED SHAFT FROM THE GREATER OF THE EXISTING GROUND SURFACE TO THE BOTTOM OF THE DRILLED SHAFT OR THE BOTTOM OF CAP TO THE BOTTOM OF THE DRILLED SHAFT.

PAYMENT IS FULL COMPENSATION FOR CONSTRUCTING THE DRILLED SHAFTS, INCLUDING FURNISHING AND PLACING CONCRETE AND LSM, AND REMOVAL OF CONCRETE OR LSM FROM AROUND THE SOLDIER PILES IN ORDER TO PLACE LAGGING.

GENERAL NOTES 1 OF 2
RETAINING WALL NO. 02 ALONG WINCHELL AVE.

1	09/01/25	SHEET REVISIONS
ADDM' NO.	DATE	DESCRIPTION
DATE COMPLETED		

DESIGN AGENCY
Palmer ENGINEERING
8350 E. KEMPER ROAD
SUITE B
CINCINNATI, OH 45249
(513) 469-1600

DESIGNER RJB
REVIEWER BJF 04/10/25
PROJECT ID 122048
SUBSET 4 TOTAL 29
SHEET P.167 TOTAL P.421

HAM-IR75-1.05

MODEL: Sheet PAPERSIZE: 34x22 (in.) DATE: 8/27/2025 TIME: 11:32:26 AM PLTDRV: OHDOT_PDF.pltcfg PENTBL: OHDOT_Pen.tbl USER: swalker@palmernet.com WORKSPACE: OHDOTCEv02 WORKSET: 122048 PRODUCT: OpenRoadsDesigner 24.00.00.205
pw:\\ohiodot-pw.bentley.com:ohiodot-pw-02\Documents\01 Active Projects\District 08\Hamilton\122048\02-Engineering_Palmer\Engineering\Structures\Wall_002\Sheets\122048_002_WN001.dgn

ITEM 524 - DRILLED SHAFTS, 48" DIAMETER ABOVE BEDROCK, AS PER PLAN

THIS WORK CONSISTS OF FURNISHING AND INSTALLING DRILLED SHAFTS FOR SOLDIER PILE WALLS. THE DRILLED SHAFTS ARE REINFORCED WITH SOLDIER PILES INSTEAD OF REINFORCING STEEL CAGES. THE SOLDIER PILES EXTEND ABOVE THE TOP OF THE DRILLED SHAFT. FURNISH AND INSTALL THE DRILLED SHAFTS ACCORDING TO C&MS 524 EXCEPT AS MODIFIED AND SUPPLEMENTED BELOW.

EXCAVATE THE HOLE FOR THE DRILLED SHAFT WITHIN 3 INCHES OF THE PLAN LOCATION. PLACE THE SOLDIER PILE WITHIN THE HOLE SO IT IS VERTICAL. PLACE THE SOLDIER PILE SO THAT THE FLANGES ARE PARALLEL TO THE CENTERLINE OF THE ROW OF DRILLED SHAFTS. DO NOT ALLOW THE ORIENTATION OF THE FLANGES TO VARY BY MORE THAN 10 DEGREES. SUPPORT THE SOLDIER PILE SO THAT IT DOES NOT MOVE DURING CONCRETE PLACEMENT. VERTICAL ALIGNMENT TOLERANCE SHALL BE ± ⅛" PER FOOT OF DEPTH.

CHECK THE POSITION, THE VERTICAL ALIGNMENT AND ORIENTATION OF THE SOLDIER PILE IMMEDIATELY AFTER CONCRETE PLACEMENT. MAKE CORRECTIONS AS NECESSARY TO MEET THE ABOVE TOLERANCES.

FILL THE HOLE ABOVE THE CONCRETE TO THE EXISTING GROUND SURFACE WITH ITEM 613 LOW STRENGTH MORTAR BACKFILL (LSM). LSM BACKFILL SHALL BE INCIDENTAL TO THIS ITEM.

REMOVE CONCRETE AND LSM AS NECESSARY FROM AROUND THE SOLDIER PILE IN ORDER TO PLACE THE LAGGING. WAIT AT LEAST 12 HOURS AFTER PLACING CONCRETE BEFORE PLACING LAGGING.

THE DEPARTMENT WILL MEASURE DRILLED SHAFTS ABOVE BEDROCK, AS PER PLAN, ALONG THE AXIS OF THE DRILLED SHAFT FROM THE GREATER OF THE EXISTING GROUND SURFACE TO THE BOTTOM OF THE DRILLED SHAFT OR THE BOTTOM OF CAP TO THE BOTTOM OF THE DRILLED SHAFT.

PAYMENT IS FULL COMPENSATION FOR CONSTRUCTING THE DRILLED SHAFTS, INCLUDING FURNISHING AND PLACING CONCRETE AND LSM, REMOVAL OF CONCRETE OR LSM FROM AROUND THE SOLDIER PILES IN ORDER TO PLACE LAGGING, AND FURNISHING AND PLACING STEEL CASING FOR SHAFTS 1, 2, 16, AND 17.

ITEM 524 - DRILLED SHAFTS, 60" DIAMETER ABOVE BEDROCK, AS PER PLAN

THIS WORK CONSISTS OF FURNISHING AND INSTALLING DRILLED SHAFTS FOR WALL NO. 02. THE DRILLED SHAFTS ARE REINFORCED WITH REINFORCING STEEL CAGES. DRILLED SHAFT REINFORCING STEEL SHALL BE GALVANIZED. FURNISH AND INSTALL THE DRILLED SHAFTS ACCORDING TO C&MS 524.

EXCAVATE THE HOLE FOR THE DRILLED SHAFT WITHIN 3 INCHES OF THE PLAN LOCATION. VERTICAL ALIGNMENT TOLERANCE SHALL BE ± ⅛" PER FOOT OF DEPTH.

THE DEPARTMENT WILL MEASURE DRILLED SHAFTS ABOVE BEDROCK, AS PER PLAN, ALONG THE AXIS OF THE DRILLED SHAFT FROM THE GREATER OF THE EXISTING GROUND SURFACE TO THE BOTTOM OF THE DRILLED SHAFT OR THE BOTTOM OF CAP TO THE BOTTOM OF THE DRILLED SHAFT.

THIS ITEM SHALL ALSO INCLUDE FOR PAYMENT REINFORCING STEEL, THE 12" AUGERED HOLE, THE #8 STONE PLACED IN THE AUGERED HOLE BETWEEN THE SHAFTS, AND THE 2" DIAMETER NON-PERFORATED PIPE DRAINING THE #8 STONE COLUMN.

CONCRETE WALL FACING

THE CONCRETE WALL FACING ALONG THE CURVED PORTIONS OF THE WALL ALIGNMENT SHALL BE FORMED CURVED AND NOT ALONG THE CHORDS OF THE SOLDIER PILES/SHAFTS.

ITEM 530 SPECIAL - RETAINING WALL, PRECAST CONCRETE LAGGING

THIS WORK CONSISTS OF FURNISHING AND PLACING PRECAST REINFORCED CONCRETE PANELS BETWEEN THE SOLDIER PILES TO FUNCTION AS LAGGING FOR THE RETAINING WALL AT THE SPECIFIC LOCATIONS SHOWN IN THE PLANS. PROVIDE PRECAST CONCRETE LAGGING FROM A PRECAST CONCRETE MANUFACTURER CERTIFIED ACCORDING TO SUPPLEMENT 1073. PROVIDE CLASS QC 1 CONCRETE ACCORDING TO C&MS 499. PROVIDE EPOXY COATED REINFORCING STEEL ACCORDING TO C&MS 709.00. IN LIEU OF EPOXY COATING, A CORROSION INHIBITING CONCRETE ADMIXTURE MAY BE USED AT THE SPECIFIED DOSAGE RATE. A QUALIFIED PRODUCT LIST OF CORROSION INHIBITING ADMIXUTRES IS ON FILE AT THE LABORATORY. MANUFACTURERS SHOULD RECOGNIZE THAT THE CORROSION INHIBITOR MAY AFFECT THE STRENGTH, ENTRAINED AIR CONTENT, WORKABILITY, ETC. OF THEIR CONCRETE MIXES. THE MANUFACTURER'S CHOICE TO USE ONE OF THESE CORROSION INHIBITORS DOES NOT ALLEVIATE MEETING ALL DESIGN REQUIREMENTS. DO NOT ALLOW THE DIMENSIONS OF THE LAGGING OR LOCATION OF THE REINFORCING STEEL TO VARY BY MORE THAN 1/4-INCH. CAST THREADED INSERTS INTO THE TOP OF EACH PANEL FOR LIFTING AND PLACING.

FILL ALL CAVITIES PRODUCED BY FORM TIES AND OTHER SINGLE DEFECTS OR DEFECTED AREAS WITH A PREQUALIFIED TROWELABLE MORTAR IN ACCORDANCE WITH SUPPLEMENTAL SPECIFICATION 843.02 AND 843.06. LIKEWISE FILL CAVITIES FOR LIFTING INSERTS IN THE TOP ROW OF PRECAST CONCRETE LAGGING PANELS. PROVIDE A BROOM/ BRUSH FINISH TO ALL TROWELABLE MORTAR PATCHES. CURE THE TROWELABLE MORTAR ACCORDING TO SUPPLEMENTAL SPECIFICATION 843.07. AIR DRY FOR AT LEAST 10 DAYS AFTER COMPLETION OF THE MANUFACTURER'S RECOMMENDED CURE TIME FOR TROWELABLE MORTAR. BRUSH ABRASIVE BLAST, FOLLOWED BY AIR BROOMING OR POWER SWEEPING, TO REMOVE DUST AND SAND FROM THE SURFACE AND OPENED PORES.

FINISH THE FACES OF THE PRECAST CONCRETE LAGGING PANELS THAT WILL NOT BE EXPOSED TO A UNIFORM SURFACE, FREE OF OPEN POCKETS OF AGGREGATE. FINISH THE EXPOSED FACE OF THE PANELS TO A SMOOTH SURFACE.

PERMANENTLY MARK EACH PRECAST CONCRETE LAGGING PANEL TO INDICATE WHICH FACE WILL BE PLACED AGAINST THE SOIL. PLACE THE PANEL BETWEEN THE FLANGES OF THE SOLDIER PILES AND BEARING AGAINST THE FLANGES ON THE EXPOSED SIDE OF THE WALL SO THAT THE SOLDIER PILE FLANGE OVERLAPS THE END OF THE LAGGING BY AT LEAST 3 INCHES AT BOTH ENDS OF THE LAGGING PANEL.

HANDLE, STORE, AND SHIP THE PRECAST CONCRETE LAGGING PANELS TO AVOID CHIPPING, CRACKING AND FRACTURING THE PANELS. SUPPORT THE PANELS ON FIRM BLOCKING WHILE STORING AND SHIPPING. DO NOT SHIP PANELS UNTIL CONCRETE HAS ATTAINED A MINIMUM 3000 PSI COMPRESSIVE STRENGTH. SUBMIT SHIPMENT DOCUMENTATION TO THE ENGINEER AS THE PANELS ARE DELIVERED TO THE PROJECT, INCLUDING THE PRECASTER'S RECORD OF FINAL INSPECTION, THE MEASUREMENTS AND TOLERANCES, STRENGTH, AND DIMENSIONS OF EACH PANEL, ALONG WITH THE TE-24 SHIPPING DOCUMENT.

INSPECT ALL PRECAST CONCRETE LAGGING PANELS AND REJECT PANELS HAVING ANY OF THE FOLLOWING:

- *DEFECTS THAT INDICATE IMPERFECT MOLDING.*
- *DEFECTS THAT INDICATE HONEYCOMBED OR OPEN TEXTURE CONCRETE.*
- *DEFECTS IN THE PHYSICAL CHARACTERISTICS OF THE CONCRETE, OR DAMAGE TO THE SEALING OF CONCRETE SURFACE TREATMENT OR TO AESTHETIC SURFACE TREATMENTS.*
- *CONCRETE CHIPS OR SPALLS THAT ARE LARGER THAN 4 INCHES WIDE OR 2 INCHES DEEP. REPAIR ALL CHIPS AND SPALLS THAT ARE SMALLER.*
- *STAINED FORM FACES, DUE TO FORM OIL, CURING, OR OTHER CONTAMINANTS.*
- *SIGNS OF AGGREGATE SEGREGATION.*
- *CRACKS WIDER THAN 0.01 INCHES, PENETRATING MORE THAN 1 INCH OR LONGER THAN 20 PERCENT OF THE LENGTH OF THE FACE CONTAINING THE CRACK. REPAIR ALL CRACKS THAT ARE SMALLER.*
- *PANELS THAT DO NOT MEET THE SPECIFIED DIMENSIONAL TOLERANCES.*
- *UNUSABLE LIFTING INSERTS.*
- *EXPOSED REINFORCING STEEL.*
- *INSUFFICIENT CONCRETE COMPRESSIVE STRENGTH.*

EITHER REPLACE DAMAGED PRECAST CONCRETE LAGGING PANELS OR DOCUMENT THE DAMAGE AND PROPOSE TO THE ENGINEER A REPAIR METHOD FOR THE DAMAGED PANEL; PERFORM REPAIRS WITH THE ACCEPTANCE OF THE ENGINEER. PROVIDE ACCEPTABLE REPLACEMENT PANELS FOR ANY THAT ARE REJECTED.

WHEN INSTALLING THE PRECAST CONCRETE LAGGING PANELS, PLACE HARDWOOD WEDGES NEAR THE TOP AND BOTTOM ON EACH SIDE TO HOLD THE LAGGING PANELS AGAINST THE FRONT INSIDE FLANGE OF THE STEEL PILES.

PAYMENT FOR ALL LABOR, EQUIPMENT, AND MATERIAL REQUIRED TO FABRICATE, TRANSPORT, AND INSTALL THE PRECAST CONCRETE LAGGING PANELS SHALL BE MADE AT THE CONTRACT UNIT PRICE PER SQUARE FOOT FOR ITEM 530 SPECIAL - RETAINING WALL, PRECAST CONCRETE LAGGING.

ITEM 607 - VANDAL PROTECTION FENCE, 6' STRAIGHT, COATED FABRIC, AS PER PLAN

PROVIDE 6' STRAIGHT VANDAL PROTECTION FENCE (PS-2 OF STANDARD DRAWING VPF-1-24) WITH THE FOLLOWING EXCEPTIONS:

1. *USE NON-STANDARD BASE PLATES AS DETAILED ON SHEET 25 /29. BASE PLATES SHALL BE 50 KSI GALVANIZED STEEL.*
2. *PVC COATING SHALL BE BLACK IN COLOR CLOSELY APPROACHING FEDERAL COLOR NUMBER 17038.*

VANDAL FENCE POSTS, RAILS, BASE PLATES, ANCHOR BOLTS, AND ANY OTHER VANDAL FENCE ITEMS NOT RECIEVING A PVC COATING SHALL BE GALVANIZED AS NOTED IN THE STANDARD DRAWING AND TOPCOATED WITH AN ORGANIC COATING PER THE REQUIREMENTS OF AASHTO M181 FOR GRADE 2 POSTS. THE TOPCOAT COLOR SHALL MATCH THE PVC COATING COLOR.

PAYMENT FOR THIS WORK INCLUDES ALL MATERIALS, LABOR, EQUIPMENT, AND ANY MISCELLANEOUS APPURTENANCES NECESSARY TO COMPLETE INSTALLATION ACCORDING TO THE STANDARD DRAWING, PLANS, AND THIS PLAN NOTE.

1	*09/01/25*	*SHEET REVISIONS*
ADDM' NO.	*DATE*	*DESCRIPTION*
DATE COMPLETED		

ITEM 840 - AESTHETIC SURFACE TREATMENT

USE CONCRETE FORM LINERS TO CREATE AESTHETIC SURFACE TREATMENT ON THE MSE WALL FACING PANELS. THE FORM LINER SHALL BE PATTERN 1107, MISSION FLUTE FROM SPEC FORMLINERS, INC. OR APPROVED EQUAL. THE FORM LINER RELIEF DEPTH SHALL BE 1.5". FABRICATE AND INSTALL THE MSE WALL PANELS SUCH THAT THE VERTICAL FINS AND VALLEYS IN THE FRACTURE FIN AESTHETIC TREATMENT ALIGN VERTICALLY ACROSS ADJACENT PANELS FROM THE TOP OF THE WALL TO THE BOTTOM OF THE WALL. USE THE SAME FRACTURED FIN PATTERN ON ALL WALLS ON THE PROJECT.

FORM LINERS SHALL BE CAPABLE OF WITHSTANDING ANTICIPATED CONCRETE POUR PRESSURES WITHOUT LEAKAGE OR CAUSING PHYSICAL DEFECTS. FORM LINERS SHALL BE REMOVABLE WITHOUT CAUSING CONCRETE SURFACE DAMAGE. USE FORM RELEASE PRODUCT AS RECOMMENDED BY THE FORM LINER MANUFACTURER. USE MANUFACTURER'S APPLICATION RATES AND ALL OTHER MANUFACTURER'S INSTRUCTIONS. FORM RELEASE PRODUCT SHALL BE FULLY COMPATIBLE WITH THE FORM LINER MATERIAL AND EPOXY-URETHANE SEALER TO BE APPLIED TO THE FINISHED SURFACES.

ALIGN THE FORM LINER PATTERNS ACROSS ALL JOINTS BETWEEN CONCRETE FACING.

FORM LINERS SHALL EXTEND TO A MINIMUM OF 1'-0" BELOW THE PROPOSED GROUND OR SIDEWALK SURFACE AT THE FRONT FACE OF THE WALL. FORM LINERS MAY EXTEND LOWER BUT THE PAY LIMITS SHALL BE 1'-0" BELOW THE PROPOSED GROUND OR SIDEWALK SURFACE.

PAYMENT WILL BE MADE AT THE UNIT PRICE BID FOR ITEM 840 - AESTHETIC SURFACE TREATMENT, WHICH SHALL BE FULL COMPENSATION FOR ALL LABOR, MATERIALS, EQUIPMENT, AND INCIDENTALS NECESSARY TO COMPLETE THIS ITEM AS SPECIFIED ABOVE AND IN A SATISFACTORY AND WORKMANLIKE MANNER.

ITEM 894 - THERMAL INTEGRITY PROFILER (T.I.P.) TEST

PERFORM INTEGRITY TESTING ON 1 OF THE DRILLED SHAFT 139 OR 140 AT THE FORWARD ABUTMENT OF SFN 3109152 BY THERMAL INTEGRITY PROFILING (TIP). PERFORM TIP TESTING PER ASTM D7949, "STANDARD TEST METHODS FOR THERMAL INTEGRITY PROFILING OF CONCRETE DEEP FOUNDATIONS," METHOD B, AND PER THE PROJECT SPECIAL PROVISIONS.

PLAN ABBREVIATIONS

ABUT.	*ABUTMENT*
BF	*BACK FACE (BACKFILL SIDE)*
BRG.	*BEARING*
C/C	*CENTER TO CENTER*
C.J.	*CONSTRUCTION JOINT*
DIA.	*DIAMETER*
EL.	*ELEVATION*
EF	*EACH FACE*
EQ. SPA.	*EQUALLY SPACED*
F.A.	*FORWARD ABUTMENT*
FF	*FRONT FACE (CREEK SIDE)*
MAX.	*MAXIMUM*
MIN.	*MINIMUM*
N.P.C.P.P.	*NON-PERFORATED CORRUGATED PLASTIC PIPE*
O/O	*OUT TO OUT*
PEJF	*PREFORMED EXPANSION JOINT FILLER*
P.C.P.P.	*PERFORATED CORRUGATED PLASTIC PIPE*
R.A.	*REAR ABUTMENT*
SPA.	*SPACE, SPACES, SPACED*
STA.	*STATION*
T.O.S.	*TOP OF SLOPE*
TYP.	*TYPICAL*

GENERAL NOTES 2 OF 2
RETAINING WALL NO. 02 ALONG WINCHELL AVE.

DESIGN AGENCY
Palmer ENGINEERING
8350 E. KEMPER ROAD
SUITE B
CINCINNATI, OH 45249
(513) 469-1600

DESIGNER RJB

REVIEWER BJF 04/10/25

PROJECT ID 122048

SUBSET 5 TOTAL 29

SHEET P.168 TOTAL P.421

HAM-IR75-1.05

MODEL: Sheet 2 PAPERSIZE: 34x22 (in.) DATE: 8/27/2025 TIME: 11:32:27 AM PLTDRV: OHDOT_PDF.pltcfg PENTBL: OHDOT_Pen.tbl USER: swalker@palmernet.com WORKSPACE: OHDOTCivil02 WORKSET: 122048 PRODUCT: OpenRoadsDesigner 24.00.00.205
pw:\\ohiodot-pw.bentley.com:ohiodot-pw-02\Documents\01 Active Projects\District 08\Hamilton\122048\402-Engineering_PalmerEngineering\Structures\Wall_002\Sheets\122048_002_WN001.dgn

ESTIMATED QUANTITIES

CALC: TES | DATE: 08/15/2025

CHECK: CVK | DATE: 08/15/2025

ITEM	ITEM EXT.	PLAN SPLIT 01/IMS/03	TOTAL	UNIT	DESCRIPTION	SHEET
503	11101	LS	LS		COFFERDAMS AND EXCAVATION BRACING, AS PER PLAN	7/29
503	21301	LS	LS		UNCLASSIFIED EXCAVATION, AS PER PLAN	
507	00400	813	813	FT	STEEL PILES, MISC.: SOLDIER PILES, W27X178	
507	00400	179	179	FT	STEEL PILES, MISC.: SOLDIER PILES, W27X258	
509	26000	176174	176174	LB	GALVANIZED STEEL REINFORCEMENT	
510	10000	1,677	1,677	EACH	DOWEL HOLES WITH NONSHRINK, NONMETALLIC GROUT	
511	46012	723	723	CY	CLASS QC1 CONCRETE WITH QC/QA, RETAINING/WINGWALL NOT INCLUDING FOOTING	
511	46512	123	123	CY	CLASS QC1 CONCRETE WITH QC/QA, FOOTING	
511	53010	475	475	CY	CLASS QC1 CONCRETE, MISC.: SHAFT CAP WITH QC/QA	
511	53010	288	288	CY	CLASS QC1 CONCRETE, MISC.: MOMENT SLAB WITH QC/QA	
512	10000	2,229	2,229	SY	SEALING OF CONCRETE SURFACES	
512	10001	2,229	2,229	SY	SEALING OF CONCRETE SURFACES, AS PER PLAN	4/29
512	33000	10	10	SY	TYPE 2 WATERPROOFING	
513	20001	574	574	EACH	WELDED STUD SHEAR CONNECTORS, AS PER PLAN	4/29
516	13600	488	488	SF	1" PREFORMED EXPANSION JOINT FILLER	
517	76300	810	810	FT	RAILING, MISC.: TEXAS RAILING	
518	20000	237	237	SY	PREFABRICATED GEOCOMPOSITE DRAIN	
518	21200	160	160	CY	POROUS BACKFILL WITH GEOTEXTILE FABRIC	
518	39900	72	72	FT	4" NON-PERFORATED CORRUGATED PLASTIC PIPE, INCLUDING SPECIALS	
518	40000	1,010	1,010	FT	6" PERFORATED CORRUGATED PLASTIC PIPE	
518	40010	80	80	FT	6" NON-PERFORATED CORRUGATED PLASTIC PIPE, INCLUDING SPECIALS	
524	94803	807	807	FT	DRILLED SHAFTS, 42" DIAMETER, ABOVE BEDROCK, AS PER PLAN	4/29
524	94903	181	181	FT	DRILLED SHAFTS, 48" DIAMETER ABOVE BEDROCK, AS PER PLAN	5/29
524	94915	5,260	5,260	FT	DRILLED SHAFTS, 60" DIAMETER, ABOVE BEDROCK, AS PER PLAN	5/29
SPECIAL	53000200	LS	LS		STRUCTURES: PRECONSTRUCTION CONDITION SURVEY	
SPECIAL	53051010	288	288	SF	RETAINING WALL, PRECAST CONCRETE LAGGING	
SPECIAL	53051020	2,104	2,104	SF	RETAINING WALL, TIMBER LAGGING	
607	39901	809	809	FT	VANDAL PROTECTION FENCE, 6' STRAIGHT, COATED FABRIC, AS PER PLAN	5/29
840	26050	8,401	8,401	SF	AESTHETIC SURFACE TREATMENT	
894	10000	12	12	EACH	THERMAL INTEGRITY PROFILING (TIP) TEST	

ADDM' NO.	DATE	DESCRIPTION
1	09/01/25	SHEET REVISIONS

DATE COMPLETED

ESTIMATED QUANTITIES
RETAINING WALL NO. 02 ALONG WINCHELL AVE.

DESIGN AGENCY
Palmer ENGINEERING
8350 E. KEMPER ROAD
SUITE B
CINCINNATI, OH 45249
(513) 469-1600

DESIGNER RJB

REVIEWER BJF 04/10/25

PROJECT ID 122048

SUBSET 6 | TOTAL 29

SHEET P.169 | TOTAL P.421

HAM-IR75-1.05

MODEL: Sheet PAPERSIZE: 34x22 (in.) DATE: 8/27/2025 TIME: 11:32:36 AM PLTDRV: OHDOT_PDF.pltcfg PENTBL: OHDOT_Pen.tbl USER: swalker@palmernet.com WORKSPACE: OHDOTCEv02 WORKSET: 122048 PRODUCT: OpenRoadsDesigner 24.00.00.205
pw:\\ohiodot-pw.bentley.com:ohiodot-pw-02\Documents\01 Active Projects\District 08\Hamilton\122048\02-Engineering_PalmerEngineering\Structures\Wall_002\Sheets\122048_002_WQ001.dgn

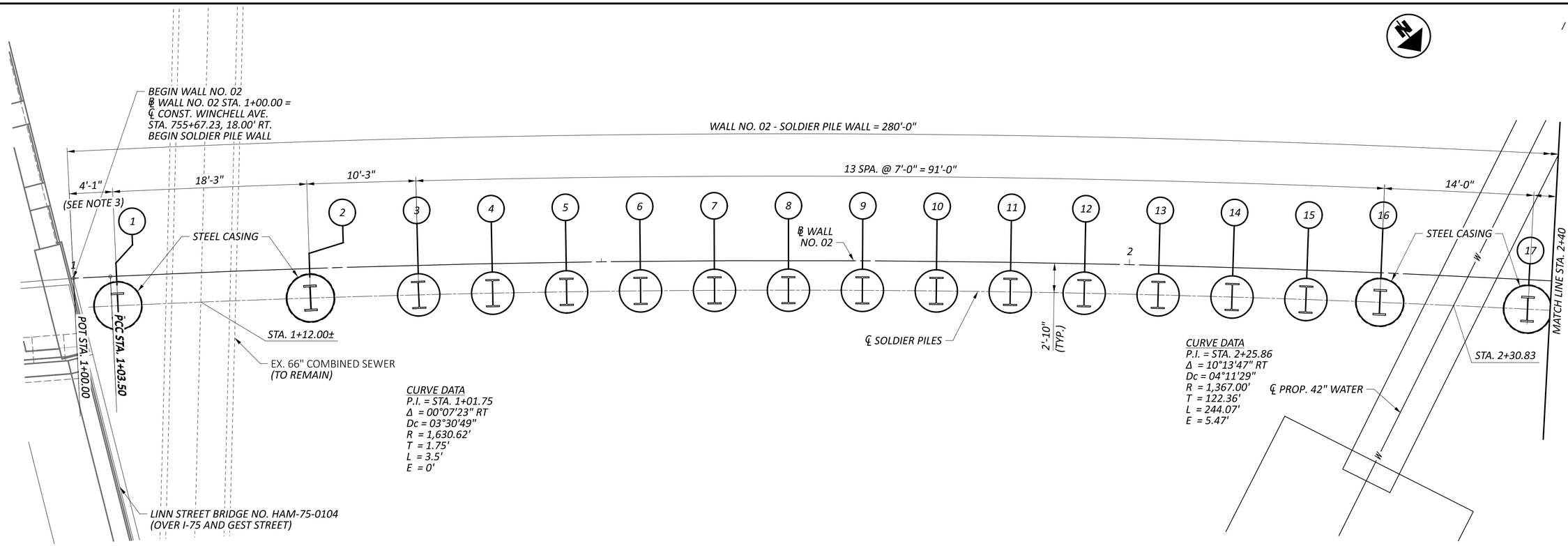

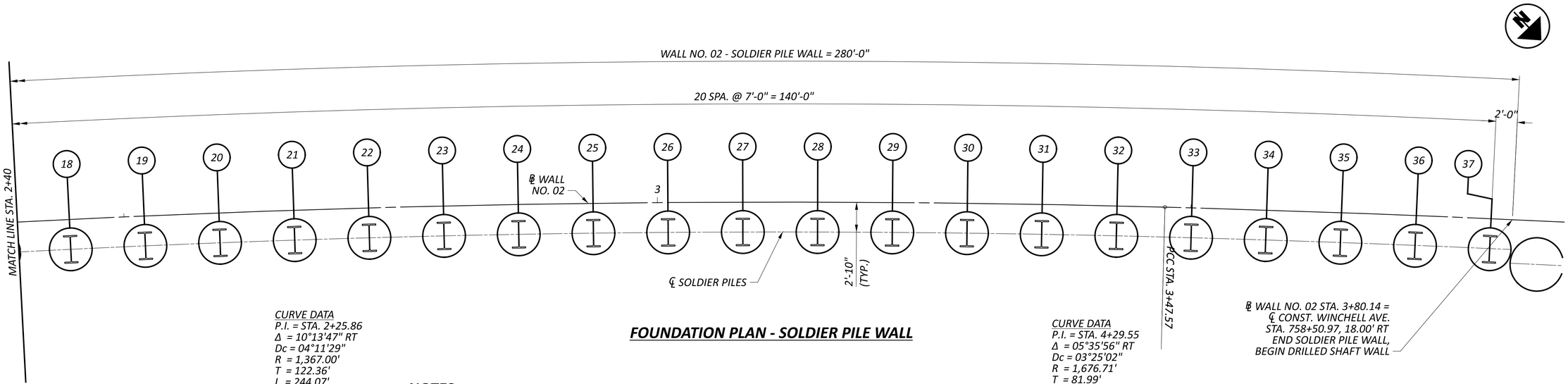

FOUNDATION PLAN - SOLDIER PILE WALL

NOTES

1. ALL DIMENSIONS REFERENCE ℄ SOLDIER PILES.
2. SEE SHEETS 10/29 FOR LOCATION AND ELEVATION TABLES.
3. TEMPORARY SUPPORT OR EXCAVATION BETWEEN PILE 1 AND THE FORWARD ABUTMENT OF THE LINN STREET BRIDGE SHALL BE THE RESPONSIBILITY OF THE CONTRACTOR. THE ASSOCIATED LABOR AND MATERIALS SHALL BE INCLUDED IN ITEM 503, COFFERDAM AND EXCAVATION BRACING, AS PER PLAN.

ADDM' NO.	DATE	DESCRIPTION
1	09/01/25	SHEET REVISIONS
DATE COMPLETED		

FOUNDATION PLAN - SOLDIER PILE WALL
RETAINING WALL NO. 02 ALONG WINCHELL AVE.

DESIGN AGENCY
Palmer ENGINEERING
8350 E. KEMPER ROAD
SUITE B
CINCINNATI, OH 45249
(513) 469-1600

DESIGNER	RJB
REVIEWER	BJF 04/10/25
PROJECT ID	122048
SUBSET / TOTAL	7 / 29
SHEET / TOTAL	P.170 / P.421

HAM-IR75-1.05

MODEL: BJP_WALL3 - Soldier_Pile-Wall_2-1 [Sheet] PAPERSIZE: 34x22 (in.) DATE: 8/27/2025 TIME: 11:32:42 AM PLTDRV: OHDOT_PDF.pltcfg PENTBL: OHDOT_Pen.tbl USER: swalker@palmernet.com WORKSPACE: OHDOTCEv02 WORKSET: 122048 PRODUCT: OpenRoadsDesigner 24.00.00.205
pw:\\ohiodot-pw.bentley.com:ohiodot-pw-02\Documents\01 Active Projects\District 08\Hamilton\122048\d02-Engineering_PalmerEngineering\Structures\Wall_002\Sheets\122048_002_WT001.dgn

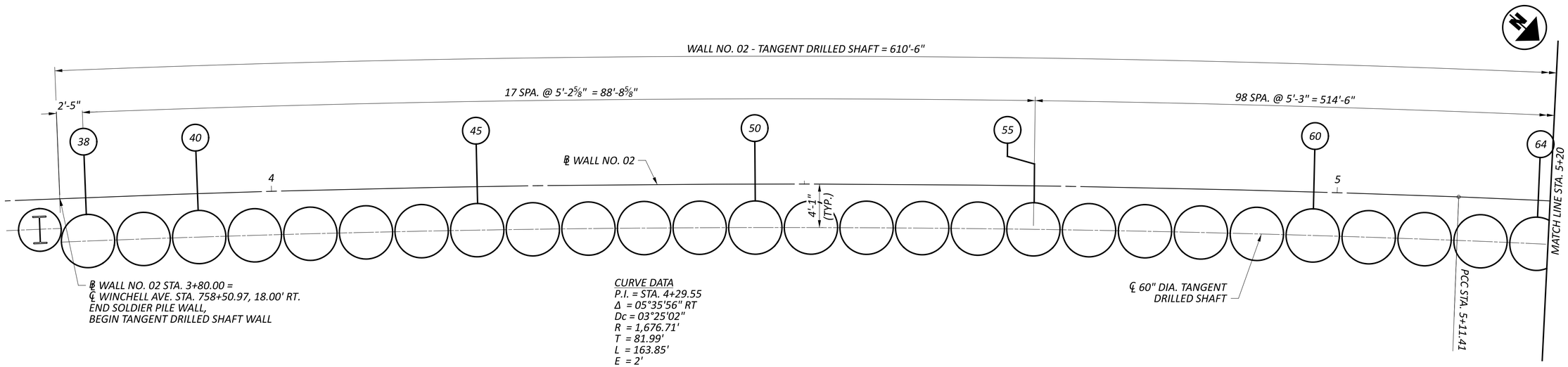

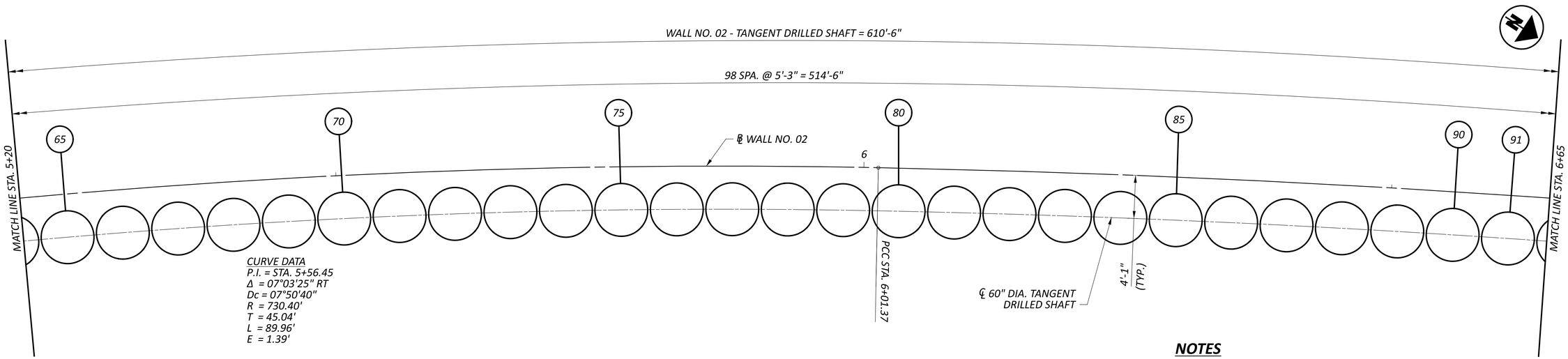

NOTES

1. ALL DIMENSIONS REFERENCE ℄ DRILLED SHAFTS.
2. SEE SHEETS 11/29 FOR LOCATION AND ELEVATION TABLES.

FOUNDATION PLAN - TANGENT DRILLED SHAFT

1	09/01/25	SHEET REVISIONS
ADDM' NO.	DATE	DESCRIPTION
DATE COMPLETED		

FOUNDATION PLAN - DRILLED SHAFT TANGENT WALL 1 OF 2
RETAINING WALL NO. 02 ALONG WINCHELL AVE.

DESIGN AGENCY
Palmer ENGINEERING
8350 E. KEMPER ROAD
SUITE B
CINCINNATI, OH 45249
(513) 469-1600

DESIGNER RJB

REVIEWER BJF 04/10/25

PROJECT ID 122048

SUBSET 8 | TOTAL 29

SHEET P.171 | TOTAL P.421

HAM-IR75-1.05

MODEL: BLP_WALL4 - Tangent_Drilled_Shaft-Wall_2-1 [Sheet] PAPERSIZE: 34x22 (in.) DATE: 8/27/2025 TIME: 11:32:44 AM PLTDRV: OHDOT_PDF.pltcfg PENTBL: OHDOT_Pen.tbl USER: swalker@palmernet.com WORKSPACE: OHDOTCEv02 WORKSET: 122048 PRODUCT: OpenRoadsDesigner 24.00.00.205
pw:\\ohiodot-pw.bentley.com:ohiodot-pw-02\Documents\01 Active Projects\District 08\Hamilton\122048\402-Engineering_PalmerEngineering\Structures\Wall_002\Sheets\122048_002_WT001.dgn

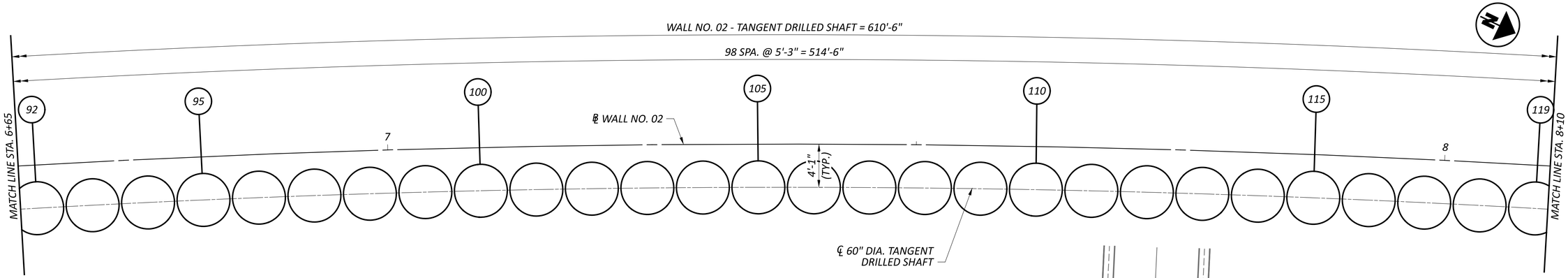

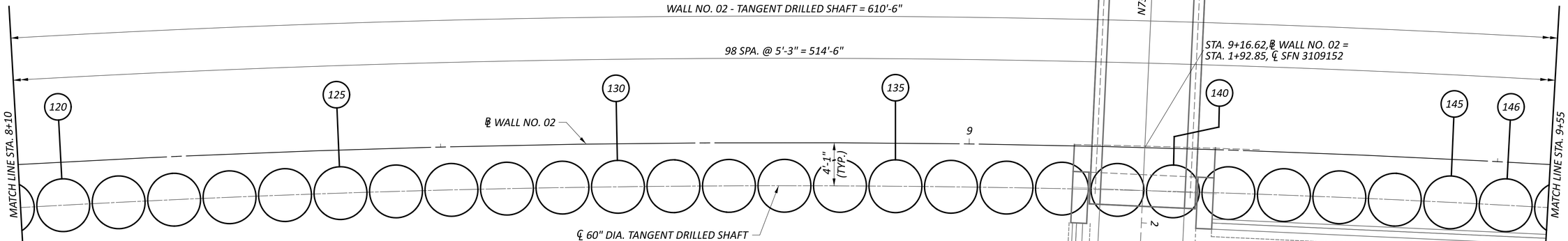

CURVE DATA
P.I. = STA. 8+28.09
Δ = 20°17'25" RT
Dc = 04°31'20"
R = 1,267.00'
T = 226.72'
L = 448.69'
E = 20.12'

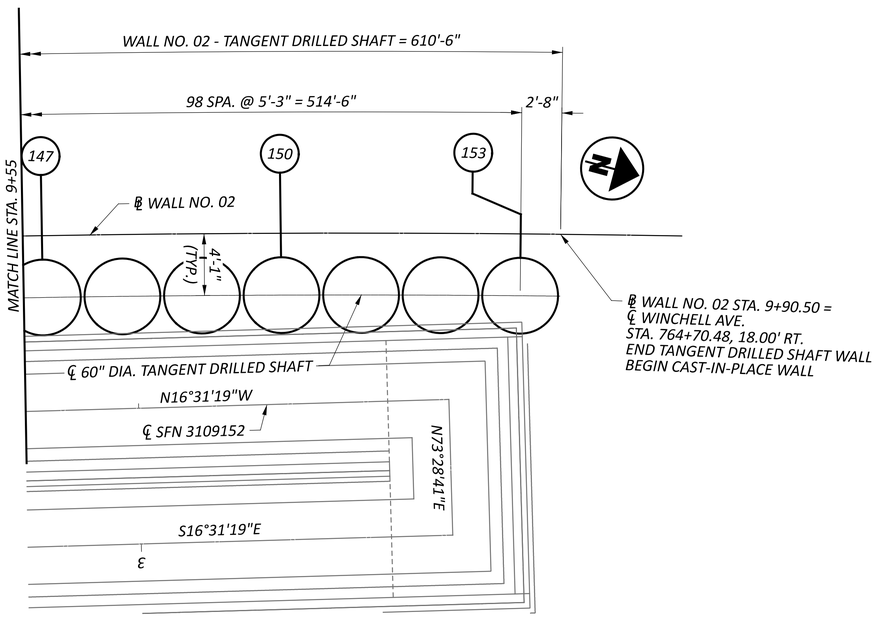

NOTES

1. ALL DIMENSIONS REFERENCE ℄ DRILLED SHAFTS.
2. SEE SHEETS 11/29 FOR LOCATION AND ELEVATION TABLES.

FOUNDATION PLAN - TANGENT DRILLED SHAFT

FOUNDATION PLAN - DRILLED SHAFT TANGENT WALL 2 OF 2
RETAINING WALL NO. 02 ALONG WINCHELL AVE.

HAM-IR75-1.05

DESIGN AGENCY
Palmer ENGINEERING
8350 E. KEMPER ROAD
SUITE B
CINCINNATI, OH 45249
(513) 469-1600

DESIGNER	RJB
REVIEWER	BJF 04/10/25
PROJECT ID	122048
SUBSET / TOTAL	9 / 29
SHEET / TOTAL	P.172 / P.421

ADDM' NO.	DATE	DESCRIPTION
1	09/01/25	SHEET REVISIONS
DATE COMPLETED		

MODEL: BLP_WALL4 - Tangent_Drilled_Shaft-Wall_2-3 |Sheet| PAPERSIZE: 34x22 (in.) DATE: 8/27/2025 TIME: 11:32:46 AM PLTDRV: OHDOT_PDF.pltcfg PENTBL: OHDOT_Pen.tbl USER: swalker@palmernet.com WORKSPACE: OHDOTCEv02 WORKSET: 122048 PRODUCT: OpenRoadsDesigner 24.00.00.205
pw:\\ohiodot-pw.bentley.com:ohiodot-pw-02\Documents\01 Active Projects\District 08\Hamilton\122048\402-Engineering_PalmerEngineering\Structures\Wall_002\Sheets\122048_002_WT001.dgn

SOLDIER PILE LOCATIONS AND ELEVATIONS - WALL NO. 02											
SHAFT NUMBER	WALL TYPE	STA. AT CL OF PILE / SHAFT	BOT. OF CAP	TOP OF PILE EL.	TOP OF SHAFT EL.	BOT OF PILE / SHAFT EL.	ESTIMATED PILE LENGTH (FT)	ESTIMATED CONC. SHAFT LENGTH (FT)	ITEM 524 DRILLED SHAFT LENGTH (FT)	PILE SHAPE	SHAFT DIA. (IN)
1	SOLDIER PILE	1+04.09	506.95	507.95	495.00	467.00	40.95	28.00	42.28	W27 x 258	48.00
2	SOLDIER PILE	1+22.27	506.42	507.42	495.00	467.00	40.42	28.00	41.32	W27 x 258	48.00
3	SOLDIER PILE	1+32.64	506.12	507.12	495.00	467.00	40.12	28.00	40.99	W27 x 258	48.00
4	SOLDIER PILE	1+39.66	505.91	506.91	495.00	477.50	29.41	17.50	30.31	W27 x 178	42.00
5	SOLDIER PILE	1+46.67	505.90	506.90	495.00	477.50	29.40	17.50	30.13	W27 x 178	42.00
6	SOLDIER PILE	1+53.69	505.90	506.90	495.00	477.50	29.40	17.50	29.89	W27 x 178	42.00
7	SOLDIER PILE	1+60.70	505.90	506.90	495.00	477.50	29.40	17.50	29.59	W27 x 178	42.00
8	SOLDIER PILE	1+67.72	505.90	506.90	495.00	477.50	29.40	17.50	29.28	W27 x 178	42.00
9	SOLDIER PILE	1+74.73	505.70	506.70	495.00	477.50	29.20	17.50	28.98	W27 x 178	42.00
10	SOLDIER PILE	1+81.74	505.40	506.40	495.00	477.50	28.90	17.50	28.60	W27 x 178	42.00
11	SOLDIER PILE	1+88.76	505.10	506.10	495.00	477.50	28.60	17.50	28.21	W27 x 178	42.00
12	SOLDIER PILE	1+95.77	504.80	505.80	495.00	477.50	28.30	17.50	27.82	W27 x 178	42.00
13	SOLDIER PILE	2+02.79	504.51	505.51	495.00	477.50	28.01	17.50	27.48	W27 x 178	42.00
14	SOLDIER PILE	2+09.80	504.21	505.21	495.00	477.50	27.71	17.50	27.21	W27 x 178	42.00
15	SOLDIER PILE	2+16.82	503.91	504.91	495.00	477.50	27.41	17.50	26.93	W27 x 178	42.00
16	SOLDIER PILE	2+23.83	503.61	504.61	495.00	476.00	28.61	19.00	28.16	W27 x 258	48.00
17	SOLDIER PILE	2+37.86	503.02	504.02	495.00	476.00	28.02	19.00	27.83	W27 x 258	48.00
18	SOLDIER PILE	2+44.87	502.72	503.72	495.00	480.50	23.22	14.50	23.18	W27 x 178	42.00
19	SOLDIER PILE	2+51.89	502.50	503.50	495.00	480.50	23.00	14.50	23.06	W27 x 178	42.00
20	SOLDIER PILE	2+58.90	502.50	503.50	495.00	480.50	23.00	14.50	23.02	W27 x 178	42.00
21	SOLDIER PILE	2+65.92	502.50	503.50	495.00	480.50	23.00	14.50	22.99	W27 x 178	42.00
22	SOLDIER PILE	2+72.93	502.50	503.50	495.00	480.50	23.00	14.50	22.95	W27 x 178	42.00
23	SOLDIER PILE	2+79.94	503.00	504.00	495.00	480.50	23.50	14.50	22.93	W27 x 178	42.00
24	SOLDIER PILE	2+86.96	503.00	504.00	495.00	480.50	23.50	14.50	22.91	W27 x 178	42.00
25	SOLDIER PILE	2+93.97	503.00	504.00	495.00	480.50	23.50	14.50	22.89	W27 x 178	42.00
26	SOLDIER PILE	3+00.99	503.00	504.00	495.00	480.50	23.50	14.50	22.85	W27 x 178	42.00
27	SOLDIER PILE	3+08.00	503.00	504.00	495.00	480.50	23.50	14.50	22.67	W27 x 178	42.00
28	SOLDIER PILE	3+15.02	503.00	504.00	495.00	480.50	23.50	14.50	22.50	W27 x 178	42.00
29	SOLDIER PILE	3+22.03	503.00	504.00	495.00	480.50	23.50	14.50	22.50	W27 x 178	42.00
30	SOLDIER PILE	3+29.05	503.00	504.00	495.00	480.50	23.50	14.50	22.50	W27 x 178	42.00
31	SOLDIER PILE	3+36.06	503.00	504.00	495.00	480.50	23.50	14.50	22.65	W27 x 178	42.00
32	SOLDIER PILE	3+43.07	503.00	504.00	495.00	480.50	23.50	14.50	22.90	W27 x 178	42.00
33	SOLDIER PILE	3+50.09	503.00	504.00	495.00	480.50	23.50	14.50	23.16	W27 x 178	42.00
34	SOLDIER PILE	3+57.10	503.00	504.00	495.00	480.50	23.50	14.50	23.50	W27 x 178	42.00
35	SOLDIER PILE	3+64.11	503.00	504.00	495.00	480.50	23.50	14.50	23.84	W27 x 178	42.00
36	SOLDIER PILE	3+71.12	503.00	504.00	495.00	480.50	23.50	14.50	24.18	W27 x 178	42.00
37	SOLDIER PILE	3+78.13	503.00	504.00	495.00	480.50	23.50	14.50	24.48	W27 x 178	42.00

NOTE

1. SEE SHEET 7/29 FOR FOOTING PLAN.

1	09/01/25	SHEET REVISIONS
ADDM' NO.	DATE	DESCRIPTION
DATE COMPLETED		

ELEVATION TABLES 1 OF 2
RETAINING WALL NO. 02 ALONG WINCHELLL AVE.

DESIGN AGENCY
Palmer ENGINEERING
8350 E. KEMPER ROAD
SUITE B
CINCINNATI, OH 45249
(513) 469-1600

DESIGNER RJB

REVIEWER BJF 04/10/25

PROJECT ID 122048

SUBSET 10 TOTAL 29

SHEET P.173 TOTAL P.421

HAM-IR75-1.05

MODEL: Untitled Sheet PAPERSIZE: 34x22 (in.) DATE: 8/27/2025 TIME: 11:32:52 AM PLTDRV: OHDOT_PDF.pltcfg PENTBL: OHDOT_Pen.tbl USER: swalker@palmernet.com WORKSPACE: OHDOTCEv02 WORKSET: 122048 PRODUCT: OpenRoadsDesigner 24.00.00.205
pw:\\ohiodot-pw.bentley.com:ohiodot-pw-02\Documents\01 Active Projects\District 08\Hamilton\122048\402-Engineering_PalmerEngineering\Structures\Wall_002\Sheets\122048_002_WE010.dgn

DRILLED SHAFT LOCATIONS AND ELEVATIONS - WALL NO. 02

SHAFT NUMBER	WALL TYPE	STA. AT CL OF SHAFT	BOT. OF CAP / TOP OF SHAFT EL.	BOT. OF SHAFT EL.	EST. CONC. SHAFT LENGTH (FT)	ITEM 524 DRILLED SHAFT LENGTH (FT)
38	TANGENT DS	3+82.62	501.80	475.25	26.55	29.89
39	TANGENT DS	3+87.85	501.80	475.25	26.55	30.08
40	TANGENT DS	3+93.08	501.80	475.25	26.55	30.26
41	TANGENT DS	3+98.31	501.80	475.25	26.55	30.45
42	TANGENT DS	4+03.54	501.80	475.25	26.55	30.48
43	TANGENT DS	4+08.77	501.80	475.25	26.55	30.43
44	TANGENT DS	4+14.01	501.80	475.25	26.55	30.38
45	TANGENT DS	4+19.24	501.80	475.25	26.55	30.33
46	TANGENT DS	4+24.47	501.80	475.25	26.55	30.28
47	TANGENT DS	4+29.70	501.80	475.25	26.55	30.27
48	TANGENT DS	4+34.93	501.80	468.25	33.55	37.27
49	TANGENT DS	4+40.16	501.80	468.25	33.55	37.27
50	TANGENT DS	4+45.40	501.80	468.25	33.55	37.27
51	TANGENT DS	4+50.63	501.80	468.25	33.55	37.27
52	TANGENT DS	4+55.86	501.80	468.25	33.55	37.25
53	TANGENT DS	4+61.09	501.80	468.25	33.55	37.24
54	TANGENT DS	4+66.32	501.80	468.25	33.55	37.22
55	TANGENT DS	4+71.55	501.80	468.25	33.55	37.21
56	TANGENT DS	4+76.78	501.80	468.25	33.55	37.19
57	TANGENT DS	4+82.05	501.80	468.25	33.55	37.17
58	TANGENT DS	4+87.31	501.80	468.25	33.55	37.16
59	TANGENT DS	4+92.57	501.80	468.25	33.55	37.14
60	TANGENT DS	4+97.83	501.80	468.25	33.55	37.12
61	TANGENT DS	5+03.10	501.80	468.25	33.55	37.11
62	TANGENT DS	5+08.36	501.80	468.25	33.55	37.11
63	TANGENT DS	5+13.63	501.80	468.25	33.55	37.12
64	TANGENT DS	5+18.91	501.80	468.25	33.55	37.12
65	TANGENT DS	5+24.19	501.80	468.25	33.55	37.12
66	TANGENT DS	5+29.47	501.80	468.25	33.55	37.14
67	TANGENT DS	5+34.75	501.80	468.25	33.55	37.17
68	TANGENT DS	5+40.03	501.80	468.25	33.55	37.20
69	TANGENT DS	5+45.31	501.80	468.25	33.55	37.23
70	TANGENT DS	5+50.59	501.80	468.25	33.55	37.25
71	TANGENT DS	5+55.87	501.80	468.25	33.55	37.29
72	TANGENT DS	5+61.15	501.80	468.25	33.55	37.33
73	TANGENT DS	5+66.43	501.80	460.75	41.05	44.87
74	TANGENT DS	5+71.70	501.80	460.75	41.05	44.91
75	TANGENT DS	5+76.98	501.80	460.75	41.05	44.96
76	TANGENT DS	5+82.26	501.80	460.75	41.05	45.01
77	TANGENT DS	5+87.54	501.80	460.75	41.05	45.06
78	TANGENT DS	5+92.82	501.80	460.75	41.05	45.11
79	TANGENT DS	5+98.10	501.80	460.75	41.05	45.16
80	TANGENT DS	6+03.38	501.80	460.75	41.05	45.18
81	TANGENT DS	6+08.64	501.80	460.75	41.05	45.17
82	TANGENT DS	6+13.91	501.80	460.75	41.05	45.16
83	TANGENT DS	6+19.18	501.80	460.75	41.05	45.16
84	TANGENT DS	6+24.44	501.80	460.75	41.05	45.15
85	TANGENT DS	6+29.71	501.80	460.75	41.05	45.13
86	TANGENT DS	6+34.98	501.80	460.75	41.05	45.11
87	TANGENT DS	6+40.25	501.80	460.75	41.05	45.09
88	TANGENT DS	6+45.51	501.80	460.75	41.05	45.07
89	TANGENT DS	6+50.78	501.80	449.50	52.30	56.29
90	TANGENT DS	6+56.05	501.80	449.50	52.30	56.24
91	TANGENT DS	6+61.31	501.80	449.50	52.30	56.20
92	TANGENT DS	6+66.58	501.80	449.50	52.30	56.15
93	TANGENT DS	6+71.85	501.80	449.50	52.30	56.10
94	TANGENT DS	6+77.11	501.80	449.50	52.30	56.05
95	TANGENT DS	6+82.38	501.80	449.50	52.30	55.99

DRILLED SHAFT LOCATIONS AND ELEVATIONS - WALL NO. 02

SHAFT NUMBER	WALL TYPE	STA. AT CL OF SHAFT	BOT. OF CAP / TOP OF SHAFT EL.	BOT. OF SHAFT EL.	EST. CONC. SHAFT LENGTH (FT)	ITEM 524 DRILLED SHAFT LENGTH (FT)
96	TANGENT DS	6+87.65	501.80	449.50	52.30	55.93
97	TANGENT DS	6+92.92	501.80	449.50	52.30	55.88
98	TANGENT DS	6+98.18	501.80	449.50	52.30	55.82
99	TANGENT DS	7+03.45	501.80	449.50	52.30	55.77
100	TANGENT DS	7+08.72	501.80	449.50	52.30	55.73
101	TANGENT DS	7+13.98	501.80	449.50	52.30	55.69
102	TANGENT DS	7+19.25	501.80	449.50	52.30	55.65
103	TANGENT DS	7+24.52	501.80	449.50	52.30	55.60
104	TANGENT DS	7+29.78	501.80	449.50	52.30	55.61
105	TANGENT DS	7+35.05	501.80	449.50	52.30	55.61
106	TANGENT DS	7+40.32	501.80	449.50	52.30	55.62
107	TANGENT DS	7+45.59	501.80	449.50	52.30	55.62
108	TANGENT DS	7+50.85	501.80	449.50	52.30	55.64
109	TANGENT DS	7+56.12	501.80	449.50	52.30	55.71
110	TANGENT DS	7+61.39	501.80	449.50	52.30	55.78
111	TANGENT DS	7+66.65	501.80	449.50	52.30	55.84
112	TANGENT DS	7+71.92	501.80	449.50	52.30	55.91
113	TANGENT DS	7+77.19	501.80	449.50	52.30	55.98
114	TANGENT DS	7+82.45	501.80	449.50	52.30	56.04
115	TANGENT DS	7+87.72	501.80	449.50	52.30	56.11
116	TANGENT DS	7+92.99	501.80	449.50	52.30	56.17
117	TANGENT DS	7+98.26	501.80	449.50	52.30	56.24
118	TANGENT DS	8+03.52	501.80	449.50	52.30	56.25
119	TANGENT DS	8+08.79	501.80	449.50	52.30	56.23
120	TANGENT DS	8+14.06	501.80	449.50	52.30	56.22
121	TANGENT DS	8+19.32	501.80	449.50	52.30	56.20
122	TANGENT DS	8+24.59	501.80	449.50	52.30	56.18
123	TANGENT DS	8+29.86	501.80	449.50	52.30	56.30
124	TANGENT DS	8+35.12	501.80	449.50	52.30	56.42
125	TANGENT DS	8+40.39	501.80	449.50	52.30	56.55
126	TANGENT DS	8+45.66	501.80	449.50	52.30	56.68
127	TANGENT DS	8+50.92	501.80	459.50	42.30	46.80
128	TANGENT DS	8+56.19	501.80	459.50	42.30	46.93
129	TANGENT DS	8+61.46	501.80	459.50	42.30	47.05
130	TANGENT DS	8+66.73	501.80	459.50	42.30	47.17
131	TANGENT DS	8+71.99	501.80	459.50	42.30	47.30
132	TANGENT DS	8+77.26	501.80	459.50	42.30	47.43
133	TANGENT DS	8+82.53	501.80	465.00	36.80	42.06
134	TANGENT DS	8+87.79	501.80	465.00	36.80	42.19
135	TANGENT DS	8+93.06	501.80	465.00	36.80	42.33
136	TANGENT DS	8+98.33	501.80	465.00	36.80	42.46
137	TANGENT DS	9+03.59	501.80	465.00	36.80	42.47
138	TANGENT DS	9+08.86	501.80	451.00	50.80	56.43
139	TANGENT DS	9+14.13	501.80	451.00	50.80	56.39
140	TANGENT DS	9+19.40	501.80	451.00	50.80	56.34
141	TANGENT DS	9+24.66	503.00	451.00	52.00	56.30
142	TANGENT DS	9+29.93	503.00	465.25	37.75	41.69
143	TANGENT DS	9+35.20	503.00	465.25	37.75	41.31
144	TANGENT DS	9+40.46	503.00	465.25	37.75	40.92
145	TANGENT DS	9+45.73	503.00	466.75	36.25	39.04
146	TANGENT DS	9+51.00	503.00	466.75	36.25	38.69
147	TANGENT DS	9+56.26	503.00	466.75	36.25	38.50
148	TANGENT DS	9+61.53	503.00	466.75	36.25	38.31
149	TANGENT DS	9+66.80	503.00	468.25	34.75	36.61
150	TANGENT DS	9+72.07	503.00	468.25	34.75	36.42
151	TANGENT DS	9+77.33	503.00	468.25	34.75	36.27
152	TANGENT DS	9+82.60	503.00	469.25	33.75	35.17
153	TANGENT DS	9+87.87	503.00	469.25	33.75	35.07

TANGENT DRILLED SHAFT REINFORCING STEEL LIST (REFERENCE ONLY)

MARK	NUMBER TOTAL	LENGTH	WEIGHT (LBS.)	TYPE	DIMENSIONS A	DIMENSIONS B	DIMENSIONS C	DRILLED SHAFT NUMBER
SP501	10	476' - 1"	4,966	27	0' - 9"	4' - 0"	26' - 6 ½" *	38-47
SP502	25	591' - 10"	15,433	27	0' - 9"	4' - 0"	33' - 6 ½" *	48-72
SP503	16	715' - 11"	11,947	27	0' - 9"	4' - 0"	41' - 0 ½" *	73-88
SP504	38	901' - 11"	35,747	27	0' - 9"	4' - 0"	52' - 3 ½" *	89-126
SP505	6	736' - 7"	4,610	27	0' - 9"	4' - 0"	42' - 3 ½" *	127-132
SP506	5	645' - 7"	3,367	27	0' - 9"	4' - 0"	36' - 9 ½" *	133-137
SP507	3	2455' - 2"	7,683	27	0' - 3 ⅛"	4' - 0"	50' - 9 ½" *	138-140
SP508	1	2512' - 8"	2,621	27	0' - 3 ⅛"	4' - 0"	52' - 0" *	141
SP509	3	661' - 5"	2,070	27	0' - 9"	4' - 0"	37' - 9" *	142-144
SP510	4	636' - 8"	2,657	27	0' - 9"	4' - 0"	36' - 3" *	145-148
SP511	3	611' - 10"	1,915	27	0' - 9"	4' - 0"	34' - 9" *	149-151
SP512	2	595' - 4"	1,242	27	0' - 9"	4' - 0"	33' - 9" *	152-153
		SUBTOTAL **	94,258					
DS1101	190	29' - 7"	29,864	16	28' - 0" *			38-47
DS1102	475	36' - 7"	92,325	16	35' - 0" *			48-72
DS1103	304	44' - 1"	71,202	16	42' - 6" *			73-88
DS1104	836	55' - 4"	245,773	16	53' - 9" *			89-126
DS1105	114	45' - 4"	27458	16	43' - 9" *			127-132
DS1106	95	39' - 10"	20,106	16	38' - 3" *			133-137
DS1107	66	53' - 10"	18,878	16	52' - 3" *			138-140
DS1108	22	55' - 0"	6,429	16	53' - 5" *			141
DS1109	57	40' - 9"	12,341	16	39' - 2" *			142-144
DS1110	76	39' - 3"	15,849	16	37' - 8" *			145-148
DS1111	57	37' - 9"	11,433	16	36' - 2" *			149-151
DS1112	38	36' - 9"	7,420	16	35' - 2" *			152-153
		SUBTOTAL **	559,078					

** = ESTIMATED TOTAL LENGTH*

*** SUBTOTALS ARE FOR REFERENCE ONLY (INCLUDE WITH ITEM 524 FOR PAYMENT)*



TYPE-16

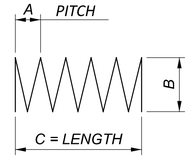

TYPE-27

NOTE

1. SEE SHEETS 8/29 AND 9/29 FOR FOOTING PLAN.

ELEVATION TABLES 2 OF 2
RETAINING WALL NO. 02 ALONG WINCHELL AVE.

DESIGN AGENCY
Palmer ENGINEERING
8350 E. KEMPER ROAD
SUITE B
CINCINNATI, OH 45249
(513) 469-1600

DESIGNER RJB

REVIEWER BJF 04/10/25

PROJECT ID 122048

SUBSET 11 TOTAL 29

SHEET P.174 TOTAL P.421

ADDM' NO.	DATE	DESCRIPTION
1	09/01/25	SHEET REVISIONS
DATE COMPLETED		

HAM-IR75-1.05

MODEL: Wall 2 Elevation Table PAPERSIZE: 34x22 (in.) DATE: 8/27/2025 TIME: 11:32:53 AM PLTDRV: OHDOT_PDF.pltcfg PENTBL: OHDOT_Pen.tbl USER: swalker@palmernet.com WORKSPACE: OHDOTCivil02 WORKSET: 122048 PRODUCT: OpenRoadsDesigner 24.00.00.205
pw:\\ohiodot-pw.bentley.com:ohiodot-pw-02\Documents\01 Active Projects\District 08\Hamilton\122048\02-Engineering_PalmerEngineering\Structures\Wall_002\Sheets\122048_002_WE010.dgn

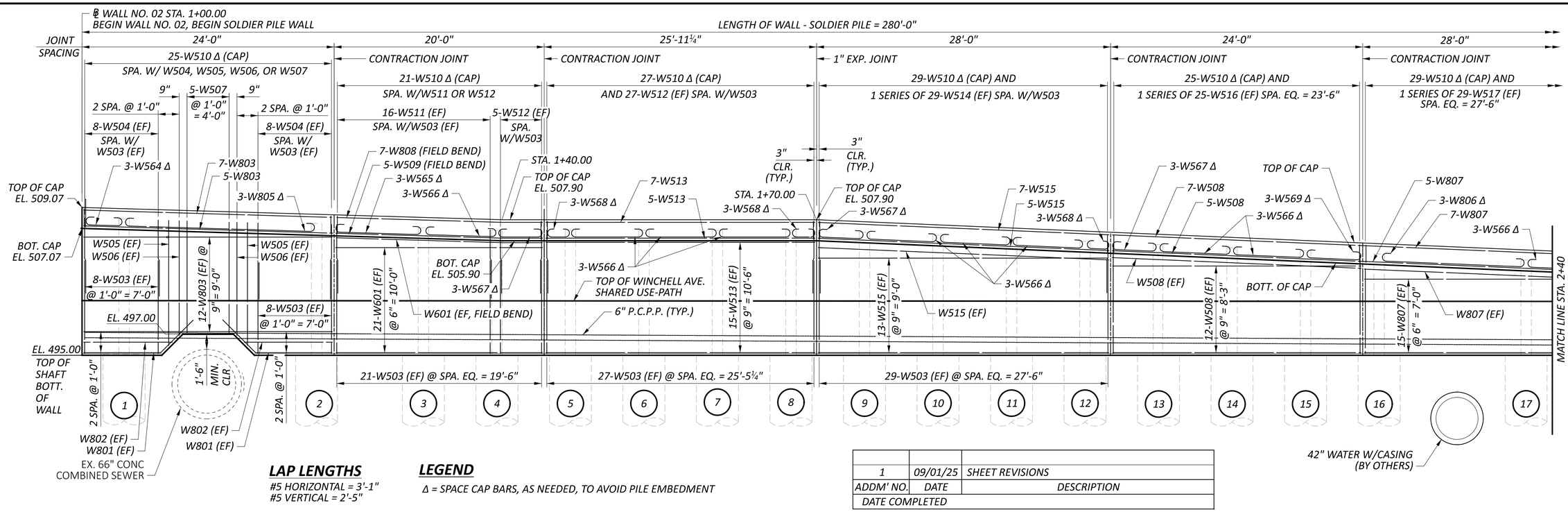

LAP LENGTHS

#5 HORIZONTAL = 3'-1"
#5 VERTICAL = 2'-5"

LEGEND

Δ = SPACE CAP BARS, AS NEEDED, TO AVOID PILE EMBEDMENT

1	09/01/25	SHEET REVISIONS
ADDM' NO.	DATE	DESCRIPTION
DATE COMPLETED		

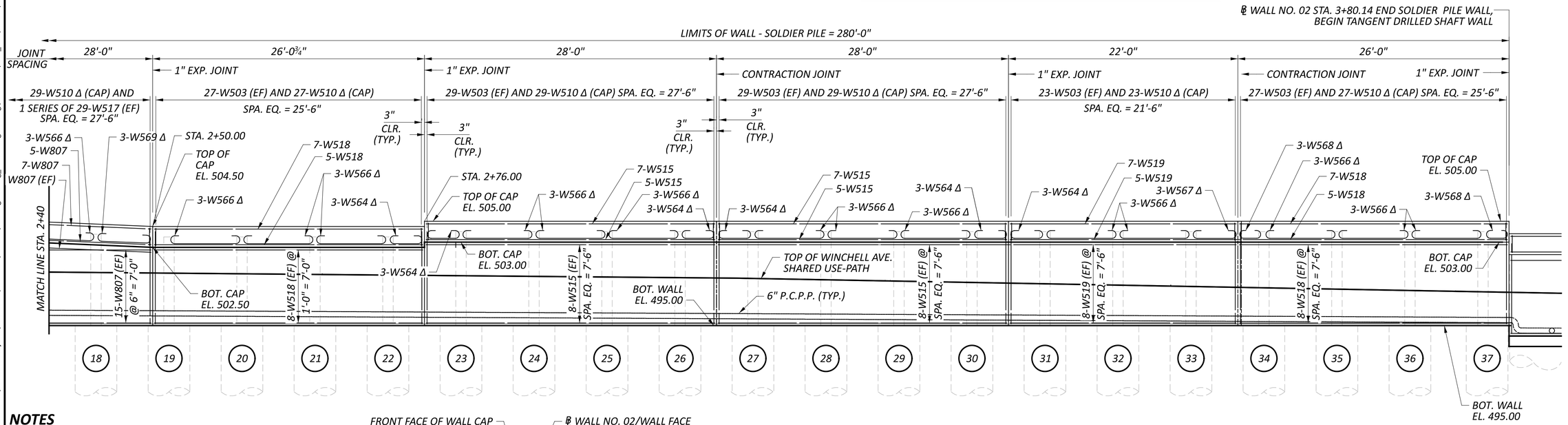

NOTES

1. SEE SHEET 4/29 AND 5/29 FOR GENERAL NOTES.
2. SEE SHEETS 18/29 AND 19/29 FOR SOLDIER PILE WALL TYPICAL SECTION DETAILS.
3. RAILING AND VANDAL PROTECTION FENCE NOT SHOWN FOR CLARITY
4. INSTALL A 6" PVC CRD-C 572-74 WATERSTOP AT THE CENTER OF THE WALL THICKNESS, CENTERED OVER THE JOINT AND EXTENDING FROM THE TOP OF THE FOOTING TO THE TOP OF THE WALL. THIS ITEM IS INCIDENTAL TO REINFORCED WALL CONCRETE.

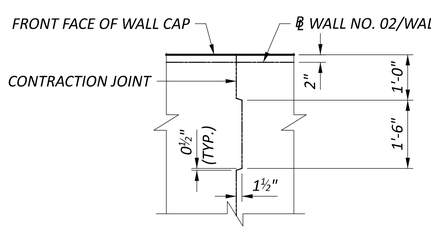

CONTRACTION JOINT PLAN - WALL CAP
DETAIL IS TYPICAL

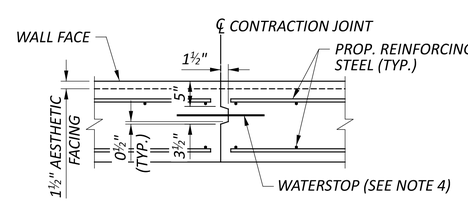

CONTRACTION JOINT PLAN - WALL FACING
DETAIL IS TYPICAL

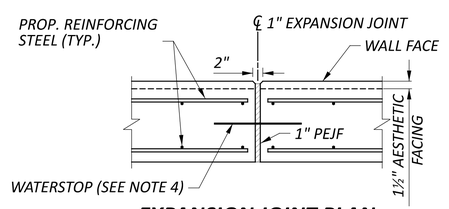

EXPANSION JOINT PLAN
DETAIL IS TYPICAL

ELEVATION DETAILS - SOLDIER PILE WALL RETAINING WALL NO. 02 ALONG WINCHELL AVE.

DESIGN AGENCY	Palmer ENGINEERING
	8350 E. KEMPER ROAD SUITE B CINCINNATI, OH 45249 (513) 469-1600
DESIGNER	RJB
REVIEWER	BJF 04/10/25
PROJECT ID	122048
SUBSET	12
TOTAL	29
SHEET	P.175
TOTAL	P.421

HAM-IR75-1.05

MODEL: PGL-1 - Soldier_Pile-Profile 1 [Sheet] PAPERSIZE: 34x22 (in.) DATE: 8/27/2025 TIME: 11:33:03 AM PLTDRV: OHDOT_PDF.pltcfg PENTBL: OHDOT_Pen.tbl USER: swalker@palmernet.com WORKSPACE: OHDOTCivil02 WORKSET: 122048 PRODUCT: OpenRoadsDesigner 24.00.00.205
pw:\\ohiodot-pw.bentley.com:ohiodot-pw-02\Documents\01 Active Projects\District 08\Hamilton\122048\402-Engineering_PalmerEngineering\Structures\Wall_002\Sheets\122048_002_WE001.dgn

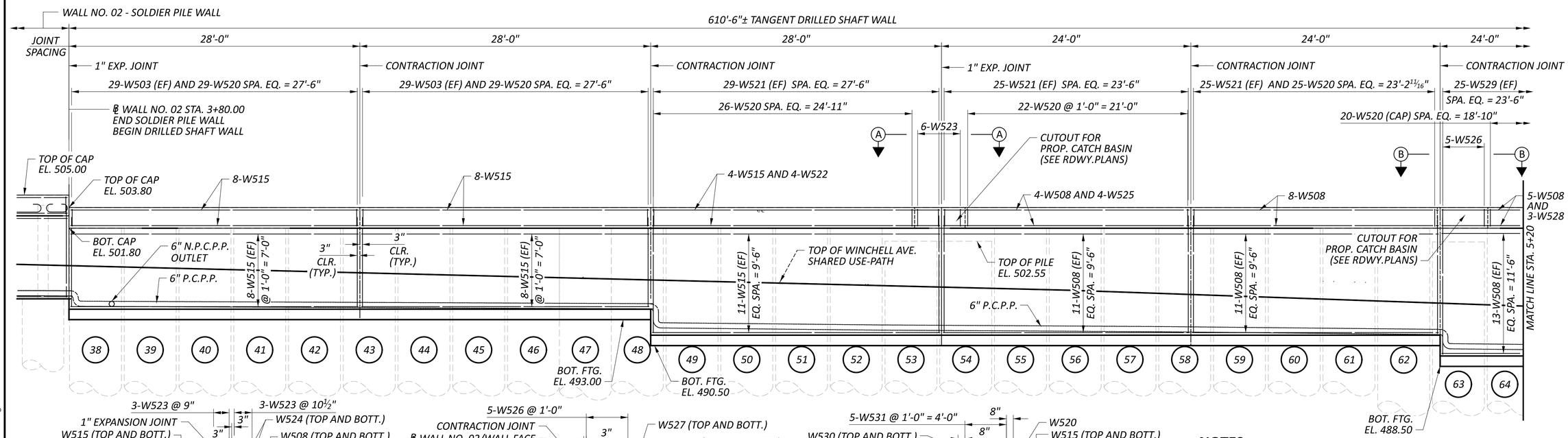

NOTES

1. SEE SHEET 4/29 AND 5/29 FOR GENERAL NOTES.
2. SEE SHEET 20/29 FOR ADDITIONAL TANGENT DRILLED SHAFT TYPICAL SECTION DETAILS.
3. RAILING AND VANDAL PROTECTION FENCE NOT SHOWN FOR CLARITY
4. SEE SITE PLAN FOR P.C.P.P. OUTLET ELEVATIONS.

LAP LENGTHS

#5 HORIZONTAL = 3'-1"
#5 VERTICAL = 2'-5"

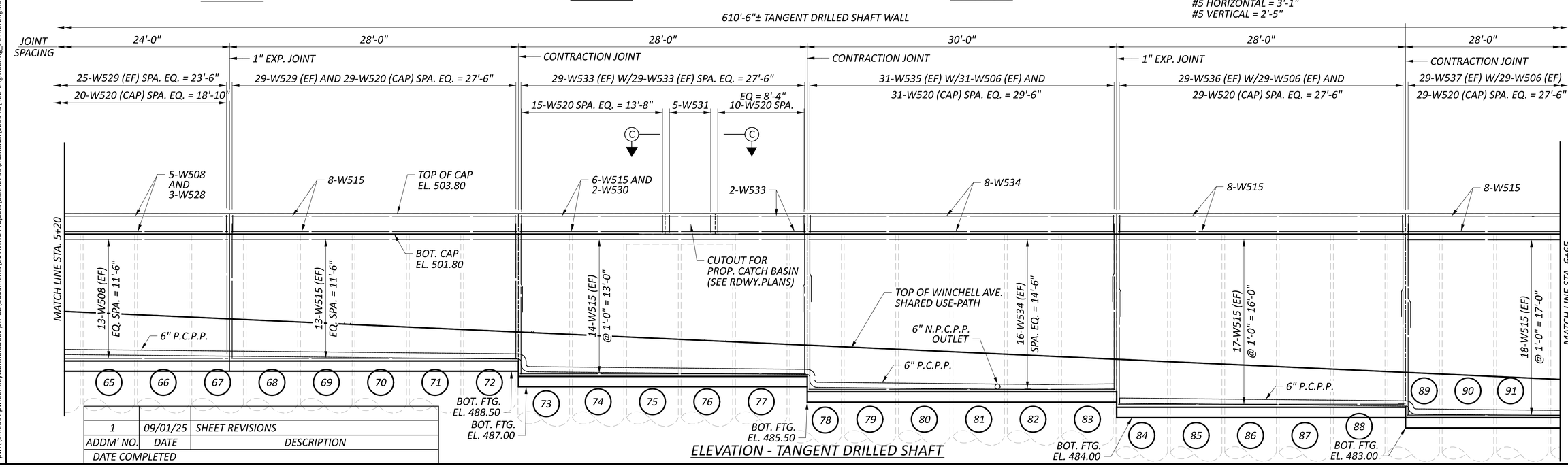

ELEVATION - TANGENT DRILLED SHAFT

ADDM' NO.	DATE	DESCRIPTION
1	09/01/25	SHEET REVISIONS
DATE COMPLETED		

ELEVATION DETAILS - TANGENT DRILLED SHAFT WALL RETAINING WALL NO. 02 ALONG WINCHELL AVE.

DESIGN AGENCY
Palmer ENGINEERING
8350 E. KEMPER ROAD
SUITE B
CINCINNATI, OH 45249
(513) 469-1600

DESIGNER RJB
REVIEWER BJF 04/10/25
PROJECT ID 122048
SUBSET 13 TOTAL 29
SHEET P.176 TOTAL P.421

HAM-IR75-1.05

MODEL: PGL-2 - Tangent_Drilled_Shaft-Profile 1 [Sheet] PAPERSIZE: 34x22 (in.) DATE: 8/27/2025 TIME: 11:33:05 AM PLTDRV: OHDOT_PDF.pltcfg PENTBL: OHDOT_Pen.tbl USER: swalker@palmernet.com WORKSPACE: OHDOTCEv02 WORKSET: 122048 PRODUCT: OpenRoadsDesigner 24.00.00.205
pw:\\ohiodot-pw.bentley.com:ohiodot-pw-02\Documents\01 Active Projects\District 08\Hamilton\122048\402-Engineering_PalmerEngineering\Structures\Wall_002\Sheets\122048_002_WE001.dgn

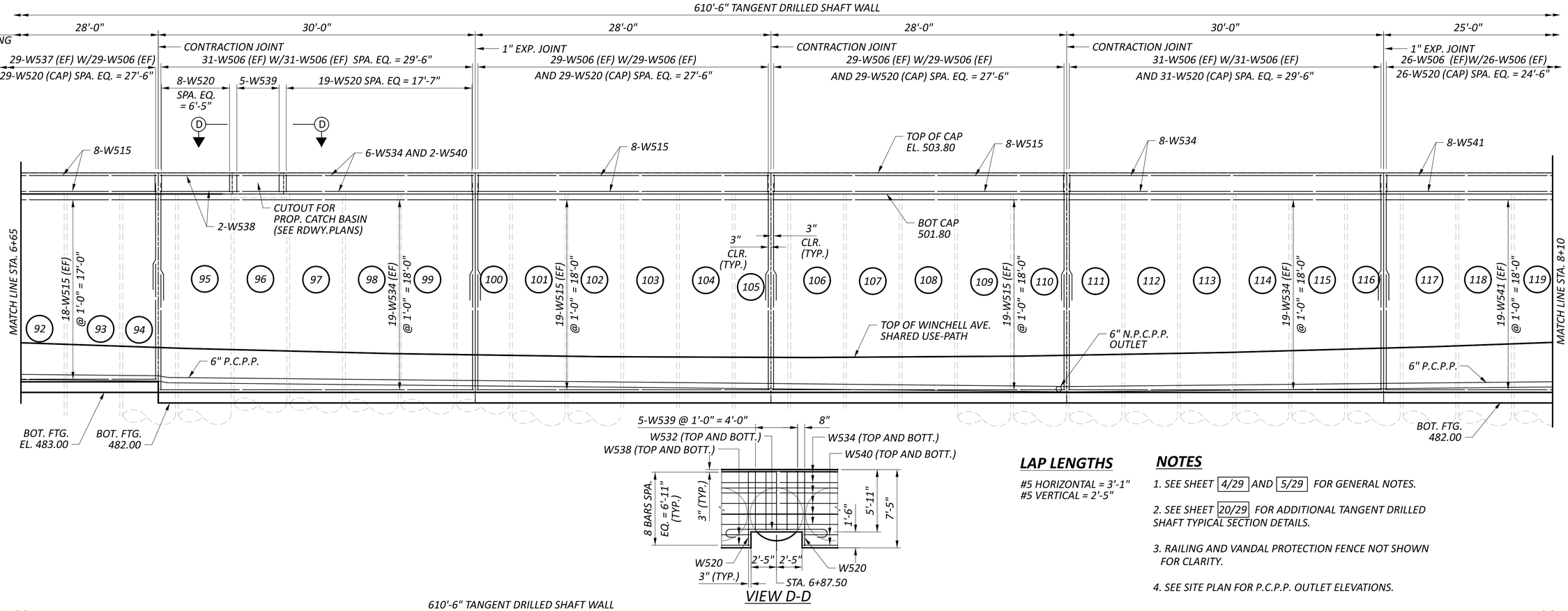

VIEW D-D

LAP LENGTHS

#5 HORIZONTAL = 3'-1"
#5 VERTICAL = 2'-5"

NOTES

1. SEE SHEET 4/29 AND 5/29 FOR GENERAL NOTES.
2. SEE SHEET 20/29 FOR ADDITIONAL TANGENT DRILLED SHAFT TYPICAL SECTION DETAILS.
3. RAILING AND VANDAL PROTECTION FENCE NOT SHOWN FOR CLARITY.
4. SEE SITE PLAN FOR P.C.P.P. OUTLET ELEVATIONS.

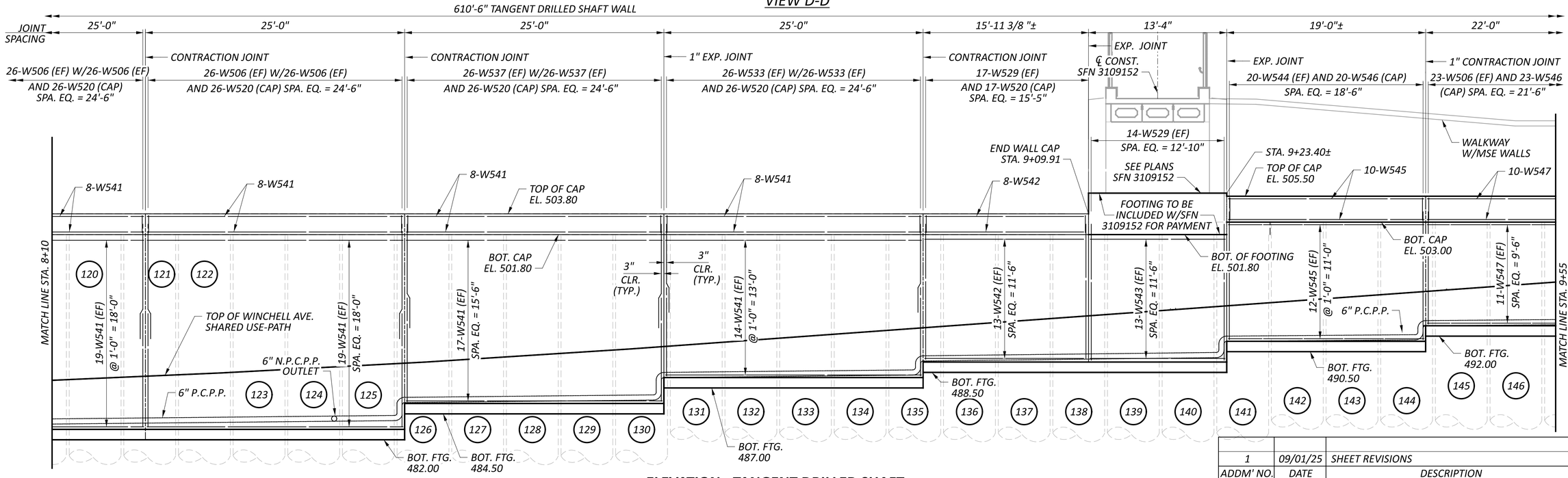

ELEVATION - TANGENT DRILLED SHAFT

ADDM' NO.	DATE	DESCRIPTION
1	09/01/25	SHEET REVISIONS
DATE COMPLETED		

ELEVATION DETAILS - TANGENT DRILLED SHAFT WALL
RETAINING WALL NO. 02 ALONG WINCHELL AVE.

DESIGN AGENCY
Palmer ENGINEERING
8350 E. KEMPER ROAD
SUITE B
CINCINNATI, OH 45249
(513) 469-1600

DESIGNER	RJB
REVIEWER	BJF 04/10/25
PROJECT ID	122048
SUBSET / TOTAL	14 / 29
SHEET / TOTAL	P.177 / P.421

HAM-IR75-1.05

MODEL: PGL-2 - Tangent_Drilled_Shaft-Profile 3 [Sheet] PAPERSIZE: 34x22 (in.) DATE: 8/27/2025 TIME: 11:33:06 AM PLTDRV: OHDOT_PDF.pltcfg PENTBL: OHDOT_Pen.tbl USER: swalker@palmernet.com WORKSPACE: OHDOTCEv02 WORKSET: 122048 PRODUCT: OpenRoadsDesigner 24.00.00.205
pw:\\ohiodot-pw.bentley.com:ohiodot-pw-02\Documents\01 Active Projects\District 08\Hamilton\122048\02-Engineering_Palmer\Engineering\Structures\Wall_002\Sheets\122048_002_WE001.dgn

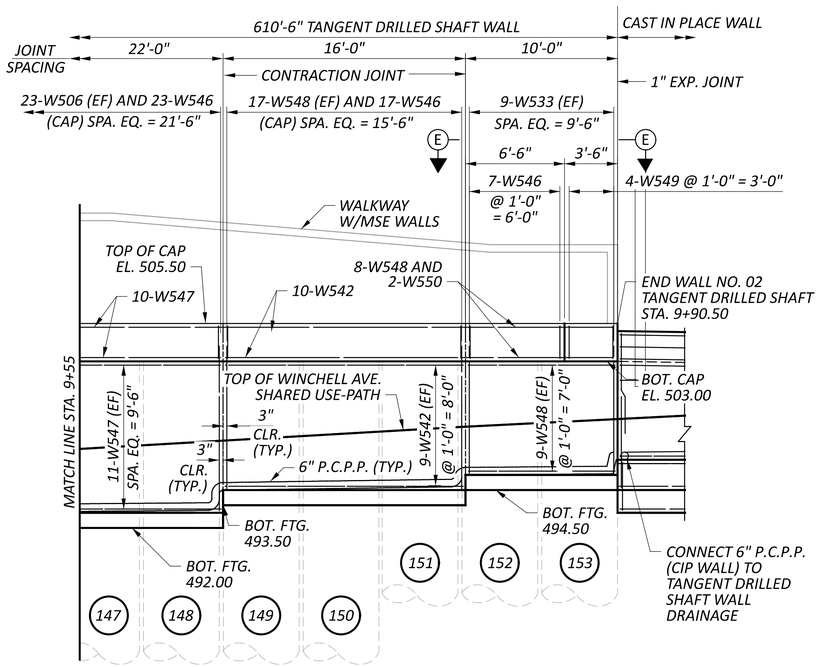

ELEVATION - WALL NO. 02 - TANGENT DRILLED SHAFT

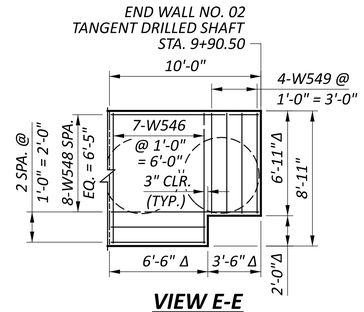

VIEW E-E

LEGEND

☆ REFER TO WALL ELEVATION VIEWS FOR BAR MARKS

Δ CLEARANCE FOR MSE WALL FOOTING (SEE PLANS - SFN31092)

LAP LENGTHS

#5 HORIZONTAL = 3'-1"
#5 VERTICAL = 2'-5"

NOTES

1. SEE SHEET 4/29 AND 5/29 FOR GENERAL NOTES.
2. SEE SHEET 16/29 FOR CAST-IN-PLACE WALL SECTION DETAILS.
3. SEE SHEET 17/29 FOR ADDITIONAL NOISE WALL DETAILS.
4. THE FOOTING CONCRETE OF THE CAST IN PLACE SECTION OF WALL NO. 02 IS PAID FOR UNDER ITEM 511 CLASS QC1 CONCRETE WITH QC/QA, FOOTING.

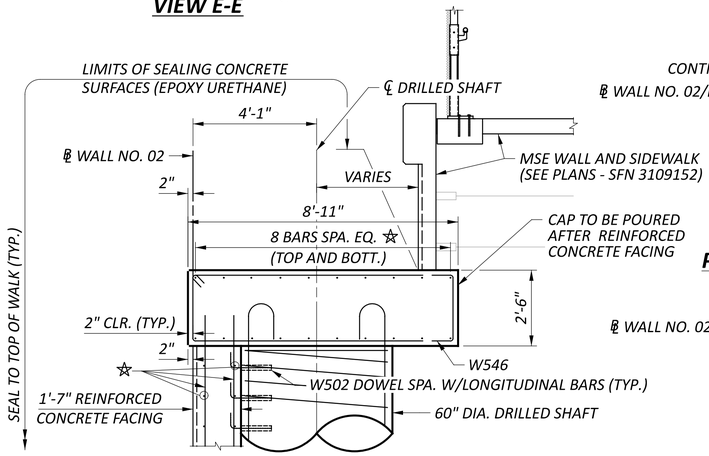

TYPICAL SECTION

STA. 9+23.40 TO STA. 9+90.50

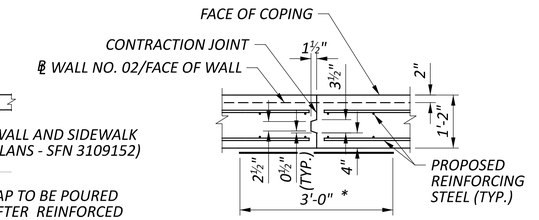

PLAN - C.I.P. WALL CONTRACTION JOINT

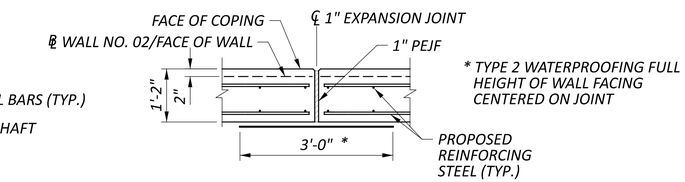

PLAN - C.I.P. WALL EXPANSION JOINT

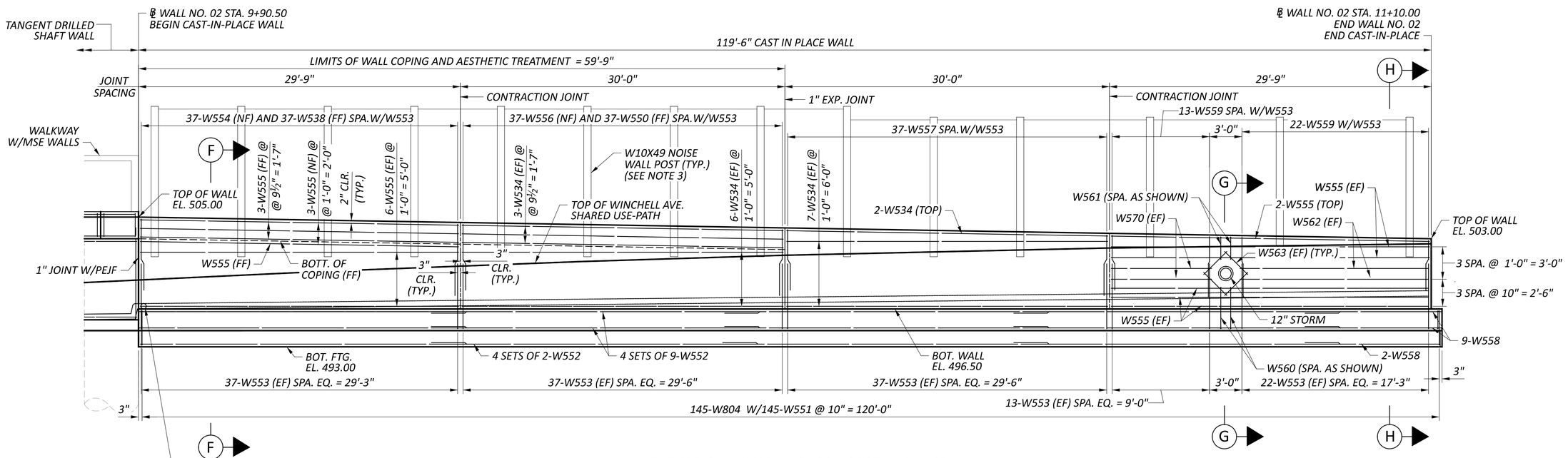

ELEVATION - WALL NO. 02 - CAST IN PLACE

1	09/01/25	SHEET REVISIONS
ADDM' NO.	DATE	DESCRIPTION
DATE COMPLETED		

ELEVATION DETAILS - TANGENT DRILLED SHAFT WALL AND C.I.P. WALL RETAINING WALL NO. 02 ALONG WINCHELL AVE.

DESIGN AGENCY
Palmer ENGINEERING
8350 E. KEMPER ROAD
SUITE B
CINCINNATI, OH 45249
(513) 469-1600

DESIGNER RJB
REVIEWER BJF 04/10/25
PROJECT ID 122048
SUBSET 15 TOTAL 29
SHEET P.178 TOTAL P.421

HAM-IR75-1.05

MODEL: PGL-3 - CIP-Profile 1 [Sheet] PAPERSIZE: 34x22 (in.) DATE: 8/27/2025 TIME: 11:33:07 AM PLTDRV: OHDOT_PDF.pltcfg PENTBL: OHDOT_Pen.tbl USER: swalker@palmernet.com WORKSPACE: OHDOTCivil02 WORKSET: 122048 PRODUCT: OpenRoadsDesigner 24.00.00.205
pw:\\ohiodot-pw.bentley.com:ohiodot-pw-02\Documents\01 Active Projects\District 08\Hamilton\122048\02-Engineering_Palmer\Engineering\Structures\Wall_002\Sheets\122048_002_WE001.dgn

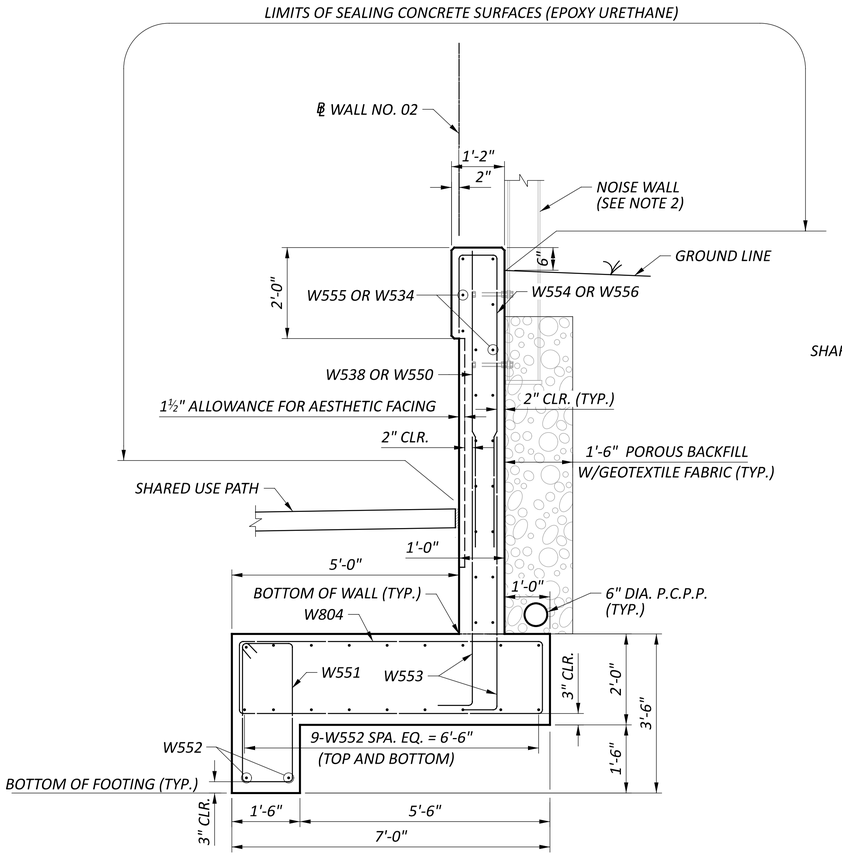

SECTION F-F

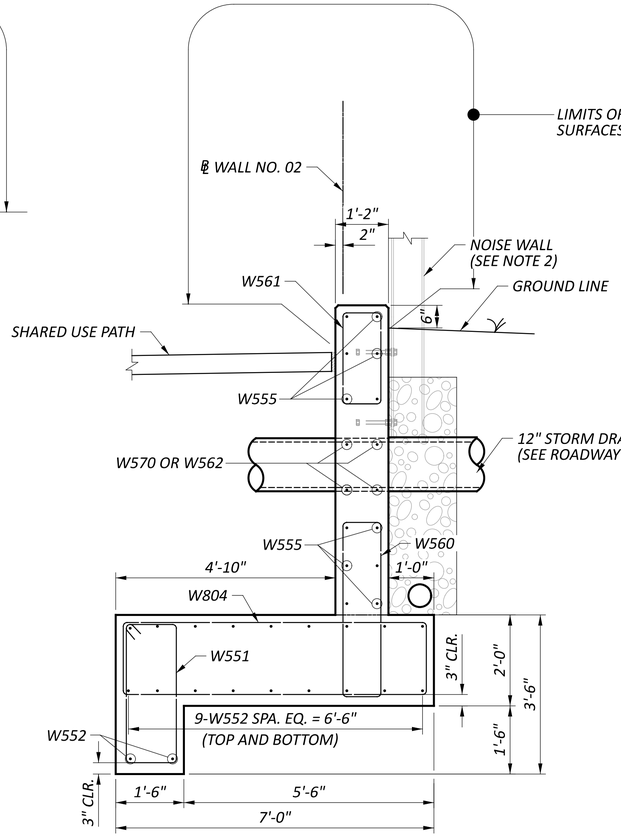

SECTION G-G

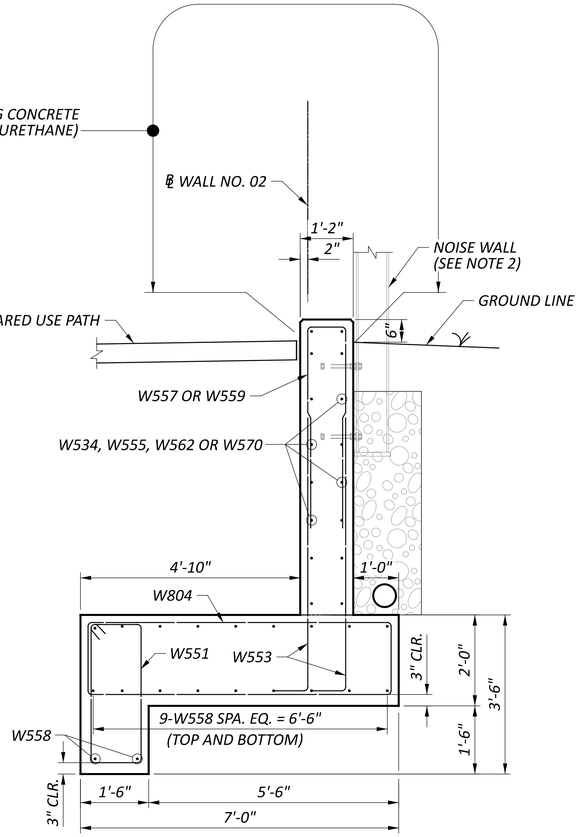

SECTION H-H

NOTES

1. SEE SHEET 15/29 FOR CAST-IN-PLACE WALL ELEVATION VIEWS.
2. SEE SHEET 17/29 FOR NOISE WALL DETAILS.

ADDM' NO.	DATE	DESCRIPTION
1	09/01/25	SHEET REVISIONS
DATE COMPLETED		

SECTION DETAILS - C.I.P. WALL
RETAINING WALL NO. 02 ALONG WINCHELLL AVE.

DESIGN AGENCY
Palmer ENGINEERING
8350 E. KEMPER ROAD
SUITE B
CINCINNATI, OH 45249
(513) 469-1600

DESIGNER	RJB
REVIEWER	BJF 04/10/25
PROJECT ID	122048
SUBSET / TOTAL	16 / 29
SHEET / TOTAL	P.179 / P.421

HAM-IR75-1.05

MODEL: PGL-4 - CIP-Profile 2 [Sheet] PAPERSIZE: 34x22 (in.) DATE: 8/27/2025 TIME: 11:33:08 AM PLTDRV: OHDOT_PDF.pltcfg PENTBL: OHDOT_Pen.tbl USER: swalker@palmernet.com WORKSPACE: OHDOTCtx02 WORKSET: 122048 PRODUCT: OpenRoadsDesigner 24.00.00.205
pw:\\ohiodot-pw.bentley.com:ohiodot-pw-02\Documents\01 Active Projects\District 08\Hamilton\122048\Engineering\02-Engineering_Palmer\Engineering\Structures\Wall_002\Sheets\122048_002_WE001.dgn

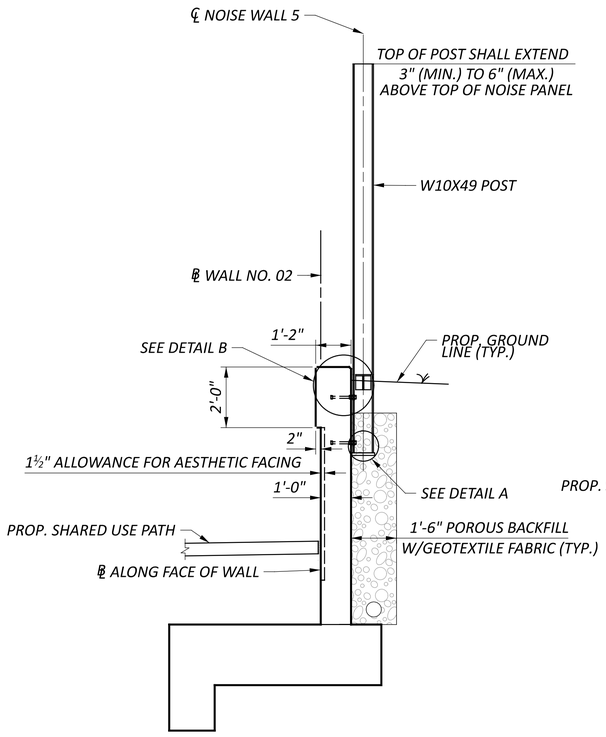

SECTION D-D

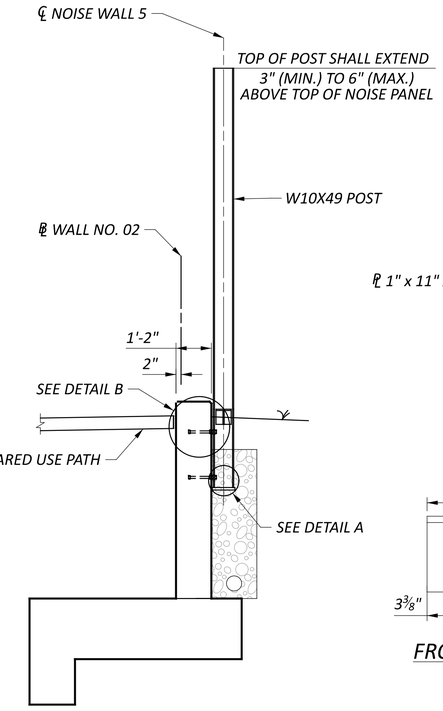

SECTION E-E

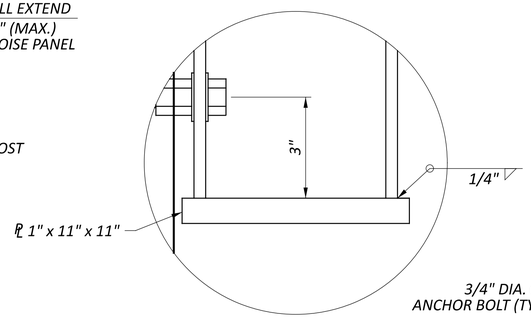

DETAIL A

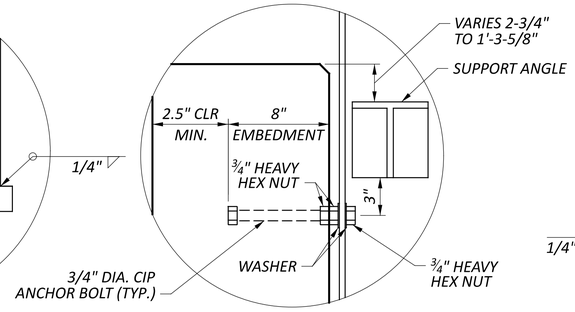

DETAIL B

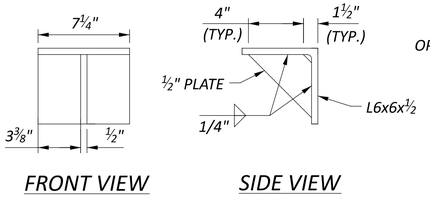

SUPPORT ANGLE DETAILS

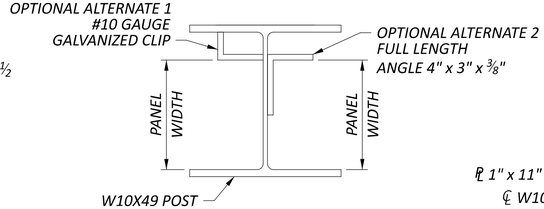

SECTION F-F

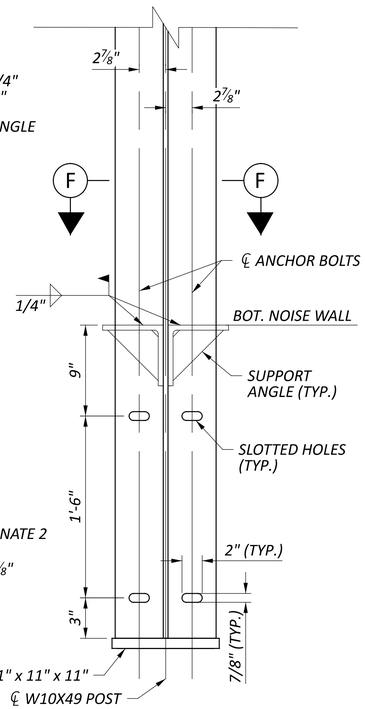

ELEVATION
NOISE WALL POST

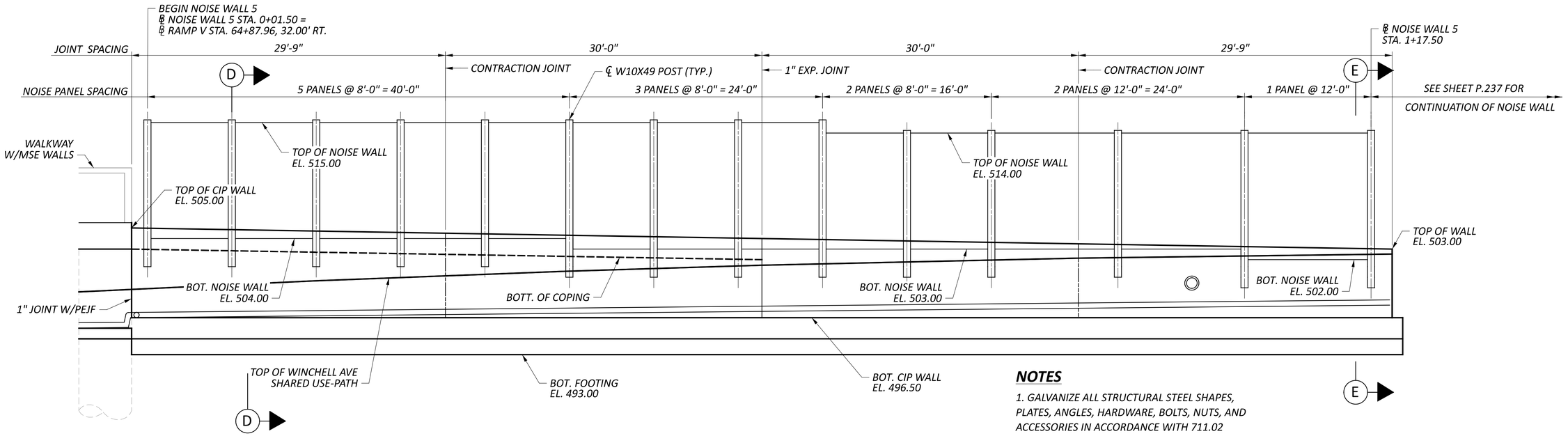

ELEVATION - WALL NO. 02 - NOISE WALL
(REINFORCING NOT SHOWN FOR CLARITY)

NOTES

1. GALVANIZE ALL STRUCTURAL STEEL SHAPES, PLATES, ANGLES, HARDWARE, BOLTS, NUTS, AND ACCESSORIES IN ACCORDANCE WITH 711.02

2. POSTS, ANGLES, AND PLATES SHALL BE ASTM A709 GRADE 50

2. CAST IN PLACE ANCHOR BOLTS SHALL BE ASTM A325 (FURNISHED ACCORDING TO 711.09)

4. SEE SHEET P.237 FOR ADDITIONAL NOISE WALL DETAILS.

5. INCLUDE ALL NOISE WALL MATERIALS IN THE CAST IN PLACE SECTION OF WALL NO. 02 WITH NOISE WALL 5, ITEM SPECIAL: NOISE BARRIER (REFLECTIVE) FOR PAYMENT.

1	09/01/25	SHEET REVISIONS
ADDM' NO.	DATE	DESCRIPTION
DATE COMPLETED		

C.I.P. WALL NOISE WALL DETAILS - NOISE WALL 5 RETAINING WALL NO. 02 ALONG WINCHELL AVE.

DESIGN AGENCY
Palmer ENGINEERING
8350 E. KEMPER ROAD
SUITE B
CINCINNATI, OH 45249
(513) 469-1600

DESIGNER RJB
REVIEWER BJF 04/10/25
PROJECT ID 122048
SUBSET 17 TOTAL 29
SHEET P.180 TOTAL P.421

HAM-IR75-1.05

MODEL: Noise Wall [Sheet] PAPERSIZE: 34x22 (in.) DATE: 8/27/2025 TIME: 11:33:16 AM PLTDRV: OHDOT_PDF.pltcfg PENTBL: OHDOT_Pen.tbl USER: swalker@palmernet.com WORKSPACE: OHDOTCEv02 WORKSET: 122048 PRODUCT: OpenRoadsDesigner 24.00.00.205
pw:\\ohiodot-pw.bentley.com:ohiodot-pw-02\Documents\01 Active Projects\District 08\Hamilton\122048\402-Engineering_PalmerEngineering\Structures\Wall_002\Sheets\122048_002_WE002.dgn

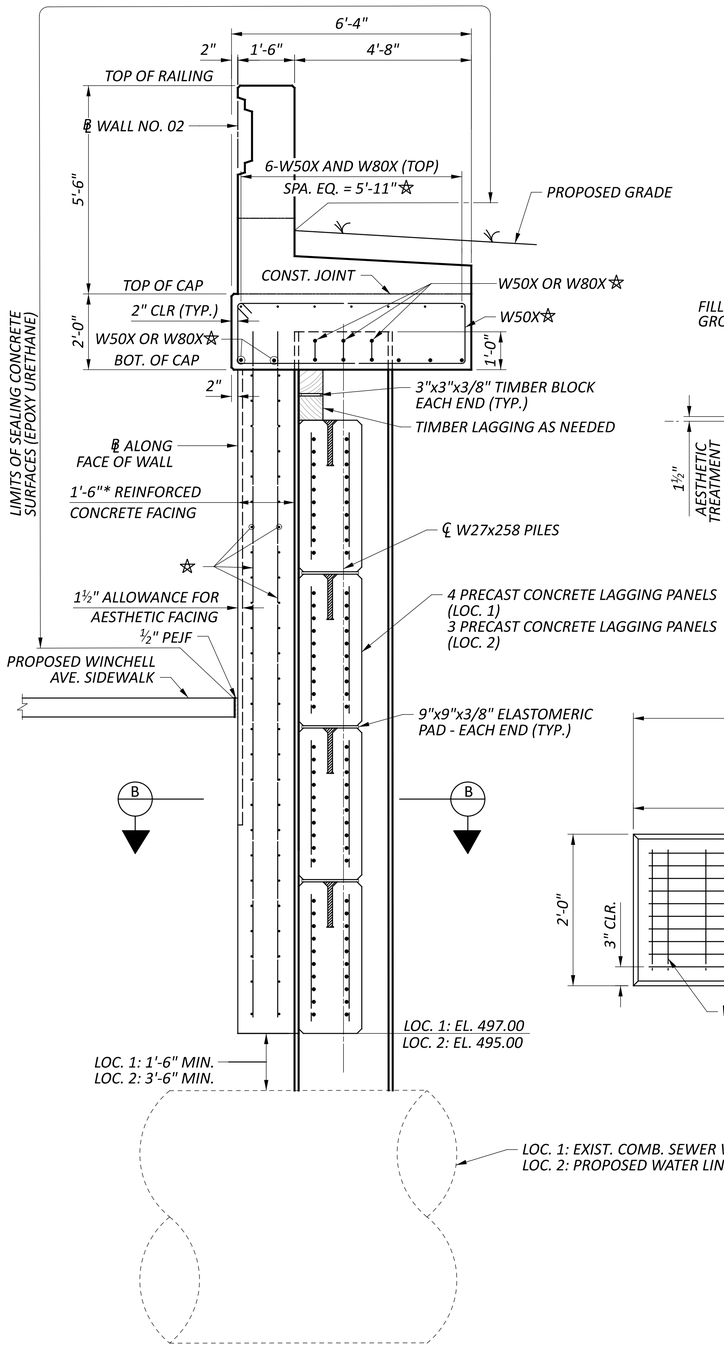

WALL SECTION

LOCATION 1: STA. 1+04.08 TO STA. 1+22.37
LOCATION 2: STA. 2+23.83 TO STA. 2+37.86
VPF NOT SHOWN FOR CLARITY

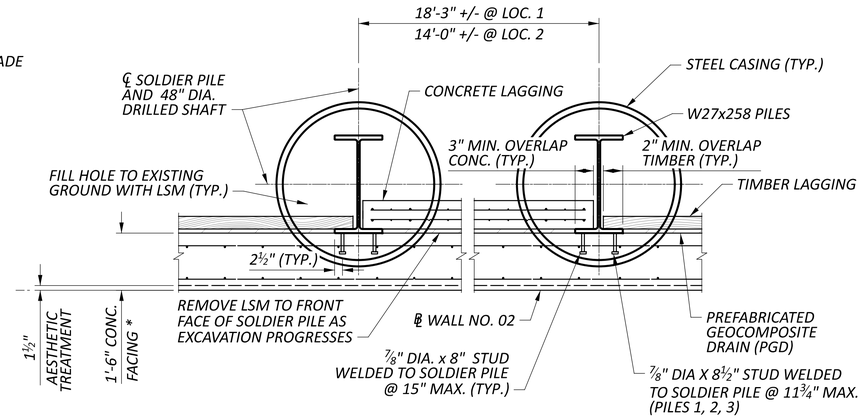

SECTION B-B

PILES 1, 2, 16, & 17

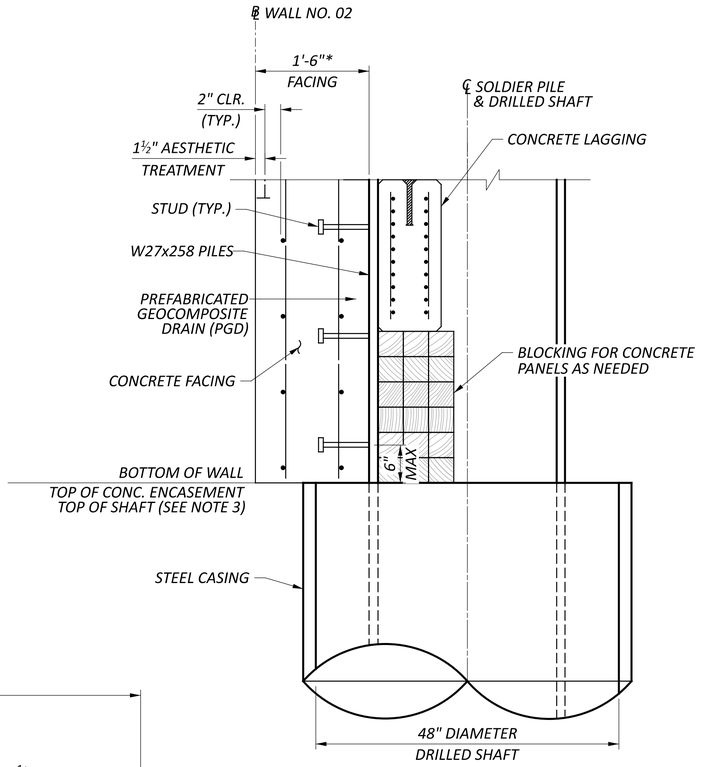

BLOCKING DETAIL AT TOP OF SHAFT

PILES 1 & 2

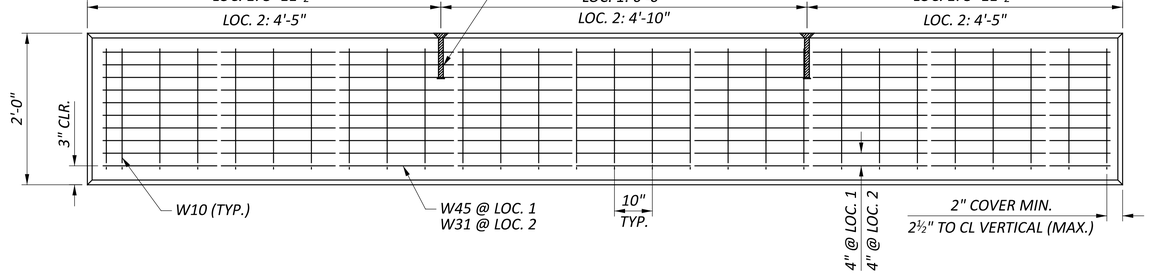

PRECAST CONCRETE LAGGING ELEVATION

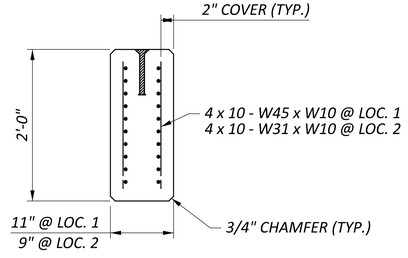

PRECAST CONCRETE LAGGING SECTION

LEGEND

☆ REFER TO WALL ELEVATION VIEWS FOR BAR MARKS

Δ BASED ON ACCURATE PLACE OF PILES. ADJUSTMENTS SHOULD BE MADE TO THE LAGGING IF PILE SPACING PROHIBITS 3" OF BEARING ON FLANGE

* THE OUTSIDE CONCRETE WALL FACING SHALL BE CONSTRUCTED PLUMB WITH ℄ WALL NO. 02

NOTES

1. SEE SHEET 4/29 AND 5/29 FOR GENERAL NOTES.
2. SEE SHEET 12/29 FOR WALL NO. 02 ELEVATION VIEWS AND ADDITIONAL WALL NO. 02 REINFORCING STEEL DETAILS.
3. SEE SHEET 7/29 FOR FOUNDATION PLAN.
4. PRECAST CONCRETE LAGGING SHALL HAVE COMPRESSIVE STRENGTH OF 4.0 KSI AND REINFORCING SHALL BE WELDED WIRE FABRIC GRADE 65, FY 65 KSI EPOXY COATED CONFORMING TO 709.14.
5. SEE SHEET 21/29 FOR MOMENT SLAB REINFORCING
6. SEE SHEETS 23-26/29 FOR RAILING REINFORCEMENT.

ADDM' NO.	DATE	DESCRIPTION
1	09/01/25	SHEET REVISIONS
DATE COMPLETED		

SOLDIER PILE WALL DETAILS 1 OF 2
RETAINING WALL NO. 02 ALONG WINCHELL AVE.

DESIGN AGENCY
Palmer ENGINEERING
8350 E. KEMPER ROAD
SUITE B
CINCINNATI, OH 45249
(513) 469-1600

DESIGNER	
RJB	
REVIEWER	
BJF	04/10/25
PROJECT ID	
122048	
SUBSET	TOTAL
18	29
SHEET	TOTAL
P.182	P.421

HAM-IR75-1.05

MODEL: Sheet 2 PAPERSIZE: 34x22 (in.) DATE: 8/27/2025 TIME: 11:33:22 AM PLTDRV: OHDOT_PDF.pltcfg PENTBL: OHDOT_Pen.tbl USER: swalker@palmernet.com WORKSPACE: OHDOTCivil02 WORKSET: 122048 PRODUCT: OpenRoadsDesigner 24.00.00.205
pw:\\ohiodot-pw.bentley.com:ohiodot-pw-02\Documents\01 Active Projects\District 08\Hamilton\122048\402 Engineering_PalmerEngineering\Structures\Wall_002\Sheets\122048_002_WD002.dgn

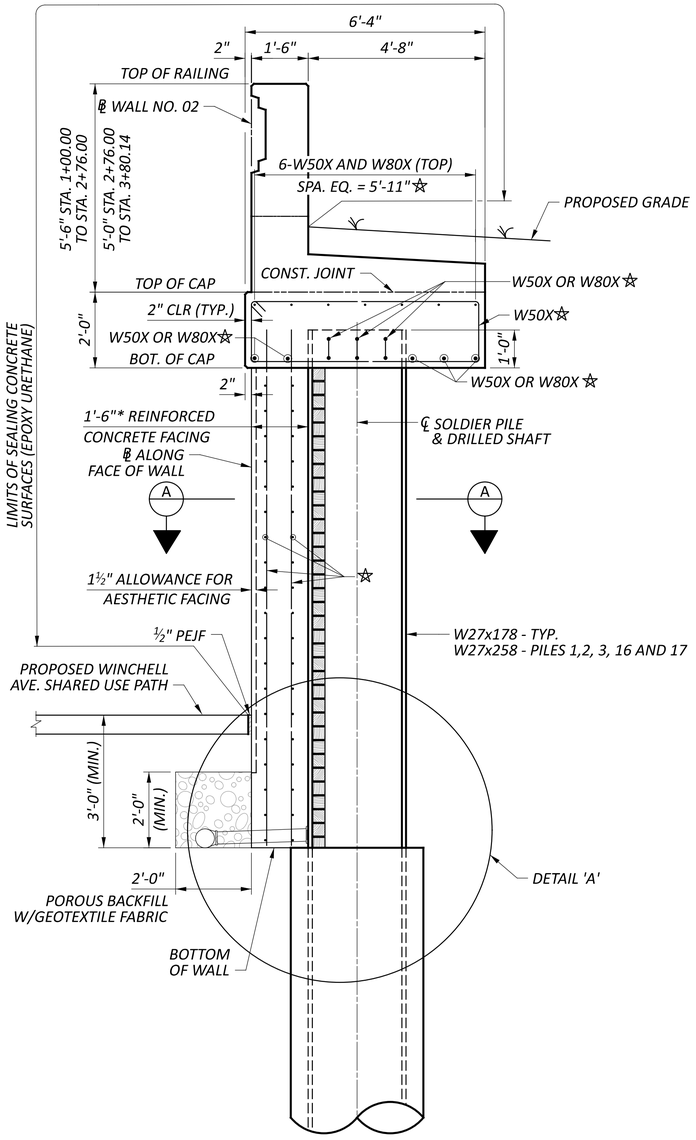

TYPICAL WALL SECTION

STA. 1+00.00 TO STA. 1+04.08
STA. 1+22.37 TO STA. 2+23.83
STA. 2+37.86 TO STA. 3+80.00
V.P.F. NOT SHOWN FOR CLARITY

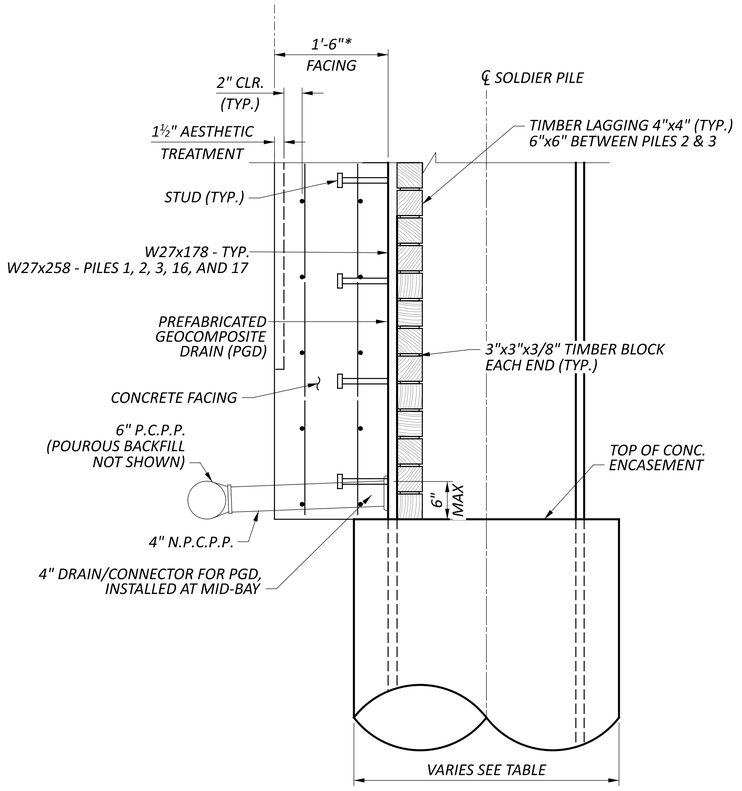

DETAIL 'A'

TYPCIAL SECTION

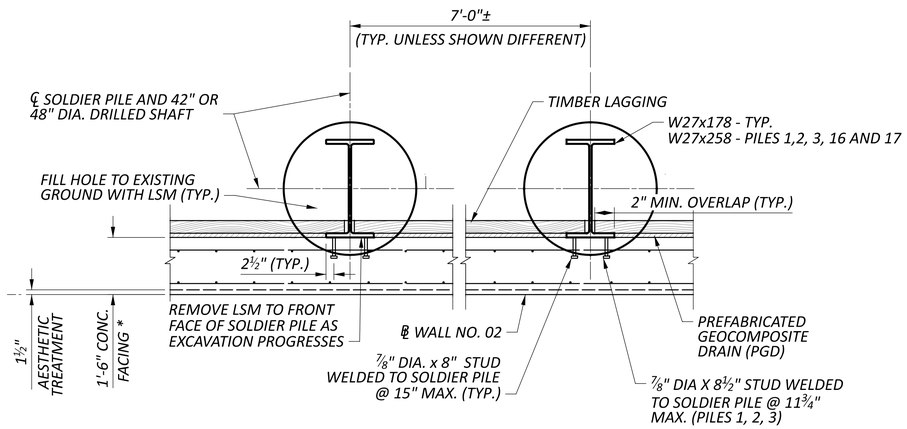

SECTION A-A

LEGEND

☆ REFER TO WALL ELEVATION VIEWS FOR BAR MARKS

* THE OUTSIDE CONCRETE WALL FACING SHALL BE CONSTRUCTED PLUMB WITH ℄ WALL NO. 02

NOTES

1. SEE SHEET 4/29 AND 5/29 FOR GENERAL NOTES.
2. SEE SHEET 12/29 FOR WALL NO. 02 ELEVATION VIEWS AND ADDITIONAL WALL NO. 02 REINFORCING STEEL DETAILS.
3. SEE SHEET 7/29 FOR FOUNDATION PLAN.
4. TIMBER LAGGING SHALL BE SOUTHERN PINE #2 OR BETTER.
5. SEE SHEET 21/29 FOR MOMENT SLAB DETAILS.
6. SEE SHEET 23-26/29 FOR RAILING DETAILS.

ADDM' NO.	DATE	DESCRIPTION
1	09/01/25	SHEET REVISIONS
DATE COMPLETED		

SOLDIER PILE WALL DETAILS 2 OF 2
RETAINING WALL NO. 02 ALONG WINCHELL AVE.

DESIGN AGENCY
Palmer ENGINEERING
8350 E. KEMPER ROAD
SUITE B
CINCINNATI, OH 45249
(513) 469-1600

DESIGNER RJB
REVIEWER BJF 04/10/25
PROJECT ID 122048
SUBSET 19 TOTAL 29
SHEET P.181 TOTAL P.421

HAM-IR75-1.05

MODEL: Sheet PAPERSIZE: 34x22 (in.) DATE: 8/27/2025 TIME: 11:33:31 AM PLTDRV: OHDOT_PDF.pltcfg PENTBL: OHDOT_Pen.tbl USER: swalker@palmernet.com WORKSPACE: OHDOTCEx02 WORKSET: 122048 PRODUCT: OpenRoadsDesigner 24.00.00.205
pw:\\ohiodot-pw.bentley.com:ohiodot-pw-02\Documents\01 Active Projects\District 08\Hamilton\122048\w02-Engineering_PalmerEngineering\Structures\Wall_002\Sheets\122048_WALL002_WD001.dgn

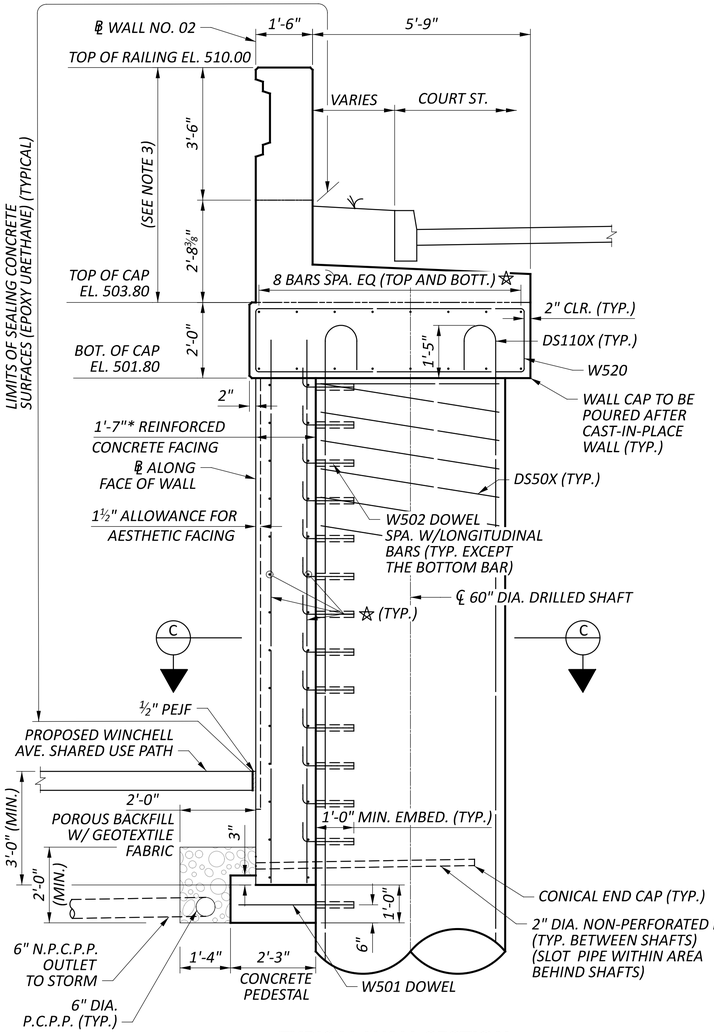

TYPICAL WALL SECTION

STA. 3+80.00 TO STA. 9+10.00
V.P.F. NOT SHOWN FOR CLARITY

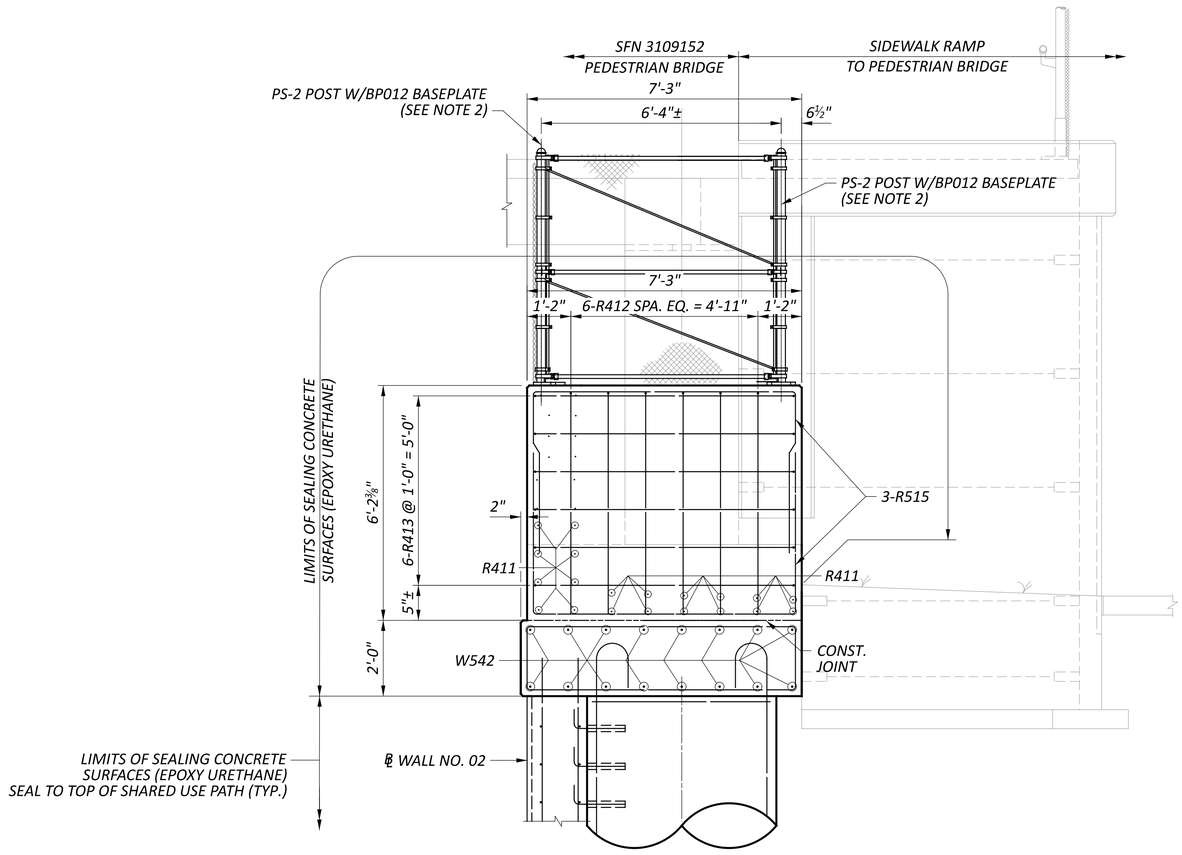

WALL SECTION

STA. 9+08.50 TO STA. 9+10.00

LAP LENGTHS

#4 VERTICAL = 1'-11"

LEGEND

☆ REFER TO WALL ELEVATION VIEWS FOR BAR MARKS

∗ THE OUTSIDE CONCRETE WALL FACING SHALL BE CONSTRUCTED PLUMB WITH ℄ WALL NO. 02

NOTES

1. SEE SHEET 4/29 AND 5/29 FOR GENERAL NOTES.
2. SEE SHEETS 13/29 - 15/29 FOR WALL NO. 02 ELEVATION VIEWS AND ADDITIONAL WALL NO. 02 REINFORCING STEEL DETAILS.
3. SEE SHEETS 21/29 - 27/29 FOR MOMENT SLAB AND RAILING DETAILS.
4. DOWELS TO BE INSTALLED WITH 1'-0" MINIMUM EMBEDMENT PER ITEM 510 - DOWEL HOLE WITH NONSHRINK, NONMETALLIC GROUT.
5. INCLUDE THE CONCRETE PEDESTAL BELOW THE CONCRETE FACING WITH ITEM 511 - CLASS QC1 CONCRETE, RETAINING/ WINGWALL NOT INCLUDING FOOTING, AS PER PLAN.
6. SEE SHEET 11/29 FOR ADDITIONAL TANGENT DRILLED SHAFT REINFORCEMENT STEEL DETAILS.

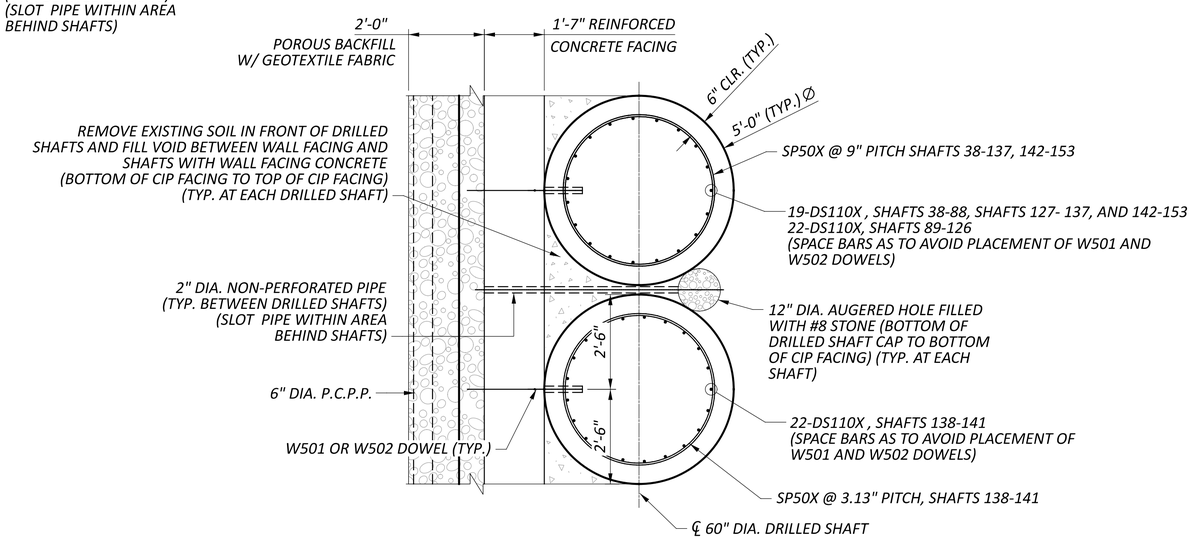

SECTION C-C

(SEE NOTE 6)

TANGENT DRILLED SHAFT WALL DETAILS
RETAINING WALL NO. 02 ALONG WINCHELL AVE.

1	09/01/25	SHEET REVISIONS
ADDM' NO.	DATE	DESCRIPTION
DATE COMPLETED		

DESIGN AGENCY
Palmer ENGINEERING
8350 E. KEMPER ROAD
SUITE B
CINCINNATI, OH 45249
(513) 469-1600

DESIGNER RJB
REVIEWER BJF 04/10/25
PROJECT ID 122048
SUBSET 20 TOTAL 29
SHEET P.183 TOTAL P.421

HAM-IR75-1.05

MODEL: Sheet 2 PAPERSIZE: 34x22 (in.) DATE: 8/27/2025 TIME: 11:33:32 AM PLTDRV: OHDOT_PDF.pltcfg PENTBL: OHDOT_Pen.tbl USER: swalker@palmernet.com WORKSPACE: OHDOTCivil02 WORKSET: 122048 PRODUCT: OpenRoadsDesigner 24.00.00.205
pw:\\ohiodot-pw.bentley.com:ohiodot-pw-02\Documents\01 Active Projects\District 08\Hamilton\122048\402-Engineering_PalmerEngineering\Structures\Wall_002\Sheets\122048_WALL002_WD001.dgn

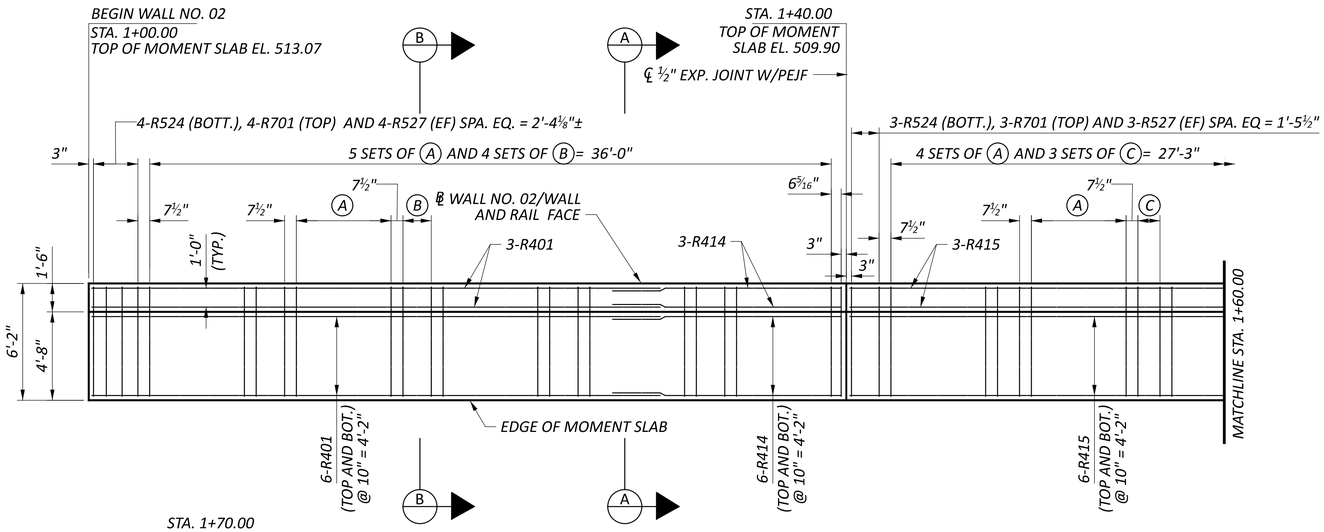

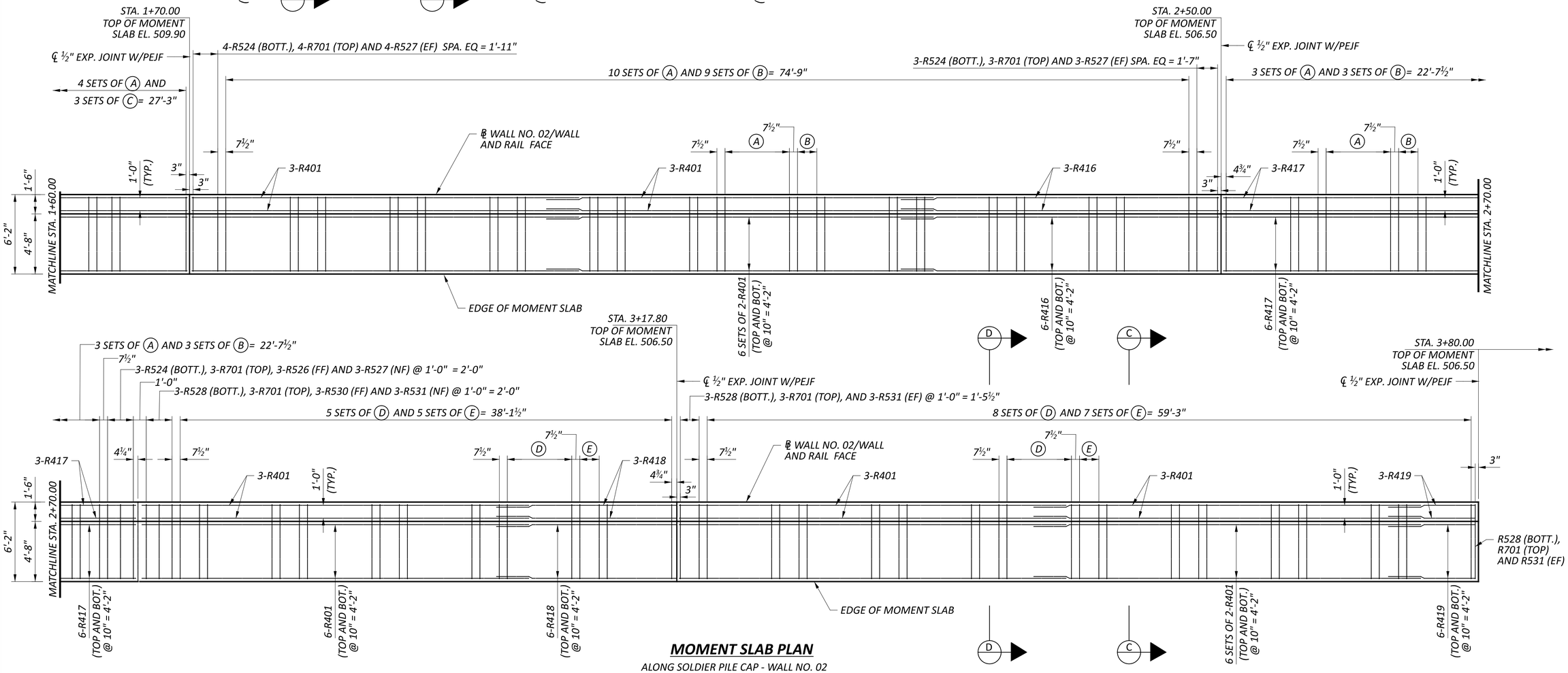

MOMENT SLAB PLAN

ALONG SOLDIER PILE CAP - WALL NO. 02

LEGEND

(A) 6-R524 (BOTT.), 6-R701 (TOP), 6-R526 (FF) AND 6-R527 (NF) @ 1'-0" = 5'-0"
(B) 3-R524 (BOTT.), 3-R701 (TOP) AND 3-R527 (EF) @ 9" = 1'-6"
(C) 3-R524 (BOTT.), 3-R701 (TOP) AND 3-R527 (EF) @ 7" = 1'-2"
(D) 6-R528 (BOTT.), 6-R701 (TOP), 6-R530 (FF) AND 6-R531 (NF) @ 1'-0" = 5'-0"
(E) 3-R528 (BOTT.), 3-R701 (TOP) AND 3-R531 (EF) @ 9" = 1'-6"

NOTES

1. SEE SHEETS 23/29 AND 24/29 FOR RAILING ELEVATION VIEWS.
2. SEE SHEET 26/29 FOR SECTION VIEWS.

LAP LENGTHS

#4 HORIZONTAL = 2'-6"

1	09/01/25	SHEET REVISIONS
ADDM' NO.	DATE	DESCRIPTION
DATE COMPLETED		

MOMENT SLAB DETAILS 1 OF 2
RETAINING WALL NO. 02 ALONG WINCHELL AVE.

DESIGN AGENCY
Palmer ENGINEERING
8350 E. KEMPER ROAD
SUITE B
CINCINNATI, OH 45249
(513) 469-1600

DESIGNER RJB
REVIEWER BJF 04/10/25
PROJECT ID 122048
SUBSET 21 TOTAL 29
SHEET P.184 TOTAL P.421

HAM-IR75-1.05

MODEL: Sheet 3A PAPERSIZE: 34x22 (in.) DATE: 8/27/2025 TIME: 11:33:33 AM PLTDRV: OHDOT_PDF.pltcfg PENTBL: OHDOT_Pen.tbl USER: swalker@palmernet.com WORKSPACE: pw:\\ohiodot-pw.bentley.com:ohiodot-pw-02\Documents\01 Active Projects\District 08\Hamilton\122048\d02-Engineering_Palmer\Engineering\Structures\Wall_002\Sheets\122048_WALL002_WD001.dgn

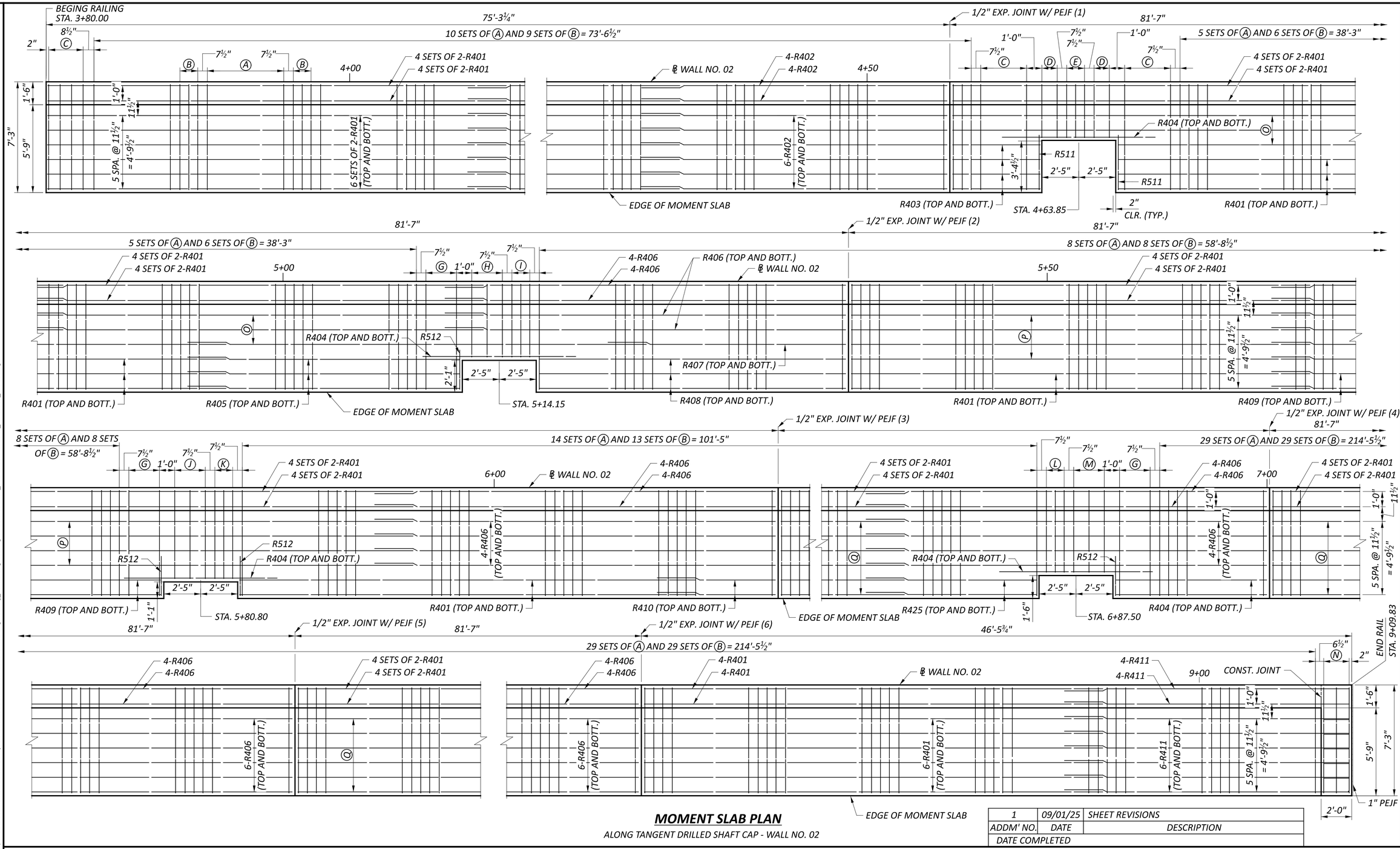

MOMENT SLAB PLAN

ALONG TANGENT DRILLED SHAFT CAP - WALL NO. 02

ADDM' NO.	DATE	DESCRIPTION
1	09/01/25	SHEET REVISIONS
DATE COMPLETED		

LEGEND

- Ⓐ 6-R501 (BOTT.), 6-R702 (TOP), 6-R513 (NF) AND 6-R514 (FF) @ 1'-0" = 5'-0"
- Ⓑ 3-R501 (BOTT.), 3-R702 (TOP) AND 3-R513 (EF) @ 7" = 1'-2"
- Ⓒ 4-R501 (BOTT.), 4-R702 (TOP), 4-R513 (NF) AND 4-R514 (FF) @ 1'-0" = 3'-0"
- Ⓓ 2-R503 (BOTT.), 2-R703 (TOP), 2-R513 (NF) AND 2-R514 (FF) @ 1'-0" = 2'-0"
- Ⓔ 3-R503 (BOTT.), 3-R703 (TOP) AND 3-R513 (EF) @ 7" = 1'-2"
- Ⓕ NOT USED
- Ⓖ 3-R501 (BOTT.), 3-R702 (TOP), 3-R513 (NF) AND 3-R514 (FF) @ 1'-0" = 2'-0"
- Ⓗ 3-R505 (BOTT.), 3-R704 (TOP), 3-R513 (NF) AND 3-R514 (FF) @ 1'-0" = 2'-0"
- Ⓘ 3-R505 (BOTT.), 3-R704 (TOP) AND 3-R513 (EF) @ 7" = 1'-2"
- Ⓙ 3-R507 (BOTT.), 3-R705 (TOP), 3-R513 (NF) AND 3-R514 (FF) @ 1'-0" = 2'-0"
- Ⓚ 3-R507 (BOTT.) AND 3-R705 (TOP) 3-R513 (EF) @ 7" = 1'-2"
- Ⓛ 3-R509 (BOTT.) AND 3-R706 (TOP) 3-R513 (EF) @ 7" = 1'-2"
- Ⓜ 3-R509 (BOTT.), 3-R706 (TOP), 3-R513 (NF) AND 3-R514 (FF) @ 1'-0" = 2'-0"
- Ⓝ 2 SETS OF 3-R515 (TOP AND BOTT.) (SEE NOTE 2 FOR ADDITIONAL BAR MARKS)
- Ⓞ 3 SETS OF 2-R401 (TOP AND BOTT.)
- Ⓟ 4-SETS OF 2-R401 (TOP AND BOTT.)
- Ⓠ 6-SETS OF 2-R401 (TOP AND BOTT.)

NOTES

1. SEE SHEET 25/29 FOR RAILING DETAILS.
2. SEE SHEETS 20/29 AND 27/29 FOR SECTION VIEWS.

LAP LENGTHS

#4 HORIZONTAL = 2'-6"

MOMENT SLAB DETAILS 2 OF 2
RETAINING WALL NO. 02 ALONG WINCHELL AVE.

DESIGN AGENCY
Palmer ENGINEERING
8350 E. KEMPER ROAD
SUITE B
CINCINNATI, OH 45249
(513) 469-1600

DESIGNER	RJB
REVIEWER	BJF 04/10/25
PROJECT ID	122048
SUBSET	22
TOTAL	29
SHEET	P.185
TOTAL	P.421

HAM-IR75-1.05

MODEL: Sheet 3B PAPERSIZE: 34x22 (in.) DATE: 8/27/2025 TIME: 11:33:34 AM PLTDRV: OHDOT_PDF.pltcfg PENTBL: OHDOT_Pen.tbl USER: swalker@palmernet.com WORKSPACE: OHDOTCEv02 WORKSET: 122048 PRODUCT: OpenRoadsDesigner 24.00.00.205
pw:\\ohiodot-pw.bentley.com:ohiodot-pw-02\Documents\01 Active Projects\District 08\Hamilton\122048\02 Engineering_PalmerEngineering\Structures\Wall_002\Sheets\122048_WALL002_WD001.dgn

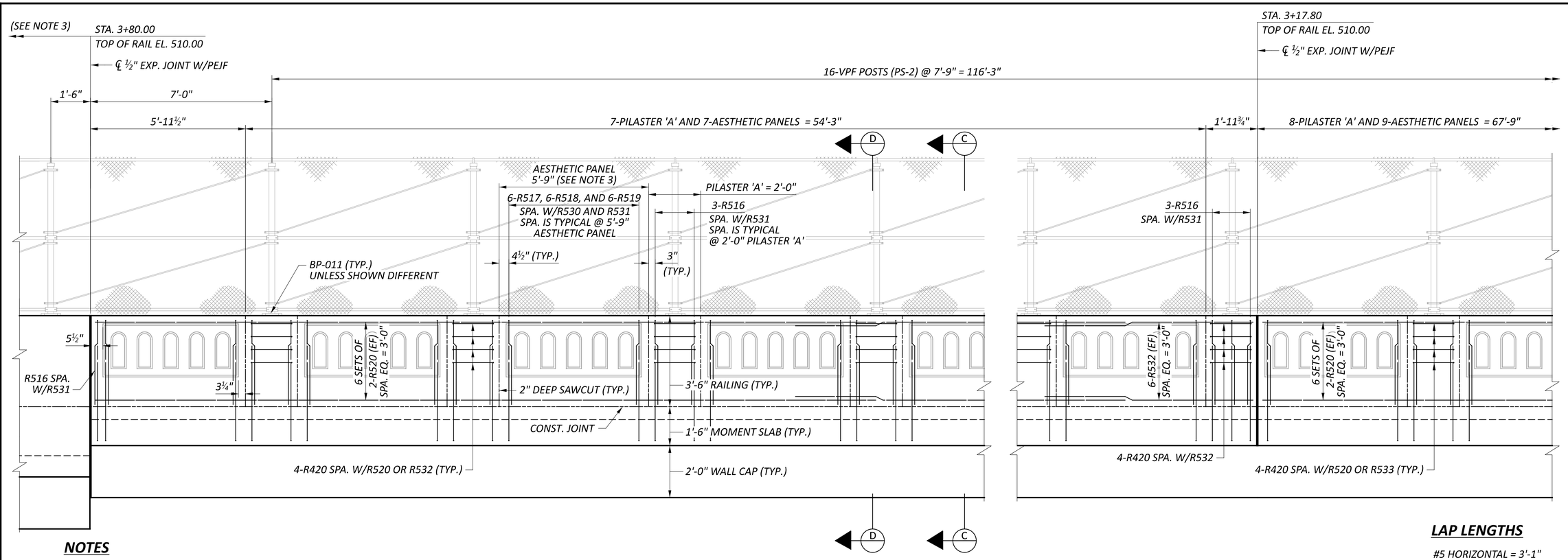

NOTES

1. SEE SHEET 26/29 FOR SECTION VIEWS.
2. SEE SHEET 21/29 FOR MOMENT SLAB PLAN.
3. SEE SHEET 25/29 FOR ADDITIONAL RAILING AND VPF DETAILS.

LAP LENGTHS

#5 HORIZONTAL = 3'-1"
#5 VERTICAL = 2'-5"

1	09/01/25	SHEET REVISIONS
ADDM' NO.	DATE	DESCRIPTION
DATE COMPLETED		

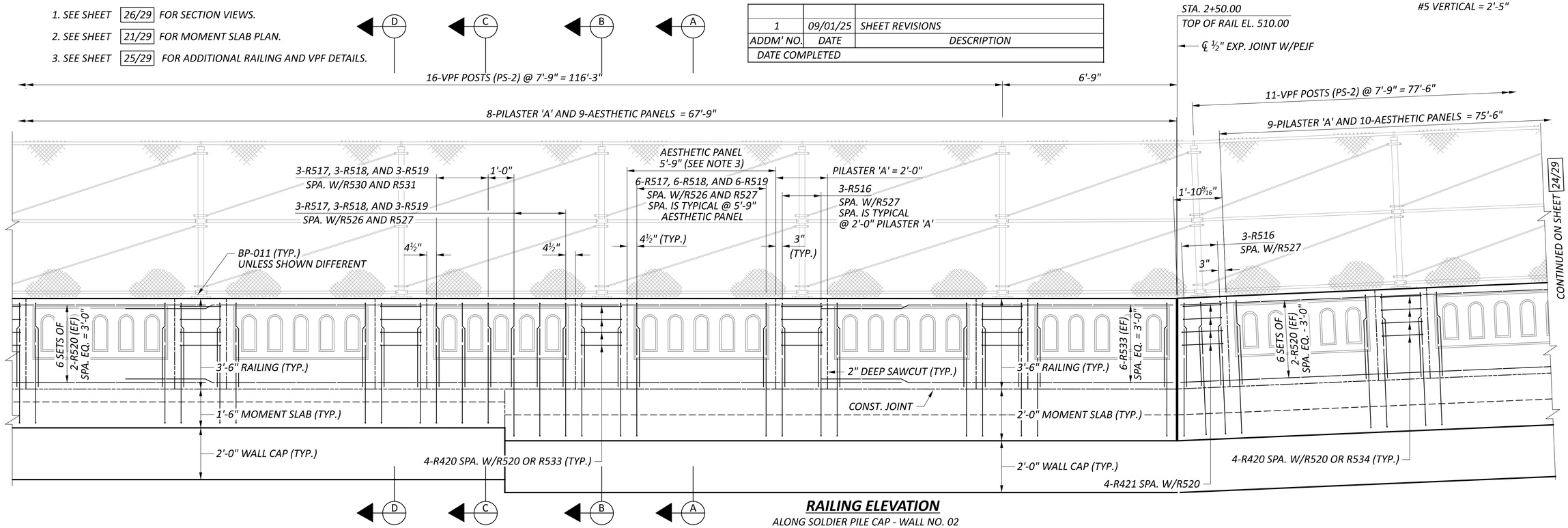

RAILING ELEVATION

ALONG SOLDIER PILE CAP - WALL NO. 02

RETAINING WALL NO. 02 ALONG WINCHELL AVE.

DESIGN AGENCY
Palmer ENGINEERING
8350 E. KEMPER ROAD
SUITE B
CINCINNATI, OH 45249
(513) 469-1600

DESIGNER	RJB
REVIEWER	BJF 04/10/25
PROJECT ID	122048
SUBSET	23
TOTAL	29
SHEET	P.186
TOTAL	P.421

HAM-IR75-1.05

MODEL: Sheet 4B PAPERSIZE: 34x22 (in.) DATE: 8/27/2025 TIME: 11:33:35 AM PLTDRV: OHDOT_PDF.pltcfg PENTBL: OHDOT_Pen.tbl USER: swalker@palmernet.com WORKSPACE: OHDOTCEv02 WORKSET: 122048 PRODUCT: OpenRoadsDesigner 24.00.00.205
pw:\\ohiodot-pw.bentley.com:ohiodot-pw-02\Documents\01 Active Projects\District 08\Hamilton\122048\d02-Engineering_PalmerEngineering\Structures\Wall_002\Sheets\122048_WALL002_WD001.dgn

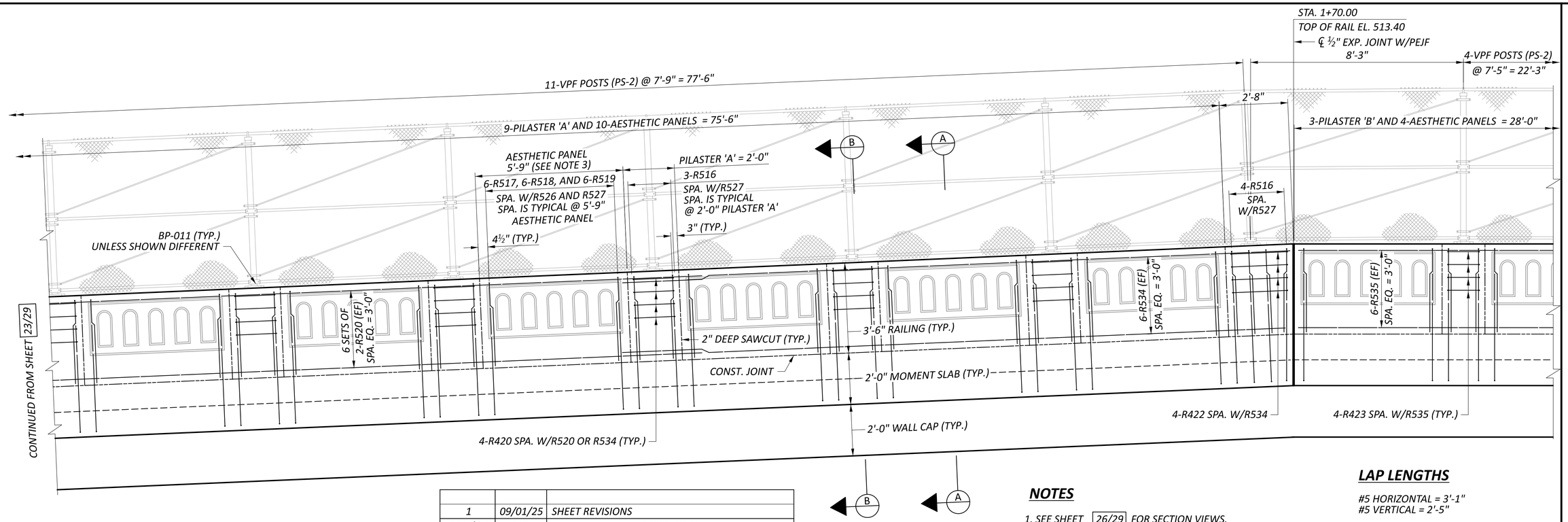

1	09/01/25	SHEET REVISIONS
ADDM' NO.	DATE	DESCRIPTION
DATE COMPLETED		

NOTES

1. SEE SHEET 26/29 FOR SECTION VIEWS.
2. SEE SHEET 21/29 FOR MOMENT SLAB PLAN.
3. SEE SHEET 25/29 FOR ADDITIONAL RAILING AND VPF DETAILS.

LAP LENGTHS

#5 HORIZONTAL = 3'-1"
#5 VERTICAL = 2'-5"

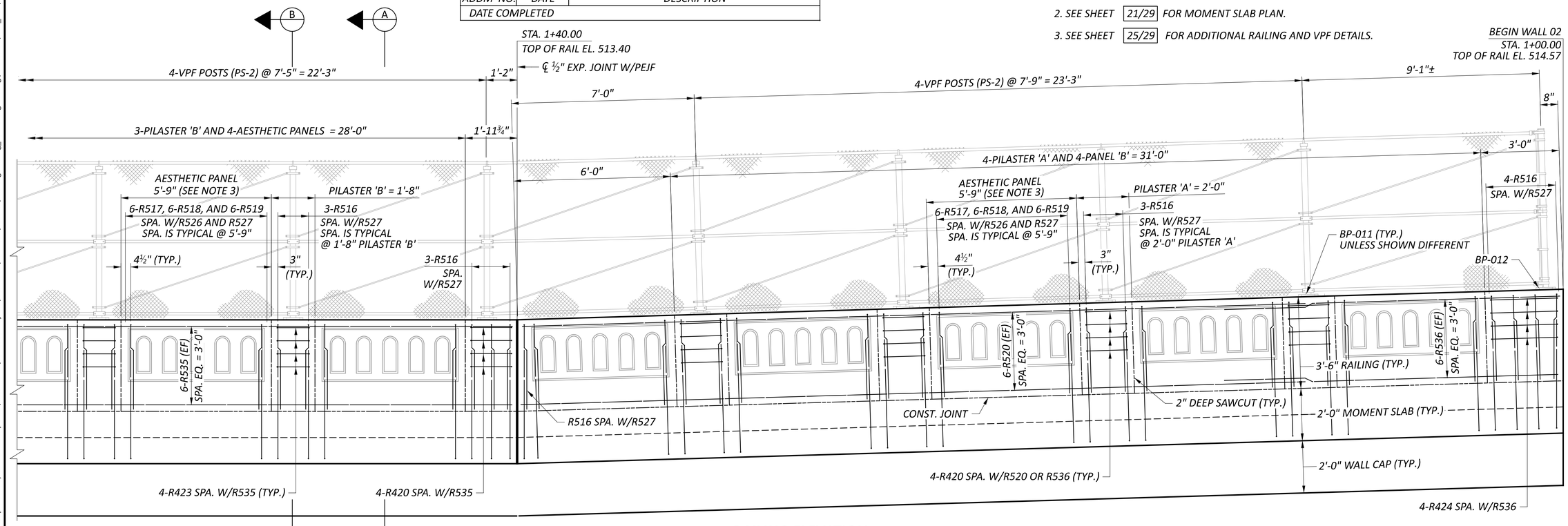

RAILING ELEVATION

ALONG SOLDIER PILE CAP - WALL NO. 02

RAILING DETAILS 2 OF 3
RETAINING WALL NO. 02 ALONG WINCHELL AVE.

HAM-IR75-1.05

MODEL: Sheet 4C PAPERSIZE: 34x22 (in.) DATE: 8/27/2025 TIME: 11:33:36 AM PLTDRV: OHDOT_PDF.pltcfg PENTBL: OHDOT_Pen.tbl USER: swalker@palmernet.com WORKSPACE: OHDOTCEv02 WORKSET: 122048 PRODUCT: OpenRoadsDesigner 24.00.00.205
pw:\\ohiodot-pw.bentley.com:ohiodot-pw-02\Documents\01 Active Projects\District 08\Hamilton\122048\402-Engineering_PalmerEngineering\Structures\Wall_002\Sheets\122048_WALL002_WD001.dgn

DESIGN AGENCY
Palmer ENGINEERING
8350 E. KEMPER ROAD
SUITE B
CINCINNATI, OH 45249
(513) 469-1600

DESIGNER	RJB
REVIEWER	BJF 04/10/25
PROJECT ID	122048
SUBSET	24
TOTAL	29
SHEET	P.187
TOTAL	P.421

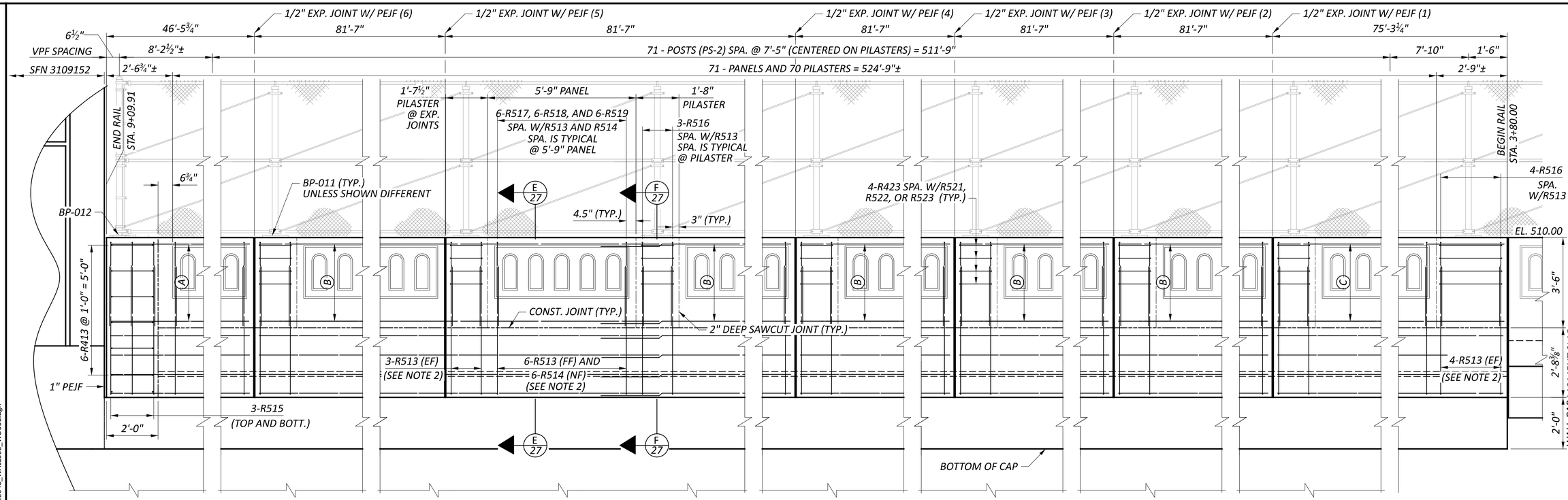

RAILING ELEVATION

ALONG DRILLED SHAFT CAP - WALL NO. 02

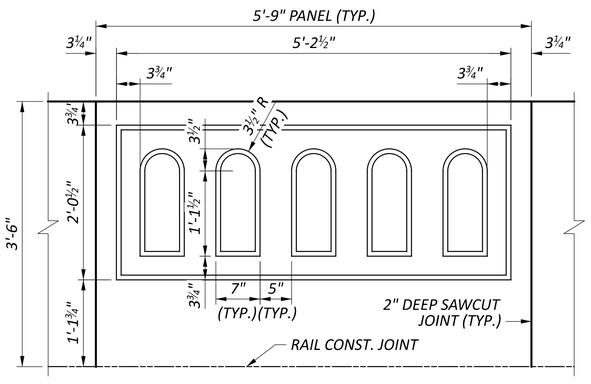

RAILING ELEVATION

5'-9' PANEL AESTHETIC DETAIL
(SEE NOTE 3)

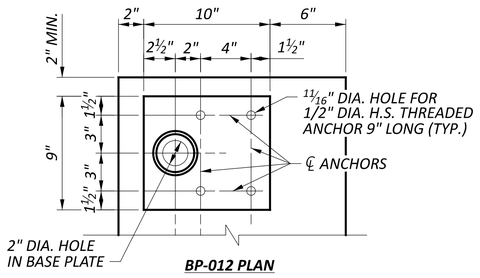

BP-012 PLAN

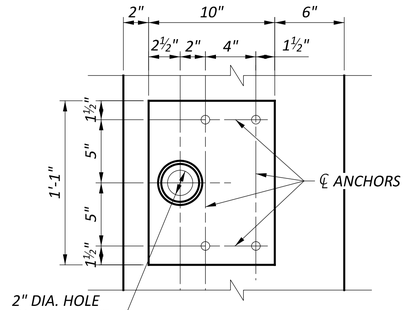

BP-011 PLAN

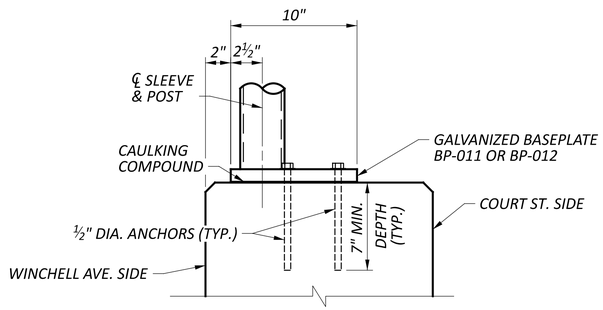

TYPICAL SECTION

BP-011 AND BP-012
BASE PLATE ASSY.

LAP LENGTHS

#5 HORIZONTAL = 3'-1"
#5 VERTICAL = 2'-5"

LEGEND

- (A) 6-R520 (EF) W/6-R521 (EF)
- (B) 6 SETS OF 2-R520 (EF) W/6-R522 (EF)
- (C) 6 SETS OF 2-R520 (EF) W/6-R523 (EF)

NOTES

1. SEE SHEET 4/29 AND 5/29 FOR GENERAL NOTES.
2. SEE SHEET 21/29 AND 22/29 FOR MOMENT SLAB DETAILS.
3. SEE SHEET S 20/29 AND 27/29 FOR SECTION VIEWS.
4. SEE STD. DWG. VPF-1-24 FOR ADDITIONAL DETAILS REGARDING THE BASEPLATE, POST SLEEVE, AND APPROVED ADHESIVE ANCHOR BOLT OPTIONS. BASE PLATES SHALL BE 50 KSI GALVANIZED STEEL.

RAILING DETAILS 3 OF 3
RETAINING WALL NO. 02 ALONG WINCHELL AVE.

ADDM' NO.	DATE	DESCRIPTION
1	09/01/25	SHEET REVISIONS
DATE COMPLETED		

DESIGN AGENCY
Palmer ENGINEERING
8350 E. KEMPER ROAD
SUITE B
CINCINNATI, OH 45249
(513) 469-1600

DESIGNER	
RJB	
REVIEWER	
BJF	04/10/25
PROJECT ID	
122048	
SUBSET	TOTAL
25	29
SHEET	TOTAL
P.188	P.421

HAM-IR75-1.05

MODEL: Sheet 4 PAPERSIZE: 34x22 (in.) DATE: 8/27/2025 TIME: 2:30:59 PM PLTDRV: OHDOT_PDF.pltcfg PENTBL: OHDOT_Pen.tbl USER: swalker@palmernet.com WORKSPACE: OHDOTCEv02 WORKSET: 122048 PRODUCT: OpenRoadsDesigner 24.00.00.205
pw:\\ohiodot-pw.bentley.com:ohiodot-pw-02\Documents\01 Active Projects\District 08\Hamilton\122048\02-Engineering_Palmer\Engineering\Structures\Wall_002\Sheets\122048_WALL002_WD001.dgn

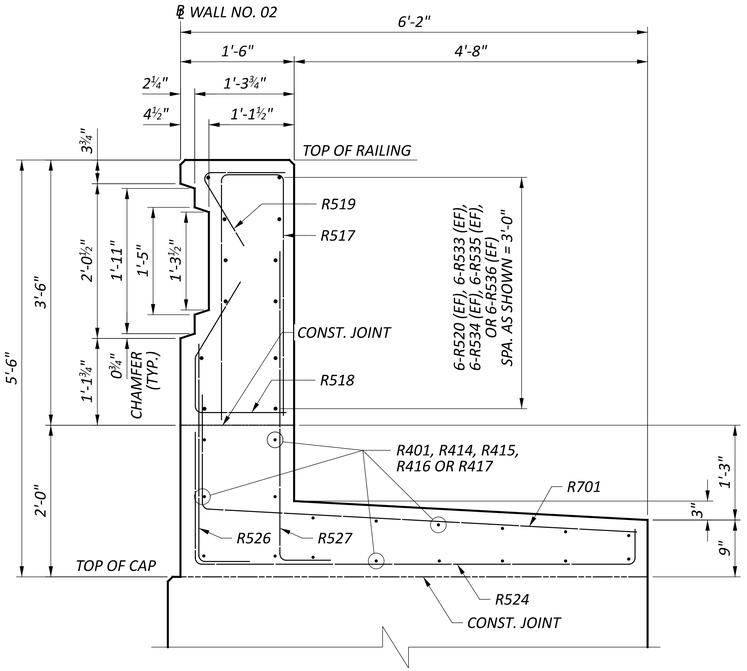

SECTION A-A

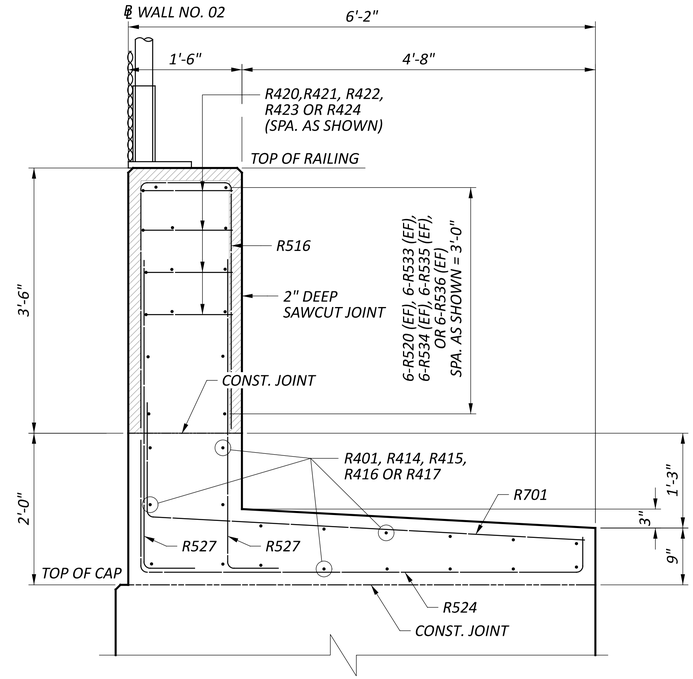

SECTION B-B

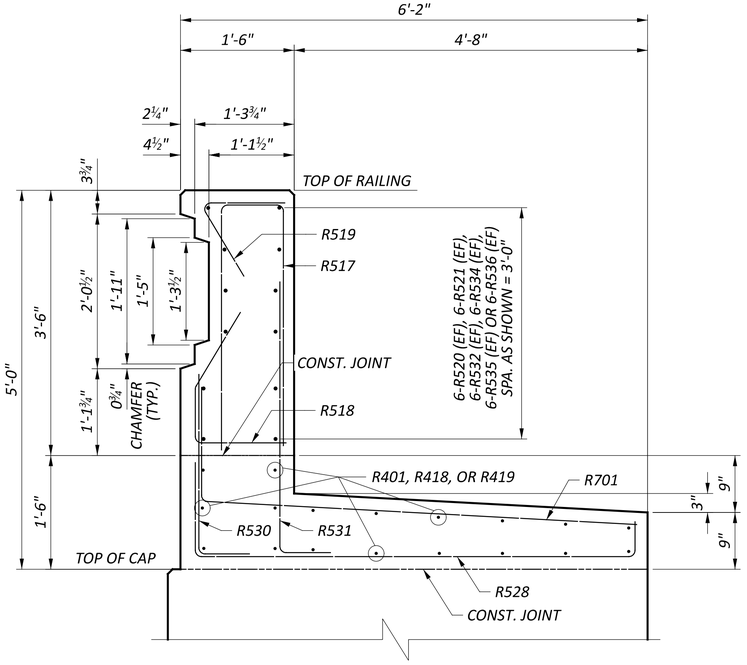

SECTION C-C

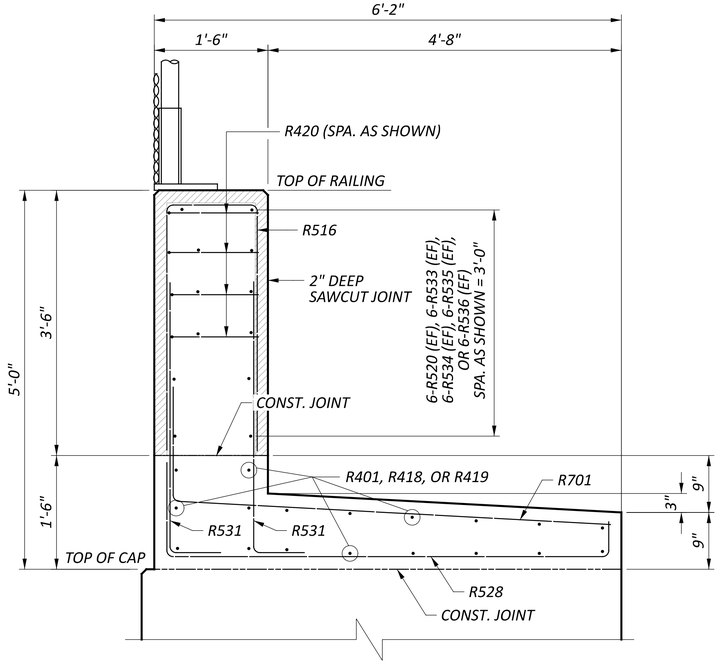

SECTION D-D

NOTES

1. SEE SHEETS 23/29 AND 24/29 FOR RAILING ELEVATION VIEWS AND LONGITUDINAL REINFORCING BAR IDENTIFICATION.
2. SEE SHEET 21/29 FOR MOMENT SLAB PLAN AND LONGITUDINAL REINFORCING BAR IDENTIFICATION.
3. SEE SHEET 25/29 FOR ADDITIONAL RAILING AND VPF DETAILS.

ADDM' NO.	DATE	DESCRIPTION
1	09/01/25	SHEET REVISIONS
DATE COMPLETED		

MOMENT SLAB AND RAILING DETAILS 1 OF 2
RETAINING WALL NO. 02 ALONG WINCHELL AVE.

DESIGN AGENCY
Palmer ENGINEERING
8350 E. KEMPER ROAD
SUITE B
CINCINNATI, OH 45249
(513) 469-1600

DESIGNER RJB
REVIEWER BJF 04/10/25
PROJECT ID 122048
SUBSET 26 TOTAL 29
SHEET P.189 TOTAL P.421

HAM-IR75-1.05

MODEL: Sheet 5A PAPERSIZE: 34x22 (in.) DATE: 8/27/2025 TIME: 11:33:38 AM PLTDRV: OHDOT_PDF.pltcfg PENTBL: OHDOT_Pen.tbl USER: swalker@palmernet.com WORKSPACE: OHDOTCEv02 WORKSET: 122048 PRODUCT: OpenRoadsDesigner 24.00.00.205
pw:\\ohiodot-pw.bentley.com:ohiodot-pw-02\Documents\01 Active Projects\District 08\Hamilton\122048\402-Engineering_PalmerEngineering\Structures\Wall_002\Sheets\122048_WALL002_WD001.dgn

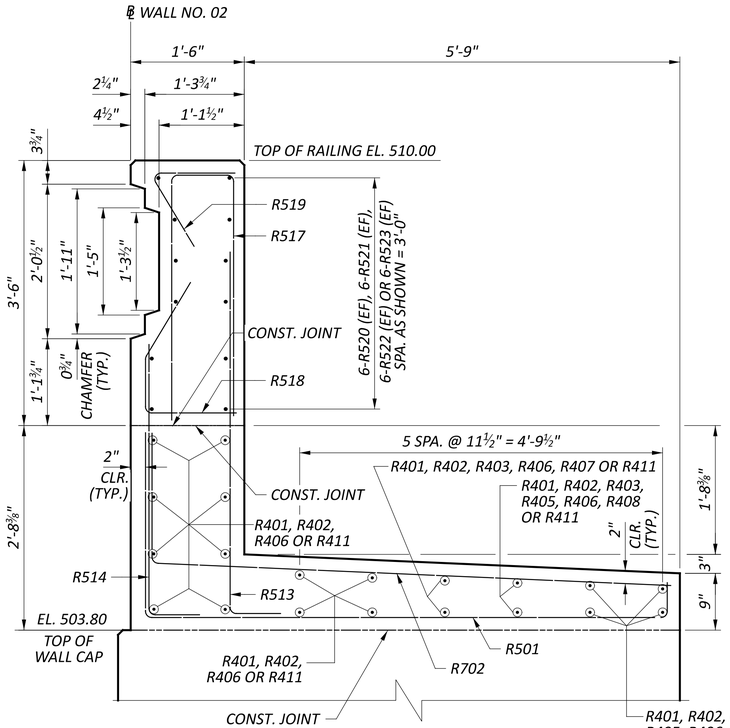

SECTION E-E

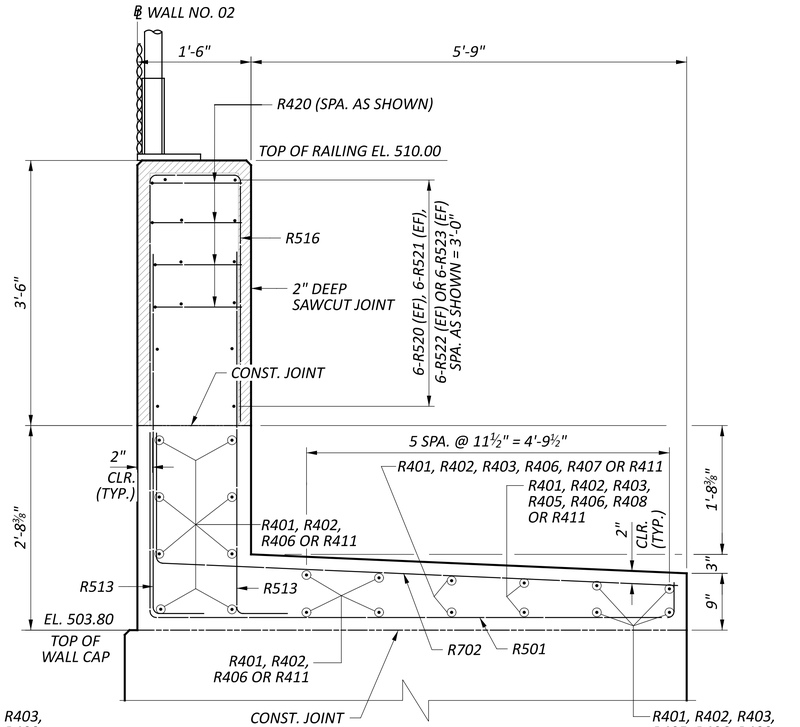

SECTION F-F

NOTES

1. SEE SHEETS 4/29 AND 5/29 FOR GENERAL NOTES.
2. SEE SHEET 22/29 FOR MOMENT SLAB DETAILS.
3. SEE SHEET 25/29 FOR RAILING ELEVATION AND ADDITIONAL DETAILS.
4. CUT THE TOP OF DS110X BARS AND REPAIR GALVANIZATION BY 711.02 OR PROVIDE STRAIGHT BARS AS NEEDED TO AVOID CATCH BASIN CUTOUT (TYP.)

LEGEND

☆ REFER TO WALL ELEVATION VIEWS FOR BAR MARKS

1	09/01/25	SHEET REVISIONS
ADDM' NO.	DATE	DESCRIPTION
DATE COMPLETED		

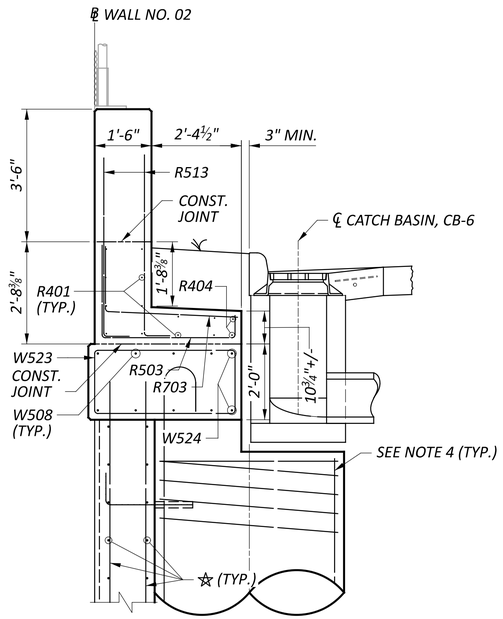

WALL SECTION
@ STA. 4+63.85

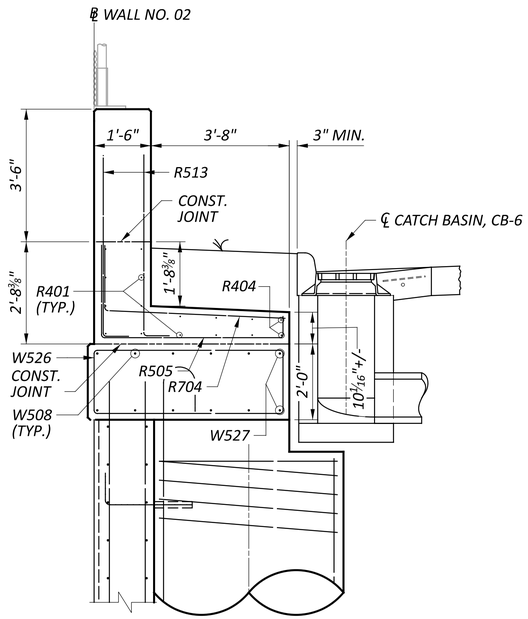

WALL SECTION
@ STA. 5+14.15

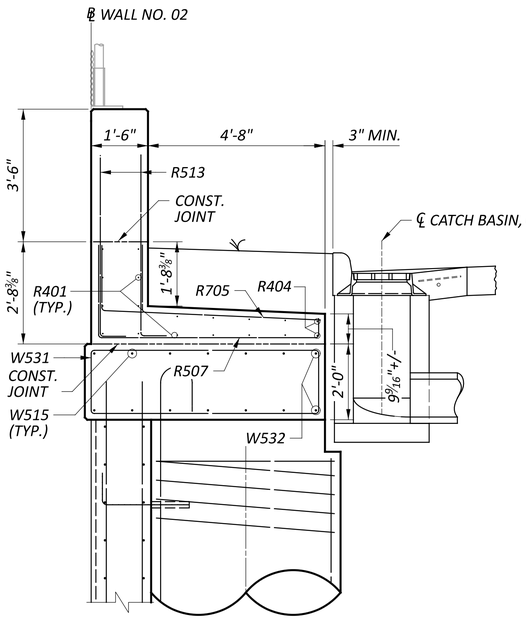

WALL SECTION
@ STA. 5+80.80

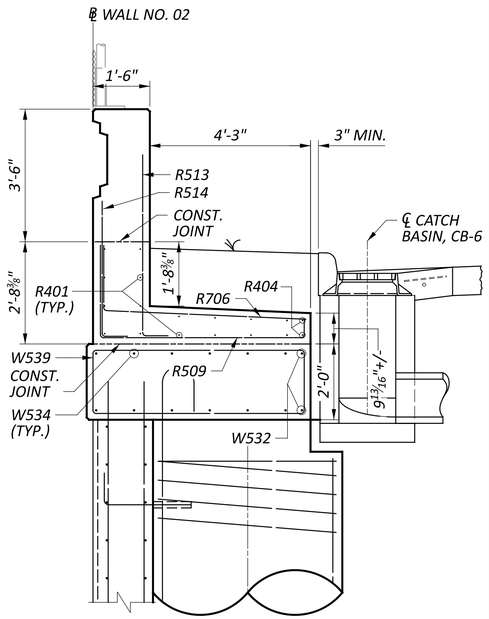

WALL SECTION
@ STA. 6+87.50

MOMENT SLAB AND RAILING DETAILS 2 OF 2
RETAINING WALL NO. 02 ALONG WINCHELL AVE.

DESIGN AGENCY
Palmer ENGINEERING
8350 E. KEMPER ROAD
SUITE B
CINCINNATI, OH 45249
(513) 469-1600

DESIGNER	RJB
REVIEWER	BJF 04/10/25
PROJECT ID	122048
SUBSET / TOTAL	27 / 29
SHEET / TOTAL	P.190 / P.421

HAM-IR75-1.05

MODEL: Sheet 5B PAPERSIZE: 34x22 (in.) DATE: 8/27/2025 TIME: 11:33:38 AM PLTDRV: OHDOT_PDF.pltcfg PENTBL: OHDOT_Pen.tbl USER: swalker@palmernet.com WORKSPACE: OHDOTCEv02 WORKSET: 122048 PRODUCT: OpenRoadsDesigner 24.00.00.205
pw:\\ohiodot-pw.bentley.com:ohiodot-pw-02\Documents\01 Active Projects\District 08\Hamilton\122048\02-Engineering_Palmer\Engineering\Structures\Wall_002\Sheets\122048_WALL002_WD001.dgn

REINFORCING STEEL LIST

MARK	NUMBER TOTAL	LENGTH	WEIGHT (LBS.)	TYPE	DIMENSIONS A	B	C	D	E	R	INC.
WALL NO. 02 (GALVANIZED STEEL REINFORCEMENT - GSR)											
W501	116	3' - 0"	363	STR							
W502	1,561	1' - 11"	3,053	1	0' - 8"	1' - 4"					
W503	572	8' - 10"	5,270	STR							
W504	32	7' - 2"	240	STR							
W505	4	12' - 0"	51	STR							
W506	916	11' - 0"	10,510	STR							
W507	5	10' - 7"	56	STR							
W508	142	23' - 8"	3,506	STR							
W509	5	19' - 8"	103	STR							
W510	291	15' - 11"	4,819	3	6' - 0"	1' - 8"					
W511	32	6' - 6"	217	STR							
W512	64	6' - 0"	401	STR							
W513	42	25' - 7"	1,121	STR							
	2	4' - 9"									
W514	SERIES	to	326	STR							0' - 0 ½"
	29	6' - 0"									
W515	482	27' - 8"	13,909	STR							
	2	9' - 6"									
W516	SERIES	to	522	STR							0' - 0 ½"
	25	10' - 6"									
	2	8' - 6"									
W517	SERIES	to	545	STR							0' - 0 ⅜"
	29	9' - 6"									
W518	56	25' - 9"	1,505	STR							
W519	28	21' - 8"	633	STR							
W520	531	18' - 1"	10,016	3	7' - 1"	1' - 8"					
W521	158	11' - 3"	1,854	STR							
W522	8	25' - 0"	209	STR							
W523	6	11' - 3"	71	3	3' - 8 ½"	1' - 8"					
W524	4	5' - 1"	22	16	4' - 6"						
W525	8	21' - 5"	179	STR							
W526	5	13' - 11"	73	3	5' - 0"	1' - 8"					
W527	2	7' - 4"	16	16	6' - 9"						
W528	6	19' - 1"	120	STR							
W529	174	13' - 1"	2,375	STR							
W530	4	13' - 10"	58	STR							
W531	5	15' - 11"	83	3	6' - 0"	1' - 8"					
W532	4	10' - 9"	45	17	9' - 7"						
W533	242	8' - 6"	2,146	STR							
W534	186	29' - 8"	5,756	STR							
W535	62	7' - 8"	496	STR							
W536	58	9' - 0"	545	STR							
W537	162	10' - 0"	1,690	STR							
W538	37	6' - 7"	255	STR							
W539	5	15' - 0"	79	3	5' - 7"	1' - 8"					
W540	4	17' - 9"	75	STR							
W541	202	24' - 8"	5,197	STR							
W542	80	15' - 8"	1,308	STR							
W543	26	13' - 0"	353	STR							
W544	40	12' - 4"	515	STR							
W545	44	18' - 8"	857	STR							
W546	67	22' - 1"	1,541	3	8' - 7"	2' - 2"					
W547	42	21' - 8"	950	STR							
W548	68	9' - 8"	686	STR							
W549	4	18' - 1"	76	3	6' - 7"	2' - 2"					
W550	41	6' - 2"	264	STR							
W551	145	9' - 0"	1,368	3	1' - 2"	3' - 1"					
W552	80	30' - 0"	2,504	STR							
W553	292	6' - 9"	2,044	1	0' - 10"	6' - 0"					
W554	37	8' - 10"	341	2	1' - 8"	0' - 10"	6' - 7"				
W555	25	29' - 5"	768	STR							

REINFORCING STEEL LIST

MARK	NUMBER TOTAL	LENGTH	WEIGHT (LBS.)	TYPE	DIMENSIONS A	B	C	D	E	R	INC.
WALL NO. 02 (GALVANIZED STEEL REINFORCEMENT - GSR)											
W556	37	8' - 4"	322	2	1' - 8"	0' - 10"	6' - 1"				
W557	37	11' - 9"	454	2	5' - 7"	0' - 10"	5' - 7"				
W558	20	12' - 8"	265	STR							
W559	35	5' - 1"	186	STR							
W560	2	9' - 11"	21	3	0' - 10"	3' - 10"					
W561	2	6' - 3"	13	3	0' - 10"	2' - 0"					
W562	4	17' - 5"	73	STR							
W563	8	3' - 0"	26	STR							
W564	21	4' - 2"	92	17	3' - 0"						
W565	3	9' - 3"	29	17	8' - 1"						
W566	72	7' - 10"	589	17	6' - 8"						
W567	12	5' - 3"	66	17	4' - 1"						
W568	15	3' - 2"	50	17	2' - 0"						
W569	6	6' - 2"	39	17	5' - 0"						
W570	4	9' - 3"	39	STR							
W601	44	19' - 8"	1,300	STR							
	GSR SUB TOTAL		95,649								
W801	4	11' - 8"	125	19	7' - 3"	3' - 2"	3' - 1"				
W802	4	8' - 5"	90	STR							
W803	36	23' - 8"	2,275	STR							
W804	145	15' - 11"	6,147	3	6' - 8"	1' - 7"					
W805	3	19' - 10"	159	17	18' - 0"						
W806	3	15' - 4"	123	17	13' - 6"						
W807	44	27' - 8"	3,251	STR							
W808	7	19' - 8"	368	STR							
	GSR SUB TOTAL		12,538								
	GSR SHEET TOTAL		108,187								

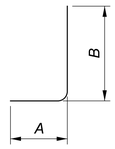

TYPE-1

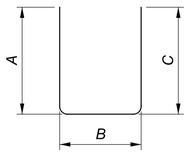

TYPE-2

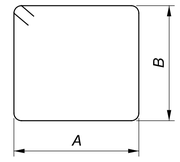

TYPE-3

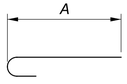

TYPE-16

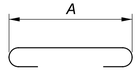

TYPE-17

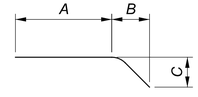

TYPE-19

REINFORCING BENDING DIAGRAMS

NOTE

SEE SHEET 11/29 FOR DRILLED SHAFT REINFORCEMENT INFORMATION

ADDM' NO.	DATE	DESCRIPTION
1	09/01/25	SHEET REVISIONS
DATE COMPLETED		

REINFORCING STEEL LIST 1 OF 2
RETAINING WALL NO. 02 ALONG WINCHELL AVE.

DESIGN AGENCY
Palmer ENGINEERING
8350 E. KEMPER ROAD
SUITE B
CINCINNATI, OH 45249
(513) 469-1600

DESIGNER RJB
REVIEWER BJF 04/10/25
PROJECT ID 122048
SUBSET 28 TOTAL 29
SHEET P.191 TOTAL P.421

HAM-IR75-1.05

MODEL: Sheet PAPERSIZE: 34x22 (in.) DATE: 8/27/2025 TIME: 11:33:44 AM PLTDRV: OHDOT_PDF.pltcfg PENTBL: OHDOT_Pen.tbl USER: swalker@palmernet.com WORKSPACE: OHDOTCEv02 WORKSET: 122048 PRODUCT: OpenRoadsDesigner 24.00.00.205
pw:\\ohiodot-pw.bentley.com:ohiodot-pw-02\Documents\01 Active Projects\District 08\Hamilton\122048\402-Engineering_PalmerEngineering\Structures\Wall_002\Sheets\122048_002_WL001.dgn

REINFORCING STEEL LIST

MARK	NUMBER TOTAL	LENGTH	WEIGHT (LBS.)	TYPE	DIMENSIONS A	B	C	D	E	R	INC.
WALL NO. 02 RAIL AND SLAB (GALVANIZED STEEL REINFORCEMENT - GSR)											
R401	362	30' - 0"	7,255	STR							
R402	20	20' - 0"	268	STR							
R403	8	5' - 10"	32	STR							
R404	12	10' - 0"	81	STR							
R405	6	17' - 10"	72	STR							
R406	84	26' - 3"	1,473	STR							
R407	2	15' - 7"	21	STR							
R408	6	20' - 1"	81	STR							
R409	4	13' - 9"	37	STR							
R410	4	7' - 9"	21	STR							
R411	20	18' - 9"	251	STR							
R412	6	13' - 2"	53	2	5' - 10"	1' - 8"	5' - 10"				
R413	6	17' - 4"	70	3	6' - 9"	1' - 8"					
R414	18	12' - 1"	146	STR							
R415	18	29' - 7"	356	STR							
R416	18	24' - 8"	297	STR							
R417	18	25' - 8"	309	STR							
R418	18	14' - 0"	169	STR							
R419	18	6' - 9"	82	STR							
R420	120	5' - 10"	468	3	1' - 2"	1' - 6"					
R421	4	5' - 8"	16	3	1' - 2"	1' - 5"					
R422	4	7' - 2"	20	3	1' - 2"	2' - 2"					
R423	296	5' - 2"	1,022	3	1' - 2"	1' - 2"					
R424	4	7' - 10"	21	3	1' - 2"	2' - 6"					
R425	4	11' - 2"	30	STR							
R501	612	9' - 5"	6,011	2	2' - 4"	6' - 11"	0' - 5"				
R502	NA										
R503	7	6' - 2"	45	2	2' - 4"	3' - 6"	0' - 6 ½"				
R504	NA										
R505	6	7' - 5"	47	2	2' - 4"	4' - 9 ½"	0' - 6"				
R506	NA										
R507	6	8' - 5"	53	2	2' - 4"	5' - 10"	0' - 5 ½"				
R508	NA										
R509	6	8' - 0"	51	2	2' - 4"	5' - 5"	0' - 6"				
R510	NA										
R511	2	7' - 1"	15	10	0' - 1 ½"	3' - 5"	0' - 5"	3' - 5"			
R512	4	4' - 5"	19	10	0' - 1"	2' - 1"	0' - 5"	2' - 1"			
R513	854	5' - 6"	4,788	1	0' - 9"	4' - 10"					
R514	426	4' - 3"	1,833	1	0' - 9"	3' - 6"					
R515	6	15' - 2"	95	2	4' - 3"	6' - 11"	4' - 3"				
R516	329	7' - 3"	2,488	2	3' - 2"	1' - 2"	3' - 2"				
R517	642	6' - 11"	4,604	2	3' - 2"	0' - 9 ½"	3' - 2"				
R518	642	2' - 10"	1,871	10	1' - 0"	0' - 7"	0' - 8 ½"	1' - 1"			
R519	642	2' - 1"	1,414	11	0' - 7"	0' - 11 ½"	1' - 1 ½"				
R520	240	30' - 0"	7,510	STR							
R521	12	19' - 3"	241	STR							
R522	60	27' - 5"	1716	STR							
R523	12	21' - 1"	264	STR							
R524	206	7' - 9"	1,666	2	1' - 9"	5' - 10"	0' - 5"				
R525	NA										
R526	135	3' - 5"	476	1	0' - 9"	2' - 9"					
R527	277	4' - 10"	1,385	1	0' - 9"	4' - 2"					
R528	121	7' - 2"	905	2	1' - 2"	5' - 10"	0' - 5"				
R529	NA										
R530	81	2' - 11"	243	1	0' - 9"	2' - 3"					
R531	161	4' - 3"	721	1	0' - 9"	3' - 8"					
R532	12	8' - 0"	101	STR							
R533	12	13' - 7"	171	STR							
R534	12	25' - 10"	324	STR							
R535	12	29' - 8"	372	STR							
R536	12	12' - 9"	160	STR							
R701	327	7' - 3"	4,825	19	5' - 9"	0' - 2"	1' - 6"				
R702	612	8' - 6"	10,592	19	6' - 10"	0' - 2"	1' - 8"				
R703	7	5' - 2"	74	19	3' - 6"	0' - 2"	1' - 8"				
R704	6	6' - 5"	79	19	4' - 9"	0' - 2"	1' - 8"				
R705	6	7' - 5"	91	19	5' - 9"	0' - 2"	1' - 8"				
R706	6	7' - 0"	86	19	5' - 4"	0' - 2"	1' - 8"				
GSR SHEET TOTAL			67,987								

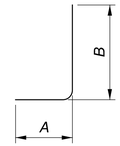

TYPE-1

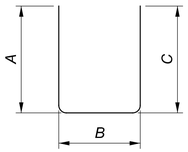

TYPE-2

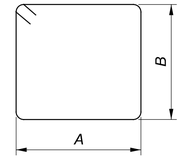

TYPE-3

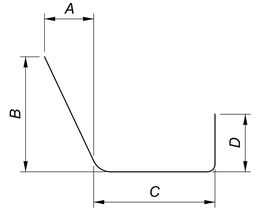

TYPE-10

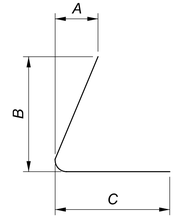

TYPE-11

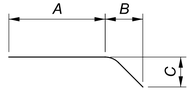

TYPE-19

REINFORCING BENDING DIAGRAMS

REINFORCING STEEL LIST 2 OF 2
RETAINING WALL NO. 02 ALONG WINCHELLL AVE.

DESIGN AGENCY
Palmer ENGINEERING
8350 E. KEMPER ROAD
SUITE B
CINCINNATI, OH 45249
(513) 469-1600

DESIGNER RJB
REVIEWER BJF 04/10/25
PROJECT ID 122048
SUBSET 29 TOTAL 29
SHEET P.192 TOTAL P.421

ADDM' NO.	DATE	DESCRIPTION
1	09/01/25	SHEET REVISIONS
DATE COMPLETED		

HAM-IR75-1.05

MODEL: Sheet - 2 PAPERSIZE: 34x22 (in.) DATE: 8/27/2025 TIME: 11:33:45 AM PLTDRV: OHDOT_PDF.pltcfg PENTBL: OHDOT_Pen.tbl USER: swalker@palmernet.com WORKSPACE: OHDOTCEv02 WORKSET: 122048 PRODUCT: OpenRoadsDesigner 24.00.00.205
pw:\\ohiodot-pw.bentley.com:ohiodot-pw-02\Documents\01 Active Projects\District 08\Hamilton\122048\402-Engineering_PalmerEngineering\Structures\Wall_002\Sheets\122048_002_WL001.dgn

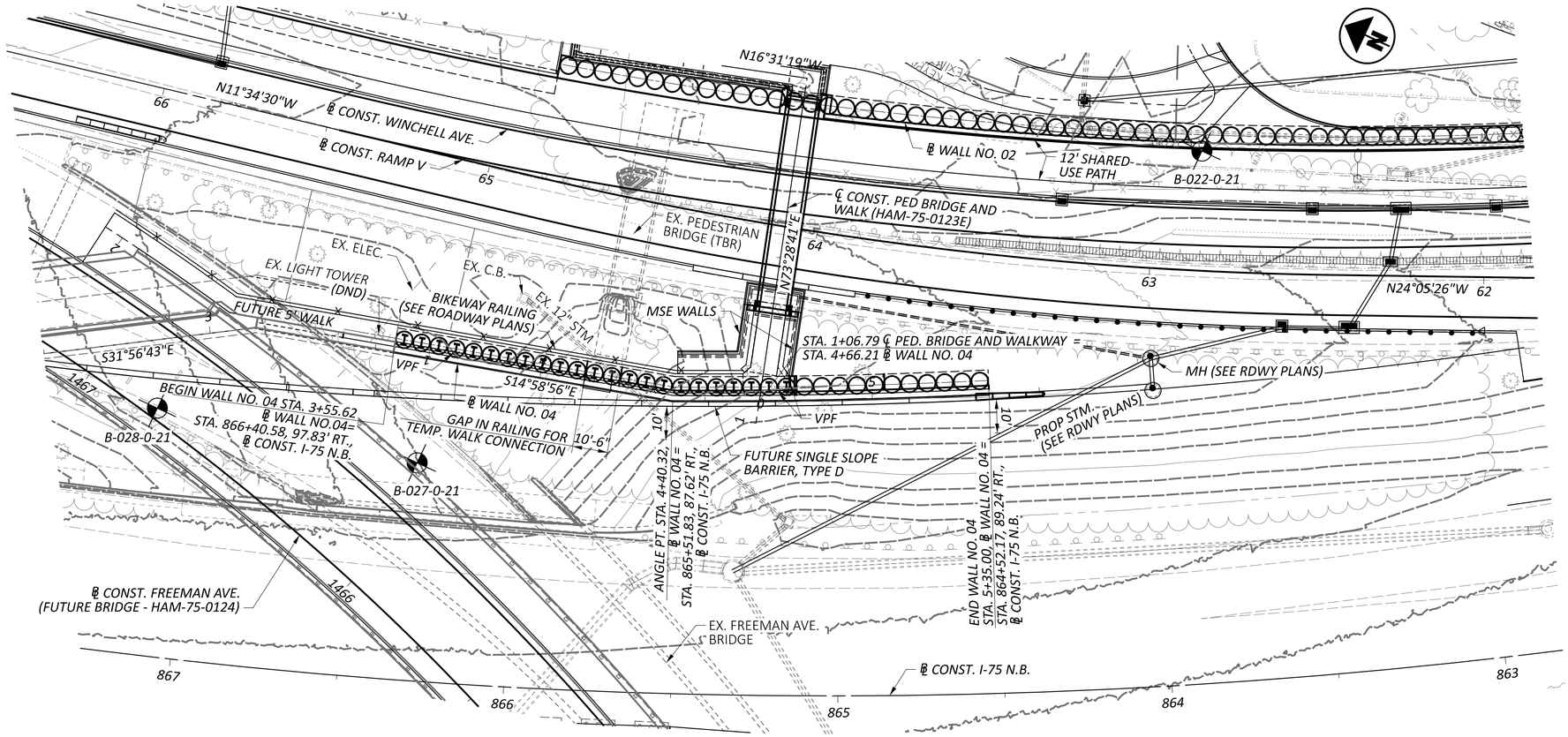

PLAN

1	09/01/25	SHEET REVISIONS
ADDM' NO.	DATE	DESCRIPTION
DATE COMPLETED		

LEGEND

PROJECT BORING LOCATION

NOTE: ALL EXISTING UTILITIES AND SEWERS SHALL BE REMOVED OR RELOCATED UNLESS OTHERWISE NOTED.

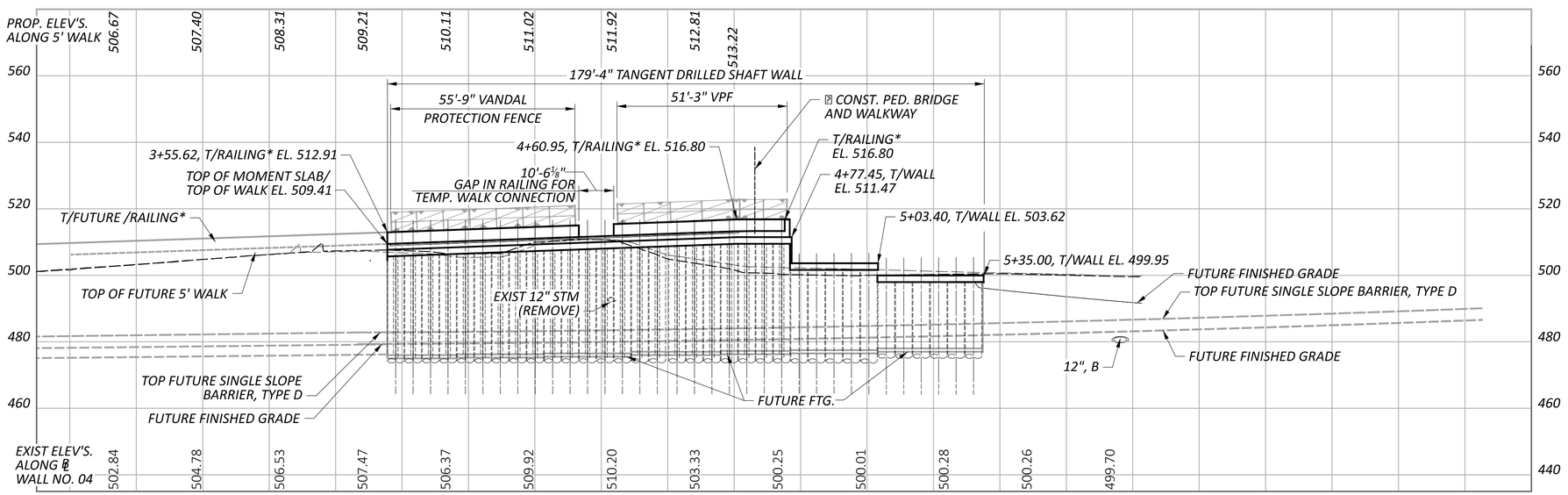

PROFILE ALONG ℄ WALL NO. 04

* DENOTES 42" AESTHETIC TEXAS C412 RAILING

PLAN AND PROFILE
RETAINING WALL NO. 04 ALONG I-75 NORTHBOUND
STA. 3+55.62 TO STA. 5+35.00

DESIGN AGENCY
Palmer ENGINEERING
8350 E. KEMPER ROAD
SUITE B
CINCINNATI, OH 45249
(513) 469-1600

DESIGNER RJB

REVIEWER BJF 04/12/25

PROJECT ID 122048

SUBSET 1 | TOTAL 10

SHEET P.193 | TOTAL P. 421

HAM-IR75-1.05

MODEL: BLP_Wall_4-6 - Plan 1 [Sheet] PAPERSIZE: 34x22 (in.) DATE: 8/27/2025 TIME: 1:14:11 PM PLTDRV: OHDOT_PDF.pltcfg PENTBL: OHDOT_Pen.tbl USER: swalker@palmernet.com WORKSPACE: OHDOTCEv02 WORKSET: 122048 PRODUCT: OpenRoadsDesigner 24.00.00.205
pw:\\ohiodot-pw.bentley.com:ohiodot-pw-02\Documents\01 Active Projects\District 08\Hamilton\122048\402-Engineering_PalmerEngineering\Structures\Wall_004\Sheets\122048_004_WP001.dgn

STANDARD DRAWINGS AND SUPPLEMENTAL SPECIFICATIONS

REFER TO THE FOLLOWING STANDARD BRIDGE DRAWINGS:

VPF-1-24 REVISED 7/19/24

REFER TO THE FOLLOWING SUPPLEMENTAL SPECIFICATION:
800 REVISED 7/19/24

DESIGN SPECIFICATIONS

THIS STRUCTURE CONFORMS TO THE 9TH EDITION OF THE "LRFD BRIDGE DESIGN SPECIFICATIONS" ADOPTED BY THE AMERICAN ASSOCIATION OF STATE HIGHWAY AND TRANSPORTATION OFFICIALS, 2020 AND THE ODOT BRIDGE DESIGN MANUAL, 2020.

DESIGN ASSUMPTIONS

SOIL UNIT WEIGHT, Y = 120 pcf
ANGLE OF INTERNAL FRICTION, ϕ 30°

DESIGN DATA

CONCRETE CLASS QC1 - COMPRESSIVE STRENGTH 4.0 KSI (DRILLED SHAFT CAP AND MOMENT SLAB)

CONCRETE CLASS QC5, WITH 3/8" MAX. AGGREGATE SIZE - COMPRESSIVE STRENGTH 4.5 KSI (DRILLED SHAFTS)

CONCRETE CLASS QC SCC, WITH 1" MAX. AGGREGATE SIZE - COMPRESSIVE STRENGTH 4.5 KSI (TEXAS C412 RAILING)

GALVANIZED STEEL REINFORCEMENT - MIN. YIELD STRENGTH - 60 KSI

PERMANENT STEEL CASING - ASTM A252 GRADE 3 - MINIMUM YIELD STRESS 45 KSI

LATERALLY LOADED DRILLED SHAFTS, 60" TANGENT DRILLED SHAFT WALL - SHAFTS 1-23

THE MAXIMUM FACTORED LATERAL LOAD AND BENDING MOMENT TO BE SUPPORTED BY EACH DRILLED SHAFT ARE 249 KIPS, AND 2,905 KIP-FEET, RESPECTIVELY. THESE LOADS PRODUCE A MAXIMUM FACTORED BENDING MOMENT OF 5,560 KIP-FEET, AND A MAXIMUM FACTORED SHEAR OF 310 KIPS, WITHIN THE DRILLED SHAFT.

LATERALLY LOADED DRILLED SHAFTS, 60" TANGENT DRILLED SHAFT WALL - SHAFTS 24-34

THE MAXIMUM FACTORED LATERAL LOAD AND BENDING MOMENT TO BE SUPPORTED BY EACH DRILLED SHAFT ARE 152 KIPS, AND 1,493 KIP-FEET, RESPECTIVELY. THESE LOADS PRODUCE A MAXIMUM FACTORED BENDING MOMENT OF 2,842 KIP-FEET, AND A MAXIMUM FACTORED SHEAR OF 176 KIPS, WITHIN THE DRILLED SHAFT.

ITEM 507 - STEEL PILES, MISC.: SOLDIER PILES, W33X387

THIS WORK CONSISTS OF FURNISHING AND PLACING STEEL SOLDIER PILES INTO DRILLED HOLES. FURNISH SOLDIER PILES CONSISTING OF STRUCTURAL STEEL MEMBERS THAT MEET THE PLAN REQUIREMENTS AND CONFORM TO ASTM A572, GRADE 50 IN ACCORDANCE WITH C&MS 711.01. GALVANIZE SOLDIER PILES AS SHOWN ON THE PLANS AND IN ACCORDANCE WITH C&MS 711.02. DO NOT FIELD WELD OR SPLICE STEEL SOLDIER PILES.

THE DEPARTMENT WILL MEASURE SOLDIER PILES ALONG THE AXIS OF THE SOLDIER PILE FROM THE BOTTOM OF CAP ELEVATION TO THE BOTTOM OF THE DRILLED SHAFT, AS DETERMINED BY THE ENGINEER. THE DEPARTMENT WILL PAY FOR SOLDIER PILES AT THE CONTRACT UNIT PRICE PER FOOT FOR ITEM 507, STEEL PILES, MISC.: SOLDIER PILES, W33X387.

ITEM 512 - SEALING OF CONCRETE SURFACES (EPOXY-URETHANE)

SEAL SURFACES OF THE CAST-IN-PLACE CONCRETE WALL FACING, PILASTERS, RAILING AND COPING AS SHOWN IN THE PLANS WITH AN EPOXY URETHANE SEALER ACCORDING TO C&MS 512. COLOR SHALL BE LIGHT NEUTRAL (FEDERAL STD. #17778).

ITEM 512 - SEALING OF CONCRETE SURFACES, AS PER PLAN, (PERMANENT GRAFFITI PROTECTION)

APPLY A PERMANENT GRAFFITI COATING QUALIFIED ACCORDING TO S1083 THAT IS COMPATIBLE WITH THE CONCRETE SEALER OVER WHICH IT IS APPLIED. APPLY THE GRAFFITI COATING IN ACCORDANCE WITH THE MANUFACTURER'S PRINTED INSTRUCTIONS.

GRAFFITI PROTECTION SHALL BE APPLIED TO ALL SURFACES SEALED WITH EPOXY URETHANE SEALANT. GRAFFITI PROTECTION SHALL HAVE A CLEAR FINISH.

ITEM 513 - WELDED STUD SHEAR CONNECTORS, AS PER PLAN

WELD HEADED STEEL STUDS TO THE STEEL CASING TO CONNECT THE CAST-IN-PLACE CONCRETE COLLAR TO THE DRILLED SHAFT. ATTACH HEADED STUDS ACCORDING TO THE C&MS 513.22 AND AS SHOWN IN THE PLANS. THE CONTRACTOR MAY ATTACH THE STUDS EITHER BEFORE PLACING THE CASING IN THE DRILLED HOLE OR AFTER EXCAVATING BEHIND THE WALL. PROTECT THE HEADED STUDS FROM DAMAGE UNTIL THE CONCRETE COLLAR IS POURED. REPAIR OR REPLACE DAMAGED HEADED STUDS AT NO EXPENSE TO THE DEPARTMENT.

ITEM 517 - RAILING MISC.: TEXAS RAILING

THIS WORK CONSISTS OF FURNISHING AND PLACING TEXAS RAIL CONCRETE RAILING AS SPECIFIED IN THE PLANS.

ARCHITECTURAL FORMLINER IS NOT PERMITTED TO CREATE THE SHAPE OF THE RAILING.

USE CONCRETE CLASS QC SCC CONCRETE.

PAYMENT FOR THIS ITEM WILL BE ON A LINEAR FOOT BASIS. THE APPROXIMATE AVERAGE RAILING AREA PER FOOT OF TEXAS RAILING IS 8.7 SQ FT.

ITEM 607 - VANDAL PROTECTION FENCE, 6' STRAIGHT, COATED FABRIC, AS PER PLAN

PROVIDE 6' STRAIGHT VANDAL PROTECTION FENCE (PS-2 OF STANDARD DRAWING VPF-1-24) WITH THE FOLLOWING EXCEPTIONS:

1.) USE NON-STANDARD BASE PLATES AS DETAILED ON SHEET 7/10. BASE PLATES SHALL BE 50 KSI GALVANIZED STEEL.

2.) PVC COATING SHALL BE BLACK IN COLOR CLOSELY APPROACHING FEDERAL COLOR NUMBER 17038.

VANDAL FENCE POSTS, RAILS, BASE PLATES, ANCHOR BOLTS, AND ANY OTHER VANDAL FENCE ITEMS NOT RECIEVING A PVC COATING SHALL BE GALVANIZED AS NOTED IN THE STANDARD DRAWING AND TOPCOATED WITH AN ORGANIC COATING PER THE REQUIREMENTS OF AASHTO M181 FOR GRADE 2 POSTS. THE TOPCOAT COLOR SHALL MATCH THE PVC COATING COLOR.

PAYMENT FOR THIS WORK INCLUDES ALL MATERIALS, LABOR, EQUIPMENT, AND ANY MISCELLANEOUS APPURTENANCES NECESSARY TO COMPLETE INSTALLATION ACCORDING TO THE STANDARD DRAWING, PLANS, AND THIS PLAN NOTE.

ITEM 524 - DRILLED SHAFTS, 60" DIAMETER ABOVE BEDROCK, AS PER PLAN

THIS WORK CONSISTS OF FURNISHING AND INSTALLING DRILLED SHAFTS FOR WALL NO. 04. THE DRILLED SHAFTS ARE REINFORCED WITH STEEL PILES AND REINFORCING STEEL CAGES (1-23) AND REINFORCING STEEL CAGES (24-34). DRILLED SHAFTS 1-23 INCLUDE PERMANENT STEEL CASING. FURNISH AND INSTALL THE DRILLED SHAFTS ACCORDING TO C&MS 524.

EXCAVATE THE HOLE FOR THE DRILLED SHAFT WITHIN 3 INCHES OF THE PLAN LOCATION. PLACE THE SOLDIER PILE WITHIN THE HOLE SO IT IS VERTICAL AND NOT INCLINED MORE THAN 1 INCH BETWEEN TOP TO BOTTOM. PLACE THE SOLDIER PILE SO THAT THE FLANGES ARE PARALLEL TO THE CENTERLINE OF THE ROW OF DRILLED SHAFTS. DO NOT ALLOW THE ORIENTATION OF THE FLANGES TO VARY BY MORE THAN 10 DEGREES. SUPPORT THE SOLDIER PILE SO THAT IT DOES NOT MOVE DURING CONCRETE PLACEMENT.

USE CLASS QC 1 CONCRETE ACCORDING TO C&MS 511. PLACE CONCRETE TO THE ELEVATION FOR THE TOP OF THE DRILLED SHAFT. THE CONTRACTOR MAY PLACE CONCRETE USING THE FREE FALL METHOD PROVIDED THE DEPTH OF WATER IS LESS THAN 6 INCHES AND THE CONCRETE FALLS WITHOUT STRIKING THE SIDES OF THE HOLE. POURING CONCRETE ALONG THE WEB OF THE SOLDIER PILE IS ACCEPTABLE.

CASING SECTION LENGTH SHALL BE MAXIMIZED TO MINIMIZE NUMBER OF FIELD SPLICE LOCATIONS. THE USE OF SPIRAL WELDED PIPE IS PERMITTED.

CHECK THE POSITION, THE VERTICAL ALIGNMENT AND ORIENTATION OF THE SOLDIER PILE IMMEDIATELY AFTER CONCRETE PLACEMENT. MAKE CORRECTIONS AS NECESSARY TO MEET THE ABOVE TOLERANCES.

THE DEPARTMENT WILL MEASURE DRILLED SHAFTS ABOVE BEDROCK, AS PER PLAN, ALONG THE AXIS OF THE DRILLED SHAFT FROM THE GREATER OF THE EXISTING GROUND SURFACE TO THE BOTTOM OF THE DRILLED SHAFT OR THE BOTTOM OF THE CAP TO THE BOTTOM OF THE DRILLED SHAFT.

THIS ITEM SHALL ALSO INCLUDE FOR PAYMENT REINFORCING STEEL, AUGERED HOLE, AND THE #8 STONE PLACED IN THE AUGERED HOLE BETWEEN THE SHAFTS.

PLAN ABBREVIATIONS

ABUT.	*ABUTMENT*
BF	*BACK FACE (BACKFILL SIDE)*
BRG.	*BEARING*
C/C	*CENTER TO CENTER*
C.J.	*CONSTRUCTION JOINT*
DIA.	*DIAMETER*
EL.	*ELEVATION*
EF	*EACH FACE*
EQ. SPA.	*EQUALLY SPACED*
F.A.	*FORWARD ABUTMENT*
FF	*FRONT FACE (CREEK SIDE)*
MAX.	*MAXIMUM*
MIN.	*MINIMUM*
N.P.C.P.P.	*NON-PERFORATED CORRUGATED PLASTIC PIPE*
O/O	*OUT TO OUT*
PEJF	*PREFORMED EXPANSION JOINT FILLER*
P.C.P.P.	*PERFORATED CORRUGATED PLASTIC PIPE*
R.A.	*REAR ABUTMENT*
SPA.	*SPACE, SPACES, SPACED*
STA.	*STATION*
T.O.S.	*TOP OF SLOPE*
TYP.	*TYPICAL*

ADDM' NO.	DATE	DESCRIPTION
1	*09/01/25*	*SHEET REVISIONS*
DATE COMPLETED		

GENERAL NOTES
RETAINING WALL NO. 04 ALONG I-75 NORTHBOUND

DESIGN AGENCY
Palmer ENGINEERING
8350 E. KEMPER ROAD
SUITE B
CINCINNATI, OH 45249
(513) 469-1600

DESIGNER RJB
REVIEWER BJF 04/12/25
PROJECT ID 122048
SUBSET 2 TOTAL 10
SHEET P.194 TOTAL P. 421

HAM-IR75-1.05

MODEL: Sheet PAPERSIZE: 34x22 (in.) DATE: 8/27/2025 TIME: 1:14:52 PM PLTDRV: OHDOT_PDF.pltcfg PENTBL: OHDOT_Pen.tbl USER: swalker@palmernet.com WORKSPACE: OHDOTCtv02 WORKSET: 122048 PRODUCT: OpenRoadsDesigner 24.00.00.205
pw:\\ohiodot-pw.bentley.com:ohiodot-pw-02\Documents\01 Active Projects\District 08\Hamilton\122048\02-Engineering_Palmer\Engineering\Structures\Wall_004\Sheets\122048_004_WN001.dgn

ESTIMATED QUANTITIES					CALC: RJB DATE: 8/18/25	CHECK: CVK DATE: 8/18/25
ITEM	ITEM EXT.	TOTAL 01/IMS/13	UNIT	DESCRIPTION	GENERAL	SHEET
503	21300	LS		UNCLASSIFIED EXCAVATION	LS	
507	00400	1872	FT	STEEL PILES, MISC.: SOLDIER PILES, W33x387	1872	
509	26000	13104	LB	GALVANIZED STEEL REINFORCEMENT	13104	
510	10000	8	EACH	DOWEL HOLES WITH NONSHRINK, NONMETALLIC GROUT	8	
511	53010	82	CY	CLASS QC1 CONCRETE, MISC.:SHAFT CAP & COLLAR	82	
511	53010	28	CY	CLASS QC1 CONCRETE, MISC.:MOMENT SLAB	28	
512	10000	245	SY	SEALING OF CONCRETE SURFACES	245	
512	10001	245	SY	SEALING OF CONCRETE SURFACES, AS PER PLAN	245	2 | 10
513	20001	28	EACH	WELDED STUD SHEAR CONNECTORS, AS PER PLAN	28	2 | 10
516	13200	10	SF	½" PREFORMED EXPANSION JOINT FILLER	10	
516	13600	41	SF	1" PREFORMED EXPANSION JOINT FILLER	41	
517	76300	111	FT	RAILING, MISC.:TEXAS RAILING	111	
524	94915	2528	FT	DRILLED SHAFTS, 60" DIAMETER, ABOVE BEDROCK, AS PER PLAN	2528	2 | 10
607	39900	112	FT	VANDAL PROTECTION FENCE, 6' STRAIGHT, COATED FABRIC	112	

ESTIMATED QUANTITIES
RETAINING WALL NO. 04 ALONG I-75 NORTHBOUND

DESIGN AGENCY
Palmer ENGINEERING
8350 E. KEMPER ROAD
SUITE B
CINCINNATI, OH 45249
(513) 469-1600

DESIGNER RJB
REVIEWER BJF 04/12/25
PROJECT ID 122048
SUBSET 3 TOTAL 10
SHEET P.195 TOTAL P. 421

ADDM' NO.	DATE	DESCRIPTION
1	09/01/25	SHEET REVISIONS
DATE COMPLETED		

HAM-IR75-1.05

MODEL: Sheet PAPERSIZE: 34x22 (in.) DATE: 8/27/2025 TIME: 1:15:00 PM PLTDRV: OHDOT_PDF.pltcfg PENTBL: OHDOT_Pen.tbl USER: swalker@palmernet.com WORKSPACE: OHDOTCEv02 WORKSET: 122048 PRODUCT: OpenRoadsDesigner 24.00.00.205
pw:\\ohiodot-pw.bentley.com:ohiodot-pw-02\Documents\01 Active Projects\District 08\Hamilton\122048\d02-Engineering_PalmerEngineering\Structures\Wall_004\Sheets\122048_004_WQ001.dgn

MODEL: BLP_Wall_4-6 - Wall_4-Tangent_Drilled_Shaft-Plan 1 [Sheet] PAPERSIZE: 34x22 (in.) DATE: 8/27/2025 TIME: 1:15:06 PM PLTDRV: OHDOT_PDF.pltcfg PENTBL: OHDOT_Pen.tbl USER: swalker@palmernet.com WORKSPACE: OHDOTCEv02 WORKSET: 122048 PRODUCT: OpenRoadsDesigner 24.00.00.205
pw:\\ohiodot-pw.bentley.com:ohiodot-pw-02\Documents\01 Active Projects\District 08\Hamilton\122048\402-Engineering_PalmerEngineering\Structures\Wall_004\Sheets\122048_004_WT001.dgn

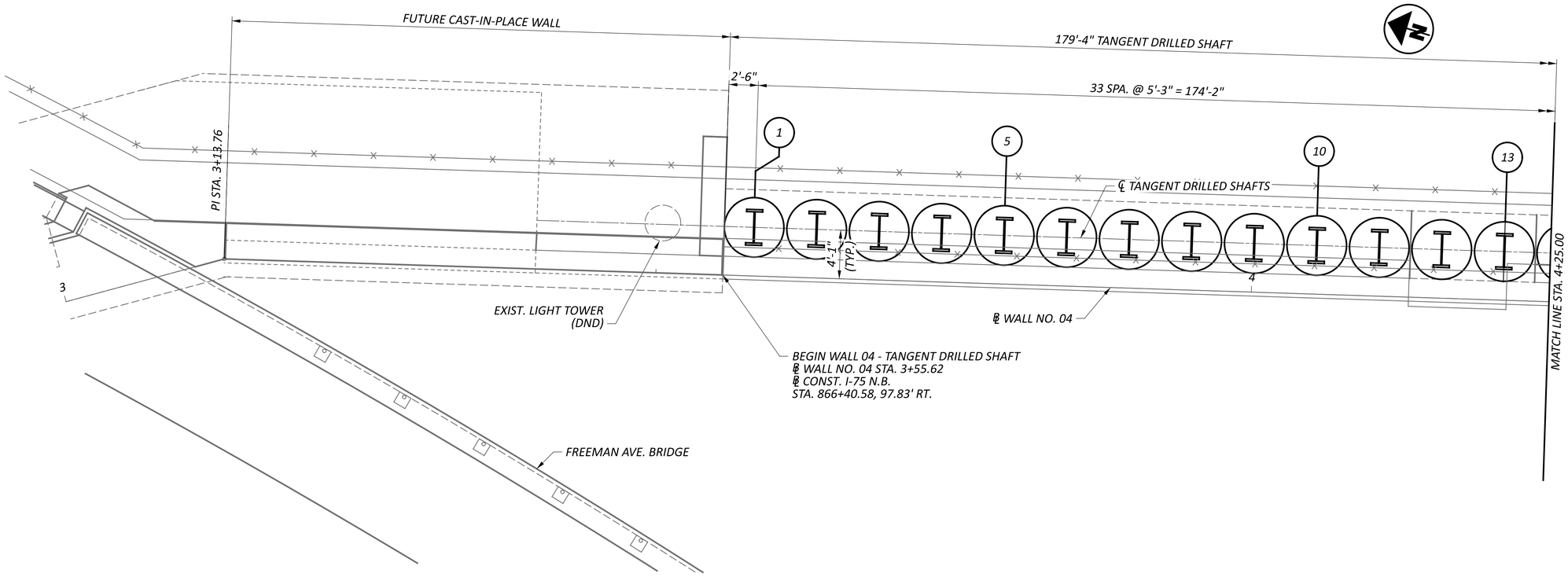

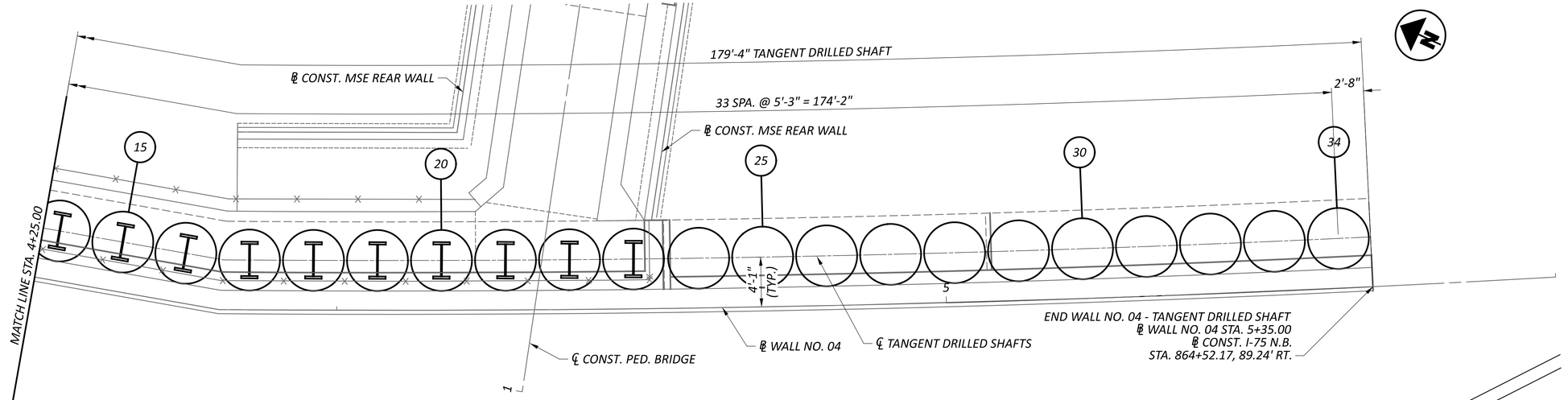

FOUNDATION PLAN - TANGENT DRILLED SHAFT

PROP. 12" STORM

NOTES

1. SEE SHEET 5/10 FOR ELEVATION TABLE.
2. SEE SHEET 2/10 FOR GENERAL NOTES.

ADDM' NO.	DATE	DESCRIPTION
1	09/01/25	SHEET REVISIONS
DATE COMPLETED		

HORIZONTAL SCALE IN FEET
0 2.5 5 10

FOUNDATION PLAN
RETAINING WALL NO. 04 ALONG I-75 NORTHBOUND

DESIGN AGENCY
Palmer ENGINEERING
8350 E. KEMPER ROAD
SUITE B
CINCINNATI, OH 45249
(513) 469-1600

DESIGNER RJB
REVIEWER BJF 04/12/25
PROJECT ID 112048
SUBSET 4 TOTAL 10
SHEET P.196 TOTAL P. 421

DRILLED SHAFT LOCATIONS AND ELEVATIONS - WALL NO. 04											
SHAFT NUMBER	WALL TYPE	STA AT CL OF SHAFT	BOT. OF CAP / TOP OF SHAFT EL.	TOP OF PILE EL.	TOP OF CASING EL.	BOT OF SHAFT EL.	ESTIMATED CONC. SHAFT LENGTH (FT)	ESTIMATED PILE LENGTH (FT)	ITEM 524 DRILLED SHAFT LENGTH (FT)	CASING LENGTH (FT)	ASSUMED BOT. OF WALL FACING FOOTER EL.*
1	TANGENT DS	3+58.12	505.76	505.76	505.76	424.50	81.26	81.26	82.33	50.00	474.50
2	TANGENT DS	3+63.37	505.95	505.95	505.95	424.50	81.45	81.45	82.12	50.00	474.50
3	TANGENT DS	3+68.62	506.14	506.14	506.14	424.50	81.64	81.64	81.91	50.00	474.50
4	TANGENT DS	3+73.87	506.33	506.33	506.33	424.50	81.83	81.83	81.83	50.00	474.50
5	TANGENT DS	3+79.12	506.52	506.52	506.52	424.75	81.77	81.77	81.77	50.00	474.75
6	TANGENT DS	3+84.37	506.71	506.71	506.71	424.75	81.96	81.96	81.96	50.00	474.75
7	TANGENT DS	3+89.62	506.90	506.90	506.90	424.75	82.15	82.15	82.15	50.00	474.75
8	TANGENT DS	3+94.87	507.09	507.09	507.09	424.75	82.34	82.34	82.54	50.00	474.75
9	TANGENT DS	4+00.12	507.28	507.28	507.28	424.75	82.53	82.53	84.37	50.00	474.75
10	TANGENT DS	4+05.37	507.47	507.47	507.47	425.00	82.47	82.47	85.13	50.00	475.00
11	TANGENT DS	4+10.62	507.66	507.66	507.66	425.00	82.66	82.66	85.48	50.00	475.00
12	TANGENT DS	4+15.87	507.85	507.85	507.85	425.00	82.85	82.85	85.81	50.00	475.00
13	TANGENT DS	4+21.12	508.04	508.04	508.04	425.00	83.04	83.04	85.76	50.00	475.00
14	TANGENT DS	4+26.37	508.23	508.23	508.23	425.00	83.23	83.23	85.35	50.00	475.00
15	TANGENT DS	4+31.62	508.42	508.42	508.42	425.00	83.42	83.42	83.96	50.00	475.00
16	TANGENT DS	4+36.87	508.61	508.61	508.61	429.50	79.11	79.11	79.11	62.00	475.50
17	TANGENT DS	4+42.82	508.83	508.83	508.83	429.50	79.33	79.33	79.33	62.00	475.50
18	TANGENT DS	4+48.08	509.02	509.02	509.02	429.50	79.52	79.52	79.52	62.00	475.50
19	TANGENT DS	4+53.34	509.21	509.21	509.21	429.50	79.71	79.71	79.71	62.00	475.50
20	TANGENT DS	4+58.60	509.40	509.40	509.40	429.75	79.65	79.65	79.65	62.00	475.75
21	TANGENT DS	4+63.86	509.47	509.47	509.47	429.75	79.72	79.72	79.72	62.00	475.75
22	TANGENT DS	4+69.12	509.47	509.47	509.47	429.75	79.72	79.72	79.72	62.00	475.75
23	TANGENT DS	4+74.39	509.47	509.47	509.47	429.75	79.72	79.72	79.72	62.00	475.75
24	TANGENT DS	4+79.74	501.62	N/A	N/A	437.00	64.62	N/A	65.15	N/A	476.00
25	TANGENT DS	4+85.00	501.62	N/A	N/A	437.00	64.62	N/A	65.05	N/A	476.00
26	TANGENT DS	4+90.26	501.62	N/A	N/A	437.00	64.62	N/A	64.95	N/A	476.00
27	TANGENT DS	4+95.52	501.62	N/A	N/A	437.00	64.62	N/A	64.86	N/A	476.00
28	TANGENT DS	5+00.78	501.62	N/A	N/A	437.00	64.62	N/A	64.72	N/A	476.00
29	TANGENT DS	5+06.05	497.95	N/A	N/A	449.00	48.95	N/A	52.58	N/A	476.50
30	TANGENT DS	5+11.31	497.95	N/A	N/A	449.00	48.95	N/A	52.44	N/A	476.50
31	TANGENT DS	5+16.57	497.95	N/A	N/A	449.00	48.95	N/A	52.29	N/A	476.50
32	TANGENT DS	5+21.83	497.95	N/A	N/A	449.00	48.95	N/A	52.15	N/A	476.50
33	TANGENT DS	5+27.09	497.95	N/A	N/A	449.00	48.95	N/A	52.01	N/A	476.50
34	TANGENT DS	5+32.35	497.95	N/A	N/A	449.00	48.95	N/A	51.87	N/A	476.50

REINFORCING STEEL LIST (FOR REFERENCE ONLY)							
MARK	NUMBER TOTAL	LENGTH	WEIGHT (LBS.)	TYPE	DIMENSIONS A	B	C
SP401	15	659' - 3"	6,606	27	0' - 12"	4' - 0"	50' - 0" *
SP402	8	808' - 7"	4,321	27	0' - 12"	4' - 0"	62' - 0" *
		SUBTOTAL **	10,927				
SP501	1	553' - 12"	578	27	0' - 9"	4' - 0"	31' - 3" *
SP502	1	558' - 1"	583	27	0' - 9"	4' - 0"	31' - 6" *
SP503	1	560' - 10"	585	27	0' - 9"	4' - 0"	31' - 8" *
SP504	2	563' - 7"	1,176	27	0' - 9"	4' - 0"	31' - 10" *
SP505	1	566' - 4"	591	27	0' - 9"	4' - 0"	32' - 0" *
SP506	1	569' - 1"	594	27	0' - 9"	4' - 0"	32' - 2" *
SP507	1	571' - 11"	597	27	0' - 9"	4' - 0"	32' - 4" *
SP508	2	574' - 8"	1,199	27	0' - 9"	4' - 0"	32' - 6" *
SP509	1	577' - 5"	603	27	0' - 9"	4' - 0"	32' - 8" *
SP510	1	580' - 2"	606	27	0' - 9"	4' - 0"	32' - 10" *
SP511	1	582' - 11"	608	27	0' - 9"	4' - 0"	33' - 0" *
SP512	1	587' - 0"	613	27	0' - 9"	4' - 0"	33' - 3" *
SP513	1	589' - 9"	616	27	0' - 9"	4' - 0"	33' - 5" *
SP514	1	319' - 8"	334	27	0' - 9"	4' - 0"	17' - 1" *
SP515	1	323' - 10"	338	27	0' - 9"	4' - 0"	17' - 4" *
SP516	1	326' - 7"	341	27	0' - 9"	4' - 0"	17' - 6" *
SP517	5	329' - 4"	1,718	27	0' - 9"	4' - 0"	17' - 8" *
SP518	5	1106' - 7"	5,771	27	0' - 9"	4' - 0"	64' - 8" *
SP519	6	847' - 6"	5,304	27	0' - 9"	4' - 0"	49' - 0" *
		SUBTOTAL **	22,755				
DS1101	72	84' - 5"	32,293	16	82' - 10" *		
DS1102	144	84' - 11"	65,000	16	83' - 4 ½" *		
DS1103	72	85' - 4"	32,644	16	83' - 9" *		
DS1104	108	85' - 8"	49,156	16	84' - 1" *		
DS1105	72	86' - 1"	32,930	16	84' - 6" *		
DS1106	72	86' - 5"	33,058	16	84' - 10" *		
DS1107	72	82' - 4"	31,496	16	80' - 9" *		
DS1108	216	82' - 9"	94,965	16	81' - 2" *		
DS1109	180	67' - 8"	64,713	16	66' - 1" *		
DS1110	216	52' - 0"	59,268	16	50' - 4 ½" *		
		SUBTOTAL **	495,523				

** = ESTIMATED TOTAL LENGTH*

*** SUBTOTALS ARE FOR REFERENCE ONLY (INCLUDE WITH ITEM 524 FOR PAYMENT)*

REINFORCING STEEL LOCATION	
SHAFT NUMBER	BARS USED
1	SP401, SP501, DS1101
2	SP401, SP502, DS1101
3	SP401, SP503, DS1102
4	SP401, SP504, DS1102
5	SP401, SP504, DS1102
6	SP401, SP505, DS1102
7	SP401, SP506, DS1103
8	SP401, SP507, DS1103
9	SP401, SP508, DS1104
10	SP401, SP508, DS1104
11	SP401, SP509, DS1104
12	SP401, SP510, DS1105
13	SP401, SP511, DS1105
14	SP401, SP512, DS1106
15	SP401, SP513, DS1106
16	SP402, SP514, DS1107
17	SP402, SP515, DS1107
18	SP402, SP516, DS1108
19	SP402, SP517, DS1108
20	SP402, SP517, DS1108
21	SP402, SP517, DS1108
22	SP402, SP517, DS1108
23	SP402, SP517, DS1108
24	SP518, DS1109
25	SP518, DS1109
26	SP518, DS1109
27	SP518, DS1109
28	SP518, DS1109
29	SP519, DS1110
30	SP519, DS1110
31	SP519, DS1110
32	SP519, DS1110
33	SP519, DS1110
34	SP519, DS1110

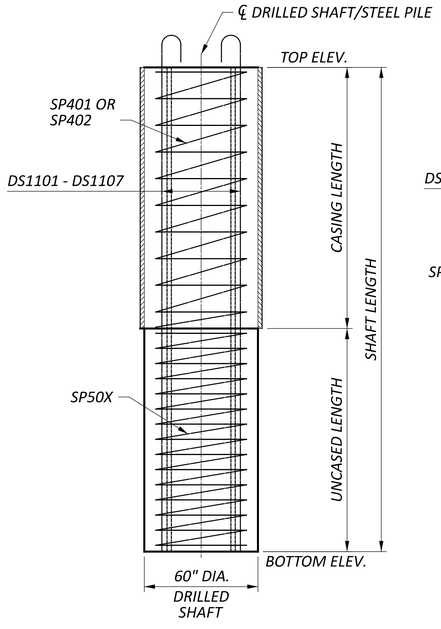

SHAFTS 1 - 23

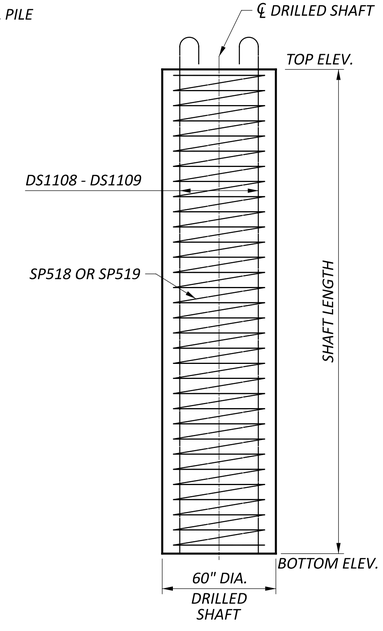

SHAFTS 24 - 34

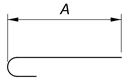

TYPE-16

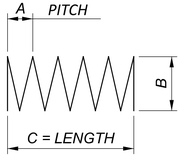

TYPE-27

NOTES

1. SEE SHEET 4/10 FOR FOUNDATION PLAN.

* THE ASSUMED BOTTOM OF WALL FACING FOOTER IS THE ASSUMED LOWEST ELEVATION OF DISTURBED SOIL. THIS IS THE BOTTOM ELEVATION USED FOR THE DESIGN GRADE OF THE RETAINING WALL.

CYLINDER PILE ELEVATION TABLE
RETAINING WALL NO. 04 ALONG I-75 NORTHBOUND

1	09/01/25	SHEET REVISIONS
ADDM' NO.	DATE	DESCRIPTION
DATE COMPLETED		

DESIGN AGENCY
Palmer ENGINEERING
8350 E. KEMPER ROAD
SUITE B
CINCINNATI, OH 45249
(513) 469-1600

DESIGNER RJB
REVIEWER BJF 04/12/25
PROJECT ID 122048
SUBSET 5 TOTAL 10
SHEET P.197 TOTAL P. 421

HAM-IR75-1.05

MODEL: Sheet PAPERSIZE: 34x22 (in.) DATE: 8/27/2025 TIME: 1:15:13 PM PLTDRV: OHDOT_PDF.pltcfg PENTBL: OHDOT_Pen.tbl USER: swalker@palmernet.com WORKSPACE: OHDOTCtv02 WORKSET: 122048 PRODUCT: OpenRoadsDesigner 24.00.00.205
pw:\\ohiodot-pw.bentley.com:ohiodot-pw-02\Documents\01 Active Projects\District 08\Hamilton\122048\02-Engineering_PalmerEngineering\Structures\Wall_004\Sheets\122048_004_WE002.dgn

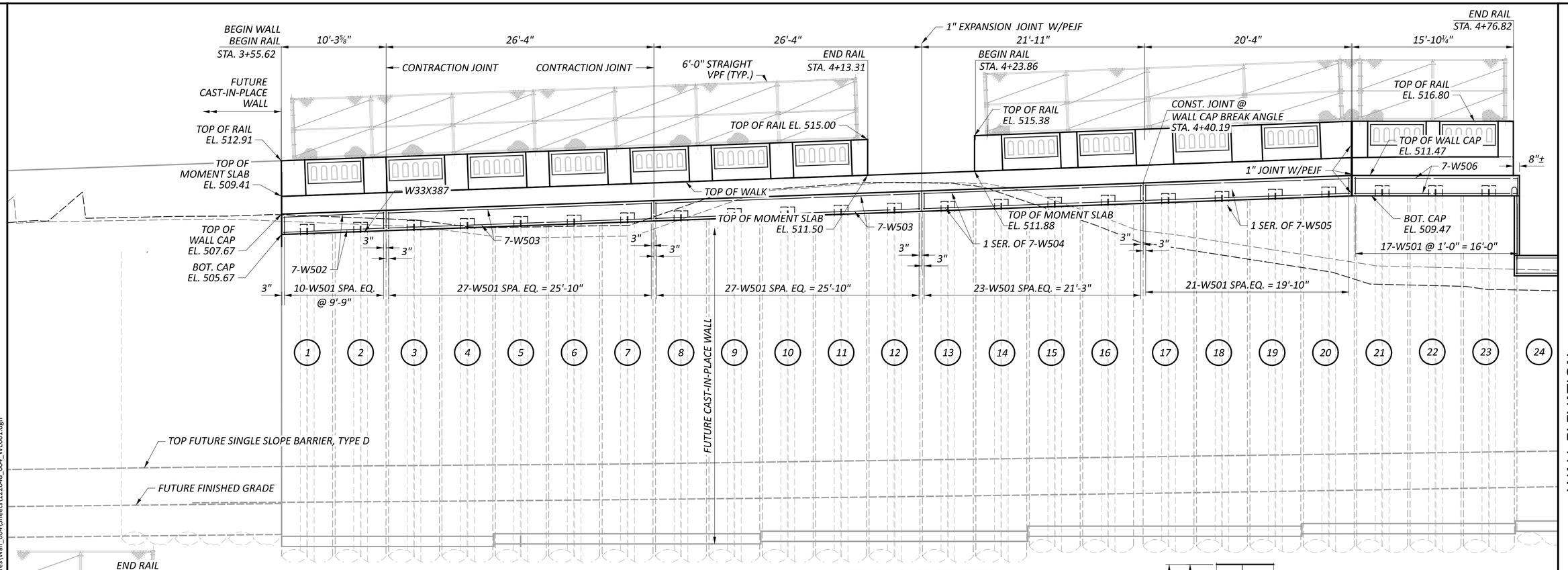

WALL NO. 04 ELEVATION

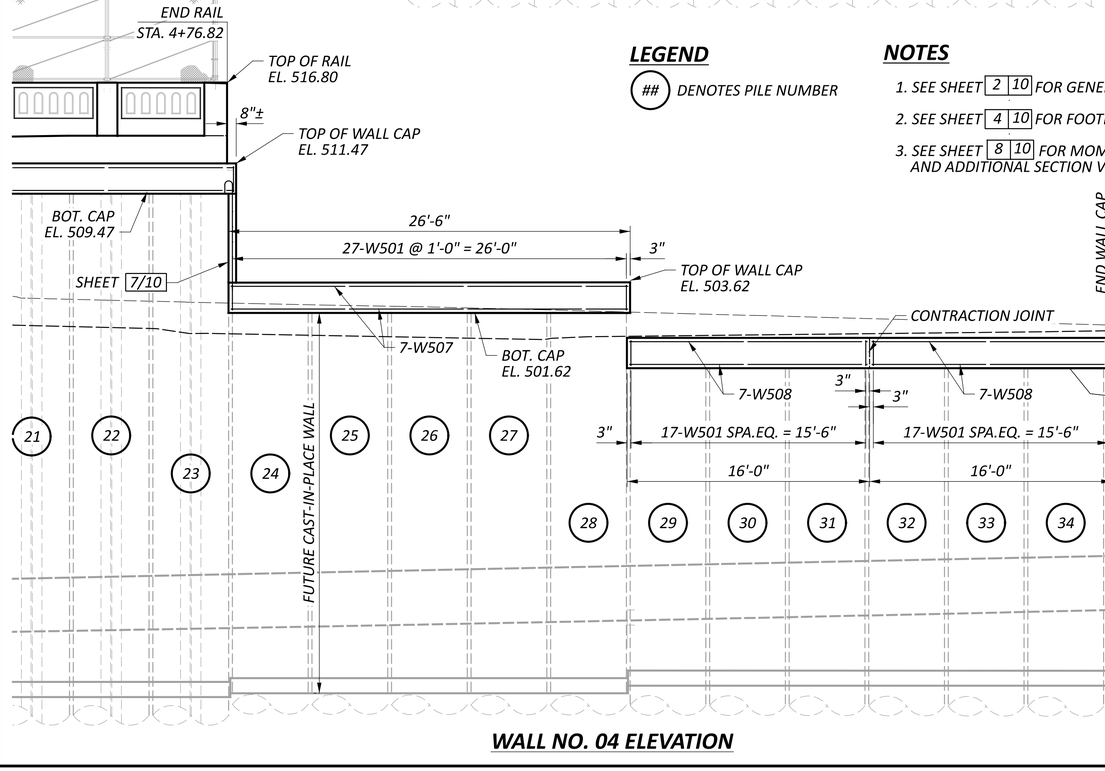

WALL NO. 04 ELEVATION

LEGEND

(##) DENOTES PILE NUMBER

NOTES

1. SEE SHEET 2 | 10 FOR GENERAL NOTES.
2. SEE SHEET 4 | 10 FOR FOOTING PLAN.
3. SEE SHEET 8 | 10 FOR MOMENT SLAB, RAILING DETAILS AND ADDITIONAL SECTION VIEWS.

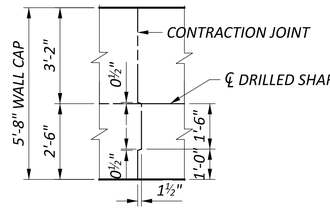

* BOTTOM OF CIP FACING IS ASSUMED TO BE 1' ABOVE THE ASSUMED BOTTOM OF WALL FACING FOOTER ON SHEET 5 | 10.

CONTRACTION JOINT PLAN

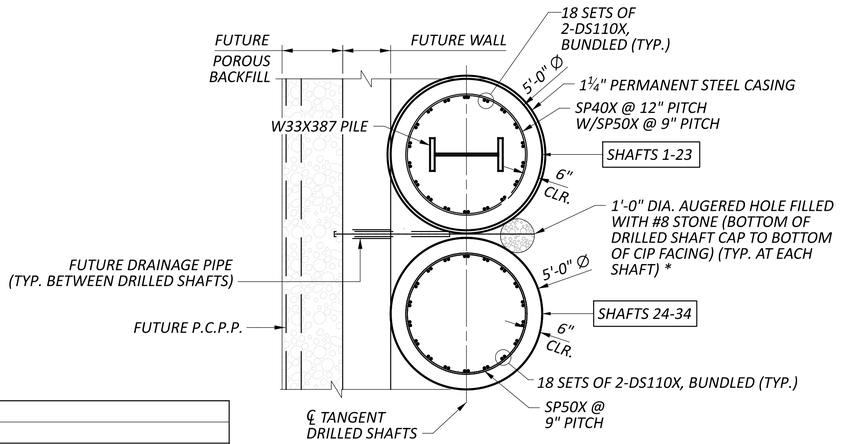

TYPICAL SECTION - TANGENT DRILLED SHAFT

SEE SHEET 5/10 FOR ADDITIONAL REINFORCMENT STEEL DETAILS

1	09/01/25	SHEET REVISIONS
ADDM' NO.	DATE	DESCRIPTION
DATE COMPLETED		

WALL ELEVATION
RETAINING WALL NO. 04 ALONG I-75 NORTHBOUND

DESIGN AGENCY
Palmer ENGINEERING
8350 E. KEMPER ROAD
SUITE B
CINCINNATI, OH 45249
(513) 469-1600

DESIGNER: RJB
REVIEWER: BJF 04/12/25
PROJECT ID: 122048
SUBSET: 6 | TOTAL: 10
SHEET: P.198 | TOTAL: P. 421

HAM-IR75-1.05

MODEL: Plan--1 - Wall_4-Tangent_Drilled_Shaft-Plan-1 [Sheet] PAPERSIZE: 34x22 (in.) DATE: 8/27/2025 TIME: 4:45:33 PM PLTDRV: OHDOT_PDF.pltcfg PENTBL: OHDOT_Pen.tbl USER: swalker@palmernet.com WORKSPACE: OHDOTCEv02 WORKSET: 122048 PRODUCT: OpenRoadsDesigner 24.00.00.205
pw:\\ohiodot-pw.bentley.com:ohiodot-pw-02\Documents\01 Active Projects\District 08\Hamilton\122048\d02-Engineering_PalmerEngineering\Structures\Wall_004\Sheets\122048_004_WE001.dgn

MODEL: Plan--1 - Wall_4-Tangent_Drilled_Shaft-Plan-2 [Sheet] PAPERSIZE: 34x22 (in.) DATE: 8/27/2025 TIME: 1:15:35 PM PLTDRV: OHDOT_PDF-pltcfg PENTBL: OHDOT_Pen.tbl USER: swalker@palmernet.com WORKSPACE: OHDOTCEv02 WORKSET: 122048 PRODUCT: OpenRoadsDesigner 24.00.00.205
pw:\\ohiodot-pw.bentley.com:ohiodot-pw-02\Documents\01 Active Projects\District 08\Hamilton\122048\402-Engineering_PalmerEngineering\Structures\Wall_004\Sheets\122048_004_WE001.dgn

HAM-IR75-1.06

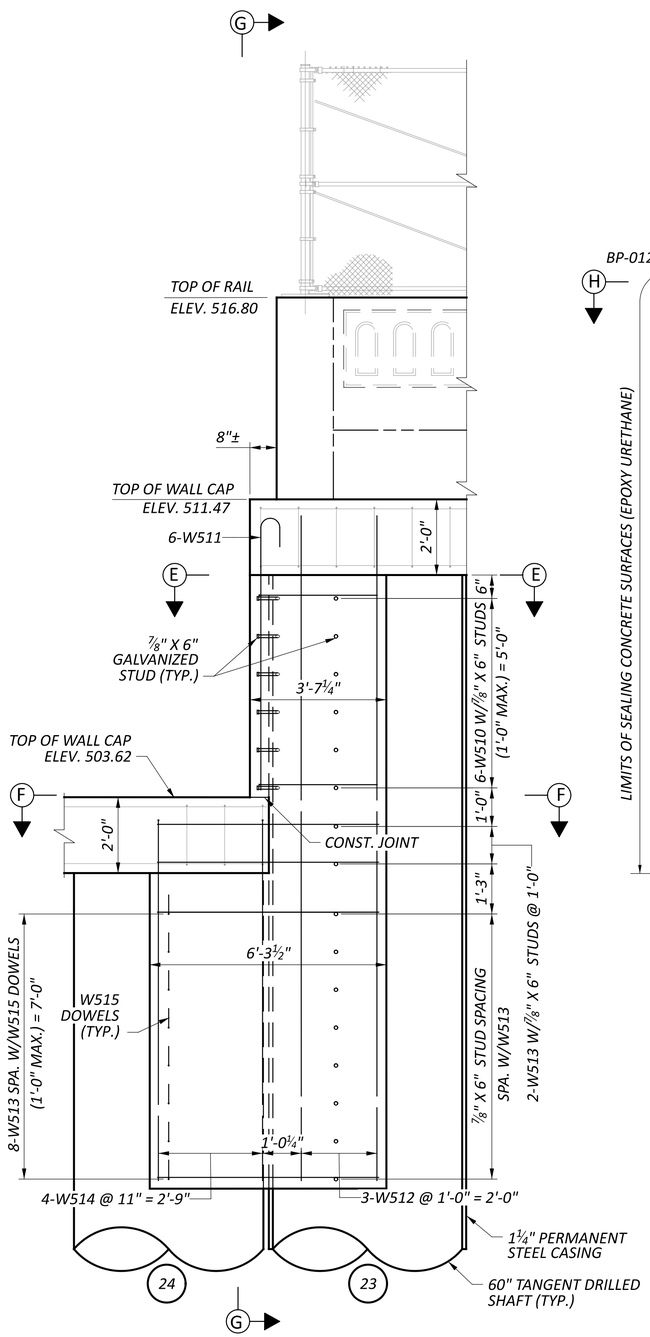

ELEVATION
SHAFT COLLAR

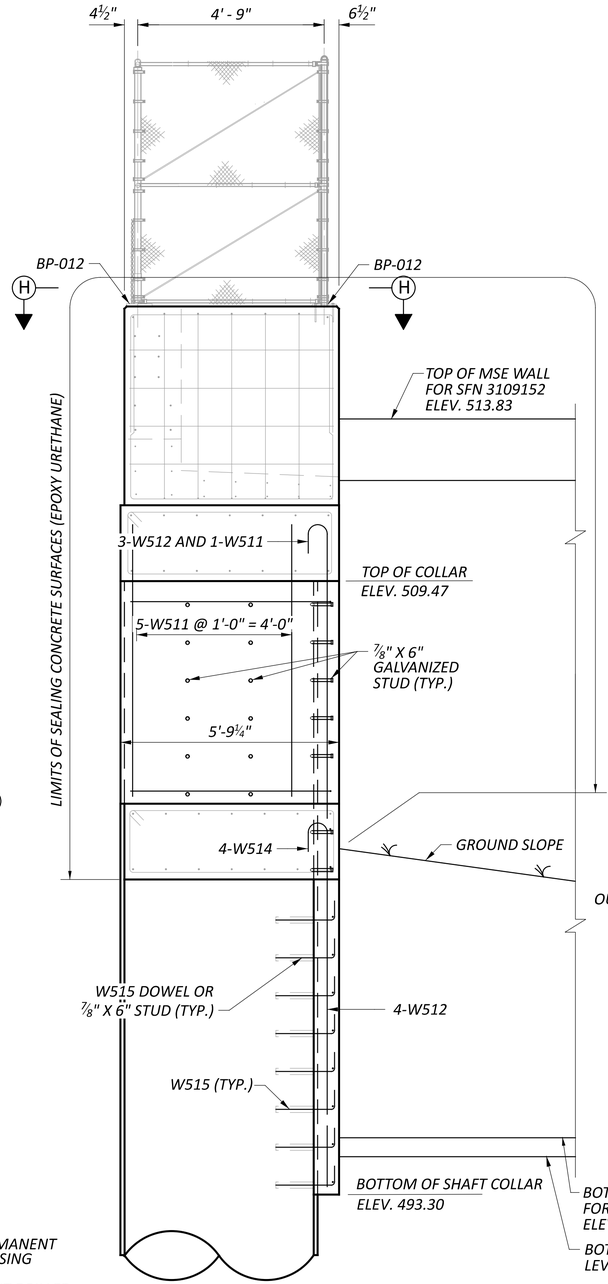

VIEW G-G

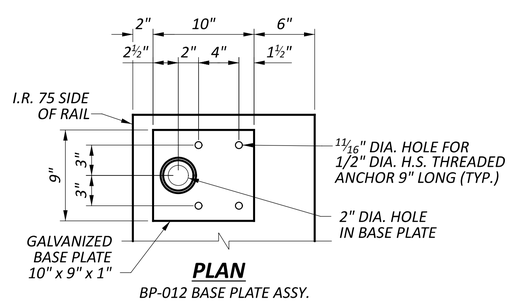

PLAN
BP-012 BASE PLATE ASSY.

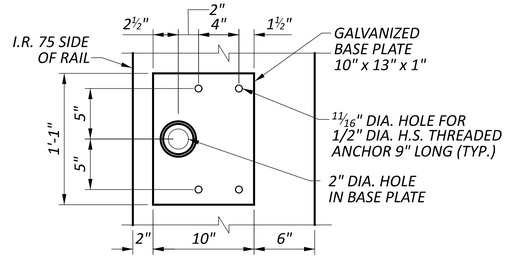

PLAN
BP-011 BASE PLATE ASSY.

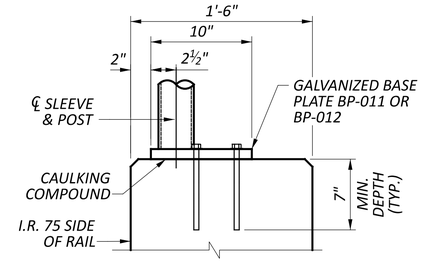

TYPICAL SECTION
BP-011 AND BP-012 BASE PLATE ASSY.

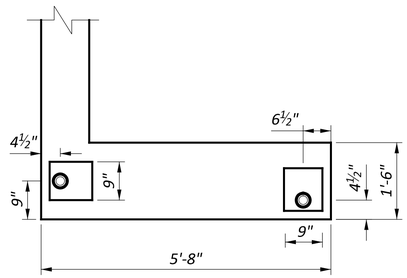

VIEW H-H
BASEPLATE ORIENTATION (SEE NOTE 6)

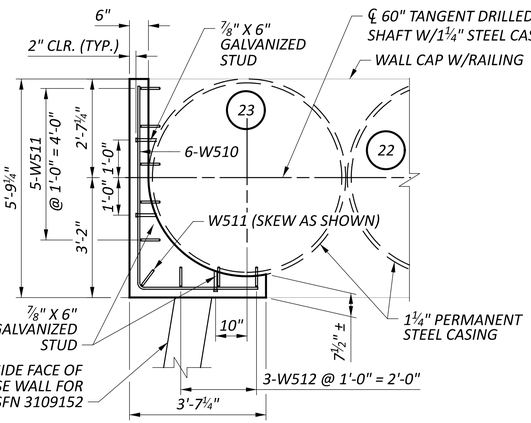

SECTION E-E
(SEE NOTE 6)

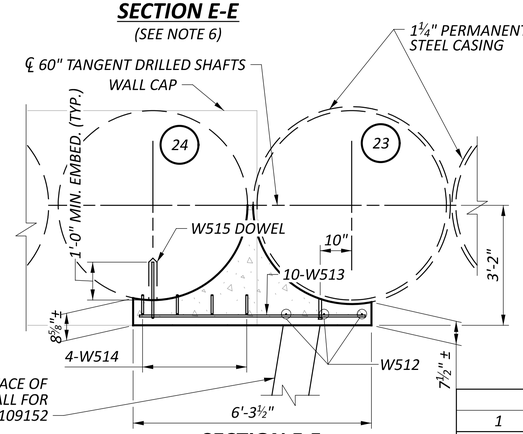

SECTION F-F
(SEE NOTE 6)

LEGEND

(#) = 60" TANGENT DRILLED SHAFT NUMBER

NOTES

1. SEE SHEET 2/10 FOR GENERAL NOTES.
2. SEE SHEET 6/10 FOR WALL 04 ELEVATION.
3. SEE SHEET 8/10 AND 9/10 FOR RAILING DETAILS.
4. SEE STD. DWG. VPF-1-24 FOR ADDITIONAL DETAILS REGARDING THE BASEPLATE, POST SLEEVE, AND APPROVED ADHESIVE ANCHOR BOLT OPTIONS. BASEPLATE SHALL BE 50 KSI GALVANIZED STEEL.
5. 2" MIN. CLEAR COVER TYPICAL OVER STEEL REINFORCEMENT.
6. SEAL EXPOSED CONCRETE SURFACES WITH EPOXY-URETHANE.

DRILLED SHAFT COLLAR FOR MSE WALL AND VPF DETAILS
RETAINING WALL NO. 04 ALONG I-75 NORTHBOUND

ADDM' NO.	DATE	DESCRIPTION
1	09/01/25	SHEET REVISIONS
DATE COMPLETED		

DESIGN AGENCY
Palmer ENGINEERING
8350 E. KEMPER ROAD
SUITE B
CINCINNATI, OH 45249
(513) 469-1600

DESIGNER: RJB
REVIEWER: BJF 04/12/25
PROJECT ID: 122048
SUBSET: 7 TOTAL: 10
SHEET: P.199 TOTAL: P. 421

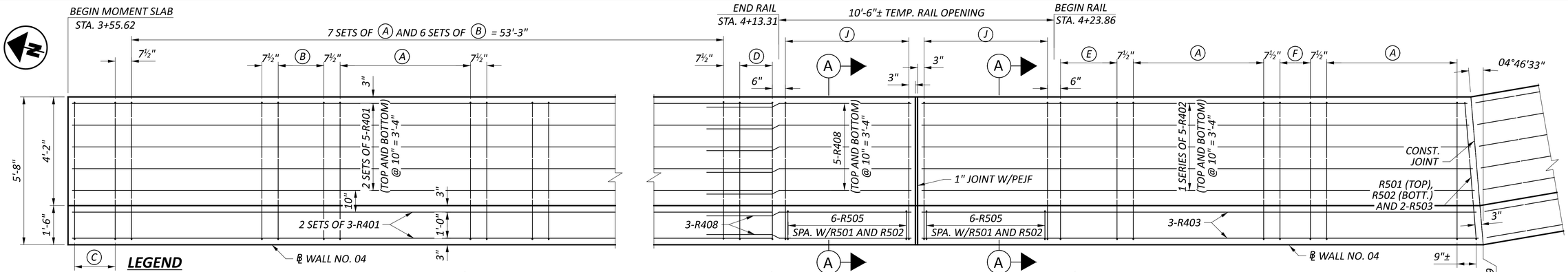

LEGEND

(A) 6-R501 (BOTT.), 6-R502 (TOP), 6-R503 AND 6-R504 @ 1'-0" = 5'-0"
(B) 3-R501 (BOTT.), 3-R502 (TOP) AND 6-R503 @ 10½" = 1'-9"
(C) 3-R501 (BOTT.), 3-R502 (TOP) AND 6-R503 @ 9⅜" = 1'-6¾"
(D) 3-R501 (BOTT.), 3-R502 (TOP) AND 6-R503 @ 7½" = 1'-3"
(E) 4-R501 (BOTT.), 4-R502 (TOP) AND 8-R503 SPA. EQ. = 2'-2"
(F) 3-R501 (BOTT.), 3-R502 (TOP) AND 6-R503 @ 7" = 1'-2"
(G) 4-R501 (BOTT.), 4-R502 (TOP) AND 8-R503 @ 10" = 2'-6"
(H) 4-R501 (BOTT.), 4-R502 (TOP) AND 8-R503 @ 11" = 2'-9"
(J) 6-R501 (BOTT.) AND 6-R502 (TOP) SPA. EQ. = 4'-9"

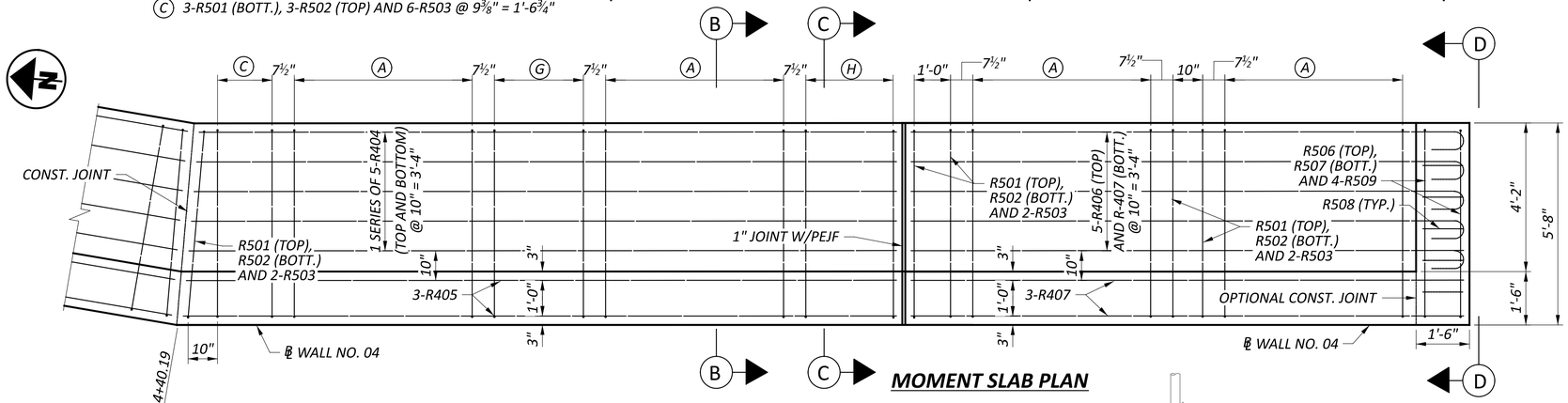

MOMENT SLAB PLAN

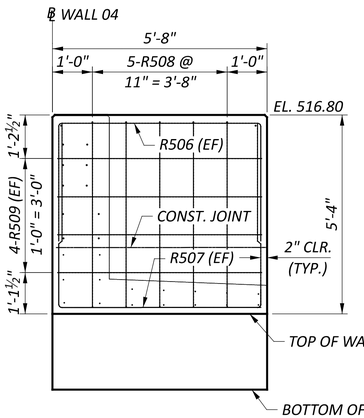

ELEVATION, VIEW D-D

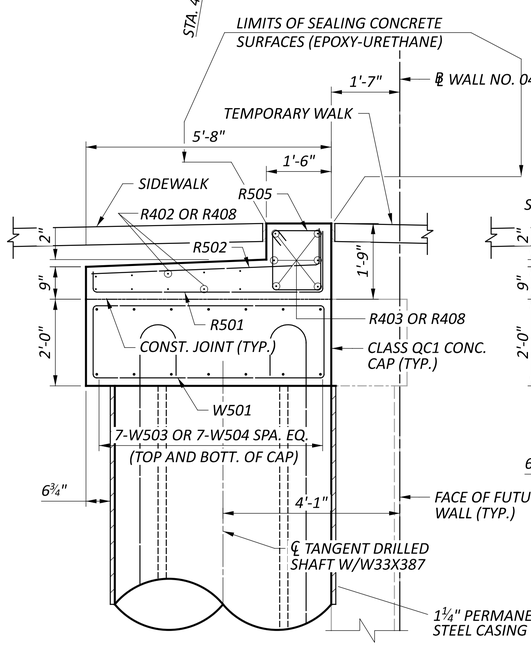

SECTION A-A

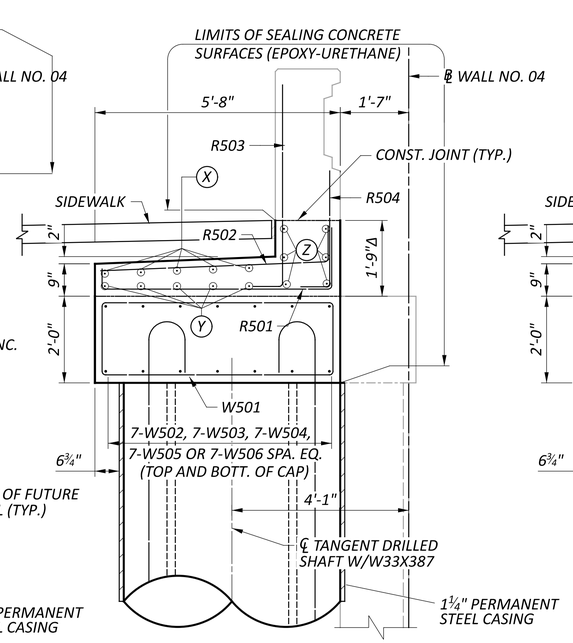

SECTION B-B
TYPICAL AT RAIL AESTHETIC LOCATIONS

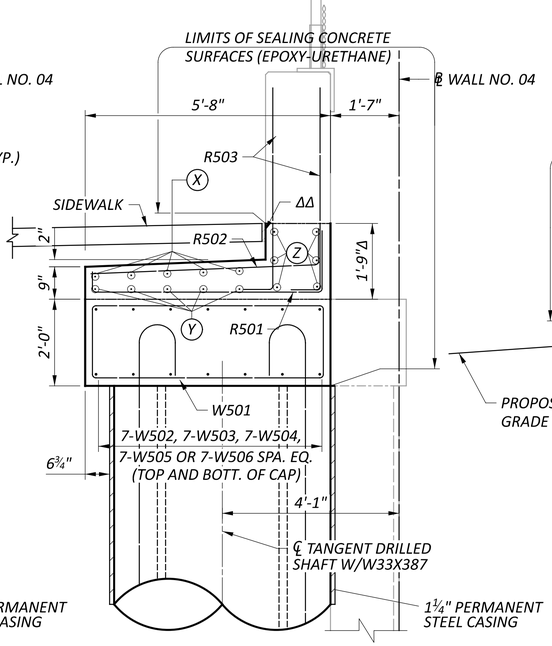

SECTION C-C
TYPICAL AT PILASTER LOCATIONS

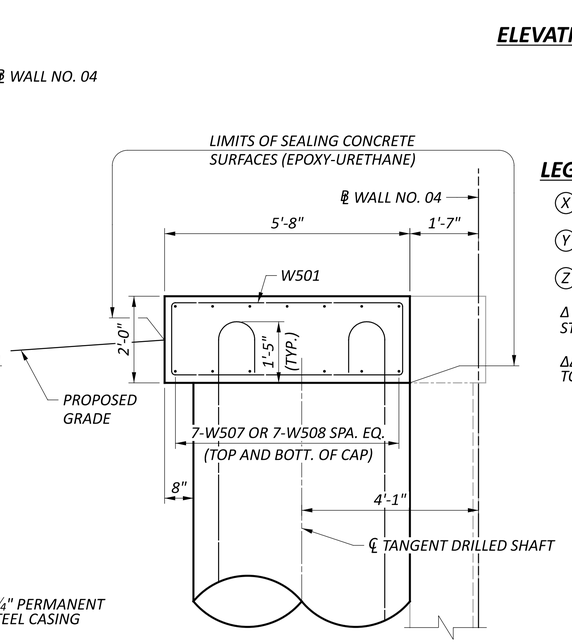

TYPICAL SECTION
STA. 4+76.82 - STA. 5+35.25

LEGEND

(X) R401, R402, R404 OR R406
(Y) R401, R402, R404 OR R407
(Z) R401, R403, R405 OR R407

Δ = VARIES 1'-9" TO 1'-10"
STA. 4+60.97 TO STA. 4+76.82

ΔΔ = ½" PEJF FROM STA. 4+61.39 +, TO PAID FOR WITH THIS PHASE

LAP LENGTH

#4 BARS - 2'-6" MIN.
#5 HORIZONTAL - 3'-1" MIN.
#5 VERTICAL - 2'-5" MIN.

NOTES

1. SEE SHEET 2 10 FOR GENERAL NOTES.
2. SEE SHEET 9 10 FOR RAILING DETAILS AND RAILING REINFORCING STEEL.
3. 2" MIN. CLEAR COVER TYPICAL OVER STEEL REINFORCEMENT.

NO.	DATE	DESCRIPTION
1	09/01/25	SHEET REVISIONS
ADDM'L	DATE COMPLETED	

MOMENT SLAB DETAILS AND TYPICAL SECTIONS RETAINING WALL NO. 04 ALONG I-75 NORTHBOUND

DESIGN AGENCY
Palmer ENGINEERING
8350 E. KEMPER ROAD
SUITE B
CINCINNATI, OH 45249
(513) 469-1600

DESIGNER RJB
REVIEWER BJF 04/12/25
PROJECT ID 122048
SUBSET 8 TOTAL 10
SHEET P.200 TOTAL P. 421

HAM-IR75-1.05

MODEL: Sheet PAPERSIZE: 34x22 (in.) DATE: 8/27/2025 TIME: 1:15:47 PM PLTDRV: OHDOT_PDF.pltcfg PENTBL: OHDOT_Pen.tbl USER: swalker@palmernet.com WORKSPACE: OHDOTCtv02 WORKSET: 122048 PRODUCT: OpenRoadsDesigner 24.00.00.205
pw:\\ohiodot-pw.bentley.com:ohiodot-pw-02\Documents\01 Active Projects\District 08\Hamilton\122048\402-Engineering_PalmerEngineering\Structures\Wall_004\Sheets\122048_004_WD001.dgn

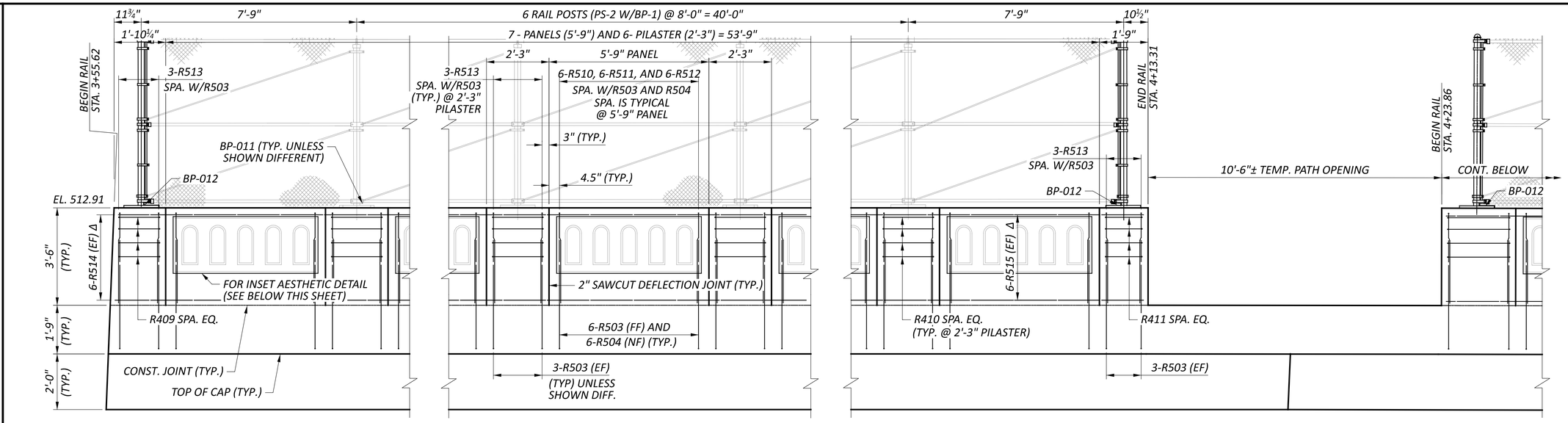

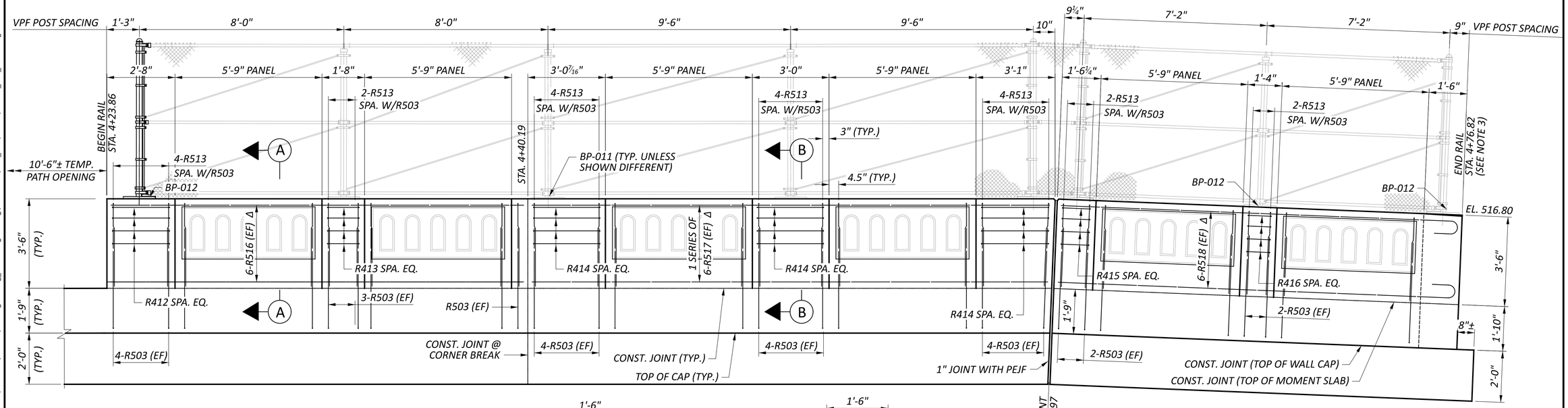

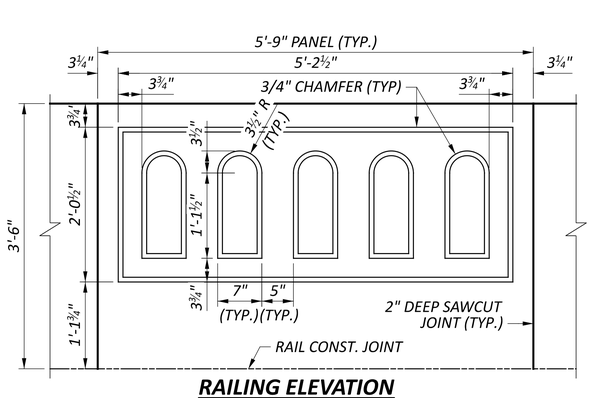

RAILING ELEVATION

5'-9' PANEL INSET AESTHETIC DETAIL

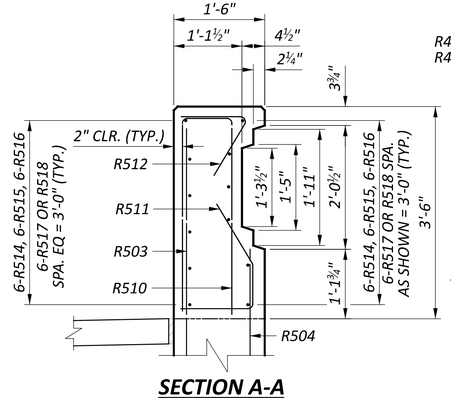

SECTION A-A

SECTION IS TYPICAL @ 5'-9" PANELS

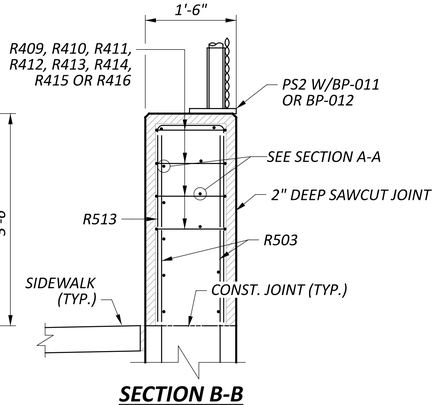

SECTION B-B

SECTION IS TYPICAL @ PILASTER

LAP LENGTH

#5 HORIZONTAL - 3'-1" MIN.
#5 VERTICAL - 2'-5" MIN.

LEGEND

Δ SEE SECTION VIEWS, THIS SHEET, FOR SPACING

NOTES

1. SEE SHEET 2 10 FOR GENERAL NOTES.
2. SEE STD. DWG. VPF-1-24 FOR ADDITIONAL DETAILS.
3. SEE SHEET 8 10 FOR MOMENT SLAB DETAILS AND END RAILING DETAILS.
4. SEE SHEET 6 10 FOR ELEVATION DETAILS AND ADDITIONAL RAILING ELEVATIONS.
5. SEE SHEET 7 10 FOR CUSTOM BASE PLATE DESIGNS.

ADDM' NO.	DATE	DESCRIPTION
1	09/01/25	SHEET REVISIONS
		DATE COMPLETED

RAILING DETAILS
RETAINING WALL NO. 04 ALONG I-75 NORTHBOUND

DESIGN AGENCY
Palmer ENGINEERING
8350 E. KEMPER ROAD
SUITE B
CINCINNATI, OH 45249
(513) 469-1600

DESIGNER	
RJB	
REVIEWER	
BJF	04/12/25
PROJECT ID	
122048	
SUBSET	TOTAL
9	10
SHEET	TOTAL
P.201	P. 421

HAM-IR75-1.05

MODEL: Sheet - 2 PAPERSIZE: 34x22 (in.) DATE: 8/27/2025 TIME: 1:15:49 PM PLTDRV: OHDOT_PDF.pltcfg PENTBL: OHDOT_Pen.tbl USER: swalker@palmernet.com WORKSPACE: OHDOTCivil02 WORKSET: 122048 PRODUCT: OpenRoadsDesigner 24.00.00.205
pw:\\ohiodot-pw.bentley.com:ohiodot-pw-02\Documents\01 Active Projects\District 08\Hamilton\122048\402-Engineering_PalmerEngineering\Structures\Wall_004\Sheets\122048_004_WD001.dgn

WALL NO. 04 REINFORCING STEEL LIST

MARK	NUMBER TOTAL	LENGTH	WEIGHT (LBS.)	TYPE	DIMENSIONS A	B	C	D	E	R	INC.
WALL NO. 04 (GALVANIZED STEEL REINFORCEMENT - GSR)											
W501	186	14' - 6"	2,822	3	5' - 4"	1' - 8"					
W502	14	9' - 11"	145	STR							
W503	28	26' - 0"	760	STR							
	2	21' - 1"									
W504	SERIES	to	312	STR							0' - 1"
	7	21' - 7"									
	2	19' - 6"									
W505	SERIES	to	289	STR							0' - 1"
	7	20' - 0"									
W506	14	16' - 2"	237	STR							
W507	14	26' - 0"	380	STR							
W508	28	15' - 6"	453	STR							
W509	NA										
W510	6	8' - 5"	53	1	5' - 4"	3' - 2"					
W511	6	7' - 11"	50	16	7' - 4"						
W512	3	18' - 1"	57	16	17' - 6"						
W513	10	5' - 11"	62	STR							
W514	4	10' - 4"	44	16	9' - 9"						
W515	8	2' - 0"	18	1	0' - 8"	1' - 6"					
R401	32	30' - 0"	642	STR							
	2	20' - 11"									
R402	SERIES	to	141	STR							0' - 0 ¾"
	5	21' - 2"									
R403	6	21' - 4"	86	STR							
	2	19' - 7"									
R404	SERIES	to	132	STR							0' - 1"
	5	19' - 11"									
R405	6	20' - 0"	81	STR							
R406	5	16' - 0"	54	16	15' - 6"						
R407	11	15' - 6"	114	STR							
R408	16	7' - 8"	82	STR							
R409	4	5' - 6"	15	3	1' - 4"	1' - 2"					
R410	24	6' - 4"	102	3	1' - 9"	1' - 2"					
R411	4	5' - 4"	15	3	1' - 3"	1' - 2"					
R412	4	7' - 2"	20	3	2' - 2"	1' - 2"					
R413	4	5' - 2"	14	3	1' - 2"	1' - 2"					
R414	12	7' - 10"	63	3	2' - 6"	1' - 2"					
R415	4	4' - 10"	13	3	1' - 0"	1' - 2"					
R416	4	4' - 6"	13	3	0' - 10"	1' - 2"					
R501	138	6' - 11"	996	2	1' - 5"	5' - 4"	0' - 5"				
R502	138	5' - 11"	857	11	0' - 0 ½"	0' - 9"	5' - 4"				
R503	174	5' - 0"	915	1	0' - 10"	4' - 4"					
R504	78	3' - 2"	258	1	0' - 10"	2' - 5 ½"					
R505	12	5' - 5"	68	3	1' - 1"	1' - 4"					
R506	2	10' - 1"	22	2	2' - 6"	5' - 4"	2' - 6"				
R507	2	14' - 9"	31	2	4' - 10"	5' - 4"	4' - 10"				
R508	5	12' - 9"	67	3	4' - 11"	1' - 2"					
R509	8	5' - 4"	45	STR							
R510	78	6' - 11"	560	2	3' - 2"	0' - 9 ½"	3' - 2"				
R511	78	2' - 11"	238	10	1' - 0"	0' - 7"	0' - 9"	1' - 2"			
R512	78	2' - 1"	169	11	0' - 6"	1' - 0"	1' - 1"				
R513	46	7' - 3"	348	2	3' - 2"	1' - 2"	3' - 2"				
R514	12	30' - 6"	382	STR							
R515	12	30' - 0"	376	STR							
R516	12	16' - 2"	203	STR							
	2	20' - 2"									
R517	SERIES	to	254	STR							0' - 0 ⅜"
	6	20' - 4"									
R518	12	16' - 1"	202	16	15' - 6"						
		GSR TOTAL =	13,260	LBS							

REINFORCING BENDING DIAGRAMS

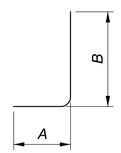

TYPE-1

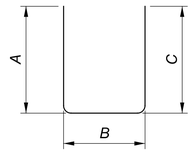

TYPE-2

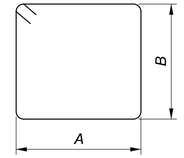

TYPE-3

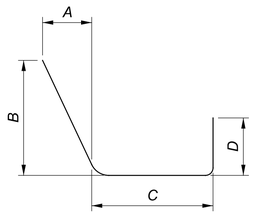

TYPE-10

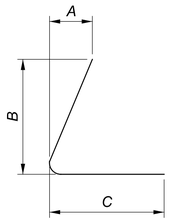

TYPE-11

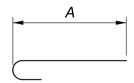

TYPE-16

NOTE

SEE SHEET 5/10 FOR ADDIONAL TANGENT DRILLED SHAFT REINFORCMENT STEEL DETAILS

1	*09/01/25*	*SHEET REVISIONS*
ADDM' NO.	*DATE*	*DESCRIPTION*
DATE COMPLETED		

REINFORCING STEEL LIST
RETAINING WALL NO. 04 ALONG I-75 NORTHBOUND

DESIGN AGENCY
Palmer ENGINEERING
8350 E. KEMPER ROAD
SUITE B
CINCINNATI, OH 45249
(513) 469-1600

DESIGNER RJB
REVIEWER BJF 04/12/25
PROJECT ID 122048
SUBSET 10 TOTAL 10
SHEET P.202 TOTAL P. 421

HAM-IR75-1.05

MODEL: Sheet PAPERSIZE: 34x22 (in.) DATE: 8/27/2025 TIME: 1:15:58 PM PLTDRV: OHDOT_PDF.pltcfg PENTBL: OHDOT_Pen.tbl USER: swalker@palmernet.com WORKSPACE: OHDOTCtv02 WORKSET: 122048 PRODUCT: OpenRoadsDesigner 24.00.00.205
pw:\\ohiodot-pw.bentley.com:ohiodot-pw-02\Documents\01 Active Projects\District 08\Hamilton\122048\02-Engineering_PalmerEngineering\Structures\Wall_004\Sheets\122048_004_WL001.dgn

REFERENCE NO.	SHEET NO.	ALIGNMENT	STATION FROM	STATION TO	SIDE		611 12" CONDUIT, TYPE B (SANITARY SEWER) FT	611 12" CONDUIT, TYPE B (SANITARY SEWER W/ CONCRETE ENCASEMENT)		611 MANHOLE ADJUSTED TO GRADE (SANITARY SEWER) EACH	611 MANHOLE, MISC.: STANDARD MANHOLE, TYPE B (SANITARY SEWER) EACH					839 SPECIAL - VALVE BOX ADJUSTED TO GRADE (GCWW) EACH	839 SPECIAL - FIRE HYDRANT REMOVED AND DISPOSED OF (GCWW) EACH	839 SPECIAL - FIRE HYDRANT SERVICE LINE SHORTENED AND ADJUSTED TO GRADE (GCWW) EACH			
			SANITARY SEWER																		
S-301	79	CLP_COURT	5+92.84		LT					1											
S-302	79 & 204	CLP_COURT	7+32.09		LT					1											
S-303	81 & 204	CLP_COURT	8+19.72		LT					1											
S-304	81 & 204	CLP_COURT	8+75.00		LT						1										
S-305	81 & 204	CLP_COURT	9+90.00	8+75.00	LT		115				1										
S-306	81 & 204	CLP_COURT	11+25.00	9+90.00	LT		38	103			1										
S-307	82	CLP_LINN	102+90.04		LT					1											
S-308	83	CLP_LINN	110+20.65		LT					1											
			WATER WORKS																		
WW-301	78	CLP_COURT	5+56.83		RT													1			
WW-302	80	CLP_COURT	9+45.47		RT												1				
WW-303	80	CLP_COURT	11+34.09		RT											1					
WW-304	80	CLP_COURT	11+59.70		RT												1				
WW-305	80	CLP_COURT	11+71.05		RT											1					
TOTALS CARRIED TO GENERAL SUMMARY							153	103		5	3					2	2	1			

UTILITIES SUBSUMMARY

DESIGN AGENCY
STRUCTUREPOINT LLC

DESIGNER
LZS

REVIEWER
KAM 03/03/25

PROJECT ID
122048

SHEET P.203 | TOTAL P.421

HAM-IR 75-1.05

MODEL: Sheet PAPERSIZE: 34x22 (in.) DATE: 8/28/2025 TIME: 10:44:50 AM PLTDRV: OHDOT_PDF.pltcfg PENTBL: OHDOT_Pen.tbl USER: WORKSPACE: OHDOTCEv02 WORKSET: I22048 PRODUCT: OpenRoadsDesigner 10.12.02.4
pw:\\ohiodot-pw.bentley.com:ohiodot-pw-02\Documents\01 Active Projects\District 08\Hamilton\122048\403-Engineering_StructurePoint\Utilities\Sheets\122048_US301.dgn

ITEM 625 - SPECIAL, MAINTAIN EXISTING LIGHTING

EXISTING ROADWAYS WHICH ARE TO REMAIN OPEN TO TRAFFIC DURING CONSTRUCTION OF THIS PROJECT AND WHICH ARE LIGHTED SHALL HAVE THE LIGHTING MAINTAINED AS DESCRIBED HEREIN.

BEFORE ANY WORK IS STARTED IN THE IMMEDIATE VICINITY OF THE EXISTING LIGHTING CIRCUITS, REPRESENTATIVES OF ODOT, THE MAINTAINING AGENCY AND THE CONTRACTOR SHALL MAKE A VISUAL INSPECTION OF THE EXISTING ROADWAY LIGHTING CIRCUITS TO BE MAINTAINED. DURING THIS INSPECTION, A WRITTEN RECORD OF THE CONDITION OF EXISTING LIGHTING SHALL BE MADE BY ODOT'S REPRESENTATIVE. THIS WRITTEN REPORT SHALL NOTEINDIVIDUAL LUMINAIRES WHICH ARE NOT IN WORKING ORDER, INDIVIDUAL POLES WHICH ARE NOT STANDING, AND INDIVIDUAL CIRCUITS WHICH ARE NOT IN WORKING ORDER. THE COMPLETED REPORT SHALL BE SIGNED BY THE REPRESENTATIVES OF ODOT, THE MAINTAINING AGENCY AND THE CONTRACTOR.

IF, AS A RESULT OF THIS INSPECTION, IT IS DETERMINED THAT THE CONDITION OF THE EXISTING SYSTEM IS BELOW THAT REQUIRED FOR THE SAFETY OF THE TRAVELING PUBLIC, THEN THE MAINTAINING AGENCY SHALL MAKE THE REPAIRS NECESSARY TO RETURN THE SYSTEM TO AN ACCEPTABLE CONDITION. FOLLOWING THESE REPAIRS, THE SYSTEM SHALL AGAIN BE INSPECTED AND A REPORT SHALL BE MADE AND SIGNED AS OUTLINED HEREIN.

WHEN THE EXISTING SYSTEM IS IN AN ACCEPTABLE CONDITION, IT SHALL BE TURNED OVER TO THE CONTRACTOR WHO SHALL THEN BE REQUIRED TO MAINTAIN THE EXISTING LIGHTING TO THE CONDITION OUTLINED IN THIS REPORT WITH THE EXCEPTION OF KNOCKDOWNS DUE TO TRAFFIC CRASHES.

REPLACEMENT OF KNOCKED DOWNED UNITS SHALL BE DONE ONLY WHEN THE ENGINEER HAS DETERMINED THAT THE REPLACEMENT OF THE KNOCKED DOWN UNIT IS NECESSARY AND SHALL BE PAID SEPARATELY ON A UNIT BASIS.

BETTERMENTS SHALL BE COVERED IN ITEMS OF WORK PERTAINING TO THE CONSTRUCTION OF PERMANENT IMPROVEMENT.

WHEN THE SEQUENCE OF CONSTRUCTION ACTIVITIES REQUIRES, OR SHOULD THE CONTRACTOR DESIRE, THE REMOVAL OF THE EXISTING LIGHTING BEFORE THE NEW LIGHTING IS OPERATIONAL, THE CONTRACTOR SHALL BE RESPONSIBLE FOR PROVIDING TEMPORARY LIGHTING OF THIS PORTION OF THE ROADWAY.

PRIOR TO INSTALLING SUCH LIGHTING, THE CONTRACTOR SHALL PREPARE AND SUBMIT FOUR SETS OF THE TEMPORARY LIGHTING PLAN TO THE ENGINEER FOR REVIEW AND APPROVAL.

THIS PLAN SHALL SHOW LOCATIONS OF POLES, LENGTHS OF BRACKET ARMS, STYLES OF LUMINAIRES, MOUNTING HEIGHTS, WIRING METHODS AND OTHER PERTINENT INFORMATION. THE TEMPORARY LIGHTING SHALL PROVIDE AN AVERAGE INITIAL INTENSITY OF 1.2 FOOTCANDLES WITH AN AVERAGE TO MINIMUM UNIFORMITY NOT TO EXCEED 3:1. MOUNTING HEIGHT OF TEMPORARY LUMINAIRES SHALL NOT BE LESS THAN 30 FEET, AND THE MINIMUM OVERHEAD CONDUCTOR CLEARANCE SHALL BE 20 FEET. TEMPORARY OVERHEAD CONSTRUCTION SHALL NOT BE LESS THAN GRADE "B" FOR STRENGTH REQUIREMENTS AS DEFINED BY THE NATIONAL ELECTRIC SAFETY CODE. WOOD POLES WITH OVERHEAD WIRING MAY BE USED. HOWEVER, TEMPORARY LIGHTING SHALL MEET FEDERAL AND STATE SAFETY CRITERIA. IF BREAKAWAY POLES ARE USED TO MEET THESE CRITERIA, THEN UNDERGROUND WIRING SHALL BE USED. RECONDITIONED OR USED MATERIALS MAY BE FURNISHED FOR TEMPORARY LIGHTING. ALL MATERIALS NECESSARY TO COMPLETE THE TEMPORARY LIGHTING SHALL BE FURNISHED AND INSTALLED BY THE CONTRACTOR. WHEN NO LONGER NEEDED, THE TEMPORARY LIGHTING INSTALLATION SHALL BE REMOVED AND PROPERLY DISPOSED OF BY THE CONTRACTOR.

ITEM 625 - SPECIAL, MAINTAIN EXISTING LIGHTING (CONTINUED)

WHEN THE PROJECT BEGINS AND THE CONTRACTOR HAS TAKEN OVER MAINTENANCE OF THE EXISTING FACILITIES, THE CONTRACTOR IS RESPONSIBLE FOR ALL REQUIRED LAYOUTS AND LOCATIONS OF THE EXISTING AND PROPOSED ELECTRICAL CIRCUITS AND RELATED ITEMS WITHIN THE PROJECT LIMITS. THE CONTRACTOR SHALL LOCATE AND MARK ALL UNDERGROUND ELECTRICAL CIRCUITS (INCLUDING TRAFFIC LOOPS AND LOOP LEAD-INS) FOR THE DURATION OF THE PROJECT.

THE MAINTAINING AGENCY WILL PAY FOR ELECTRICAL ENERGY CONSUMED BY EXISTING POWER SERVICES AND BY PROPOSED PERMANENT POWER SERVICES AFTER ACCEPTANCE OF THE LIGHTING WORK. THE CONTRACTOR WILL PAY FOR ELECTRICAL ENERGY, INSTALLATION, REMOVAL AND MAINTENANCE OF ANY TEMPORARY POWER SERVICES.

THE LUMP SUM PRICE BID FOR ITEM SPECIAL "MAINTAIN EXISTING LIGHTING" SHALL INCLUDE PAYMENT FOR ALL LABOR, EQUIPMENT, MATERIALS AND INCIDENTALS NECESSARY TO MAINTAIN THE EXISTING LIGHTING AS SPECIFIED HEREIN.

THE UNIT PRICE BID FOR ITEM SPECIAL "REPLACEMENT OF EXISTING LIGHTING UNIT" SHALL BE FULL PAYMENT FOR THE REPLACEMENT OF AN EXISTING LIGHTING UNIT WHICH HAS BEEN KNOCKED DOWN AFTER THE AFOREMENTIONED INSPECTION AND SHALL INCLUDE ALL LABOR, EQUIPMENT, MATERIALS AND INCIDENTALS NECESSARY TO PROVIDE A REPLACEMENT FOR SUCH UNIT.

THE FOLLOWING ESTIMTED QUANTITIES HAVE BEEN INCLUDED IN THE GENERAL SUMMARY FOR THE WORK NOTED ABOVE:

ITEM 625 - SPECIAL, MAINTAIN EXISTING LIGHTING 1 1 LS
ITEM 625 - SPECIAL, REPLACEMENT OF EXISITNG LIGHT UNIT 2 EACH

LIGHTING GENERAL NOTES

DESIGN AGENCY
AMERICAN STRUCTUREPOINT INC.

DESIGNER
CDP

REVIEWER
EMS 03/03/25

PROJECT ID
122048

SHEET P.220A TOTAL P.421

HAM-IR 75-1.05

MODEL: Sheet 02 PAPERSIZE: 34x22 (in.) DATE: 8/28/2025 TIME: 10:45:00 AM PLTDRV: OHDOT_PDF.pltcfg PENTBL: OHDOT_Pen.tbl USER: WORKSPACE: OHDOTCEv02 WORKSET: 122048 PRODUCT: OpenRoadsDesigner 10.12.02.4
pw:\\ohiodot-pw.bentley.com:ohiodot-pw-02\Documents\01 Active Projects\District 08\Hamilton\122048\403-Engineering_StructurePoint\Lighting\Sheets\122048_LN301.dgn

GENERAL NOTES:

REFER TO THE FOLLOWING STANDARD BRIDGE AND ROADWAY DRAWINGS:

AS-1-15 REVISED 1-20-23
AS-2-15 REVISED 7-21-23
EXJ-4-87 REVISED 1-19-24
GSD-1-19 REVISED 7-19-24
RM-2.1 REVISED 7-19-13
26999 DATED 01-03 (CITY OF CINCINNATI)

AND TO THE FOLLOWING SUPPLEMENTAL SPECIFICATIONS:

800 DATED 01-17-25
840 DATED 07-19-24
851 DATED 07-19-24

DESIGN SPECIFICATIONS:

THIS STRUCTURE CONFORMS TO THE 9" EDITION OF THE "LRFD BRIDGE DESIGN SPECIFICATIONS"ADOPTED BY THE AMERICAN ASSOCIATION OF STATE HIGHWAY AND TRANSPORTATION OFFICIALS, 2020 AND THE ODOT BRIDGE DESIGN MANUAL, 2020 EDITION WITH REVISIONS THROUGH JULY 2024, EXCEPT AS NOTED ELSEWHERE IN THE PLANS.

SPECIAL DESIGN SPECIFICATIONS:

THIS BRIDGE REQUIRED THE USE OF A THREE-DIMENSIONAL MODEL USING THE FINITE ELEMENT DESIGN METHOD TO ANALYZE THE STRUCTURE. THE COMPUTER PROGRAM USED FOR STRUCTURAL ANALYSIS WAS MDX VERSION 2023.11.21. THIS PROGRAM WAS USED FOR THE DESIGN OF THE STEEL GIRDERS AND CROSSFRAMES AND TO CALCULATE REACTIONS FOR THE DESIGN OF THE BEARINGS AND SUBSTRUCTURES.

DEAD LOAD DISTRIBUTIONS: THE WEIGHT OF THE STEEL SUPERSTRUCTURE AND CONCRETE DECK WAS APPLIED TO EACH ELEMENT IN THE MODEL BASED ON LOCAL SECTION PROPERTIES. THE WEIGHT OF THE FUTURE WEARING SURFACE, SIDEWALK, RAISED MEDIAN, LIGHT POLES AND PLANTER POTS WAS APPLIED TO EACH GIRDER BASED ON TRIBUTARY AREA. PARAPET, SCREEN WALL, PILASTERS AND PLANTER WEIGHT WAS APPLIED TO THE EXTERIOR GIRDERS.

UNIT LOADS USED IN THE ANALYSIS ARE LISTED BELOW:

FUTURE WEARING SURFACE 60 LB/SF
PARAPET/PILASTERS + PLANTERS + SCREEN WALL + SIDEWALK + LIGHT POLES + RAISED MEDIAN:
GIRDER/BEAM LINES 1 & 9 (UNIT 1) - 4.268 KIPS/FT
GIRDER/BEAM LINES 1 & 9 (UNIT 2) - 3.640 KIPS/FT
GIRDER/BEAM LINES 2 & 8 (UNITS 1 & 2) - 1.448 KIPS/FT
GIRDER/BEAM LINES 3 & 7 (UNITS 1 & 2) - 0.880 KIPS/FT
GIRDER/BEAM LINE 5 (UNITS 1 & 2) - 0.750 KIPS/FT

LIVE LOAD DISTRIBUTION: THE DESIGN AND LOAD RATING ANALYSES WERE CARRIED OUT BY APPLYING TRUCK AND LANE LOADS DIRECTLY TO THE FINITE ELEMENT MODELS, RATHER THAN BY USING CALCULATED DISTRIBUTION FACTORS.

OPERATIONAL IMPORTANCE:

A LOAD MODIFIER OF 1.0 HAS BEEN ASSUMED FOR THE DESIGN OF THIS STRUCTURE IN ACCORDANCE WITH THE AASHTO LRFD BRIDGE DESIGN SPECIFICATIONS, ARTICLE 1.3.5 AND THE ODOT BRIDGE DESIGN MANUAL, 2020.

DESIGN LOADING:

HL-93
FUTURE WEARING SURFACE (FWS) OF 0.060 KSF
SATURATED SOIL UNIT WEIGHT OF 0.115 KCF
PLANTER WALL CONCRETE UNIT WEIGHT OF 0.150 KCF
SIDEWALK LIVE LOAD OF 0.075 KSF

DESIGN DATA:

CONCRETE CLASS QC3 COMPRESSIVE STRENGTH 4.5 KSI (DECK AND APPROACH SLABS)
CONCRETE CLASS QC2 COMPRESSIVE STRENGTH 4.5 KSI (SIDEWALKS, RAISED MEDIAN, AND PLANTER WALLS)
CONCRETE CLASS QC SCC COMPRESSIVE STRENGTH 4.5 KSI (PARAPETS)
CONCRETE CLASS QC3 COMPRESSIVE STRENGTH 4.0 KSI (SUBSTRUCTURE EXCLUDING FOOTINGS)
CONCRETE CLASS QC1 COMPRESSIVE STRENGTH 4.0 KSI (FOOTINGS)
GALVANIZED STEEL REINFORCEMENT MINIMUM YIELD STRENGTH 60 KSI
STRUCTURAL STEEL ASTM A709 GRADE 50W YIELD STRENGTH 50 KSI
STEEL CIP PILES ASTM A 252 GRADE 3 YIELD STRENGTH 45 KSI
STEEL SHEET PILING ASTM A572 GRADE 50 YIELD STRENGTH 50 KSI

DECK PROTECTION METHOD:

GALVANIZED REINFORCING STEEL
2½"CONCRETE COVER
CLASS QC3 CONCRETE

MONOLITHIC WEARING SURFACE:

MONOLITHIC WEARING SURFACE IS ASSUMED, FOR DESIGN PURPOSES, TO BE 1 INCH THICK.

EXISTING STRUCTURE PLANS:

THE EXISTING STRUCTURE PLANS ARE AVAILABLE ONLINE THROUGH THE FOLLOWING WEBSITE:ftp:///ftp.dot.state.oh.us/pub/Contracts/Attach/D08-113361/Reference%20Files/

IT IS THE RESPONSIBILITY OF THE CONTRACTOR TO BECOME FAMILIAR WITH ALL PERTINENT EXISTING DRAWINGS AND DETAILS RELEVANT TO THIS PROJECT.

ITEM 202 - STRUCTURE REMOVED, OVER 20 FOOT SPAN, AS PER PLAN:

IN ADDITION TO THE REQUIREMENTS OF CMS 202, THIS ITEM INCLUDES THE FOLLOWING WORK:

1. REMOVE THE EXISTING RAMP BRIDGE SUPERSTRUCTURES AND PIERS FROM GEST STREET TO LINN STREET. DO NOT REMOVE THE EXISTING ABUTMENTS, RETAINING WALLS AND EMBANKMENTS SUPPORTING THE GEST ST. RAMPS.

2. REMOVE EXISTING PIERS 1, 2, 3, 4, AND 6 DOWN TO THE BOTTOM OF FOOTING.

3. CUT OFF EXISTING PILES AT EXISTING PIER 1 AND EXISTING FORWARD ABUTMENT AS NOTED ON THE FOUNDATION PLANS.

MOT AND PHASE CONSTRUCTION:

THE EXISTING LINN ST. BRIDGE WILL BE CLOSED WITH A DETOUR OF TRAFFIC . REMOVE THE EXISTING SUPERSTRUCTURE AND THE EXISTING SUBSTRUCTURE DURING MOT PHASE 1. CONSTRUCT THE PROPOSED STRUCTURE DURING MOT PHASES 1 AND 2. SHORT TERM CLOSURES OF I-75 AND WINCHELL AVE. WILL BE REQUIRED FOR DEMOLITION AND ERECTION OF THE NEW SUPERSTRUCTURE.

SEE MAINTANENCE OF TRAFFIC PLANS FOR ADDITIONAL DETAILS AND NOTES.

PILE DESIGN LOADS (ULTIMATE BEARING VALUE):

THE ULTIMATE BEARING VALUE IS 251 KIPS PER PILE FOR THE REAR ABUTMENT PILES AND 316 KIPS PER PILE FOR THE FORWARD ABUTMENT PILES. THE ULTIMATE BEARING VALUE IS 383 KIPS PER PILE FOR THE PIER 1 PILES AND 377 KIPS PER PILE FOR THE PIER 2 PILES.

REAR ABUTMENT PILES:

12" DIA. CIP PILES 70 FEET LONG, ORDER LENGTH
1 DYNAMIC LOAD TESTING ITEM

FORWARD ABUTMENT PILES:

12" DIA. CIP PILES 85 FEET LONG, ORDER LENGTH
1 DYNAMIC LOAD TESTING ITEM

PIER 1 PILES:

14" DIA. CIP PILES 65 FEET LONG, ORDER LENGTH
1 DYNAMIC LOAD TESTING ITEM

PIER 2 PILES:

14" DIA. CIP PILES 85 FEET LONG, ORDER LENGTH
1 DYNAMIC LOAD TESTING ITEM

PROVIDE PLAIN CYLINDRICAL CASINGS WITH A MINIMUM PILE WALL THICKNESS OF 0.25 INCH AT ABUTMENTS AND AT PIERS FOR THE CAST-IN-PLACE REINFORCED CONCRETE PILES.

PILE DRIVING:

USE A PILE DRIVING HAMMER WITH A MINIMUM RATED ENERGY OF 42,000 FOOT-POUNDS TO INSTALL THE PILES. ENSURE THAT STRESSES IN THE PILES DURING DRIVING DO NOT EXCEED 40,500 POUNDS PER SQUARE INCH.

PILE DRIVING CONSTRAINTS:

PRIOR TO DRIVING ABUTMENT PILES TO THE ULTIMATE BEARING VALUE (UBV), CONSTRUCT THE MSE WALL AND THE BRIDGE APPROACH EMBANKMENT BEHIND THE ABUTMENT UP TO THE BOTTOM OF THE FOOTING FOR A MINIMUM DISTANCE OF 200-FT BEHIND EACH ABUTMENT. THE CONTRACTOR SHALL PRE-DRIVE ABUTMENT PILES BEFORE CONSTRUCTING MSE WALLS. PRE-DRIVING CONSISTS OF INSTALLING THE ABUTMENT PILES INTO THE SOIL ONLY AS FAR AS NECESSARY SO THAT THE PILE WILL REMAIN VERTICAL DURING MSE WALL CONSTRUCTION. INSTALL PILE SLEEVES AROUND PILES BEFORE CONSTRUCTING THE MSE WALL. PROVIDE AT LEAST THREE FEET OF PILE ABOVE THE TOP OF THE PILE SLEEVE TO MEET THE REQUIREMENTS OF C&MS 507.09 REGARDING SPLICES. DO NOT DRIVE ABUTMENT PILES TO THE UBV UNTIL AFTER THE ABOVE REQUIRED MSE WALL AND EMBANKMENT HAVE BEEN CONSTRUCTED AND A 60 CALENDAR DAY WAITING PERIOD HAS ELAPSED (REAR ABUTMENT ONLY). NO WAITING PERIOD IS REQUIRED AT THE FORWARD ABUTMENT. THE ENGINEER MAY ADJUST THE LENGTH OF THE WAITING PERIOD BASED ON SETTLEMENT PLATFORM READINGS. AFTER THE SPECIFIED WAITING PERIOD HAS ELAPSED, DRIVE ABUTMENT PILES TO THE UBV. IN ORDER TO REMOVE ANY NEGATIVE SKIN FRICTION THAT HAS DEVELOPED DURING THE WAITING PERIOD, DRIVE EACH ABUTMENT PILE A DISTANCE OF AT LEAST 0.5 INCH.

ITEM 507 - PREBORED HOLES, AS PER PLAN:

USE PREBORED HOLES, 20' DEEP, AT SPECIFIED LOCATIONS AT PIER 2 AS SHOWN ON THE FOUNDATION PLAN, TO VERIFY THAT EXISTING BATTERED PILES WILL NOT INTERFERE WITH PROPOSED PILES. NOTIFY THE ENGINEER IF PROPOSED PILES CANNOT BE DRIVEN AT THE PLAN LOCATIONS, SO THAT ALTERNATE LOCATIONS CAN BE APPROVED PRIOR TO DRIVING PILES.

PRIOR TO DRIVING PILES, BACKFILL THE PREBORED HOLES WITH DRY SAND.

PROPRIETARY RETAINING WALL DATA:

THE PROPRIETARY WALL SUPPLIER SHALL DESIGN THE INTERNAL STABILITY OF A MECHANICALLY STABILIZED EARTH (MSE) WALL IN ACCORDANCE WITH SS840 TO SUPPORT THE ABUTMENT. THE DESIGN FOR INTERNAL STABILITY SHALL INCLUDE A NOMINAL (I.E. UNFACTORED) HORIZONTAL STRIP LOAD DUE TO FRICTION (FR) FROM THE SUPERSTRUCTURE OF 1.15 K/FT AT THE REAR ABUTMENT AND 2.76 K/FT AT THE FORWARD ABUTMENT APPLIED PERPENDICULAR TO THE FACE OF WALL AT THE BASE OF THE CONCRETE FOOTING. THIS STRIP LOAD DOES NOT INCLUDE EARTH PRESSURE LOADS FROM THE ABUTMENT BACKFILL. HOWEVER, THE PROPRIETARY WALL SUPPLIER SHALL INCLUDE EARTH PRESSURE LOADS FROM THE ABUTMENT BACKFILL IN THE DESIGN CALCULATIONS.

FOUNDATION BEARING RESISTANCE:

THE REAR ABUTMENT REINFORCED SOIL MASS, AS DESIGNED, PRODUCES A MAXIMUM SERVICE LIMIT STATE BEARING PRESSURE OF 3.7 KIPS PER SQUARE FOOT AND A MAXIMUM STRENGTH LIMIT STATE BEARING PRESSURE OF 5.2 KIPS PER SQUARE FOOT. THE FACTORED BEARING RESISTANCE IS 5.9 KIPS PER SQUARE FOOT.

THE FORWARD ABUTMENT REINFORCED SOIL MASS, AS DESIGNED, PRODUCES A MAXIMUM SERVICE LIMIT STATE BEARING PRESSURE OF 4.6 KIPS PER SQUARE FOOT AND A MAXIMUM STRENGTH LIMIT STATE BEARING PRESSURE OF 6.7 KIPS PER SQUARE FOOT. THE FACTORED BEARING RESISTANCE IS 14.6 KIPS PER SQUARE FOOT.

ITEM 512 - SEALING OF CONCRETE SURFACES (EPOXY-URETHANE):

TINT SO THE FINAL COLOR IS FEDERAL COLOR STANDARD NO. 17778, LIGHT NEUTRAL.

ITEM 512 - SEALING OF CONCRETE SURFACES, AS PER PLAN, (PERMANENT GRAFFITI PROTECTION):

APPLY A PERMANENT GRAFFITI COATING QUALIFIED ACCORDING TO S1083 THAT IS COMPATIBLE WITH THE CONCRETE SEALER OVER WHICH IT IS APPLIED. THE GRAFFITI COATING SHALL BE CLEAR. APPLY THE GRAFFITI COATING IN ACCORDANCE WITH THE MANUFACTURER'S PRINTED INSTRUCTIONS. APPLY THE GRAFFITI COATING TO ALL EXPOSED CONCRETE SURFACES OF THE MSE WALLS, ABUTMENTS, PIERS, PARAPETS, AND PLANTER WALLS.

ITEM 514 - FIELD PAINTING STRUCTURAL STEEL, INTERMEDIATE COAT:
ITEM 514 - FIELD PAINTING STRUCTURAL STEEL, FINISH COAT:

APPLY INTERMEDIATE AND FINISH COATS IN THE FIELD PER CMS 514 TO THE SURFACES NOTED IN THE FOLLOWING DIAGRAMS (APPLIES TO BOTH FASCIA GIRDERS AND INCLUDES STIFFENERS AND SPLICE PLATES/BOLTS ON THE OUTBOARD (FASCIA) SIDE AND BOTTOM OF FASCIA GIRDERS).

ADDITIONALLY, PAINT THE LAST 10 FT OF EACH GIRDER END ADJACENT TO THE ABUTMENTS AND PIER 1 INCLUDING ALL CROSS-FRAMES AND OTHER STEEL WITHIN THESE LIMITS.

THE PRIME COAT SHALL BE 708.01. FOR THE ENDS OF INTERIOR GIRDERS, THE TOP COAT COLOR SHALL CLOSELY APPROACH FEDERAL STANDARD NO. 595B - 20045 OR 20059 (THE COLOR OF WEATHERING STEEL). FOR THE FASCIA GIRDERS, THE TOP COAT COLOR SHALL CLOSELY APPROACH FEDERAL STANDARD NO. 595B - 34058 (DARK GREEN).

USE TYPE I BOLTS FOR PAINTED WEATHERING STEEL LOCATIONS WITH COATING SYSTEMS THAT ARE ZINC BASED, SUCH AS OZEU, IZEU, GALVANIZING OR METALLIZING.

USE GRADE A325, TYPE III BOLTS FOR UN-COATED WEATHERING STEEL BOLT LOCATIONS. IF THE FAYING SURFACES UNDER BOTH THE HEAD AND NUT OF A WEATHERING STEEL MEMBER ARE COATED, SPECIFY GALVANIZED GRADE A325 TYPE I BOLTS. OTHERWISE, SPECIFY GRADE A325, TYPE III BOLTS.

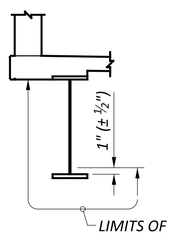

FASCIA GIRDER COATING LIMITS

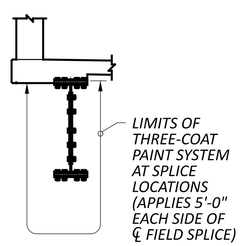

FASCIA GIRDER COATING LIMITS AT SPLICE

ITEM 526 - REINFORCED CONCRETE APPROACH SLABS WITH QC/QA (T=17"), AS PER PLAN:

THE REQUIREMENTS OF 511.03 AND 511.04 SHALL APPLY TO THIS ITEM OF WORK. THIS ITEM SHALL INCLUDE BUT IS NOT LIMITED TO THE CONCRETE AND STEEL REINFORCEMENT NECESSARY TO FORM AND PLACE THE APPROACH SLABS AS SHOWN IN THE PLANS. PAYMENT FOR THIS ITEM SHALL ALSO INCLUDE THE ITEMS LISTED ON STANDARD DRAWING AS-1-15 AND ALL OTHER NECESSARY MATERIALS, LABOR, AND EQUIPMENT AND SHALL BE INCLUDED IN THE UNIT PRICE BID PER SQUARE YARD FOR ITEM 526 - REINFORCED CONCRETE APPROACH SLABS WITH QC/QA (T=17"), AS PER PLAN.

THE REQUIREMENTS IN THE GENERAL NOTES FOR ITEM 511 - CLASS QC3 CONCRETE, MISC.: BRIDGE DECK, WITH QC/QA SHALL APPLY TO THIS ITEM OF WORK.

DECK PLACEMENT DESIGN ASSUMPTIONS:

THE FOLLOWING ASSUMPTIONS OF CONSTRUCTION MEANS AND METHODS WERE MADE FOR THE ANALYSIS AND DESIGN OF THE SUPERSTRUCTURE. THE CONTRACTOR IS RESPONSIBLE FOR THE DESIGN OF THE FALSEWORK SUPPORT SYSTEM WITHIN THESE PARAMATERS AND WILL ASSUME RESPONSIBILITY FOR SUPERSTRUCTURE ANALYSIS FOR DEVIATION FROM THESE DESIGN ASSUMPTIONS.

AN EIGHT WHEEL FINISHING MACHINE WITH A MAXIMUM WHEEL LOAD OF 2.86 KIPS.

A MINIMUM OUT-TO-OUT WHEEL SPACING AT EACH END OF THE MACHINE OF 103 INCHES.

A MAXIMUM SPACING OF OVERHANG FALSEWORK BRACKETS OF 48 INCHES.

A MAXIMUM DISTANCE FROM THE CENTERLINE OF THE FASCIA GIRDER TO THE FACE OF THE SAFETY HANDRAIL OF 65 INCHES.

FOR UNIT 1 DECK ONLY, ALL SCREED RAILS SHALL BE SUPPORTED ON THE GIRDERS. HAND WELDING OF RAIL SUPPORTS TO COMPRESSION REGIONS OF THE TOP FLANGE IS PERMITTED. ALTERNATE MEANS OF ATTACHMENT OF RAIL SUPPORTS TO TENSION REGIONS OF TOP FLANGES WILL BE REQUIRED. METHODS WHICH USE AUTOMATIC END-WELDED STUDS TO ATTACH RAIL SUPPORT BASE PLATES TO THE TENSION REGIONS ARE PERMITTED. ANY SUPPORT HARDWARE WHICH WILL REMAIN IN THE CONCRETE SHALL BE GALVANIZED. FOR TOP FLANGE STRESS CONDITIONS, SEE SHEET 35/88.

ITEM 511 - CLASS QC SCC CONCRETE WITH QC/QA, BRIDGE DECK (PARAPET), AS PER PLAN:

SEE SHEETS 58/88 TO 65/88 FOR PARAPET DETAILS, INCLUDING JOINT TREATMENTS. THIS ITEM INCLUDES PARAPETS ON BRIDGE AND APPROACH SLABS.

ITEM SPECIAL - STRUCTURES: TEMPORARY SUPPORTS FOR GIRDERS:

PROVIDE TEMPORARY SUPPORTS FOR THE UNIT 2 GIRDER ERECTION AS SHOWN ON SHEET 32/88.

ITEM 840 - AESTHETIC SURFACE TREATMENT:

USE CONCRETE FORM LINERS TO CREATE AESTHETIC SURFACE TREATMENT ON THE MSE WALL FACING PANELS. THE FORM LINER SHALL BE PATTERN 1107, MISSION FLUTE FROM SPEC FORMLINERS, INC., OR APPROVED EQUAL. THE FORM LINER RELIEF DEPTH SHALL BE 1.5 INCHES. FABRICATE AND INSTALL THE MSE WALL PANELS SUCH THAT THE VERTICAL FINS AND VALLEYS IN THE FRACTURE FIN AESTHETIC TREATMENT ALIGN VERTICALLY ACROSS ADJACENT PANELS FROM THE TOP OF THE WALL TO THE BOTTOM OF THE WALL. USE THE SAME FRACTURED FIN PATTERN ON ALL WALLS ON THE PROJECT.

FORM LINERS SHALL BE CAPABLE OF WITHSTANDING ANTICIPATED CONCRETE POUR PRESSURES WITHOUT LEAKAGE OR CAUSING PHYSICAL DEFECTS. FORM LINERS SHALL BE REMOVABLE WITHOUT CAUSING CONCRETE SURFACE DAMAGE. USE A FORM RELEASE PRODUCT AS RECOMMENDED BY THE FORM LINER MANUFACTURER. USE MANUFACTURER'S APPLICATION RATES AND ALL OTHER MANUFACTURER'S INSTRUCTIONS. FORM RELEASE PRODUCTS SHALL BE FULLY COMPATIBLE WITH THE FORM LINER MATERIAL AND THE EPOXY-URETHANE SEALER TO BE APPLIED TO THE FINISHED SURFACES.

ALIGN THE FORM LINER PATTERNS ACROSS ALL JOINTS BETWEEN MSE WALL PANELS.

FORM LINERS SHALL EXTEND A MINIMUM OF 1'-0" BELOW THE PROPOSED GROUND OR SIDEWALK SURFACE AT THE FRONT FACE OF THE WALL. FORM LINERS MAY EXTEND LOWER BUT THE PAY LIMITS SHALL BE 1'-0" BELOW THE PROPOSED GROUND OR SIDEWALK SURFACE.

PAYMENT WILL BE MADE AT THE UNIT PRICE BID FOR ITEM 840 - AESTHETIC SURFACE TREATMENT, WHICH SHALL BE FULL COMPENSATION FOR ALL LABOR, MATERIALS, EQUIPMENT, AND INCIDENTALS NECESSARY TO COMPLETE THIS ITEM AS SPECIFIED ABOVE AND IN A SATISFACTORY AND WORKMANLIKE MANNER.

ITEM 203 - EMBANKMENT AS PER PLAN:

PLACE AND COMPACT EMBANKMENT IN 6-INCH LIFTS FOR THE CONSTRUCTION OF THE APPROACH EMBANKMENT BETWEEN STATIONS 104+50 TO 111+00.

GENERAL NOTES - 1
BRIDGE NO. HAM-75-0104
LINN STREET OVER IR-75 AND GEST STREET

SFN 3109098
DESIGN AGENCY B&N burgessniple.com
DESIGNER MAB | CHECKER BES
REVIEWER JCS 12/15/24
PROJECT ID 122048
SUBSET 3 | TOTAL 88
SHEET P.245 | TOTAL P.421

HAM-IR 75-1.05

MODEL: Sheet PAPERSIZE: 34x22 (in.) DATE: 8/28/2025 TIME: 9:53:28 AM PLTDRV: OHDOT_PDF.pltcfg PENTBL: OHDOT_UTPen.tbl USER: WORKSPACE: OHDOTCtx02 WORKSET: 122048_SFN_3109098 pw:\\ohiodot-pw.bentley.com:ohiodot-pw-02\Documents\01 Active Projects\District 08\Hamilton\122048\401-Engineering_BurgessNiple\Structures\SFN_3109098\Sheets\122048_SFN_3109098_SN001.dgn

ITEM 503 - COFFERDAMS AND EXCAVATION BRACING, AS PER PLAN:

THE DESIGN SHOWN ON THE PLANS FOR TEMPORARY SUPPORT OF EXCAVATION IS ONE REPRESENTATIVE DESIGN THAT MAY BE USED TO CONSTRUCT THE PROJECT. THE CONTRACTOR MAY CONSTRUCT THE DESIGN SHOWN ON THE PLANS OR PREPARE AN ALTERNATE DESIGN TO SUPPORT THE SIDES OF EXCAVATIONS. IF CONSTRUCTING AN ALTERNATE DESIGN FOR TEMPORARY SUPPORT OF EXCAVATION, PREPARE AND PROVIDE PLANS IN ACCORDANCE WITH CMS 501.05.

THIS ITEM SHALL INCLUDE ALL MATERIALS AND LABOR FOR ANY TEMPORARY SHEETING NECESSARY TO CONSTRUCT THE MSE WALLS AT EACH ABUTMENT.

THE DEPARTMENT WILL PAY FOR THE TEMPORARY SUPPORT OF EXCAVATION AT THE CONTRACT LUMP SUM PRICE FOR COFFERDAMS AND EXCAVATION BRACING. THE DEPARTMENT WILL NOT MAKE ADDITIONAL PAYMENT FOR PROVIDING AN ALTERNATE DESIGN.

ITEM SPECIAL - STRUCTURAL SURVEY AND MONITORING OF VIBRATION:

MONITOR GROUND VIBRATIONS CAUSED BY PILE DRIVING TO MINIMIZE THE POTENTIAL FOR:

1) DAMAGE TO THE POLICE OFFICE, HOTEL AND PARKING GARAGES LOCATED NEAR THE REAR ABUTMENT.

2) UNACCEPTABLE LEVELS OF VIBRATION ANNOYANCE WITH RESPECT TO HUMAN RESPONSE AT THE POLICE OFFICE, HOTEL AND PARKING GARAGES LOCATED NEAR THE REAR ABUTMENT.

RETAIN AN EXPERIENCED VIBRATION SPECIALIST TO ESTABLISH THE ACCEPTABLE VIBRATION LIMITS AND TO PERFORM THE VIBRATION MONITORING. USE A VIBRATION SPECIALIST THAT IS AN EXPERT IN THE INTERPRETATION OF VIBRATION DATA, AND WHO MEETS ONE OF THE FOLLOWING CRITERIA: 1) IS A REGISTERED ENGINEER WITH AT LEAST TWO YEARS OF PROVEN EXPERIENCE IN MONITORING VIBRATIONS ON SIMILAR CONSTRUCTION PROJECTS, OR 2) HAS AT LEAST FIVE YEARS OF PROVEN EXPERIENCE IN MONITORING VIBRATIONS ON SIMILAR CONSTRUCTION PROJECTS. DO NOT USE A VIBRATION SPECIALIST THAT IS AN EMPLOYEE OF THE CONTRACTOR.

SUBMIT A RESUME OF THE CREDENTIALS OF THE PROPOSED VIBRATION SPECIALIST AT, OR BEFORE, THE PRECONSTRUCTION MEETING. INCLUDE IN THE RESUME A LIST OF CONSTRUCTION PROJECTS ON WHICH THE VIBRATION SPECIALIST WAS RESPONSIBLY IN CHARGE OF MONITORING THE VIBRATIONS. LIST A DESCRIPTION OF THE PROJECTS, WITH DETAILS OF THE VIBRATION INTERPRETATIONS MADE ON THE PROJECT. LIST THE NAMES AND TELEPHONE NUMBERS OF PROJECT OWNERS WITH SUFFICIENT KNOWLEDGE OF THE PROJECTS TO VERIFY THE SUBMITTED INFORMATION. OBTAIN THE ENGINEER'S ACCEPTANCE OF THE VIBRATION SPECIALIST BEFORE BEGINNING ANY PILE DRIVING WORK. ALLOW 30 DAYS FOR THE REVIEW OF THIS DOCUMENTATION.

USE SEISMOGRAPHS CAPABLE OF CONTINUOUSLY RECORDING THE PEAK PARTICLE VELOCITY FOR THREE MUTUALLY PERPENDICULAR COMPONENTS OF VIBRATION, AND OF PROVIDING A PERMANENT RECORD OF THE ENTIRE VIBRATION EVENT. USE A SUFFICIENT NUMBER OF SEISMOGRAPHS TO PROVIDE REDUNDANCY IN CASE ONE DEVICE SHOULD FAIL. SUBMIT A PLAN OF THE PROPOSED SEISMOGRAPH LOCATIONS TO THE ENGINEER FOR REVIEW.

THE VIBRATION SPECIALIST SHALL PERFORM THE FOLLOWING:

1. MEASURE THE AMBIENT GROUND VIBRATIONS NEAR EXISTING STRUCTURES BEFORE PILE DRIVING BEGINS.

2. ESTABLISH VIBRATION LIMITS TO MINIMIZE POTENTIAL DAMAGE TO EXISTING STRUCTURES AND EXPLAIN WHY THEY ARE BEING USED TO THE ENGINEER BEFORE DRIVING PILES NEAR EXISTING STRUCTURES.

3. MONITOR GROUND VIBRATIONS DURING PILE DRIVING.

4. IMMEDIATELY INFORM THE CONTRACTOR AND ENGINEER IF THE VIBRATION LIMITS ARE REACHED OR EXCEEDED.

5. FURNISH THE DATA RECORDED AND INCLUDE THE FOLLOWING:
   A. IDENTIFICATION OF SEISMOGRAPH.
   B. DISTANCE AND DIRECTION OF SEISMOGRAPH FROM PILE DRIVING.
   C. START TIME AND DURATION OF PILE DRIVING.
   D. LIST OF PILES DRIVEN DURING EACH MONITORING INTERVAL.

IMMEDIATELY SUSPEND ALL PILE DRIVING IF THE VIBRATION LIMITS ARE REACHED OR EXCEEDED. EVALUATE ALTERNATIVE CONSTRUCTION PROCEDURES, SUCH AS PREBORED HOLES, TO REDUCE THE VIBRATIONS.

SUBMIT THREE COPIES OF THE FINAL REPORT WHICH CONTAINS ALL MEASUREMENTS, INTERPRETATIONS, AND RECOMMENDATIONS TO THE ENGINEER.

THE DEPARTMENT WILL PAY FOR THIS ITEM AT THE CONTRACT LUMP SUM PRICE FOR ITEM SPECIAL - STRUCTURAL SURVEY AND MONITORING OF VIBRATION. THE DEPARTMENT WILL PAY THE FINAL TWENTY PERCENT AFTER THE ENGINEER RECEIVES THE FINAL REPORT.

THE DEPARTMENT WILL PAY ACCORDING TO C&MS 109.05 FOR ALTERNATIVE CONSTRUCTION PROCEDURES THAT THE ENGINEER DETERMINES ARE NECESSARY TO REDUCE VIBRATIONS.

BEFORE PILE DRIVING BEGINS, CONDUCT A CONDITION SURVEY OF ALL EXISTING BUILDING, STRUCTURES, AND UTILITIES WITHIN 200-FT OF THE PILE DRIVING WORK. THE PURPOSE OF THE SURVEY IS TO DOCUMENT THE CONDITION OF THE BUILDINGS, STRUCTURES, OR UTILITIES PRIOR TO PILE DRIVING, SO THAT CLAIMS OF DAMAGE CAUSED BY THE PILE DRIVING CAN BE VERIFIED.

RETAIN AN EXPERIENCED VIBRATION SPECIALIST TO PERFORM OR SUPERVISE THE CONDITION SURVEY. USE A VIBRATION SPECIALIST THAT MEETS THE QUALIFICATION REQUIREMENTS FOR VIBRATION MONITORING.

RECORD THE CONDITION OF EXISTING STRUCTURES AND BUILDING MATERIALS, USING WRITTEN TEXT, PHOTOGRAPHS, AND VIDEO RECORDINGS. INSPECT INTERIOR WALLS, CEILINGS, AND FLOORS THAT ARE ACCESSIBLE. INSPECT THE EXTERIOR OF THE BUILDING THAT IS VISIBLE FROM GROUND LEVEL. ALSO RECORD THE LOCATION, SIZE, AND TYPE OF ALL CRACKS AND OTHER STRUCTURAL DEFICIENCIES.

IF OWNERS OR OCCUPANTS FAIL TO ALLOW ACCESS TO THE PROPERTY FOR THE PRECONSTRUCTION CONDITION SURVEY, SEND A CERTIFIED LETTER TO THE OWNER OR OCCUPANT. DOCUMENT THE NOTIFICATION EFFORT AND THE CERTIFIED LETTER IN THE REPORT.

SUBMIT THREE COPIES OF A REPORT TO THE ENGINEER THAT SUMMARIZES THE PRECONSTRUCTION CONDITION OF THE BUILDINGS, STRUCTURES, AND UTILITIES, AND THAT IDENTIFIES AREAS OF CONCERN.

PAYMENT FOR THE PRECONSTRUCTION CONDITION SURVEY IS INCLUSIVE OF THE CONTRACT LUMP SUM PRICE FOR ITEM SPECIAL - STRUCTURAL SURVEY AND MONITORING OF VIBRATION.

ITEM 511 - CLASS QC3 CONCRETE, MISC.: PIER ABOVE FOOTINGS, WITH QC/QA
ITEM 511 - CLASS QC3 CONCRETE, MISC.: ABUTMENT NOT INCLUDING FOOTING, WITH QC/QA

THIS ITEM MODIFIES THE STANDARD 511 CONCRETE FOR STRUCTURES SPECIFICATION TO INCLUDE MACRO-SYNTHETIC, AND CORROSION INHIBITORS INTO THE SUBSTRUCTURE CONCRETE. THIS ITEM SHALL CONFORM TO CMS 511 WITH THE FOLLOWING CONDITIONS AND REVISIONS:

PROVIDE MATERIALS CONFORMING TO 511.02 EXCEPT AS MODIFIED BELOW:

PORTLAND CEMENT CONCRETE	499.03, CLASS QC 3 MEETING A DESIGN STRENGTH OF 4,000 PSI, WITH MACRO-SYNTHETIC FIBERS WITH MODIFICATION PER 511.02
FIBERS FOR CONCRETE	ASTM C 1116, TYPE III
CORROSION INHIBITOR	515.15

THE CLASS QC3 CONCRETE FOR THE SUBSTRUCTURE SHALL MEET THE FOLLOWING CRITERIA:

WATER/CEMENT RATIO = 0.40 MAXIMUM; MINIMUM 4 LBS/CY MACRO-SYTHETIC FIBERS (1.0 IN. MIN. TO 2.5 IN. MAX.) MEETING ASTM C1116 TYPE III SHALL BE ADDED TO THE MIX.

MIX SHALL INCLUDE A MIGRATING CORROSION INHIBITOR AS MANUFACTURED BY AN APPROVED SUPPLIER LISTED ON ODOT'S QUALIFIED APPROVED SUPPLIERS, ITEM 515.15. THE DOSAGE RATE LISTED ON THE ODOT QUALIFIED APPROVED SUPPLIERS LIST WILL APPLY.

THE MACRO-SYNTHETIC FIBERS SHALL BE INCORPORATED INTO THE MIX IN SUCH A WAY THAT NO 'BALLING' OCCURS. UPON INSPECTION OF THE MIX AT THE TIME OF PLACEMENT, IF ANY 'BALLING' OCCURS, THE ENGINEER SHALL REJECT THE REMAINDER OF THE LOAD AT ANY TIME DURING THE POUR. IT IS IMPORTANT TO FOLLOW INDUSTRY STANDARDS AND ASTM SPECIFICATIONS ON THE PREMIXING OF THE CEMENT, AGGREGATE, AND MACRO-SYNTHETIC FIBERS PRIOR TO THE ADDITION OF WATER AND ADMIXTURES. PROVIDE MACRO-SYNTHETIC-FIBERS THAT ARE MONOFILAMENT FIBERS MADE FROM VIRGIN POLYPROPYLENE, POLYETHYLENE, OR CO-POLYMERS THAT ARE INERT TO ALKALI ATTACK. ENSURE THE MACRO-SYTHETIC FIBERS HAVE A MINIMUM TENSILE STRENGTH OF 70 KSI, A MINIMUM MODULUS OF ELASTICITY OF 800 KSI, A MINIMUM FILAMENT DIAMETER OF 0.012 INCHES, AND ASPECT RATIO BETWEEN 60 AND 100, AND ARE BETWEEN 1.5 AND 2.5 INCHES IN LENGTH. STORE THE MACRO-SYTHETIC FIBERS ACCORDING TO THE MANUFACTURER'S RECOMMENDATION AND KEEP THE MATERIAL FREE FROM DUST, DIRT AND MOISTURE. PLACING THE BAG THAT THE FIBERS COME IN INTO THE CONCRETE MIX IS NOT PERMITTED.

USE A MINIMUM DOSAGE RATE OF MACRO-SYTHETIC FIBERS OF 4.0 LBS/CY OF CONCRETE. DETERMINE THE FINAL PROPOSED DOSAGE RATE THROUGH MIX TESTING. ENSURE THE FIBER REINFORCED CONCRETE MEETS OR EXCEEDS A MINIMUM EQUIVALENT FLEXURAL STRENGTH RATIO OF 25% ACCORDING TO ASTM C 1609. ENSURE THE FINAL PROPOSED MIX IS WORKABLE AND ABLE TO BE PRODUCED SUCH THAT BALLING OR CLUMPING OF THE FIBERS IS NOT A PROBLEM AS DETERMINED BY THE ENGINEER. UTILIZE A LABORATORY REGULARLY INSPECTED BY THE CEMENT AND CONCRETE REFERENCE LABORATORY (CCRL) OF THE NATIONAL INSTITUTE OF STANDARDS AND TECHNOLOGY, OR OTHER APPROVED REFERENCE LABORATORY, TO PERFORM THE TESTING. BEFORE USE, SUBMIT DOCUMENTATION TO THE PROJECT ENGINEER CERTIFYING BOTH THE MACRO-SYNTHETIC FIBERS AND THE MIX MEET OR EXCEED THE REQUIRED PROPERTIES. SAMPLING WILL BE ALLOWED FOR TESTING PURPOSES. A DEMONSTRATION OF THE MIX PRODUCTION OR TRIAL MIX, MAY BE REQUIRED BY THE ENGINEER PRIOR TO PLACING ANY OF THE MIX ON THE PROJECT.

THE BATCH WEIGHTS SHALL BE CORRECTED TO COMPENSATE FOR THE MOISTURE CONTAINED IN THE AGGREGATE AT THE TIME OF USE. A CHEMICAL ADMIXTURE (705.12, TYPE A OR D) SHALL BE USED. THE TRANSIT MIXER CHARGE SHALL BE LIMITED TO ¾ OF ITS RATED CAPACITY OR 6 CUBIC YARDS, WHICHEVER IS SMALLER. THE FIRST THREE TRANSIT MIXER LOADS ARE REQUIRED TO BE AT THE MINIMUM YARDAGE LISTED ABOVE TO SHOW PROOF OF THE SUCCESSFUL BATCHING OPERATION. AFTER CONSISTENCY IN THE DELIVERED MATERIAL HAS BEEN ESTABLISHED, THE CONCRETE SUPPLIER MAY INCREASE THE BATCH DELIVERED QUANTITIES AS LONG AS THE QUALITY REMAINS ACCEPTABLE TO THE ENGINEER. THE ENGINEER CAN REDUCE THE BATCH LOAD SIZE AT ANY TIME AS NEEDED TO CORRECT/IMPROVE CONCRETE QUALITY.

CONCRETE SUPPLIERS SHOULD RECOGNIZE THAT THE CORROSION INHIBITOR AND ADMIXTURES MAY HAVE AN EFFECT ON STRENGTH, ENTRAINED AIR CONTENT, WORKABILITY, ETC. OF THEIR CONCRETE MIXES. THE CORROSION INHIBITOR IS SUGGESTED TO BE A MCI PRODUCT BY CORTEC OR AN APPROVED EQUAL FROM THE QUALIFIED PRODUCTS LIST. THE CONCRETE SUPPLIER'S CHOICE OF ONE OF THESE CORROSION INHIBITORS DOES NOT ALLEVIATE MEETING DESIGN REQUIREMENTS. PLEASE BE ADVISED THAT SOME PRODUCTS ON THE LIST EFFECT THE DELIVERED MIX PROPERTIES GREATLY WHILE OTHER PRODUCTS DO NOT.

THE CONTRACTOR SHOULD BE ADVISED THAT CONCRETE RETARDING AGENTS MAY NEED TO BE ADDED TO OFFSET THE EFFECTS OF THE MIGRATING CORROSION INHIBITOR SELECTED.

ITEM 511 - CLASS QC3 CONCRETE, MISC.: BRIDGE DECK, WITH QC/QA:

THIS ITEM MODIFIES THE STANDARD 511 CONCRETE FOR STRUCTURES SPECIFICATION TO INCLUDE MACRO-SYNTHETIC, AND CORROSION INHIBITORS INTO THE SUPERSTRUCTURE CONCRETE. THIS ITEM SHALL CONFORM TO CMS 511 WITH THE FOLLOWING CONDITIONS AND REVISIONS:

PROVIDE MATERIALS CONFORMING TO 511.02 EXCEPT AS MODIFIED BELOW:

PORTLAND CEMENT CONCRETE	499.03, CLASS QC 3 MEETING A DESIGN STRENGTH OF 4,500 PSI, WITH MACRO-SYNTHETIC FIBERS WITH MODIFICATION PER 511.02
FIBERS FOR CONCRETE	ASTM C 1116, TYPE III
CORROSION INHIBITOR	515.15

THE CLASS QC3 CONCRETE FOR THE SUPERSTRUCTURE SHALL MEET THE FOLLOWING CRITERIA:

WATER/CEMENT RATIO = 0.40 MAXIMUM; MINIMUM 4 LBS/CY MACRO-SYTHETIC FIBERS (1.5 IN. MIN. TO 2.5 IN. MAX.) MEETING ASTM C1116 TYPE III SHALL BE ADDED TO THE MIX.

MIX SHALL INCLUDE A MIGRATING CORROSION INHIBITOR AS MANUFACTURED BY AN APPROVED SUPPLIER LISTED ON ODOT'S QUALIFIED APPROVED SUPPLIERS, ITEM 515.15. THE DOSAGE RATE LISTED ON THE ODOT QUALIFIED APPROVED SUPPLIERS LIST WILL APPLY.

THE MACRO-SYNTHETIC FIBERS SHALL BE INCORPORATED INTO THE MIX IN SUCH A WAY THAT NO 'BALLING' OCCURS. UPON INSPECTION OF THE MIX AT THE TIME OF PLACEMENT, IF ANY 'BALLING' OCCURS, THE ENGINEER SHALL REJECT THE REMAINDER OF THE LOAD AT ANY TIME DURING THE POUR. IT IS IMPORTANT TO FOLLOW INDUSTRY STANDARDS AND ASTM SPECIFICATIONS ON THE PREMIXING OF THE CEMENT, AGGREGATE, AND MACRO-SYNTHETIC FIBERS PRIOR TO THE ADDITION OF WATER AND ADMIXTURES. PROVIDE MACRO-SYNTHETIC-FIBERS THAT ARE MONOFILAMENT FIBERS MADE FROM VIRGIN POLYPROPYLENE, POLYETHYLENE, OR CO-POLYMERS THAT ARE INERT TO ALKALI ATTACK. ENSURE THE MACRO-SYTHETIC FIBERS HAVE A MINIMUM TENSILE STRENGTH OF 70 KSI, A MINIMUM MODULUS OF ELASTICITY OF 800 KSI, A MINIMUM FILAMENT DIAMETER OF 0.012 INCHES, AND ASPECT RATIO BETWEEN 60 AND 100, AND ARE BETWEEN 1.5 AND 2.5 INCHES IN LENGTH. STORE THE MACRO-SYTHETIC FIBERS ACCORDING TO THE MANUFACTURER'S RECOMMENDATION AND KEEP THE MATERIAL FREE FROM DUST, DIRT AND MOISTURE. PLACING THE BAG THAT THE FIBERS COME IN INTO THE CONCRETE MIX IS NOT PERMITTED.

USE A MINIMUM DOSAGE RATE OF MACRO-SYTHETIC FIBERS OF 4.0 LBS/CY OF CONCRETE. DETERMINE THE FINAL PROPOSED DOSAGE RATE THROUGH MIX TESTING. ENSURE THE FIBER REINFORCED CONCRETE MEETS OR EXCEEDS A MINIMUM EQUIVALENT FLEXURAL STRENGTH RATIO OF 25% ACCORDING TO ASTM C 1609. ENSURE THE FINAL PROPOSED MIX IS WORKABLE AND ABLE TO BE PRODUCED SUCH THAT BALLING OR CLUMPING OF THE FIBERS IS NOT A PROBLEM AS DETERMINED BY THE ENGINEER. UTILIZE A LABORATORY REGULARLY INSPECTED BY THE CEMENT AND CONCRETE REFERENCE LABORATORY (CCRL) OF THE NATIONAL INSTITUTE OF STANDARDS AND TECHNOLOGY, OR OTHER APPROVED REFERENCE LABORATORY, TO PERFORM THE TESTING. BEFORE USE, SUBMIT DOCUMENTATION TO THE PROJECT ENGINEER CERTIFYING BOTH THE MACRO-SYNTHETIC FIBERS AND THE MIX MEET OR EXCEED THE REQUIRED PROPERTIES. SAMPLING WILL BE ALLOWED FOR TESTING PURPOSES. A DEMONSTRATION OF THE MIX PRODUCTION OR TRIAL MIX, MAY BE REQUIRED BY THE ENGINEER PRIOR TO PLACING ANY OF THE MIX ON THE PROJECT.

THE BATCH WEIGHTS SHALL BE CORRECTED TO COMPENSATE FOR THE MOISTURE CONTAINED IN THE AGGREGATE AT THE TIME OF USE. A CHEMICAL ADMIXTURE (705.12, TYPE A OR D) SHALL BE USED. THE TRANSIT MIXER CHARGE SHALL BE LIMITED TO ¾ OF ITS RATED CAPACITY OR 6 CUBIC YARDS, WHICHEVER IS SMALLER. THE FIRST THREE TRANSIT MIXER LOADS ARE REQUIRED TO BE AT THE MINIMUM YARDAGE LISTED ABOVE TO SHOW PROOF OF THE SUCCESSFUL BATCHING OPERATION. AFTER CONSISTENCY IN THE DELIVERED MATERIAL HAS BEEN ESTABLISHED, THE CONCRETE SUPPLIER MAY INCREASE THE BATCH DELIVERED QUANTITIES AS LONG AS THE QUALITY REMAINS ACCEPTABLE TO THE ENGINEER. THE ENGINEER CAN REDUCE THE BATCH LOAD SIZE AT ANY TIME AS NEEDED TO CORRECT/IMPROVE CONCRETE QUALITY.

CONCRETE SUPPLIERS SHOULD RECOGNIZE THAT THE CORROSION INHIBITOR AND ADMIXTURES MAY HAVE AN EFFECT ON STRENGTH, ENTRAINED AIR CONTENT, WORKABILITY, ETC. OF THEIR CONCRETE MIXES. THE CORROSION INHIBITOR IS SUGGESTED TO BE A MCI PRODUCT BY CORTEC OR AN APPROVED EQUAL FROM THE QUALIFIED PRODUCTS LIST.

THE CONCRETE SUPPLIER'S CHOICE OF ONE OF THESE CORROSION INHIBITORS DOES NOT ALLEVIATE MEETING DESIGN REQUIREMENTS. PLEASE BE ADVISED THAT SOME PRODUCTS ON THE LIST EFFECT THE DELIVERED MIX PROPERTIES GREATLY WHILE OTHER PRODUCTS DO NOT.

APPROACH SLABS ARE TO USE THE SAME MIX DESIGN AS THE BRIDGE DECK. THE CONTRACTOR SHOULD BE ADVISED THAT CONCRETE RETARDING AGENTS MAY NEED TO BE ADDED TO OFFSET THE EFFECTS OF THE MIGRATING CORROSION INHIBITOR SELECTED.

THE CONTRACTOR SHALL PROVIDE TRADITIONAL BRIDGE DECK FORMS CONFORMING TO CMS 508. PERMANENT STAY-IN-PLACE (SIP) FORMS ARE NOT ALLOWED. THE PLACING OF THE DECK AND THE APPROACH SLABS IN THE SAME CONCRETE POUR IS NOT PERMITTED.

ITEM 513 - STRUCTURAL STEEL MEMBERS, LEVEL 3, AS PER PLAN:

THIS ITEM OF WORK INCLUDES ALL STRUCTURAL STEEL FOR UNIT 1 OF THE SUPERSTRUCTURE.

SEE BEAM DETAILS AND INTERMEDIATE DIAPHRAGM DETAILS FOR STIFFENER ORIENTATION.

SEE BEAM DETAILS FOR STIFFENER CLIP DIMENSIONS.

SEE INTERMEDIATE DIAPHRAGM DETAILS AND END CROSSFRAME DETAILS FOR BOLT HOLE SIZES.

ITEM 513 - STRUCTURAL STEEL MEMBERS, LEVEL 4, AS PER PLAN:

THIS ITEM OF WORK INCLUDES ALL STRUCTURAL STEEL FOR UNIT 2 OF THE SUPERSTRUCTURE.

SEE GIRDER DETAILS AND INTERMEDIATE CROSSFRAME DETAILS FOR STIFFENER ORIENTATION.

SEE GIRDER FIELD SPLICE DETAILS, INTERMEDIATE CROSSFRAME DETAILS AND END CROSSFRAME DETAILS FOR BOLT HOLE SIZES.

ITEM 518 - POROUS BACKFILL WITH GEOTEXTILE FABRIC, AS PER PLAN:

THIS ITEM SHALL INCLUDE THE AGGREGATE BACKFILL AND GEOTEXTILE FABRIC THAT ARE SHOWN IN THE TALL AND SHORT PLANTER AREAS ON SHEET 71/88 AND IN THE PLANTER POTS ON SHEET 74/88

FURNISH POROUS BACKFILL CONSISTING OF GRAVEL, WITH A NO. 57 SIZE GRADATION ACCORDING TO TABLE 703.01-1. COMPACTION IS NOT REQUIRED.

ITEM 605 - 6" UNCLASSIFIED PIPE UNDERDRAINS, AS PER PLAN:

THIS ITEM SHALL INCLUDE:

1. PIPES FOR PLANTER DRAINAGE OUTLETS AT ABUTMENTS, FROM BACK FACE OF ABUTMENT BACKWALL TO ROADWAY DRAINAGE STRUCTURES. SEE SHEET 72/88 FOR DETAILS.

FURNISH NON-PERFORATED PVC PIPES PER CMS 707.41.

GENERAL NOTES - 2
BRIDGE NO. HAM-75-0104
LINN STREET OVER IR-75 AND GEST STREET

SFN 3109098

DESIGN AGENCY
B&N
burgessniple.com

DESIGNER	CHECKER
MAB	BES

REVIEWER
JCS 12/15/24

PROJECT ID
122048

SUBSET	TOTAL
4	88

SHEET	TOTAL
P.246	P.421

HAM-IR 75-1.05

MODEL: Sheet PAPERSIZE: 34x22 (in.) DATE: 8/28/2025 TIME: 9:53:37 AM PLTDRV: OHDOT_PDF.pltcfg PENTBL: OHDOT_UTPen.tbl USER: WORKSPACE: OHDOTCEv02 WORKSET: 122048 PRODUCT: OpenRoadsDesigner 10.12.02.4
pw:\\ohiodot-pw.bentley.com:ohiodot-pw-02\Documents\01 Active Projects\District 08\Hamilton\122048\401-Engineering_BurgessNiple\Structures\SFN_3109098_SN002.dgn

ADHESIVE ANCHOR/DOWEL SYSTEM:

INSTALL ADHESIVE ANCHORS/DOWELS ACCORDING TO THE MANUFACTURER'S INSTALLATION INSTRUCTIONS PUBLISHED IN THE ICC-ES REPORTS LISTED BELOW.

THE HOLES FOR THE ADHESIVE ANCHORS SHALL BE DRILLED WITH A HAMMER DRILL AND CARBIDE BIT. PRIOR TO THE INSTALLATION OF THE ANCHORS, CLEAN AND DRY THE HOLES IN A MANNER CONSISTENT WITH THE MANUFACTURER'S REQUIREMENTS FOR DRY CONCRETE.

HTTPS://ICC-ES.ORG/EVALUATION-REPORT-PROGRAM/REPORTS-DIRECTORY/

SELECT FROM ONE OF THE FOLLOWING APPROVED PRODUCTS:
HILTI HIT-RE 500 V3 - ICC-ES ESR-3814
SIMPSON STRONG-TIE SET-3G - ICC-ES ESR-4057

FACTORED ANCHOR/DOWEL LOADS: SHEAR - 50 KIPS/BEARING (PIER 1 REAR FIXED BEARINGS)

SHEAR - 268 KIPS/BEARING (PIER 2 FIXED BEARINGS)

TENSION - 13.33 KIPS PER BASE PLATE (SCREEN WALL ANCHORS AT TOP OF PARAPET)

SHEAR - 2.00 KIPS PER BASE PLATE (SCREEN WALL ANCHORS AT TOP OF PARAPET)

SHEAR - 10.67 KIPS PER BASE PLATE (SCREEN WALL ANCHORS AT FRONT FACE OF PARAPET)

THE CONTRACTOR MAY USE A SUBSTITUTE ADHESIVE ANCHOR/DOWEL SYSTEM THAT MEETS THE ACCEPTANCE CRITERIA OF ICEES AC308 - POST-INSTALLED ADHESIVE ANCHORS IN CONCRETE ELEMENTS. THE SUBSTITUTE ANCHORS SHALL MEET OR EXCEED THE CAPACITY OF THE ADHESIVE ANCHOR/DOWEL SYSTEM LISTED ABOVE.

ADHESIVE ANCHORS/DOWELS SHALL NOT BE SUBSTITUTED WITH MECHANICAL ANCHORS.

THE CONTRACTOR SHALL SUPPLY DOCUMENTATION SEALED BY AN OHIO REGISTERED PROFESSIONAL ENGINEER ENSURING THAT THE SUBSTITUTE ADHESIVE ANCHOR/DOWEL SYSTEM PROVIDES SUFFICIENT CAPACITY FOR THIS APPLICATION IN ACCORDANCE WITH AASHTO LRFD SECTION 5.13. INSTALL THE ANCHORS ACCORDING TO THE MANUFACTURER'S INSTALLATION INSTRUCTIONS PUBLISHED IN THE ICC-ES REPORT.

ITEM SPECIAL - WATERPROOFING FOR PLANTER AREAS:

THIS ITEM SHALL INCLUDE FURNISHING AND INSTALLING MORTAR, FLASHING, WATERPROOFING, PROTECTION BOARD, AND COUNTERFLASHING. PERFORM WORK IN ACCORDANCE WITH CMS 512, EXCEPT AS MODIFIED BY PLAN NOTES AND DETAILS. SEE SHEETS 71/88 TO 73/88 FOR WATERPROOFING DETAILS AND ADDITIONAL REQUIREMENTS.

THE CONTRACTOR SHALL ENSURE THAT ALL PRODUCTS USED FOR THIS ITEM OF WORK ARE COMPATIBLE WITH EACH OTHER. FOLLOW MANUFACTURER'S INSTRUCTIONS REGARDING DELIVERY, STORAGE, SURFACE PREPARATION, AND INSTALLATION.

WATERPROOFING ACTIVITIES, INCLUDING PLACEMENT OF MORTAR, SHALL NOT COMMENCE UNTIL AT LEAST 14 DAYS AFTER COMPLETION OF DECK, PARAPET, AND PLANTER WALL CONCRETE PLACEMENTS.

PLACE MORTAR AT BOTTOM OF PLANTER AREAS PRIOR TO INSTALLING WATERPROOFING MATERIALS. PROVIDE A WOOD-FLOAT OR WOOD-TROWELED FINISH ON THE MORTAR. DO NOT PROVIDE A STEEL-TROWELED FINISH. WAIT AT LEAST 14 DAYS FOLLOWING MORTAR PLACEMENT BEFORE STARTING INSTALLATION OF WATERPROOFING.

FLASHING SHALL BE A 60 MIL UNCURED NEOPRENE ROLLED SHEET, AS FOLLOWS:

1. TENSILE STRENGTH: 1400 PSI MIN. PER ASTM D412, DIE C
2. ELONGATION: 267% MIN. PER ASTM D412, DIE C
3. TEAR RESISTANCE: 125 LBS/IN MIN. PER ASTM D412, DIE C
4. BRITTLENESS: NO BREAK AT -30 DEG. F PER ASTM D2137

PROTECT THE SURFACE OF THE WATERPROOFING DURING INSTALLATION AND UNTIL THE PROTECTION BOARD IS INSTALLED. DO NOT ALLOW CONSTRUCTION EQUIPMENT ON THE WATERPROOFING DURING INSTALLATION AND UNTIL THE PROTECTION BOARD IS INSTALLED.

PROTECTION BOARD INSTALLATION:

EMBED THE PROTECTION BOARD INTO THE WATERPROOFING MEMBRANE WHILE IT IS STILL HOT TO ENSURE A GOOD BOND. OVERLAP ADJOINING PROTECTION BOARD EDGES (DRY) A MINIMUM OF 2" TO ENSURE COMPLETE COVERAGE, OR ABUT ADJACENT EDGES AND APPLY PMPC TAPE AT JOINTS. THE COMPLETED MEMBRANE/PROTECTION BOARD ASSEMBLY MUST BE COVERED WITH SUBSEQUENT TOPPING MATERIALS AS SOON AS POSSIBLE, WITHIN 30 DAYS OF MEMBRANE INSTALLATION.

ITEM SPECIAL - WATERPROOFING FOR PLANTER AREAS (CONTINUED):

METHOD OF MEASUREMENT:

THE DEPARTMENT WILL MEASURE WATERPROOFING BY THE NUMBER OF SQUARE YARDS APPLIED TO THE HORIZONTAL AND VERTICAL SURFACES OF THE PLANTER AREAS.

BASIS OF PAYMENT:

THE WATERPROOFING WILL BE PAID FOR AT THE CONTRACT PRICE WHICH INCLUDES FURNISHING AND INSTALLING MORTAR, FLASHING, WATERPROOFING, PROTECTION BOARD, AND COUNTERFLASHING.

ITEM SPECIAL - PLANTER POTS:

1.0 SUMMARY:

A. WORK SHALL INCLUDE ALL ENGINEERING, FABRICATION, TOOLS, LABOR AND MATERIALS NECESSARY, INCLUDING INCIDENTALS TO SUCCESSFULLY FABRICATE AND INSTALL THE PLANTER POTS AS SHOWN ON THE CONSTRUCTION DRAWINGS.
B. THIS SECTION INCLUDES THE FOLLOWING:
   PLANTER POT, SEE SHEET 74/88 FOR DETAILS.
C. SIZES:
   3'-0" WIDE x 6'-0" LONG x 2'-0" TALL
D. MATERIAL AND FINISH:
   ALUMINUM 5052 POWDER COAT - BLACK COLOR
E. ACCESSORIES WITH EACH PLANTER:
   IRRIGATION FITTINGS, NEOPRENE RUBBER FEET, RIGID INSULATION BOARD AND DRAINAGE FITTINGS

1.1 REFERENCES:

ASTM B 117 - STANDARD PRACTICE FOR OPERATING SALT SPRAY (FOG) APPARATUS.
ASTM D 522 - STANDARD TEST METHODS FOR MANDREL BEND TEST OF ATTACHED ORGANIC COATINGS.
ASTM D 523 - STANDARD TEST METHOD FOR SPECULAR GLOSS.
ASTM D 2247 - STANDARD PRACTICE FOR TESTING WATER RESISTANCE OF COATINGS IN 100% RELATIVE HUMIDITY.
ASTM D 2794 - STANDARD TEST METHOD FOR RESISTANCE OF ORGANIC COATINGS TO THE EFFECTS OF RAPID DEFORMATION (IMPACT).
ASTM D 3359 - STANDARD TEST METHODS FOR MEASURING ADHESION BY TAPE TEST.
ASTM D 3363 - STANDARD TEST METHOD FOR FILM HARDNESS BY PENCIL TEST.
ASTM G 155 - STANDARD PRACTICE FOR OPERATING XENON ARC LIGHT APPARATUS FOR EXPOSURE OF NON-METALLIC.
ISO 1520 - PAINTS AND VARNISHES - CUPPING TEST.
ISO 2815 - PAINTS AND VARNISHES - BUCHHOLZ INDENTATION TEST.

1.2 SUBMITTALS:

A. PRODUCT DATA: SUBMIT MANUFACTURER'S PRODUCT DATA, STORAGE AND HANDLING REQUIREMENTS AND RECOMMENDATIONS, INSTALLATION METHODS AND AVAILABLE COLORS, STYLES, PATTERNS AND TEXTURES.
B. SHOP DRAWINGS: SUBMIT MANUFACTURER'S SHOP DRAWINGS, INCLUDING PLANS AND ELEVATIONS, INDICATING OVERALL DIMENSIONS, MATERIALS, TOLERANCES, WELDING, FASTENERS, HARDWARE, MOUNTING, FINISHES, AND ACCESSORIES.
C. SAMPLES: SUBMIT MANUFACTURER'S SAMPLES OF MATERIALS, FINISHES, AND FACTORY APPLIED COLOR FINISHES.
D. WARRANTY DATA ON MANUFACTURER'S LETTERHEAD.

1.3 QUALITY ASSURANCE:

A. PRODUCT SUPPORT: PRODUCTS ARE SUPPORTED WITH COMPLETE ENGINEERING DRAWINGS AND DESIGN PATENTS.
B. FACILITY OPERATOR: WELDERS AND MACHINE OPERATORS ARE CERTIFIED.

1.4 DELIVERY, STORAGE AND HANDLING:

A. DELIVERY: DELIVER MATERIALS TO SITE IN MANUFACTURER'S ORIGINAL, UNOPENED CONTAINERS AND PACKAGING, WITH LABELS CLEARLY IDENTIFYING PRODUCT NAME AND MANUFACTURER.
B. STORAGE: STORE MATERIALS IN CLEAN, DRY AREA IN ACCORDANCE WITH MANUFACTURER'S INSTRUCTIONS. KEEP MATERIALS IN MANUFACTURER'S ORGINAL, UNOPENED CONTAINERS AND PACKAGING UNTIL INSTALLATION.
C. HANDLING: PROTECT MATERIALS AND FINISH DURING HANDLING AND INSTALLATION TO PREVENT DAMAGE.

1.5 WARRANTY:

WARRANTY INFORMATION: PRODUCTS WILL BE FREE FROM DEFECTS IN MATERIAL AND/OR WORKMANSHIP FOR A PERIOD OF THREE YEARS FROM THE DATE OF FINAL ACCEPTANCE BY THE DEPARTMENT. THE WARRANTY DOES NOT APPLY TO DAMAGE RESULTING FROM ACCIDENT, ALTERATION, MISUSE, TAMPERING, NEGLIGENCE, OR ABUSE. SUPERFICIAL DAMAGE RESULTING FROM NORMAL USE: SCRATCHES, NICKS, AND ABRASIONS ARE TO BE CONSIDERED NORMAL WEAR AND TEAR, AND ARE NOT THE RESPONSIBILITY OF THE MANUFACTURER.

1.6 FINISHES:
A. FINISH ON METAL:

1. PRIMER: RUST INHIBITOR EPOXY PRIMER COAT 1.0-1.5 MILS ON FERROUS SUPPORTS
2. TOPCOAT: THERMOSETTING TGIC POLYESTER POWDER COAT, UV, CHIP, AND FLAKE RESISTANT.
3. COLOR: RAL 9004 BLACK, FINE TEXTURE.

B. TEST RESULTS:

1. SPECIFIC GRAVITY: 1.5 +/- .05
2. OPTIMAL STORAGE: < 80°F, 50% RH
3. PARTICLE DISTRIBUTION: +44 MICRONS (325 MESH) 30 - 40%
4. THEORETICAL COVERAGE: 59 SQ/FT @ 2.2 MILS
5. FILM THICKNESS: 2.2 TO 4.0 MILS
6. CURE SCHEDULE: 10 MINUTES @ 400
7. METAL TEMPERATURE: 18 MINUTES @ 375
8. 25 MINUTES @ 350
9. GLOSS: ASTM D523 4 - 7%
10. PENCIL HARDNESS: ASTM D3363 H-2H
11. FLEXIBILITY: ASTM D522 ⅛ IN
12. ADHESION: ASTM D3359 5B
13. DIRECT IMPACT: ASTM D2794 160 IN/LBS @ 2.2 MILS
14. REVERSE IMPACT: ASTM D2794 160 IN/LBS @ 2.2 MILS
15. SALT SPRAY HOURS: ASTM B117 1000
16. SALT SPRAY MATERIALS: CRS HENKEL B1000

2.0 MANUFACTURERS:

PROVIDE PRODUCTS FROM ONE OF THE FOLLOWING MANUFACTURERS:

A. KOMI SITE FURNISHINGS
   2825 HELSTON RD.
   COLUMBUS, OH 43220
   PHONE: (614) 578-9413
   WEBSITE: WWW.KOMISITEFURNISHINGS.COM

B. SPRUCE AND GANDER
   1782 LA COSTA MEADOWS DR.
   SUITE 104
   SAN MARCOS, CA 92078
   PHONE: (877) 650-7711
   WEBSITE: WWW.SPRUCEANDGANDER.COM

C. ORE INC.
   130 S. REDWOOD RD.
   NORTH SALT LAKE, UT 84054
   PHONE: (801) 936-0499
   WEBSITE: WWW.ORECONTAINERS.COM

D. WASSAU TILE
   PO BOX 1520
   WASSAU, WI 54402
   PHONE: (800) 388-8728
   WEBSITE: WWW.WASSAUTILE.COM

2.1 MISCELLANEOUS MATERIALS:

ANCHORS, FASTENERS, FITTINGS, AND HARDWARE:
STAINLESS STEEL MANUFACTURER'S STANDARD, CORROSION-RESISTANT-COATED OR NON-CORRODIBLE MATERIALS; COMMERCIAL QUALITY, TAMPERPROOF, VANDAL AND THEFT RESISTANT, CONCEALED, RECESSED, AND CAPPED OR PLUGGED.

3.0 EXAMINATION:

VERIFY THAT SUBSTRATES ARE STABLE AND CAPABLE OF SUPPORTING THE WEIGHT OF ITEMS COVERED UNDER THIS SECTION. VERIFY THAT SUBSTRATES HAVE BEEN ADEQUATELY PREPARED TO SECURELY ANCHOR THOSE ITEMS THAT WILL BE SURFACE MOUNTED. NOTIFY FIELD ENGINEER OF CONDITIONS THAT WOULD ADVERSELY AFFECT INSTALLATION OR SUBSEQUENT USE. DO NOT BEGIN INSTALLATION UNTIL UNACCEPTABLE CONDITIONS ARE CORRECTED.

3.1 INSTALLATION:

A. INSTALL PLANTERS IN ACCORDANCE WITH MANUFACTURER'S INSTRUCTIONS AT LOCATIONS INDICATED ON THE DRAWINGS.
B. INSTALL SITE FURNISHINGS LEVEL, PLUMB, SQUARE, ACCURATELY ALIGNED, CORRECTLY LOCATED, AND WITHOUT WARP AND POSITIONED AT LOCATIONS INDICATED ON DRAWINGS.

3.2 CLEANING:

A. CLEAN PLANTERS PROMPTLY AFTER INSTALLATION IN ACCORDANCE WITH MANUFACTURER'S INSTRUCTIONS. DO NOT USE HARSH CLEANING MATERIALS OR METHODS THAT COULD DAMAGE FINISH.
B. REMOVE TEMPORARY PROTECTIVE COVERINGS.
C. KEEP CLEAN UNTIL DATE OF FINAL COMPLETION.

3.3 ADJUSTING:

A. FINISH DAMAGE: REPAIR MINOR DAMAGES TO FINISH IN ACCORDANCE WITH MANUFACTURER'S INSTRUCTIONS AND AS APPROVED BY DESIGNER. REPAIR DAMAGED FINISHES TO MATCH ORIGINAL FINISH OR REPLACE COMPONENT.
B. COMPONENT DAMAGE: REMOVE AND REPLACE DAMAGED COMPONENTS THAT CANNOT BE SUCCESSFULLY REPAIRED AS DETERMINED BY DESIGNER.

3.4 PROTECTION:

PROTECT INSTALLED PLANTERS TO ENSURE THAT, EXCEPT FOR NORMAL WEATHERING, PLANTERS WILL BE WITHOUT DAMAGE OR DETERIORATION UNTIL DATE OF FINAL ACCEPTANCE.

4.0 METHOD OF MEASUREMENT:

PLANTER POTS SHALL BE MEASURED BY LUMP SUM FOR EACH INCLUDING CONTAINER AND INSTALLATION ACCESSORIES. REFER TO PLANTING SOILS, MULCH, DRAINAGE AGGREGATE, GEOTEXTILE FABRIC, PRECAST CONCRETE PLINTHS, AND IRRIGATION SECTIONS FOR METHOD OF MEASUREMENT FOR THESE SEPARATE ITEMS.

5.0 BASIS OF PAYMENT:

THE ACCEPTED PLANTER POTS WILL BE PAID FOR AT THE CONTRACT PRICE DESIGNATED FOR EACH AS SHOWN ON THE PLANS. ALL COSTS FOR WORK IN THIS SECTION ARE TO BE INCLUDED IN THE PRICE FOR EACH PLANTER POT. THE COSTS FOR PLANTING SOILS, PLANTS, MULCH, DRAINAGE AGGREGATE, GEOTEXTILE FABRIC, PRECAST CONCRETE PLINTHS, AND IRRIGATION SHALL BE INCLUDED ELSEWHERE.

ITEM 511 - CLASS QC2 CONCRETE WITH QC/QA, SIDEWALK, AS PER PLAN:
ITEM 511 - CLASS QC2 CONCRETE, MISC.: RAISED MEDIAN, WITH QC/QA:

PROVIDE A BROOM FINISH.

ITEM 511 - CONCRETE, MISC.: PRECAST CONCRETE PLINTHS:

SEE SHEET 74/88 FOR DETAILS AND ADDITIONAL REQUIREMENTS.

PROVIDE PRECAST CONCRETE PLINTHS FROM A PRECAST CONCRETE PRODUCER CERTIFIED UNDER SUPPLEMENT 1073. PRECAST PLINTHS SHALL BE DESIGNED BY THE MANUFACTURER TO SUPPORT THE DEAD LOAD SELF-WEIGHT OF THE PRECAST MEMBER, THE WEIGHT OF A FULLY-LOADED PLANTER POT SITTING ON TOP OF THE PLINTH (4.5 KIPS UNFACTORED LOAD), AS WELL AS ANY LIFTING AND ERECTION LOADS. THE PLINTHS SHALL BE DESIGNED TO PREVENT THERMAL AND FLEXURAL CRACKS FROM OCCURING DURING ANY STAGE OF CONSTRUCTION AND THROUGHOUT THE SERVICE LIFE OF THE BRIDGE. AT A MINIMUM, PROVIDE 1 LAYER OF # 4 BARS AT 12" MAX. SPACING IN EACH DIRECTION. PROVIDE 1.5" CLEAR COVER AT THE TOP SURFACE. PROVIDE ADDITIONAL REINFORCING STEEL NEAR THE TOP AND BOTTOM SURFACES AS NEEDED FOR LIFTING AND ERECTION.

CONCRETE FOR PRECAST PLINTHS SHALL BE CLASS QC3 AND SHALL HAVE A MINIMUM COMPRESSIVE STRENGTH OF 4 KSI WHEN FIRST LIFTED AND 5 KSI AT 28 DAYS. OBTAIN ALL CONCRETE FOR USE IN PRECAST CONCRETE PLINTHS FROM A SINGLE SUPPLIER USING CONSISTENT COMPONENTS IN ORDER TO OBTAIN A UNIFORM APPEARANCE.

REINFORCING STEEL SHALL CONFORM TO CMS 509 AND SHALL BE GALVANIZED.

PROVIDE SHOP DRAWINGS PER 501.04. THE REQUIREMENTS OF 501.04A, 501.04B, AND 501.04C SHALL APPLY.

PROVIDE A RUBBED FINISH PER 511.15B ON THE FOUR SIDES OF THE PLINTH. PROVIDE A STANDARD FINISH PER 511.15A ON THE TOP AND BOTTOM SURFACES.

PROVIDE A ½" BEVEL ON ALL EXPOSED EDGES, USING A TRIANGULAR STRIP BUILT INTO THE FORMS.

LIFTING LUGS SHALL BE DESIGNED AND INSTALLED BY THE PRECAST MANUFACTURER. FOLLOWING INSTALLATION, LUGS SHALL BE REMOVED AND GROUTED TO PROVIDE A SMOOTH, UNIFORM APPEARANCE.

TOLERANCES:

UNIT LENGTH AND WIDTH:	+/- ½"
UNIT HEIGHT:	+/- ⅛"
REINFORCING STEEL COVER:	- 0, + ¼"
POSITION OF REINFORCING STEEL, LIFTING INSERT, ETC:	+/- ¼"
SIZE OF SURFACES DEFECTS:	+/- ⅛"

REJECT PRECAST CONCRETE UNITS HAVING ANY OF THE CHARACTERISTICS DESCRIBED IN SECTION 851.05C OF SUPPLEMENTAL SPECIFICATION 851, OR NOT MEETING THE TOLERANCES SPECIFIED HEREIN.

ALL INSERTS, REINFORCING STEEL, LIFTING LUGS, AND OTHER REQUIRED APPURTENANCES SHALL BE FURNISHED AND SHOP-INSTALLED BY THE PRECAST MANUFACTURER. THESE ITEMS, TOGETHER WITH THE DESIGN, SHOP DRAWINGS, FABRICATION, DELIVERY AND INSTALLATION OF THE PLINTHS ON THE BRIDGE (INCLUDING GROUT BED, VALVE BOX, DRILLED OR FORMED HOLES IN SIDEWALK, THREADED BARS, AND ANY OTHER INCIDENTALS NECESSARY TO COMPLETE THE WORK), SHALL BE INCLUDED FOR PAYMENT WITH ITEM 511 - CONCRETE, MISC.: PRECAST CONCRETE PLINTHS.

GENERAL NOTES - 3
BRIDGE NO. HAM-75-0104
LINN STREET OVER IR-75 AND GEST STREET

SFN 3109098

DESIGN AGENCY
B&N
burgessniple.com

DESIGNER	CHECKER
BES	MAB

REVIEWER
JCS 12/15/24

PROJECT ID
122048

SUBSET	TOTAL
5	88

SHEET	TOTAL
P.247	P.421

HAM-IR 75-1.05

MODEL: Sheet PAPERSIZE: 34x22 (in.) DATE: 8/28/2025 TIME: 9:53:46 AM PLTDRV: OHDOT_PDF.pltcfg PENTBL: OHDOT_UTPen.tbl USER: WORKSPACE: OHDOTCEv02 WORKSET: 122048 PRODUCT: OpenRoadsDesigner 10.12.02.4
pw:\\ohiodot-pw.bentley.com:ohiodot-pw-02\Documents\01 Active Projects\District 08\Hamilton\122048\401-Engineering_BurgessNiple\Structures\SFN_3109098\Sheets\122048_SFN_3109098_SN003.dgn

ITEM 516 - ARMORLESS PREFORMED JOINT SEAL, AS PER PLAN:

THIS WORK CONSISTS OF INSTALLING THE ARMORLESS PREFORMED JOINT SEAL BETWEEN THE UNIT 1 AND UNIT 2 PLANTER WALLS AT THE PIER 1 EXPANSION JOINT. INSTALL THE ARMORLESS PREFORMED JOINT SEAL IN ACCORDANCE WITH THE MANUFACTURER'S SPECIFICATIONS AND UNDER THE SUPERVISION OF THE MANUFACTURER'S DESIGNATED REPRESENTATIVE.

SELECT THE ARMORLESS PREFORMED JOINT SEAL FROM ONE OF THE MANUFACTURERS LISTED BELOW:
R.J. WATSON, INC.
11035 WALDEN AVENUE
ALDEN, NY 14004-9616
PHONE: (716) 901-7020
FAX: (716) 901-7015
- SILICOFLEX SF500 (MAX. MOVEMENT RATING: 5")

WATSON BOWMAN ACME CORP.
95 PINEVIEW DRIVE
AMHERST, NY 14228-2121
PHONE: (716) 691-7566
FAX: (716) 691-9239
- WABO SPS-500 (MAX. MOVEMENT RATING: 5")

D.S. BROWN COMPANY
300 EAST CHERRY STREET
NORTH BALTIMORE, OH 45872-1227
PHONE: (419) 257-3561
FAX: (419) 257-2200
- V-500 (MAX. MOVEMENT RATING: 5")

THE SEAL AND ADHESIVE ARE AN INTEGRAL JOINT SYSTEM THAT SHALL BE DESIGNED AND SUPPLIED BY THE SAME MANUFACTURER.

RECESS THE JOINT SEAL AT LEAST ½" BELOW AND NO MORE THAN 2" BELOW THE TOP AND FACE OF PLANTER WALL. CONTINUALLY CHECK AND ADJUST THE DEPTH OF THE JOINT SEAL BY HAND AS NECESSARY BECAUSE WHEN THE JOINT SEAL OPENING CLOSES, THE JOINT SEAL WILL HAVE THE TENDENCY TO RISE. THEREFORE, AT THE JOINT SEAL'S MINIMUM WIDTH, THE TOP OF THE JOINT SEAL SHALL STILL BE AT LEAST ½" BELOW THE PLANTER WALL SURFACE.

SUBMIT THE JOINT SEAL INSTALLATION PROCEDURES TO THE ENGINEER AT LEAST SEVEN (7) DAYS BEFORE CONSTRUCTION BEGINS. THE DEPARTMENT'S ACCEPTANCE IS NOT REQUIRED.

THE DEPARTMENT WILL MEASURE THE ARMORLESS PREFORMED JOINT SEAL BY THE NUMBER OF FEET HORIZONTALLY AND VERTICALLY ALONG THE JOINT CENTERLINE.

THE DEPARTMENT WILL INCLUDE ALL MATERIALS, LABOR, EQUIPMENT, SURFACE PREPARATIONS, TOOLS, TRAFFIC CONTROL, AND INCIDENTALS NEEDED TO COMPLETE THE WORK DESCRIBED ABOVE IN THE CONTRACT PRICE FOR ITEM 516 - ARMORLESS PREFORMED JOINT SEAL, AS PER PLAN.

ITEM SPECIAL - BRIDGE PILASTER LETTERS:

DESCRIPTION:
THIS WORK CONSISTS OF PREPARING SHOP DRAWINGS, COORDINATING WITH THE CITY OF CINCINNATI, AND INSTALLING THE LETTERING ON THE BRIDGE PILASTERS AS SHOWN ON SHEET 63/88 AND AS SPECIFIED HEREIN.

SANDBLASTED GRAPHICS 1/8" DEPTH. IN-FILL RECESSED AREAS WITH SHERWIN WILLIAMS (SW 2849 WESTCHESTER GRAY) OR APPROVED EQUAL.

: FULL-SIZE ART FILE TO BE PROVIDED BY DOTE.
: SUBMIT SHOP DRAWINGS FOR REVIEW AND APPROVAL. THE CITY OF CINCINNATI SHALL HAVE 21 CALENDAR DAYS TO REVIEW THE SHOP DRAWINGS. IN THE EVENT THE SHOP DRAWINGS ARE NOT APPROVED, THE CITY OF CINCINNATI SHALL HAVE 21 CALENDAR DAYS TO REVIEW ANY RESUBMISSIONS UNTIL THE SHOP DRAWINGS ARE APPROVED.
: CONTRACTOR TO MEET ON-SITE WITH CITY STAFF TO CONFIRM LOCATIONS, PRIOR TO SANDBLASTING THE FINAL GRAPHICS INTO THE WALL. CONTACT BRIAN RHODES brian.rhodes@cincinnati-oh.gov /OR/ JOELL ANGEL-CHUMBLEY joell.angel-chumbley@cincinnati-oh.gov WITH ANTICIPATED INSTALL SCHEDULE.

METHOD OF MEASUREMENT:
THE DEPARTMENT WILL MEASURE THE BRIDGE PILASTER LETTERS BY THE NUMBER OF PILASTERS TO WHICH THE LETTERS ARE APPLIED.

BASIS OF PAYMENT:
THE DEPARTMENT WILL PAY FOR ACCEPTED QUANTITIES AT THE CONTRACT PRICE FOR ITEM SPECIAL - BRIDGE PILASTER LETTERS, WHICH SHALL INCLUDE ALL NECESSARY LABOR, MATERIALS, AND EQUIPMENT TO COMPLETE THIS ITEM OF WORK, INCLUDING PREPARING SHOP DRAWINGS, COORDINATING WITH THE CITY OF CINCINNATI, AND INSTALLING THE LETTERING.

ITEM 203 - GRANULAR MATERIAL, TYPE B, AS PER PLAN:

IN AREAS WHERE GRANULAR MATERIAL, TYPE B OVERLAPS WITH SELECT GRANULAR BACKFILL (I.E. IN THE AREAS OF SOIL REINFORCEMENT FOR THE MSE WALLS RUNNING PARALLEL TO ℄ CONST. CLP_LINN), THE GRANULAR MATERIAL, TYPE B, SHALL MEET THE REQUIREMENTS OF SUPPLEMENTAL SPECIFICATION 840.03.E. IN OTHER AREAS, GRANULAR MATERIAL, TYPE B SHALL CONFORM TO CMS 203.

ITEM 517 - RAILING MISC.: SIDEWALK RAILING AT REAR ABUTMENT MSE WALL:

THIS ITEM SHALL CONFORM TO CMS 517 EXCEPT AS NOTED HEREIN. SEE SHEET 65/88 FOR RAILING DETAILS AND ADDITIONAL REQUIREMENTS.

MECHANICAL CONNECTORS:

AN APPROVED TYPE OF MECHANICAL CONNECTOR FOR REINFORCING BARS SHALL BE PROVIDED. INSTALLATION OF CONNECTORS SHALL CONFORM WITH MANUFACTURER'S RECOMMENDED PROCEDURES.

CONNECTORS USED WITH GALVANIZED BARS SHALL BE GALVANIZED. COATING FOR BOTH CONNECTORS AND BARS SHALL CONFORM TO THE SAME SPECIFICATIONS. COATINGS WHICH HAVE BEEN DAMAGED OR WHICH OTHERWISE DO NOT MEET SPECIFICATIONS WITH RESPECT TO COLOR, CONTINUITY AND UNIFORMITY SHALL BE REPLACED WITH MATERIAL THAT MEETS THE SPECIFICATIONS.

SUPPLY AND INSTALL CAPS FOR MECHANICAL CONNECTORS TO PREVENT CONCRETE INTRUSION INTO THE CONNECTORS DURING THE DECK POUR.

CONNECTORS SHALL CONFORM WITH ITEM 509 AND ARE CONSIDERED INCIDENTAL TO THE BID PRICE PER POUND FOR ITEM 509.

ITEM 659 - TOPSOIL, AS PER PLAN:

THIS ITEM OF WORK SHALL CONFORM WITH CMS 659, EXCEPT AS NOTED BELOW.

TOPSOIL SHALL BE MACADAM 2/6MM AND 25% BY VOLUME ENRICHED BIOCHAR AND MATURE COMPOST MIXED EQUALLY.

THE COMPOST SHALL BE MATURE, AND THE BIOCHAR SHALL BE NUTRITIONALLY ENRICHED WITH HYGIENIZED ORGANIC FERTILIZER OR MINERAL FERTILIZER NPK 5-1-4 WITH MICRONUTRIENTS.

STANDARD ABBREVIATIONS LIST:

APPROX. = APPROXIMATE
BOT. OR BTM. = BOTTOM
BRG. = BEARINGS
BRGS. = BEARINGS
B.S. = BOTH SIDES
B# = BEAM NUMBER
c/c = CENTER-TO-CENTER
C.J. = CONSTRUCTION JOINT
CJP = COMPLETE JOINT PENETRATION
CLR. = CLEAR
CMS OR C&MS = CONSTRUCTION AND MATERIALS SPECIFICATIONS
CONST. = CONSTRUCTION
CS = INDICATES BUTT WELD SUBJECT TO COMPRESSIVE STRESSES ONLY
CVN = CHARPY V-NOTCH
DIA. = DIAMETER
EB = EASTBOUND
E.F. = EACH FACE
EL. = ELEVATION
EMBED. = EMBEDMENT
EQ. = EQUAL
EXP. = EXPANSION
F.A. = FORWARD ABUTMENT
F.F. = FAR FACE
F.S. = FIELD SPLICE
FWD = FORWARD
GFRP = GLASS FIBER REINFORCED POLYMER
G# = GIRDER NUMBER
HMWM = HIGH MOLECULAR WEIGHT METHACRYLATE
H.S. = HIGH STRENGTH
LF = LEFT FORWARD
LT. = LEFT
MAX. = MAXIMUM
M.C. = MECHANICAL CONNECTOR
M.E. = MATCH EXISTING
MIN. = MINIMUM
MGS = MIDWEST GUARDRAIL SYSTEM
NB = NORTHBOUND
N.F. = NEAR FACE
NPCPP = NON-PERFORATED CORRUGATED PLASTIC PIPE
O.D. = OUTSIDE DIAMETER
o/o = OUT-TO-OUT
PCB = PORTABLE CONCRETE BARRIER
PCPP = PERFORATED CORRUGATED PLASTIC PIPE
PEJF = PREFORMED EXPANSION JOINT FILLER
P.G. = PROFILE GRADE
PGD = PREFABRICATED GEOCOMPOSITE DRAIN
R.A. = REAR ABUTMENT
RAD. = RADIUS
RT. = RIGHT
SB = SOUTHBOUND
SCH = SCHEDULE
SHLD. = SHOULDER
SHT. = SHEET
S.O. OR SR = SERIES OF
SPA. = SPACES
STA. = STATION
SYMM. = SYMMETRICAL
TBR = TO BE REMOVED
TBRLO = TO BE RELOCATED BY OTHERS
T&B = TOP AND BOTTOM
T/R = TOP OF ROCK
t/t = TOE-TO-TOE
U.N.O. = UNLESS NOTED OTHERWISE
VAR. = VARIES
WB = WESTBOUND
W.P. = WORK POINT

GENERAL NOTES - 4
BRIDGE NO. HAM-75-0104
LINN STREET OVER IR-75 AND GEST STREET

SFN 3109098
DESIGN AGENCY B&N burgessniple.com
DESIGNER BES | CHECKER MAB
REVIEWER JCS 12/15/24
PROJECT ID 122048
SUBSET 6 | TOTAL 88
SHEET P.248 | TOTAL P.421

HAM-IR 75-1.05

MODEL: Sheet PAPERSIZE: 34x22 (in.) DATE: 8/28/2025 TIME: 9:53:55 AM PLTDRV: OHDOT_PDF.pltcfg PENTBL: OHDOT_UTPen.tbl USER: WORKSPACE: OHDOTCEv02 WORKSET: 122048 PRODUCT: OpenRoadsDesigner 10.12.02.4
pw:\\ohiodot-pw.bentley.com:ohiodot-pw-02\Documents\01 Active Projects\District 08\Hamilton\122048\401-Engineering_BurgessNiple\Structures\SFN_3109098\Sheets\122048_SFN_3109098_SN004.dgn

ITEM SPECIAL - STRUCTURES: SCREEN WALLS:

1. DESCRIPTION:

THIS WORK CONSISTS OF PREPARING SHOP DRAWINGS, FURNISHING, FABRICATING, COATING, AND ERECTING SCREEN WALLS.

SEE SHEETS 65A/88 TO 65E/88 FOR SCREEN WALL DETAILS.

2. FABRICATOR QUALIFICATIONS:

FABRICATOR SHALL HAVE ISO 9001 CERTIFICATIONS SUPPORTING DESIGN AND ENGINEERING WORK AS WELL AS QUALITY ASSURANCE.

FABRICATOR IS REQUIRED TO HAVE A WELDING COUPON.

FABRICATOR IS REQUIRED TO DEMONSTRATE AND DISCUSS RELEVANT EXPERIENCE WITH PROJECTS OF SIMILAR SCOPE AND INTENT.

FABRICATOR HAS BEEN IN BUSINESS NO LESS THAN 10 YEARS.

FABRICATOR SHALL PROVIDE PROOF THAT THEY HAVE MANUFACTURED A MINIMUM OF 3 SIMILAR PROJECTS OR PRODUCTS.

3. SHOP DRAWINGS:

SUBMIT SHOP DRAWINGS TO THE ODOT OFFICE OF MATERIALS MANAGEMENT (OMM) AND THE ODOT DISTRICT 8 OFFICE OF PLANNING AND ENGINEERING AT LEAST 3 DAYS BEFORE THE PRE-FABRICATION MEETING. THE SUBMISSION TO OMM SHALL INCLUDE A WRITTEN ACCEPTANCE LETTER AND EACH DRAWING. ALSO, FURNISH THE FABRICATOR'S QUALITY CONTROL SPECIALIST WITH THESE DRAWINGS BEFORE THE PRE-FABRICATION MEETING.

HAVE COMPETENT INDIVIDUALS PREPARE AND CHECK THE SHOP DRAWINGS. THE PREPARER(S) AND CHECKER(S) SHALL INITIAL EACH SHEET AND SHALL BE DIFFERENT INDIVIDUALS. PROVIDE, ON THE COVER SHEET OR SUBMITTAL LETTER, THE FIRST NAME, LAST NAME AND INITIALS OF EACH PREPARER AND CHECKER PERFORMING WORK ON THE SHOP DRAWINGS. HAVE AN OHIO REGISTERED ENGINEER SIGN, SEAL AND DATE THE SHOP DRAWING COVER SHEET OR SUBMITTAL LETTER ACCORDING TO ORC 4733 AND OAC 4733-35 CONFIRMING THAT THE SHOP DRAWINGS MEET THE INTENT OF THE CONTRACT. IF MULTIPLE PREPARERS OR MULTIPLE CHECKERS CREATED THE DRAWING, THEN THE COVER SHEET OR SUBMITTAL LETTER SHALL CLEARLY INDICATE THE PORTIONS FOR WHICH EACH PERSON IS RESPONSIBLE. HAVE ALL QUESTIONS AND COMMENTS ADDRESSED BEFORE SUBMITTING THE SHOP DRAWINGS.

THE CONTRACTOR'S WRITTEN ACCEPTANCE LETTER SHALL DOCUMENT ACCEPTANCE OF THE SHOP DRAWINGS INCLUDING CONFIRMATION OF FIELD VERIFICATION, AS REQUIRED, AND DESCRIPTIONS OF ISSUES RESOLVED BETWEEN THE CONTRACTOR, THE FABRICATOR, OR THE DEPARTMENT.

BY ACCEPTING THESE SHOP DRAWINGS, THE CONTRACTOR REPRESENTS TO THE DEPARTMENT THAT ALL DIMENSIONS AND ELEVATIONS OF EXISTING CONDITIONS SHOWN ON THE PLANS HAVE BEEN FIELD MEASURED AND VERIFIED, AND THAT THESE SHOP DRAWINGS COMPLY WITH ALL THE MATERIALS REQUIREMENTS, CONSTRUCTION REQUIREMENTS, CONTRACT REQUIREMENTS, AND PERFORMANCE CRITERIA. THE CONTRACTOR FURTHER REPRESENTS THAT THESE DRAWINGS HAVE BEEN COORDINATED AND VERIFIED WITH THE DETAILS OF THE WORK TO BE PERFORMED BY OTHER FABRICATORS AND ENTITIES ON THE PROJECT. THE DEPARTMENT WILL NOT MAKE ANY ALLOWANCE FOR ADDITIONAL COST OR DELAYS TO THE CONTRACTOR FOR INCORRECT FABRICATION AS A RESULT OF FAILURE TO COORDINATE OR PERFORM THIS ACCEPTANCE.

IF THE DEPARTMENT REQUESTS CHANGES ON THESE SHOP DRAWINGS, OR THE CONTRACTOR MAKES CHANGES IN ADDITION TO THOSE EXPRESSLY REQUESTED, REVISE THE SHOP DRAWINGS AND SUBMIT A NEW COVER SHEET, SIGNED, SEALED AND DATED BY AN OHIO REGISTERED ENGINEER WITH SUITABLE REVISION MARKS TO IDENTIFY THE CHANGES.

SCHEDULE THE PRE-FABRICATION MEETING AFTER OMM RECEIVES THE DRAWINGS. FABRICATION MAY BEGIN AFTER THE PRE-FABRICATION MEETING IS COMPLETE.

4. MATERIAL REQUIREMENTS:

SUBMIT MILL TEST REPORTS FOR STRUCTURAL STEEL AND ALUMINUM ACCORDING TO C&MS 501.06.B.

5. FABRICATION REQUIREMENTS:

FABRICATE COMPONENTS PER C&MS 513. CONDUCT A PRE-FABRICATION MEETING PER 513.07.

ALL PLAN DIMENSIONS ARE MEASURED ALONG THE HORIZONTAL. SEE SITE PLAN FOR VERTICAL PROFILE.

WELDING OF STEEL MEMBERS SHALL CONFORM TO THE REQUIREMENTS OF THE AASHTO/AWS D1.5M/D1.5 BRIDGE WELDING CODE. WELDING OF ALUMINUM MEMBERS SHALL CONFORM TO THE REQUIREMENTS OF AWS D1.2/D1.2M STRUCTURAL WELDING CODE - ALUMINUM.

PERFORM ALL SHOP WELDING PRIOR TO GALVANIZING OF STEEL MEMBERS AND PAINTING OF ALUMINUM MEMBERS.

6. COATINGS:

SEE SHEETS 65A/88 TO 65E/88 FOR GALVANIZING REQUIREMENTS.

PAINT SHALL BE A CATALYZED ACRYLIC POLYURETHANE PAINT SYSTEM, MATTHEWS PAINT SYSTEM OR APPROVED EQUAL, AND FINISHED WITH A HIGH-PERFORMANCE GRAFFITI-RESISTANT GLOSS CLEAR COAT. FINAL COLOR SHALL BE [TBD].

FOLLOW ALL MANUFACTURER'S WRITTEN INSTRUCTIONS REGARDING SURFACE PREPARATION, MIXING, STORAGE, EQUIPMENT, APPLICATION, COATING THICKNESSES, DRYING TIMES AND ANY OTHER INSTRUCTIONS PROVIDED BY THE MANUFACTURER.

PROTECT COATINGS DURING TRANSPORTATION AND ERECTION. REPAIR GALVANIZING DAMAGED DURING TRANSPORTATION OR ERECTION PER C&MS 711.02. REPAIR PAINT DAMAGED DURING TRANPORTATION OR ERECTION ACCORDING TO PAINT MANUFACTURER'S INSTRUCTIONS.

7. JOB STANDARD MOCK-UP:

PROVIDE A JOB STANDARD MOCK-UP FABRICATED, GALVANIZED, PAINTED, AND DELIVERED TO THE JOB SITE FOR ENGINEER'S APPROVAL BEFORE FABRICATION OF THE PROJECT SCREEN WALL BEGINS. THE JOB STANDARD MOCK-UP SHALL MEET THE FOLLOWING REQUIREMENTS:

A. PROVIDE PROPER HANDLING, STORAGE, DELIVERY, AND MAINTENANCE OF THE MOCK-UP THROUGHOUT THE DURATION OF THE PROJECT. THE DEPARTMENT SHALL TAKE POSSESSION OF THE MOCK-UP AT A TIME AGREED UPON BY THE ENGINEER AND CONTRACTOR.

B. THE MOCK-UP SHALL CONSIST OF 3 POSTS, 2 SCREEN WALL PANELS, AND A CLOSURE PLATE, AND SHALL REPLICATE THE SCREEN WALL SHOWN IN THE PLANS ADJACENT TO THE END PILASTER AT THE FORWARD ABUTMENT, LEFT PARAPET. THE MOCK-UP SHALL INCLUDE BASE PLATES, ANCHOR RODS, POSTS, STEEL CONNECTION ANGLES, ALUMINUM CONNECTION ANGLES, SCREEN WALL PANELS, MASKING ELEMENTS, BOLTS AND ASSOCIATED HARDWARE, AND A CLOSURE PLATE. ALL DETAILS AND CONNECTIONS SHALL BE AS SHOWN ON THE PLANS.

C. AFTER THE COMPONENT PARTS OF THE JOB STANDARD MOCK-UP HAVE BEEN DELIVERED TO THE JOB SITE, THE CONTRACTOR SHALL INSTALL THE MOCK-UP ON A TEMPORARY SECTION OF CONCRETE PARAPET WITH DIMENSIONS AND GRADE REPRESENTING THE PERMANENT CONCRETE PARAPET ONTO WHICH THE PRODUCTION SCREEN WALL WILL BE MOUNTED.

D. FOR ANY PORTIONS OF THE MOCK-UP REJECTED BY THE ENGINEER, REPAIR OR REPLACE, TO THE SATISFACTION OF THE ENGINEER, INCLUDING BUT NOT LIMITED TO COATINGS AND COATING COLORS.

E. FULL FABRICATION OF THE SCREEN WALLS WILL NOT COMMENCE UNTIL THE ENGINEER GIVES WRITTEN NOTICE OF ACCEPTANCE OF THE MOCK-UP.

F. THE MOCK-UP WILL BE USED BY THE ENGINEER FOR THE DURATION OF THE PROJECT TO ASSURE THE QUALITY AND CONSISTENCY OF ALL SCREEN WALL SECTIONS USED ON THE BRIDGE. THE ENGINEER WILL REJECT ANY AND ALL SECTIONS THAT DO NOT REPLICATE THE ACCEPTED PROPERTIES OF THE MOCK-UP.

8. METHOD OF MEASUREMENT:

THE DEPARTMENT WILL MEASURE SCREEN WALLS BY THE NUMBER OF FEET FROM CENTERLINE TO CENTERLINE OF END POSTS.

9. BASIS OF PAYMENT:

THE DEPARTMENT WILL PAY FOR ACCEPTED QUANTITIES AT THE UNIT PRICE BID PER FOOT FOR ITEM SPECIAL - STRUCTURES: SCREEN WALLS, WHICH SHALL BE FULL COMPENSATION FOR ALL LABOR, MATERIALS, EQUIPMENT, AND INCIDENTALS NECESSARY TO COMPLETE THIS ITEM OF WORK IN A SATISFACTORY AND WORKMANLIKE MANNER, AS SHOWN IN THE PLANS AND DESCRIBED HEREIN.

ITEM 507 - 12" CAST-IN-PLACE REINFORCED CONCRETE PILES, DRIVEN, AS PER PLAN:
ITEM 507 - 14"CAST-IN-PLACE REINFORCED CONCRETE PILES, DRIVEN, AS PER PLAN:

FOLLOWING REMOVAL OF EXISTING CONCRETE FOOTINGS WITHIN THE PROPOSED BRIDGE LIMITS, FIELD LOCATE, BY SURVEY, EACH OF THE EXISTING PILES AT THE FOLLOWING LOCATIONS AND PROVIDE A SCALED DRAWING TO THE ENGINEER ILLUSTRATING THE EXISTING PILES AND THE PROPOSED PILE LOCATIONS:

EXISTING PIER 1 (PROPOSED REAR ABUTMENT)

EXISTING PIER 2 (PROPOSED PIER 1)

EXISTING PIER 4 (PROPOSED PIER 2)

EXISTING FORWARD ABUTMENT (PROPOSED FORWARD ABUTMENT)

DEPICT POTENTIAL PILE CONFLICTS WITH CONFLICT DIMENSIONS ON THE DRAWING AND PROPOSE NEW LOCATIONS OF THE PILES. THE ENGINEER WILL COORDINATE WITH THE DESIGNER OF RECORD TO ADJUST THE PILE LAYOUT TO AVOID CONFLICTS. PROVIDE THE PILE LAYOUT DRAWING AT LEAST 10 WORKING DAYS PRIOR TO PROPOSED COMMENCEMENT OF PILE DRIVING OPERATIONS. THE ENGINEER WILL PROVIDE A MODIFIED PILE LAYOUT ON OR BEFORE 10 WORKING DAYS. BEGIN PILE DRIVING OPERATIONS FOLLOWING RECEIVING THE MODIFIED PILE LAYOUT. INCLUDE SPECIFIC TASKS IN THE CPM SCHEDULE FOR SUBMITTAL OF THE PILE LAYOUT DRAWING AS WELL AS TIME TO RECEIVE A MODIFIED PILE LAYOUT. DRIVE PILES TO THE DESIGNATED ULTIMATE BEARING VALUE PER THE REQUIREMENTS OF ITEM 507.

ITEM 509 - CONCRETE REINFORCEMENT, MISC.: ADDITIONAL GALVANIZED STEEL REINFORCEMENT FOR FOOTINGS:

IT IS ANTICIPATED THAT THE GALVANIZED REINFORCING STEEL, AS SHOWN IN THE PLANS FOR THE FOOTINGS, MAY CHANGE BASED ON THE LOCATION OF THE EXISTING PILING. SEE ITEM 507 - 12"CAST-IN-PLACE REINFORCED CONCRETE PILES, DRIVEN, AS PER PLAN AND ITEM 507 - 14"CAST-IN-PLACE REINFORCED CONCRETE PILES, DRIVEN, AS PER PLAN FOR ADDITIONAL INFORMATION. THE FINAL GALVANIZED REINFORCING STEEL DETAILS WILL BE PROVIDED WITH THE MODIFIED PILE LAYOUT REFERENCED IN ITEM 507 - 12"CAST-IN-PLACE REINFORCED CONCRETE PILES, DRIVEN, AS PER PLAN AND ITEM 507 - 14"CAST-IN-PLACE REINFORCED CONCRETE PILES, DRIVEN, AS PER PLAN. INCLUDE SPECIFIC TASKS IN THE CPM SCHEDULE FOR THE NECESSARY TIME REQUIRED TO OBTAIN ADDITIONAL GALVANIZED REINFORCING STEEL BASED ON THE FINAL REINFORCING DETAILS FOR THE FOOTINGS BASED ON THE MODIFIED PILE LAYOUT. COMPENSATION FOR ANY ADDITIONAL GALVANIZED REINFORCING STEEL REQUIRED BASED ON THE MODIFIED PILE LAYOUT WILL BE MADE UNDER THIS ITEM. IN ADDITION TO THE PROVISIONS OF ITEM 509, FIELD BEND AND/OR FIELD CUT THE STEEL REINFORCEMENT DESIGNATED IN THE PLANS, AS NECESSARY, IN ORDER TO MAINTAIN THE REQUIRED CLEARANCES AND BAR SPACINGS. REPAIR ALL DAMAGE TO THE BAR COATING ACCORDING TO C&MS 709.16.

A QUANTITY OF 4,000 LBS. OF ITEM 509 - CONCRETE REINFORCEMENT, MISC.: ADDITIONAL GALVANIZED STEEL REINFORCEMENT FOR FOOTINGS HAS BEEN INCLUDED FOR THIS PURPOSE.

511 - CLASS QC1 CONCRETE WITH QC/QA, FOOTING, AS PER PLAN:

THE DIMENSIONS OF THE FOOTINGS MAY CHANGE BASED ON THE LOCATION OF THE EXISTING PILING. A QUANTITY OF 10% OF THE FOOTING VOLUME HAS BEEN ADDED TO HELP ACCOUNT FOR PILE PLACEMENT VARIANCES. SEE ITEM 507 - 12" CAST-IN-PLACE REINFORCED CONCRETE PILES, DRIVEN, AS PER PLAN AND ITEM 507 - 14"CAST-IN-PLACE REINFORCED CONCRETE PILES, DRIVEN, AS PER PLAN FOR ADDITIONAL INFORMATION. THE FINAL DIMENSIONS OF THE FOOTINGS WILL BE PROVIDED WITH THE MODIFIED PILE LAYOUT REFERENCED IN ITEM 507 - 12"CAST-IN-PLACE REINFORCED CONCRETE PILES, DRIVEN, AS PER PLAN AND ITEM 507 - 14"CAST-IN-PLACE REINFORCED CONCRETE PILES, DRIVEN, AS PER PLAN. ADJUSTMENTS TO THE DIMENSIONS OF THE FOOTINGS BASED ON THE LOCATION OF THE EXISTING PILING IS CONSIDERED INCIDENTAL TO THIS ITEM. PAYMENT WILL BE IN ACCORDANCE WITH C&MS 511.23 AND CALCULATIONS FROM PLAN DIMENSIONS, IN PLACE, COMPLETED AND ACCEPTED WILL BE BASED UPON THE FINAL DIMENSIONS OF THE FOOTINGS PROVIDED WITH THE MODIFIED PILE LAYOUT REFERENCED IN ITEM 507 - 12"CAST-IN-PLACE REINFORCED CONCRETE PILES, DRIVEN, AS PER PLAN AND ITEM 507 - 14"CAST-IN-PLACE REINFORCED CONCRETE PILES, DRIVEN, AS PER PLAN.

ITEM SPECIAL - BRIDGE PILASTER STORY PANELS:

THIS ITEM OF WORK CONSISTS OF PREPARING SHOP DRAWINGS, FURNISHING, FABRICATING, COATING, AND ERECTING STORY PANELS ON THE CONCRETE END PILASTERS.

SEE SHEET 63A/88 FOR STORY PANEL DETAILS.

SECTIONS 2-6 OF THE GENERAL NOTES FOR ITEM SPECIAL - STRUCTURES: SCREEN WALLS SHALL APPLY TO THIS ITEM OF WORK.

JOB STANDARD MOCK-UP:

PROVIDE A JOB STANDARD MOCK-UP FABRICATED, COATED, AND DELIVERED TO THE JOB SITE FOR ENGINEER'S APPROVAL BEFORE FABRICATION OF THE PROJECT STORY PANELS BEGINS. THE JOB STANDARD MOCK-UP SHALL MEET THE FOLLOWING REQUIREMENTS:

A. PROVIDE PROPER HANDLING, STORAGE, DELIVERY, AND MAINTENANCE OF THE MOCK-UP THROUGHOUT THE DURATION OF THE PROJECT. THE DEPARTMENT SHALL TAKE POSSESSION OF THE MOCK-UP AT A TIME AGREED UPON BY THE ENGINEER AND CONTRACTOR.

B. THE MOCK-UP SHALL CONSIST OF A COMPLETED STORY PANEL, ADHERED TO A PREFORMED BEARING PAD AS SHOWN IN THE PLANS.

C. AFTER THE JOB STANDARD MOCK-UP HAS BEEN DELIVERED TO THE JOB SITE, THE CONTRACTOR SHALL STORE THE MOCK-UP IN A LOCATION AGREED UPON BY THE ENGINEER AND CONTRACTOR TO ALLOW FOR INSPECTION. MOUNTING OF THE MOCK-UP TO A CONCRETE ELEMENT IS NOT REQUIRED.

D. FOR ANY PORTIONS OF THE MOCK-UP REJECTED BY THE ENGINEER, REPAIR OR REPLACE, TO THE SATISFACTION OF THE ENGINEER, INCLUDING BUT NOT LIMITED TO COATINGS AND COATING COLORS.

E. FULL FABRICATION OF THE STORY PANELS WILL NOT COMMENCE UNTIL THE ENGINEER GIVES WRITTEN NOTICE OF ACCEPTANCE OF THE MOCK-UP.

F. THE MOCK-UP WILL BE USED BY THE ENGINEER FOR THE DURATION OF THE PROJECT TO ASSURE THE QUALITY AND CONSISTENCY OF ALL STORY PANELS USED ON THE BRIDGE. THE ENGINEER WILL REJECT ANY AND ALL PANELS THAT DO NOT REPLICATE THE ACCEPTED PROPERTIES OF THE MOCK-UP.

G. UPON APPROVAL BY THE ENGINEER, THE MOCK-UP MAY BE USED AS ONE OF THE PROJECT STORY PANELS.

METHOD OF MEASUREMENT:

THE DEPARTMENT WILL MEASURE STORY PANELS BY THE NUMBER OF EACH.

BASIS OF PAYMENT:

THE DEPARTMENT WILL PAY FOR ACCEPTED QUANTITIES AT THE UNIT PRICE BID PER EACH FOR ITEM SPECIAL - BRIDGE PILASTER STORY PANELS, WHICH SHALL BE FULL COMPENSATION FOR ALL LABOR, MATERIALS, EQUIPMENT, AND INCIDENTALS NECESSARY TO COMPLETE THIS ITEM OF WORK IN A SATISFACTORY AND WORKMANLIKE MANNER, AS SHOWN IN THE PLANS AND DESCRIBED HEREIN.

GENERAL NOTES - 4A
BRIDGE NO. HAM-75-0104
LINN STREET OVER IR-75 AND GEST STREET

SFN 3109098
DESIGN AGENCY B&N burgessniple.com
DESIGNER BES | CHECKER MAB
REVIEWER XAC 8/27/25
PROJECT ID 122048
SUBSET 6A | TOTAL 88
SHEET P.248A | TOTAL P.421

HAM-IR 75-1.05

MODEL: Sheet PAPERSIZE: 34x22 (in.) DATE: 8/28/2025 TIME: 9:54:02 AM PLTDRV: OHDOT_PDF.pltcfg PENTBL: OHDOT_UTPen.tbl USER: WORKSPACE: OHDOTCEv02 WORKSET: 122048 PRODUCT: OpenRoadsDesigner 10.12.02.4
pw:\\ohiodot-pw.bentley.com:ohiodot-pw-02\Documents\01 Active Projects\District 08\Hamilton\122048\401-Engineering_BurgessNiple\Structures\SFN_3109098\Sheets\122048_SFN_3109098_SN005.dgn

ESTIMATED QUANTITIES						CALC.	DATE	CHK'D	DATE
						XAC/BES	4/9/2025	JDG/MAB	4/9/2025
ITEM	ITEM EXT.	TOTAL	UNIT	DESCRIPTION	ABUT.	PIERS	SUPER.	GENERAL	SHT. REF.
202	11003		LS	STRUCTURE REMOVED, OVER 20 FOOT SPAN, AS PER PLAN				LS	3/88
202	22900	634	SY	APPROACH SLAB REMOVED				634	
202	30204		LS	STEPS REMOVED				LS	
203	20001	27	CY	EMBANKMENT, AS PER PLAN	27				3/88
203	35111	864	CY	GRANULAR MATERIAL, TYPE B, AS PER PLAN	864				6/88
503	11101		LS	COFFERDAMS AND EXCAVATION BRACING, AS PER PLAN				LS	4/88
503	21300		LS	UNCLASSIFIED EXCAVATION		LS			
505	11100		LS	PILE DRIVING EQUIPMENT MOBILIZATION				LS	
507	00501	4120	FT	12" CAST-IN-PLACE REINFORCED CONCRETE PILES, DRIVEN, AS PER PLAN	4120				6A/88
507	00550	4400	FT	12" CAST-IN-PLACE REINFORCED CONCRETE PILES, FURNISHED	4400				
507	00601	5500	FT	14" CAST-IN-PLACE REINFORCED CONCRETE PILES, DRIVEN, AS PER PLAN		5500			6A/88
507	00650	5880	FT	14" CAST-IN-PLACE REINFORCED CONCRETE PILES, FURNISHED		5880			
507	92201	280	FT	PREBORED HOLES, AS PER PLAN		280			3/88
509	26000	502351	LB	GALVANIZED STEEL REINFORCEMENT	27993	77520	396838		
509	40000	4000	LB	CONCRETE REINFORCEMENT, MISC.: ADDITIONAL GALVANIZED STEEL REINFORCEMENT FOR FOOTINGS	2000	2000			6A/88
511	34463	313	CY	CLASS QC SCC CONCRETE WITH QC/QA, BRIDGE DECK (PARAPET), AS PER PLAN			313		3/88
511	46513	307	CY	CLASS QC1 CONCRETE WITH QC/QA, FOOTING, AS PER PLAN	146	161			6A/88
511	51513	510	CY	CLASS QC2 CONCRETE WITH QC/QA, SIDEWALK, AS PER PLAN			510		5 /88
511	53012	83	CY	CLASS QC2 CONCRETE, MISC.: RAISED MEDIAN, WITH QC/QA			83		5 /88
511	53012	98	CY	CLASS QC2 CONCRETE, MISC.: PLANTER WALLS, WITH QC/QA			98		
511	53014	1079	CY	CLASS QC3 CONCRETE, MISC.: BRIDGE DECK, WITH QC/QA			1079		4/88
511	53014	237	CY	CLASS QC3 CONCRETE, MISC.: PIER ABOVE FOOTINGS, WITH QC/QA		237			4/88
511	53014	155	CY	CLASS QC3 CONCRETE, MISC.: ABUTMENT NOT INCLUDING FOOTING, WITH QC/QA	155				4/88
511	81300	48	EACH	CONCRETE, MISC.: PRECAST CONCRETE PLINTHS			48		5/88
512	10001	3868	SY	SEALING OF CONCRETE SURFACES, AS PER PLAN	740	1316	1812		3/88
512	10050	2827	SY	SEALING OF CONCRETE SURFACES (NON-EPOXY)			2827		
512	10100	3868	SY	SEALING OF CONCRETE SURFACES (EPOXY-URETHANE)	740	1316	1812		3/88
512	33000	61	SY	TYPE 2 WATERPROOFING	61				
SPECIAL	51267200	844	SY	WATERPROOFING FOR PLANTERS AREAS			844		5/88
513	10261	128300	LB	STRUCTURAL STEEL MEMBERS, LEVEL 3, AS PER PLAN			128300		4/88
513	10281	1275300	LB	STRUCTURAL STEEL MEMBERS, LEVEL 4, AS PER PLAN			1275300		4/88
513	20000	9784	EACH	WELDED STUD SHEAR CONNECTORS			9784		
514	00060	15361	SF	FIELD PAINTING STRUCTURAL STEEL, INTERMEDIATE COAT			15361		3/88
514	00066	15361	SF	FIELD PAINTING STRUCTURAL STEEL, FINISH COAT			15361		3/88
516	10010	182	FT	ARMORLESS PREFORMED JOINT SEAL			182		
516	10011	11	FT	ARMORLESS PREFORMED JOINT SEAL, AS PER PLAN			11		6/88
516	11211	258	FT	STRUCTURAL EXPANSION JOINT INCLUDING ELASTOMERIC STRIP SEAL, AS PER PLAN			258		75-79/88
516	13000	81	SF	¼" PREFORMED EXPANSION JOINT FILLER			81		
516	13200	64	SF	½" PREFORMED EXPANSION JOINT FILLER			64		
516	13900	356	SF	2" PREFORMED EXPANSION JOINT FILLER			356		
516	44101	9	EACH	ELASTOMERIC BEARING WITH INTERNAL LAMINATES AND LOAD PLATE (NEOPRENE), AS PER PLAN (13"x12"x2.358" EXP. BEARING)			9		45/88
516	44101	9	EACH	ELASTOMERIC BEARING WITH INTERNAL LAMINATES AND LOAD PLATE (NEOPRENE), AS PER PLAN (13"x12"x2.358" FIXED BEARING)			9		45/88
516	44201	4	EACH	ELASTOMERIC BEARING WITH INTERNAL LAMINATES AND LOAD PLATE (NEOPRENE), AS PER PLAN (23"x18"x3.448" FIXED BEARING)			4		45/88
516	44201	5	EACH	ELASTOMERIC BEARING WITH INTERNAL LAMINATES AND LOAD PLATE (NEOPRENE), AS PER PLAN (20"x15"x3.448" FIXED BEARING)			5		45/88
516	44301	4	EACH	ELASTOMERIC BEARING WITH INTERNAL LAMINATES AND LOAD PLATE (NEOPRENE), AS PER PLAN (18"x14"x4.068" EXP. BEARING)			4		45/88
516	44301	5	EACH	ELASTOMERIC BEARING WITH INTERNAL LAMINATES AND LOAD PLATE (NEOPRENE), AS PER PLAN (16"x13"x4.068" EXP. BEARING)			5		45/88
516	44301	4	EACH	ELASTOMERIC BEARING WITH INTERNAL LAMINATES AND LOAD PLATE (NEOPRENE), AS PER PLAN (19"x16"x4.068" EXP. BEARING)			4		45/88
516	44301	5	EACH	ELASTOMERIC BEARING WITH INTERNAL LAMINATES AND LOAD PLATE (NEOPRENE), AS PER PLAN (17"x13"x4.068" EXP. BEARING)			5		45/88
517	76300	29	FT	RAILING, MISC.: SIDEWALK RAILING AT REAR ABUTMENT MSE WALLS				29	6/88
518	20000	276	SY	PREFABRICATED GEOCOMPOSITE DRAIN			276		
518	21201	65	CY	POROUS BACKFILL WITH GEOTEXTILE FABRIC, AS PER PLAN			65		4/88
518	39800	767	FT	4" PERFORATED CORRUGATED PLASTIC PIPE			767		
518	62100	89	FT	STRUCTURE DRAINAGE, MISC.: NEOPRENE TROUGH AND DRAINAGE OUTLETS			89		80/88
523	20000	4	EACH	DYNAMIC LOAD TESTING	2	2			
523	20500	4	EACH	RESTRIKE	2	2			
526	30011	602	SY	REINFORCED CONCRETE APPROACH SLABS WITH QC/QA (T=17"), AS PER PLAN				602	3/88

MODEL: Sheet PAPERSIZE: 34x22 (in.) DATE: 8/28/2025 TIME: 9:54:11 AM PLTDRV: OHDOT_PDF.pltcfg PENTBL: OHDOT_UTPen.tbl USER: WORKSPACE: OHDOTCEv02 WORKSET: 122048 PRODUCT: OpenRoadsDesigner 10.12.02.4
pw:\\ohiodot-pw.bentley.com:ohiodot-pw-02\Documents\01 Active Projects\District 08\Hamilton\122048\401-Engineering_BurgessNiple\Structures\SFN_3109098\Sheets\122048_SFN_3109098_SQ001.dgn

ESTIMATED QUANTITIES - 1
BRIDGE NO. HAM-75-0104
LINN STREET OVER IR-75 AND GEST STREET

SFN 3109098
DESIGN AGENCY B&N burgessniple.com
DESIGNER BES | CHECKER XAC
REVIEWER JCS 01/02/25
PROJECT ID 122048
SUBSET 7 | TOTAL 88
SHEET P.249 | TOTAL P.421

ESTIMATED QUANTITIES						CALC.	DATE	CHK'D	DATE
						XAC/BES	4/9/2025	JDG/MAB	4/9/2025
ITEM	ITEM EXT.	TOTAL	UNIT	DESCRIPTION	ABUT.	PIERS	SUPER.	GENERAL	SHT. REF.
526	90030	180	FT	TYPE C INSTALLATION				180	
SPECIAL	53000200		LS	STRUCTURES: TEMPORARY SUPPORTS FOR GIRDERS			LS		3/88
SPECIAL	53001300	728	FT	STRUCTURES: SCREEN WALLS			728		6A/88
SPECIAL	53014000		LS	STRUCTURAL SURVEY AND MONITORING OF VIBRATION				LS	4/88
601	21001	69	SY	CONCRETE SLOPE PROTECTION, AS PER PLAN	69				20,24/88
605	13301	316	FT	6" UNCLASSIFIED PIPE UNDERDRAINS, AS PER PLAN				316	4/88
605	98300	20	EACH	UNDERDRAINS, MISC.: CLEANOUT			20		72/88
605	98300	4	EACH	UNDERDRAINS, MISC.: DRAINAGE OUTLET AT ABUTMENT	4				72/88
605	98300	2	EACH	UNDERDRAINS, MISC.: DRAINAGE OUTLET AT PIER 1		2			72/88
608	40001	384	FT	CONCRETE STEPS, TYPE A, AS PER PLAN	384				25/88
659	00301	284	CY	TOPSOIL, AS PER PLAN			284		6/88
661	00500	21	CY	MULCH			21		
SPECIAL	69098000	2	EACH	BRIDGE PILASTER LETTERS			2		6/88
SPECIAL	69098000	2	EACH	BRIDGE PILASTER STORY PANELS			2		6A/88
SPECIAL	69098000	48	EACH	PLANTER POTS			48		5/88
840	20000	6010	SF	MECHANICALLY STABILIZED EARTH WALL	6010				
840	21000	3033	CY	WALL EXCAVATION	3033				
840	22000	717	SY	FOUNDATION PREPARATION	717				
840	23000	3283	CY	SELECT GRANULAR BACKFILL	3283				
840	25010	665	FT	6" DRAINAGE PIPE, PERFORATED	665				
840	25020	60	FT	6" DRAINAGE PIPE, NON-PERFORATED	60				
840	26000	420	FT	CONCRETE COPING	420				
840	26050	2812	SF	AESTHETIC SURFACE TREATMENT	2812				3/88
840	27000	5	DAY	ON-SITE ASSISTANCE	5				
840	28000		LS	SGB INSPECTION AND COMPACTION TESTING	LS				

MODEL: Sheet PAPERSIZE: 34x22 (in.) DATE: 8/28/2025 TIME: 9:54:18 AM PLTDRV: OHDOT_PDF.pltcfg PENTBL: OHDOT_UTPen.tbl USER: WORKSPACE: OHDOTCEv02 WORKSET: 122048 PRODUCT: OpenRoadsDesigner 10.12.02.4
pw:\\ohiodot-pw.bentley.com:ohiodot-pw-02\Documents\01 Active Projects\District 08\Hamilton\122048\401-Engineering_BurgessNiple\Structures\SFN_3109098\Sheets\122048_SFN_3109098_SG002.dgn

ESTIMATED QUANTITIES - 2
BRIDGE NO. HAM-75-0104
LINN STREET OVER IR-75 AND GEST STREET

SFN 3109098
DESIGN AGENCY B&N burgessniple.com
DESIGNER BES | CHECKER XAC
REVIEWER JCS 01/02/25
PROJECT ID 122048
SUBSET 8 | TOTAL 88
SHEET P.250 | TOTAL P.421

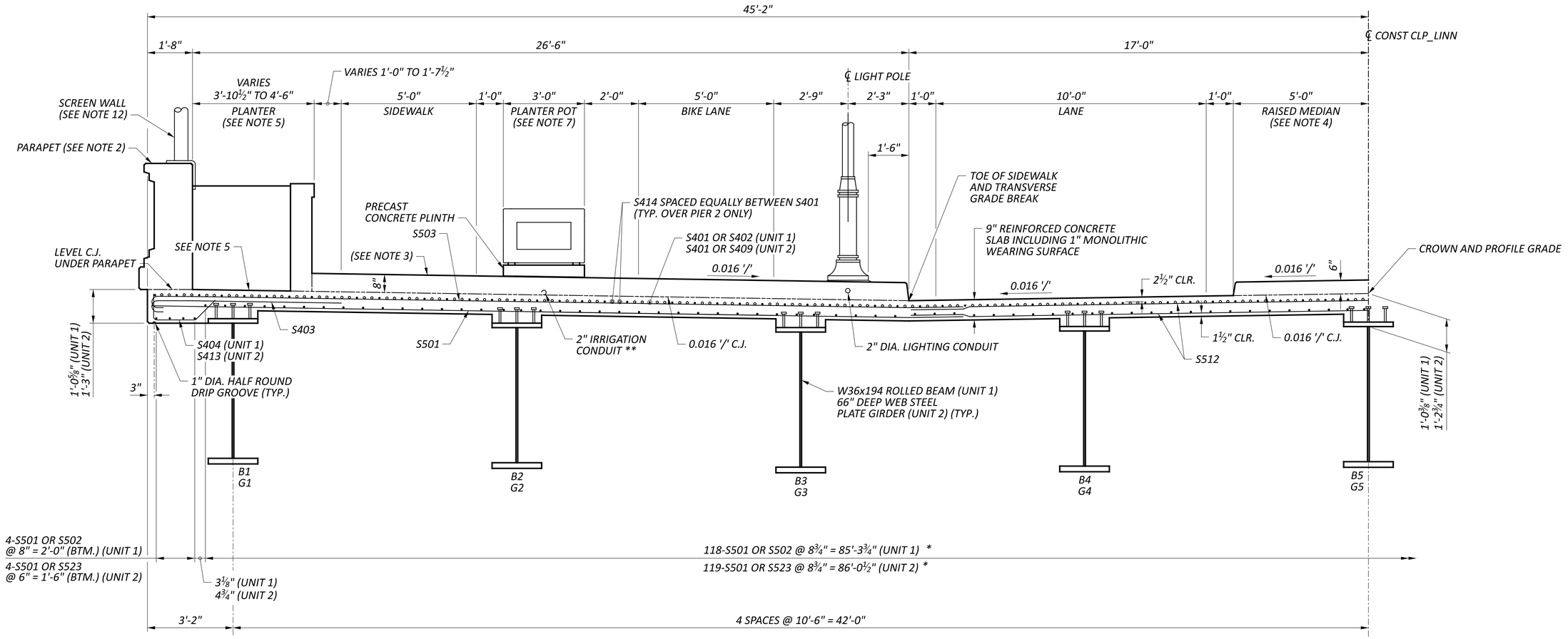

HALF TRANSVERSE SECTION

(SYMMETRIC ABOUT ℄ CONST CLP_LINN)
(CROSSFRAMES AND DIAPHRAGMS NOT SHOWN)

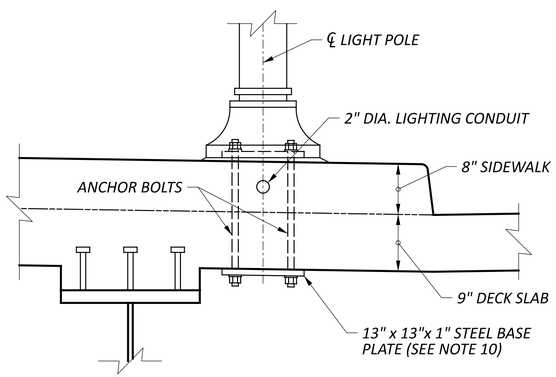

LIGHT POLE ANCHORAGE DETAIL

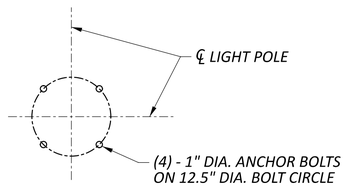

LIGHT POLE ANCHOR BOLT PLAN

LIGHT POLE LOCATIONS	
STATION	OFFSET
106+05.05	19.25' RT.
107+00.18	19.25' LT.
108+10.06	19.25' RT.
109+36.39	19.25' LT.

LEGEND:

* = ADJUST BAR SPACING AS NEEDED TO CLEAR SHEAR CONNECTORS

NOTES:

1. DECK SLAB CONCRETE QUANTITY: THE ESTIMATED QUANTITY OF DECK SLAB CONCRETE IS BASED ON THE CONSTANT DECK SLAB THICKNESS, AS SHOWN, PLUS THE QUANTITY OF CONCRETE THAT FORMS EACH BEAM/GIRDER HAUNCH. THE ESTIMATE ASSUMES A CONSTANT HAUNCH THICKNESS OF 3⅜" IN UNIT 1 AND 5¾" IN UNIT 2 AND A HAUNCH WIDTH EQUAL TO THE TOP FLANGE WIDTH. DEVIATE FROM THIS HAUNCH THICKNESS AS NECESSARY TO PLACE THE DECK SURFACE AT THE FINISHED GRADE. THE HAUNCH THICKNESS WAS MEASURED AT THE CENTERLINE OF THE BEAM/GIRDER, FROM THE SURFACE OF THE DECK TO THE BOTTOM OF THE TOP FLANGE MINUS THE DECK SLAB THICKNESS. THE AREA OF ALL EMBEDDED STEEL PLATES HAS BEEN DEDUCTED FROM THE HAUNCH QUANTITY IN ACCORDANCE WITH 511.23.
2. FOR PARAPET DETAILS, SEE SHEETS 58/88-65/88.
3. FOR SIDEWALK DETAILS, SEE SHEETS 55/88-56/88.
4. FOR RAISED MEDIAN DETAILS, SEE SHEET 57/88.
5. FOR PLANTER WALL AND PLANTER AREA DETAILS INCLUDING DRAINAGE AND WATERPROOFING DETAILS, SEE SHEETS 66/88-73/88.
6. FOR SEALING LIMITS, SEE SHEETS 55/88 AND 57/88.
7. FOR PLANTER POT AND PRECAST CONCRETE PLINTH DETAILS, SEE SHEET 74/88.
8. CONFIRM ANCHOR BOLT SIZE AND ANCHOR BOLT CIRCLE DIAMETER WITH LIGHT POLE MANUFACTURER.
9. ANCHOR BOLTS SHALL BE ASTM F3125, GRADE A325 OR ASTM F1554, GRADE 105. ANCHOR BOLTS SHALL BE GALVANIZED. ANCHOR BOLT LENGTH SHALL BE AS DETERMINED BY LIGHT POLE MANUFACTURER. ANCHOR BOLTS OR SLEEVES FOR ANCHOR BOLTS SHALL BE CAST-IN-PLACE. DRILLED HOLES ARE NOT PERMITTED.
10. CONFIRM THAT THE EDGE DISTANCE PROVIDED FROM THE CENTERLINE OF THE ANCHOR BOLTS TO THE EDGE OF THE STEEL BASE PLATE IS AT LEAST 2". ADJUST THE STEEL BASE PLATE SIZE AS NEEDED TO MEET THIS REQUIREMENT. STEEL BASE PLATES SHALL BE ASTM A709, GRADE 50, GALVANIZED.
11. SEE LIGHTING PLANS FOR ADDITIONAL DETAILS AND PAYMENT FOR ANCHOR BOLTS, JUNCTION BOXES, LIGHT POLES, AND CONDUITS.
12. FOR SCREEN WALL DETAILS, SEE SHEET 65A/88 TO 65E/88 .

TRANSVERSE SECTION
BRIDGE NO. HAM-75-0104
LINN STREET OVER IR-75 AND GEST STREET

SFN	3109098
DESIGN AGENCY	B&N burgessniple.com
DESIGNER	MES
CHECKER	BCS
REVIEWER	JCS 12/15/24
PROJECT ID	122048
SUBSET	47
TOTAL	88
SHEET	P.289
TOTAL	P.421

HAM-75-1.05

MODEL: Sheet PAPERSIZE: 34x22 (in.) DATE: 8/28/2025 TIME: 9:54:25 AM PLTDRV: OHDOT_PDF.pltcfg PENTBL: OHDOT_UTPen.tbl USER: WORKSPACE: OHDOTCeV02 WORKSET: 122048 PRODUCT: OpenRoadsDesigner 10.12.02.4
pw:\\ohiodot-pw.bentley.com:ohiodot-pw-02\Documents\01 Active Projects\District 08\Hamilton\122048\401-Engineering_BurgessNiple\Structures\SFN_3109098\Sheets\SFN_3109098_ST001.dgn

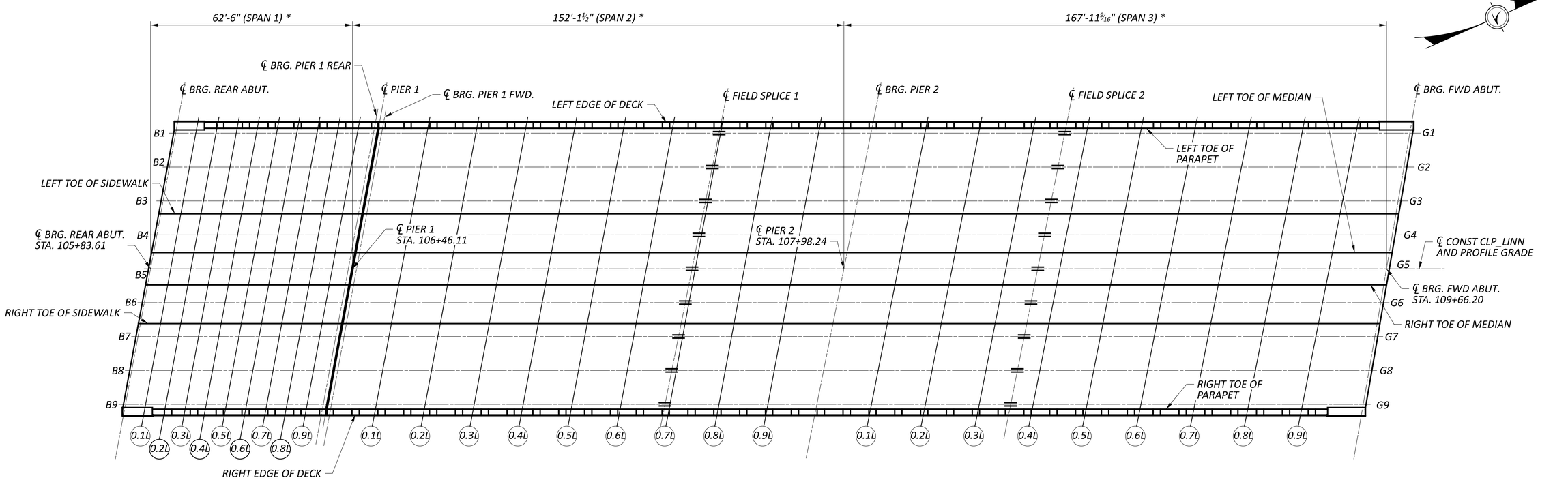

CRITICAL BRIDGE POINTS PLAN
(FOR USE WITH SCREED, TOP OF HAUNCH AND FINAL DECK ELEVATION TABLES)

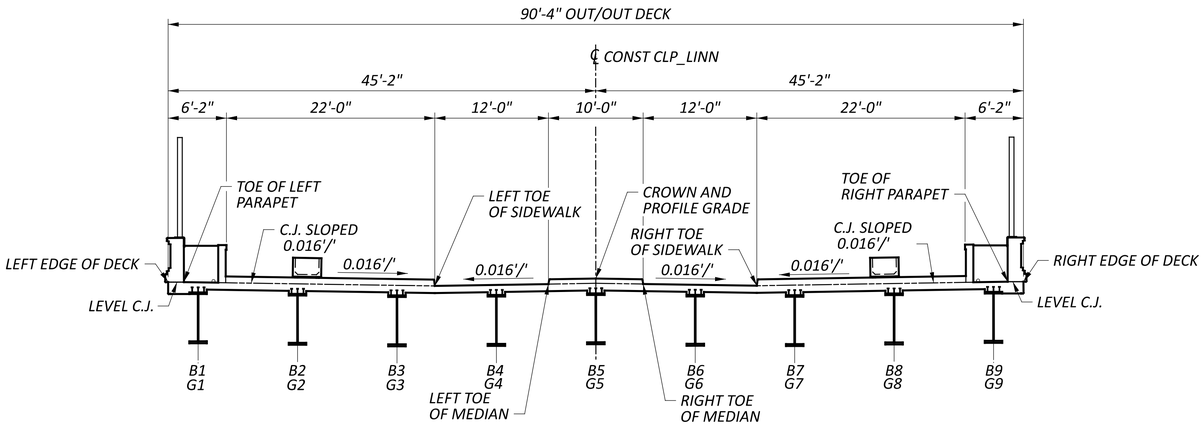

CRITICAL BRIDGE POINTS TRANSVERSE SECTION

LEGEND:

** = MEASURED ALONG ℄ CONST CLP_LINN*
L = SPAN LENGTH

NOTES:

1. *FOR TOP OF HAUNCH ELEVATION TABLES, SEE SHEET 53/88.*
2. *FOR FINISHED DECK ELEVATION TABLES, SEE SHEET 54/88.*
3. *FOR SCREED ELEVATION TABLES, SEE SHEET 52/88.*

CRITICAL BRIDGE POINTS LOCATION PLAN
BRIDGE NO. HAM-75-0104
LINN STREET OVER IR-75 AND GEST STREET

SFN 3109098
DESIGN AGENCY B&N burgessniple.com
DESIGNER MAB | CHECKER MES
REVIEWER JCS 12/18/24
PROJECT ID 122048
SUBSET 51 | TOTAL 88
SHEET P.293 | TOTAL P.421

HAM-75-1.05

MODEL: Sheet PAPERSIZE: 34x22 (in.) DATE: 8/28/2025 TIME: 9:54:37 AM PLTDRV: OHDOT_PDF.pltcfg PENTBL: OHDOT_UTPen.tbl USER: WORKSPACE: OHDOTCEv02 WORKSET: 122048 PRODUCT: OpenRoadsDesigner 10.12.02.4
pw:\\ohiodot-pw.bentley.com:ohiodot-pw-02\Documents\01 Active Projects\District 08\Hamilton\122048\401-Engineering_BurgessNiple\Structures\SFN_3109098\Sheets\122048_SFN_3109098_SS010.dgn

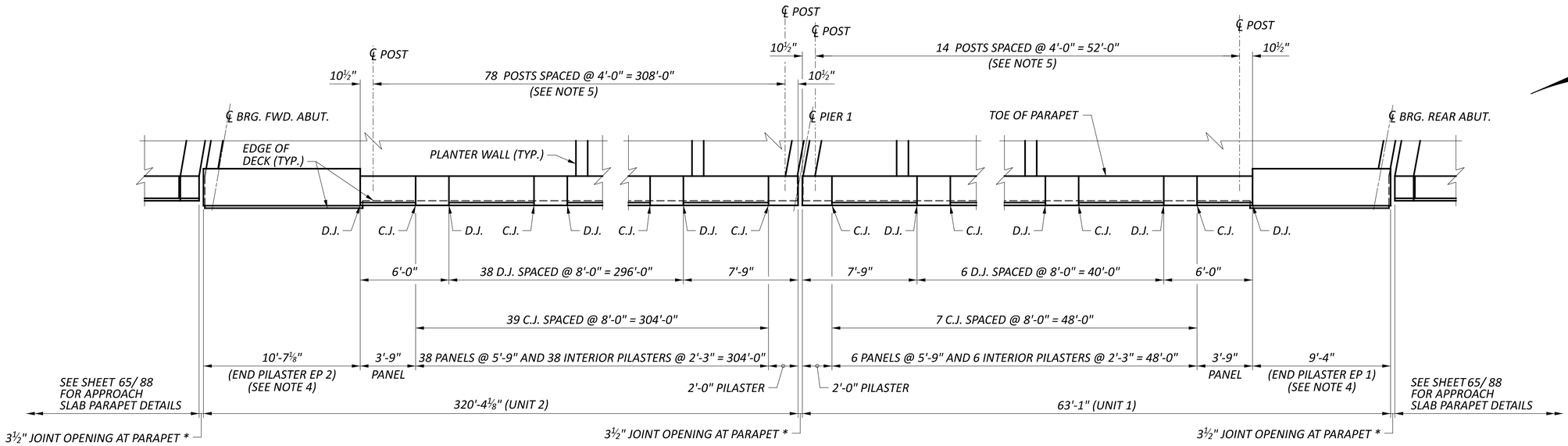

LEFT PARAPET PLAN

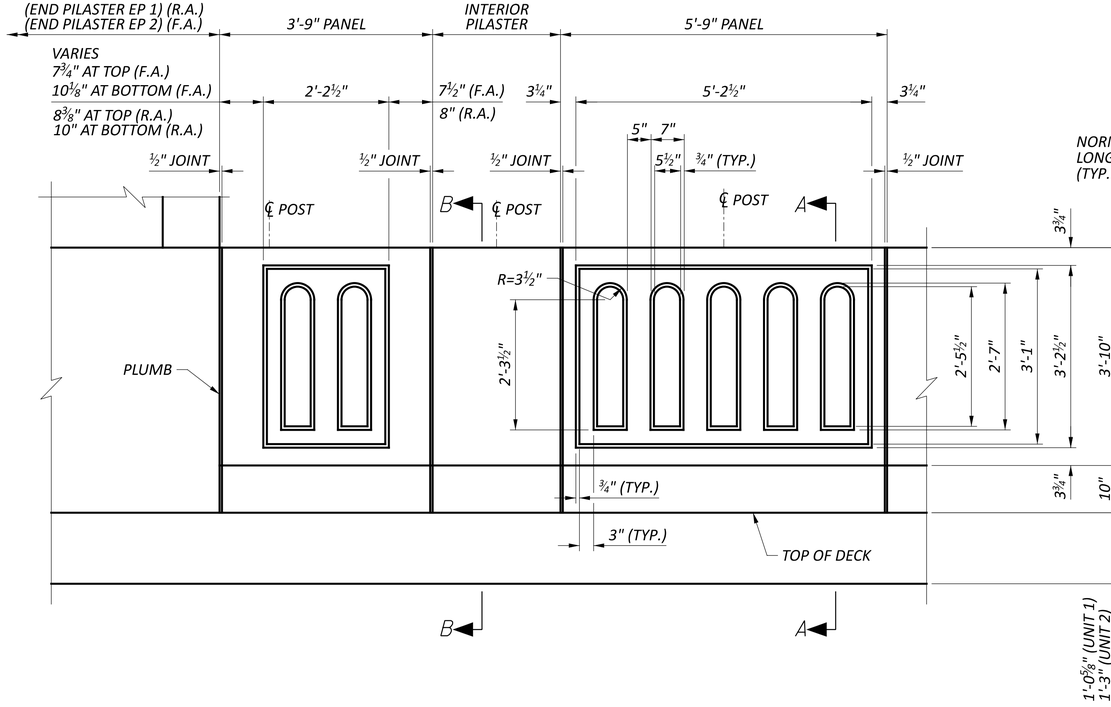

PARTIAL PARAPET ELEVATION

(EXTERIOR FACE)
(FORWARD ABUTMENT END SHOWN,
REAR ABUTMENT END SIMILAR)

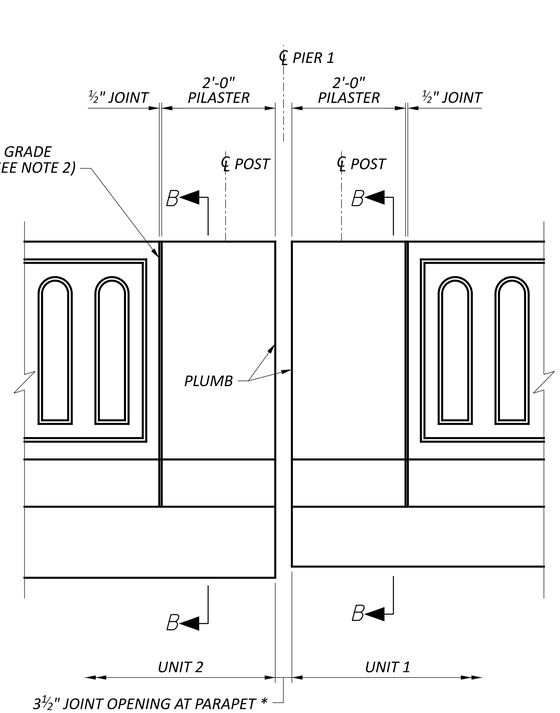

PARTIAL PARAPET ELEVATION AT PIER 1

(EXTERIOR FACE)

LEGEND:

C.J. = CONTRACTION JOINT
D.J. = DEFLECTION JOINT
* = PER ODOT STD. DWG. EXJ-4-87, DETAIL C, SHEET 3/4

NOTES:

1. FOR SECTIONS A-A, B-B AND JOINT DETAILS SEE SHEET 60/ 88 .
2. CONSTRUCT PILASTERS AND PANELS NORMAL TO THE LONGITUDINAL GRADE, EXCEPT AS NOTED BELOW. DEFLECTION JOINTS AT END PILASTERS SHALL BE PLUMB. ENDS OF PARAPETS AT ABUTMENTS AND PIER 1 SHALL BE PLUMB. LONGITUDINAL LINES SHALL BE PARALLEL TO THE LONGITUDINAL GRADE.
3. LONGITUDINAL DIMENSIONS SHOWN ARE MEASURED ALONG THE HORIZONTAL AT BASE OF PARAPET (TOP OF DECK), UNLESS NOTED OTHERWISE.
4. FOR END PILASTER DETAILS, SEE SHEET 63/88.
5. FOR POST DETAILS, SEE SHEET 65A/88 .

LEFT PARAPET PLAN AND ELEVATION
BRIDGE NO. HAM-75-0104
LINN STREET OVER IR-75 AND GEST STREET

SFN	3109098
DESIGN AGENCY	B&N burgessniple.com
DESIGNER	BES
CHECKER	MAB
REVIEWER	BCS 04/10/25
PROJECT ID	122048
SUBSET	58
TOTAL	88
SHEET	P.300
TOTAL	P.421

HAM-75-1.05

MODEL: Sheet PAPERSIZE: 34x22 (in.) DATE: 8/28/2025 TIME: 9:54:47 AM PLTDRV: OHDOT_PDF.pltcfg PENTBL: OHDOT_UTPen.tbl USER: WORKSPACE: OHDOTCivil02 WORKSET: 122048
pw:\\ohiodot-pw.bentley.com:ohiodot-pw-02\Documents\01 Active Projects\District 08\Hamilton\122048\401-Engineering_BurgessNiple\Structures\SFN_3109098\Sheets\122048_SFN_3109098_SA001.dgn

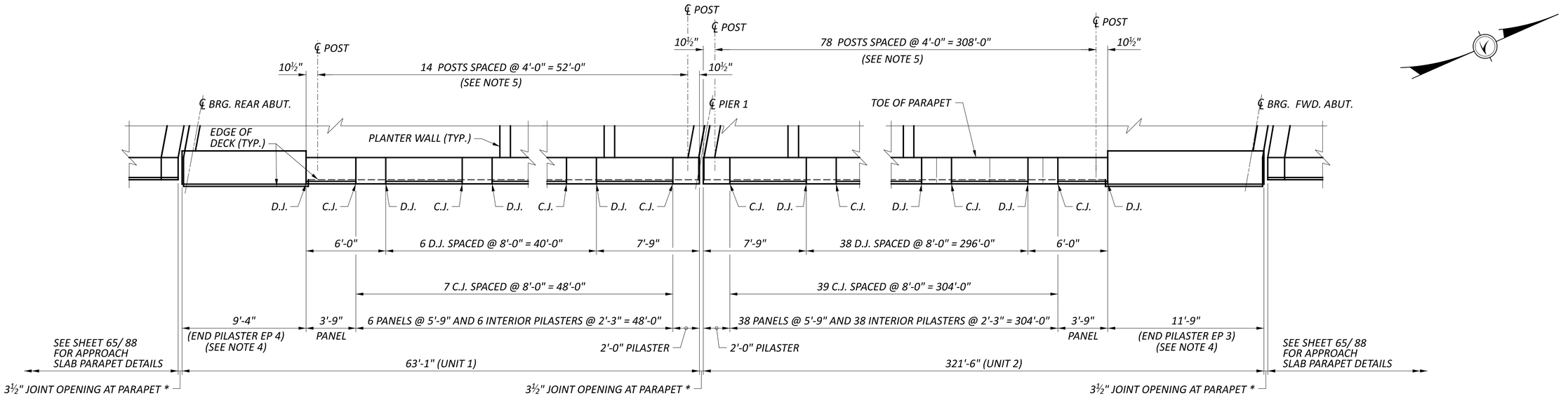

RIGHT PARAPET PLAN

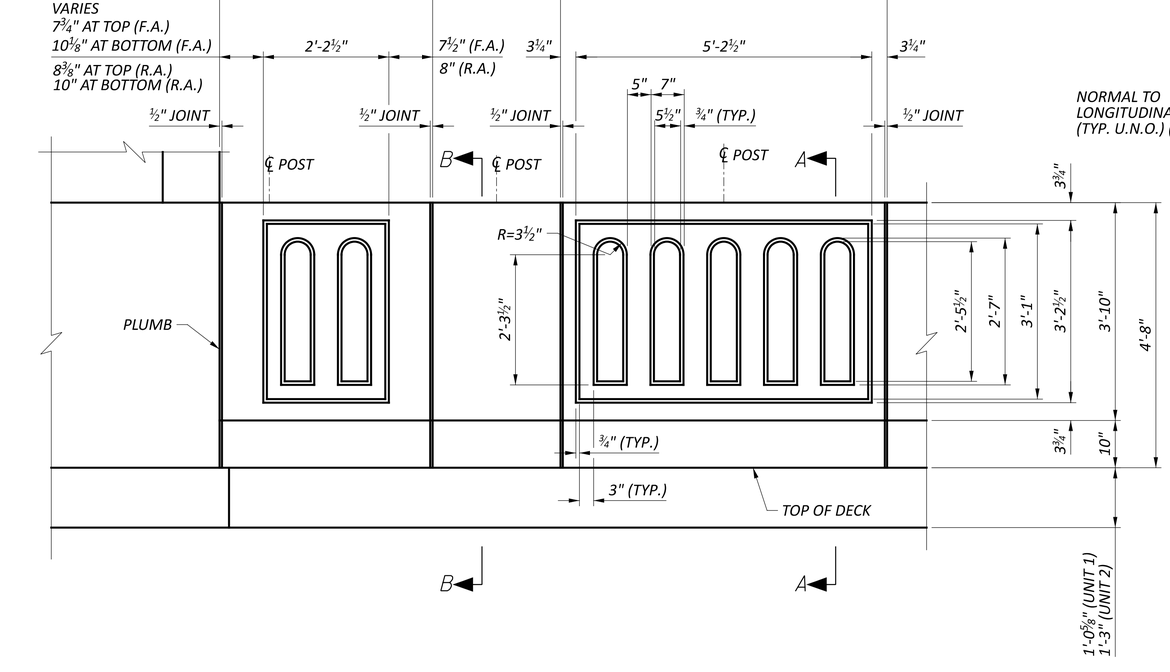

PARTIAL PARAPET ELEVATION

(EXTERIOR FACE)
(REAR ABUTMENT END SHOWN,
FORWARD ABUTMENT END SIMILAR)

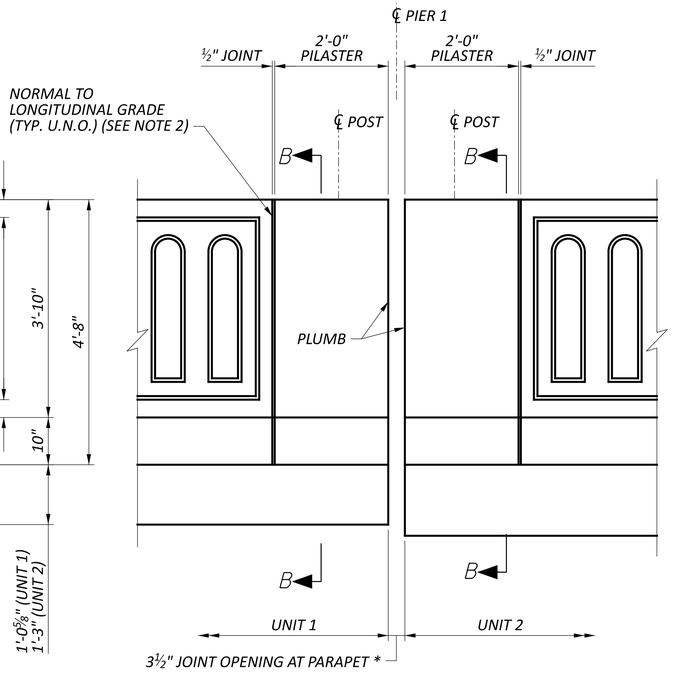

PARTIAL PARAPET ELEVATION AT PIER 1

(EXTERIOR FACE)

LEGEND:

C.J. = CONTRACTION JOINT
D.J. = DEFLECTION JOINT
* = PER ODOT STD. DWG. EXJ-4-87, DETAIL C, SHEET 3/4

NOTES:

1. FOR SECTIONS A-A, B-B AND JOINT DETAILS SEE SHEET 60/ 88 .
2. CONSTRUCT PILASTERS AND PANELS NORMAL TO THE LONGITUDINAL GRADE, EXCEPT AS NOTED BELOW. DEFLECTION JOINTS AT END PILASTERS SHALL BE PLUMB. ENDS OF PARAPETS AT ABUTMENTS AND PIER 1 SHALL BE PLUMB. LONGITUDINAL LINES SHALL BE PARALLEL TO THE LONGITUDINAL GRADE.
3. LONGITUDINAL DIMENSIONS SHOWN ARE MEASURED ALONG THE HORIZONTAL AT BASE OF PARAPET (TOP OF DECK), UNLESS NOTED OTHERWISE.
4. FOR END PILASTER DETAILS, SEE SHEET 63/88.
5. FOR POST DETAILS, SEE SHEET 65A/88 .

RIGHT PARAPET PLAN AND ELEVATION
BRIDGE NO. HAM-75-0104
LINN STREET OVER IR-75 AND GEST STREET

SFN	3109098
DESIGN AGENCY	B&N burgessniple.com
DESIGNER	BES
CHECKER	MAB
REVIEWER	BCS 04/10/25
PROJECT ID	122048
SUBSET	59
TOTAL	88
SHEET	P.301
TOTAL	P.421

HAM-75-1.05

MODEL: Sheet PAPERSIZE: 34x22 (in.) DATE: 8/28/2025 TIME: 9:54:55 AM PLTDRV: OHDOT_PDF.pltcfg PENTBL: OHDOT_UTPen.tbl USER: WORKSPACE: OHDOTCEv02 WORKSET: 122048 PRODUCT: OpenRoadsDesigner 10.12.02.4
pw:\\ohiodot-pw.bentley.com:ohiodot-pw-02\Documents\01 Active Projects\District 08\Hamilton\122048\401-Engineering_BurgessNiple\Structures\SFN_3109098\Sheets\SFN_3109098_SA004.dgn

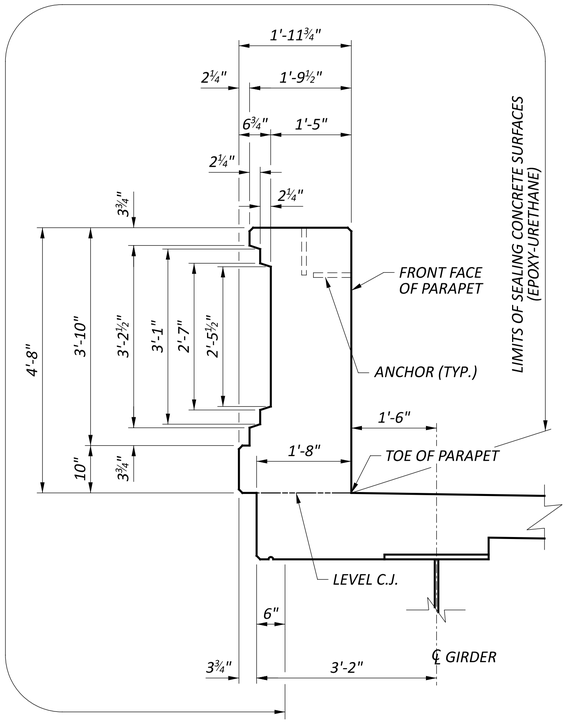

SECTION A-A

(SCREEN WALL AND REINFORCING NOT SHOWN FOR CLARITY)

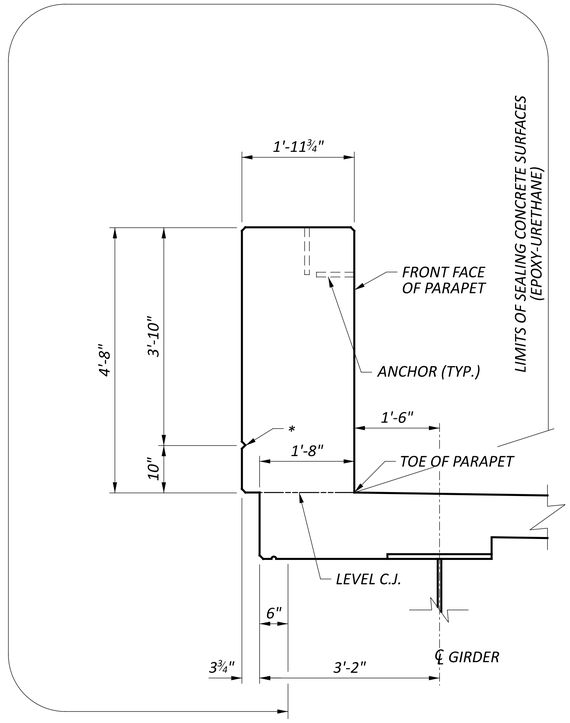

** = ¾" DEEP x 1½" WIDE V-GROOVE*

SECTION B-B

(SCREEN WALL AND REINFORCING NOT SHOWN FOR CLARITY)

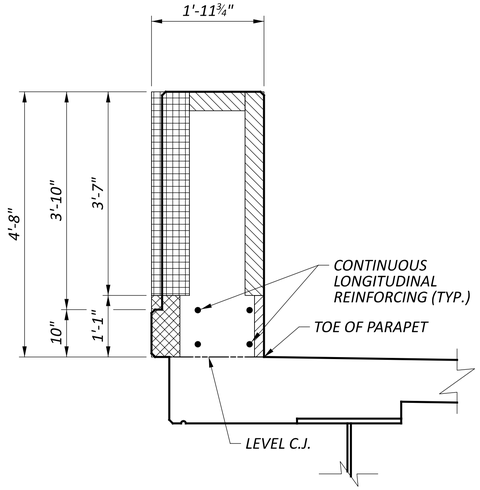

DEFLECTION JOINT

(SCREEN WALL AND DECK REINFORCING NOT SHOWN FOR CLARITY)

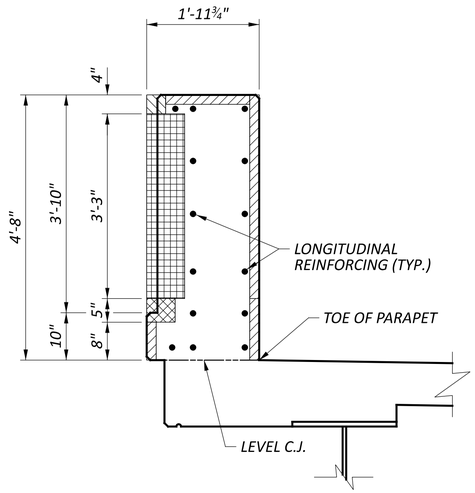

CONTRACTION JOINT

(SCREEN WALL AND DECK REINFORCING NOT SHOWN FOR CLARITY)

LEGEND:

- *8" WIDE PREFORMED JOINT MATERIAL*
- *6" WIDE PREFORMED JOINT MATERIAL*
- *4" WIDE PREFORMED JOINT MATERIAL*
- *2" WIDE PREFORMED JOINT MATERIAL*

NOTES:

1. *DEFLECTION AND CONTRACTION JOINTS ARE TO BE CAST INTO THE PARAPETS AND HELD IN WITH CHAMFER STRIPS. THE EXCESS MATERIAL WILL BE TRIMMED TO THE BASE OF THE CHAMFER. THE MATERIAL THAT WILL BE USED NEEDS TO NOT ABSORB WATER AND HAVE SUFFICIENT RIGIDITY TO NOT SIGNIFICANTLY MOVE DURING THE CASTING OF THE PARAPET. THE JOINT MATERIAL IS TO BE 0.5" IN THICKNESS AND WILL BE NOMAFLEX BY NOMACO OR FIBER LITE BY W.R. MEADOWS OR SIMILAR PRODUCT APPROVED BY THE ENGINEER. COST SHALL BE INCIDENTAL TO THE PARAPET CONCRETE.*

PARAPET DETAILS
BRIDGE NO. HAM-75-0104
LINN STREET OVER IR-75 AND GEST STREET

SFN	3109098
DESIGN AGENCY	B&N burgessniple.com
DESIGNER	BES
CHECKER	MAB
REVIEWER	BCS 04/10/25
PROJECT ID	122048
SUBSET	60
TOTAL	88
SHEET	P.302
TOTAL	P.421

HAM-75-1.05

MODEL: Sheet PAPERSIZE: 34x22 (in.) DATE: 8/28/2025 TIME: 9:55:03 AM PLTDRV: OHDOT_PDF.pltcfg PENTBL: OHDOT_UTPen.tbl USER: WORKSPACE: OHDOTCEv02 WORKSET: 122048 PRODUCT: OpenRoadsDesigner 10.12.02.4
pw:\\ohiodot-pw.bentley.com:ohiodot-pw-02\Documents\01 Active Projects\District 08\Hamilton\122048\401-Engineering_BurgessNiple\Structures\SFN_3109098_SA002.dgn

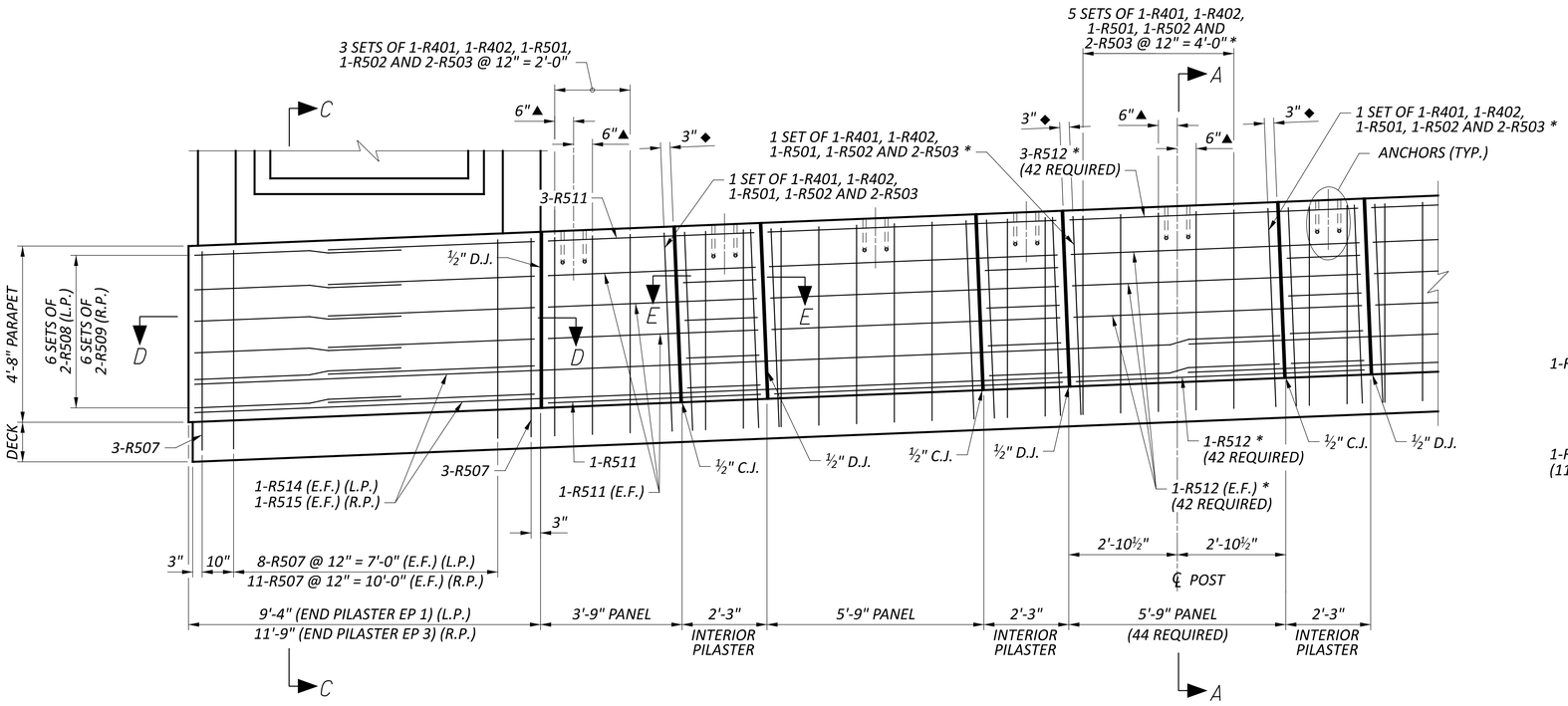

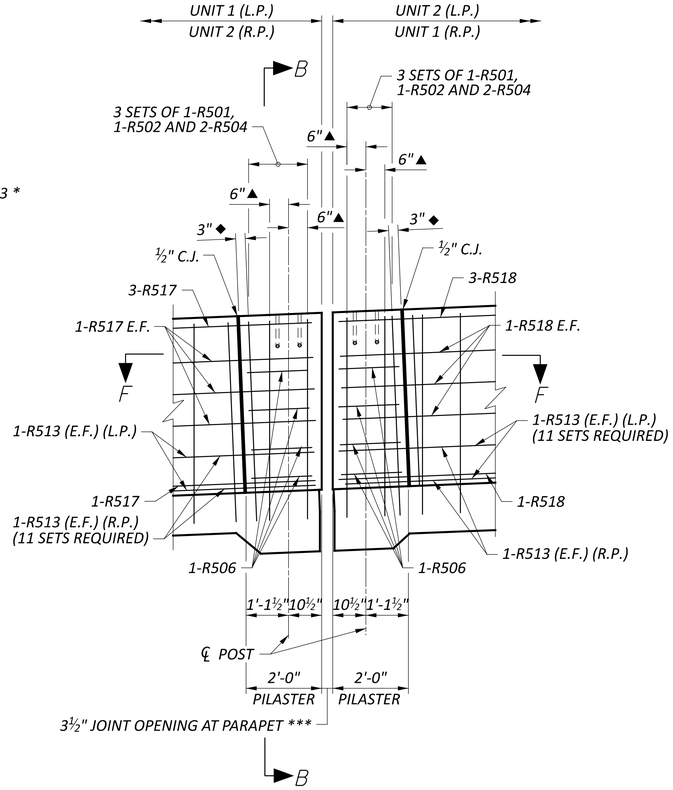

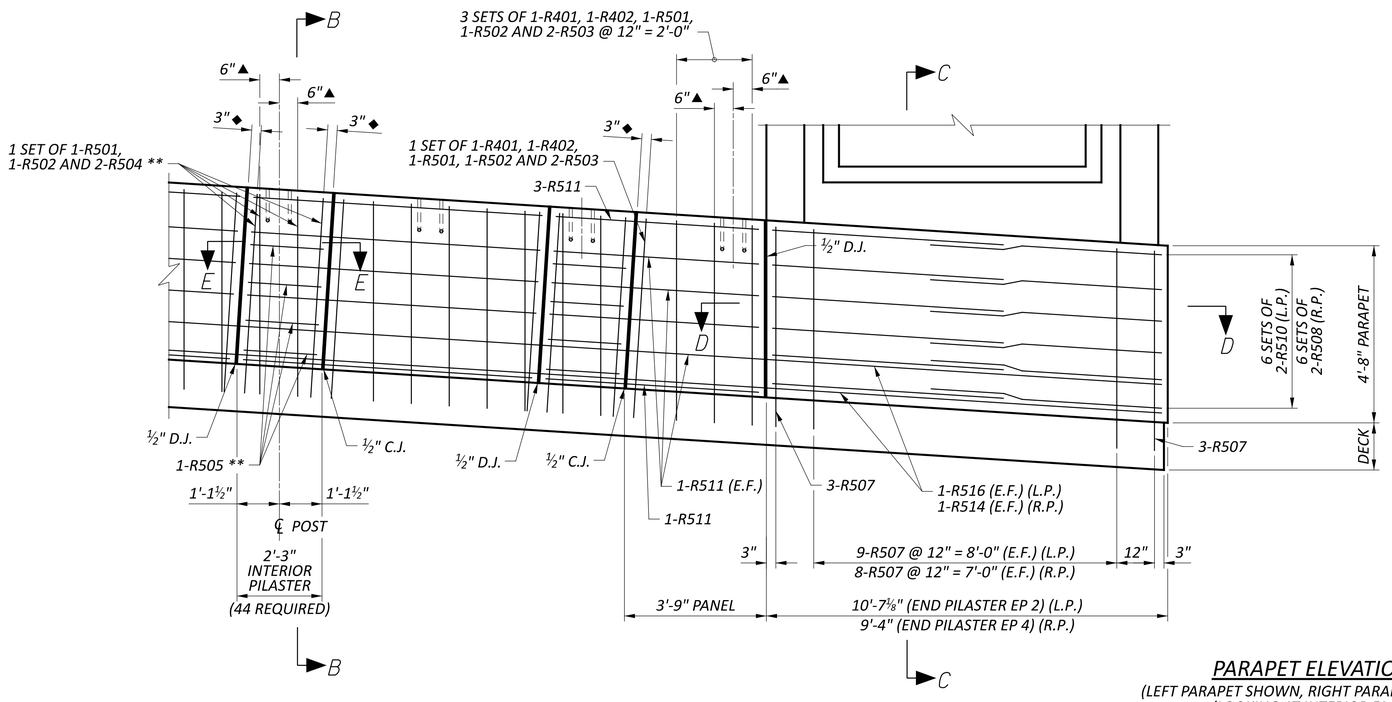

PARAPET ELEVATION

(LEFT PARAPET SHOWN, RIGHT PARAPET SIMILAR)
(LOOKING AT INTERIOR FACE)

MINIMUM LAP LENGTH

#5 BAR = 1'-11"

LEGEND:

* = TYPICAL REINFORCING FOR 5'-9" PANEL, PLACE 3 SETS OF BARS ON THE LOWER END OF THE PANEL AND 2 SETS OF BARS ON THE HIGHER END OF THE PANEL AS SHOWN.

** = TYPICAL REINFORCING FOR 2'-3" INTERIOR PILASTER

*** = PER ODOT STD. DWG. EXJ-4-87, DETAIL C, SHEET 3/4

◆ = REINFORCING BARS SHALL BE PLACED 3" FROM EACH DEFLECTION AND CONTRACTION JOINT. BARS SHALL BE PLACED NORMAL TO THE LONGITUDINAL GRADE.

▲ = REINFORCING BARS SHALL BE PLACED 6" ON EACH SIDE OF THE ℄ SCREEN WALL POSTS. BARS SHALL BE PLACED PLUMB.

(L.P.) = LEFT PARAPET

(R.P.) = RIGHT PARAPET

C.J. = CONTRACTION JOINT

D.J. = DEFLECTION JOINT

NOTES:

1. FOR PANEL, PILASTER, CONTRACTION JOINT, DEFLECTION JOINT AND SCREEN WALL POST LOCATIONS, SEE SHEETS 58/ 88 AND 59/ 88 .
2. FOR PARAPET JOINT DETAILS AND SECTIONS, SEE SHEET 60/ 88 .
3. FOR SECTIONS A-A, B-B, C-C, D-D, E-E AND F-F, SEE SHEET 62/ 88 .
4. ACCURATELY PLACE CONCRETE REINFORCEMENT IN THE VICINITY OF THE SCREEN WALL ANCHOR LOCATIONS TO AVOID INTERFERENCE WITH THE DRILLING OF ANCHOR ROD HOLES.
5. LONGITUDINAL DIMENSIONS SHOWN ARE MEASURED ALONG THE HORIZONTAL AT BASE OF PARAPET (TOP OF DECK), UNLESS NOTED OTHERWISE.
6. PLACE VERTICAL REINFORCING PLUMB, UNLESS NOTED OTHERWISE.
7. FOR REINFORCING EXTENDING FROM PARAPETS INTO PLANTERS, SEE SHEET 70/88.

PARAPET REINFORCING ELEVATION
BRIDGE NO. HAM-75-0104
LINN STREET OVER IR-75 AND GEST STREET

SFN 3109098
DESIGN AGENCY B&N burgessniple.com
DESIGNER BES | CHECKER MAB
REVIEWER BCS 04/10/25
PROJECT ID 122048
SUBSET 61 | TOTAL 88
SHEET P.303 | TOTAL P.421

HAM-75-1.05

MODEL: Sheet PAPERSIZE: 34x22 (in.) DATE: 8/28/2025 TIME: 9:55:10 AM PLTDRV: OHDOT_PDF.pltcfg PENTBL: OHDOT_UTPen.tbl USER: WORKSPACE: OHDOTCEv02 WORKSET: 122048 PRODUCT: OpenRoadsDesigner 10.12.02.4
pw:\\ohiodot-pw.bentley.com:ohiodot-pw-02\Documents\01 Active Projects\District 08\Hamilton\122048\401-Engineering_BurgessNiple\Structures\SFN_3109098_SA005.dgn

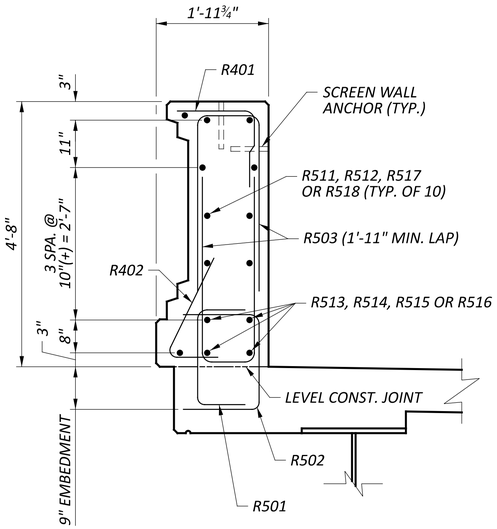

SECTION A-A

(DECK REINFORCING AND SCREEN WALL NOT SHOWN FOR CLARITY)

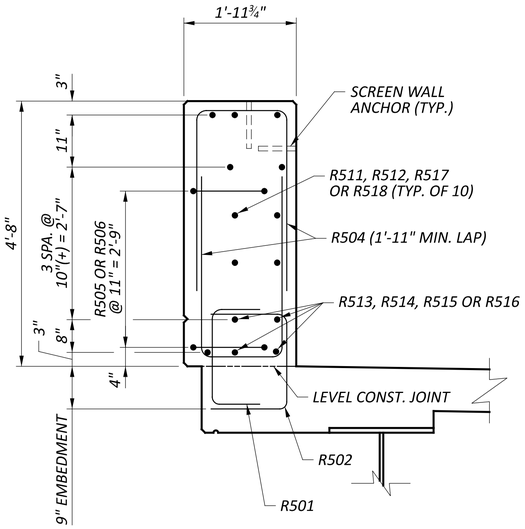

SECTION B-B

(DECK REINFORCING AND SCREEN WALL NOT SHOWN FOR CLARITY)

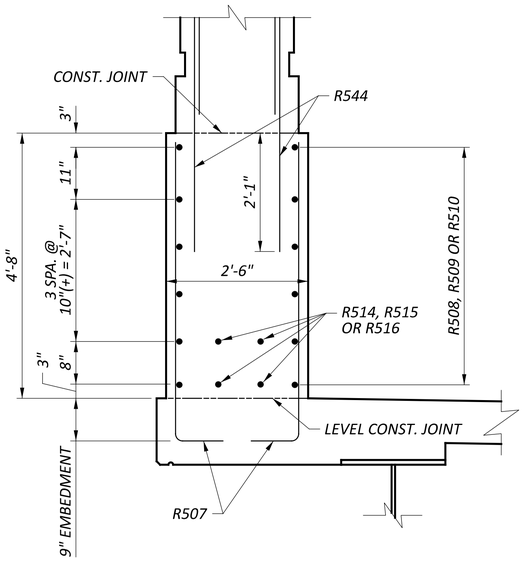

SECTION C-C

(DECK REINFORCING NOT SHOWN FOR CLARITY)

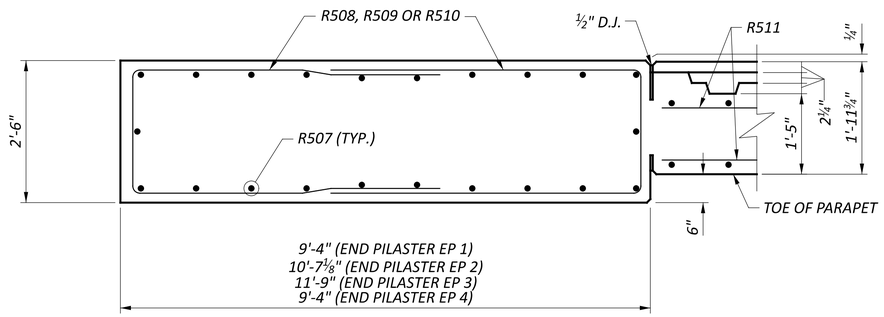

SECTION D-D

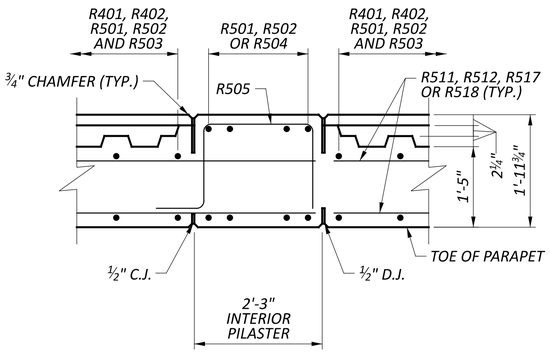

SECTION E-E

(LOCATIONS OF C.J. AND D.J. VARY, SEE PLAN VIEWS AND REINFORCING ELEVATION VIEW)

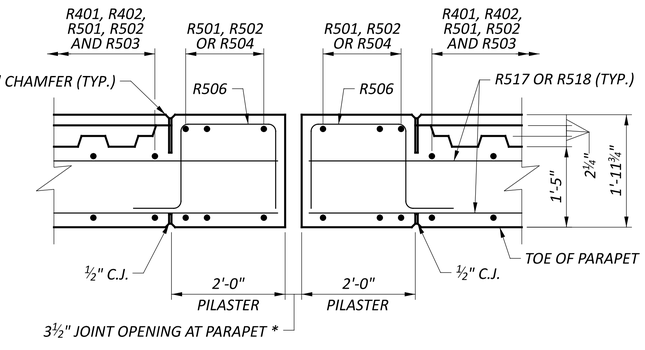

SECTION F-F

MINIMUM LAP LENGTH

#5 BAR = 1'-11"

LEGEND:

** = PER ODOT STD. DWG. EXJ-4-87, DETAIL C, SHEET 3/4*
C.J. = CONTRACTION JOINT
D.J. = DEFLECTION JOINT

PARAPET REINFORCING SECTIONS
BRIDGE NO. HAM-75-0104
LINN STREET OVER IR-75 AND GEST STREET

SFN	3109098
DESIGN AGENCY	B&N burgessniple.com
DESIGNER	BES
CHECKER	MAB
REVIEWER	BCS 04/10/25
PROJECT ID	122048
SUBSET	62
TOTAL	88
SHEET	P.304
TOTAL	P.421

HAM-75-1.05

MODEL: Sheet PAPERSIZE: 34x22 (in.) DATE: 8/28/2025 TIME: 9:55:18 AM PLTDRV: OHDOT_PDF.pltcfg PENTBL: OHDOT_UTPen.tbl USER: WORKSPACE: OHDOTCEv02 WORKSET: 122048 PRODUCT: OpenRoadsDesigner 10.12.02.4
pw:\\ohiodot-pw.bentley.com:ohiodot-pw-02\Documents\01 Active Projects\District 08\Hamilton\122048\401-Engineering_BurgessNiple\Structures\SFN_3109098_SA007.dgn

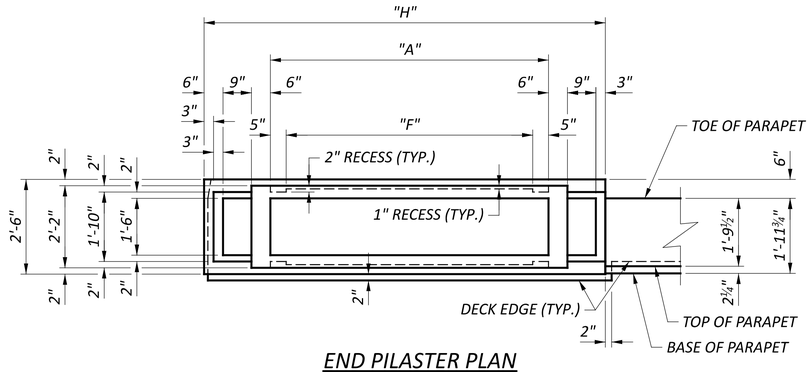

END PILASTER PLAN

(EP 2 SHOWN, EP 4 SIMILAR, EP 1 AND EP 3 OPPOSITE HAND)

END PILASTER DIMENSIONS							
	LOCATION	"A"	"F"	"H"	"J"	"K"	"L"
EP 1	LT. REAR	6'-1"	5'-3"	9'-4"	10'-4½"	18'-11½"	4½"
EP 2	LT. FORWARD	7'-4⅛"	6'-6⅛"	10'-7⅛"	10'-8"	19'-3"	8"
EP 3	RT. FORWARD	8'-6"	7'-8"	11'-9"	10'-8¼"	19'-3¼"	8¼"
EP 4	RT. REAR	6'-1"	5'-3"	9'-4"	10'-4½"	18'-11½"	4½"

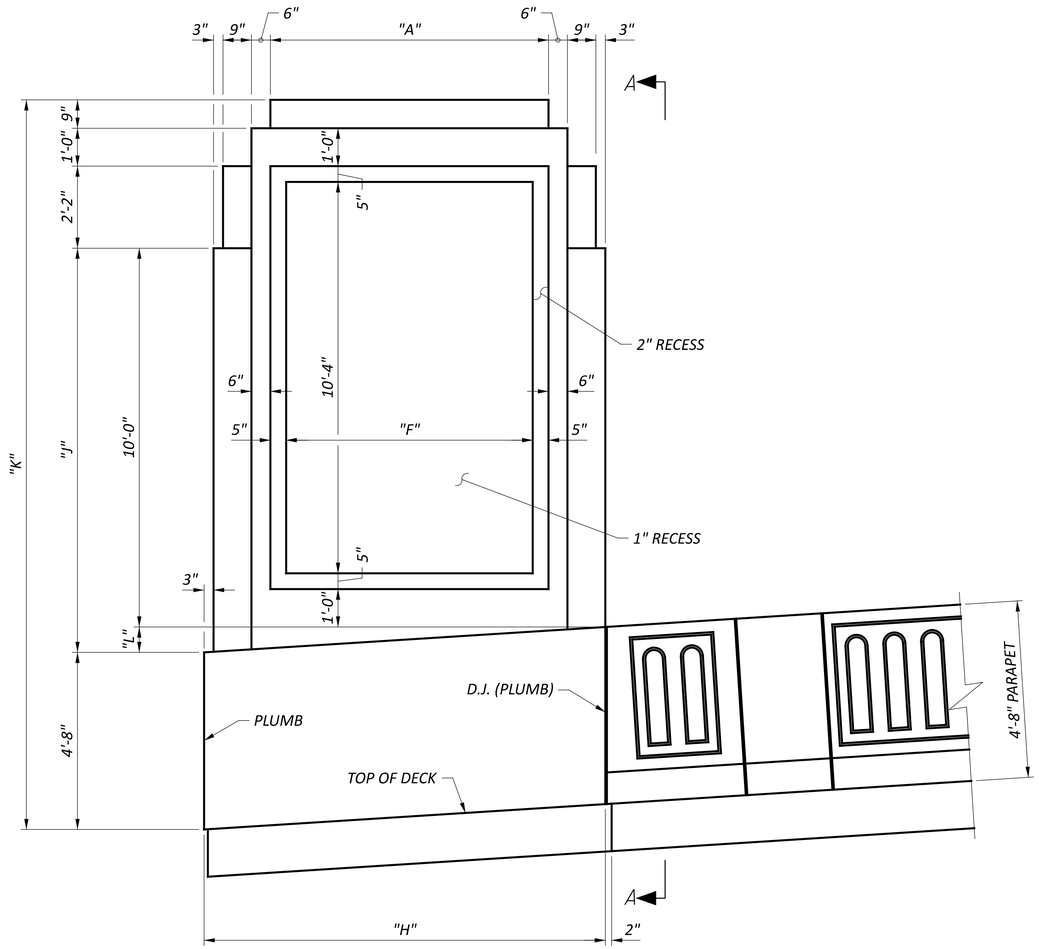

END PILASTER EXTERIOR ELEVATION

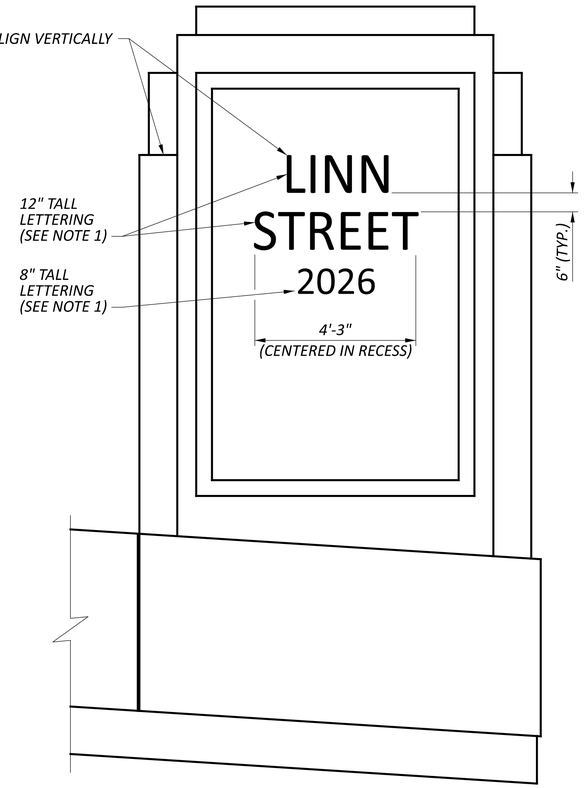

END PILASTER INTERIOR ELEVATION

(RIGHT REAR AND LEFT FORWARD END PILASTERS)
(SEE EXTERIOR ELEVATION FOR DIMENSIONS)

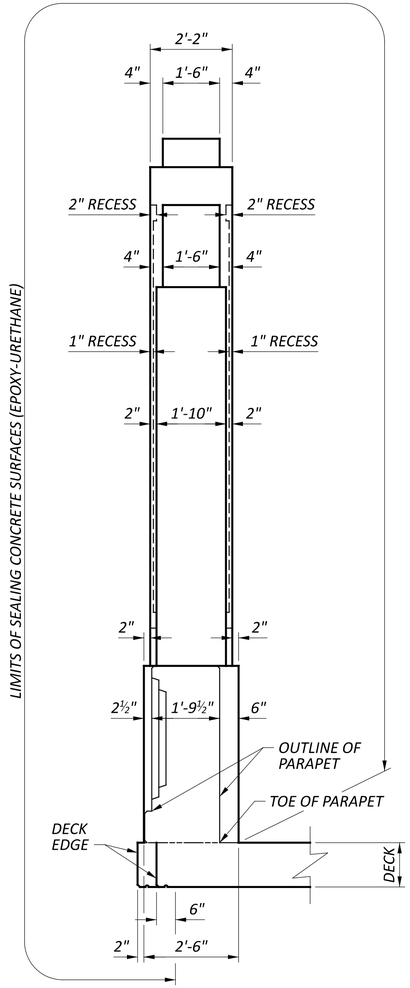

VIEW A-A

LEGEND:

D.J. = DEFLECTION JOINT

NOTES:

1. *SEE GENERAL NOTES FOR ADDITIONAL REQUIREMENTS FOR LETTERING.*
2. *SEE SHEET 63A/88 FOR END PILASTER INTERIOR ELEVATION AT LEFT REAR AND RIGHT FORWARD END PILASTERS.*

END PILASTER DETAILS - 1
BRIDGE NO. HAM-75-0104
LINN STREET OVER IR-75 AND GEST STREET

SFN	3109098
DESIGN AGENCY	B&N burgessniple.com
DESIGNER	BES
CHECKER	MAB
REVIEWER	BCS 04/10/25
PROJECT ID	122048
SUBSET	63
TOTAL	88
SHEET	P.305
TOTAL	P.421

HAM-75-1.05

MODEL: Sheet PAPERSIZE: 34x22 (in.) DATE: 8/28/2025 TIME: 9:55:25 AM PLTDRV: OHDOT_PDF.pltcfg PENTBL: OHDOT_UTPen.tbl USER: WORKSPACE: OHDOTCEx02 WORKSET: 122048 pw:\\ohiodot-pw.bentley.com:ohiodot-pw-02\Documents\01 Active Projects\District 08\Hamilton\122048\401-Engineering_BurgessNiple\Structures\SFN_3109098\Sheets\122048_SFN_3109098_SA003.dgn

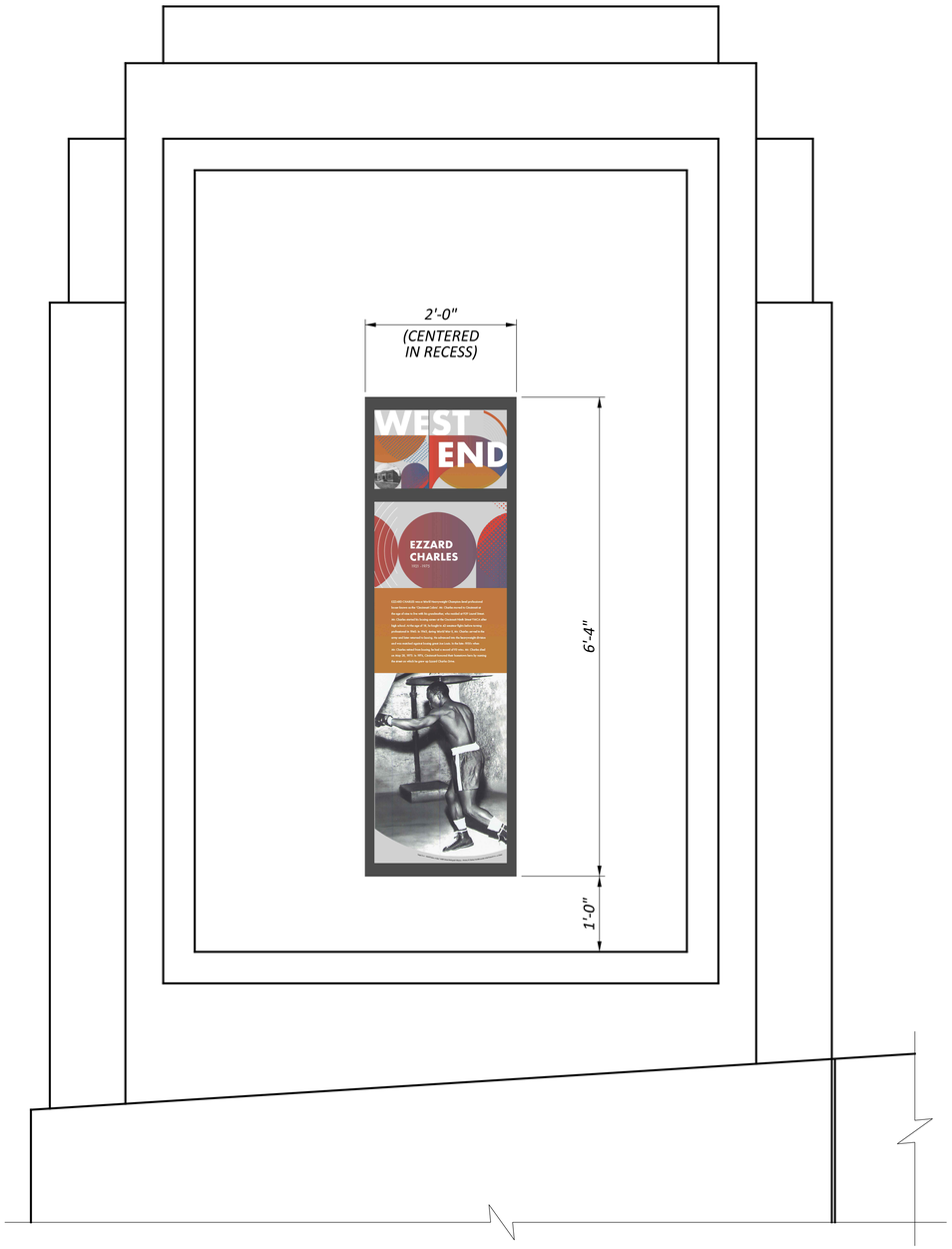

END PILASTER INTERIOR ELEVATION
(LEFT REAR AND RIGHT FORWARD END PILASTERS)

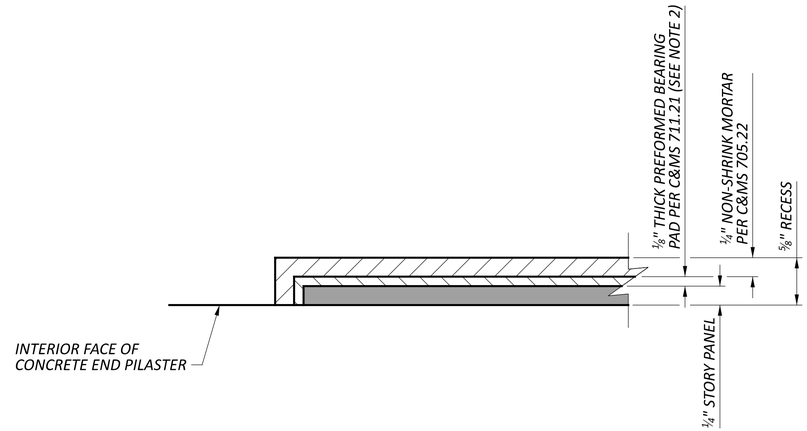

MOUNTING DETAIL
(TYP. AROUND PERIMETER OF STORY PANEL)
(FORM RECESS TO RECEIVE STORY PANEL
FOR FLUSH MOUNT INSTALLATION)

STORY PANEL NOTES:

INTERPRETIVE GRAPHIC PANEL SHALL CONSIST OF DIRECT EMBED PRODUCT AS FURNISHED BY DIRECT EMBED COATING, OR APPROVED EQUAL. STORY PANELS SHALL BE ALUMINUM ALLOY 5052-H32, 1/4" THICK. DIRECT EMBED PRODUCT PROCESS INCLUDES COATING THE ALUMINUM PANEL WITH EXTERIOR GRADE SUPER DURABLE POLYURETHANE POWDER COAT AND PERMANENTLY EMBEDDED HIGH RESOLUTION IMAGES (UV WHITE TEXTURED FINISH). MOUNT STORY PANEL TO INTERIOR FACE OF CONCRETE END PILASTER AS SHOWN.

CONTACT THE CITY OF CINCINNATI (JOELL ANGEL-CHUMBLEY---joell.angel-chumbley@cincinnati-oh.gov) TO OBTAIN IMAGE FOR STORY PANEL.

NOTES:

1. *FOR END PILASTER DIMENSIONS AND ADDITIONAL DETAILS, SEE SHEET 63/88.*
2. *ADHERE STORY PANEL TO PREFORMED BEARING PAD USING A TWO-COMPONENT EPOXY COMPOUND, MASTERBOND EP21LV, OR APPROVED EQUAL. FOLLOW MANUFACTURER'S INSTRUCTIONS REGARDING SURFACE PREPARATION, STORAGE, MIXING, APPLICATION, AND CURING. ENSURE THAT EPOXY IS FULLY CURED PRIOR TO SHIPPING TO JOB SITE.*

END PILASTER DETAILS - 2
BRIDGE NO. HAM-75-0104
LINN STREET OVER IR-75 AND GEST STREET

SFN	3109098
DESIGN AGENCY	B&N burgessniple.com
DESIGNER	BES
CHECKER	MAB
REVIEWER	XAC 8/28/25
PROJECT ID	122048
SUBSET	63A
TOTAL	88
SHEET	P.305A
TOTAL	P.421

HAM-75-1.05

MODEL: Sheet PAPERSIZE: 34x22 (in.) DATE: 8/28/2025 TIME: 9:55:32 AM PLTDRV: OHDOT_PDF.pltcfg PENTBL: OHDOT_UTPen.tbl USER: WORKSPACE: OHDOTCEv02 WORKSET: 122048 PRODUCT: OpenRoadsDesigner 10.12.02.4
pw:\\ohiodot-pw.bentley.com:ohiodot-pw-02\Documents\01 Active Projects\District 08\Hamilton\122048\401-Engineering_BurgessNiple\Structures\SFN_3109098\Sheets\122048_SFN_3109098_SA015.dgn

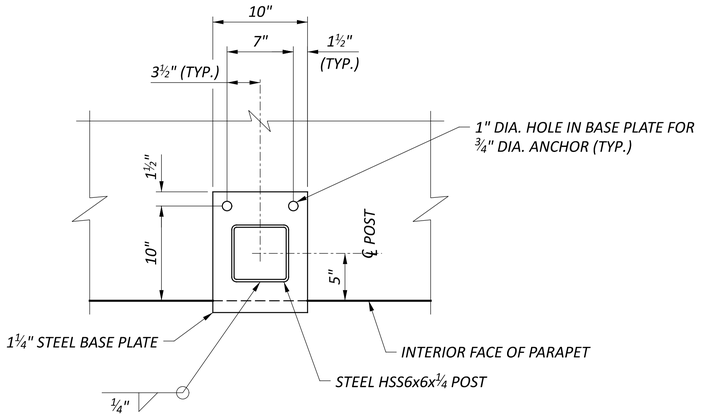

BASE PLATE PLAN

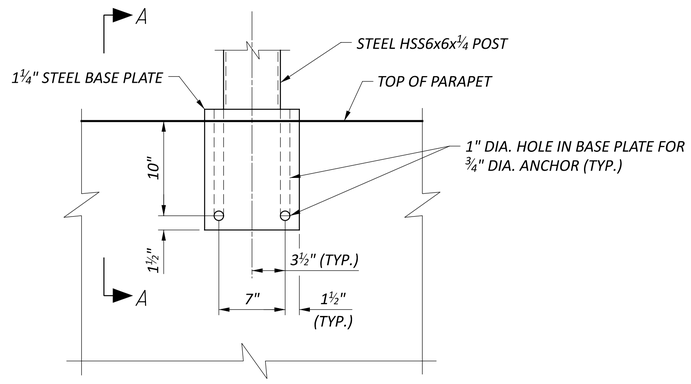

BASE PLATE ELEVATION

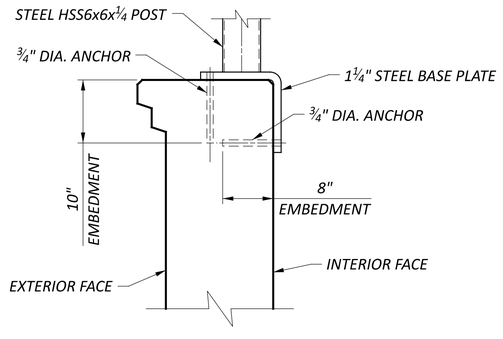

SECTION A-A

(REINFORCING NOT SHOWN FOR CLARITY)

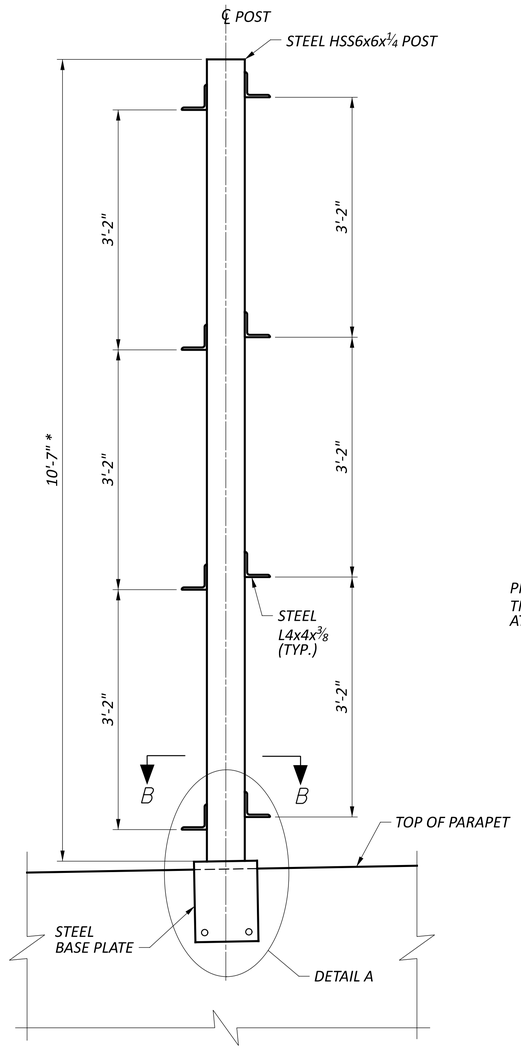

SCREEN WALL POST ELEVATION

(ELEVATION ALONG INTERIOR FACE OF PARAPET)
(SCREEN WALL PANELS AND MASKING ELEMENT NOT SHOWN FOR CLARITY)

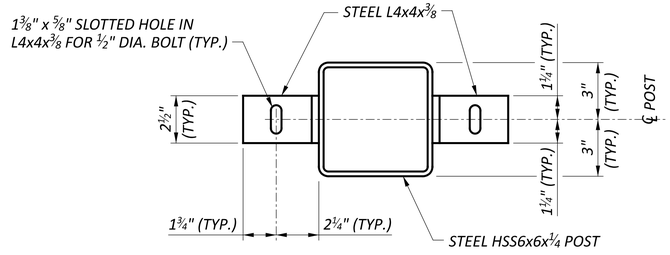

SECTION B-B

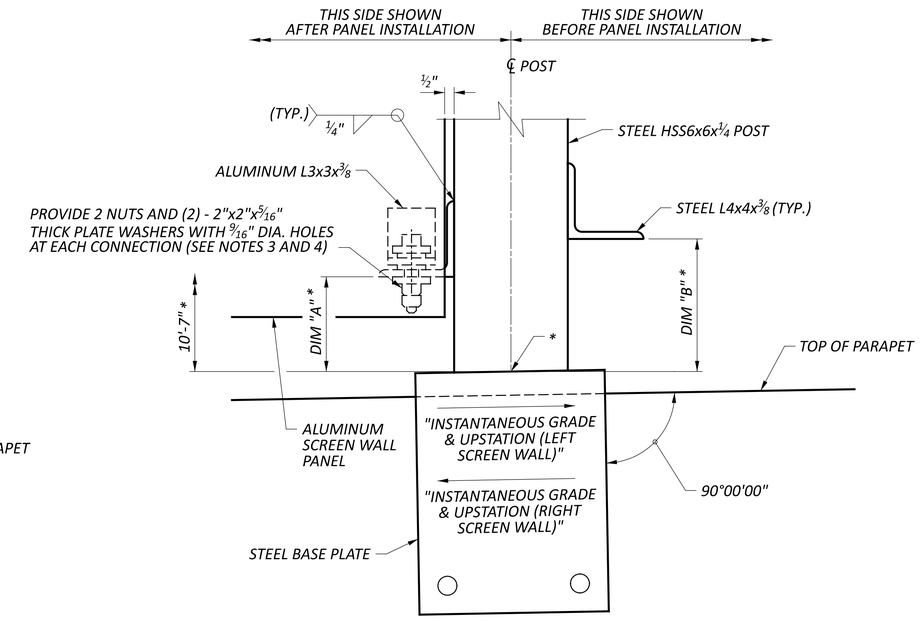

DETAIL A

(SEE NOTE 5)

NOTES:

1. POSTS SHALL BE ASTM A500, GRADE B. STEEL BASE PLATES, ANGLES AND PLATE WASHERS SHALL BE ASTM A709, GRADE 50. BOLTS SHALL BE ASTM F3125 GRADE A325. ANCHOR RODS SHALL BE ASTM F1554, GRADE 36, THREADED FULL-LENGTH. EACH ANCHOR ROD SHALL INCLUDE A NUT AND WASHER. POSTS, BASE PLATES, STEEL ANGLES, BOLTS, PLATE WASHERS AND ANCHOR RODS SHALL BE GALVANIZED ACCORDING TO C&MS 711.02 AND PAINTED [COLOR TBD].
2. ANCHOR RODS SHALL BE INSTALLED PER C&MS 510 USING NON-SHRINK, NON-METALLIC GROUT. FOR APPROVED GROUTS, SEE GENERAL NOTES FOR ADHESIVE ANCHOR/DOWEL SYSTEM ON SHEET 5/88.
3. PROVIDE LEXAN OR NYLON WASHERS AND BUSHINGS TO SEPARATE ALUMINUM FROM STEEL. PROVIDE LEXAN OR NYLON WASHERS BETWEEN ALUMINUM AND STEEL ANGLES AND BETWEEN ALUMINUM ANGLE AND STEEL PLATE WASHER. NYLON SHALL BE NYLON 6/6 MEETING FEDERAL SPECIFICATION LP 410A.
4. NUTS SHALL BE HAND TIGHTENED TO SNUG TIGHT CONDITION ONLY. DO NOT APPLY ADDITIONAL TENSION TO THE BOLTS. ENSURE THE BOTTOM NUT IS HAND TIGHTENED TO SNUG TIGHT CONDITION AGAINST THE TOP NUT TO PREVENT LOOSENING FROM VIBRATIONS.
5. INSTALL POSTS PLUMB IN BOTH DIRECTIONS. PROVIDE BEVEL CUT AT BOTTOM OF EACH POST. BEVEL CUT SHALL BE PARALLEL TO THE INSTANTANEOUS GRADE.
6. BASE PLATE SHIMS (IF NEEDED) SHALL BE MADE FROM ANY MULTI-POLYMER PLASTIC WITH A MINIMUM COMPRESSIVE STRENGTH OF 5,000 PSI.
7. FOR SCREEN WALL POST LOCATIONS, SEE SHEETS 58/ 88 AND 59/ 88 .
8. FOR SCREEN WALL CLOSURE PLATE DETAILS, SEE SHEET 65D/88 .
9. FOR SCREEN WALL PANEL AND MASKING ELEMENT DETAILS, SEE SHEETS 65C/88 AND 65E/88.

LEGEND:

* = DIMENSION IS MEASURED FROM THE TOP OF BASE PLATE AT THE ℄ POST LOCATION. FOR TABLE OF DIMENSIONS, SEE SHEET 65B/88.

SCREEN WALL POST AND ANCHOR DETAILS
BRIDGE NO. HAM-75-0104
LINN STREET OVER IR-75 AND GEST STREET

SFN	3109098
DESIGN AGENCY	B&N burgessniple.com
DESIGNER	BES
CHECKER	MAB
REVIEWER	XAC 8/27/25
PROJECT ID	122048
SUBSET	65A
TOTAL	88
SHEET	P.307A
TOTAL	P.421

HAM-75-1.05

MODEL: Sheet PAPERSIZE: 34x22 (in.) DATE: 8/28/2025 TIME: 9:56:08 AM PLTDRV: OHDOT_PDF.pltcfg PENTBL: OHDOT_UTPen.tbl USER: WORKSPACE: OHDOTCEv02 WORKSET: 122048 PRODUCT: OpenRoadsDesigner 10.12.02.4
pw:\\ohiodot-pw.bentley.com:ohiodot-pw-02\Documents\01 Active Projects\District 08\Hamilton\122048\401-Engineering_BurgessNiple\Structures\SFN_3109098\Sheets\122048_SFN_3109098_SA011.dgn

LEFT SCREEN WALL DIMENSION TABLE				
POST	STATION	INSTANTANEOUS GRADE (%)	DIM. A (IN.)	DIM. B (IN.)
1	106+01.14	4.05	-	6.94
2	106+05.14	4.05	5.00	6.94
3	106+09.14	4.05	5.00	6.94
4	106+13.14	4.05	5.00	6.94
5	106+17.14	4.05	5.00	6.94
6	106+21.14	4.05	5.00	6.94
7	106+25.14	4.05	5.00	6.94
8	106+29.14	4.05	5.00	6.94
9	106+33.14	4.05	5.00	6.94
10	106+37.14	4.05	5.00	6.94
11	106+41.14	4.05	5.00	6.94
12	106+45.14	4.05	5.00	6.94
13	106+49.14	4.05	5.00	6.92
14	106+53.14	3.95	5.00	-
15	106+55.18	3.88	-	6.83
16	106+59.18	3.75	5.00	6.77
17	106+63.18	3.62	5.00	6.71
18	106+67.18	3.49	5.00	6.65
19	106+71.18	3.36	5.00	6.58
20	106+75.18	3.23	5.00	6.52
21	106+79.18	3.10	5.00	6.46
22	106+83.18	2.97	5.00	6.40
23	106+87.18	2.84	5.00	6.33
24	106+91.18	2.71	5.00	6.27
25	106+95.18	2.58	5.00	6.21
26	106+99.18	2.45	5.00	6.15
27	107+03.18	2.32	5.00	6.08
28	107+07.18	2.20	5.00	6.02
29	107+11.18	2.07	5.00	5.96
30	107+15.18	1.94	5.00	5.90
31	107+19.18	1.81	5.00	5.84
32	107+23.18	1.68	5.00	5.77
33	107+27.18	1.55	5.00	5.71
34	107+31.18	1.42	5.00	5.65
35	107+35.18	1.29	5.00	5.59
36	107+39.18	1.16	5.00	5.52
37	107+43.18	1.03	5.00	5.46
38	107+47.18	0.90	5.00	5.40
39	107+51.18	0.77	5.00	5.34
40	107+55.18	0.64	5.00	5.28
41	107+59.18	0.51	5.00	5.21
42	107+63.18	0.38	5.00	5.15
43	107+67.18	0.25	5.00	5.09
44	107+71.18	0.12	5.00	5.03
45	107+75.18	-0.01	5.00	5.00
46	107+79.18	-0.14	5.04	5.00
47	107+83.18	-0.27	5.10	5.00
48	107+87.18	-0.40	5.16	5.00
49	107+91.18	-0.53	5.22	5.00
50	107+95.18	-0.66	5.29	5.00

LEFT SCREEN WALL DIMENSION TABLE (CONTINUED)				
POST	STATION	INSTANTANEOUS GRADE (%)	DIM. A (IN.)	DIM. B (IN.)
51	107+99.18	-0.79	5.35	5.00
52	108+03.18	-0.92	5.41	5.00
53	108+07.18	-1.05	5.47	5.00
54	108+11.18	-1.18	5.53	5.00
55	108+15.18	-1.31	5.60	5.00
56	108+19.18	-1.44	5.66	5.00
57	108+23.18	-1.57	5.72	5.00
58	108+27.18	-1.70	5.78	5.00
59	108+31.18	-1.83	5.85	5.00
60	108+35.18	-1.96	5.91	5.00
61	108+39.18	-2.09	5.97	5.00
62	108+43.18	-2.22	6.03	5.00
63	108+47.18	-2.35	6.09	5.00
64	108+51.18	-2.48	6.16	5.00
65	108+55.18	-2.61	6.22	5.00
66	108+59.18	-2.74	6.28	5.00
67	108+63.18	-2.87	6.34	5.00
68	108+67.18	-2.99	6.41	5.00
69	108+71.18	-3.12	6.47	5.00
70	108+75.18	-3.25	6.53	5.00
71	108+79.18	-3.38	6.59	5.00
72	108+83.18	-3.51	6.66	5.00
73	108+87.18	-3.64	6.72	5.00
74	108+91.18	-3.77	6.78	5.00
75	108+95.18	-3.90	6.84	5.00
76	108+99.18	-4.03	6.90	5.00
77	109+03.18	-4.16	6.97	5.00
78	109+07.18	-4.29	7.03	5.00
79	109+11.18	-4.42	7.09	5.00
80	109+15.18	-4.55	7.15	5.00
81	109+19.18	-4.68	7.22	5.00
82	109+23.18	-4.81	7.28	5.00
83	109+27.18	-4.94	7.34	5.00
84	109+31.18	-5.07	7.40	5.00
85	109+35.18	-5.20	7.47	5.00
86	109+39.18	-5.33	7.53	5.00
87	109+43.18	-5.46	7.59	5.00
88	109+47.18	-5.59	7.65	5.00
89	109+51.18	-5.72	7.71	5.00
90	109+55.18	-5.85	7.78	5.00
91	109+59.18	-5.98	7.84	5.00
92	109+63.18	-6.11	7.90	-

RIGHT SCREEN WALL DIMENSION TABLE				
POST	STATION	INSTANTANEOUS GRADE (%)	DIM. A (IN.)	DIM. B (IN.)
1	105+85.04	4.05	6.94	-
2	105+89.04	4.05	6.94	5.00
3	105+93.04	4.05	6.94	5.00
4	105+97.04	4.05	6.94	5.00
5	106+01.04	4.05	6.94	5.00
6	106+05.04	4.05	6.94	5.00
7	106+09.04	4.05	6.94	5.00
8	106+13.04	4.05	6.94	5.00
9	106+17.04	4.05	6.94	5.00
10	106+21.04	4.05	6.94	5.00
11	106+25.04	4.05	6.94	5.00
12	106+29.04	4.05	6.94	5.00
13	106+33.04	4.05	6.94	5.00
14	106+37.04	4.05	-	5.00
15	106+39.08	4.05	6.94	-
16	106+43.08	4.05	6.94	5.00
17	106+47.08	4.05	6.94	5.00
18	106+51.08	4.01	6.90	5.00
19	106+55.08	3.89	6.83	5.00
20	106+59.08	3.76	6.77	5.00
21	106+63.08	3.63	6.71	5.00
22	106+67.08	3.50	6.65	5.00
23	106+71.08	3.37	6.58	5.00
24	106+75.08	3.24	6.52	5.00
25	106+79.08	3.11	6.46	5.00
26	106+83.08	2.98	6.40	5.00
27	106+87.08	2.85	6.34	5.00
28	106+91.08	2.72	6.27	5.00
29	106+95.08	2.59	6.21	5.00
30	106+99.08	2.46	6.15	5.00
31	107+03.08	2.33	6.09	5.00
32	107+07.08	2.20	6.02	5.00
33	107+11.08	2.07	5.96	5.00
34	107+15.08	1.94	5.90	5.00
35	107+19.08	1.81	5.84	5.00
36	107+23.08	1.68	5.78	5.00
37	107+27.08	1.55	5.71	5.00
38	107+31.08	1.42	5.65	5.00
39	107+35.08	1.29	5.59	5.00
40	107+39.08	1.16	5.53	5.00
41	107+43.08	1.03	5.46	5.00
42	107+47.08	0.90	5.40	5.00
43	107+51.08	0.77	5.34	5.00
44	107+55.08	0.64	5.28	5.00
45	107+59.08	0.51	5.21	5.00
46	107+63.08	0.38	5.15	5.00
47	107+67.08	0.25	5.09	5.00
48	107+71.08	0.12	5.03	5.00
49	107+75.08	-0.01	5.00	5.00
50	107+79.08	-0.14	5.00	5.03

RIGHT SCREEN WALL DIMENSION TABLE (CONTINUED)				
POST	STATION	INSTANTANEOUS GRADE (%)	DIM. A (IN.)	DIM. B (IN.)
51	107+83.08	-0.27	5.00	5.10
52	107+87.08	-0.40	5.00	5.16
53	107+91.08	-0.53	5.00	5.22
54	107+95.08	-0.66	5.00	5.28
55	107+99.08	-0.79	5.00	5.35
56	108+03.08	-0.92	5.00	5.41
57	108+07.08	-1.05	5.00	5.47
58	108+11.08	-1.18	5.00	5.53
59	108+15.08	-1.30	5.00	5.60
60	108+19.08	-1.43	5.00	5.66
61	108+23.08	-1.56	5.00	5.72
62	108+27.08	-1.69	5.00	5.78
63	108+31.08	-1.82	5.00	5.84
64	108+35.08	-1.95	5.00	5.91
65	108+39.08	-2.08	5.00	5.97
66	108+43.08	-2.21	5.00	6.03
67	108+47.08	-2.34	5.00	6.09
68	108+51.08	-2.47	5.00	6.16
69	108+55.08	-2.60	5.00	6.22
70	108+59.08	-2.73	5.00	6.28
71	108+63.08	-2.86	5.00	6.34
72	108+67.08	-2.99	5.00	6.40
73	108+71.08	-3.12	5.00	6.47
74	108+75.08	-3.25	5.00	6.53
75	108+79.08	-3.38	5.00	6.59
76	108+83.08	-3.51	5.00	6.65
77	108+87.08	-3.64	5.00	6.72
78	108+91.08	-3.77	5.00	6.78
79	108+95.08	-3.90	5.00	6.84
80	108+99.08	-4.03	5.00	6.90
81	109+03.08	-4.16	5.00	6.97
82	109+07.08	-4.29	5.00	7.03
83	109+11.08	-4.42	5.00	7.09
84	109+15.08	-4.55	5.00	7.15
85	109+19.08	-4.68	5.00	7.21
86	109+23.08	-4.81	5.00	7.28
87	109+27.08	-4.94	5.00	7.34
88	109+31.08	-5.07	5.00	7.40
89	109+35.08	-5.20	5.00	7.46
90	109+39.08	-5.33	5.00	7.53
91	109+43.08	-5.46	5.00	7.59
92	109+47.08	-5.59	-	7.65

NOTES:

1. *FOR LOCATION OF DIMENSIONS, SEE DETAILS ON SHEET 65A/88 .*

SCREEN WALL POST DIMENSIONS
BRIDGE NO. HAM-75-0104
LINN STREET OVER IR-75 AND GEST STREET

SFN 3109098

DESIGN AGENCY B&N burgessniple.com

DESIGNER	CHECKER
MAB	BES

REVIEWER XAC 8/27/25

PROJECT ID 122048

SUBSET	TOTAL
65B	88

SHEET	TOTAL
P.307B	P.421

HAM-IR 75-1.05

MODEL: Sheet PAPERSIZE: 34x22 (in.) DATE: 8/28/2025 TIME: 9:56:16 AM PLTDRV: OHDOT_PDF.pltcfg PENTBL: OHDOT_UTPen.tbl USER: WORKSPACE: OHDOTCEv02 WORKSET: 122048 PRODUCT: OpenRoadsDesigner 10.12.02.4
pw:\\ohiodot-pw.bentley.com:ohiodot-pw-02\Documents\01 Active Projects\District 08\Hamilton\122048\401-Engineering_BurgessNiple\Structures\SFN_3109098\Sheets\122048_SFN_3109098_SA013.dgn

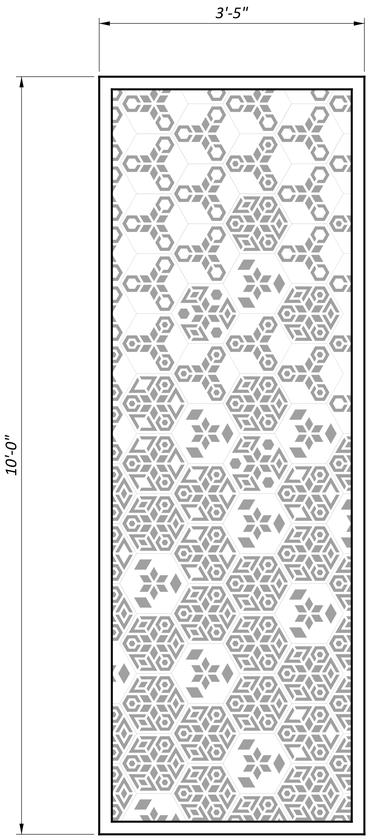

SCREEN WALL LASER CUT PANEL ELEVATION
(POLYGONS SHOWN AROUND EACH MODULE ARE FOR INFORMATION ONLY)

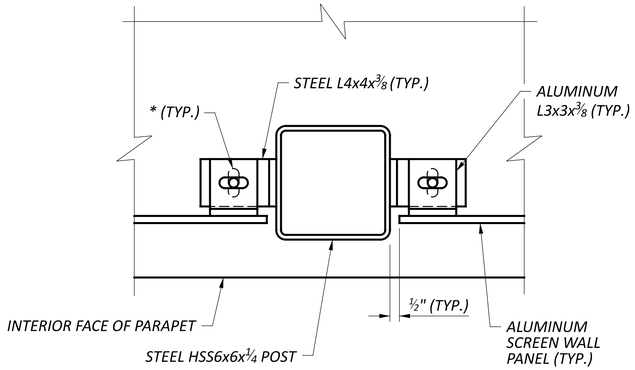

SCREEN WALL CONNECTION DETAIL
(MASKING ELEMENT NOT SHOWN FOR CLARITY)

LASER-CUT MODULE NOTES:

EACH 6-SIDED POLYGON MODULE IS DESIGNED TO THE FOLLOWING ENGINEERING CRITERIA:

1. LASER CUT LINEAR OPENINGS 1/2" x 3".
2. LASER CUT DIAMOND SHAPES 1 1/2" x 1 1/2".
3. LINEAR PATTERN ELEMENTS 3/8" WIDE x VARYING LENGTHS.
4. 2" WHITE BORDER AROUND ALL PANEL EDGES.
5. CONTACT ODOT DISTRICT 8 TO OBTAIN A MICROSTATION CADD DRAWING OF THE PANEL.

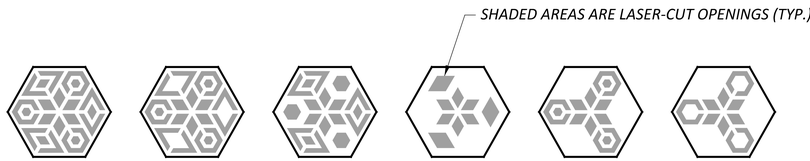

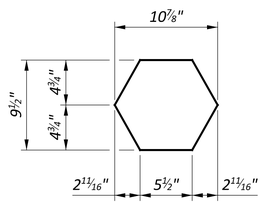

6-SIDED POLYGON MODULES

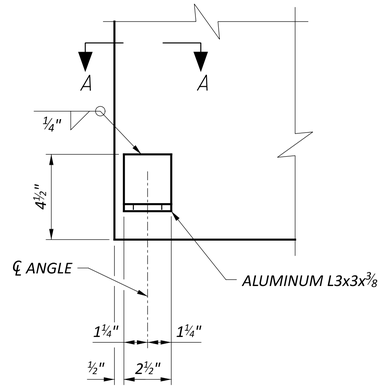

DETAIL A

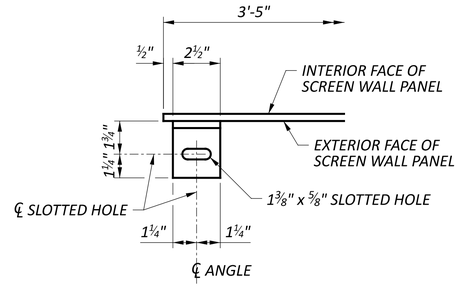

VIEW A-A

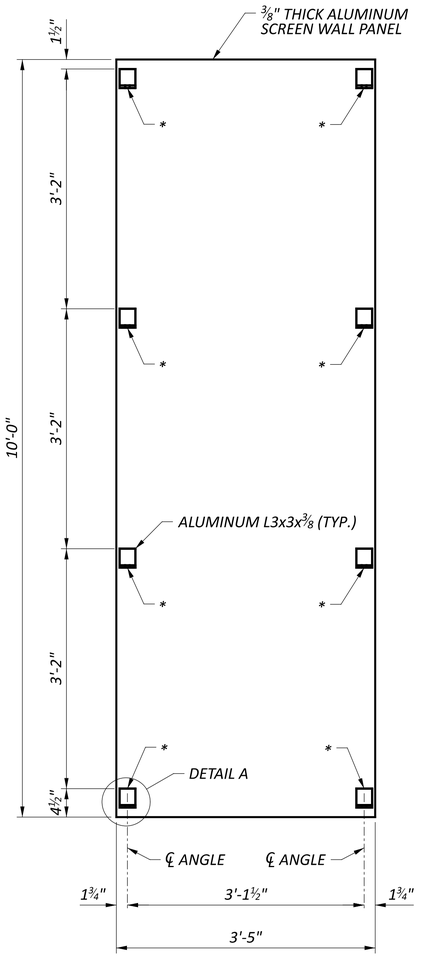

SCREEN WALL ELEVATION
(EXTERIOR FACE SHOWN)
(SEE NOTE 2)

LEGEND:

* = PROVIDE 2 NUTS AND (2) - 2"x2"x5/16" THICK PLATE WASHERS WITH 9/16" DIA. HOLES AT EACH CONNECTION

NOTES:

1. ALUMINUM PANELS AND ANGLES SHALL BE ALLOY 6061-T6 AND SHALL BE PAINTED [COLOR TBD].
2. INSTALL PANELS PLUMB AND LEVEL.

SCREEN WALL PANEL DETAILS
BRIDGE NO. HAM-75-0104
LINN STREET OVER IR-75 AND GEST STREET

SFN	3109098
DESIGN AGENCY	B&N burgessniple.com
DESIGNER	BES
CHECKER	MAB
REVIEWER	XAC 8/27/25
PROJECT ID	122048
SUBSET	65C
TOTAL	88
SHEET	P.307C
TOTAL	P.421

HAM-75-1.05

MODEL: Sheet PAPERSIZE: 34x22 (in.) DATE: 8/28/2025 TIME: 9:56:24 AM PLTDRV: OHDOT_PDF.pltcfg PENTBL: OHDOT_UTPen.tbl USER: WORKSPACE: OHDOTCEv02 WORKSET: 122048 PRODUCT: OpenRoadsDesigner 10.12.02.4
pw:\\ohiodot-pw.bentley.com:ohiodot-pw-02\Documents\01 Active Projects\District 08\Hamilton\122048\v01-Engineering_BurgessNiple\Structures\SFN_3109098\Sheets\SFN_3109098_SA012.dgn

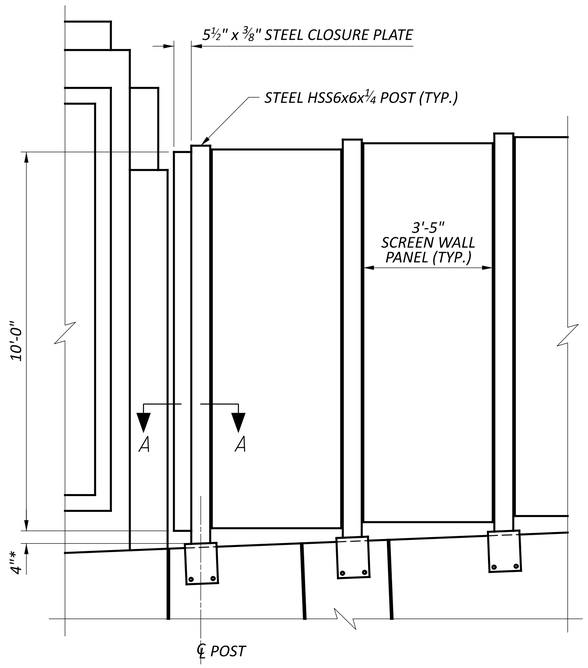

TYPICAL SCREEN WALL ELEVATION AT END PILASTER

(LEFT PARAPET INTERIOR FACE SHOWN,
RIGHT PARAPET INTERIOR FACE SIMILAR)
(MASKING ELEMENTS AND CONNECTION ANGLES NOT SHOWN FOR CLARITY)

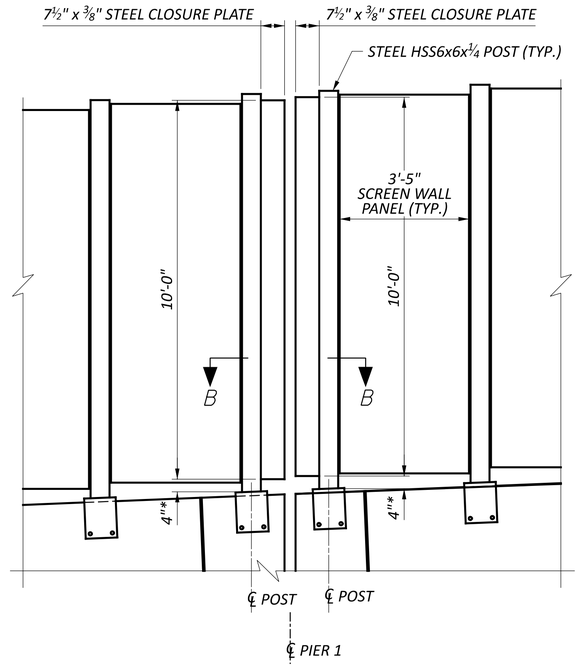

SCREEN WALL ELEVATION AT PIER 1

(LEFT PARAPET INTERIOR FACE SHOWN,
RIGHT PARAPET INTERIOR FACE SIMILAR)
(MASKING ELEMENTS AND CONNECTION ANGLES NOT SHOWN FOR CLARITY)

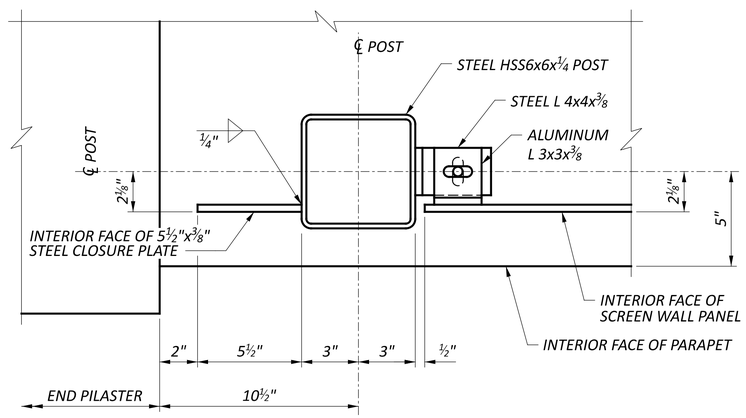

SECTION A-A

(BASE PLATE NOT SHOWN FOR CLARITY)

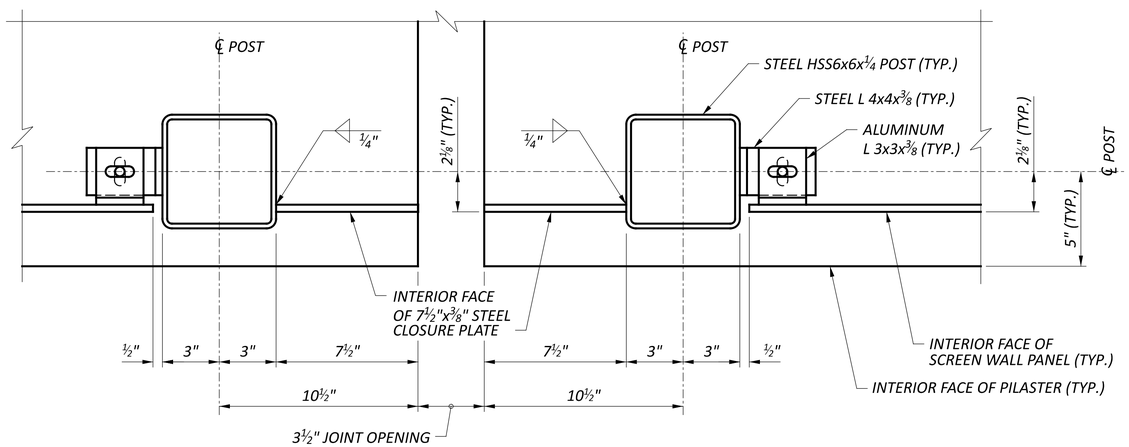

SECTION B-B

(BASE PLATE NOT SHOWN FOR CLARITY)

LEGEND:

** = 4" DIMENSION IS MEASURED FROM THE TOP OF BASE PLATE AT THE ℄ POST LOCATION TO BOTTOM OF CLOSURE PLATE*

NOTES:

1. *CLOSURE PLATES SHALL BE ASTM A709, GRADE 50. CLOSURE PLATES SHALL BE GALVANIZED ACCORDING TO C&MS 711.02 AND PAINTED [COLOR TBD].*
2. *FOR PARAPET PANEL, PILASTER, CONTRACTION JOINT, DEFLECTION JOINT AND SCREEN WALL POST LOCATIONS, SEE SHEETS 58/ 88 AND 59/ 88 .*
3. *FOR ADDITIONAL SCREEN WALL DETAILS, SEE SHEET 65A/88 AND 65C/88 .*

SCREEN WALL CLOSURE PLATE DETAILS
BRIDGE NO. HAM-75-0104
LINN STREET OVER IR-75 AND GEST STREET

SFN	3109098
DESIGN AGENCY	B&N burgessniple.com
DESIGNER	BES
CHECKER	MAB
REVIEWER	XAC 8/27/25
PROJECT ID	122048
SUBSET	65D
TOTAL	88
SHEET	P.307D
TOTAL	P.421

HAM-75-1.05

MODEL: Sheet PAPERSIZE: 34x22 (in.) DATE: 8/28/2025 TIME: 9:56:32 AM PLTDRV: OHDOT_PDF.pltcfg PENTBL: OHDOT_UTPen.tbl USER: WORKSPACE: OHDOTCEv02 WORKSET: 122048 PRODUCT: OpenRoadsDesigner 10.12.02.4
pw:\\ohiodot-pw.bentley.com:ohiodot-pw-02\Documents\01 Active Projects\District 08\Hamilton\122048\401-Engineering_BurgessNiple\Structures\SFN_3109098\Sheets\122048_SFN_3109098_SA010.dgn

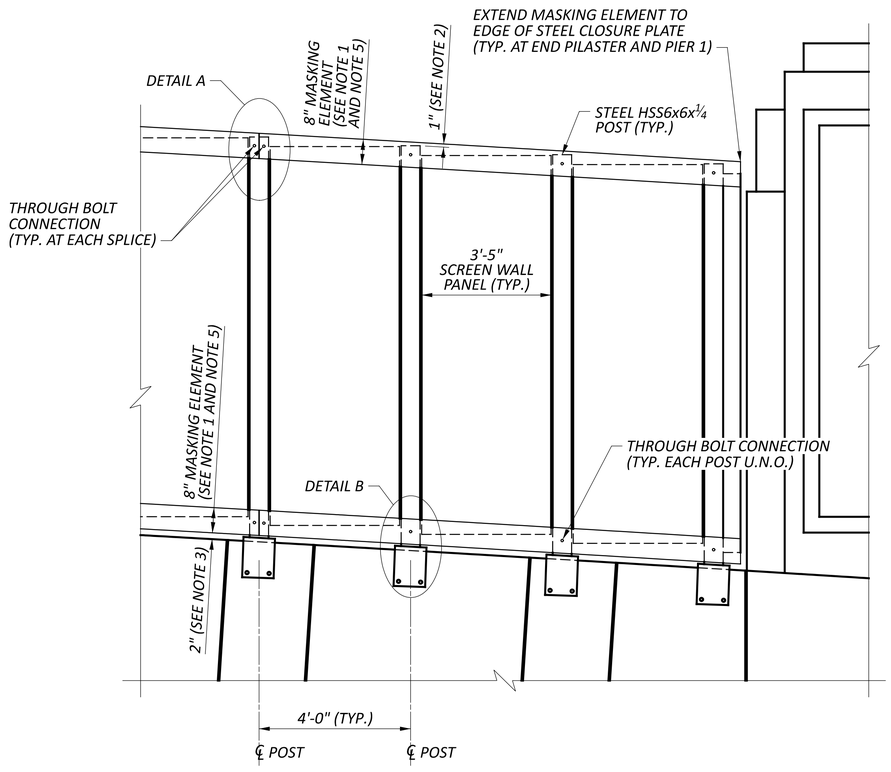

MASKING ELEMENT ELEVATION

(ELEVATION ALONG INSIDE FACE OF SCREEN WALL)

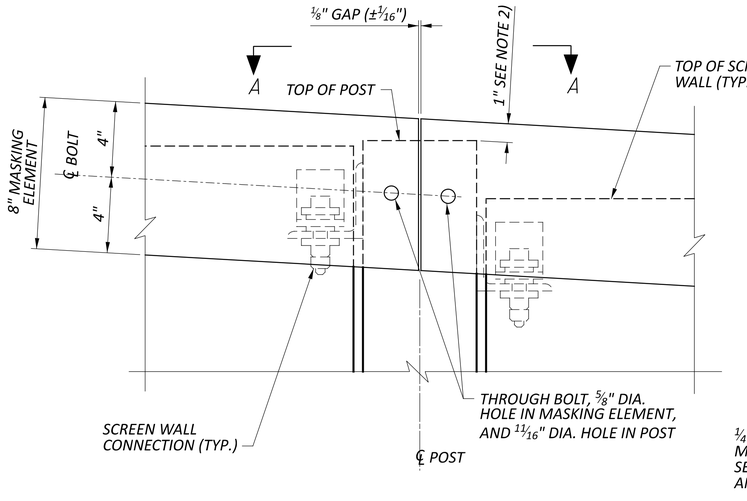

DETAIL A

(DISCONTINUOUS MASKING ELEMENT SHOWN AT TOP, SIMILAR AT BOTTOM)

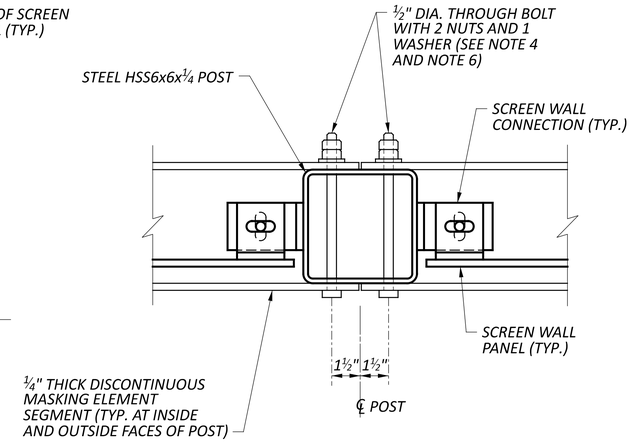

VIEW A-A

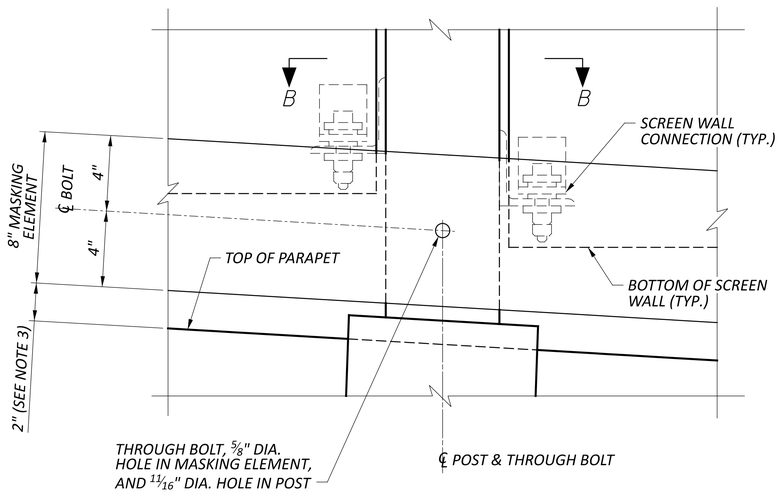

DETAIL B

(CONTINUOUS MASKING ELEMENT SHOWN AT BOTTOM, SIMILAR AT TOP)

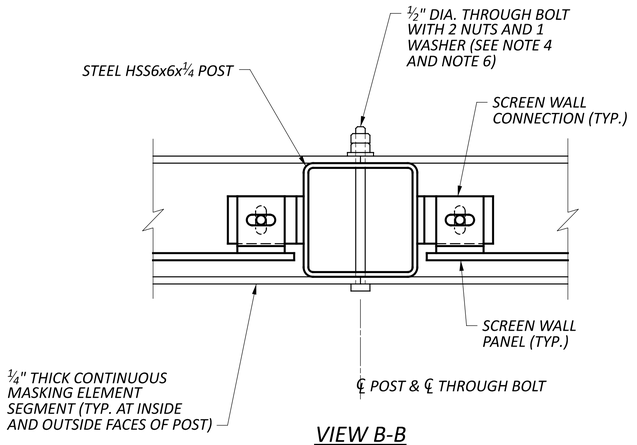

VIEW B-B

NOTES:

1. MASKING ELEMENTS ARE ALONG THE INSIDE FACE AND OUTSIDE FACE OF THE SCREEN WALL. MASKING ELEMENTS SHALL EXTEND ACROSS A MINIMUM OF 2 POST SPACES AND A MAXIMUM OF 3 POST SPACES. END MASKING ELEMENT SEGMENT NEAR ℄ OF A POST, LEAVING A GAP AS SHOWN IN DETAIL A. UNLESS NOTED OTHERWISE.
2. MAINTAIN 1" ± ⅛" CLEARANCE FROM TOP OF POST TO TOP OF MASKING ELEMENT.
3. MAINTAIN 2" ± ⅛" CLEARANCE FROM TOP OF PARAPET TO BOTTOM OF MASKING ELEMENT.
4. BOLTS SHALL BE ASTM F3125 GRADE A325. BOLTS SHALL BE GALVANIZED ACCORDING TO C&MS 711.02 AND PAINTED [COLOR TBD].
5. MASKING ELEMENTS SHALL BE ASTM A709, GRADE 50. MASKING ELEMENTS SHALL BE GALVANIZED ACCORDING TO C&MS 711.02 AND PAINTED [COLOR TBD].
6. NUTS SHALL BE HAND TIGHTENED TO SNUG TIGHT CONDITION ONLY. DO NOT APPLY ADDITIONAL TENSION TO THE BOLTS. ENSURE THE SECOND NUT IS HAND TIGHTENED TO SNUG TIGHT CONDITION AGAINST THE FIRST NUT.

MASKING ELEMENT DETAILS
BRIDGE NO. HAM-75-0104
LINN STREET OVER IR-75 AND GEST STREET

SFN	3109098
DESIGN AGENCY	B&N burgessniple.com
DESIGNER	BES
CHECKER	MAB
REVIEWER	XAC 8/27/25
PROJECT ID	122048
SUBSET	65E
TOTAL	88
SHEET	P.307E
TOTAL	P.421

HAM-75-1.05

MODEL: Sheet PAPERSIZE: 34x22 (in.) DATE: 8/28/2025 TIME: 9:56:41 AM PLTDRV: OHDOT_PDF.pltcfg PENTBL: OHDOT_UTPen.tbl USER: WORKSPACE: OHDOTCEv02 WORKSET: 122048 PRODUCT: OpenRoadsDesigner 10.12.02.4
pw:\\ohiodot-pw.bentley.com:ohiodot-pw-02\Documents\01 Active Projects\District 08\Hamilton\122048\401-Engineering_BurgessNiple\Structures\SFN_3109098\Sheets\122048_SFN_3109098_SA014.dgn

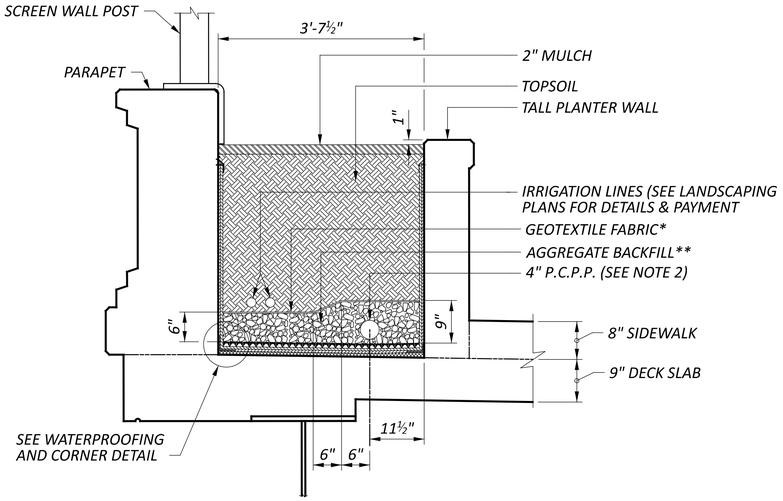

TALL PLANTER DETAIL
(SEE NOTE 1)

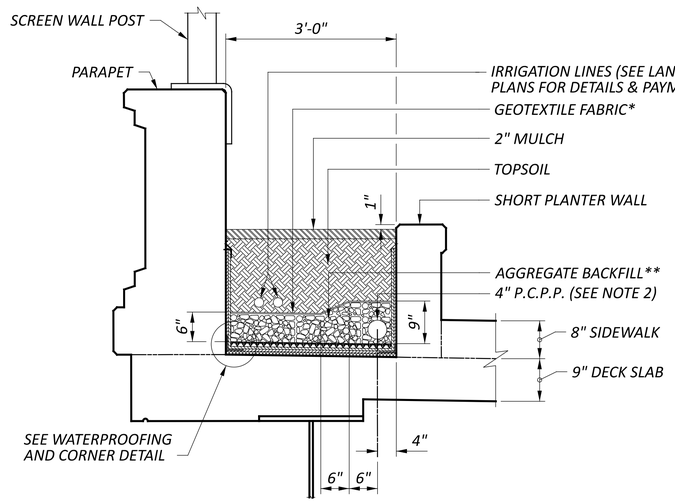

SHORT PLANTER DETAIL

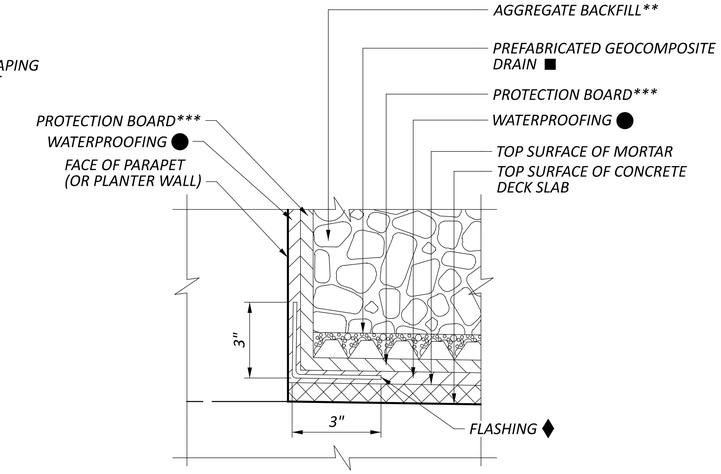

WATERPROOFING AND CORNER DETAIL
(APPLIES AT BASE OF PARAPET AND BASE OF PLANTER WALLS)
(SEE NOTE 1)

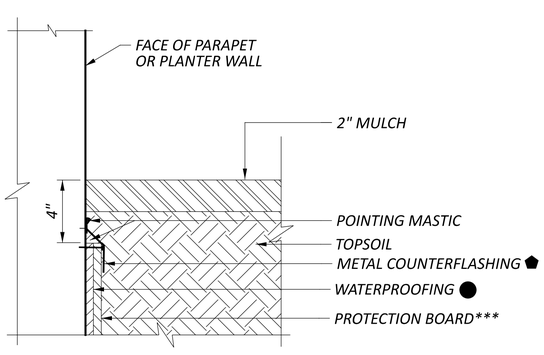

WATERPROOFING TERMINATION DETAIL 1
(APPLIES AT BACK FACE OF TALL AND SHORT PLANTER WALLS, AND FRONT FACE OF PARAPET FOR TALL AND SHORT PLANTERS)
(SEE NOTE 1)

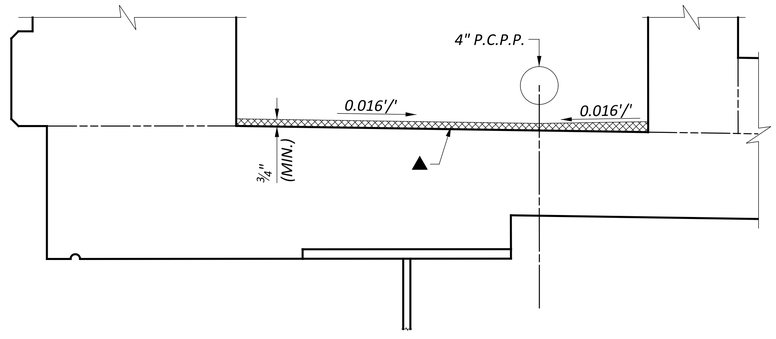

MORTAR DETAIL AT BASE OF PLANTER
(TALL PLANTER SHOWN, SHORT PLANTER SIMILAR)

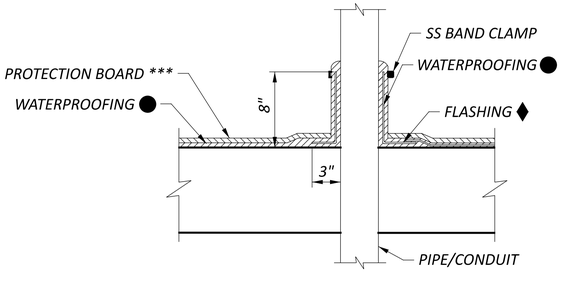

TYPICAL CAST-IN-PLACE PENETRATIONS

LEGEND:

* = GEOTEXTILE FABRIC SHALL CONFORM TO CMS 712.09, TYPE A

** = AGGREGATE BACKFILL SHALL CONFORM TO CMS TABLE 703.01-1, SIZE #57

*** = PROTECTION BOARD SHALL BE WR MEADOWS PROTECTION COURSE PC-3, TREMCO 2560 PROTECTION BOARD, OR APPROVED EQUAL

▲ = MORTAR SHALL BE QUICK SETTING CONCRETE MORTAR, TYPE 2, CONFORMING TO CMS 705.21

■ = PREFABRICATED GEOCOMPOSITE DRAIN (PGD) SHALL CONFORM TO CMS 518 AND 712.16. SUPPLY PGD MEETING THE PROPERTIES IN CMS TABLE 712.16-1 FOR CONVENTIONAL ABUTMENT/WALL HEIGHTS OF 30' TO 50'

⬟ = COUNTERFLASHING SHALL BE 1-PIECE, 24-GAUGE (MIN.) GALVANIZED STEEL, ATTACHED TO CONCRETE SURFACE AT 12" MAX. SPACING. ATTACHMENT HARDWARE SHALL BE GALVANIZED. OVERLAP INDIVIDUAL PIECES A MINIMUM OF 1"

♦ = INSTALL FLASHING AFTER APPLYING PRIMER AND FIRST COAT OF WATERPROOFING MEMBRANE, AND PRIOR TO APPLYING THE FABRIC REINFORCEMENT.

LEGEND CONTINUED:

● = WATERPROOFING SHALL BE A HOT-APPLIED RUBBERIZED ASPHALT WATERPROOFING MEMBRANE, AND SHALL BE FABRIC REINFORCED. TWO COATS OF MEMBRANE SHALL BE APPLIED, WITH THE FIRST COAT BEING 90 MILS THICKNESS AND THE SECOND COAT BEING 125 MILS THICKNESS. FABRIC REINFORCEMENT SHALL BE EMBEDDED INTO THE FIRST COAT WHILE IT IS STILL HOT. PRODUCT SHALL BE HRM 714 BY WR MEADOWS, MM6125 BY HYDROTECH, OR APPROVED EQUAL. PERFORM SURFACE PREPARATION AND APPLY PRIMER AS RECOMMENDED BY THE WATERPROOFING MANUFACTURER. FOLLOW ALL MANUFACTURER'S INSTRUCTIONS REGARDING INSTALLATION, INCLUDING WEATHER RESTRICTIONS AND SAFETY PRECAUTIONS.

NOTE:

1. PROVIDE WATERPROOFING AND PROTECTION BOARD ON ALL VERTICAL SURFACES OF PLANTER AREAS, INCLUDING TRANSVERSE PLANTER WALLS.

2. PLACE PIPE ON 1" BEDDING OF AGGREGATE BACKFILL.

DRAINAGE AND WATERPROOFING DETAILS - 1
BRIDGE NO. HAM-75-0104
LINN STREET OVER IR-75 AND GEST STREET

SFN 3109098
DESIGN AGENCY B&N burgessniple.com
DESIGNER BES | CHECKER XAC
REVIEWER JCS 12/18/24
PROJECT ID 122048
SUBSET 71 | TOTAL 88
SHEET P.313 | TOTAL P.421

HAM-75-1.05

MODEL: Sheet PAPERSIZE: 34x22 (in.) DATE: 8/28/2025 TIME: 9:56:49 AM PLTDRV: OHDOT_PDF.pltcfg PENTBL: OHDOT_UTPen.tbl USER: WORKSPACE: OHDOTCEv02 WORKSET: 122048 PRODUCT: OpenRoadsDesigner 10.12.02.4
pw:\\ohiodot-pw.bentley.com:ohiodot-pw-02\Documents\01 Active Projects\District 08\Hamilton\122048\401-Engineering_BurgessNiple\Structures\SFN_3109098\Sheets\122048_SFN_3109098_SM013.dgn

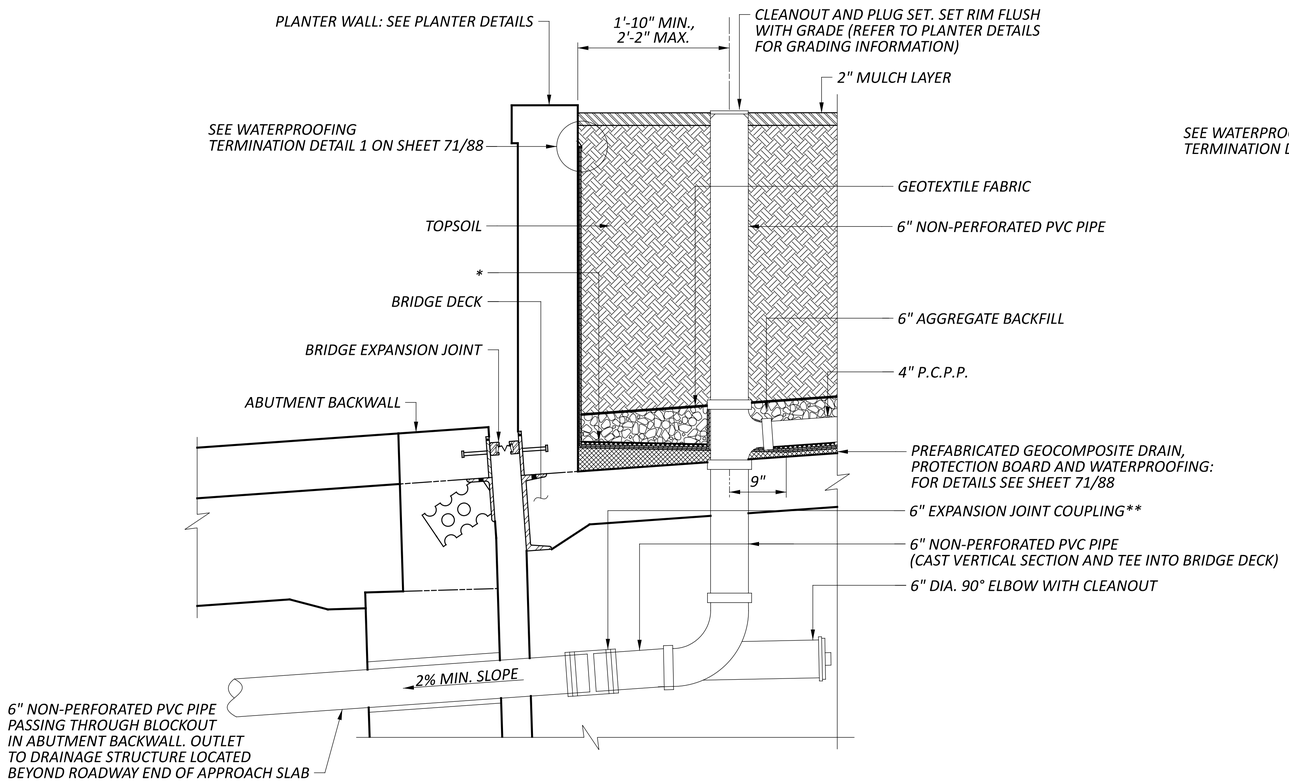

PLANTER DRAINAGE OUTLET AT ABUTMENT - SECTION

(4 OUTLET LOCATIONS)

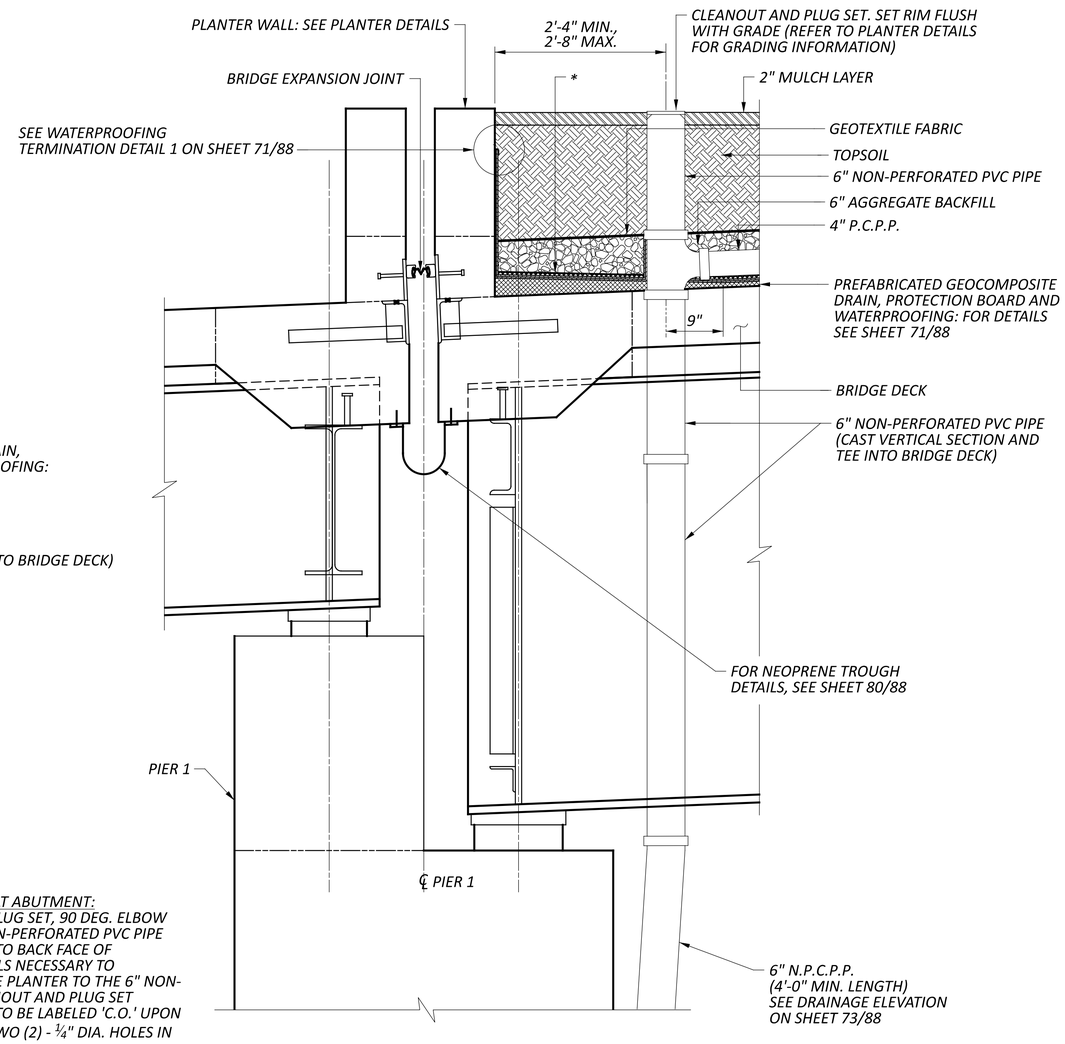

PLANTER DRAINAGE OUTLET AT PIER 1 - SECTION

(2 OUTLET LOCATIONS)

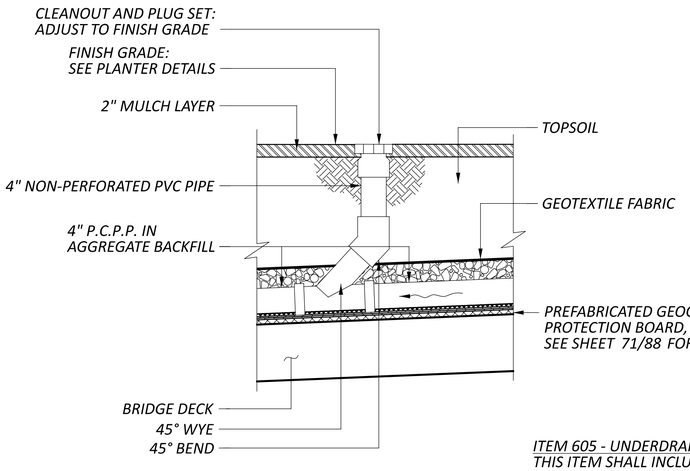

CLEANOUT DETAIL

ITEM 605 - UNDERDRAINS, MISC.: DRAINAGE OUTLET AT ABUTMENT:
THIS ITEM SHALL INCLUDE VERTICAL CLEANOUT AND PLUG SET, 90 DEG. ELBOW WITH CLEANOUT, EXPANSION JOINT COUPLING, 6" NON-PERFORATED PVC PIPE SEGMENTS PER CMS 707.41 FROM PLANTER SURFACE TO BACK FACE OF ABUTMENT BACKWALL, PIPE TEE, AND ANY INCIDENTALS NECESSARY TO COMPLETE THE CONNECTION OF THE 4" P.C.P.P. IN THE PLANTER TO THE 6" NON-PERFORATED PVC PIPE BEHIND THE ABUTMENT. CLEANOUT AND PLUG SET WITHIN PLANTER AREA SHALL BE BLACK. END PLUG IS TO BE LABELED 'C.O.' UPON TOP SURFACE FOR IDENTIFICATION PURPOSES. DRILL TWO (2) - ¼" DIA. HOLES IN END PLUG TO ALLOW VENTING.

ITEM 605 - UNDERDRAINS, MISC.: CLEANOUT:
THIS ITEM SHALL INCLUDE VERTICAL CLEANOUT AND PLUG SET, 4" NON-PERFORATED PVC PIPE PER CMS 707.41, 45 DEG. WYES AND BENDS, AND ANY INCIDENTALS NECESSARY TO COMPLETE THE INSTALLATION OF THE CLEANOUT.

CLEANOUT AND PLUG SET TO BE BLACK, END PLUG IS TO BE LABELED 'C.O.' UPON TOP SURFACE FOR IDENTIFICATION PURPOSES. DRILL TWO (2) - ¼" DIA. HOLES IN END PLUG TO ALLOW VENTING.

ITEM 605 - UNDERDRAINS, MISC.: DRAINAGE OUTLET AT PIER 1:
THIS ITEM SHALL INCLUDE VERTICAL CLEANOUT AND PLUG SET, 6" NON-PERFORATED PVC PIPE SEGMENTS PER CMS 707.41, 6" N.P.C.P.P. PER CMS 707.33, PIPE ELBOWS, TEES, CLEANOUTS, PLUGS, TIED CONCRETE BLOCK MAT, AND ANY INCIDENTALS NECESSARY TO COMPLETE THE CONNECTION OF THE 4" P.C.P.P. IN THE PLANTER TO THE OUTLET AT THE TIED CONCRETE BLOCK MAT. CLEANOUT AND PLUG SET WITHIN PLANTER AREA SHALL BE BLACK. END PLUG IS TO BE LABELED 'C.O.' UPON TOP SURFACE FOR IDENTIFICATION PURPOSES. DRILL TWO (2) - ¼" DIA. HOLES IN END PLUG TO ALLOW VENTING.

LEGEND:

** = PLACE MORTAR AT END OF BRIDGE SUPERSTRUCTURE UNIT TO PROVIDE ¼" PER FOOT MINIMUM SLOPE FROM PLANTER WALL TO 9" BEYOND CENTERLINE OF VERTICAL CLEANOUT. MORTAR SHALL BE QUICK SETTING CONCRETE MORTAR, TYPE 2, CONFORMING TO CMS 705.21.*

*** = EXPANSION COUPLING SHALL BE CAPABLE OF ACCOMMODATING 3" TOTAL MOVEMENT.*

DRAINAGE AND WATERPROOFING DETAILS - 2

BRIDGE NO. HAM-75-0104
LINN STREET OVER IR-75 AND GEST STREET

SFN 3109098
DESIGN AGENCY B&N burgessniple.com
DESIGNER BES | CHECKER XAC
REVIEWER JCS 12/18/24
PROJECT ID 122048
SUBSET 72 | TOTAL 88
SHEET P.314 | TOTAL P.421

HAM-75-1.05

MODEL: Sheet PAPERSIZE: 34x22 (in.) DATE: 8/28/2025 TIME: 9:56:56 AM PLTDRV: OHDOT_PDF.pltcfg PENTBL: OHDOT_UTPen.tbl USER: WORKSPACE: OHDOTCEv02 WORKSET: 122048 PRODUCT: OpenRoadsDesigner 10.12.02.4
pw:\\ohiodot-pw.bentley.com:ohiodot-pw-02\Documents\01 Active Projects\District 08\Hamilton\122048\401-Engineering_BurgessNiple\Structures\SFN_3109098\Sheets\122048_SFN_3109098_SM012.dgn

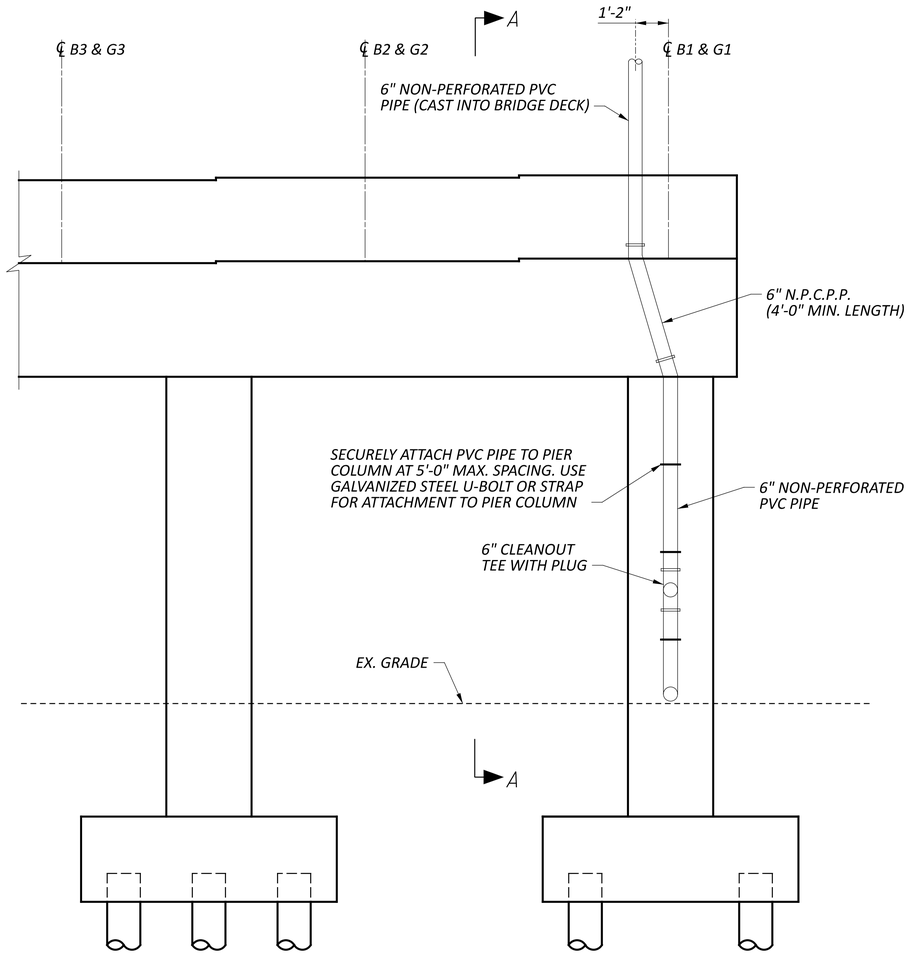

PLANTER DRAINAGE OUTLET ELEVATION AT PIER 1

(TYPICAL AT EACH END OF PIER 1)
(LOOKING DOWNSTATION)

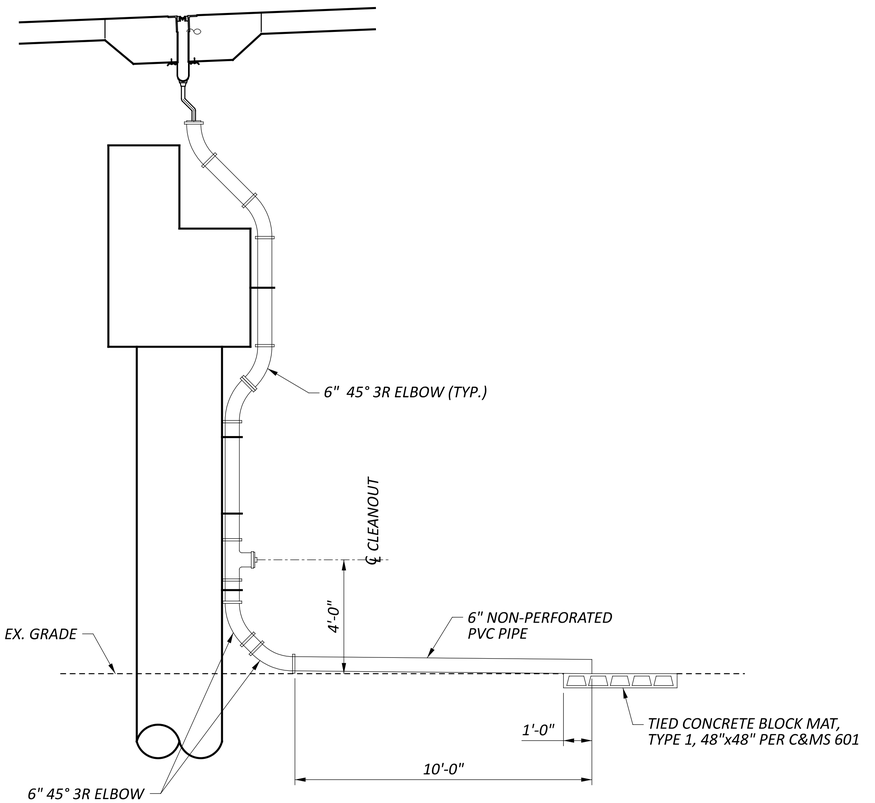

VIEW A-A

(SHOWN AT NEOPRENE TROUGH DRAINAGE OUTLET)
(SEE SHEET 80/88 FOR LOCATION OF VIEW)

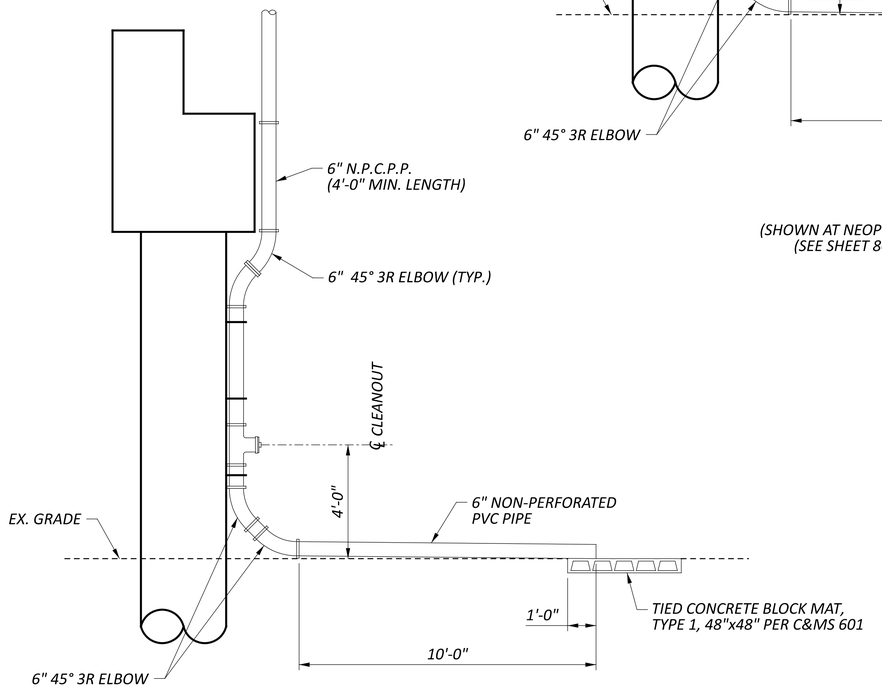

VIEW A-A

(SHOWN AT PLANTER DRAINAGE OUTLET)

DRAINAGE AND WATERPROOFING DETAILS - 3
BRIDGE NO. HAM-75-0104
LINN STREET OVER IR-75 AND GEST STREET

SFN 3109098
DESIGN AGENCY B&N burgessniple.com
DESIGNER BES | CHECKER XAC
REVIEWER JCS 12/18/24
PROJECT ID 122048
SUBSET 73 | TOTAL 88
SHEET P.315 | TOTAL P.421

HAM-75-1.05

MODEL: Sheet PAPERSIZE: 34x22 (in.) DATE: 8/28/2025 TIME: 9:57:04 AM PLTDRV: OHDOT_PDF.pltcfg PENTBL: OHDOT_UTPen.tbl USER: WORKSPACE: OHDOTCEv02 WORKSET: 122048 PRODUCT: OpenRoadsDesigner 10.12.02.4
pw:\\ohiodot-pw.bentley.com:ohiodot-pw-02\Documents\01 Active Projects\District 08\Hamilton\122048\401-Engineering_BurgessNiple\Structures\SFN_3109098\Sheets\122048_SFN_3109098_SM021.dgn

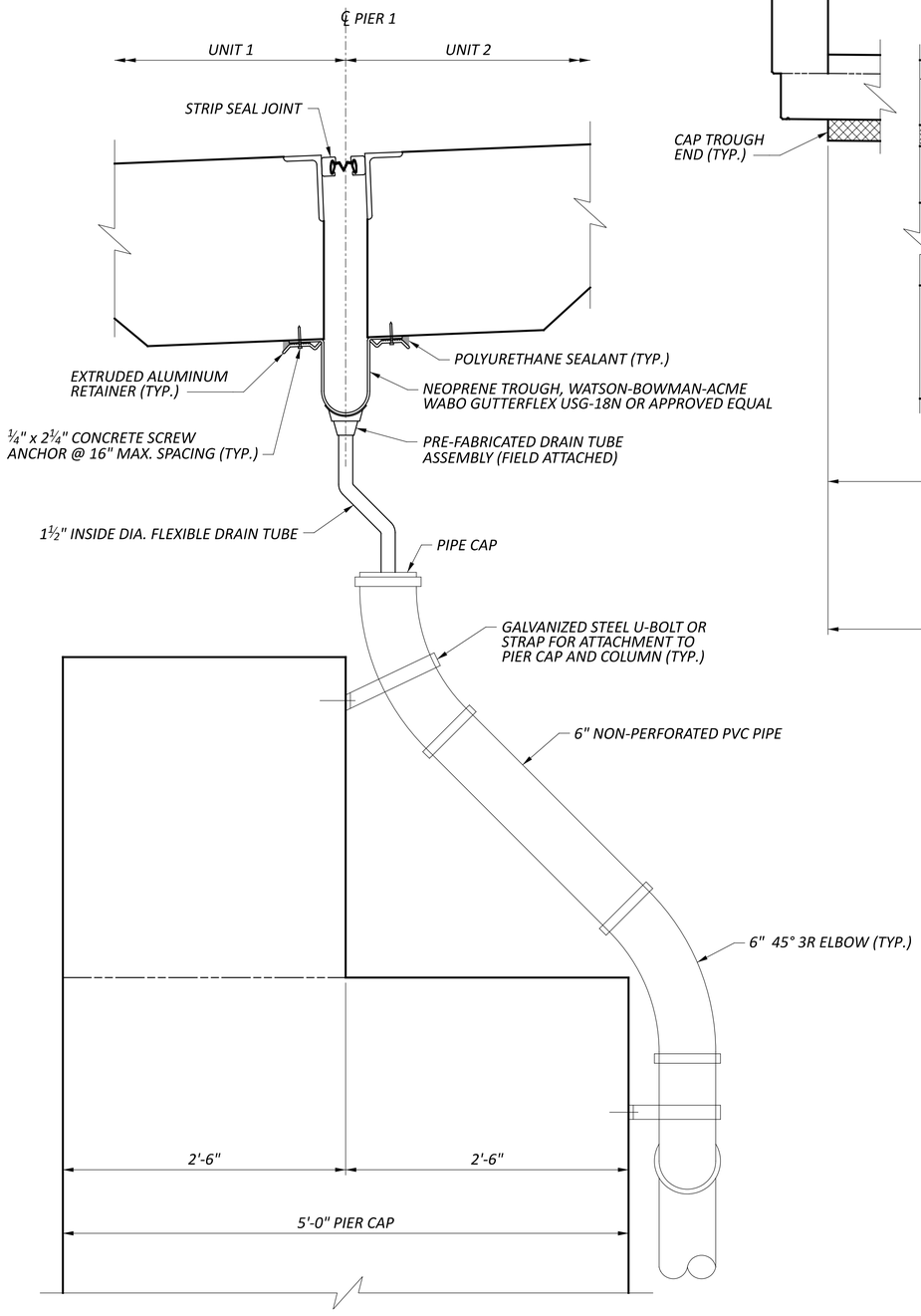

SECTION B-B

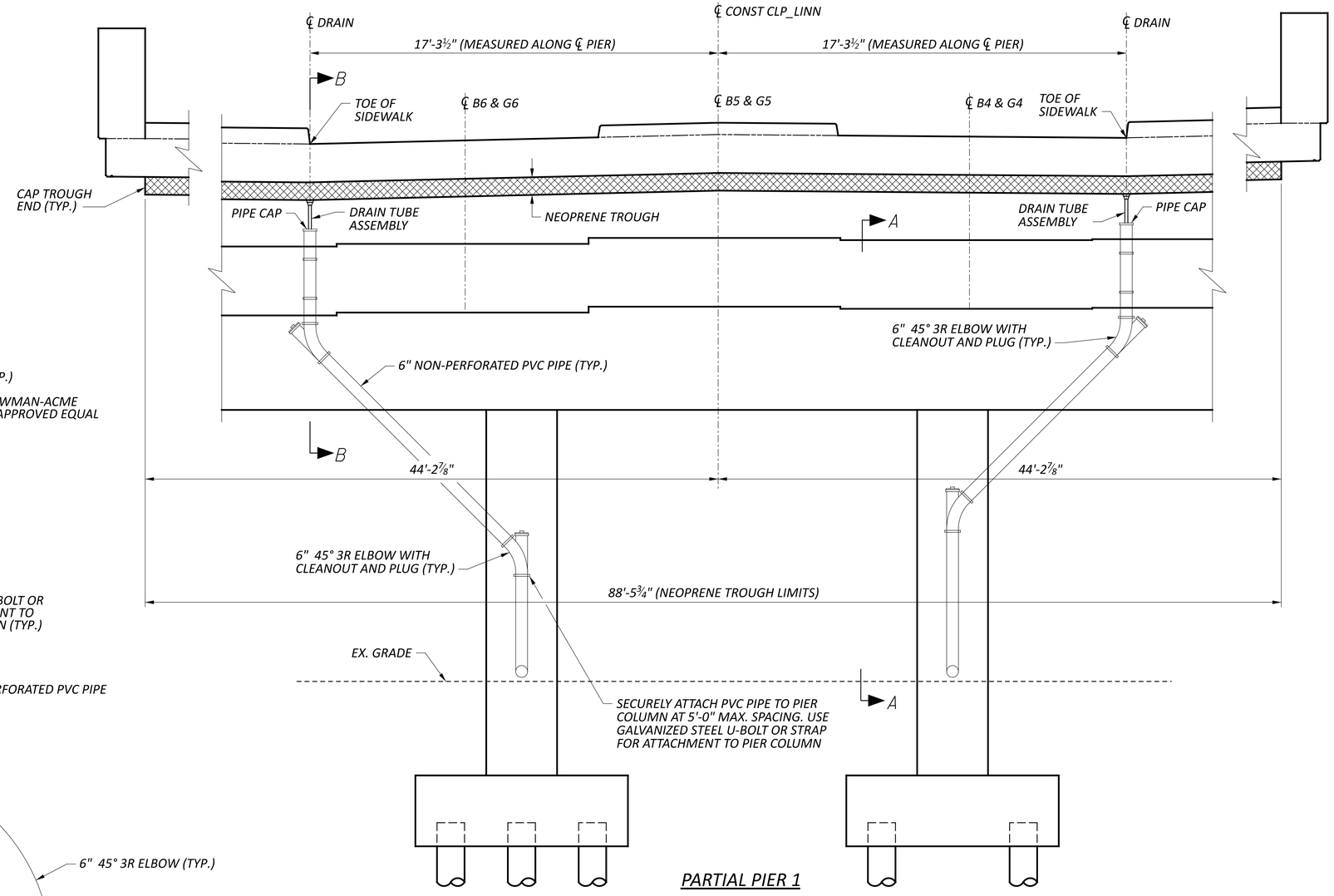

PARTIAL PIER 1 ELEVATION

(LOOKING DOWN STATION)

ITEM 518 - STRUCTURE DRAINAGE, MISC.: NEOPRENE TROUGH AND DRAINAGE OUTLETS:

THIS ITEM SHALL INCLUDE THE NEOPRENE TROUGH, INCLUDING ATTACHMENT TO THE UNDERSIDE OF THE DECK, AND ALL COMPONENTS OF THE DRAINAGE SYSTEM BELOW THE TROUGH, INCLUDING THE VERTICAL AND HORIZONTAL RUNS OF 6" NON-PERFORATED PVC PIPE, PIPE ELBOWS, TEES, CLEANOUTS, PLUGS, AND TIED CONCRETE BLOCK MAT. FURNISH NON-PERFORATED PVC PIPES PER CMS 707.41 . FOLLOW MANUFACTURER'S INSTRUCTIONS FOR INSTALLATION OF TROUGH.

METHOD OF MEASUREMENT:
THE DEPARTMENT WILL MEASURE THE NEOPRENE TROUGH BY THE NUMBER OF FEET, FROM END TO END OF TROUGH.

BASIS OF PAYMENT:
THE NEOPRENE TROUGH WILL BE PAID FOR AT THE CONTRACT PRICE PER FOOT, WHICH SHALL INCLUDE THE TROUGH, ATTACHMENT TO THE UNDERSIDE OF THE DECK, AND ALL COMPONENTS OF THE DRAINAGE SYSTEM BELOW THE TROUGH INCLUDING VERTICAL AND HORIZONTAL RUNS OF 6" NON-PERFORATED PVC PIPE, PIPE ELBOWS, TEES, CLEANOUTS, PLUGS, TIED CONCRETE BLOCK MAT AND OTHER INCIDENTALS AS SHOWN ON THIS SHEET AND AS NECESSARY TO COMPLETE THE WORK IN A SATISFACTORY AND WORKMANLIKE MANNER.

NOTES:

1. *FOR VIEW A-A, SEE SHEET 73/88 .*

NEOPRENE TROUGH DETAILS AT PIER 1
BRIDGE NO. HAM-75-0104
LINN STREET OVER IR-75 AND GEST STREET

SFN	3109098
DESIGN AGENCY	B&N burgessniple.com
DESIGNER	BES
CHECKER	MAB
REVIEWER	JCS 12/18/24
PROJECT ID	122048
SUBSET	80
TOTAL	88
SHEET	P.322
TOTAL	P.421

HAM-75-1.05

MODEL: Sheet PAPERSIZE: 34x22 (in.) DATE: 8/28/2025 TIME: 10:05:14 AM PLTDRV: OHDOT_PDF.pltcfg PENTBL: OHDOT_UTPen.tbl USER: WORKSPACE: OHDOTCEv02 WORKSET: 122048 PRODUCT: OpenRoadsDesigner 10.12.02.4
pw:\\ohiodot-pw.bentley.com:ohiodot-pw-02\Documents\01 Active Projects\District 08\Hamilton\122048\401-Engineering_BurgessNiple\Structures\SFN_3109098\Sheets\122048_SFN_3109098_SX006.dgn

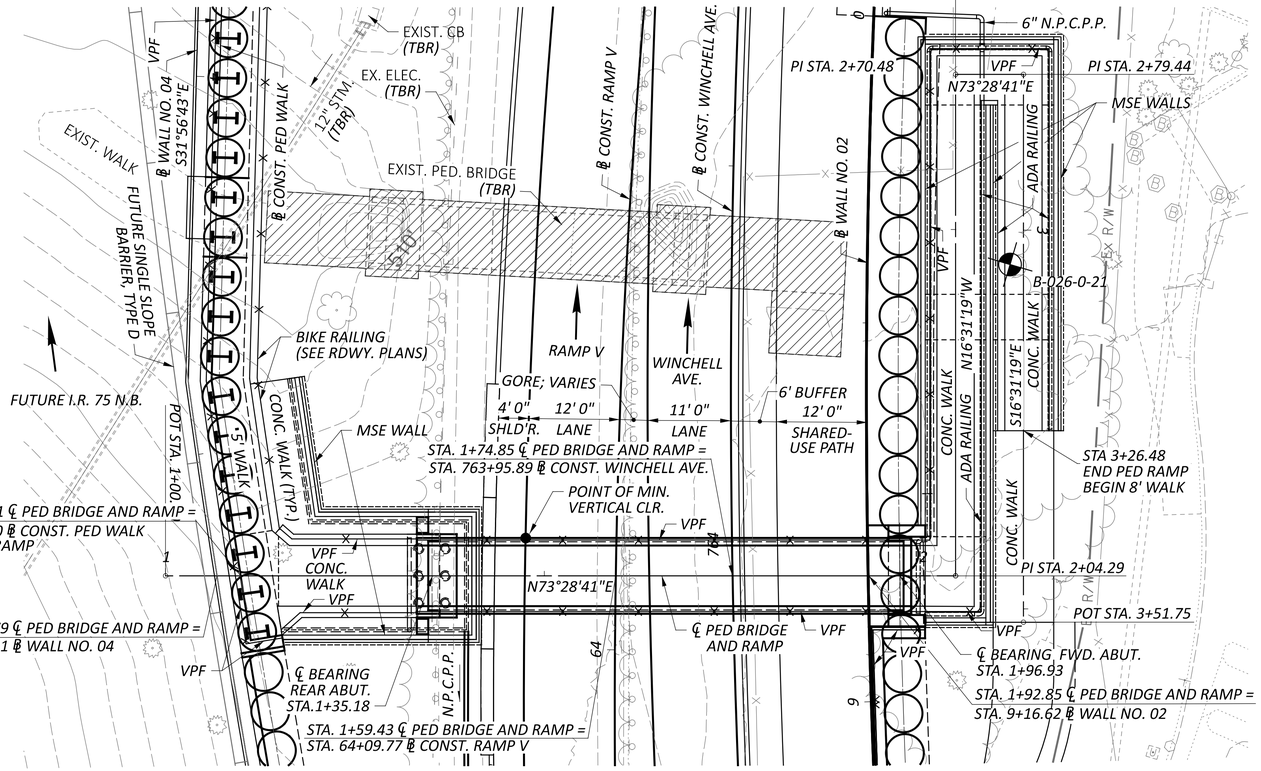

1	09/01/25	SHEET REVISIONS
ADDM' NO.	DATE	DESCRIPTION
DATE COMPLETED		

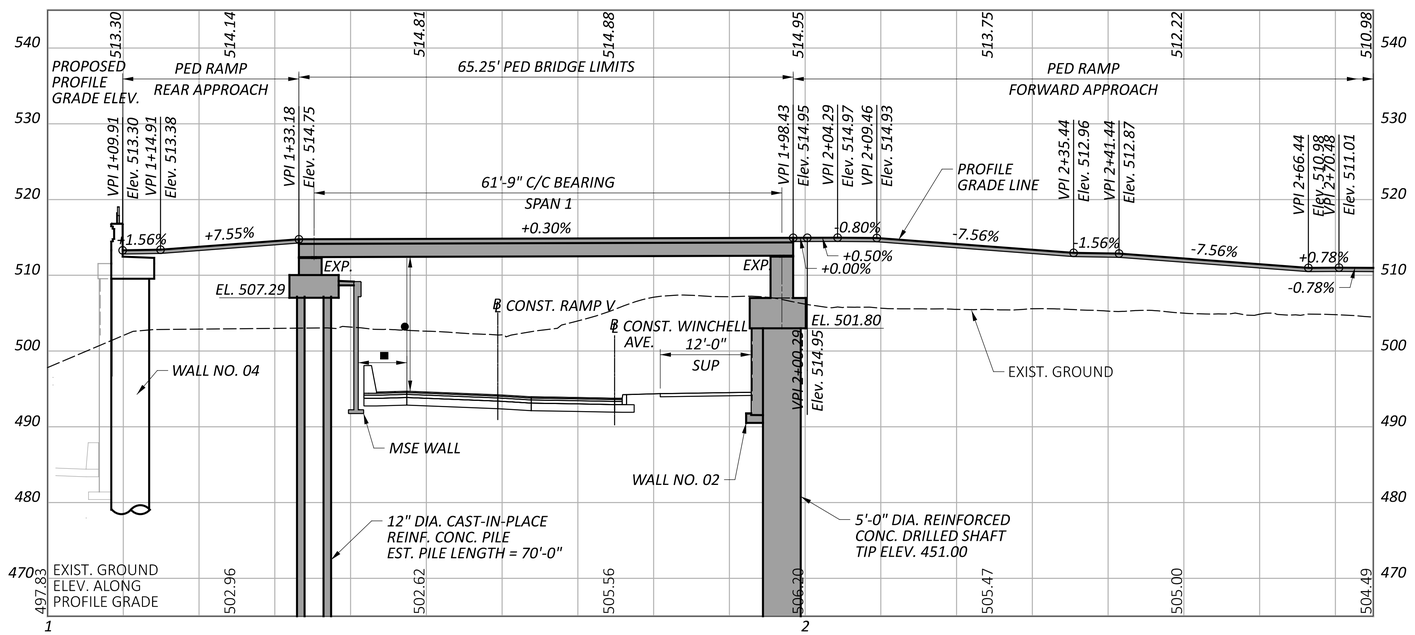

BENCHMARK DATA

BM #1 STA. 63+71.02 ,	ELEV. 491.77 ,	OFFSET 308.82' LT.,	IRON PIN
BM #2 STA. 63+92.86 ,	ELEV. 492.97 ,	OFFSET 251.23' LT.,	MAG SPIKE
BM #3 STA. 63+56.30 ,	ELEV. 490.92 ,	OFFSET 106.06' LT.,	MAG SPIKE

FOR ADDITIONAL BENCHMARK INFORMATION. SEE ROADWAY PLAN SHEET P.2

NOTES

EARTHWORK LIMITS SHOWN ARE APPROXIMATE. ACTUAL SLOPES SHALL CONFORM TO PLAN CROSS SECTIONS.

LEGEND

- PROJECT BORING LOCATION
- ● 17'-6" REQUIRED MINIMUM VERTICAL CLEARANCE
  17'-6⅛" ACTUAL MINIMUM VERTICAL CLEARANCE.
- ■ 5'-8" REQUIRED MINIMUM HORIZONTAL CLEARANCE
  6'-3¾" ACTUAL MINIMUM HORIZONTAL CLEARANCE
- EXISTING STRUCTURE TO BE REMOVED

TBR = TO BE REMOVED
SUP = SHARED-USE PATH

EXISTING STRUCTURE

TYPE: REINFORCED CONCRETE RIGID FRAME
SPANS: 36'-0"± CLEAR FACE/FACE PIERS
WIDTH: 8'-0"± TOE/TOE CURB
LOADING: 85 PSF PEDESTRIAN LOAD
SKEW: NONE
WEARING SURFACE: NONE
APPROACH SLABS: NONE
ALIGNMENT: TANGENT
CROWN: 0.0104 FT/FT
STRUCTURE FILE NUMBER: 3109151
DATE BUILT: 1961
DISPOSITION: TO BE REMOVED

PROPOSED STRUCTURE

TYPE: SINGLE SPAN, PRESTRESSED CONCRETE BOX BEAMS WITH COMPOSITE REINFORCED CONCRETE DECK SUPPORTED ON CONCRETE STUB ABUTMENT SUPPORTED ON PILES BEHIND MSE WALL EMBANKMENT AND STUB ABUTMENT SUPPORTED ON DRILLED SHAFTS

SPANS: 61'-9" C/C BEARINGS
WIDTH: 8'-0" TOE/TOE CURB
LOADING: 90 PSF PEDESTRIAN LOAD
SKEW: NONE
WEARING SURFACE: NONE
APPROACH SLABS: NONE
ALIGNMENT: TANGENT
CROWN: NONE
DECK AREA: 653 SF

COORDINATES: LATITUDE 39°06'25.27" N
LONGITUDE 84°31'50.13" W

SITE PLAN
BRIDGE NO. HAM-75-0123E
PEDESTRIAN BRIDGE OVER RAMP V AND WINCHELL AVE.

SFN	3109152
DESIGN AGENCY	Palmer ENGINEERING
	8350 E. KEMPER ROAD SUITE B CINCINNATI, OH 45249 (513) 469-1600
DESIGNER	RJB
CHECKER	TES
REVIEWER	BJF 04/11/25
PROJECT ID	122048
SUBSET	1
TOTAL	22
SHEET	P.331
TOTAL	P.421

HAM-IR75-1.05

MODEL: 10 Scale Sheet PAPERSIZE: 34x22 (in.) DATE: 8/27/2025 TIME: 12:56:38 PM PLTDRV: OHDOT_PDF.pltcfg PENTBL: OHDOT_Pen.tbl USER: swalker@palmernet.com WORKSPACE: OHDOTCEx02 WORKSET: 122048 PRODUCT: OpenRoadsDesigner 24.00.00.205
pw:\\ohiodot-pw.bentley.com:ohiodot-pw-02\Documents\01 Active Projects\District 08\Hamilton\122048\402-Engineering_PalmerEngineering\Structures\SFN_3109152_SP001.dgn

STANDARD DRAWINGS AND SUPPLEMENTAL SPECIFICATIONS

REFER TO THE FOLLOWING STANDARD BRIDGE DRAWINGS:

PSBD-2-07 REVISED 7/20/18
VPF-1-24 REVISED 1/17/25

AND TO THE FOLLOWING SUPPLEMENTAL SPECIFICATION(S):

840 DATED 1/17/25

DESIGN SPECIFICATIONS

THIS STRUCTURE CONFORMS TO THE "LRFD BRIDGE DESIGN SPECIFICATIONS" ADOPTED BY THE AMERICAN ASSOCIATION OF STATE HIGHWAY AND TRANSPORTATION OFFICIALS, 9TH EDITION, LRFD GUIDE SPECIFICATIONS FOR THE DESIGN OF PEDESTRIAN BRIDGES, 2009, AND THE ODOT BRIDGE DESIGN MANUAL, 2020.

REDUNDANCY

THE FOLLOWING ITEM WAS CONSIDERED NON-REDUNDANT FOR DESIGN AND INCLUDE A LOAD MODIFIER EQUAL TO 1.05 IN ACCORDANCE WITH THE AASHTO LRFD BRIDGE DESIGN SPECIFICATIONS, ARTICLE 1.3.4: PS BOX BEAMS.

OPERATIONAL IMPORTANCE

A LOAD MODIFIER OF 1.05 HAS BEEN ASSUMED FOR THE DESIGN OF THE PRESTRESSED BOX BEAMS IN ACCORDANCE WITH THE AASHTO LRFD BRIDGE DESIGN SPECIFICATIONS, ARTICLE 1.3.5 AND THE ODOT BRIDGE DESIGN MANUAL, 2020.

DESIGN LOADING

PEDESTRIAN LIVE LOAD: 0.090 KSF

DESIGN DATA

CONCRETE CLASS QC1 - COMPRESSIVE STRENGTH 4.0 KSI
(SUBSTRUCTURE)
CONCRETE CLASS QC2 - COMPRESSIVE STRENGTH 4.5 KSI
(SUPERSTRUCTURE)
CONCRETE CLASS QC5, WITH 1" MAX. AGGREGATE SIZE - COMPRESSIVE STRENGTH 4.5 KSI
(DRILLED SHAFTS)

GALVANIZED STEEL REINFORCEMENT - MIN. YIELD STRENGTH - 60 KSI

STEEL CIP PILES – ASTM A252 GRADE 2 - YIELD STRENGTH 35 KSI

CONCRETE FOR PRESTRESSED BEAMS:
COMPRESSIVE STRENGTH (FINAL) - 7.0 KSI
COMPRESSIVE STRENGTH (RELEASE) - 5.0 KSI

PRESTRESSING STRAND:
AREA = 0.167 SQ. IN.
ULTIMATE STRENGTH = 270 KSI
INITIAL STRESS = 202.5 KSI (LOW RELAXATION STRANDS)

MONOLITHIC WEARING SURFACE

MONOLITHIC WEARING SURFACE IS ASSUMED, FOR DESIGN PURPOSES, TO BE 1 INCH THICK.

ITEM 202 - STRUCTURE REMOVED, OVER 20' SPAN

REMOVE THE EXISTING PEDESTRIAN BRIDGE AT THE LOCATION SHOWN ON SHEET 1/22 *IN ITS ENTIRETY.*

LATERALLY LOADED DRILLED SHAFTS, 60" TANGENT DRILLED SHAFT WALL - SHAFTS 138-141 - FORWARD ABUTMENT

THE MAXIMUM FACTORED LATERAL LOAD AND BENDING MOMENT TO BE SUPPORTED BY EACH DRILLED SHAFT ARE 52 KIPS, AND 281 KIP-FEET, RESPECTIVELY. THESE LOADS PRODUCE A MAXIMUM FACTORED BENDING MOMENT OF 2,443 KIP-FEET, AND A MAXIMUM FACTORED SHEAR OF 137 KIPS, WITHIN THE DRILLED SHAFT.

FRICTION DRILLED SHAFTS

THE MAXIMUM FACTORED LOAD TO BE SUPPORTED BY EACH DRILLED SHAFT IS 271 KIPS AT THE ABUTMENTS. THIS LOAD IS RESISTED BY FRICTIONAL SIDE RESISTANCE ALONG THE LENGTH OF THE DRILLED SHAFT AND BY THE TIP RESISTANCE. THE FACTORED SIDE RESISTANCE IS 289 KIPS, ASSUMED TO ACT ALONG THE BOTTOM 32 FEET OF THE DRILLED SHAFT, AND THE FACTORED TIP RESISTANCE IS 18 KIPS.

PILES DESIGN LOADS (ULTIMATE BEARING VALUE)

THE ULTIMATE BEARING VALUE IS 80 KIPS PER PILE FOR THE REAR ABUTMENT PILES.

ABUTMENT PILES:
6 PILES 75 FEET LONG, ORDER LENGTH.
1 DYNAMIC LOAD TESTING ITEM.

PROVIDE PLAIN CYLINDRICAL CASINGS WITH A MINIMUM PILE THICKNESS OF 0.25 INCH FOR THE CAST-IN-PLACE REINFORCED CONCRETE PILES.

ITEM 507 - CAST-IN-PLACE REINFORCED CONCRETE PILES, DRIVEN, AS PER PLAN

THIS ITEM INCLUDES THE FURNISHING AND PLACEMENT OF THE PILE SLEEVES PRIOR TO DRIVING PILES.

ITEM 511 - CLASS QC2 CONCRETE, AS PER PLAN.

THIS ITEM INCLUDES THE POLYSTYRENE AT THE ABUTMENT SEATS. FURNISH THE POLYSTYRENE MATERIAL MEETING THE REQUIREMENTS OF ASTM C578 TYPE IV. NEATLY CUT MATERIAL AS NECESSARY TO ALLOW FOR PROPER INSTALLATION. JOINTS AT ABUTTING PIECES SHALL BE SEALED WITH DUCT TAPE. ALLOWABLE TOLERANCE FOR THE TOTAL THICKNESS OF THE MATERIAL SHALL BE -0", +1/2". DO NOT PLACE MORE THAN TWO LAYERS OF POLYSTYRENE TO ACHIEVE TOTAL THICKNESS.

ITEM 512 - SEALING OF CONCRETE SURFACES, AS PER PLAN, (PERMANENT GRAFFITI PROTECTION)

APPLY A PERMANENT GRAFFITI COATING QUALIFIED ACCORDING TO S1083 THAT IS COMPATIBLE WITH THE CONCRETE SEALER OVER WHICH IT IS APPLIED. APPLY THE GRAFFITI COATING IN ACCORDANCE WITH THE MANUFACTURER'S PRINTED INSTRUCTIONS.

ITEM 512 - SEALING OF CONCRETE SURFACES (EPOXY-URETHANE)

SEAL SURFACES OF THE CAST-IN-PLACE CONCRETE WALL FACING, PILASTERS, RAILING AND COPING AS SHOWN IN THE PLANS WITH AN EPOXY URETHANE SEALER ACCORDING TO C&MS 512. COLOR SHALL BE LIGHT NEUTRAL (FEDERAL STD. 595C #17778)

ITEM 517 - RAILING, MISC.: PEDESTRIAN ADA COMPLIANT RAILING

THIS ITEM SHALL CONSIST OF FURNISHING AND INSTALLING A RAILING AT THE FORWARD APPROACH MSE RAMP THAT IS COMPLIANT WITH THE AMERICANS AND DISABILITIES ACT (ADA) STANDARDS, U.S. ACCESS BOARD PROPOSED GUIDELINES FOR PEDESTRIAN FACILITIES IN THE PUBLIC RIGHT-OF-WAY (PROWAG) SECTION R-409, AND ODOT MULTIMODAL DESIGN SECTION 4.7.3 AND 5.4 AND THE ODOT MULTIMODAL DESIGN. THIS INCLUDES BUT IS NOT LIMITED TO THE POST DESIGN, THE HANDRAIL DESIGN, AND TERMINATIONS AND EXTENSIONS.

THE RAILING AND OTHER DESIGN ELEMENTS SHALL ALSO BE DESIGNED FOR LOADS IN ACCORDANCE WITH AASHTO 13.8.2. THIS INCLUDES BUT ITS NOT LIMITED TO THE POST, HANDRAIL, BASEPLATE, ANCHOR BOLTS AND WELDS AND OTHER CONNECTION ITEMS. GALVANIZE ALL PARTS OF STEEL AND IRON RAILING, BASEPLATES AND ANCHOR BOLTS.

THE POST, RAILS, BASE PLATES, AND ANCHOR BOLTS SHALL BE PAINTED BLACK. PAINTING SHALL BE INCLUDED WITH THIS ITEM FOR PAYMENT.

PILE DRIVING CONSTRAINTS - REAR ABUTMENT

PRIOR TO DRIVING ABUTMENT PILES TO THE ULTIMATE BEARING VALUE (UBV), CONSTRUCT THE MSE WALL AND THE BRIDGE APPROACH EMBANKMENT BEHIND THE ABUTMENT UP TO THE BOTTOM OF THE FOOTING UNTIL REAR APPR. MSE WALL POT STA. 0+71.06 FOR LEFT SIDE AND UNTIL REAR APPR. MSE WALL POT STA. 1+34.21 FOR RIGHT SIDE. THE CONTRACTOR MAY PRE-DRIVE ABUTMENT PILES BEFORE CONSTRUCTING MSE WALLS. PRE-DRIVING CONSISTS OF INSTALLING THE ABUTMENT PILES INTO THE SOIL ONLY AS FAR AS NECESSARY SO THAT THE PILE WILL REMAIN VERTICAL DURING MSE WALL CONSTRUCTION. IF PRE-DRIVING PILES, INSTALL PILE SLEEVES AROUND PILES BEFORE CONSTRUCTING THE MSE WALL. PROVIDE AT LEAST 3-FT OF PILE ABOVE THE TOP OF THE PILE SLEEVE TO MEET THE REQUIREMENTS OF C&MS 507.09 REGARDING SPLICES. IN LIEU OF SPECIFYING A WAITING PERIOD, A DOWNDRAG ANALYSIS WAS PERFORMED AND IT WAS DETERMINED THAT THE DOWNDRAG LOADS ARE NOT ANTICIPATED TO BE A CONCERN FOR THE PROJECT PROPOSED PILE FOUNDATIONS. THEREFORE, NO WAITING PERIOD IS REQUIRED.

IF NOT PRE-DRIVING ABUTMENT PILES, INSTALL THE ABUTMENT PILES THROUGH PILE SLEEVES AFTER THE ABOVE REQUIRED MSE WALL AND EMBANKMENT HAVE BEEN CONSTRUCTED.

PROPRIETARY RETAINING WALL DATA

THE PROPRIETARY WALL SUPPLIER SHALL DESIGN THE INTERNAL STABILITY OF A MECHANICALLY STABILIZED EARTH (MSE) WALL IN ACCORDANCE WITH SS840 TO SUPPORT THE ABUTMENT. THE DESIGN FOR INTERNAL STABILITY SHALL INCLUDE A NOMINAL (I.E. UNFACTORED) HORIZONTAL STRIP LOAD DUE TO FRICTION (FR) FROM THE SUPERSTRUCTURE OF 3.3 K/FT APPLIED PERPENDICULAR TO THE FACE OF WALL AT THE BASE OF THE CONCRETE FOOTING. THIS STRIP LOAD DOES NOT INCLUDE EARTH PRESSURE LOADS FROM THE ABUTMENT BACKFILL. HOWEVER, THE PROPRIETARY WALL SUPPLIER SHALL INCLUDE EARTH PRESSURE LOADS FROM THE ABUTMENT BACKFILL IN THE DESIGN CALCULATIONS.

1	*09/01/25*	*SHEET REVISIONS*
ADDM' NO.	*DATE*	*DESCRIPTION*
DATE COMPLETED		

ITEM 607 - VANDAL PROTECTION FENCE, 8', STRAIGHT, COATED FABRIC, AS PER PLAN
ITEM SPECIAL - VANDAL PROTECTION FENCE, 12'

THESE ITEMS SHALL CONSIST OF FURNISHING AND INSTALLING 8 AND 12 FOOT TALL VANDAL PROTECTION FENCES. VANDAL FENCE SHALL HAVE A BLACK PVC COATING. PVC COATING SHALL BE BLACK IN COLOR CLOSELY APPROACHING FEDERAL COLOR NUMBER 17038. VANDAL FENCE POSTS, RAILS, HANDRAIL, HADRAIL SLEEVE AND PLATE ASSEMBLY, BASE PLATES, ANCHOR BOLTS AND ANY OTHER VANDAL FENCE ITEMS NOT RECEIVING A PVC COATING SHALL BE PAINTED BLACK. PAINTING AND PVC COATING SHALL BE INCLUDED WITH THIS ITEM FOR PAYMENT.

PAYMENT FOR THIS WORK INCLUDES ALL MATERIAL, LABOR, EQUIPMENT AND ANY MISCELLANEOUS APPURTENANCES NECESSARY TO COMPLETE INSTALLATION IN ACCORDANCE WITH THE PLANS, AND STANDARD CONSTRUCTION DRAWING VPF-1-24. THE DEPARTMENT WILL PAY FOR ACCEPTED QUANTITIES AT THE CONTRACT UNIT PRICE BID FOR PER FOOT FOR ITEMS 607 - VANDAL PROTECTION FENCE, 8', AS PER PLAN AND SPECIAL - VANDAL PROTECTION FENCE, 12' .

ITEM 840 - AESTHETIC SURFACE TREATMENT

USE CONCRETE FORM LINERS TO CREATE AESTHETIC SURFACE TREATMENT ON THE MSE WALL FACING PANELS. THE FORM LINER SHALL BE PATTERN 1107, MISSION FLUTE FROM SPEC FORMLINERS, INC. OR APPROVED EQUAL. THE FORM LINER RELIEF DEPTH SHALL BE 1.5". FABRICATE AND INSTALL THE MSE WALL PANELS SUCH THAT THE VERTICAL FINS AND VALLEYS IN THE FRACTURE FIN AESTHETIC TREATMENT ALIGN VERTICALLY ACROSS ADJACENT PANELS FROM THE TOP OF THE WALL TO THE BOTTOM OF THE WALL. USE THE SAME FRACTURED FIN PATTERN ON ALL WALLS ON THE PROJECT.

FORM LINERS SHALL BE CAPABLE OF WITHSTANDING ANTICIPATED CONCRETE POUR PRESSURES WITHOUT LEAKAGE OR CAUSING PHYSICAL DEFECTS. FORM LINERS SHALL BE REMOVABLE WITHOUT CAUSING CONCRETE SURFACE DAMAGE. USE FORM RELEASE PRODUCT AS RECOMMENDED BY THE FORM LINER MANUFACTURER. USE MANUFACTURER'S APPLICATION RATES AND ALL OTHER MANUFACTURER'S INSTRUCTIONS. FORM RELEASE PRODUCT SHALL BE FULLY COMPATIBLE WITH THE FORM LINER MATERIAL AND EPOXY-URETHANE SEALER TO BE APPLIED TO THE FINISHED SURFACES.

ALIGN THE FORM LINER PATTERNS ACROSS ALL JOINTS BETWEEN CONCRETE FACING.

PLAN ABBREVIATIONS

ABUT.	*ABUTMENT*
BF	*BACK FACE (BACKFILL SIDE)*
BRG.	*BEARING*
C/C	*CENTER TO CENTER*
C.J.	*CONSTRUCTION JOINT*
DIA.	*DIAMETER*
EL.	*ELEVATION*
EF	*EACH FACE*
EQ. SPA.	*EQUALLY SPACED*
F.A.	*FORWARD ABUTMENT*
FF	*FRONT FACE (CREEK SIDE)*
MAX.	*MAXIMUM*
MIN.	*MINIMUM*
N.P.C.P.P.	*NON-PERFORATED CORRUGATED PLASTIC PIPE*
O/O	*OUT TO OUT*
PEJF	*PREFORMED EXPANSION JOINT FILLER*
P.C.P.P.	*PERFORATED CORRUGATED PLASTIC PIPE*
R.A.	*REAR ABUTMENT*
SPA.	*SPACE, SPACES, SPACED*
STA.	*STATION*
T.O.S.	*TOP OF SLOPE*
TYP.	*TYPICAL*

GENERAL NOTES
BRIDGE NO. HAM-75-0123E
PEDESTRIAN BRIDGE OVER RAMP V AND WINCHELL AVE.

SFN 3109152

DESIGN AGENCY
Palmer ENGINEERING
8350 E. KEMPER ROAD
SUITE B
CINCINNATI, OH 45249
(513) 469-1600

DESIGNER	CHECKER
RJB	TES

REVIEWER: BJF 04/11/25

PROJECT ID: 122048

SUBSET	TOTAL
2	22

SHEET	TOTAL
P.332	P.421

HAM-IR75-1.05

MODEL: Sheet PAPERSIZE: 34x22 (in.) DATE: 8/27/2025 TIME: 12:57:16 PM PLTDRV: OHDOT_PDF.pltcfg PENTBL: OHDOT_Pen.tbl USER: swalker@palmernet.com WORKSPACE: OHDOTCEx02 WORKSET: 122048 PRODUCT: OpenRoadsDesigner 24.00.00.205
pw:\\ohiodot-pw.bentley.com:ohiodot-pw-02\Documents\01 Active Projects\District 08\Hamilton\122048\402-Engineering_PalmerEngineering\Structures\SFN_3109152_SN001.dgn

ESTIMATED QUANTITIES

ITEM	ITEM EXT.	TOTAL 02/IMS/13	UNIT	DESCRIPTION	ABUT	CALC: RJB DATE: 8/18/25 SUPER	CALC: RJB DATE: 8/18/25 GENERAL	CHECK: CVK DATE: 8/18/25 MSE	CHECK: CVK DATE: 8/18/25 SHEET
202	11002	LS		STRUCTURE REMOVED, OVER 20 FOOT SPAN			LS		
503	11100	LS		COFFERDAMS AND EXCAVATION BRACING			LS		
503	21300	LS		UNCLASSIFIED EXCAVATION			LS		
505	11100	LS		PILE DRIVING EQUIPMENT MOBILIZATION			LS		
507	00501	420	FT	12" CAST-IN-PLACE REINFORCED CONCRETE PILES, DRIVEN, AS PER PLAN	420				2 | 22
507	00550	450	FT	12" CAST-IN-PLACE REINFORCED CONCRETE PILES, FURNISHED	450				
509	26000	7,791	LB	GALVANIZED STEEL REINFORCEMENT	3,273	4,518			
511	31611	16	CY	CLASS QC2 CONCRETE, SUPERSTRUCTURE, AS PER PLAN		16			2 | 22
511	43510	41	CY	CLASS QC1 CONCRETE, ABUTMENT INCLUDING FOOTING	41				
511	34448	10	CY	CLASS QC2 CONCRETE, BRIDGE DECK (PARAPET)		10			
512	10001	470	SY	SEALING OF CONCRETE SURFACES, AS PER PLAN	44	116		310	2 | 22
512	33000	6	SY	TYPE 2 WATERPROOFING	6				
515	12040	3	EACH	PRESTRESSED CONCRETE COMPOSITE BOX BEAM BRIDGE MEMBERS, LEVEL 1, CB21-36 (62'-9" Long)	3				
516	13200	33	SF	½" PREFORMED EXPANSION JOINT FILLER			33		
516	13600	32	SF	1" PREFORMED EXPANSION JOINT FILLER			32		
516	13900	23	SF	2" PREFORMED EXPANSION JOINT FILLER	23				
516	14020	28	FT	SEMI-INTEGRAL ABUTMENT EXPANSION JOINT SEAL	28				
516	31010	26	FT	2" DEEP JOINT SEALER			26		
516	43100	12	EACH	ELASTOMERIC BEARING WITH INTERNAL LAMINATES ONLY (NEOPRENE) (8.5"x8"x1.564")	12				
517	76302	166	EACH	RAILING, MISC.:PEDESTRIAN ADA COMPLIANT RAILING			166		2 | 22
518	21200	4	CY	POROUS BACKFILL WITH GEOTEXTILE FABRIC	4				
518	40001	23	FT	6" PERFORATED CORRUGATED PLASTIC PIPE, AS PER PLAN	23				6 & 8 |22
518	40011	130	FT	6" NON-PERFORATED CORRUGATED PLASTIC PIPE, INCLUDING SPECIALS, AS PER PLAN	130				13 | 22
601	21000	6	SY	CONCRETE SLOPE PROTECTION	6				
607	39911	131	FT	VANDAL PROTECTION FENCE, 8' STRAIGHT, COATED FABRIC, AS PER PLAN			131		2 & 7 | 22
SPECIAL	60740000	131	FT	VANDAL PROTECTION FENCE, 12' STRAIGHT, COATED FABRIC		131			2 & 20 | 22
608	13000	1,279	SF	6" CONCRETE WALK			1,279		
608	98000	470	SF	WALKWAY, MISC.: 10" CONCRETE WALK			470		7 & 14 | 22
625	33000	1	EACH	STRUCTURE GROUNDING SYSTEM			1		
840	20000	3,589	SF	MECHANICALLY STABILIZED EARTH WALL				3,589	
840	21000	595	CY	WALL EXCAVATION				595	
840	22000	220	SY	FOUNDATION PREPARATION				220	
840	23000	752	CY	SELECT GRANULAR BACKFILL				752	
840	23050	111	CY	NATURAL SOIL				111	
840	25010	298	FT	6" DRAINAGE PIPE, PERFORATED				298	
840	25020	29	FT	6" DRAINAGE PIPE, NON-PERFORATED				29	
840	26000	293	FT	CONCRETE COPING				293	
840	26050	3,589	SF	AESTHETIC SURFACE TREATMENT				3,589	
840	27000	5	DAY	ON-SITE ASSISTANCE				5	
840	28000	LS		SGB INSPECTION AND COMPACTION TESTING				LS	

ADDM' NO.	DATE	DESCRIPTION
1	09/01/25	SHEET REVISIONS
DATE COMPLETED		

ESTIMATED QUANTITIES
BRIDGE NO. HAM-75-0123E
PEDESTRIAN BRIDGE OVER RAMP V AND WINCHELL AVE.

SFN 3109152

DESIGN AGENCY

Palmer ENGINEERING

8350 E. KEMPER ROAD
SUITE B
CINCINNATI, OH 45249
(513) 469-1600

DESIGNER	CHECKER
CDVK	BJF

REVIEWER: BJF 04/11/25

PROJECT ID: 122048

SUBSET	TOTAL
3	22

SHEET	TOTAL
P.333	P.421

HAM-IR75-1.05

MODEL: Sheet PAPERSIZE: 34x22 (in.) DATE: 8/28/2025 TIME: 7:29:07 AM PLTDRV: OHDOT_PDF.pltcfg PENTBL: OHDOT_Pen.tbl USER: swalker@palmernet.com WORKSPACE: OHDOTCivil02 WORKSET: 122048 PRODUCT: OpenRoadsDesigner 24.00.00.205
pw:\\ohiodot-pw.bentley.com:ohiodot-pw-02\Documents\01 Active Projects\District 08\Hamilton\122048\d02-Engineering_PalmerEngineering\Structures\SFN_3109152\Sheets\122048_SFN_3109152_SQ001.dgn

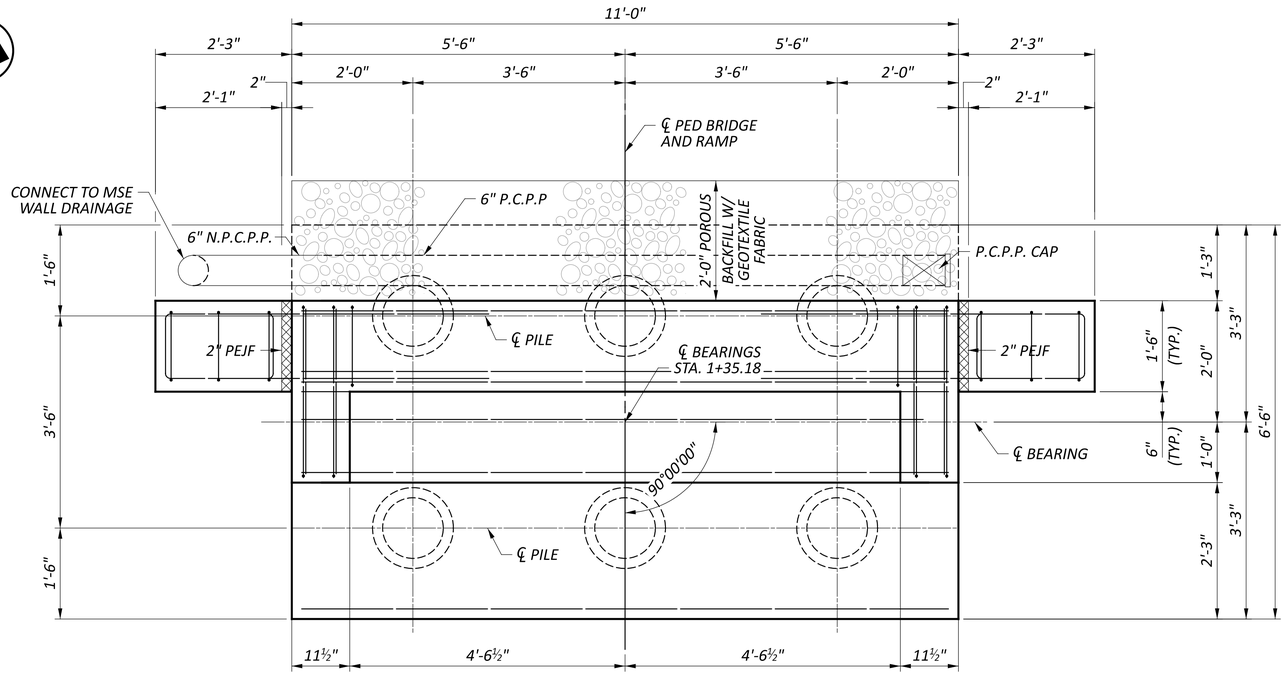

REAR ABUTMENT PLAN

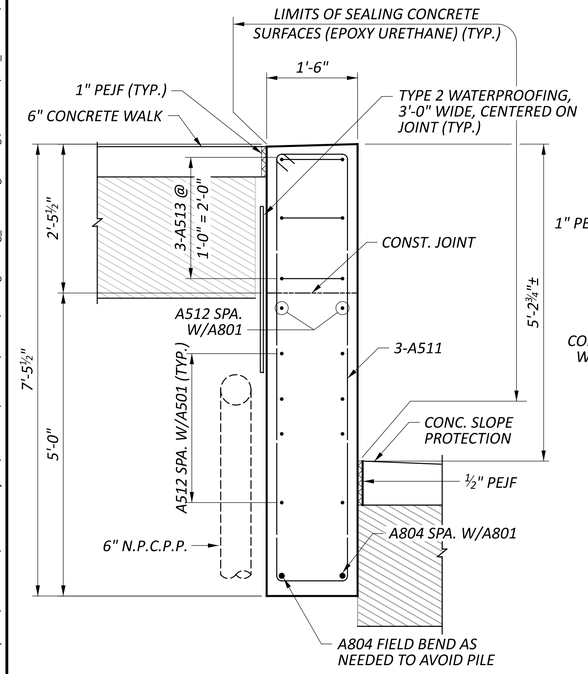

SECTION C-C

LEGEND

ITEM 203 - NATURAL SOIL (2'-0" MIN. DEPTH)

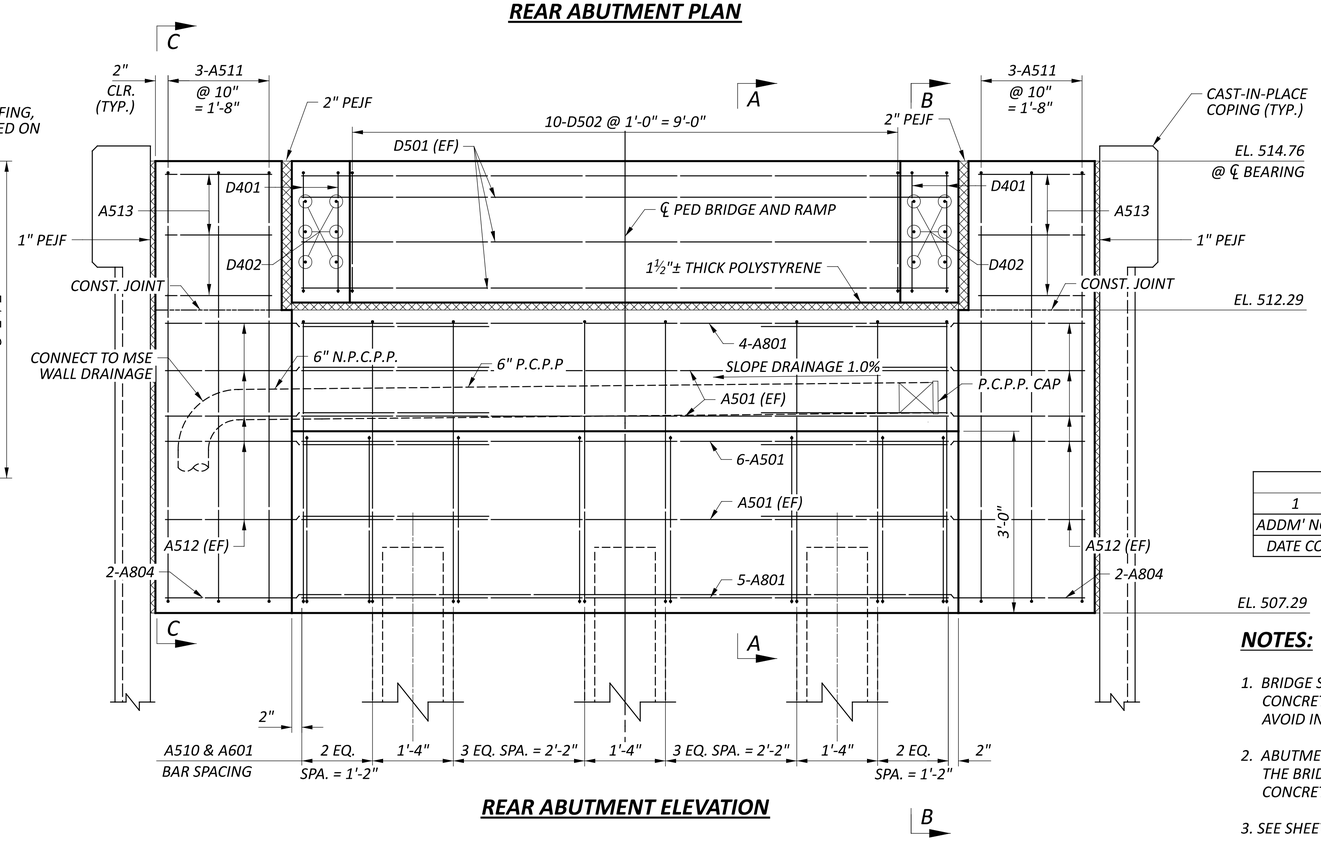

REAR ABUTMENT ELEVATION

NOTES:

1. BRIDGE SEAT REINFORCEMENT, SETTING ANCHORS: ACCURATELY PLACE CONCRETE REINFORCEMENT IN THE VICINITY OF THE BRIDGE SEAT TO AVOID INTERFERENCE WITH DRILLING OF ANCHOR BAR HOLES.
2. ABUTMENT CONCRETE: DO NOT PLACE ABUTMENT CONCRETE ABOVE THE BRIDGE SEAT CONSTRUCTION JOINT UNTIL THE PRESTRESSED CONCRETE BOX BEAMS HAVE BEEN ERECTED.
3. SEE SHEET 5 22 FOR SECTION VIEWS.

1	09/01/25	SHEET REVISIONS
ADDM' NO.	DATE	DESCRIPTION
DATE COMPLETED		

REAR ABUTMENT PLAN AND ELEVATION
BRIDGE NO. HAM-75-0123E
PEDESTRIAN BRIDGE OVER RAMP V AND WINCHELL AVE.

SFN 3109152

DESIGN AGENCY
Palmer ENGINEERING
8350 E. KEMPER ROAD
SUITE B
CINCINNATI, OH 45249
(513) 469-1600

DESIGNER	CHECKER
RJB	TES

REVIEWER BJF 04/11/25

PROJECT ID 122048

SUBSET	TOTAL
4	22

SHEET	TOTAL
P.334	P.421

HAM-IR75-1.05

MODEL: Abutment Plan and Elevation PAPERSIZE: 34x22 (in.) DATE: 8/27/2025 TIME: 12:57:31 PM PLTDRV: OHDOT_PDF.pltcfg PENTBL: OHDOT_Pen.tbl USER: swalker@palmernet.com WORKSPACE: OHDOTCEv02 WORKSET: 122048 PRODUCT: OpenRoadsDesigner 24.00.00.205
pw:\\ohiodot-pw.bentley.com:ohiodot-pw-02\Documents\01 Active Projects\District 08\Hamilton\122048\402-Engineering_PalmerEngineering\Structures\SFN_3109152\Sheets\122048_SFN_3109152_SR001.dgn

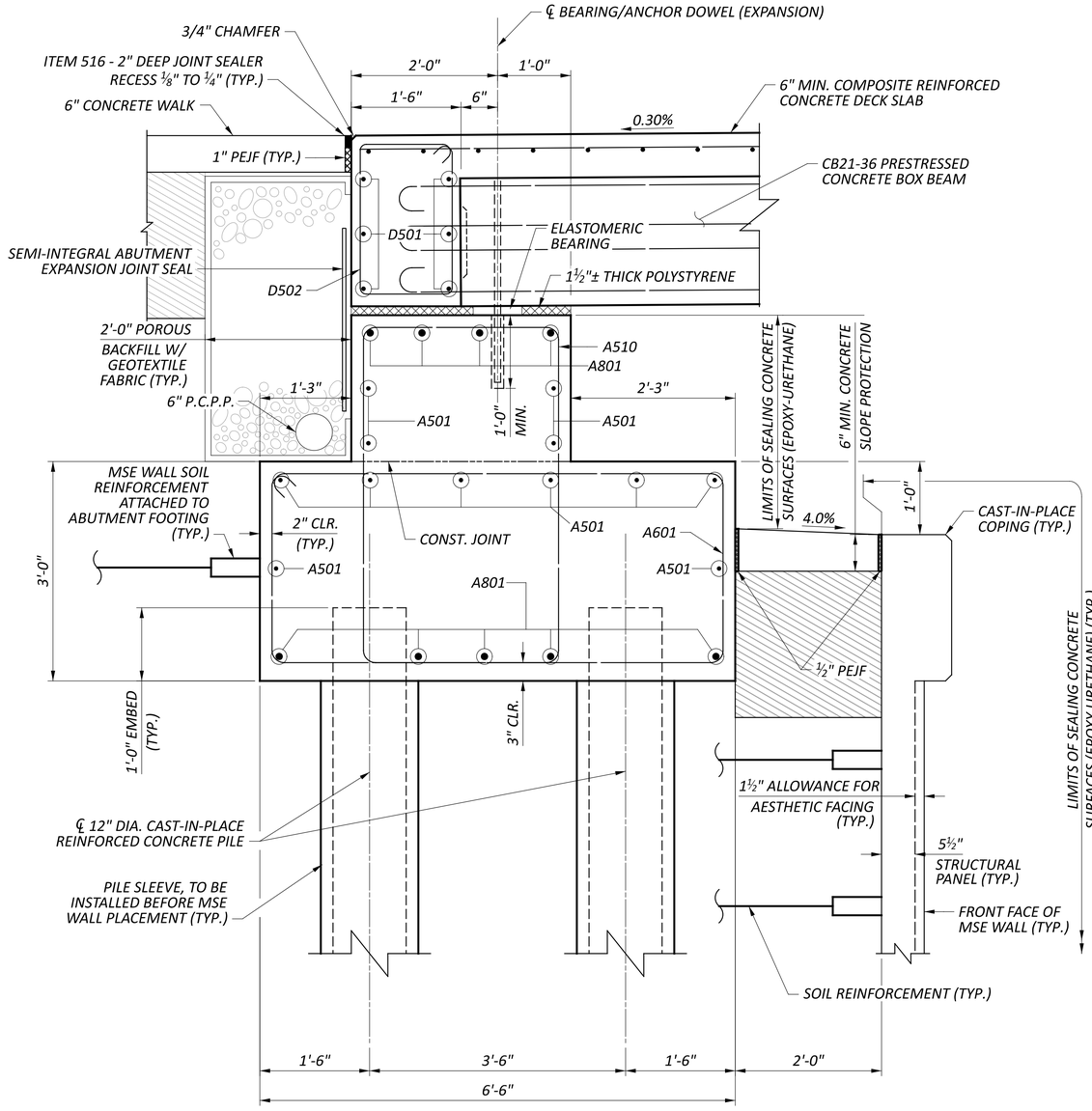

SECTION A-A

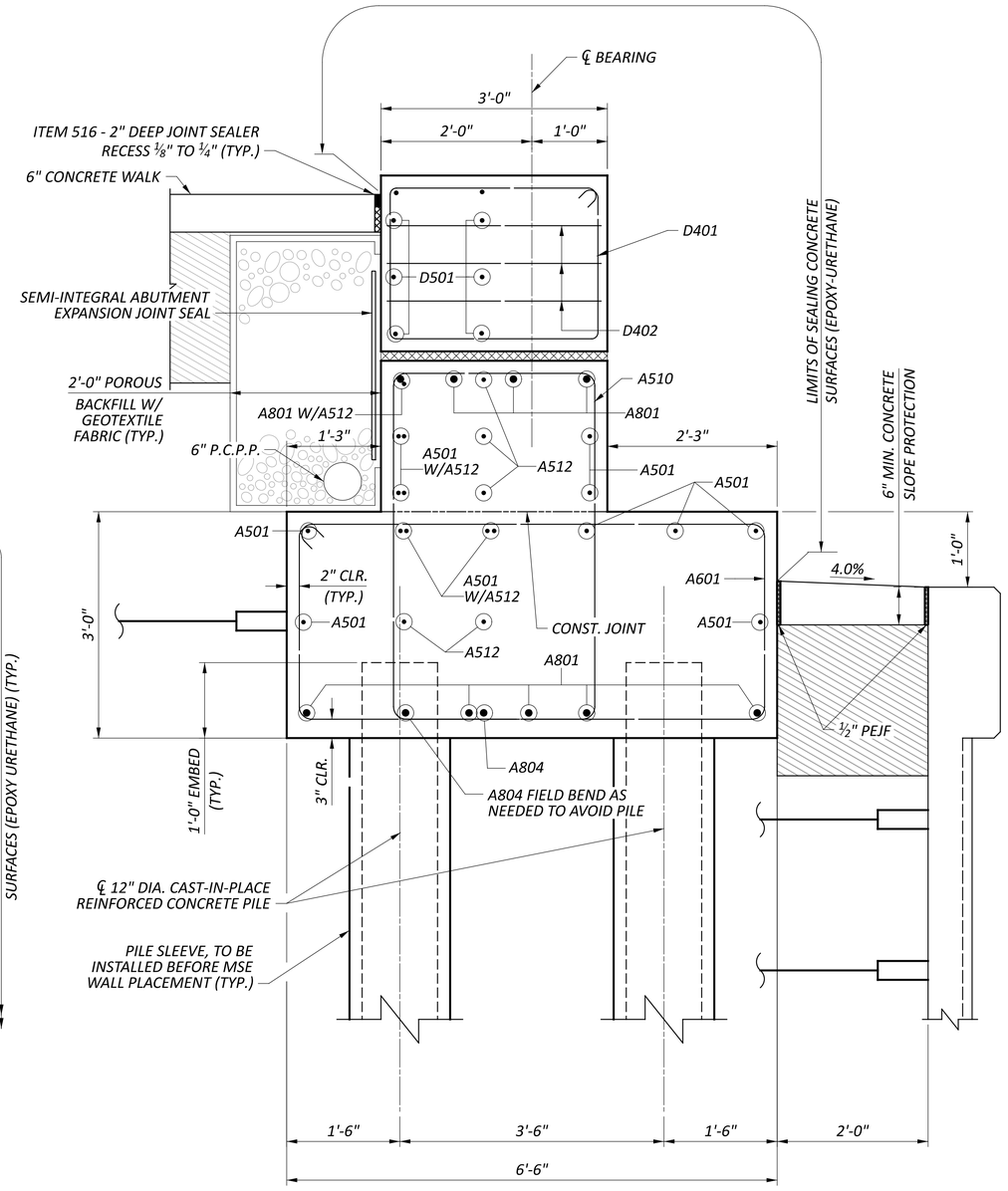

SECTION B-B

1	09/01/25	SHEET REVISIONS
ADDM' NO.	DATE	DESCRIPTION
DATE COMPLETED		

LEGEND

ITEM 203 - NATURAL SOIL (2'-0" MIN. DEPTH)

NOTES:

1. SEE SHEET 4 22 FOR ELEVATION VIEWS.

REAR ABUTMENT SECTION
BRIDGE NO. HAM-75-0123E
PEDESTRIAN BRIDGE OVER RAMP V AND WINCHELL AVE.

SFN 3109152

DESIGN AGENCY

Palmer ENGINEERING

8350 E. KEMPER ROAD
SUITE B
CINCINNATI, OH 45249
(513) 469-1600

DESIGNER	CHECKER
RJB	TES

REVIEWER BJF 04/11/25

PROJECT ID 122048

SUBSET	TOTAL
5	22

SHEET	TOTAL
P.335	P.421

HAM-IR75-1.05

MODEL: Abutment Section PAPERSIZE: 34x22 (in.) DATE: 8/27/2025 TIME: 12:57:32 PM PLTDRV: OHDOT_PDF.pltcfg PENTBL: OHDOT_Pen.tbl USER: swalker@palmernet.com WORKSPACE: OHDOTCEv02 WORKSET: 122048 PRODUCT: OpenRoadsDesigner 24.00.00.205
pw:\\ohiodot-pw.bentley.com:ohiodot-pw-02\Documents\01 Active Projects\District 08\Hamilton\122048\402-Engineering_PalmerEngineering\Structures\Sheets\122048_SFN_3109152_SR001.dgn

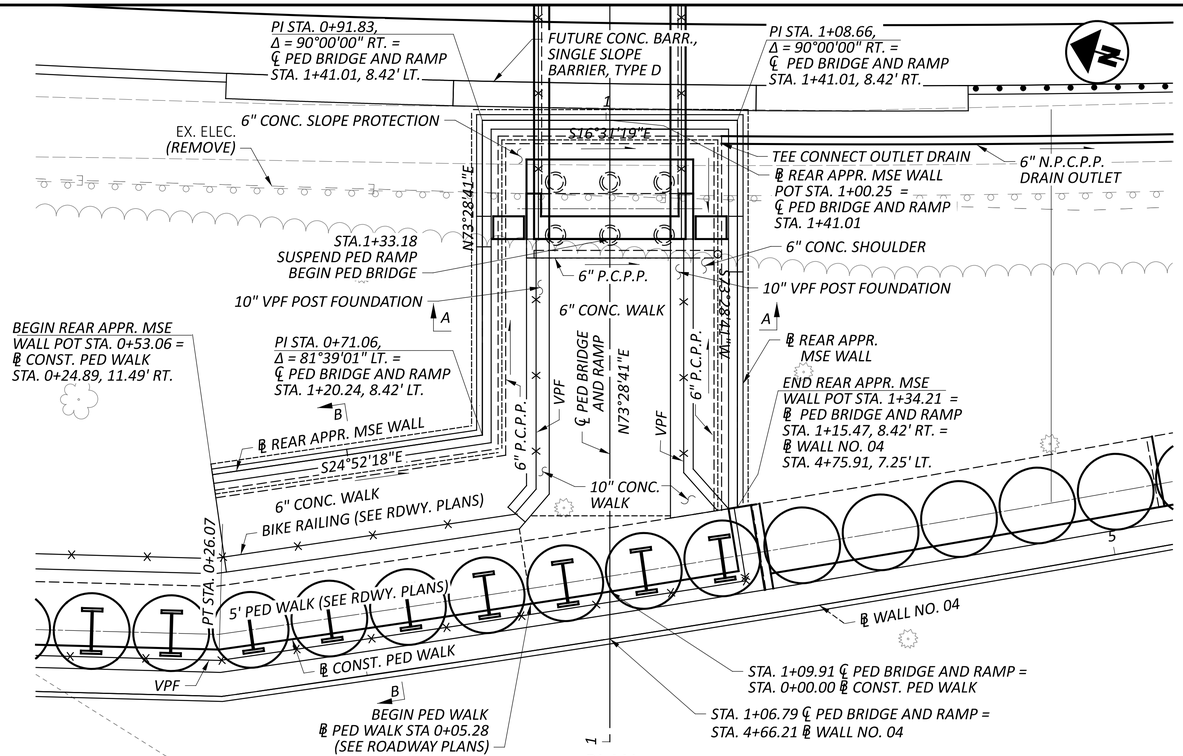

PLAN

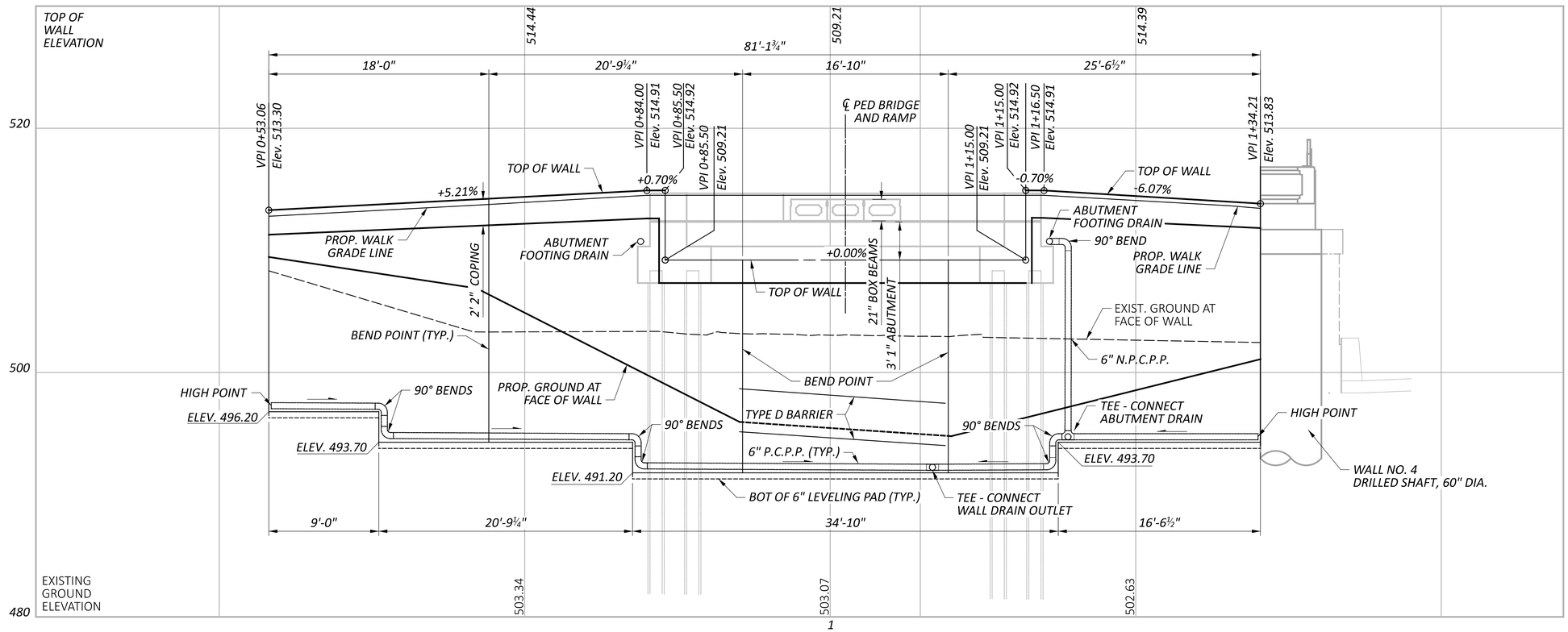

PROFILE ALONG ℄ REAR APPROACH MSE WALL

BENCHMARK DATA

BM #1 STA.	63+71.02 ,	ELEV. 491.77 ,	OFFSET	308.82' LT.,	IRON PIN
BM #2 STA.	63+92.86 ,	ELEV. 492.97 ,	OFFSET	251.23' LT.,	MAG SPIKE
BM #3 STA.	63+56.30 ,	ELEV. 490.92 ,	OFFSET	106.06' LT.,	MAG SPIKE

FOR ADDITIONAL BENCHMARK INFORMATION. SEE ROADWAY PLAN SHEET P.2

NOTES

EARTHWORK LIMITS SHOWN ARE APPROXIMATE. ACTUAL SLOPES SHALL CONFORM TO PLAN CROSS SECTIONS.

1	09/01/25	SHEET REVISIONS
ADDM' NO.	DATE	DESCRIPTION
DATE COMPLETED		

HORIZONTAL SCALE IN FEET
0 2.5 5 10

WALL PLAN AND ELEVATION REAR APPROACH MSE WALL ALONG WEST APPROACH TO PEDESTRIAN BRIDGE

DESIGN AGENCY
Palmer ENGINEERING
8350 E. KEMPER ROAD
SUITE B
CINCINNATI, OH 45249
(513) 469-1600

DESIGNER RJB
REVIEWER BJF 04/11/25
PROJECT ID 122048
SUBSET 6 TOTAL 22
SHEET P.336 TOTAL P.421

HAM-IR75-1.05

MODEL: BLP_MSE_REAR - Plan [Sheet] PAPERSIZE: 34x22 (in.) DATE: 8/27/2025 TIME: 12:57:47 PM PLTDRV: OHDOT_PDF.pltcfg PENTBL: OHDOT_Pen.tbl USER: swalker@palmernet.com WORKSPACE: OHDOTCEv02 WORKSET: 122048 PRODUCT: OpenRoadsDesigner 24.00.00.205
pw:\\ohiodot-pw.bentley.com:ohiodot-pw-02\Documents\01 Active Projects\District 08\Hamilton\122048\402-Engineering_PalmerEngineering\Structures\SFN_3109152\Sheets\SFN_3109152\Sheets\122048_WP100.dgn

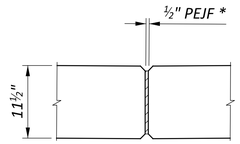

MSE WALL COPING JOINT DETAIL

(MAX. JOINT SPACING IS 20'-0")
*INCLUDE WITH ITEM 840 - CONCRETE COPING

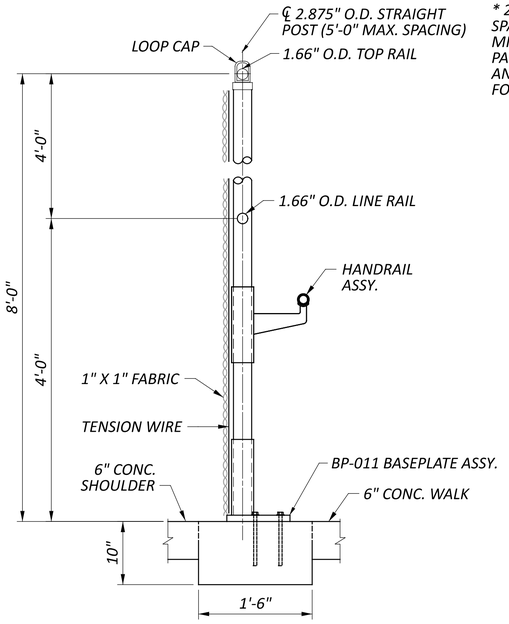

POST AND FOUNDATION SECTION

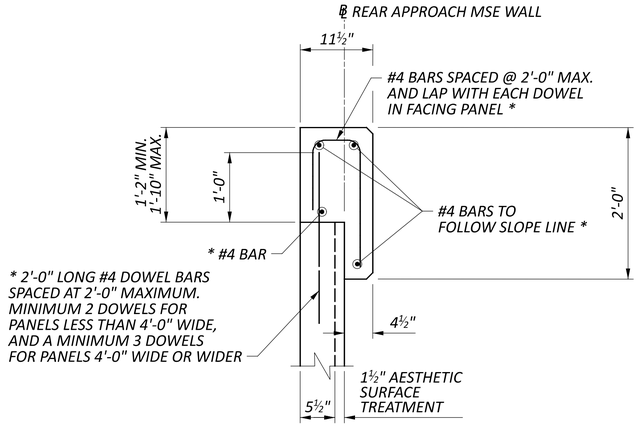

MSE WALL COPING TYPICAL SECTION

(ALL REINFORCING STEEL TO BE GALVANIZED)
* - INCLUDED WITH CONCRETE COPING FOR PAYMENT

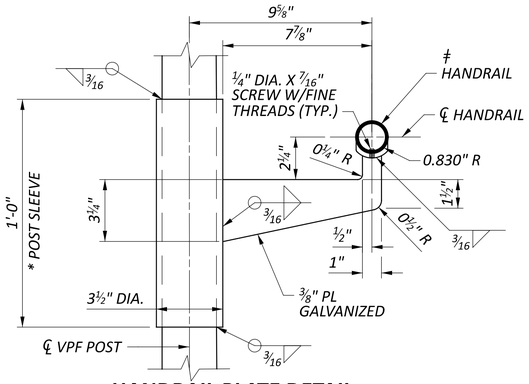

HANDRAIL PLATE DETAIL

*
POST SLEEVES SHALL BE 3.5 INCH OUTSIDE DIAMETER PIPE, ASTM A53, 35,000 PSI MINIMUM YIELD STRENGTH, 7.58 LB/FT, GALVANIZED ACCORDING TO 711.02.

ǂ
HANDRAIL SHALL BE SWEDGED END PIPE 1.660 " O.D. PER C&MS 710.03 TYPE I GRADE 2 - FY = 50 KSI.

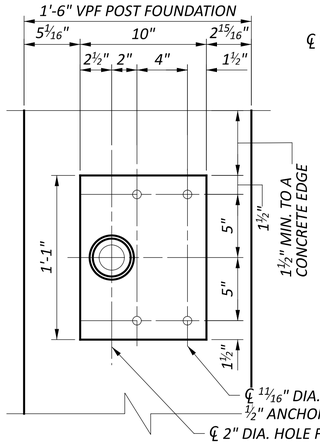

PLAN - BP-011 BASEPLATE ASSY.

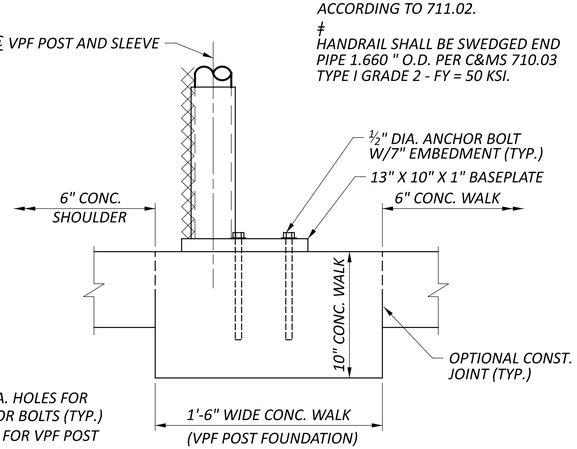

ELEVATION - BP-011 BASEPLATE ASSY.

NOTE:
SEE SCD VPF-1-24 , SHEET 14/22 AND SHEET 20/22 FOR ADDITIONAL VANDAL PROTECTION FENCE AND BASE PLATE BP-011 DETAILS.

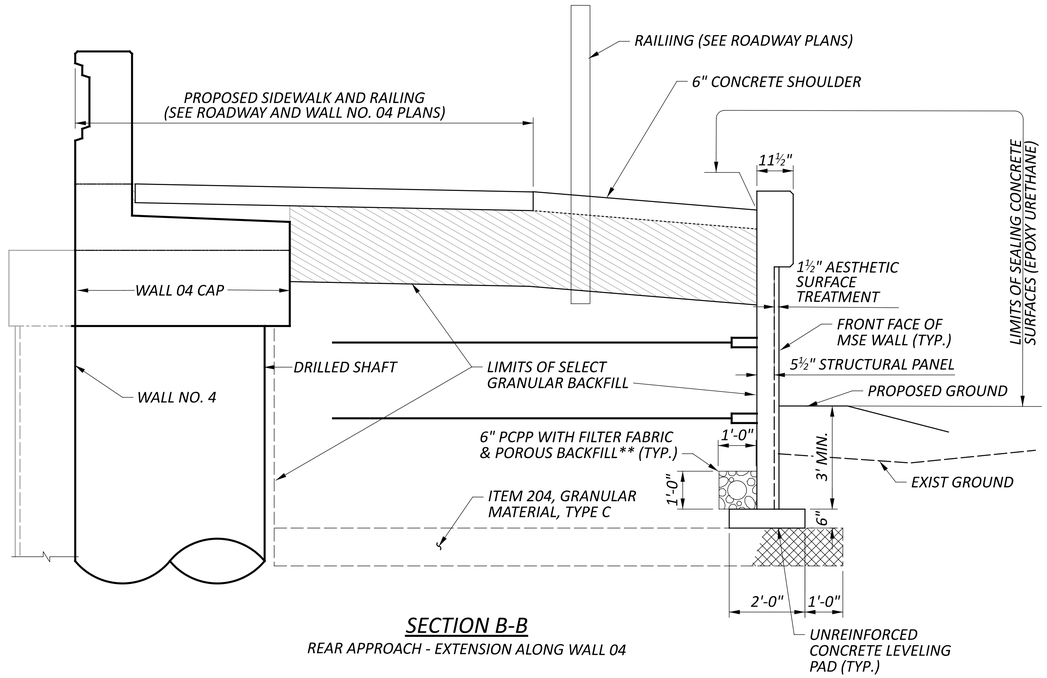

SECTION B-B

REAR APPROACH - EXTENSION ALONG WALL 04

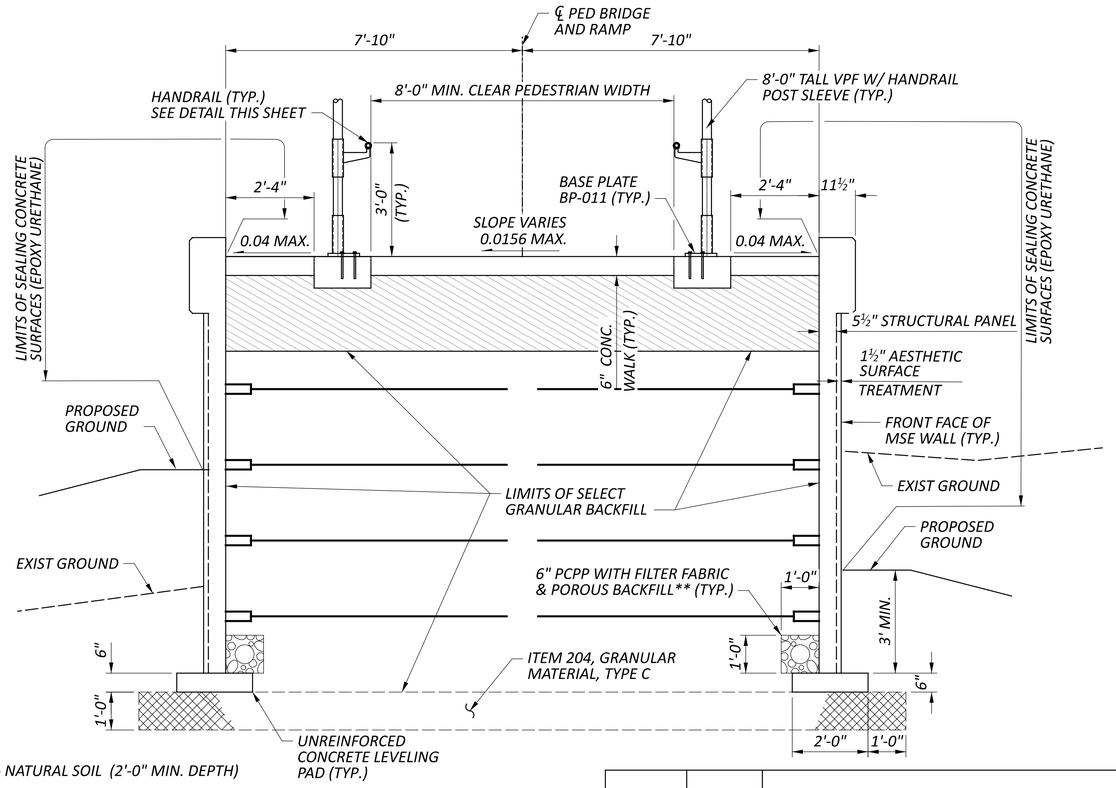

SECTION A-A

REAR APPROACH

LEGEND

ITEM 203 - NATURAL SOIL (2'-0" MIN. DEPTH)

** TO BE INCLUDED WITH MSE WALL P.C.P.P. FOR PAYMENT

ADDM' NO.	DATE	DESCRIPTION
1	09/01/25	SHEET REVISIONS
DATE COMPLETED		

MSE WALL DETAILS - REAR ABUTMENT
BRIDGE NO. HAM-75-0123E
PEDESTRIAN BRIDGE OVER RAMP V AND WINCHELL ACE.

DESIGN AGENCY
Palmer ENGINEERING
8350 E. KEMPER ROAD
SUITE B
CINCINNATI, OH 45249
(513) 469-1600

DESIGNER	
RJB	
REVIEWER	
BJF	04/11/25
PROJECT ID	
122048	
SUBSET	TOTAL
7	22
SHEET	TOTAL
P.337	P.421

HAM-IR75-1.05

MODEL: Sheet PAPERSIZE: 34x22 (in.) DATE: 8/27/2025 TIME: 12:57:56 PM PLTDRV: OHDOT_PDF.pltcfg PENTBL: OHDOT_Pen.tbl USER: swalker@palmernet.com WORKSPACE: OHDOTCEx02 WORKSET: 122048 PRODUCT: OpenRoadsDesigner 24.00.00.205
pw:\\ohiodot-pw.bentley.com:ohiodot-pw-02\Documents\01 Active Projects\District 08\Hamilton\122048\402-Engineering_PalmerEngineering\Structures\Structures\SFN_3109152\Sheets\122048_SFN_3109152_SW001.dgn

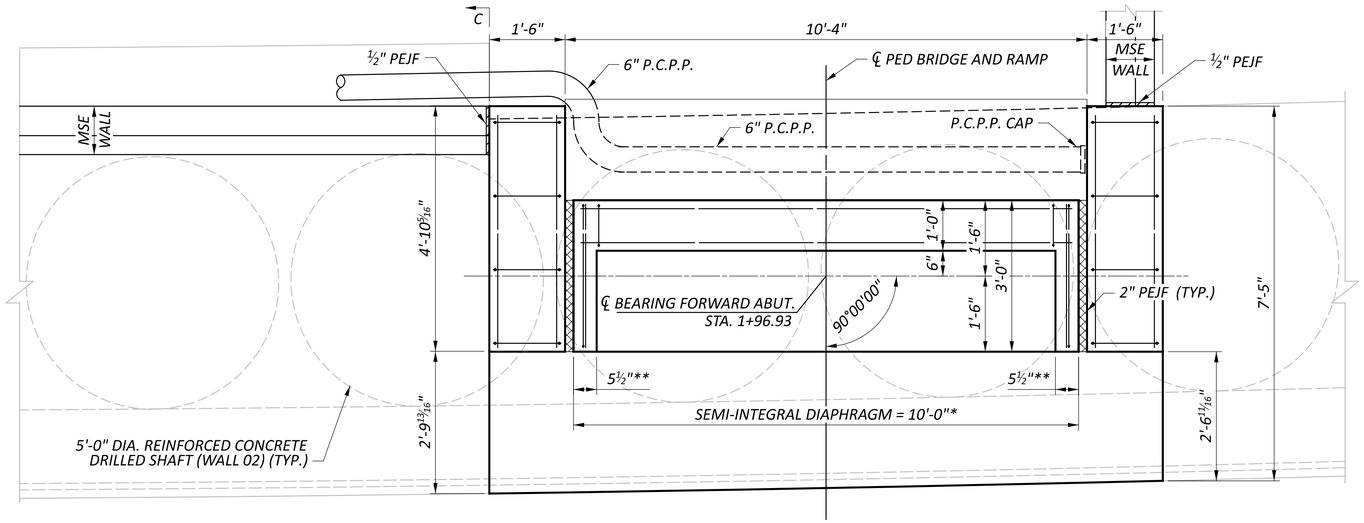

FORWARD ABUTMENT PLAN

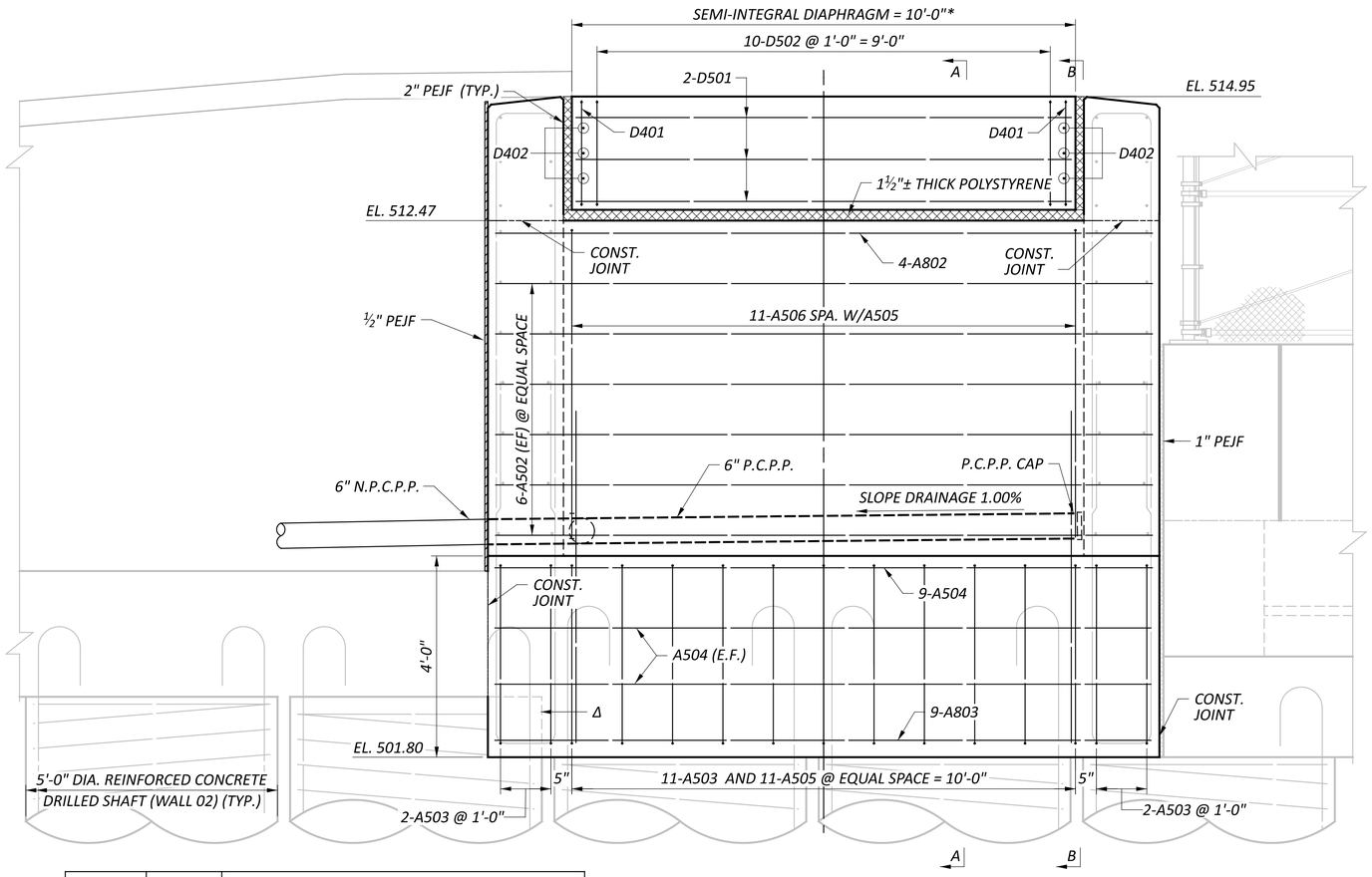

FORWARD ABUTMENT ELEVATION

1	09/01/25	SHEET REVISIONS
ADDM' NO.	DATE	DESCRIPTION
DATE COMPLETED		

LEGEND

* = PLUS FIT-UP
** = MINUS FIT UP
Δ = ADJUST OR TRIM REINFORCEMENT STEEL AS NEEDED TO AVOID INTERFERENCE WITH TANGENT DRILLED SHAFT (TYP. - SHAFT 138 & 141)

LAP SPLICES:

#5 = 2'-6"

NOTES:

1. SEE SHEET 9 22 FOR SECTION VIEW.
2. SEE SHEET 10 22 FOR WINGWALL DETAILS AND REINFORCING.
3. SEE SHEET P.183 FOR WALL 02 DETAILS AND REINFORCING.
4. SEE SHEET 11 22 THRU 14 22 FOR MSE WALL DETAILS.
5. MATCH CURVATURE OF FACE OF ABUTMENT FOOTING TO CURVATURE OF WALL 2.

FORWARD ABUTMENT PLAN AND ELEVATION
BRIDGE NO. HAM-75-0123E
PEDESTRIAN BRIDGE OVER RAMP V AND WINCHELL AVE.

SFN 3109152

DESIGN AGENCY
Palmer ENGINEERING
8350 E. KEMPER ROAD
SUITE B
CINCINNATI, OH 45249
(513) 469-1600

DESIGNER	CHECKER
RJB	TES

REVIEWER
BJF 04/11/25

PROJECT ID 122048

SUBSET	TOTAL
8	22

SHEET	TOTAL
P.338	P.421

HAM-IR75-1.05

MODEL: Abutment Plan and Elevation PAPERSIZE: 34x22 (in.) DATE: 8/27/2025 TIME: 12:58:05 PM PLTDRV: OHDOT_PDF.pltcfg PENTBL: OHDOT_Pen.tbl USER: swalker@palmernet.com WORKSPACE: OHDOTCEv02 WORKSET: 122048 PRODUCT: OpenRoadsDesigner 24.00.00.205
pw:\\ohiodot-pw.bentley.com:ohiodot-pw-02\Documents\01 Active Projects\District 08\Hamilton\122048\02-Engineering_PalmerEngineering\Structures\Structures\SFN_3109152\Sheets\122048_SFN_3109152_SF001.dgn

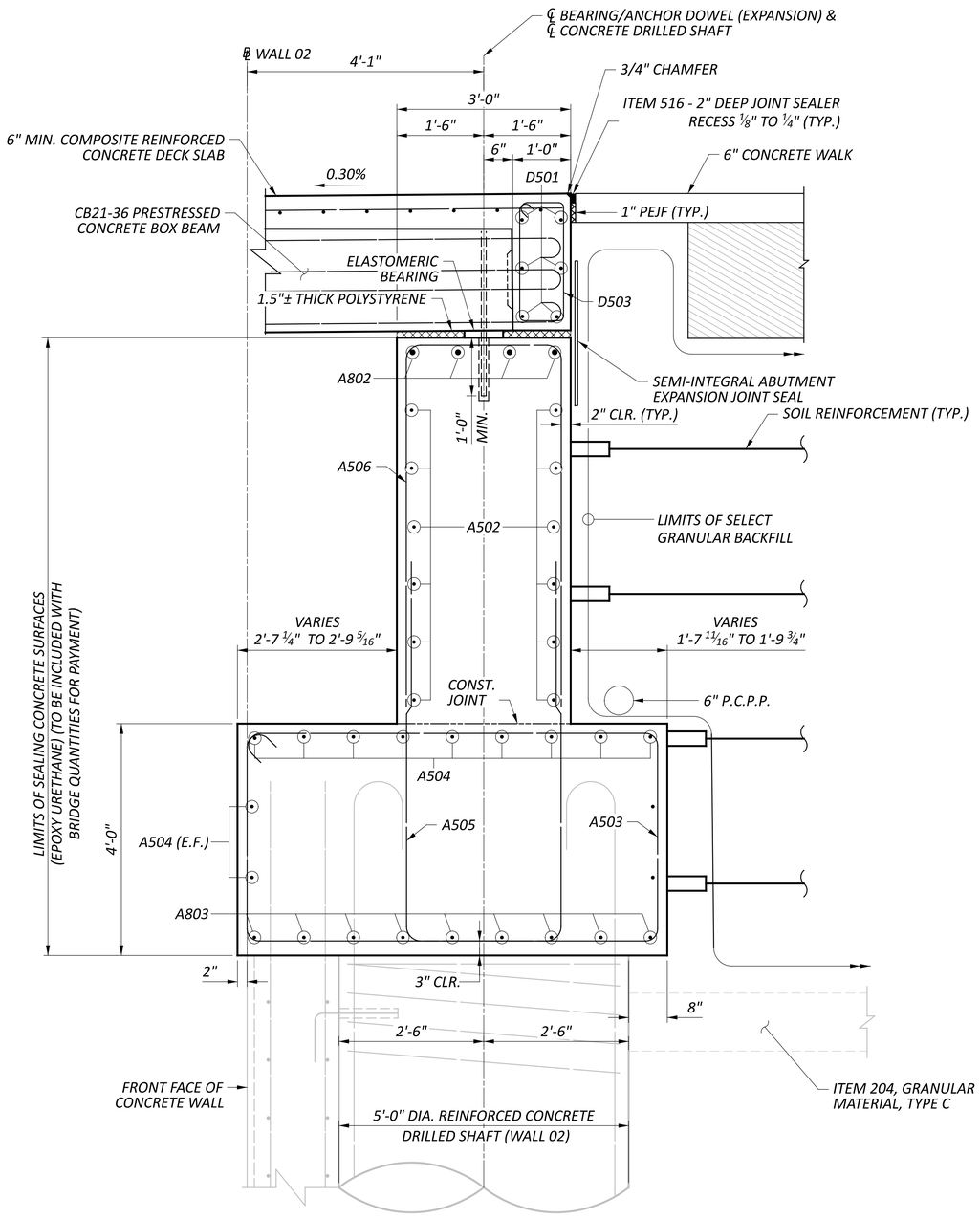

SECTION A-A

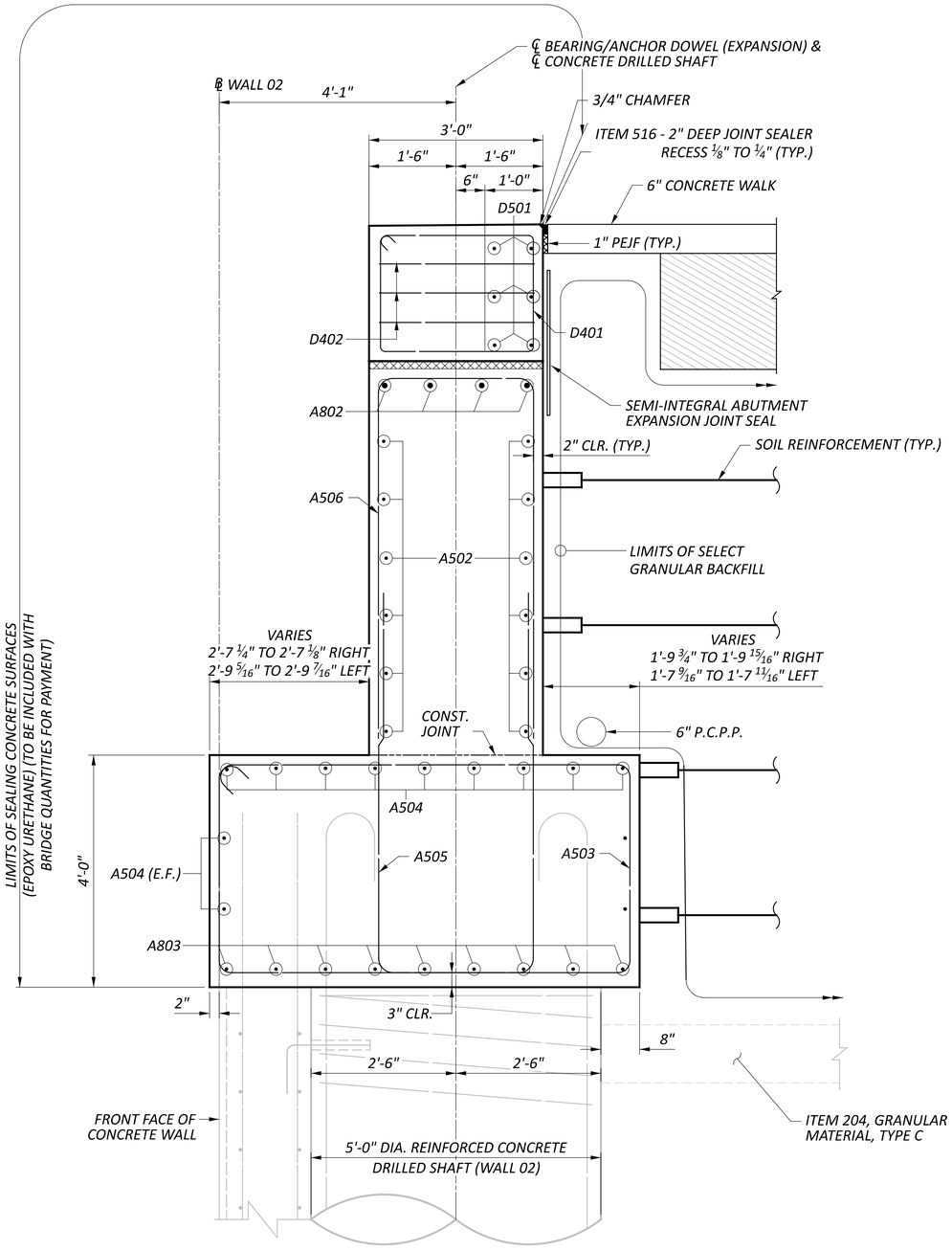

SECTION B-B

1	09/01/25	SHEET REVISIONS
ADDM' NO.	DATE	DESCRIPTION
DATE COMPLETED		

LEGEND

ITEM 203 - NATURAL SOIL (2'-0" MIN. DEPTH)

LAP SPLICES:

#5 = 2'-0" (GALVANIZED)

NOTES:

1. SEE SHEET 8 22 FOR PLAN AND ELEVATION VIEWS.
2. SEE SHEET P.183 FOR WALL 02 DETAILS AND REINFORCING.

FORWARD ABUTMENT SECTION
BRIDGE NO. HAM-75-0123E
PEDESTRIAN BRIDGE OVER RAMP V AND WINCHELL AVE.

SFN 3109152

DESIGN AGENCY

Palmer ENGINEERING
8350 E. KEMPER ROAD
SUITE B
CINCINNATI, OH 45249
(513) 469-1600

DESIGNER	CHECKER
RJB	TES

REVIEWER: BJF 04/11/25

PROJECT ID: 122048

SUBSET	TOTAL
9	22

SHEET	TOTAL
P.339	P.421

HAM-IR75-1.05

MODEL: Abutment Section PAPERSIZE: 34x22 (in.) DATE: 8/27/2025 TIME: 12:58:06 PM PLTDRV: OHDOT_PDF.pltcfg PENTBL: OHDOT_Pen.tbl USER: swalker@palmernet.com WORKSPACE: OHDOTCEv02 WORKSET: 122048 PRODUCT: OpenRoadsDesigner 24.00.00.205
pw:\\ohiodot-pw.bentley.com:ohiodot-pw-02\Documents\01 Active Projects\District 08\Hamilton\122048\v02-Engineering_ PalmerEngineering\Structures\SFN_3109152_SF001.dgn

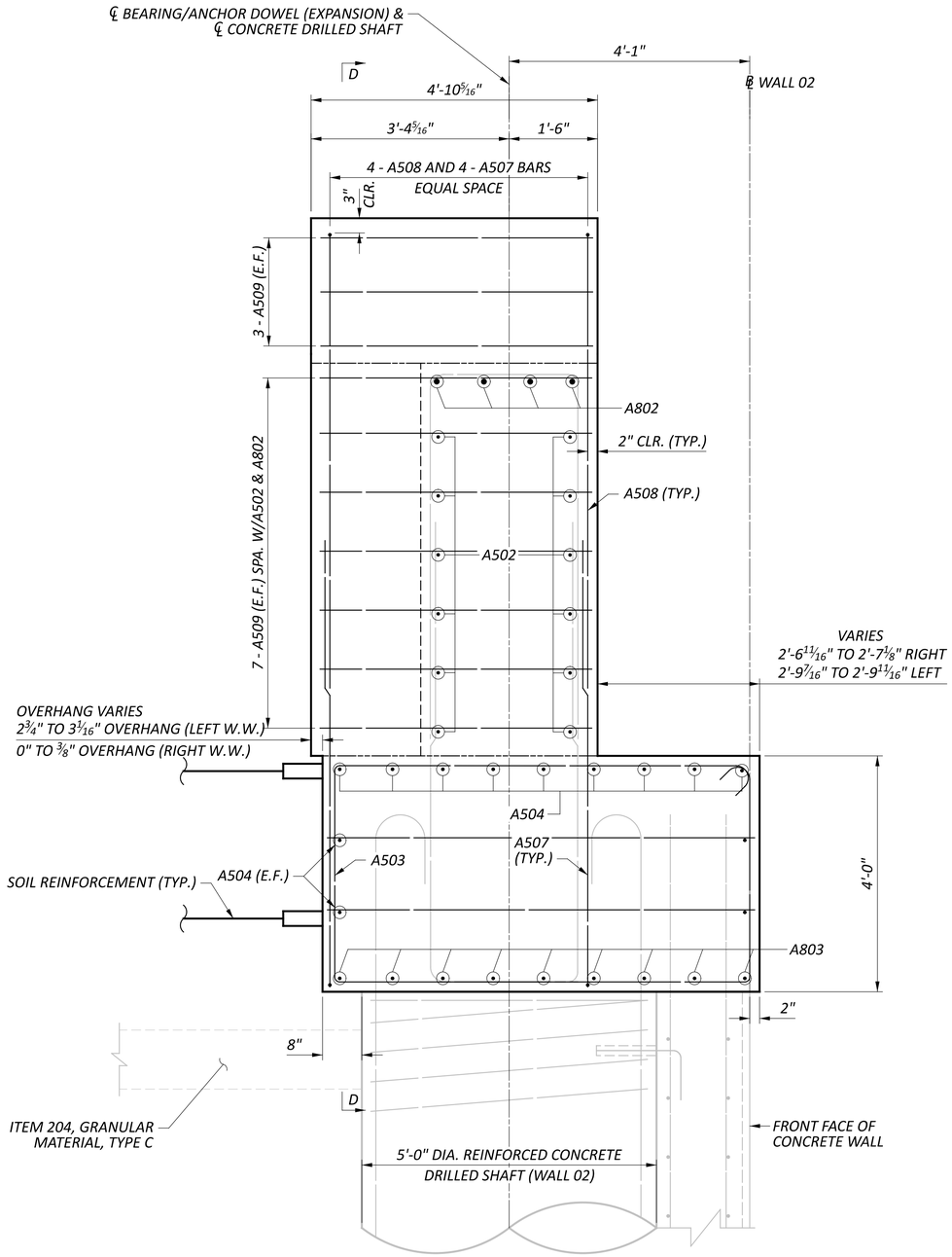

VIEW C-C

LEFT WINGWALL SHOWN
RIGHT WINGWALL SIMILAR

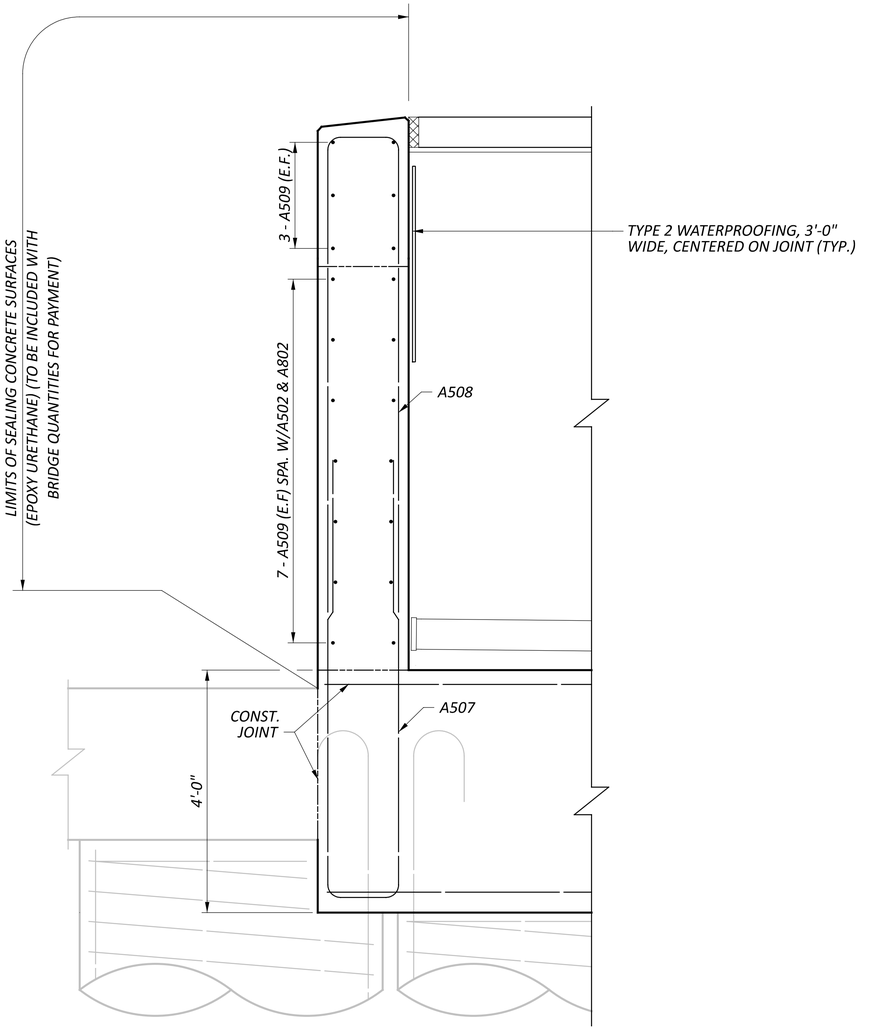

SECTION D-D

LEFT WINGWALL SHOWN
RIGHT WINGWALL SIMILAR
(SEE ELEVATION VIEW FOR FOOTING DETAILS)

LAP SPLICES:

#5 = 2'-6"

NOTES:

1. *SEE SHEET 8 22 FOR PLAN AND ELEVATION VIEWS.*
2. *SEE SHEET P.183 FOR WALL 02 DETAILS AND REINFORCING.*

1	09/01/25	SHEET REVISIONS
ADDM' NO.	DATE	DESCRIPTION
DATE COMPLETED		

FORWARD ABUTMENT WINGWALL DETAILS
BRIDGE NO. HAM-75-0123E
PEDESTRIAN BRIDGE OVER RAMP V AND WINCHELL AVE.

SFN 3109152
DESIGN AGENCY
Palmer ENGINEERING
8350 E. KEMPER ROAD
SUITE B
CINCINNATI, OH 45249
(513) 469-1600

DESIGNER	CHECKER
RJB	TES

REVIEWER: BJF 04/11/25
PROJECT ID: 122048
SUBSET: 10 TOTAL: 22
SHEET: P.340 TOTAL: P.421

HAM-IR75-1.05

MODEL: Abutment Wingwall PAPERSIZE: 34x22 (in.) DATE: 8/27/2025 TIME: 12:58:08 PM PLTDRV: OHDOT_PDF.pltcfg PENTBL: OHDOT_Pen.tbl USER: swalker@palmernet.com WORKSPACE: OHDOTCEv02 WORKSET: 122048 PRODUCT: OpenRoadsDesigner 24.00.00.205
pw:\\ohiodot-pw.bentley.com:ohiodot-pw-02\Documents\01 Active Projects\District 08\Hamilton\122048\402-Engineering_PalmerEngineering\Structures\SFN_3109152\Sheets\122048_SFN_3109152_SF001.dgn

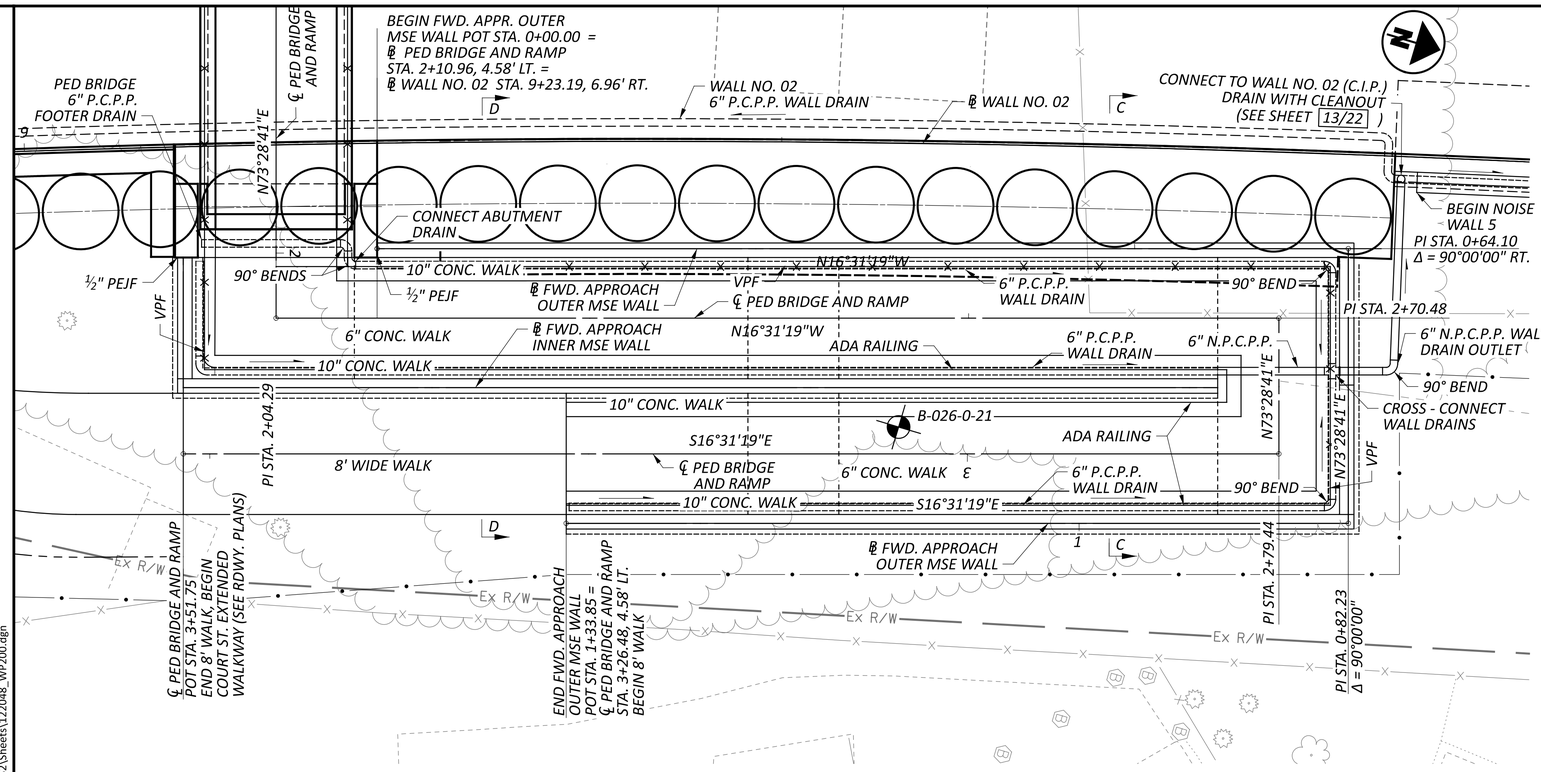

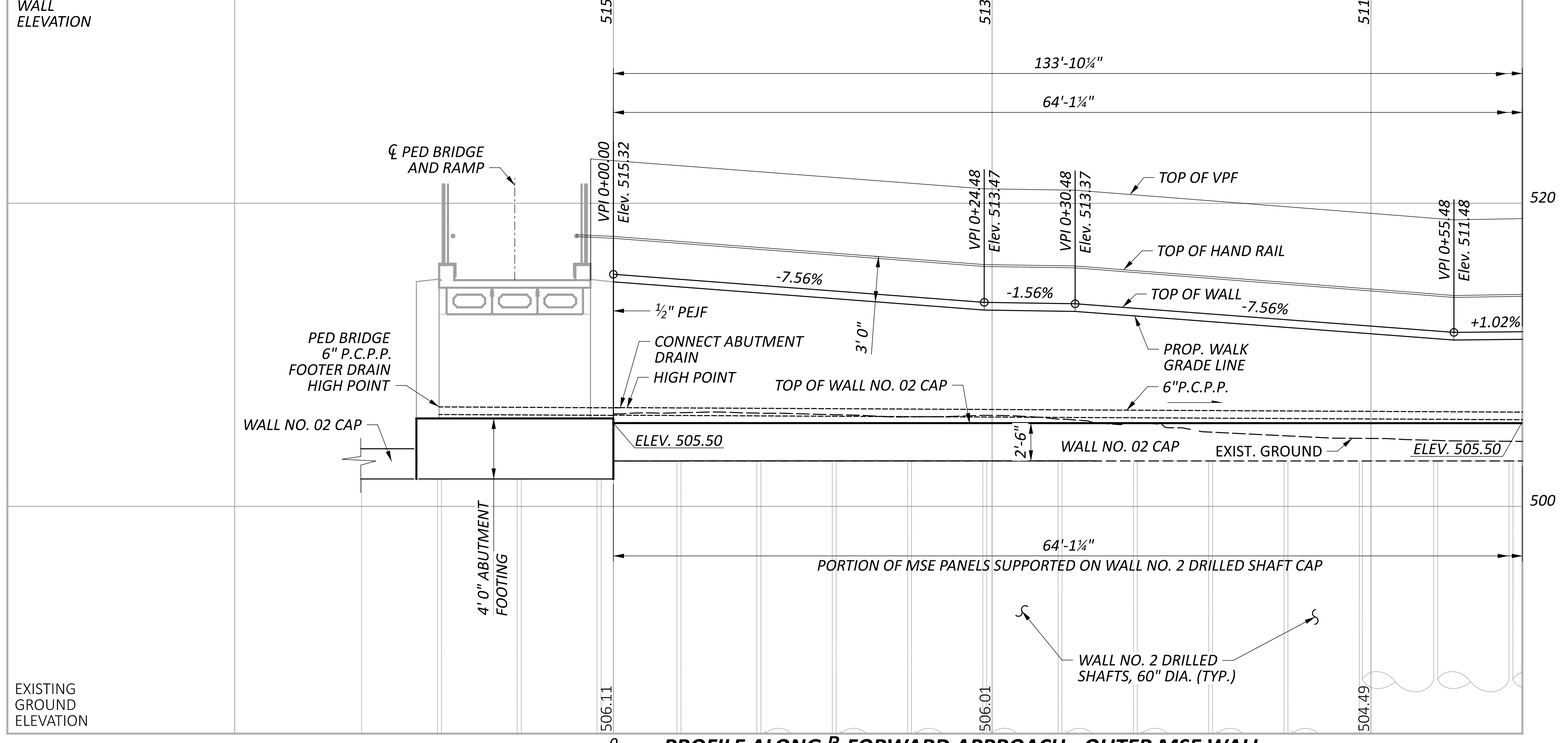

PROFILE ALONG ℄ FORWARD APPROACH - OUTER MSE WALL

℄ WALL NO. 02 CURVE DATA
P.I. = STA. 8+28.09
Δ = 20°17'25" RT
Dc = 04°31'20"
R = 1,267.00'
T = 226.72'
L = 448.69'
E = 20.12'

BENCHMARK DATA

BM #1 STA. 63+71.02,	ELEV. 491.77,	OFFSET 308.82' LT.,	IRON PIN
BM #2 STA. 63+92.86,	ELEV. 492.97,	OFFSET 251.23' LT.,	MAG SPIKE
BM #3 STA. 63+56.30,	ELEV. 490.92,	OFFSET 106.06' LT.,	MAG SPIKE

FOR ADDITIONAL BENCHMARK INFORMATION. SEE ROADWAY PLAN SHEET P.2

NOTES

EARTHWORK LIMITS SHOWN ARE APPROXIMATE. ACTUAL SLOPES SHALL CONFORM TO PLAN CROSS SECTIONS.

LEGEND

PROJECT BORING LOCATION

HORIZONTAL SCALE IN FEET
0 2.5 5 10

WALL PLAN AND ELEVATION (1 OF 2)
FWD. APPROACH OUTER MSE WALL
ALONG EAST APPROACH TO PEDESTRIAN BRIDGE

1	09/01/25	SHEET REVISIONS
ADDM' NO.	DATE	DESCRIPTION
DATE COMPLETED		

DESIGN AGENCY
Palmer ENGINEERING
8350 E. KEMPER ROAD
SUITE B
CINCINNATI, OH 45249
(513) 469-1600

DESIGNER RJB
REVIEWER BJF 04/11/25
PROJECT ID 122048
SUBSET 11 TOTAL 22
SHEET P.341 TOTAL P.421

HAM-IR75-1.05

MODEL: BLP_MSE_FWD_OUTER - Fwd Appr Outer MSE Plan 1 [Sheet] PAPERSIZE: 34x22 (in.) DATE: 8/27/2025 TIME: 12:58:25 PM PLTDRV: OHDOT_PDF.pltcfg PENTBL: OHDOT_Pen.tbl USER: swalker@palmernet.com WORKSPACE: OHDOTCEv02 WORKSET: 122048 PRODUCT: OpenRoadsDesigner 24.00.00.205
pw:\\ohiodot-pw.bentley.com:ohiodot-pw-02\Documents\01 Active Projects\District 08\Hamilton\122048\s02-Engineering_PalmerEngineering\Structures\SFN_3109152\Sheets\122048_WP200.dgn

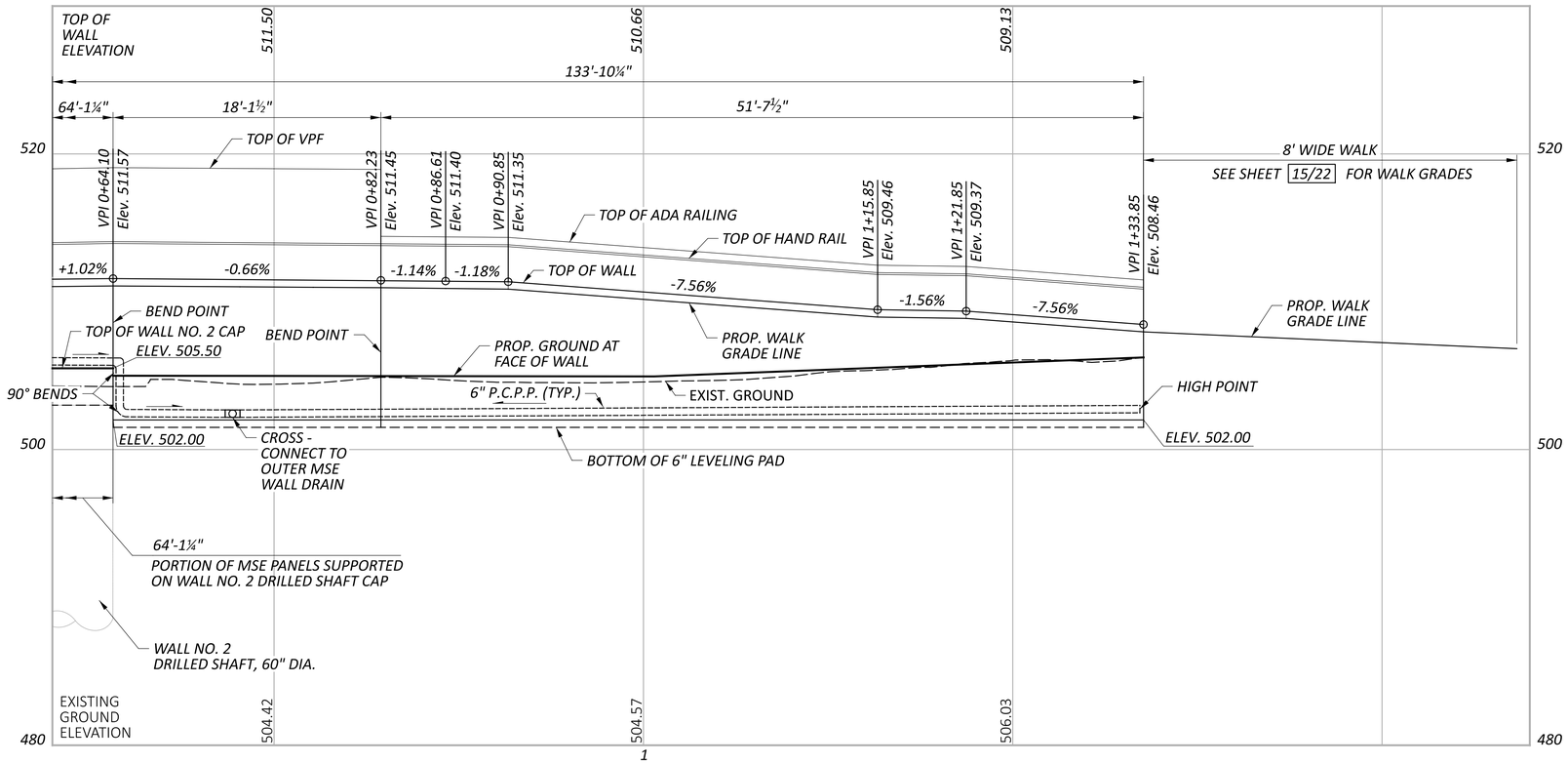

1

PROFILE ALONG ℄ FORWARD APPROACH - OUTER MSE WALL

HORIZONTAL SCALE IN FEET
0 2.5 5 10

WALL PLAN AND ELEVATION (2 OF 2)
FWD. APPROACH OUTER MSE WALL
ALONG EAST APPROACH TO PEDESTRIAN BRIDGE

ADDM' NO.	DATE	DESCRIPTION
1	09/01/25	SHEET REVISIONS
DATE COMPLETED		

DESIGN AGENCY
Palmer ENGINEERING
8350 E. KEMPER ROAD
SUITE B
CINCINNATI, OH 45249
(513) 469-1600

DESIGNER: RJB
REVIEWER: BJF 04/11/25
PROJECT ID: 122048
SUBSET: 12 TOTAL: 22
SHEET: P.342 TOTAL: P.421

HAM-IR75-1.05

MODEL: Plan--1 - Profile 2 [Sheet] PAPERSIZE: 34x22 (in.) DATE: 8/27/2025 TIME: 12:58:27 PM PLTDRV: OHDOT_PDF.pltcfg PENTBL: OHDOT_Pen.tbl USER: swalker@palmernet.com WORKSPACE: OHDOTCtx02 WORKSET: 122048 PRODUCT: OpenRoadsDesigner 24.00.00.205
pw:\\ohiodot-pw.bentley.com:ohiodot-pw-02\Documents\01 Active Projects\District 08\Hamilton\122048\Engineering\02-Engineering\Structures\SFN_3109152\Sheets\122048_WP200.dgn

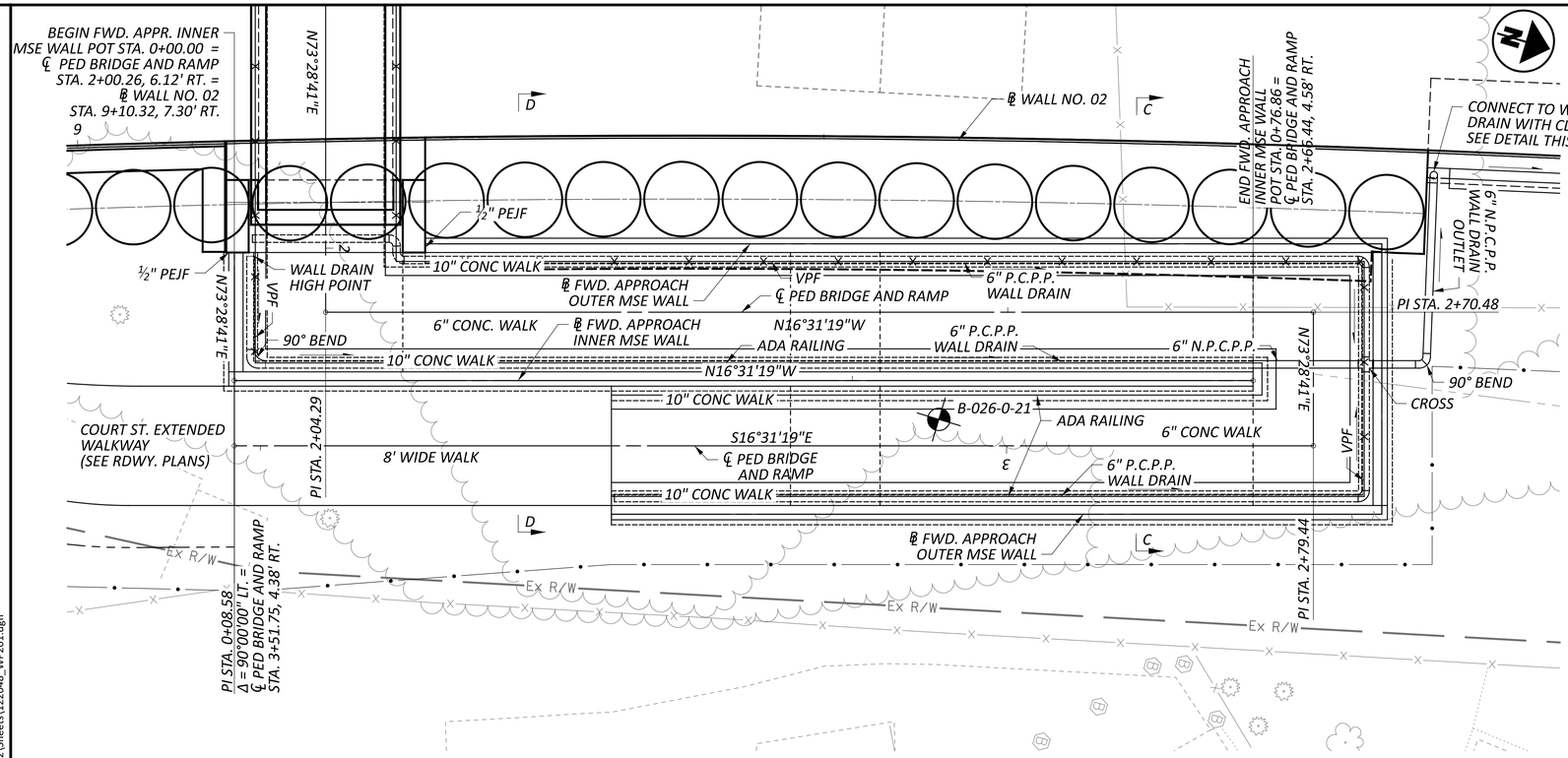

BENCHMARK DATA

BM #1 STA.	63+71.02 ,	ELEV. 491.77 ,	OFFSET	308.82' LT.,	IRON PIN
BM #2 STA.	63+92.86 ,	ELEV. 492.97 ,	OFFSET	251.23' LT.,	MAG SPIKE
BM #3 STA.	63+56.30 ,	ELEV. 490.92 ,	OFFSET	106.06' LT.,	MAG SPIKE

FOR ADDITIONAL BENCHMARK INFORMATION. SEE ROADWAY PLAN SHEET P.2

℄ WALL NO. 02 CURVE DATA
P.I. = STA. 8+28.09
Δ = 20°17'25" RT
Dc = 04°31'20"
R = 1,267.00'
T = 226.72'
L = 448.69'
E = 20.12'

NOTES

EARTHWORK LIMITS SHOWN ARE APPROXIMATE. ACTUAL SLOPES SHALL CONFORM TO PLAN CROSS SECTIONS.

LEGEND

PROJECT BORING LOCATION

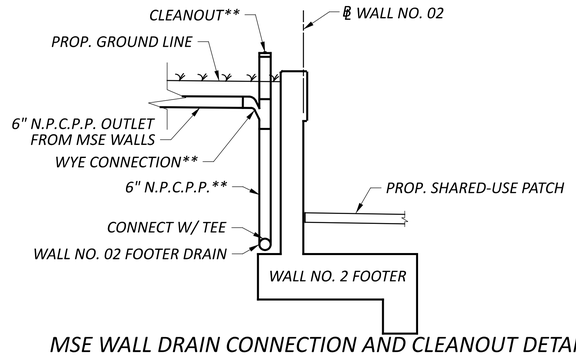

MSE WALL DRAIN CONNECTION AND CLEANOUT DETAIL
***TO BE INCLUDED WITH ITEM 518 - 6" NON-PERFORATED CORRUGATED PLASTIC PIPE, INCLUDING SPECIALS, AS PER PLAN*

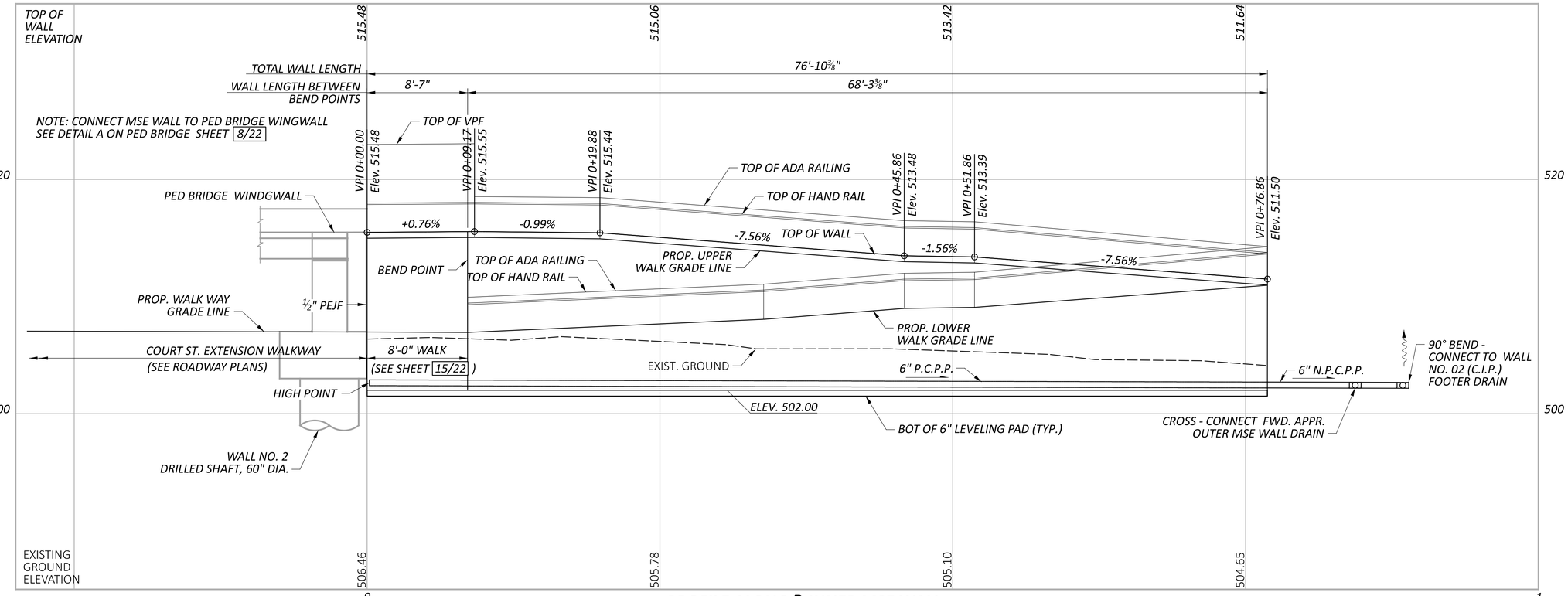

PROFILE ALONG ℄ INNER MSE WALL

NO.	DATE	DESCRIPTION
1	09/01/25	SHEET REVISIONS
ADDM' NO.	DATE	DATE COMPLETED

HORIZONTAL SCALE IN FEET
0 2.5 5 10

WALL PLAN AND ELEVATION
FWD. APPROACH INNER MSE WALL
ALONG EAST APPROACH TO PEDESTRIAN BRIDGE

DESIGN AGENCY
Palmer ENGINEERING
8350 E. KEMPER ROAD
SUITE B
CINCINNATI, OH 45249
(513) 469-1600

DESIGNER RJB
REVIEWER BJF 04/11/25
PROJECT ID 122048
SUBSET 13 TOTAL 22
SHEET P.343 TOTAL P.421

HAM-IR75-1.05

MODEL: BLP_MSE_FWD_INNER - Plan 1 [Sheet] PAPERSIZE: 34x22 (in.) DATE: 8/27/2025 TIME: 12:58:36 PM PLTDRV: OHDOT_PDF.pltcfg PENTBL: OHDOT_Pen.tbl USER: pw:\\ohiodot-pw.bentley.com:ohiodot-pw-02\Documents\01 Active Projects\District 08\Hamilton\122048\402-Engineering_PalmerEngineering\Structures\SFN_3109152_WP201.dgn

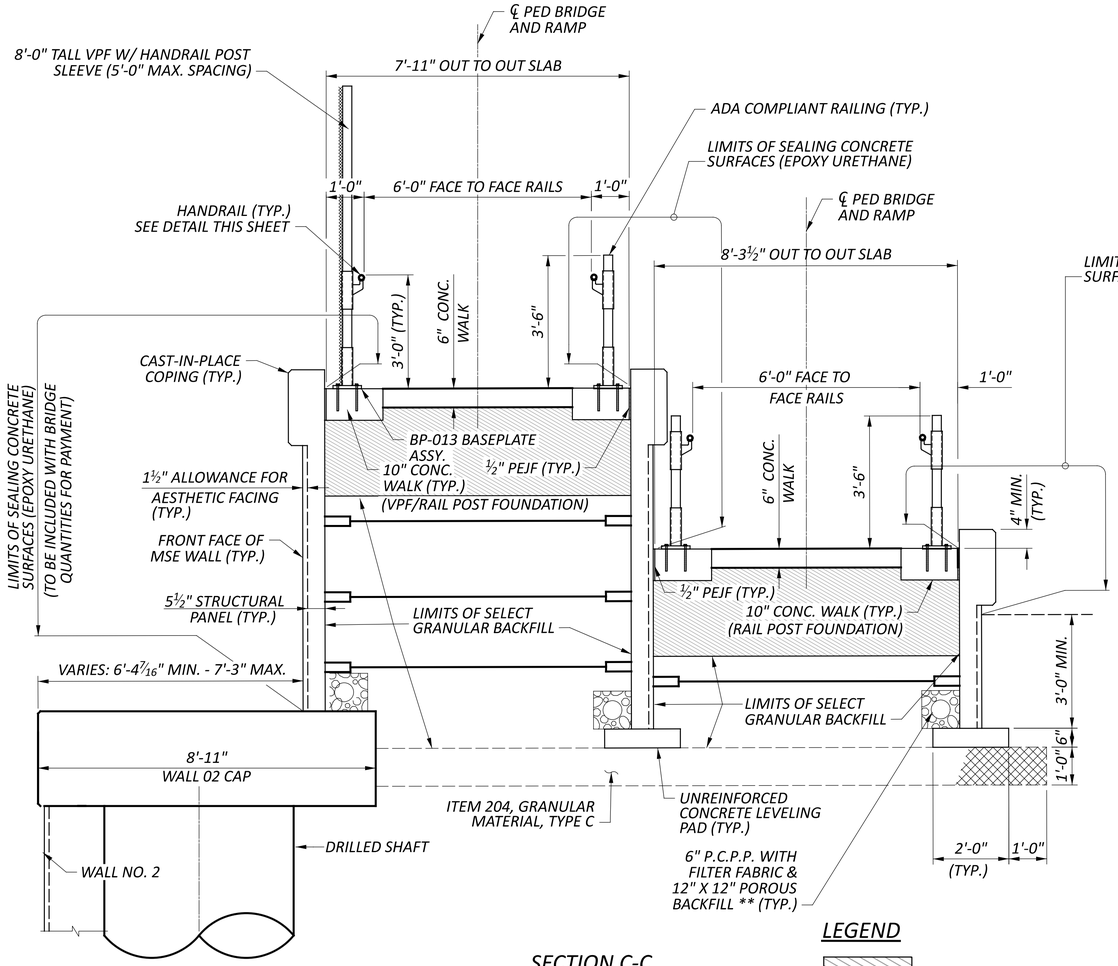

SECTION C-C
FORWARD APPROACH
DUAL RAMP

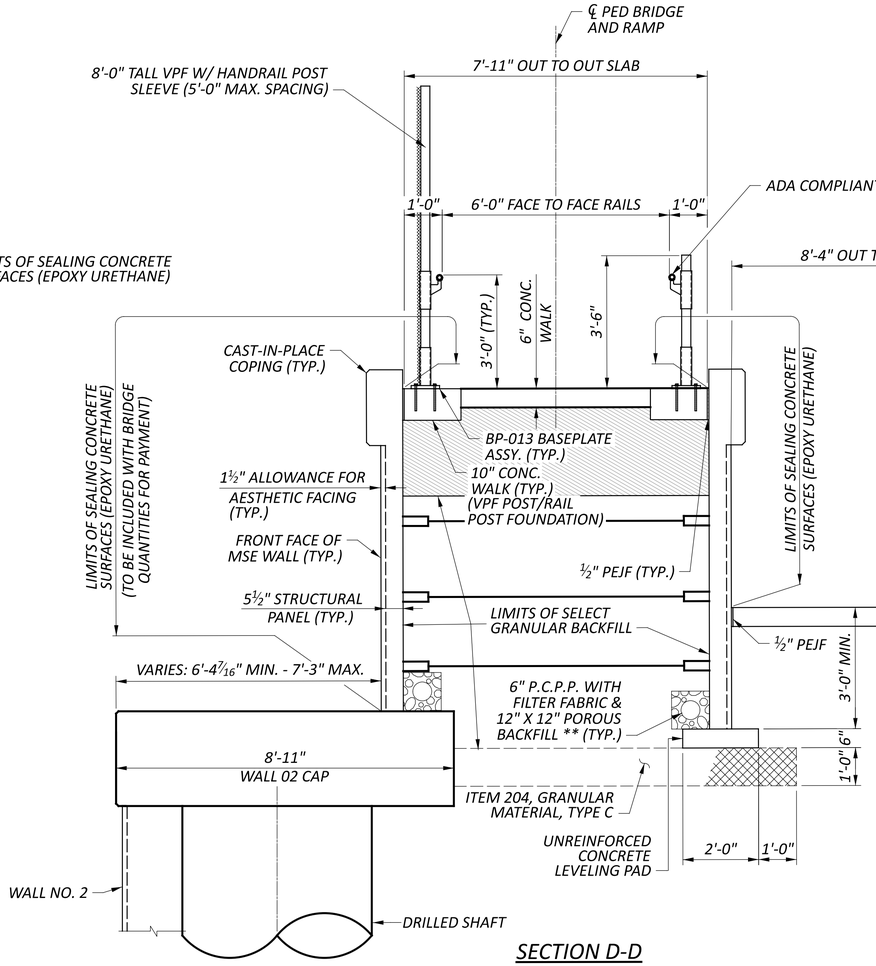

SECTION D-D
FORWARD APPROACH
AT GRADE LANDING

LEGEND
ITEM 203 - NATURAL SOIL (2'-0" MIN. DEPTH)

** TO BE INCLUDED WITH MSE WALL P.C.P.P. FOR PAYMENT

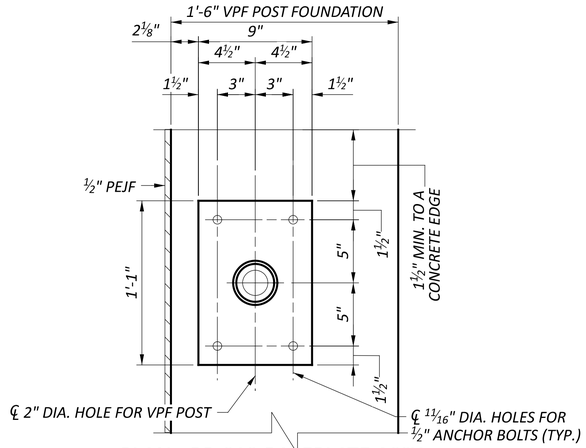

PLAN - BP-013 BASEPLATE ASSY.

NOTE:
SEE SCD VPF-1-24 , SHEET 7/22 AND SHEET 20/22 FOR ADDITIONAL VANDAL PROTECTION FENCE AND BASE PLATE BP-011 DETAILS. BASE PLATE SHALL BE 50 KSI GALVANIZED STEEL.

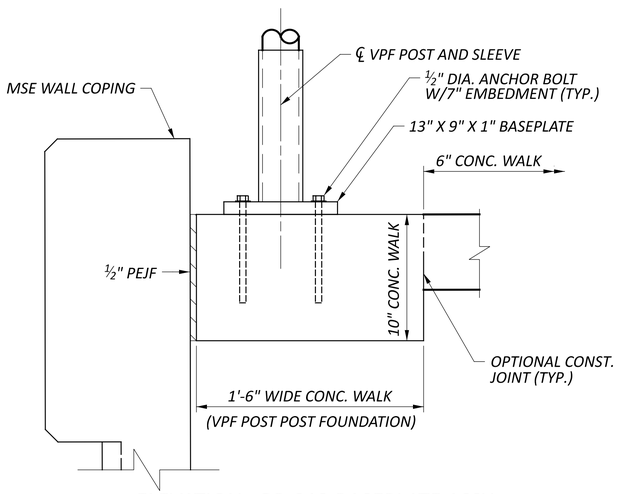

ELEVATION - BP-013 BASEPLATE ASSY.

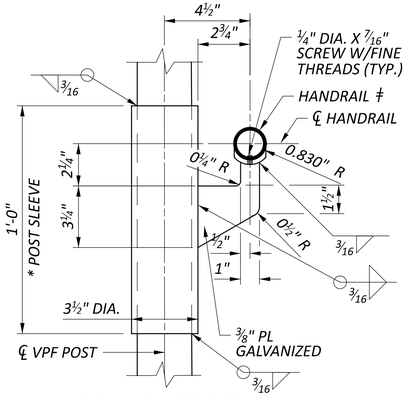

HANDRAIL PLATE DETAIL

* POST SLEEVES SHALL BE 3.5 INCH OUTSIDE DIAMETER PIPE, ASTM A53, 35,000 PSI MINIMUM YIELD STRENGTH, 7.58 LB/FT, GALVANIZED ACCORDING TO 711.02.

ǂ HANDRAIL SHALL BE SWEDGED END PIPE 1.660 " O.D. PER C&MS 710.03 TYPE I GRADE 2 - FY = 50 KSI.

NO.	DATE	DESCRIPTION
1	09/01/25	SHEET REVISIONS
ADDM' NO.	DATE	DATE COMPLETED

MSE WALL DETAILS - FORWARD ABUTMENT
BRIDGE NO. HAM-75-0123E
PEDESTRIAN BRIDGE OVER RAMP V AND WINCHELL AVE.

DESIGN AGENCY
Palmer ENGINEERING
8350 E. KEMPER ROAD
SUITE B
CINCINNATI, OH 45249
(513) 469-1600

DESIGNER: RJB
REVIEWER: BJF 04/11/25
PROJECT ID: 122048
SUBSET: 14 | TOTAL: 22
SHEET: P.344 | TOTAL: P.421

HAM-IR75-1.05

MODEL: Sheet 2 PAPERSIZE: 34x22 (in.) DATE: 8/27/2025 TIME: 12:58:47 PM PLTDRV: OHDOT_PDF.pltcfg PENTBL: OHDOT_Pen.tbl USER: swalker@palmernet.com WORKSPACE: OHDOTCEx02 WORKSET: 122048 PRODUCT: OpenRoadsDesigner 24.00.00.205
pw:\\ohiodot-pw.bentley.com:ohiodot-pw-02\Documents\01 Active Projects\District 08\Hamilton\122048\402-Engineering_PalmerEngineering\Structures\SFN_3109152\Sheets\122048_SFN_3109152_SW001.dgn

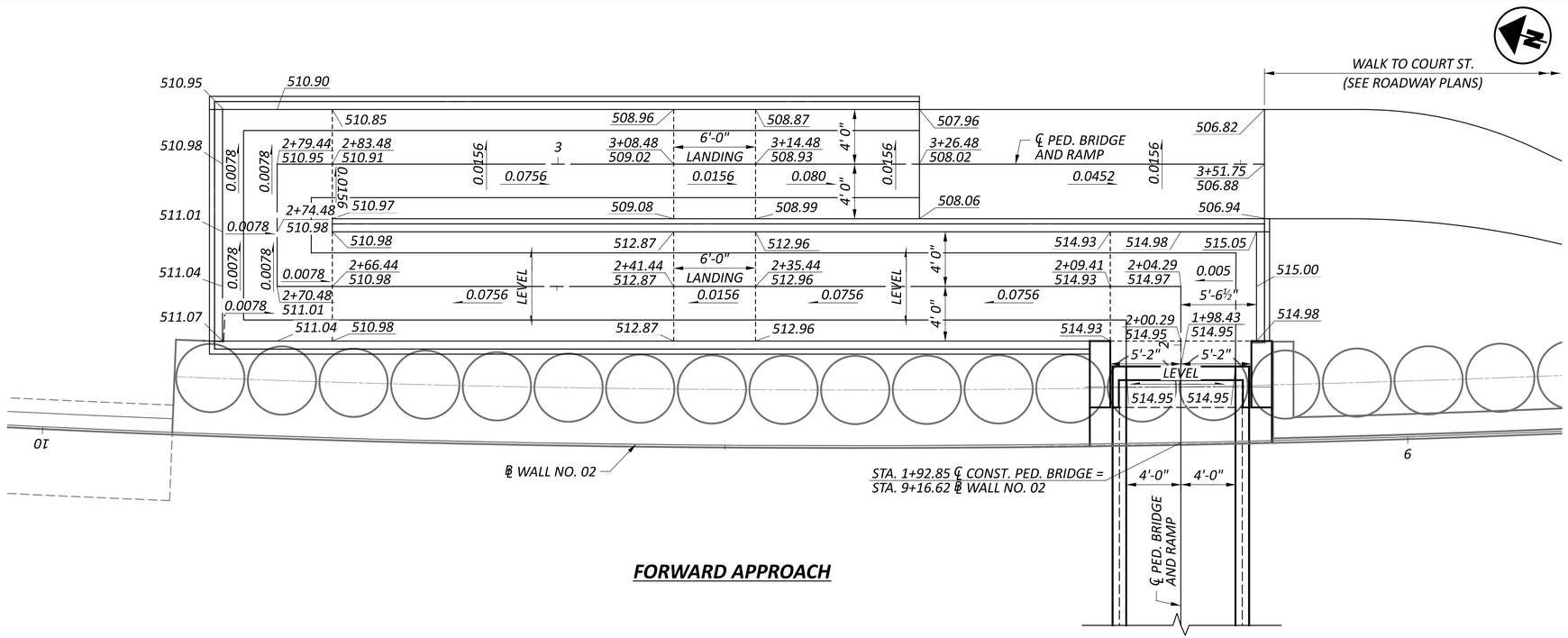

FORWARD APPROACH

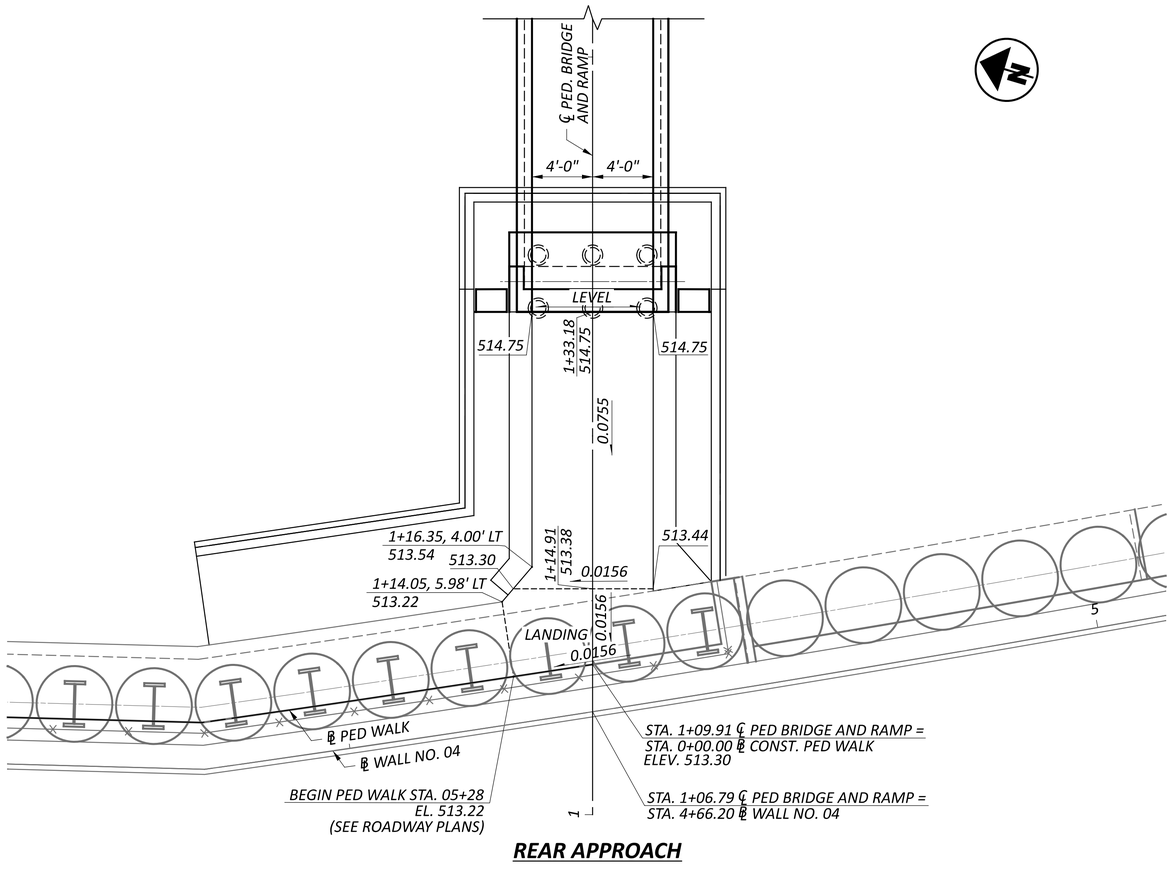

REAR APPROACH

1	09/01/25	SHEET REVISIONS
ADDM' NO.	DATE	DESCRIPTION
DATE COMPLETED		

PEDESTRIAN RAMP GRADE DETAILS
BRIDGE NO. HAM-75-0123E
PEDESTRIAN BRIDGE OVER RAMP V AND WINCHELL AVE.

DESIGN AGENCY
Palmer ENGINEERING
8350 E. KEMPER ROAD
SUITE B
CINCINNATI, OH 45249
(513) 469-1600

DESIGNER RJB
REVIEWER BJF 04/11/25
PROJECT ID 122048
SUBSET 15 | TOTAL 22
SHEET P.345 | TOTAL P.421

HAM-IR75-1.05

MODEL: CLP_PED_BRIDGE - Plan 2 [Sheet] PAPERSIZE: 34x22 (in.) DATE: 8/27/2025 TIME: 12:58:55 PM PLTDRV: OHDOT_PDF.pltcfg PENTBL: OHDOT_Pen.tbl USER: swalker@palmernet.com WORKSPACE: OHDOTCtv02 WORKSET: 122048 PRODUCT: OpenRoadsDesigner 24.00.00.205
pw:\\ohiodot-pw.bentley.com:ohiodot-pw-02\Documents\01 Active Projects\District 08\Hamilton\122048\02-Engineering_Palmer\Engineering\Structures\SFN_3109152\Sheets\122048_SFN_3109152_SW002.dgn

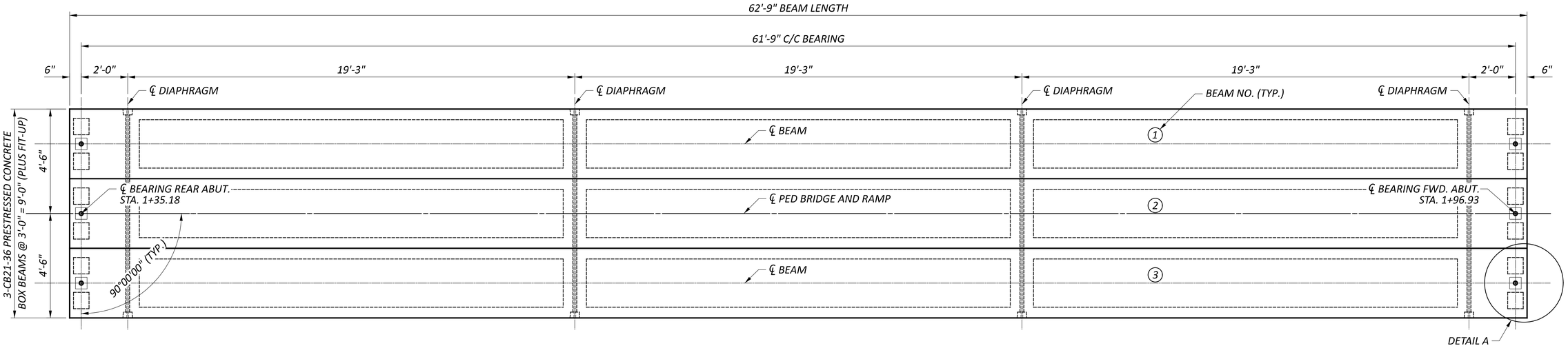

FRAMING PLAN

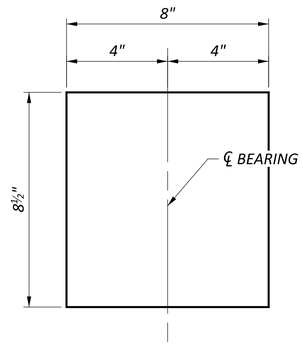

BEARING PLAN

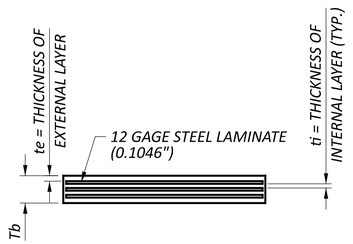

BEARING ELEVATION

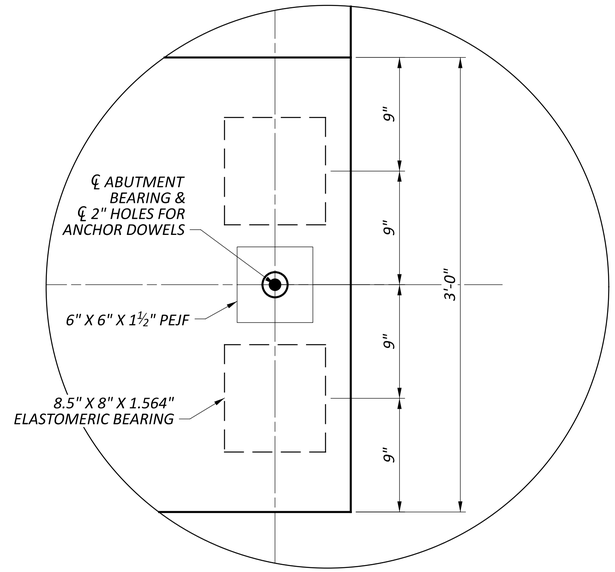

DETAIL A

BEARING SCHEDULE

LOCATION	UNFACTORED LOAD (KIPS)			DIMENSION (IN)					NO. OF ti	NO. OF te	NO. OF STEEL LAMINATES (12 GAGE)	NUMBER REQUIRED
	DL	PL	MAXIMUM DESIGN LOAD	WIDTH	LENGTH	Tb	ti	te				
ABUTMENTS	18.4	4.2	22.6	8.5	8	1.564	0.375	0.25	2	2	3	12

NOTES:

1. THE ELASTOMER SHALL HAVE HARDNESS OF 50 DUROMETER. THE BEARINGS WERE DESIGNED IN ACCORDANCE WITH SECTION 14.7.6 (METHOD A) OF THE AASHTO LRFD BRIDGE DESIGN SPECIFICATIONS. THE LONG-TERM COMPRESSION PROOF LOAD TEST (AASHTO STANDARD SPECIFICATIONS FOR HIGHWAY BRIDGES, DIVISION II, SECTION 18.7.2.8) IS NOT REQUIRED.

2. ALL BEARINGS SHALL BE MARKED PRIOR TO SHIPPING. THE MARKS SHALL INCLUDE THE BEARING LOCATION ON THE BRIDGE, AND A DIRECTION ARROW THAT POINTS UP-STATION. ALL MARKS SHALL BE PERMANENT.

1	09/01/25	SHEET REVISIONS
ADDM' NO.	DATE	DESCRIPTION
DATE COMPLETED		

FRAMING PLAN
BRIDGE NO. HAM-75-0123E
PEDESTRIAN BRIDGE OVER RAMP V AND WINCHELL AVE.

SFN 3109152
DESIGN AGENCY
Palmer ENGINEERING
8350 E. KEMPER ROAD
SUITE B
CINCINNATI, OH 45249
(513) 469-1600

DESIGNER	CHECKER
RJB	TES

REVIEWER: BJF 04/11/25
PROJECT ID: 122048
SUBSET 16 | TOTAL 22
SHEET P.346 | TOTAL P.421

HAM-IR75-1.05

MODEL: Sheet PAPERSIZE: 34x22 (in.) DATE: 8/27/2025 TIME: 12:59:03 PM PLTDRV: OHDOT_PDF.pltcfg PENTBL: OHDOT_Pen.tbl USER: swalker@palmernet.com WORKSPACE: OHDOTCEx02 WORKSET: 122048 PRODUCT: OpenRoadsDesigner 24.00.00.205
pw:\\ohiodot-pw.bentley.com:ohiodot-pw-02\Documents\01 Active Projects\District 08\Hamilton\122048\402-Engineering_PalmerEngineering\Structures\SFN_3109152_SS001.dgn

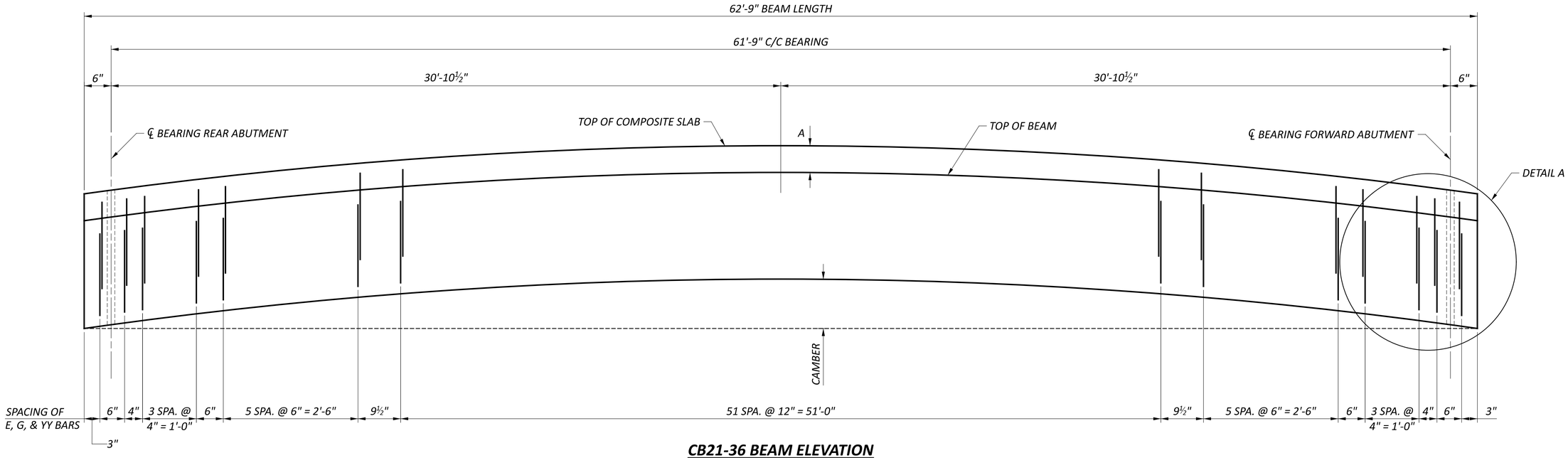

CB21-36 BEAM ELEVATION

ALONG ℄ OF BEAM (NOT TO SCALE)

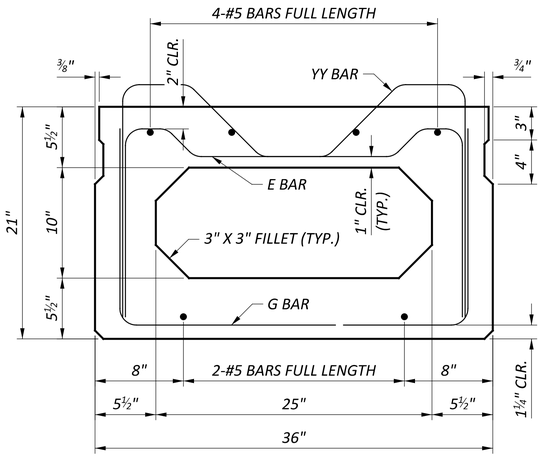

CB21-36 MILD REINFORCING

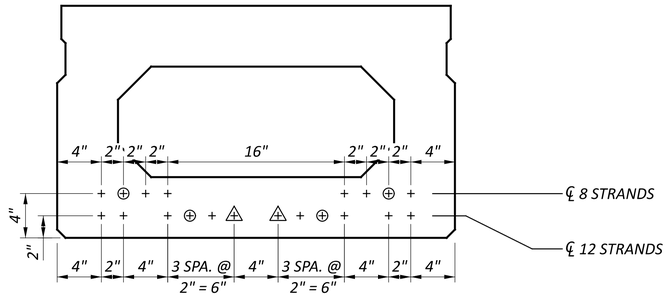

CB21-36 STRAND PATTERN

△ - DEBOND STRAND 6'-3" FROM END OF BEAM
⊕ - DEBOND STRAND 3'-0" FROM END OF BEAM

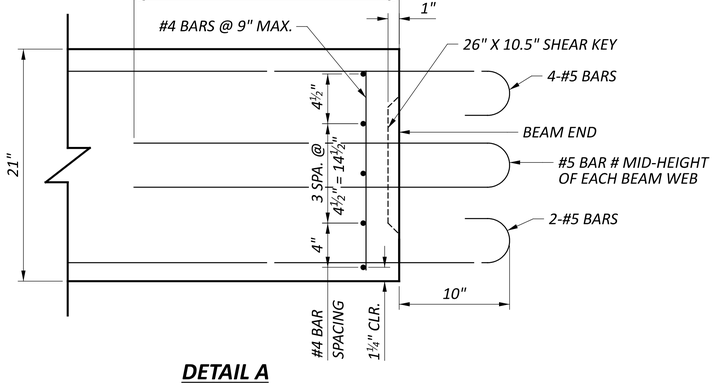

DETAIL A

NOTES:

1. TERMINATE FULL LENGTH TOP AND BOTTOM BARS WITH A STANDARD 180 DEGREE HOOK AS SHOWN.
2. SEE STANDARD DRAWING PSBD-2-07 FOR ADDITIONAL DETAILS.
3. ESTIMATED CAMBER AT DAY 0 (D0) IS 1.29".
4. ESTIMATED CAMBER AT DAY 0 (D30) IS 2.21".
5. DEFLECTION DUE TO REMAINING DEAD LOAD (CONCRETE DECK, RAILING, ETC.) IS 1.03".
6. THE BEAM SEAT ELEVATIONS ASSUME ESTIMATED CAMBER (D30).
7. DECK SLAB THICKNESS FOR CONCRETE QUANTITY: THE ESTIMATED QUANTITY OF DECK CONCRETE IS MEASURED ACCORDING TO CMS 511. IN ADDITION TO THE DESIGN SLAB THICKNESS, THE QUANTITY INCLUDES A VARIABLE HAUNCH THICKNESS THAT PROVIDES AN ALLOWANCE FOR VERTICAL GRADE ADJUSTMENT AND BEAM CAMBER.
8. SEE SHEET 16 22 FOR BEARING PAD DETAILS.
9. BARS PROJECTING INTO THE DECK OR INTO THE ABUTMENT DIAPHRAGM SHALL BE GALVANIZED.

TOPPING THICKNESS @ CL OF BEAM (DIM. A) (IN.)			
	REAR ABUT.	MIDSPAN	FWD. ABUT.
ALL BEAMS	7.13	6.00	7.13

1	09/01/25	SHEET REVISIONS
ADDM' NO.	DATE	DESCRIPTION
DATE COMPLETED		

BEAM DETAILS
BRIDGE NO. HAM-75-0123E
PEDESTRIAN BRIDGE OVER RAMP V AND WINCHELL AVE.

SFN 3109152

DESIGN AGENCY

Palmer ENGINEERING
8350 E. KEMPER ROAD
SUITE B
CINCINNATI, OH 45249
(513) 469-1600

DESIGNER	CHECKER
RJB	TES

REVIEWER BJF 04/11/25

PROJECT ID 122048

SUBSET	TOTAL
17	22

SHEET	TOTAL
P.347	P.421

HAM-IR75-1.05

MODEL: Sheet PAPERSIZE: 34x22 (in.) DATE: 8/28/2025 TIME: 6:36:48 AM PLTDRV: OHDOT_PDF.pltcfg PENTBL: OHDOT_Pen.tbl USER: swalker@palmernet.com WORKSPACE: OHDOT-pw:\\ohiodot-pw.bentley.com:ohiodot-pw-02\Documents\01 Active Projects\District 08\Hamilton\122048\402-Engineering_PalmerEngineering\Structures\SFN_3109152\Sheets\122048_SFN_3109152_SS002.dgn WORKSET: 122048 PRODUCT: OpenRoadsDesigner 24.00.00.205

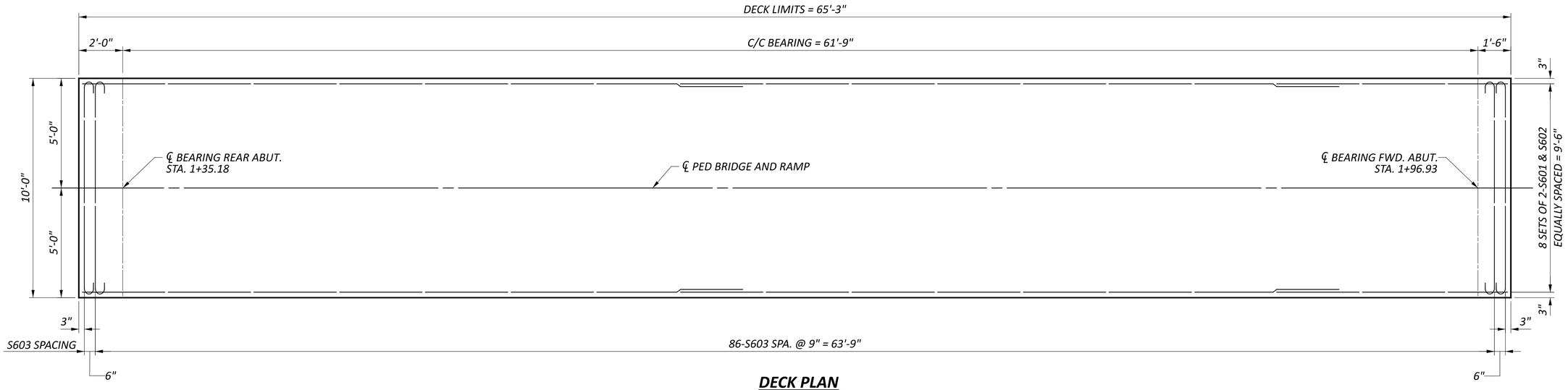

DECK PLAN

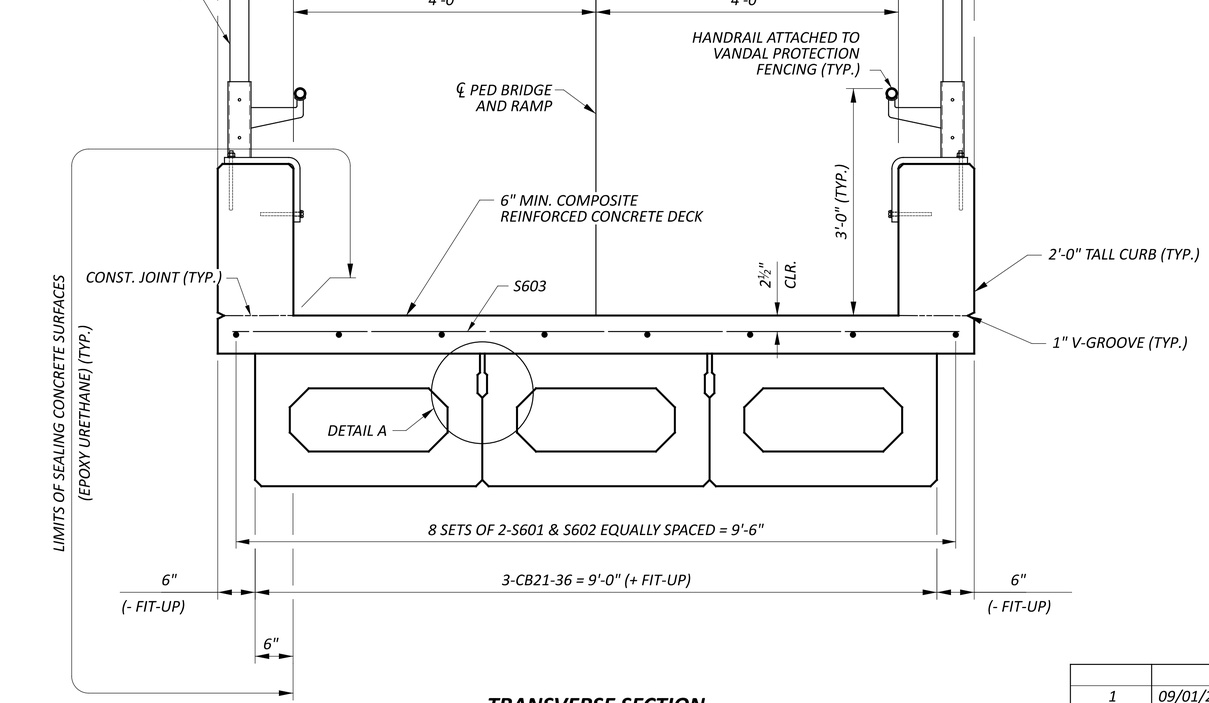

TRANSVERSE SECTION

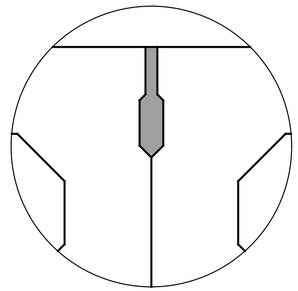

DETAIL 'A'

SHEAR KEYWAYS SHALL BE MORTARED TO A FINISHED PLANE BETWEEN THE TOP EDGES OF THE ADJACENT BEAMS WHERE VERTICAL OFFSET OCCURS WITHIN TOLERANCES.

LAP SPLICES:

#6 = 2'-10" (LONGITUDINAL)

NOTES:

1. SEE SHEETS 4 22 THROUGH 9 22 FOR END DIAPHRAGM DETAILS.

1	09/01/25	SHEET REVISIONS
ADDM' NO.	DATE	DESCRIPTION
DATE COMPLETED		

DECK PLAN AND TRANSVERSE SECTION
BRIDGE NO. HAM-75-0123E
PEDESTRIAN BRIDGE OVER RAMP V AND WINCHELL AVE.

SFN 3109152

DESIGN AGENCY
Palmer ENGINEERING
8350 E. KEMPER ROAD
SUITE B
CINCINNATI, OH 45249
(513) 469-1600

DESIGNER	CHECKER
RJB	TES

REVIEWER: BJF 04/11/25

PROJECT ID: 122048

SUBSET	TOTAL
18	22

SHEET	TOTAL
P.348	P.421

HAM-IR75-1.05

MODEL: Sheet PAPERSIZE: 34x22 (in.) DATE: 8/27/2025 TIME: 12:59:16 PM PLTDRV: OHDOT_PDF.pltcfg PENTBL: OHDOT_Pen.tbl USER: swalker@palmernet.com WORKSPACE: OHDOTCEx02 WORKSET: 122048 PRODUCT: OpenRoadsDesigner 24.00.00.205
pw:\\ohiodot-pw.bentley.com:ohiodot-pw-02\Documents\01 Active Projects\District 08\Hamilton\122048\402-Engineering_PalmerEngineering\Structures\SFN_3109152_SD001.dgn

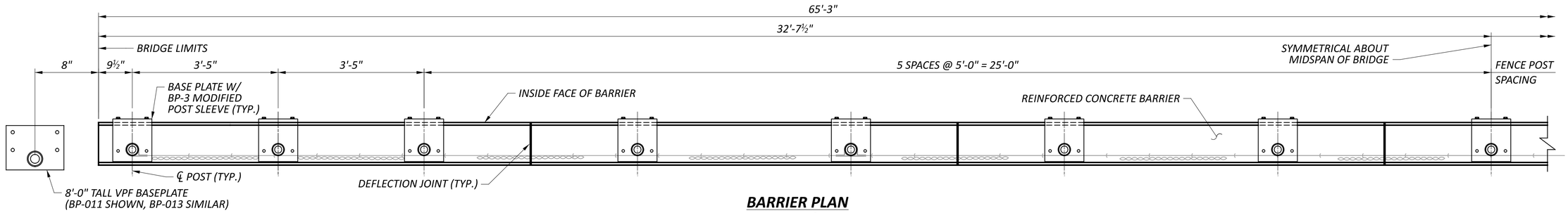

BARRIER PLAN

SYMMETRICAL ABOUT ℄ HAM-75-0123E

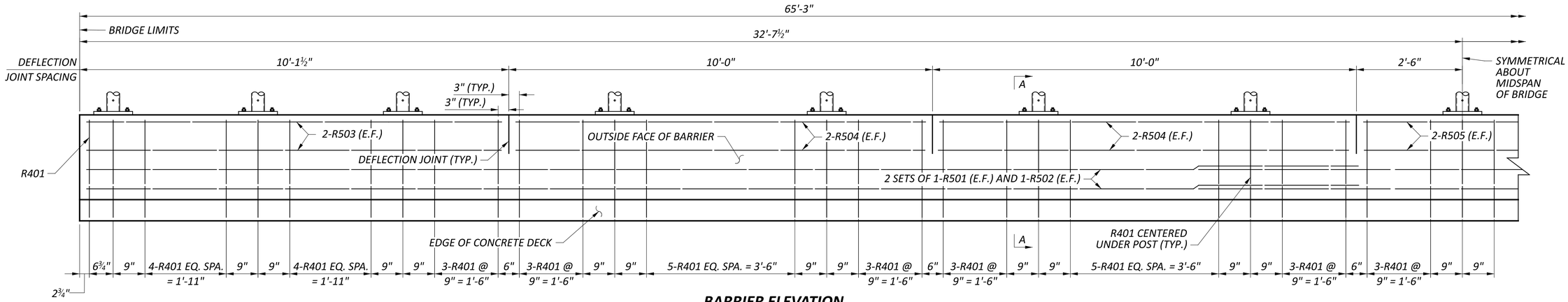

BARRIER ELEVATION

SYMMETRICAL ABOUT ℄ HAM-75-0123E

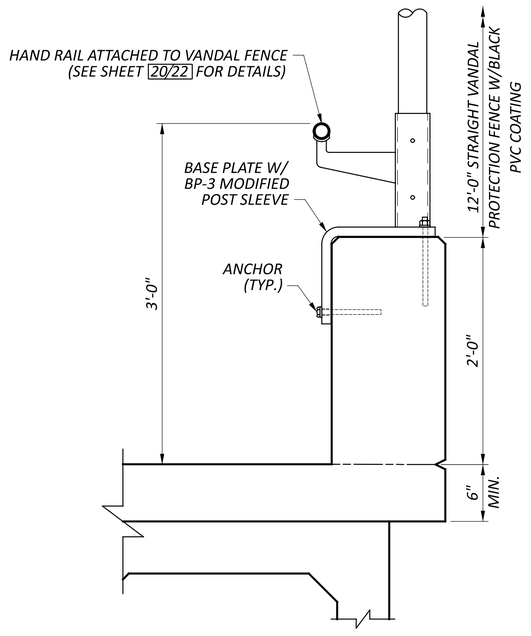

TYPICAL BARRIER SECTION

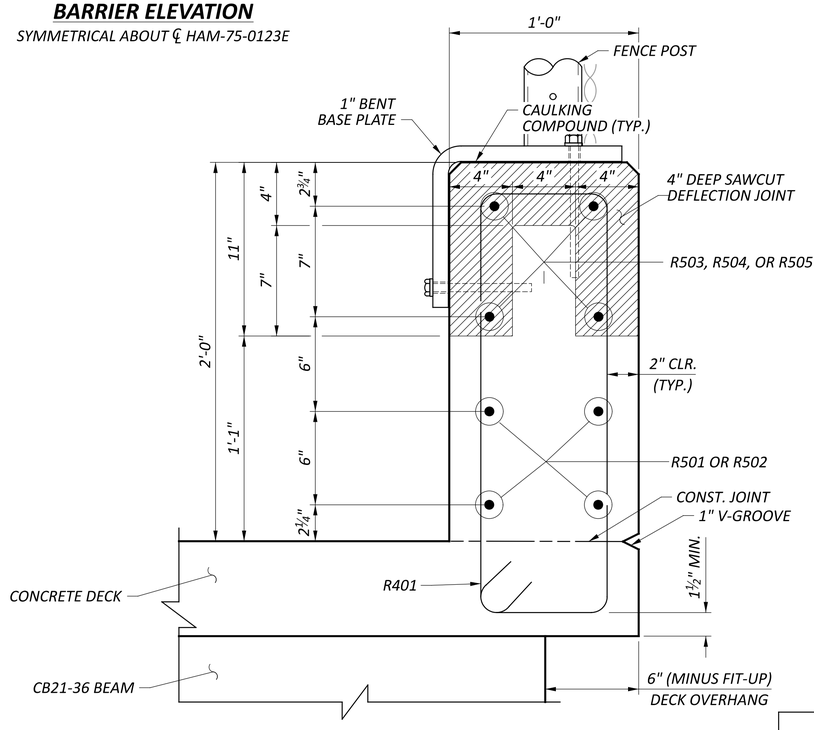

SECTION A-A

LAP SPLICES

#5 = 3'-2" (LONGITUDINAL)

1	09/01/25	SHEET REVISIONS
ADDM' NO.	DATE	DESCRIPTION
DATE COMPLETED		

BARRIER DETAILS
BRIDGE NO. HAM-75-0123E
PEDESTRIAN BRIDGE OVER RAMP V AND WINCHELL AVE.

SFN 3109152

DESIGN AGENCY
Palmer ENGINEERING
8350 E. KEMPER ROAD
SUITE B
CINCINNATI, OH 45249
(513) 469-1600

DESIGNER	CHECKER
RJB	TES

REVIEWER: BJF 04/11/25

PROJECT ID: 122048

SUBSET	TOTAL
19	22

SHEET	TOTAL
P.349	P.421

HAM-IR75-1.05

MODEL: Elevation Sheet PAPERSIZE: 34x22 (in.) DATE: 8/28/2025 TIME: 7:36:53 AM PLTDRV: OHDOT_PDF.pltcfg PENTBL: OHDOT_Pen.tbl USER: swalker@palmernet.com WORKSPACE: OHDOTCEv02 WORKSET: 122048 PRODUCT: OpenRoadsDesigner 24.00.00.205
pw:\\ohiodot-pw.bentley.com:ohiodot-pw-02\Documents\01 Active Projects\District 08\Hamilton\122048\402-Engineering_PalmerEngineering\Structures\SFN_3109152\Sheets\122048_SFN_3109152_SA001.dgn

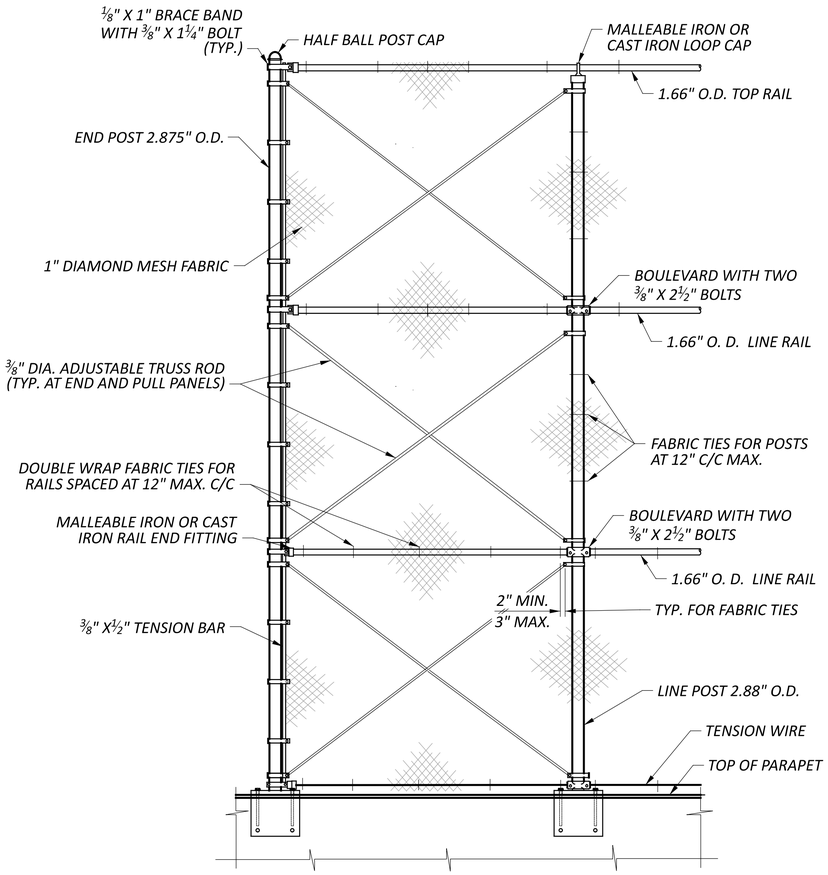

INSIDE ELEVATION OF STRAIGHT VANDAL PROTECTION FENCE

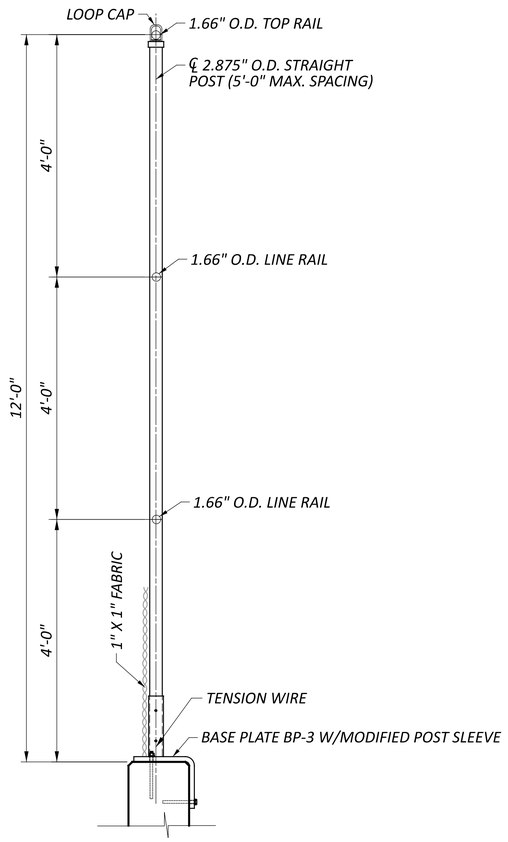

POST SECTION

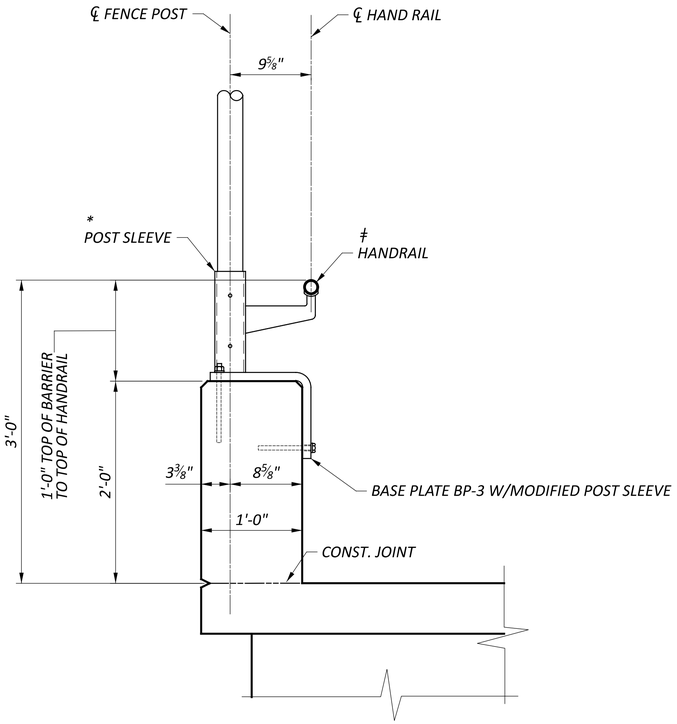

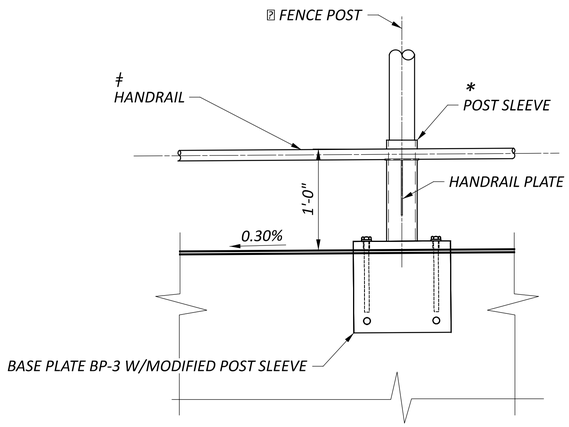

HANDRAIL ELEVATION DETAIL SLOPED AREA

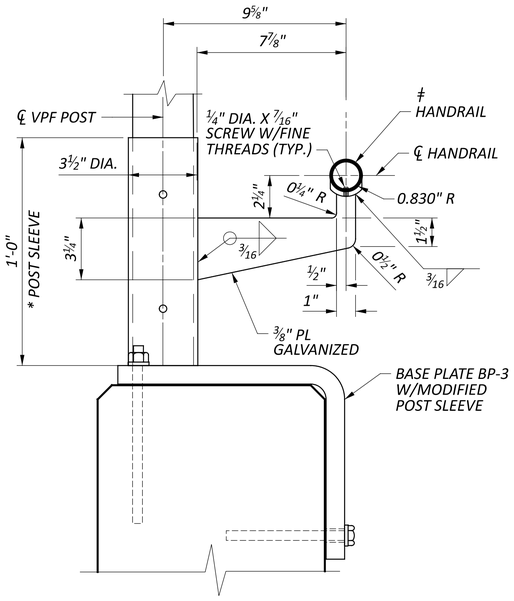

HANDRAIL PLATE DETAIL

LEGEND

*
POST SLEEVES SHALL BE 3.5 INCH OUTSIDE DIAMETER PIPE, ASTM A53, 35,000 PSI MINIMUM YIELD STRENGTH, 7.58 LB/FT, GALVANIZED ACCORDING TO 711.02.

‡
HANDRAIL SHALL BE SWEDGED END PIPE 1.660 " O.D. PER C&MS 710.03 TYPE I GRADE 2 - FY = 50 KSI.

1	09/01/25	SHEET REVISIONS
ADDM' NO.	DATE	DESCRIPTION
DATE COMPLETED		

NOTES:

DECK PLAN: SEE SHEET 18/22 .

RAILING PLAN: SEE SHEET 19/22 .

CONCRETE BARRIER REINFORCING, SETTING ANCHORS:
ACCURATELY PLACE REINFORCING STEEL IN THE CONCRETE BARRIER TO AVOID INTERFERENCE WITHTHE DRILLING OF FENCE ANCHOR BAR HOLES.

VANDAL PROTECTION FENCE, 12' STRAIGHT, COATED FABRIC:
FOR DIMENSIONS AND DETAILS NOT SHOWN, SEE STANDARD CONSTRUCTION DRAWING VPF-1-24. BASE PLATES SHALL BE 50 KSI GALVANIZED STEEL.

FENCE DETAILS
BRIDGE NO. HAM-75-0123E
PEDESTRIAN BRIDGE OVER RAMP V AND WINCHELL AVE.

SFN 3109152

DESIGN AGENCY
Palmer ENGINEERING
8350 E. KEMPER ROAD
SUITE B
CINCINNATI, OH 45249
(513) 469-1600

DESIGNER	CHECKER
AJP	RJB

REVIEWER
BJF 04/11/25

PROJECT ID
122048

SUBSET	TOTAL
20	22

SHEET	TOTAL
P.350	P.421

HAM-IR75-1.05

MODEL: Fence Sheet PAPERSIZE: 34x22 (in.) DATE: 8/27/2025 TIME: 12:59:22 PM PLTDRV: OHDOT_PDF.pltcfg PENTBL: OHDOT_Pen.tbl USER: swalker@palmernet.com WORKSPACE: OHDOTCEv02 WORKSET: 122048 PRODUCT: OpenRoadsDesigner 24.00.00.205
pw:\\ohiodot-pw.bentley.com:ohiodot-pw-02\Documents\01 Active Projects\District 08\Hamilton\122048\02-Engineering_Palmer\Engineering\Structures\SFN_3109152\Sheets\122048_SFN_3109152_SA001.dgn

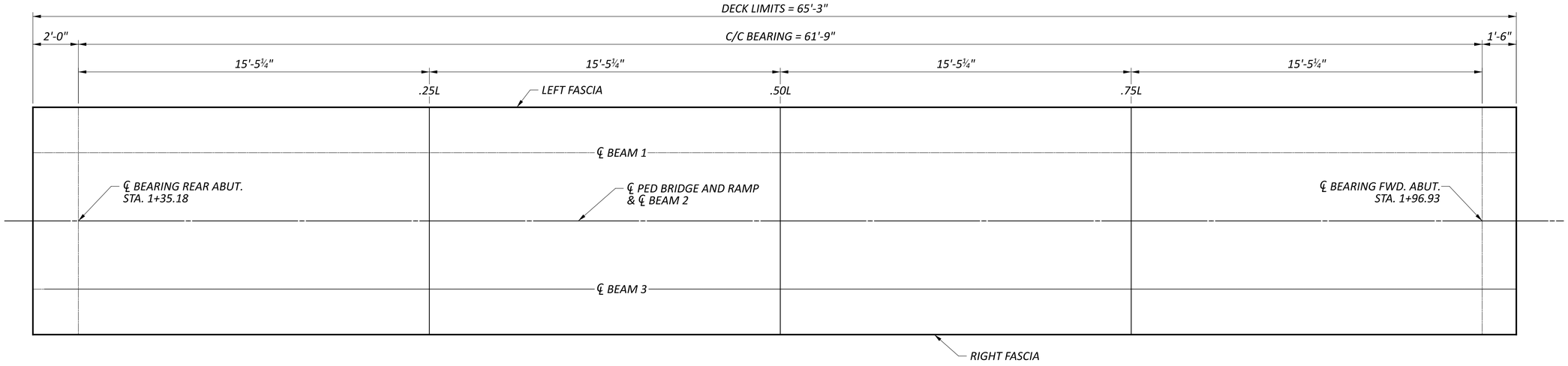

PLAN

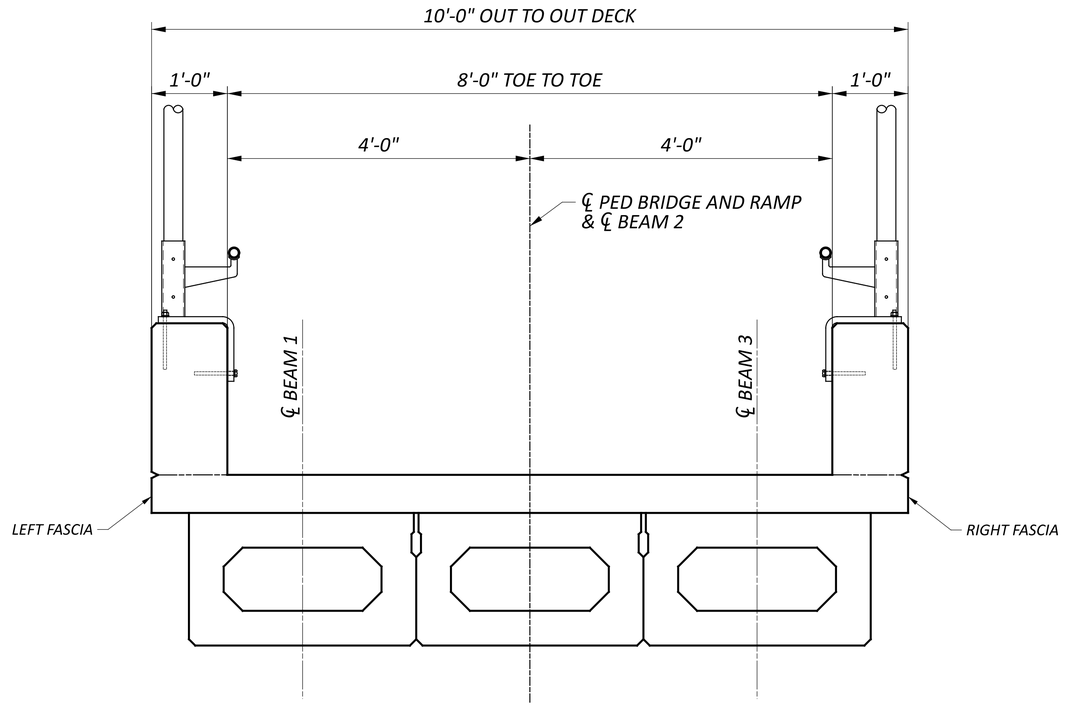

TRANSVERSE SECTION

FINAL DECK SURFACE & SCREED ELEVATIONS

LOCATION		CL BRG. REAR ABUT.	SPAN 1			CL BRG. FWD. ABUT.
			0.25L	0.50L	0.75L	
LEFT FASCIA	STATION	01+35.18	01+50.62	01+66.06	01+81.49	01+96.93
	SCREED ELEVATION	514.76	514.87	514.94	514.96	514.95
	FINAL DECK SURFACE ELEVATION	514.76	514.81	514.85	514.90	514.95
CL BEAM 1	STATION	01+35.18	01+50.62	01+66.06	01+81.49	01+96.93
	FINAL DECK SURFACE ELEVATION	514.76	514.81	514.85	514.90	514.95
CL CONST. PED BRIDGE AND RAMP & BEAM 2	STATION	01+35.18	01+50.62	01+66.06	01+81.49	01+96.93
	SCREED ELEVATION	514.76	514.87	514.94	514.96	514.95
	FINAL DECK SURFACE ELEVATION	514.76	514.81	514.85	514.90	514.95
CL BEAM 3	STATION	01+35.18	01+50.62	01+66.06	01+81.49	01+96.93
	FINAL DECK SURFACE ELEVATION	514.76	514.81	514.85	514.90	514.95
RIGHT FASCIA	STATION	01+35.18	01+50.62	01+66.06	01+81.49	01+96.93
	SCREED ELEVATION	514.76	514.87	514.94	514.96	514.95
	FINAL DECK SURFACE ELEVATION	514.76	514.81	514.85	514.90	514.95

1	09/01/25	SHEET REVISIONS
ADDM' NO.	DATE	DESCRIPTION
DATE COMPLETED		

NOTES:

1. FINAL DECK SURFACE ELEVATIONS SHOWN REPRESENT THE DECK SURFACE LOCATION AFTER ALL ANTICIPATED DEAD LOAD DEFLECTIONS HAVE OCCURRED.

2. OFFSETS REFERENCE ℄ PED BRIDGE AND RAMP.

DECK ELEVATIONS
BRIDGE NO. HAM-75-0123E
PEDESTRIAN BRIDGE OVER RAMP V AND WINCHELL AVE.

SFN 3109152

DESIGN AGENCY
Palmer ENGINEERING
8350 E. KEMPER ROAD
SUITE B
CINCINNATI, OH 45249
(513) 469-1600

DESIGNER	CHECKER
RJB	TES

REVIEWER: BJF 04/11/25

PROJECT ID: 122048

SUBSET	TOTAL
21	22

SHEET	TOTAL
P.351	P.421

HAM-IR75-1.05

MODEL: Sheet PAPERSIZE: 34x22 (in.) DATE: 8/27/2025 TIME: 12:59:28 PM PLTDRV: OHDOT_PDF.pltcfg PENTBL: OHDOT_Pen.tbl USER: swalker@palmernet.com WORKSPACE: OHDOTCEx02 WORKSET: 122048 PRODUCT: OpenRoadsDesigner 24.00.00.205
pw:\\ohiodot-pw.bentley.com:ohiodot-pw-02\Documents\01 Active Projects\District 08\Hamilton\122048\402-Engineering_PalmerEngineering\Structures\SFN_3109152\Sheets\122048_SFN_3109152_SD002.dgn

REINFORCING STEEL LIST

MARK	NUMBER			LENGTH	WEIGHT (LBS.)	TYPE	DIMENSIONS						
	REAR	FWD.	TOTAL				A	B	C	D	E	R	INC.
ABUTMENTS (GALVANIZED STEEL REINFORCEMENT - GSR)													
A501	12		12	10' - 8"	134	STR							
A502		12	12	13' - 0"	163	STR							
A503		15	15	21' - 11"	343	3	3' - 7"	7' - 1"					
A504		13	13	13' - 0"	177	STR							
A505		11	11	15' - 3"	175	2	6' - 5"	2' - 8"	6' - 5"				
A506		11	11	15' - 1"	174	2	6' - 4"	2' - 8"	6' - 4"				
A507		8	8	13' - 9"	115	2	6' - 5"	1' - 2"	6' - 5"				
A508		8	8	18' - 3"	153	2	8' - 8"	1' - 2"	8' - 8"				
A509		40	40	4' - 6"	188	STR							
A510	14		14	15' - 0"	220	3	2' - 8"	4' - 7"					
A511	6		6	16' - 11"	106	3	1' - 2"	7' - 0"					
A512	20		20	5' - 4"	112	STR							
A513	6		6	6' - 5"	40	3	1' - 9"	1' - 2"					
A601	14		14	18' - 4"	386	3	6' - 2"	2' - 7"					
A801	9		9	10' - 8"	257	STR							
A802		4	4	13' - 0"	139	STR							
A803		9	9	13' - 0"	313	STR							
A804	4		4	7' - 3"	78	STR							
ABUTMENTS GSR SUBTOTAL =					**3,273**	**LBS.**							
DIAPHRAGMS (GSR)													
D401	4	2	6	9' - 10"	40	3	2' - 8"	2' - 0"					
D402	12	6	18	2' - 8"	33	STR							
D501	6	6	12	10' - 8"	134	STR							
D502	10	10	20	6' - 11"	144	3	1' - 2"	2' - 0"					
DIAPHRAGMS GSR SUBTOTAL =					**351**	**LBS.**							
DECK (GALVANIZED STEEL REINFORCEMENT - GSR)													
S601	16			30' - 0"	721	STR							
S602	8			10' - 7"	128	STR							
S603	88			11' - 0"	1,454	17	9' - 8"						
DECK GSR SUBTOTAL =					**2,303**	**LBS.**							
RAILING (GSR)													
R401	178			6' - 3"	744	3	0' - 8"	2' - 2 ½"					
R501	16			30' - 0"	501	STR							
R502	8			11' - 3"	94	STR							
R503	16			9' - 9"	163	STR							
R504	32			9' - 8"	323	STR							
R505	8			4' - 8"	39	STR							
RAILING GSR SUBTOTAL =					**1,864**	**LBS.**							
GSR TOTAL =					**7,791**	**LBS.**							

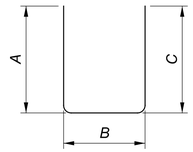

TYPE-2

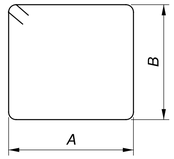

TYPE-3



TYPE-17

1	09/01/25	SHEET REVISIONS
ADDM' NO.	DATE	DESCRIPTION
DATE COMPLETED		

REINFORCING STEEL LIST
BRIDGE NO. HAM-75-0123E
PEDESTRIAN BRIDGE OVER RAMP V AND WINCHELL AVE.

SFN 3109152

DESIGN AGENCY
Palmer ENGINEERING
8350 E. KEMPER ROAD
SUITE B
CINCINNATI, OH 45249
(513) 469-1600

DESIGNER	CHECKER
CDVK	RJB

REVIEWER: BJF 04/11/25

PROJECT ID: 122048

SUBSET	TOTAL
22	22

SHEET	TOTAL
P.352	P.421

HAM-IR75-1.05

MODEL: Sheet PAPERSIZE: 34x22 (in.) DATE: 8/28/2025 TIME: 7:33:51 AM PLTDRV: OHDOT_PDF.pltcfg PENTBL: OHDOT_Pen.tbl USER: swalker@palmernet.com WORKSPACE: OHDOTCEv02 WORKSET: 122048 PRODUCT: OpenRoadsDesigner 24.00.00.205
pw:\\ohiodot-pw.bentley.com:ohiodot-pw-02\Documents\01 Active Projects\District 08\Hamilton\122048\02-Engineering_PalmerEngineering\Structures\SFN_3109152\Sheets\122048_SFN_3109152_SL001.dgn

LANDSCAPE IRRIGATION SYSTEM

1.0 GENERAL REQUIREMENTS

A. THE WORK SHALL INCLUDE THE FOLLOWING: FURNISH AND INSTALL A FULLY AUTOMATIC IRRIGATION SYSTEM, INCLUDING ALL LABOR, MATERIALS, EQUIPMENT AND SERVICES REQUIRED TO PROVIDE A COMPLETE AND FULLY OPERATING SYSTEM, AS SPECIFIED HEREIN AND AS DIAGRAMMED IN THE DRAWINGS.
B. THE DRAWINGS ARE SCHEMATIC AND TOGETHER WITH THE SPECIFICATIONS ARE INTENDED TO COMPLEMENT EACH OTHER. THE CONTRACTOR SHALL FURNISH AND INSTALL ALL PARTS, WHICH MAY BE REQUIRED BY THE DRAWINGS AND OMITTED BY THE SPECIFICATIONS, OR VICE VERSA, JUST AS THOUGH REQUIRED BY BOTH. SHOULD THERE APPEAR TO BE DISCREPANCIES OR QUESTION OF INTENT, THE CONTRACTOR SHALL REFER THE MATTER TO THE PROJECT ENGINEER FOR DECISION, AND THIS INTERPRETATION SHALL BE FINAL, CONCLUSIVE AND BINDING.
C. ALL NECESSARY FIELD CHANGES TO THE DRAWINGS TO AVOID ANY OBSTACLES SHALL BE MADE BY THE CONTRACTOR WITH THE PRIOR APPROVAL OF THE PROJECT ENGINEER.
D. TRENCH EXCAVATION, BACK FILLING AND BEDDING MATERIALS, TOGETHER WITH THE TESTING OF THE COMPLETED INSTALLATION SHALL BE INCLUDED IN THIS WORK.
E. ALL PARTS NECESSARY FOR THE PROPER AND COMPLETE EXECUTION OF THE WORK, WHETHER OR NOT INDICATED ON THE DRAWINGS, SHALL BE FURNISHED.
F. THE DIAGRAMATIC IRRIGATION SYSTEM SHOWN ON THE DRAWINGS AND DESCRIBED WITHIN THESE SPECIFICATIONS REPRESENTS A SINGLE CONTROLLER AND IRRIGATION SYSTEM FOR EACH BRIDGE LANDSCAPE SUPPLIED FROM MUNICIPAL WATER. A MINIMUM 65-PSI STATIC AND 60-PSI DYNAMIC PRESSURE AT FULL SYSTEM FLOW IS REQUIRED FROM THE IRRIGATION CONTRACTOR'S POINT OF CONNECTION DOWNSTREAM OF THE BACKFLOW PREVENTER.
G. THE WORK UNDER THIS SECTION SHALL COMPLY WITH ALL ORDINANCES AND REGULATIONS OF AUTHORITIES HAVING JURISDICTION. THE CONTRACTOR SHALL OBTAIN AND PAY FOR ANY AND ALL PERMITS, TESTS AND CERTIFICATIONS REQUIRED FOR THE EXECUTION OF WORK UNDER THIS SECTION. FURNISH COPIES OF PERMITS, CERTIFICATIONS AND APPROVAL NOTICES TO THE PROJECT ENGINEER PRIOR TO REQUESTING PAYMENT. THE CONTRACTOR SHALL INCLUDE IN THEIR BID ANY CHARGES BY THE WATER DEPARTMENT, UTILITY COMPANY, OR OTHER AUTHORITIES FOR WORK DONE BY THEM AND CHARGED TO THE CONTRACTOR.
H. THE CONTRACTOR SHALL BECOME FULLY INFORMED OF EXISTING CONDITIONS ON THE SITE BEFORE SUBMITTING A BID, AND SHALL BE FULLY RESPONSIBLE FOR CARRYING OUT ALL WORK REQUIRED TO FULLY AND PROPERLY EXECUTE THE WORK OF THE CONTRACT. NO CLAIM FOR EXTRA COMPENSA- TION OR EXTENSION OF TIME WILL BE ALLOWED ON ACCOUNT OF ACTUAL CONDITIONS INCONSISTENT WITH THOSE ASSUMED.

1.1 METHOD OF MEASUREMENT

LANDSCAPE IRRIGATION SYSTEM SHALL BE MEASURED BY LUMP SUM FOR EACH SEPARATE SYSTEM INCLUDING BRIDGE AND ADJACENT STREETSCAPE SEGMENT WHERE APPLICABLE.

1.2 BASIS OF PAYMENT

THE ACCEPTED LANDSCAPE IRRIGATION SYSTEM WILL BE PAID FOR AT THE CONTRACT PRICE DESIGNATED FOR EACH BRIDGE SHOWN ON THE PLANS. ALL COSTS FOR WORK IN THIS SECTION ARE TO BE INCLUDED IN THE LUMP SUM PRICE FOR EACH LANDSCAPE IRRIGATION SYSTEM.

1.3 REFERENCES

APPLICABLE REQUIREMENTS OF ACCEPTED STANDARDS AND CODES SHALL APPLY TO THE WORK OF THIS SECTION AND SHALL BE SO LABELED OR LISTED:

AMERICAN SOCIETY FOR TESTING & MATERIALS (ASTM)

ASTM: D1784 RIGID POLY (VINYL CHLORIDE) (PVC) COMPOUNDS AND CHLORINATED POLY (VINYL CHLORIDE) (CPVC) COMPOUNDS.

ASTM: D1785 POLY (VINYL CHLORIDE) (PVC) PLASTIC PIPE, SCHEDULES 40, 80, AND CL200.

ASTM: D2464 THREADED POLY (VINYL CHLORIDE) (PVC) PLASTIC PIPE FITTINGS, SCHEDULE 80.

ASTM: D2466 POLY (VINYL CHLORIDE) (PVC) PLASTIC PIPE FITTINGS, SCHEDULE 40

ASTM: D2564 SOLVENT CEMENTS FOR POLY (VINYL CHLORIDE) (PVC) PLASTIC PIPING SYSTEMS

ASTM: D2737-99 POLYETHYLENE (PE) PRESSURE RATED TUBE.

NATIONAL PLUMBING CODE (NPC)

NATIONAL ELECTRIC CODE (NEC)

NATIONAL SANITARY FOUNDATION (NSF)

AMERICAN SOCIETY OF AGRICULTURAL ENGINEERS (ASAE)

UNDERWRITERS LABORATORIES, INC. (UL)

OCCUPATIONAL SAFETY AND HEALTH REGULATIONS (OSHA)

1.4 SUBMITTALS

A. SHOP DRAWINGS: SUBMIT THE PROPOSED IRRIGATION SYSTEM PER THE DIAGRAMS AND DESIGN SPECIFICATIONS PROVIDED. SUBMIT PLANS FOR REVIEW BY THE DEPARTMENT PER THE PROJECT REQUIREMENTS FOLLOWING FIELD MEASUREMENTS AND VERIFICATION OF ALL KNOWN UTILTIY CONFLICTS. NOTE ANY DEVIATION FROM THE DESIGN SPECIFICATIONS WHETHER SUGGESTED OR REQUIRED. PLANS MUST MEET REQUIREMENTS OF PERMITTING TO CONSTRUCT.
B. PRODUCT SPECIFICATION SHEETS OF ALL PROPOSED EQUIPMENT TO BE INSTALLED FOR APPROVAL BY PROJECT ENGINEER PRIOR TO THE START OF WORK. THE IRRIGATION SYSTEM MAY NOT COMMENCE UNTIL PRODUCT SHEETS ARE SUBMITTED AND APPROVED. SUBMITTALS SHALL BE MARKED TO SHOW PROPER NOZZLES, SIZES, FLOWS, AND EQUIPMENT TO BE INCLUDED: DRIP TUBING, FLOOD BUBBLER ASSEMBLIES, VALVES, MANUAL AND AUTOMATIC, CONTROLLERS, VALVE BOXES, PIPE AND FITTINGS, WIRE AND CONNECTORS, QUICK COUPLING VALVES, RAIN SENSOR, AND CONTROLS, AIR VACUUM / RELIEF VALVES, AND MISCELLANEOUS MATERIALS.
C. PROJECT RECORD DOCUMENTS: THE CONTRACTOR SHALL PROVIDE AND KEEP UP-TO-DATE A COMPLETE REDLINED RECORD SET OF DRAWINGS OF THE SYSTEM AS THE PROJECT PROCEEDS. DRAWINGS SHALL BE CORRECTED DAILY, SHOWING EVERY CHANGE FROM THE ORIGINAL DRAWINGS AND SPECIFICATIONS. RECORD DRAWINGS SHALL SPECIFY AND EXACTLY LOCATE EACH VALVE BOX LOCATION TO BE REFERENCED BY DISTANCE FROM A MINIMUM OF TWO PERMANENT LOCATIONS. CONTROLLER(S), RAIN SENSOR(S), AIR VACUUM RELIEF VALVES, FLUSHING VALVES, QUICK COUPLING VALVES, WATER METERS, BACK FLOW PREVENTION DEVICE AND ALL OTHER EQUIPMENT SHALL BE INDICATED ON THE DRAWINGS. ALL WIRE ROUTING, WIRE SIZE AND SPLICES SHALL BE INDICATED. MAIN LINE PIPE AND WIRE ROUTE SHALL HAVE TWO (2) DISTINCTLY DIFFERENT GRAPHIC SYMBOLS (LINE TYPES). THIS REDLINED RECORD SET OF DRAWINGS SHALL BE KEPT AT JOB SITE AND SHALL BE USED ONLY AS A RECORD SET. THIS RECORD SET OF DRAWINGS SHALL BE AVAILABLE AT ALL TIMES FOR OBSERVATION AND SHALL BE KEPT IN A LOCATION DESIGNATED BY PROJECT ENGINEER. SHOULD THIS RECORD SET OF DRAWINGS NOT BE AVAILABLE FOR REVIEW OR NOT BE UP-TO-DATE AT THE TIME OF THE OBSERVATION, IT WILL BE ASSUMED NO WORK HAS BEEN COMPLETED. PROVIDE COPIES OF THE REDLINED RECORD SET OF DRAWINGS FOR PROJECT ENGINEER REVIEW. MAKE NEAT AND LEGIBLE NOTATIONS ON THIS RECORD SET OF DRAWINGS AS THE WORK PROCEEDS, SHOWING THE WORK AS ACTUALLY INSTALLED. FOR EXAMPLE, SHOULD A PIECE OF EQUIPMENT BE INSTALLED IN A LOCATION THAT DOES NOT MATCH THE PLAN, INDICATE THAT EQUIPMENT IN A GRAPHIC MANNER IN THE LOCATION OF INSTALLATION AND SO AS TO MATCH THE ORIGINAL SYMBOLS AS INDICATED IN THE IRRIGATION LEGEND. SHOULD THE EQUIPMENT BE DIFFERENT FROM THAT SPECIFIED, INDICATE WITH A NEW GRAPHIC SYMBOL BOTH ON THE DRAWINGS AND THE IRRIGATION LEGEND. THE RELOCATED EQUIPMENT DIMENSIONS AND NORTHING AND EASTING COORDINATES SHOULD THEN BE TRANSFERRED TO THE APPROPRIATE DRAWING IN THIS RECORD SET OF DRAWINGS AT THE PROPER TIME. ON OR BEFORE THE DATE OF FINAL FIELD OBSERVATION, DELIVER CORRECTED AND COMPLETED CAD COMPUTER PLOTS OF "RECORD DRAWINGS" AND ELECTRONIC FILES ON DISK TO THE PROJECT ENGINEER AS PART OF CONTRACT CLOSEOUT. DELIVERY OF PLOTS WILL NOT RELIEVE CONTRACTOR OF THE RESPONSIBILITY OF FURNISHING REQUIRED INFORMATION THAT MAY HAVE BEEN OMITTED FROM THE PRINTS.
D. AT THE END OF EACH SEGMENT OF THE PROJECT THE CONTRACTOR SHALL SUBMIT THE FOLLOWING TO THE PROJECT ENGINEER: PLUMBING PERMITS (IF NONE REQUIRED, SO STATE), MATERIAL APPROVALS, PRESSURE LINE TESTS (BY WHOM APPROVED AND DATE), MATERIALS FURNISHED (RECIPIENT AND DATE).
E. MAINTENANCE AND OPERATING BINDERS SHALL INCLUDE: TABLE OF CONTENTS, WRITTEN DESCRIPTION OF IRRIGATION SYSTEM, SYSTEM DRAWINGS: ONE (1) COPY OF THE ORIGINAL IRRIGATION PLAN; ONE (1) COPY OF THE RECORD DRAWING; ONE (1) REPRODUCIBLE OF THE RECORD DRAWING; ONE (1) COPY OF THE CONTROLLER VALVE SYSTEM WIRING DIAGRAM, LISTING OF MANUFACTURERS, MANUFACTURERS' DATA WHERE MULTIPLE MODEL, TYPE AND SIZE LISTINGS ARE INCLUDED; CLEARLY AND CONSPICUOUSLY INDICATING THOSE THAT ARE PERTINENT TO THIS INSTALLATION, "APPROVED" SUBMITTALS OF ALL IRRIGATION EQUIPMENT, OPERATION INSTRUCTION, MAINTENANCE INSTRUCTION, COMPLETE TROUBLESHOOTING CHARTS, PARTS LIST, WINTERIZATION AND SPRING START-UP PROCEDURES, GUARANTEE DATA, NAMES, ADDRESSES AND TELEPHONE NUMBERS OF RECOMMENDED REPAIR AND SERVICE COMPANIES, AND A COPY OF THE SUGGESTED SYSTEM OPERATING SCHEDULE WHICH SHALL CALL OUT THE CONTROLLER PROGRAM REQUIRED (ZONE RUN TIME IN MINUTES PER DAY AND DAYS PER WEEK) IN ORDER TO PROVIDE THE DESIRED AMOUNT OF WATER TO EACH AREA UNDER NO-RAIN CONDITIONS.

1.5 QUALITY ASSURANCE

A. INSTALLER: A FIRM WHICH HAS AT LEAST FIVE (5) YEARS EXPERIENCE IN WORK OF THE TYPE AND SIZE REQUIRED BY THIS SECTION AND WHICH IS ACCEPTABLE TO THE PROJECT ENGINEER.
B. REFERENCES: THE CONTRACTOR MUST SUPPLY THREE REFERENCES FOR WORK OF THIS TYPE AND SIZE WITH THEIR BID INCLUDING NAMES AND PHONE NUMBERS OF CONTACT PERSON(S).
C. THE PROJECT ENGINEER WILL BE ON SITE AT VARIOUS TIMES TO OBSERVE THE SYSTEM IS BEING INSTALLED ACCORDING TO THE SPECIFICATIONS AND DRAWINGS.
D. COVERAGE TEST: AFTER COMPLETION OF THE SYSTEM, TEST THE OPERATION OF ENTIRE SYSTEM AND ADJUST AS DIRECTED BY THE PROJECT ENGINEER. DEMONSTRATE TO THE PROJECT ENGINEER THAT ALL IRRIGATED AREAS ARE BEING ADEQUATELY COVERED. FURNISH AND INSTALL MATERIALS REQUIRED TO CORRECT ANY GAPS IN COVERAGE.
E. DURING FINAL ADJUSTMENTS AND PROJECT ENGINEER REVIEW, THE CONTRACTOR SHALL BE RESPONSIBLE FOR HAVING TWO-WAY COMMUNICATION AND SUFFICIENT PERSONNEL TO PROVIDE INSTANTANEOUS COMMUNICATION BETWEEN THE OBSERVATION AREA AND THE CONTROLLER FOR THE SYSTEM.

1.6 STORAGE AND HANDLING

STORE AND HANDLE ALL MATERIALS IN COMPLIANCE WITH MANUFACTURER INSTRUCTIONS AND RECOMMENDATIONS. PROTECT FROM ALL POSSIBLE DAMAGE. MINIMIZE ON-SITE STORAGE.

1.7 WARRANTY

A. THE CONTRACTOR SHALL OBTAIN IN THE CITY'S NAME THE STANDARD WRITTEN MANUFACTURER'S GUARANTEE OF ALL MATERIALS FURNISHED UNDER THIS SECTION WHERE SUCH GUARANTEES ARE OFFERED IN THE MANUFACTURER'S PUBLISHED PRODUCT DATA. ALL THESE GUARANTEES SHALL BE IN ADDITION TO, AND NOT IN LIEU OF, OTHER LIABILITIES THAT THE CONTRACTOR MAY HAVE BY LAW.
B. IN ADDITION TO THE MANUFACTURERS GUARANTEES THE CONTRACTOR SHALL WARRANT THE ENTIRE IRRIGATION SYSTEM, BOTH PARTS AND LABOR FOR A PERIOD OF ONE (1) YEAR FROM THE DATE OF FINAL ACCEPTANCE BY THE DEPARTMENT. AS PART OF THE ONE-YEAR WARRANTY THE CONTRACTOR SHALL PERFORM THE FIRST YEAR-END WINTERIZATION AND SPRING START-UP FOR THE IRRIGATION SYSTEM. SHOULD ANY PROBLEMS DEVELOP WITHIN THE WARRANTY PERIOD BECAUSE OF INFERIOR OR FAULTY MATERIALS OR WORKMANSHIP, CORRECTIONS SHALL BE MADE TO THE SATISFACTION OF THE DESIGNER AT NO ADDITIONAL EXPENSE TO THE CITY. A WRITTEN WARRANTY SHOWING DATE OF COMPLETION AND PERIOD OF WARRANTY SHALL BE SUPPLIED UPON COMPLETION OF EACH SEGMENT OF THE PROJECT.

1.8 PROJECT CONDITIONS

A. THE CONTRACTOR SHALL AT ALL TIMES COORDINATE HIS WORK CLOSELY WITH THE PROJECT ENGINEER TO EFFICIENTLY BRING THE PROJECT TO COMPLETION. THE PROJECT ENGINEER SHALL BE NOTIFIED AS TO THE START OF WORK, PROGRESSION AND COMPLETION, AS WELL AS ANY CHANGES TO THE DRAWINGS BEFORE THE CHANGE IS MADE.
B. THE CONTRACTOR SHALL ALSO COORDINATE THE WORK WITH OTHER TRADES.
C. THE CONTRACTOR SHALL BE HELD RESPONSIBLE FOR AND SHALL PAY FOR ANY DAMAGE TO OTHER WORK CAUSED BY HIS WORK, PERSONNEL, OR SUB-CONTRACTORS. REPAIRS OF SUCH DAMAGE (IF ANY) SHALL BE DONE BY THE CONTRACTOR WHO INSTALLED THE WORK, AS DIRECTED BY THE PROJECT ENGINEER.
D. CONTRACTOR SHALL INCLUDE IN THE BID, AN ALLOWANCE FOR FOUR (4) HOURS OF INSTRUCTION OF CITY PERSONNEL UPON COMPLETION OF CHECK/TEST/START-UP/ADJUSTMENT OPERATIONS BY A COMPETENT OPERATOR (THE PROJECT ENGINEER SHALL BE NOTIFIED AT LEAST ONE (1) WEEK IN ADVANCE OF CHECK/TEST/STARTUP/ADJUSTMENT OPERATIONS). UPON COMPLETION OF WORK AND PRIOR TO APPLICATION FOR ACCEPTANCE AND FINAL PAYMENT, A MINIMUM OF THREE (3) THREE RING, HARD COVER BINDERS, SHALL BE SUBMITTED TO THE PROJECT ENGINEER. AFTER REVIEW AND APPROVAL, THE COPIES WILL BE FORWARDED TO THE CITY.
E. NOTIFY ALL CITY DEPARTMENTS AND/OR PUBLIC UTILITY OWNERS CONCERNED, OF THE TIME AND LOCATION OF ANY WORK THAT MAY AFFECT THEM. COOPERATE AND COORDINATE WITH THEM IN THE PROTECTION AND/OR REPAIRS OF ANY UTILITIES. PROVIDE AND INSTALL TEMPORARY SUPPORT, ADEQUATE PROTECTION AND MAINTENANCE OF ALL STRUCTURES, DRAINS, SEWERS, AND OTHER OBSTRUCTIONS ENCOUNTERED. WHERE GRADE OR ALIGNMENT IS OBSTRUCTED, THE OBSTRUCTION SHALL BE PERMANENTLY SUPPORTED, RELOCATED, REMOVED OR RECONSTRUCTED AS DIRECTED BY THE PROJECT ENGINEER.

1.9 PRE-INSTALLATION CONFERENCE

BEFORE WORK COMMENCES, HOLD A CONFERENCE WITH THE PROJECT ENGINEER TO DISCUSS GENERAL DETAILS OF THE WORK. EXAMINE ALL CONTRACT DOCUMENTS APPLYING TO THIS SECTION NOTING ANY DISCREPANCIES AND BRINGING THE SAME TO THE ATTENTION OF THE PROJECT ENGINEER FOR TIMELY RESOLUTION. ALL WORK INDICATED ON DRAWINGS SHALL BE PROVIDED WHETHER OR NOT SPECIFICALLY MENTIONED IN THE SPECIFICATIONS. IF THERE ARE AMBIGUITIES BETWEEN DRAWINGS AND SPECIFICATIONS, AND SPECIFIC INTERPRETATION OR CLARIFICATION IS NOT ISSUED PRIOR TO BIDDING, THE INTERPRETATION OR CLARIFICATION WILL BE MADE ONLY BY PROJECT ENGINEER, AND CONTRACTOR SHALL COMPLY WITH THE DECISIONS. IN THE EVENT THE INSTALLATION CONTRADICTS THE DIRECTIONS GIVEN, THE INSTALLATION SHALL BE CORRECTED BY CONTRACTOR AT NO ADDITIONAL COST.

2.0 PRODUCTS

ALL MATERIALS TO BE INCORPORATED IN THIS SYSTEM SHALL BE NEW AND WITHOUT FLAWS OR DEFECTS AND OF QUALITY AND PERFORMANCE AS SPECIFIED AND MEETING THE REQUIREMENTS OF THE SYSTEM. ALL MATERIAL OVERAGES AT THE COMPLETION OF THE INSTALLATION ARE THE PROPERTY OF THE CONTRACTOR AND SHALL BE REMOVED FROM THE SITE. NO MATERIAL SUBSTITUTIONS FROM THE IRRIGATION PRODUCTS DESCRIBED IN THESE SPECIFICATIONS AND SHOWN ON THE DRAWINGS SHALL BE MADE WITHOUT PRIOR APPROVAL AND ACCEPTANCE FROM THE PROJECT ENGINEER.

A. PVC IRRIGATION PIPE: ALL PIPE SHALL BEAR THE FOLLOWING MARKINGS: MANUFACTURER'S NAME, NOMINAL PIPE SIZE, SCHEDULE OR CLASS, PRESSURE RATING IN PSI, AND DATE OF EXTRUSION. ALL PIPE IN SIZES 2-1/2 INCHES AND SMALLER SHALL BE PVC, CLASS 200, TYPE 1120, SDR 21, SOLVENT-WELD PVC, CONFORMING TO ASTM NO. D2241 AS MANUFACTURED BY CERTAINTEED, CRESLINE OR JM.
B. PVC PIPE SLEEVES: ALL PIPE SLEEVES BENEATH NON-SOIL AREAS SHALL BE PVC, CLASS 200 WATER PIPE AS MANUFACTURED BY CERTAINTEED, CRESLINE OR JM. MINIMUM SLEEVE SIZE TO BE TWICE THE SIZE OF THE LINE IT WILL BE CARRYING.
C. WIRE CONDUIT: CONDUIT FOR WIRING BENEATH NON-SOIL AREAS SHALL BE PVC, SCH-40 CONDUIT WITH SOLVENT-WELD JOINTS, AS MANUFACTURED BY CERTAINTEED, CRESLINE OR JM. SWEEP ELLS SHALL BE STANDARD ELECTRICAL TYPE PVC SCHEDULE 40 LONG SWEEP ELBOWS. CAP SWEEP ELL WITH TRI-PLUG WITH THE RING FOR SECURING NYLON PULL ROPE. CONDUIT FOR ABOVE GROUND WIRING TO RAIN SENSORS OR CONTROLLERS SHALL BE GALVANIZED, RIGID METALLIC CONDUIT.
D. PVC IRRIGATION FITTINGS: FITTINGS FOR SOLVENT WELD PVC PIPE, 2-1/2 INCH AND SMALLER IN SIZE, SHALL BE SCHEDULE 40 SOLVENT WELD PVC FITTINGS AS MANUFACTURED BY DURA, LASCO, SPEARS OR EQUAL. FITTINGS SHALL BEAR MANUFACTURER'S NAME OR TRADEMARK, MATERIAL DESIGNATION, SIZE, AND APPLICABLE I.P.S. SCHEDULE. ALL PVC THREADED CONNECTIONS IN AND OUT OF VALVES SHALL BE MADE USING SCHEDULE 80 TOE NIPPLES AND SCHEDULE 40 COUPLERS OR SOCKET FITTINGS. SCHEDULE 40 THREADS WILL NOT BE APPROVED FOR INSTALLATION. PVC SOLVENT SHALL BE NSF APPROVED, FOR TYPE I AND TYPE II PVC PIPE, AND SCHEDULE 40 AND 80 FITTINGS. CEMENT IS TO MEET ASTM D2564 AND FF493 FOR POTABLE WATER PIPES. PVC SOLVENT CEMENT SHALL BE RECTORSEAL GOLD, IPS WELD-ON 711, OATEY HEAVY DUTY CEMENT OR EQUAL, AND SHALL BE USED IN CONJUNCTION WITH THE APPROPRIATE PRIMER. PRIMER SHALL BE NSF APPROVED, AND FORMULATED FOR PVC AND CPVC PIPE APPLICATIONS. PRIMER IS TO MEET ASTM F 656. PRIMER SHALL BE RECTORSEAL JIM PR-2, IPS WELD-ON P-68 CLEAR, OATEY CLEAR PRIMER FOR PVC AND CPVC. ALL NIPPLES TO BE SCHEDULE 80 PVC.
E. POLYETHYLENE IRRIGATION PIPE: PIPING 1-1/4 INCH AND SMALLER IN SIZE MAY ALSO BE INSTALLED WITH POLYETHYLENE (PE) PIPE, SDR 15, CLASS 100, TYPE III, GRADE 3, CLASS C CONFORMING TO ASTM D2239, WITH A MINIMUM PRESSURE RATING OF 100 PSI. POLYETHYLENE PIPE SHALL ONLY BE USED IN AREAS WHERE A FLEXIBLE PIPING IS NEEDED, SUCH AS SERVING THE FREE-STANDING PLANTERS VIA THE PVC SLEEVING IN THE BRICK SIDEWALK AREAS.
F. POLYETHYLENE IRRIGATION FITTINGS: FITTINGS FOR POLYETHYLENE PIPE SHALL BE INSERT PVC OR NYLON TYPE FITTINGS. FITTINGS SHALL CONFORM TO NSF STANDARDS AND BE ATTACHED WITH TWO (2) DOG-EARED STAINLESS STEEL CLAMPS PER PIPE TO FITTING CONNECTION. SUPPLY ONLY PIPES AND FITTINGS THAT ARE MARKED BY THE MANUFACTURER WITH THE APPROPRIATE ASTM DESIGNATIONS AND PRESSURE RATINGS AND ARE FREE FROM CRACKS, WRINKLES, BLISTERS, DENTS OR OTHER DAMAGE. FITTINGS SHALL BE PER ASTM D2609 AS MANUFACTURED BY DURA OR LASCO.
G. VALVE BOXES: ALL VALVE BOXES SHALL BE MANUFACTURED FROM UNFORMED RESIN WITH A TENSILE STRENGTH OF 3,100-5,500 PSI CONFORMING TO ASTM D638. ALL BOXES SHALL BE GREEN IN COLOR. COVERS SHALL BE GREEN IN COLOR UNLESS OTHERWISE SPECIFIED. VALVE BOXES FOR AIR RELIEF VALVES AND FLUSHING VALVES ON DRIP ZONES SHALL BE 6-INCH ROUND VALVE BOXES WITH METAL DETECTION. VALVE BOXES FOR SINGLE 1 INCH AND 1-1/2 INCH ELECTRIC VALVES, ISOLATION VALVES AND QUICK COUPLING VALVES SHALL BE 10-INCH ROUND VALVE BOXES WITH METAL DETECTION AND BOLT DOWN COVERS. VALVE BOXES FOR SINGLE 2 INCH AND DUAL ELECTRIC VALVES SHALL BE 12-INCH STANDARD VALVE BOXES WITH METAL DETECTION AND BOLT DOWN COVERS. WHEN MULTIPLE ELECTRIC VALVES ARE INSTALLED IN THE SAME AREA, THEY ARE TO BE INSTALLED TWO (2) VALVES PER BOX IN A 12-INCH STANDARD BOX. VALVE BOXES FOR WIRE SPLICES SHALL BE 10 INCH ROUND VALVE BOXES WITH DETECTABLE DISKS. ALL SPLICES SHALL BE IN SEPARATE VALVE BOXES AND NOT INCLUDED WITH ISOLATION VALVES. 24 VOLT SPLICES SHALL HAVE GRAY LIDS. VALVE BOX EXTENSIONS SHALL BE PROVIDED AND INSTALLED AS REQUIRED FOR PROPER BOX DEPTH. VALVE BOX EXTENSIONS SHALL BE MADE BY THE SAME MANUFACTURER. VALVE BOXES SHALL BE MANUFACTURED BY PENTEK, CARSON SPECIFICATION GRADE OR NDS PRO SERIES.

IRRIGATION SPECS 1
BRIDGE NO. HAM-75-0104
LINN STREET OVER IR-75 AND GEST STREET

DESIGN AGENCY
MKSK
LANDSCAPE ARCHITECTURE + URBAN PLANNING

DESIGNER	CHECKER
LHW	JRB

REVIEWER
JRB 4.14.25

PROJECT ID
122048

SHEET	TOTAL
P.371	P.421

HAM-75-1.05

X:\Columbus\2024\c24127-I-75 Hamilton Bridges\BIM_CAD_GIS\CAD\Sheets\c24127 Spec Sheets-Irrig.dwg

STATE OF OHIO
DEPARTMENT OF TRANSPORTATION

HAM-IR 75-1.05

CITY OF CINCINNATI
HAMILTON COUNTY

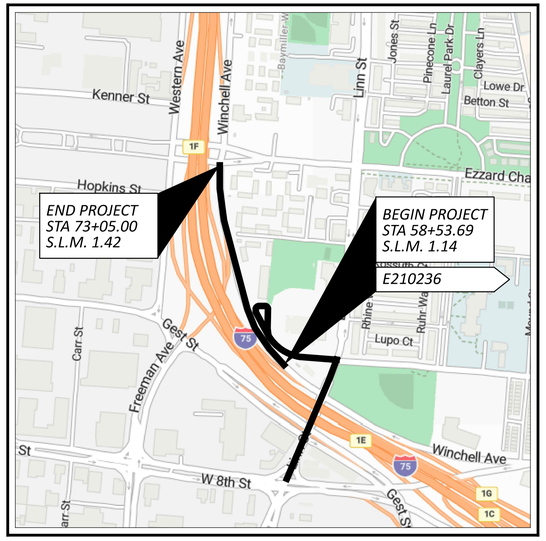

LOCATION MAP

LATITUDE: N 39°06'34" LONGITUDE: W 84°31'54"

PORTION TO BE IMPROVED ----------

DESIGN DESIGNATION

SEE SHEET P.2

ADA DESIGN WAIVERS

NONE REQUIRED

DESIGN EXCEPTIONS

NONE REQUIRED

ADDENDUM

1 8/28/25

INDEX OF SHEETS:

TITLE SHEET ---- *P.1*
SCHEMATIC PLAN ---- *P.2 - P.3*
TYPICAL SECTIONS ---- *P.4 - P.10*
GENERAL NOTES ---- *P.11, P.13, P.13A, P.14* (1)
MAINTENANCE OF TRAFFIC ---- *P.15 - P.58*
GENERAL SUMMARY ---- *P.59 - P.66*
SUBSUMMARIES ---- *P.67 - P.72*
CALCULATIONS ---- *P.73 - P.74*
PROJECT SITE PLAN ---- *P.75 - P.77*
PLAN & PROFILES:
SIDE ROADS:
COURT ST ---- *P.78 - P.81*
LINN ST ---- *P.82 - P.83*
WINCHELL AVE ---- *P.84 - P.85*
RAMP V ---- *P.86 - P.89*
CROSS SECTIONS:
SIDE ROADS:
EARTHWORK SUBSUMMARY ---- *P.90*
COURT ST ---- *P.91 - P.99*
LINN ST ---- *P.100 - P.106*
WINCHELL AVE ---- *P.107 - P.122*
RAMP V ---- *P.123 - P.137*
SUPERELEVATION TABLES ---- *P.138*
INTERCHANGE DETAILS ---- *P.139 - P.142*
MEDIAN DETAILS ---- *P.143*
INTERSECTION DETAILS ---- *P.144 - P.147*
DRIVEWAY DETAILS ---- *P.148 - P.149*
WALK DETAILS ---- *P.150 - P.151*
STORM SEWER TABLES & PROFILES ---- *P.152 - P.163*
RETAINING WALLS:
WALL 2 ---- *P.164 - P.191*
WALL 4 ---- *P.193 - P.202*
SANITARY SEWER DETAILS ---- *P.203 - P.204*
TRAFFIC CONTROL:
SIGNING & PAVEMENT MARKINGS:
SUBSUMMARIES ---- *P.205 - P.207*
COURT ST ---- *P.208 - P.209*
LINN ST ---- *P.210 - P.213*
WINCHELL AVE ---- *P.214 - P.215*
RAMP V ---- *P.216 - P.219*
LIGHTING ---- *P.220, P.220A, P.221 - P.230* (1)
NOISE WALL DETAILS ---- *P.231 - P.242*
STRUCTURES OVER 20'
HAM-75-0104 (LINN ST over IR75) ---- *P.243 - P.305, P.305A, P.306 - P. 307, P.307A, P.307B, P.307C, P.307D, P.307E, P.308 - P.330* (1)
HAM-75-0123E (PED BRIDGE over WINCHELL) ---- *P.331 - P.352*
AESTHETIC ENHANCEMENT PLAN ---- *P.353, P.365 - P.373*
NOT USED ---- *P.354 - P.364*
SOIL PROFILES ---- *P.374 - P.415*
NOT USED ---- *P.416 - P.421*

FEDERAL PROJECT NUMBER

1 NONE

RAILROAD INVOLVEMENT

NONE

PROJECT DESCRIPTION

RECONSTRUCT AND WIDEN THE LINN ST BRIDGE OVER IR 75. RECONSTRUCT WINCHELL AVE AND RAMP V FROM NORTH OF LINN ST BRIDGE TO SOUTH OF EZZARD CHARLES ALONG WITH THE CUL-DE-SAC WEST COURT ST.

EARTH DISTURBED AREAS

PROJECT EARTH DISTURBED AREA:	*6.66 ACRES*
ESTIMATED CONTRACTOR EARTH DISTURBED AREA:	*1.00 ACRES*
NOTICE OF INTENT EARTH DISTURBED AREA:	*N/A (NOI NOT REQUIRED)*

** ALL DRAINAGE FLOWS TO EXISTING COMBINED SEWERS.*

2023 SPECIFICATIONS

THE STANDARD SPECIFICATIONS OF THE STATE OF OHIO, DEPARTMENT OF TRANSPORTATION, INCLUDING SUPPLEMENTAL SPECIFICATIONS LISTED IN THE PLANS AND CHANGES LISTED IN THE PROPOSAL SHALL GOVERN THIS IMPROVEMENT.

I HEREBY APPROVE THESE PLANS AND DECLARE THAT THE MAKING OF THIS IMPROVEMENT WILL REQUIRE THE CLOSING TO TRAFFIC OF THE HIGHWAY AND THAT DETOURS WILL BE PROVIDED AS INDICATED ON SHEET P.52 - P.58.

DISTRICT DEPUTY DIRECTOR

Douglas A. Gruver, P.E.

DIRECTOR, DEPARTMENT OF TRANSPORTATION

Pamela Boratyn

FINAL TRACINGS
MAY 8, 2025

UNDERGROUND UTILITIES
Contact Two Working Days Before You Dig
OHIO811.org Before You Dig
OHIO811, 8-1-1, or 1-800-362-2764
(Non members must be called directly)

PLAN PREPARED BY:

B&N burgessniple.com

AMERICAN STRUCTUREPOINT INC.

Palmer ENGINEERING
8350 E. KEMPER ROAD
SUITE B
CINCINNATI, OH 45249
(513) 469-1600

STANDARD CONSTRUCTION DRAWINGS

ODOT								*CITY OF CINCINNATI*				*SUPPLEMENTAL SPECIFICATIONS*		*SPECIAL PROVISIONS*
BP-3.1	*1/19/24*	*MGS-5.3*	*7/15/16*	*VPF-1-24*	*1/17/25*	*MT-98.30*	*7/16/21*	*TC-61.30*	*7/19/24*	*C101*	*8/23/24*	*ES-2-2*	*8/28/07*	*800-2023*	*7/18/25*	
BP-3.2	*1/18/19*	*MGS-6.1*	*1/19/18*			*MT-99.20*	*4/19/19*	*TC-65.10*	*1/17/14*	*C102*	*8/23/24*	*ES-7-1*	*7/23/04*	*807*	*1/17/25*	(1)
BP-4.1	*7/19/13*			*HL-10.11*	*7/21/23*	*MT-99.30*	*1/17/20*	*TC-65.11*	*1/17/25*	*C103*	*8/23/24*	*ES-7-2*	*9/15/04*	*808*	*7/19/24*	
BP-5.1	*1/17/25*	*MH-3*	*7/19/24*	*HL-10.12*	*7/21/23*	*MT-99.60*	*7/19/24*	*TC-71.10*	*4/21/23*	*C112*	*8/23/24*	*ES-7-3*	*9/15/04*	*809*	*7/18/25*	
BP-6.1	*7/19/13*			*HL-10.13*	*1/20/23*	*MT-101.60*	*1/17/25*	*TC-72.20*	*1/17/25*	*C116*	*8/23/24*	*ES-7-4*	*9/15/04*	*813*	*7/21/23*	
BP-7.1	*1/17/25*	*RM-2.1*	*7/19/13*	*HL-30.31*	*1/17/25*	*MT-101.70*	*7/19/24*	*TC-73.20*	*1/17/25*	*C117*	*8/23/24*	*ES-10-3*	*3/01/05*	*821*	*4/20/12*	
		RM-3.1	*7/20/18*	*HL-50.21*	*7/15/22*	*MT-101.75*	*7/21/23*	*TC-74.10*	*7/21/23*	*C119*	*8/23/24*			*825*	*7/19/24*	
CB-2-2A, 2B, 2C	*7/19/24*	*RM-4.2*	*4/17/20*	*HL-60.11*	*7/21/17*	*MT-101.80*	*1/17/20*	*TC-83.20*	*7/19/24*	*C120*	*8/23/24*	*26999*	*01/2003*	*829*	*1/20/17*	
CB-6	*7/19/24*	*RM-4.3*	*1/17/25*	*HL-60.12*	*7/21/23*	*MT-101.90*	*7/17/20*	*TC-85.10*	*1/19/24*	*C121*	*8/23/24*	*49007*	*3/13/89*	*832*	*7/18/25*	(1)
		RM-4.4	*7/19/24*			*MT-102.10*	*7/21/23*			*C122*	*8/23/24*	*49010*	*4/13/21*	*840*	*1/17/25*	
DM-1.1	*1/17/25*	*RM-4.5*	*1/17/25*	*MT-95.30*	*7/19/19*	*MT-102.30*	*10/16/15*			*C123*	*8/23/24*	*49011*	*4/13/21*	*851*	*1/17/25*	
DM-1.3	*7/18/14*	*RM-4.6*	*7/19/13*	*MT-95.31*	*7/19/19*	*MT-103.10*	*7/18/25* (1)			*C125*	*8/23/24*	*49013*	*4/13/21*	*873*	*4/16/21*	
DM-4.3	*1/15/16*	*RM-5.2*	*7/19/24*	*MT-95.32*	*4/19/19*	*MT-104.10*	*1/19/24*			*C126*	*8/23/24*	*49016*	*4/13/21*	*878*	*1/21/22*	
DM-4.4	*1/15/16*			*MT-95.45*	*7/21/23*	*MT-105.10*	*1/17/20*					*49038*	*4/13/21*	*894*	*4/16/21*	
		AS-1-15	*1/20/23*	*MT-95.50*	*7/21/17*	*MT-110.10*	*7/19/13*			*ES-1-0*	*8/29/07*	*49041*	*4/13/21*	*896*	*7/21/17*	
I-3C, 3C1	*1/17/25*	*AS-2-15*	*7/21/23*	*MT-98.10*	*1/17/20*					*ES-1-1*	*7/19/04*	*120362*	*1/08/14*	*905*	*1/17/25*	
		EXJ-4-87	*1/19/24*	*MT-98.11*	*1/17/20*	*TC-41.20*	*10/18/13*			*ES-2-1*	*8/29/07*			*908*	*1/17/25*	
MGS-1.1	*1/17/25*	*GSD-1-19*	*7/19/24*	*MT-98.20*	*4/19/19*	*TC-41.30*	*4/21/23*							*913*	*4/16/21*	
MGS-2.1	*1/17/25*	*NBS-1-09*	*1/17/25*	*MT-98.22*	*1/17/20*	*TC-42.20*	*10/18/13*			***METROPOLITAN SEWER DISTRICT (MSDGC)***				*921*	*7/19/24*	
MGS-3.1	*1/19/18*	*PSBD-2-07*	*7/20/18*	*MT-98.28*	*1/17/20*	*TC-52.10*	*10/18/13*			*49005*	*08/2011*	*49056*	*12/2010*	*929*	*7/21/23*	
MGS-4.5	*1/18/13*	*TVPF-1-18*	*1/17/25*	*MT-98.29*	*1/17/20*	*TC-52.20*	*1/15/21*			*49048*	*12/2010*	*61307*	*10/2023*	*996*	*7/21/23*	

ENGINEER'S SEAL:	*ENGINEER'S SEAL:*	*ENGINEER'S SEAL:*
AMERICAN STRUCTUREPOINT, INC	*PALMER ENGINEERING*	*PALMER ENGINEERING*
FOR ALL ROADWAY SHEETS	*FOR MAINTENANCE OF TRAFFIC SHEETS*	*FOR WALL 02, WALL 04 SHEETS & STRUCTURES OVER 20' (HAM-75-0123E)*
STATE OF OHIO · LUKE Z STUTLER E-86344 · REGISTERED PROFESSIONAL ENGINEER	STATE OF OHIO · DANIEL PAUL FICKER E-63916 · REGISTERED PROFESSIONAL ENGINEER	STATE OF OHIO · BRONSON J FUNKE E-61820 · REGISTERED PROFESSIONAL ENGINEER
ENGINEER'S SEAL:	*ENGINEER'S SEAL:*	*ENGINEER'S SEAL:*
BURGESS & NIPLE	*AMERICAN STRUCTUREPOINT, INC*	*BURGESS & NIPLE*
FOR NOISE WALL 05 & 06 SHEETS	*FOR LIGHTING PLANS*	*FOR STRUCTURES OVER 20' (HAM-75-0104)*
STATE OF OHIO · STEVEN CHARLES SMITH E-54439 · REGISTERED PROFESSIONAL ENGINEER	STATE OF OHIO · ELIZABETH M. SCHNEIDER E-77942 · REGISTERED PROFESSIONAL ENGINEER	STATE OF OHIO · BRADLEY EVAN STIFFLER E-67083 · REGISTERED PROFESSIONAL ENGINEER

DESIGN AGENCY: AMERICAN STRUCTUREPOINT INC.
DESIGNER: LZS
REVIEWER: KAM 03/03/25
PROJECT ID: 122048
SHEET: P.1 TOTAL: P.421

TITLE SHEET

HAM-IR 75-1.05

MODEL: Sheet PAPERSIZE: 34x22 (in.) DATE: 8/28/2025 TIME: 11:16:16 AM PLTDRV: OHDOT_PDF.pltcfg PENTBL: OHDOT_Pen_Addendum.tbl USER: WORKSPACE: OHDOTCEv02 WORKSET: 122048 PRODUCT: OpenRoadsDesigner 10.12.02.4
pw:\\ohiodot-pw.bentley.com:ohiodot-pw-02\Documents\01 Active Projects\District 08\Hamilton\122048\403-Engineering_StructurePoint\Roadway\Sheets\122048_GT301.dgn

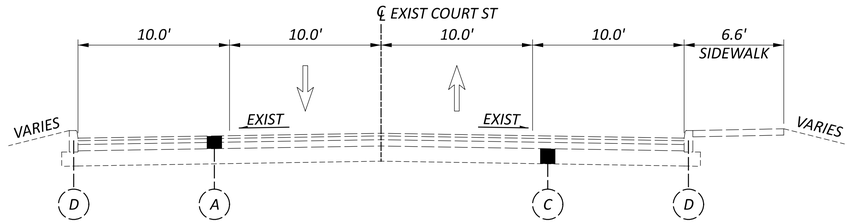

EXISTING TYPICAL SECTION - COURT ST

STA 4+00.00

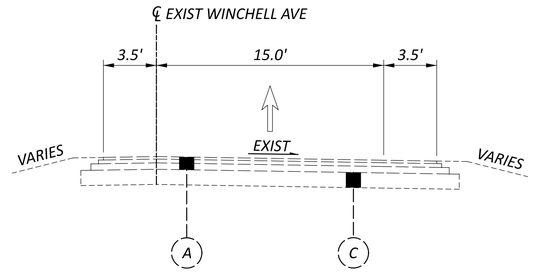

EXISTING TYPICAL SECTION - WINCHELL AVE

STA 29+00.00

LEGEND

1. *ITEM 442 - 1-1/2" ASPHALT CONCRETE SURFACE COURSE, 12.5MM, TYPE A (447)*
2. *ITEM 442 - 2" ASPHALT CONCRETE SURFACE COURSE, 12.5MM,TYPE A (448)*
3. *ITEM 442 - 1-3/4" ASPHALT CONCRETE INTERMEDIATE COURSE, 12.5MM, TYPE A (446)* 1
4. *ITEM 407 - NON-TRACKING TACK COAT (0.055 GAL/SY)*
5. *ITEM 302 - 3" ASPHALT CONCRETE BASE, PG64-22, (449)*
6. *ITEM 302 - 5" ASPHALT CONCRETE BASE, PG64-22, (449)*
7. *ITEM 302 - 8-1/2" ASPHALT CONCRETE BASE (2 EQUAL LIFTS WITH ITEM 407 BETWEEN LIFTS)*
8. *ITEM 304 - 6" AGGREGATE BASE*
9. *ITEM 206 - 14" CEMENT STABILIZED SUBGRADE*
10. *ITEM 609 - CURB, MISC.: TYPE S-1 CURB (CINCINNATI)*
11. *ITEM 609 - 6" CONCRETE MEDIAN*
12. *ITEM 608 - 5" CONCRETE WALK*
13. *ITEM 606 - GUARDRAIL, TYPE MGS*
14. *ITEM 622 - CONCRETE BARRIER, SINGLE SLOPE, TYPE C*
15. *ITEM 622 - CONCRETE BARRIER, SINGLE SLOPE, TYPE D*
16. *ITEM 659 - SEEDING AND MULCHING*
17. *ITEM 609 - CURB, MISC.: TYPE B-1 CURB (CINCINNATI)*
18. *ITEM 204 - EXCAVATION OF SUBGRADE, 12 INCHES DEEP,*
    ITEM 204 - GRANULAR MATERIAL, TYPE C,
    ITEM 204 - GEOTEXTILE FABRIC
19. *ITEM 204 - PROOF ROLLING*
20. *ITEM 607 - FENCE MISC.: WOOD FENCE*
21. *ITEM 452 - 10" NON-REINFORCED CONCRETE PAVEMENT, CLASS QC1P WITH QC/QA*
22. *ITEM 609 - CURB, MISC.: TYPE P-1 CURB (CINCINNATI)*
23. *ITEM 257 - DIAMOND GRINDING PORTLAND CEMENT CONCRETE PAVEMENT*
24. *ITEM 605 - 6" SHALLOW PIPE UNDERDRAINS WITH GEOTEXTILE FABRIC*

- (A) *EXISTING 5.5"± ASPHALT CONCRETE*
- (B) *EXISTING 10"± CONCRETE PAVEMENT*
- (C) *EXISTING 6"± AGGREGATE BASE*
- (D) *EXISTING CURB*

TYPICAL SECTIONS

DESIGN AGENCY: AMERICAN STRUCTUREPOINT INC.
DESIGNER: LZS
REVIEWER: KAM 03/03/25
PROJECT ID: 122048
SHEET: P.4 TOTAL: P.421

HAM-IR 75-1.05

MODEL: Sheet PAPERSIZE: 34x22 (in.) DATE: 8/28/2025 TIME: 9:29:06 AM PLTDRV: OHDOT_PDF.pltcfg PENTBL: OHDOT_Pen_Addendum.tbl USER: WORKSPACE: OHDOTCEv02 WORKSET: 122048 PRODUCT: OpenRoadsDesigner 10.12.02.4
pw:\\ohiodot-pw.bentley.com:ohiodot-pw-02\Documents\01 Active Projects\District 08\Hamilton\122048\403-Engineering_StructurePoint\Roadway\Sheets\122048_GY301.dgn

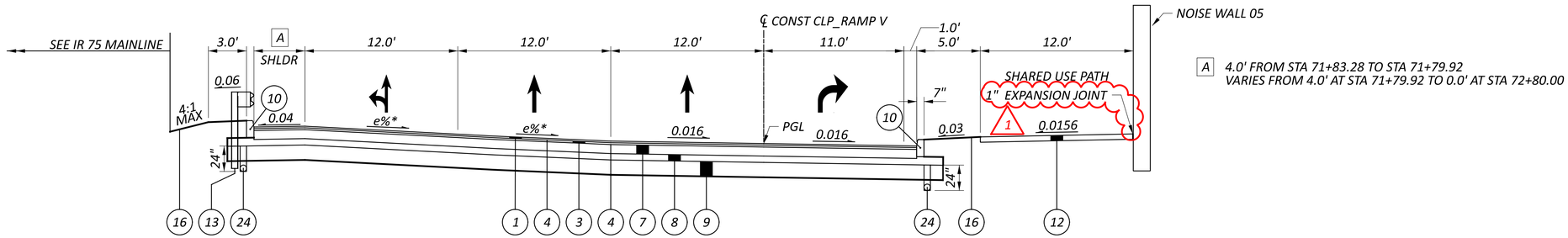

A 4.0' FROM STA 71+83.28 TO STA 71+79.92
VARIES FROM 4.0' AT STA 71+79.92 TO 0.0' AT STA 72+80.00

SUPERELEVATION SECTION - RAMP V

STA 71+83.28 TO STA 73+00.00

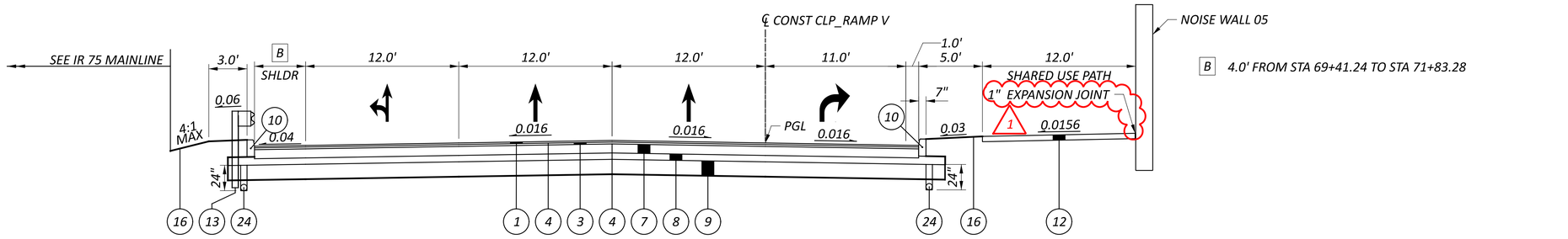

B 4.0' FROM STA 69+41.24 TO STA 71+83.28

NORMAL SECTION - RAMP V

STA 69+41.24 TO STA 71+83.28

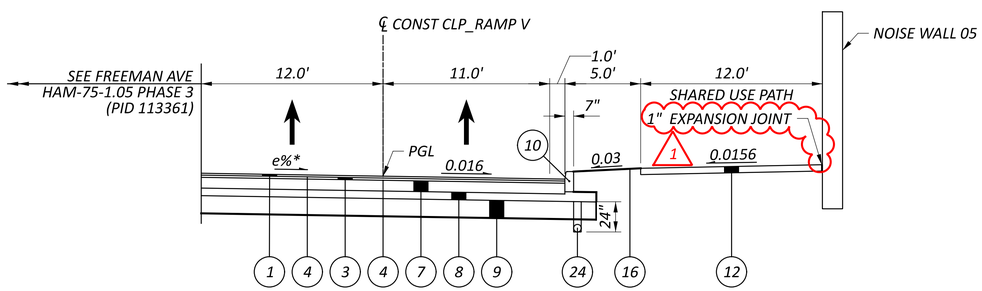

SUPERELEVATION SECTION - RAMP V

STA 66+92.54 TO STA 69+41.24

NOTES:

** FOR SUPERELEVATION RATES SEE SHEET P.138*

1. FOR LEGEND, SEE SHEET P.4
2. FOR CURB DETAILS, SEE SHEET P.6
3. FOR RETAINING WALL 02 DETAILS, SEE SHEETS P.164 - P.191
4. FOR RETAINING WALL 04 DETAILS, SEE SHEETS P.193 - P.202
5. FOR NOISE WALL DETAILS, SEE SHEETS P.231 - P.241

TYPICAL SECTIONS

HAM-IR 75-1.05

MODEL: Sheet PAPERSIZE: 34x22 (in.) DATE: 8/28/2025 TIME: 9:29:28 AM PLTDRV: OHDOT_PDF.pltcfg PENTBL: OHDOT_Pen_Addendum.tbl USER: WORKSPACE: OHDOTCEv02 WORKSET: 122048 PRODUCT: OpenRoadsDesigner 10.12.02.4
pw:\\ohiodot-pw.bentley.com:ohiodot-pw-02\Documents\01 Active Projects\District 08\Hamilton\122048\403-Engineering_StructurePoint\Roadway\Sheets\122048_GY373.dgn

DESIGN AGENCY
STRUCTUREPOINT LLC

DESIGNER
LZS

REVIEWER
KAM 03/03/25

PROJECT ID
122048

SHEET P.10 TOTAL P.421

ENDANGERED BAT HABITAT REMOVAL

THIS PROJECT IS LOCATED WITHIN THE KNOWN HABITAT RANGES OF THE FEDERALLY LISTED AND PROTECTED INDIANA BAT, AND NORTHERN LONG-EARED BAT. NO TREES SHALL BE REMOVED UNDER THIS PROJECT FROM APRIL 1 THROUGH SEPTEMBER 30. ALL NECESSARY TREE REMOVAL SHALL OCCUR FROM OCTOBER 1 THROUGH MARCH 31. THIS REQUIREMENT IS NECESSARY TO AVOID AND MINIMIZE IMPACTS TO THESE SPECIES AS REQUIRED BY THE ENDANGERED SPECIES ACT (ESA). FOR THE PURPOSES OF THIS NOTE, A TREE IS DEFINED AS: A LIVE, DYING, OR DEAD WOODY PLANT, WITH A TRUNK 3 INCHES OR GREATER IN DIAMETER AT A HEIGHT OF 4.5 FEET ABOVE THE GROUND SURFACE, AND WITH A MINIMUM HEIGHT OF 13 FEET.

REVIEW OF DRAINAGE FACILITIES

PRIOR TO THE START OF WORK AND AGAIN BEFORE FINAL ACCEPTANCE, PERFORM AN INSPECTION WITH REPRESENTATIVES OF THE DEPARTMENT, CONTRACTOR AND LOCALS OF ALL EXISTING DRAINAGE FACILITIES THAT ARE TO REMAIN IN SERVICE WHICH MAY BE AFFECTED BY THE WORK. THE CONDITION OF THE EXISTING CONDUITS AND THEIR APPURTENANCES IS DETERMINED FROM FIELD OBSERVATIONS. RECORDS OF THE INSPECTION ARE MAINTAINED BY THE DEPARTMENT.

1 THE METROPOLITAN SEWER DISTRICT OF GREATER CINCINNATI (MSDGC) REQUIRES PRE AND POST CONSTRUCTION INSPECTION VIDEOS OF ALL MSDGC OWNED CONDUITS AND FACILITIES, SEE "REQUIREMENTS OF PACP/LACP CCTV AND MANHOLE SEWER INSPECTIONS" NOTE FOR SPECIFICATIONS.

CONFIRM ALL EXISTING SEWERS INSPECTED INITIALLY BY THE ABOVE-MENTIONED PARTIES ARE MAINTAINED AND LEFT IN A CONDITION COMPARABLE TO THAT DETERMINED BY THE ORIGINAL INSPECTION. THE CONTRACTOR IS RESPONSIBLE TO CORRECT ANY CHANGE IN THE CONDITION RESULTING FROM THEIR OPERATIONS AS DIRECTED AND APPROVED BY THE ENGINEER.

PAYMENT FOR ALL OPERATIONS DESCRIBED ABOVE IS INCLUDED IN THE CONTRACT PRICE FOR THE PERTINENT 611 CONDUIT ITEMS.

ITEM SPECIAL - FILL AND PLUG EXISTING CONDUIT

THIS ITEM SHALL CONSIST OF THE CONSTRUCTION OF BULKHEADS IN AN EXISTING CONDUIT AND FILLING THE AREA THUS SEALED OFF WITH ITEM 613, SAND OR OTHER MATERIAL APPROVED BY THE ENGINEER.

BULKHEADS SHALL BE LOCATED AT THE LIMITS OF THE AREA TO BE FILLED AS INDICATED ON THE PLANS. THE BULKHEADS SHALL CONSIST OF BRICK OR CONCRETE MASONRY WITH A MINIMUM THICKNESS OF 12 INCHES.

THE FILL MATERIAL SHALL BE PUMPED INTO PLACE, OR PLACED BY OTHER MEANS APPROVED BY THE ENGINEER, SO THAT, AFTER SETTLEMENT, AT LEAST 90 PERCENT OF THE CROSS-SECTIONAL AREA OF THE CONDUIT, FOR ITS ENTIRE LENGTH, SHALL BE FILLED. THE LENGTH OF FILLED AND PLUGGED CONDUIT TO BE PAID FOR SHALL BE THE ACTUAL NUMBER OF FEET (MEASURED ALONG THE CENTERLINE OF EACH CONDUIT FROM OUTER FACE TO OUTER FACE OF BULKHEADS) FILLED AND PLUGGED AS DESCRIBED ABOVE.

1 IN LIEU OF FILLING AND PLUGGING THE EXISTING CONDUIT, THE PIPE MAY BE REMOVED. THE LENGTH, MEASURED AS PROVIDED ABOVE, SHALL BE PAID FOR AT THE CONTRACT PRICE PER FOOT FOR, ITEM SPECIAL, FILL AND PLUG EXISTING CONDUIT.

ITEM 204 - PROOF ROLLING

THE FOLLOWING QUANTITY IS PROVIDED IN THE GENERAL SUMMARY TO ADDRESS LOCATIONS REQUIRING PROOF ROLLING.

ITEM 204 - PROOF ROLLING 5 HOUR.

CROSSINGS AND CONNECTIONS TO EXISTING PIPES AND UTILITIES

WHERE PLANS PROVIDE FOR A PROPOSED CONDUIT TO BE CONNECTED TO, OR CROSS OVER OR UNDER AN EXISTING SEWER OR UNDERGROUND UTILITY, THE CONTRACTOR SHALL LOCATE THE EXISTING PIPES OR UTILITIES BOTH AS TO LINE AND GRADE BEFORE STARTING TO LAY THE PROPOSED CONDUIT.

IF IT IS DETERMINED THAT THE ELEVATION OF THE EXISTING CONDUIT, OR EXISTING APPURTENANCE TO BE CONNECTED, DIFFERS FROM THE PLAN ELEVATION OR RESULTS IN A CHANGE IN THE PLAN CONDUIT SLOPE, THE ENGINEER SHALL BE NOTIFIED BEFORE STARTING CONSTRUCTION OF ANY PORTION OF THE PROPOSED CONDUIT WHICH WILL BE AFFECTED BY THE VARIANCE IN THE EXISTING ELEVATIONS.

IF IT IS DETERMINED THAT THE PROPOSED CONDUIT WILL INTERSECT AN EXISTING SEWER OR UNDERGROUND UTILITY IF CONSTRUCTED AS SHOWN ON THE PLAN, THE ENGINEER SHALL BE NOTIFIED BEFORE STARTING CONSTRUCTION OF ANY PORTION OF THE PROPOSED CONDUIT WHICH WOULD BE AFFECTED BY THE INTERFERENCE WITH AN EXISTING FACILITY.

PAYMENT FOR ALL THE OPERATIONS DESCRIBED ABOVE SHALL BE INCLUDED IN THE CONTRACT PRICE FOR THE PERTINENT 611 CONDUIT ITEM.

PAVEMENT RESTORATION FOR PIPE INSTALLATIONS AND/OR REMOVALS

THE FOLLOWING QUANTITY HAS BEEN PROVIDED FOR PAVEMENT RESTORATION FOLLOWING INSTALLATION AND/OR REMOVAL OF PIPES.

1 ITEM 302 - ASPHALT CONCRETE BASE, PG64-22 15 CU. YDS.

THE ABOVE QUANTITY IS BASED ON A 302 1 THICKNESS OF 6 INCHES AND A PAVEMENT RESTORATION WIDTH THAT INCLUDES THE TRENCH WIDTH PLUS TWO FEET ON EACH SIDE OF THE TRENCH.

PROVIDE ANY MATERIALS USED OUTSIDE THE LIMITS STATED ABOVE AT NO ADDITIONAL COST.

PAVEMENT RESTORATION FOR DRAINAGE STRUCTURE INSTALLATIONS

THE FOLLOWING QUANTITY IS PROVIDED FOR PAVEMENT RESTORATION FOLLOWING INSTALLATION OF ITEM 611, DRAINAGE STRUCTURES.

1 ITEM 302, ASPHALT CONCRETE BASE, PG64-22 15 CU. YDS.

THE ABOVE QUANTITY IS BASED ON A 302 1 THICKNESS OF 6 INCHES AND A WIDTH OF TWO FEET AROUND THE PERIMETER OF THE DRAINAGE STRUCTURE.

PROVIDE ANY MATERIALS USED OUTSIDE THE LIMITS STATED ABOVE AT NO ADDITIONAL COST.

EXISTING SUBSURFACE DRAINAGE

PROVIDE UNOBSTRUCTED OUTLETS FOR ALL EXISTING UNDERDRAINS OR AGGREGATE DRAINS ENCOUNTERED DURING CONSTRUCTION.

PROVIDE AN OUTLET PER STANDARD CONSTRUCTION DRAWING DM-1.1 FOR ALL UNDERDRAINS THAT OUTLET TO A SLOPE. UNDERDRAINS THAT CAN BE CONNECTED TO THE NEW OR EXISTING UNDERDRAINS AT THE END OF THE PROJECT LIMITS AS WELL AS ALL NECESSARY BENDS OR BRANCHES REQUIRED FOR CONNECTION ARE INCLUDED IN THE BASIS OF PAYMENT FOR UNCLASSIFIED PIPE UNDERDRAINS.

THE FOLLOWING ESTIMATED QUANTITIES HAVE BEEN INCLUDED IN THE GENERAL SUMMARY FOR THE WORK NOTED ABOVE:

ITEM 611, 6" CONDUIT, TYPE F	100 FT.
ITEM 605, 6" UNCLASSIFIED PIPE UNDERDRAINS	100 FT.

ITEM 202 - ANCHOR ASSEMBLY REMOVED, TYPE A, AS PER PLAN

WHERE DESIGNATED, EXISTING ANCHOR ASSEMBLIES INCLUDING ALL POSTS AND HARDWARE SHALL BE REMOVED. THIS ITEM SHALL ALSO INCLUDE THE REMOVAL OF THE ENTIRE CONCRETE ANCHOR AND CONCRETE ENCASEMENT. ALL HOLES LEFT AFTER REMOVAL OF ASSEMBLIES AND POSTS SHALL BE FILLED WITH GRANULAR MATERIAL AS DIRECTED BY THE ENGINEER. PAYMENT SHALL INCLUDE ALL NECESSARY LABOR AND EQUIPMENT REQUIRED TO PERFORM THE WORK AS INDICATED ABOVE. PAYMENT SHALL BE AT THE UNIT BID PRICE.

ITEM 203 - EMBANKMENT, AS PER PLAN

PLACE AND COMPACT EMBANKMENT MATERIAL IN 6 INCH LIFTS FOR THE CONTRUCTION OF THE APPROACH EMBANKMENT BETWEEN STATIONS 104+50 TO 111+00, ALONG ℄ CONST CLP_LINN.

ITEM 606 - ANCHOR ASSEMBLY, MGS TYPE E

THIS ITEM SHALL CONSIST OF FURNISHING AND INSTALLING GUARDRAIL END TERMINALS FOR TYPE MGS GUARDRAIL AS LISTED ON ROADWAY ENGINEERING'S WEB PAGE UNDER ROADSIDE SAFETY DEVICES FOR APPROVED GUARDRAIL END TREATMENTS. INSTALLATION SHALL BE AT THE LOCATIONS SPECIFIED IN THE PLANS, IN ACCORDANCE WITH THE MANUFACTURER'S SPECIFICATIONS.

THE FACE OF THE TYPE E IMPACT HEAD SHALL BE COVERED WITH REBOUNDABLE RETROREFLECTIVE SHEETING, PER CMS 730.191.

REFER TO THE MANUFACTURER'S INSTRUCTIONS REGARDING THE INSTALLATION OF, AND THE GRADING AROUND THE FOUNDATION TUBES AND GROUND STRUT. THE TOP OF ANY FOUNDATION TUBE SHOULD BE LESS THAN 4 INCHES ABOVE THE GROUND. THE PLACEMENT OF THE FOUNDATION TUBES SHOULD BE AN APPROPRIATE DEPTH BELOW THE LEVEL LINE IN ORDER TO MAINTAIN THE FINISHED GUARDRAIL HEIGHT OF 31 INCHES FROM THE EDGE OF THE SHOULDER.

ON-SITE GRADING IS REQUIRED IF THE TOP OF THE FOUNDATION TUBES OR TOP OF THE GROUND STRUT DOES PROJECT MORE THAN 4 INCHES ABOVE THE GROUND LINE.

PAYMENT FOR THE ABOVE WORK SHALL BE MADE AT THE UNIT PRICE BID FOR ITEM 606, ANCHOR ASSEMBLY, MGS TYPE E, EACH, AND SHALL INCLUDE ALL LABOR, TOOLS, EQUIPMENT AND MATERIALS NECESSARY TO CONSTRUCT A COMPLETE AND FUNCTIONAL ANCHOR ASSEMBLY SYSTEM, INCLUDING ALL RELATED TRANSITIONS, REFLECTIVE SHEETING, HARDWARE, GRADING, EMBANKMENT AND EXCAVATION NOT SEPARATELY SPECIFIED, AS REQUIRED BY THE MANUFACTURER.

ITEM 606 - IMPACT ATTENUATOR, TYPE 2 (UNIDIRECTIONAL)

THIS ITEM SHALL CONSIST OF FURNISHING AND INSTALLING ANY OF THE TYPE 2 IMPACT ATTENUATORS AS LISTED ON THE OFFICE OF ROADWAY ENGINEERING'S WEB PAGE (REFER TO THE POSTED SHOP DRAWINGS FOR THE MOST CURRENT APPROVED PRODUCT MODELS). WHEN BI-DIRECTIONAL DESIGNS ARE SPECIFIED, THE CONTRACTOR SHALL SUPPLY APPROPRIATE TRANSITIONS.

PAYMENT FOR THE ABOVE WORK SHALL BE MADE AT THE UNIT PRICE BID FOR ITEM 606, IMPACT ATTENUATOR, TYPE 2 (UNIDIRECTIONAL) (35 MPH), EACH, AND SHALL INCLUDE ALL LABOR, TOOLS, EQUIPMENT AND MATERIALS NECESSARY TO CONSTRUCT A COMPLETE AND FUNCTIONAL IMPACT ATTENUATOR SYSTEM, INCLUDING ALL RELATED BACKUPS/BACKSTOPS, TRANSITIONS, HARDWARE AND GRADING, NOT SEPARATELY SPECIFIED, AS REQUIRED BY THE MANUFACTURER. INSTALLATION SHALL BE AT THE LOCATIONS SPECIFIED IN THE PLANS, IN ACCORDANCE WITH THE MANUFACTURER'S SPECIFICATIONS.

ITEM 607 - FENCE, MISC.: WOOD FENCE (RM-5.2)

THIS ITEM SHALL CONSIST OF CONSTRUCTING A WOOD BIKEWAY RAILING ACCORDING TO STANDARD CONSTRUCTION DRAWING RM-5.2 AT THE LOCATIONS SPECIFIED ON THE PLANS. ALL LABOR, EQUIPMENT, MATERIALS, AND INCIDENTALS REQUIRED TO PERFORM THIS WORK SHALL BE INCLUDED IN THE UNIT PRICE BID FOR ITEM 607, FENCE, MISC.: WOOD FENCE.

ITEM 608 - WALKWAY, MISC.: 12"CONCRETE WALK

THIS ITEM SHALL CONSIST OF FURNISHING AND INSTALLING A 1'-0" WIDE BY 14'-7"LONG AND 12"THICK CONCRETE WALK FOR THE RAILING LEADING UP TO THE REAR ABUTMENT OF THE LINN STREET BRIDGE. THE THICKENED WALK SHALL BE INSTALLED AT THE LOCATIONS NOTED BELOW:

STA. 105+28.62 TO STA. 105+43.28, 43.50' RT
STA. 105+44.79 TO STA. 105+59.37, 43.50' LT

ALL LABOR, EQUIPMENT, MATERIALS, AND INCIDENTALS REQUIRED TO PERFORM THIS WORK SHALL BE INCLUDE IN THE UNIT PRICE BID FOR ITEM 608, WALKWAY, MISC.: 12"CONCRETE WALK.

REMOVAL OF EXISTING PAVEMENT MARKINGS

THE CONTRACTOR SHALL REMOVE ALL EXISTING PAVEMENT MARKINGS ON REMAINING PAVEMENT THAT CONFLICT WITH THE PROPOSED MARKINGS SHOWN ON THE SIGNING AND PAVEMENT MARKING PLANS.

THE FOLLOWING ESTIMATED QUANTITIES HAVE BEEN INCLUDED IN THE GENERAL SUMMARY FOR THE WORK NOTED ABOVE:

ITEM 644, PAVEMENT MARKING REMOVED	300 FT
ITEM 644, PAVEMENT MARKING REMOVED	5 EACH
ITEM 644, PAVEMENT MARKING REMOVED	0.45 MILES

NOISE WALL INSTALLATION 1

THE CONTRACTOR SHALL SCHEDULE THE INSTALLATION OF THE PROPOSED NOISE WALL ALONG WINCHELL AVE (ADJACENT TO THE QUEENSGATE BALLFIELD) TO OCCUR NEAR THE END OF PROJECT, ADHERING TO THE COMPLETION DATES SHOWN ON THE INCENTIVE/DISINCENTIVE CONTRACT TABLE SHOWN ON SHEET P.19.

ITEM 202 - REMOVAL, MISC.: RETAINING WALL 1

THE CONTRACTOR SHALL REMOVE THE EXISTING RETAINING WALL, INCLUDING THE FOOTING. THE EXISTING PILING SHALL BE CUT DOWN TO 2 FOOT BELOW THE PROPOSED SUBGRADE. DISPOSE OF ALL MATERIAL PER 105.17.

ALL LABOR, EQUIPMENT, MATERIALS, AND INCIDENTALS REQUIRED TO PERFORM THIS WORK SHALL BE INCLUDE IN THE UNIT PRICE BID FOR ITEM 202 - REMOVAL MISC.: RETAINING WALL.

GENERAL NOTES

DESIGN AGENCY
AMERICAN STRUCTUREPOINT INC.
DESIGNER LZS
REVIEWER KAM 03/03/25
PROJECT ID 122048
SHEET P.12 TOTAL P.421

HAM-IR 75-1.05

MODEL: Sheet PAPERSIZE: 34x22 (in.) DATE: 8/28/2025 TIME: 9:29:38 AM PLTDRV: OHDOT_PDF.pltcfg PENTBL: OHDOT_Pen_Addendum.tbl USER: WORKSPACE: OHDOTCEv02 WORKSET: 122048 PRODUCT: OpenRoadsDesigner 10.12.02.4
pw:\\ohiodot-pw.bentley.com:ohiodot-pw-02\Documents\01 Active Projects\District 08\Hamilton\122048\403-Engineering_StructurePoint\Roadway\Sheets\122048_GN302.dgn

FULL DEPTH PAVEMENT WEDGE TO FREEMAN AVE

A FULL DEPTH PAVEMENT WEDGE SHALL BE CONSTRUCTED TO PROVIDE A TEMPORARY CONNECTION BETWEEN FREEMAN AVE AND RAMP V/WINCHELL, UNTIL THE RECONSTRUCTION OF FREEMAN AVE AS PART OF THE HAM-75-1.05 PHASE 3 PROJECT (PID 113361). THIS SHALL OCCUR BETWEEN STA 66+92.54 AND 69+41.24 (℄ CONST CLP_RAMP V), AS NOTED IN THE PLAN AND PROFILE SHEETS. THIS FULL DEPTH WEDGE SHALL MATCH THE PAVEMENT BUILDUP OF RAMP V/WINCHELL AVE, ESTIMATED QUANTITIES FOR THE PAVEMENT HAVE BEEN PROVIDED IN THE PAVEMENT CALCULATIONS. THIS FULL DEPTH WEDGE SHALL BE CONSTRUCTED TO PROVIDE A MINIMUM 10.0-FT WIDE TRAVEL LANE. TAPER THE FULL DEPTH WEDGE PER ODOT STANDARD CONSTRUCTION DRAWING BP-3.1.

IN ADDITION TO THE PAVEMENT QUANTITIES THE FOLLOWING ESTIMATED QUANTITIES HAVE BEEN INCLUDED IN THE GENERAL SUMMARY TO BE USED IF NECESSARY FOR THE WORK NOTED ABOVE:

1 ITEM 202 - CONCRETE MEDIAN REMOVED	45 SY
ITEM 202 - CURB REMOVED	249 FT
ITEM 202 - GUARDRAIL REMOVED	139 FT
ITEM 606 - GUARDRAIL, TYPE MGS	100 FT
ITEM 606 - ANCHOR ASSEMBLY, MGS TYPE E (MASH 2016)	1 EACH
ITEM 606 - IMPACT ATTENUATOR, TYPE 2 (UNIDIRECTIONAL)	1 EACH
ITEM 609 - CURB MISC.: TYPE S-1 CURB (CINCINNATI)	249 FT
1 ITEM 622 - PORTABLE BARRIER, ANCHORED	640 FT

PROVIDE ANY MATERIALS USED OUTSIDE THE LIMITS STATED ABOVE AT NO ADDITIONAL COST.

ITEM SPECIAL - PIPE CLEANOUT

THIS WORK CONSISTS OF REMOVING SEDIMENT AND DEBRIS FROM THE EXISTING DRAINAGE CONDUITS SPECIFIED IN THE PLANS. DISPOSE OF ALL MATERIAL PER 105.16 AND 105.17. CLEAN OUT TO THE APPROVAL OF THE ENGINEER.

CLEANOUT OF THE PIPE IS PAID FOR AT THE UNIT PRICE BID FOR ITEM SPECIAL, PIPE CLEANOUT. THIS PRICE INCLUDES THE COST FOR MATERIAL, EQUIPMENT, LABOR, AND ALL INCIDENTALS REQUIRED TO COMPLETE THE CLEANOUT.

THE FOLLOWING ESTIMATED QUANTITIES HAVE BEEN INCLUDED IN THE GENERAL SUMMARY FOR THE WORK NOTED ABOVE:

ITEM SPECIAL, PIPE CLEANOUT, 24" AND UNDER	1000 FT
ITEM SPECIAL, PIPE CLEANOUT, 27" TO 48"	215 FT
ITEM SPECIAL, PIPE CLEANOUT, OVER 48"	900 FT

ITEM 611 - CONDUIT, TYPE B/C, AS PER PLAN 1

USE 703.11 STRUCTURAL BACKFILL TYPE 1 OR 613 LOW STRENGTH MORTAR AS STRUCTURAL BACKFILL FOR ALL TYPE A AND B FLEXIBLE CONDUITS 12-INCH DIAMETER AND LARGER. DETAIL THE SELECTED CONDUIT MATERIAL AND STRUCTURAL BACKFILL IN THE 611 INSTALLATION PLAN PER 611.04 B.

ITEM 611 - CONDUIT, TYPE B/C, AS PER PLAN (CINCINNATI) 1

ALL TYPE A AND B CONDUITS 12-INCH DIAMETER AND LARGER SHALL BE REINFORCED CONCRETE PIPE WITH CONTROLLED LOW STRENGTH MATERIAL (CLSM) BACKFILL. THIS ITEM SHALL CONFORM TO THE CITY OF CINCINNATI STANDARDS AND SHALL BE IN ACCORDANCE WITH THE MOST RECENT VERSION OF THE CITY OF CINCINNATI SUPPLEMENT TO STATE OF OHIO DEPARTMENT OF TRANSPORTATION CONSTRUCTION AND MATERIAL SPECIFICATION SECTION 603.

ITEM 442 - ASPHALT CONCRETE, MISC.: FULL-DEPH 448 TYPE 1 HOT-MIX ASPHALT PER CINCINNATI ITEM 627 DRIVEWAYS

THIS ITEM SHALL CONFORM TO THE CITY OF CINCINNATI STANDARDS FOR 627 ASPHALT CONCRETE, TYPE 1 AND SHALL BE IN ACCORDANCE WITH THE MOST RECENT VERSION OF THE CITY OF CINCINNATI SUPPLEMENT TO STATE OF OHIO DEPARMENT OF TRANSPORTATION CONSTRUCTION AND MATERIAL SPECIFICATION SECTION 627.

ITEM 609 - CURB, MISC.: TYPE B-1 CURB (CINCINNATI)

THIS ITEM SHALL CONSIST OF A 7" WIDE CITY OF CINCINNATI TYPE B-1 BATTERED CONCRETE CURB, ADHERING TO THE CITY OF CINCINNATI DEPARTMENT OF PUBLIC WORKS DIVISION OF ENGINEERING STANDARD DRAWING ACCESSION NO. C101.

ITEM 609 - CURB, MISC.: TYPE P-1 CURB (CINCINNATI)

THIS ITEM SHALL CONSIST OF A 7" WIDE CITY OF CINCINNATI TYPE P-1 BATTERED CONCRETE CURB, ADHERING TO THE CITY OF CINCINNATI DEPARTMENT OF PUBLIC WORKS DIVISION OF ENGINEERING STANDARD DRAWING ACCESSION NO. C102.

ITEM 609 - CURB, MISC.: TYPE S-1 CURB (CINCINNATI)

THIS ITEM SHALL CONSIST OF A 7" WIDE CITY OF CINCINNATI TYPE S-1 BATTERED CONCRETE CURB, ADHERING TO THE CITY OF CINCINNATI DEPARTMENT OF PUBLIC WORKS DIVISION OF ENGINEERING STANDARD DRAWING ACCESSION NO. C103.

ITEM 611 - CATCH BASIN, MISC.: COMBINATION INLET (CI)

THIS ITEM SHALL CONSIST OF A CITY OF CINCINNATI COMBINATION INLET (CI) ADHERING TO THE CITY OF CINCINNATI'S STORMWATER MANAGEMENT UTILITY (SMU) STANDARD DRAWING ACCESSION NO. 49016.

ITEM 611 - CATCH BASIN, MISC.: DOUBLE GUTTER INLET MH (DGIMH)

THIS ITEM SHALL CONSIST OF A CITY OF CINCINNATI DOUBLE GUTTER INLET MANHOLE (DGIMH) ADHERING TO THE CITY OF CINCINNATI'S STORMWATER MANAGEMENT UTILITY (SMU) STANDARD DRAWING ACCESSION NO. 49010.

ITEM 611 - MANHOLE, MISC.: STANDARD MANHOLE, TYPE B

THIS ITEM SHALL CONSIST OF A CITY OF CINCINNATI STANDARD MANHOLE TYPE B ADHERING TO THE CITY OF CINCINNATI'S STORMWATER MANAGEMENT UTILITY (SMU) STANDARD DRAWING ACCESSION NO. 49038.

ITEM 611 - INLET, MISC.: DITCH INLET

THIS ITEM SHALL CONSIST OF A CITY OF CINCINNATI COMBINATION INLET (CI) ADHERING TO THE CITY OF CINCINNATI'S STORMWATER MANAGEMENT UTILITY (SMU) STANDARD DRAWING ACCESSION NO. 49023.

ITEM 611 - 6", SLOTTED DRAIN, TYPE 1 1

THIS ITEM CONSISTS OF 6 INCH DIAMETER SLOTTED DRAIN ALUMINUM COATED STEEL CONDUIT 707.01 WITH 6 INCH TRAPEZOIDAL GALVANIZED SOLID BAR GRATE AS APPROVED BY THE ENGINEER. ALL COSTS FOR LABOR AND MATERIALS, INCLUDING TYPE 2 BEDDING, AND BACKFILLING AS DETAILED ON STANDARD CONSTRUCTION DRAWING DM-1.3 IS INCLUDED IN THE PRICE BID PER FT FOR ITEM 611, 6" SLOTTED DRAIN,TYPE 1

ITEM 108 - CPM PROGRESS SCHEDULE, AS PER PLAN 1

IN ADDITION TO THE REQUIREMENTS OF PROPOSAL NOTE 107, THE FOLLOWING ITEMS SHALL APPLY:

- THE CONTRACTOR SHALL INCLUDE THE UTILITY OWNERS RELOCATION TIME FRAMES WITHIN THE SCHEDULE.

- COORDINATE ALL PROJECT WORK AND UTILITY WORK WITH THE AFFECTED UTILITY OWNERS.

ITEM 619 - FIELD OFFICE, AS PER PLAN 1

THE CONTRACTOR SHALL ENTER INTO A LEASE AGREEMENT FOR A FIELD OFFICE AT LONGWORTH HALL LOCATED AT 700 W PETE ROSE WAY, CINCINNATI, OHIO 45203 FOR DEPARTMENT PERSONNEL. THE DEPARTMENT SHALL APPROVE OF THE SPACE PRIOR TO THE EXECUTION OF THE LEASE. THE LEASE SHALL BE EXECUTED WITHIN THIRTY (30) CALENDAR DAYS OF THE DATE THE CONTRACT IS SIGNED AND THE SPACE AVAILABLE FOR DEPARTMENT USE WITHIN FORTY-FIVE (45) CALENDAR DAYS OF THE DATE THE CONTRACT IS SIGNED. FAILURE TO MEET THE AFOREMENTIONED TIME FRAMES SHALL RESULT IN A DISINCENTIVE IN THE AMOUNT OF $1000 PER CALENDAR DAY FOR EACH CALENDAR DAY THE REQUIREMENTS ARE NOT MET. IN ADDITION, THE CONTRACTOR SHALL PROVIDE THE FOLLOWING:

- MAINTAIN ALL UTILITY SERVICES (E.G., ELECTRIC, SECURITY, TELEPHONE, WATER) FOR THE DURATION OF THE PROJECT.

- INTERNET SERVICE CONNECTION - PROVIDE A FIBER OR CABLE BROADBAND INTERNET CONNECTION CAPABLE OF MINIMUM DOWNLOAD SPEEDS AS FOLLOWS: 500 MBPS DOWNLOAD 50 MBPS UPLOAD - NETWORK LATENCY LESS THAN 50 MILLISECONDS.

- ONE MULTI-FUNCTION COPIER THAT IS SETUP FOR SCANNING, PRINTING AND COPYING. PLEASE SEE C&MS TABLE 619.02-1 FOR DETAILS.

-TEN (10) EACH DELUXE HIGH BACK SWIVEL OFFICE CHAIRS WITH ARMS.

- WATER SERVICE CONSISTING OF:
  - SIXTY (60) GALLONS (I.E. 12 FIVE GALLON CONTAINERS) OF PURIFIED WATER PER MONTH.
  - WATER DISPENSER CAPABLE OF COOLING AND HEATING THE FIVE GALLON WATER CONTAINERS.

- THESE ITEMS SHALL BE PROVIDED WITHIN FORTY-FIVE (45) CALENDAR DAYS OF THE DATE THE CONTRACT IS SIGNED. FAILURE TO PROVIDE THE ITEMS WITHIN THE STATED TIME SHALL RESULT IN A DISINCENTIVE IN THE AMOUNT OF $1000 PER CALENDAR DAY FOR EACH CALENDAR DAY THE ITEMS ARE NOT PROVIDED.

- ALL ITEMS MUST BE APPROVED BY THE DEPARTMENT PRIOR TO EXECUTION AND/OR ORDERING.

COMPENSATION: THE DEPARTMENT WILL FURNISH ITEM 619 EACH, FIELD OFFICE WITH AN AMOUNT IN THE PROPOSAL TO PAY FOR THE FIELD OFFICE. THE FIXED AMOUNT SHOWN IN THE PROPOSAL IS INCLUDED (AS ANY OTHER BID ITEMS) IN THE TOTAL BID AMOUNT. THIS FIXED AMOUNT IS THE DEPARTMENT'S ESTIMATE OF THE TOTAL COST OF FIELD OFFICE FOR THE PROJECT. IF THE FIELD OFFICE EXCEEDS THIS AMOUNT, THE FIELD OFFICE WILL STILL BE PAID AT INVOICE SUPPORTED ACTUAL COSTS. THE PAYMENT DUE WILL BE DEDUCTED FROM ITEM 619 EACH, FIELD OFFICE. C&MS TABLE 104.02-2 DOES NOT APPLY TO REDUCTIONS IN THIS CONTRACT ITEM.

BASIS OF PAYMENT: THE CONTRACTOR WILL BE COMPENSATED FOR THE INVOICE SUPPORTED ACTUAL COSTS. THE DEPARTMENT WILL NOT PAY A PERCENT MARKUP ON THESE COSTS.

REMOVED "ITEM SPECIAL - CONSULTANT FOR CONCRETE QUALITY CONTROL INCLUDING TESTING AND INSPECTION" NOTE 1

GENERAL NOTES

DESIGN AGENCY
AMERICAN STRUCTUREPOINT INC.

DESIGNER LZS
REVIEWER KAM 03/03/25
PROJECT ID 122048
SHEET P.13 TOTAL P.421

HAM-IR 75-1.05

MODEL: Sheet PAPERSIZE: 34x22 (in.) DATE: 8/28/2025 TIME: 9:29:51 AM PLTDRV: OHDOT_PDF.pltcfg PENTBL: OHDOT_Pen_Addendum.tbl USER: WORKSPACE: OHDOTCEv02 WORKSET: 122048 PRODUCT: OpenRoadsDesigner 10.12.02.4
pw:\\ohiodot-pw.bentley.com:ohiodot-pw-02\Documents\01 Active Projects\District 08\Hamilton\122048\403-Engineering_StructurePoint\Roadway\Sheets\122048_GN303.dgn

REQUIREMENTS OF PACP/LACP CCTV AND MANHOLE SEWER INSPECTIONS

MSD CONFORMS TO THE NATIONAL ASSOCIATION OF SEWER SERVICE COMPANIES' (NASSCO) PIPELINE ASSESSMENT CERTIFICATION PROGRAM (PACP), LATERAL ASSESSMENT CERTIFICATION PROGRAM (LACP), AND MANHOLE INSPECTION UTILIZING MSD INSPECTION FORMS. THESE INSPECTIONS WILL BE MAINTAINED WITHIN MSD'S LIBRARY OF SEWER INSPECTIONS AND IT IS IMPERATIVE THAT THEY MEET ALL APPROPRIATE MSD REQUIREMENTS. ALL PACP AND LACP CCTV WORK TO BE PERFORMED VIA THIS CONTRACT SHALL THEREFORE CONFORM TO ALL CURRENT NASSCO STANDARDS EXCEPT WHERE SPECIFICALLY INSTRUCTED OTHERWISE BY THE MSDGC PROGRAM MANAGER (PM). THESE STANDARDS INCLUDE BUT ARE NOT LIMITED TO: SPEED OF CAMERA TRAVEL, CENTERING OF CAMERA IN PIPE, CODING OF DEFECTS/STRUCTURAL FEATURES/OBSERVATIONS, PANNING OF DEFECTS/STRUCTURAL FEATURES, CAMERA LIGHTING, HEADER INFORMATION, FLOW CONTROL, AND REVERSAL INSPECTIONS. MSD GIS STANDARDS AND DESIGNATIONS SHALL APPLY FOR HEADER INFORMATION INCLUDING, BUT NOT LIMITED TO: MANHOLE NUMBERS, ASSET ID NUMBERS, CITYWORKS®WORK ORDER NUMBERS, BUILDING SEWER NAMES AND IDENTIFICATION, AND PREVIOUSLY UNDOCUMENTED MANHOLES.

ALL PACP AND LACP CCTV WORK TO BE PERFORMED VIA THIS WORK ORDER SHALL BE CARRIED OUT UTILIZING A COLOR PAN AND TILT ROTATING HEAD CAMERA SPECIFICALLY DESIGNED AND CONSTRUCTED FOR SEWER INSPECTION. ALL CCTV WORK SHALL BE RECORDED ENTIRELY IN DIGITAL MP4 FORMAT ENCODED WITH A FILE COMPRESSION OF HIGH EFFICIENCY VIDEO CODING (HEVC OR H.265) (OTHER FORMATS NEED MSDGC PM APPROVAL) WITH AN APPROPRIATE PACP/LACP DATABASE FILE (NASSCO PACP/LACP V7.0 CERTIFIED ACCESS DATABASE HAVING COMPATIBILITY WITH PIPETECH® PIPELINE INSPECTION SOFTWARE), AND ALL VIDEO MUST BE CONTINUOUSLY METERED.

THE PERSON CODING THE PIPELINE INSPECTION MUST BE NASSCO PACP AND LACP CERTIFIED WITH A MINIMUM OF THREE YEARS OF FULL-TIME EXPERIENCE CODING DEFECTS USING THE NASSCO STANDARD. PACP AND LACP CERTIFICATION NUMBERS MUST BE PROVIDED TO MSDGC AND PROOF OF EXPERIENCE MUST BE DEMONSTRATED BY DOCUMENTATION SUCH AS A RESUME WITH REFERENCES.

<u>ROBOTIC PACP/LACP & MANHOLE INSPECTION</u>

THE CONTRACTOR SHALL BE RESPONSIBLE FOR:

1. CONDUCTING A FINAL MANHOLE-TO-MANHOLE (MH-MH), TELEVISING OF THE MAINLINE SEWER SECTION TO EVALUATE THE CONDITION OF THE SEWER AFTER ALL APPROPRIATE CLEANING, TRIMMING, GRINDING, AND FLUSHING HAS BEEN PERFORMED. IN THE EVENT AN INSPECTION CANNOT BE COMPLETED FROM ONE SET-UP DUE TO A STRUCTURAL OR MAINTENANCE DEFECT, THE INSPECTOR SHALL PERFORM A REVERSE INSPECTION FROM AN ADDITIONAL SET-UP THE SAME DAY. THE INSPECTOR SHALL SUBMIT TWO INSPECTION REPORTS AS THE FINAL INSPECTION. THIS FINAL TELEVISING SHALL BE IN PACP AND SHALL FOLLOW ALL PACP V 7.0 STANDARDS.

2. EMPLOYING VARIOUS FLOW CONTROL METHODS AS APPROPRIATE TO ENSURE VISIBILITY OF THE ENTIRE CIRCUMFERENCE OF THE SEWER.

3. CONDUCTING A FINAL TELEVISING OF EACH INDIVIDUAL BUILDING SEWER FROM THE MAIN SEWER LINE TO THE PUBLIC RIGHT OF WAY DESIGNATION OR SEWER EASEMENT LIMIT. UNLESS OTHERWISE DIRECTED BY MSD PERSONNEL, THE EASEMENT LIMIT SHOULD BE ASSUMED TO BE A MINIMUM OF 10'. THIS FINAL TELEVISING SHALL BE IN LACP AND SHALL FOLLOW ALL LACP V7.0 STANDARDS. IF A FULL MAINLINE TO RIGHT OF WAY OR EASEMENT INSPECTION IS UNABLE TO BE COMPLETED DUE TO AN OBSTRUCTION OF ANY SORT, SAID OBSTRUCTION MUST BE LOCATED AND REPORTED TO THE MSD PM IMMEDIATELY.

REQUIREMENTS OF PACP/LACP CCTV AND MANHOLE SEWER INSPECTIONS (CONTINUED)

4. ROBOTIC LACP INSPECTION SHALL BE DONE FROM THE MAIN SEWER OR AVAILABLE CLEANOUT OR ACCESS POINT. THE CONTRACTOR SHALL USE ROBOTIC TECHNOLOGY TO PUSH OR "LAUNCH"THE LATERAL CAMERA INTO THE BUILDING SEWER FROM THE MAINLINE. THE VAST MAJORITY OF BUILDING SEWERS ARE 6 INCHES IN DIAMETER AND ARE MADE OF VARIOUS MATERIALS. IF THE CONTRACTOR IS UNABLE TO PERFORM AN INSPECTION OF THE LATERAL DUE TO DEBRIS, ROOTS OR OTHER OBSTACLES IN THE BUILDING SEWER LATERAL, THEY SHALL CONTACT THE MSD PM FOR DIRECTION.

<u>WALK THROUGH PACP/LACP INSPECTION (MANNED ENTRY)</u>

THE CONTRACTOR SHALL BE RESPONSIBLE FOR:

1. THE OPERATOR ENTERING INTO LARGE DIAMETER SEWERS IN ORDER TO CONDUCT A FINAL MANHOLE-TO-MANHOLE (MH-MH) TELEVISING OF THE SEWER TO EVALUATE THE CONDITION OF THE SEWER AFTER ALL APPROPRIATE CLEANING, TRIMMING GRINDING, AND FLUSHING HAS BEEN PERFORMED. THE FINAL TELEVISING SHALL BE IN PACP AND SHALL FOLLOW ALL PAC V7.0 STANDARDS. THE CONTRACTOR MAY UTILIZE ROBOTIC EQUIPMENT TO PERFORM A PACP INSPECTION IN PIPE SIZES GREATER THAN 60 INCHES AT THE DIRECTION/APPROVAL OF THE MSD PM.

2. ALL MAN ENTRY INTO THE SEWER WILL FOLLOW THE CONTRACTOR'S HEALTH AND SAFETY PLAN WITH REGARDS TO CONFINED SPACE ENTRY.

3. CONDUCTING A FINAL TELEVISING OF EACH INDIVIDUAL BUILDING SEWER FROM THE MAIN SEWER LINE TO THE PUBLIC RIGHT OF WAY DESIGNATION OR SEWER EASEMENT LIMIT. THIS FINAL TELEVISING SHALL BE IN LACP AND SHALL FOLLOW ALL LACP V7.0 STANDARDS. IF A FULL MAINLINE TO RIGHT OF WAY OR SEWER EASEMENT INSPECTION IS UNABLE TO BE COMPLETED DUE TO AN OBSTRUCTION OF ANY SORT, SAID OBSTRUCTION MUST BE REPORTED TO THE MSD PM IMMEDIATELY.

THE CONTRACTOR SHALL SUBMIT WORK IN THE FORMAT REQUIRED BY MSDGC AND SHALL FOLLOW GUIDELINES FROM THE MSDGC PROJECT P M. IN ORDER TO CONTINUE IMPROVING THE UPLOADING OF DATA AND SUBMITTALS, THE MSDGC PM MAY UPDATE THE REQUIREMENTS AT ANY TIME, BUT WILL GIVE THE CONTRACTOR SUFFICIENT ACCESS TO MSD'S PROGRAMS AS NEEDED.

<u>SUBMITTAL OF WORK TO MSDGC</u>

WORK COMPLETED AND SUBMITTED TO MSDGC SHALL FOLLOW THE SPECIFICATIONS DETAILED IN THE SUBSECTIONS BELOW.

<u>REQUIREMENTS OF ALL PACP AND LACP CCTV SUBMITTALS AND MANHOLE INSPECTION SUBMITTALS</u>

ALL SUBMITTALS OF PACP AND LACP INSPECTIONS SHALL CONFORM TO THE FOLLOWING SPECIFICATIONS:

1. EACH SUBMITTAL THE PACP/LACP DATABASE FILE AND ITS CORRESPONDING VIDEO FILES SHALL CONTAIN WORK FROM ONLY 1 (ONE) INSPECTOR AND ONLY 1 (ONE) CCTV WORK CATEGORY FROM THE LIST BELOW:

- *a. SANITARY AND/OR COMBINED MAINLINE SEWER INSPECTIONS (PACP)*
- *b. SANITARY AND/OR COMBINED BUILDING SEWER INSPECTIONS (LACP)*
- *c. STORM MAINLINE SEWER INSPECTIONS (PACP)*
- *d. STORM BUILDING SEWER INSPECTIONS (LACP)*

REQUIREMENTS OF PACP/LACP CCTV AND MANHOLE SEWER INSPECTIONS (CONTINUED)

2. EACH SUBMITTAL SHALL BE ASSIGNED A UNIQUE TRACKING IDENTIFIER

- *a. IN THE EVENT THAT A SUBMITTAL IS REJECTED AS UNACCEPTABLE, THE MSD PM SHALL DIRECT THE CONTRACTOR WHETHER TO REUSE THE ORIGINAL OR TO ASSIGN A NEW TRACKING IDENTIFIER.*

3. EACH SUBMITTAL SHALL INCLUDE INSPECTIONS FROM ONLY ONE CALENDAR MONTH.

*4. EACH PACP VIDEO FILE MUST BE IN STANDARD *.MP4 FORMAT AND NAMED AS DESCRIBED BELOW:*

- *a. [MONTH]_[DAY]_[YEAR]-[HOUR]_[MINUTE]_[AM/PM]-[INSPECTOR NAME]-[WORK ORDER NUMBER].MP4*
- *b. E.G., "1_03_2012-11_23_AM-M LONGMIRE-411032.MP4"*

*5. EACH LACP VIDEO FILE MUST BE IN STANDARD *.MP4 FORMAT AND NAMED AS DESCRIBED BELOW:*

- *a. [MONTH]_[DAY]_[YEAR]-[HOUR]_[MINUTE]_[AM/PM]-[INSPECTOR NAME]-[ADDRESS]_[STREET]-[WORK ORDER NUMBER].MP4*
- *b. E.G., "1_02_2012-07_51_PM-E SCHNEIDER-842 SUNDERLAND DR-405623.MP4"*

6. EACH MANHOLE INSPECTION SHALL FOLLOW THE FORMAT PROVIDED BY MSD UTILIZING THEIR MANHOLE INSPECTION FORM.

7. ALL PACP, LACP AND MANHOLE INSPECTIONS MUST BE SUBMITTED WITHIN FOURTEEN (14) CALENDAR DAYS OF THE DATE OF WORK.

8. IN THE CASE OF REJECTION OF A WHOLE OR ANY PART OF A SUBMITTAL, CONTRACTOR SHALL HAVE FOURTEEN (14) CALENDAR DAYS FROM THE DATE OF NOTIFICATION OF SAID REJECTION TO ADDRESS, CORRECT, AND/OR RE-PERFORM AND THEN RE-SUBMIT SAID WORK TO MSDGC.

1

GENERAL NOTES

DESIGN AGENCY
STRUCTUREPOINT

DESIGNER LZS
REVIEWER KAM 03/03/25
PROJECT ID 122048
SHEET P.13A TOTAL P.421

HAM-IR 75-1.05

MODEL: Sheet PAPERSIZE: 34x22 (in.) DATE: 8/28/2025 TIME: 10:44:12 AM PLTDRV: OHDOT_PDF.pltcfg PENTBL: OHDOT_Pen_Addendum.tbl USER: WORKSPACE: OHDOTCEv02 WORKSET: 122048 PRODUCT: OpenRoadsDesigner 10.12.02.4
pw:\\ohiodot-pw.bentley.com:ohiodot-pw-02\Documents\01 Active Projects\District 08\Hamilton\122048\403-Engineering_StructurePoint\Roadway\Sheets\122048_GN305.dgn

PROJECT ENVIRONMENTAL COMMITMENTS

A SPILL PREVENTION CONTROL AND COUNTERMEASURES PLAN THAT IS ACCEPTABLE TO KYTC, ODOT, AND THE KENTUCKY DEPARTMENT FOR ENVIRONMENTAL PROTECTION WILL BE PREPARED FOR THE PROJECT. THIS PLAN WILL DEFINE, AT MINIMUM, PROTOCOLS FOR THE MANAGING, HANDLING, AND DISPOSING OF OIL SPILLS, INCLUDING CONTACT WITH EMERGENCY RESPONSE PERSONNEL, SAFETY DATA SHEETS, AND COPIES OF AGREEMENTS WITH AGENCIES THAT WOULD BE PART OF A SPILL-RESPONSE EFFORT. THE PLAN WILL ALSO OUTLINE COMMUNICATION PROTOCOLS TO ENSURE PROPER AND TIMELY NOTIFICATION OF NEARBY PUBLIC DRINKING WATER SUPPLIES IN THE EVENT OF A SPILL, INCLUDING THE SOURCE WATER PROTECTION ZONES FOR THE LOUISVILLE WATER COMPANY (KY0560258) AND THE NORTHERN KENTUCKY WATER DISTRICT (KY0590220).

IF PREVIOUSLY UNIDENTIFIED HISTORIC PROPERTIES, OR UNANTICIPATED EFFECTS ON KNOWN HISTORIC PROPERTIES, ARE DISCOVERED AFTER COMPLETION OF THE SECTION 106 PROCESS, ODOT AND KYTC SHALL FOLLOW THE UNANTICIPATED DISCOVERY PLANS FOR THEIR RESPECTIVE STATES, AS DESCRIBED IN APPENDIX A OF THE PROGRAMMATIC AGREEMENT AMONG FHWA, ODOT, KYTC, THE OHIO SHPO, THE KENTUCKY SHPO, AND THE CITY OF COVINGTON IMPLEMENTING SECTION 106 OF THE NATIONAL HISTORIC PRESERVATION ACT FOR THE BRENT SPENCE BRIDGE CORRIDOR PROJECT.

THE OHIO STATE HISTORIC PRESERVATION OFFICER (SHPO) AND OHIO SECTION 106 CONSULTING PARTIES WILL BE GIVEN AN OPPORTUNITY TO REVIEW AND COMMENT ON FINAL DESIGN PLANS.

IN COORDINATION WITH THE CITY OF CINCINNATI AND THE OHIO AESTHETICS SUBCOMMITTEE, ODOT HAS ESTABLISHED AN AESTHETIC DESIGN CHECKLIST FOR PHASES I AND II OF THE PROJECT. POTENTIAL CHANGES TO AESTHETIC FEATURES WILL BE COORDINATED AND CONFIRMED WITH THE CITY OF CINCINNATI AND THE OHIO AESTHETICS SUBCOMMITTEE AT THE COMPLETION OF EACH DESIGN STAGE REVIEW IN ACCORDANCE WITH ODOT'S AESTHETIC DESIGN GUIDELINES.

DURING CONSTRUCTION, VEHICULAR, BICYCLE, AND AMERICANS WITH DISABILITIES ACT-COMPLIANT PEDESTRIAN ACCESS TO NEIGHBORHOODS AND COMMUNITY FACILITIES WILL BE MAINTAINED THROUGH PROVISION OF ALTERNATE ROUTES OF ENTRY. WHERE SIDEWALKS, WALKWAYS, OR SHOULDERS MUST BE TEMPORARILY CLOSED TO FACILITATE CONSTRUCTION, SAFE PEDESTRIAN PASSAGE WILL ALWAYS BE MAINTAINED ON ONE SIDE OF THE ROADWAY, UNLESS OTHER TEMPORARY PEDESTRIAN ACCOMMODATIONS ARE PROVIDED. CONSTRUCTION ZONE PEDESTRIAN ACCESS WILL BE MAINTAINED IN ACCORDANCE WITH THE ACCESSIBILITY GUIDELINES FOR PEDESTRIAN FACILITIES IN THE PUBLIC RIGHT-OF-WAY AS PUBLISHED IN FEDERAL REGISTER VOLUME 88 PAGE 53604 (88 FR 53604). A MAINTENANCE OF TRAFFIC (MOT) PLAN WILL BE DEVELOPED AND IMPLEMENTED TO MAINTAIN TRAFFIC OPERATION THROUGH THE CORRIDOR AND MINIMIZE DISRUPTION TO THE SURROUNDING COMMUNITIES. THE MOT PLAN WILL BE COORDINATED WITH THE REGIONAL INCIDENT MANAGEMENT TASK FORCE.

1 DURING DESIGN DEVELOPMENT, IN ADDITION TO EVALUATING PARAMETERS SUCH AS COST, SCHEDULE, ACCESS, TRAFFIC IMPACTS, SAFETY, RISK, ETC., KYTC AND ODOT WILL ALSO CONSIDER CONSTRUCTION NOISE ABATEMENT IN AREAS WHERE NOISE SENSITIVE RECEPTORS ARE PRESENT, INCLUDING:

- FOUNDATION TYPE SELECTION: DIFFERENT FOUNDATION TYPES HAVE VARYING EFFECTS ON THE INTENSITY AND DURATION OF CONSTRUCTION NOISE (E.G., PILING VERSUS CAST-IN-PLACE CONCRETE SHAFTS).

- INSTALLATION METHODOLOGY: THE SAME FEATURE OF WORK CAN BE ACHIEVED IN A VARIETY OF WAYS AND PLANNED FOR IN THE DESIGN PHASE. THIS COULD INVOLVE USING MECHANICAL OR CHEMICAL SPLITTING AS MEANS OF DEMOLITION VERSUS THE USE OF EXPLOSIVES OR DRILLING AND SETTING A RETAINING WALL VERSUS DRIVING SOLDIER PILES.

- STORAGE AND STAGING AREAS: IDENTIFICATION OR ACQUISITION OF LOCATIONS/PROPERTIES THAT PROVIDE SEPARATION FROM SENSITIVE RECEPTORS. THIS COULD BE BY PROXIMITY OR BY THE USE OF EXISTING BARRIERS.

PROJECT ENVIRONMENTAL COMMITMENTS (CONTINUED)

1 - PHASING OF WORK: CONSIDERATION OF HOW WORK IS PHASED CAN HAVE A PROMINENT IMPACT ON THE DURATION FOR WHICH A NOISE SENSITIVE RECEPTOR IS EXPOSED TO CONSTRUCTION NOISE FROM A PARTICULAR FEATURE OF WORK. THIS CONCEPT IS ESPECIALLY EVIDENT WHEN DEALING WITH A RECEPTOR LIKE A SCHOOL THAT IS OUT OF SESSION DURING THE SUMMER. PHASING THE PROJECT TO ALLOW/FACILITATE ALL HIGH DECIBEL WORK TO BE COMPLETED AT ONCE AND DURING THIS WINDOW NOT ONLY REDUCES, BUT ELIMINATES, THIS IMPACT.

- PERMANENT NOISE BARRIERS: CONSIDERATION WILL BE GIVEN TO THE FEASIBILITY OF CONSTRUCTING PERMANENT NOISE BARRIERS THAT ARE NEEDED FOR NOISE ABATEMENT OF THE PROJECT'S FINAL CONFIGURATION EARLIER IN THE PROJECT TO HELP MITIGATE TEMPORARY CONSTRUCTION NOISE.

- INCENTIVES: THERE ARE PROVISIONS TO ESTABLISH SCHEDULE-BASED INCENTIVES. THESE INCENTIVES COULD BE USED TO HELP MINIMIZE THE DURATION OF OVERALL CONSTRUCTION NOISE.

IMPACTS OF THE MOT PLAN ON PUBLIC TRANSPORTATION WILL BE EVALUATED. THE DESIGN-BUILD TEAM WILL DEVELOP MEASURES TO MAINTAIN EXISTING SERVICES TO PROVIDE SAFE, REASONABLE, AND EFFICIENT ACCESS TO GOODS AND SERVICES UNLESS OTHER TEMPORARY ACCOMMODATIONS ARE PROVIDED.

TEMPORARY CONSTRUCTION DETOURS AND HAUL ROUTES WILL BE EVALUATED IN A WAY TO LIMIT THE IMPACT CREATED BY REDIRECTED TRAFFIC THROUGH COMMUNITY SENSITIVE AREAS AND NEAR NOISE SENSITIVE RECEPTORS TO THE EXTENT PRACTICABLE. IN ADDITION TO OFFICIAL ROUTES, ALTERNATE ROUTES THAT MAY ALSO BE USED WILL ALSO BE EVALUATED TO MINIMIZE HEAVY TRUCK TRAFFIC ON RESIDENTIAL STREETS.

THE AVAILABILITY OF NIGHT-TIME AND WEEKEND WORK WILL BE EVALUATED IN CONJUNCTION WITH PERMITTED LANE CLOSURE MAPS DURING THE DEVELOPMENT OF THE MOT PLAN.

1 THE MOT PLAN AND THE PROJECT COMMUNICATIONS PLAN WILL INCLUDE PROVISIONS FOR COMMUNICATING WITH TRUCKING COMPANIES AND MAPPING SERVICES TO NOTIFY THEM OF DETOURS AND DELAY INFORMATION RELATED TO THE PROJECT.

THE MOT PLAN WILL EVALUATE AVAILABLE TRAVEL LANES ON THE MAINLINE INTERSTATE DURING CONSTRUCTION TO REDUCE THE POTENTIAL THAT THE PROJECT WILL INDUCE TRAFFIC DIVERSION SIMILAR TO THAT EXPERIENCED DURING RECENT CLOSURES AND RESTRICTIONS ON THE EXISTING BRENT SPENCE BRIDGE.

A PROJECT INCIDENT MANAGEMENT PLAN WILL BE DEVELOPED TO MINIMIZE DIVERSION RESULTING FROM INCIDENTS OCCURRING WITHIN THE PROJECT LIMITS DURING CONSTRUCTION TO THE EXTENT PRACTICABLE. THE CITY OF CINCINNATI AND THE NORTHERN KENTUCKY CITIES ALONG THE CORRIDOR, INCLUDING FORT MITCHELL, FORT WRIGHT, PARK HILLS, AND COVINGTON, WILL BE GIVEN THE OPPORTUNITY TO PARTICIPATE ACTIVELY IN THE DEVELOPMENT OF THE INCIDENT MANAGEMENT PLAN.

1 ODOT WILL PROVIDE THE CITY OF CINCINNATI AN OPPORTUNITY TO REVIEW AND COMMENT ON THE PROJECT MOT PLAN AND INCIDENT MANAGEMENT PLAN AS THEY ARE DEVELOPED. ODOT WILL WORK DIRECTLY WITH THE CITY OF CINCINNATI DEPARTMENT OF TRANSPORTATION AND ENGINEERING (DOTE) TO ENSURE THAT ALL RELEVANT AGENCIES WITHIN THE CITY HAVE AN OPPORTUNITY TO REVIEW AND PROVIDE INPUT INTO ALL ASPECTS OF MOT PLANNING, MOT AND INCIDENT MANAGEMENT PLAN DEVELOPMENT, AND CONSTRUCTION PERIOD OPERATIONS AFFECTING THE CITY.

THE CONSTRUCTION DOCUMENTS, IN CONCERT WITH THE MOT PLAN, WILL INCLUDE APPROPRIATE PROVISIONS FOR THE DESIGN-BUILD TEAM/CONTRACTOR TO INSTALL AND UTILIZE VARIABLE ELECTRONIC MESSAGE BOARDS AT KEY LOCATIONS WITHIN THE CITY OF COVINGTON (E.G., PIKE AND RUSSELL, EIGHTH AND RUSSELL, SEVENTEENTH AND SCOTT) AND THE CITY OF CINCINNATI, AS NEEDED, DURING CONSTRUCTION.

PROJECT ENVIRONMENTAL COMMITMENTS (CONTINUED)

ODOT WILL WORK TO ENSURE THAT THE CONSTRUCTION DOCUMENTS REQUIRE THE CONTRACTOR, WORKING THROUGH ODOT'S PROJECT MANAGER AND THE CINCINNATI DOTE, TO COORDINATE THE LOCATION AND PLACEMENT OF VARIABLE ELECTRONIC MESSAGE BOARDS. THE CONSTRUCTION DOCUMENTS ALSO MAY CONTAIN OTHER MEANS OF INFORMING AND NOTIFYING THE PUBLIC OF TRAFFIC CHANGES, AS APPROPRIATE.

1 DURING CONSTRUCTION, A PROJECT WEBSITE WILL PROVIDE REGULAR PROJECT UPDATES REGARDING MAINTENANCE OF TRAFFIC PLANS, CURRENT TRAFFIC PATTERNS, UPCOMING CHANGES, ETC. THE WEBSITE WILL PROVIDE AN EMAIL ADDRESS AND PHONE NUMBER FOR THE PUBLIC TO CONTACT THE CONTRACTOR'S DESIGNATED REPRESENTATIVE WITH QUESTIONS, CONCERNS, OR COMPLAINTS REGARDING ONGOING OR PLANNED CONSTRUCTION ACTIVITIES. INFORMATION ABOUT CONSTRUCTION SEQUENCING, PROJECT HIGHLIGHTS, AND CONSTRUCTION SCHEDULES WILL ALSO BE SHARED WITH THE PUBLIC THROUGH SOCIAL MEDIA, E-NEWSLETTERS, LOCAL MEDIA, PRESENTATIONS TO LOCAL GROUPS, AND VIRTUAL PROJECT UPDATES. ALL COMPLAINTS WILL BE INVESTIGATED BY PROJECT PERSONNEL. KYTC AND ODOT WILL DEVELOP REPORTING PROTOCOLS TO ENSURE THAT THE CONTRACTOR RESPONDS TO THE INQUIRIES IN A TIMELY MANNER AND KEEPS KYTC AND ODOT INFORMED OF COMMUNITY QUESTIONS AND CONCERNS.

THE PROJECT PLANS SHALL CONTAIN REQUIREMENTS TO ENSURE COMPLIANCE WITH ALL APPLICABLE STATE NOISE STANDARDS AND LOCAL NOISE ORDINANCES. THE CONTRACTOR, WORKING THROUGH THE KYTC AND ODOT PROJECT MANAGERS, SHALL BE REQUIRED TO COMMUNICATE AND COORDINATE WITH THE COVINGTON PROJECT DIRECTOR REGARDING NOISE ABATEMENT MEASURES WITHIN THE CITY OF COVINGTON AND THE CINCINNATI DOTE REGARDING NOISE ABATEMENT MEASURES WITHIN THE CITY OF CINCINNATI. SUCH MEASURES MAY INCLUDE LIMITING CONSTRUCTION ACTIVITIES AND CREWS AND CONSTRUCTION NOISE DURING SPECIFIC TIMES OF DAY, DAYS OF THE WEEK, NUMBER OF CONSECUTIVE HOURS OR DAYS, AND SPECIAL EVENTS AND LIMITING ACTIVITIES THAT CREATE HIGH LEVELS OF CONSTRUCTION NOISE, SUCH AS PILE DRIVING AND BLASTING, TO CERTAIN TIMES OF DAY TO THE EXTENT PRACTICABLE.

ODOT WILL WORK WITH THE CITY OF CINCINNATI TO CONDUCT BEFORE/AFTER SURVEYS OF OTHER ROADWAYS IMPACTED BY INCREASED TRAFFIC DURING CONSTRUCTION. ODOT WILL RESTORE THOSE ROADWAYS TO PRE-CONSTRUCTION CONDITIONS ONCE THE PROJECT IS COMPLETE.

CONTRACTORS SHALL COMPLY WITH ALL APPLICABLE U.S. ENVIRONMENTAL PROTECTION AGENCY (USEPA) DIESEL EMISSION REQUIREMENTS. CONTRACTORS WILL UTILIZE CONSTRUCTION EQUIPMENT THAT MEETS USEPA TIER 4 DIESEL ENGINE STANDARDS TO THE GREATEST EXTENT PRACTICABLE.

ALL DIESEL-POWERED CONSTRUCTION EQUIPMENT WILL USE ULTRA-LOW SULFUR DIESEL FUEL.

1 CONTRACTORS WILL SCHEDULE AND CONDUCT ACTIVITIES AND EMPLOY APPROPRIATE PROTECTION TECHNIQUES TO MINIMIZE IMPACTS TO AIR QUALITY AND PREVENT HAZARDOUS OR OBJECTIONABLE AIR QUALITY CONDITIONS, PARTICULARLY FOR DRILLING, CUTTING, GRINDING, ABRASIVE BLASTING, OR SIMILAR ACTIVITIES TO THE EXTENT PRACTICABLE.

THE BURNING OF ANY MATERIALS WILL NOT BE PERMITTED ON THE CONSTRUCTION SITE.

CONTRACTORS WILL DEVELOP AND IMPLEMENT A DUST CONTROL PLAN THAT INCLUDES PROACTIVE MEASURES TO PREVENT DISCHARGE OF DUST INTO THE ATMOSPHERE. THE PLAN WILL BE APPROVED BY KYTC AND ODOT AND WILL DEFINE ROLES AND RESPONSIBILITIES FOR IMPLEMENTATION AND MONITORING FOR COMPLIANCE. EXPECTATIONS AND TIMELINES ESTABLISHED IN THE DUST CONTROL PLAN WILL BE IN ACCORDANCE WITH KYTC'S STANDARD SPECIFICATIONS AND ODOT'S CONSTRUCTION AND MATERIAL SPECIFICATIONS ITEM 616, DUST CONTROL.

PROJECT ENVIRONMENTAL COMMITMENTS (CONTINUED)

THE FOLLOWING MEASURES WILL BE EMPLOYED TO PROTECT SENSITIVE RECEPTORS SUCH AS PARKS, HOSPITALS, SCHOOLS, DAY CARE FACILITIES, BUILDING FRESH AIR OR VENTILATION INTAKES, OLDER ADULT HOUSING, AND CONVALESCENT FACILITIES FROM IMPACTS OF DIESEL EXHAUST FUMES:

- DIESEL-POWERED ENGINES WILL BE LOCATED AWAY FROM BUILDING AIR CONDITIONERS AND WINDOWS TO THE GREATEST EXTENT PRACTICABLE.

- EXPOSURE TO DIESEL EXHAUST WITHIN 50 FEET OF SENSITIVE RECEPTORS WILL BE MINIMIZED IN TERMS OF CONCENTRATION AND TIME TO THE GREATEST EXTENT PRACTICABLE.

- IDLING TIME FOR DIESEL-POWERED EQUIPMENT WILL BE MINIMIZED TO THE GREATEST EXTENT PRACTICABLE.

- DIGITAL SIGNS SUCH AS ARROW PANELS AND VARIABLE ELECTRONIC MESSAGE BOARDS WILL USE SOLAR POWER TO THE GREATEST EXTENT PRACTICABLE.

- THE PROJECT STAFF WILL BE EDUCATED ON THE NOISE SENSITIVE RECEPTORS. THIS WILL INCLUDE NOT ONLY THEIR LOCATION, BUT ALSO THE TYPE (RESIDENT, SCHOOL, BUSINESS, ETC.), HOURS OF OPERATION, AND ANY PRIOR CONCERNS COMMUNICATED.

THE PROJECT STAFF WILL BE EDUCATED ON THE NOISE SENSITIVE RECEPTORS. THIS WILL INCLUDE NOT ONLY THEIR LOCATION, BUT ALSO THE TYPE (RESIDENT, SCHOOL, BUSINESS, ETC.), HOURS OF OPERATION, AND ANY PRIOR CONCERNS COMMUNICATED.

MOTORIZED CONSTRUCTION EQUIPMENT WILL BE EQUIPPED WITH AN APPROPRIATE, WELL-MAINTAINED MUFFLER AND WILL INCLUDE SILENCERS ON BOTH AIR INTAKES AND AIR EXHAUST WHEN REASONABLE. CONTRACTORS WILL HAVE AN ESTABLISHED MAINTENANCE PROGRAM FOR THEIR EQUIPMENT FLEET AND WILL ENSURE THAT NECESSARY MAINTENANCE/REPAIRS ARE PERFORMED BEFORE PUTTING EQUIPMENT INTO SERVICE. EQUIPMENT WILL ALSO BE PULLED OUT OF SERVICE TO ADDRESS DEFICIENCIES IDENTIFIED DURING OPERATION. WHEN NOISE SENSITIVE RECEPTORS ARE PRESENT, SPECIFIC ATTENTION WILL BE GIVEN TO THE MUFFLER SYSTEMS ON ALL COMBUSTION ENGINES, AS THAT IS OFTEN A PRIMARY SOURCE OF CONSTRUCTION NOISE.

TO THE GREATEST EXTENT PRACTICABLE, CONSTRUCTION EQUIPMENT AND VEHICLES CARRYING ROCK, CONCRETE, OR OTHER MATERIALS WILL UTILIZE DESIGNATED ROUTES THAT WILL CAUSE THE LEAST DISTURBANCE TO NOISE SENSITIVE RECEPTORS.

WHERE PRACTICABLE, EXISTING FEATURES WILL BE UTILIZED TO MINIMIZE THE IMPACTS OF CONSTRUCTION NOISE ON NOISE SENSITIVE RECEPTORS. SUCH FEATURES WILL INCLUDE BRIDGES, BERMS, RETAINING WALLS, AND BUILDINGS. TEMPORARY FEATURES ALREADY NECESSARY FOR PERFORMING THE WORK, SUCH AS STOCKPILES AND TOOL TRAILERS, MAY ALSO BE STRATEGICALLY UTILIZED TO ASSIST IN THIS EFFORT. WHERE NECESSARY, TEMPORARY FEATURES, SUCH AS HAY BALES, WILL BE CONSTRUCTED SPECIFICALLY TO MINIMIZE CONSTRUCTION NOISE WHERE NOISE SENSITIVE RECEPTORS ARE PRESENT.

1 WHERE NOISE SENSITIVE RECEPTORS ARE PRESENT, SPECIFIC CONSIDERATION WILL BE GIVEN TO THE SELECTION OF EQUIPMENT TO BE UTILIZED. THIS MAY INCLUDE THE AGE OF THE EQUIPMENT AS NEWER EQUIPMENT TYPICALLY EMPLOYS NEW TECHNOLOGY WITH RESPECT TO EMISSIONS AND NOISE, IF SHIELDING OR ENGINE ENCLOSURES ARE STANDARD, SIZE APPROPRIATENESS, AND POWER SOURCE (GAS/DIESEL, ELECTRIC/SOLAR, PNEUMATIC, HYDRAULIC).

GENERAL NOTES

DESIGN AGENCY
STRUCTUREPOINT INC.

DESIGNER LZS
REVIEWER KAM 03/03/25
PROJECT ID 122048
SHEET P.14 TOTAL P.421

HAM-IR 75-1.05

MODEL: Sheet PAPERSIZE: 34x22 (in.) DATE: 8/28/2025 TIME: 10:44:57 AM PLTDRV: OHDOT_PDF.pltcfg PENTBL: OHDOT_Pen_Addendum.tbl USER: WORKSPACE: OHDOTCEv02 WORKSET: 122048 PRODUCT: OpenRoadsDesigner 10.12.02.4
pw:\\ohiodot-pw.bentley.com:ohiodot-pw-02\Documents\01 Active Projects\District 08\Hamilton\122048\403-Engineering_StructurePoint\Roadway\Sheets\122048_GN304.dgn

ITEM 614, WORK ZONE SPEED LIMIT SIGN

THE CONTRACTOR SHALL FURNISH, INSTALL, MAINTAIN, COVER DURING SUSPENSION OF WORK, AND SUBSEQUENTLY REMOVE WORK ZONE SPEED LIMIT (R2-1) (45 MPH SPEED LIMIT) SIGNS AND SUPPORTS WITHIN THE WORK LIMITS IN ACCORDANCE WITH THE FOLLOWING REQUIREMENTS:

THE CONTRACTOR SHALL COVER OR REMOVE ANY EXISTING SPEED LIMIT SIGNS WITHIN THE REDUCED SPEED ZONE(S). THESE SIGNS SHALL BE RESTORED DURING SUSPENSION OR TERMINATION OF THE REDUCED SPEED LIMIT. THE EXPENSE OF COVERING OR REMOVAL AND RESTORATION OF EXISTING SPEED LIMIT OR MINIMUM SPEED LIMIT SIGNS SHALL BE INCLUDED IN THE PAY ITEM FOR THE WORK ZONE SPEED LIMIT SIGNS.

THE WORK ZONE SPEED LIMIT SIGNS MAY BE ERECTED OR UNCOVERED NO MORE THAN FOUR HOURS BEFORE THE ACTUAL START OF WORK THAT CAUSES THE WARRANTING CONDITION(S) TO OCCUR. THE SIGNS SHALL BE REMOVED OR COVERED NO LATER THAN FOUR HOURS FOLLOWING REMOVAL OF THE WARRANTING CONDITION(S), OR SOONER AS DIRECTED BY THE ENGINEER. TEMPORARY SIGN COVERING AND UNCOVERING DUE TO TEMPORARY REMOVAL OF WARRANTING CONDITION(S) SHALL BE GUIDED BY THE FOUR-HOUR LIMITATIONS STATED ABOVE. CONSTRUCTION AND MATERIAL SPECIFICATIONS ITEM 614, PARAGRAPH 614.02(B), INDICATES THAT THE TWO DIRECTIONS OF A DIVIDED HIGHWAY ARE CONSIDERED SEPARATE HIGHWAY SECTIONS. THEREFORE, IF THE WORK ON A MULTI-LANE DIVIDED HIGHWAY IS LIMITED TO ONLY ONE DIRECTION, A SPEED REDUCTION IN THE DIRECTION OF THE WORK DOES NOT AUTOMATICALLY CONSTITUTE A SPEED REDUCTION IN THE OPPOSITE DIRECTION. A SPEED LIMIT REDUCTION IN THE OPPOSITE DIRECTION, IN SUCH CASE, IS APPROPRIATE ONLY IF CONDITIONS ARE EXPECTED TO HAVE AN IMPACT ON THE DIRECTIONAL TRAFFIC FLOW, AS DIRECTED BY THE ENGINEER.

THE CONTRACTOR SHALL ERECT A WORK ZONE SPEED LIMIT SIGN IN ADVANCE OF THE WARRANTING CONDITION, AS DETAILED IN THE PLANS OR AS DIRECTED BY THE ENGINEER. THE SIGN SHALL BE MOUNTED ON BOTH SIDES OF A DIRECTIONAL ROADWAY OF DIVIDED HIGHWAYS. THE FIRST WORK ZONE SPEED LIMIT SIGN SHALL BE PLACED APPROXIMATELY 500 FEET IN ADVANCE OF THE LANE REDUCTION, SHIFT TAPER, OR OTHER ROADWAY OR SHOULDER RESTRICTION THAT WARRANTED THE WORK ZONE SPEED ZONE. ON UNDIVIDED HIGHWAYS THE SIGN SHALL BE MOUNTED ON THE RIGHT SIDE, APPROXIMATELY 250 FEET IN ADVANCE OF SUCH RESTRICTIONS. THE SIGN SHALL BE REPEATED EVERY 1 MILE FOR 60 AND 55 MPH ZONES AND EVERY ONE-HALF MILE FOR 50 MPH AND 45 MPH ZONES. THESE SIGNS SHALL ALSO BE ERECTED IMMEDIATELY AFTER EACH OPEN ENTRANCE RAMP WITHIN THE ZONE.

THE SPEED LIMIT REDUCTION SHALL BE LIMITED TO ONLY THE PORTION OF THE PROJECT AND THE WORK THAT WARRANTED THE WORK ZONE SPEED LIMIT REDUCTION.

SPEED REDUCTION (SPEED ZONE AHEAD SYMBOL) SIGNS (W3-5) SHALL BE ERECTED IN ADVANCE OF THE SPEED REDUCTION, APPROXIMATELY 1250 FEET ON MULTI-LANE HIGHWAYS AND 500 FEET ON TWO-LANE HIGHWAYS.

A SIGN(S) TO INDICATE THE RESUMPTION OF THE STATUTORY SPEED LIMIT SHALL BE ERECTED AT THE END OF ANY REDUCED SPEED ZONE. THE CONTRACTOR MAY USE SIGNS AND SUPPORTS IN USED, BUT GOOD CONDITION, PROVIDED THE SIGNS MEET CURRENT ODOT SPECIFICATIONS. SIGN FACES SHALL BE RETROREFLECTORIZED WITH TYPE G SHEETING COMPLYING WITH THE REQUIREMENTS OF C&MS 730.19. WORK ZONE SPEED LIMIT SIGNS SHALL BE MOUNTED ON TWO ITEM 630, GROUND MOUNTED SUPPORTS, NO. 3 POSTS, UNLESS MOUNTED ON A TEMPORARY SIGN SUPPORT PER SCD MT 105.10. WORK ZONE SPEED LIMIT AND RELATED SIGN SIZES, PLACEMENT, SUPPORTS, ETC SHALL BE PER THE OMUTCD, WITH TWO EXCEPTIONS: 1) EXPRESSWAY SIZE SPEED LIMIT SIGNS MAY BE ON FREEWAYS AND EXPRESSWAYS, IF NECESSARY; 2) THE HEIGHT OF SIGNS MOUNTED ON PORTABLE SUPPORTS SHOULD BE THE HEIGHT REQUIRED FOR GROUND-MOUNTED SIGNS BUT SHALL NOT BE MORE THAN 1 FOOT LOWER THAN THE HEIGHT REQUIRED BY THE OMUTCD, OR AS DIRECTED BY THE ENGINEER. PORTABLE SUPPORTS SHOULD NOT BE USED FOR A DURATION OF MORE THAN 3 DAYS.

WORK ZONE SPEED LIMIT SIGNS AND SUPPORTS WILL BE MEASURED AS THE NUMBER OF SIGN INSTALLATIONS, INCLUDING THE SIGNS AND NECESSARY SUPPORTS. IF A SIGN AND SUPPORT COMBINATION IS REMOVED AND REERECTED AT ANOTHER LOCATION WITHIN THE PROJECT DUE TO CHANGES IN THE SPEED ZONE AS DETAILED IN THE PLANS OR AS DIRECTED BY THE ENGINEER, IT SHALL BE CONSIDERED ANOTHER UNIT.

PAYMENT FOR ACCEPTED QUANTITIES, COMPLETE IN PLACE, WILL BE MADE AT THE CONTRACT UNIT PRICE. PAYMENT SHALL BE FULL COMPENSATION FOR ALL MATERIALS, LABOR, INCIDENTALS AND EQUIPMENT FOR FURNISHING, ERECTING, MAINTAINING, COVERING DURING SUSPENSION OF WORK, AND REMOVING THE SIGNS AND SUPPORTS. SPEED LIMIT SIGNING FOR THE POINT OF RESUMPTION OF THE STATUTORY SPEED LIMIT SHALL BE PAID FOR AS WORK ZONE SPEED LIMIT SIGNS. THE FOLLOWING ESTIMATED QUANTITY HAS BEEN CARRIED TO THE GENERAL SUMMARY.

ITEM 614, WORK ZONE SPEED LIMIT SIGN 12 EACH
ITEM 614, SPEED ZONE AHEAD SYMBOL SIGN 6 EACH

THE FOLLOWING TABLE PROVIDES DETAILS ON WORK ZONE SPEED ZONES APPROVED FOR USE ON THIS PROJECT:

WZSZ REVISION NUMBER(S)	COUNTY-ROUTE-SECTION(S)	DIRECTION(S)
WZ-45130-A	HAM-75 SLM 1.00 TO SLM 2.00	NB/SB

WORK ZONE INCREASED PENALTIES SIGN (R11-H5A)

R11-H5A-48 SIGNS SHALL BE FURNISHED, ERECTED, AND MAINTAINED IN GOOD CONDITION AND/OR REPLACED AS NECESSARY AND SUBSEQUENTLY REMOVED BY THE CONTRACTOR. SIGNS SHALL BE MOUNTED AT THE APPROPRIATE OFFSETS AND ELEVATIONS AS PRESCRIBED BY THE OHIO MANUAL OF UNIFORM TRAFFIC CONTROL DEVICES. THEY SHALL BE MAINTAINED ON SUPPORTS MEETING CURRENT SAFETY CRITERIA.

THE SIGNS MAY BE ERECTED OR UNCOVERED NO MORE THAN FOUR HOURS BEFORE THE ACTUAL START OF WORK.
THE SIGNS SHALL BE REMOVED OR COVERED NO LATER THAN FOUR HOURS FOLLOWING RESTORATION OF ALL LANES TO TRAFFIC WITH NO RESTRICTIONS, OR SOONER AS DIRECTED BY THE ENGINEER. TEMPORARY SIGN COVERING AND UNCOVERING DUE TO TEMPORARY LANE RESTORATIONS SHALL BE GUIDED BY THE FOUR-HOUR LIMITATIONS STATED ABOVE. SUCH LANE RESTORATIONS SHOULD BE EXPECTED TO REMAIN IN EFFECT FOR 30 OR MORE CONSECUTIVE CALENDAR DAYS, SUCH AS DURING WINTER SHUT-DOWNS.

THE SIGNS ON THE MAINLINE SHALL BE DUAL MOUNTED UNLESS NOT PHYSICALLY POSSIBLE. THE FIRST SIGN SHALL BE PLACED BETWEEN THE ROAD WORK AHEAD (W20-1) SIGN AND THE NEXT SIGN IN THE SEQUENCE. SIGNS SHALL BE ERECTED ON EACH ENTRANCE RAMP AND EVERY 2 MILES THROUGH THE CONSTRUCTION WORK LIMITS. SIGNS ON THE MAINLINE SHALL BE R11-H5A-48. SIGNS USED ON THE RAMPS SHALL BE R11-H5A-24. R11-H5A-24 SIGNS MAY BE USED IN THE MEDIAN IN LIEU OF R11-H5A-48 SIGNS IF IT IS NOT PHYSICALLY POSSIBLE TO PROVIDE R11-H5A-48 SIGNS IN THE MEDIAN.

THE R11-H5A-48 SIGNS SHALL BE MOUNTED ON 2 NO. 3 POSTS WHEN LOCATED WITHIN CLEAR ZONES.

THE CONTRACTOR MAY USE SIGNS AND SUPPORTS IN USED, BUT GOOD, CONDITION PROVIDED THE SIGNS MEET CURRENT ODOT SPECIFICATIONS.

WORK ZONE INCREASED PENALTIES SIGNS AND SUPPORTS WILL BE MEASURED AS THE NUMBER OF SIGN INSTALLATIONS, INCLUDING THE SIGN AND NECESSARY SUPPORTS. IF A SIGN AND SUPPORT COMBINATION IS REMOVED AND REERECTED AT ANOTHER LOCATION AS DIRECTED BY THE ENGINEER, IT SHALL BE CONSIDERED ANOTHER UNIT.

PAYMENT FOR ACCEPTED QUANTITIES, COMPLETE, IN PLACE WILL BE MADE AT THE CONTRACT UNIT PRICE. PAYMENT SHALL BE FULL COMPENSATION FOR ALL MATERIALS, LABOR, INCIDENTALS AND EQUIPMENT FOR FURNISHING, ERECTING, MAINTAINING, COVERING DURING SUSPENSION OF WORK, AND REMOVAL OF THE SIGN AND SUPPORT.

ITEM 614, WORK ZONE INCREASED PENALTIES SIGN
7 EACH (SEE PLANS FOR LOCATIONS)

FLOODLIGHTING

FLOODLIGHTING OF THE WORK SITE FOR OPERATIONS CONDUCTED DURING NIGHTTIME PERIODS SHALL BE ACCOMPLISHED SO THAT THE LIGHTS DO NOT CAUSE GLARE TO THE DRIVERS ON THE ROADWAY. TO ENSURE THE ADEQUACY OF THE FLOODLIGHT PLACEMENT, THE CONTRACTOR AND THE ENGINEER SHALL DRIVE THROUGH THE WORK SITE EACH NIGHT WHEN THE LIGHTING IS IN PLACE AND OPERATIVE PRIOR TO COMMENCING ANY WORK. IF GLARE IS DETECTED, THE LIGHT PLACEMENT AND SHIELDING SHALL BE ADJUSTED TO THE SATISFACTION OF THE ENGINEER BEFORE WORK PROCEEDS.

PAYMENT FOR ALL LABOR, EQUIPMENT AND MATERIALS SHALL BE INCLUDED IN THE LUMP SUM CONTRACT PRICE FOR ITEM 614, MAINTAINING TRAFFIC.

ITEM 614, WORK ZONE IMPACT ATTENUATOR FOR 24" WIDE HAZARDS (UNIDIRECTIONAL OR BIDIRECTIONAL)

THIS ITEM SHALL CONSIST OF FURNISHING AND INSTALLING A NON-GATING IMPACT ATTENUATOR. FURNISH AN IMPACT ATTENUATOR FROM THE OFFICE OF ROADWAY ENGINEERING'S APPROVED LIST FOR WORK ZONE IMPACT ATTENUATORS, FROM THE ROADWAY STANDARDS APPROVED PRODUCTS WEB PAGE.

INSTALLATION SHALL BE AT THE LOCATIONS SPECIFIED IN THE PLANS IN ACCORDANCE WITH THE MANUFACTURER'S SPECIFICATIONS.

THE CONTRACTOR SHALL REPAIR OR REPLACE A DAMAGED UNIT WITHIN 24 HOURS OF A DAMAGING IMPACT.

WHEN BIDIRECTIONAL DESIGNS ARE SPECIFIED, THE CONTRACTOR SHALL SUPPLY APPROPRIATE TRANSITIONS.

WHEN GATING IMPACT ATTENUATORS ARE DESIRED, THE CONTRACTOR SHALL SUBMIT DOCUMENTATION TO THE ENGINEER FOR ACCEPTANCE.

THE COST FOR THE ADDITIONAL BARRIER REQUIRED FOR A GATING IMPACT ATTENUATOR SHALL BE INCLUDED IN THE COST OF THE GATING IMPACT ATTENUATOR.

PAYMENT FOR THE ABOVE WORK SHALL BE MADE AT THE UNIT PRICE BID AND SHALL INCLUDE ALL LABOR, TOOLS, EQUIPMENT AND MATERIALS NECESSARY TO CONSTRUCT AND MAINTAIN A COMPLETE AND FUNCTIONAL IMPACT ATTENUATOR SYSTEM, INCLUDING ALL RELATED BACKUPS, TRANSITIONS, LEVELING PADS, HARDWARE AND GRADING, NOT SEPARATELY SPECIFIED, AS REQUIRED BY THE MANUFACTURER.

DELINEATION OF PORTABLE AND PERMANENT BARRIER

BARRIER REFLECTORS AND OBJECT MARKERS SHALL BE INSTALLED ON ALL PORTABLE BARRIER (PB) USED FOR TRAFFIC CONTROL; AND, ON PERMANENT CONCRETE BARRIER (INCLUDING BRIDGE PARAPETS) LOCATED WITHIN 5 FEET OF THE EDGE OF THE ADJACENT TRAVEL LANE.

BARRIER REFLECTORS SHALL CONFORM TO C&MS 626, EXCEPT THAT THE SPACING SHALL BE AS PER TRAFFIC SCD MT-101.70. OBJECT MARKERS AND THEIR INSTALLATION SHALL CONFORM TO C&MS 614.03 AND SCD MT-101.70. WHEN THE PB CONTAINS GLARE SCREEN, ONE SET OF THREE VERTICAL STRIPES OF SHEETING SHALL BE CONSIDERED EQUIVALENT TO AN OBJECT MARKER, ONE-WAY.

INCREASED BARRIER DELINEATION, AS SPECIFIED HEREIN, SHALL BE INSTALLED ON ALL PB AND PERMANENT CONCRETE BARRIER LOCATED WITHIN 5 FEET OF THE EDGE OF THE TRAVELED LANE UNDER EITHER OF THE FOLLOWING CONDITIONS: ALONG TAPERS AND TRANSITION AREAS; OR ALONG CURVES (OUTSIDE ONLY) WITH DEGREE OF CURVATURE GREATER THAN OR EQUAL TO 3 DEGREES.

THE INCREASED BARRIER DELINEATION SHALL CONSIST OF EITHER DELINEATION PANELS OR THE TRIPLE STACKING OF WORK ZONE BARRIER REFLECTORS.

DELINEATION PANELS SHALL CONSIST OF PANELS OF DELINEATION, APPROXIMATELY 34 INCHES LONG AND 6 INCHES WIDE AND SHALL BE "CRIMPED." PANELS SHALL BE INSTALLED AND SPACED PER TRAFFIC SCD MT-101.70.

TRIPLE-STACKED BARRIER REFLECTORS SHALL CONSIST OF ALIGNING THREE BARRIER REFLECTORS VERTICALLY, AT LOCATIONS WHERE A SINGLE BARRIER REFLECTOR WOULD BE OTHERWISE ATTACHED. THERE SHALL BE NO OPEN SPACE BETWEEN THE ADJACENT BARRIER REFLECTORS. THE TRIPLE-STACKED BARRIER REFLECTORS SHALL CONFORM TO C&MS 626, EXCEPT THAT THEY SHALL BE SPACED AND ALIGNED PER TRAFFIC SCD MT-101.70.

SEE ESTIMATED QUANTITIES FOR THE FOLLOWING ITEMS CARRIED TO THE GENERAL SUMMARY:

ITEM 614, BARRIER REFLECTOR, TYPE 1 (ONE-WAY OR BI-DIRECTIONAL) , EACH

ITEM 614, OBJECT MARKER, (ONE-WAY OR BI-DIRECTIONAL), EACH

ITEM 614, INCREASED BARRIER BELINEATION, FEET

PAYMENT SHALL BE FULL COMPENSATION FOR ALL MATERIAL, LABOR, INCIDENTALS AND EQUIPMENT NECESSARY FOR FURNISHING, INSTALLING, MAINTAINING AND REMOVING EACH OF THE ABOVE ITEMS.

ALONG RUNS OF INCREASED BARRIER DELINEATION WHERE THIS ITEM IS PROVIDED, THE QUANTITY SHALL BE MEASURED AS THE ENTIRE LENGTH OF THE RUN OF INCREASED BARRIER DELINEATION, INCLUDING THE SPACES BETWEEN THE INDIVIDUAL DELINEATION PANELS OR STACKS OF BARRIER REFLECTORS.

CONSTRUCTION INGRESS AND EGRESS 1

THE CONSTRUCTION INGRESS AND EGRESS SHOWN REPRESENT A POSSIBLE SCENARIO TO BE EVALUATED BY THE CONTRACTOR. THE CONTRACTOR SHALL COMPLY WITH THE CONTRACT REQUIREMENTS INCLUDING, BUT NOT LIMITED TO, SCD MT 103.10 (7/18/2025), SUPPLEMENTAL SPECIFICATION 829 (1/20/2017), AND THE WORKSITE TRAFFIC SUPERVISOR. INGRESS AND EGRESS SHALL PROVIDE A SAFE MEANS OF INTERACTION BETWEEN PROJECT RELATED VEHICLES AND THE TRAVELING PUBLIC BY PROVIDING DEDICATED AREAS OUTSIDE THE TRAVELED LANES FOR THE DECELERATION AND ACCELERATION OF PROJECT VEHICLES. THE WORKSITE TRAFFIC SUPERVISOR SHALL SUBMIT A CONSTRUCTION INGRESS AND EGRESS PLAN FOR REVIEW BY THE DEPARTMENT AT LEAST FOURTEEN CALENDAR DAYS PRIOR TO THE START OF WORK.

ADDM' NO.	DATE	DESCRIPTION
1	09/01/25	ADDED NOTE

DATE COMPLETED

GENERAL NOTES - MAINTENANCE OF TRAFFIC

DESIGN AGENCY
Palmer ENGINEERING
8350 E. KEMPER ROAD
SUITE B
CINCINNATI, OH 45249
(513) 469-1600

DESIGNER DPF
REVIEWER DCJ 12/20/24
PROJECT ID 122048
SHEET P.16 TOTAL P. 421

HAM-IR75-1.05

MODEL: Sheet - 2 PAPERSIZE: 34x22 (in.) DATE: 8/27/2025 TIME: 1:24:07 PM PLTDRV: OHDOT_PDF.pltcfg PENTBL: OHDOT_Pen.tbl USER: swalker@palmernet.com WORKSPACE: OHDOTCEv02 WORKSET: 122048 PRODUCT: OpenRoadsDesigner 24.00.00.205
pw:\\ohiodot-pw.bentley.com:ohiodot-pw-02\Documents\01 Active Projects\District 08\Hamilton\122048\402-Engineering_PalmerEngineering\MOT\Sheets\122048_MN001.dgn

ITEM 614, LAW ENFORCEMENT OFFICER (WITH PATROL CAR) FOR ASSISTANCE DURING CONSTRUCTION OPERATIONS

USE OF LAW ENFORCEMENT OFFICERS (LEOS) BY CONTRACTORS OTHER THAN THE USES SPECIFIED BELOW SHALL NOT BE PERMITTED AT PROJECT COST NOR TIME COMPENSATION. LEOS SHOULD NOT BE USED WHERE THE OMUTCD INTENDS THAT FLAGGERS BE USED.

IN ADDITION TO THE REQUIREMENTS OF C&MS 614 AND THE OMUTCD, A UNIFORMED LEO WITH AN OFFICIAL PATROL CAR (CAR WITH TOP-MOUNTED EMERGENCY FLASHING LIGHTS AND COMPLETE MARKINGS OF THE APPROPRIATE LAW ENFORCEMENT AGENCY) SHALL BE PROVIDED FOR THE FOLLOWING TRAFFIC CONTROL TASKS:

- *DURING THE ENTIRE ADVANCE PREPARATION AND CLOSURE SEQUENCE WHERE COMPLETE BLOCKAGE OF TRAFFIC IS REQUIRED.*
- *DURING A TRAFFIC SIGNAL INSTALLATION WHEN IMPACTING THE NORMAL FUNCTION OF THE SIGNAL OR THE FLOW OF TRAFFIC, OR WHEN TRAFFIC NEEDS TO BE DIRECTED THROUGH AN ENERGIZED TRAFFIC SIGNAL CONTRARY TO THE SIGNAL DISPLAY (E.G., DIRECTING MOTORISTS THROUGH A RED LIGHT).*
- *DURING PERIODS WHERE TRAFFIC NEEDS TO BE DIRECTED CONTRARY TO A TRAFFIC CONTROL DEVICE (FLAGGER, SIGN [E.G. STOP SIGN, STREET OR HIGHWAY SIGNS, ETC], SIGNAL OR OTHER DEVICE USED TO REGULATE, WARN OR GUIDE TRAFFIC). TRAFFIC IN THIS INSTANCE INCLUDES VEHICULAR, PEDESTRIAN AND/OR SHARED USE PATH USERS.*

IN ADDITION TO THE REQUIREMENT OF C&MS 614 AND THE OMUTCD, A UNIFORMED LEO WITH AN OFFICIAL PATROL CAR (CAR WITH TOP-MOUNTED EMERGENCY FLASHING LIGHTS AND COMPLETE MARKINGS OF THE APPROPRIATE LAW ENFORCEMENT AGENCY) SHOULD BE PROVIDED FOR THE FOLLOWING TRAFFIC CONTROL TASKS AS APPROVED BY THE ENGINEER:

- *FOR LANE CLOSURES THAT MEET ALL OF THE CRITERIA LISTED BELOW: DURING INITIAL SET-UP PERIODS, TEAR DOWN PERIODS, SUBSTANTIAL SHIFTS OF A CLOSURE POINT OR WHEN NEW LANE CLOSURE ARRANGEMENTS ARE INITIATED FOR LONG-TERM LANE CLOSURES/SHIFTS (FOR THE FIRST AND LAST DAY OF MAJOR CHANGES IN TRAFFIC CONTROL SETUP).*
  - *o CRITERIA*

ON A MULTI-LANE DIVIDED INTERSTATE, OTHER FREEWAY OR EXPRESSWAY; AND,
AN AUTHORIZED SPEED LIMIT OF 45 MPH OR GREATER THAT IS IN EFFECT AT THE TIME OF THE OPERATION; AND,
AADT OF 50,000 (OR AADT OF 30,000 WITH 25% OR HIGHER PERCENT TRUCKS)

IN GENERAL, LEOS SHOULD BE POSITIONED IN ADVANCE OF AND ON THE SAME SIDE AS THE LANE RESTRICTION (OR AT THE POINT OF ROAD CLOSURE), AND TO MANUALLY CONTROL TRAFFIC MOVEMENTS THROUGH SIGNALIZED INTERSECTIONS AND/OR IN CONTRARY TO OTHER TRAFFIC CONTROL DEVICES IN WORK ZONES.

LEOS SHOULD NOT FORGO THEIR TRAFFIC CONTROL RESPONSIBILITIES TO APPREHEND MOTORISTS FOR ROUTINE TRAFFIC VIOLATIONS. HOWEVER, IF A MOTORIST'S ACTIONS ARE CONSIDERED TO BE RECKLESS, THEN PURSUIT OF THE MOTORIST IS APPROPRIATE.

THE LEOS WORK AT THE DIRECTION OF THE CONTRACTOR. THE CONTRACTOR IS RESPONSIBLE FOR SECURING THE SERVICES OF THE LEOS WITH THE APPROPRIATE AGENCIES AND COMMUNICATING THE INTENTIONS OF THE PLANS WITH RESPECT TO DUTIES OF THE LEOS. THE ENGINEER SHALL HAVE FINAL CONTROL OVER THE LEOS'S DUTIES AND PLACEMENT, AND WILL RESOLVE ANY ISSUES THAT MAY ARISE BETWEEN THE TWO PARTIES.

ENSURE PROVIDED LEOS HAVE BEEN TRAINED APPROPRIATE TO THE JOB DECISIONS THEY ARE REQUIRED TO MAKE WHILE ON THE PROJECT, IN ACCORDANCE WITH C&MS 614.03.THE LEO SHALL REPORT IN TO THE CONTRACTOR PRIOR TO THE START OF THE SHIFT, IN ORDER TO RECEIVE INSTRUCTIONS REGARDING SPECIFIC WORK ASSIGNMENTS DURING HIS/HER SHIFT. THE LEO IS EXPECTED TO STAY AT THE PROJECT SITE FOR THE ENTIRE DURATION OF HIS/HER SHIFT. THE LEO SHALL REPORT TO THE CONTRACTOR AT THE END OF HIS/HER SHIFT. SHOULD IT BE NECESSARY TO LEAVE THE PROJECT SITE, THE LEO SHALL NOTIFY THE ENGINEER. THE CONTRACTOR SHALL PROVIDE THE LEO WITH A TWO-WAY COMMUNICATION DEVICE THAT SHALL BE RETURNED TO THE CONTRACTOR AT THE END OF HIS/HER SHIFT.

LEOS (WITH PATROL CAR) REQUIRED BY THE TRAFFIC MAINTENANCE TASKS ABOVE SHALL BE PAID FOR ON A UNIT PRICE (HOURLY) BASIS UNDER ITEM 614, LAW ENFORCEMENT OFFICER (WITH PATROL CAR) FOR ASSISTANCE. THE FOLLOWING ESTIMATED QUANTITIES HAVE BEEN CARRIED TO THE GENERAL SUMMARY.

ITEM 614, LAW ENFORCEMENT OFFICER WITH PATROL CAR FOR ASSISTANCE 1000 HOURS

THE HOURS PAID SHALL INCLUDE ANY MINIMUM SHOW-UP TIME REQUIRED BY THE LAW ENFORCEMENT AGENCY INVOLVED. ANY ADDITIONAL COSTS (ADMINISTRATIVE OR OTHERWISE) INCURRED BY THE CONTRACTOR TO OBTAIN THE SERVICES OF AN LEO ARE INCLUDED WITH THE BID UNIT PRICE FOR ITEM 614, LAW ENFORCEMENT OFFICER WITH PATROL CAR FOR ASSISTANCE.

PERMITTED LANE CLOSURE SCHEDULE (PLCS)

SHORT-TERM LANE CLOSURES ARE THOSE WHICH ARE PERMITTED BY THE PERMITTED LANE CLOSURE NOTE. THESE TIMES SHALL NOT BE REVISED WITHOUT PRIOR APPROVAL FROM THE DISTRICT 8 WORK ZONE TRAFFIC CONTROL ENGINEER. SHORT TERM LANE CLOSURES SHALL ONLY BE IMPLEMENTED WHEN WORK IS BEING CONTINUOUSLY PERFORMED IN THE LANE. THE CLOSURE SHALL BE REMOVED AS SOON AS POSSIBLE AFTER WORK HAS STOPPED. PERMITTED LANE CLOSURES SHALL ONLY BE ALLOWED DURING THE TIMES SPECIFIED IN THE PERMITTED LANE CLOSURE TIMES AND UNAUTHORIZED LANE USE TABLE BELOW. NO LANE OR SHOULDER CLOSURE SHALL BE IN PLACE WHEN NO WORK IS BEING PERFORMED.

MAINTAINING TRANSIT OPERATIONS

TRANSIT FACILITIES ARE LOCATED WITHIN THE PROJECT LIMITS AND ARE AFFECTED BY THE PROPOSED WORK AND/OR THE MAINTENANCE OF TRAFFIC. TRANSIT OPERATIONS SHALL BE MAINTAINED AT ALL TIMES. INVITE THE BELOW LISTED TRANSIT AGENCY CONTACT(S) TO THE PRECONSTRUCTION MEETING AND PROVIDE THEM WITH THE PROJECT SCHEDULE INCLUDING UPDATES RELATIVE TO TRANSIT IMPACTS.

SORTA/METRO
- *BRIAN MESSER: BMESSER@GO-METRO.COM*
- *KIM WYATT: KWYATT@GO-METRO.COM*
- *PAUL JOHNSON: PJOHNSON@GO-METRO.COM*
- *SCHEDULING@GO-METRO.COM*
- *BUSSTOPS@GO-METRO.COM*

COORDINATION WITH THE TRANSIT AGENCY IS REQUIRED. PROVIDE NOTIFICATION AT LEAST 14 CALENDAR DAYS IN ADVANCE TO ALLOW THE TRANSIT AGENCY TO IMPLEMENT ANY CHANGES TO THE TRANSIT OPERATIONS AS DESCRIBED BELOW:
- *BUS ROUTE 27 (LINN ST, BOTH DIRECTIONS)*

1	09/01/25	MODIFIED TABLE AND NOTE
ADDM' NO.	DATE	DESCRIPTION
DATE COMPLETED		

PERMITTED LANE CLOSURE TIMES AND UNAUTHORIZED LANE USE TABLE

LOCATION	DIRECTION	EX. NO. OF THRU LANES		1 LANE CLOSED		2 LANES CLOSED		3 LANES CLOSED		15 MINUTE SHORT DURATION COMPLETE CLOSURES	COMPLETE CLOSURE	TIME UNIT	DISINCENTIVE PER LANE PER TIME UNIT
				WEEKDAY	WEEKEND	WEEKDAY	WEEKEND	WEEKDAY	WEEKEND				
IR-75	SB	4	RIGHT LANES CLOSED	11PM(FRI 12MID.) - 5AM	11PM(SAT 12MID.) - 6AM	11PM(FRI 12MID.) - 5AM	11PM(FRI 12MID.) - 6AM	12MID - 4AM	12MID(SAT 1AM) - 6AM	12AM - 4AM	11PM - 5AM	1 MINUTE	$380
			LEFT LANES CLOSED	8:30PM -6AM	7PM - 8:30AM	10PM(FRI 11PM) - 5AM	9:30PM - 7:30AM	12MID - 4AM	12MID(SAT 1AM) - 6AM				
IR-75	NB	2		11PM - 5AM	11PM - 7AM	NOT APPLICABLE		NOT APPLICABLE		12AM - 4AM	11PM - 5AM	1 MINUTE	$755
RAMP ME (FROM I-71 SB)	NB	2		8PM - 6AM	8PM - 7AM	NOT APPLICABLE		NOT APPLICABLE		12AM - 4AM	NOT ALLOWED	1 MINUTE	$280
RAMPS	BOTH			NOT APPLICABLE		NOT APPLICABLE		NOT APPLICABLE		NOT ALLOWED	10PM - 5AM	1 MINUTE	$100
CITY STREETS	BOTH	1		ANYTIME; MAINTAIN 1 LANE OF 2-WAY TRAFFIC		NOT APPLICABLE		NOT APPLICABLE		10PM - 5AM			1
CITY STREETS	BOTH	2 OR MORE		8AM - 4PM & 7PM TO 6AM	7PM-8AM	NOT APPLICABLE		NOT APPLICABLE		10PM - 5AM	NOT ALLOWED	1 MINUTE	$100

NOTES:

1. NO CLOSURES 2 HOURS BEFORE TO 30 MINUTES AFTER THE START TIME OF EVENTS AT GREAT AMERICAN BALL PARK, PAUL BROWN STADIUM, OR HERITAGE BANK ARENA. THIS RESTRICTION ALSO APPLIES TO ANY OTHER LOCAL VENUE REACHING AN ATTEDANCE OF 20,000+.

2. NO CLOSURES FROM 30 MINUTES BEFORE THE SCHEDULED FINISH TIME TO 2 HOURS AFTER EVENTS AT GREAT AMERICAN BALL PARK, PAYCOR STADIUM, OR HERITAGE BANK ARENA. THIS RESTRICTION ALSO APPLIES TO ANY OTHER LOCAL VENUE REACHING AN ATTEDANCE OF 20,000+.

3. NO SHORT TERM SHOULDER CLOSURES BETWEEN THE HOURS OF 6 AM TO 9 AM AND 3 PM TO 7 PM MONDAY THROUGH FRIDAY.

4. RAMPS ARE PERMITTED TO BE CLOSED OVERNIGHT FOR MOT TRAFFIC SWITCHES AND WHEN PERFORMING WORK WITHIN THE RAMP ACCELERATION/DECELERATION LANE ONLY. ONLY ONE RAMP IS PERMITTED TO BE CLOSED AT A TIME.

GENERAL NOTES - MAINTENANCE OF TRAFFIC

DESIGN AGENCY
Palmer ENGINEERING
8350 E. KEMPER ROAD
SUITE B
CINCINNATI, OH 45249
(513) 469-1600

DESIGNER DPF
REVIEWER DCJ 12/20/24
PROJECT ID 122048
SHEET P.18 TOTAL P. 421

HAM-IR75-1.05

MODEL: Sheet - 4 PAPERSIZE: 34x22 (in.) DATE: 8/27/2025 TIME: 1:25:13 PM PLTDRV: OHDOT_PDF.pltcfg PENTBL: OHDOT_Pen.tbl USER: swalker@palmernet.com WORKSPACE: OHDOTCEv02 WORKSET: 122048 PRODUCT: OpenRoadsDesigner 24.00.00.205
pw:\\ohiodot-pw.bentley.com:ohiodot-pw-02\Documents\01 Active Projects\District 08\Hamilton\122048\402-Engineering_PalmerEngineering\MOT\Sheets\122048_MN001.dgn

NOTIFICATION OF TRAFFIC RESTRICTIONS

THROUGHOUT THE DURATION OF THE PROJECT, THE CONTRACTOR SHALL NOTIFY THE PROJECT ENGINEER IN WRITING OF ALL TRAFFIC RESTRICTIONS AND UPCOMING MAINTENANCE OF TRAFFIC CHANGES. THE CONTRACTOR SHALL ENSURE THE WRITTEN NOTIFICATION IS SUBMITTED IN A TIMELY MANNER TO ALLOW THE PROJECT ENGINEER TO MEET THE REQUIRED TIME FRAMES SET FORTH IN THE TABLE BELOW TO INFORM THE SPECIAL HAULING PERMITS SECTION (HAULING.PERMITS@DOT.OHIO.GOV) AND THE DISTRICT PUBLIC INFORMATION OFFICE (PIO). IN ADDITION, THE FOLLOWING LOCAL OFFICIALS SHALL RECEIVE NOTIFICATION:

CHRIS KELLY, CITY OF CINCINNATI:
CHRIS.KELLY@CINCINNATI-OH.GOV

CURTIS HINES
CURTIS.HINES@CINCINNATI-OH.GOV

THIS NOTIFICATION SHALL BE RECEIVED BY THE PROJECT ENGINEER PRIOR TO THE PHYSICAL SETUP OF ANY APPLICABLE SIGNS OR MESSAGE BOARDS.

INFORMATION SHOULD INCLUDE, BUT IS NOT LIMITED TO, ALL CONSTRUCTION ACTIVITIES THAT IMPACT OR INTERFERE WITH TRAFFIC AND SHALL LIST THE SPECIFIC LOCATION, TYPE OF WORK, ROAD STATUS, DATE AND TIME OF RESTRICTION, DURATION OF RESTRICTION, NUMBER OF LANES MAINTAINED, NUMBER OF LANES CLOSED, MINIMUM VERTICAL CLEARANCE, MINIMUM WIDTH OF DRIVABLE PAVEMENT, DETOUR ROUTES, IF APPLICABLE, AND ANY OTHER INFORMATION REQUESTED BY THE PROJECT ENGINEER.

1

NOTIFICATION TIME FRAME TABLE

ITEM	DURATION OF CLOSURE	NOTIFICATION DUE TO DISTRICT 8 PIO	SIGN DISPLAYED TO PUBLIC
RAMP & ROAD CLOSURES	>=2 WEEKS	21 CALENDAR DAYS PRIOR TO CLOSURE	14 CALENDAR DAYS PRIOR TO CLOSURE
	> 12 HOURS &< 2 WEEKS	14 CALENDAR DAYS PRIOR TO CLOSURE	7 CALENDAR DAYS PRIOR TO CLOSURE
	<=12 HOURS	4 CALENDAR DAYS PRIOR TO CLOSURE	2 CALENDAR DAYS PRIOR TO CLOSURE
LANE CLOSURES & RESTRICTIONS	>=2 WEEKS	14 CALENDAR DAYS PRIOR TO CLOSURE	
	< 2 WEEKS	5 CALENDAR DAYS PRIOR TO CLOSURE	
START OF CONSTRUCTION & TRAFFIC PATTERN CHANGES	N/A	14 CALENDAR DAYS PRIOR TO IMPLEMENTATION	

ANY UNFORESEEN CONDITIONS NOT SPECIFIED IN THE PLANS REQUIRING TRAFFIC RESTRICTIONS SHALL ALSO BE REPORTED TO THE PROJECT ENGINEER USING THE NOTIFICATION TIME TABLE.

1

COORDINATION AND COOPERATION BETWEEN CONTRACTORS

THE CONTRACTOR IS ADVISED THAT COORDINATION AND COOPERATION WILL BE REQUIRED WITH CONTRACTORS AND MULTIPLE ONGOING ODOT AND LOCAL PROJECTS IN THE AREAS ADJACENT TO AND OVERLAPPING WITH THIS PROJECT. THE COORDINATION AND COOPERATION WILL BE MORE INVOLVED THAN TYPICAL PRACTICE. CONTACT INFORMATION FOR ALL CONTRACTORS SHALL BE PROVIDED AT THE PRE-CONSTRUCTION MEETING.

THE PROJECTS REQUIRING COORDINATION AND COOPERATION, INCLUDE BUT ARE NOT LIMITED TO:

- ODOT BRENT SPENCE BRIDGE, PID 116649
- METROPOLITAN SEWER DISTRICT PROJECT 10142950 - EAST BRANCH OHIO RIVER INTERCEPTOR (EBORI) EXTENSION PROJECT (LAUNCH PIT AT WESTERN AVE/GEST STREET/SB I-75 ON RAMP)
- CITY OF CINCINNATI – LINN ST ROAD DIET

A GENERAL OVERVIEW OF THE COORDINATION WITH PID 116649 AND THE EBORI IS OUTLINED IN THE PHASING DESCRIPTION ON SHEET P.13. THE SPECIFICS ARE DETAILED IN THIS NOTE.

1

PHASE 1 (SHEETS P.46 - P.47):
CONTRACTOR SHALL COORDINATE MOBILIZATION WITH THE CONTRACTOR FOR THE METROPOLITAN SEWER DISTRICT EBORI PROJECT AND SETUP OF MOT AT THE LAUNCH PIT SITE AT WESTERN AVE/GEST STREET/SB I-75 ON RAMP. IF THE MOT FOR EBORI IS SETUP PRIOR TO MOBILIZATION FOR THIS PROJECT, THE CONTRACTOR SHALL ASSUME RESPONSIBILITY FOR WORK SITE TRAFFIC SUPERVISION, WORK ZONE PAVEMENT MARKINGS AND SIGNAGE. THE PORTABLE BARRIER PLACED BY THE EBORI CONTRACTOR WILL REMAIN AND BE MAINTAINED INCLUDING CONSTRUCTION ACCESS POINTS. IF THE EBORI LAUNCH PIT SITE IS STILL ACTIVE AT THE CONCLUSION OF THIS PROJECT, THE EORBI CONTRACTOR WILL REASSUME RESPONSIBILITY FOR WORK SITE TRAFFIC SUPERVISION, WORK ZONE PAVEMENT MARKINGS AND SIGNAGE.

PHASE 2 (NORTHBOUND I-75):
BY THE DATE REQUIRED IN THE DISINCENTIVE CONTRACT TABLE FOR THE COMPLETION OF PHASE 1 (DEMOLITION OF THE ENTIRE EXISTING BRIDGE HAM-75-0150, PROPOSED FORWARD ABUTMENT AND PROPOSED PIER #2 AND PORTION OF WALL #2), THE ENTIRETY OF NORTHBOUND I-75 WILL BE TURNED OVER TO THE CONTRACTOR FOR THE BRENT SPENCE BRIDGE (PID 116649) TO SETUP MOT. SOUTHBOUND I-75 MOT RESPONSIBILITY AND MAINTENANCE WILL REMAIN WITH THE PID 122048 CONTRACTOR. THE PID 122048 CONTRACTOR SHALL COORDINATE WITH THE CONTRACTOR FOR PID 116649 FOR THE MAINTENANCE OF THE TRAFFIC SWITCHOVER, WHICH WILL INCLUDE 9TH RAMP OPENING. THE CONTRACTOR IS ADVISED THAT INDIVIDUAL PORTABLE BARRIER RUNS FOR PID 122048 MAY NEED TO BE REMOVED IN SEPARATE OPERATIONS TO FACILITATE SWITCHOVER. IT IS EXPECTED THAT THE PORTABLE BARRIER ON THE NORTHBOUND LEFT SHOULDER WILL NEED TO BE REMOVED BEFORE THE SWITCHOVER AND PORTABLE BARRIER ON THE RIGHT SHOULDER WILL BE REMOVED AFTER THE SWITCHOVER. SIGNING WILL NEED TO BE REMOVED OR COVERED AT THE TIME OF SWITCHOVER.

PHASE 3 (SOUTHBOUND I-75):
BY THE DATE REQUIRED IN THE DISINCENTIVE CONTRACT TABLE FOR THE COMPLETE OPENING OF LINN STREET BRIDGE TO ALL PEDESTRIAN AND VEHICULAR TRAFFIC, THE ENTIRETY OF SOUTHBOUND I-75 WILL BE TURNED OVER TO THE CONTRACTOR FOR THE BRENT SPENCE BRIDGE (PID 116649) TO SETUP MOT. THE PID 122048 CONTRACTOR SHALL COORDINATE WITH THE CONTRACTOR FOR PID 116649 FOR THE MAINTENANCE OF THE TRAFFIC SWITCHOVER. THE CONTRACTOR IS ADVISED THAT INDIVIDUAL PORTABLE BARRIER RUNS FOR PID 122048 MAY NEED TO BE REMOVED IN SEPARATE OPERATIONS TO FACILITATE SWITCHOVER

DETOUR ROUTES:
THE FOLLOWING DETOUR ROUTES WILL BE REQUIRED TO CONTINUE OPERATION DURING THE BRENT SPENCE BRIDGE, PID 116649 AT THE CONCLUSION OF HIS PROJECT:

SHEET P.56 - WESTERN AVE TO I-75 S.
SHEET P.57 - EASTBOUND GEST STREET
SHEET P.58 - WESTBOUND GEST STREET

THE CONTRACTOR(S) ON PID 116649 (BRENT SPENCE BRIDGE) SHALL ASSUME MAINTENANCE OF THE DETOURS AFTER THIS PROJECT. INSPECTION OF THE SIGNAGE AND BARRICADES BY REPRESENTATIVES OF THE CONTRACTOR, ODOT AND THE BRENT SPENCE BRIDGE WILL TAKE PLACE AT THIS TIME. THE CONTRACTOR FOR PID 122048 CAN CHOOSE TO REMOVE AND RETAIN THE SIGNAGE AND BARRICADES, OR UNDER SEPARATE AGREEMENT, ALLOW THE BRENT SPENCE BRIDGE CONTRACTOR TO RETAIN AND ASSUME CONTROL AND MAINTENANCE OF THE DETOURS, ANY DEFICIENCIES FOUND IN THE SIGNAGE AND BARRICADES FROM THIS INSPECTION SHALL BE CORRECTED BY THE CONTRACTOR. A SUMMARY OF SIGNAGE AND BARRICADES TRANSFERRED TO BRENT SPENCE BRIDGE CONTRACTOR SHALL BE PROVIDED TO THE ENGINEER AND WILL INCLUDE DOCUMENTATION OF CORRECTIVE ACTIONS NECESSARY TO CORRECT DEFICIENCIES FOUND IN THE INSPECTION

ADDITIONAL PROJECTS:
THE CONTRACTOR SHALL COORDINATE ALL WORK AND MOT WITH THE ENGINEER & CONTRACTOR(S) FOR ALL ADJACENT PROJECTS. IN THE EVENT OF A CONFLICT, WORK AND MOT ON ALL ADJACENT PROJECTS GOVERN AND CONTROL. RESEQUENCING OF WORK, ETC DUE TO CONFLICTS COMES AT NO ADDITIONAL COST TO THE DEPARTMENT OR TIME TO THE PROJECT.

VERTICAL CLEARANCE

ANY WORK (FALSEWORK, TRAFFIC PROTECTION, CONTAINMENT, ETC. OVER LIVE TRAFFIC BY THE CONTRACTOR THAT REDUCES THE EXISTING VERTICAL CLEARANCE IS PROHIBITED UNLESS 30 DAYS ADVANCED NOTICE IS PROVIDED WITH NEW PROPOSED VERTICAL CLEARANCES. THE CONTRACTOR SHALL PROVIDE FIELD MEASUREMENTS BEFORE ALLOWING TRAFFIC UNDERNEATH. NO WORK OVER TRAFFIC SHALL OCCUR WITH A VERTICAL CLEARANCE LESS THAN 14'-0". LOWERING THE VERTICAL CLEARANCE DURING CONSTRUCTION IS CONSIDERED THE CONTRACTOR'S MEANS AND METHODS OF ACCOMPLISHING THE WORK, AND THEREFORE THE STATE IS NOT RESPONSIBLE FOR ANY DAMAGE FROM VEHICULAR IMPACTS THAT MAY RESULT AS PER 107.10.

IF ANY WORK IS TO OCCUR THAT REDUCES THE EXISTING VERTICAL CLEARANCE, THEN THE FOLLOWING ADVANCE WARNING SIGNS SHALL BE INSTALLED A MINIMUM OF 2 WEEKS PRIOR TO PERFORMING SUCH WORK. SIGNING SHALL BE AS DETAILED IN THE OHIO MANUAL OF UNIFORM TRAFFIC CONTROL DEVICES (OMUTCD) OF THE TYPE AND LOCATION AS FOLLOWS:

- W12-2-48 SIGN DUAL MOUNTED AT OR WITHIN 100 FEET OF THE BRIDGE IN EACH DIRECTION.
- W12-2-48 SIGN WITH W16-2AP-30 PLAQUE (1000 FT) DUAL MOUNTED 1000 FEET BEFORE THE BRIDGE IN EACH DIRECTION (NORTHBOUND WILL BE TRIPLE MOUNTED).
- W12-2-48 SIGN WITH W16-3AP-30 PLAQUE (1 MILE) DUAL MOUNTED AT THE 2.0 MILE MARKER SOUTHBOUND; W16-3AP-30 PLAQUE (1/2 MILE) AT THE 0.32 MILE MARKER NORTHBOUND I-75; W16-3AP-30 PLAQUE (3/4 MILE) SINGLE MOUNTED OVERHEAD/OVERLAY ABOVE 3RD STREET ON THE RAMP FROM SOUTHBOUND I-71.
- THE HEIGHT LISTED ON THE W12-2 SIGN SHALL BE 3" LOWER THAN THE ACTUAL TEMPORARY VC.

DRUM REQUIREMENTS

IN ADDITION TO THE REQUIREMENTS OF THE PLANS, SPECIFICATION AND PROPOSAL, DRUMS FURNISHED BY THE CONTRACTOR SHALL BE NEW AND UNUSED AT THE TIME OF ARRIVAL ON THE PROJECT. ANY DRUMS BROUGHT ON THE PROJECT, WHICH HAVE PREVIOUSLY BEEN USED ELSEWHERE, WILL NOT BE ACCEPTED.

PAYMENT FOR DRUMS SHALL BE INCLUDED IN THE LUMP SUM PRICE BID FOR MAINTAINING TRAFFIC UNLESS SEPARATELY ITEMIZED.

COORDINATION BETWEEN CONTRACTORS

COORDINATION WILL BE REQUIRED WITH ADJACENT ODOT AND LOCAL PROJECTS. THERE WILL BE MULTIPLE ONGOING PROJECTS IN THE AREA, INCLUDING BUT NOT LIMITED TO:
ODOT BRENT SPENCE BRIDGE, PID 116649

METROPOLITIAN SEWER DISTRICT PROJECT 10142950 - EAST BRANCH OHIO RIVER INTERCEPTOR (EBORI) EXTENSION PROJECT (LAUNCH PIT AT WESTERN AVE/GEST STREET/SB I-75 ON RAMP)

THE CONTRACTOR SHALL COORDINATE ALL WORK AND MOT WITH THE ENGINEER & CONTRACTOR(S) FOR ALL ADJACENT PROJECTS. IN THE EVENT OF A CONFLICT, WORK AND MOT ON ALL ADJACENT PROJECTS GOVERN AND CONTROL. RESEQUENCING OF WORK, ETC DUE TO CONFLICTS COMES AT NO ADDITIONAL COST TO THE DEPARTMENT OR TIME TO THE PROJECT.

1

CITY OF CINCINNATI DOTE

- IF PROJECT ACTIVITIES ARE PERFORMED IN CITY OF CINCINNATI RIGHT OF WAY, OR WILL IMPACT LOCAL ROADS, THEN THE CONTRACTORS MUST APPLY FOR A CITY PERMIT.

- PERMITS: A CITY OF CINCINNATI DOTE PERMIT IS REQUIRED PRIOR TO THE ODOT CONTRACTOR COMMENCING WORK INSIDE THE CITY'S RIGHT OF WAY. PERMITS WILL BE AT "NO COST" AND REQUIRE DOTE'S GENERAL PERMIT TO BE APPLIED FOR.

- THE CITY OF CINCINNATI'S CITIZENS AND BUSINESSES HOST MANY MAJOR EVENTS THAT MAY AFFECT TRANSPORTATION ASSETS WITHIN THE PROJECT LIMITS. CITY ISSUED PERMITS MAY REQUIRE MAJOR EVENT WORK RESTRICTIONS ON THE CONTRACTOR'S ACTIVITIES. THE CITY MAINTAINS A LIST OF KNOWN MAJOR EVENTS AT THE FOLLOWING WEBSITE: HTTP://CINCINNATI-OH.GOV/POLICE/SPECIAL EVENTS-REGULATIONS-AUCTIONS/EVENT-PERMITS/ .

PATCHING RUMBLE STRIPS

THE CONTRACTOR SHALL MILL THE EXISTING RUMBLE STRIPS A WIDTH OF 3 FEET AT 1 ½ INCH DEPTH AND PAVE WITH 1 ½ INCH ITEM 448 ASPHALT CONCRETE SURFACE COURSE, TYPE 1. PAYMENT FOR ALL MATERIALS, LABOR AND EQUIPMENT SHALL BE INCLUDED FOR PAYMENT UNDER ITEM 614 MAINTAINING TRAFFIC, MISC.: RUMBLE STRIP MILLED/FILLED

THE FOLLOWING QUANTITIES HAVE BEEN CARRIED TO THE GENERAL SUMMARY:

ITEM 614 MAINTAINING TRAFFIC, MISC.: RUMBLE STRIP MILLED/FILLED - 1,400 FT.

INCENTIVE/DISINCENTIVE CONTRACT TABLE

DESCRIPTION OR LOCATION OF CRITICAL WORK	COMPLETION DATE	TIME PERIOD	DISINCENTIVE $ PER TIME PERIOD	INCENTIVE $ PER TIME PERIOD	MAX INCENTIVE $
COMPLETION OF PHASE 1; DEMOLITION OF THE ENTIRE EXISTING BRIDGE HAM-75-0150, PROPOSED FORWARD ABUTMENT AND PROPOSED PIER #2 AND SOILDER PILE PORTION OF WALL #2 (TO STA. 3+80.14)	8/15/2026	DAY	$25,000	$33,000	$1,000,000
COMPLETION OF BRIDGE HAM-75-0150 PROPOSED SUPERSTRUCTURE FRAMING AND REMOVAL OF TEMPORARY STEEL SUPPORT	2/15/2027	DAY	$25,000	$25,000	$500,000
OPENING OF LINN STREET BRIDGE TO ALL PEDESTRIAN AND VEHICULAR TRAFFIC	8/15/2027	DAY	$25,000	$25,000	$500,000

ADDM' NO.	DATE	DESCRIPTION
1	09/01/25	NOTES AND TABLE MODIFIED, NOTE REMOVED

DATE COMPLETED

GENERAL NOTES - MAINTENANCE OF TRAFFIC

DESIGN AGENCY
Palmer ENGINEERING
8350 E. KEMPER ROAD
SUITE B
CINCINNATI, OH 45249
(513) 469-1600

DESIGNER DPF
REVIEWER DCJ 12/20/24
PROJECT ID 122048
SHEET P.19 TOTAL P. 421

HAM-IR75-1.05

MODEL: Sheet - 5 PAPERSIZE: 34x22 (in.) DATE: 8/27/2025 TIME: 1:22:44 PM PLTDRV: OHDOT_PDF.pltcfg PENTBL: OHDOT_Pen.tbl USER: swalker@palmernet.com WORKSPACE: OHDOTCEv02 WORKSET: 122048 PRODUCT: OpenRoadsDesigner 24.00.00.205
pw:\\ohiodot-pw.bentley.com:ohiodot-pw-02\Documents\01 Active Projects\District 08\Hamilton\122048\402-Engineering_Palmer\Engineering\MOT\Sheets\122048_MN001.dgn

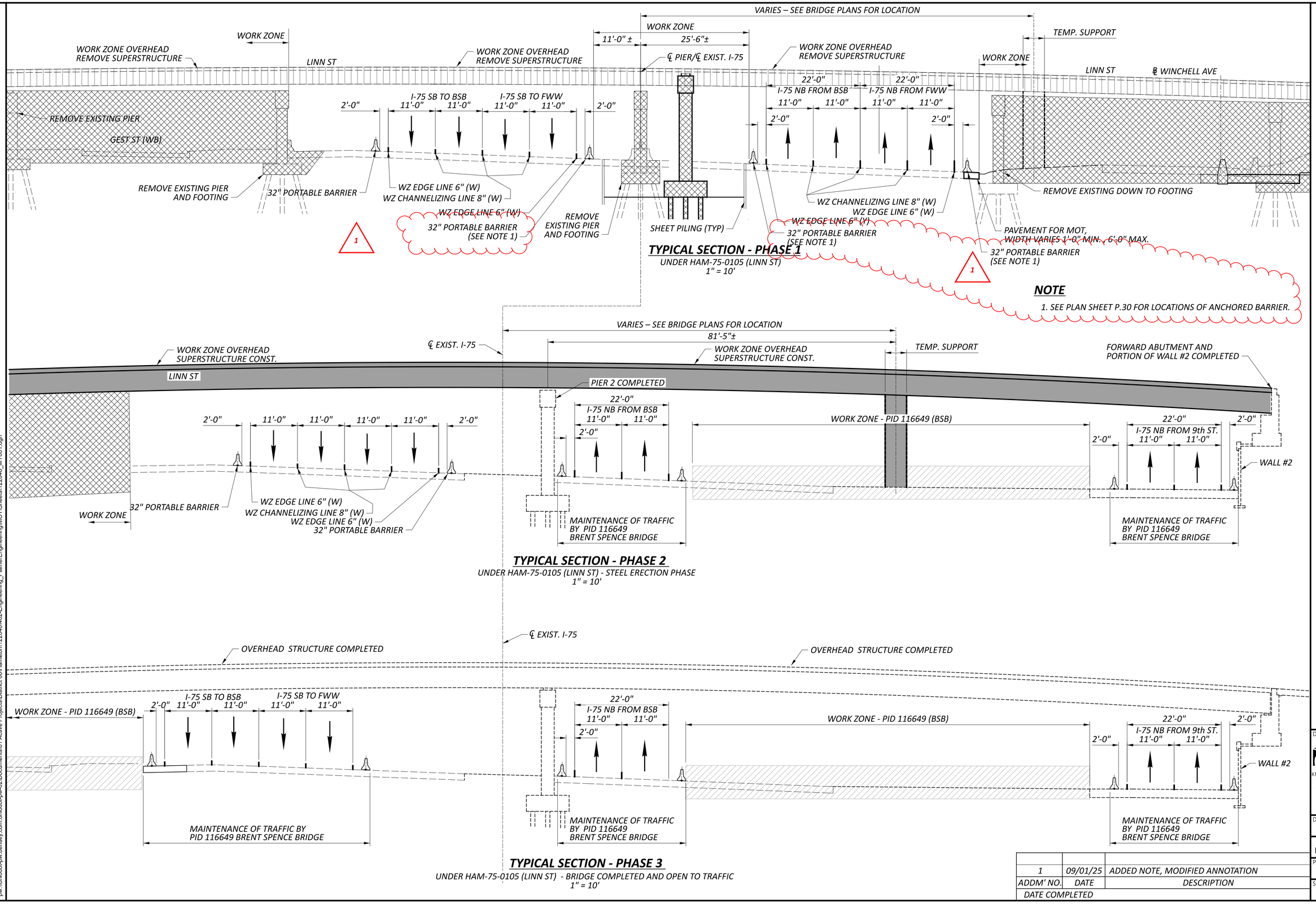

MAINTENANCE OF TRAFFIC TYPICAL SECTIONS

HAM-IR75-1.05

MODEL: Sheet PAPERSIZE: 34x22 (in.) DATE: 8/27/2025 TIME: 1:26:23 PM PLTDRV: OHDOT_PDF.pltcfg PENTBL: OHDOT_Pen.tbl USER: swalker@palmernet.com WORKSPACE: OHDOTCEv02 WORKSET: I220048 PRODUCT: OpenRoadsDesigner 24.00.00.205
pw:\\ohiodot-pw.bentley.com:ohiodot-pw-02\Documents\01 Active Projects\District 08\Hamilton\122048402-Engineering_PalmerEngineering\MOT\Sheets\122048_MY001.dgn

1	09/01/25	ADDED NOTE, MODIFIED ANNOTATION
ADDM' NO.	DATE	DESCRIPTION
DATE COMPLETED		

DESIGN AGENCY
Palmer ENGINEERING
8350 EAST KEMPER ROAD
SUITE B
CINCINNATI, OH 45249
(513) 469-1600

DESIGNER DPF
REVIEWER DCJ 12/20/24
PROJECT ID 122048
SHEET P.24 TOTAL P. 421

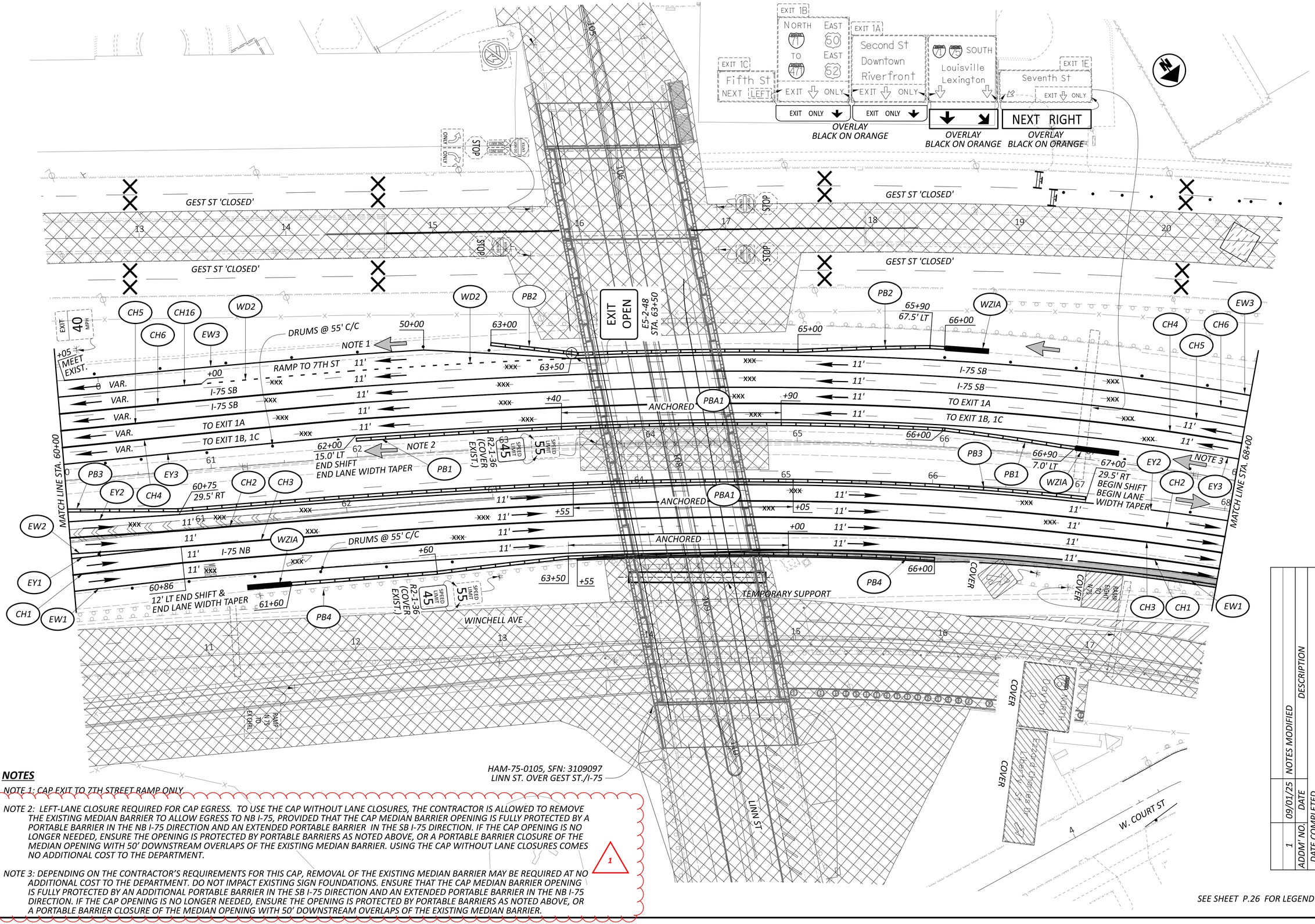

HAM-75-0105, SFN: 3109097
LINN ST. OVER GEST ST./I-75

NOTES

NOTE 1: CAP EXIT TO 7TH STREET RAMP ONLY

NOTE 2: LEFT-LANE CLOSURE REQUIRED FOR CAP EGRESS. TO USE THE CAP WITHOUT LANE CLOSURES, THE CONTRACTOR IS ALLOWED TO REMOVE THE EXISTING MEDIAN BARRIER TO ALLOW EGRESS TO NB I-75, PROVIDED THAT THE CAP MEDIAN BARRIER OPENING IS FULLY PROTECTED BY A PORTABLE BARRIER IN THE NB I-75 DIRECTION AND AN EXTENDED PORTABLE BARRIER IN THE SB I-75 DIRECTION. IF THE CAP OPENING IS NO LONGER NEEDED, ENSURE THE OPENING IS PROTECTED BY PORTABLE BARRIERS AS NOTED ABOVE, OR A PORTABLE BARRIER CLOSURE OF THE MEDIAN OPENING WITH 50' DOWNSTREAM OVERLAPS OF THE EXISTING MEDIAN BARRIER. USING THE CAP WITHOUT LANE CLOSURES COMES NO ADDITIONAL COST TO THE DEPARTMENT.

NOTE 3: DEPENDING ON THE CONTRACTOR'S REQUIREMENTS FOR THIS CAP, REMOVAL OF THE EXISTING MEDIAN BARRIER MAY BE REQUIRED AT NO ADDITIONAL COST TO THE DEPARTMENT. DO NOT IMPACT EXISTING SIGN FOUNDATIONS. ENSURE THAT THE CAP MEDIAN BARRIER OPENING IS FULLY PROTECTED BY AN ADDITIONAL PORTABLE BARRIER IN THE SB I-75 DIRECTION AND AN EXTENDED PORTABLE BARRIER IN THE NB I-75 DIRECTION. IF THE CAP OPENING IS NO LONGER NEEDED, ENSURE THE OPENING IS PROTECTED BY PORTABLE BARRIERS AS NOTED ABOVE, OR A PORTABLE BARRIER CLOSURE OF THE MEDIAN OPENING WITH 50' DOWNSTREAM OVERLAPS OF THE EXISTING MEDIAN BARRIER.

NO.	DATE	DESCRIPTION
1	09/01/25	NOTES MODIFIED
ADDM		DATE COMPLETED

SEE SHEET P.26 FOR LEGEND

HORIZONTAL SCALE IN FEET
0 15 30 60

MAINTENANCE OF TRAFFIC
IR 75 - PHASE 1

DESIGN AGENCY
Palmer ENGINEERING
8350 E. KEMPER ROAD
SUITE B
CINCINNATI, OH 45249
(513) 469-1600

DESIGNER DPF
REVIEWER DCJ 12/20/24
PROJECT ID 122048
SHEET P.30 TOTAL P. 421

HAM-IR75-1.05

MODEL: CLX_I81 - Plan 5 [Sheet] PAPERSIZE: 34x22 (in.) DATE: 8/27/2025 TIME: 1:27:55 PM PLTDRV: OHDOT_PDF.pltcfg PENTBL: OHDOT_Pen.tbl USER: swalker@palmernet.com WORKSPACE: OHDOTCEv02 WORKSET: 122048 PRODUCT: OpenRoadsDesigner 24.00.00.205
pw:\\ohiodot-pw.bentley.com:ohiodot-pw-02\Documents\01 Active Projects\District 08\Hamilton\122048\402 Engineering_PalmerEngineering\MOT\Sheets\122048_MP001.dgn

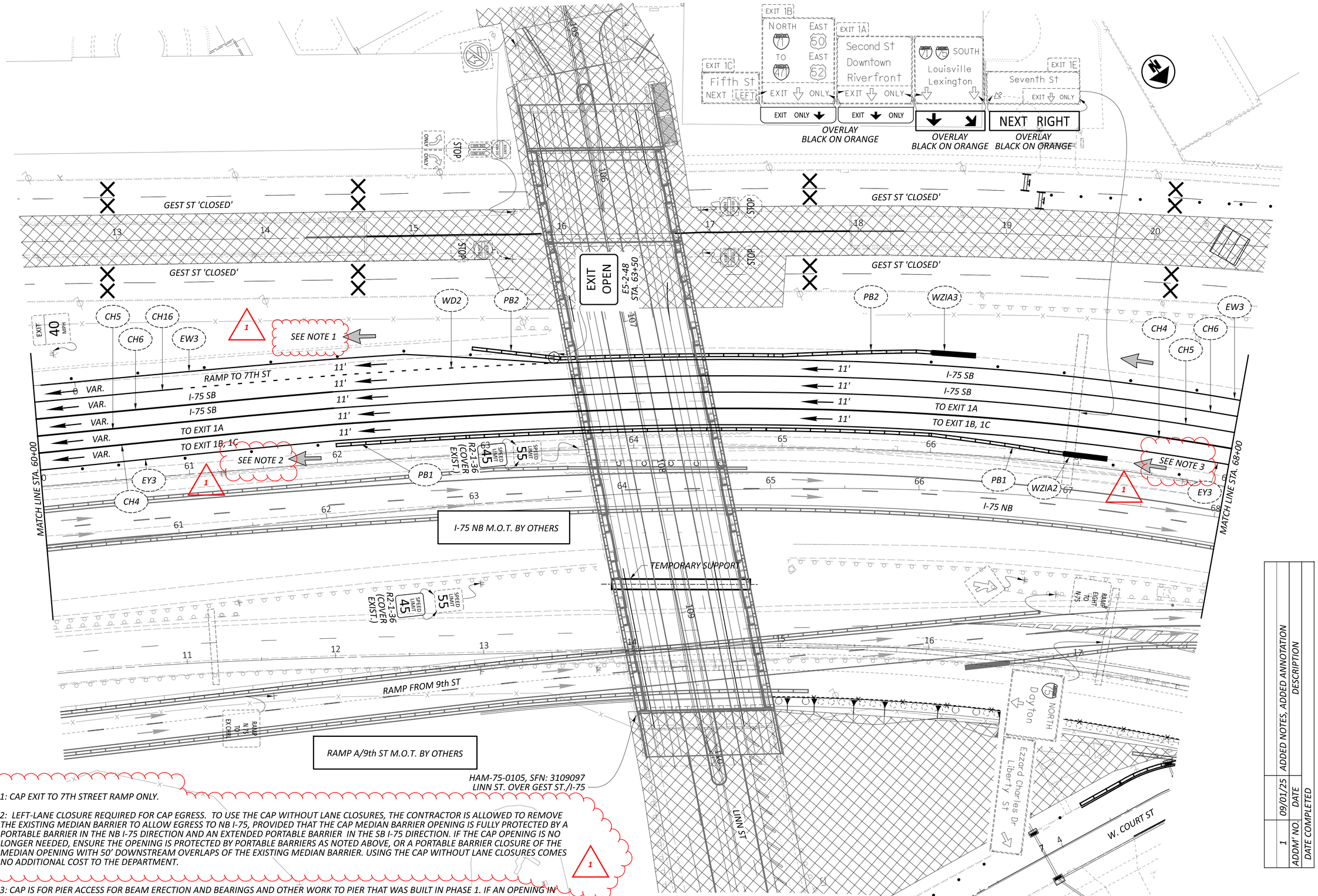

NOTE 1: CAP EXIT TO 7TH STREET RAMP ONLY.

NOTE 2: LEFT-LANE CLOSURE REQUIRED FOR CAP EGRESS. TO USE THE CAP WITHOUT LANE CLOSURES, THE CONTRACTOR IS ALLOWED TO REMOVE THE EXISTING MEDIAN BARRIER TO ALLOW EGRESS TO NB I-75, PROVIDED THAT THE CAP MEDIAN BARRIER OPENING IS FULLY PROTECTED BY A PORTABLE BARRIER IN THE NB I-75 DIRECTION AND AN EXTENDED PORTABLE BARRIER IN THE SB I-75 DIRECTION. IF THE CAP OPENING IS NO LONGER NEEDED, ENSURE THE OPENING IS PROTECTED BY PORTABLE BARRIERS AS NOTED ABOVE, OR A PORTABLE BARRIER CLOSURE OF THE MEDIAN OPENING WITH 50' DOWNSTREAM OVERLAPS OF THE EXISTING MEDIAN BARRIER. USING THE CAP WITHOUT LANE CLOSURES COMES NO ADDITIONAL COST TO THE DEPARTMENT.

NOTE 3: CAP IS FOR PIER ACCESS FOR BEAM ERECTION AND BEARINGS AND OTHER WORK TO PIER THAT WAS BUILT IN PHASE 1. IF AN OPENING IN THE EXISTING MEDIAN BARRIER WAS USED FOR THE CAP IN PHASE 1, ENSURE IT IS FULLY PROTECTED BY AN ADDITIONAL PORTABLE BARRIER IN THE SB I-75 DIRECTION AND AN EXTENDED PORTABLE BARRIER IN THE NB I-75 DIRECTION, OR A PORTABLE BARRIER CLOSURE OF THE MEDIAN OPENING WITH 50' DOWNSTREAM OVERLAPS OF THE EXISTING MEDIAN BARRIER.

SEE SHEET P.26 FOR LEGEND

HORIZONTAL SCALE IN FEET
0 15 30 60

MAINTENANCE OF TRAFFIC
IR 75 - PHASE 2

ADDM' NO.	DATE	DESCRIPTION
1	09/01/25	ADDED NOTES, ADDED ANNOTATION

DATE COMPLETED

DESIGN AGENCY
Palmer ENGINEERING
8350 E. KEMPER ROAD
SUITE B
CINCINNATI, OH 45249
(513) 469-1600

DESIGNER DPF
REVIEWER DCJ 12/20/24
PROJECT ID 122048
SHEET P.38 TOTAL P. 421

HAM-IR75-1.05

MODEL: CLX_I81 - Plan 5 [Sheet] PAPERSIZE: 34x22 (in.) DATE: 8/27/2025 TIME: 1:20:02 PM PLTDRV: OHDOT_PDF.pltcfg PENTBL: OHDOT_Pen.tbl USER: swalker@palmernet.com WORKSPACE: OHDOTCEv02 WORKSET: 122048 PRODUCT: OpenRoadsDesigner 24.00.00.205
pw:\\ohiodot-pw.bentley.com:ohiodot-pw-02\Documents\01 Active Projects\District 08\Hamilton\122048\402-Engineering_PalmerEngineering\MOT\Sheets\122048_MP002.dgn

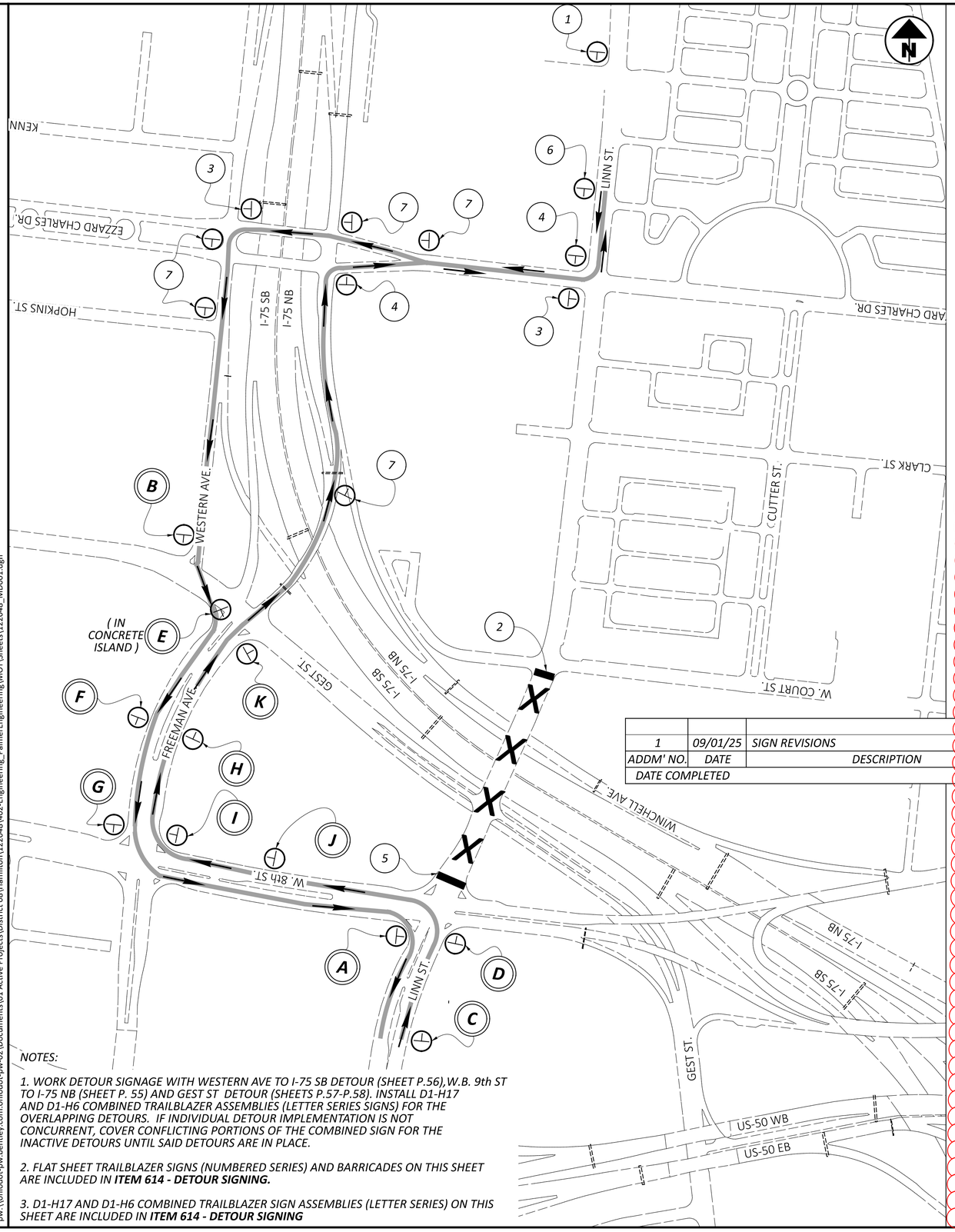

1	09/01/25	SIGN REVISIONS
ADDM' NO.	DATE	DESCRIPTION
DATE COMPLETED		

NOTES:

1. WORK DETOUR SIGNAGE WITH WESTERN AVE TO I-75 SB DETOUR (SHEET P.56),W.B. 9th ST TO I-75 NB (SHEET P. 55) AND GEST ST DETOUR (SHEETS P.57-P.58). INSTALL D1-H17 AND D1-H6 COMBINED TRAILBLAZER ASSEMBLIES (LETTER SERIES SIGNS) FOR THE OVERLAPPING DETOURS. IF INDIVIDUAL DETOUR IMPLEMENTATION IS NOT CONCURRENT, COVER CONFLICTING PORTIONS OF THE COMBINED SIGN FOR THE INACTIVE DETOURS UNTIL SAID DETOURS ARE IN PLACE.

*2. FLAT SHEET TRAILBLAZER SIGNS (NUMBERED SERIES) AND BARRICADES ON THIS SHEET ARE INCLUDED IN **ITEM 614 - DETOUR SIGNING.***

*3. D1-H17 AND D1-H6 COMBINED TRAILBLAZER SIGN ASSEMBLIES (LETTER SERIES) ON THIS SHEET ARE INCLUDED IN **ITEM 614 - DETOUR SIGNING***

1



W20-1-24

2

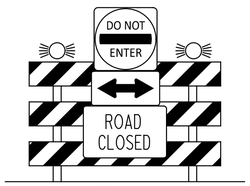

R5-1-36
W1-7-48
R11-2-48
TYPE 9 BARRICADE
PER MT 101.60

3

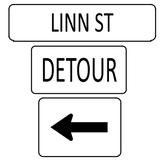

D3-1-36
M4-8-30
M6-1-30

4

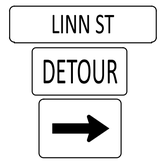

D3-1-36
M4-8-30
M6-1-30

5

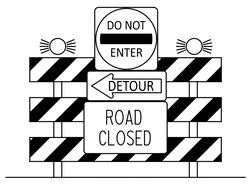

R5-1-36
M4-10L-48
R11-2-48
TYPE 9 BARRICADE
PER MT 101.60

6



D3-1-36
M4-8-30
M5-1-30

7

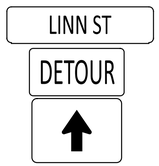

D3-1-36
M4-8-30
M6-3-30

A

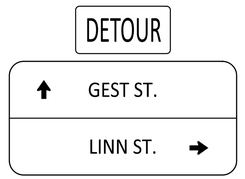

M4-8-30
D1-H6-VAR.

B

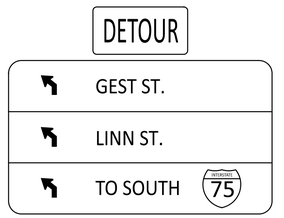

M4-8-30
D1-H17-VAR.

1

C



M4-8-30
D1-H6-VAR.

D



M4-8-30
D1-H6-48

E

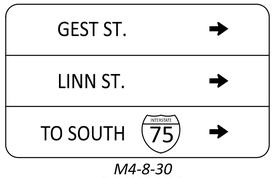

M4-8-30
D1-H17-VAR.

F

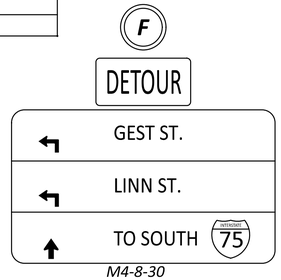

M4-8-30
D1-H17-VAR.

G

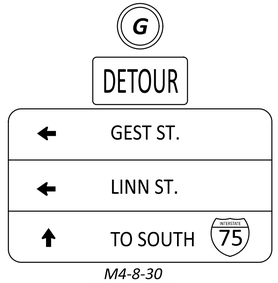

M4-8-30
D1-H17-VAR.

H

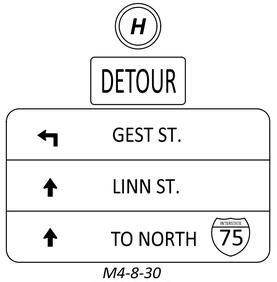

M4-8-30
D1-H17-VAR.

I

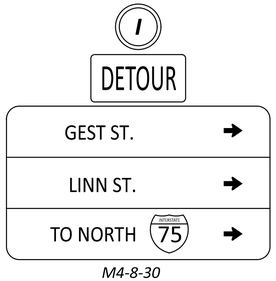

M4-8-30
D1-H17-VAR.

J

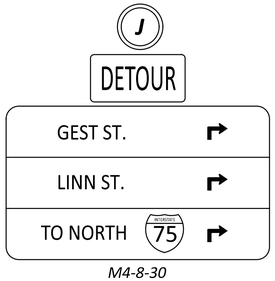

M4-8-30
D1-H17-VAR.

K

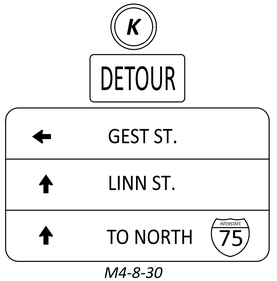

M4-8-30
D1-H17-VAR.

HORIZONTAL SCALE IN FEET
0 100 200 400

DETOUR PLAN
LINN STREET

HAM-IR75-1.05

MODEL: Sheet PAPERSIZE: 34x22 (in.) DATE: 8/27/2025 TIME: 1:30:57 PM PLTDRV: OHDOT_PDF.pltcfg PENTBL: OHDOT_Pen.tbl USER: swalker@palmernet.com WORKSPACE: OHDOTCivil3D WORKSET: 122048 PRODUCT: OpenRoadsDesigner 24.00.00.205
pw:\\ohiodot-pw.bentley.com:ohiodot-pw-02\Documents\01 Active Projects\District 08\Hamilton\122048\402-Engineering_PalmerEngineering\MOT\Sheets\122048_MD001.dgn

DESIGN AGENCY
Palmer ENGINEERING
8350 E. KEMPER ROAD
SUITE B
CINCINNATI, OH 45249
(513) 469-1600

DESIGNER DPF
REVIEWER DCJ 12/20/24
PROJECT ID 122048
SHEET P.52 TOTAL P. 421

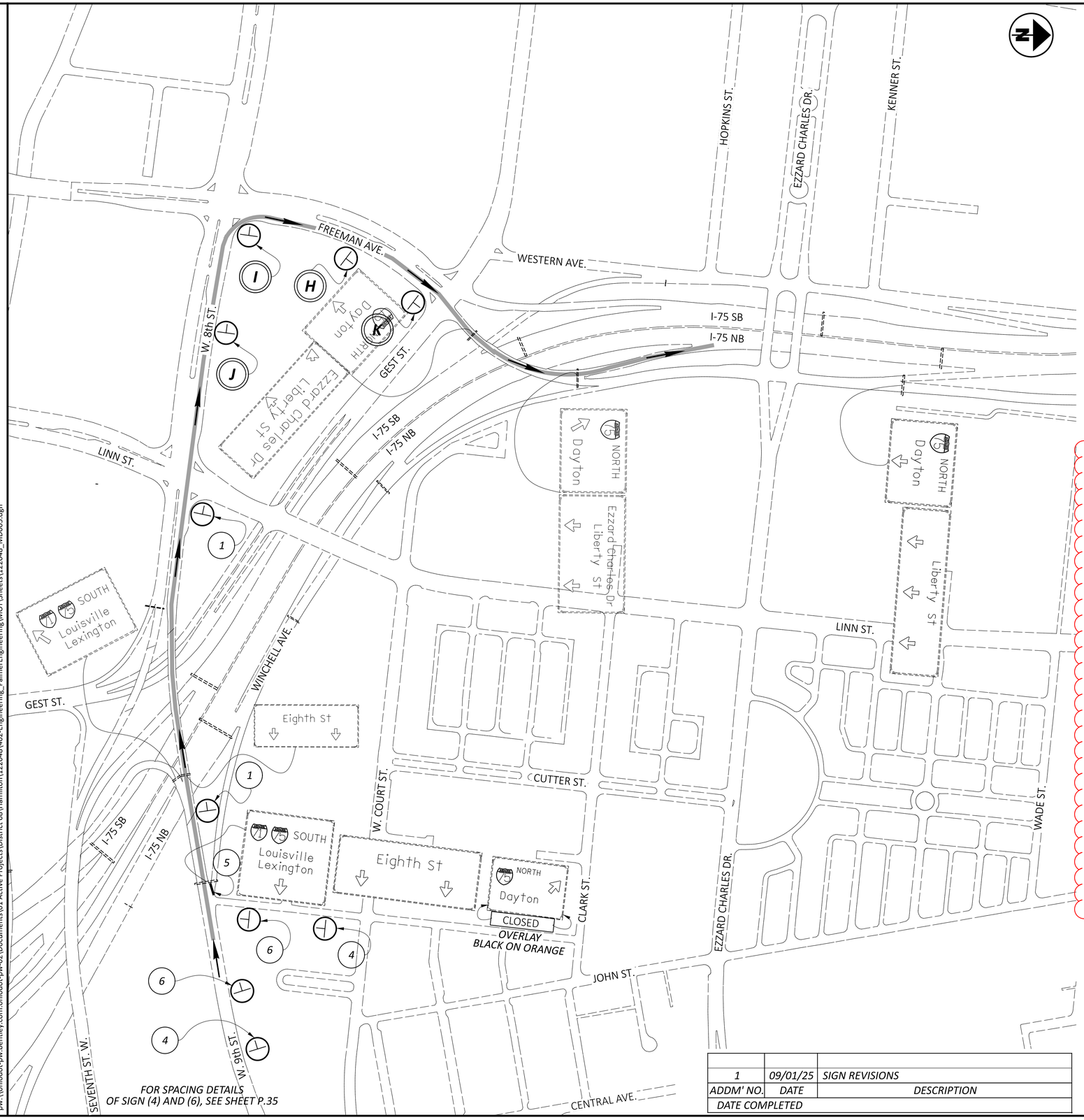

FOR SPACING DETAILS OF SIGN (4) AND (6), SEE SHEET P.35

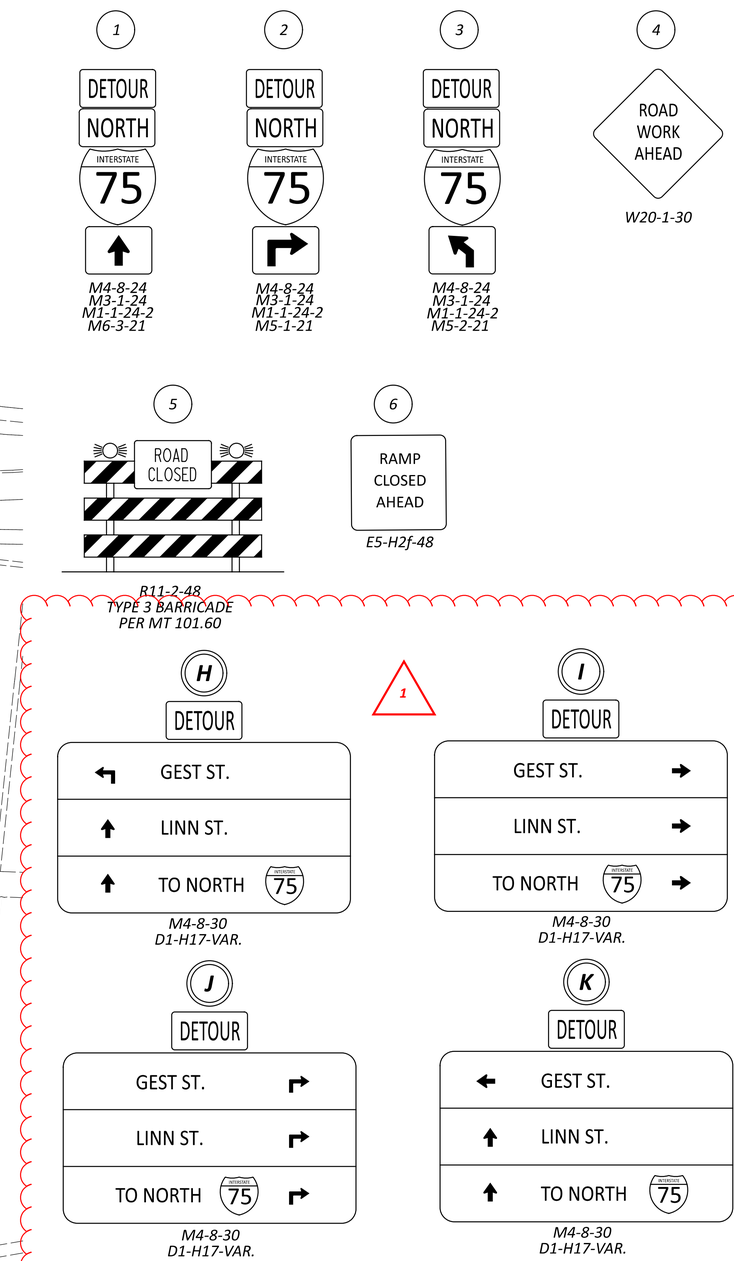

NOTES:

1. WORK DETOUR SIGNAGE WITH LINN ST DETOUR (SHEET P.52), W.B. 9th ST TO I-75 NB (SHEET P. 55) AND GEST ST DETOUR (SHEETS P.57-P.58). INSTALL D1-H17 AND D1-H6 COMBINED TRAILBLAZER ASSEMBLIES (LETTER SERIES SIGNS) FOR THE OVERLAPPING DETOURS. IF INDIVIDUAL DETOUR IMPLEMENTATION IS NOT CONCURRENT, COVER CONFLICTING PORTIONS OF THE COMBINED SIGN FOR THE INACTIVE DETOURS UNTIL SAID DETOURS ARE IN PLACE.

2. FLAT SHEET TRAILBLAZER SIGNS (NUMBERED SERIES) AND BARRICADES ON THIS SHEET ARE INCLUDED IN **ITEM 614 - DETOUR SIGNING.**

3. D1-H17 AND D1-H6 COMBINED TRAILBLAZER SIGN ASSEMBLIES (LETTER SERIES) ON THIS SHEET ARE INCLUDED IN **ITEM 614 - DETOUR SIGNING**

ADDM' NO.	DATE	DESCRIPTION
1	09/01/25	SIGN REVISIONS

DATE COMPLETED

HORIZONTAL SCALE IN FEET
0 100 200 400

DETOUR PLAN
W.B. 9th ST. TO I-75 N.B.

DESIGN AGENCY
Palmer ENGINEERING
8350 E. KEMPER ROAD
SUITE B
CINCINNATI, OH 45249
(513) 469-1600

DESIGNER
DPF

REVIEWER
DCJ 12/20/24

PROJECT ID
122048

SHEET P.55 TOTAL P. 421

HAM-IR75-1.05

MODEL: Sheet PAPERSIZE: 34x22 (in.) DATE: 8/27/2025 TIME: 1:32:09 PM PLTDRV: OHDOT_PDF.pltcfg PENTBL: OHDOT_Pen.tbl USER: swalker@palmernet.com WORKSPACE: OHDOTCEv02 WORKSET: 122048 PRODUCT: OpenRoadsDesigner 24.00.00.205
pw:\\ohiodot-pw.bentley.com:ohiodot-pw-02\Documents\01 Active Projects\District 08\Hamilton\122048\402-Engineering_PalmerEngineering\MOT\Sheets\122048_MD005.dgn

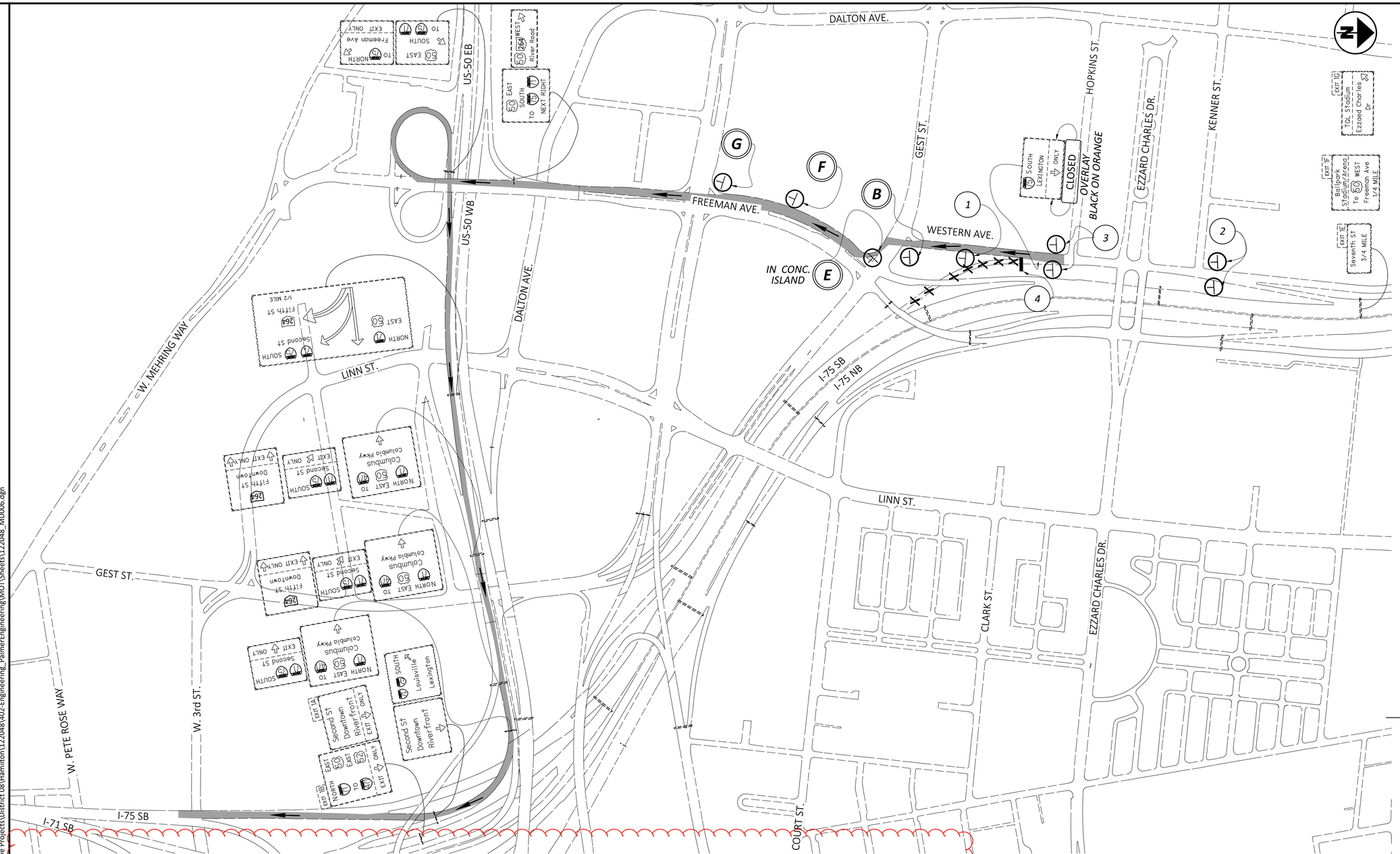

1

DETOUR

SOUTH

INTERSTATE 75

M4-8-24
M1-1-24-2
M3-3-24
M5-1L-21

2

RAMP CLOSED AHEAD

E5-H2f-48

3

RAMP CLOSED

E5-H2e-48

4

ROAD CLOSED

R11-2-48
TYPE 3 BARRICADE
PER MT 101.60

HORIZONTAL SCALE IN FEET

0 125 250 500

DETOUR PLAN - PHASE 1B
WESTERN AVE TO I-75 S.B.

B

DETOUR

↰	GEST ST.
↰	LINN ST.
↰	TO SOUTH 75

M4-8-30
D1-H17-VAR.

E

DETOUR

	GEST ST. →
	LINN ST. →
	TO SOUTH 75 →

M4-8-30
D1-H17-VAR.

F

DETOUR

↰	GEST ST.
↰	LINN ST.
↑	TO SOUTH 75

M4-8-30
D1-H17-VAR.

G

DETOUR

←	GEST ST.
←	LINN ST.
↑	TO SOUTH 75

M4-8-30
D1-H17-VAR.

1

NOTES:

1. WORK DETOUR SIGNAGE WITH LINN ST DETOUR (SHEET P.52), WESTERN AVE TO I-75 SB DETOUR (SHEET P.56) AND GEST ST DETOUR (SHEETS P.57-P.58). INSTALL D1-H17 AND D1-H6 COMBINED TRAILBLAZER ASSEMBLIES (LETTER SERIES SIGNS) FOR THE OVERLAPPING DETOURS. IF INDIVIDUAL DETOUR IMPLEMENTATION IS NOT CONCURRENT, COVER CONFLICTING PORTIONS OF THE COMBINED SIGN FOR THE INACTIVE DETOURS UNTIL SAID DETOURS ARE IN PLACE.

2. ALL SIGNAGE AND BARRICADES ON THIS SHEET ARE INCLUDED IN **ITEM 614 - DETOUR SIGNING**

ADDM' NO.	DATE	DESCRIPTION
1	09/01/25	SIGN REVISIONS

DATE COMPLETED

DESIGN AGENCY

Palmer ENGINEERING
8350 EAST KEMPER ROAD
SUITE B
CINCINNATI, OH 45249
(513) 469-1600

DESIGNER DPF

REVIEWER DCJ 12/20/24

PROJECT ID 122048

SHEET P.56 TOTAL P. 421

HAM-IR75-1.05

MODEL: Sheet PAPERSIZE: 34x22 (in.) DATE: 8/27/2025 TIME: 1:33:38 PM PLTDRV: OHDOT_PDF.pltcfg PENTBL: OHDOT_Pen.tbl USER: swalker@palmernet.com WORKSPACE: OHDOTCEv02 WORKSET: 122048 PRODUCT: OpenRoadsDesigner 24.00.00.205
pw:\\ohiodot-pw.bentley.com:ohiodot-pw-02\Documents\01 Active Projects\District 08\Hamilton\122048\402-Engineering_PalmerEngineering\MOT\Sheets\122048_MD006.dgn

NOTES:

1. WORK DETOUR SIGNAGE WITH LINN ST DETOUR (SHEET P.52), AND WESTERN TO I-75 SB DETOUR (SHEET P.56). INSTALL D1-H17 AND D1-H6 COMBINED TRAILBLAZER ASSEMBLIES (LETTER SERIES SIGNS) FOR THE OVERLAPPING DETOURS. IF INDIVIDUAL DETOUR IMPLEMENTATION IS NOT CONCURRENT, COVER CONFLICTING PORTIONS OF THE COMBINED SIGN FOR THE INACTIVE DETOURS UNTIL SAID DETOURS ARE IN PLACE.

2. ALL SIGNAGE AND BARRICADES ON THIS SHEET ARE INCLUDED IN **ITEM 614 - DETOUR SIGNING**

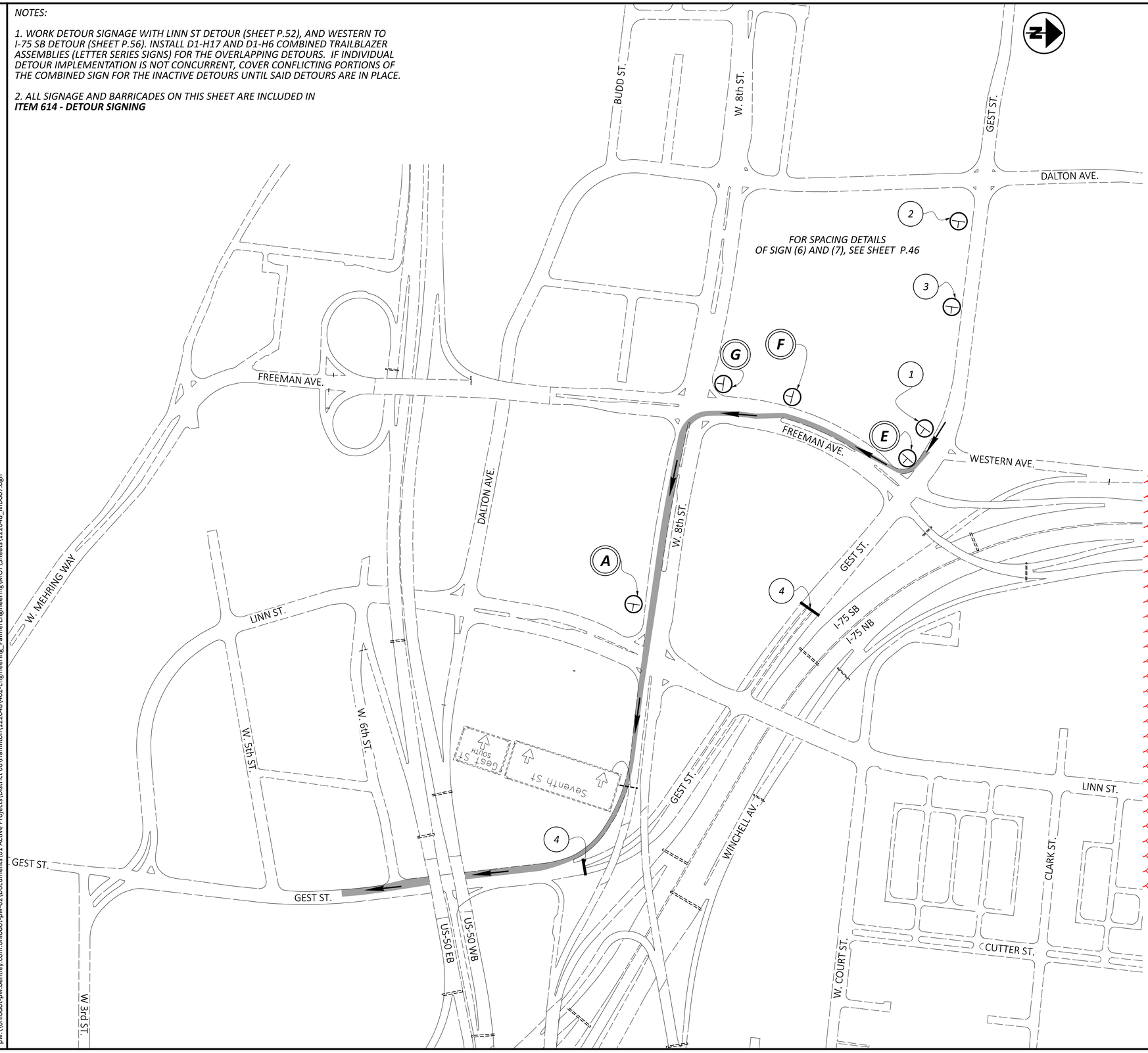

1
Gest St.
DETOUR
D3-1-36
M4-8-30
M5-1-30
STA. 30+00

2
ROAD WORK AHEAD
W20-1-36
STA. 34+00

3
Gest St.
ROAD CLOSED AHEAD
1000 FEET
D3-1-36
W20-3-36
W16-2P-18
STA. 33+00

4
ROAD CLOSED
R11-2-48
TYPE 3 BARRICADE
PER MT 101.60

A
DETOUR
GEST ST.
LINN ST.
M4-8-30
D1-H6-VAR.

E
DETOUR
GEST ST.
LINN ST.
TO SOUTH 75
M4-8-30
D1-H17-VAR.

F
DETOUR
GEST ST.
LINN ST.
TO SOUTH 75
M4-8-30
D1-H17-VAR.

G
DETOUR
GEST ST.
LINN ST.
TO SOUTH 75
M4-8-30
D1-H17-VAR.

1

HORIZONTAL SCALE IN FEET
0 125 250 500

DETOUR PLAN EASTBOUND GEST STREET

HAM-IR75-1.05

MODEL: Sheet PAPERSIZE: 34x22 (in.) DATE: 8/27/2025 TIME: 1:34:56 PM PLTDRV: OHDOT_PDF.pltcfg PENTBL: OHDOT_Pen.tbl USER: swalker@palmernet.com WORKSPACE: OHDOTCEv02 WORKSET: 122048 PRODUCT: OpenRoadsDesigner 24.00.00.205
pw:\\ohiodot-pw.bentley.com:ohiodot-pw-02\Documents\01 Active Projects\District 08\Hamilton\122048\02-Engineering_Palmer\Engineering\MOT\Sheets\122048_MD007.dgn

DESIGN AGENCY
Palmer ENGINEERING
8350 E. KEMPER ROAD
SUITE B
CINCINNATI, OH 45249
(513) 469-1600

DESIGNER DPF
REVIEWER DCJ 12/20/24
PROJECT ID 122048
SHEET P.57 TOTAL P. 421

ADDM' NO.	DATE	DESCRIPTION
1	09/01/25	SIGN REVISIONS
DATE COMPLETED		

NOTES:

1. WORK DETOUR SIGNAGE WITH LINN ST DETOUR (SHEET P.52), AND 9TH ST TO I-75 NB DETOUR (SHEET P.55). INSTALL D1-H17 AND D1-H6 COMBINED TRAILBLAZER ASSEMBLIES (LETTER SERIES SIGNS) FOR THE OVERLAPPING DETOURS. IF INDIVIDUAL DETOUR IMPLEMENTATION IS NOT CONCURRENT, COVER CONFLICTING PORTIONS OF THE COMBINED SIGN FOR THE INACTIVE DETOURS UNTIL SAID DETOURS ARE IN PLACE.

2. ALL SIGNAGE AND BARRICADES ON THIS SHEET ARE INCLUDED IN ***ITEM 614 - DETOUR SIGNING***

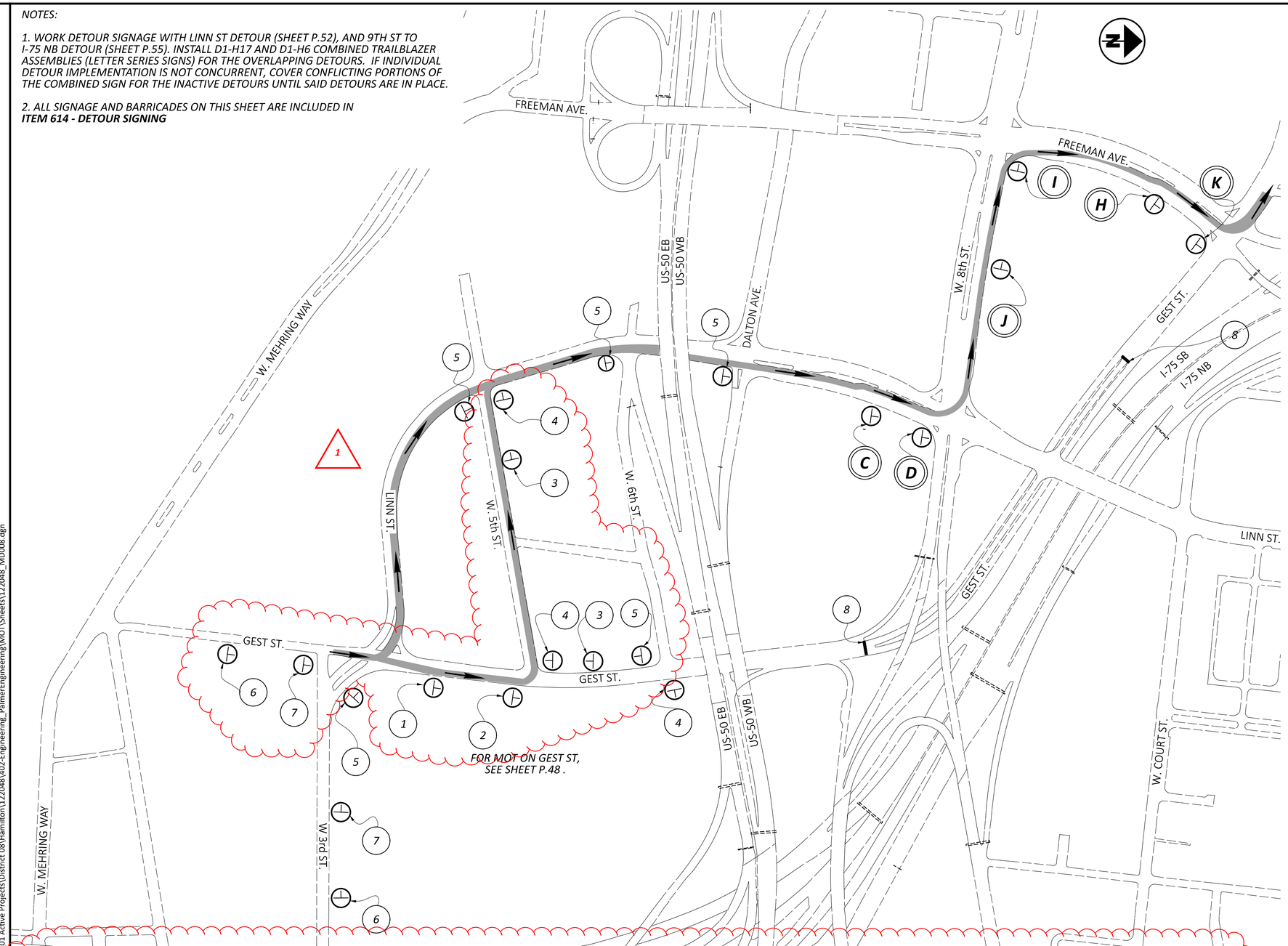

1
GEST ST
DETOUR
D3-1-36
M4-8-30
M5-1-30

2
GEST ST
DETOUR
D3-1-36
M4-8-30
M6-1-30

3
GEST ST
DETOUR
D3-1-36
M4-8-30
M5-1-30

4
GEST ST
DETOUR
D3-1-36
M4-8-30
M6-1-30

5
GEST ST
DETOUR
D3-1-36
M4-8-30
M6-1-30

6
DETOUR AHEAD
W20-2-36

7
GEST ST
ROAD CLOSED AHEAD
D3-1-36
W20-3-36

8
ROAD CLOSED
R11-2-48
TYPE 3 BARRICADE
PER MT 101.60

C
DETOUR
GEST ST.
LINN ST.
M4-8-30
D1-H6-VAR.

D
DETOUR
GEST ST.
LINN ST.
M4-8-30
D1-H6-VAR.

H
DETOUR
GEST ST.
LINN ST.
TO NORTH 75
M4-8-30
D1-H17-VAR.

I
DETOUR
GEST ST.
LINN ST.
TO NORTH 75
M4-8-30
D1-H17-VAR.

J
DETOUR
GEST ST.
LINN ST.
TO NORTH 75
M4-8-30
D1-H17-VAR.

K
DETOUR
GEST ST.
LINN ST.
TO NORTH 75
M4-8-30
D1-H17-VAR.

HORIZONTAL SCALE IN FEET
0 125 250 500

DETOUR PLAN
WESTBOUND GEST STREET

ADDM' NO.	DATE	DESCRIPTION
1	---	SIGN REVISIONS, ROUTE REVISION
DATE COMPLETED		

DESIGN AGENCY
Palmer ENGINEERING
8350 E. KEMPER ROAD
SUITE B
CINCINNATI, OH 45249
(513) 469-1600

DESIGNER DPF
REVIEWER DCJ 12/20/24
PROJECT ID 122048
SHEET P.58 TOTAL P. 421

HAM-IR75-1.05

MODEL: Sheet PAPERSIZE: 34x22 (in.) DATE: 8/27/2025 TIME: 1:36:03 PM PLTDRV: OHDOT_PDF.pltcfg PENTBL: OHDOT_Pen.tbl USER: swalker@palmernet.com WORKSPACE: OHDOTCivil3D WORKSET: 122048 PRODUCT: OpenRoadsDesigner 24.00.00.205
pw:\\ohiodot-pw.bentley.com:ohiodot-pw-02\Documents\01 Active Projects\District 08\Hamilton\122048\02-Engineering_PalmerEngineering\MOT\Sheets\122048_MD0008.dgn

SHEET NUM.										PART.			ITEM	ITEM EXT	GRAND TOTAL	UNIT	DESCRIPTION	SEE SHEET NO.
OFFICE CALCS	P.11	P.13	P.68	P.69	P.74	P.90	P.148			01/IMS	02/IMS	03/IMS						
																	ROADWAY	
										LS			201	11000	LS		CLEARING AND GRUBBING	
			9,679				144		1	9,268		731	202	23000	9,999	SY	PAVEMENT REMOVED	
			8,059							8,059			202	30000	8,059	SF	WALK REMOVED	
		45								45			202	30600	45	SY	CONCRETE MEDIAN REMOVED	
		249	3,302							3,551			202	32000	3,551	FT	CURB REMOVED	
			656							656			202	35100	656	FT	PIPE REMOVED, 24" DIAMETER AND UNDER	
		139	2,224							2,363			202	38000	2,363	FT	GUARDRAIL REMOVED	
			1							1			202	42001	1	EACH	ANCHOR ASSEMBLY REMOVED, TYPE A, AS PER PLAN	P.12
			1							1			202	58000	1	EACH	MANHOLE REMOVED	
			10							10			202	58100	10	EACH	CATCH BASIN REMOVED	
		1,000								1,000			SPECIAL	20270110	1,000	FT	PIPE CLEANOUT, 24" AND UNDER	P.13
		215								215			SPECIAL	20270120	215	FT	PIPE CLEANOUT, 27" TO 48"	P.13
		1,250								1,250			SPECIAL	20270130	1,250	FT	PIPE CLEANOUT OVER 48"	P.13
			1,705							1,705			202	75000	1,705	FT	FENCE REMOVED	
			440							440			202	98200	440	FT	REMOVAL MISC.: RETAINING WALL 1	P.12
						16,726				16,726			203	10000	16,726	CY	EXCAVATION	
						2,106				2,106			203	20000	2,106	CY	EMBANKMENT	
						653				653			203	20001	653	CY	EMBANKMENT, AS PER PLAN	P.12
					1,409					1,409			204	13000	1,409	CY	EXCAVATION OF SUBGRADE	
					1,409					1,409			204	30020	1,409	CY	GRANULAR MATERIAL, TYPE C	
					5					5			204	45000	5	HOUR	PROOF ROLLING	
					4,225					4,225			204	50000	4,225	SY	GEOTEXTILE FABRIC	
					199					199			206	10500	199	TON	CEMENT	
					6,643					6,643			206	11000	6,643	SY	CURING COAT	
					6,643					6,643			206	15020	6,643	SY	CEMENT STABILIZED SUBGRADE, 14 INCHES DEEP	
LS										LS			206	30000	LS		MIXTURE DESIGN FOR CHEMICALLY STABILIZED SOILS	
		100		450						550			606	15050	550	FT	GUARDRAIL, TYPE MGS	
		1		1						2			606	26150	2	EACH	ANCHOR ASSEMBLY, MGS TYPE E (MASH 2016)	
				1						1			606	26550	1	EACH	ANCHOR ASSEMBLY, MGS TYPE T	
				1						1			606	35002	1	EACH	MGS BRIDGE TERMINAL ASSEMBLY, TYPE 1	
		1								1			606	60022	1	EACH	IMPACT ATTENUATOR, TYPE 2 (UNIDIRECTIONAL) (35 MPH)	P.13
				104						104			607	98000	104	FT	FENCE, MISC.: WOOD FENCE	P.12
				31,812						31,812			608	12000	31,812	SF	5" CONCRETE WALK	
				754						754			608	52000	754	SF	CURB RAMP	
				54						54			608	98000	54	SF	WALKWAY, MISC.: 12" CONCRETEWALK	P.12
				194						194			622	10120	194	FT	CONCRETE BARRIER, SINGLE SLOPE, TYPE C	
				20						20			622	10160	20	FT	CONCRETE BARRIER, SINGLE SLOPE, TYPE D	
				1						1			622	25000	1	EACH	CONCRETE BARRIER END SECTION, TYPE D	
				1						1			622	25008	1	EACH	CONCRETE BARRIER, END ANCHORAGE, REINFORCED, TYPE C	
				1						1			622	25050	1	EACH	CONCRETE BARRIER, END ANCHORAGE, REINFORCED, TYPE D	
				273					1	273			622	41100	273	FT	PORTABLE BARRIER, UNANCHORED	
		640								640			622	41110	640	FT	PORTABLE BARRIER, ANCHORED	
LS										LS			SPECIAL	69098400	LS		CONSULTANT FOR CONCRETE QUALITY CONTROL INCLUDING TESTING AND INSPECTION	P.13
																	EROSION CONTROL	
	2									2			659	00100	2	EACH	SOIL ANALYSIS TEST	
	985									985			659	00300	985	CY	TOPSOIL	
	8,873									8,873			659	10000	8,873	SY	SEEDING AND MULCHING	
	444									444			659	14000	444	SY	REPAIR SEEDING AND MULCHING	
	444									444			659	15000	444	SY	INTER-SEEDING	
	1.31									1.31			659	20000	1.31	TON	COMMERCIAL FERTILIZER	
	1.83									1.83			659	31000	1.83	ACRE	LIME	
	49									49			659	35000	49	MGAL	WATER	
LS										LS			832	15000	LS		STORM WATER POLLUTION PREVENTION PLAN	
LS										LS			832	15002	LS		STORM WATER POLLUTION PREVENTION INSPECTIONS	
LS										LS			832	15010	LS		STORM WATER POLLUTION PREVENTION INSPECTION SOFTWARE	
55,000										55,000			832	30000	55,000	EACH	EROSION CONTROL	

GENERAL SUMMARY

HAM-IR 75-1.05

MODEL: Sheet PAPERSIZE: 34x22 (in.) DATE: 8/28/2025 TIME: 9:30:27 AM PLTDRV: OHDOT_PDF.pltcfg PENTBL: OHDOT_Pen_Addendum.tbl USER: WORKSPACE: OHDOTCEv02 WORKSET: 122048 PRODUCT: OpenRoadsDesigner 10.12.02.4
pw:\\ohiodot-pw.bentley.com:ohiodot-pw-02\Documents\01 Active Projects\District 08\Hamilton\122048\403-Engineering_StructurePoint\Roadway\Sheets\122048_GG301.dgn

DESIGN AGENCY
AMERICAN STRUCTUREPOINT INC.

DESIGNER LZS

REVIEWER KAM 03/03/25

PROJECT ID 122048

SHEET P.59 | TOTAL P.421

SHEET NUM.										PART.			ITEM	ITEM EXT	GRAND TOTAL	UNIT	DESCRIPTION	SEE SHEET NO.
OFFICE CALCS	P.12	P.13	P.69	P.71	P.72	P.74	P.148	P.149	P.203	01/IMS	02/IMS	03/IMS						
																	DRAINAGE	
					2,245					2,245			605	11100	2,245	FT	6" SHALLOW PIPE UNDERDRAINS	
	100									100			605	13300	100	FT	6" UNCLASSIFIED PIPE UNDERDRAINS	
	100				240					340			611	00510	340	FT	6" CONDUIT, TYPE F FOR UNDERDRAIN OUTLETS	
			1	450						450			611	04401	450	FT	12" CONDUIT, TYPE B, AS PER PLAN	P.13
				931						931			611	04401	931	FT	12" CONDUIT, TYPE B, AS PER PLAN (CINCINNATI)	P.13
				43						43			611	04601	43	FT	12" CONDUIT, TYPE C, AS PER PLAN	P.13
				96						96			611	04601	96	FT	12" CONDUIT, TYPE C, AS PER PLAN (CINCINNATI)	P.13
				287						287			611	05901	287	FT	15" CONDUIT, TYPE B, AS PER PLAN	P.13
				263						263			611	05901	263	FT	15" CONDUIT, TYPE B, AS PER PLAN (CINCINNATI)	P.13
				49						49			611	06101	49	FT	15" CONDUIT, TYPE C, AS PER PLAN (CINCINNATI)	P.13
				339						339			611	07401	339	FT	18" CONDUIT, TYPE B, AS PER PLAN	P.13
				254						254			611	07401	254	FT	18" CONDUIT, TYPE B, AS PER PLAN (CINCINNATI)	P.13
				50						50			611	07601	50	FT	18" CONDUIT, TYPE C, AS PER PLAN	P.13
				24						24			611	07601	24	FT	18" CONDUIT, TYPE C, AS PER PLAN (CINCINNATI)	P.13
				53						53			611	10401	53	FT	24" CONDUIT, TYPE B, AS PER PLAN	P.13
			1	268						268			611	97000	268	FT	SLOTTED DRAIN, TYPE 1, 6"	P.13
				4						4			611	98150	4	EACH	CATCH BASIN, NO. 3	
				16						16			611	98180	16	EACH	CATCH BASIN, NO. 3A	
				5						5			611	98370	5	EACH	CATCH BASIN, NO. 6	
				2						2			611	98470	2	EACH	CATCH BASIN, NO. 2-2B	
				1						1			611	98510	1	EACH	CATCH BASIN, NO. 2-3	
				9						9			611	98690	9	EACH	CATCH BASIN, MISC.: COMBINATION INLET (CI) (CINCINNATI)	P.13
				6						6			611	98690	6	EACH	CATCH BASIN, MISC.: DOUBLE GUTTER INLET MANHOLE (DGIMH) (CINCINNATI)	P.13
				1						1			611	98810	1	EACH	INLET, NO. 3C	
				1						1			611	99500	1	EACH	INLET, MISC.: DITCH INLET (DI) (CINCINNATI)	P.13
				2						2			611	99574	2	EACH	MANHOLE, NO. 3	
				3						3			611	99690	3	EACH	MANHOLE, MISC.:STANDARD MANHOLE, TYPE B (CINCINNATI)	P.13
																	PAVEMENT	
						5,537				5,537			257	10000	5,537	SY	DIAMOND GRINDING PORTLAND CEMENT CONCRETE PAVEMENT	
	30					2,197				2,227			302	56000	2,227	CY	ASPHALT CONCRETE BASE, PG64-22, (449)	P.12
						1,199				1,199			304	20000	1,199	CY	AGGREGATE BASE	
						1,148				1,148			407	20000	1,148	GAL	NON-TRACKING TACK COAT	
						265				265			442	10300	265	CY	ASPHALT CONCRETE SURFACE COURSE, 12.5 MM, TYPE A (447)	
						220				220			442	20000	220	CY	ASPHALT CONCRETE SURFACE COURSE, 12.5 MM, TYPE A (448)	
						497				497			442	10090 1	497	CY	ASPHALT CONCRETE INTERMEDIATE COURSE, 12.5 MM, TYPE B (446) 1	
							11	41		52			442	90000	52	CY	ASPHALT CONCRETE, MISC.: FULL-DEPH 448 TYPE 1 HOT-MIX ASPHALT PER CINCINNATI ITEM 627 DRIVEWAYS	P.13
							56	65		121			452	11010	121	SY	7" NON-REINFORCED CONCRETE PAVEMENT, CLASS QC 1P	
						92				92			452	14020	92	SY	10" NON-REINFORCED CONCRETE PAVEMENT, CLASS QC 1P WITH QC/QA	
						276				276			609	71000	276	SF	CONCRETE MEDIAN	
			46							46			609	98000	46	FT	CURB, MISC.: TYPE B-1 CURB (CINCINNATI)	P.13
			82							82			609	98000	82	FT	CURB, MISC.: TYPE P-1 CURB (CINCINNATI)	P.13
		100	4,098				41	154		4,393			609	98000	4,393	FT	CURB, MISC.: TYPE S-1 CURB (CINCINNATI)	P.13
LS										LS			878	25000	LS		INSPECTION AND COMPACTION TESTING OF UNBOUND MATERIALS	
																	WATER WORK	
									2	2			SPECIAL	63820500	2	EACH	VALVE BOX ADJUSTED TO GRADE (GCWW)	
									2	2			SPECIAL	63820760	2	EACH	FIRE HYDRANT REMOVED AND DISPOSED OF (GCWW)	
									1	1			SPECIAL	63820764	1	EACH	FIRE HYDRANT SERVICE LINE SHORTENED AND ADJUSTED TO GRADE (GCWW)	

GENERAL SUMMARY

DESIGN AGENCY: MPEAN STRUCTUREPOINT INC.

DESIGNER: LZS

REVIEWER: KAM 03/03/25

PROJECT ID: 122048

SHEET: P.60 TOTAL: P.421

HAM-IR 75-1.05

MODEL: Sheet PAPERSIZE: 34x22 (in.) DATE: 8/28/2025 TIME: 9:30:37 AM PLTDRV: OHDOT_PDF.pltcfg PENTBL: OHDOT_Pen_Addendum.tbl USER: WORKSPACE: OHDOTCEv02 WORKSET: 122048 PRODUCT: OpenRoadsDesigner 10.12.02.4
pw:\\ohiodot-pw.bentley.com:ohiodot-pw-02\Documents\01 Active Projects\District 08\Hamilton\122048\403-Engineering_StructurePoint\Roadway\Sheets\122048_GG302.dgn

OFFICE CALCS				SHEET NUM. P.203	P.220	P.221	P.222			PART. 01/IMS	02/IMS	03/IMS	ITEM	ITEM EXT	GRAND TOTAL	UNIT	DESCRIPTION	SEE SHEET NO.
																	SANITARY SEWER	
			1	153						153			611	04400	153	FT	12" CONDUIT, TYPE B (SANITARY SEWER)	
				103						103			611	04400	103	FT	12" CONDUIT, TYPE B (SANITARY SEWER W/CONCRETE ENCASEMENT)	
				5						5			611	99654	5	EACH	MANHOLE ADJUSTED TO GRADE (SANITARY SEWER)	
				3						3			611	99690	3	EACH	MANHOLE, MISC.: STANDARD MANHOLE, TYPE B (SANITARY SEWER)	P.12
																	LIGHTING	
						18	2			20			625	00450	20	EACH	CONNECTION, FUSED PULL APART	
						9	1			10			625	00460	10	EACH	CONNECTION, UNFUSED PULL APART	
						12	3			15			625	00480	15	EACH	CONNECTION, UNFUSED PERMANENT	
						4				4			625	10481	4	EACH	LIGHT POLE, AESTHETIC, AS PER PLAN (20' POST TOP)	
							1			1			625	10490	1	EACH	LIGHT POLE, CONVENTIONAL (AT15B40)	
						5				5			625	10491	5	EACH	LIGHT POLE, CONVENTIONAL, AS PER PLAN (35')	
						4				4			625	10614	4	EACH	LIGHT POLE ANCHOR BOLTS ON STRUCTURE	
						5	1			6			625	14100	6	EACH	LIGHT POLE FOUNDATION, 24" X 8' DEEP	
						5				5			625	17960	5	EACH	BRACKET ARM, 8'	
							1			1			625	18200	1	EACH	BRACKET ARM, 15'	
						2,655				2,655			625	22990	2,655	FT	NO. 6 AWG 600 VOLT DISTRIBUTION CABLE	
						2,959	2,022			4,981			625	23000	4,981	FT	NO. 4 AWG 600 VOLT DISTRIBUTION CABLE	
							1,200			1,200			625	23200	1,200	FT	NO. 4 AWG 2400 VOLT DISTRIBUTION CABLE	
						664				664			625	23400	664	FT	NO. 10 AWG POLE AND BRACKET CABLE	
							672			672			625	24100	672	FT	1-1/2" DUCT CABLE WITH TWO NO. 4 AWG 2400 VOLT CABLES	
							533			533			625	25301	533	FT	CONDUIT, 1-1/2", 725.04, AS PER PLAN	
						634	288			922			625	25400	922	FT	CONDUIT, 2", 725.04	
						114	82			196			625	25500	196	FT	CONDUIT, 3", 725.04	
						3	51			54			625	25802	54	FT	CONDUIT, CONCRETE ENCASED (2")	
						3				3			625	26253	3	EACH	LUMINAIRE, CONVENTIONAL, SOLID STATE (LED), AS PER PLAN, TYPE II	
						2	1			3			625	26253	3	EACH	LUMINAIRE, CONVENTIONAL, SOLID STATE (LED), AS PER PLAN, TYPE III	
						4				4			625	27403	4	EACH	LUMINAIRE, POST TOP, SOLID STATE (LED), AS PER PLAN (SUN VALLEY, 103W, TYPE III)	
							2			2			625	27503	2	EACH	LUMINAIRE, UNDERPASS, SOLID STATE (LED), AS PER PLAN (54W, CEILING MOUNTED)	
							8			8			625	27503	8	EACH	LUMINAIRE, UNDERPASS, SOLID STATE (LED), AS PER PLAN (70W, WALL MOUNTED)	
						1,062	745			1,807			625	29002	1,807	FT	TRENCH, 24" DEEP	
							1			1			625	29900	1	EACH	JUNCTION BOX	
							2			2			625	29940	2	EACH	BARRIER JUNCTION BOX	
							8			8			625	30700	8	EACH	PULL BOX, 725.08, 18"	
						2	1			3			625	30701	3	EACH	PULL BOX, 725.08, 18", AS PER PLAN	
						2				2			625	30707	2	EACH	PULL BOX, 725.08, 24", AS PER PLAN	
						5	1			6			625	32000	6	EACH	GROUND ROD	
						1	3			4			625	33000	4	EACH	STRUCTURE GROUNDING SYSTEM	
							2			2			625	34000	2	EACH	POWER SERVICE	
						1				1			625	34001	1	EACH	POWER SERVICE, AS PER PLAN	P.220
			1				1			1			625	37100	1	EACH	SERVICE TO UNDERPASS LIGHTING	
				LS						LS			SPECIAL	62540000	LS		MAINTAIN EXISTING LIGHTING	P.220
				2						2			SPECIAL	62540010	2	EACH	REPLACEMENT OF EXISTING LIGHTING UNIT	P.220
						1	3			4			625	75800	4	EACH	DISCONNECT CIRCUIT	

GENERAL SUMMARY

DESIGN AGENCY
STRUCTUREPOINT LLC

DESIGNER
LZS

REVIEWER
KAM 03/03/25

PROJECT ID
122048

SHEET P.61 TOTAL P.421

HAM-IR 75-1.05

MODEL: Sheet PAPERSIZE: 34x22 (in.) DATE: 8/28/2025 TIME: 9:30:46 AM PLTDRV: OHDOT_PDF.pltcfg PENTBL: OHDOT_Pen_Addendum.tbl USER: WORKSPACE: OHDOTCEv02 WORKSET: 122048 PRODUCT: OpenRoadsDesigner 10.12.02.4
pw:\\ohiodot-pw.bentley.com:ohiodot-pw-02\Documents\01 Active Projects\District 08\Hamilton\122048\403-Engineering_StructurePoint\Roadway\Sheets\122048_GG303.dgn

SHEET NUM.										PART.			ITEM	ITEM EXT	GRAND TOTAL	UNIT	DESCRIPTION	SEE SHEET NO.
OFFICE CALCS	P.12		P.69		P.205	P.206	P.207		P.365	01/IMS	02/IMS	03/IMS						
																	TRAFFIC CONTROL	
						113				113			621	00100	113	EACH	RPM	
			10							10			626	00102	10	EACH	BARRIER REFLECTOR, TYPE 1 (ONE-WAY)	
			8							8			626	00110	8	EACH	BARRIER REFLECTOR, TYPE 2 (ONE-WAY)	
							182.4			182.4			630	02100	182.4	FT	GROUND MOUNTED SUPPORT, NO. 2 POST	
							53.4			53.4			630	03100	53.4	FT	GROUND MOUNTED SUPPORT, NO. 3 POST	
							112.4			112.4			630	06100	112.4	FT	GROUND MOUNTED SUPPORT, NO. 6 POST	
							9			9			630	08600	9	EACH	SIGN POST REFLECTOR	
							203.41			203.41			630	80100	203.41	SF	SIGN, FLAT SHEET	
							18			18			630	84900	18	EACH	REMOVAL OF GROUND MOUNTED SIGN AND DISPOSAL	
							11			11			630	86002	11	EACH	REMOVAL OF GROUND MOUNTED POST SUPPORT AND DISPOSAL	
							1			1			630	86010	1	EACH	REMOVAL OF GROUND MOUNTED POST SUPPORT AND REERECTION	
							1			1			630	87500	1	EACH	REMOVAL OF POLE MOUNTED SIGN AND DISPOSAL	
							1			1			630	97700	1	EACH	SIGNING, MISC.: GROUND MOUNTED SIGN SUPPORT, STEEL POLE (CINCINNATI)	
					0.01	0.73				0.74			644	00100	0.74	MILE	EDGE LINE, 4"	
					0.02	0.28				0.3			644	00200	0.3	MILE	LANE LINE, 4"	
					0.02	0.04				0.06			644	00300	0.06	MILE	CENTER LINE	
						1,389				1,389			644	00400	1,389	FT	CHANNELIZING LINE, 8"	
					18	47				65			644	00500	65	FT	STOP LINE	
					85					85			644	00620	85	FT	CROSSWALK LINE, 12"	
						130				130			644	00630	130	FT	CROSSWALK LINE, 24"	
						106				106			644	00720	106	FT	CHEVRON MARKING	
						10				10			644	01300	10	EACH	LANE ARROW	
					5					5			644	01500	5	FT	DOTTED LINE, 4" WHITE (2FT LONG, 6FT GAP)	
						137				137			644	01510	137	FT	DOTTED LINE, 6" WHITE (3FT LONG, 9FT GAP)	
	300									300			644	30000	300	FT	REMOVAL OF PAVEMENT MARKING	
	5									5			644	30020	5	EACH	REMOVAL OF PAVEMENT MARKING	
	0.45									0.45			644	30030	0.45	MILE	REMOVAL OF PAVEMENT MARKING	
					0.21	0.09				0.3			646	10000	0.3	MILE	EDGE LINE, 4"	
					0.04					0.04			646	10010	0.04	MILE	EDGE LINE, 6"	
					0.1					0.1			646	10100	0.1	MILE	LANE LINE, 4"	
					0.05	0.02				0.07			646	10200	0.07	MILE	CENTER LINE	
					1,595					1,595			646	10300	1,595	FT	CHANNELIZING LINE, 8"	
					75					75			646	10400	75	FT	STOP LINE	
					357					357			646	10510	357	FT	CROSSWALK LINE, 12"	
					60	65				125			646	10600	125	FT	TRANSVERSE/DIAGONAL LINE (YELLOW)	
					255					255			646	10600	255	FT	TRANSVERSE/DIAGONAL LINE (WHITE)	
					277					277			646	10620	277	FT	CHEVRON MARKING	
					11	1				12			646	20300	12	EACH	LANE ARROW	
					237					237			646	20502	237	FT	DOTTED LINE, 4" WHITE (2FT LONG, 6FT GAP)	

SHEET NUM. OFFICE CALCS									PART. 01/IMS	02/IMS	03/IMS	ITEM	ITEM EXT	GRAND TOTAL	UNIT	DESCRIPTION	SEE SHEET NO.
				P.169		P.195		P.236									
													1			**RETAINING WALLS (WALL 02)**	
				LS					LS			503	11101	LS		COFFERDAMS AND EXCAVATION BRACING, AS PER PLAN 1 1	P.170
				LS					LS			503	21301	LS	1	UNCLASSIFIED EXCAVATION, AS PER PLAN 1	P.167
			1	813				1	813			507	00400	813	FT	STEEL PILES, MISC.: SOLDIER PILES, W27X178	P.167
			1	179				1	179			507	00400	179	FT	STEEL PILES, MISC.: SOLDIER PILES, W27X258	P.167
				176,174					176,174			509	26000	176,174	LB	GALVANIZED STEEL REINFORCEMENT	
															1		
			1	1,677				1	1,677			510	10000	1,677	EACH	DOWEL HOLES WITH NONSHRINK, NONMETALLIC GROUT	
			1	723				1	723			511	46012	723	CY	CLASS QC1 CONCRETE WITH QC/QA, RETAINING/WINGWALL NOT INCLUDING FOOTING	
				123					123			511	46510	123	CY	CLASS QC1 CONCRETE, FOOTING	
			1	475				1	475			511	53010	475	CY	CLASS QC1 CONCRETE, MISC.: SHAFT CAP WITH QC/QA	P.167
			1	288				1	288			511	53010	288	CY	CLASS QC1 CONCRETE, MISC.: MOMENT SLAB WITH QC/QA	P.167
															1		
				2,229					2,229			512	10000	2,229	SY	SEALING OF CONCRETE SURFACES	
				2,229					2,229			512	10001	2,229	SY	SEALING OF CONCRETE SURFACES, AS PER PLAN	P.167
			1	10				1	10			512	33000	10	SY	TYPE 2 WATERPROOFING	
				574					574			513	20001	574	EACH	WELDED STUD SHEAR CONNECTORS, AS PER PLAN 1	P.167
				488					488			516	13600	488	SF	1" PREFORMED EXPANSION JOINT FILLER	
				810					810			517	76300	810	FT	RAILING, MISC.: TEXAS RAILING	P.167
				237					237			518	20000	237	SY	PREFABRICATED GEOCOMPOSITE DRAIN	
			1	160				1	160			518	21200	160	CY	POROUS BACKFILL WITH GEOTEXTILE FABRIC	
				72					72			518	39900	72	FT	4" NON-PERFORATED CORRUGATED PLASTIC PIPE, INCLUDING SPECIALS	
				1,010					1,010			518	40000	1,010	1 FT	6" PERFORATED CORRUGATED PLASTIC PIPE	
			1	80				1	80			518	40010	80	FT	6" NON-PERFORATED CORRUGATED PLASTIC PIPE, INCLUDING SPECIALS	
															1		
				807					807			524	94803	807	FT	DRILLED SHAFTS, 42" DIAMETER, ABOVE BEDROCK, AS PER PLAN	P.167
			1	181				1	181			524	94903	181	FT	DRILLED SHAFTS, 48" DIAMETER ABOVE BEDROCK, AS PER PLAN	P.168
				5,260					5,260			524	94915	5,260	FT	DRILLED SHAFTS, 60" DIAMETER, ABOVE BEDROCK, AS PER PLAN 1	P.168
				LS					LS			SPECIAL	53000200	LS		STRUCTURES: PRECONSTRUCTION CONDITION SURVEY	P.167
			1	288				1	288			SPECIAL	53051010	288	1 SF	RETAINING WALL, PRECAST CONCRETE LAGGING	P.168
				2,104					2,104			SPECIAL	53051020	2,104	SF	RETAINING WALL, TIMBER LAGGING	P.167
			1	809				1	809			607	39901	809	FT	VANDAL PROTECTION FENCE, 6' STRAIGHT, COATED FABRIC, AS PER PLAN 1	P.168
				8,401					8,401			840	26050	8,401	SF	AESTHETIC SURFACE TREATMENT 1	P.168
				12					12			894	10000	12	1 EACH	THERMAL INTEGRITY PROFILING (TIP) TEST	P.168

SHEET NUM. OFFICE CALCS							P.249	P.250	PART. 01/IMS	02/IMS	03/IMS	ITEM	ITEM EXT	GRAND TOTAL	UNIT	DESCRIPTION	SEE SHEET NO.
																STRUCTURE OVER 20 FOOT SPAN (HAM-75-0104) (SFN 3109098)	
							LS				LS	202	11003	LS		STRUCTURE REMOVED, OVER 20 FOOT SPAN, AS PER PLAN	P.245
							634				634	202	22900	634	SY	APPROACH SLAB REMOVED (1)	
							LS				LS	202	30204	LS		STEPS REMOVED	
							27			27		203	20001	27	CY	EMBANKMENT, AS PER PLAN	P.245
							864			864		203	35111	864	CY	GRANULAR MATERIAL, TYPE B, AS PER PLAN	P.248
							LS			LS		503	11101	LS		COFFERDAMS AND EXCAVATION BRACING, AS PER PLAN	P.245
							LS			LS		503	21300	LS		UNCLASSIFIED EXCAVATION	
							LS			LS		505	11100 (1)	LS		PILE DRIVING EQUIPMENT MOBILIZATION	
							4,120			4,120		507	00501	4,120	FT	12" CAST-IN-PLACE REINFORCED CONCRETE PILES, DRIVEN, AS PER PLAN (1)	P.248A
							4,400			4,400		507	00550	4,400	FT	12" CAST-IN-PLACE REINFORCED CONCRETE PILES, FURNISHED	
							5,500			5,500		507	00601 (1)	5,500	FT	14" CAST-IN-PLACE REINFORCED CONCRETE PILES, DRIVEN, AS PER PLAN (1)	P.248A
							5,880			5,880		507	00650	5,880	FT	14" CAST-IN-PLACE REINFORCED CONCRETE PILES, FURNISHED	
							280			280		507	92201	280	FT	PREBORED HOLES, AS PER PLAN	P.245
							502,351			502,351		509	26000	502,351	LB	GALVANIZED STEEL REINFORCEMENT	
							(1) 4,000		(1)	4,000		509	40000	4,000	LB	CONCRETE REINFORCEMENT, MISC.: ADDITIONAL GALVANIZED STEEL REINFORCEMENT FOR FOOTINGS (1)	P.248A
							313			313		511	34463	313	CY	CLASS QC SCC CONCRETE WITH QC/QA, BRIDGE DECK (PARAPET), AS PER PLAN	P.245
							(1) 279		(1)	279		511	46513	279 (1)	CY	CLASS QC1 CONCRETE WITH QC/QA, FOOTING, AS PER PLAN	P.248A
							510			510		511	51513	510	CY	CLASS QC2 CONCRETE WITH QC/QA, SIDEWALK, AS PER PLAN	P.247
							83			83		511	53012	83	CY	CLASS QC2 CONCRETE, MISC.: RAISED MEDIAN, WITH QC/QA	P.247
							98			98		511	53012	98	CY	CLASS QC2 CONCRETE, MISC.: PLANTER WALLS, WITH QC/QA	
							1,079			1,079		511	53014	1,079	CY	CLASS QC3 CONCRETE, MISC.: BRIDGE DECK, WITH QC/QA	P.246
							237			237		511	53014	237	CY	CLASS QC3 CONCRETE, MISC.: PIER ABOVE FOOTINGS, WITH QC/QA	P.246
							155			155		511	53014	155	CY	CLASS QC3 CONCRETE, MISC.: ABUTMENT NOT INCLUDING FOOTING, WITH QC/QA	P.246
							48			48		511	81300	48	EACH	CONCRETE, MISC.: PRECAST CONCRETE PLINTHS	P.247
							3,868			3,868		512	10001	3,868	SY	SEALING OF CONCRETE SURFACES, AS PER PLAN	P.245
							2,827			2,827		512	10050	2,827	SY	SEALING OF CONCRETE SURFACES (NON-EPOXY)	
							3,868			3,868		512	10100	3,868	SY	SEALING OF CONCRETE SURFACES (EPOXY-URETHANE)	P.245
							61			61		512	33000	61	SY	TYPE 2 WATERPROOFING	
							844			844		SPECIAL	51267200	844	SY	WATERPROOFING FOR PLANTERS AREAS	P.247
							128,300			128,300		513	10261	128,300	LB	STRUCTURAL STEEL MEMBERS, LEVEL 3, AS PER PLAN	P.246
							1,275,300			1,275,300		513	10281	1,275,300	LB	STRUCTURAL STEEL MEMBERS, LEVEL 4, AS PER PLAN	P.246
							9,784			9,784		513	20000	9,784	EACH	WELDED STUD SHEAR CONNECTORS	
							15,361			15,361		514	00060	15,361	SF	FIELD PAINTING STRUCTURAL STEEL, INTERMEDIATE COAT	P.245
							15,361			15,361		514	00066	15,361	SF	FIELD PAINTING STRUCTURAL STEEL, FINISH COAT	P.245
							182			182		516	10010	182	FT	ARMORLESS PREFORMED JOINT SEAL	
							11			11		516	10011	11	FT	ARMORLESS PREFORMED JOINT SEAL, AS PER PLAN	P.248
							258			258		516	11211	258	FT	STRUCTURAL EXPANSION JOINT INCLUDING ELASTOMERIC STRIP SEAL, AS PER PLAN	P.317
							81			81		516	13000	81	SF	1/4" PREFORMED EXPANSION JOINT FILLER	
							64			64		516	13200	64	SF	1/2" PREFORMED EXPANSION JOINT FILLER	
							356			356		516	13900	356	SF	2" PREFORMED EXPANSION JOINT FILLER	
							9			9		516	44101	9	EACH	ELASTOMERIC BEARING WITH INTERNAL LAMINATES AND LOAD PLATE (NEOPRENE), AS PER PLAN (13"x12"x2.358" EXP. BEARING)	P.287
							9			9		516	44101	9	EACH	ELASTOMERIC BEARING WITH INTERNAL LAMINATES AND LOAD PLATE (NEOPRENE), AS PER PLAN (13"x12"x2.358" FIXED BEARING)	P.287
							4			4		516	44201	4	EACH	ELASTOMERIC BEARING WITH INTERNAL LAMINATES AND LOAD PLATE (NEOPRENE), AS PER PLAN (23"x18"x3.448" FIXED BEARING)	P.287
							5			5		516	44201	5	EACH	ELASTOMERIC BEARING WITH INTERNAL LAMINATES AND LOAD PLATE (NEOPRENE), AS PER PLAN (20"x15"x3.448" FIXED BEARING)	P.287
							4			4		516	44301	4	EACH	ELASTOMERIC BEARING WITH INTERNAL LAMINATES AND LOAD PLATE (NEOPRENE), AS PER PLAN (18"x14"x4.068" EXP. BEARING)	P.287
							5			5		516	44301	5	EACH	ELASTOMERIC BEARING WITH INTERNAL LAMINATES AND LOAD PLATE (NEOPRENE), AS PER PLAN (16"x13"x4.068" EXP. BEARING)	P.287
							4			4		516	44301	4	EACH	ELASTOMERIC BEARING WITH INTERNAL LAMINATES AND LOAD PLATE (NEOPRENE), AS PER PLAN (19"x16"x4.068" EXP. BEARING)	P.287
							5			5		516	44301	5	EACH	ELASTOMERIC BEARING WITH INTERNAL LAMINATES AND LOAD PLATE (NEOPRENE), AS PER PLAN (17"x13"x4.068" EXP. BEARING)	P.287
							29			29		517	76300	29	FT	RAILING, MISC.: SIDEWALK RAILING AT REAR ABUTMENT MSE WALLS	P.287
							276			276		518	20000	276	SY	PREFABRICATED GEOCOMPOSITE DRAIN	
							65			65		518	21201	65	CY	POROUS BACKFILL WITH GEOTEXTILE FABRIC, AS PER PLAN	P.246
							767			767		518	39800	767	FT	4" PERFORATED CORRUGATED PLASTIC PIPE	
							89			89		518	62100	89	FT	STRUCTURE DRAINAGE, MISC.: NEOPRENE TROUGH AND DRAINAGE OUTLETS	P.322
							4			4		523	20000	4	EACH	DYNAMIC LOAD TESTING	
							4			4		523	20500	4	EACH	RESTRIKE	
							602			602		526	30011	602	SY	REINFORCED CONCRETE APPROACH SLABS WITH QC/QA (T=17"), AS PER PLAN	P.245
								180		180		526	90030	180	FT	TYPE C INSTALLATION	
								LS	(1)	LS		SPECIAL	53000200	LS		STRUCTURES: TEMPORARY SUPPORTS FOR GIRDERS	P.245
								728		728		SPECIAL	53013000	728	SF	FORM LINER: STRUCTURES: SCREEN WALLS	P.248A

GENERAL SUMMARY

HAM-IR 75-1.05

MODEL: Sheet PAPERSIZE: 34x22 (in.) DATE: 8/28/2025 TIME: 9:31:16 AM PLTDRV: OHDOT_PDF.pltcfg PENTBL: OHDOT_Pen_Addendum.tbl USER: WORKSPACE: OHDOTCEv02 WORKSET: 122048 PRODUCT: OpenRoadsDesigner 10.12.02.4
pw:\\ohiodot-pw.bentley.com:ohiodot-pw-02\Documents\01 Active Projects\District 08\Hamilton\122048\403-Engineering_StructurePoint\Roadway\Sheets\122048_GG306.dgn

DESIGN AGENCY: STRUCTUREPOINT LLC (A WSP FIRM)
DESIGNER: LZS
REVIEWER: KAM 03/03/25
PROJECT ID: 122048
SHEET: P.64 TOTAL: P.421

SHEET NUM. OFFICE CALCS					P.250		P.333			PART. 01/IMS	02/IMS	03/IMS	ITEM	ITEM EXT	GRAND TOTAL	UNIT	DESCRIPTION	SEE SHEET NO.
																	STRUCTURE OVER 20 FOOT SPAN (HAM-75-0104) (SFN 3109098) (CONTINUED)	
					LS						LS		SPECIAL	53014000	LS		STRUCTURAL SURVEY AND MONITORING OF VIBRATION	P.246
					69						69		601	21001	69	SY	CONCRETE SLOPE PROTECTION, AS PER PLAN	P.262
					500						500		605	13301	500	FT	6" UNCLASSIFIED PIPE UNDERDRAINS, AS PER PLAN	P.246
					20						20		605	98300	20	EACH	UNDERDRAINS, MISC.: CLEANOUT	P.314
					4						4		605	98300	4	EACH	UNDERDRAINS, MISC.: DRAINAGE OUTLET AT ABUTMENT	P.314
					2						2		605	98300	2	EACH	UNDERDRAINS, MISC.: DRAINAGE OUTLET AT PIER 1	P.314
					384						384		608	40001	384	FT	CONCRETE STEPS, TYPE A, AS PER PLAN	P.267
					284						284		659	00301	284	CY	TOPSOIL, AS PER PLAN	P.248
					21						21		661	00500	21	CY	MULCH	
					2						2		SPECIAL	69098000	2	EACH	BRIDGE PILASTER LETTERS	P.248
					2						2		SPECIAL	69098000	2	EACH	BRIDGE PILASTER STORY PANELS	P.248A
					48						48		SPECIAL	69098000	48	EACH	PLANTER POTS	P.247
					6,010						6,010		840	20000	6,010	SF	MECHANICALLY STABILIZED EARTH WALL	
					3,033						3,033		840	21000	3,033	CY	WALL EXCAVATION	
					717						717		840	22000	717	SY	FOUNDATION PREPARATION	
					3,283						3,283		840	23000	3,283	CY	SELECT GRANULAR BACKFILL	
					665						665		840	25010	665	FT	6" DRAINAGE PIPE, PERFORATED	
					60						60		840	25020	60	FT	6" DRAINAGE PIPE, NON-PERFORATED	
					420						420		840	26000	420	FT	CONCRETE COPING	
					2,812						2,812		840	26050	2,812	SF	AESTHETIC SURFACE TREATMENT	P.245
					5						5		840	27000	5	DAY	ON-SITE ASSISTANCE	
					LS						LS		840	28000	LS		SGB INSPECTION AND COMPACTION TESTING	
																	STRUCTURE OVER 20 FOOT SPAN (HAM-75-0123E) (SFN 3109152)	
							LS					LS	202	11002	LS		STRUCTURE REMOVED, OVER 20 FOOT SPAN	
							LS				LS		503	11100	LS		COFFERDAMS AND EXCAVATION BRACING	
							LS				LS		503	21300	LS		UNCLASSIFIED EXCAVATION	
							LS				LS		505	11100	LS		PILE DRIVING EQUIPMENT MOBILIZATION	
							420				420		507	00501	420	FT	12" CAST-IN-PLACE REINFORCED CONCRETE PILES, DRIVEN, AS PER PLAN	P.332
							450				450		507	00550	450	FT	12" CAST-IN-PLACE REINFORCED CONCRETE PILES, FURNISHED	
							7,757				7,757		509	26000	7,757	LB	GALVANIZED STEEL REINFORCEMENT	
							16				16		511	31611	16	CY	CLASS QC2 CONCRETE, SUPERSTRUCTURE, AS PER PLAN	P.332
							10				10		511	34448	10	CY	CLASS QC2 CONCRETE, BRIDGE DECK (PARAPET)	
							41				41		511	43510	41	CY	CLASS QC1 CONCRETE, ABUTMENT INCLUDING FOOTING	
							470				470		512	10001	470	SY	SEALING OF CONCRETE SURFACES, AS PER PLAN	P.332
							6				6		512	33000	6	SY	TYPE 2 WATERPROOFING	
							6				6		515	12040	6	EACH	PRESTRESSED CONCRETE COMPOSITE BOX BEAM BRIDGE MEMBERS, LEVEL 1, CB21-36 (62'-9" Long)	
							33				33		516	13200	33	SF	1/2" PREFORMED EXPANSION JOINT FILLER	
							32				32		516	13600	32	SF	1" PREFORMED EXPANSION JOINT FILLER	
							23				23		516	13900	23	SF	2" PREFORMED EXPANSION JOINT FILLER	
							28				28		516	14020	28	FT	SEMI-INTEGRAL ABUTMENT EXPANSION JOINT SEAL	
							26				26		516	31010	26	FT	2" DEEP JOINT SEALER	
							12				12		516	43100	12	EACH	ELASTOMERIC BEARING WITH INTERNAL LAMINATES ONLY (NEOPRENE) (8.5"x8"x1.564")	
							166				166		517	76302	166	EACH	RAILING, MISC.:PEDESTRIAN ADA COMPLIANT RAILING	P.332
							4				4		518	21200	4	CY	POROUS BACKFILL WITH GEOTEXTILE FABRIC	
							23				23		518	40000	23	FT	6" PERFORATED CORRUGATED PLASTIC PIPE	P.336
							130				130		518	40011	130	FT	6" NON-PERFORATED CORRUGATED PLASTIC PIPE, INCLUDING SPECIALS, AS PER PLAN	P.332
							6				6		601	21000	6	SY	CONCRETE SLOPE PROTECTION	
							131				131		607	39911	131	FT	VANDAL PROTECTION FENCE, 8' STRAIGHT, COATED FABRIC, AS PER PLAN	P.332
							131				131		SPECIAL	60740000	131	FT	VANDAL PROTECTION FENCE, 12' STRAIGHT, COATED FABRIC	P.332
							1,279				1,279		608	13000	1,279	SF	6" CONCRETE WALK	
							470				470		608	98000	470	SF	WALKWAY, MISC.: 10" CONCRETE WALK	P.337
							1				1		625	33000	1	EACH	STRUCTURE GROUNDING SYSTEM	
							3,589				3,589		840	20000	3,589	SF	MECHANICALLY STABILIZED EARTH WALL	
							595				595		840	21000	595	CY	WALL EXCAVATION	
							220				220		840	22000	220	SY	FOUNDATION PREPARATION	
							752				752		840	23000	752	CY	SELECT GRANULAR BACKFILL	
							111				111		840	23050	111	CY	NATURAL SOIL	

GENERAL SUMMARY

HAM-IR 75-1.05

MODEL: Sheet PAPERSIZE: 34x22 (in.) DATE: 8/28/2025 TIME: 9:31:25 AM PLTDRV: OHDOT_PDF.pltcfg PENTBL: OHDOT_Pen_Addendum.tbl USER: WORKSPACE: OHDOTCEv02 WORKSET: 122048 PRODUCT: OpenRoadsDesigner 10.12.02.4
pw:\\ohiodot-pw.bentley.com:ohiodot-pw-02\Documents\01 Active Projects\District 08\Hamilton\122048403-Engineering_StructurePoint\Roadway\Sheets\122048_GG307.dgn

DESIGN AGENCY: STRUCTUREPOINT LLC

DESIGNED

REVIEWED: KAM 03/03/25

PROJECT ID: 122048

SHEET: P.65 TOTAL: P.421

OFFICE CALCS	P.15	P.16	P.17	P.18	P.19	P.20	P.21	P.22	P.23	P.333	PART. 01/IMS	PART. 02/IMS	PART. 03/IMS	ITEM	ITEM EXT	GRAND TOTAL	UNIT	DESCRIPTION	SEE SHEET NO.
																		STRUCTURE OVER 20 FOOT SPAN (HAM-75-0123E) (SFN 3109152) (CONTINUED)	
										298		298		840	25010	298	FT	6" DRAINAGE PIPE, PERFORATED	
									1	29		29		840	25020	29	FT	6" DRAINAGE PIPE, NON-PERFORATED	
										293		293		840	26000	293	FT	CONCRETE COPING	
										3,589		3,589		840	26050	3,589	SF	AESTHETIC SURFACE TREATMENT	
										5		5		840	27000	5	DAY	ON-SITE ASSISTANCE	
										LS		LS		840	28000	LS		SGB INSPECTION AND COMPACTION TESTING	
																		MAINTENANCE OF TRAFFIC	
					600						600			253	01001	600	SY	PAVEMENT REPAIR, AS PER PLAN, PERFORMED IN 2026	P.17
					600						600			253	01001	600	SY	PAVEMENT REPAIR, AS PER PLAN, PERFORMED IN 2027	P.17
					200						200			253	01001	200	SY	PAVEMENT REPAIR, AS PER PLAN, PERFORMED IN 2028	P.17
								360			360			607	39994	360	FT	TEMPORARY VANDAL FENCE, TYPE B	
				1,000							1,000			614	11110	1,000	HOUR	LAW ENFORCEMENT OFFICER WITH PATROL CAR FOR ASSISTANCE	
							2,270		150		2,420			614	11630	2,420	FT	INCREASED BARRIER DELINEATION	
							5	1	1		7			614	12380	7	EACH	WORK ZONE IMPACT ATTENUATOR, 24" WIDE HAZARDS, (UNIDIRECTIONAL)	
		6									6			614	12410	6	EACH	SPEED ZONE AHEAD SYMBOL SIGN	
											LS			614	12420	LS		DETOUR SIGNING	
		12									12			614	12470	12	EACH	WORK ZONE SPEED LIMIT SIGN	
		7									7			614	12484	7	EACH	WORK ZONE INCREASED PENALTIES SIGN	
	10										10			614	12500	10	EACH	REPLACEMENT SIGN	
	100										100			614	12600	100	EACH	REPLACEMENT DRUM	
							1,594				1,594			614	12801	1,594	EACH	WORK ZONE RAISED PAVEMENT MARKER, AS PER PLAN	P.15
							44	13	3		60			614	13310	60	EACH	BARRIER REFLECTOR, TYPE 1, 1-WAY	
								9			9			614	13310	9	EACH	BARRIER REFLECTOR, TYPE 1, 2-WAY	
							44	13	3		60			614	13350	60	EACH	OBJECT MARKER, ONE WAY	
								9			9			614	13360	9	EACH	OBJECT MARKER, TWO WAY	
					1,400						1,400			614	18030	1,400	FT	MAINTAINING TRAFFIC, MISC.:, RUMBLE STRIP MILLED/FILLED	P.17
			32								32			614	18601	32	SNMT	PORTABLE CHANGEABLE MESSAGE SIGN, AS PER PLAN	P.15
							2.74				2.74			614	22056	2.74	MILE	WORK ZONE EDGE LINE, CLASS I, 6", 807 PAINT	
								1.42	0.12		1.54			614	22110	1.54	MILE	WORK ZONE EDGE LINE, CLASS I, 6", 642 PAINT	
	1.4										1.4			614	22336	1.4	MILE	WORK ZONE EDGE LINE, CLASS I, 6", 648	
							18,622				18,622			614	23110	18,622	FT	WORK ZONE CHANNELIZING LINE, CLASS I, 12", 807 PAINT	
								2,126			2,126			614	23210	2,126	FT	WORK ZONE CHANNELIZING LINE, CLASS I, 12", 642 PAINT	
	9,300										9,300			614	23150	9,300	FT	WORK ZONE CHANNELIZING LINE, CLASS I, 12", 648	
							1,925				1,925			614	24102	1,925	FT	WORK ZONE DOTTED LINE, CLASS I, 6", 807 PAINT	
	690										690			614	24142	690	FT	WORK ZONE DOTTED LINE, CLASS I, 6", 648	
								623	403		1,026			614	24202	1,026	FT	WORK ZONE DOTTED LINE, CLASS I, 6", 642 PAINT	
							507				507			614	25000	507	FT	WORK ZONE TRANSVERSE/DIAGONAL LINE, CLASS I	
							4	14			18			614	30200	18	EACH	WORK ZONE ARROW, CLASS I, 642 PAINT	
											LS			615	10000	LS		ROADS FOR MAINTAINING TRAFFIC	
									262		262			615	20000	262	SY	PAVEMENT FOR MAINTAINING TRAFFIC, CLASS A	
	8										8			616	10000	8	MGAL	WATER	
							1,820	650			2,470			622	41100	2,470	FT	PORTABLE BARRIER, UNANCHORED	
							450	450	150		1,050			622	41110	1,050	FT	PORTABLE BARRIER, ANCHORED	
			12								12			829	00100	12	SNMT	WORK ZONE EGRESS WARNING SYSTEM	
			84								84			896	00010	84	SNMT	PORTABLE NON-INTRUSIVE TRAFFIC SENSOR, CLASS I	
			12								12			896	00021	12	SNMT	PORTABLE CHANGEABLE MESSAGE SIGN, AS PER PLAN	P.15
																		INCIDENTALS	
LS											LS			108	XXXXX	LS		CPM PROGRESS SCHEDULE, AS PER PLAN	P.13
LS											LS			614	11000	LS		MAINTAINING TRAFFIC 1 1	
1											1			619	XXXXX	1	EACH	FIELD OFFICE, AS PER PLAN	P.13
LS										1	LS			623	10000	LS		CONSTRUCTION LAYOUT STAKES AND SURVEYING 1 1 1	
LS											LS			624	10000	LS		MOBILIZATION	

GENERAL SUMMARY

DESIGN AGENCY: MPEAN STRUCTUREPOINT INC.

DESIGNER: LZS

REVIEWER: KAM 03/03/25

PROJECT ID: 122048

SHEET: P.66 TOTAL: P.344

HAM-IR 75-1.05

MODEL: Sheet PAPERSIZE: 34x22 (in.) DATE: 8/28/2025 TIME: 9:31:34 AM PLTDRV: OHDOT_PDF.pltcfg PENTBL: OHDOT_Pen_Addendum.tbl USER: WORKSPACE: OHDOTCEv02 WORKSET: 122048 PRODUCT: OpenRoadsDesigner 10.12.02.4
pw:\\ohiodot-pw.bentley.com:ohiodot-pw-02\Documents\01 Active Projects\District 08\Hamilton\122048403-Engineering_StructurePoint\Roadway\Sheets\122048_GG308.dgn

REFERENCE NO.	SHEET NO.	ALIGNMENT	STATION FROM	STATION TO	SIDE		202 PAVEMENT REMOVED	202 WALK REMOVED	202 CURB REMOVED	202 PIPE REMOVED, 24" AND UNDER	202 GUARDRAIL REMOVED	202 ANCHOR ASSEMBLY REMOVED, TYPE A, AS PER PLAN	202 MANHOLE REMOVED	202 CATCH BASIN REMOVED	202 FENCE REMOVED	202 REMOVAL MISC.: RETAINING WALL					
							SY	SF	FT	FT	FT	EACH	EACH	EACH	FT	FT					
R-346	87	CLP_RAMP V	59+00.00	64+50.00	RT				548												
R-347	87	CLP_RAMP V	59+80.41		RT					18				1							
R-348	87	CLP_RAMP V	60+71.94		RT					23				1							
R-349	87 & 88	CLP_RAMP V	60+54.11	66+20.45							576										
R-350	87	CLP_RAMP V	64+80.91		LT					103				1							
R-351	88	CLP_RAMP V	64+50.00	70+00.00	LT/RT		1317														
R-352	89	CLP_RAMP V	65+13.46	66+23.37	LT				109												
R-353	88 & 89	CLP_RAMP V	66+24.62	72+86.36											652						
R-354	88	CLP_RAMP V	69+06.38		RT					42				1							
R-355	88	CLP_RAMP V	69+40.86	70+00.00	LT				60												
R-356	89	CLP_RAMP V	70+00.00	73+00.00	LT/RT		1506														
R-357	89	CLP_RAMP V	70+00.00	72+92.01	LT				299												
R-358	88 & 89	CLP_RAMP V	69+40.86	72+46.24							313										
R-359	86 - 88	CLP_RAMP V	54+49.75	64+55.91				98													
R-360	86 & 87	CLP_RAMP V	58+49.59	62+93.68	RT											440					

REFERENCE NO.	SHEET NO.	ALIGNMENT	STATION FROM	STATION TO	SIDE	611 12" CONDUIT, TYPE B, AS PER PLAN	611 12" CONDUIT, TYPE B, AS PER PLAN (CINCINNATI)	611 12" CONDUIT, TYPE C, AS PER PLAN	611 12" CONDUIT, TYPE C, AS PER PLAN (CINCINNATI)	611 15" CONDUIT, TYPE B, AS PER PLAN	611 15" CONDUIT, TYPE B, AS PER PLAN (CINCINNATI)	611 15" CONDUIT, TYPE C, AS PER PLAN (CINCINNATI)	611 18" CONDUIT, TYPE B, AS PER PLAN	611 18" CONDUIT, TYPE B, AS PER PLAN (CINCINNATI)	611 18" CONDUIT, TYPE C, AS PER PLAN	611 18" CONDUIT, TYPE C, AS PER PLAN (CINCINNATI)	611 24" CONDUIT, TYPE B, AS PER PLAN	611 CATCH BASIN, NO. 3	611 CATCH BASIN, NO. 3A	611 CATCH BASIN, NO. 6	611 CATCH BASIN, NO. 2-2B	611 CATCH BASIN, NO. 2-3	611 CATCH BASIN, MISC.: COMBINATION INLET (CI) (CINCINNATI)	611 CATCH BASIN, MISC.: DOUBLE GUTTER INLET MANHOLE (DGIMH) (CINCINNATI)	611 INLET, NO. 3C	611 INLET, MISC.: DITCH INLET (DI) (CINCINNATI)	611 MANHOLE, NO. 3	611 MANHOLE, MISC.: STANDARD MANHOLE, TYPE B (CINCINNATI)	611 SLOTTED DRAIN, TYPE 1, 6"
			FROM	TO		FT	FT	FT	FT	FT	FT	FT	FT	FT	FT	FT	FT	EACH	EACH	EACH	EACH	EACH	EACH	EACH	EACH	EACH	EACH	EACH	FT
			DRAINAGE																										
D-301	79	CLP_COURT	7+00.00	7+00.00	LT											14						1							
D-302	79	CLP_COURT	7+00.00	8+00.00	RT		32							36									1						
D-303	79 & 81	CLP_COURT	8+00.00	8+00.00	LT		35															1						
D-304	79 & 81	CLP_COURT	8+00.00	8+00.00	RT		57							97									1						
D-305	81	CLP_COURT	8+40.00	8+00.00	RT									34									1						
D-306	81	CLP_COURT	8+85.00	8+85.00	LT		20													1									
D-307	81	CLP_COURT	8+85.00	8+40.00	RT									42									1						
D-308	81	CLP_COURT	9+34.73	9+34.73	LT		20													1									
D-309	81	CLP_COURT	9+34.73	8+85.00	RT		40					49												1					
D-310	81	CLP_COURT	10+00.00	10+00.00	LT		20													1									
D-311	81	CLP_COURT	10+00.00	9+34.73	RT						65													1					
D-312	81	CLP_COURT	11+00.00	11+00.00	LT		20													1									
D-313	81	CLP_COURT	11+00.00	10+00.00	CL						98																	1	
D-314	81	CLP_COURT	11+00.00	11+00.00	LT		25															1						
D-315	81	CLP_WINCHELL	763+10.12	11+00.00	RT		149																			1			
D-316	81	CLP_WINCHELL	757+19.22	7+00.00	RT				67												1								
D-317	81	CLP_COURT	7+00.00		LT											10												1	
D-318			NOT	USED																									
D-319			NOT	USED																									
D-320			NOT	USED																									
D-321			NOT	USED																									
D-322			NOT	USED																									
D-323			NOT	USED																									
D-324	83	CLP_LINN	110+33.00	110+20.65	LT				29													1							
D-325	83	CLP_LINN	110+17.00	110+33.00	RT		38															1							
D-326	79 & 83	CLP_LINN	111+17.00	4+73.68	LT		10															1							
D-327	79 & 83	CLP_LINN	111+47.20	4+73.68	RT		10															1							
D-328	82	CLP_LINN	105+35.00	105+23.16	RT		21															1							
D-329	82	CLP_LINN	105+35.00	105+23.16	LT		21															1							
D-330	82	CLP_LINN	105+23.16	103+48.87	CL		184																					1	
D-331			NOT	USED																									
D-332			NOT	USED																									
D-333			NOT	USED																									
D-334			NOT	USED																									
D-335			NOT	USED																									
D-336			NOT	USED																									
D-337			NOT	USED																									
D-338			NOT	USED																									
D-339			NOT	USED																									
D-340			NOT	USED																									
D-341*	84	CLP_WINCHELL	753+13.16	756+40.00	RT																								
D-342*	84	CLP_WINCHELL	756+40.00	758+55.00	RT																								
D-343	84 & 87	CLP_WINCHELL	758+55.00	760+85.00	RT		229												1										
D-344	84 & 87	CLP_WINCHELL	760+85.00	761+85.00	RT						100								1										
D-345	84 & 87	CLP_RAMP V	60+70.00	761+85.00	RT					31																		1	
SUBTOTALS CARRIED TO SHEET P.71						0	931	0	96	31	263	49	0	209	0	24	0	0	2	4	1	0	9	6	1	1	0	3	0

* DRAINAGE ITEMS TO BE CONSTRUCTED AS PART OF THE BRENT SPENCE BRIDGE PROJECT (PID 116649), SHOWN FOR INFORMATION ONLY

** DRAINAGE ITEMS TO BE CONSTRUCTED AS PART OF THE HAM-IR 75-1.05 (PHASE 3) PROJECT (PID 113361), SHOWN FOR INFORMATION ONLY

1 8/28/25

1 8/28/25

DRAINAGE SUBSUMMARY

DESIGN AGENCY: WSP / STRUCTUREPOINT INC.

DESIGNER: LZS

REVIEWER: KAM 03/03/25

PROJECT ID: 122048

SHEET: P.70 | TOTAL: P.421

HAM-IR 75-1.05

MODEL: Sheet PAPERSIZE: 34x22 (in.) DATE: 8/28/2025 TIME: 9:31:52 AM PLTDRV: OHDOT_PDF.pltcfg PENTBL: OHDOT_Pen_Addendum.tbl USER: WORKSPACE: OHDOTCEv02 WORKSET: 122048 PRODUCT: OpenRoadsDesigner 10.12.02.4
pw:\\ohiodot-pw.bentley.com:ohiodot-pw-02\Documents\01 Active Projects\District 08\Hamilton\122048\403-Engineering_StructurePoint\Drainage\Sheets\122048_DS301.dgn

REFERENCE NO.	SHEET NO.	ALIGNMENT	STATION FROM	STATION TO	SIDE	611 12" CONDUIT, TYPE B, AS PER PLAN FT	611 12" CONDUIT, TYPE B, AS PER PLAN (CINCINNATI) FT	611 12" CONDUIT, TYPE C, AS PER PLAN FT	611 12" CONDUIT, TYPE C, AS PER PLAN (CINCINNATI) FT	611 15" CONDUIT, TYPE B, AS PER PLAN FT	611 15" CONDUIT, TYPE B, AS PER PLAN (CINCINNATI) FT	611 15" CONDUIT, TYPE C, AS PER PLAN (CINCINNATI) FT	611 18" CONDUIT, TYPE B, AS PER PLAN FT	611 18" CONDUIT, TYPE B, AS PER PLAN (CINCINNATI) FT	611 18" CONDUIT, TYPE C, AS PER PLAN FT	611 18" CONDUIT, TYPE C, AS PER PLAN (CINCINNATI) FT	611 24" CONDUIT, TYPE B, AS PER PLAN FT	611 CATCH BASIN, NO. 3 EACH	611 CATCH BASIN, NO. 3A EACH	611 CATCH BASIN, NO. 6 EACH	611 CATCH BASIN, NO. 2-2B EACH	611 CATCH BASIN, NO. 2-3 EACH	611 CATCH BASIN, MISC.: COMBINATION INLET (CI) (CINCINNATI) EACH	611 CATCH BASIN, MISC.: DOUBLE GUTTER INLET MANHOLE (DGIMH) (CINCINNATI) EACH	611 INLET, NO. 3C EACH	611 INLET, MISC.: DITCH INLET (DI) (CINCINNATI) EACH	611 MANHOLE, NO. 3 EACH	611 MANHOLE, MISC.: STANDARD MANHOLE, TYPE B (CINCINNATI) EACH	611 SLOTTED DRAIN, TYPE 1, 6" FT
D-346	85 & 87	CLP_WINCHELL	761+85.00	762+13.51	RT										28				1										
D-347	85 & 87	CLP_WINCHELL	762+13.51	62+28.00	RT										17				1										
D-348	85 & 87	CLP_WINCHELL	762+40.00	762+13.51	RT	26														1									
D-349	85 & 87	CLP_WINCHELL	763+15.00	762+40.00	RT	75														1									
D-350	85 & 87	CLP_RAMP V	62+28.00	62+40.07	RT								21								1								268
D-351	85 & 87	CLP_RAMP V	62+40.07	62+60.00	LT								20					1											
D-352	85 & 87	CLP_RAMP V	62+60.00	62+98.00	LT										40					1									
D-353	85 & 87	CLP_RAMP V	62+98.00	64+08.57	LT								140															1	
D-354	85 & 87	CLP_RAMP V	62+96.80		LT										10													1	
D-355			NOT	USED																									
D-356			NOT	USED																									
D-357	88	CLP_RAMP V	65+87.50	65+85.00	RT	25																	1						
D-358	85 & 88	CLP_RAMP V	65+85.00	67+65.00	RT	180													1										
D-359**	85 & 88	CLP_RAMP V	67+47.22	69+25.31	LT																								
D-360	85 & 88	CLP_RAMP V	67+65.00	68+25.00	RT					60									1										
D-361	88	CLP_RAMP V	68+25.00	68+75.00	RT					50									1										
D-362	88	CLP_RAMP V	68+75.00	69+25.00	RT					50									1										
D-363	88	CLP_RAMP V	69+25.00	62+72.73	RT					47									1										
D-364**	88	CLP_RAMP V	69+25.31	69+72.73	LT					49																			
D-365	88	CLP_RAMP V	69+72.73	70+25.00	LT								54					1											
D-366	88	CLP_RAMP V	62+72.73	70+25.00	RT								52					1											
D-367	89	CLP_RAMP V	70+25.00	70+25.00	RT			12														1							
D-368	89	CLP_RAMP V	70+25.00	70+25.00	LT								52						1										
D-369	89	CLP_RAMP V	70+25.00	70+72.39	RT												53		1										
D-370	89	CLP_RAMP V	70+90.00	70+72.39	RT			31											1										
D-371	89	CLP_RAMP V	71+35.00	70+90.00	RT	45													1										
D-372	89	CLP_RAMP V	72+35.00	71+35.00	RT	99													1										
SUBTOTALS FROM THIS SHEET						450	0	43	0	256	0	0	339	45	50	0	53	4	14	1	1	1	0	0	0	0	2	0	268
SUBTOTALS CARRIED FROM SHEET P.70						0	931	0	96	31	263	49	0	209	0	24	0	0	2	4	1	0	9	6	1	1	0	3	0
TOTALS CARRIED TO GENERAL SUMMARY						450	931	43	96	287	263	49	339	254	50	24	53	4	16	5	2	1	9	6	1	1	2	3	268

* DRAINAGE ITEMS TO BE CONSTRUCTED AS PART OF THE BRENT SPENCE BRIDGE PROJECT (PID 116649), SHOWN FOR INFORMATION ONLY

** DRAINAGE ITEMS TO BE CONSTRUCTED AS PART OF THE HAM-IR 75-1.05 (PHASE 3) PROJECT (PID 113361), SHOWN FOR INFORMATION ONLY

1 8/28/25

1 8/28/25

DRAINAGE SUBSUMMARY

HAM-IR 75-1.05

DESIGN AGENCY
AMERICAN STRUCTUREPOINT INC.

DESIGNER LZS

REVIEWER KAM 03/03/25

PROJECT ID 122048

SHEET P.71 TOTAL P.421

MODEL: Sheet PAPERSIZE: 34x22 (in.) DATE: 8/28/2025 TIME: 9:32:02 AM PLTDRV: OHDOT_PDF.pltcfg PENTBL: OHDOT_Pen_Addendum.tbl USER: WORKSPACE: OHDOTCEv02 WORKSET: 122048 PRODUCT: OpenRoadsDesigner 10.12.02.4
pw:\\ohiodot-pw.bentley.com:ohiodot-pw-02\Documents\01 Active Projects\District 08\Hamilton\122048\403-Engineering_StructurePoint\Drainage\Sheets\122048_DS302.dgn

ALIGNMENT	STATION TO STATION		SIDE	LENGTH (L)	AVERAGE WIDTH (W)	SURFACE AREA (A) A=LxW	CADD AREA	204 EXCAVATION OF SUBGRADE 12"	204 GRANULAR MATERIAL, TYPE C 12"	204 PROOF ROLLING	204 GEOTEXTILE FABRIC	206 CEMENT	206 CURING COAT	206 CEMENT STABILIZED SUBGRADE, 14 INCHES DEEP	206 DIAMOND GRINDING PORTLAND CEMENT CONCRETE PAVEMENT	302 ASPHALT CONCRETE BASE, PG64-22, (449) 5"	302 ASPHALT CONCRETE BASE, PG64-22, (449) 8.5"	304 AGGREGATE BASE 6"	407 NON-TRACKING TACK COAT(0.055 GAL/SY)	442 ASPHALT CONCRETE SURFACE COURSE, 12.5 MM, TYPE A (447) 1.5"	442 ASPHALT CONCRETE SURFACE COURSE, 12.5 MM, TYPE A (448) 2"	442 ASPHALT CONCRETE INTERMEDIATE COURSE, 12.5 MM, TYPE B (446) 1.75" 1	452 10" NON-REINFORCED CONCRETE PAVEMENT, CLASS QC 1P WITH QC/QA 10"	609 CONCRETE MEDIAN
				FT	FT	SQ FT	SQ FT	CY	CY	HOUR	SY	TON	SY	SY	SY	CY	CY	CY	GAL	CY	CY	CY	SY	SF
CLP_COURT	5+50.00	7+81.59	LT/RT	231.59	36.00	8337.24										129			102		51	45		
					40.17	9302.97		345	345	0.52	1034													
CLP_COURT	7+81.59	8+74.08	LT/RT				2596.39									40			32		16	14		
							2983.10	110	110	0.17	331													
CLP_COURT	8+74.08	10+22.08	LT/RT	148.00	20.00	2960.00										46			36		18	16		
					24.17	3577.16		132	132	0.20	397													
CLP_COURT	10+22.08	11+71.05	LT/RT				11483.85									177			140		71	62		
							12464.31	462	462	0.69	1385													
CLP_LINN	95+54.94	102+03.21	RT				34376.10								3820									
CLP_LINN	103+03.76	104+92.58	LT/RT				15448.77								1717									
CLP_LINN	104+92.58	105+27.00	LT/RT				2458.54												30		15			
CLP_LINN	105+27.00	105+51.32	LT/RT	24.32	34.00	826.88																	92	
					38.74	942.25		35	35	0.05	105													
							109.78																	110
CLP_LINN	109+98.74	110+14.08	LT/RT	15.34	34.00	521.56										8			6		3	3		
					38.23	586.37		22	22	0.03	65													
CLP_LINN	109+98.74	110+18.50	LT/RT				166.14																	166
CLP_LINN	110+14.08	111+01.48	LT	87.4	17.00	1485.80										23			18		9	8		
					19.08	1667.59		62	62	0.09	185													
CLP_LINN	110+14.08	110+63.89	RT	49.81	22.50	1120.72										17			14		7	6		
					26.67	1328.43		49	49	0.07	148													
CLP_LINN	110+63.89	111+27.73	RT	63.84	28.00	1787.52										28			22		11	10		
					30.08	1920.31		71	71	0.11	213													
CLP_LINN	111+01.48	111+58.38	LT				1604.61									25			20		10	9		
							1726.39	64	64	0.10	192													
CLP_LINN	111+27.73	111+58.38	RT				1392.84									21			17		9	8		
							1528.53	57	57	0.08	170													
SUBTOTALS CARRIED TO SHEET P.74								1409	1409	2	4225	0	0	0	5537	514	0	0	437	0	220	181	92	276

PAVEMENT CALCULATIONS

HAM-IR 75-1.05

MODEL: Sheet PAPERSIZE: 34x22 (in.) DATE: 8/28/2025 TIME: 9:32:14 AM PLTDRV: OHDOT_PDF.pltcfg PENTBL: OHDOT_Pen_Addendum.tbl USER: WORKSPACE: OHDOTCEv02 WORKSET: 122048 PRODUCT: OpenRoadsDesigner 10.12.02.4
pw:\\ohiodot-pw.bentley.com:ohiodot-pw-02\Documents\01 Active Projects\District 08\Hamilton\122048\403-Engineering_StructurePoint\Roadway\Sheets\122048_GC301.dgn

DESIGN AGENCY: STRUCTUREPOINT INC.
DESIGNER: LZS
REVIEWER: KAM 03/03/25
PROJECT ID: 122048
SHEET: P.73 | TOTAL: P.421

ALIGNMENT	STATION TO STATION		SIDE	LENGTH (L)	AVERAGE WIDTH (W)	SURFACE AREA (A) A=LxW	CADD AREA	204 EXCAVATION OF SUBGRADE 12"	204 GRANULAR MATERIAL, TYPE C 12"	204 PROOF ROLLING	204 GEOTEXTILE FABRIC	206 CEMENT	206 CURING COAT	206 CEMENT STABILIZED SUBGRADE, 14 INCHES DEEP	206 DIAMOND GRINDING PORTLAND CEMENT CONCRETE PAVEMENT	302 ASPHALT CONCRETE BASE, PG64-22, (449) 5"	302 ASPHALT CONCRETE BASE, PG64-22, (449) 8.5"	304 AGGREGATE BASE 6"	407 NON-TRACKING TACK COAT(0.055 GAL/SY)	442 ASPHALT CONCRETE SURFACE COURSE, 12.5 MM, TYPE A (447) 1.5"	442 ASPHALT CONCRETE SURFACE COURSE, 12.5 MM, TYPE A (448) 2"	442 ASPHALT CONCRETE INTERMEDIATE COURSE, 12.5 MM, TYPE B (446) 1.75" 1	452 10" NON-REINFORCED CONCRETE PAVEMENT, CLASS QC 1P WITH QC/QA 10"	609 CONCRETE MEDIAN
				FT	FT	SQ FT	SQ FT	CY	CY	HOUR	SY	TON	SY	SY	SY	CY	CY	CY	GAL	CY	CY	CY	SY	SF
CLP_WINCHELL	758+50.00	760+75.83	LT	225.83	15.00	3387.45													21	16				
					18.00	4064.94											107		25			22		
					21.08	4761.17				0.26		16	529	529				88						
CLP_WINCHELL	760+75.83	765+30.89	LT	455.06	11.00	5005.66													61	23		27		
					14.08	6407.24				0.36		21	712	712			168	119						
CLP_RAMP V	58+53.69	59+89.23	LT/RT	135.54	16.22	2198.46				0.12		7	244	244			58	41	27	10		12		
CLP_RAMP V	59+89.23	60+84.36	LT	95.13	18.00	1712.34				0.10		6	190	190			45	32	21	8		9		
CLP_RAMP V	59+89.23	61+90.07	LT				1478.85			0.08		5	164	164			39	27	18	7		8		
CLP_RAMP V	60+84.36	61+90.07	LT	105.71	12.00	1268.52				0.07		4	141	141			33	23	16	6		7		
CLP_RAMP V	60+84.36	65+45.91	RT				3091.08			0.17		10	343	343			81	57	38	14		17		
CLP_RAMP V	61+90.07	65+45.91	LT	355.84	16.00	5693.44													70	26		31		
					18.08	6433.59				0.36		22	715	715			169	119						
CLP_RAMP V	65+45.91	66+92.54	LT/RT	146.63	27.00	3959.01													48	18		21		
					32.17	4717.09				0.26		16	524	524			124	87						
CLP_RAMP V	66+92.54	69+41.24	LT/RT	248.70	27.00	6714.90													82	31		36		
					31.58	7854.69				0.44		26	873	873			206	145						
CLP_RAMP V	66+92.54	69+41.24	LT				5032.38										132	93	62	23		27		
CLP_RAMP V	69+41.24	71+79.82	LT/RT	238.58	51.00	12167.58													149	56		66		
					56.17	13400.08				0.74		45	1489	1489			352	248						
CLP_RAMP V	71+79.82	72+80.00	LT/RT	100.18	49.00	4908.82													60	23		27		
					54.17	5426.75				0.30		18	603	603			142	100						
CLP_RAMP V	72+80.00	73+00.00	LT			732.74				0.04		2	81	81			19	14	9	3		4		
CLP_RAMP V	72+80.00	73+00.00	RT			318.02				0.02		1	35	35			8	6	4	1		2		
SUBTOTALS FROM THIS SHEET								0	0	3	0	199	6643	6643	0	0	1683	1199	711	265	0	316	0	0
SUBTOTALS CARRIED FROM SHEET P.73								1409	1409	2	4225	0	0	0	5537	514	0	0	437	0	220	181	92	276
TOTALS CARRIED TO GENERAL SUMMARY								1409	1409	5	4225	199	6643	6643	5537	2197		1199	1148	265	220	497	92	276

PAVEMENT CALCULATIONS

DESIGN AGENCY: STRUCTUREPOINT LLC (MEMBER)

DESIGNER: LZS

REVIEWER: KAM 03/03/25

PROJECT ID: 122048

SHEET P.74 | TOTAL P.421

HAM-IR 75-1.05

MODEL: Sheet PAPERSIZE: 34x22 (in.) DATE: 8/28/2025 TIME: 9:32:24 AM PLTDRV: OHDOT_PDF.pltcfg PENTBL: OHDOT_Pen_Addendum.tbl USER: pw:\\ohiodot-pw.bentley.com:ohiodot-pw-02\Documents\01 Active Projects\District 08\Hamilton\122048\403-Engineering_StructurePoint\Roadway\Sheets\122048_GC302.dgn WORKSPACE: OHDOTCEv02 WORKSET: 122048 PRODUCT: OpenRoadsDesigner 10.12.02.4

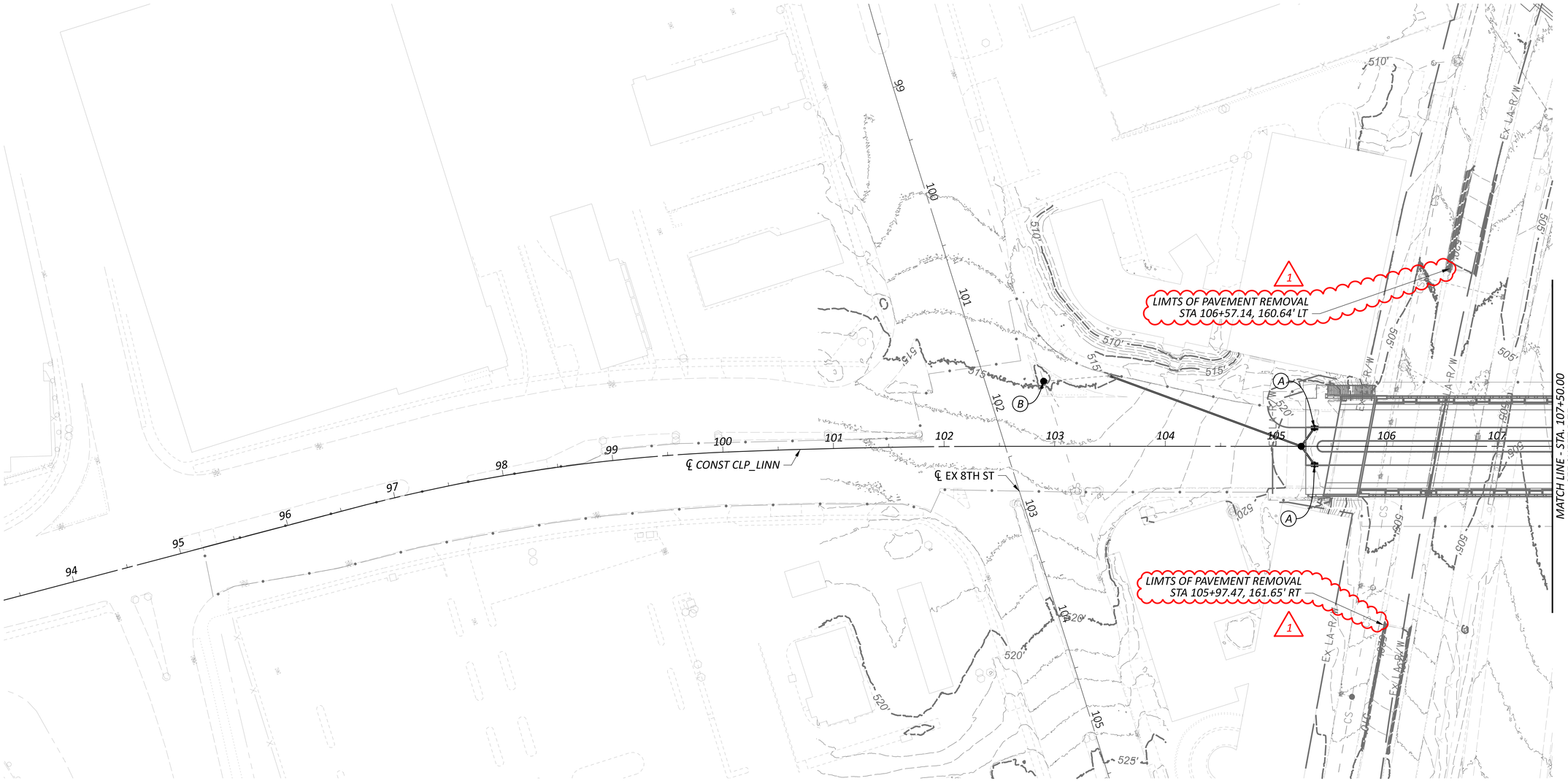

FOR LEGEND AND PROJECT DATA SEE SHEET P.75

HORIZONTAL SCALE IN FEET
0 25 50 100

PROJECT SITE PLAN

DESIGN AGENCY
AMERICAN STRUCTUREPOINT INC.

DESIGNER
LZS

REVIEWER
KAM 03/03/25

PROJECT ID
122048

SHEET P.77 TOTAL P.421

HAM-IR 75-1.05

MODEL: Sheet PAPERSIZE: 34x22 (in.) DATE: 8/28/2025 TIME: 9:33:18 AM PLTDRV: OHDOT_PDF.pltcfg PENTBL: OHDOT_Pen_Addendum.tbl USER: WORKSPACE: OHDOTCEv02 WORKSET: 122048 PRODUCT: OpenRoadsDesigner 10.12.02.4
pw:\\ohiodot-pw.bentley.com:ohiodot-pw-02\Documents\01 Active Projects\District 08\Hamilton\122048\403-Engineering_StructurePoint\Drainage\Sheets\122048_DP304.dgn

NOTE:
** DENOTES EXISTING PIPES TO BE CLEANED 1

FOR CURVE DATA SEE SHEET P.3
FOR SUBSUMMARIES SEE SHEETS P.67 - P.71
FOR INTERSECTION DETAILS SEE SHEET P.135
FOR DRIVE DETAILS SEE SHEETS P.148 - P.149
FOR CURB RAMP DETAILS SEE SHEET P.147
FOR RETAINING WALL 02 DETAILS SEE SHEETS P.164 - P.192

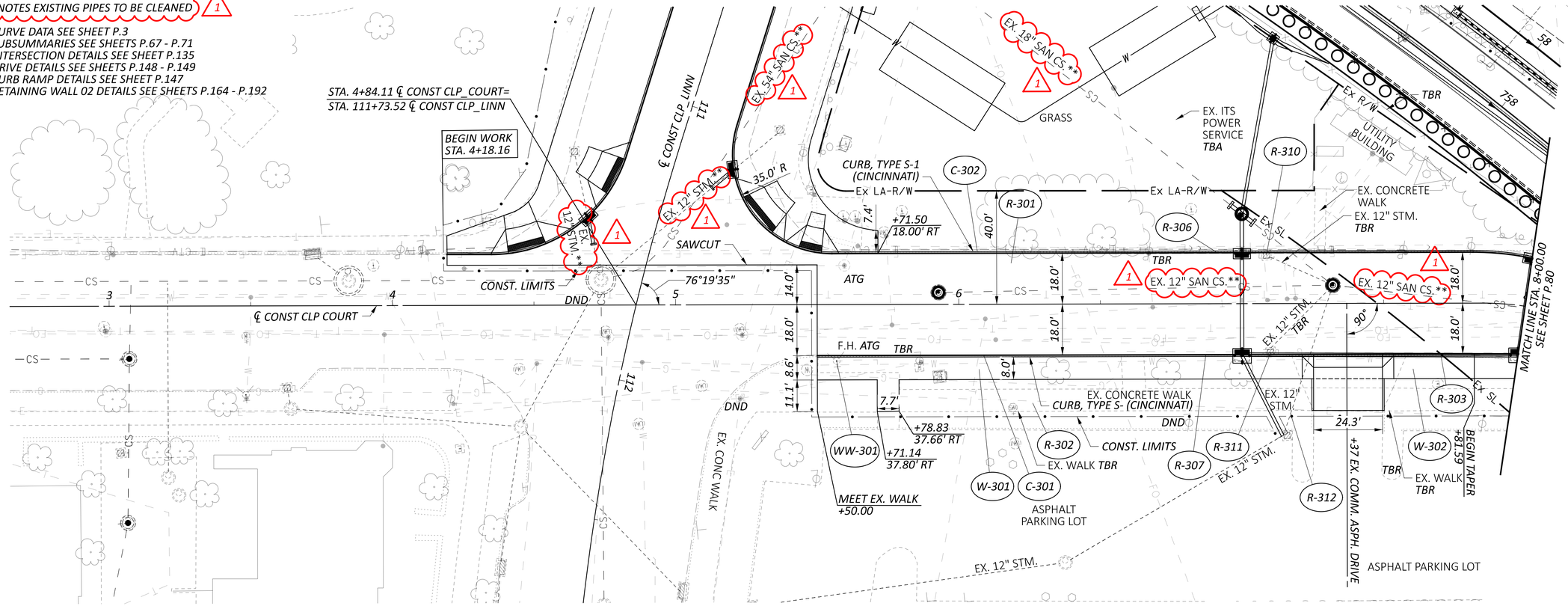

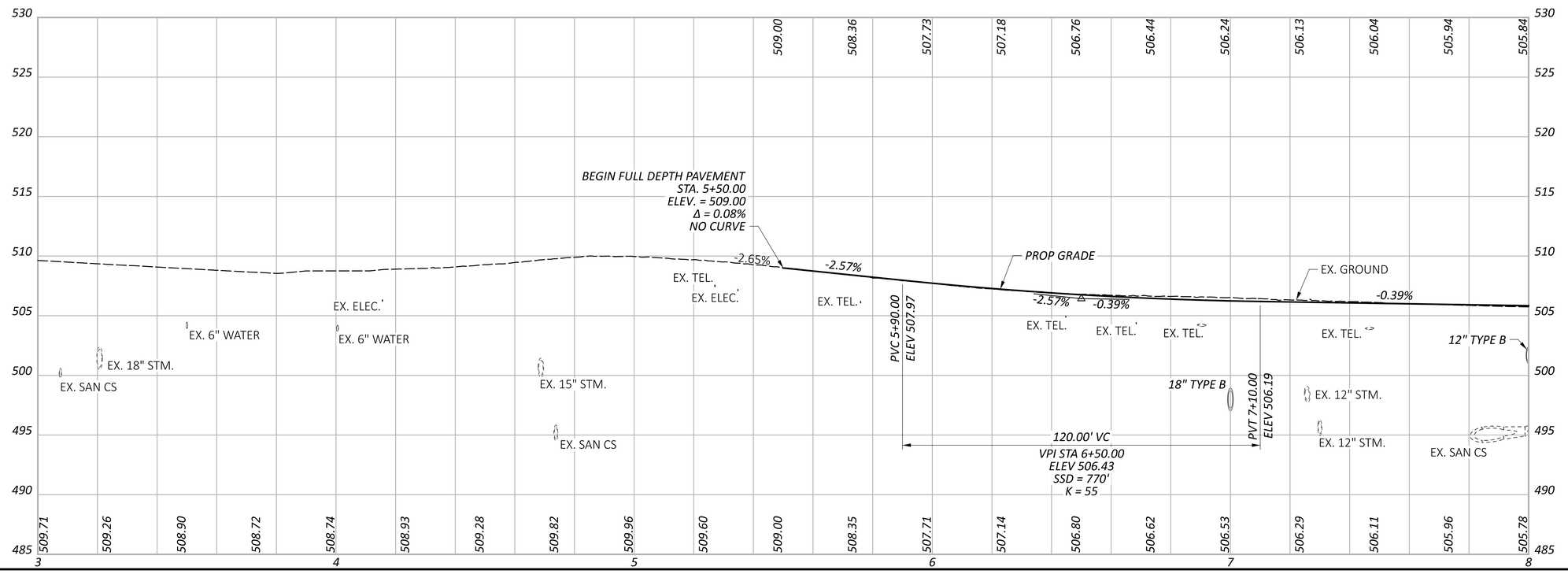

HORIZONTAL SCALE IN FEET
0 10 20 40

PLAN AND PROFILE - COURT ST
STA. 3+00.00 TO STA. 8+00.00

DESIGN AGENCY
AMERICAN STRUCTUREPOINT INC.
DESIGNER LZS
REVIEWER KAM 03/03/25
PROJECT ID 122048
SHEET P.78 TOTAL P.421

HAM-IR 75-1.05

MODEL: Sheet PAPERSIZE: 34x22 (in.) DATE: 8/28/2025 TIME: 9:33:53 AM PLTDRV: OHDOT_PDF.pltcfg PENTBL: OHDOT_Pen_Addendum.tbl USER: WORKSPACE: OHDOTCEv02 WORKSET: 122048 PRODUCT: OpenRoadsDesigner 10.12.02.4
pw:\\ohiodot-pw.bentley.com:ohiodot-pw-02\Documents\01 Active Projects\District 08\Hamilton\122048\403-Engineering_StructurePoint\Roadway\Sheets\122048_GP311.dgn

NOTE:
** DENOTES EXISTING PIPES TO BE CLEANED
"APP (C)" DENOTES ITEM 611 - CONDUIT, AS PER PLAN (CINCINNATI)

FOR STORM SEWER PROFILES SEE SHEETS P.154 - P.163

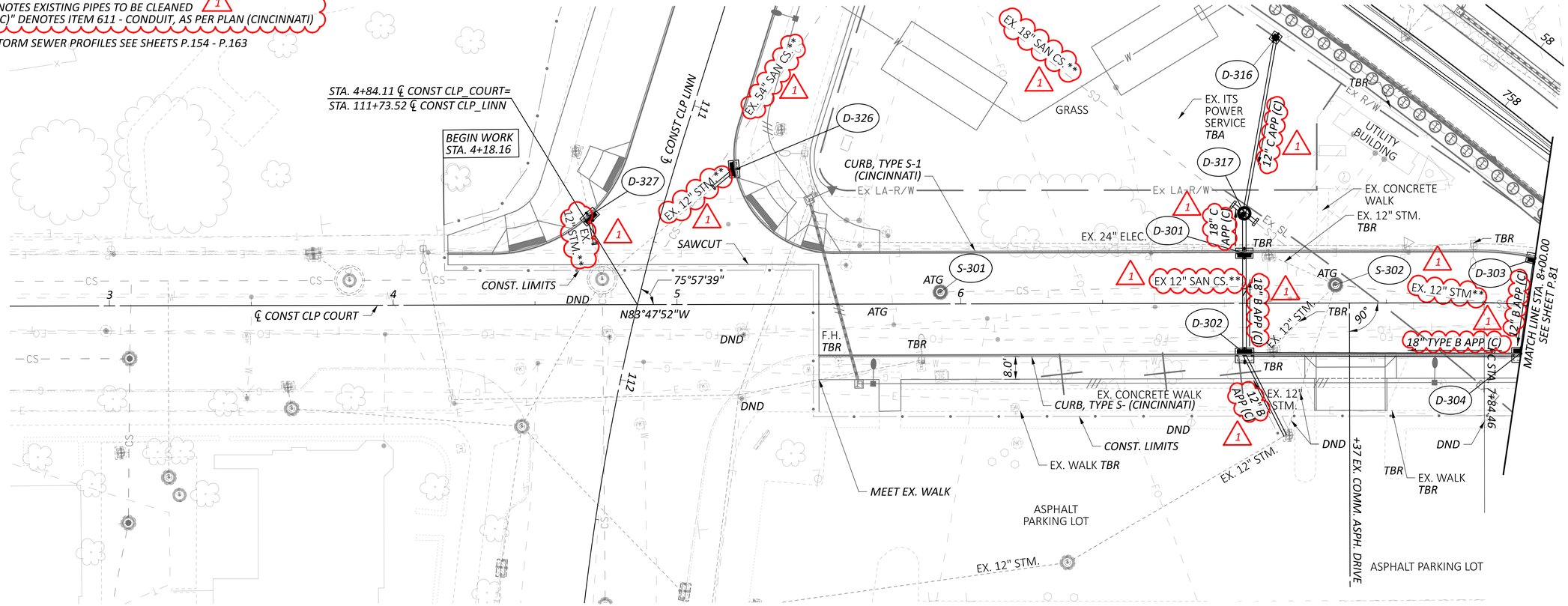

HORIZONTAL SCALE IN FEET
0 10 20 40

DRAINAGE PLAN - COURT ST
STA. 3+00.00 TO STA. 8+00.00

DESIGN AGENCY
STRUCTUREPOINT INC.

DESIGNER
LZS

REVIEWER
KAM 03/03/25

PROJECT ID
122048

SHEET P.79 | TOTAL P.421

HAM-IR 75-1.05

MODEL: Sheet PAPERSIZE: 34x22 (in.) DATE: 8/28/2025 TIME: 9:34:19 AM PLTDRV: OHDOT_PDF.pltcfg PENTBL: OHDOT_Pen_Addendum.tbl USER: WORKSPACE: OHDOTCEv02 WORKSET: 122048 PRODUCT: OpenRoadsDesigner 10.12.02.4
pw:\\ohiodot-pw.bentley.com:ohiodot-pw-02\Documents\01 Active Projects\District 08\Hamilton\122048\403-Engineering_StructurePoint\Drainage\Sheets\122048_DP311.dgn

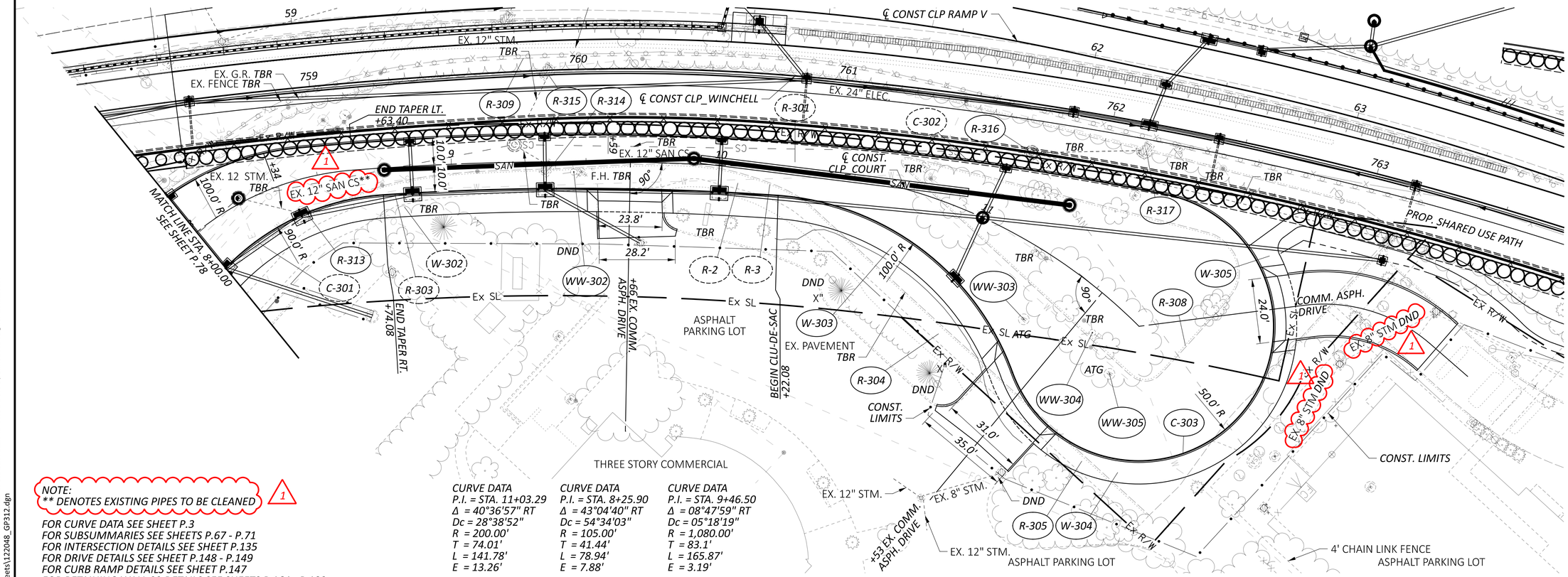

NOTE:
** DENOTES EXISTING PIPES TO BE CLEANED

1

FOR CURVE DATA SEE SHEET P.3
FOR SUBSUMMARIES SEE SHEETS P.67 - P.71
FOR INTERSECTION DETAILS SEE SHEET P.135
FOR DRIVE DETAILS SEE SHEET P.148 - P.149
FOR CURB RAMP DETAILS SEE SHEET P.147
FOR RETAINING WALL 02 DETAILS SEE SHEETS P.164 - P.192

CURVE DATA
P.I. = STA. 11+03.29
Δ = 40°36'57" RT
Dc = 28°38'52"
R = 200.00'
T = 74.01'
L = 141.78'
E = 13.26'

CURVE DATA
P.I. = STA. 8+25.90
Δ = 43°04'40" RT
Dc = 54°34'03"
R = 105.00'
T = 41.44'
L = 78.94'
E = 7.88'

CURVE DATA
P.I. = STA. 9+46.50
Δ = 08°47'59" RT
Dc = 05°18'19"
R = 1,080.00'
T = 83.1'
L = 165.87'
E = 3.19'

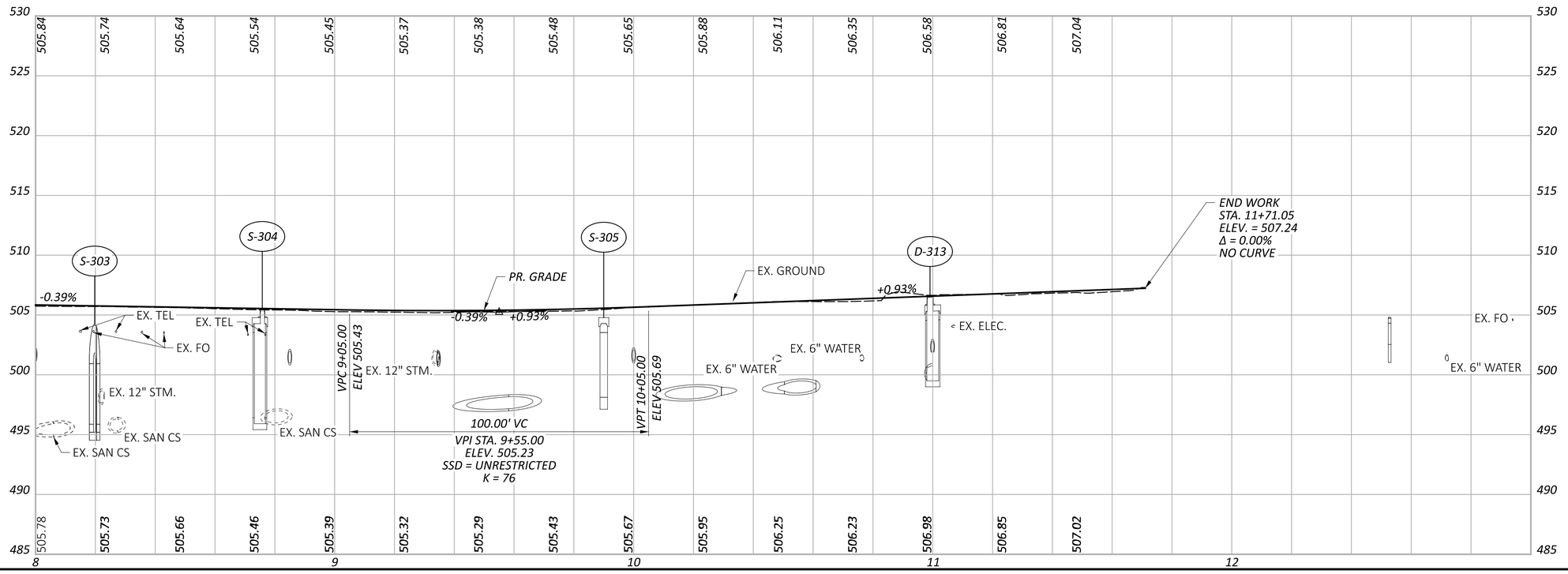

HORIZONTAL SCALE IN FEET
0 10 20 40

PLAN AND PROFILE - COURT ST
STA. 8+00.00 TO STA. 11+71.05

DESIGN AGENCY
AMERICAN STRUCTUREPOINT INC.

DESIGNER	LZS
REVIEWER	KAM 03/03/25
PROJECT ID	122048
SHEET	P.80
TOTAL	P.421

HAM-IR 75-1.05

MODEL: Sheet PAPERSIZE: 34x22 (in.) DATE: 8/28/2025 TIME: 9:34:44 AM PLTDRV: OHDOT_PDF.pltcfg PENTBL: OHDOT_Pen_Addendum.tbl USER: WORKSPACE: OHDOTCEv02 WORKSET: 122048 PRODUCT: OpenRoadsDesigner 10.12.02.4
pw:\\ohiodot-pw.bentley.com:ohiodot-pw-02\Documents\01 Active Projects\District 08\Hamilton\122048\03-Engineering_StructurePoint\Roadway\Sheets\122048_GP312.dgn

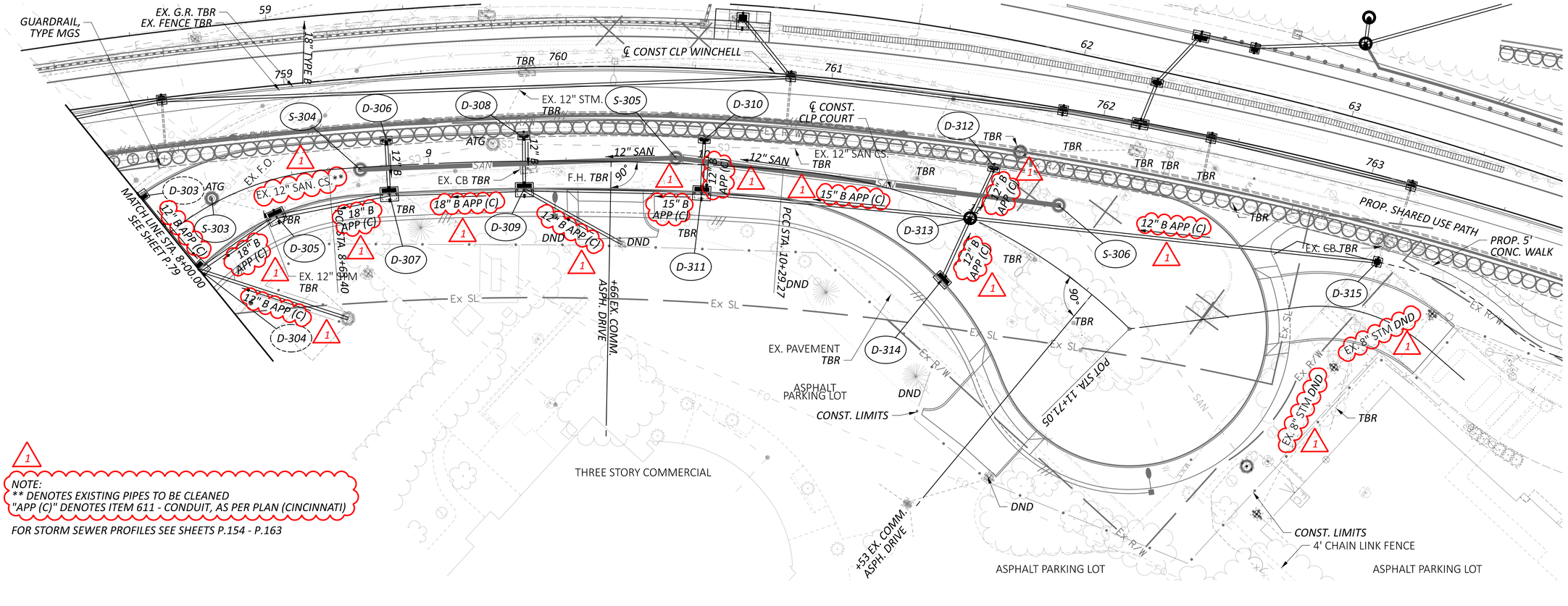

NOTE:
** DENOTES EXISTING PIPES TO BE CLEANED
"APP (C)" DENOTES ITEM 611 - CONDUIT, AS PER PLAN (CINCINNATI)

FOR STORM SEWER PROFILES SEE SHEETS P.154 - P.163

HORIZONTAL SCALE IN FEET
0 10 20 40

DRAINAGE PLAN - COURT ST
STA. 8+00.00 TO STA. 11+71.05

HAM-IR 75-1.05

MODEL: Sheet PAPERSIZE: 34x22 (in.) DATE: 8/28/2025 TIME: 9:35:09 AM PLTDRV: OHDOT_PDF.pltcfg PENTBL: OHDOT_Pen_Addendum.tbl USER: WORKSPACE: OHDOTCEv02 WORKSET: 122048 PRODUCT: OpenRoadsDesigner 10.12.02.4
pw:\\ohiodot-pw.bentley.com:ohiodot-pw-02\Documents\01 Active Projects\District 08\Hamilton\122048\d03-Engineering_StructurePoint\Drainage\Sheets\122048_DP312.dgn

DESIGN AGENCY
AMERICAN STRUCTUREPOINT INC.

DESIGNER LZS
REVIEWER KAM 03/03/25
PROJECT ID 122048
SHEET P.81 TOTAL P.421

MODEL: Sheet PAPERSIZE: 34x22 (in.) DATE: 8/28/2025 TIME: 9:36:51 AM PLTDRV: OHDOT_PDF.pltcfg PENTBL: OHDOT_Pen_Addendum.tbl USER: WORKSPACE: OHDOTCEv02 WORKSET: 122048 PRODUCT: OpenRoadsDesigner 10.12.02.4
pw:\\ohiodot-pw.bentley.com:ohiodot-pw-02\Documents\01 Active Projects\District 08\Hamilton\122048\403-Engineering_StructurePoint\Roadway\Sheets\122048_GP351.dgn

HAM-IR 75-1.05

LEGEND

DIAMOND GRINDING PORTLAND CEMENT CONCRETE PAVEMENT

WEDGE COURSE
ITEM 442 - 2" ASPHALT CONCRETE SURFACE COURSE

BEGIN WORK STA. 102+69.35

CURVE DATA
P.I. = STA. 101+28.39
Δ = 02°21'12" RT
Dc = 00°57'18"
R = 6,000.00'
T = 123.23'
L = 246.43'
E = 1.27'

BEGIN DIAMOND GRINDING STA. 103+03.76

PT STA. 102+51.58

BEGIN WEDGE COURSE STA. 104+92.60

BEGIN FULL DEPTH PAVEMENT STA. 105+27.00

BEGIN APPROACH SLAB STA. 105+51.32

END APPROACH SLAB STA. 105+81.32

MATCH LINE STA. 107+50.00 SEE SHEET P.83

N23°44'44"E

PARKING GARAGE

MULTI STORY COMMERCIAL BUILDING

MULTI STORY HOTEL

2 STORY PARKING GARAGE

CONST. LIMITS

+27.00 43.75' LT.

+20.72 43.50' RT.

EX. FENCE TBR

OLD GEST ST. UNDERPASS TBR

HAM-75-0104
SFN 3109098

EX. 6" WATER

EX. 12" STM**

EX. 12" STM

EX. 16" WATER

EX. 8" GAS

Ex LA-R/W

12" TYPE B APP (C)

DND

TBRO

ATG

W 8TH ST.

A CURB HEIGHT TRANSITION FROM 6" TO 8"
FOR INFORMATION SEE INTERSECTION DETAILS

B TAPER ISLAND HEIGHT OVER 10.0'
PER ODOT SCD RM-3.1

FOR CURVE DATA SEE SHEET P.3
FOR SUBSUMMARIES SEE SHEETS P.67 - P.71
FOR INTERSECTION DETAILS SEE SHEETS P.134
FOR CURB RAMP DETIALS SEE SHEET P.147
FOR STORM SEWER PROFILES SEE SHEET P.154 - P.163
FOR HAM-75-0104 DETAILS SEE SHEETS P.243 - P.330

NOTE:
** DENOTES EXISTING PIPES TO BE CLEANED
"APP (C)" DENOTES ITEM 611 - CONDUIT, AS PER PLAN (CINCINNATI)

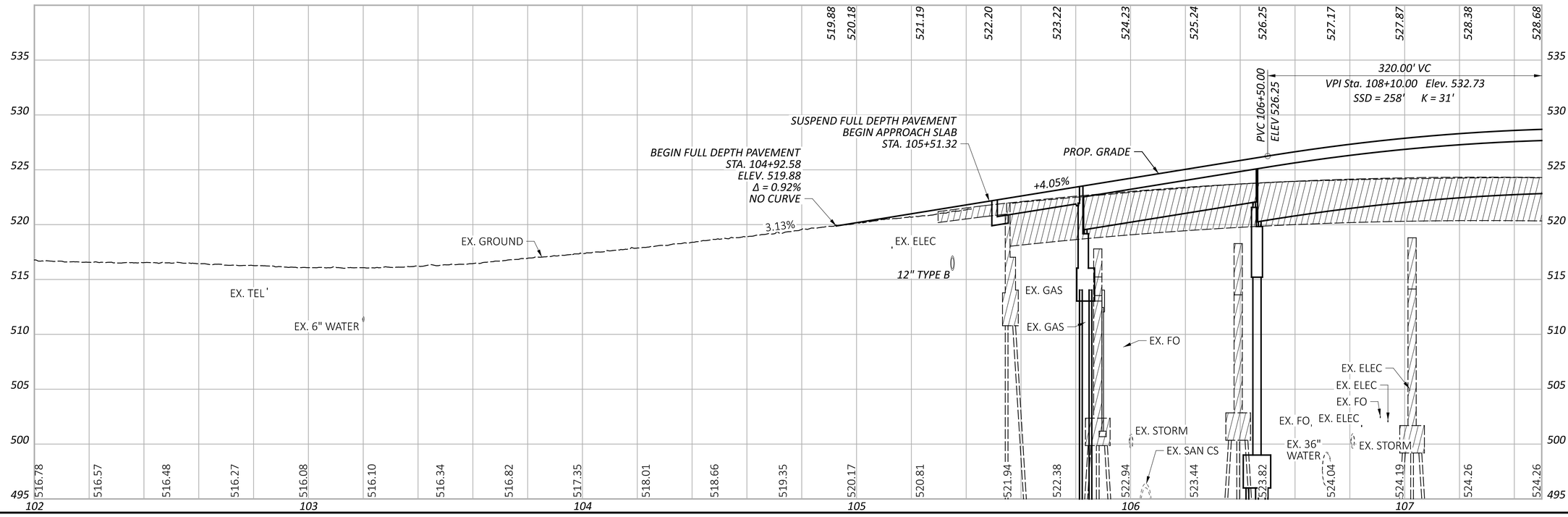

HORIZONTAL SCALE IN FEET
0 10 20 40

PLAN AND PROFILE - LINN ST
STA. 102+00.00 TO STA. 107+50.00

DESIGN AGENCY
STRUCTUREPOINT

DESIGNER LZS

REVIEWER KAM 03/05/25

PROJECT ID 122048

SHEET P.82 TOTAL P.421

A CURB HEIGHT TRANSITION FROM 6" TO 8"
FOR INFORMATION SEE INTERSECTION DETAILS

B TAPER ISLAND HEIGHT OVER 10.0'
PER ODOT SCD RM-3.1

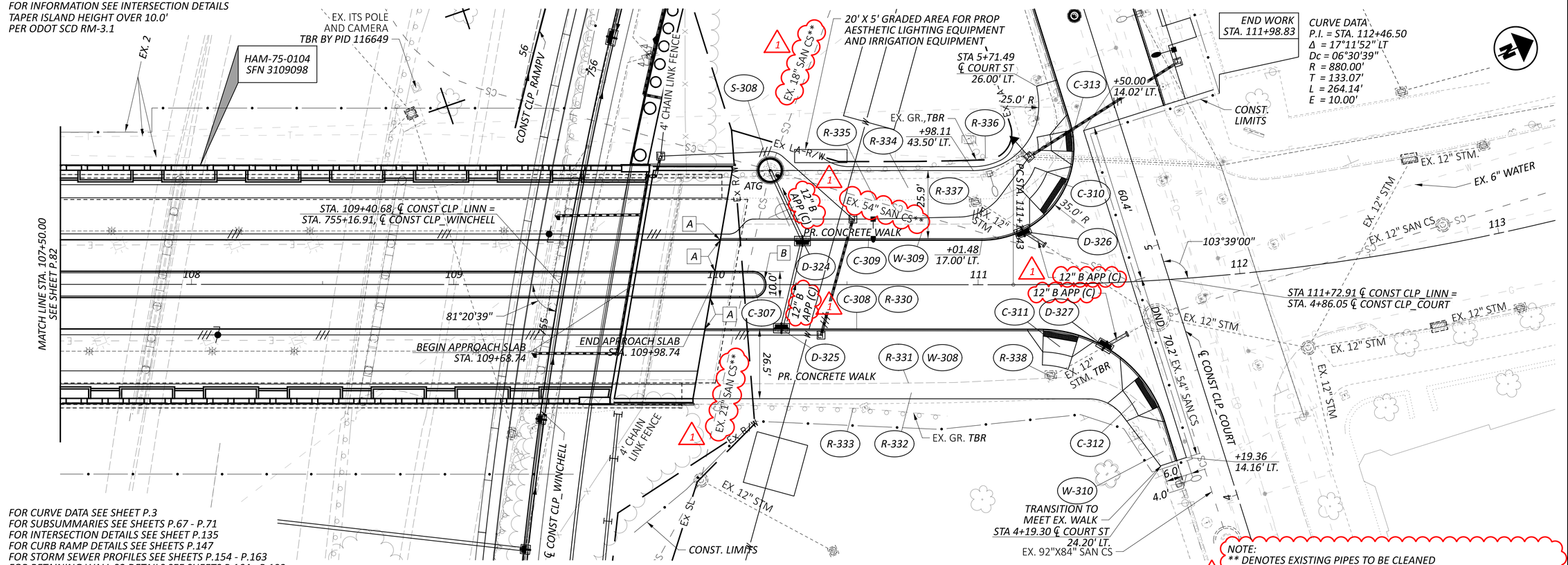

NOTE:
** DENOTES EXISTING PIPES TO BE CLEANED
"APP (C)" DENOTES ITEM 611 - CONDUIT, AS PER PLAN (CINCINNATI)

FOR CURVE DATA SEE SHEET P.3
FOR SUBSUMMARIES SEE SHEETS P.67 - P.71
FOR INTERSECTION DETAILS SEE SHEET P.135
FOR CURB RAMP DETAILS SEE SHEETS P.147
FOR STORM SEWER PROFILES SEE SHEETS P.154 - P.163
FOR RETAINING WALL 02 DETAILS SEE SHEETS P.164 - P.192
FOR HAM-75-0104 DETAILS SEE SHEETS P.243 - P.330

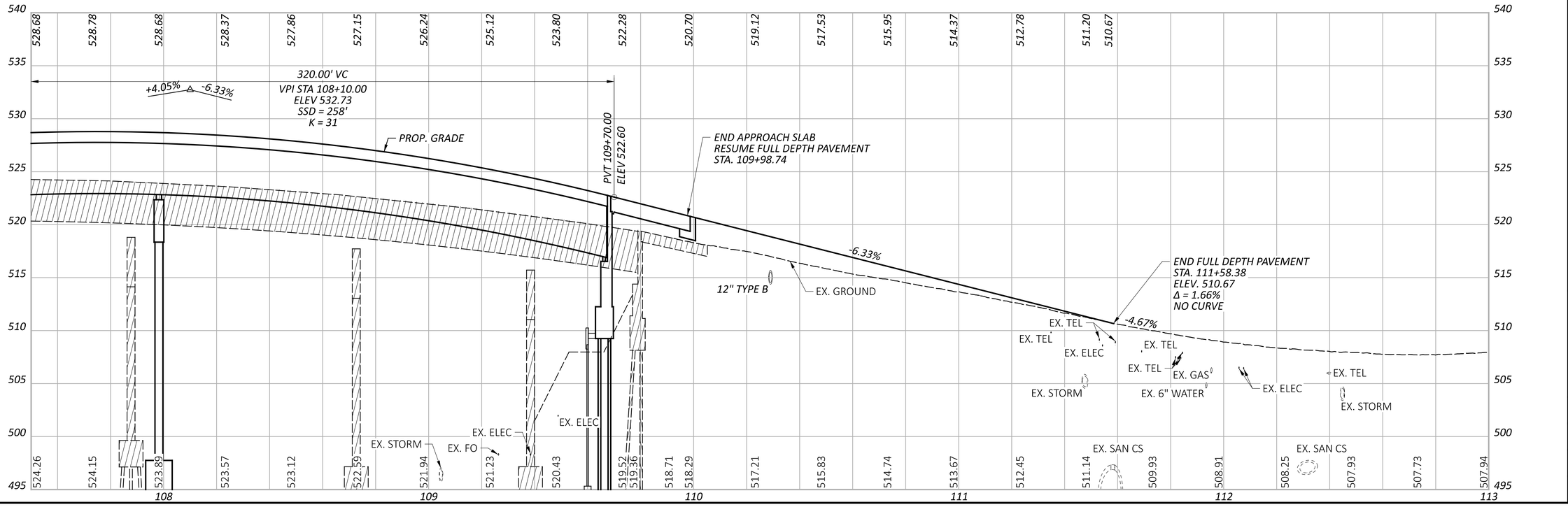

MODEL: Sheet PAPERSIZE: 34x22 (in.) DATE: 8/28/2025 TIME: 9:38:55 AM PLTDRV: OHDOT_PDF.pltcfg PENTBL: OHDOT_Pen_Addendum.tbl USER: WORKSPACE: OHDOTCEv02 WORKSET: 122048 PRODUCT: OpenRoadsDesigner 10.12.02.4
pw:\\ohiodot-pw.bentley.com:ohiodot-pw-02\Documents\01 Active Projects\District 08\Hamilton\122048\403-Engineering_StructurePoint\Roadway\Sheets\122048_GP352.dgn

HAM-IR 75-1.05

HORIZONTAL SCALE IN FEET
0 10 20 40

PLAN AND PROFILE - LINN ST
STA. 107+50.00 TO STA. 113+00.00

DESIGN AGENCY
STRUCTUREPOINT LLC

DESIGNER	LZS
REVIEWER	KAM 03/03/25
PROJECT ID	122048
SHEET	P.83
TOTAL	P.421

HAM-IR 75-1.05

MODEL: Sheet PAPERSIZE: 34x22 (in.) DATE: 8/28/2025 TIME: 9:39:25 AM PLTDRV: OHDOT_PDF.pltcfg PENTBL: OHDOT_Pen_Addendum.tbl USER: WORKSPACE: OHDOTCEv02 WORKSET: 122048 PRODUCT: OpenRoadsDesigner 10.12.02.4
pw:\\ohiodot-pw.bentley.com:ohiodot-pw-02\Documents\01 Active Projects\District 08\Hamilton\122048\403-Engineering_StructurePoint\Roadway\Sheets\122048_GP374.dgn

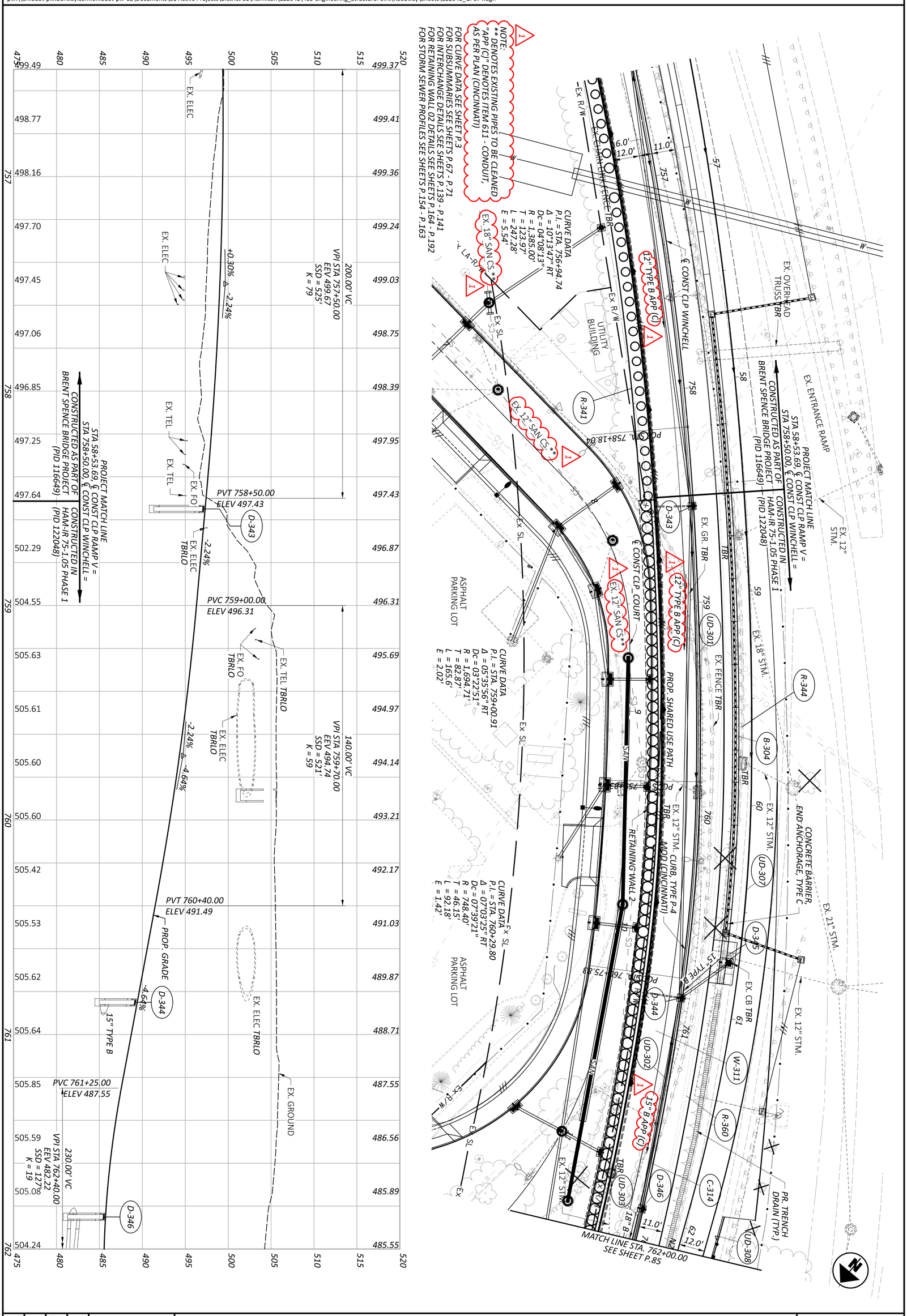

DESIGN AGENCY: AMERICAN STRUCTUREPOINT INC.	DESIGNER: CDP	REVIEWER: KAM 03/03/25	PROJECT ID: 122048	SHEET: P.84 TOTAL: P.421

PLAN AND PROFILE - WINCHELL AVE
STA. 756+50.00 TO STA. 762+00.00

HORIZONTAL SCALE IN FEET
0 10 20 40

MODEL: Sheet PAPERSIZE: 34x22 (in.) DATE: 8/28/2025 TIME: 9:39:48 AM PLTDRV: OHDOT_PDF.pltcfg PENTBL: OHDOT_Pen_Addendum.tbl USER: WORKSPACE: OHDOTCEv02 WORKSET: 122048 PRODUCT: OpenRoadsDesigner 10.12.02.4
pw:\\ohiodot-pw.bentley.com:ohiodot-pw-02\Documents\01 Active Projects\District 08\Hamilton\122048\403-Engineering_StructurePoint\Roadway\Sheets\122048_GP375.dgn

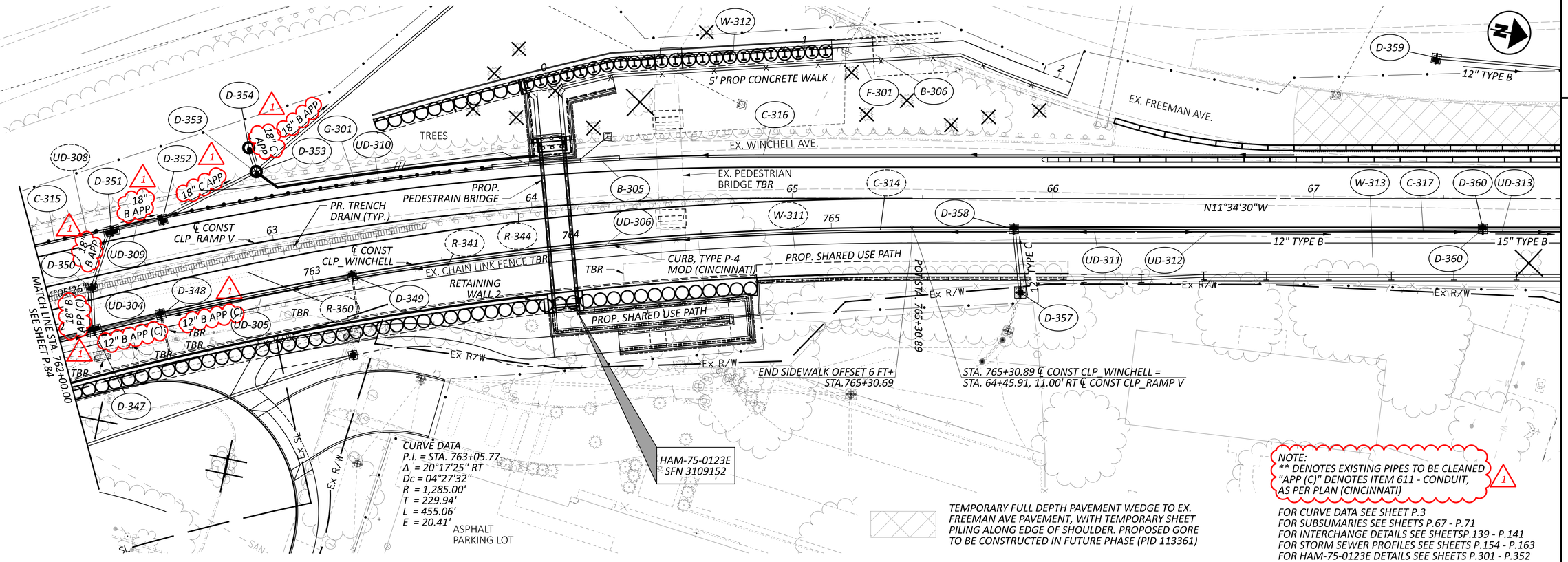

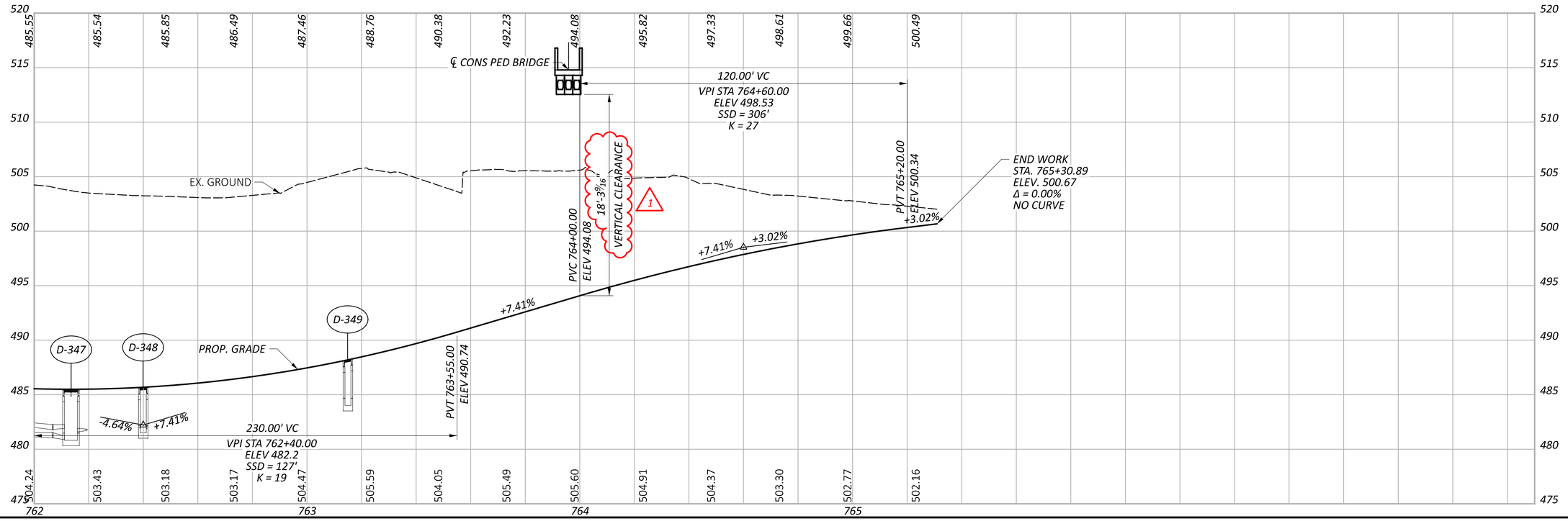

HORIZONTAL SCALE IN FEET
0 10 20 40

PLAN AND PROFILE - WINCHELL AVE
STA. 762+00.00 TO STA. 765+30.89

DESIGN AGENCY
STRUCTUREPOINT LLC

DESIGNER	CDP
REVIEWER	KAM 03/03/25
PROJECT ID	122048
SHEET	P.85
TOTAL	P.421

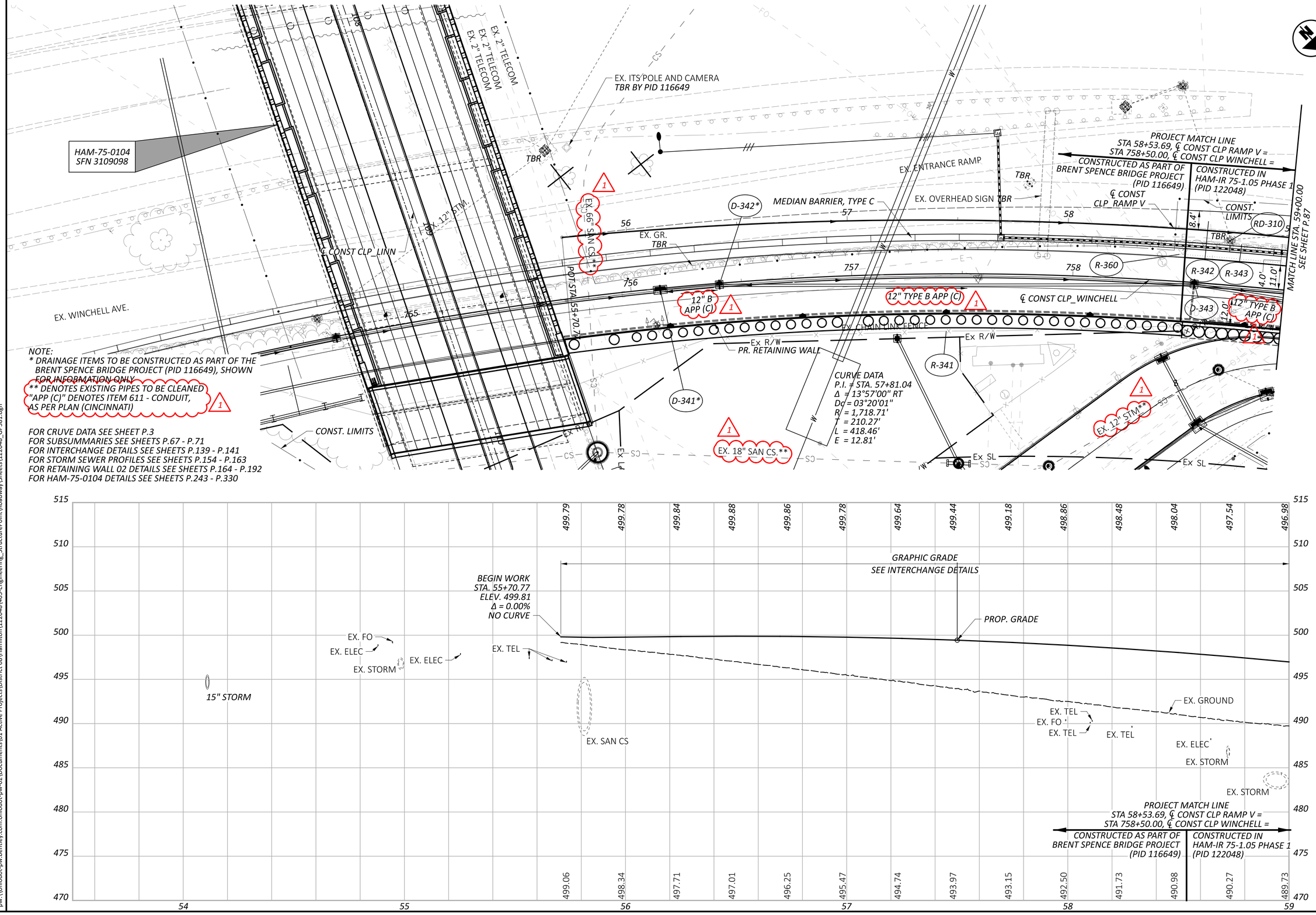

HORIZONTAL SCALE IN FEET
0 10 20 40

PLAN AND PROFILE - RAMP V
STA. 55+70.77 TO STA. 59+00.00

HAM-IR 75-1.05

DESIGN AGENCY
STRUCTUREPOINT

DESIGNER	LZS
REVIEWER	KAM 03/03/25
PROJECT ID	122048
SHEET	P.86
TOTAL	P.421

MODEL: Sheet PAPERSIZE: 34x22 (in.) DATE: 8/28/2025 TIME: 9:40:20 AM PLTDRV: OHDOT_PDF.pltcfg PENTBL: OHDOT_Pen_Addendum.tbl USER: WORKSPACE: OHDOTCEv02 WORKSET: 122048 PRODUCT: OpenRoadsDesigner 10.12.02.4
pw:\\ohiodot-pw.bentley.com:ohiodot-pw-02\Documents\01 Active Projects\District 08\Hamilton\122048\403-Engineering_StructurePoint\Roadway\Sheets\122048_GP381.dgn

NOTE:
** DENOTES EXISTING PIPES TO BE CLEANED
"APP (C)" DENOTES ITEM 611 - CONDUIT, AS PER PLAN (CINCINNATI)

FOR CURVE DATA SEE SHEET P.3
FOR SUBSUMMARIES SEE SHEETS P.67 - P.71
FOR INTERCHANGE DETAILS SEE SHEETSP.139 - P.141
FOR STORM SEWER PROFILES SEE SHEETS P.154 - P.163
FOR HAM-75-0123E DETAILS SEE SHEETS P.301 - P.352

A BEGIN MGS ANCHOR ASSEMBLY, TYPE E
STA. 62+01.35, 16.00' LT

B LENGTH OF NEED LIMIT
GUARDRAIL, TYPE MGS
STA. 62+21.59, 16.00' LT

C END MGS ANCHOR ASSEMBLY, TYPE E
BEGIN GUARDRAIL, TYPE MGS
STA. 62+51.28, 16.00' LT

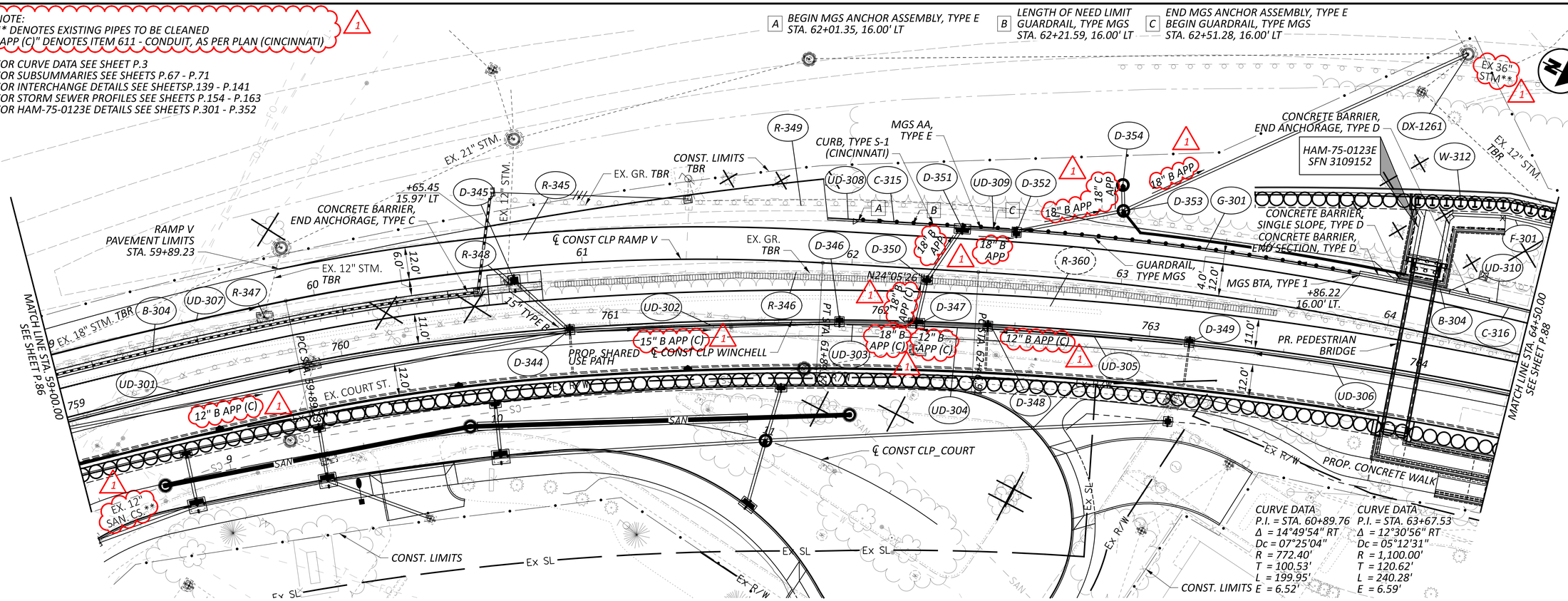

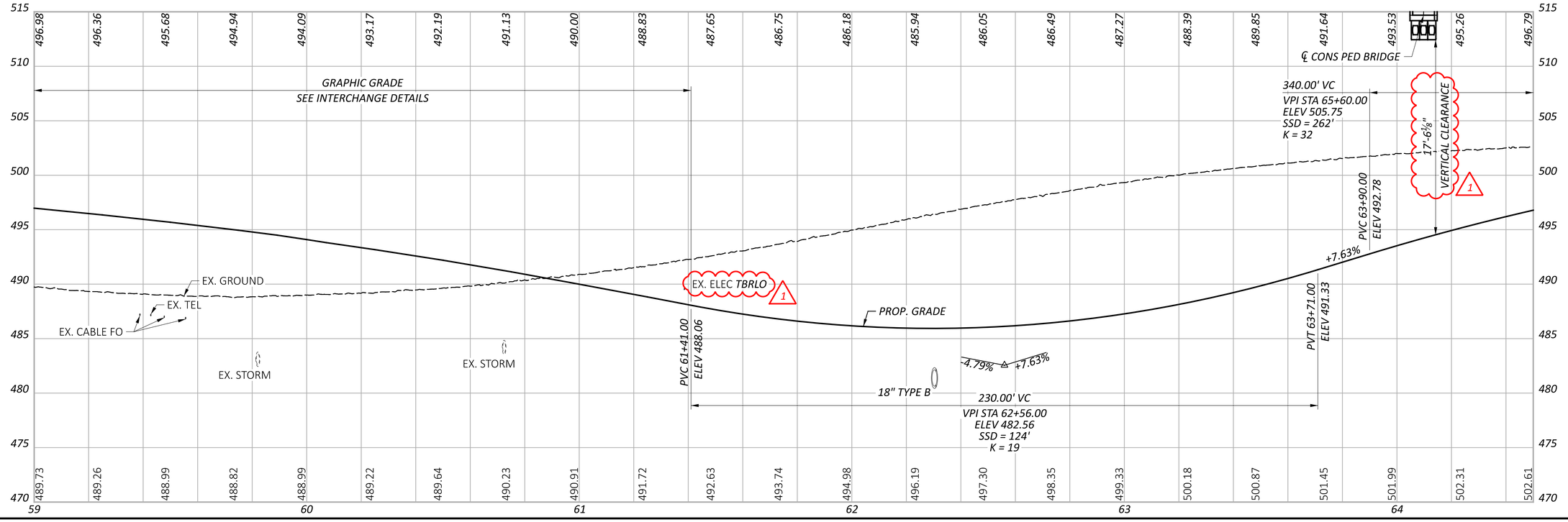

HORIZONTAL SCALE IN FEET
0 10 20 40

PLAN AND PROFILE - RAMP V
STA. 59+00.00 TO STA. 64+50.00

DESIGN AGENCY
STRUCTUREPOINT LLC

DESIGNER	LZS
REVIEWER	KAM 03/03/25
PROJECT ID	122048
SHEET	P.87
TOTAL	P.421

HAM-IR 75-1.05

MODEL: Sheet PAPERSIZE: 34x22 (in.) DATE: 8/28/2025 TIME: 9:40:42 AM PLTDRV: OHDOT_PDF.pltcfg PENTBL: OHDOT_Pen_Addendum.tbl USER: WORKSPACE: OHDOTCEv02 WORKSET: 122048 PRODUCT: OpenRoadsDesigner 10.12.02.4
pw:\\ohiodot-pw.bentley.com:ohiodot-pw-02\Documents\01 Active Projects\District 08\Hamilton\122048\d03-Engineering_StructurePoint\Roadway\Sheets\122048_GP382.dgn

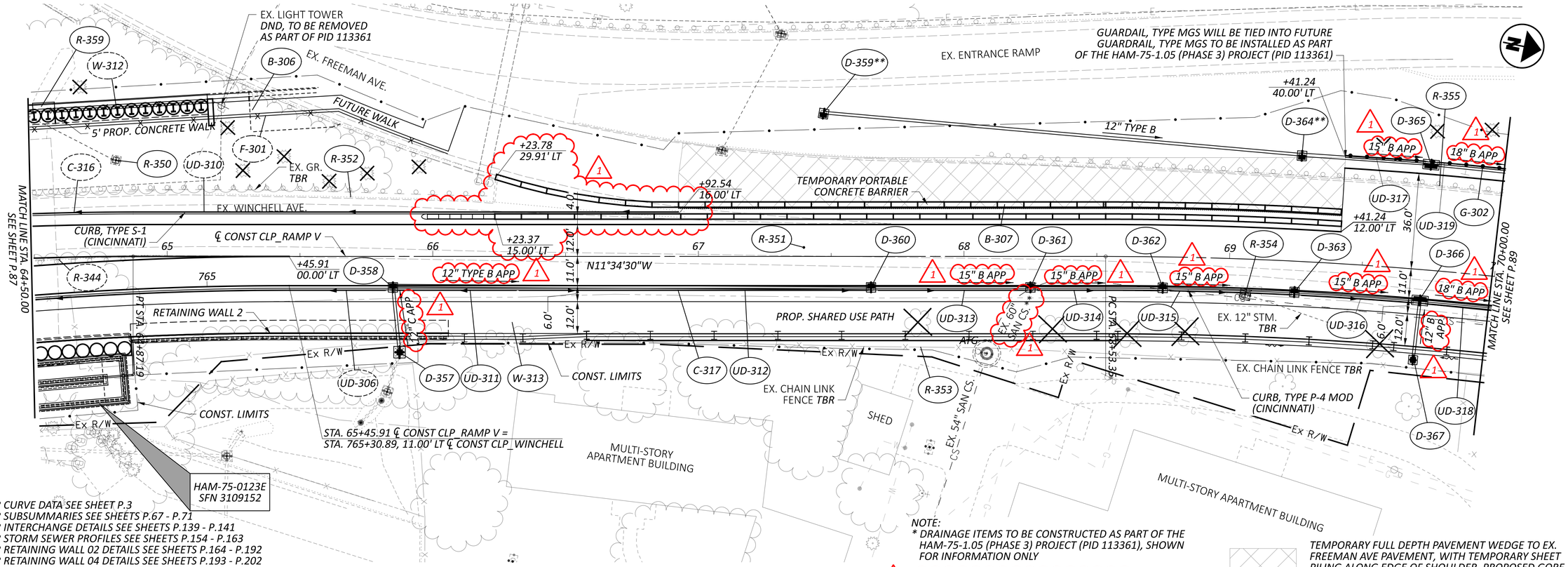

FOR CURVE DATA SEE SHEET P.3
FOR SUBSUMMARIES SEE SHEETS P.67 - P.71
FOR INTERCHANGE DETAILS SEE SHEETS P.139 - P.141
FOR STORM SEWER PROFILES SEE SHEETS P.154 - P.163
FOR RETAINING WALL 02 DETAILS SEE SHEETS P.164 - P.192
FOR RETAINING WALL 04 DETAILS SEE SHEETS P.193 - P.202
FOR NOISE WALL DETAILS SEE SHEETS P.231 - P.242
FOR HAM-75-0123E DETAILS SEE SHEETS P.331 - P.352

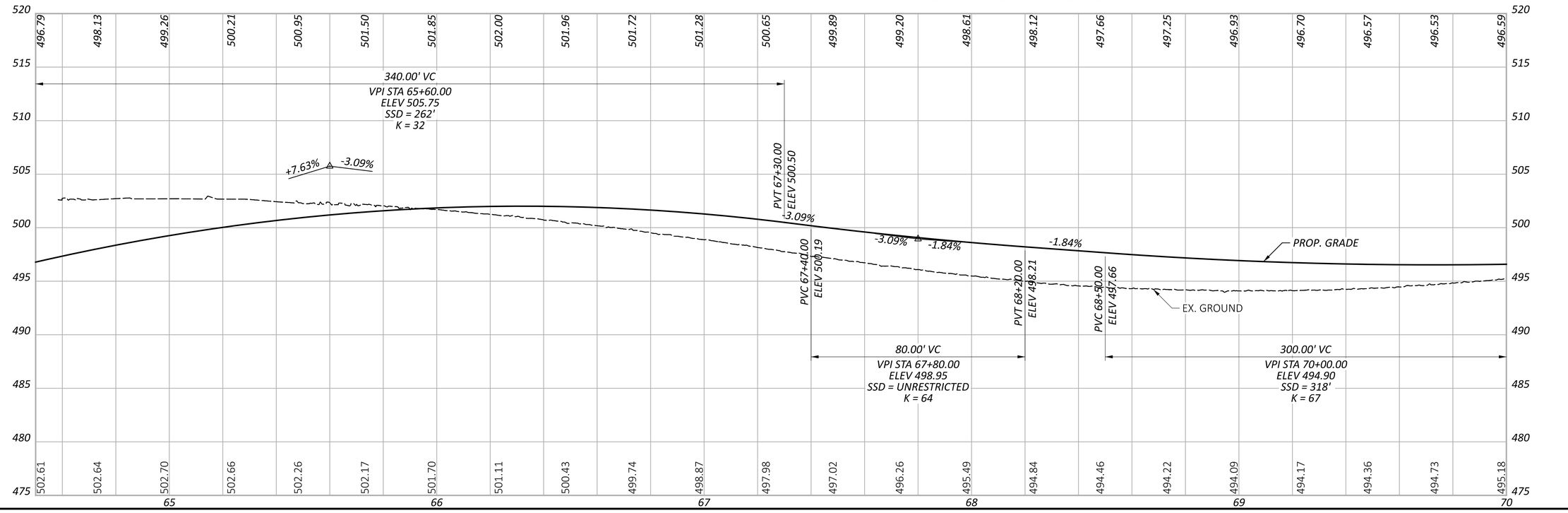

HORIZONTAL
SCALE IN FEET
0 10 20 40

PLAN AND PROFILE - RAMP V
STA. 64+50.00 TO STA. 70+00.00

DESIGN AGENCY
WEPFER STRUCTUREPOINT INC.

DESIGNER	LZS
REVIEWER	KAM 03/03/25
PROJECT ID	122048
SHEET	P.88
TOTAL	P.421

HAM-IR 75-1.05

MODEL: Sheet PAPERSIZE: 34x22 (in.) DATE: 8/28/2025 TIME: 9:41:02 AM PLTDRV: OHDOT_PDF.pltcfg PENTBL: OHDOT_Pen_Addendum.tbl USER: WORKSPACE: OHDOTCEv02 WORKSET: 122048 PRODUCT: OpenRoadsDesigner 10.12.02.4
pw:\\ohiodot-pw.bentley.com:ohiodot-pw-02\Documents\01 Active Projects\District 08\Hamilton\122048\403-Engineering_StructurePoint\Roadway\Sheets\122048_GP383.dgn

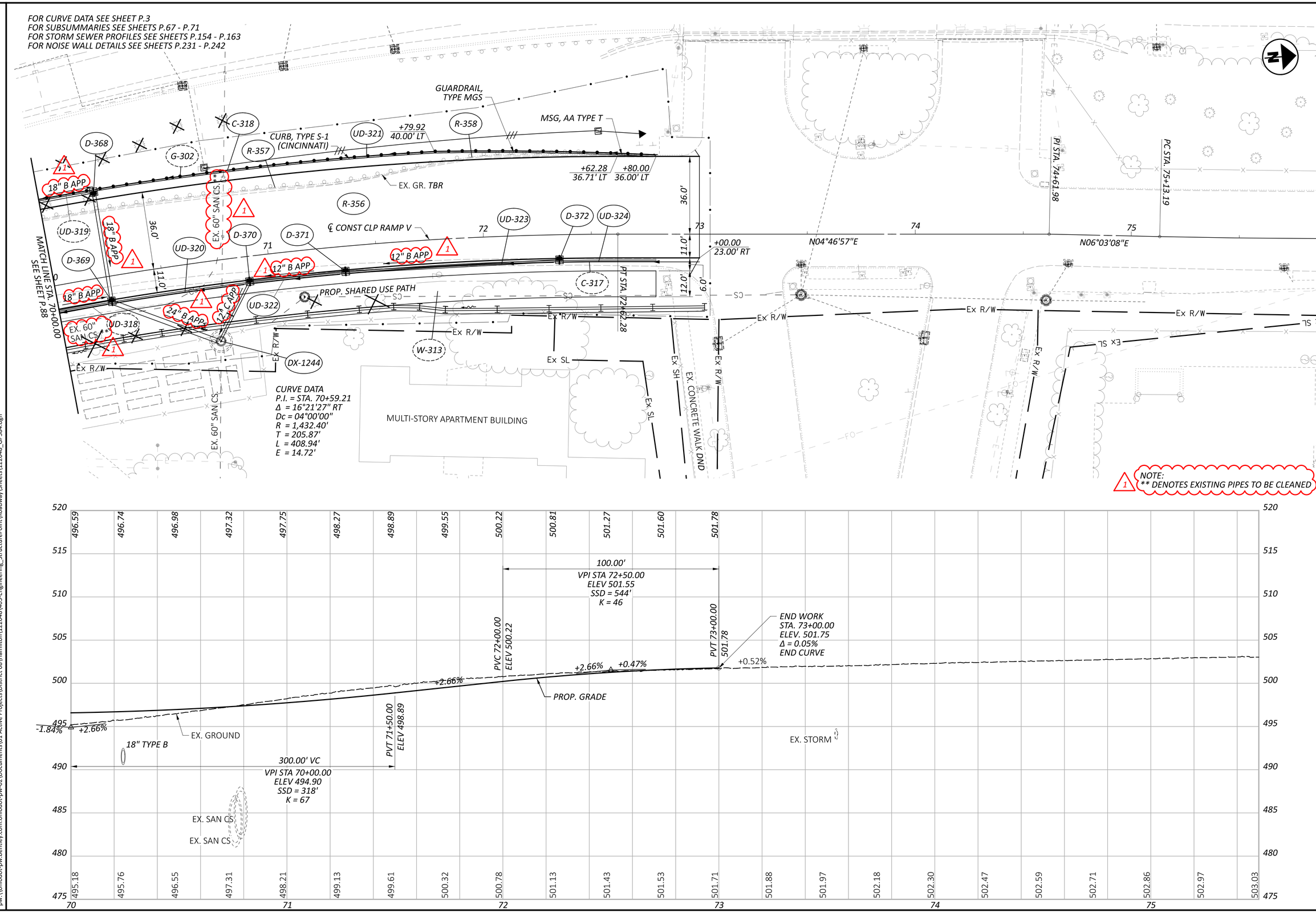

HORIZONTAL SCALE IN FEET 0 10 20 40

PLAN AND PROFILE - RAMP V
STA. 70+00.00 TO STA. 75+50.00

DESIGN AGENCY: AMERICAN STRUCTUREPOINT INC.

DESIGNER: LZS

REVIEWER: KAM 03/03/25

PROJECT ID: 122048

SHEET: P.89 TOTAL: P.421

HAM-IR 75-1.05

MODEL: Sheet PAPERSIZE: 34x22 (in.) DATE: 8/28/2025 TIME: 9:41:22 AM PLTDRV: OHDOT_PDF.pltcfg PENTBL: OHDOT_Pen_Addendum.tbl USER: WORKSPACE: OHDOTCEv02 WORKSET: 122048 PRODUCT: OpenRoadsDesigner 10.12.02.4
pw:\\ohiodot-pw.bentley.com:ohiodot-pw-02\Documents\01 Active Projects\District 08\Hamilton\122048\403-Engineering_StructurePoint\Roadway\Sheets\122048_GP384.dgn

LEGEND

EXISTING PAVEMENT REMOVED

ITEM 204 - 12" GRANULAR MATERIAL, TYPE C

ITEM 206 - 14" CEMENT STABILIZED SUBGRADE

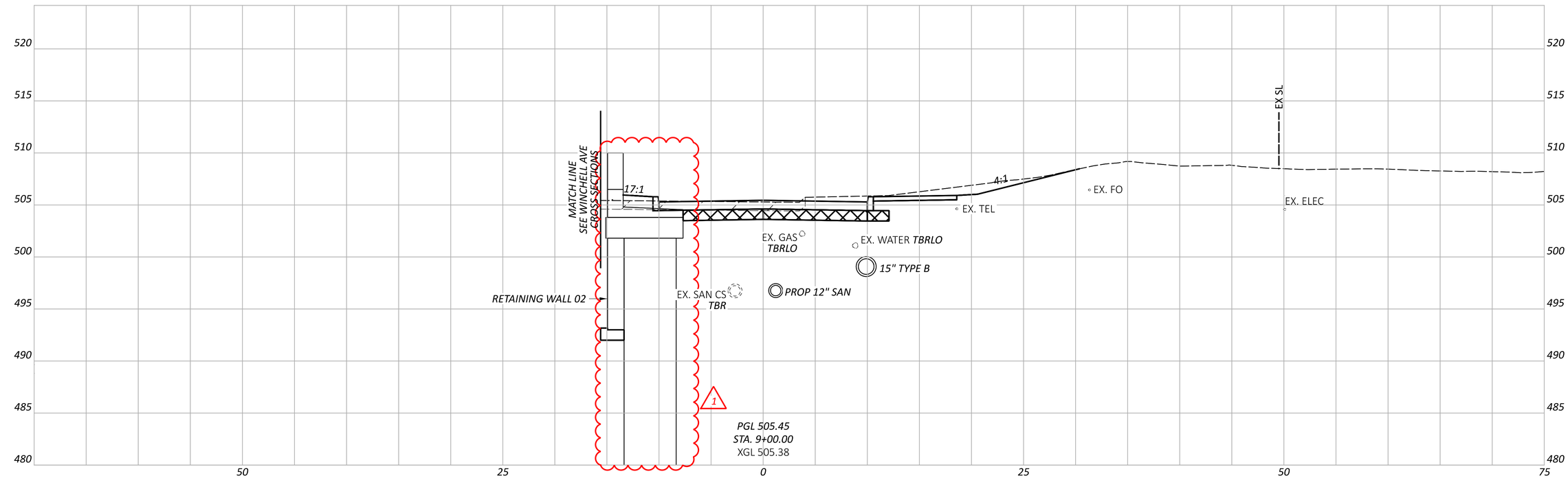

HAM-IR 75-1.05

MODEL: COURT - XS005 PAPERSIZE: 34x22 (in.) DATE: 8/28/2025 TIME: 9:41:47 AM PLTDRV: OHDOT_PDF.pltcfg PENTBL: OHDOT_Pen_Addendum.tbl USER: WORKSPACE: OHDOTCEv02 WORKSET: 122048 PRODUCT: OpenRoadsDesigner 10.12.02.4
pw:\\ohiodot-pw.bentley.com:ohiodot-pw-02\Documents\01 Active Projects\District 08\Hamilton\122048\403-Engineering_StructurePoint\Roadway\Sheets\122048_XS311.dgn

CROSS SECTIONS - COURT ST
STA. 9+00.00

DESIGN AGENCY
AMERICAN STRUCTUREPOINT INC.

DESIGNER
LZS

REVIEWER
KAM 03/03/25

PROJECT ID
122048

SHEET P.95 TOTAL P.421

MODEL: COURT - XS006 PAPERSIZE: 34x22 (in.) DATE: 8/28/2025 TIME: 9:42:11 AM PLTDRV: OHDOT_PDF.pltcfg PENTBL: OHDOT_Pen_Addendum.tbl USER: pw:\\ohiodot-pw.bentley.com:ohiodot-pw-02\Documents\01 Active Projects\District 08\Hamilton\122048\403-Engineering_StructurePoint\Roadway\Sheets\122048_XS311.dgn

HAM-IR 75-1.05

LEGEND

EXISTING PAVEMENT REMOVED

ITEM 204 - 12" GRANULAR MATERIAL, TYPE C

ITEM 206 - 14" CEMENT STABILIZED SUBGRADE

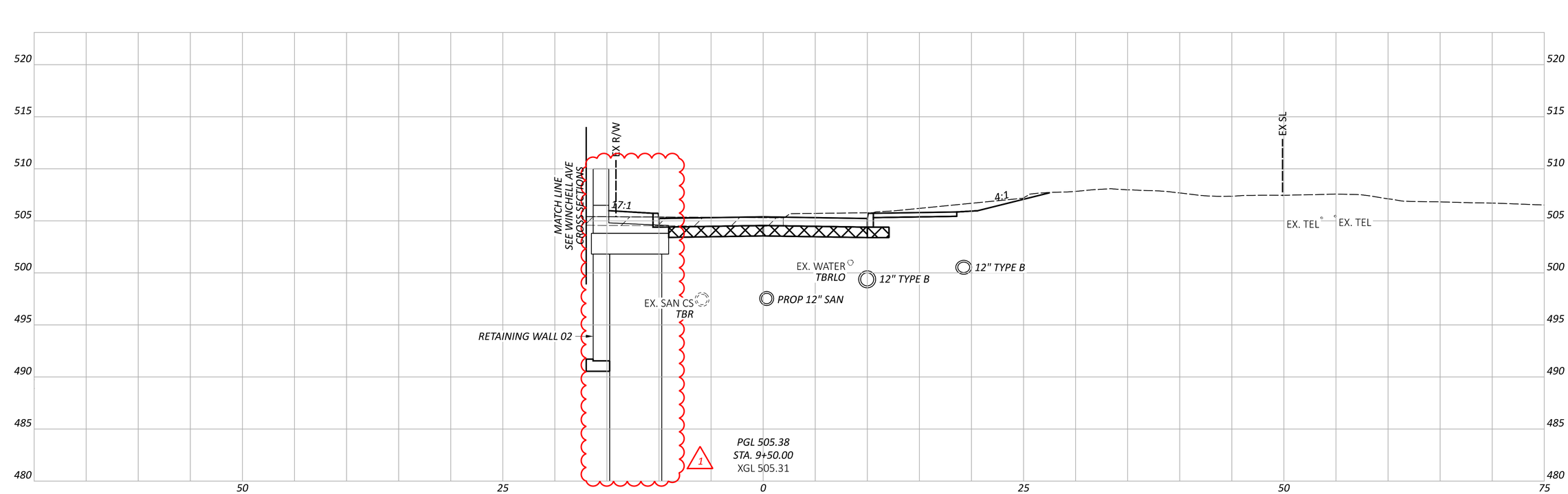

CROSS SECTIONS - COURT ST
STA. 9+50.00

DESIGN AGENCY
STRUCTUREPOINT LLC

DESIGNER
LZS

REVIEWER
KAM 03/03/25

PROJECT ID
122048

SHEET P.96 TOTAL P.421

LEGEND

EXISTING PAVEMENT REMOVED

ITEM 204 - 12" GRANULAR MATERIAL, TYPE C

ITEM 206 - 14" CEMENT STABILIZED SUBGRADE

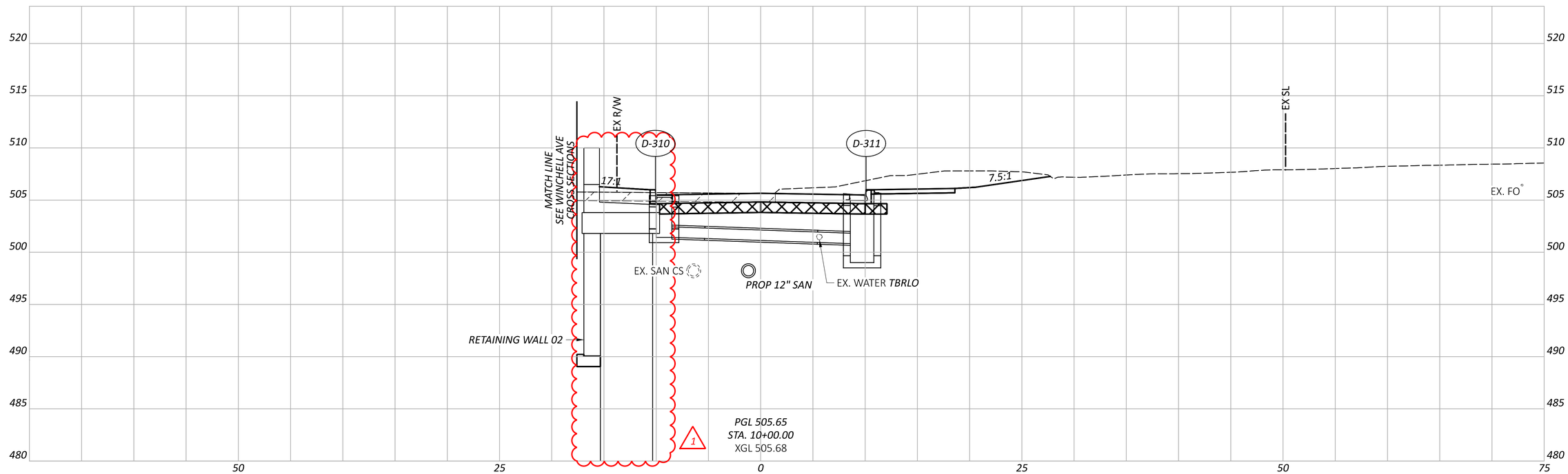

CROSS SECTIONS - COURT ST
STA. 10+00.00

DESIGN AGENCY
AMERICAN STRUCTUREPOINT INC.

DESIGNER
LZS

REVIEWER
KAM 03/03/25

PROJECT ID
122048

SHEET P.97 TOTAL P.421

HAM-IR 75-1.05

MODEL: COURT - XS007 PAPERSIZE: 34x22 (in.) DATE: 8/28/2025 TIME: 9:42:14 AM PLTDRV: OHDOT_PDF.pltcfg PENTBL: OHDOT_Pen_Addendum.tbl USER: WORKSPACE: OHDOTCEv02 WORKSET: 122048 PRODUCT: OpenRoadsDesigner 10.12.02.4
pw:\\ohiodot-pw.bentley.com:ohiodot-pw-02\Documents\01 Active Projects\District 08\Hamilton\122048\403-Engineering_StructurePoint\Roadway\Sheets\122048_XS311.dgn

LEGEND

EXISTING PAVEMENT REMOVED

ITEM 204 - 12" GRANULAR MATERIAL, TYPE C

ITEM 206 - 14" CEMENT STABILIZED SUBGRADE

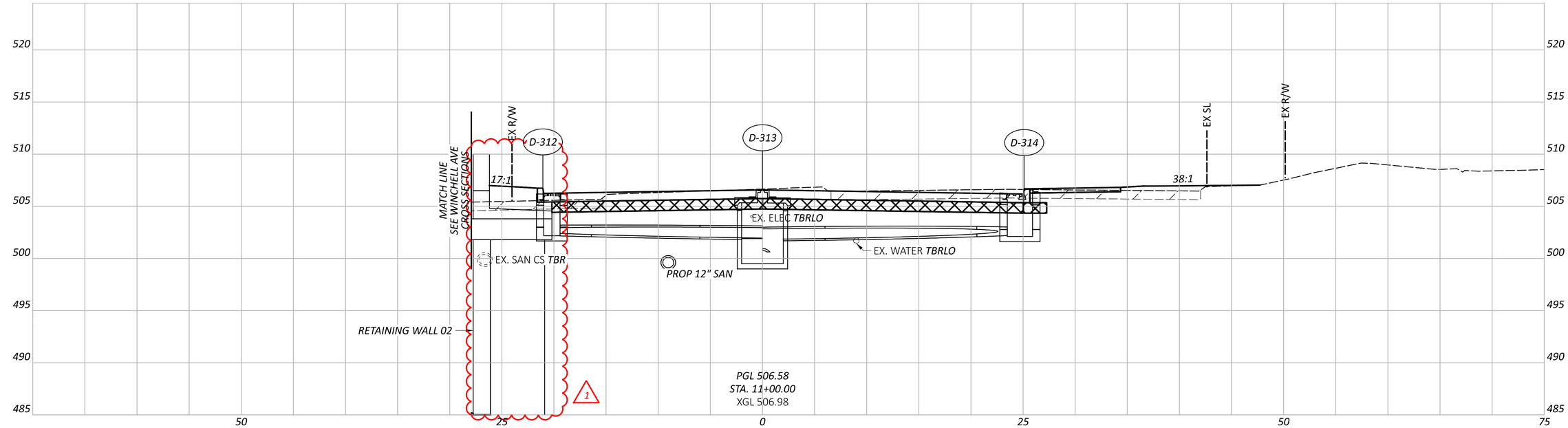

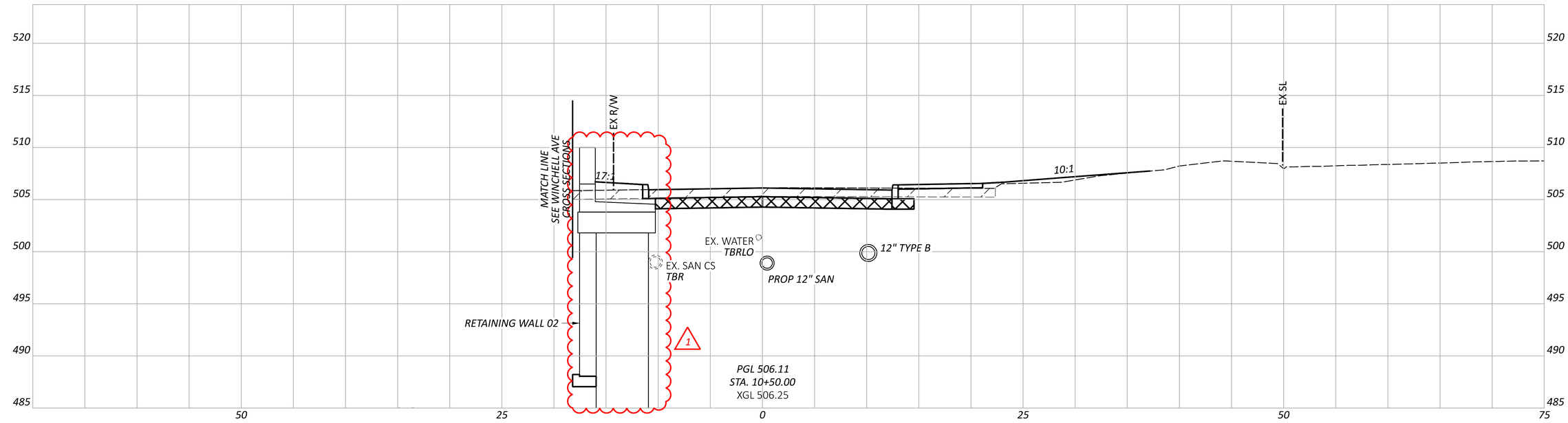

CROSS SECTIONS - COURT ST
STA. 10+50.00 TO STA. 11+00.00

DESIGN AGENCY
STRUCTUREPOINT LLC

DESIGNER
LZS

REVIEWER
KAM 03/03/25

PROJECT ID
122048

SHEET P.98 TOTAL P.421

HAM-IR 75-1.05

MODEL: COURT - XS008 PAPERSIZE: 34x22 (in.) DATE: 8/28/2025 TIME: 9:42:17 AM PLTDRV: OHDOT_PDF.plt;cfg PENTBL: OHDOT_Pen_Addendum.tbl USER: WORKSPACE: pw:\\ohiodot-pw.bentley.com:ohiodot-pw-02\Documents\01 Active Projects\District 08\Hamilton\122048\03-Engineering_StructurePoint\Roadway\Sheets\122048_XS311.dgn WORKSPACE: OHDOTCEv02 WORKSET: 122048 PRODUCT: OpenRoadsDesigner 10.12.02.4

LEGEND

EXISTING PAVEMENT REMOVED

ITEM 204 - 12" GRANULAR MATERIAL, TYPE C

ITEM 206 - 14" CEMENT STABILIZED SUBGRADE

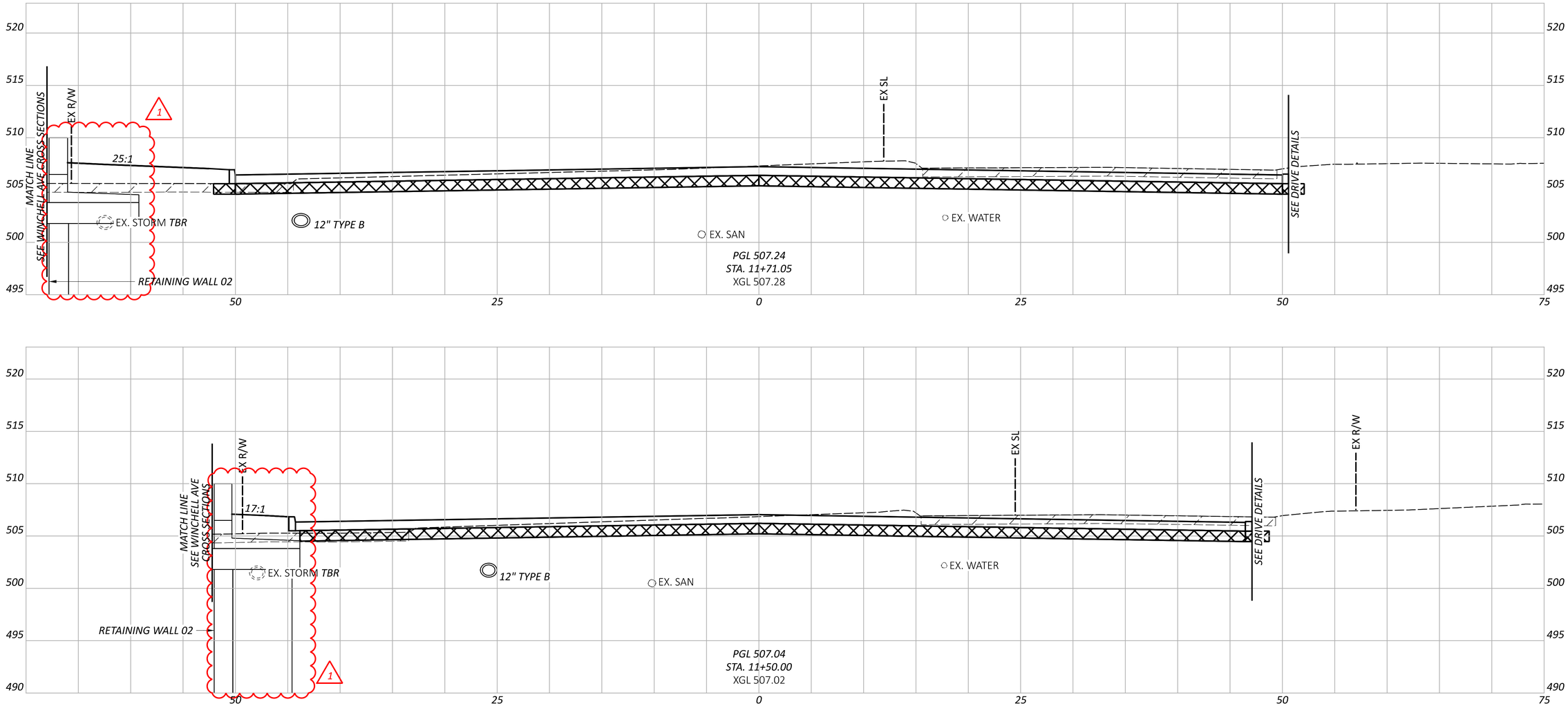

CROSS SECTIONS - COURT ST
STA. 11+50.00 TO STA. 11+71.05

DESIGN AGENCY
STRUCTUREPOINT

DESIGNER
LZS

REVIEWER
KAM 03/03/25

PROJECT ID
122048

SHEET P.99 TOTAL P.421

HAM-IR 75-1.05

MODEL: COURT - XS009 PAPERSIZE: 34x22 (in.) DATE: 8/28/2025 TIME: 9:42:21 AM PLTDRV: OHDOT_PDF.pltcfg PENTBL: OHDOT_Pen_Addendum.tbl USER: WORKSPACE: OHDOTCEv02 WORKSET: 122048 PRODUCT: OpenRoadsDesigner 10.12.02.4
pw:\\ohiodot-pw.bentley.com:ohiodot-pw-02\Documents\01 Active Projects\District 08\Hamilton\122048\d03-Engineering_StructurePoint\Roadway\Sheets\122048_XS311.dgn

MODEL: LINN - XS004 PAPERSIZE: 34x22 (in.) DATE: 8/28/2025 TIME: 9:42:50 AM PLTDRV: OHDOT_PDF.pltcfg PENTBL: OHDOT_Pen_Addendum.tbl USER: WORKSPACE: OHDOTCtv02 WORKSET: 122048 PRODUCT: OpenRoadsDesigner 10.12.02.4
pw:\\ohiodot-pw.bentley.com:ohiodot-pw-02\Documents\01 Active Projects\District 08\Hamilton\122048\d03-Engineering_StructurePoint\Roadway\Sheets\122048_XS351.dgn

HAM-IR 75-1.05

LEGEND

EXISTING PAVEMENT REMOVED

ITEM 204 - 12" GRANULAR MATERIAL, TYPE C

ITEM 206 - 14" CEMENT STABILIZED SUBGRADE

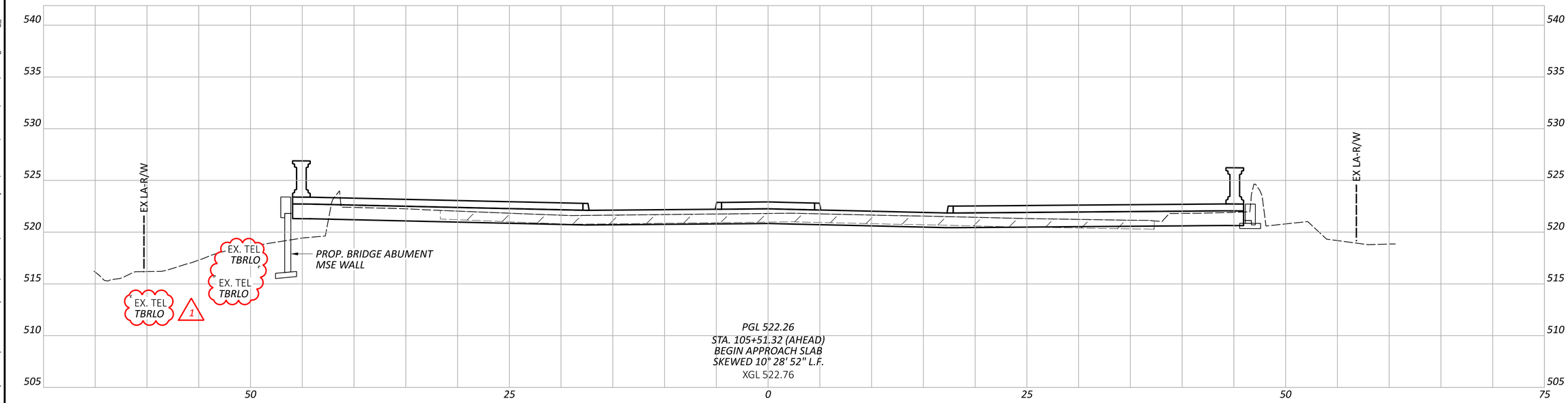

CROSS SECTIONS - LINN ST
STA. 105+51.32 (AHEAD)

DESIGN AGENCY
MPEAN STRUCTUREPOINT INC.

DESIGNER
LZS

REVIEWER
KAM 03/03/25

PROJECT ID
122048

SHEET P.101 | TOTAL P.421

LEGEND

EXISTING PAVEMENT REMOVED

ITEM 204 - 12" GRANULAR MATERIAL, TYPE C

ITEM 206 - 14" CEMENT STABILIZED SUBGRADE

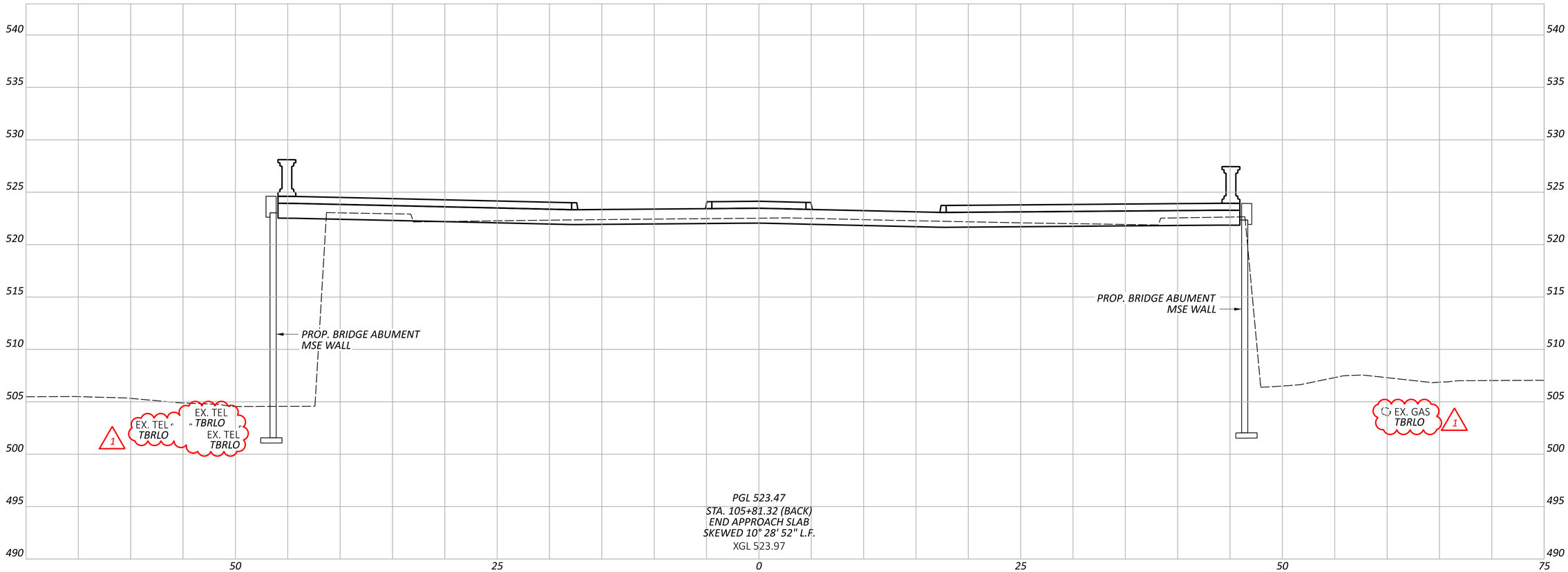

PGL 523.47
STA. 105+81.32 (BACK)
END APPROACH SLAB
SKEWED 10° 28' 52" L.F.
XGL 523.97

CROSS SECTIONS - LINN ST
STA. 105+81.32 (BACK)

HAM-IR 75-1.05

MODEL: LINN - XS005 PAPERSIZE: 34x22 (in.) DATE: 8/28/2025 TIME: 9:43:05 AM PLTDRV: OHDOT_PDF.pltcfg PENTBL: OHDOT_Pen_Addendum.tbl USER: WORKSPACE: OHDOTCtv02 WORKSET: 122048 PRODUCT: OpenRoadsDesigner 10.12.02.4
pw:\\ohiodot-pw.bentley.com:ohiodot-pw-02\Documents\01 Active Projects\District 08\Hamilton\122048\403-Engineering_StructurePoint\Roadway\Sheets\122048_XS351.dgn

DESIGN AGENCY
STRUCTUREPOINT LLC

DESIGNER
LZS

REVIEWER
KAM 03/03/25

PROJECT ID
122048

SHEET P.102 | TOTAL P.421

MODEL: LINN - XS006 PAPERSIZE: 34x22 (in.) DATE: 8/28/2025 TIME: 9:45:48 AM PLTDRV: OHDOT_PDF.pltcfg PENTBL: OHDOT_Pen_Addendum.tbl USER: WORKSPACE: OHDOTCEv02 WORKSET: 122048 PRODUCT: OpenRoadsDesigner 10.12.02.4
pw:\\ohiodot-pw.bentley.com:ohiodot-pw-02\Documents\01 Active Projects\District 08\Hamilton\122048\d03-Engineering_StructurePoint\Roadway\Sheets\122048_XS351.dgn

HAM-IR 75-1.05

LEGEND

EXISTING PAVEMENT REMOVED

ITEM 204 - 12" GRANULAR MATERIAL, TYPE C

ITEM 206 - 14" CEMENT STABILIZED SUBGRADE

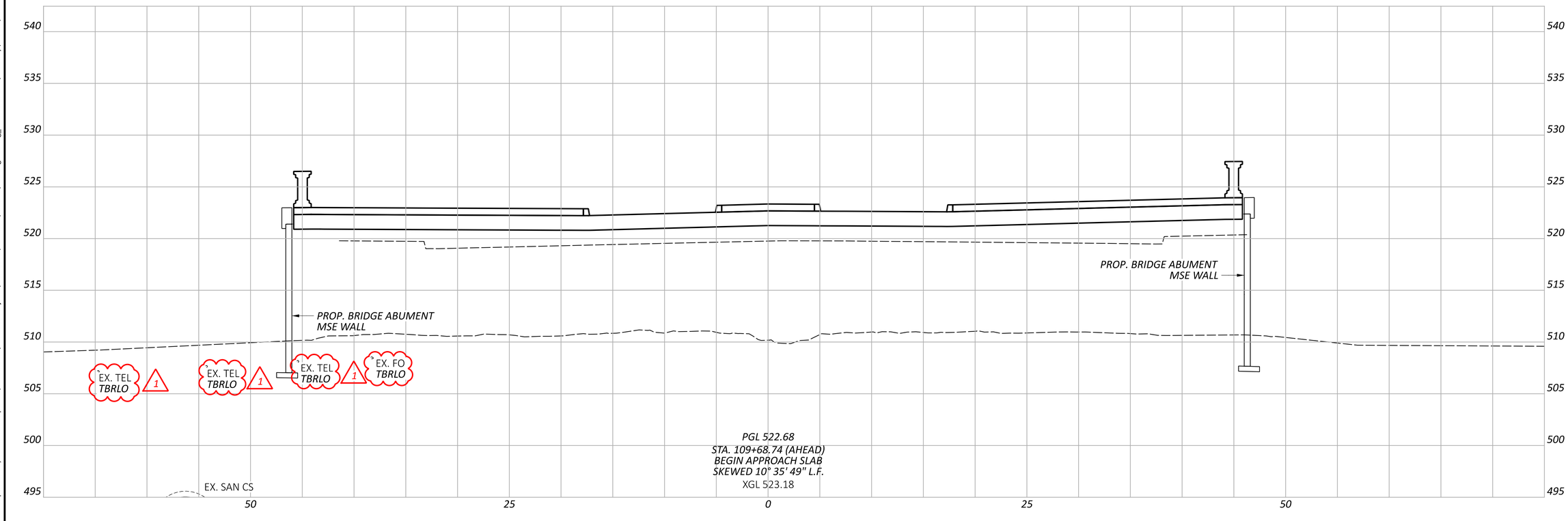

CROSS SECTIONS - LINN ST
STA. 109+68.74 (AHEAD)

DESIGN AGENCY
AMERICAN STRUCTUREPOINT INC.

DESIGNER
LZS

REVIEWER
KAM 03/03/25

PROJECT ID
122048

SHEET P.103 TOTAL P.421

LEGEND

EXISTING PAVEMENT REMOVED

ITEM 204 - 12" GRANULAR MATERIAL, TYPE C

ITEM 206 - 14" CEMENT STABILIZED SUBGRADE

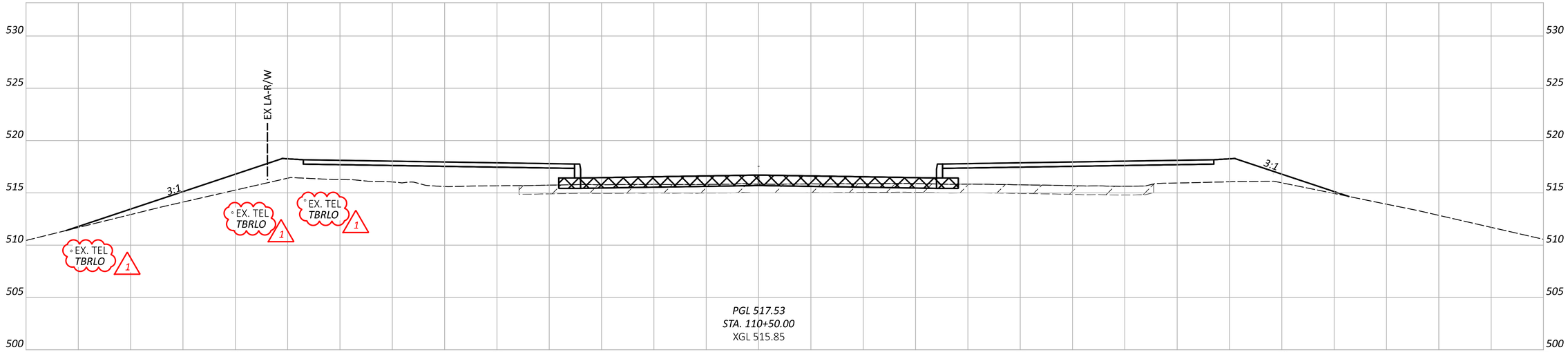

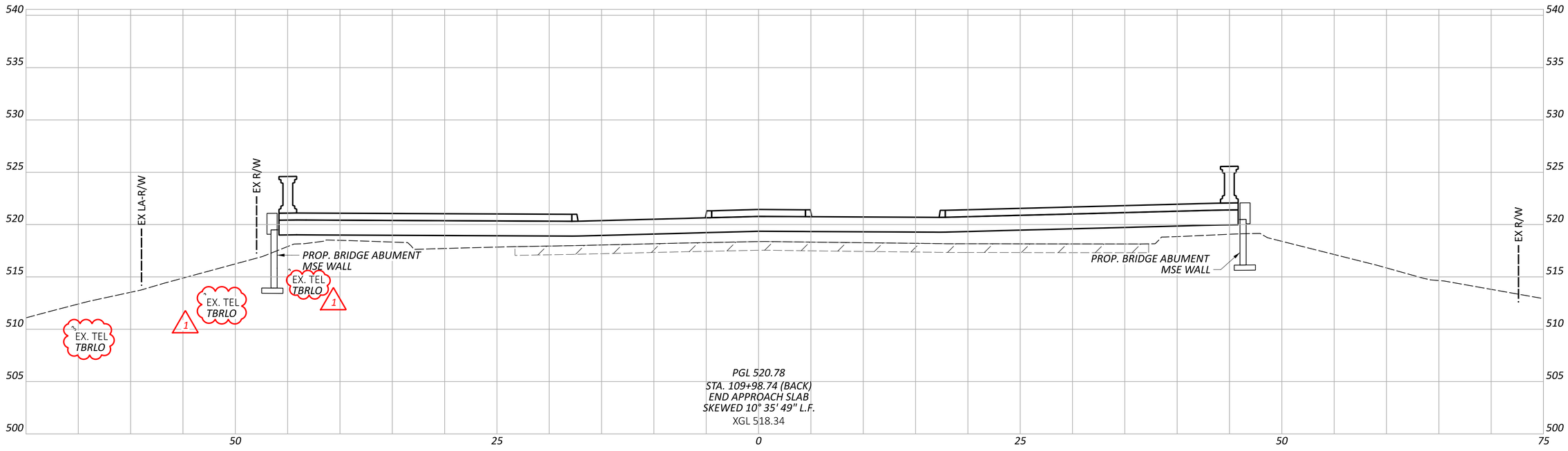

CROSS SECTIONS - LINN ST
STA. 109+98.74 (BACK) TO STA. 110+50.00

HAM-IR 75-1.05

MODEL: LINN - XS007 PAPERSIZE: 34x22 (in.) DATE: 8/28/2025 TIME: 9:45:54 AM PLTDRV: OHDOT_PDF.pltcfg PENTBL: OHDOT_Pen_Addendum.tbl USER: WORKSPACE: OHDOTCivil3D WORKSET: 122048 PRODUCT: OpenRoadsDesigner 10.12.02.4
pw:\\ohiodot-pw.bentley.com:ohiodot-pw-02\Documents\01 Active Projects\District 08\Hamilton\122048\d03-Engineering_StructurePoint\Roadway\Sheets\122048_XS351.dgn

DESIGN AGENCY
STRUCTUREPOINT LLC

DESIGNER
LZS

REVIEWER
KAM 03/03/25

PROJECT ID
122048

SHEET P.104 | TOTAL P.421

LEGEND

EXISTING PAVEMENT REMOVED

ITEM 204 - 12" GRANULAR MATERIAL, TYPE C

ITEM 206 - 14" CEMENT STABILIZED SUBGRADE

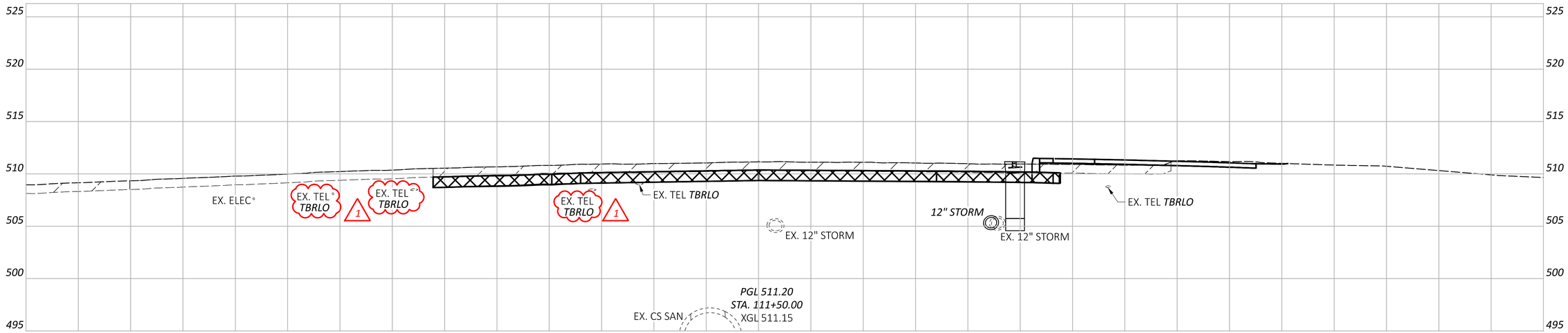

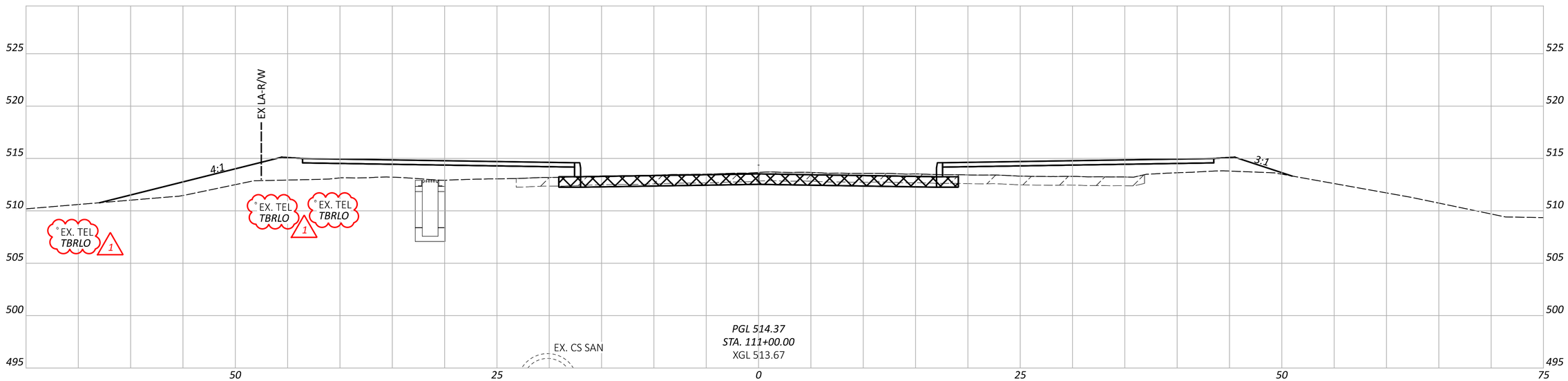

CROSS SECTIONS - LINN ST
STA. 111+00.00 TO STA. 111+50.00

DESIGN AGENCY
MPEAN STRUCTUREPOINT INC.

DESIGNER
LZS

REVIEWER
KAM 03/03/25

PROJECT ID
122048

SHEET P.105 TOTAL P.421

HAM-IR 75-1.05

MODEL: LINN - XS008 PAPERSIZE: 34x22 (in.) DATE: 8/28/2025 TIME: 9:46:00 AM PLTDRV: OHDOT_PDF.pltcfg PENTBL: OHDOT_Pen_Addendum.tbl USER: WORKSPACE: OHDOTCtv02 WORKSET: 122048 PRODUCT: OpenRoadsDesigner 10.12.02.4
pw:\\ohiodot-pw.bentley.com:ohiodot-pw-02\Documents\01 Active Projects\District 08\Hamilton\122048\v03-Engineering_StructurePoint\Roadway\Sheets\122048_XS351.dgn

MODEL: WINCHELL - XS018 PAPERSIZE: 34x22 (in.) DATE: 8/28/2025 TIME: 9:46:29 AM PLTDRV: OHDOT_PDF.pltcfg PENTBL: OHDOT_Pen_Addendum.tbl USER:
pw:\\ohiodot-pw.bentley.com:ohiodot-pw-02\Documents\01 Active Projects\District 08\Hamilton\122048\403-Engineering_StructurePoint\Roadway\Sheets\122048_XS371.dgn

HAM-IR 75-1.05

LEGEND

EXISTING PAVEMENT REMOVED

ITEM 204 - 12" GRANULAR MATERIAL, TYPE C

ITEM 206 - 14" CEMENT STABILIZED SUBGRADE

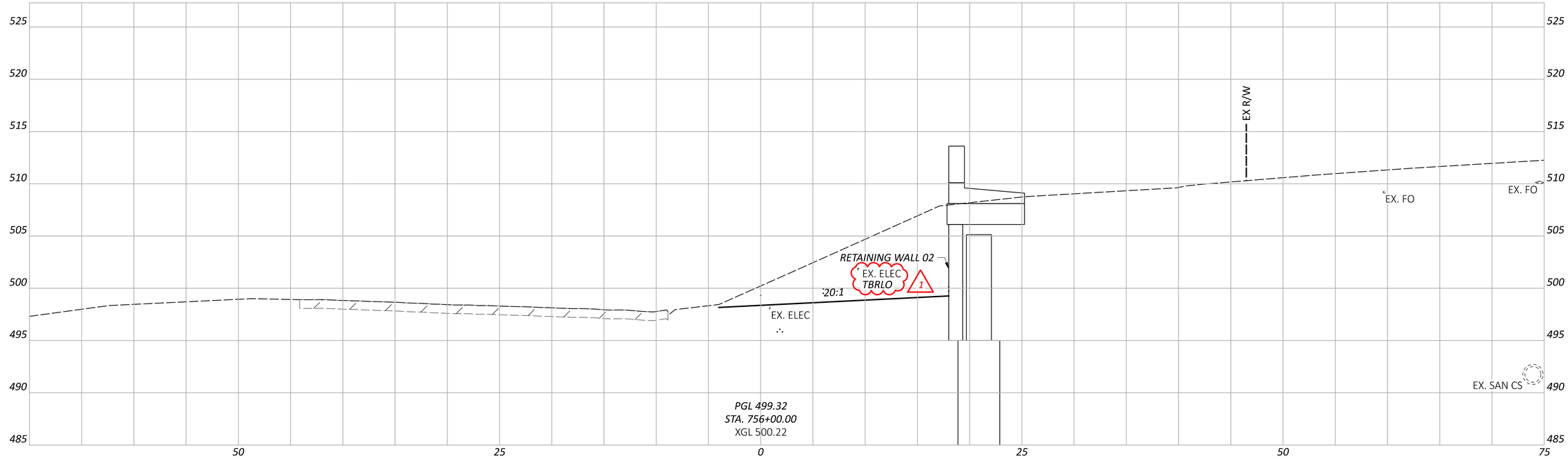

CROSS SECTIONS - WINCHELL AVE
STA. 756+00.00

DESIGN AGENCY
STRUCTUREPOINT

DESIGNER
LZS

REVIEWER
KAM 03/03/25

PROJECT ID
122048

SHEET P.107 TOTAL P.421

LEGEND

EXISTING PAVEMENT REMOVED

ITEM 204 - 12" GRANULAR MATERIAL, TYPE C

ITEM 206 - 14" CEMENT STABILIZED SUBGRADE

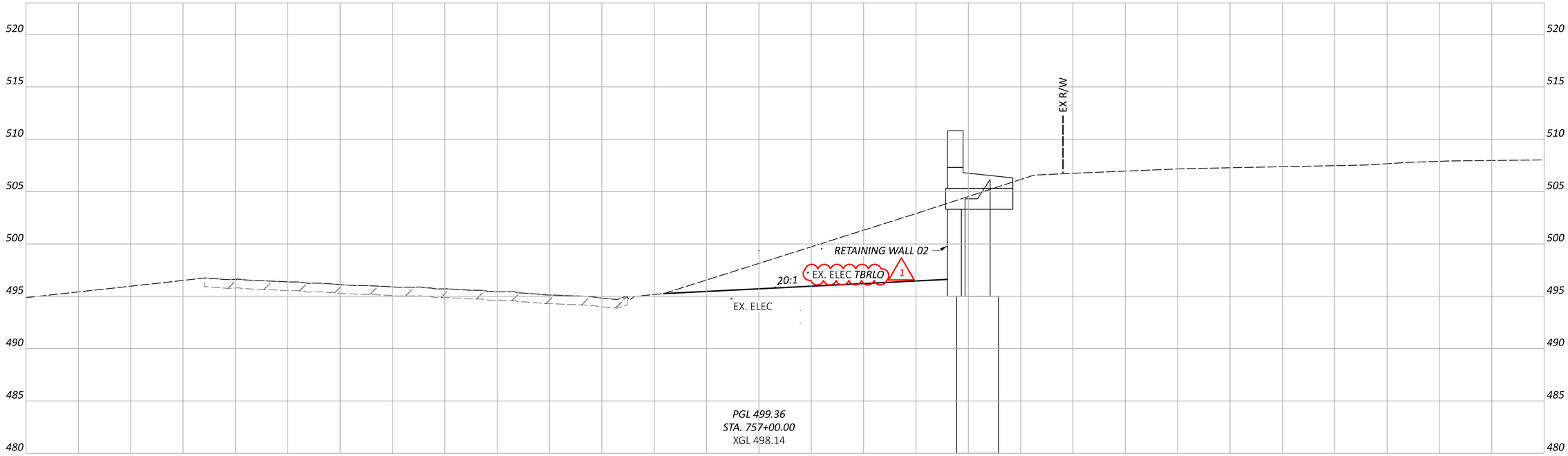

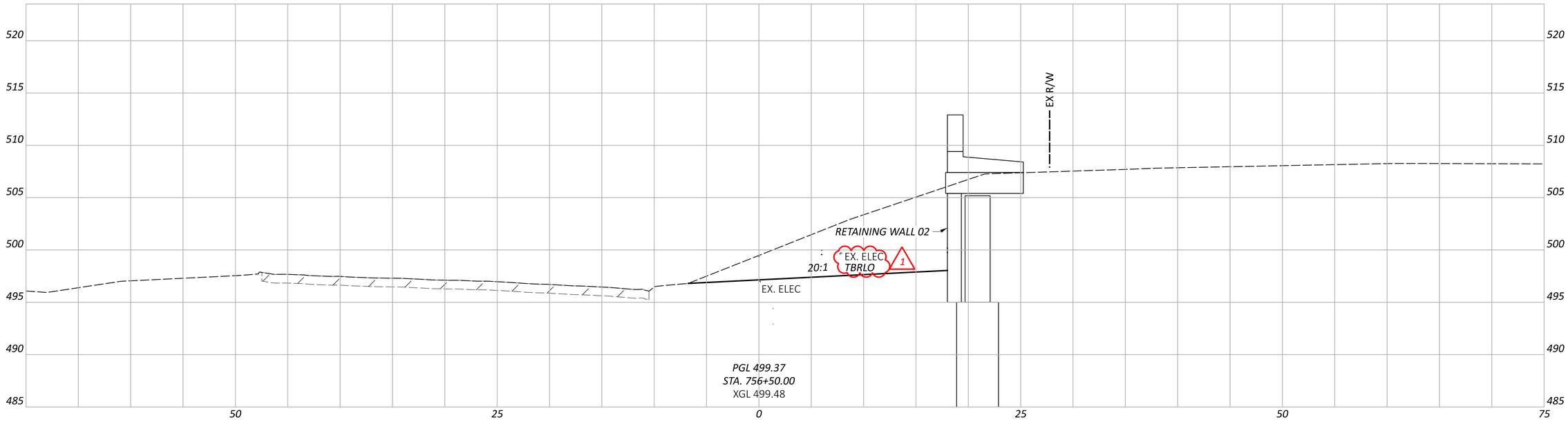

CROSS SECTIONS - WINCHELL AVE
STA. 756+50.00 TO STA. 757+00.00

DESIGN AGENCY
STRUCTUREPOINT LLC

DESIGNER
LZS

REVIEWER
KAM 03/03/25

PROJECT ID
122048

SHEET P.108 | TOTAL P.421

HAM-IR 75-1.05

MODEL: WINCHELL - XS019 PAPERSIZE: 34x22 (in.) DATE: 8/28/2025 TIME: 9:46:43 AM PLTDRV: OHDOT_PDF.pltcfg PENTBL: OHDOT_Pen_Addendum.tbl USER: WORKSPACE: OHDOTCEv02 WORKSET: 122048 PRODUCT: OpenRoadsDesigner 10.12.02.4
pw:\\ohiodot-pw.bentley.com:ohiodot-pw-02\Documents\01 Active Projects\District 08\Hamilton\122048\403-Engineering_StructurePoint\Roadway\Sheets\122048_XS371.dgn

LEGEND

EXISTING PAVEMENT REMOVED

ITEM 204 - 12" GRANULAR MATERIAL, TYPE C

ITEM 206 - 14" CEMENT STABILIZED SUBGRADE

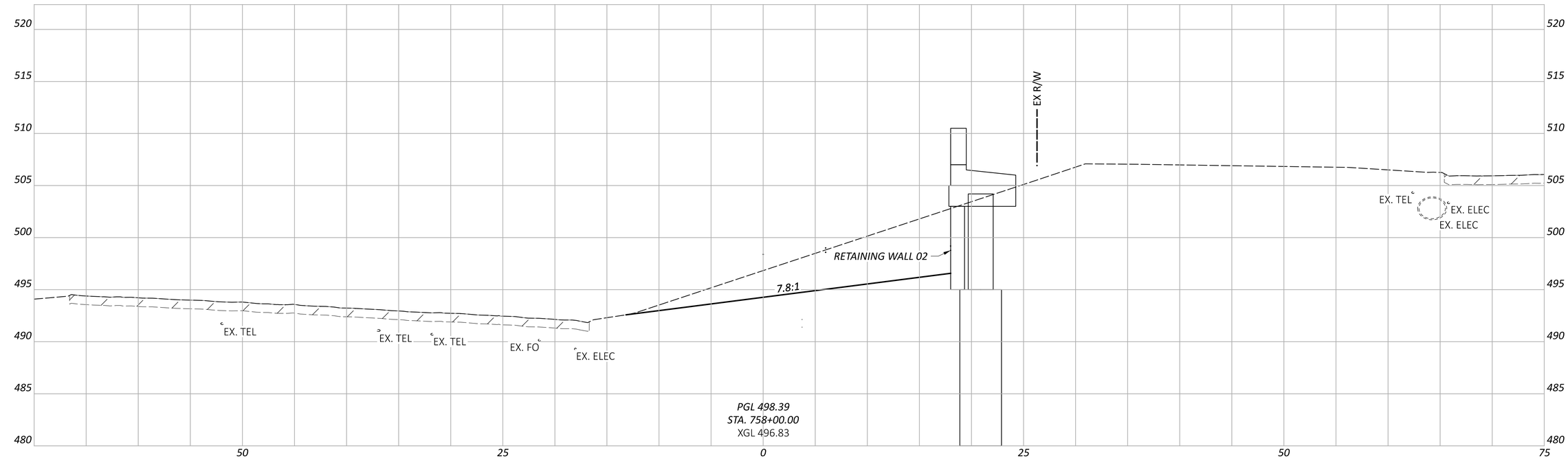

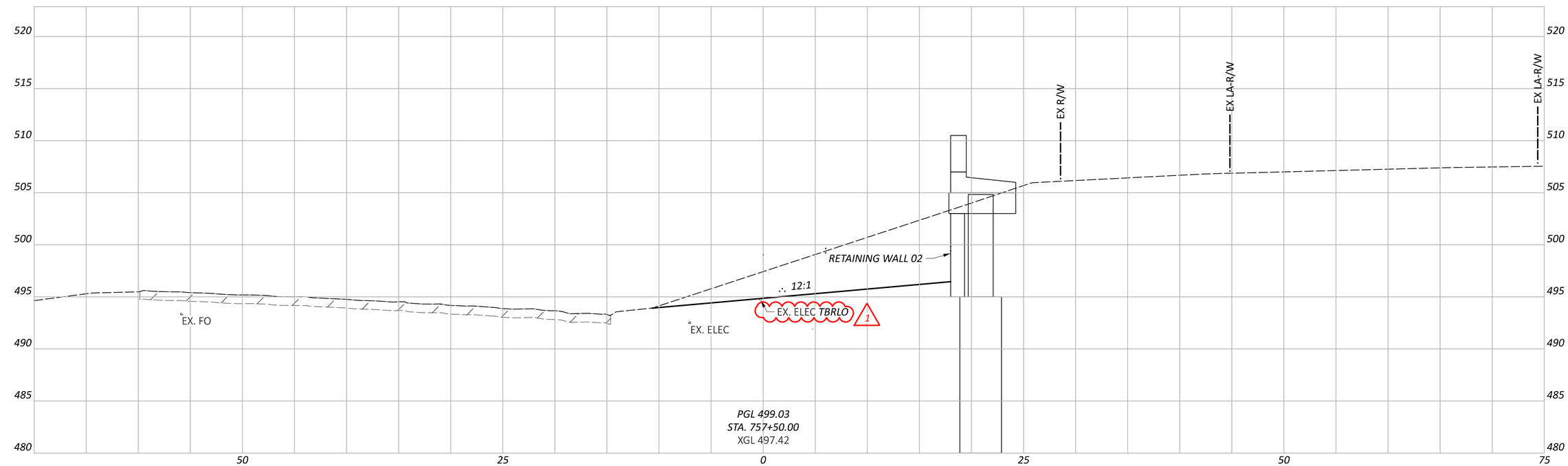

CROSS SECTIONS - WINCHELL AVE
STA. 757+50.00 TO STA. 758+00.00

DESIGN AGENCY
STRUCTUREPOINT

DESIGNER
LZS

REVIEWER
KAM 03/03/25

PROJECT ID
122048

SHEET P.109 | TOTAL P.421

HAM-IR 75-1.05

MODEL: WINCHELL - XS020 PAPERSIZE: 34x22 (in.) DATE: 8/28/2025 TIME: 9:47:04 AM PLTDRV: OHDOT_PDF.pltcfg PENTBL: OHDOT_Pen_Addendum.tbl USER: pw:\\ohiodot-pw.bentley.com:ohiodot-pw-02\Documents\01 Active Projects\District 08\Hamilton\122048\403-Engineering_StructurePoint\Roadway\Sheets\122048_XS371.dgn

MODEL: WINCHELL - XS022 PAPERSIZE: 34x22 (in.) DATE: 8/28/2025 TIME: 9:47:19 AM PLTDRV: OHDOT_PDF.pltcfg PENTBL: OHDOT_Pen_Addendum.tbl USER: WORKSPACE: OHDOTCEv02 WORKSET: 122048 PRODUCT: OpenRoadsDesigner 10.12.02.4
pw:\\ohiodot-pw.bentley.com:ohiodot-pw-02\Documents\01 Active Projects\District 08\Hamilton\122048\403-Engineering_StructurePoint\Roadway\Sheets\122048_XS371.dgn

HAM-IR 75-1.05

LEGEND

EXISTING PAVEMENT REMOVED

ITEM 204 - 12" GRANULAR MATERIAL, TYPE C

ITEM 206 - 14" CEMENT STABILIZED SUBGRADE

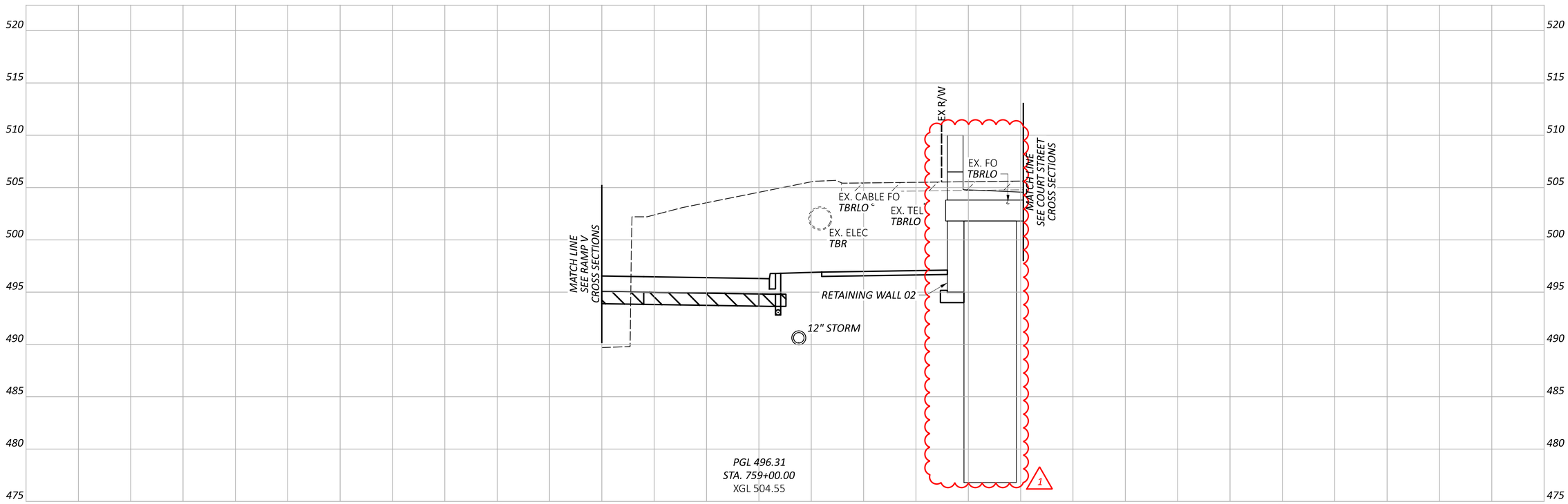

CROSS SECTIONS - WINCHELL AVE
STA. 759+00.00

DESIGN AGENCY
STRUCTUREPOINT LLC

DESIGNER
LZS

REVIEWER
KAM 03/03/25

PROJECT ID
122048

SHEET P.111 TOTAL P.421

MODEL: WINCHELL - XS023 PAPERSIZE: 34x22 (in.) DATE: 8/28/2025 TIME: 9:47:26 AM PLTDRV: OHDOT_PDF.pltcfg PENTBL: OHDOT_Pen_Addendum.tbl USER: WORKSPACE: OHDOTCEv02 WORKSET: 122048 PRODUCT: OpenRoadsDesigner 10.12.02.4
pw:\\ohiodot-pw.bentley.com:ohiodot-pw-02\Documents\01 Active Projects\District 08\Hamilton\122048\403-Engineering_StructurePoint\Roadway\Sheets\122048_XS371.dgn

HAM-IR 75-1.05

LEGEND

EXISTING PAVEMENT REMOVED

ITEM 204 - 12" GRANULAR MATERIAL, TYPE C

ITEM 206 - 14" CEMENT STABILIZED SUBGRADE

CROSS SECTIONS - WINCHELL AVE
STA. 759+50.00

DESIGN AGENCY
STRUCTUREPOINT LLC

DESIGNER LZS

REVIEWER KAM 03/03/25

PROJECT ID 122048

SHEET P.112 TOTAL P.421

MODEL: WINCHELL - XS024 PAPERSIZE: 34x22 (in.) DATE: 8/28/2025 TIME: 9:47:33 AM PLTDRV: OHDOT_PDF.pltcfg PENTBL: OHDOT_Pen_Addendum.tbl USER: WORKSPACE: OHDOTCEv02 WORKSET: 122048 PRODUCT: OpenRoadsDesigner 10.12.02.4
pw:\\ohiodot-pw.bentley.com:ohiodot-pw-02\Documents\01 Active Projects\District 08\Hamilton\122048\403-Engineering_StructurePoint\Roadway\Sheets\122048_XS371.dgn

HAM-IR 75-1.05

LEGEND

EXISTING PAVEMENT REMOVED

ITEM 204 - 12" GRANULAR MATERIAL, TYPE C

ITEM 206 - 14" CEMENT STABILIZED SUBGRADE

CROSS SECTIONS - WINCHELL AVE
STA. 760+00.00

DESIGN AGENCY
STRUCTUREPOINT LLC

DESIGNER
LZS

REVIEWER
KAM 03/03/25

PROJECT ID
122048

SHEET P.113 TOTAL P.421

MODEL: WINCHELL - XS025 PAPERSIZE: 34x22 (in.) DATE: 8/28/2025 TIME: 9:47:46 AM PLTDRV: OHDOT_PDF.pltcfg PENTBL: OHDOT_Pen_Addendum.tbl USER: WORKSPACE: OHDOTCEv02 WORKSET: 122048 PRODUCT: OpenRoadsDesigner 10.12.02.4
pw:\\ohiodot-pw.bentley.com:ohiodot-pw-02\Documents\01 Active Projects\District 08\Hamilton\122048\d03-Engineering_StructurePoint\Roadway\Sheets\122048_XS371.dgn

HAM-IR 75-1.05

LEGEND

EXISTING PAVEMENT REMOVED

ITEM 204 - 12" GRANULAR MATERIAL, TYPE C

ITEM 206 - 14" CEMENT STABILIZED SUBGRADE

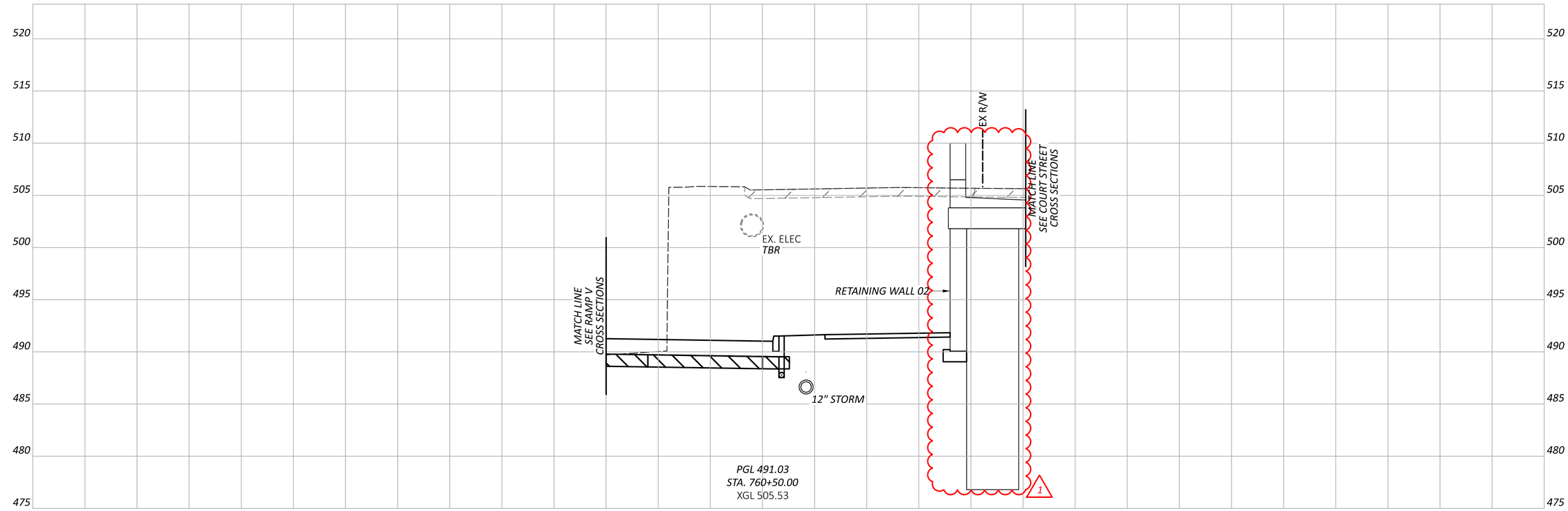

CROSS SECTIONS - WINCHELL AVE
STA. 760+50.00

DESIGN AGENCY
AMERICAN STRUCTUREPOINT INC.

DESIGNER
LZS

REVIEWER
KAM 03/03/25

PROJECT ID
122048

SHEET P.114 TOTAL P.421

MODEL: WINCHELL - XS026 PAPERSIZE: 34x22 (in.) DATE: 8/28/2025 TIME: 9:47:54 AM PLTDRV: OHDOT_PDF.pltcfg PENTBL: OHDOT_Pen_Addendum.tbl USER: WORKSPACE: OHDOTCEv02 WORKSET: 122048 PRODUCT: OpenRoadsDesigner 10.12.02.4
pw:\\ohiodot-pw.bentley.com:ohiodot-pw-02\Documents\01 Active Projects\District 08\Hamilton\122048\403-Engineering_StructurePoint\Roadway\Sheets\122048_XS371.dgn

HAM-IR 75-1.05

LEGEND

EXISTING PAVEMENT REMOVED

ITEM 204 - 12" GRANULAR MATERIAL, TYPE C

ITEM 206 - 14" CEMENT STABILIZED SUBGRADE

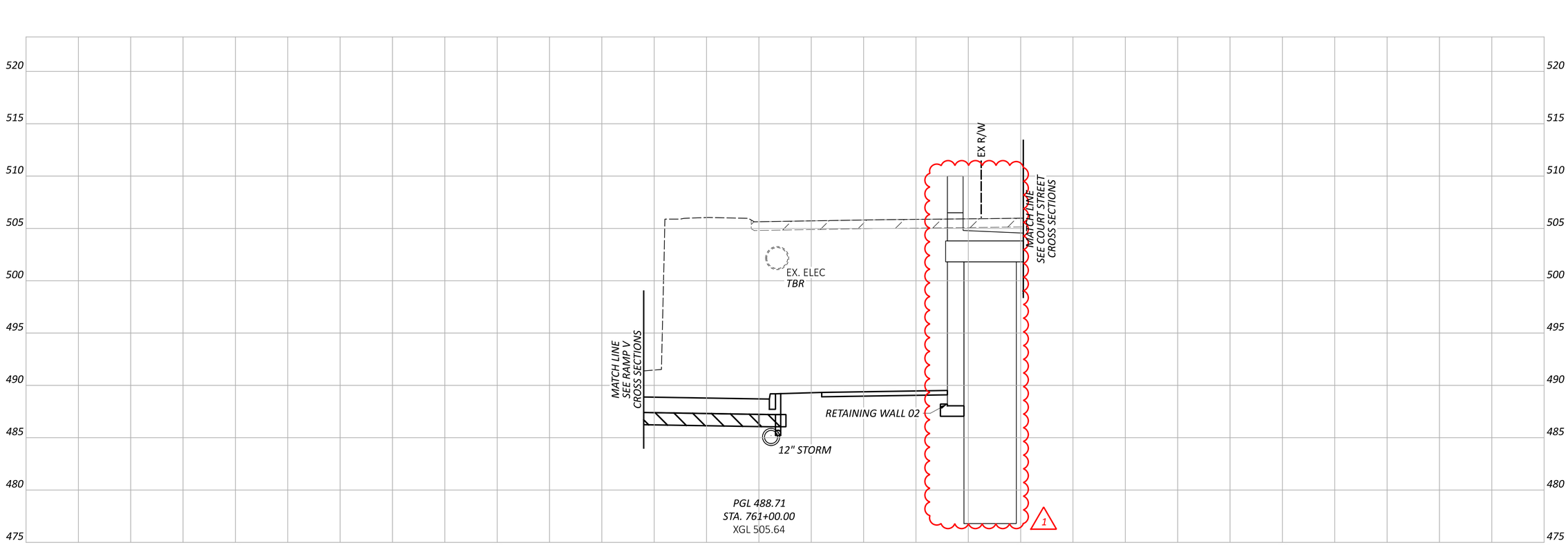

CROSS SECTIONS - WINCHELL AVE
STA. 761+00.00

DESIGN AGENCY
STRUCTUREPOINT

DESIGNER
LZS

REVIEWER
KAM 03/03/25

PROJECT ID
122048

SHEET P.115 TOTAL P.421

MODEL: WINCHELL - XS027 PAPERSIZE: 34x22 (in.) DATE: 8/28/2025 TIME: 9:48:01 AM PLTDRV: OHDOT_PDF.pltcfg PENTBL: OHDOT_Pen_Addendum.tbl USER: WORKSPACE: OHDOTCEv02 WORKSET: 122048 PRODUCT: OpenRoadsDesigner 10.12.02.4
pw:\\ohiodot-pw.bentley.com:ohiodot-pw-02\Documents\01 Active Projects\District 08\Hamilton\122048\403-Engineering_StructurePoint\Roadway\Sheets\122048_XS371.dgn

HAM-IR 75-1.05

LEGEND

EXISTING PAVEMENT REMOVED

ITEM 204 - 12" GRANULAR MATERIAL, TYPE C

ITEM 206 - 14" CEMENT STABILIZED SUBGRADE

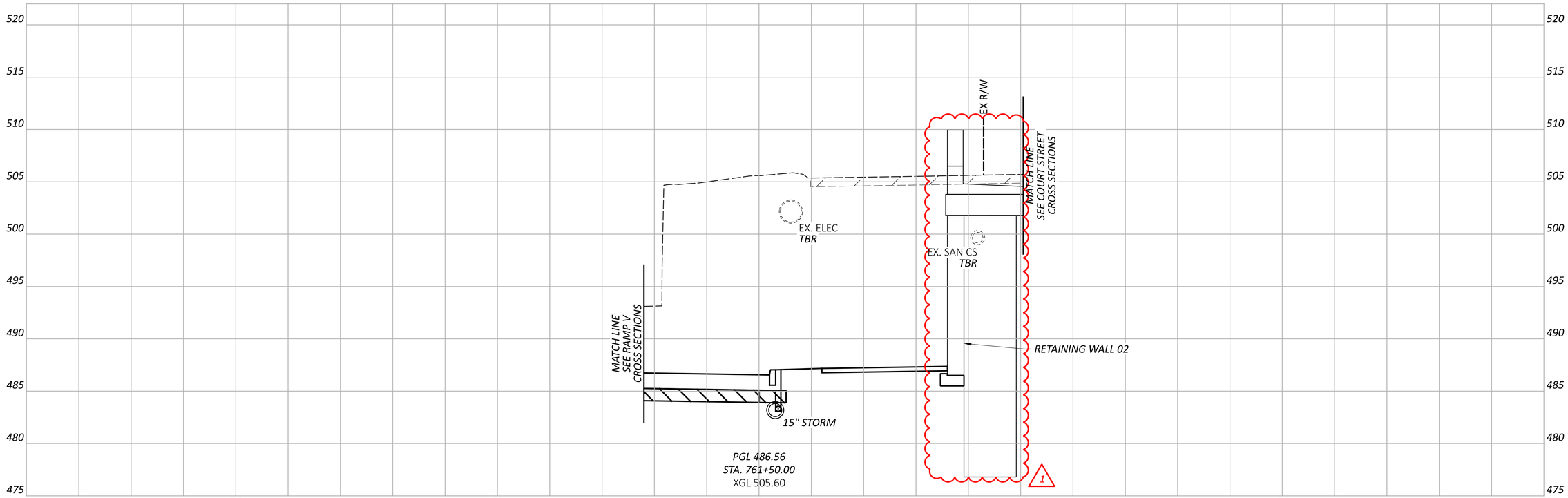

CROSS SECTIONS - WINCHELL AVE
STA. 761+50.00

DESIGN AGENCY
STRUCTUREPOINT LLC

DESIGNER
LZS

REVIEWER
KAM 03/03/25

PROJECT ID
122048

SHEET P.116 TOTAL P.421

MODEL: WINCHELL - XS028 PAPERSIZE: 34x22 (in.) DATE: 8/28/2025 TIME: 9:48:08 AM PLTDRV: OHDOT_PDF.pltcfg PENTBL: OHDOT_Pen_Addendum.tbl USER: WORKSPACE: OHDOTCEv02 WORKSET: 122048 PRODUCT: OpenRoadsDesigner 10.12.02.4
pw:\\ohiodot-pw.bentley.com:ohiodot-pw-02\Documents\01 Active Projects\District 08\Hamilton\122048\403-Engineering_StructurePoint\Roadway\Sheets\122048_XS371.dgn

HAM-IR 75-1.05

LEGEND

EXISTING PAVEMENT REMOVED

ITEM 204 - 12" GRANULAR MATERIAL, TYPE C

ITEM 206 - 14" CEMENT STABILIZED SUBGRADE

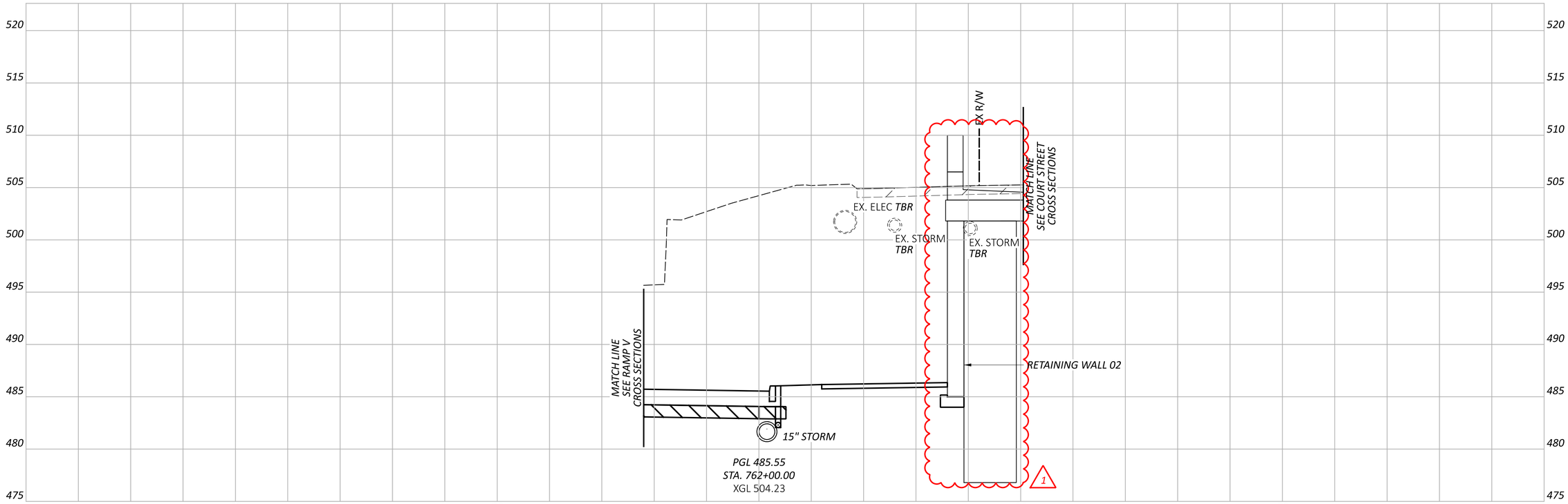

CROSS SECTIONS - WINCHELL AVE
STA. 762+00.00

DESIGN AGENCY
STRUCTUREPOINT LLC

DESIGNER LZS

REVIEWER KAM 03/03/25

PROJECT ID 122048

SHEET P.117 TOTAL P.421

MODEL: WINCHELL - XS029 PAPERSIZE: 34x22 (in.) DATE: 8/28/2025 TIME: 9:48:14 AM PLTDRV: OHDOT_PDF.pltcfg PENTBL: OHDOT_Pen_Addendum.tbl USER: WORKSPACE: OHDOTCEv02 WORKSET: 122048 PRODUCT: OpenRoadsDesigner 10.12.02.4
pw:\\ohiodot-pw.bentley.com:ohiodot-pw-02\Documents\01 Active Projects\District 08\Hamilton\122048\403-Engineering_StructurePoint\Roadway\Sheets\122048_XS371.dgn

HAM-IR 75-1.05

LEGEND

EXISTING PAVEMENT REMOVED

ITEM 204 - 12" GRANULAR MATERIAL, TYPE C

ITEM 206 - 14" CEMENT STABILIZED SUBGRADE

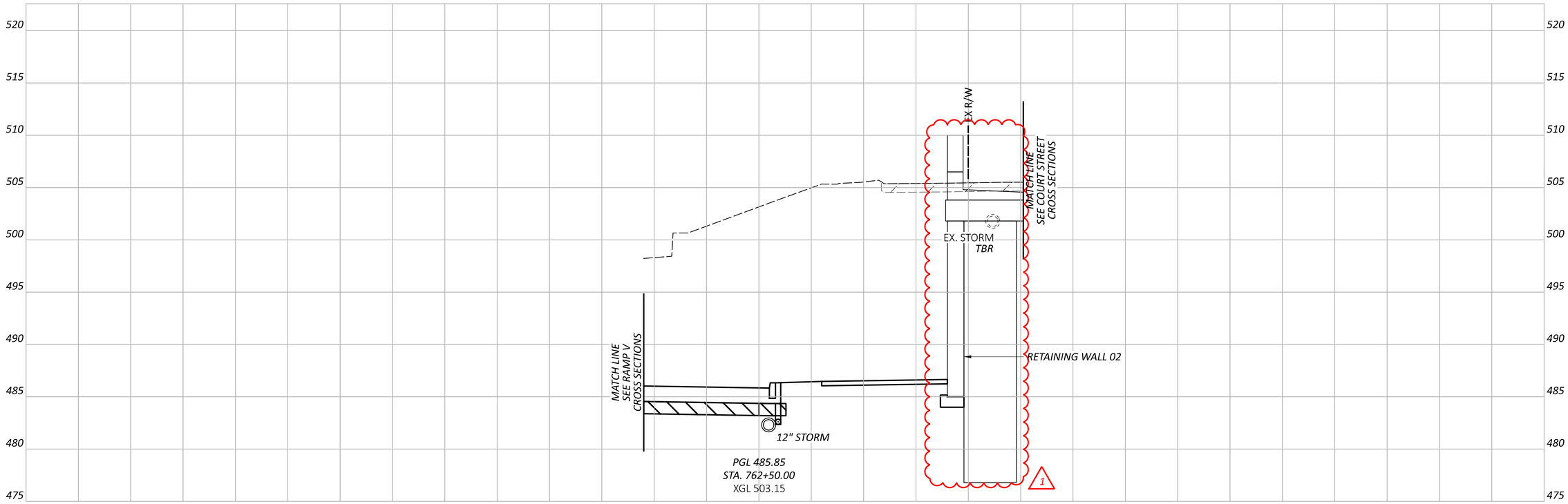

CROSS SECTIONS - WINCHELL AVE
STA. 762+50.00

DESIGN AGENCY
STRUCTUREPOINT LLC

DESIGNER
LZS

REVIEWER
KAM 03/03/25

PROJECT ID
122048

SHEET P.118 | TOTAL P.421

MODEL: WINCHELL - XS030 PAPERSIZE: 34x22 (in.) DATE: 8/28/2025 TIME: 9:48:30 AM PLTDRV: OHDOT_PDF.pltcfg PENTBL: OHDOT_Pen_Addendum.tbl USER: WORKSPACE: OHDOTCEv02 WORKSET: 122048 PRODUCT: OpenRoadsDesigner 10.12.02.4
pw:\\ohiodot-pw.bentley.com:ohiodot-pw-02\Documents\01 Active Projects\District 08\Hamilton\122048\403-Engineering_StructurePoint\Roadway\Sheets\122048_XS371.dgn

HAM-IR 75-1.05

LEGEND

EXISTING PAVEMENT REMOVED

ITEM 204 - 12" GRANULAR MATERIAL, TYPE C

ITEM 206 - 14" CEMENT STABILIZED SUBGRADE

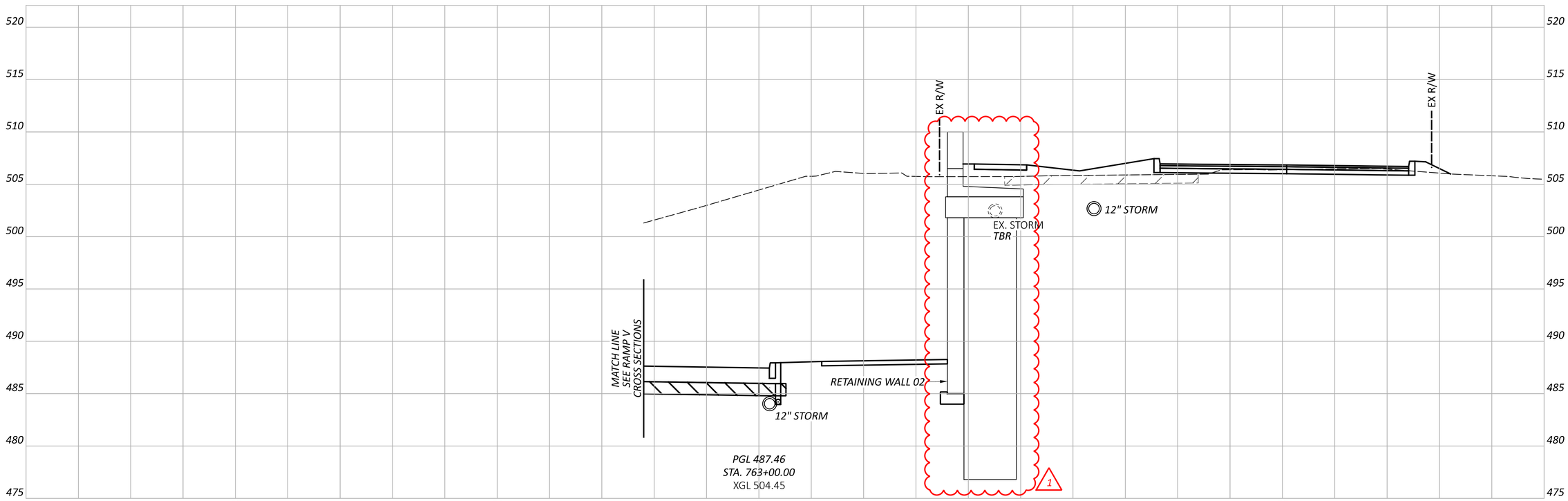

CROSS SECTIONS - WINCHELL AVE
STA. 763+00.00

DESIGN AGENCY
STRUCTUREPOINT LLC

DESIGNER
LZS

REVIEWER
KAM 03/03/25

PROJECT ID
122048

SHEET P.119 TOTAL P.421

LEGEND

EXISTING PAVEMENT REMOVED

ITEM 204 - 12" GRANULAR MATERIAL, TYPE C

ITEM 206 - 14" CEMENT STABILIZED SUBGRADE

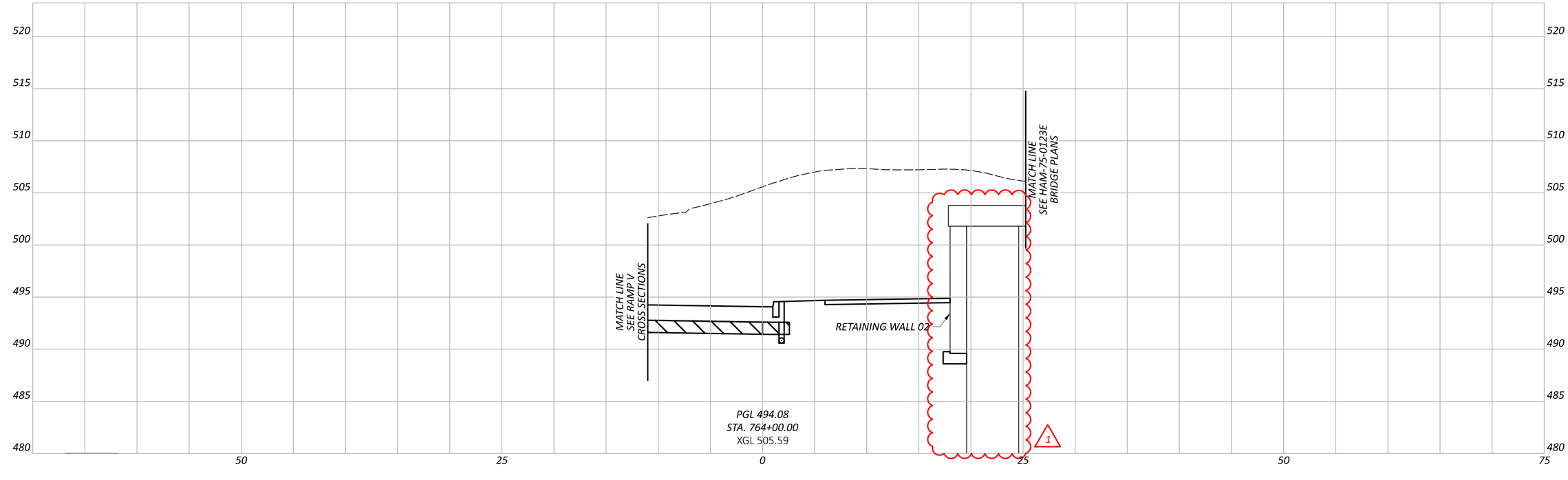

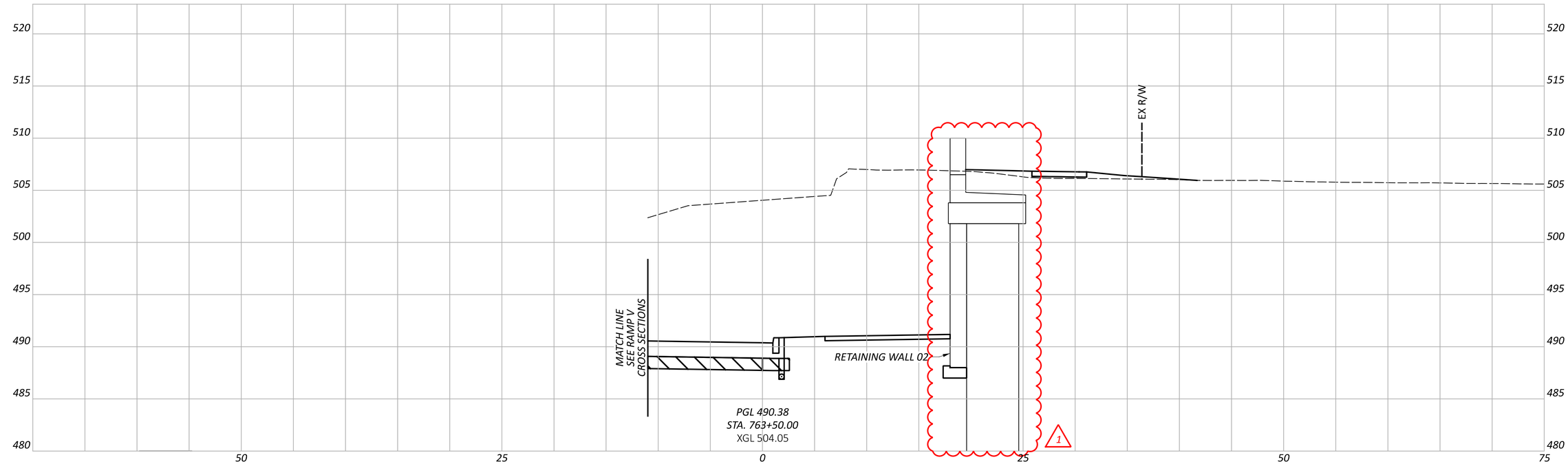

CROSS SECTIONS - WINCHELL AVE
STA. 763+50.00 TO STA. 764+00.00

HAM-IR 75-1.05

MODEL: WINCHELL - XS031 PAPERSIZE: 34x22 (in.) DATE: 8/28/2025 TIME: 9:48:38 AM PLTDRV: OHDOT_PDF.pltcfg PENTBL: OHDOT_Pen_Addendum.tbl USER: pw:\\ohiodot-pw.bentley.com:ohiodot-pw-02\Documents\01 Active Projects\District 08\Hamilton\122048\403-Engineering_StructurePoint\Roadway\Sheets\122048_XS371.dgn

DESIGN AGENCY
STRUCTUREPOINT INC.

DESIGNER LZS

REVIEWER KAM 03/03/25

PROJECT ID 122048

SHEET P.120 TOTAL P.421

LEGEND

EXISTING PAVEMENT REMOVED

ITEM 204 - 12" GRANULAR MATERIAL, TYPE C

ITEM 206 - 14" CEMENT STABILIZED SUBGRADE

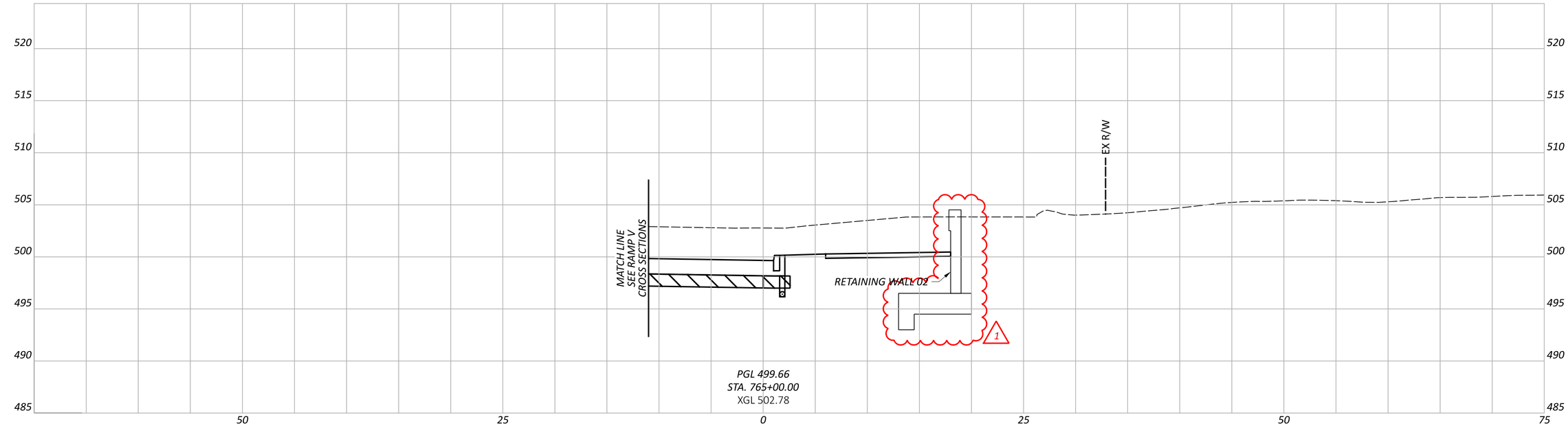

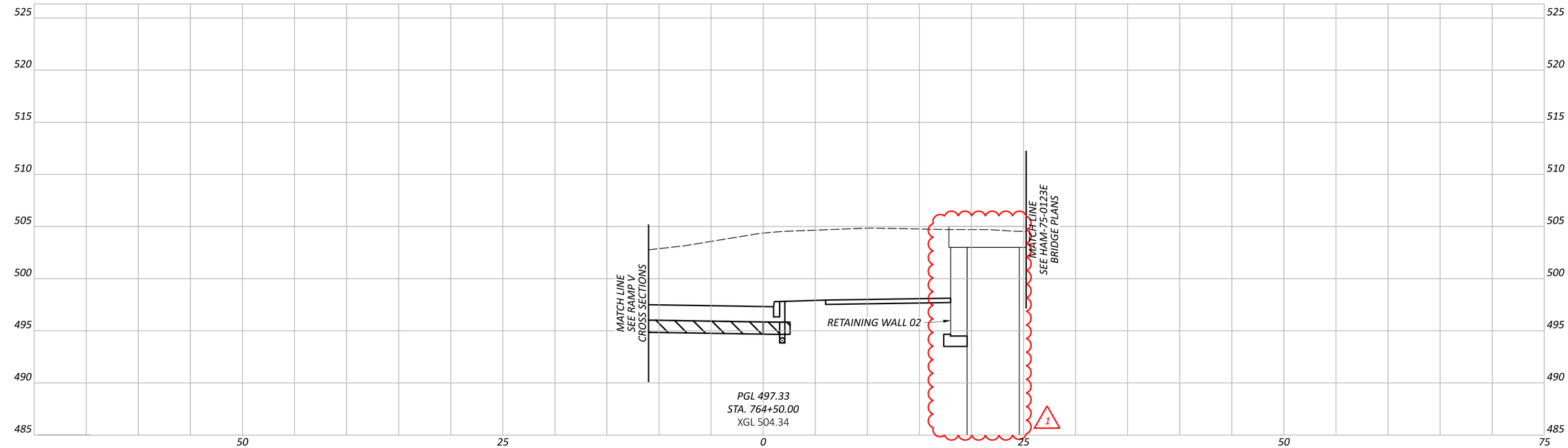

CROSS SECTIONS - WINCHELL AVE
STA. 764+50.00 TO STA. 765+00.00

DESIGN AGENCY
STRUCTUREPOINT INC.

DESIGNER
LZS

REVIEWER
KAM 03/03/25

PROJECT ID
122048

SHEET P.121 | TOTAL P.421

HAM-IR 75-1.05

MODEL: WINCHELL - XS032 PAPERSIZE: 34x22 (in.) DATE: 8/28/2025 TIME: 9:48:49 AM PLTDRV: OHDOT_PDF.pltcfg PENTBL: OHDOT_Pen_Addendum.tbl USER: pw:\\ohiodot-pw.bentley.com:ohiodot-pw-02\Documents\01 Active Projects\District 08\Hamilton\122048\403-Engineering_StructurePoint\Roadway\Sheets\122048_XS371.dgn

MODEL: WINCHELL - XS033 PAPERSIZE: 34x22 (in.) DATE: 8/28/2025 TIME: 9:49:05 AM PLTDRV: OHDOT_PDF.pltcfg PENTBL: OHDOT_Pen_Addendum.tbl USER:
pw:\\ohiodot-pw.bentley.com:ohiodot-pw-02\Documents\01 Active Projects\District 08\Hamilton\122048\403-Engineering_StructurePoint\Roadway\Sheets\122048_XS371.dgn

HAM-IR 75-1.05

LEGEND

EXISTING PAVEMENT REMOVED

ITEM 204 - 12" GRANULAR MATERIAL, TYPE C

ITEM 206 - 14" CEMENT STABILIZED SUBGRADE

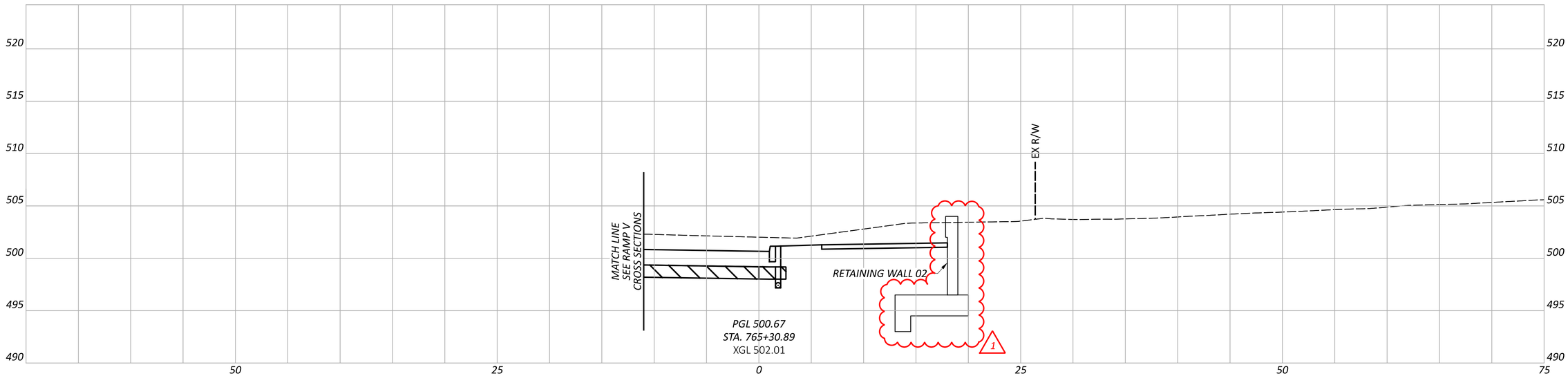

CROSS SECTIONS - WINCHELL AVE
STA. 765+30.89

DESIGN AGENCY
STRUCTUREPOINT LLC

DESIGNER
LZS

REVIEWER
KAM 03/03/25

PROJECT ID
122048

SHEET P.122 | TOTAL P.421

LEGEND

EXISTING PAVEMENT REMOVED

ITEM 204 - 12" GRANULAR MATERIAL, TYPE C

ITEM 206 - 14" CEMENT STABILIZED SUBGRADE

FULL DEPTH PAVEMENT WEDGE

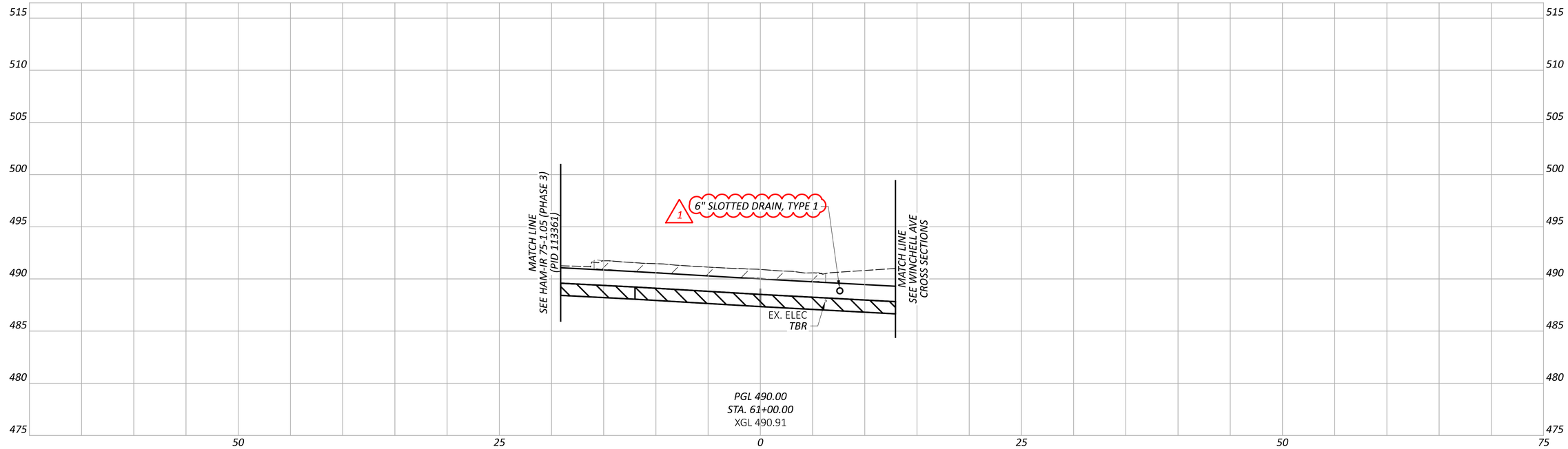

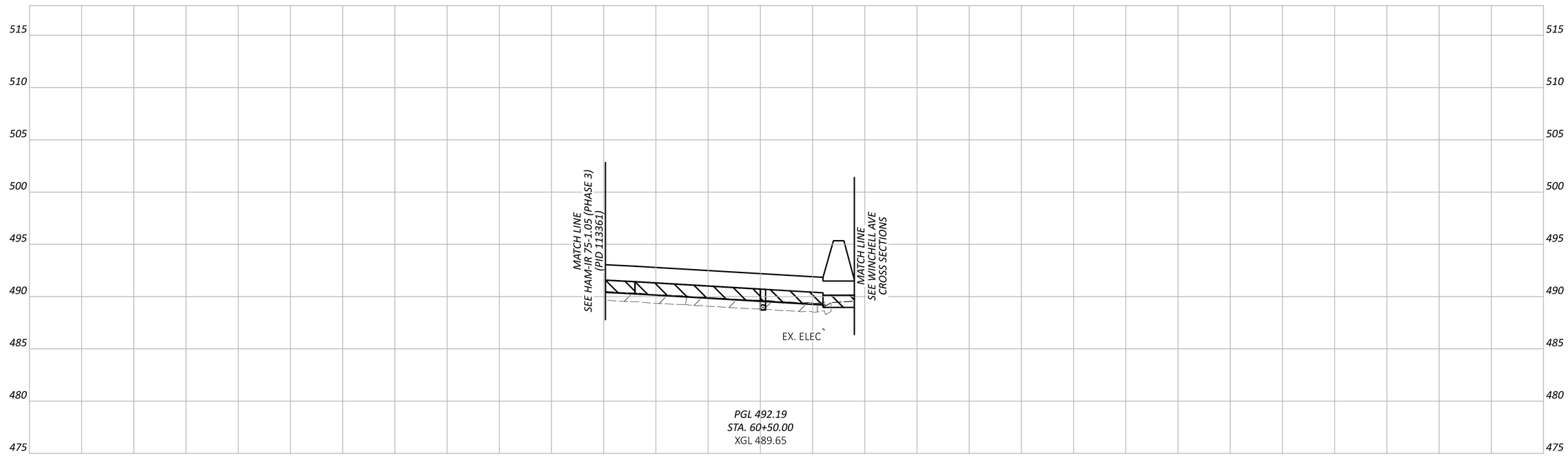

CROSS SECTIONS - RAMP V
STA. 60+50.00 TO STA. 61+00.00

HAM-IR 75-1.05

MODEL: RAMPV - XS006 PAPERSIZE: 34x22 (in.) DATE: 8/28/2025 TIME: 10:51:37 AM PLTDRV: OHDOT_PDF.pltcfg PENTBL: OHDOT_Pen_Addendum.tbl USER: pw:\\ohiodot-pw.bentley.com:ohiodot-pw-02\Documents\01 Active Projects\District 08\Hamilton\122048\403-Engineering_StructurePoint\Roadway\Sheets\122048_XS381.dgn

DESIGN AGENCY
STRUCTUREPOINT LLC

DESIGNER LZS

REVIEWER KAM 03/03/25

PROJECT ID 122048

SHEET P.125 TOTAL P.421

LEGEND

EXISTING PAVEMENT REMOVED

ITEM 204 - 12" GRANULAR MATERIAL, TYPE C

ITEM 206 - 14" CEMENT STABILIZED SUBGRADE

FULL DEPTH PAVEMENT WEDGE

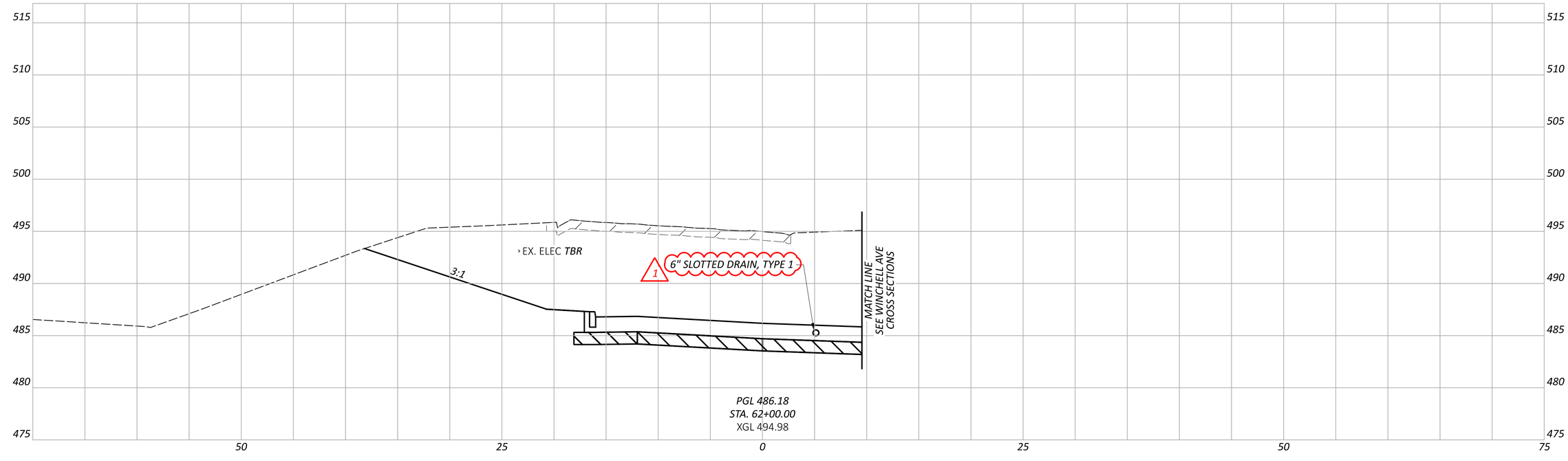

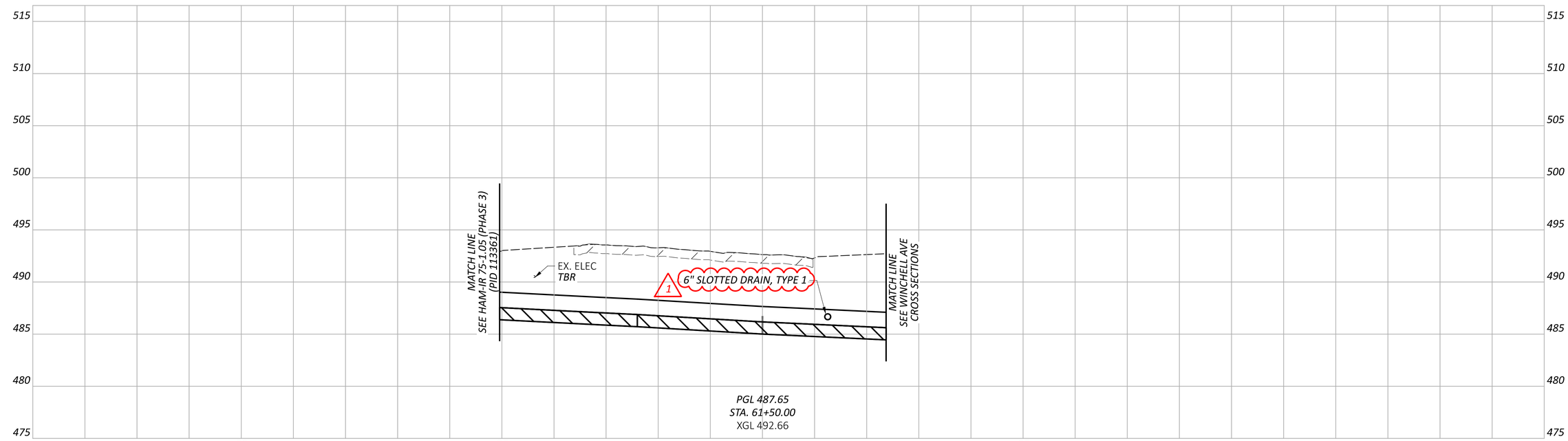

CROSS SECTIONS - RAMP V
STA. 61+50.00 TO STA. 62+00.00

HAM-IR 75-1.05

MODEL: RAMPV - XS007 PAPERSIZE: 34x22 (in.) DATE: 8/28/2025 TIME: 10:54:07 AM PLTDRV: OHDOT_PDF.pltcfg PENTBL: OHDOT_Pen_Addendum.tbl USER: pw:\\ohiodot-pw.bentley.com:ohiodot-pw-02\Documents\01 Active Projects\District 08\Hamilton\122048\403-Engineering_StructurePoint\Roadway\Sheets\122048_XS381.dgn

DESIGN AGENCY
STRUCTUREPOINT LLC

DESIGNER LZS

REVIEWER KAM 03/03/25

PROJECT ID 122048

SHEET P.126 TOTAL P.421

LEGEND

EXISTING PAVEMENT REMOVED

ITEM 204 - 12" GRANULAR MATERIAL, TYPE C

ITEM 206 - 14" CEMENT STABILIZED SUBGRADE

FULL DEPTH PAVEMENT WEDGE

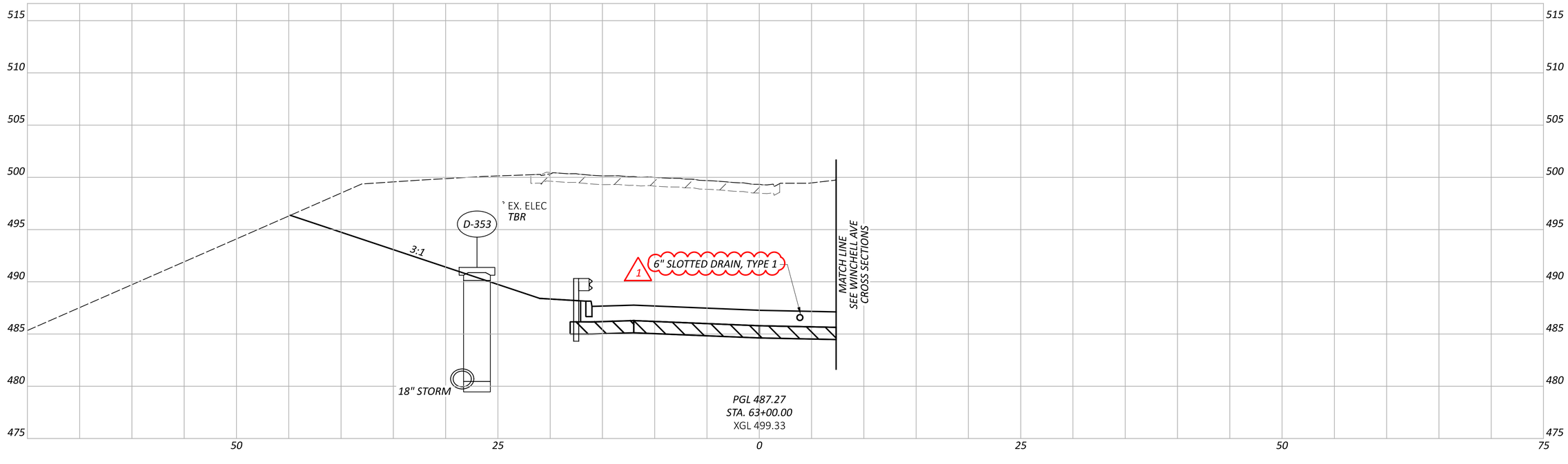

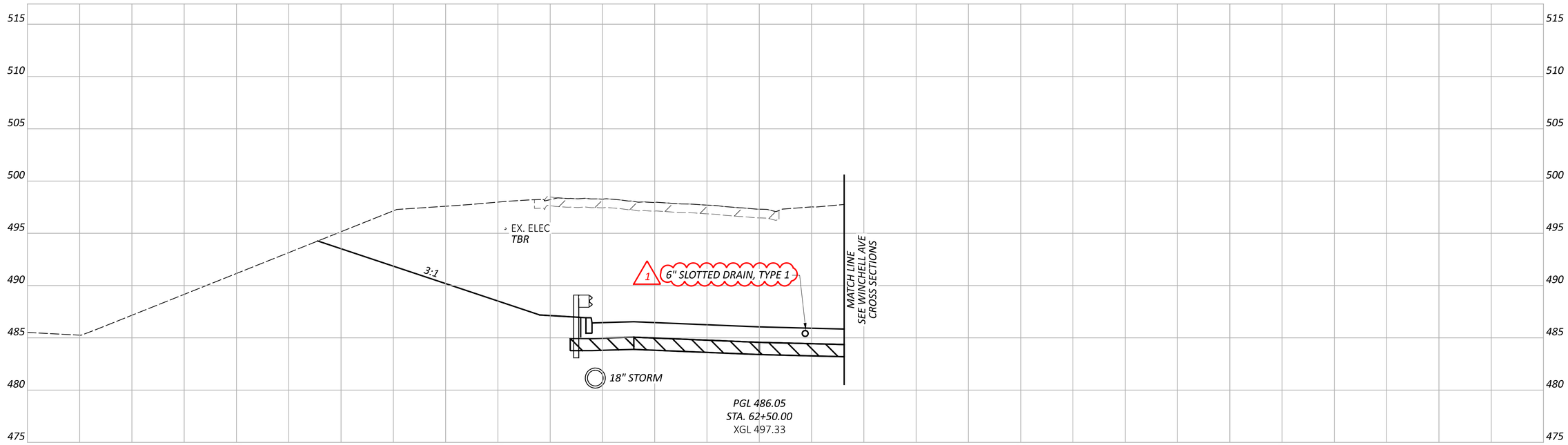

CROSS SECTIONS - RAMP V
STA. 62+50.00 TO STA. 63+00.00

HAM-IR 75-1.05

MODEL: RAMPV - XS008 PAPERSIZE: 34x22 (in.) DATE: 8/28/2025 TIME: 10:54:19 AM PLTDRV: OHDOT_PDF.pltcfg PENTBL: OHDOT_Pen_Addendum.tbl USER: pw:\\ohiodot-pw.bentley.com:ohiodot-pw-02\Documents\01 Active Projects\District 08\Hamilton\122048\403-Engineering_StructurePoint\Roadway\Sheets\122048_XS381.dgn

DESIGN AGENCY
STRUCTUREPOINT LLC

DESIGNER
LZS

REVIEWER
KAM 03/03/25

PROJECT ID
122048

SHEET P.127 TOTAL P.421

LEGEND

- EXISTING PAVEMENT REMOVED
- ITEM 204 - 12" GRANULAR MATERIAL, TYPE C
- ITEM 206 - 14" CEMENT STABILIZED SUBGRADE
- FULL DEPTH PAVEMENT WEDGE

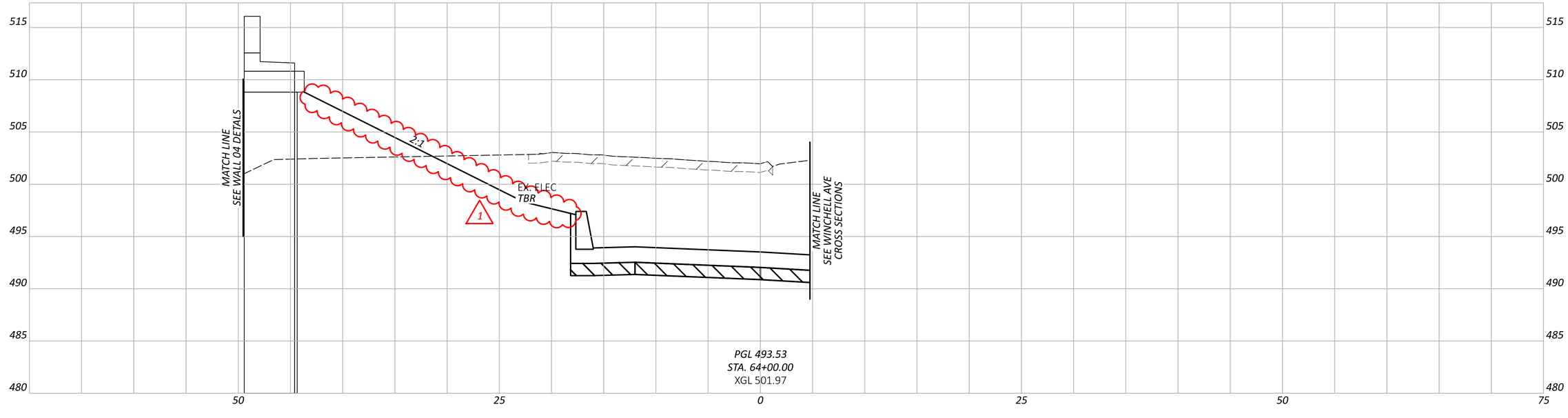

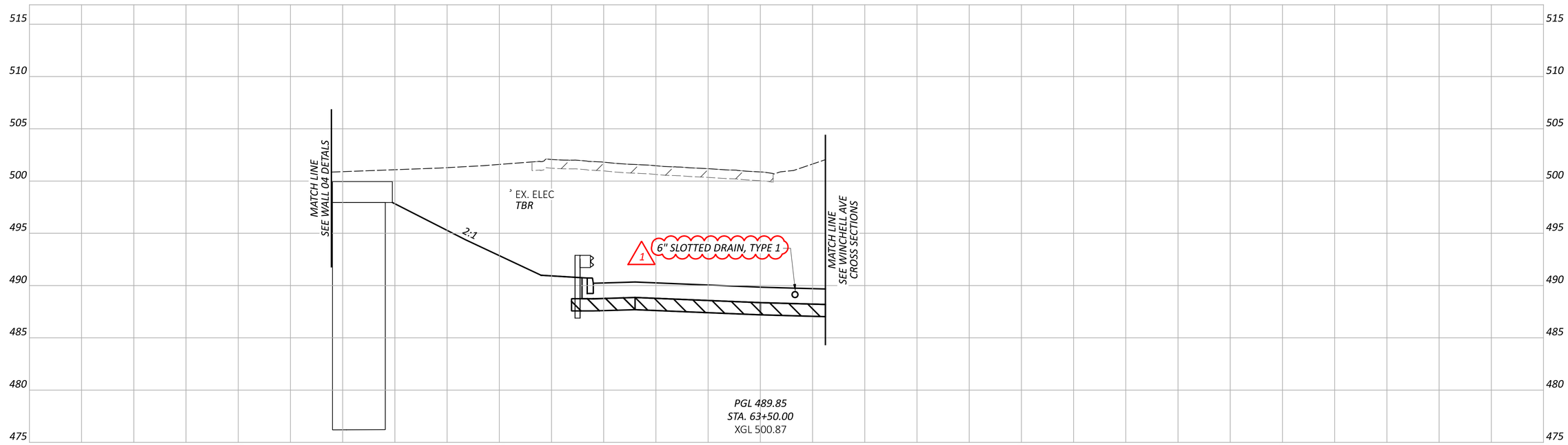

CROSS SECTIONS - RAMP V
STA. 63+50.00 TO STA. 64+00.00

DESIGN AGENCY
AMERICAN STRUCTUREPOINT INC.

DESIGNER
LZS

REVIEWER
KAM 03/03/25

PROJECT ID
122048

SHEET P.128 TOTAL P.421

HAM-IR 75-1.05

MODEL: RAMPV - XS009 PAPERSIZE: 34x22 (in.) DATE: 8/28/2025 TIME: 10:54:30 AM PLTDRV: OHDOT_PDF.pltcfg PENTBL: OHDOT_Pen_Addendum.tbl USER: WORKSPACE: OHDOTCEv02 WORKSET: 122048 PRODUCT: OpenRoadsDesigner 10.12.02.4
pw:\\ohiodot-pw.bentley.com:ohiodot-pw-02\Documents\01 Active Projects\District 08\Hamilton\122048\403-Engineering_StructurePoint\Roadway\Sheets\122048_XS381.dgn

LEGEND

EXISTING PAVEMENT REMOVED

ITEM 204 - 12" GRANULAR MATERIAL, TYPE C

ITEM 206 - 14" CEMENT STABILIZED SUBGRADE

FULL DEPTH PAVEMENT WEDGE

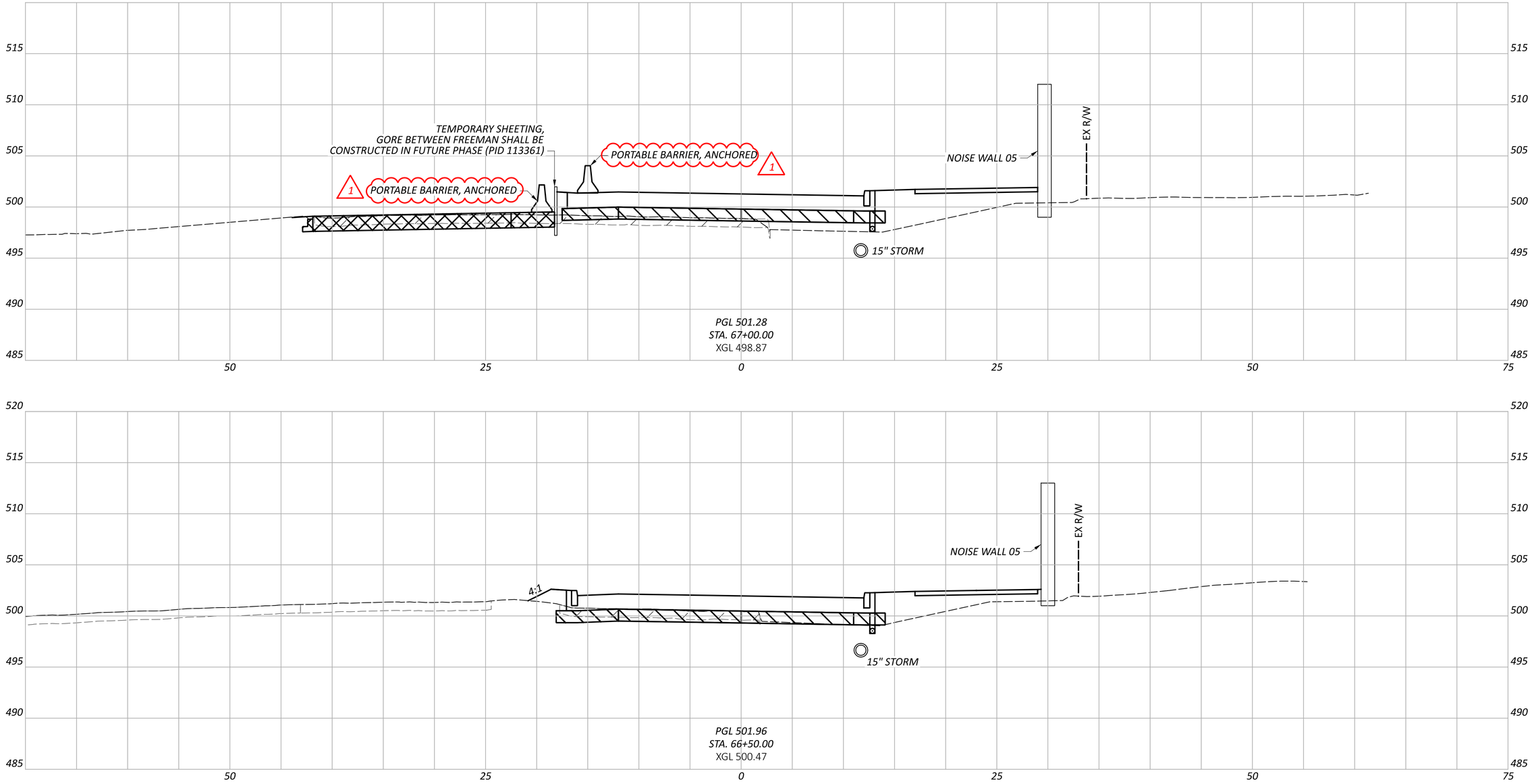

CROSS SECTIONS - RAMP V
STA. 66+50.00 TO STA. 67+00.00

DESIGN AGENCY
STRUCTUREPOINT LLC

DESIGNER
LZS

REVIEWER
KAM 03/03/25

PROJECT ID
122048

SHEET P.131 TOTAL P.421

HAM-IR 75-1.05

MODEL: RAMPV - XS012 PAPERSIZE: 34x22 (in.) DATE: 8/28/2025 TIME: 11:34:57 AM PLTDRV: OHDOT_PDF.pltcfg PENTBL: OHDOT_Pen_Addendum.tbl USER: WORKSPACE: OHDOTCEv02 WORKSET: 122048 PRODUCT: OpenRoadsDesigner 10.12.02.4
pw:\\ohiodot-pw.bentley.com:ohiodot-pw-02\Documents\01 Active Projects\District 08\Hamilton\122048\403-Engineering_StructurePoint\Roadway\Sheets\122048_XS381.dgn

LEGEND

EXISTING PAVEMENT REMOVED

ITEM 204 - 12" GRANULAR MATERIAL, TYPE C

ITEM 206 - 14" CEMENT STABILIZED SUBGRADE

FULL DEPTH PAVEMENT WEDGE

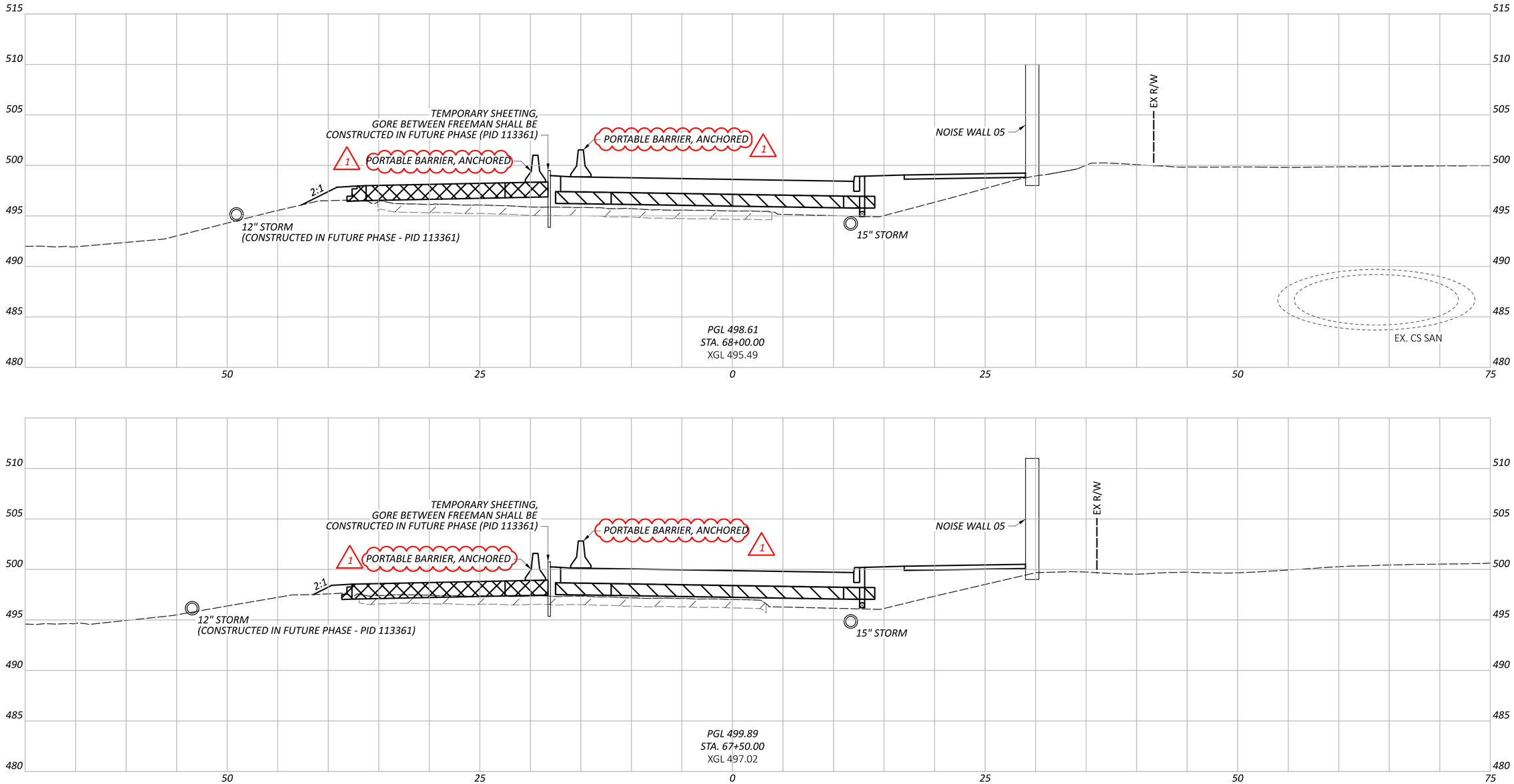

CROSS SECTIONS - RAMP V
STA. 67+50.00 TO STA. 68+00.00

HAM-IR 75-1.05

MODEL: RAMPV - XS013 PAPERSIZE: 34x22 (in.) DATE: 8/28/2025 TIME: 11:38:24 AM PLTDRV: OHDOT_PDF.pltcfg PENTBL: OHDOT_Pen_Addendum.tbl USER: WORKSPACE: OHDOTCEv02 WORKSET: 122048 PRODUCT: OpenRoadsDesigner 10.12.02.4
pw:\\ohiodot-pw.bentley.com:ohiodot-pw-02\Documents\01 Active Projects\District 08\Hamilton\122048\d03-Engineering_StructurePoint\Roadway\Sheets\122048_XS381.dgn

DESIGN AGENCY
STRUCTUREPOINT

DESIGNER
LZS

REVIEWER
KAM 03/03/25

PROJECT ID
122048

SHEET P.132 TOTAL P.421

MODEL: RAMPV - XS014 PAPERSIZE: 34x22 (in.) DATE: 8/28/2025 TIME: 11:38:34 AM PLTDRV: OHDOT_PDF.pltcfg PENTBL: OHDOT_Pen_Addendum.tbl USER: WORKSPACE: OHDOTCEv02 WORKSET: 122048 PRODUCT: OpenRoadsDesigner 10.12.02.4
pw:\\ohiodot-pw.bentley.com:ohiodot-pw-02\Documents\01 Active Projects\District 08\Hamilton\122048\d03-Engineering_StructurePoint\Roadway\Sheets\122048_XS381.dgn

HAM-IR 75-1.05

LEGEND

- *EXISTING PAVEMENT REMOVED*
- *ITEM 204 - 12" GRANULAR MATERIAL, TYPE C*
- *ITEM 206 - 14" CEMENT STABILIZED SUBGRADE*
- *FULL DEPTH PAVEMENT WEDGE*

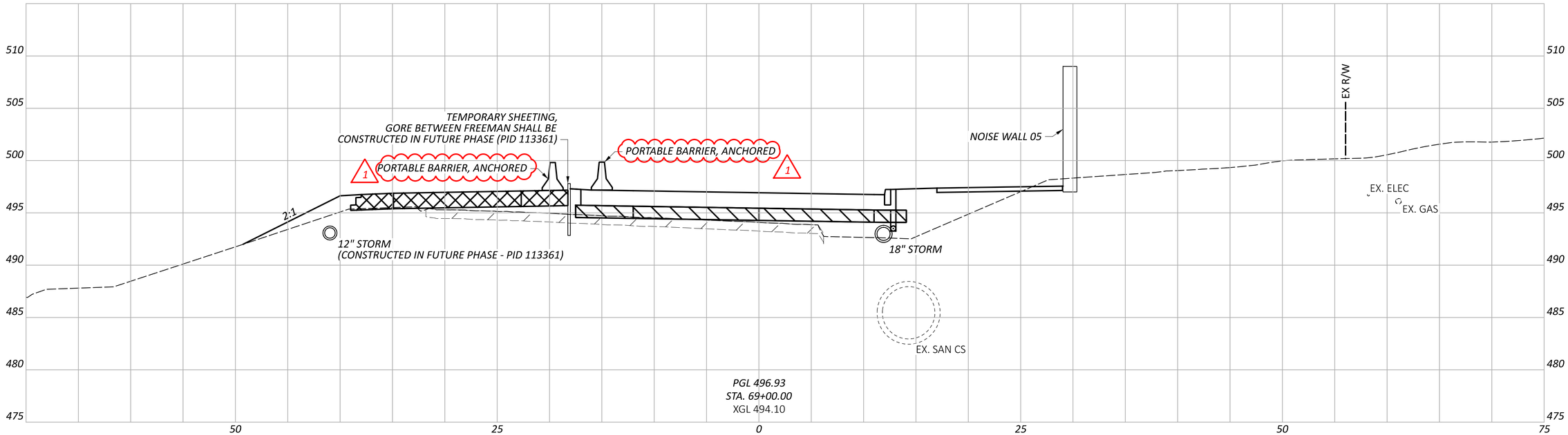

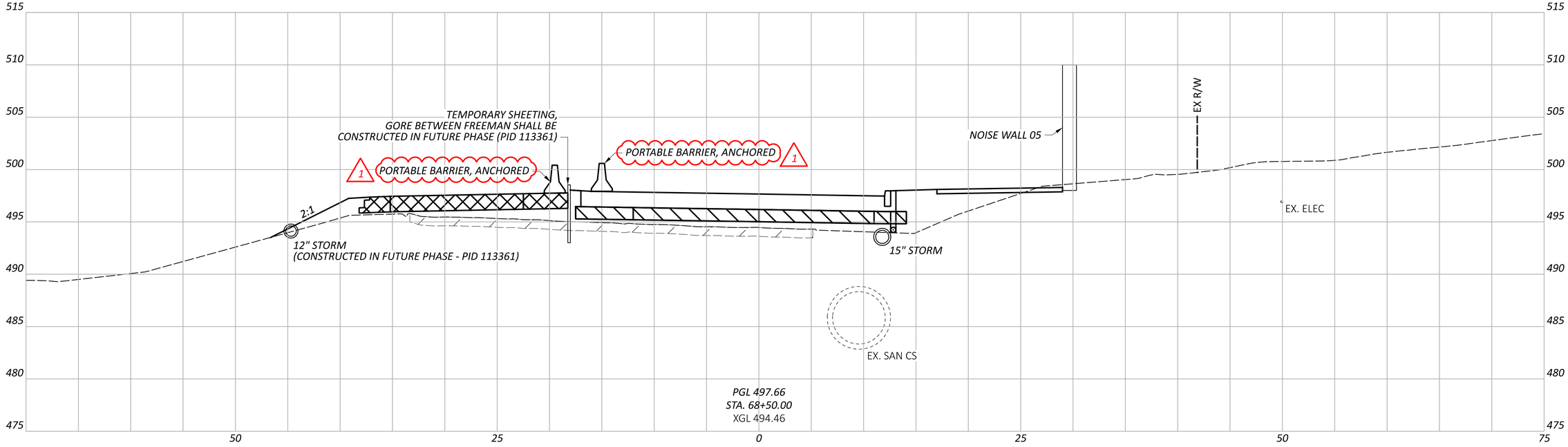

CROSS SECTIONS - RAMP V
STA. 68+50.00 TO STA. 69+00.00

DESIGN AGENCY
AMERICAN STRUCTUREPOINT INC.

DESIGNER
LZS

REVIEWER
KAM 03/03/25

PROJECT ID
122048

SHEET P.133 | TOTAL P.421

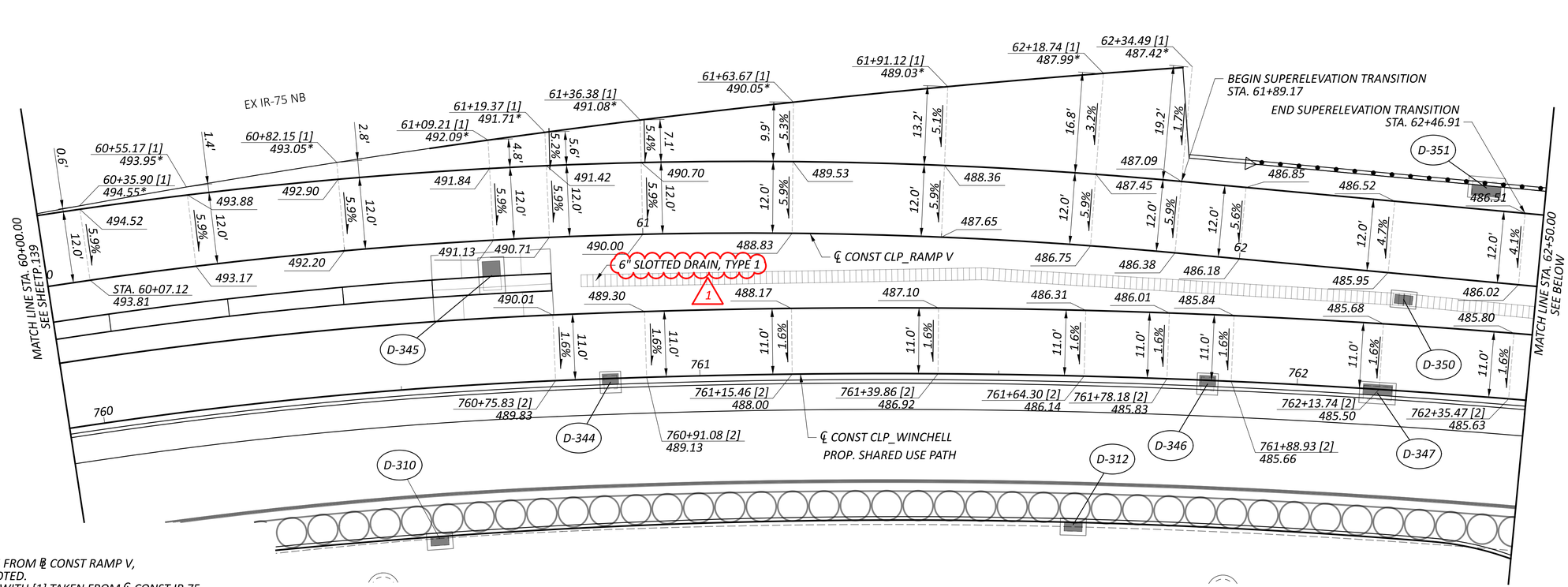

NOTES:

ALL STATIONING TAKEN FROM ℄ CONST RAMP V, UNLESS OTHERWISE NOTED.
STATIONING DENOTED WITH [1] TAKEN FROM ℄ CONST IR 75 .
STATIONING DENOTED WITH [2] TAKEN FROM ℄ CONST WINCHELL AVE.
STATIONING DENOTED WITH [3] TAKEN FROM ℄ CONST FREEMAN AVE.

ALL ELEVATIONS SHOWN AT EDGE OF PAVEMENT, UNLESS OTHERWISE NOTED.

* *ELEVATIONS ALONG IR-75 ARE SHOWN FOR INFORMATION ONLY, BASED ON FUTURE CONSTRUCTION*

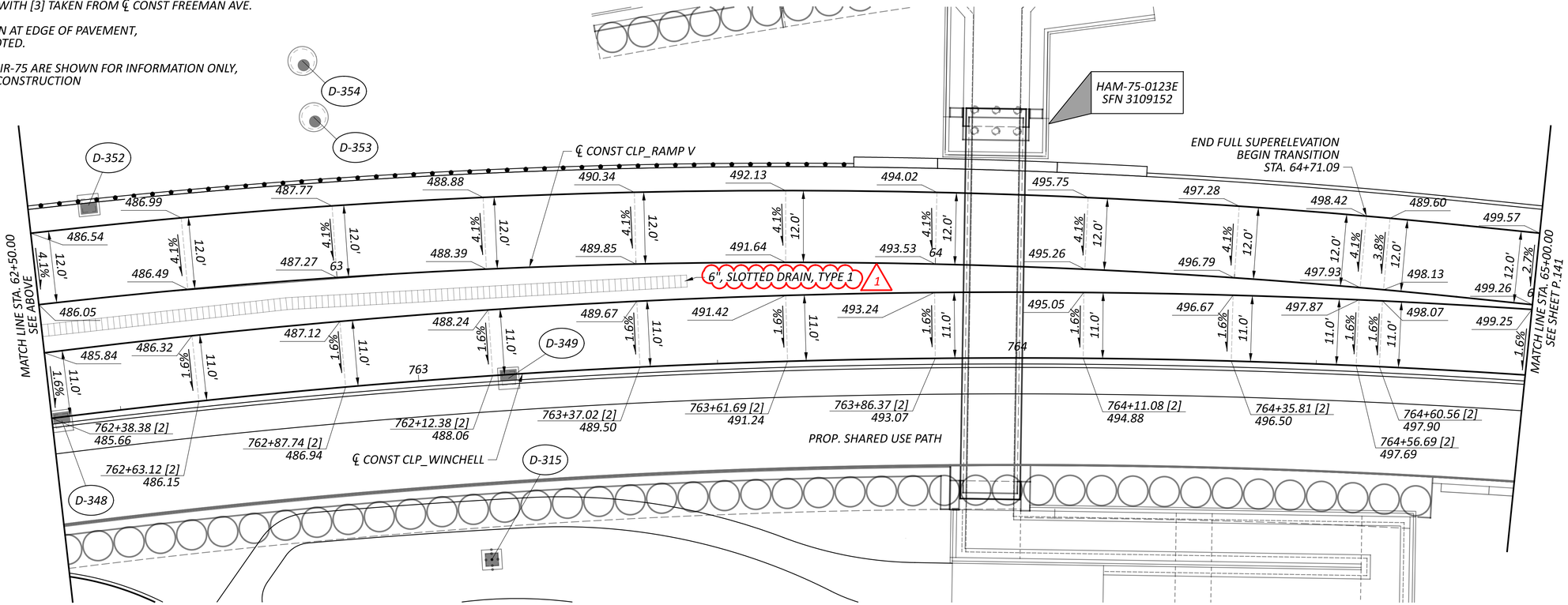

HORIZONTAL SCALE IN FEET
0 5 10 20

GORE DETAILS
IR-75/RAMP V/WINCHELL AVE GORE

DESIGN AGENCY
AMERICAN STRUCTUREPOINT INC.

DESIGNER	LZS
REVIEWER	KAM 03/03/25
PROJECT ID	122048
SHEET	P.140
TOTAL	P.421

HAM-IR 75-1.05

MODEL: Sheet 2 PAPERSIZE: 34x22 (in.) DATE: 8/28/2025 TIME: 9:55:37 AM PLTDRV: OHDOT_PDF.pltcfg PENTBL: OHDOT_Pen_Addendum.tbl USER: WORKSPACE: OHDOTCEv02 WORKSET: 122048 PRODUCT: OpenRoadsDesigner 10.12.02.4
pw:\\ohiodot-pw.bentley.com:ohiodot-pw-02\Documents\01 Active Projects\District 08\Hamilton\122048\Roadway\Sheets\122048_GI300.dgn

DRAINAGE CONDUIT DETAILS

REF NO.	CFN	LENGTH (FT)	SIZE	TYPE 1	SLOPE	UPSTREAM		DOWNSTREAM		NOTES
						STRUCT. REF NO	INVERT ELEV	STRUCT. REF NO	INVERT ELEV	
P-301	N/A	14.00	18"	TYPE C APP (CINCINNATI)	1.00%	D-301	497.09	D-317	496.95	
P-302	N/A	36.00	18"	TYPE B APP (CINCINNATI)	0.80%	D-302	497.38	D-301	497.09	
P-303	N/A	35.00	12"	TYPE B APP (CINCINNATI)	1.75%	D-303	501.50	D-304	500.89	
P-304	N/A	97.00	18"	TYPE B APP (CINCINNATI)	0.70%	D-304	498.06	D-302	497.38	
P-305	N/A	34.00	18"	TYPE B APP (CINCINNATI)	0.30%	D-305	498.16	D-304	498.06	
P-306	N/A	20.00	12"	TYPE B APP (CINCINNATI)	3.00%	D-306	501.28	D-307	500.68	
P-307	N/A	42.00	18"	TYPE B APP (CINCINNATI)	0.30%	D-307	498.29	D-305	498.16	
P-308	N/A	20.00	12"	TYPE B APP (CINCINNATI)	3.00%	D-308	501.15	D-309	500.55	
P-309	N/A	49.00	18"	TYPE B APP (CINCINNATI)	0.30%	D-309	498.44	D-307	498.29	
P-310	N/A	20.00	12"	TYPE B APP (CINCINNATI)	3.00%	D-310	501.43	D-311	500.83	
P-311	N/A	65.00	15"	TYPE B APP (CINCINNATI)	0.50%	D-311	499.01	D-309	498.69	
P-312	N/A	20.00	12"	TYPE B APP (CINCINNATI)	1.00%	D-312	502.18	D-313	501.98	
P-313	N/A	98.00	15"	TYPE B APP (CINCINNATI)	0.50%	D-317	499.50	D-311	499.01	
P-314	N/A	25.00	12"	TYPE B APP (CINCINNATI)	1.00%	D-314	502.11	D-313	501.86	
P-315	N/A	149.00	12"	TYPE B APP (CINCINNATI)	1.15%	D-315	502.28	D-313	500.57	
P-316	N/A	63.00	12"	TYPE C APP (CINCINNATI)	1.00%	D-316	502.16	D-317	501.53	
P-324	N/A	29.00	12"	TYPE C APP (CINCINNATI)	1.00%	D-324	514.28	S-308	513.99	
P-325	N/A	35.00	12"	TYPE B APP (CINCINNATI)	1.43%	D-325	514.78	D-324	514.28	
P-326	N/A	10.00	12"	TYPE B APP (CINCINNATI)	4.78%	D-326	506.62	MATCH EX	506.14	
P-327	N/A	10.00	12"	TYPE B APP (CINCINNATI)	7.09%	D-327	505.07	MATCH EX	505.38	
P-328	N/A	34.00	12"	TYPE B APP (CINCINNATI)	1.00%	D-328	517.26	D-330	517.05	
P-329	N/A	189.00	12"	TYPE B APP (CINCINNATI)	1.00%	D-329	517.26	D-330	517.05	
P-330	N/A	1894.00	12"	TYPE B APP (CINCINNATI)	2.25%	D-330	516.05	DX-1381	511.91	
P-1454	N/A	57.00	12"	TYPE B APP (CINCINNATI)	1.00%	DX-1454	501.62	D-304	501.05	
P-1532	N/A	32.00	12"	TYPE B APP (CINCINNATI)	6.63%	DX-1532	504.01	D-302	501.89	
P-1538	N/A	40.00	12"	TYPE B APP (CINCINNATI)	1.00%	DX-1538	500.26	D-309	499.86	

NOTES:

FOR STORM SEWER SUBSUMMARY SEE SHEETS P.70 - P.71
FOR STORM SEWER SCHEMATIC PLAN SEE SHEET P.153
FOR STORM SEWER PROFILES SEE SHEETS P.154 - P.156

DRAINAGE STRUCTURE DETAILS

REF NO.	REFERENCE ALIGNMENT	STATION	OFFSET	SIDE	TYPE	GRATE/RIM ELEV	INVERT ELEV	CONNECTED PIPES					NOTES
								REF NO.		SIZE	INVERT ELEV		
D-301	CLP_COURT	7+00.00	18.00'	LT	CI	505.89	497.09	IN	P-302	18"	497.09	N	
								OUT	P-301	18"	497.09	S	
D-302	CLP_COURT	7+00.00	18.00'	RT	DGIMH	505.89	497.38	IN	P-1532	12"	501.89	N	
								IN	P-304	18"	497.38	W	
								OUT	P-302	18"	497.38	S	
D-303	CLP_COURT	8+00.00	17.13'	RT	CI	505.50	501.50	OUT	P-303	12"	501.50	N	
D-304	CLP_COURT	8+00.00	17.07'	RT	DGIMH	505.51	498.06	IN	P-1454	12"	501.05	NW	
								IN	P-303	12"	500.89	N	
								IN	P-305	18"	498.06	W	
								OUT	P-304	18"	498.06	E	
D-305	CLP_COURT	8+40.00	12.93'	RT	DGIMH	505.41	498.16	IN	P-307	18"	498.16	NW	
								OUT	P-305	18"	498.16	E	
D-306	CLP_COURT	8+85.00	10.00'	LT	CB-6	505.28	501.28	OUT	P-306	12"	501.28	NE	
D-307	CLP_COURT	8+85.00	10.00'	RT	DGIMH	505.28	498.29	IN	P-306	12"	500.68	NW	
								IN	P-309	18"	498.29	SW	
								OUT	P-307	18"	498.29	SE	
D-308	CLP_COURT	9+34.73	10.00'	LT	CB-6	505.15	501.15	OUT	P-308	12"	501.15	NE	
D-309	CLP_COURT	9+34.73	10.00'	RT	DGIMH	505.15	498.44	IN	P-308	12"	500.55	SW	
								IN	P-1538	12"	499.86	N	
								IN	P-311	15"	498.69	NW	
								OUT	P-309	18"	498.44	SE	
D-310	CLP_COURT	10+00.00	10.00'	LT	CB-6	505.43	501.43	OUT	P-310	12"	501.43	E	
D-311	CLP_COURT	10+00.00	10.00'	RT	DGIMH	505.43	499.01	IN	P-310	12"	500.83	W	
								IN	P-313	15"	499.01	NW	
								OUT	P-311	15"	499.01	SE	
D-312	CLP_COURT	11+00.00	20.98'	LT	CB-6	506.18	502.18	OUT	P-312	12"	502.18	E	
D-313	CLP_COURT	11+00.00	0.00'	CL	MH, B	506.58	499.50	IN	P-312	12"	501.98	E	
								IN	P-314	12"	501.86	W	
								IN	P-315	12"	500.57	N	
								OUT	P-313	15"	499.50	S	
D-314	CLP_COURT	11+00.00	25.01'	RT	CI	506.11	502.11	OUT	P-314	12"	502.11	W	
D-315	CLP_WINCHELL	763+10.12	30.67'	RT	DI	506.03	502.28	OUT	P-315	12"	502.28	S	
D-316	CLP_WINCHELL	757+20.00	29.00'	RT	CB-2-2B	505.25	502.16	OUT	P-317	12"	502.16	N	
D-317	CLP_COURT	7+00.00	31.68'	LT	MH, B	507.66	492.72	IN	P-316	12"	501.53	S	
								IN	P-301	18"	496.95	N	
								IN	EX PIPE	18"	492.72	NW	
								OUT	EX PIPE	18"	492.72	SE	
D-324	CLP_LINN	110+33.00	17.00'	LT	CI	518.28	514.28	IN	P-325	12"	514.28	SE	
								OUT	P-324	12"	514.28	W	
D-325	CLP_LINN	110+25.00	17.00'	RT	CI	518.78	514.78	OUT	P-325	12"	514.78	NE	
D-326	CLP_LINN	111+17.00	20.58'	LT	CI	512.90	506.62	OUT	P-326	12"	506.62	NE	
D-327	CLP_LINN	111+47.20	24.28'	RT	CI	511.14	505.07	OUT	P-327	12"	505.07	N	
D-328	CLP_LINN	105+35.00	17.00'	RT	CI	521.26	517.26	OUT	P-328	12"	517.26	SW	
D-329	CLP_LINN	105+35.00	17.00'	LT	CI	521.26	517.26	OUT	P-329	12"	517.26	SE	
D-330	CLP_LINN	105+23.00	0.00'	CL	MH, B	521.11	516.05	IN	P-328	12"	517.05	NE	
								IN	P-329	12"	517.05	NW	
								OUT	P-330	12"	516.05	SW	
DX-1381	CLP_LINN	103+50.50	64.17'	LT	EX INLET	514.72	511.91	IN	P-329	12"	511.91	NE	
								OUT	EX PIPE	12"	511.91	SW	EX. TO REMAIN
DX-1454	CLP_COURT	8+66.43	54.63'	RT	EX MH	507.03	501.62	IN	EX PIPE	12"	501.66	W	EX. TO REMAIN
								OUT	EX PIPE	12"	501.62	S	TBR
								OUT	P-1454	12"	501.62	S	
DX-1532	CLP_COURT	7+14.26	46.63	RT	EX INLET	507.43	504.01	IN	EX PIPE	12"	504.85	NE	EX. TO REMAIN
								OUT	EX PIPE	12"	504.01	SE	TBR
								OUT	P-1532	12"	504.01	SE	
DX-1538	CLP_COURT	9+70.70	29.62'	RT	EX INLET	505.73	500.26	IN	EX PIPE	12"	500.26	N	EX. TO REMAIN
								OUT	EX PIPE	12"	500.26	S	TBR
								OUT	P-1538	12"	500.26	S	
S-308	CLP_LINN	110+20.65	43.60'	LT	MH ATG	520.03	489.80	IN	P-324	12"	513.99	E	
								IN	EX PIPE	18"	490.78	NW	EX. TO REMAIN
								IN	EX PIPE	21"	490.60	SE	EX. TO REMAIN
								IN	EX PIPE	54"	490.17	NE	EX. TO REMAIN
								OUT	EX PIPE	66"	489.80	SW	EX. TO REMAIN

STORM SEWER DATA TABLES

DESIGN AGENCY
AMERICAN STRUCTUREPOINT INC.

DESIGNER LZS
REVIEWER KAM 03/03/25
PROJECT ID 122048
SHEET P.152 TOTAL P.421

HAM-IR 75-1.05

MODEL: Sheet PAPERSIZE: 34x22 (in.) DATE: 8/28/2025 TIME: 9:55:58 AM PLTDRV: OHDOT_PDF.pltcfg PENTBL: OHDOT_Pen_Addendum.tbl USER: WORKSPACE: OHDOTCEv02 WORKSET: 122048 PRODUCT: OpenRoadsDesigner 10.12.02.4
pw:\\ohiodot-pw.bentley.com:ohiodot-pw-02\Documents\01 Active Projects\District 08\Hamilton\122048\403-Engineering_StructurePoint\Drainage\Sheets\122048_DD301.dgn

STORM SEWER SCHEMATIC

HORIZONTAL SCALE IN FEET
0 15 30 60

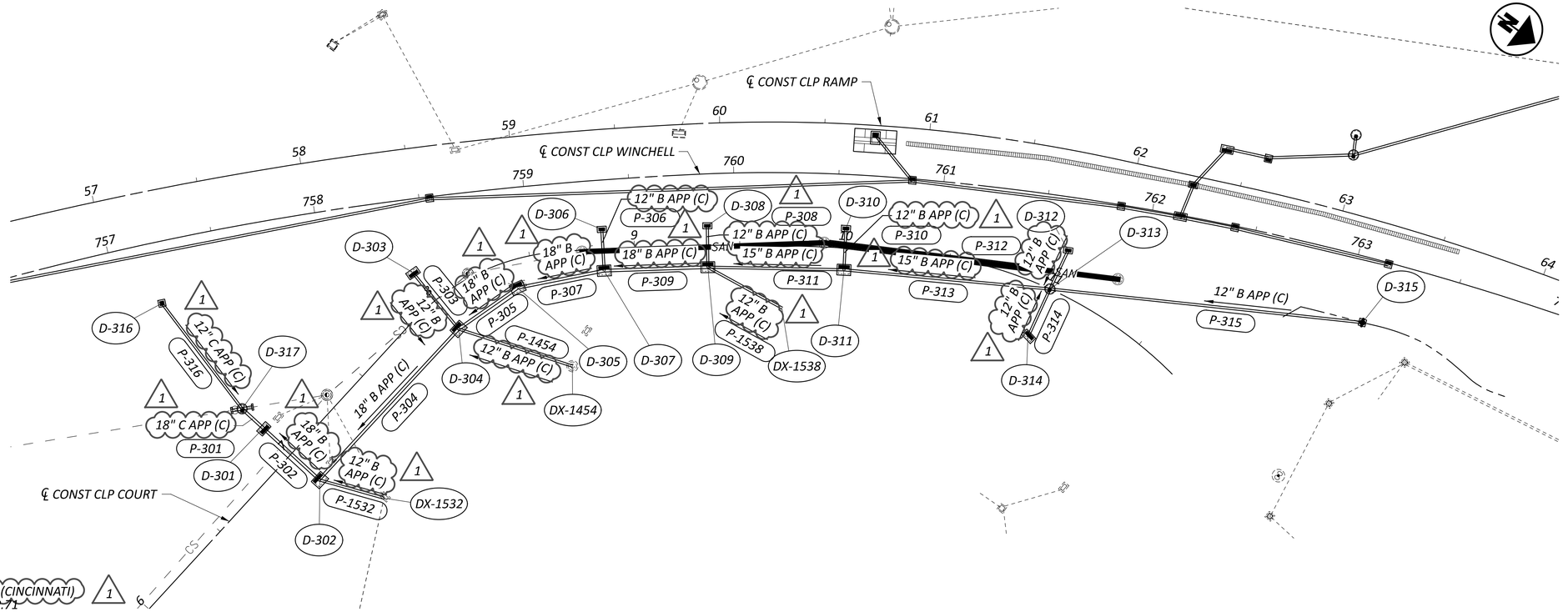

NOTES:

"APP (C)" DENOTES ITEM 611 - CONDUIT, AS PER PLAN (CINCINNATI)

FOR STORM SEWER SUBSUMMARY SEE SHEETS P.70 - P.71

FOR STORM SEWER DATA TABLES SEE SHEET P.152

FOR STORM SEWER PROFILES SEE SHEETS P.154 - P.156

DESIGN AGENCY
AMERICAN STRUCTUREPOINT INC.

DESIGNER	LZS
REVIEWER	KAM 03/03/25
PROJECT ID	122048
SHEET	P.153
TOTAL	P.421

HAM-IR 75-1.05

MODEL: Sheet PAPERSIZE: 34x22 (in.) DATE: 8/28/2025 TIME: 9:56:12 AM PLTDRV: OHDOT_PDF.pltcfg PENTBL: OHDOT_Pen.tbl USER: WORKSPACE: OHDOTCEv02 WORKSET: 122048 PRODUCT: OpenRoadsDesigner 10.12.02.4
pw:\\ohiodot-pw.bentley.com:ohiodot-pw-02\Documents\01 Active Projects\District 08\Hamilton\122048\403-Engineering_StructurePoint\Drainage\Sheets\122048_DD302.dgn

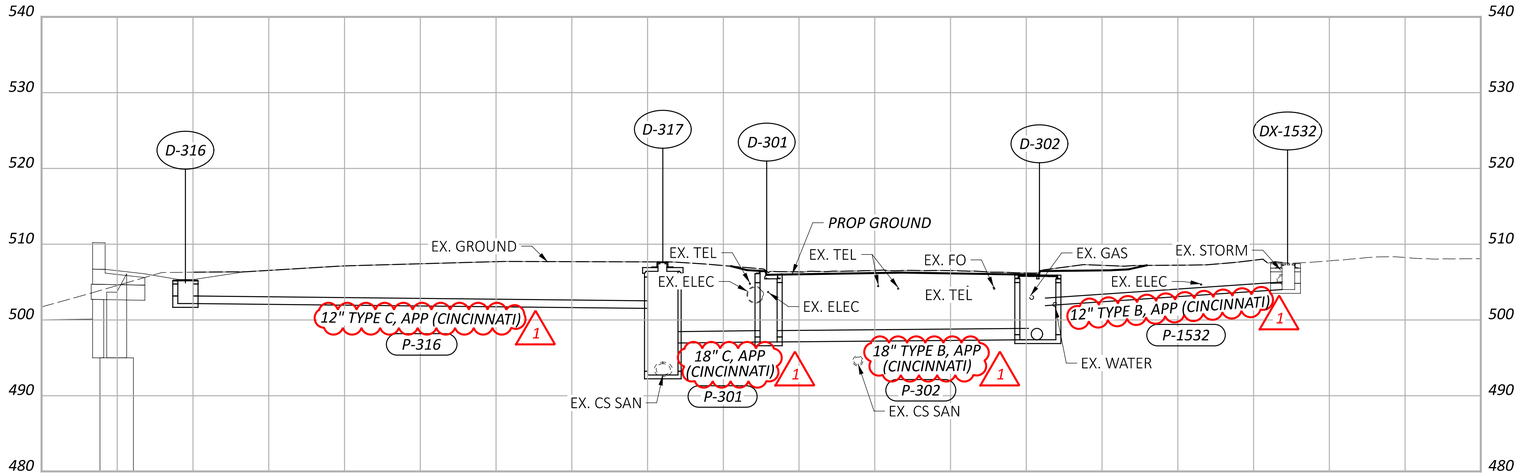

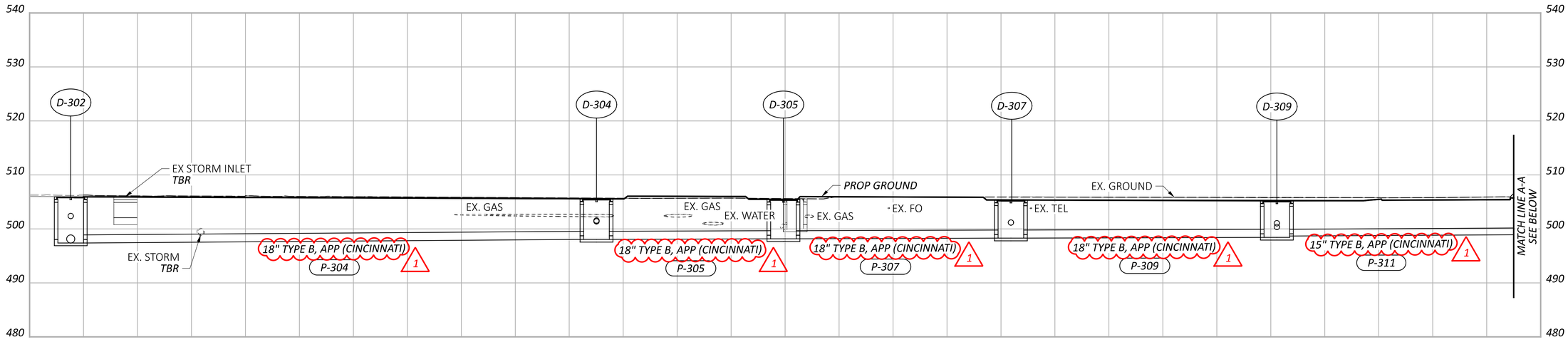

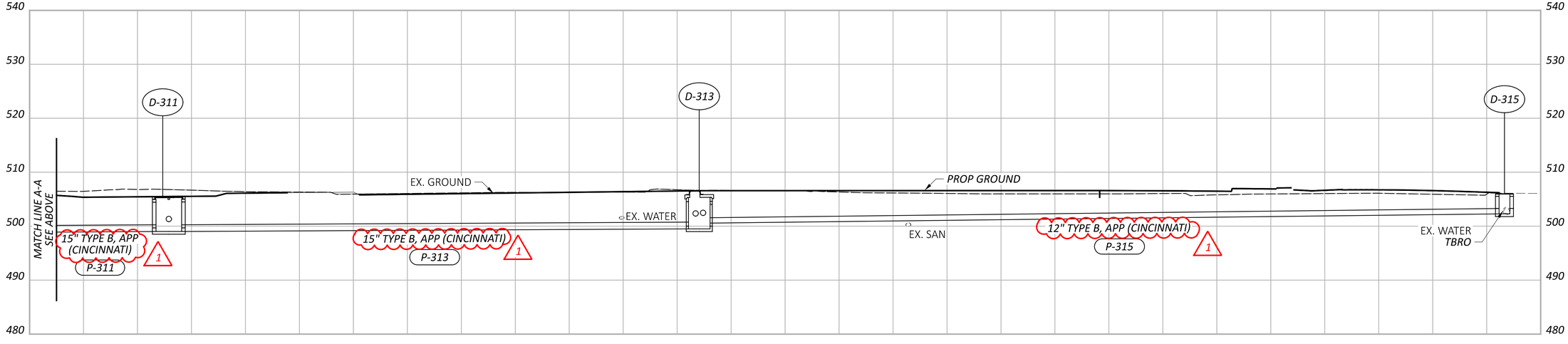

HORIZONTAL SCALE IN FEET
0 50 100 200

STORM SEWER PROFILES LOCAL STREETS

DESIGN AGENCY
STRUCTUREPOINT LLC

DESIGNER
LZS

REVIEWER
KAM 03/03/25

PROJECT ID
122048

SHEET P.154 TOTAL P.421

HAM-IR 75-1.05

MODEL: Sheet 01 PAPERSIZE: 34x22 (in.) DATE: 8/28/2025 TIME: 9:56:38 AM PLTDRV: OHDOT_PDF.pltcfg PENTBL: OHDOT_Pen_Addendum.tbl USER: WORKSPACE: OHDOTCEv02 WORKSET: 122048 PRODUCT: OpenRoadsDesigner 10.12.02.4
pw:\\ohiodot-pw.bentley.com:ohiodot-pw-02\Documents\01 Active Projects\District 08\Hamilton\122048\03-Engineering_StructurePoint\Drainage\Sheets\122048_DF301.dgn

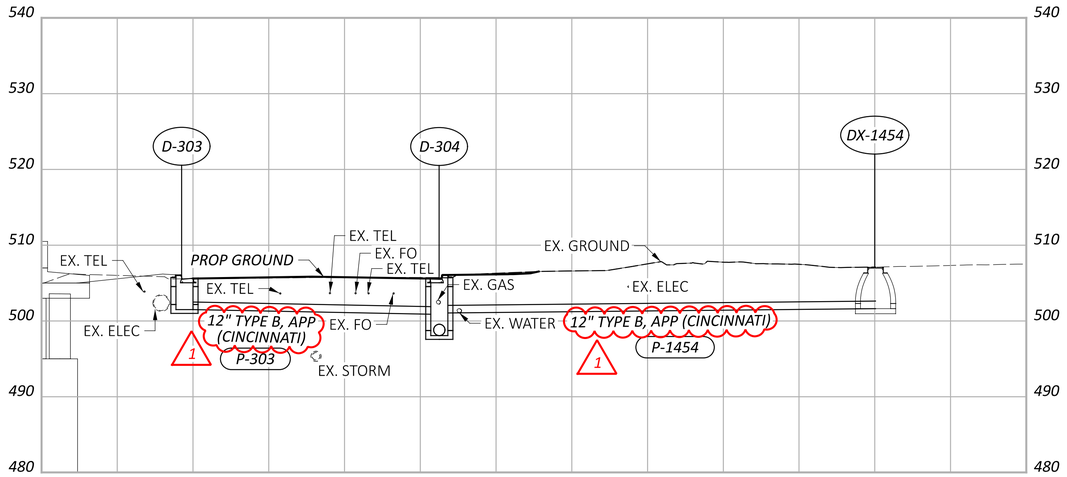

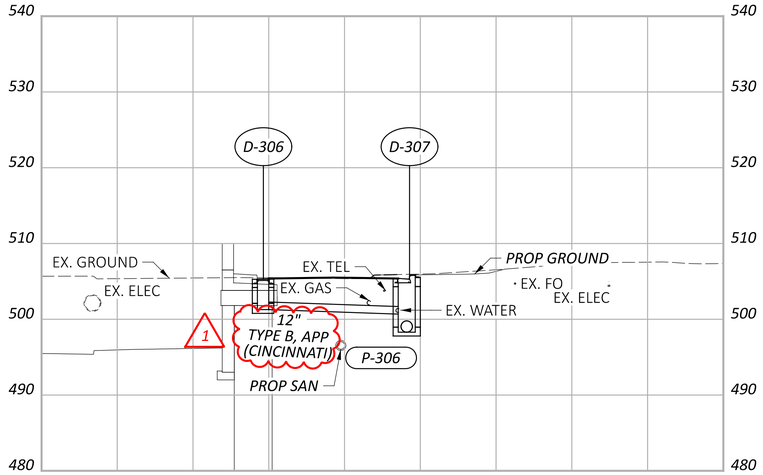

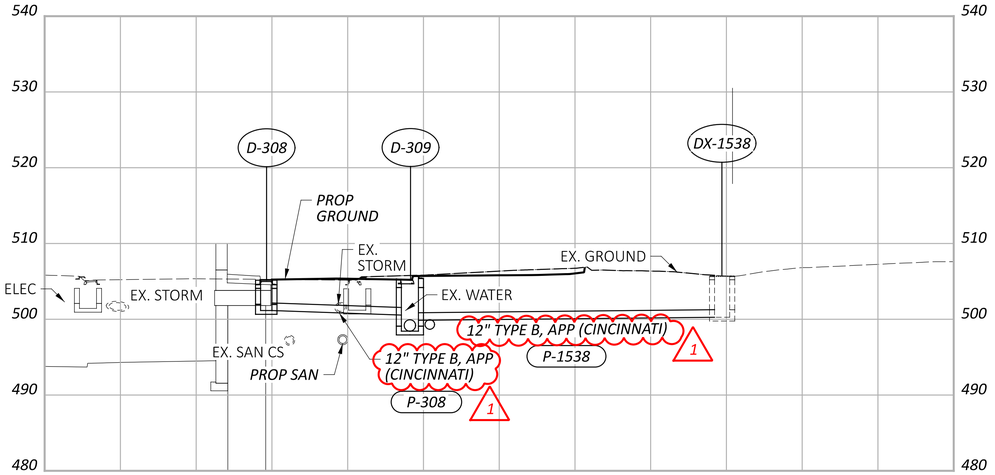

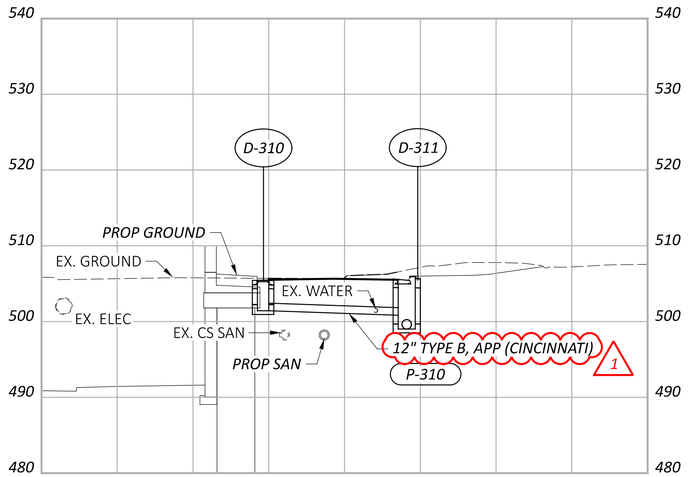

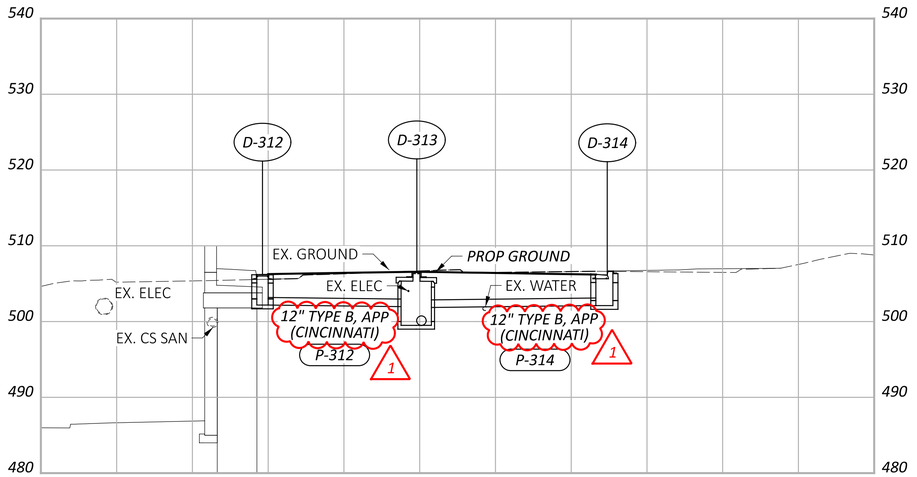

HORIZONTAL SCALE IN FEET
0 50 100 200

STORM SEWER PROFILES LOCAL STREETS

DESIGN AGENCY
AMERICAN STRUCTUREPOINT INC.

DESIGNER
LZS

REVIEWER
KAM 03/03/25

PROJECT ID
122048

SHEET P.155 TOTAL P.421

HAM-IR 75-1.05

MODEL: Sheet 02 PAPERSIZE: 34x22 (in.) DATE: 8/28/2025 TIME: 9:59:23 AM PLTDRV: OHDOT_PDF.pltcfg PENTBL: OHDOT_Pen_Addendum.tbl USER: WORKSPACE: OHDOTCEv02 WORKSET: 122048 PRODUCT: OpenRoadsDesigner 10.12.02.4
pw:\\ohiodot-pw.bentley.com:ohiodot-pw-02\Documents\01 Active Projects\District 08\Hamilton\122048\403-Engineering_StructurePointDrainage\Sheets\122048_DF301.dgn

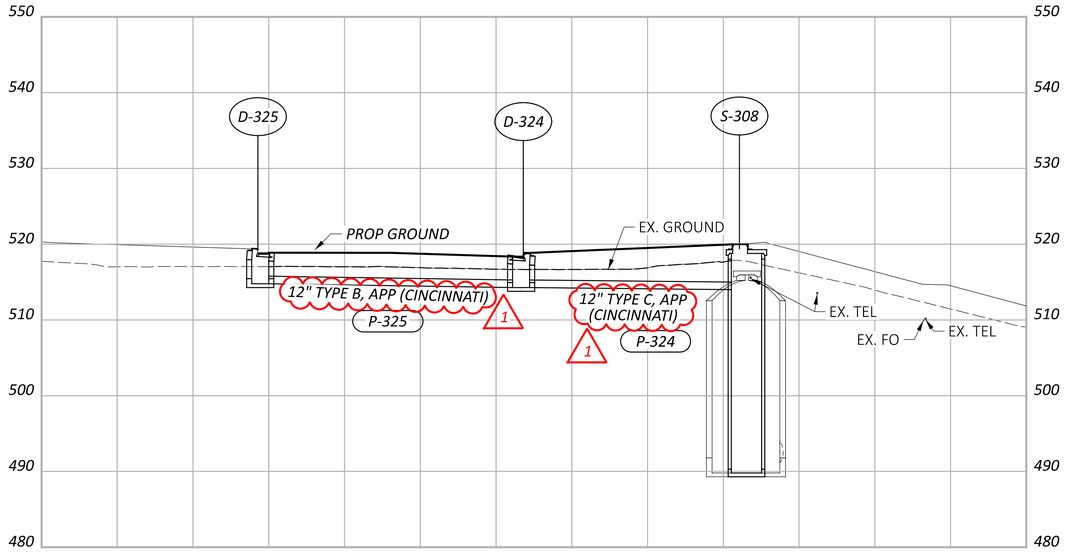

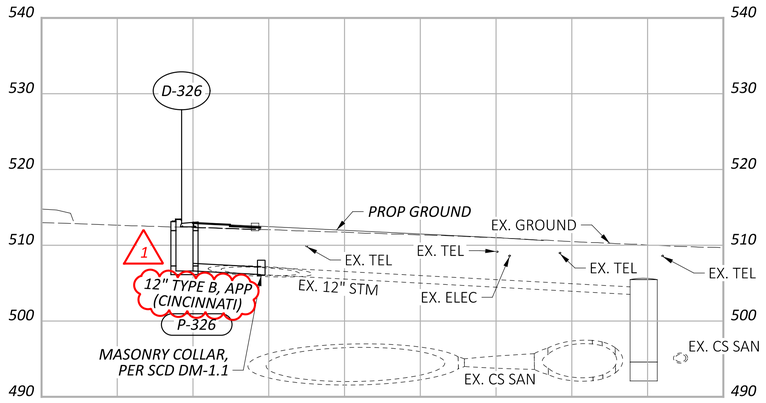

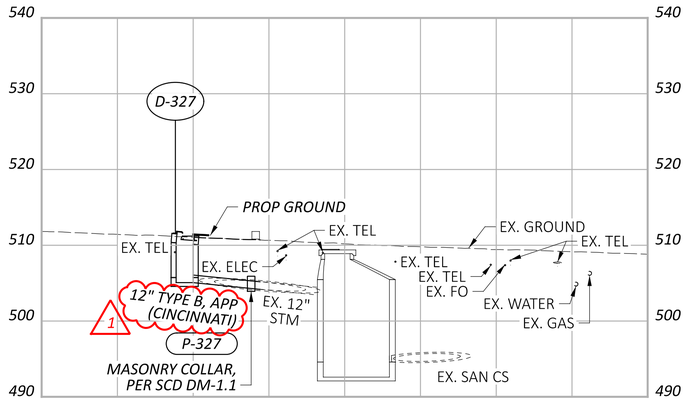

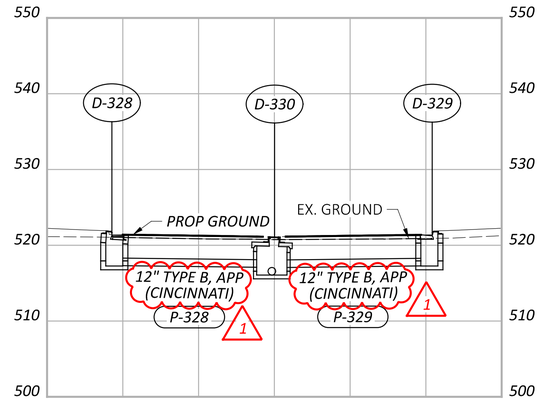

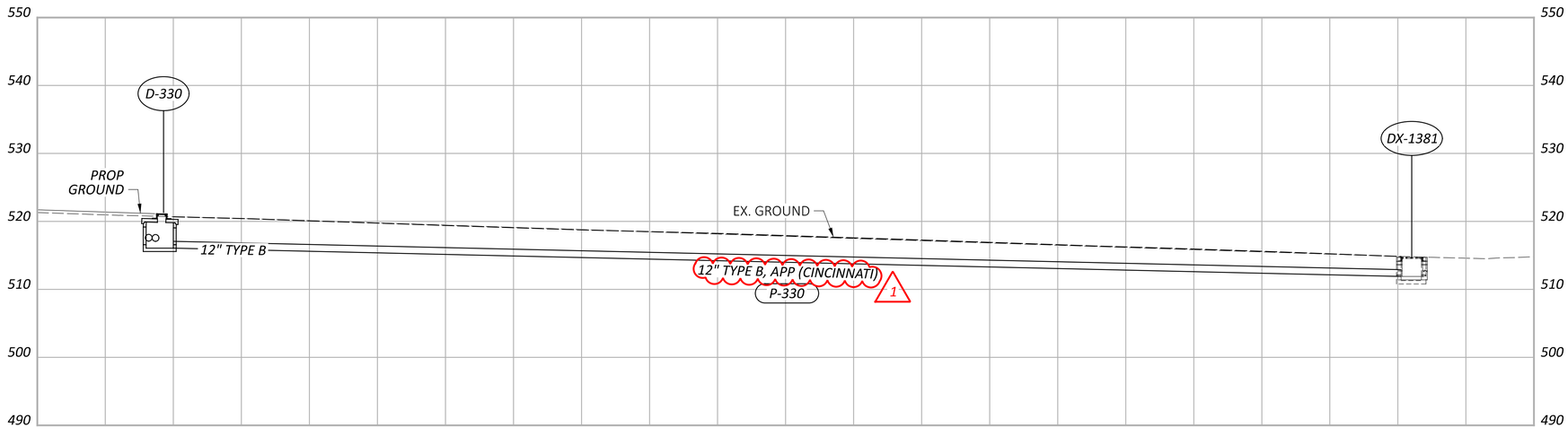

HORIZONTAL SCALE IN FEET
0 50 100 200

STORM SEWER PROFILES LOCAL STREETS

DESIGN AGENCY
STRUCTUREPOINT LLC

DESIGNER
LZS

REVIEWER
KAM 03/03/25

PROJECT ID
122048

SHEET P.156 TOTAL P.421

HAM-IR 75-1.05

MODEL: Sheet 01 PAPERSIZE: 34x22 (in.) DATE: 8/28/2025 TIME: 9:59:42 AM PLTDRV: OHDOT_PDF.pltcfg PENTBL: OHDOT_Pen_Addendum.tbl USER: WORKSPACE: OHDOTCEv02 WORKSET: 122048 PRODUCT: OpenRoadsDesigner 10.12.02.4
pw:\\ohiodot-pw.bentley.com:ohiodot-pw-02\Documents\01 Active Projects\District 08\Hamilton\122048\403-Engineering_StructurePoint\Drainage\Sheets\122048_DF302.dgn

DRAINAGE CONDUIT DETAILS

REF NO.	CFN	LENGTH (FT)	SIZE	TYPE 1	SLOPE	UPSTREAM STRUCT. REF NO	UPSTREAM INVERT ELEV	DOWNSTREAM STRUCT. REF NO	DOWNSTREAM INVERT ELEV	NOTES
P-341*	N/A	27.00	12"	TYPE B APP (CINCINNATI)	2.00%	D-341	495.08	D-342	494.54	
P-342*	N/A	215.00	12"	TYPE B APP (CINCINNATI)	1.50%	D-342	494.54	D-343	491.32	
P-343	N/A	229.00	12"	TYPE B APP (CINCINNATI)	2.66%	D-343	491.32	D-344	485.22	
P-344	N/A	100.00	15"	TYPE B APP (CINCINNATI)	3.69%	D-344	484.97	D-346	481.29	
P-345	1998216	31.00	15"	TYPE B APP	4.56%	D-345	486.39	D-344	484.97	
P-346	N/A	28.00	18"	TYPE B APP (CINCINNATI)	0.76%	D-346	481.04	D-347	480.82	
P-347	N/A	17.00	18"	TYPE B APP (CINCINNATI)	0.88%	D-347	480.82	D-350	480.67	
P-348	N/A	26.00	12"	TYPE B APP (CINCINNATI)	1.00%	D-348	481.51	D-347	481.25	
P-349	N/A	75.00	12"	TYPE B APP (CINCINNATI)	3.35%	D-349	484.02	D-348	481.51	
P-350	1998217	21.00	18"	TYPE B APP	0.88%	D-350	480.67	D-351	480.49	
P-351	1998218	20.00	18"	TYPE B APP	0.88%	D-351	480.49	D-352	480.31	
P-352	N/A	40.00	18"	TYPE C APP	0.88%	D-352	480.31	D-353	479.96	
P-353	1998222	140.00	18"	TYPE B APP	0.88%	D-353	479.96	DX-1261	478.73	
P-354	N/A	10.00	18"	TYPE C APP	1.00%	D-353	479.96	D-354	479.86	

NOTES:

1 "APP (C)" DENOTES ITEM 611 - CONDUIT, AS PER PLAN (CINCINNATI)
FOR STORM SEWER SUBSUMMARY SEE SHEETS P.70 - P.71
FOR STORM SEWER PROFILES SEE SHEETS P.158 - P.160

* DRAINAGE ITEMS TO BE CONSTRUCTED AS PART OF THE BRENT SPENCE BRIDGE PROJECT (PID 116649), SHOWN FOR INFORMATION ONLY

DRAINAGE STRUCTURE DETAILS

REF NO.	REFERENCE ALIGNMENT	STATION	OFFSET	SIDE	TYPE	GRATE/RIM ELEV	INVERT ELEV	CONNECTED PIPES REF NO.		SIZE	INVERT ELEV		NOTES
D-341*	CLP_WINCHELL	756+13.16	1.00'	RT	CB-3	499.08	495.08	IN	UD	6"	495.93	SE	(PID 116649)
								IN	UD	6"	495.93	NE	
								OUT	P-341	12"	495.08	NW	
D-342*	CLP_WINCHELL	756+40.00	1.00'	RT	CB-3A	499.11	494.54	IN	UD	6"	495.96	NW	(PID 116649)
								IN	P-341	12"	494.54	SE	
								OUT	P-342	12"	494.54	NW	
D-343	CLP_WINCHELL	758+55.00	1.00'	RT	CB-3A	497.1	491.32	IN	UD	6"	493.95	SE	
								IN	P-342	12"	491.32	SE	
								OUT	P-343	12"	491.32	NW	
D-344	CLP_WINCHELL	760+85.00	1.00'	RT	CB-3A	489.22	484.97	IN	NPCPP	6"	487.10	E	
								IN	UD	6"	486.07	SE	
								IN	P-343	12"	485.22	SE	
								IN	P-345	15"	484.97	S	
								OUT	P-344	15"	484.97	NW	
D-345	CLP_RAMP V	60+74.36	6.00'	RT	I-3C	490.64	486.39	IN	UD	6"	487.49	S	
								OUT	P-345	15"	486.39	N	
D-346	CLP_WINCHELL	761+85.00	1.00'	RT	CB-3A	485.54	481.04	IN	UD	6"	482.39	SE	
								IN	P-344	15"	481.29	SE	
								OUT	P-346	18"	481.04	NW	
D-347	CLP_WINCHELL	762+13.51	1.00'	RT	CB-3	485.32	480.82	IN	UD	6"	482.17	SE	
								IN	UD	6"	482.17	NW	
								IN	P-348	12"	481.25	NW	
								IN	P-346	18"	480.82	SE	
								OUT	P-347	18"	480.82	W	
D-348	CLP_WINCHELL	762+40.00	1.00'	RT	CB-3A	485.51	481.51	IN	NPCPP	6"	483.40	E	
								IN	UD	6"	482.36	NW	
								IN	P-349	12"	481.51	NW	
								OUT	P-348	12"	481.51	S	
D-349	CLP_WINCHELL	763+15.00	1.00'	RT	CB-3A	488.02	484.02	IN	UD	6"	484.87	NW	
								IN	NPCPP	6"	484.20	E	
								OUT	P-349	12"	484.02	S	
D-350	CLP_RAMP V	62+28.00	4.25'	RT	CB-6	485.81	480.67	IN	S-DRAIN	6"	485.81	N	
								IN	S-DRAIN	6"	485.81	S	
								IN	P-347	18"	480.67	E	
								OUT	P-350	18"	480.67	W	
D-351	CLP_RAMP V	62+40.07	16.00'	LT	CB-3	486.21	480.49	IN	UD	6"	483.06	N	
								IN	UD	6"	483.06	S	
								IN	P-350	18"	480.49	E	
								OUT	P-351	18"	480.49	NW	
D-352	CLP_RAMP V	62+60.00	16.00'	LT	CB-3A	486.40	480.31	IN	UD	6"	483.25	N	
								IN	P-351	18"	480.31	S	
								OUT	P-352	18"	480.31	NW	
D-353	CLP_RAMP V	62+98.00	27.00'	LT	MH-3	492.13	479.96	IN	P-352	18"	479.96	SE	
								OUT	P-353	18"	479.96	NW	
D-354	CLP_RAMP V	62+96.80	36.51'	LT	MH-3	493.47	479.86	IN	P-354	18"	479.86	E	
DX-1261	CLP_RAMP V	64+08.57	104.23'	LT	EX MH	484.64	475.94	IN	P-353	18"	478.73	SE	
								IN	EX PIPE	15"	479.42	SE	EX. TO REMAIN
								IN	EX PIPE	18"	479.17	SW	EX. TO REMAIN
								IN	EX PIPE	24"	477.79	S	EX. TO REMAIN
								OUT	EX PIPE	36"	475.94	N	EX. TO REMAIN

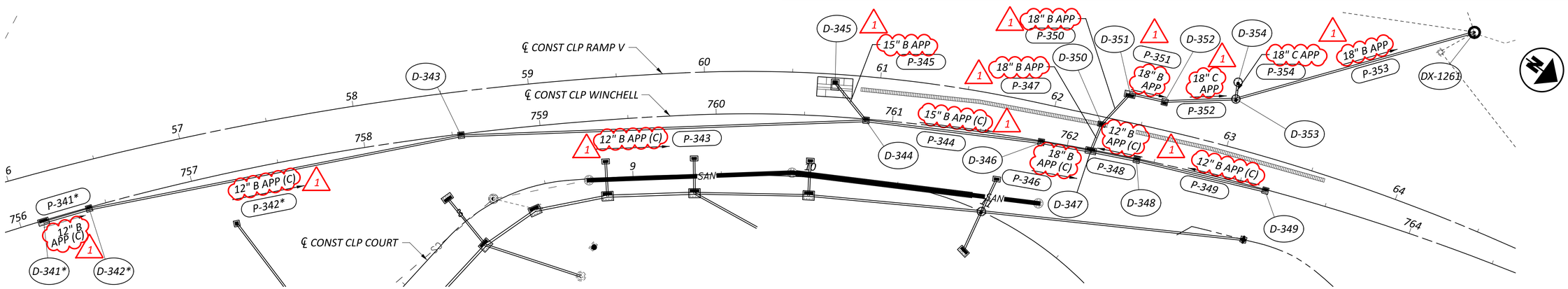

HORIZONTAL SCALE IN FEET
0 15 30 60

STORM SEWER SCHEMATIC AND DATA TABLES

DESIGN AGENCY
WSP USA STRUCTUREPOINT INC.
DESIGNER LZS
REVIEWER KAM 03/03/25
PROJECT ID 122048
SHEET P.157 TOTAL P.421

HAM-IR 75-1.05

MODEL: Sheet PAPERSIZE: 34x22 (in.) DATE: 8/28/2025 TIME: 10:00:00 AM PLTDRV: OHDOT_PDF.pltcfg PENTBL: OHDOT_Pen_Addendum.tbl USER: WORKSPACE: OHDOTCEx02 WORKSET: 122048 PRODUCT: OpenRoadsDesigner 10.12.02.4
pw:\\ohiodot-pw.bentley.com:ohiodot-pw-02\Documents\01 Active Projects\District 08\Hamilton\122048\403-Engineering_StructurePoint\Drainage\Sheets\122048_DD304.dgn

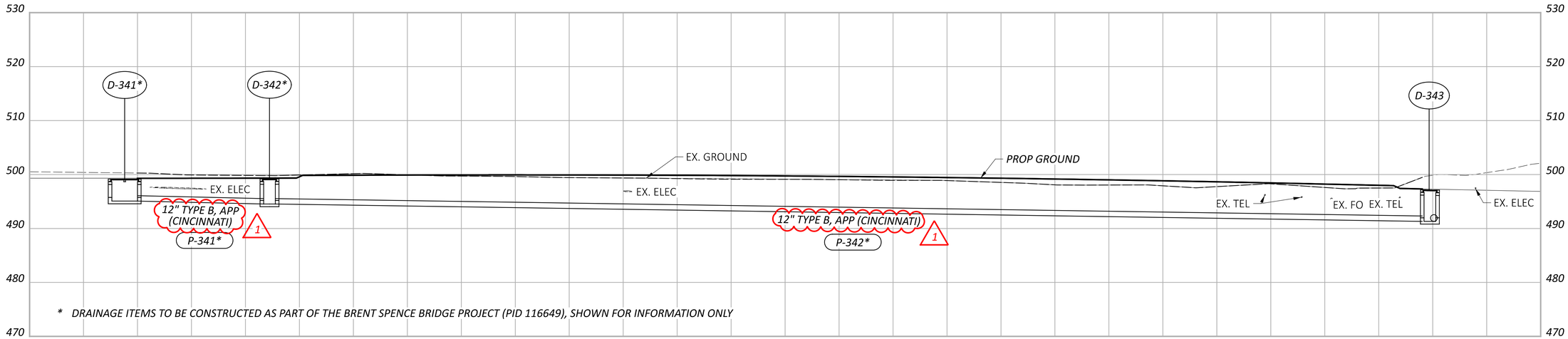

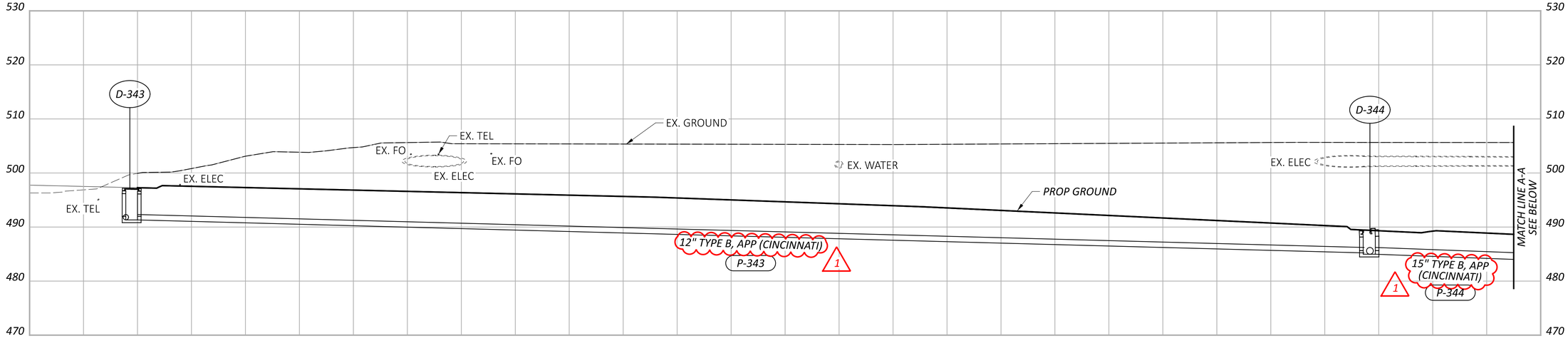

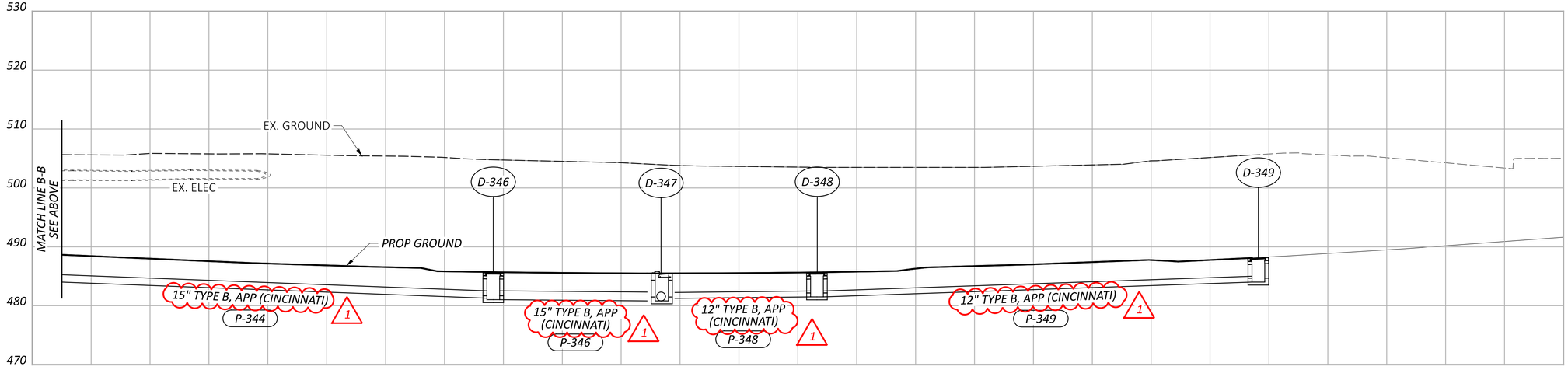

HORIZONTAL SCALE IN FEET
0 50 100 200

STORM SEWER PROFILES
LOCAL STREETS

DESIGN AGENCY
STRUCTUREPOINT

DESIGNER LZS
REVIEWER KAM 03/03/25
PROJECT ID 122048
SHEET P.158 TOTAL P.421

HAM-IR 75-1.05

MODEL: Sheet 01 PAPERSIZE: 34x22 (in.) DATE: 8/28/2025 TIME: 10:00:42 AM PLTDRV: OHDOT_PDF.pltcfg PENTBL: OHDOT_Pen_Addendum.tbl USER: WORKSPACE: OHDOTCivil02 WORKSET: 122048 PRODUCT: OpenRoadsDesigner 10.12.02.4
pw:\\ohiodot-pw.bentley.com:ohiodot-pw-02\Documents\01 Active Projects\District 08\Hamilton\122048\03-Engineering_StructurePoint\Drainage\Sheets\122048_DF304.dgn

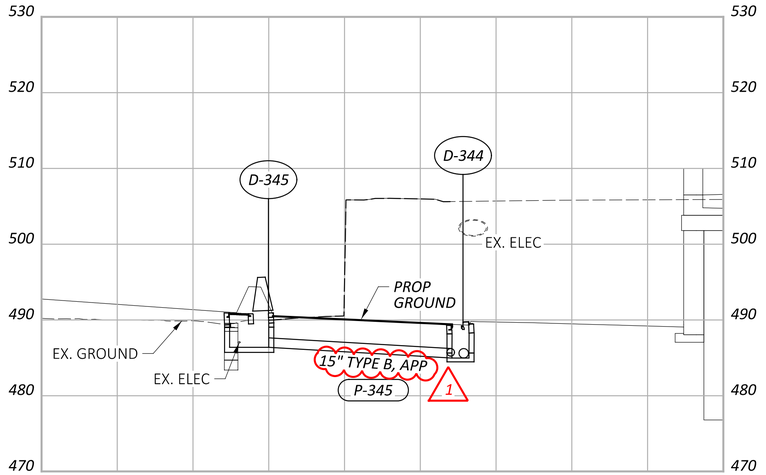

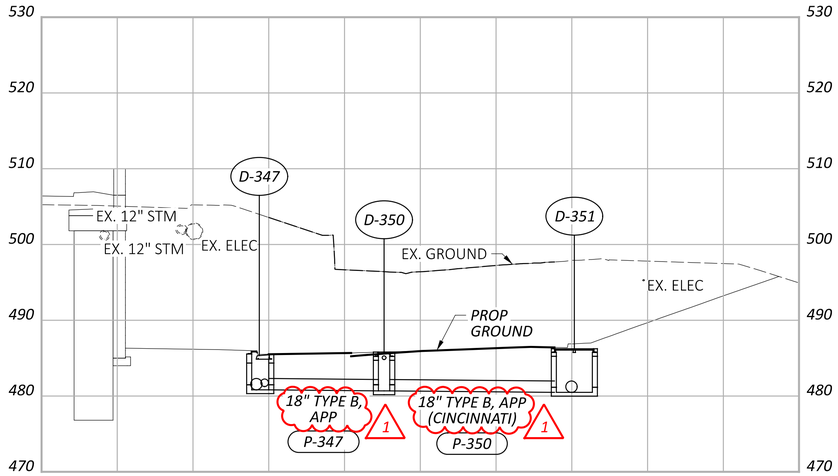

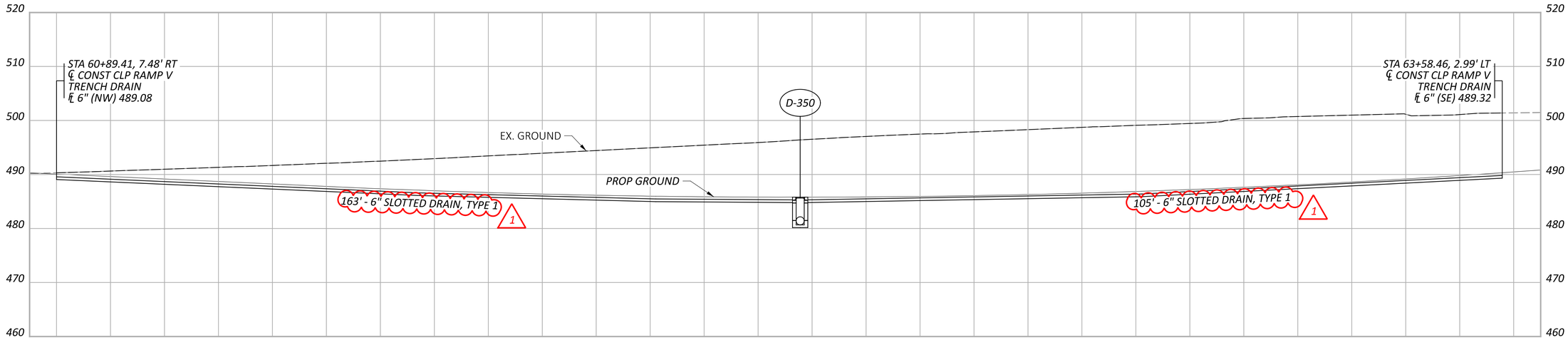

HORIZONTAL SCALE IN FEET
0 50 100 200

STORM SEWER PROFILES
LOCAL STREETS

DESIGN AGENCY
WEPFER STRUCTUREPOINT INC.

DESIGNER LZS
REVIEWER KAM 03/03/25
PROJECT ID 122048
SHEET P.159 TOTAL P.421

HAM-IR 75-1.05

MODEL: Sheet 02 PAPERSIZE: 34x22 (in.) DATE: 8/28/2025 TIME: 10:00:47 AM PLTDRV: OHDOT_PDF.pltcfg PENTBL: OHDOT_Pen_Addendum.tbl USER: WORKSPACE: OHDOTCivil02 WORKSET: 122048 PRODUCT: OpenRoadsDesigner 10.12.02.4
pw:\\ohiodot-pw.bentley.com:ohiodot-pw-02\Documents\01 Active Projects\District 08\Hamilton\122048\403-Engineering_StructurePoint\Drainage\Sheets\122048_DF304.dgn

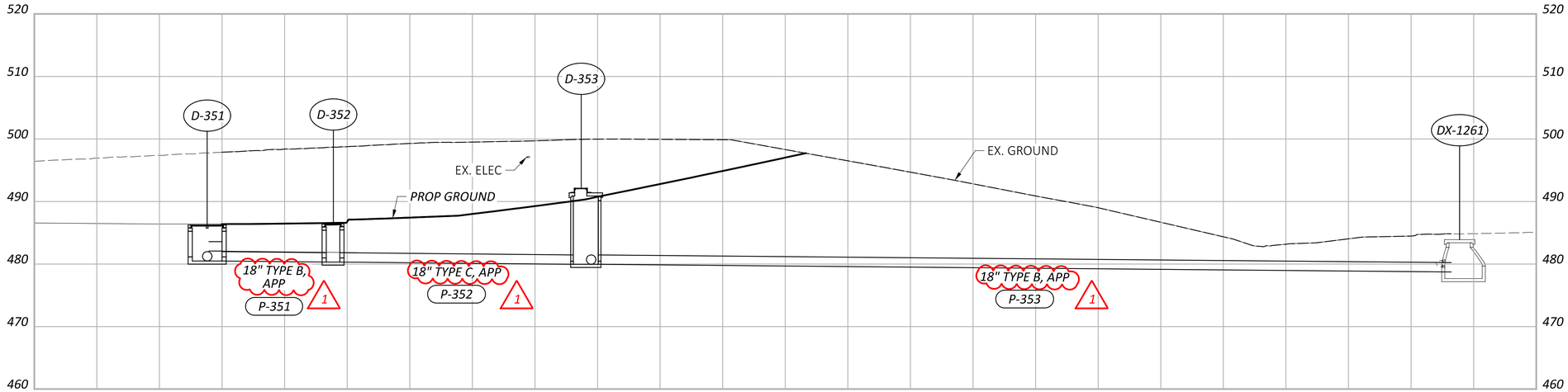

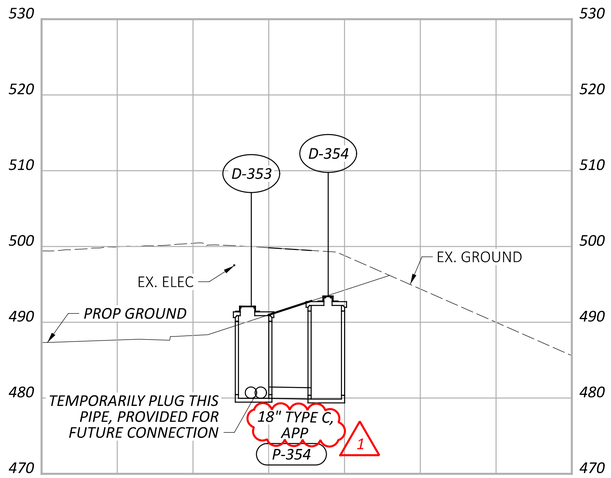

HORIZONTAL SCALE IN FEET
0 50 100 200

STORM SEWER PROFILES LOCAL STREETS

NOTES:

STRUCTURE D-354 IS PROVIDED FOR FUTURE CONNECTION

DESIGN AGENCY
AMERICAN STRUCTUREPOINT INC.

DESIGNER LZS

REVIEWER KAM 03/03/25

PROJECT ID 122048

SHEET P.160 TOTAL P.421

HAM-IR 75-1.05

MODEL: Sheet 03 PAPERSIZE: 34x22 (in.) DATE: 8/28/2025 TIME: 10:00:51 AM PLTDRV: OHDOT_PDF.pltcfg PENTBL: OHDOT_Pen_Addendum.tbl USER: WORKSPACE: OHDOTCivil WORKSET: 122048 PRODUCT: OpenRoadsDesigner 10.12.02.4
pw:\\ohiodot-pw.bentley.com:ohiodot-pw-02\Documents\01 Active Projects\District 08\Hamilton\122048\403-Engineering_StructurePoint\Drainage\Sheets\122048_DF304.dgn

DRAINAGE CONDUIT DETAILS

REF NO.	CFN	LENGTH (FT)	SIZE	TYPE	SLOPE	UPSTREAM		DOWNSTREAM		NOTES
						STRUCT. REF NO	INVERT ELEV	STRUCT. REF NO	INVERT ELEV	
P-357	N/A	25.00	12"	TYPE C APP	7.75%	D-357	499.24	D-358	497.30	
P-358	1998229	180.00	12"	TYPE B APP	1.78%	D-358	497.30	D-360	494.10	
P-359**	1998231	181.00	12"	TYPE B APP	2.00%	D-359**	495.70	D-364**	492.07	
P-360	1998232	60.00	15"	TYPE B APP	1.00%	D-360	493.85	D-361	493.25	
P-361	1998227	50.00	15"	TYPE B APP	1.22%	D-361	493.25	D-362	492.64	
P-362	1998234	50.00	15"	TYPE B APP	1.09%	D-362	492.64	D-363	492.09	
P-363	1998230	47.00	15"	TYPE B APP	1.00%	D-363	492.09	D-366	491.62	
P-634	1998236	49.00	15"	TYPE B APP	0.55%	D-364**	491.82	D-365	491.55	
P-365	1998233	54.00	18"	TYPE B APP	5.50%	D-365	491.30	D-368	491.01	
P-366	1998221	52.00	18"	TYPE B APP	1.00%	D-366	491.37	D-369	490.85	
P-367	N/A	22.00	12"	TYPE C APP	0.59%	D-367	492.26	D-366	492.13	
P-368	1998239	52.00	18"	TYPE B APP	0.55%	D-368	491.01	D-369	490.72	
P-369	N/A	53.00	24"	TYPE C APP	1.00%	D-369	490.35	DX-1244	489.82	
P-370	N/A	31.00	12"	TYPE C APP	0.92%	D-370	493.21	DX-1244	492.93	
P-371	1998237	45.00	12"	TYPE B APP	2.09%	D-371	494.15	D-370	493.21	
P-372	1998238	99.00	12"	TYPE B APP	2.54%	D-372	496.66	D-371	494.15	

NOTES:

1. "APP (C)" DENOTES ITEM 611 - CONDUIT, AS PER PLAN (CINCINNATI)
   FOR STORM SEWER SUBSUMMARY SEE SHEETS P.70 - P.71
   FOR STORM SEWER PROFILES SEE SHEETS P.162 - P.163

** DRAINAGE ITEMS TO BE CONSTRUCTED AS PART OF THE HAM-IR 75-1.05 (PHASE 3) PROJECT (PID 113361), SHOWN FOR INFORMATION ONLY

DRAINAGE STRUCTURE DETAILS

REF NO.	REFERENCE ALIGNMENT	STATION	OFFSET	SIDE	TYPE	GRATE/RIM ELEV	INVERT ELEV	CONNECTED PIPES				NOTES
								REF NO.		SIZE	INVERT ELEV	
D-357	CLP_RAMP V	65+87.50	36.03'	RT	CB-2-3	503.24	499.24	IN	DX-51657	12"	499.70 E	EXISTING PIPE
								OUT	P-357	12"	499.7 W	
D-358	CLP_RAMP V	65+85.00	12.00'	RT	CB-3A	501.30	497.30	IN	UD	6"	498.15 N	
								IN	P-357	12"	497.30 E	
								OUT	P-358	12"	497.30 N	
D-359**	CLP_RAMP V	67+47.22	54.08'	LT	CB-3A	499.60	495.70	IN	UD	6"	496.45 S	(PID 113361)
								OUT	P-359**	12"	495.70 N	
D-360	CLP_RAMP V	67+65.00	12.00'	RT	CB-3A	499.10	493.85	IN	UD	6"	495.95 S	
								IN	P-358	12"	494.10 S	
								OUT	P-360	15"	493.85 N	
D-361	CLP_RAMP V	68+25.00	12.00'	RT	CB-3A	497.76	493.25	IN	UD	6"	494.61 S	
								IN	P-360	15"	493.25 S	
								OUT	P-361	15"	493.25 N	
D-362	CLP_RAMP V	68+75.00	12.00'	RT	CB-3A	496.89	492.64	IN	UD	6"	493.74 S	
								IN	P-361	15"	492.64 S	
								OUT	P-362	15"	492.64 N	
D-363	CLP_RAMP V	69+25.00	12.00'	RT	CB-3A	496.34	492.09	IN	UD	6"	493.19 S	
								IN	P-362	15"	492.09 S	
								OUT	P-363	15"	492.09 N	
D-364**	CLP_RAMP V	69+25.31	40.09'	LT	CB-3A	496.19	491.82	IN	UD	6"	493.04 S	(PID 113361)
								IN	P-359**	12"	492.07 S	
								OUT	P-364	15"	491.82 N	
D-365	CLP_RAMP V	69+72.73	40.00'	LT	CB-3	496.01	491.30	IN	UD	6"	492.86 S	
								IN	UD	6"	492.86 N	
								IN	P-364	15"	491.55 S	
								OUT	P-365	18"	491.30 N	
D-366	CLP_RAMP V	62+72.73	12.00'	RT	CB-3	496.17	491.37	IN	UD	6"	493.02 S	
								IN	UD	6"	493.02 N	
								IN	P-367	12"	492.13 E	
								IN	P-363	15"	491.62 S	
								OUT	P-366	18"	491.37 N	
D-367	CLP_RAMP V	69+71.99	34.15'	RT	CB-2-2B	496.26	492.26	OUT	P-367	12"	492.26 W	
D-368	CLP_RAMP V	70+25.00	40.00'	LT	CB-3A	496.22	491.01	IN	UD	6"	493.07 N	
								IN	P-365	18"	491.01 S	
								OUT	P-368	18"	491.01 E	
D-369	CLP_RAMP V	70+25.00	12.00'	RT	CB-3A	496.38	490.35	IN	UD	6"	493.23 N	
								IN	P-366	18"	490.85 S	
								IN	P-368	18"	490.72 W	
								OUT	P-369	24"	490.35 NE	
D-370	CLP_RAMP V	70+90.00	12.00'	RT	CB-3A	497.21	493.21	IN	UD	6"	494.06 N	
								IN	P-371	12"	493.21 N	
								OUT	P-370	12"	493.21 SE	
D-371	CLP_RAMP V	71+35.00	12.00'	RT	CB-3A	498.15	494.15	IN	UD	6"	495.00 N	
								IN	P-372	12"	494.15 N	
								OUT	P-371	12"	494.15 S	
D-372	CLP_RAMP V	72+35.00	12.00'	RT	CB-3A	500.66	496.66	IN	UD	6"	497.51 N	
								OUT	P-372	12"	496.66 S	
DX-1244	CLP_RAMP V	70+73.11	37.37'	RT	EX MH	497.50	483.67	IN	P-370	12"	492.93 NW	
								IN	P-369	24"	489.82 SE	
								IN	EX PIPE	60"	483.67 E	EX TO REMAIN
								OUT	EX PIPE	60"	483.67 W	EX TO REMAIN

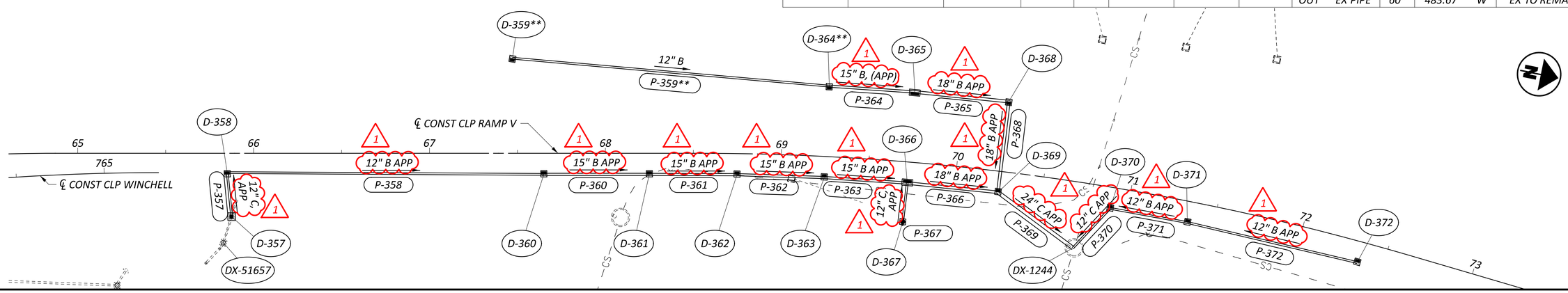

HORIZONTAL SCALE IN FEET
0 15 30 60

STORM SEWER SCHEMATIC AND DATA TABLES

DESIGN AGENCY: WSP USA / STRUCTUREPOINT INC.
DESIGNER: LZS
REVIEWER: KAM 03/03/25
PROJECT ID: 122048
SHEET: P.161 TOTAL: P.421

HAM-IR 75-1.05

MODEL: Sheet PAPERSIZE: 34x22 (in.) DATE: 8/28/2025 TIME: 10:01:08 AM PLTDRV: OHDOT_PDF.pltcfg PENTBL: OHDOT_Pen_Addendum.tbl USER: WORKSPACE: OHDOTCEv02 WORKSET: 122048 PRODUCT: OpenRoads Designer 10.12.02.4
pw:\\ohiodot-pw.bentley.com:ohiodot-pw-02\Documents\01 Active Projects\District 08\Hamilton\122048\403-Engineering_StructurePoint\Drainage\Sheets\122048_DD305.dgn

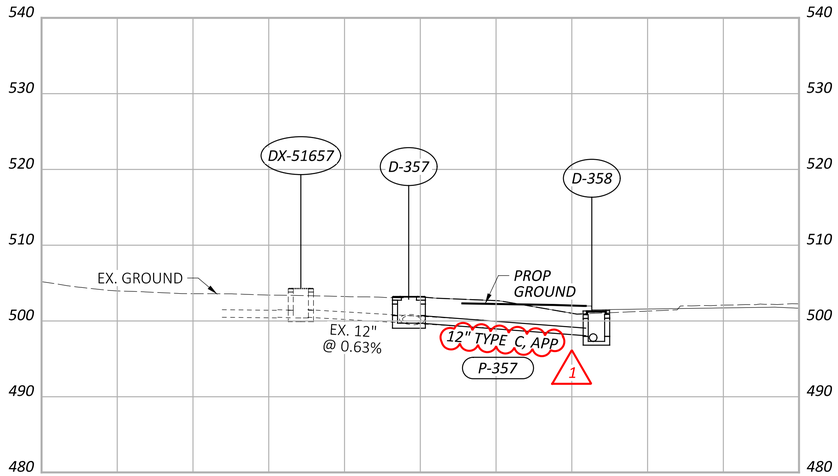

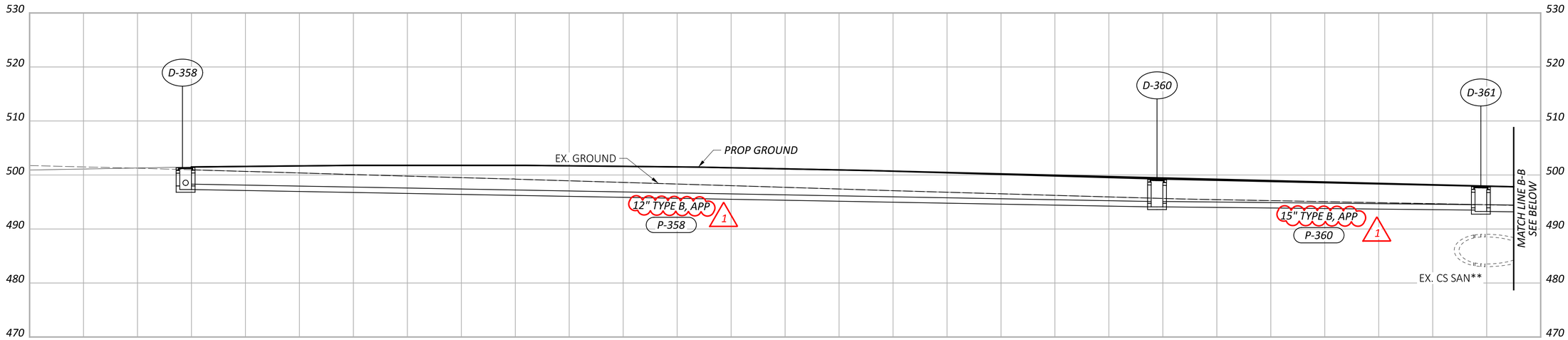

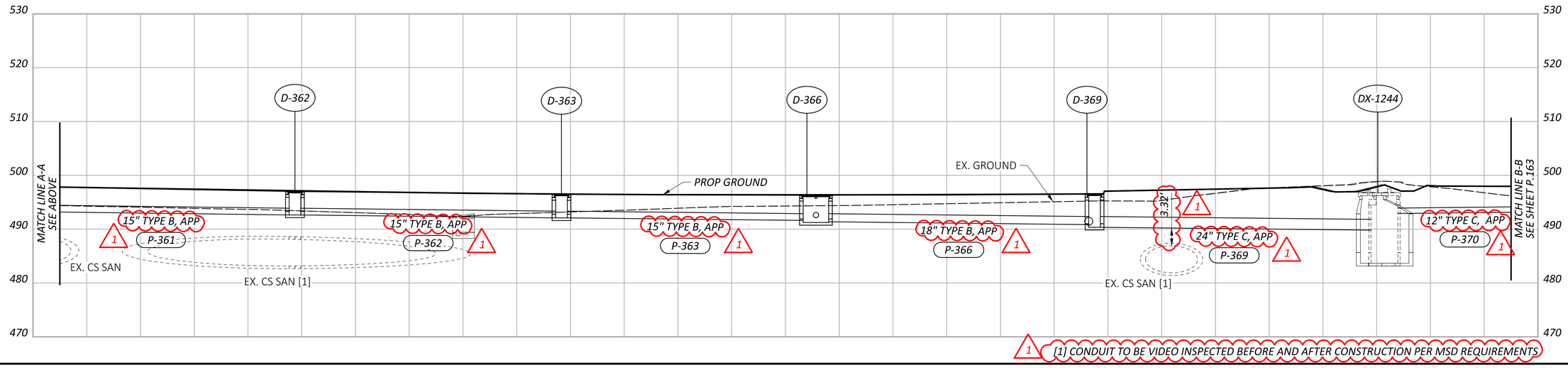

HORIZONTAL SCALE IN FEET
0 50 100 200

STORM SEWER PROFILES
LOCAL STREETS

HAM-IR 75-1.05

MODEL: Sheet 01 PAPERSIZE: 34x22 (in.) DATE: 8/28/2025 TIME: 10:48:13 AM PLTDRV: OHDOT_PDF.pltcfg PENTBL: OHDOT_Pen_Addendum.tbl USER: WORKSPACE: OHDOTCEv02 WORKSET: 122048 PRODUCT: OpenRoadsDesigner 10.12.02.4
pw:\\ohiodot-pw.bentley.com:ohiodot-pw-02\Documents\01 Active Projects\District 08\Hamilton\122048\d03-Engineering_StructurePoint\Drainage\Sheets\122048_DF305.dgn

DESIGN AGENCY
AMEREIN STRUCTUREPOINT INC.

DESIGNER	LZS
REVIEWER	KAM 03/03/25
PROJECT ID	122048
SHEET	P.162
TOTAL	P.421

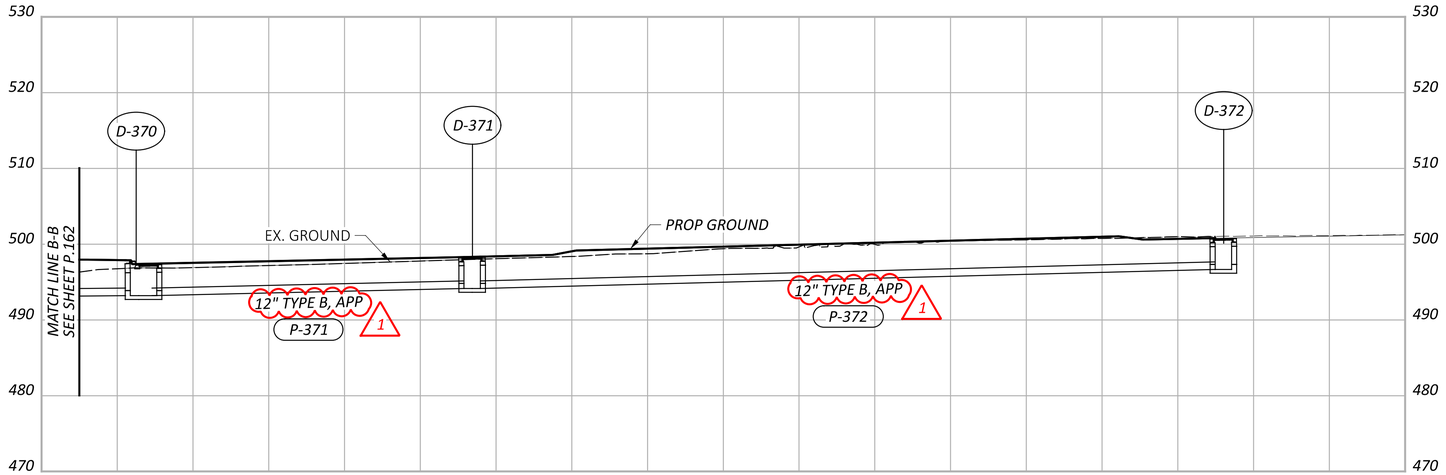

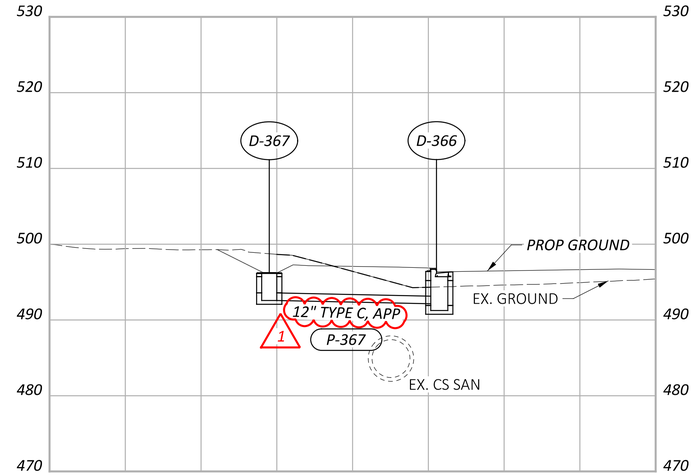

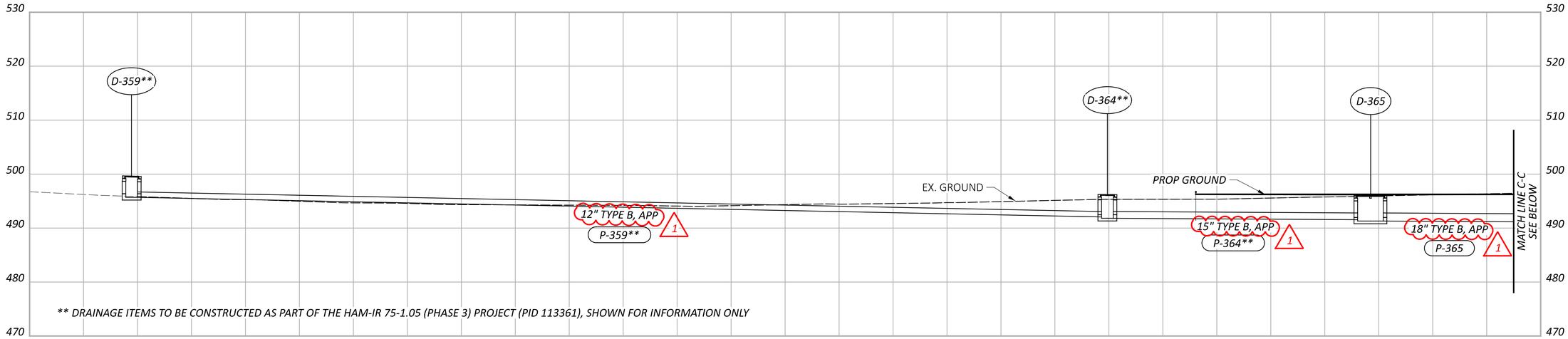

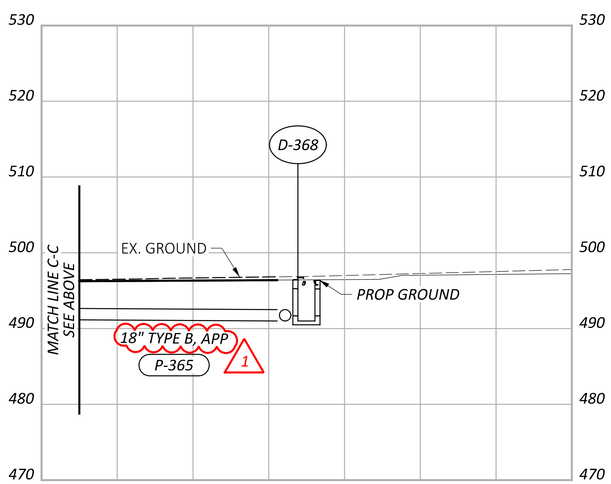

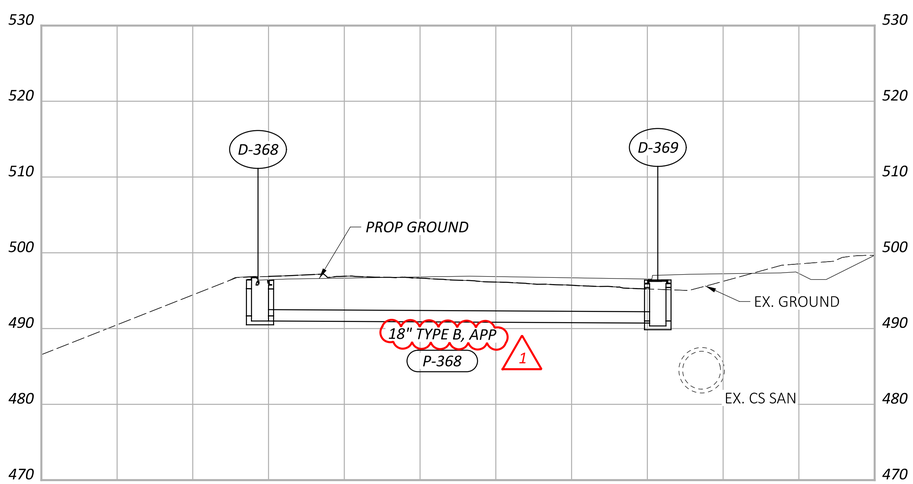

HORIZONTAL SCALE IN FEET
0 50 100 200

STORM SEWER PROFILES LOCAL STREETS

HAM-IR 75-1.05

MODEL: Sheet 02 PAPERSIZE: 34x22 (in.) DATE: 8/28/2025 TIME: 10:03:16 AM PLTDRV: OHDOT_PDF.pltcfg PENTBL: OHDOT_Pen_Addendum.tbl USER: WORKSPACE: OHDOTCtv02 WORKSET: 122048 PRODUCT: OpenRoadsDesigner 10.12.02.4
pw:\\ohiodot-pw.bentley.com:ohiodot-pw-02\Documents\01 Active Projects\District 08\Hamilton\122048\403-Engineering_StructurePoint\Drainage\Sheets\122048_DF305.dgn

DESIGN AGENCY
AMERICAN STRUCTUREPOINT INC.

DESIGNER	LZS
REVIEWER	KAM 03/03/25
PROJECT ID	122048
SHEET	P.163
TOTAL	P.421

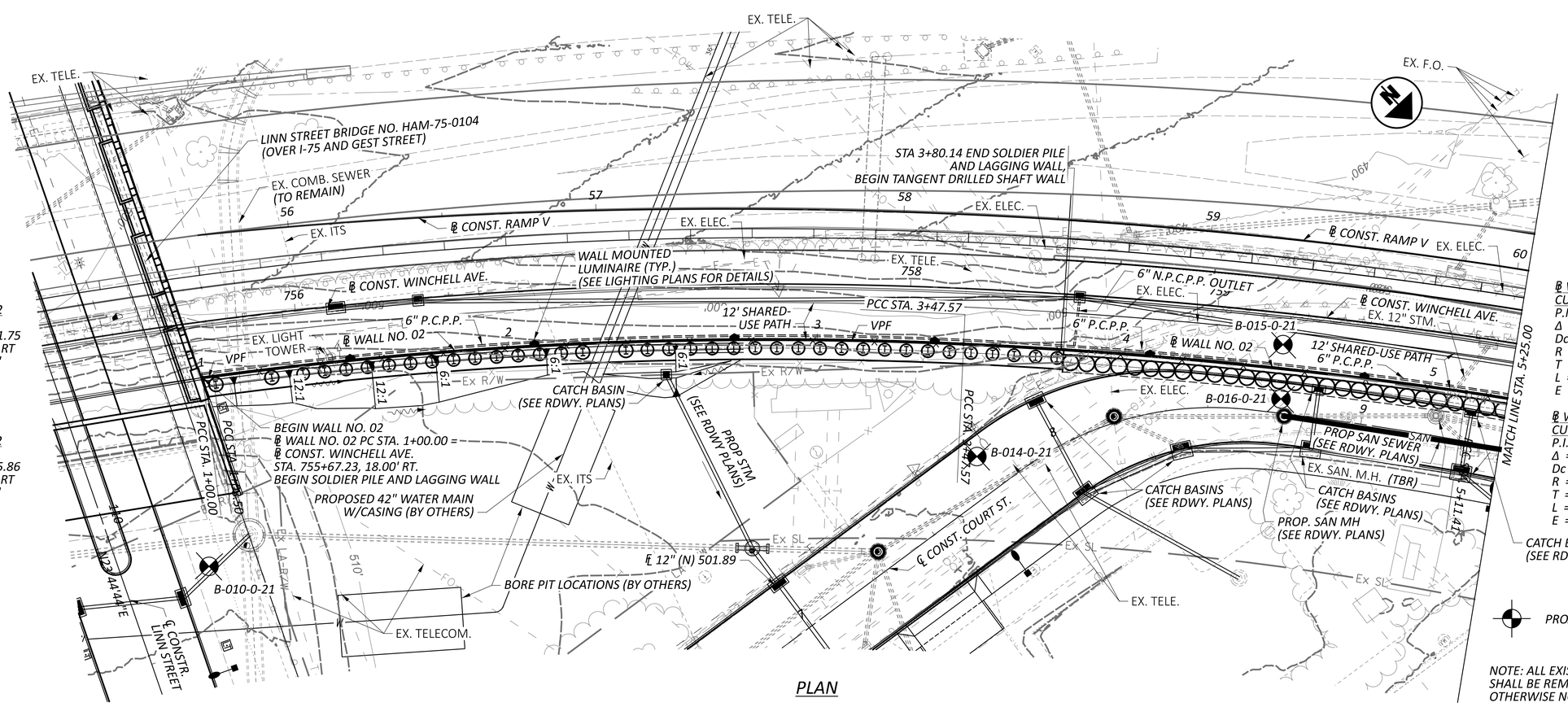

PLAN

℄ WALL NO. 02
CURVE DATA
P.I. = STA. 1+01.75
Δ = 00°07'23" RT
Dc = 03°30'49"
R = 1,630.62'
T = 1.75'
L = 3.5'
E = 0'

℄ WALL NO. 02
CURVE DATA
P.I. = STA. 2+25.86
Δ = 10°13'47" RT
Dc = 04°11'29"
R = 1,367.00'
T = 122.36'
L = 244.07'
E = 5.47'

℄ WALL NO. 02
CURVE DATA
P.I. = STA. 4+29.55
Δ = 05°35'56" RT
Dc = 03°25'02"
R = 1,676.71'
T = 81.99'
L = 163.85'
E = 2'

℄ WALL NO. 02
CURVE DATA
P.I. = STA. 5+56.45
Δ = 07°03'25" RT
Dc = 07°50'40"
R = 730.40'
T = 45.04'
L = 89.96'
E = 1.39'

LEGEND

PROJECT BORING LOCATION

NOTE: ALL EXISTING UTILITIES AND SEWERS SHALL BE REMOVED OR RELOCATED UNLESS OTHERWISE NOTED.

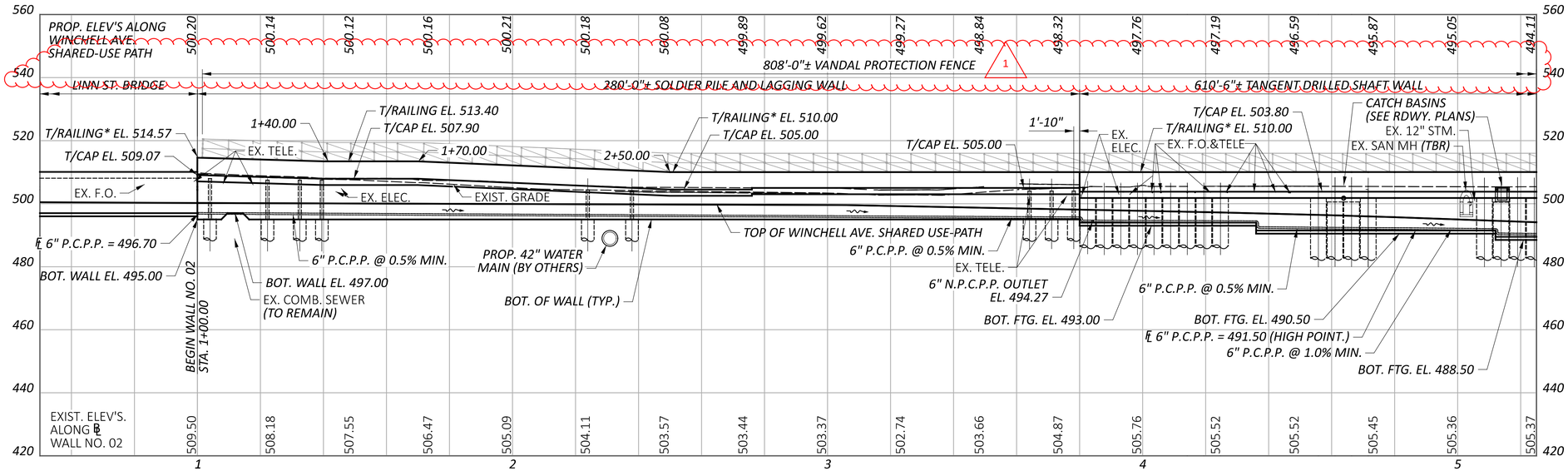

PROFILE ALONG ℄ WALL NO. 02

* DENOTES 42" AESTHETIC TEXAS C412 RAILING

ADDM' NO.	DATE	DESCRIPTION
1	09/01/25	SHEET REVISIONS
DATE COMPLETED		

PLAN AND PROFILE 1 OF 3
RETAINING WALL NO. 02 ALONG WINCHELL AVE.
STA. 1+00.00 TO STA. 5+25.00

DESIGN AGENCY
Palmer ENGINEERING
8350 E. KEMPER ROAD
SUITE B
CINCINNATI, OH 45249
(513) 469-1600

DESIGNER	
RJB	
REVIEWER	
BJF	04/10/25
PROJECT ID	
122048	
SUBSET	TOTAL
1	29
SHEET	TOTAL
P.164	P.421

HAM-IR75-1.05

MODEL: WALL2 - Sheet 1 PAPERSIZE: 34x22 (in.) DATE: 8/27/2025 TIME: 11:31:43 AM PLTDRV: OHDOT_PDF.pltcfg PENTBL: OHDOT_Pen.tbl USER: swalker@palmernet.com WORKSPACE: OHDOTCivil02 WORKSET: 122048 PRODUCT: OpenRoadsDesigner 24.00.00.205
pw:\\ohiodot-pw.bentley.com:ohiodot-pw-02\Documents\01 Active Projects\District 08\Hamilton\122048\d02-Engineering_PalmerEngineering\Structures\Wall_002\Sheets\122048_002_WP001.dgn

MODEL: WALL2 - Sheet 2 PAPERSIZE: 34x22 (in.) DATE: 8/27/2025 TIME: 11:32:12 AM PLTDRV: OHDOT_PDF.pltcfg PENTBL: OHDOT_Pen.tbl USER: swalker@palmernet.com WORKSPACE: OHDOTCivil02 WORKSET: 122048 PRODUCT: OpenRoadsDesigner 24.00.00.205
pw:\\ohiodot-pw.bentley.com:ohiodot-pw-02\Documents\01 Active Projects\District 08\Hamilton\122048\402 Engineering_PalmerEngineering\Structures\Wall_002\Sheets\122048_002_WP001.dgn

HAM-IR75-1.05

℄ WALL NO. 02
CURVE DATA
P.I. = STA. 5+56.45
Δ = 07°03'25" RT
Dc = 07°50'40"
R = 730.40'
T = 45.04'
L = 89.96'
E = 1.39'

℄ WALL NO. 02
CURVE DATA
P.I. = STA. 6+10.12
Δ = 43°17'55" RT
Dc = 03°30'49"
R = 1,630.62'
Ls = 0.00'
Θs = 00°00'00"
LT = 0.00'
ST = 0.00'
Lc = 3.50'
Ts = 510.12'
Es = 77.93'
Emax =
T.S. =
S.C. = 1+00.00
C.S. = 1+03.50
S.T. =

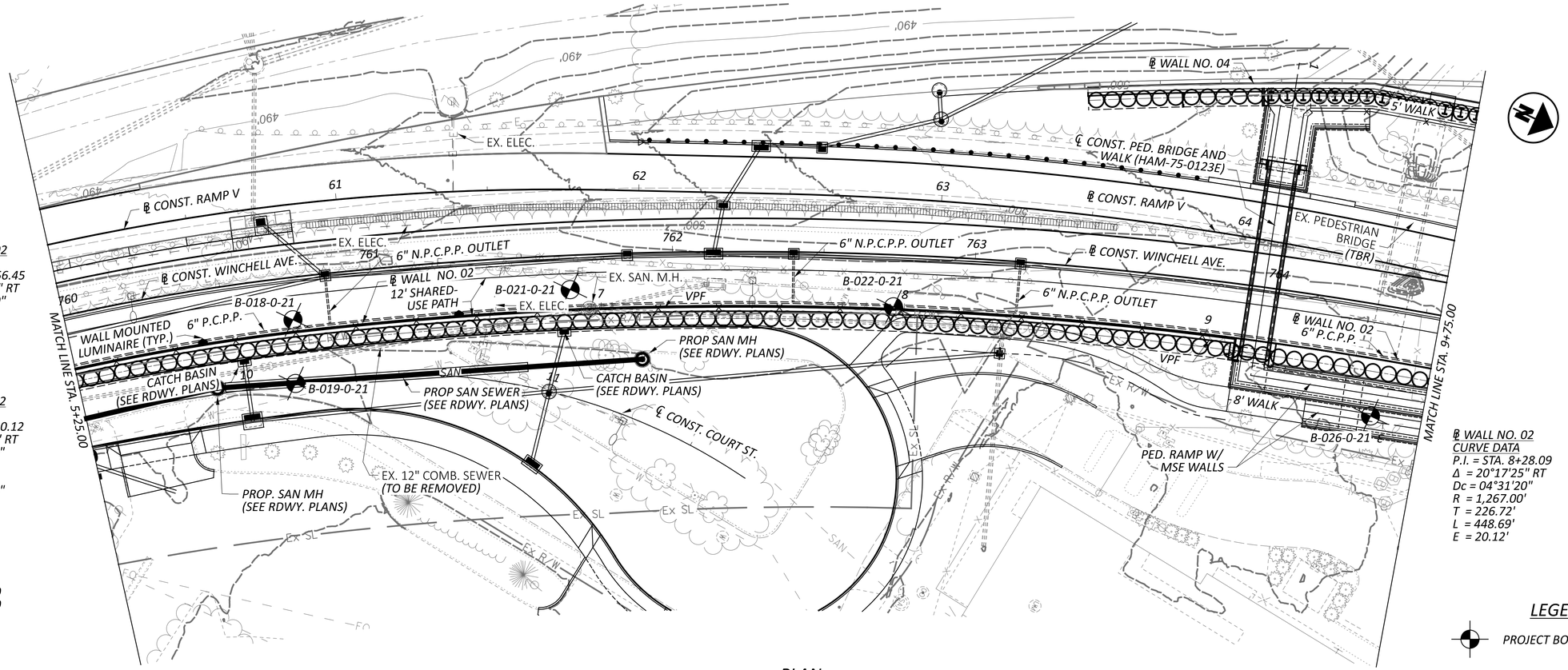

PLAN

℄ WALL NO. 02
CURVE DATA
P.I. = STA. 8+28.09
Δ = 20°17'25" RT
Dc = 04°31'20"
R = 1,267.00'
T = 226.72'
L = 448.69'
E = 20.12'

LEGEND

PROJECT BORING LOCATION

NOTE: ALL EXISTING UTILITIES AND SEWERS SHALL BE REMOVED OR RELOCATED UNLESS OTHERWISE NOTED.

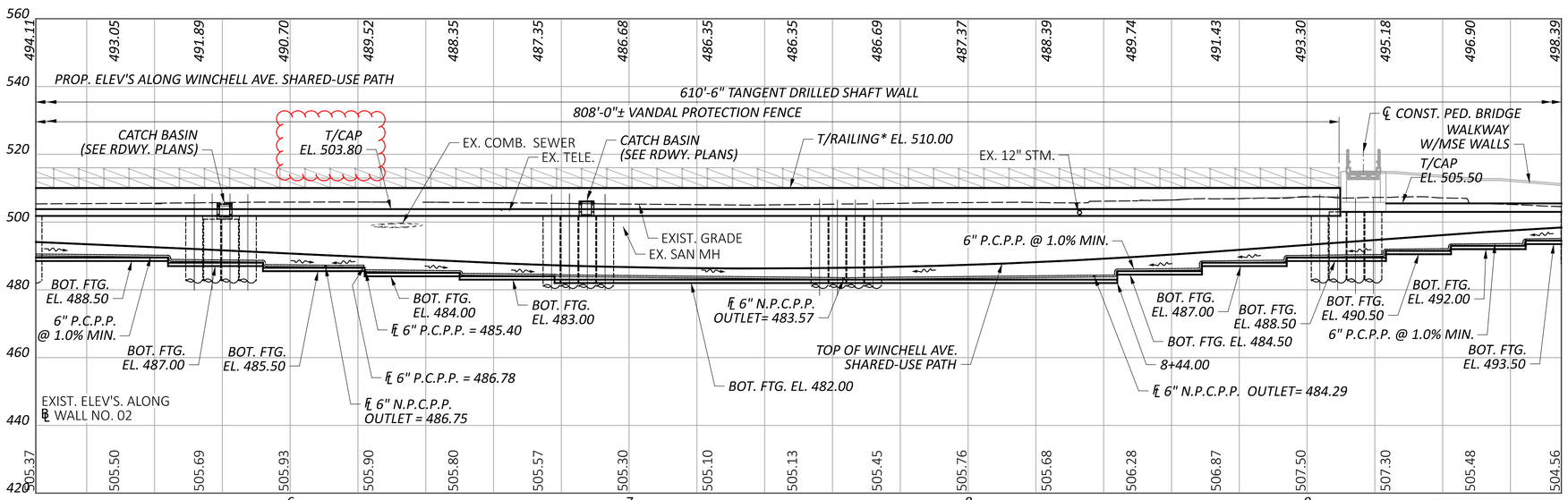

PROFILE ALONG ℄ WALL NO. 02

* DENOTES 42" AESTHETIC TEXAS C412 RAILING

PLAN AND PROFILE 2 OF 3
RETAINING WALL NO. 02 ALONG WINCHELL AVE.
STA. 5+25.00 TO STA. 9+75.00

DESIGN AGENCY
Palmer ENGINEERING
8350 E. KEMPER ROAD
SUITE B
CINCINNATI, OH 45249
(513) 469-1600

DESIGNER	RJB
REVIEWER	BJF 04/10/25
PROJECT ID	122048
SUBSET / TOTAL	2 / 29
SHEET / TOTAL	P.165 / P.421

ADDM' NO.	DATE	DESCRIPTION
1	09/01/25	SHEET REVISIONS
DATE COMPLETED		

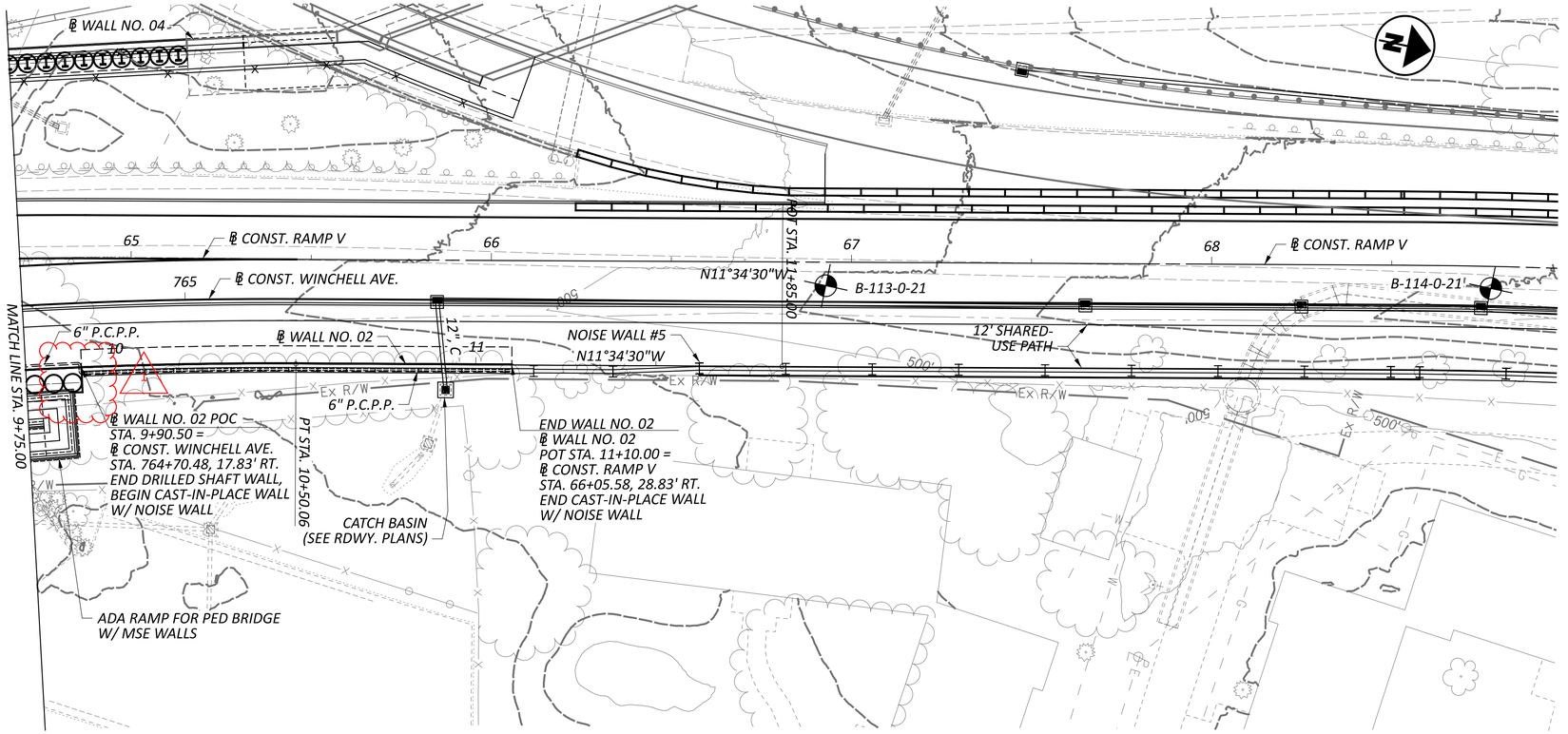

℄ WALL NO. 02
CURVE DATA
P.I. = STA. 8+28.09
Δ = 20°17'25" RT
Dc = 04°31'20"
R = 1,267.00'
T = 226.72'
L = 448.69'
E = 20.12'

PLAN

LEGEND

PROJECT BORING LOCATION

NOTE: ALL EXISTING UTILITIES AND SEWERS SHALL BE REMOVED OR RELOCATED UNLESS OTHERWISE NOTED.

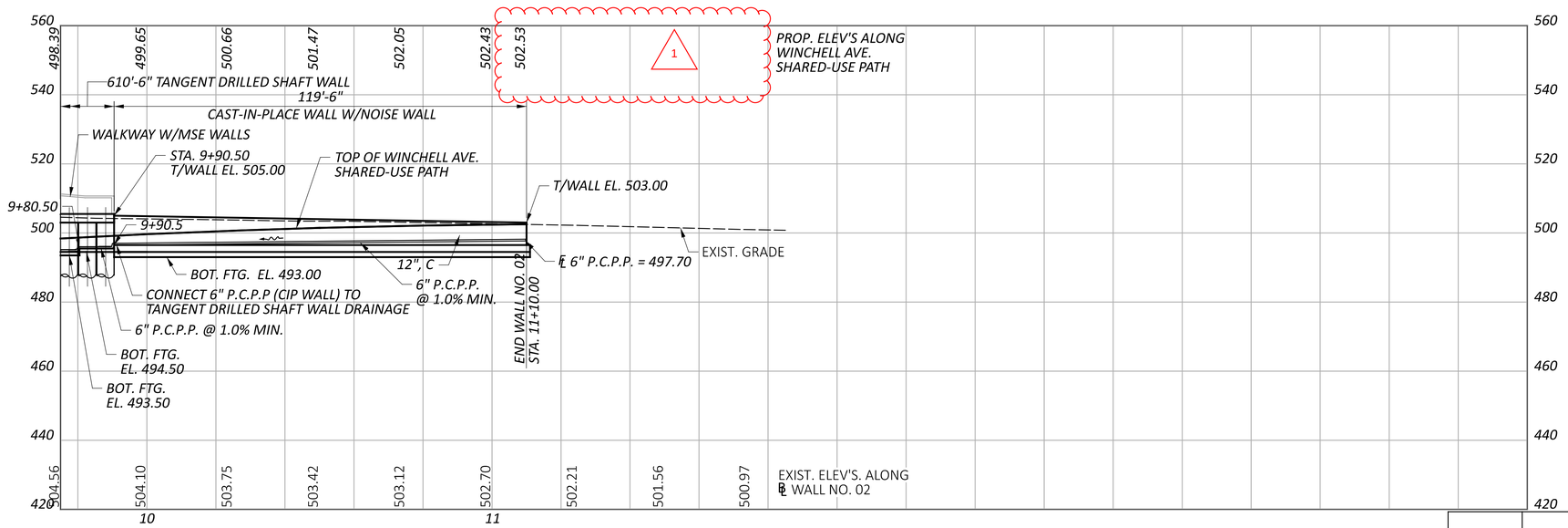

PROFILE ALONG ℄ WALL NO. 02

ADDM' NO.	DATE	DESCRIPTION
1	09/01/25	SHEET REVISIONS
DATE COMPLETED		

PLAN AND PROFILE 3 OF 3
RETAINING WALL NO. 02 ALONG WINCHELL AVE.
STA. 9+75.00 TO END

DESIGN AGENCY
Palmer ENGINEERING
8350 E. KEMPER ROAD
SUITE B
CINCINNATI, OH 45249
(513) 469-1600

DESIGNER RJB
REVIEWER BJF 04/10/25
PROJECT ID 122048
SUBSET 3 TOTAL 29
SHEET P.166 TOTAL P.421

HAM-IR75-1.05

MODEL: WALL2 - Sheet 3 PAPERSIZE: 34x22 (in.) DATE: 8/27/2025 TIME: 11:32:16 AM PLTDRV: OHDOT_PDF.pltcfg PENTBL: OHDOT_Pen.tbl USER: swalker@palmernet.com WORKSPACE: OHDOTCivil02 WORKSET: 122048 PRODUCT: OpenRoadsDesigner 24.00.00.205
pw:\\ohiodot-pw.bentley.com:ohiodot-pw-02\Documents\01 Active Projects\District 08\Hamilton\122048\402-Engineering_PalmerEngineering\Structures\Wall_002\Sheets\122048_002_WP001.dgn

STANDARD DRAWINGS AND SUPPLEMENTAL SPECIFICATIONS

REFER TO THE FOLLOWING STANDARD BRIDGE DRAWINGS:

VPF-1-24	REVISED	7/19/24

REFER TO THE FOLLOWING SUPPLEMENTAL SPECIFICATION:

800	REVISED	7/19/24
894	REVISED	4/16/21

DESIGN SPECIFICATIONS

THIS STRUCTURE CONFORMS TO THE 9TH EDITION OF THE "LRFD BRIDGE DESIGN SPECIFICATIONS" ADOPTED BY THE AMERICAN ASSOCIATION OF STATE HIGHWAY AND TRANSPORTATION OFFICIALS, 2020 AND THE ODOT BRIDGE DESIGN MANUAL, 2020.

DESIGN ASSUMPTIONS

SOIL UNIT WEIGHT, Y = 120 pcf
ANGLE OF INTERNAL FRICTION, ϕ 30°

DESIGN DATA

CONCRETE CLASS QC1 - COMPRESSIVE STRENGTH 4.0 KSI (CONCRETE FACING, COPING, WALL CAP AND MOMENT SLAB, CIP WALL AND FOOTING)

CONCRETE CLASS QC SCC - WITH 1" MAX. AGGREGATE SIZE - COMPRESSIVE STRENGTH 4.5 KSI (TEXAS C412 RAILING) 1

CONCRETE CLASS QC5, WITH 1" MAX. AGGREGATE SIZE - COMPRESSIVE STRENGTH 4.5 KSI (DRILLED SHAFTS)

GALVANIZED STEEL REINFORCEMENT - MIN. YIELD STRENGTH - 60 KSI

GALVANIZED STEEL SOLDIER PILES – ASTM A572 - YIELD STRENGTH 50 KSI

FOUNDATION BEARING RESISTANCE

THE SPREAD FOOTINGS OF THE CAST-IN-PLACE SECTION OF WALL 02, AS DESIGNED, PRODUCE A MAXIMUM SERVICE LIMIT STATE BEARING PRESSURE OF (3.7) KIPS PER SQUARE FOOT AND A MAXIMUM STRENGTH LIMIT STATE BEARING PRESSURE OF (5.1) KIPS PER SQUARE FOOT. THE FACTORED BEARING RESISTANCE IS (12.5) KIPS PER SQUARE FOOT.

LATERALLY LOADED DRILLED SHAFTS, 60" TANGENT DRILLED SHAFT WALL - SHAFTS 38-137 AND 142-153

THE MAXIMUM FACTORED LATERAL LOAD AND BENDING MOMENT TO BE SUPPORTED BY EACH DRILLED SHAFT ARE 116 KIPS, AND 989 KIP-FEET, RESPECTIVELY. THESE LOADS PRODUCE A MAXIMUM FACTORED BENDING MOMENT OF 1,573 KIP-FEET, AND A MAXIMUM FACTORED SHEAR OF 120 KIPS, WITHIN THE DRILLED SHAFT.

ITEM 503 - UNCLASSIFIED EXCAVATION, AS PER PLAN

THIS ITEM INCLUDES ANY WALL EXCAVATION OUTSIDE THE EXCAVATION REQUIRED FOR THE ROADWAY FROM THE PROPOSED ROADWAY SURFACE TO THE BOTTOM OF THE WALL FACING.

ITEM SPECIAL - STRUCTURE: PRECONSTRUCTION CONDITION SURVEY

BEFORE PILE DRIVING BEGINS, CONDUCT A CONDITION SURVEY OF ALL EXISTING BUILDINGS, STRUCTURES, SEWERS AND UTILITIES WITHIN 200-FT OF THE PILE DRIVING WORK. THE PURPOSE OF THE SURVEY IS TO DOCUMENT THE CONDITION OF THE BUILDINGS, STRUCTURES, OR UTILITIES PRIOR TO PILE DRIVING, SO THAT CLAIMS OF DAMAGE CAUSED BY THE PILE DRIVING CAN BE VERIFIED.

RETAIN AN EXPERIENCED VIBRATION SPECIALIST TO PERFORM OR SUPERVISE THE CONDITION SURVEY. USE A VIBRATION SPECIALIST THAT MEETS THE QUALIFICATION REQUIREMENTS FOR VIBRATION MONITORING.

RECORD THE CONDITION OF EXISTING STRUCTURES, SEWERS AND BUILDING MATERIALS, USING WRITTEN TEXT, PHOTOGRAPHS, AND VIDEO RECORDINGS. INSPECT INTERIOR WALLS, CEILINGS, AND FLOORS THAT ARE ACCESSIBLE. INSPECT THE EXTERIOR OF THE BUILDING THAT IS VISIBLE FROM GROUND LEVEL. ALSO RECORD THE LOCATION, SIZE, AND TYPE OF ALL CRACKS AND OTHER STRUCTURAL DEFICIENCIES.

IF OWNERS, OR OCCUPANTS, FAIL TO ALLOW ACCESS TO THE PROPERTY FOR THE PRECONSTRUCTION CONDITION SURVEY, SEND A CERTIFIED LETTER TO THE OWNER OR OCCUPANT. DOCUMENT THE NOTIFICATION EFFORT AND THE CERTIFIED LETTER IN THE REPORT.

SUBMIT THREE COPIES OF THE REPORT TO THE ENGINEER THAT SUMMARIZES THE PRECONSTRUCTION CONDITION OF THE BUILDINGS, STRUCTURES, AND UTILITIES, AND THAT IDENTIFIES AREAS OF CONCERN.

THE DEPARTMENT WILL PAY FOR THIS ITEM AT THE CONTRACT LUMP SUM PRICE FOR ITEM SPECIAL - STRUCTURE: PRECONSTRUCTION CONDITION SURVEY.

ITEM SPECIAL - RETAINING WALL: TIMBER LAGGING

THIS WORK CONSISTS OF FURNISHING AND PLACING TIMBER LAGGING BETWEEN THE SOLDIER PILES BELOW THE EXISTING GROUND SURFACE. FURNISH TIMBER LAGGING CONSISTING OF CONSTRUCTION GRADE, UNTREATED HARDWOOD WITH A MAXIMUM THICKNESS OF 6". TO PERMIT DRAINAGE, PROVIDE 1/4 TO 1/2-INCH SPACES BETWEEN LAGGING BOARDS USING 3/8-INCH SPACER BLOCKS OR OTHER MEANS ACCEPTABLE TO THE ENGINEER.

ITEM 507 - STEEL PILES, MISC.: SOLDIER PILES, W27X258
ITEM 507 - STEEL PILES, MISC.: SOLDIER PILES, W27X178

THIS WORK CONSISTS OF FURNISHING AND PLACING STEEL SOLDIER PILES INTO DRILLED HOLES. FURNISH SOLDIER PILES CONSISTING OF STRUCTURAL STEEL MEMBERS THAT MEET THE PLAN REQUIREMENTS AND CONFORM TO ASTM A572, GRADE 50 IN ACCORDANCE WITH C&MS 711.01. GALVANIZE SOLDIER PILES AS SHOWN ON THE PLANS AND IN ACCORDANCE WITH C&MS 711.02. DO NOT FIELD WELD OR SPLICE STEEL SOLDIER PILES.

THE DEPARTMENT WILL MEASURE SOLDIER PILES ALONG THE AXIS OF THE SOLDIER PILE FROM THE TOP OF WALL ELEVATION TO THE BOTTOM OF THE DRILLED SHAFT, AS DETERMINED BY THE ENGINEER. THE DEPARTMENT WILL PAY FOR SOLDIER PILES AT THE CONTRACT UNIT PRICE PER FOOT FOR ITEM 507, STEEL PILES, MISC.: SOLDIER PILES, W27X258 AND ITEM 507, STEEL PILES, MISC.: SOLDIER PILES, W27X178.

THE CONTRACTOR IS REQUIRED TO CONTACT THE METROPOLITAN SEWER DISTRICT OF GREATER CINCINNATI TO ACCURATELY LOCATE THE EXISTING 66" SANITARY SEWER LINE PRIOR TO INSTALLATION OF SHAFTS AT LOCATIONS 1 AND 2. 1

THE CONTRACTOR IS REQUIRED TO CONTACT GREATER CINCINNATI WATER WORKS TO ACCURATELY LOCATE THE PROPOSED 42" WATER MAIN PRIOR TO INSTALLATION OF SHAFTS AT LOCATION 16 AND 17.

SHAFTS AT LOCATIONS 1, 2, 16, AND 17 SHALL BE CASED TO AVOID LOSS OF FILL AROUND UTILITY LINES AND THE CASING SHALL BE LEFT IN PLACE.

COSTS ASSOCIATED WITH THE ADDITIONAL REQUIREMENTS STATED IN THIS NOTE (LOCATING SEWER AND FURNISHING AND PLACING CASING) SHALL BE INCLUDED IN THE APPLICABLE ITEM 507 - STEEL PILES, MISC. PAY ITEM.

ITEM 512 - SEALING OF CONCRETE SURFACES, AS PER PLAN, (PERMANENT GRAFFITI PROTECTION)

APPLY A PERMANENT GRAFFITI COATING QUALIFIED ACCORDING TO S1083 THAT IS COMPATIBLE WITH THE CONCRETE SEALER OVER WHICH IT IS APPLIED. APPLY THE GRAFFITI COATING IN ACCORDANCE WITH THE MANUFACTURER'S PRINTED INSTRUCTIONS.

GRAFFITI PROTECTION SHALL BE APPLIED TO ALL SURFACES SEALED WITH EPOXY URETHANE SEALANT. GRAFFITI PROTECTION SHALL HAVE A CLEAR FINISH.

ITEM 512 - SEALING OF CONCRETE SURFACES (EPOXY-URETHANE)

SEAL SURFACES OF THE CAST-IN-PLACE CONCRETE WALL FACING, PILASTERS, RAILING AND COPING AS SHOWN IN THE PLANS WITH AN EPOXY URETHANE SEALER ACCORDING TO C&MS 512. COLOR SHALL BE LIGHT NEUTRAL (FEDERAL STD. #17778).

ITEM 513 - WELDED STUD SHEAR CONNECTORS, AS PER PLAN

WELD HEADED STEEL STUDS TO THE FLANGES OF THE SOLDIER PILE TO CONNECT THE CAST-IN-PLACE CONCRETE WALL FACING TO THE SOLDIER PILE. ATTACH HEADED STUDS ACCORDING TO C&MS 513.22 AND AS SHOWN IN THE PLANS. THE CONTRACTOR MAY ATTACH THE STUDS EITHER BEFORE PLACING THE SOLDIER PILE IN THE DRILLED HOLE OR AFTER EXCAVATING IN FRONT OF THE WALL. PROTECT THE HEADED STUDS FROM DAMAGE UNTIL THE CONCRETE WALL FACING IS POURED. REPAIR OR REPLACE DAMAGED HEADED STUDS AT NO EXPENSE TO THE DEPARTMENT.

ITEM 517 - RAILING MISC.: TEXAS C412 RAILING

THIS WORK CONSISTS OF FURNISHING AND PLACING TEXAS C412 RAIL CONCRETE RAILING AS SPECIFIED IN THE PLANS.

ARCHITECTURAL FORMLINER IS NOT PERMITTED TO CREATE THE SHAPE OF THE RAILING.

USE CONCRETE CLASS QC SCC CONCRETE.

PAYMENT FOR THIS ITEM WILL BE ON A LINEAR FOOT BASIS. THE APPROXIMATE AVERAGE RAILING AREA PER FOOT OF TEXAS RAILING IS 8.7 SQ FT. 1

ITEM 524 - DRILLED SHAFTS, 42" DIAMETER ABOVE BEDROCK, AS PER PLAN

THIS WORK CONSISTS OF FURNISHING AND INSTALLING DRILLED SHAFTS FOR SOLDIER PILE WALLS. THE DRILLED SHAFTS ARE REINFORCED WITH SOLDIER PILES INSTEAD OF REINFORCING STEEL CAGES. THE SOLDIER PILES EXTEND ABOVE THE TOP OF THE DRILLED SHAFT. FURNISH AND INSTALL THE DRILLED SHAFTS ACCORDING TO C&MS 524 EXCEPT AS MODIFIED AND SUPPLEMENTED BELOW.

EXCAVATE THE HOLE FOR THE DRILLED SHAFT WITHIN 3 INCHES OF THE PLAN LOCATION. PLACE THE SOLDIER PILE WITHIN THE HOLE SO IT IS VERTICAL. PLACE THE SOLDIER PILE SO THAT THE FLANGES ARE PARALLEL TO THE CENTERLINE OF THE ROW OF DRILLED SHAFTS. DO NOT ALLOW THE ORIENTATION OF THE FLANGES TO VARY BY MORE THAN 10 DEGREES. SUPPORT THE SOLDIER PILE SO THAT IT DOES NOT MOVE DURING CONCRETE PLACEMENT. VERTICAL ALIGNMENT TOLERANCE SHALL BE ± 1/8" PER FOOT OF DEPTH.

CHECK THE POSITION, THE VERTICAL ALIGNMENT AND ORIENTATION OF THE SOLDIER PILE IMMEDIATELY AFTER CONCRETE PLACEMENT. MAKE CORRECTIONS AS NECESSARY TO MEET THE ABOVE TOLERANCES.

FILL THE HOLE ABOVE THE CONCRETE TO THE EXISTING GROUND SURFACE WITH ITEM 613 LOW STRENGTH MORTAR BACKFILL (LSM). LSM BACKFILL SHALL BE INCIDENTAL TO THIS ITEM.

REMOVE CONCRETE AND LSM AS NECESSARY FROM AROUND THE SOLDIER PILE IN ORDER TO PLACE THE LAGGING. WAIT AT LEAST 12 HOURS AFTER PLACING CONCRETE BEFORE PLACING LAGGING.

THE DEPARTMENT WILL MEASURE DRILLED SHAFTS ABOVE BEDROCK, AS PER PLAN, ALONG THE AXIS OF THE DRILLED SHAFT FROM THE GREATER OF THE EXISTING GROUND SURFACE TO THE BOTTOM OF THE DRILLED SHAFT OR THE BOTTOM OF CAP TO THE BOTTOM OF THE DRILLED SHAFT. 1

PAYMENT IS FULL COMPENSATION FOR CONSTRUCTING THE DRILLED SHAFTS, INCLUDING FURNISHING AND PLACING CONCRETE AND LSM, AND REMOVAL OF CONCRETE OR LSM FROM AROUND THE SOLDIER PILES IN ORDER TO PLACE LAGGING.

ADDM' NO.	DATE	DESCRIPTION
1	09/01/25	SHEET REVISIONS
DATE COMPLETED		

GENERAL NOTES 1 OF 2
RETAINING WALL NO. 02 ALONG WINCHELL AVE.

DESIGN AGENCY
Palmer ENGINEERING
8350 E. KEMPER ROAD
SUITE B
CINCINNATI, OH 45249
(513) 469-1600

DESIGNER	RJB
REVIEWER	BJF 04/10/25
PROJECT ID	122048
SUBSET	4
TOTAL	29
SHEET	P.167
TOTAL	P.421

HAM-IR75-1.05

MODEL: Sheet PAPERSIZE: 34x22 (in.) DATE: 8/27/2025 TIME: 11:32:26 AM PLTDRV: OHDOT_PDF.pltcfg PENTBL: OHDOT_Pen.tbl USER: swalker@palmernet.com WORKSPACE: OHDOTCEv02 WORKSET: 122048 PRODUCT: OpenRoadsDesigner 24.00.00.205
pw:\\ohiodot-pw.bentley.com:ohiodot-pw-02\Documents\01 Active Projects\District 08\Hamilton\122048\02-Engineering_Palmer\Engineering\Structures\Wall_002\Sheets\122048_002_WN001.dgn

ITEM 524 - DRILLED SHAFTS, 48" DIAMETER ABOVE BEDROCK, AS PER PLAN

THIS WORK CONSISTS OF FURNISHING AND INSTALLING DRILLED SHAFTS FOR SOLDIER PILE WALLS. THE DRILLED SHAFTS ARE REINFORCED WITH SOLDIER PILES INSTEAD OF REINFORCING STEEL CAGES. THE SOLDIER PILES EXTEND ABOVE THE TOP OF THE DRILLED SHAFT. FURNISH AND INSTALL THE DRILLED SHAFTS ACCORDING TO C&MS 524 EXCEPT AS MODIFIED AND SUPPLEMENTED BELOW.

EXCAVATE THE HOLE FOR THE DRILLED SHAFT WITHIN 3 INCHES OF THE PLAN LOCATION. PLACE THE SOLDIER PILE WITHIN THE HOLE SO IT IS VERTICAL. PLACE THE SOLDIER PILE SO THAT THE FLANGES ARE PARALLEL TO THE CENTERLINE OF THE ROW OF DRILLED SHAFTS. DO NOT ALLOW THE ORIENTATION OF THE FLANGES TO VARY BY MORE THAN 10 DEGREES. SUPPORT THE SOLDIER PILE SO THAT IT DOES NOT MOVE DURING CONCRETE PLACEMENT. VERTICAL ALIGNMENT TOLERANCE SHALL BE ± ⅛" PER FOOT OF DEPTH.

CHECK THE POSITION, THE VERTICAL ALIGNMENT AND ORIENTATION OF THE SOLDIER PILE IMMEDIATELY AFTER CONCRETE PLACEMENT. MAKE CORRECTIONS AS NECESSARY TO MEET THE ABOVE TOLERANCES.

FILL THE HOLE ABOVE THE CONCRETE TO THE EXISTING GROUND SURFACE WITH ITEM 613 LOW STRENGTH MORTAR BACKFILL (LSM). LSM BACKFILL SHALL BE INCIDENTAL TO THIS ITEM.

REMOVE CONCRETE AND LSM AS NECESSARY FROM AROUND THE SOLDIER PILE IN ORDER TO PLACE THE LAGGING. WAIT AT LEAST 12 HOURS AFTER PLACING CONCRETE BEFORE PLACING LAGGING. 1

THE DEPARTMENT WILL MEASURE DRILLED SHAFTS ABOVE BEDROCK, AS PER PLAN, ALONG THE AXIS OF THE DRILLED SHAFT FROM THE GREATER OF THE EXISTING GROUND SURFACE TO THE BOTTOM OF THE DRILLED SHAFT OR THE BOTTOM OF CAP TO THE BOTTOM OF THE DRILLED SHAFT.

PAYMENT IS FULL COMPENSATION FOR CONSTRUCTING THE DRILLED SHAFTS, INCLUDING FURNISHING AND PLACING CONCRETE AND LSM, REMOVAL OF CONCRETE OR LSM FROM AROUND THE SOLDIER PILES IN ORDER TO PLACE LAGGING, AND FURNISHING AND PLACING STEEL CASING FOR SHAFTS 1, 2, 16, AND 17.

ITEM 524 - DRILLED SHAFTS, 60" DIAMETER ABOVE BEDROCK, AS PER PLAN

THIS WORK CONSISTS OF FURNISHING AND INSTALLING DRILLED SHAFTS FOR WALL NO. 02. THE DRILLED SHAFTS ARE REINFORCED WITH REINFORCING STEEL CAGES. DRILLED SHAFT REINFORCING STEEL SHALL BE GALVANIZED. FURNISH AND INSTALL THE DRILLED SHAFTS ACCORDING TO C&MS 524.

EXCAVATE THE HOLE FOR THE DRILLED SHAFT WITHIN 3 INCHES OF THE PLAN LOCATION. VERTICAL ALIGNMENT TOLERANCE SHALL BE ± ⅛" PER FOOT OF DEPTH.

THE DEPARTMENT WILL MEASURE DRILLED SHAFTS ABOVE BEDROCK, AS PER PLAN, ALONG THE AXIS OF THE DRILLED SHAFT FROM THE GREATER OF THE EXISTING GROUND SURFACE TO THE BOTTOM OF THE DRILLED SHAFT OR THE BOTTOM OF CAP TO THE BOTTOM OF THE DRILLED SHAFT. 1

THIS ITEM SHALL ALSO INCLUDE FOR PAYMENT REINFORCING STEEL, THE 12" AUGERED HOLE, THE #8 STONE PLACED IN THE AUGERED HOLE BETWEEN THE SHAFTS, AND THE 2" DIAMETER NON-PERFORATED PIPE DRAINING THE #8 STONE COLUMN.

CONCRETE WALL FACING

THE CONCRETE WALL FACING ALONG THE CURVED PORTIONS OF THE WALL ALIGNMENT SHALL BE FORMED CURVED AND NOT ALONG THE CHORDS OF THE SOLDIER PILES/SHAFTS.

ITEM 530 SPECIAL - RETAINING WALL, PRECAST CONCRETE LAGGING

THIS WORK CONSISTS OF FURNISHING AND PLACING PRECAST REINFORCED CONCRETE PANELS BETWEEN THE SOLDIER PILES TO FUNCTION AS LAGGING FOR THE RETAINING WALL AT THE SPECIFIC LOCATIONS SHOWN IN THE PLANS. PROVIDE PRECAST CONCRETE LAGGING FROM A PRECAST CONCRETE MANUFACTURER CERTIFIED ACCORDING TO SUPPLEMENT 1073. PROVIDE CLASS QC 1 CONCRETE ACCORDING TO C&MS 499. PROVIDE EPOXY COATED REINFORCING STEEL ACCORDING TO C&MS 709.00. IN LIEU OF EPOXY COATING, A CORROSION INHIBITING CONCRETE ADMIXTURE MAY BE USED AT THE SPECIFIED DOSAGE RATE. A QUALIFIED PRODUCT LIST OF CORROSION INHIBITING ADMIXUTRES IS ON FILE AT THE LABORATORY. MANUFACTURERS SHOULD RECOGNIZE THAT THE CORROSION INHIBITOR MAY AFFECT THE STRENGTH, ENTRAINED AIR CONTENT, WORKABILITY, ETC. OF THEIR CONCRETE MIXES. THE MANUFACTURER'S CHOICE TO USE ONE OF THESE CORROSION INHIBITORS DOES NOT ALLEVIATE MEETING ALL DESIGN REQUIREMENTS. DO NOT ALLOW THE DIMENSIONS OF THE LAGGING OR LOCATION OF THE REINFORCING STEEL TO VARY BY MORE THAN 1/4-INCH. CAST THREADED INSERTS INTO THE TOP OF EACH PANEL FOR LIFTING AND PLACING.

FILL ALL CAVITIES PRODUCED BY FORM TIES AND OTHER SINGLE DEFECTS OR DEFECTED AREAS WITH A PREQUALIFIED TROWELABLE MORTAR IN ACCORDANCE WITH SUPPLEMENTAL SPECIFICATION 843.02 AND 843.06. LIKEWISE FILL CAVITIES FOR LIFTING INSERTS IN THE TOP ROW OF PRECAST CONCRETE LAGGING PANELS. PROVIDE A BROOM/ BRUSH FINISH TO ALL TROWELABLE MORTAR PATCHES. CURE THE TROWELABLE MORTAR ACCORDING TO SUPPLEMENTAL SPECIFICATION 843.07. AIR DRY FOR AT LEAST 10 DAYS AFTER COMPLETION OF THE MANUFACTURER'S RECOMMENDED CURE TIME FOR TROWELABLE MORTAR. BRUSH ABRASIVE BLAST, FOLLOWED BY AIR BROOMING OR POWER SWEEPING, TO REMOVE DUST AND SAND FROM THE SURFACE AND OPENED PORES.

FINISH THE FACES OF THE PRECAST CONCRETE LAGGING PANELS THAT WILL NOT BE EXPOSED TO A UNIFORM SURFACE, FREE OF OPEN POCKETS OF AGGREGATE. FINISH THE EXPOSED FACE OF THE PANELS TO A SMOOTH SURFACE.

PERMANENTLY MARK EACH PRECAST CONCRETE LAGGING PANEL TO INDICATE WHICH FACE WILL BE PLACED AGAINST THE SOIL. PLACE THE PANEL BETWEEN THE FLANGES OF THE SOLDIER PILES AND BEARING AGAINST THE FLANGES ON THE EXPOSED SIDE OF THE WALL SO THAT THE SOLDIER PILE FLANGE OVERLAPS THE END OF THE LAGGING BY AT LEAST 3 INCHES AT BOTH ENDS OF THE LAGGING PANEL.

HANDLE, STORE, AND SHIP THE PRECAST CONCRETE LAGGING PANELS TO AVOID CHIPPING, CRACKING AND FRACTURING THE PANELS. SUPPORT THE PANELS ON FIRM BLOCKING WHILE STORING AND SHIPPING. DO NOT SHIP PANELS UNTIL CONCRETE HAS ATTAINED A MINIMUM 3000 PSI COMPRESSIVE STRENGTH. SUBMIT SHIPMENT DOCUMENTATION TO THE ENGINEER AS THE PANELS ARE DELIVERED TO THE PROJECT, INCLUDING THE PRECASTER'S RECORD OF FINAL INSPECTION, THE MEASUREMENTS AND TOLERANCES, STRENGTH, AND DIMENSIONS OF EACH PANEL, ALONG WITH THE TE-24 SHIPPING DOCUMENT.

INSPECT ALL PRECAST CONCRETE LAGGING PANELS AND REJECT PANELS HAVING ANY OF THE FOLLOWING:

- DEFECTS THAT INDICATE IMPERFECT MOLDING.
- DEFECTS THAT INDICATE HONEYCOMBED OR OPEN TEXTURE CONCRETE.
- DEFECTS IN THE PHYSICAL CHARACTERISTICS OF THE CONCRETE, OR DAMAGE TO THE SEALING OF CONCRETE SURFACE TREATMENT OR TO AESTHETIC SURFACE TREATMENTS.
- CONCRETE CHIPS OR SPALLS THAT ARE LARGER THAN 4 INCHES WIDE OR 2 INCHES DEEP. REPAIR ALL CHIPS AND SPALLS THAT ARE SMALLER.
- STAINED FORM FACES, DUE TO FORM OIL, CURING, OR OTHER CONTAMINANTS.
- SIGNS OF AGGREGATE SEGREGATION.
- CRACKS WIDER THAN 0.01 INCHES, PENETRATING MORE THAN 1 INCH OR LONGER THAN 20 PERCENT OF THE LENGTH OF THE FACE CONTAINING THE CRACK. REPAIR ALL CRACKS THAT ARE SMALLER.
- PANELS THAT DO NOT MEET THE SPECIFIED DIMENSIONAL TOLERANCES.
- UNUSABLE LIFTING INSERTS.
- EXPOSED REINFORCING STEEL.
- INSUFFICIENT CONCRETE COMPRESSIVE STRENGTH.

EITHER REPLACE DAMAGED PRECAST CONCRETE LAGGING PANELS OR DOCUMENT THE DAMAGE AND PROPOSE TO THE ENGINEER A REPAIR METHOD FOR THE DAMAGED PANEL; PERFORM REPAIRS WITH THE ACCEPTANCE OF THE ENGINEER. PROVIDE ACCEPTABLE REPLACEMENT PANELS FOR ANY THAT ARE REJECTED.

WHEN INSTALLING THE PRECAST CONCRETE LAGGING PANELS, PLACE HARDWOOD WEDGES NEAR THE TOP AND BOTTOM ON EACH SIDE TO HOLD THE LAGGING PANELS AGAINST THE FRONT INSIDE FLANGE OF THE STEEL PILES.

PAYMENT FOR ALL LABOR, EQUIPMENT, AND MATERIAL REQUIRED TO FABRICATE, TRANSPORT, AND INSTALL THE PRECAST CONCRETE LAGGING PANELS SHALL BE MADE AT THE CONTRACT UNIT PRICE PER SQUARE FOOT FOR ITEM 530 SPECIAL - RETAINING WALL, PRECAST CONCRETE LAGGING.

ITEM 607 - VANDAL PROTECTION FENCE, 6' STRAIGHT, COATED FABRIC, AS PER PLAN

PROVIDE 6' STRAIGHT VANDAL PROTECTION FENCE (PS-2 OF STANDARD DRAWING VPF-1-24) WITH THE FOLLOWING EXCEPTIONS:

1.) USE NON-STANDARD BASE PLATES AS DETAILED ON SHEET 25 /29. BASE PLATES SHALL BE 50 KSI GALVANIZED STEEL. 1

2.) PVC COATING SHALL BE BLACK IN COLOR CLOSELY APPROACHING FEDERAL COLOR NUMBER 17038.

VANDAL FENCE POSTS, RAILS, BASE PLATES, ANCHOR BOLTS, AND ANY OTHER VANDAL FENCE ITEMS NOT RECIEVING A PVC COATING SHALL BE GALVANIZED AS NOTED IN THE STANDARD DRAWING AND TOPCOATED WITH AN ORGANIC COATING PER THE REQUIREMENTS OF AASHTO M181 FOR GRADE 2 POSTS. THE TOPCOAT COLOR SHALL MATCH THE PVC COATING COLOR.

PAYMENT FOR THIS WORK INCLUDES ALL MATERIALS, LABOR, EQUIPMENT, AND ANY MISCELLANEOUS APPURTENANCES NECESSARY TO COMPLETE INSTALLATION ACCORDING TO THE STANDARD DRAWING, PLANS, AND THIS PLAN NOTE.

1	09/01/25	SHEET REVISIONS
ADDM' NO.	DATE	DESCRIPTION
DATE COMPLETED		

ITEM 840 - AESTHETIC SURFACE TREATMENT 1

USE CONCRETE FORM LINERS TO CREATE AESTHETIC SURFACE TREATMENT ON THE MSE WALL FACING PANELS. THE FORM LINER SHALL BE PATTERN 1107, MISSION FLUTE FROM SPEC FORMLINERS, INC. OR APPROVED EQUAL. THE FORM LINER RELIEF DEPTH SHALL BE 1.5". FABRICATE AND INSTALL THE MSE WALL PANELS SUCH THAT THE VERTICAL FINS AND VALLEYS IN THE FRACTURE FIN AESTHETIC TREATMENT ALIGN VERTICALLY ACROSS ADJACENT PANELS FROM THE TOP OF THE WALL TO THE BOTTOM OF THE WALL. USE THE SAME FRACTURED FIN PATTERN ON ALL WALLS ON THE PROJECT.

FORM LINERS SHALL BE CAPABLE OF WITHSTANDING ANTICIPATED CONCRETE POUR PRESSURES WITHOUT LEAKAGE OR CAUSING PHYSICAL DEFECTS. FORM LINERS SHALL BE REMOVABLE WITHOUT CAUSING CONCRETE SURFACE DAMAGE. USE FORM RELEASE PRODUCT AS RECOMMENDED BY THE FORM LINER MANUFACTURER. USE MANUFACTURER'S APPLICATION RATES AND ALL OTHER MANUFACTURER'S INSTRUCTIONS. FORM RELEASE PRODUCT SHALL BE FULLY COMPATIBLE WITH THE FORM LINER MATERIAL AND EPOXY-URETHANE SEALER TO BE APPLIED TO THE FINISHED SURFACES.

ALIGN THE FORM LINER PATTERNS ACROSS ALL JOINTS BETWEEN CONCRETE FACING.

FORM LINERS SHALL EXTEND TO A MINIMUM OF 1'-0" BELOW THE PROPOSED GROUND OR SIDEWALK SURFACE AT THE FRONT FACE OF THE WALL. FORM LINERS MAY EXTEND LOWER BUT THE PAY LIMITS SHALL BE 1'-0" BELOW THE PROPOSED GROUND OR SIDEWALK SURFACE.

PAYMENT WILL BE MADE AT THE UNIT PRICE BID FOR ITEM 840 - AESTHETIC SURFACE TREATMENT, WHICH SHALL BE FULL COMPENSATION FOR ALL LABOR, MATERIALS, EQUIPMENT, AND INCIDENTALS NECESSARY TO COMPLETE THIS ITEM AS SPECIFIED ABOVE AND IN A SATISFACTORY AND WORKMANLIKE MANNER.

ITEM 894 - THERMAL INTEGRITY PROFILER (T.I.P.) TEST

PERFORM INTEGRITY TESTING ON 1 OF THE DRILLED SHAFT 139 OR 140 AT THE FORWARD ABUTMENT OF SFN 3109152 BY THERMAL INTEGRITY PROFILING (TIP). PERFORM TIP TESTING PER ASTM D7949, "STANDARD TEST METHODS FOR THERMAL INTEGRITY PROFILING OF CONCRETE DEEP FOUNDATIONS," METHOD B, AND PER THE PROJECT SPECIAL PROVISIONS. 1

PLAN ABBREVIATIONS

ABUT.	ABUTMENT
BF	BACK FACE (BACKFILL SIDE)
BRG.	BEARING
C/C	CENTER TO CENTER
C.J.	CONSTRUCTION JOINT
DIA.	DIAMETER
EL.	ELEVATION
EF	EACH FACE
EQ. SPA.	EQUALLY SPACED
F.A.	FORWARD ABUTMENT
FF	FRONT FACE (CREEK SIDE)
MAX.	MAXIMUM
MIN.	MINIMUM
N.P.C.P.P.	NON-PERFORATED CORRUGATED PLASTIC PIPE
O/O	OUT TO OUT
PEJF	PREFORMED EXPANSION JOINT FILLER
P.C.P.P.	PERFORATED CORRUGATED PLASTIC PIPE
R.A.	REAR ABUTMENT
SPA.	SPACE, SPACES, SPACED
STA.	STATION
T.O.S.	TOP OF SLOPE
TYP.	TYPICAL

GENERAL NOTES 2 OF 2
RETAINING WALL NO. 02 ALONG WINCHELL AVE.

DESIGN AGENCY
Palmer ENGINEERING
8350 E. KEMPER ROAD
SUITE B
CINCINNATI, OH 45249
(513) 469-1600

DESIGNER RJB
REVIEWER BJF 04/10/25
PROJECT ID 122048
SUBSET 5 TOTAL 29
SHEET P.168 TOTAL P.421

HAM-IR75-1.05

MODEL: Sheet 2 PAPERSIZE: 34x22 (in.) DATE: 8/27/2025 TIME: 11:32:27 AM PLTDRV: OHDOT_PDF.pltcfg PENTBL: OHDOT_Pen.tbl USER: swalker@palmernet.com WORKSPACE: OHDOTCeV02 WORKSET: 122048 PRODUCT: OpenRoadsDesigner 24.00.00.205
pw:\\ohiodot-pw.bentley.com:ohiodot-pw-02\Documents\01 Active Projects\District 08\Hamilton\122048\402-Engineering_PalmerEngineering\Structures\Wall_002\Sheets\122048_002_WN001.dgn

ESTIMATED QUANTITIES

CALC: TES	DATE: 08/15/2025
CHECK: CVK	DATE: 08/15/2025

ITEM	ITEM EXT.	PLAN SPLIT 01/IMS/03	TOTAL	UNIT	DESCRIPTION	SHEET
503	11101	LS	LS		COFFERDAMS AND EXCAVATION BRACING, AS PER PLAN	7/29
503	21301	LS	LS		UNCLASSIFIED EXCAVATION, AS PER PLAN	
507	00400	813	813	FT	STEEL PILES, MISC.: SOLDIER PILES, W27X178	
507	00400	179	179	FT	STEEL PILES, MISC.: SOLDIER PILES, W27X258	
509	26000	176174	176174	LB	GALVANIZED STEEL REINFORCEMENT	
510	10000	1,677	1,677	EACH	DOWEL HOLES WITH NONSHRINK, NONMETALLIC GROUT	
511	46012	723	723	CY	CLASS QC1 CONCRETE WITH QC/QA, RETAINING/WINGWALL NOT INCLUDING FOOTING	
511	46512	123	123	CY	CLASS QC1 CONCRETE WITH QC/QA, FOOTING	
511	53010	475	475	CY	CLASS QC1 CONCRETE, MISC.: SHAFT CAP WITH QC/QA	
511	53010	288	288	CY	CLASS QC1 CONCRETE, MISC.: MOMENT SLAB WITH QC/QA	
512	10000	2,229	2,229	SY	SEALING OF CONCRETE SURFACES	
512	10001	2,229	2,229	SY	SEALING OF CONCRETE SURFACES, AS PER PLAN	4/29
512	33000	10	10	SY	TYPE 2 WATERPROOFING	
513	20001	574	574	EACH	WELDED STUD SHEAR CONNECTORS, AS PER PLAN	4/29
516	13600	488	488	SF	1" PREFORMED EXPANSION JOINT FILLER	
517	76300	810	810	FT	RAILING, MISC.: TEXAS RAILING	
518	20000	237	237	SY	PREFABRICATED GEOCOMPOSITE DRAIN	
518	21200	160	160	CY	POROUS BACKFILL WITH GEOTEXTILE FABRIC	
518	39900	72	72	FT	4" NON-PERFORATED CORRUGATED PLASTIC PIPE, INCLUDING SPECIALS	
518	40000	1,010	1,010	FT	6" PERFORATED CORRUGATED PLASTIC PIPE	
518	40010	80	80	FT	6" NON-PERFORATED CORRUGATED PLASTIC PIPE, INCLUDING SPECIALS	
524	94803	807	807	FT	DRILLED SHAFTS, 42" DIAMETER, ABOVE BEDROCK, AS PER PLAN	4/29
524	94903	181	181	FT	DRILLED SHAFTS, 48" DIAMETER ABOVE BEDROCK, AS PER PLAN	5/29
524	94915	5,260	5,260	FT	DRILLED SHAFTS, 60" DIAMETER, ABOVE BEDROCK, AS PER PLAN	5/29
SPECIAL	53000200	LS	LS		STRUCTURES: PRECONSTRUCTION CONDITION SURVEY	
SPECIAL	53051010	288	288	SF	RETAINING WALL, PRECAST CONCRETE LAGGING	
SPECIAL	53051020	2,104	2,104	SF	RETAINING WALL, TIMBER LAGGING	
607	39901	809	809	FT	VANDAL PROTECTION FENCE, 6' STRAIGHT, COATED FABRIC, AS PER PLAN	5/29
840	26050	8,401	8,401	SF	AESTHETIC SURFACE TREATMENT	
894	10000	12	12	EACH	THERMAL INTEGRITY PROFILING (TIP) TEST	

1

ADDM' NO.	DATE	DESCRIPTION
1	09/01/25	SHEET REVISIONS
DATE COMPLETED		

ESTIMATED QUANTITIES
RETAINING WALL NO. 02 ALONG WINCHELL AVE.

DESIGN AGENCY
Palmer ENGINEERING
8350 E. KEMPER ROAD
SUITE B
CINCINNATI, OH 45249
(513) 469-1600

DESIGNER RJB
REVIEWER BJF 04/10/25
PROJECT ID 122048
SUBSET 6 TOTAL 29
SHEET P.169 TOTAL P.421

HAM-IR75-1.05

MODEL: Sheet PAPERSIZE: 34x22 (in.) DATE: 8/27/2025 TIME: 11:32:36 AM PLTDRV: OHDOT_PDF.pltcfg PENTBL: OHDOT_Pen.tbl USER: swalker@palmernet.com WORKSPACE: OHDOTCEv02 WORKSET: 122048 PRODUCT: OpenRoadsDesigner 24.00.00.205
pw:\\ohiodot-pw.bentley.com:ohiodot-pw-02\Documents\01 Active Projects\District 08\Hamilton\122048\02-Engineering_PalmerEngineering\Structures\Wall_002\Sheets\122048_002_WQ001.dgn

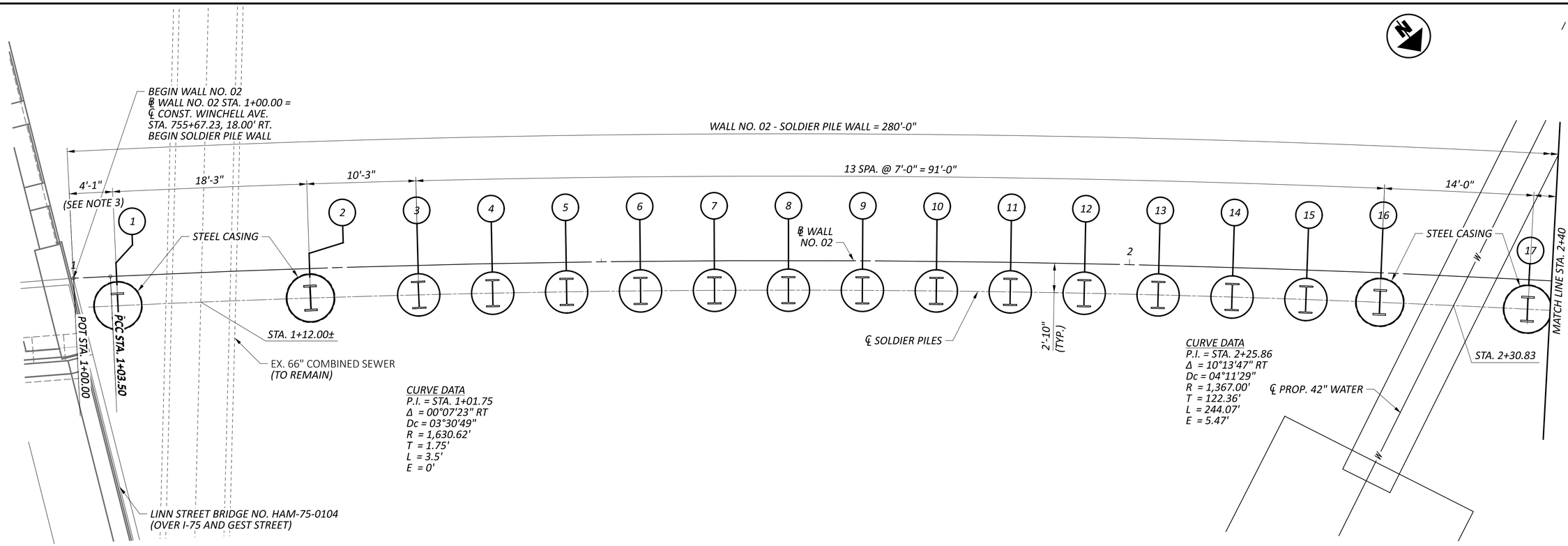

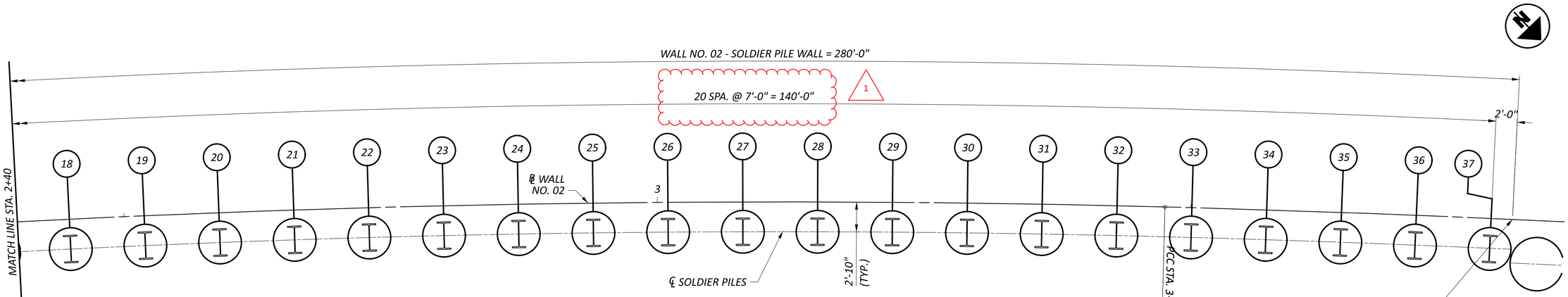

FOUNDATION PLAN - SOLDIER PILE WALL

NOTES

1. ALL DIMENSIONS REFERENCE ℄ SOLDIER PILES.
2. SEE SHEETS 10/29 FOR LOCATION AND ELEVATION TABLES.
3. TEMPORARY SUPPORT OR EXCAVATION BETWEEN PILE 1 AND THE FORWARD ABUTMENT OF THE LINN STREET BRIDGE SHALL BE THE RESPONSIBILITY OF THE CONTRACTOR. THE ASSOCIATED LABOR AND MATERIALS SHALL BE INCLUDED IN ITEM 503, COFFERDAM AND EXCAVATION BRACING, AS PER PLAN. 1

ADDM' NO.	DATE	DESCRIPTION
1	09/01/25	SHEET REVISIONS
DATE COMPLETED		

FOUNDATION PLAN - SOLDIER PILE WALL
RETAINING WALL NO. 02 ALONG WINCHELL AVE.

DESIGN AGENCY
Palmer ENGINEERING
8350 E. KEMPER ROAD
SUITE B
CINCINNATI, OH 45249
(513) 469-1600

DESIGNER	RJB
REVIEWER	BJF 04/10/25
PROJECT ID	122048
SUBSET	7
TOTAL	29
SHEET	P.170
TOTAL	P.421

HAM-IR75-1.05

MODEL: BJP_WALL3 - Soldier_Pile-Wall_2-1 [Sheet] PAPERSIZE: 34x22 (in.) DATE: 8/27/2025 TIME: 11:32:42 AM PLTDRV: OHDOT_PDF.pltcfg PENTBL: OHDOT_Pen.tbl USER: swalker@palmernet.com WORKSPACE: OHDOTCEv02 WORKSET: 122048 PRODUCT: OpenRoadsDesigner 24.00.00.205
pw:\\ohiodot-pw.bentley.com:ohiodot-pw-02\Documents\01 Active Projects\District 08\Hamilton\122048\d02-Engineering_PalmerEngineering\Structures\Wall_002\Sheets\122048_002_WT001.dgn

MODEL: BLP_WALL4 - Tangent_Drilled_Shaft-Wall_2-1 [Sheet] PAPERSIZE: 34x22 (in.) DATE: 8/27/2025 TIME: 11:32:44 AM PLTDRV: OHDOT_PDF.pltcfg PENTBL: OHDOT_Pen.tbl USER: swalker@palmernet.com WORKSPACE: OHDOTCEv02 WORKSET: 122048 PRODUCT: OpenRoadsDesigner 24.00.00.205
pw:\\ohiodot-pw.bentley.com:ohiodot-pw-02\Documents\01 Active Projects\District 08\Hamilton\122048\402-Engineering_PalmerEngineering\Structures\Wall_002\Sheets\122048_002_WT001.dgn

HAM-IR75-1.05

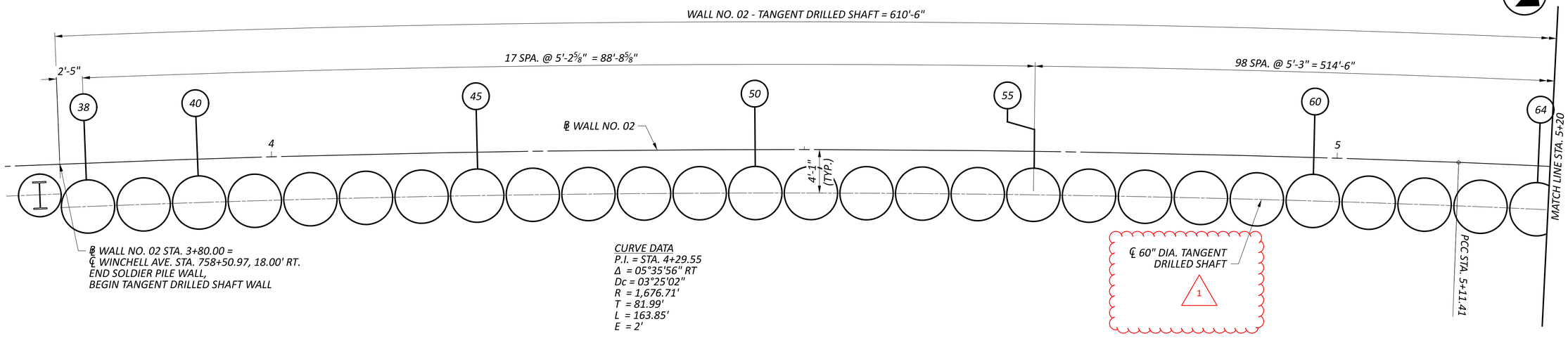

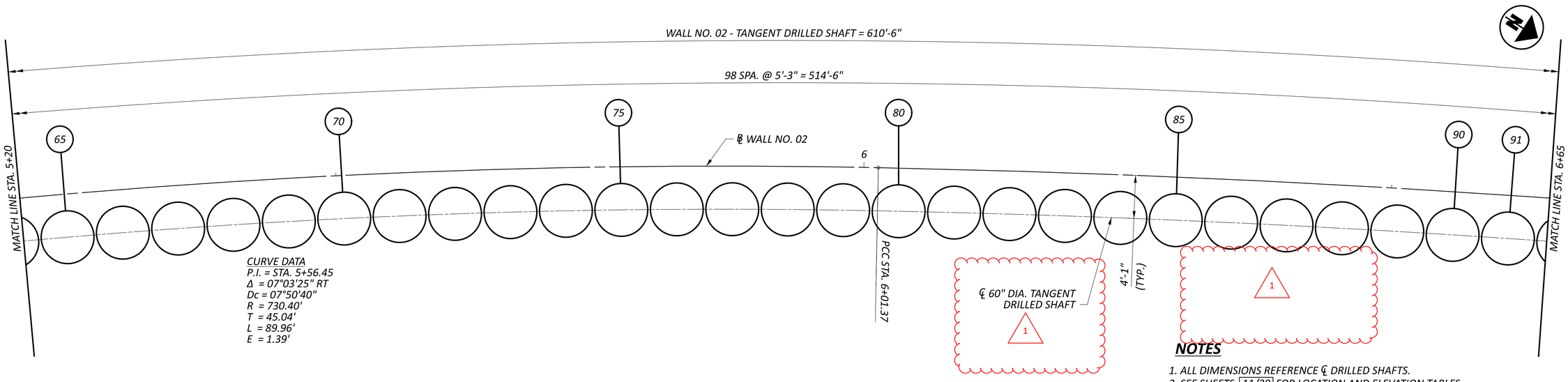

NOTES

1. ALL DIMENSIONS REFERENCE ℄ DRILLED SHAFTS.
2. SEE SHEETS 11/29 FOR LOCATION AND ELEVATION TABLES.

FOUNDATION PLAN - TANGENT DRILLED SHAFT

ADDM' NO.	DATE	DESCRIPTION
1	09/01/25	SHEET REVISIONS
DATE COMPLETED		

FOUNDATION PLAN - DRILLED SHAFT TANGENT WALL 1 OF 2
RETAINING WALL NO. 02 ALONG WINCHELL AVE.

DESIGN AGENCY
Palmer ENGINEERING
8350 E. KEMPER ROAD
SUITE B
CINCINNATI, OH 45249
(513) 469-1600

DESIGNER	RJB
REVIEWER	BJF 04/10/25
PROJECT ID	122048
SUBSET	8
TOTAL	29
SHEET	P.171
TOTAL	P.421

MODEL: BLP_WALL4 - Tangent_Drilled_Shaft-Wall_2-3 |Sheet| PAPERSIZE: 34x22 (in.) DATE: 8/27/2025 TIME: 11:32:46 AM PLTDRV: OHDOT_PDF.pltcfg PENTBL: OHDOT_Pen.tbl USER: swalker@palmernet.com WORKSPACE: OHDOTCEv02 WORKSET: 122048 PRODUCT: OpenRoadsDesigner 24.00.00.205
pw:\\ohiodot-pw.bentley.com:ohiodot-pw-02\Documents\01 Active Projects\District 08\Hamilton\122048\02-Engineering_PalmerEngineering\Structures\Wall_002\Sheets\122048_002_WT001.dgn

HAM-IR75-1.05

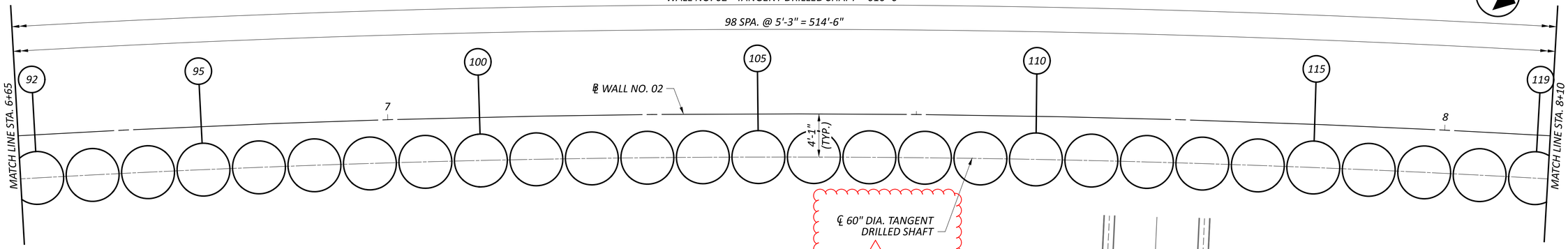

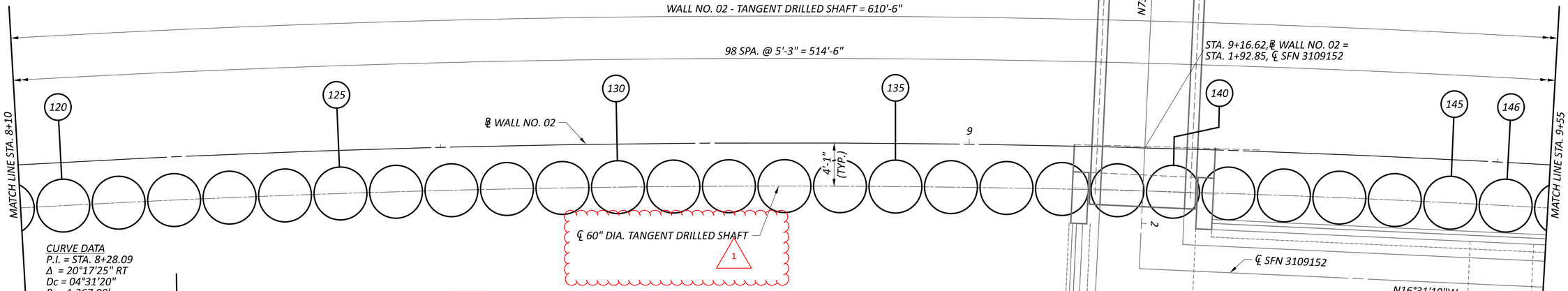

CURVE DATA
P.I. = STA. 8+28.09
Δ = 20°17'25" RT
Dc = 04°31'20"
R = 1,267.00'
T = 226.72'
L = 448.69'
E = 20.12'

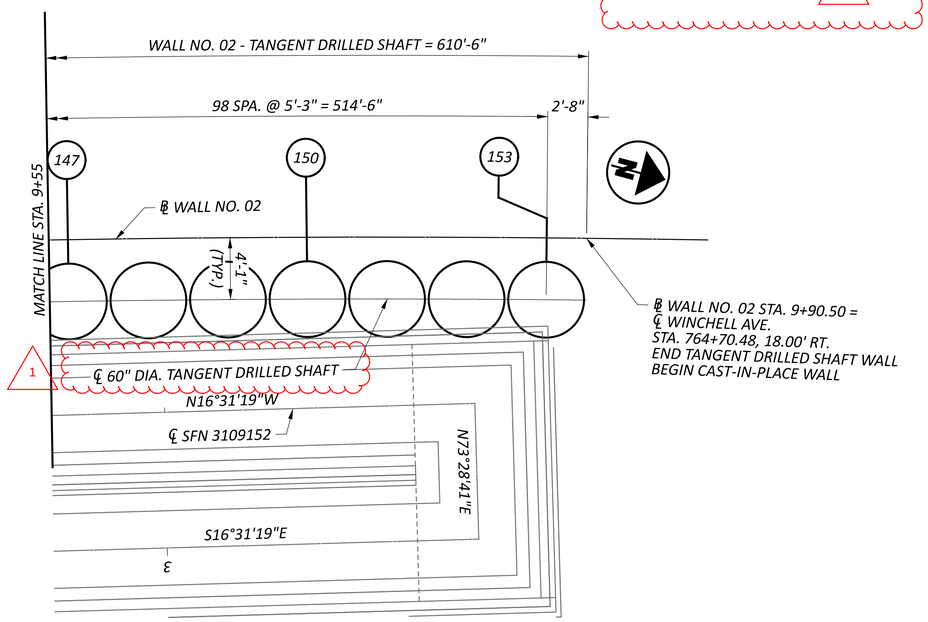

NOTES

1. ALL DIMENSIONS REFERENCE ℄ DRILLED SHAFTS.
2. SEE SHEETS 11/29 FOR LOCATION AND ELEVATION TABLES.

FOUNDATION PLAN - TANGENT DRILLED SHAFT

FOUNDATION PLAN - DRILLED SHAFT TANGENT WALL 2 OF 2
RETAINING WALL NO. 02 ALONG WINCHELL AVE.

DESIGN AGENCY
Palmer ENGINEERING
8350 E. KEMPER ROAD
SUITE B
CINCINNATI, OH 45249
(513) 469-1600

DESIGNER	RJB
REVIEWER	BJF 04/10/25
PROJECT ID	122048
SUBSET / TOTAL	9 / 29
SHEET / TOTAL	P.172 / P.421

ADDM' NO.	DATE	DESCRIPTION
1	09/01/25	SHEET REVISIONS
DATE COMPLETED		

SOLDIER PILE LOCATIONS AND ELEVATIONS - WALL NO. 02											
SHAFT NUMBER	WALL TYPE	STA. AT CL OF PILE / SHAFT	BOT. OF CAP	TOP OF PILE EL.	TOP OF SHAFT EL.	BOT OF PILE / SHAFT EL.	ESTIMATED PILE LENGTH (FT)	ESTIMATED CONC. SHAFT LENGTH (FT)	ITEM 524 DRILLED SHAFT LENGTH (FT)	PILE SHAPE	SHAFT DIA. (IN)
1	SOLDIER PILE	1+04.09	506.95	507.95	495.00	467.00	40.95	28.00	42.28	W27 x 258	48.00
2	SOLDIER PILE	1+22.27	506.42	507.42	495.00	467.00	40.42	28.00	41.32	W27 x 258	48.00
3	SOLDIER PILE	1+32.64	506.12	507.12	495.00	467.00	40.12	28.00	40.99	W27 x 258	48.00
4	SOLDIER PILE	1+39.66	505.91	506.91	495.00	477.50	29.41	17.50	30.31	W27 x 178	42.00
5	SOLDIER PILE	1+46.67	505.90	506.90	495.00	477.50	29.40	17.50	30.13	W27 x 178	42.00
6	SOLDIER PILE	1+53.69	505.90	506.90	495.00	477.50	29.40	17.50	29.89	W27 x 178	42.00
7	SOLDIER PILE	1+60.70	505.90	506.90	495.00	477.50	29.40	17.50	29.59	W27 x 178	42.00
8	SOLDIER PILE	1+67.72	505.90	506.90	495.00	477.50	29.40	17.50	29.28	W27 x 178	42.00
9	SOLDIER PILE	1+74.73	505.70	506.70	495.00	477.50	29.20	17.50	28.98	W27 x 178	42.00
10	SOLDIER PILE	1+81.74	505.40	506.40	495.00	477.50	28.90	17.50	28.60	W27 x 178	42.00
11	SOLDIER PILE	1+88.76	505.10	506.10	495.00	477.50	28.60	17.50	28.21	W27 x 178	42.00
12	SOLDIER PILE	1+95.77	504.80	505.80	495.00	477.50	28.30	17.50	27.82	W27 x 178	42.00
13	SOLDIER PILE	2+02.79	504.51	505.51	495.00	477.50	28.01	17.50	27.48	W27 x 178	42.00
14	SOLDIER PILE	2+09.80	504.21	505.21	495.00	477.50	27.71	17.50	27.21	W27 x 178	42.00
15	SOLDIER PILE	2+16.82	503.91	504.91	495.00	477.50	27.41	17.50	26.93	W27 x 178	42.00
16	SOLDIER PILE	2+23.83	503.61	504.61	495.00	476.00	28.61	19.00	28.16	W27 x 258	48.00
17	SOLDIER PILE	2+37.86	503.02	504.02	495.00	476.00	28.02	19.00	27.83	W27 x 258	48.00
18	SOLDIER PILE	2+44.87	502.72	503.72	495.00	480.50	23.22	14.50	23.18	W27 x 178	42.00
19	SOLDIER PILE	2+51.89	502.50	503.50	495.00	480.50	23.00	14.50	23.06	W27 x 178	42.00
20	SOLDIER PILE	2+58.90	502.50	503.50	495.00	480.50	23.00	14.50	23.02	W27 x 178	42.00
21	SOLDIER PILE	2+65.92	502.50	503.50	495.00	480.50	23.00	14.50	22.99	W27 x 178	42.00
22	SOLDIER PILE	2+72.93	502.50	503.50	495.00	480.50	23.00	14.50	22.95	W27 x 178	42.00
23	SOLDIER PILE	2+79.94	503.00	504.00	495.00	480.50	23.50	14.50	22.93	W27 x 178	42.00
24	SOLDIER PILE	2+86.96	503.00	504.00	495.00	480.50	23.50	14.50	22.91	W27 x 178	42.00
25	SOLDIER PILE	2+93.97	503.00	504.00	495.00	480.50	23.50	14.50	22.89	W27 x 178	42.00
26	SOLDIER PILE	3+00.99	503.00	504.00	495.00	480.50	23.50	14.50	22.85	W27 x 178	42.00
27	SOLDIER PILE	3+08.00	503.00	504.00	495.00	480.50	23.50	14.50	22.67	W27 x 178	42.00
28	SOLDIER PILE	3+15.02	503.00	504.00	495.00	480.50	23.50	14.50	22.50	W27 x 178	42.00
29	SOLDIER PILE	3+22.03	503.00	504.00	495.00	480.50	23.50	14.50	22.50	W27 x 178	42.00
30	SOLDIER PILE	3+29.05	503.00	504.00	495.00	480.50	23.50	14.50	22.50	W27 x 178	42.00
31	SOLDIER PILE	3+36.06	503.00	504.00	495.00	480.50	23.50	14.50	22.65	W27 x 178	42.00
32	SOLDIER PILE	3+43.07	503.00	504.00	495.00	480.50	23.50	14.50	22.90	W27 x 178	42.00
33	SOLDIER PILE	3+50.09	503.00	504.00	495.00	480.50	23.50	14.50	23.16	W27 x 178	42.00
34	SOLDIER PILE	3+57.10	503.00	504.00	495.00	480.50	23.50	14.50	23.50	W27 x 178	42.00
35	SOLDIER PILE	3+64.11	503.00	504.00	495.00	480.50	23.50	14.50	23.84	W27 x 178	42.00
36	SOLDIER PILE	3+71.12	503.00	504.00	495.00	480.50	23.50	14.50	24.18	W27 x 178	42.00
37	SOLDIER PILE	3+78.13	503.00	504.00	495.00	480.50	23.50	14.50	24.48	W27 x 178	42.00

1

NOTE

1. SEE SHEET 7/29 FOR FOOTING PLAN.

ELEVATION TABLES 1 OF 2
RETAINING WALL NO. 02 ALONG WINCHELL AVE.

HAM-IR75-1.05

MODEL: Untitled Sheet PAPERSIZE: 34x22 (in.) DATE: 8/27/2025 TIME: 11:32:52 AM PLTDRV: OHDOT_PDF.pltcfg PENTBL: OHDOT_Pen.tbl USER: swalker@palmernet.com WORKSPACE: OHDOTCEv02 WORKSET: 122048 PRODUCT: OpenRoadsDesigner 24.00.00.205
pw:\\ohiodot-pw.bentley.com:ohiodot-pw-02\Documents\01 Active Projects\District 08\Hamilton\122048\d02-Engineering_PalmerEngineering\Structures\Wall_002\Sheets\122048_002_WE010.dgn

DESIGN AGENCY
Palmer ENGINEERING
8350 E. KEMPER ROAD
SUITE B
CINCINNATI, OH 45249
(513) 469-1600

DESIGNER RJB
REVIEWER BJF 04/10/25
PROJECT ID 122048
SUBSET 10 TOTAL 29
SHEET P.173 TOTAL P.421

ADDM' NO.	DATE	DESCRIPTION
1	09/01/25	SHEET REVISIONS
DATE COMPLETED		

DRILLED SHAFT LOCATIONS AND ELEVATIONS - WALL NO. 02

SHAFT NUMBER	WALL TYPE	STA. AT CL OF SHAFT	BOT. OF CAP / TOP OF SHAFT EL.	BOT. OF SHAFT EL.	EST. CONC. SHAFT LENGTH (FT)	ITEM 524 DRILLED SHAFT LENGTH (FT)
38	TANGENT DS	3+82.62	501.80	475.25	26.55	29.89
39	TANGENT DS	3+87.85	501.80	475.25	26.55	30.08
40	TANGENT DS	3+93.08	501.80	475.25	26.55	30.26
41	TANGENT DS	3+98.31	501.80	475.25	26.55	30.45
42	TANGENT DS	4+03.54	501.80	475.25	26.55	30.48
43	TANGENT DS	4+08.77	501.80	475.25	26.55	30.43
44	TANGENT DS	4+14.01	501.80	475.25	26.55	30.38
45	TANGENT DS	4+19.24	501.80	475.25	26.55	30.33
46	TANGENT DS	4+24.47	501.80	475.25	26.55	30.28
47	TANGENT DS	4+29.70	501.80	475.25	26.55	30.27
48	TANGENT DS	4+34.93	501.80	468.25	33.55	37.27
49	TANGENT DS	4+40.16	501.80	468.25	33.55	37.27
50	TANGENT DS	4+45.40	501.80	468.25	33.55	37.27
51	TANGENT DS	4+50.63	501.80	468.25	33.55	37.27
52	TANGENT DS	4+55.86	501.80	468.25	33.55	37.25
53	TANGENT DS	4+61.09	501.80	468.25	33.55	37.24
54	TANGENT DS	4+66.32	501.80	468.25	33.55	37.22
55	TANGENT DS	4+71.55	501.80	468.25	33.55	37.21
56	TANGENT DS	4+76.78	501.80	468.25	33.55	37.19
57	TANGENT DS	4+82.05	501.80	468.25	33.55	37.17
58	TANGENT DS	4+87.31	501.80	468.25	33.55	37.16
59	TANGENT DS	4+92.57	501.80	468.25	33.55	37.14
60	TANGENT DS	4+97.83	501.80	468.25	33.55	37.12
61	TANGENT DS	5+03.10	501.80	468.25	33.55	37.11
62	TANGENT DS	5+08.36	501.80	468.25	33.55	37.11
63	TANGENT DS	5+13.63	501.80	468.25	33.55	37.12
64	TANGENT DS	5+18.91	501.80	468.25	33.55	37.12
65	TANGENT DS	5+24.19	501.80	468.25	33.55	37.12
66	TANGENT DS	5+29.47	501.80	468.25	33.55	37.14
67	TANGENT DS	5+34.75	501.80	468.25	33.55	37.17
68	TANGENT DS	5+40.03	501.80	468.25	33.55	37.20
69	TANGENT DS	5+45.31	501.80	468.25	33.55	37.23
70	TANGENT DS	5+50.59	501.80	468.25	33.55	37.25
71	TANGENT DS	5+55.87	501.80	468.25	33.55	37.29
72	TANGENT DS	5+61.15	501.80	468.25	33.55	37.33
73	TANGENT DS	5+66.43	501.80	460.75	41.05	44.87
74	TANGENT DS	5+71.70	501.80	460.75	41.05	44.91
75	TANGENT DS	5+76.98	501.80	460.75	41.05	44.96
76	TANGENT DS	5+82.26	501.80	460.75	41.05	45.01
77	TANGENT DS	5+87.54	501.80	460.75	41.05	45.06
78	TANGENT DS	5+92.82	501.80	460.75	41.05	45.11
79	TANGENT DS	5+98.10	501.80	460.75	41.05	45.16
80	TANGENT DS	6+03.38	501.80	460.75	41.05	45.18
81	TANGENT DS	6+08.64	501.80	460.75	41.05	45.17
82	TANGENT DS	6+13.91	501.80	460.75	41.05	45.16
83	TANGENT DS	6+19.18	501.80	460.75	41.05	45.16
84	TANGENT DS	6+24.44	501.80	460.75	41.05	45.15
85	TANGENT DS	6+29.71	501.80	460.75	41.05	45.13
86	TANGENT DS	6+34.98	501.80	460.75	41.05	45.11
87	TANGENT DS	6+40.25	501.80	460.75	41.05	45.09
88	TANGENT DS	6+45.51	501.80	460.75	41.05	45.07
89	TANGENT DS	6+50.78	501.80	449.50	52.30	56.29
90	TANGENT DS	6+56.05	501.80	449.50	52.30	56.24
91	TANGENT DS	6+61.31	501.80	449.50	52.30	56.20
92	TANGENT DS	6+66.58	501.80	449.50	52.30	56.15
93	TANGENT DS	6+71.85	501.80	449.50	52.30	56.10
94	TANGENT DS	6+77.11	501.80	449.50	52.30	56.05
95	TANGENT DS	6+82.38	501.80	449.50	52.30	55.99

DRILLED SHAFT LOCATIONS AND ELEVATIONS - WALL NO. 02

SHAFT NUMBER	WALL TYPE	STA. AT CL OF SHAFT	BOT. OF CAP / TOP OF SHAFT EL.	BOT. OF SHAFT EL.	EST. CONC. SHAFT LENGTH (FT)	ITEM 524 DRILLED SHAFT LENGTH (FT)
96	TANGENT DS	6+87.65	501.80	449.50	52.30	55.93
97	TANGENT DS	6+92.92	501.80	449.50	52.30	55.88
98	TANGENT DS	6+98.18	501.80	449.50	52.30	55.82
99	TANGENT DS	7+03.45	501.80	449.50	52.30	55.77
100	TANGENT DS	7+08.72	501.80	449.50	52.30	55.73
101	TANGENT DS	7+13.98	501.80	449.50	52.30	55.69
102	TANGENT DS	7+19.25	501.80	449.50	52.30	55.65
103	TANGENT DS	7+24.52	501.80	449.50	52.30	55.60
104	TANGENT DS	7+29.78	501.80	449.50	52.30	55.61
105	TANGENT DS	7+35.05	501.80	449.50	52.30	55.61
106	TANGENT DS	7+40.32	501.80	449.50	52.30	55.62
107	TANGENT DS	7+45.59	501.80	449.50	52.30	55.62
108	TANGENT DS	7+50.85	501.80	449.50	52.30	55.64
109	TANGENT DS	7+56.12	501.80	449.50	52.30	55.71
110	TANGENT DS	7+61.39	501.80	449.50	52.30	55.78
111	TANGENT DS	7+66.65	501.80	449.50	52.30	55.84
112	TANGENT DS	7+71.92	501.80	449.50	52.30	55.91
113	TANGENT DS	7+77.19	501.80	449.50	52.30	55.98
114	TANGENT DS	7+82.45	501.80	449.50	52.30	56.04
115	TANGENT DS	7+87.72	501.80	449.50	52.30	56.11
116	TANGENT DS	7+92.99	501.80	449.50	52.30	56.17
117	TANGENT DS	7+98.26	501.80	449.50	52.30	56.24
118	TANGENT DS	8+03.52	501.80	449.50	52.30	56.25
119	TANGENT DS	8+08.79	501.80	449.50	52.30	56.23
120	TANGENT DS	8+14.06	501.80	449.50	52.30	56.22
121	TANGENT DS	8+19.32	501.80	449.50	52.30	56.20
122	TANGENT DS	8+24.59	501.80	449.50	52.30	56.18
123	TANGENT DS	8+29.86	501.80	449.50	52.30	56.30
124	TANGENT DS	8+35.12	501.80	449.50	52.30	56.42
125	TANGENT DS	8+40.39	501.80	449.50	52.30	56.55
126	TANGENT DS	8+45.66	501.80	449.50	52.30	56.68
127	TANGENT DS	8+50.92	501.80	459.50	42.30	46.80
128	TANGENT DS	8+56.19	501.80	459.50	42.30	46.93
129	TANGENT DS	8+61.46	501.80	459.50	42.30	47.05
130	TANGENT DS	8+66.73	501.80	459.50	42.30	47.17
131	TANGENT DS	8+71.99	501.80	459.50	42.30	47.30
132	TANGENT DS	8+77.26	501.80	459.50	42.30	47.43
133	TANGENT DS	8+82.53	501.80	465.00	36.80	42.06
134	TANGENT DS	8+87.79	501.80	465.00	36.80	42.19
135	TANGENT DS	8+93.06	501.80	465.00	36.80	42.33
136	TANGENT DS	8+98.33	501.80	465.00	36.80	42.46
137	TANGENT DS	9+03.59	501.80	465.00	36.80	42.47
138	TANGENT DS	9+08.86	501.80	451.00	50.80	56.43
139	TANGENT DS	9+14.13	501.80	451.00	50.80	56.39
140	TANGENT DS	9+19.40	501.80	451.00	50.80	56.34
141	TANGENT DS	9+24.66	503.00	451.00	52.00	56.30
142	TANGENT DS	9+29.93	503.00	465.25	37.75	41.69
143	TANGENT DS	9+35.20	503.00	465.25	37.75	41.31
144	TANGENT DS	9+40.46	503.00	465.25	37.75	40.92
145	TANGENT DS	9+45.73	503.00	466.75	36.25	39.04
146	TANGENT DS	9+51.00	503.00	466.75	36.25	38.69
147	TANGENT DS	9+56.26	503.00	466.75	36.25	38.50
148	TANGENT DS	9+61.53	503.00	466.75	36.25	38.31
149	TANGENT DS	9+66.80	503.00	468.25	34.75	36.61
150	TANGENT DS	9+72.07	503.00	468.25	34.75	36.42
151	TANGENT DS	9+77.33	503.00	468.25	34.75	36.27
152	TANGENT DS	9+82.60	503.00	469.25	33.75	35.17
153	TANGENT DS	9+87.87	503.00	469.25	33.75	35.07

1

TANGENT DRILLED SHAFT REINFORCING STEEL LIST (REFERENCE ONLY)

MARK	NUMBER TOTAL	LENGTH	WEIGHT (LBS.)	TYPE	DIMENSIONS A	DIMENSIONS B	DIMENSIONS C	DRILLED SHAFT NUMBER
SP501	10	476' - 1"	4,966	27	0' - 9"	4' - 0"	26' - 6 ½" *	38-47
SP502	25	591' - 10"	15,433	27	0' - 9"	4' - 0"	33' - 6 ½" *	48-72
SP503	16	715' - 11"	11,947	27	0' - 9"	4' - 0"	41' - 0 ½" *	73-88
SP504	38	901' - 11"	35,747	27	0' - 9"	4' - 0"	52' - 3 ½" *	89-126
SP505	6	736' - 7"	4,610	27	0' - 9"	4' - 0"	42' - 3 ½" *	127-132
SP506	5	645' - 7"	3,367	27	0' - 9"	4' - 0"	36' - 9 ½" *	133-137
SP507	3	2455' - 2"	7,683	27	0' - 3 ⅛"	4' - 0"	50' - 9 ½" *	138-140
SP508	1	2512' - 8"	2,621	27	0' - 3 ⅛"	4' - 0"	52' - 0" *	141
SP509	3	661' - 5"	2,070	27	0' - 9"	4' - 0"	37' - 9" *	142-144
SP510	4	636' - 8"	2,657	27	0' - 9"	4' - 0"	36' - 3" *	145-148
SP511	3	611' - 10"	1,915	27	0' - 9"	4' - 0"	34' - 9" *	149-151
SP512	2	595' - 4"	1,242	27	0' - 9"	4' - 0"	33' - 9" *	152-153
		SUBTOTAL **	94,258					
DS1101	190	29' - 7"	29,864	16	28' - 0" *			38-47
DS1102	475	36' - 7"	92,325	16	35' - 0" *			48-72
DS1103	304	44' - 1"	71,202	16	42' - 6" *			73-88
DS1104	836	55' - 4"	245,773	16	53' - 9" *			89-126
DS1105	114	45' - 4"	27458	16	43' - 9" *			127-132
DS1106	95	39' - 10"	20,106	16	38' - 3" *			133-137
DS1107	66	53' - 10"	18,878	16	52' - 3" *			138-140
DS1108	22	55' - 0"	6,429	16	53' - 5" *			141
DS1109	57	40' - 9"	12,341	16	39' - 2" *			142-144
DS1110	76	39' - 3"	15,849	16	37' - 8" *			145-148
DS1111	57	37' - 9"	11,433	16	36' - 2" *			149-151
DS1112	38	36' - 9"	7,420	16	35' - 2" *			152-153
		SUBTOTAL **	559,078					

** = ESTIMATED TOTAL LENGTH*

*** SUBTOTALS ARE FOR REFERENCE ONLY (INCLUDE WITH ITEM 524 FOR PAYMENT)*



TYPE-16

1

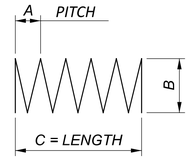

TYPE-27

NOTE

1. SEE SHEETS 8/29 AND 9/29 FOR FOOTING PLAN.

1

ADDM' NO.	DATE	DESCRIPTION
1	09/01/25	SHEET REVISIONS
DATE COMPLETED		

ELEVATION TABLES 2 OF 2
RETAINING WALL NO. 02 ALONG WINCHELL AVE.

DESIGN AGENCY

Palmer ENGINEERING

8350 E. KEMPER ROAD
SUITE B
CINCINNATI, OH 45249
(513) 469-1600

DESIGNER RJB

REVIEWER BJF 04/10/25

PROJECT ID 122048

SUBSET 11 TOTAL 29

SHEET P.174 TOTAL P.421

HAM-IR75-1.05

MODEL: Wall 2 Elevation Table PAPERSIZE: 34x22 (in.) DATE: 8/27/2025 TIME: 11:32:53 AM PLTDRV: OHDOT_PDF.pltcfg PENTBL: OHDOT_Pen.tbl USER: swalker@palmernet.com WORKSPACE: OHDOTCivil02 WORKSET: 122048 PRODUCT: OpenRoadsDesigner 24.00.00.205
pw:\\ohiodot-pw.bentley.com:ohiodot-pw-02\Documents\01 Active Projects\District 08\Hamilton\122048\02-Engineering_PalmerEngineering\Structures\Wall_002\Sheets\122048_002_WE010.dgn

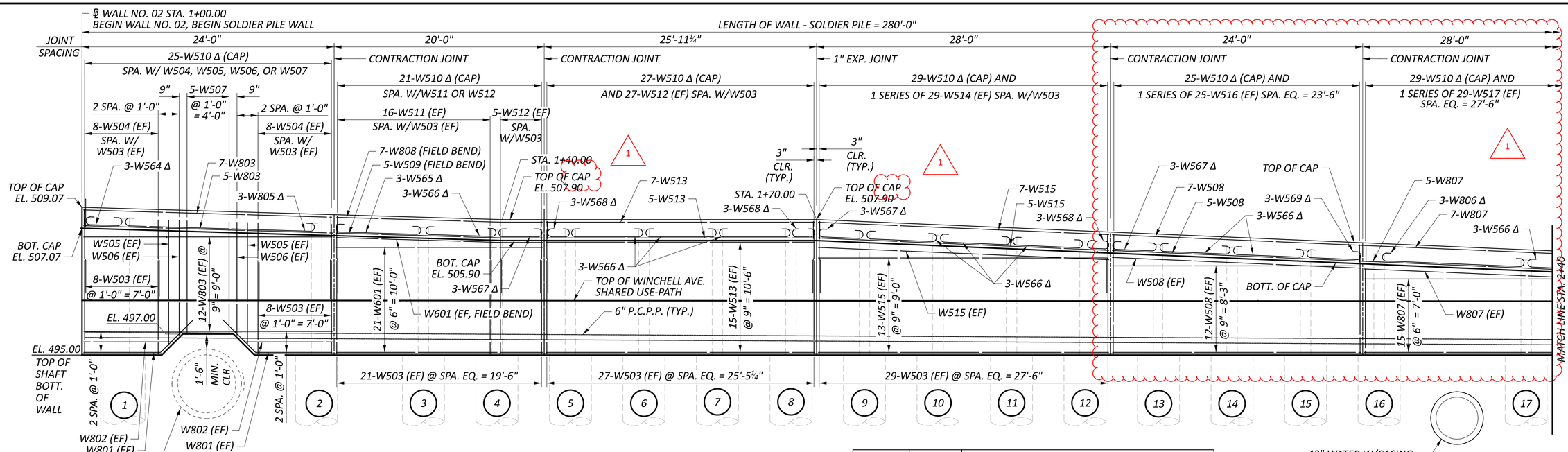

LAP LENGTHS

#5 HORIZONTAL = 3'-1"
#5 VERTICAL = 2'-5"

LEGEND

Δ = SPACE CAP BARS, AS NEEDED, TO AVOID PILE EMBEDMENT

1	09/01/25	SHEET REVISIONS
ADDM' NO.	DATE	DESCRIPTION
DATE COMPLETED		

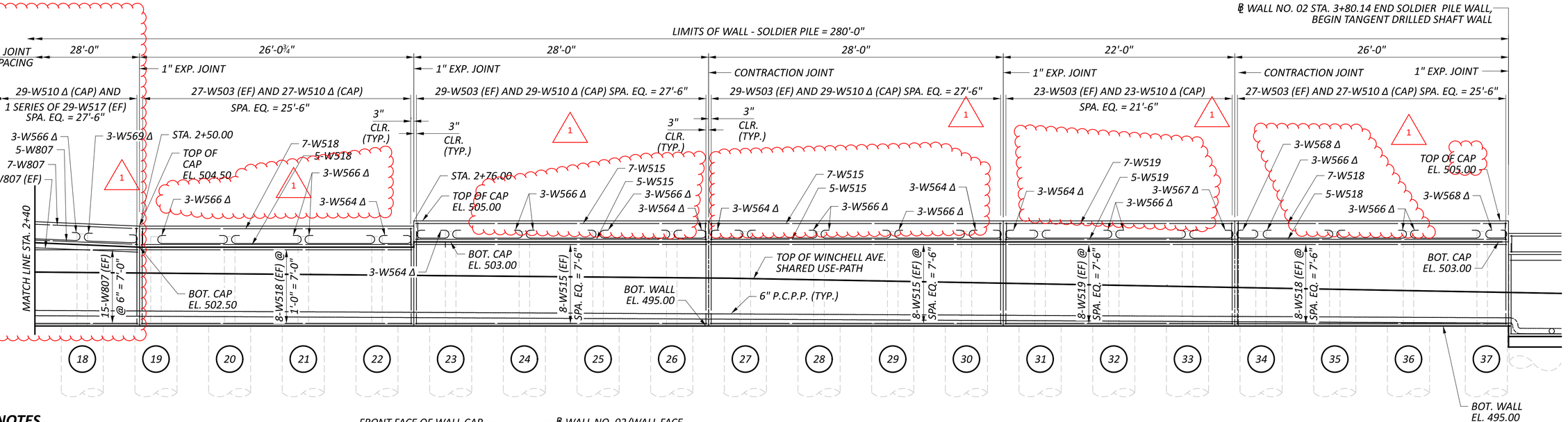

NOTES

1. SEE SHEET 4/29 AND 5/29 FOR GENERAL NOTES.
2. SEE SHEETS 18/29 AND 19/29 FOR SOLDIER PILE WALL TYPICAL SECTION DETAILS.
3. RAILING AND VANDAL PROTECTION FENCE NOT SHOWN FOR CLARITY
4. INSTALL A 6" PVC CRD-C 572-74 WATERSTOP AT THE CENTER OF THE WALL THICKNESS, CENTERED OVER THE JOINT AND EXTENDING FROM THE TOP OF THE FOOTING TO THE TOP OF THE WALL. THIS ITEM IS INCIDENTAL TO REINFORCED WALL CONCRETE.

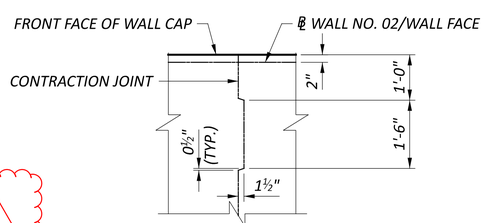

CONTRACTION JOINT PLAN - WALL CAP
DETAIL IS TYPICAL

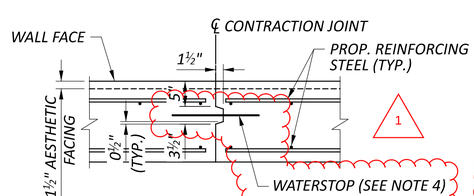

CONTRACTION JOINT PLAN - WALL FACING
DETAIL IS TYPICAL

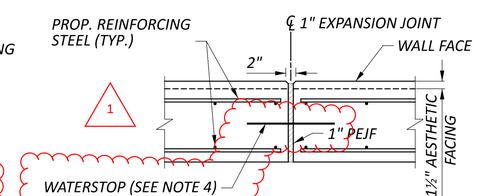

EXPANSION JOINT PLAN
DETAIL IS TYPICAL

ELEVATION DETAILS - SOLDIER PILE WALL RETAINING WALL NO. 02 ALONG WINCHELL AVE.

HAM-IR75-1.05

DESIGN AGENCY
Palmer ENGINEERING
8350 E. KEMPER ROAD SUITE B CINCINNATI, OH 45249 (513) 469-1600
DESIGNER RJB
REVIEWER BJF 04/10/25
PROJECT ID 122048
SUBSET 12 TOTAL 29
SHEET P.175 TOTAL P.421

MODEL: PGL-1 - Soldier_Pile-Profile 1 [Sheet] PAPERSIZE: 34x22 (in.) DATE: 8/27/2025 TIME: 11:33:03 AM PLTDRV: OHDOT_PDF.pltcfg PENTBL: OHDOT_Pen.tbl USER: swalker@palmernet.com WORKSPACE: OHDOTCEx02 WORKSET: 122048 PRODUCT: OpenRoadsDesigner 24.00.00.205
dw:\\ohiodot-pw.bentley.com:ohiodot-pw-02\Documents\01 Active Projects\District 08\Hamilton\122048\002_Engineering_Palmer\Engineering\Structures\Wall_002\Sheets\122048_002_WE001.dgn

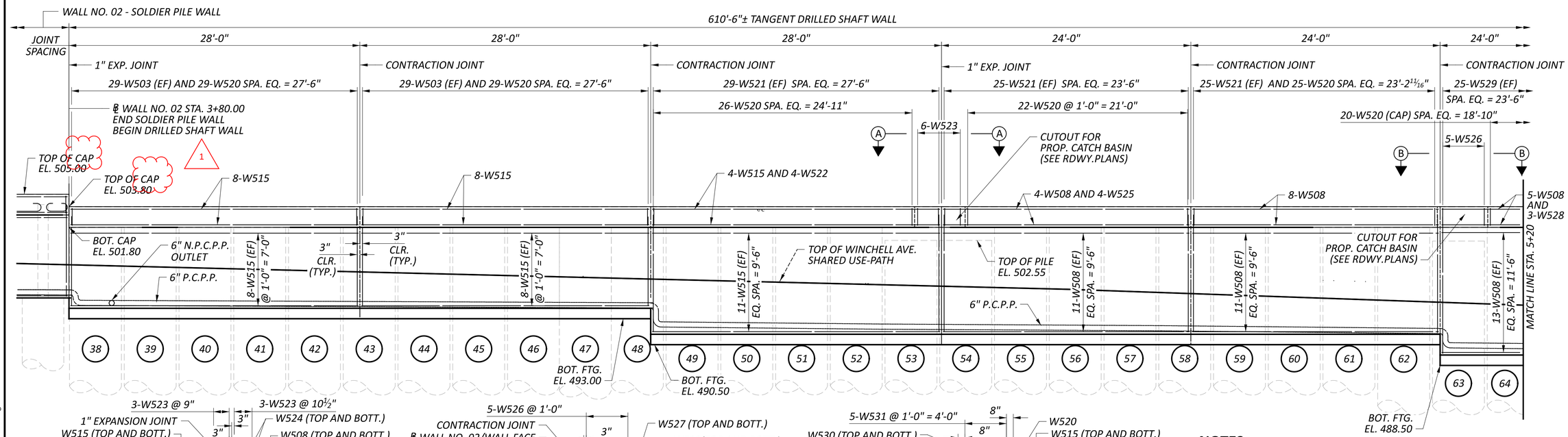

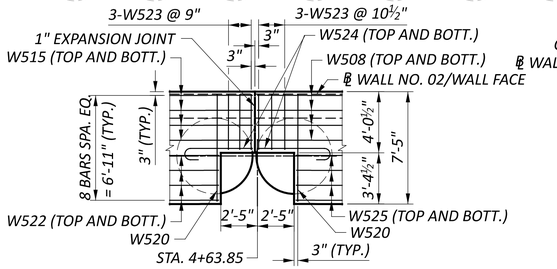

VIEW A-A

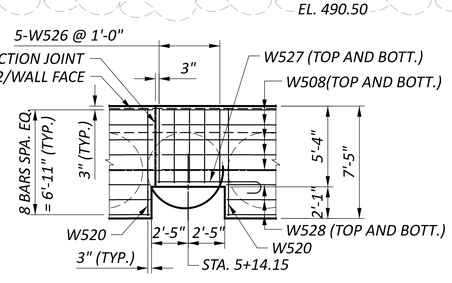

VIEW B-B

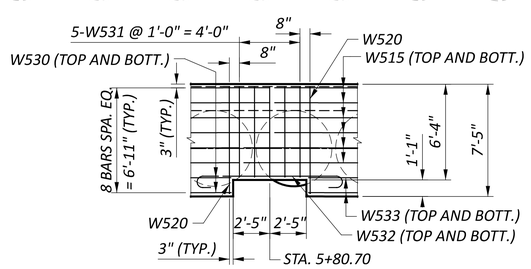

VIEW C-C

NOTES

1. SEE SHEET 4/29 AND 5/29 FOR GENERAL NOTES.
2. SEE SHEET 20/29 FOR ADDITIONAL TANGENT DRILLED SHAFT TYPICAL SECTION DETAILS.
3. RAILING AND VANDAL PROTECTION FENCE NOT SHOWN FOR CLARITY
4. SEE SITE PLAN FOR P.C.P.P. OUTLET ELEVATIONS.

LAP LENGTHS

1

#5 HORIZONTAL = 3'-1"
#5 VERTICAL = 2'-5"

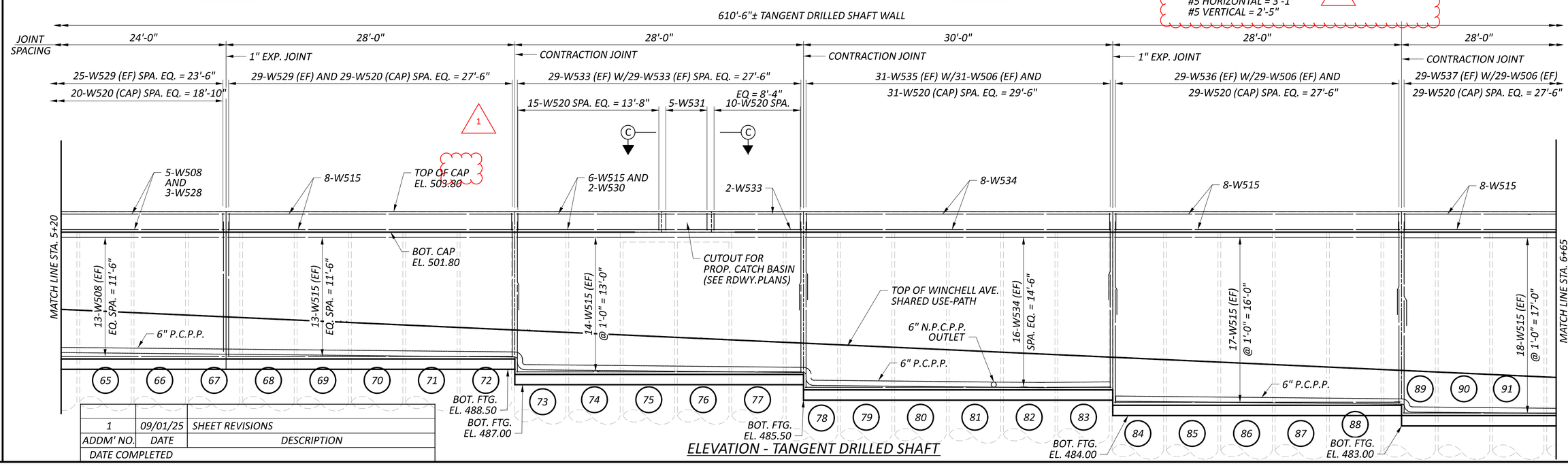

ELEVATION - TANGENT DRILLED SHAFT

ADDM' NO.	DATE	DESCRIPTION
1	09/01/25	SHEET REVISIONS
DATE COMPLETED		

ELEVATION DETAILS - TANGENT DRILLED SHAFT WALL RETAINING WALL NO. 02 ALONG WINCHELL AVE.

DESIGN AGENCY
Palmer ENGINEERING
8350 E. KEMPER ROAD
SUITE B
CINCINNATI, OH 45249
(513) 469-1600

DESIGNER	RJB
REVIEWER	BJF 04/10/25
PROJECT ID	122048
SUBSET	13
TOTAL	29
SHEET	P.176
TOTAL	P.421

HAM-IR75-1.05

MODEL: PGL-2 - Tangent_Drilled_Shaft-Profile 1 [Sheet] PAPERSIZE: 34x22 (in.) DATE: 8/27/2025 TIME: 11:33:05 AM PLTDRV: OHDOT_PDF.pltcfg PENTBL: OHDOT_Pen.tbl USER: swalker@palmernet.com WORKSPACE: OHDOTCEv02 WORKSET: 122048 PRODUCT: OpenRoadsDesigner 24.00.00.205
pw:\\ohiodot-pw.bentley.com:ohiodot-pw-02\Documents\01 Active Projects\District 08\Hamilton\122048\d02-Engineering_PalmerEngineering\Structures\Wall_002\Sheets\122048_002_WE001.dgn

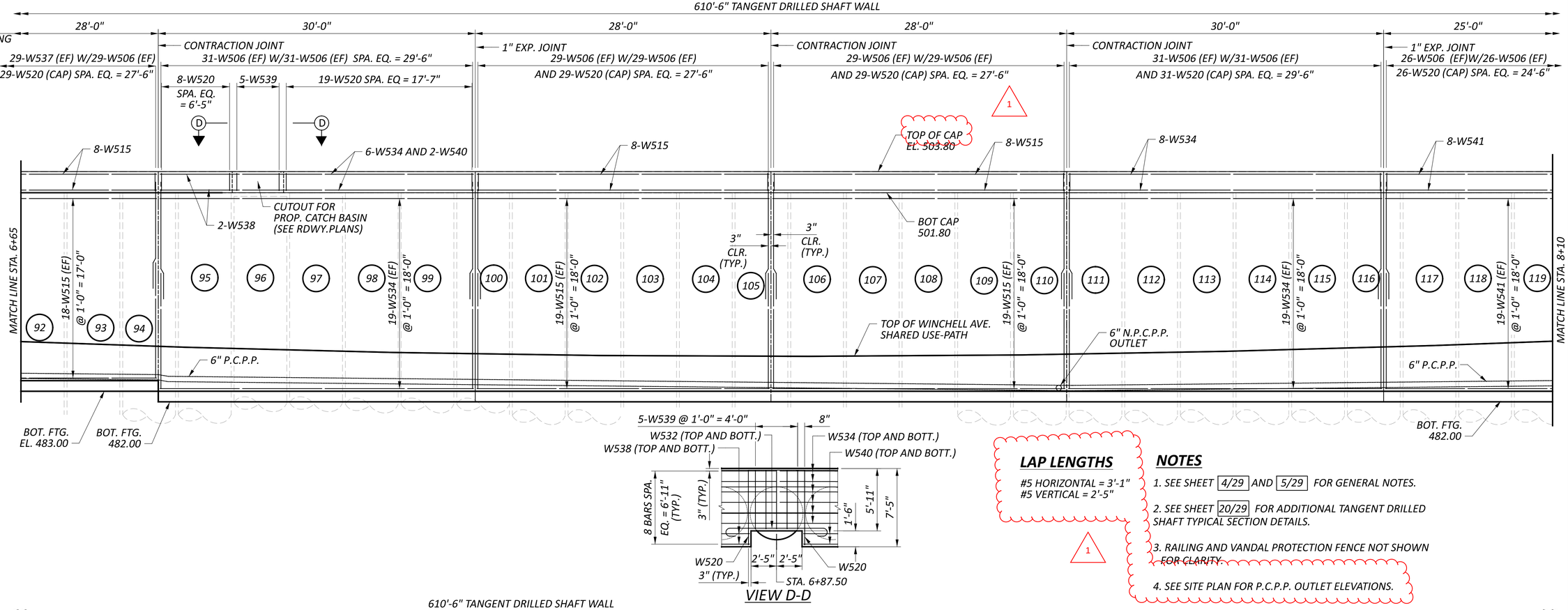

VIEW D-D

LAP LENGTHS

#5 HORIZONTAL = 3'-1"
#5 VERTICAL = 2'-5"

NOTES

1. SEE SHEET 4/29 AND 5/29 FOR GENERAL NOTES.
2. SEE SHEET 20/29 FOR ADDITIONAL TANGENT DRILLED SHAFT TYPICAL SECTION DETAILS.
3. RAILING AND VANDAL PROTECTION FENCE NOT SHOWN FOR CLARITY.
4. SEE SITE PLAN FOR P.C.P.P. OUTLET ELEVATIONS.

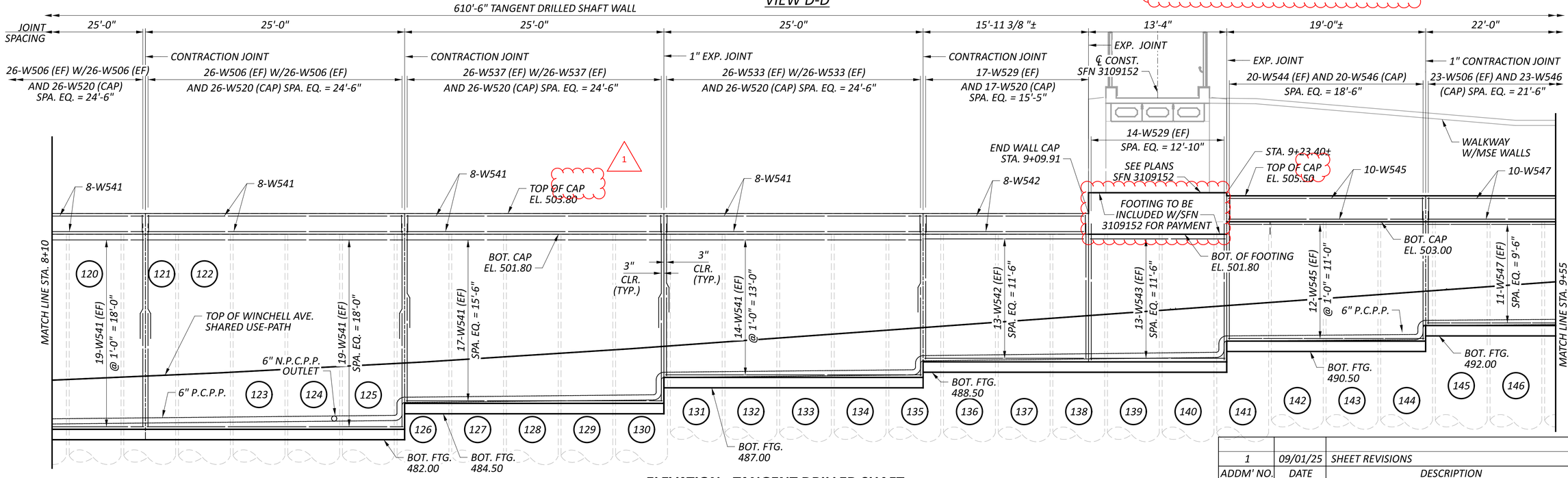

ELEVATION - TANGENT DRILLED SHAFT

ADDM' NO.	DATE	DESCRIPTION
1	09/01/25	SHEET REVISIONS
DATE COMPLETED		

ELEVATION DETAILS - TANGENT DRILLED SHAFT WALL
RETAINING WALL NO. 02 ALONG WINCHELL AVE.

DESIGN AGENCY
Palmer ENGINEERING
8350 E. KEMPER ROAD
SUITE B
CINCINNATI, OH 45249
(513) 469-1600

DESIGNER RJB
REVIEWER BJF 04/10/25
PROJECT ID 122048
SUBSET 14 TOTAL 29
SHEET P.177 TOTAL P.421

HAM-IR75-1.05

MODEL: PGL-2 - Tangent_Drilled_Shaft-Profile 3 [Sheet] PAPERSIZE: 34x22 (in.) DATE: 8/27/2025 TIME: 11:33:06 AM PLTDRV: OHDOT_PDF.pltcfg PENTBL: OHDOT_Pen.tbl USER: swalker@palmernet.com WORKSPACE: OHDOTCEv02 WORKSET: 122048 PRODUCT: OpenRoadsDesigner 24.00.00.205
pw:\\ohiodot-pw.bentley.com:ohiodot-pw-02\Documents\01 Active Projects\District 08\Hamilton\122048\02-Engineering_Palmer\Engineering\Structures\Wall_002\Sheets\122048_002_WE001.dgn

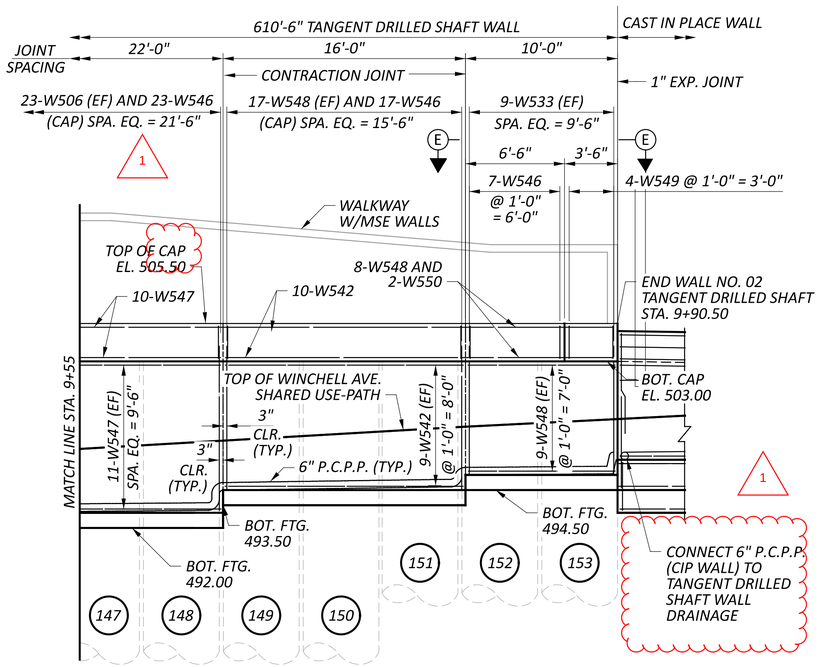

ELEVATION - WALL NO. 02 - TANGENT DRILLED SHAFT

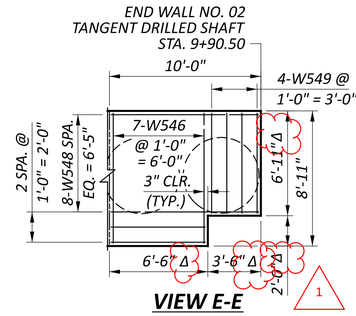

VIEW E-E

LEGEND

☆ REFER TO WALL ELEVATION VIEWS FOR BAR MARKS

Δ CLEARANCE FOR MSE WALL FOOTING (SEE PLANS - SFN31092)

LAP LENGTHS

#5 HORIZONTAL = 3'-1"
#5 VERTICAL = 2'-5"

NOTES

1. SEE SHEET 4/29 AND 5/29 FOR GENERAL NOTES.
2. SEE SHEET 16/29 FOR CAST-IN-PLACE WALL SECTION DETAILS.
3. SEE SHEET 17/29 FOR ADDITIONAL NOISE WALL DETAILS.
4. THE FOOTING CONCRETE OF THE CAST IN PLACE SECTION OF WALL NO. 02 IS PAID FOR UNDER ITEM 511 CLASS QC1 CONCRETE WITH QC/QA, FOOTING.

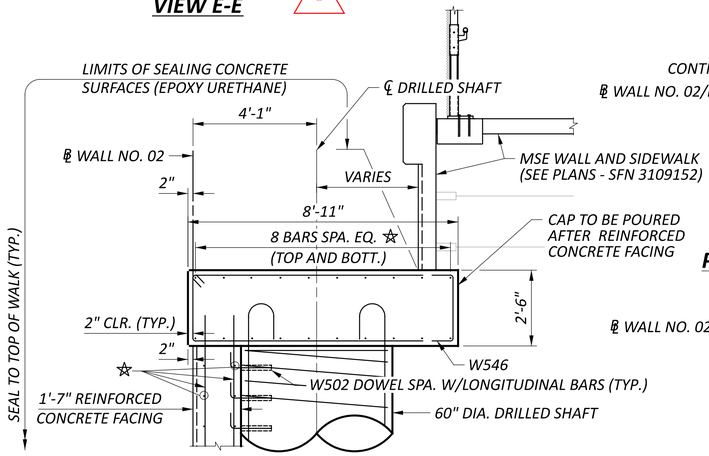

TYPICAL SECTION

STA. 9+23.40 TO STA. 9+90.50

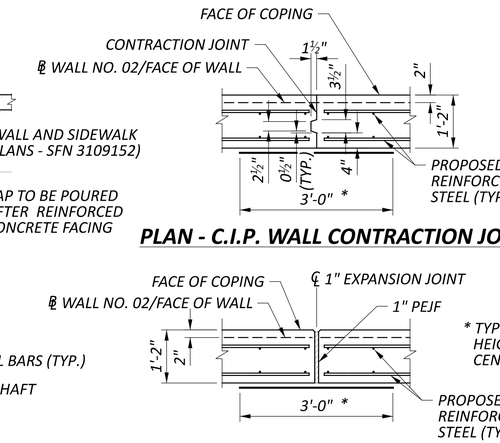

PLAN - C.I.P. WALL CONTRACTION JOINT

PLAN - C.I.P. WALL EXPANSION JOINT

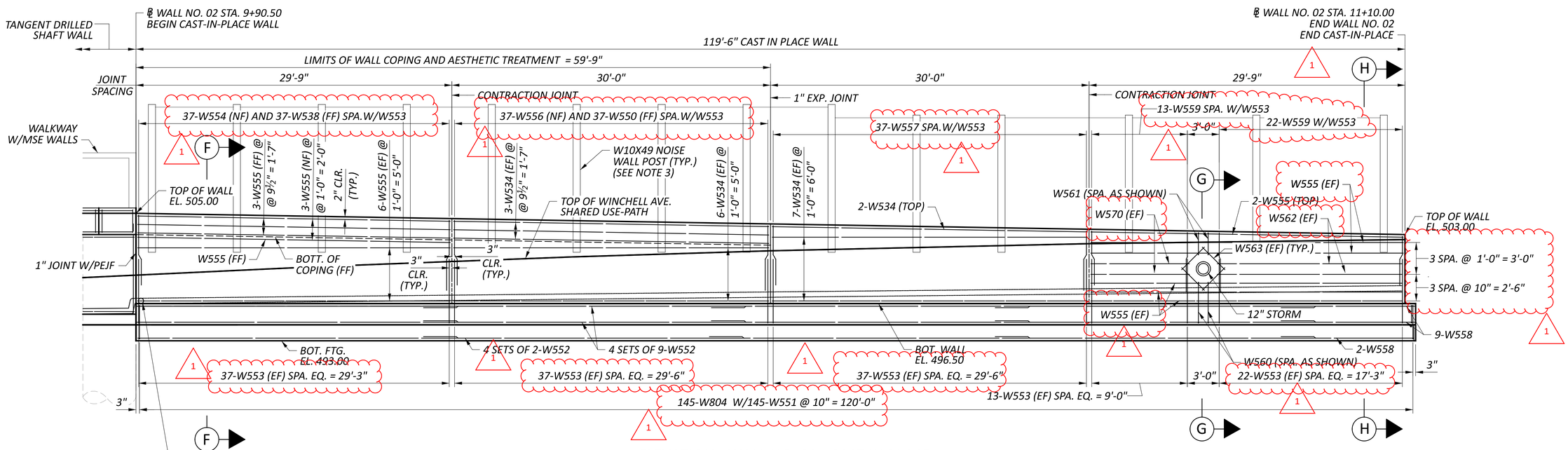

ELEVATION - WALL NO. 02 - CAST IN PLACE

ADDM' NO.	DATE	DESCRIPTION
1	09/01/25	SHEET REVISIONS
DATE COMPLETED		

ELEVATION DETAILS - TANGENT DRILLED SHAFT WALL AND C.I.P. WALL RETAINING WALL NO. 02 ALONG WINCHELL AVE.

DESIGN AGENCY
Palmer ENGINEERING
8350 E. KEMPER ROAD SUITE B
CINCINNATI, OH 45249
(513) 469-1600

DESIGNER RJB
REVIEWER BJF 04/10/25
PROJECT ID 122048
SUBSET 15 TOTAL 29
SHEET P.178 TOTAL P.421

HAM-IR75-1.05

MODEL: PGL-3 - CIP-Profile 1 [Sheet] PAPERSIZE: 34x22 (in.) DATE: 8/27/2025 TIME: 11:33:07 AM PLTDRV: OHDOT_PDF.pltcfg PENTBL: OHDOT_Pen.tbl USER: swalker@palmernet.com WORKSPACE: OHDOTCivil02 WORKSET: 122048 PRODUCT: OpenRoadsDesigner 24.00.00.205
pw:\\ohiodot-pw.bentley.com:ohiodot-pw-02\Documents\01 Active Projects\District 08\Hamilton\122048\02-Engineering_Palmer\Engineering\Structures\Wall_002\Sheets\122048_002_WE001.dgn

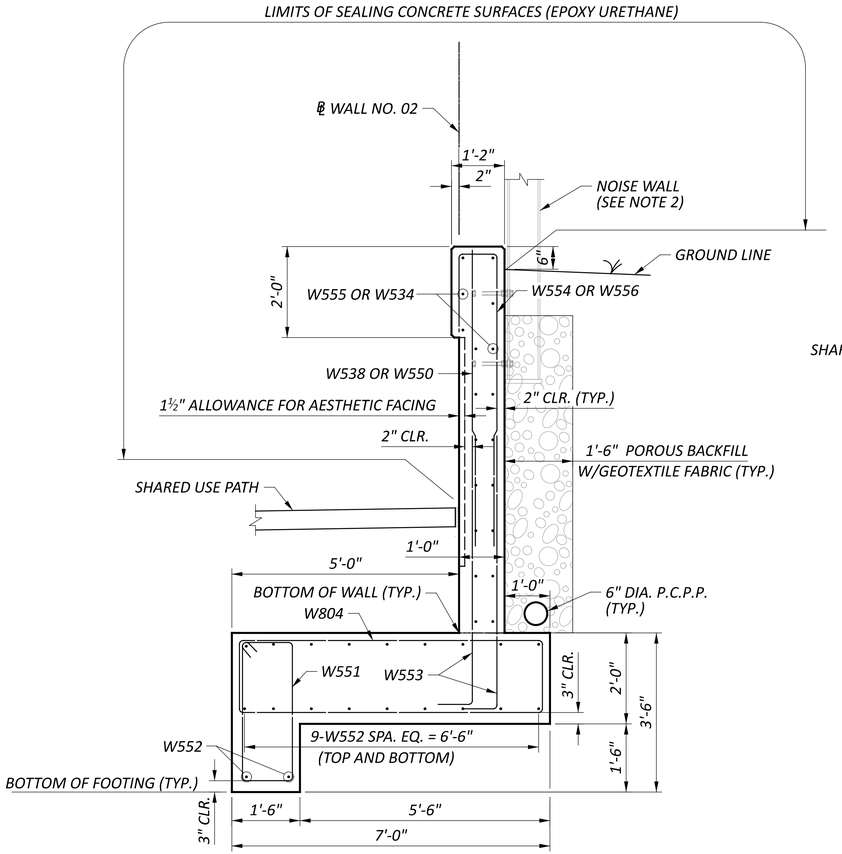

SECTION F-F

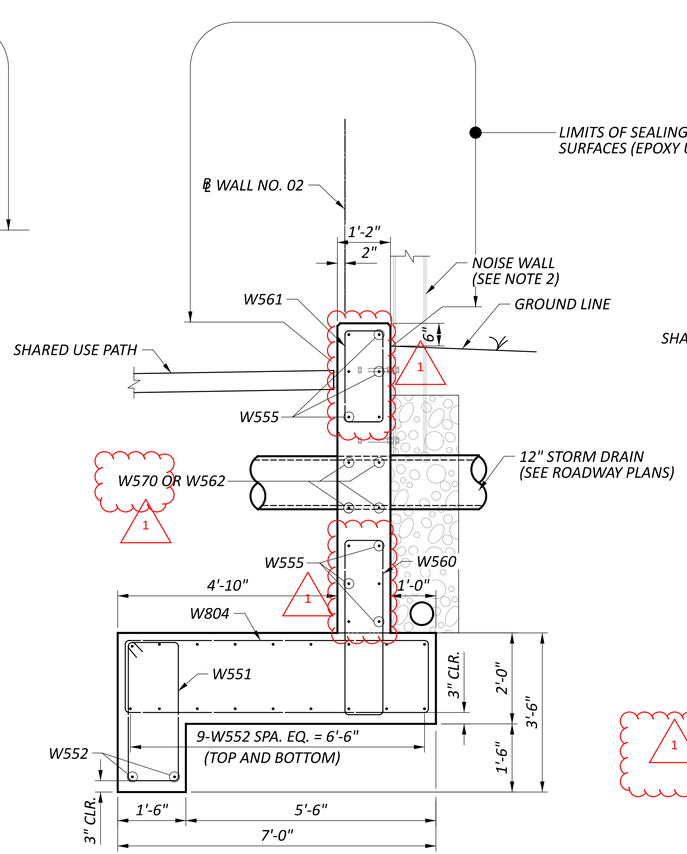

SECTION G-G

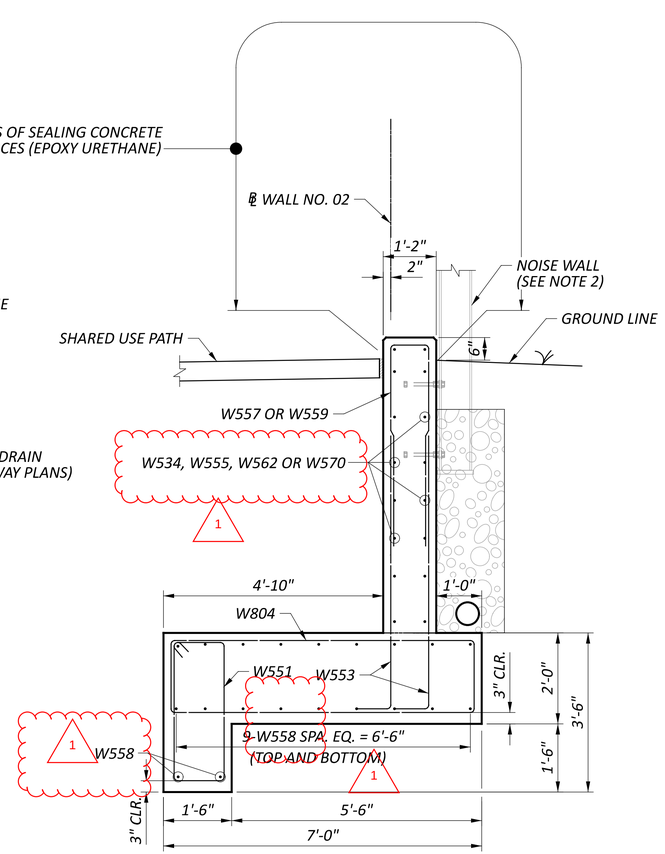

SECTION H-H

NOTES

1. SEE SHEET 15/29 FOR CAST-IN-PLACE WALL ELEVATION VIEWS.
2. SEE SHEET 17/29 FOR NOISE WALL DETAILS.

ADDM' NO.	DATE	DESCRIPTION
1	09/01/25	SHEET REVISIONS
DATE COMPLETED		

SECTION DETAILS - C.I.P. WALL
RETAINING WALL NO. 02 ALONG WINCHELLL AVE.

DESIGN AGENCY
Palmer ENGINEERING
8350 E. KEMPER ROAD
SUITE B
CINCINNATI, OH 45249
(513) 469-1600

DESIGNER	
RJB	
REVIEWER	
BJF	04/10/25
PROJECT ID	
122048	
SUBSET	TOTAL
16	29
SHEET	TOTAL
P.179	P.421

HAM-IR75-1.05

MODEL: PGL-4 - CIP-Profile 2 [Sheet] PAPERSIZE: 34x22 (in.) DATE: 8/27/2025 TIME: 11:33:08 AM PLTDRV: OHDOT_PDF.pltcfg PENTBL: OHDOT_Pen.tbl USER: swalker@palmernet.com WORKSPACE: OHDOTCivil02 WORKSET: 122048 PRODUCT: OpenRoadsDesigner 24.00.00.205
pw:\\ohiodot-pw.bentley.com:ohiodot-pw-02\Documents\01 Active Projects\District 08\Hamilton\122048\402-Engineering_PalmerEngineering\Structures\Wall_002\Sheets\122048_002_WE001.dgn

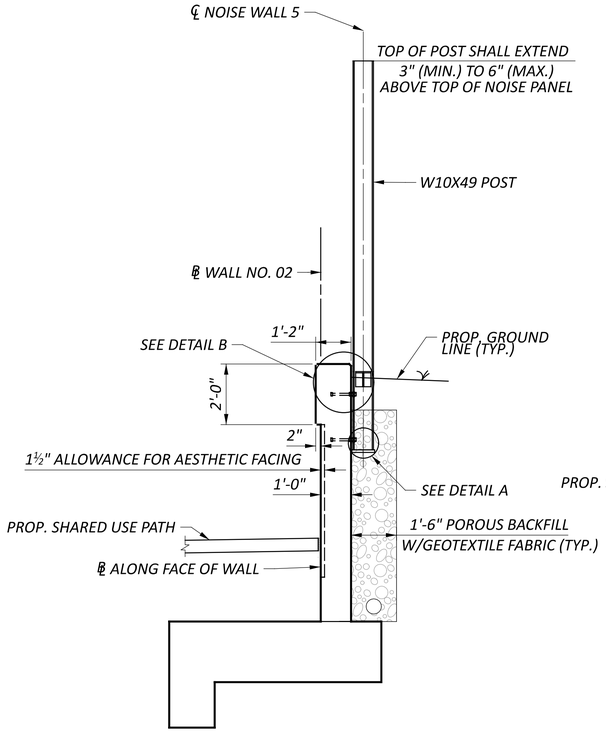

SECTION D-D

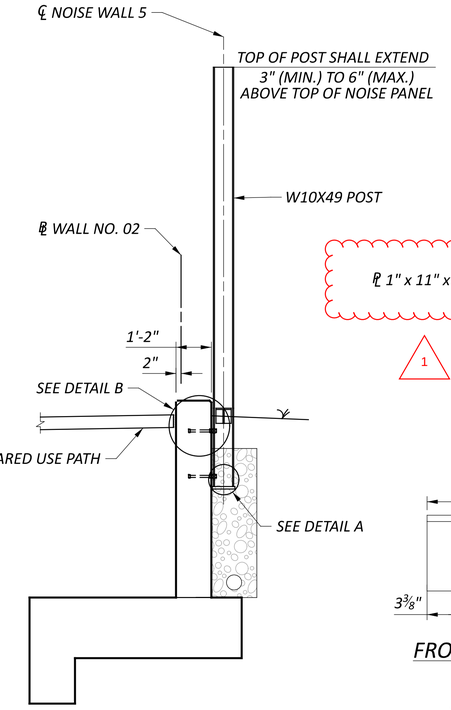

SECTION E-E

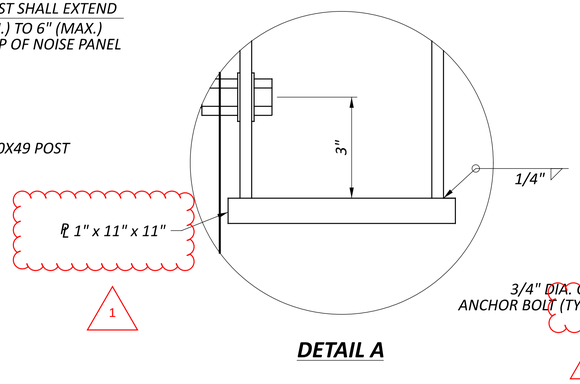

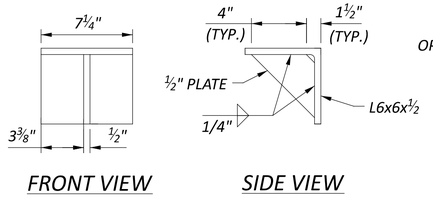

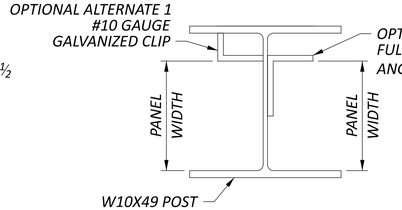

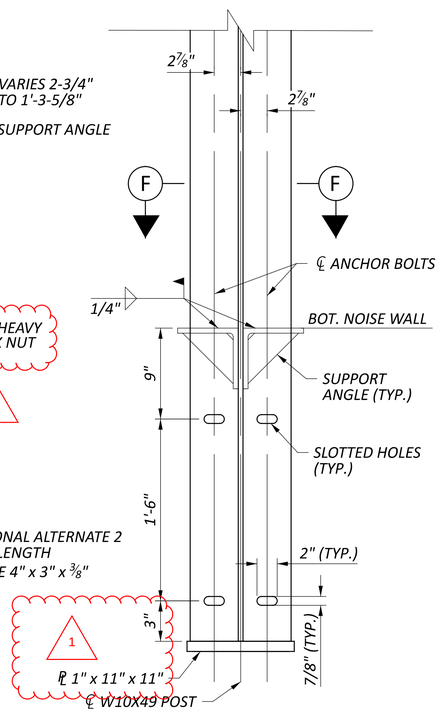

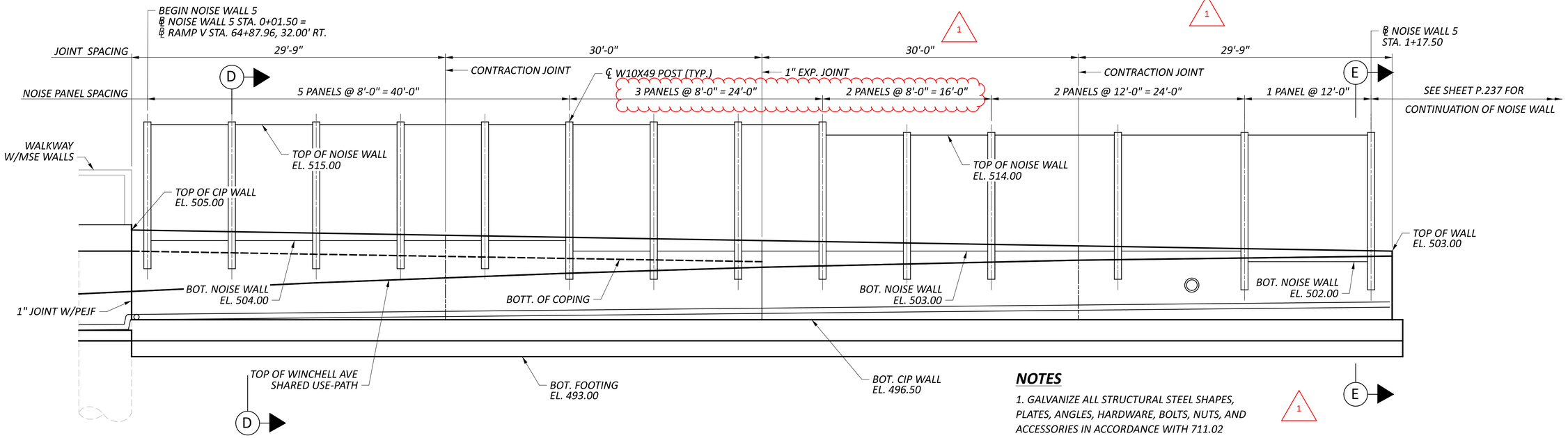

ELEVATION - WALL NO. 02 - NOISE WALL

(REINFORCING NOT SHOWN FOR CLARITY)

1	09/01/25	SHEET REVISIONS
ADDM' NO.	DATE	DESCRIPTION
DATE COMPLETED		

NOTES

1. GALVANIZE ALL STRUCTURAL STEEL SHAPES, PLATES, ANGLES, HARDWARE, BOLTS, NUTS, AND ACCESSORIES IN ACCORDANCE WITH 711.02

2. POSTS, ANGLES, AND PLATES SHALL BE ASTM A709 GRADE 50

2. CAST IN PLACE ANCHOR BOLTS SHALL BE ASTM A325 (FURNISHED ACCORDING TO 711.09)

4. SEE SHEET P.237 FOR ADDITIONAL NOISE WALL DETAILS.

5. INCLUDE ALL NOISE WALL MATERIALS IN THE CAST IN PLACE SECTION OF WALL NO. 02 WITH NOISE WALL 5, ITEM SPECIAL: NOISE BARRIER (REFLECTIVE) FOR PAYMENT.

C.I.P. WALL NOISE WALL DETAILS - NOISE WALL 5
RETAINING WALL NO. 02 ALONG WINCHELL AVE.

DESIGN AGENCY
Palmer ENGINEERING
8350 E. KEMPER ROAD
SUITE B
CINCINNATI, OH 45249
(513) 469-1600

DESIGNER RJB
REVIEWER BJF 04/10/25
PROJECT ID 122048
SUBSET 17 TOTAL 29
SHEET P.180 TOTAL P.421

HAM-IR75-1.05

MODEL: Noise Wall [Sheet] PAPERSIZE: 34x22 (in.) DATE: 8/27/2025 TIME: 11:33:16 AM PLTDRV: OHDOT_PDF.pltcfg PENTBL: OHDOT_Pen.tbl USER: swalker@palmernet.com WORKSPACE: OHDOTCEv02 WORKSET: 122048 PRODUCT: OpenRoadsDesigner 24.00.00.205
pw:\\ohiodot-pw.bentley.com:ohiodot-pw-02\Documents\01 Active Projects\District 08\Hamilton\122048\02-Engineering_PalmerEngineering\Structures\Wall_002\Sheets\122048_002_WE002.dgn

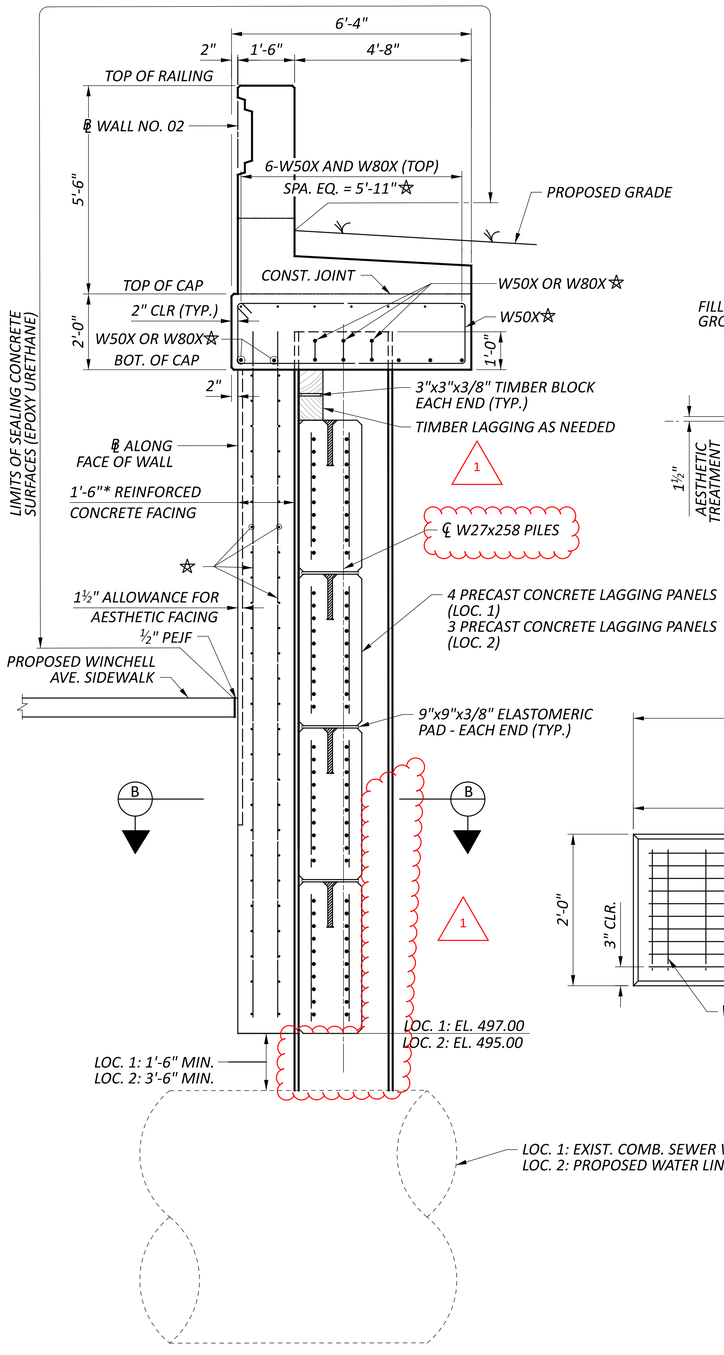

WALL SECTION

LOCATION 1: STA. 1+04.08 TO STA. 1+22.37
LOCATION 2: STA. 2+23.83 TO STA. 2+37.86
VPF NOT SHOWN FOR CLARITY

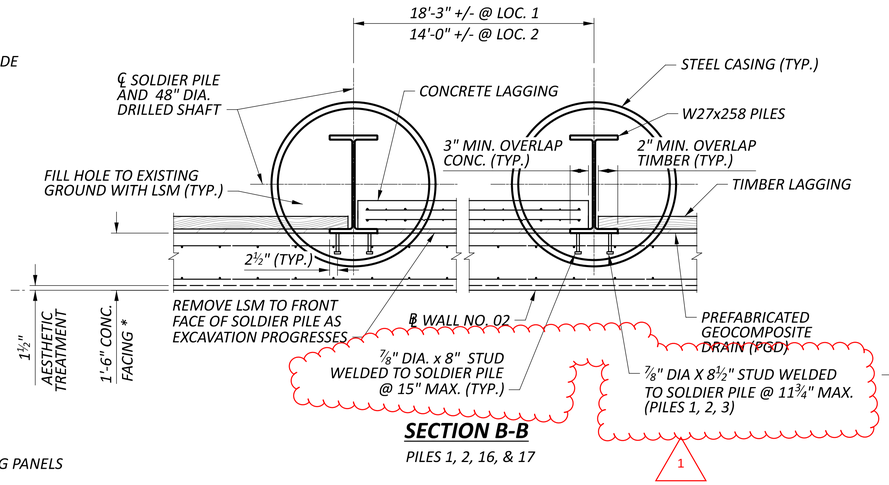

SECTION B-B

PILES 1, 2, 16, & 17

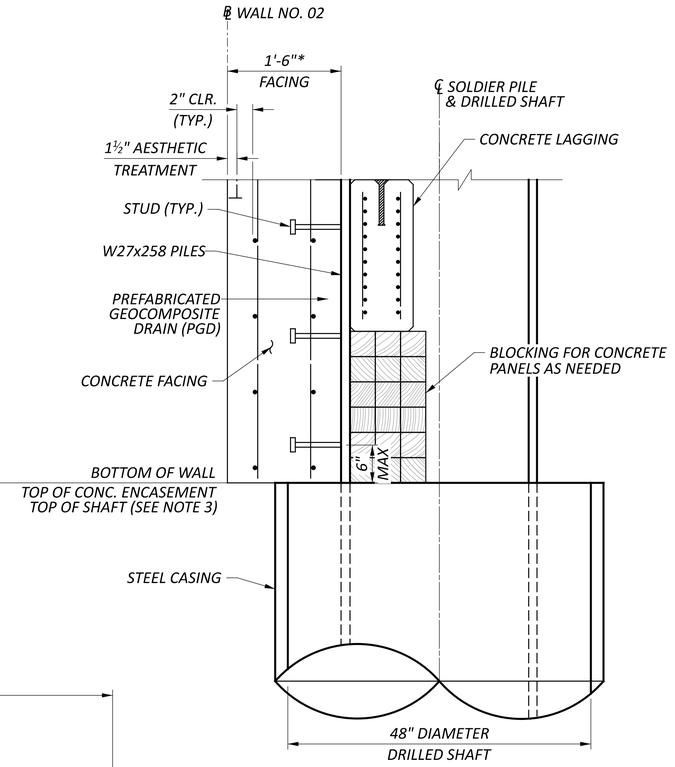

BLOCKING DETAIL AT TOP OF SHAFT

PILES 1 & 2

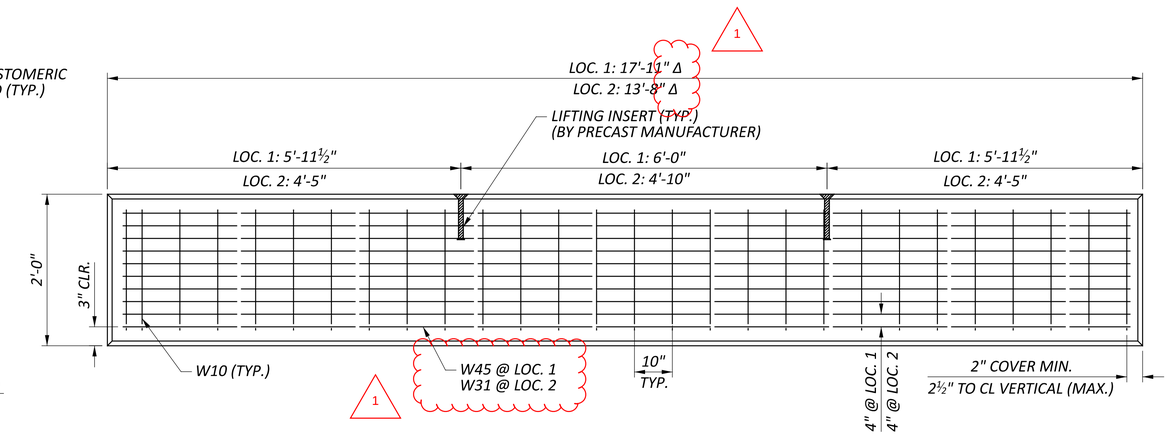

PRECAST CONCRETE LAGGING ELEVATION

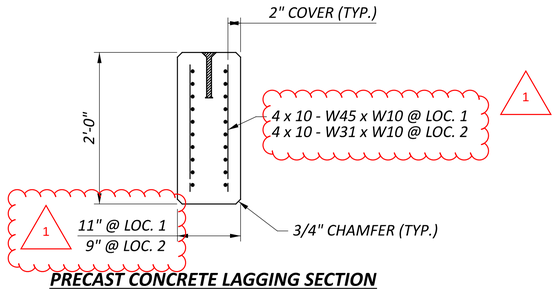

PRECAST CONCRETE LAGGING SECTION

LEGEND

☆ REFER TO WALL ELEVATION VIEWS FOR BAR MARKS

Δ BASED ON ACCURATE PLACE OF PILES. ADJUSTMENTS SHOULD BE MADE TO THE LAGGING IF PILE SPACING PROHIBITS 3" OF BEARING ON FLANGE

* THE OUTSIDE CONCRETE WALL FACING SHALL BE CONSTRUCTED PLUMB WITH ℄ WALL NO. 02

NOTES

1. SEE SHEET 4/29 AND 5/29 FOR GENERAL NOTES.
2. SEE SHEET 12/29 FOR WALL NO. 02 ELEVATION VIEWS AND ADDITIONAL WALL NO. 02 REINFORCING STEEL DETAILS.
3. SEE SHEET 7/29 FOR FOUNDATION PLAN.
4. PRECAST CONCRETE LAGGING SHALL HAVE COMPRESSIVE STRENGTH OF 4.0 KSI AND REINFORCING SHALL BE WELDED WIRE FABRIC GRADE 65, FY 65 KSI EPOXY COATED CONFORMING TO 709.14.
5. SEE SHEET 21/29 FOR MOMENT SLAB REINFORCING
6. SEE SHEETS 23-26/29 FOR RAILING REINFORCEMENT.

ADDM' NO.	DATE	DESCRIPTION
1	09/01/25	SHEET REVISIONS
DATE COMPLETED		

SOLDIER PILE WALL DETAILS 1 OF 2
RETAINING WALL NO. 02 ALONG WINCHELL AVE.

DESIGN AGENCY
Palmer ENGINEERING
8350 E. KEMPER ROAD
SUITE B
CINCINNATI, OH 45249
(513) 469-1600

DESIGNER	RJB
REVIEWER	BJF 04/10/25
PROJECT ID	122048
SUBSET	18
TOTAL	29
SHEET	P.182
TOTAL	P.421

HAM-IR75-1.05

MODEL: Sheet 2 PAPERSIZE: 34x22 (in.) DATE: 8/27/2025 TIME: 11:33:22 AM PLTDRV: OHDOT_PDF.pltcfg PENTBL: OHDOT_Pen.tbl USER: swalker@palmernet.com WORKSPACE: OHDOTCivil02 WORKSET: 122048 PRODUCT: OpenRoadsDesigner 24.00.00.205
pw:\\ohiodot-pw.bentley.com:ohiodot-pw-02\Documents\01 Active Projects\District 08\Hamilton\122048\402 Engineering_PalmerEngineering\Structures\Wall_002\Sheets\122048_002_WD002.dgn

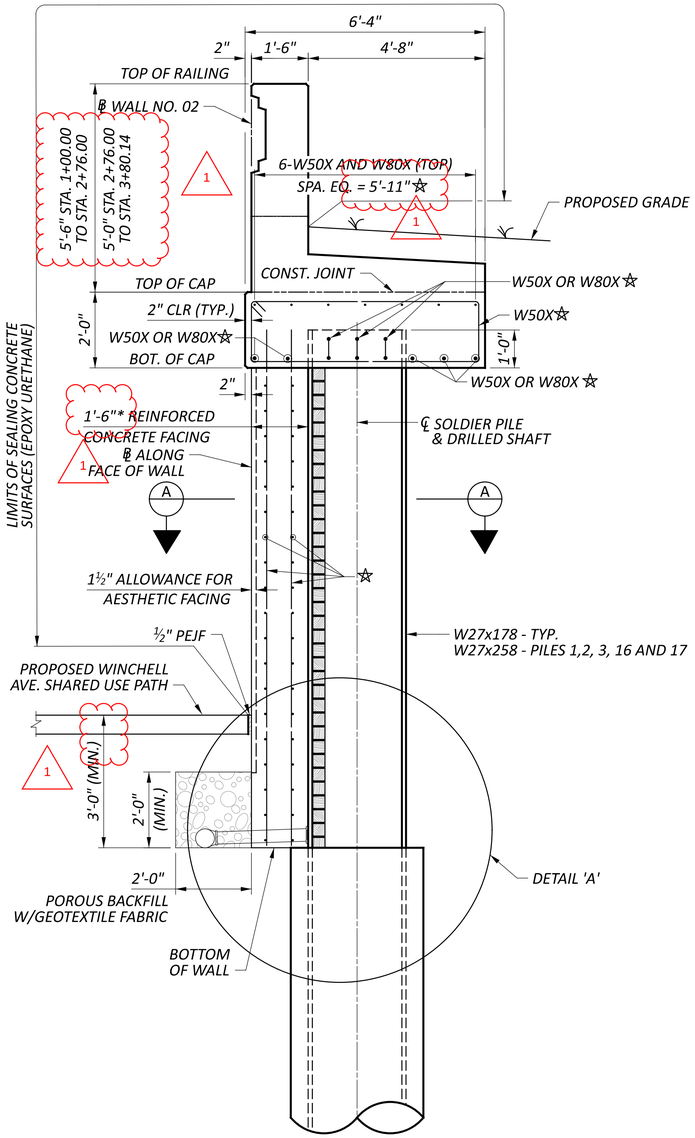

TYPICAL WALL SECTION

STA. 1+00.00 TO STA. 1+04.08
STA. 1+22.37 TO STA. 2+23.83
STA. 2+37.86 TO STA. 3+80.00
V.P.F. NOT SHOWN FOR CLARITY

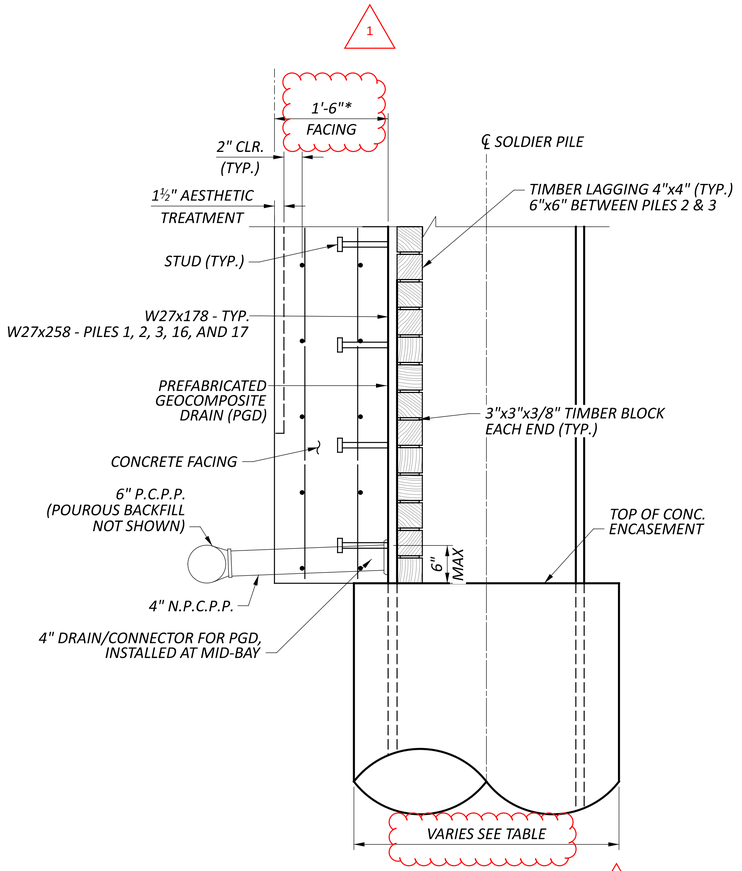

DETAIL 'A'

TYPCIAL SECTION

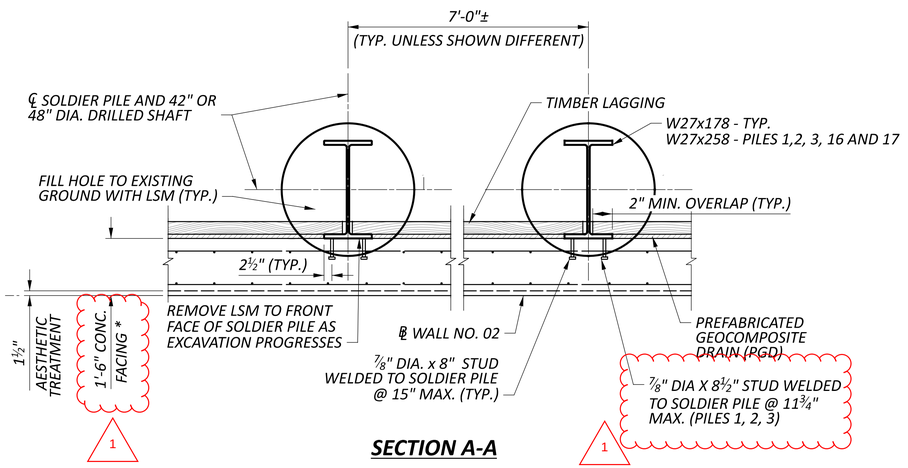

SECTION A-A

LEGEND

☆ REFER TO WALL ELEVATION VIEWS FOR BAR MARKS

1 * THE OUTSIDE CONCRETE WALL FACING SHALL BE CONSTRUCTED PLUMB WITH ℄ WALL NO. 02

NOTES

1. SEE SHEET 4/29 AND 5/29 FOR GENERAL NOTES.
2. SEE SHEET 12/29 FOR WALL NO. 02 ELEVATION VIEWS AND ADDITIONAL WALL NO. 02 REINFORCING STEEL DETAILS.
3. SEE SHEET 7/29 FOR FOUNDATION PLAN.
4. TIMBER LAGGING SHALL BE SOUTHERN PINE #2 OR BETTER.
5. SEE SHEET 21/29 FOR MOMENT SLAB DETAILS.
6. SEE SHEET 23-26/29 FOR RAILING DETAILS.

ADDM' NO.	DATE	DESCRIPTION
1	09/01/25	SHEET REVISIONS
DATE COMPLETED		

SOLDIER PILE WALL DETAILS 2 OF 2
RETAINING WALL NO. 02 ALONG WINCHELL AVE.

DESIGN AGENCY
Palmer ENGINEERING
8350 E. KEMPER ROAD
SUITE B
CINCINNATI, OH 45249
(513) 469-1600

DESIGNER RJB
REVIEWER BJF 04/10/25
PROJECT ID 122048
SUBSET 19 TOTAL 29
SHEET P.181 TOTAL P.421

HAM-IR75-1.05

MODEL: Sheet PAPERSIZE: 34x22 (in.) DATE: 8/27/2025 TIME: 11:33:31 AM PLTDRV: OHDOT_PDF.pltcfg PENTBL: OHDOT_Pen.tbl USER: swalker@palmernet.com WORKSPACE: OHDOTCEv02 WORKSET: 122048 PRODUCT: OpenRoadsDesigner 24.00.00.205
pw:\\ohiodot-pw.bentley.com:ohiodot-pw-02\Documents\01 Active Projects\District 08\Hamilton\122048\402-Engineering_PalmerEngineering\Structures\Wall_002\Sheets\122048_WALL002_WD001.dgn

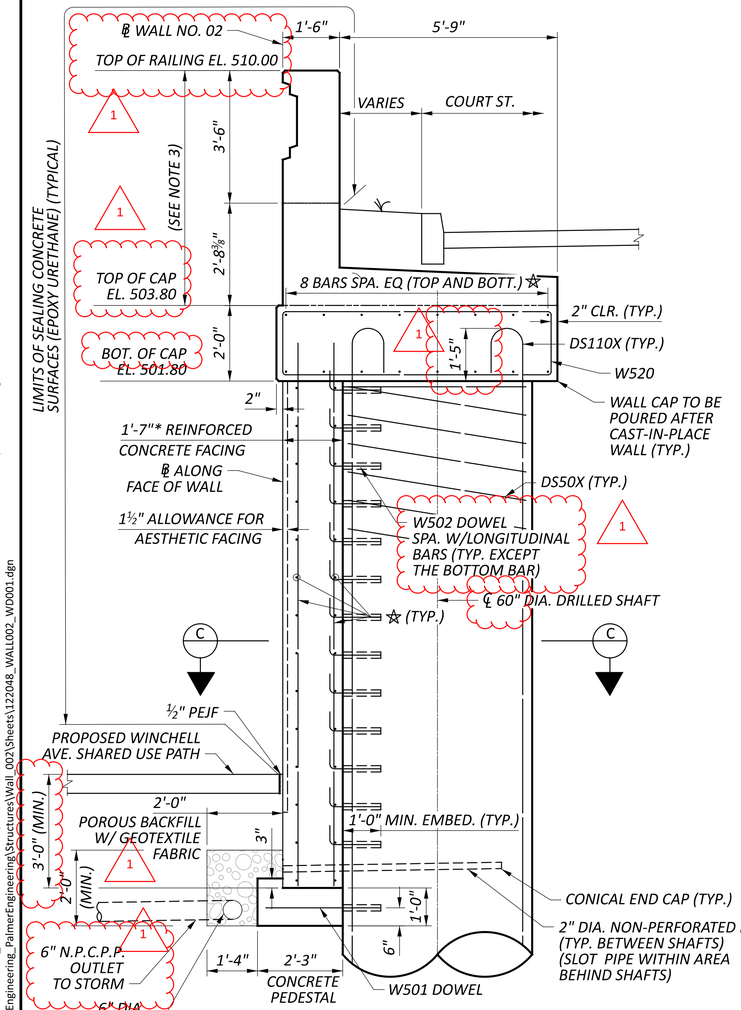

TYPICAL WALL SECTION

STA. 3+80.00 TO STA. 9+10.00
V.P.F. NOT SHOWN FOR CLARITY

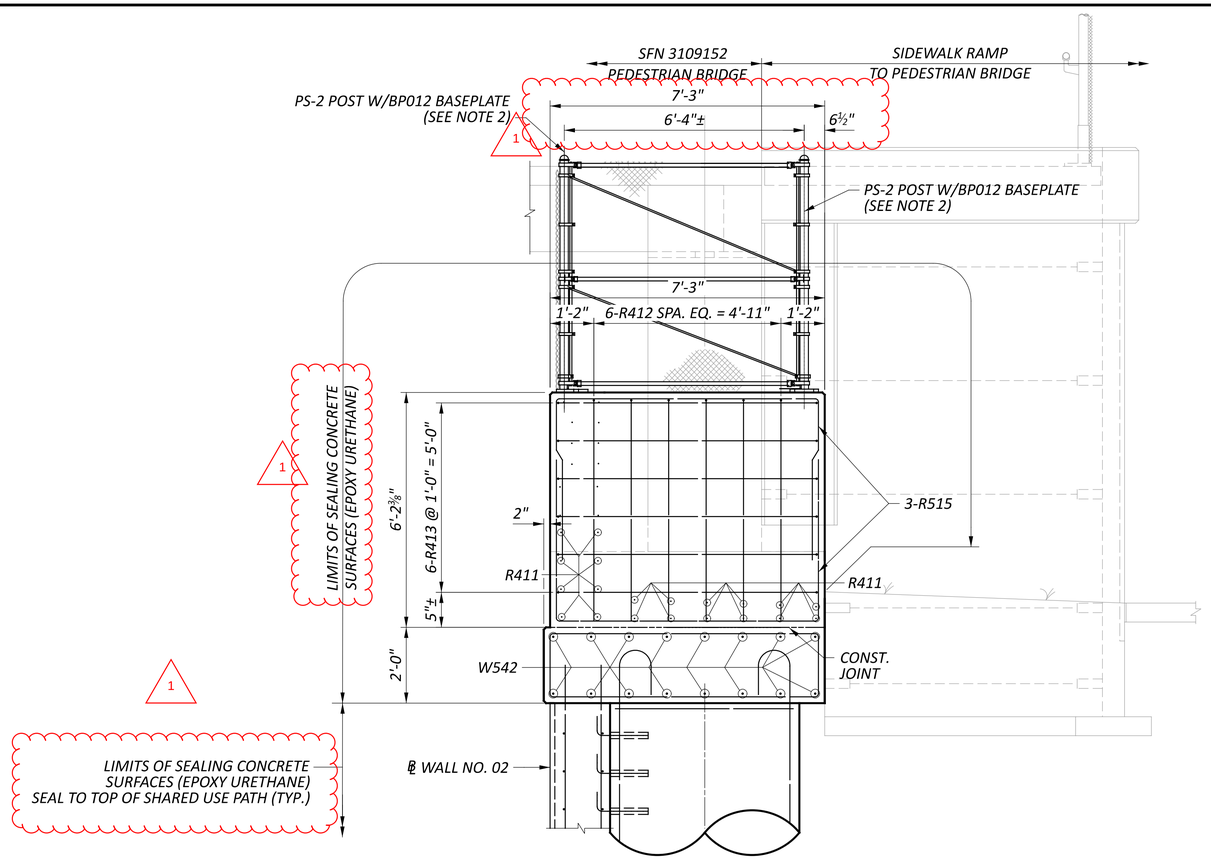

WALL SECTION

STA. 9+08.50 TO STA. 9+10.00

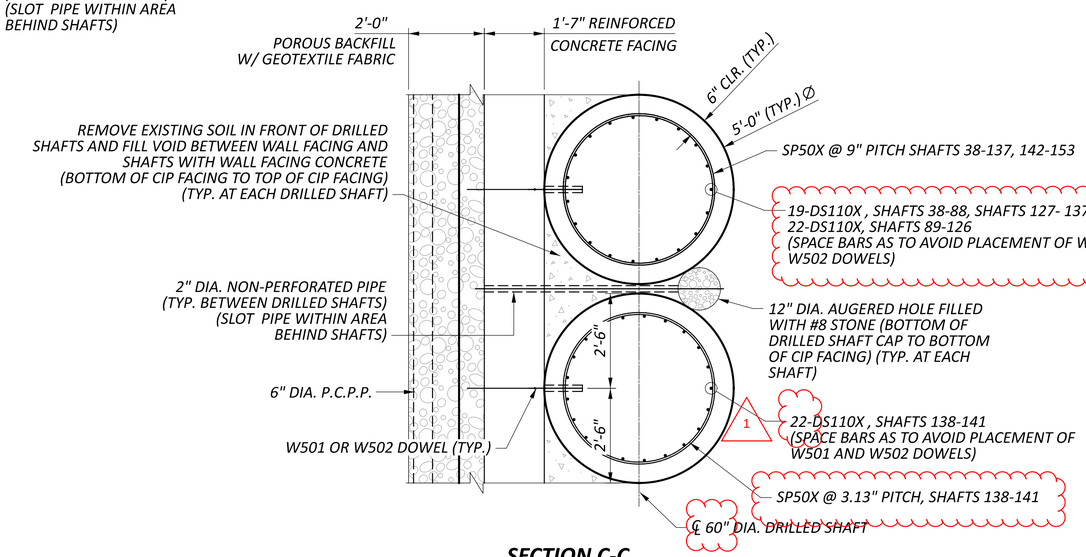

SECTION C-C

(SEE NOTE 6)

LAP LENGTHS

#4 VERTICAL = 1'-11"

LEGEND

☆ REFER TO WALL ELEVATION VIEWS FOR BAR MARKS

* THE OUTSIDE CONCRETE WALL FACING SHALL BE CONSTRUCTED PLUMB WITH ℄ WALL NO. 02

NOTES

1. SEE SHEET 4/29 AND 5/29 FOR GENERAL NOTES.
2. SEE SHEETS 13/29 - 15/29 FOR WALL NO. 02 ELEVATION VIEWS AND ADDITIONAL WALL NO. 02 REINFORCING STEEL DETAILS.
3. SEE SHEETS 21/29 - 27/29 FOR MOMENT SLAB AND RAILING DETAILS.
4. DOWELS TO BE INSTALLED WITH 1'-0" MINIMUM EMBEDMENT PER ITEM 510 - DOWEL HOLE WITH NONSHRINK, NONMETALLIC GROUT.
5. INCLUDE THE CONCRETE PEDESTAL BELOW THE CONCRETE FACING WITH ITEM 511 - CLASS QC1 CONCRETE, RETAINING/ WINGWALL NOT INCLUDING FOOTING, AS PER PLAN.
6. SEE SHEET 11/29 FOR ADDITIONAL TANGENT DRILLED SHAFT REINFORCEMENT STEEL DETAILS.

ADDM' NO.	DATE	DESCRIPTION
1	09/01/25	SHEET REVISIONS
DATE COMPLETED		

TANGENT DRILLED SHAFT WALL DETAILS
RETAINING WALL NO. 02 ALONG WINCHELL AVE.

DESIGN AGENCY
Palmer ENGINEERING
8350 E. KEMPER ROAD
SUITE B
CINCINNATI, OH 45249
(513) 469-1600

DESIGNER RJB
REVIEWER BJF 04/10/25
PROJECT ID 122048
SUBSET 20 TOTAL 29
SHEET P.183 TOTAL P.421

HAM-IR75-1.05

MODEL: Sheet 2 PAPERSIZE: 34x22 (in.) DATE: 8/27/2025 TIME: 11:33:32 AM PLTDRV: OHDOT_PDF.pltcfg PENTBL: OHDOT_Pen.tbl USER: swalker@palmernet.com WORKSPACE: OHDOTCivil02 WORKSET: 122048 PRODUCT: OpenRoadsDesigner 24.00.00.205
pw:\\ohiodot-pw.bentley.com:ohiodot-pw-02\Documents\01 Active Projects\District 08\Hamilton\122048\402-Engineering_PalmerEngineering\Structures\Wall_002\Sheets\122048_WALL002_WD001.dgn

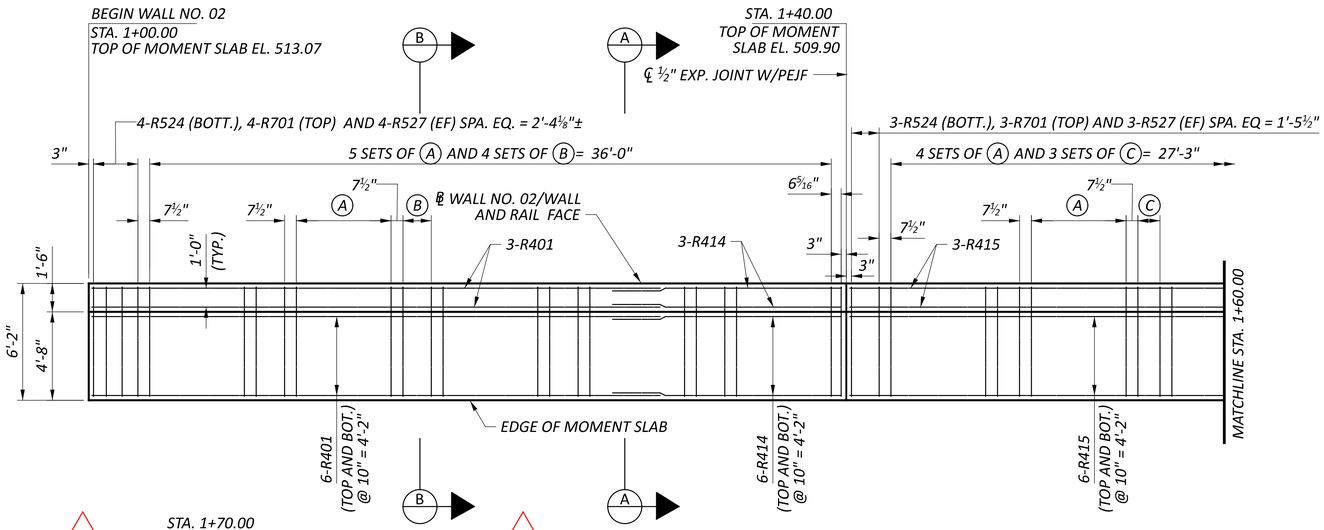

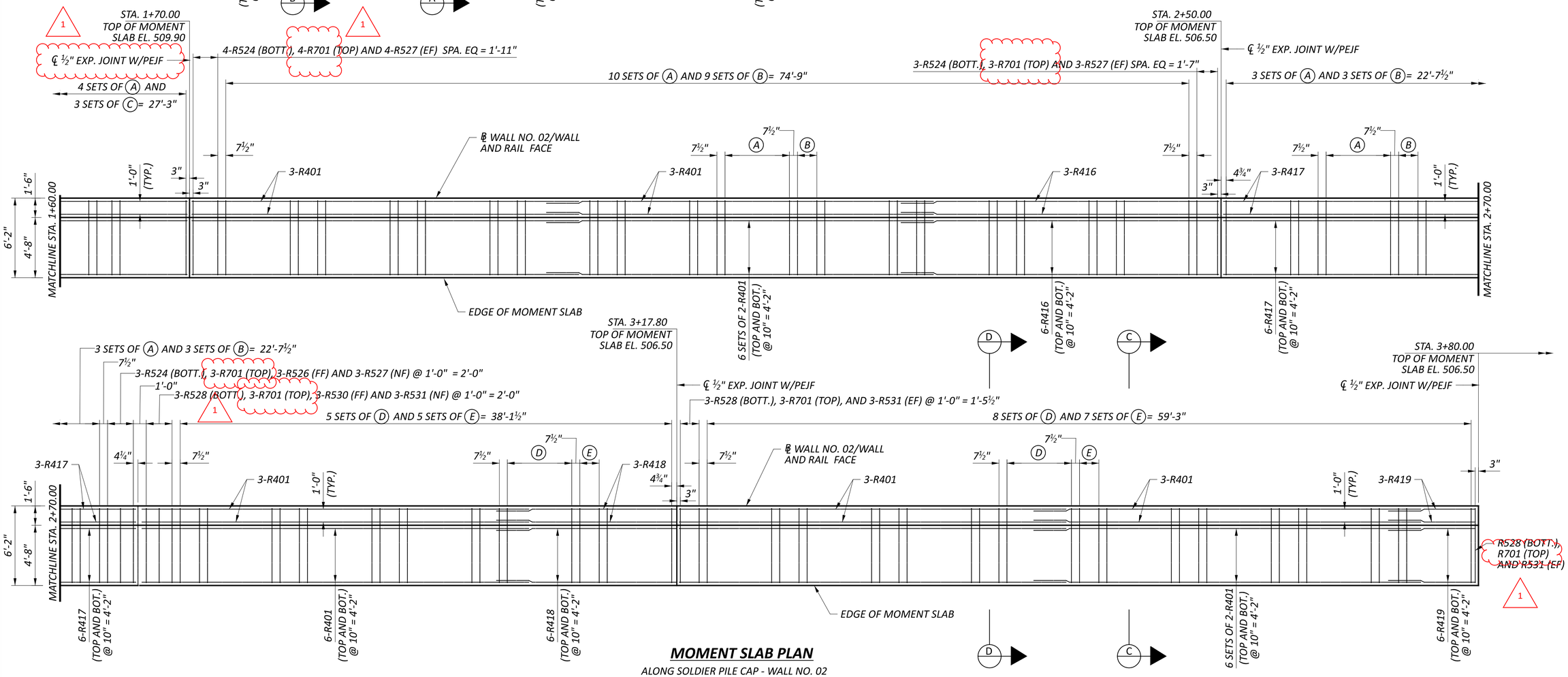

MOMENT SLAB PLAN

ALONG SOLDIER PILE CAP - WALL NO. 02

LEGEND

(A) 6-R524 (BOTT.), 6-R701 (TOP), 6-R526 (FF) AND 6-R527 (NF) @ 1'-0" = 5'-0"
(B) 3-R524 (BOTT.), 3-R701 (TOP) AND 3-R527 (EF) @ 9" = 1'-6"
(C) 3-R524 (BOTT.), 3-R701 (TOP) AND 3-R527 (EF) @ 7" = 1'-2"
(D) 6-R528 (BOTT.), 6-R701 (TOP), 6-R530 (FF) AND 6-R531 (NF) @ 1'-0" = 5'-0"
(E) 3-R528 (BOTT.), 3-R701 (TOP) AND 3-R531 (EF) @ 9" = 1'-6"

1

NOTES

1. SEE SHEETS 23/29 AND 24/29 FOR RAILING ELEVATION VIEWS.
2. SEE SHEET 26/29 FOR SECTION VIEWS.

1

LAP LENGTHS

#4 HORIZONTAL = 2'-6"

1	09/01/25	SHEET REVISIONS
ADDM' NO.	DATE	DESCRIPTION
DATE COMPLETED		

MOMENT SLAB DETAILS 1 OF 2
RETAINING WALL NO. 02 ALONG WINCHELL AVE.

DESIGN AGENCY
Palmer ENGINEERING
8350 E. KEMPER ROAD
SUITE B
CINCINNATI, OH 45249
(513) 469-1600

DESIGNER RJB
REVIEWER BJF 04/10/25
PROJECT ID 122048
SUBSET 21 TOTAL 29
SHEET P.184 TOTAL P.421

HAM-IR75-1.05

MODEL: Sheet 3A PAPERSIZE: 34x22 (in.) DATE: 8/27/2025 TIME: 11:33:33 AM PLTDRV: OHDOT_PDF.pltcfg PENTBL: OHDOT_Pen.tbl USER: swalker@palmernet.com WORKSPACE: pw:\\ohiodot-pw.bentley.com:ohiodot-pw-02\Documents\01 Active Projects\District 08\Hamilton\122048\d02-Engineering_Palmer\Engineering\Structures\Wall_002\Sheets\122048_WALL002_WD001.dgn WORKSPACE: OHDOTCEv02 WORKSET: 122048 PRODUCT: OpenRoadsDesigner 24.00.00.205

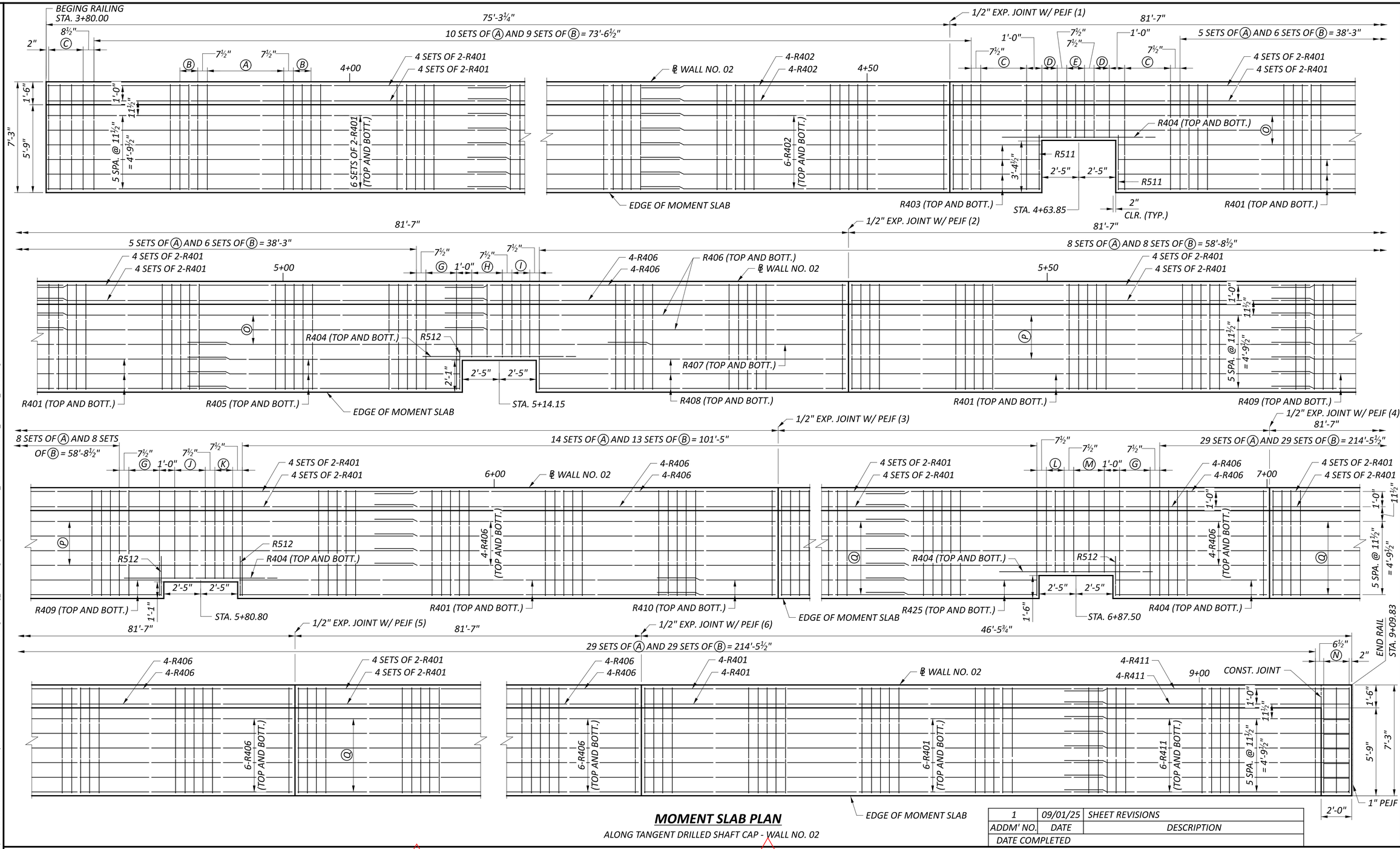

MOMENT SLAB PLAN

ALONG TANGENT DRILLED SHAFT CAP - WALL NO. 02

ADDM' NO.	DATE	DESCRIPTION
1	09/01/25	SHEET REVISIONS
DATE COMPLETED		

LEGEND

- Ⓐ 6-R501 (BOTT.), 6-R702 (TOP), 6-R513 (NF) AND 6-R514 (FF) @ 1'-0" = 5'-0"
- Ⓑ 3-R501 (BOTT.), 3-R702 (TOP) AND 3-R513 (EF) @ 7" = 1'-2"
- Ⓒ 4-R501 (BOTT.), 4-R702 (TOP), 4-R513 (NF) AND 4-R514 (FF) @ 1'-0" = 3'-0"
- Ⓓ 2-R503 (BOTT.), 2-R703 (TOP), 2-R513 (NF) AND 2-R514 (FF) @ 1'-0" = 2'-0"
- Ⓔ 3-R503 (BOTT.), 3-R703 (TOP) AND 3-R513 (EF) @ 7" = 1'-2"
- Ⓕ NOT USED
- Ⓖ 3-R501 (BOTT.), 3-R702 (TOP), 3-R513 (NF) AND 3-R514 (FF) @ 1'-0" = 2'-0" (1)
- Ⓗ 3-R505 (BOTT.), 3-R704 (TOP), 3-R513 (NF) AND 3-R514 (FF) @ 1'-0" = 2'-0"
- Ⓘ 3-R505 (BOTT.), 3-R704 (TOP) AND 3-R513 (EF) @ 7" = 1'-2"
- Ⓙ 3-R507 (BOTT.), 3-R705 (TOP), 3-R513 (NF) AND 3-R514 (FF) @ 1'-0" = 2'-0"
- Ⓚ 3-R507 (BOTT.) AND 3-R705 (TOP) 3-R513 (EF) @ 7" = 1'-2"
- Ⓛ 3-R509 (BOTT.) AND 3-R706 (TOP) 3-R513 (EF) @ 7" = 1'-2"
- Ⓜ 3-R509 (BOTT.), 3-R706 (TOP), 3-R513 (NF) AND 3-R514 (FF) @ 1'-0" = 2'-0" (1)
- Ⓝ 2 SETS OF 3-R515 (TOP AND BOTT.) (SEE NOTE 2 FOR ADDITIONAL BAR MARKS)
- Ⓞ 3 SETS OF 2-R401 (TOP AND BOTT.)
- Ⓟ 4-SETS OF 2-R401 (TOP AND BOTT.)
- Ⓠ 6-SETS OF 2-R401 (TOP AND BOTT.)

NOTES

1. SEE SHEET 25/29 FOR RAILING DETAILS.
2. SEE SHEETS 20/29 AND 27/29 FOR SECTION VIEWS.

LAP LENGTHS

#4 HORIZONTAL = 2'-6"

MOMENT SLAB DETAILS 2 OF 2

RETAINING WALL NO. 02 ALONG WINCHELL AVE.

DESIGN AGENCY
Palmer ENGINEERING
8350 E. KEMPER ROAD
SUITE B
CINCINNATI, OH 45249
(513) 469-1600

DESIGNER	RJB
REVIEWER	BJF 04/10/25
PROJECT ID	122048
SUBSET	22
TOTAL	29
SHEET	P.185
TOTAL	P.421

HAM-IR75-1.05

MODEL: Sheet 3B PAPERSIZE: 34x22 (in.) DATE: 8/27/2025 TIME: 11:33:34 AM PLTDRV: OHDOT_PDF.pltcfg PENTBL: OHDOT_Pen.tbl USER: swalker@palmernet.com WORKSPACE: OHDOTCEv02 WORKSET: 122048 PRODUCT: OpenRoadsDesigner 24.00.00.205
pw:\ohiodot-pw.bentley.com:ohiodot-pw-02\Documents\01 Active Projects\District 08\Hamilton\122048\02 Engineering_PalmerEngineering\Structures\Wall_002\Sheets\122048_WALL002_WD001.dgn

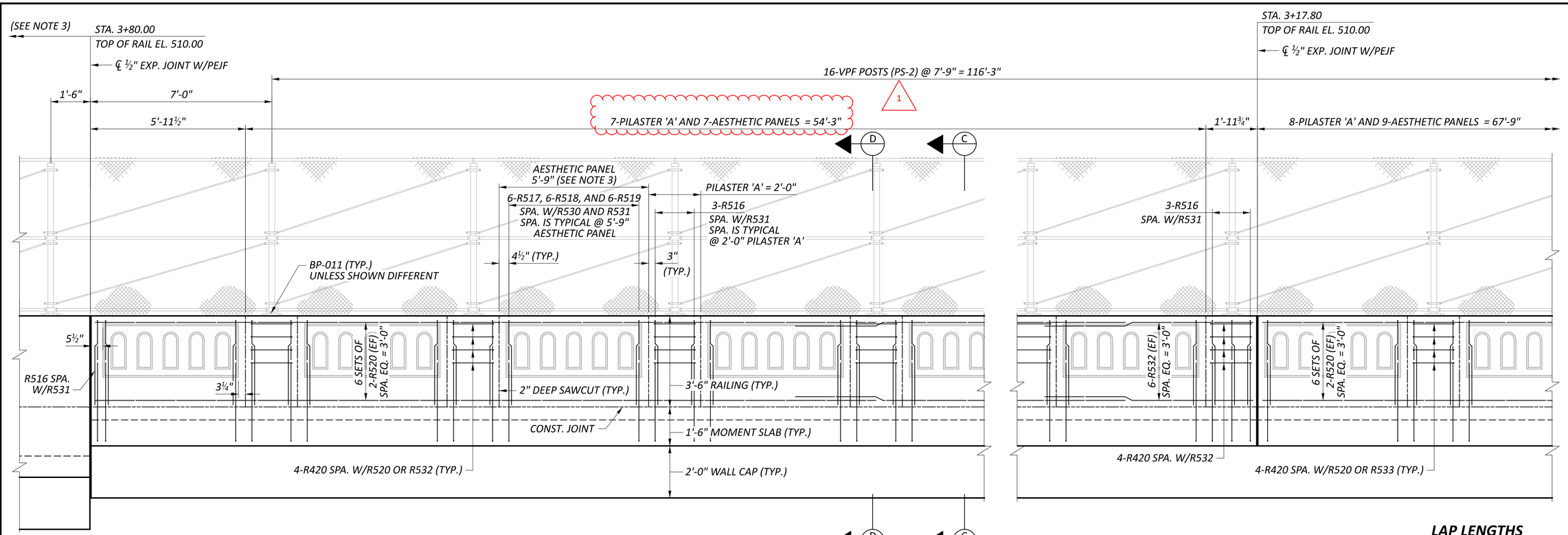

NOTES

1. SEE SHEET 26/29 FOR SECTION VIEWS.
2. SEE SHEET 21/29 FOR MOMENT SLAB PLAN.
3. SEE SHEET 25/29 FOR ADDITIONAL RAILING AND VPF DETAILS.

LAP LENGTHS

#5 HORIZONTAL = 3'-1"
#5 VERTICAL = 2'-5"

1	09/01/25	SHEET REVISIONS
ADDM' NO.	DATE	DESCRIPTION
DATE COMPLETED		

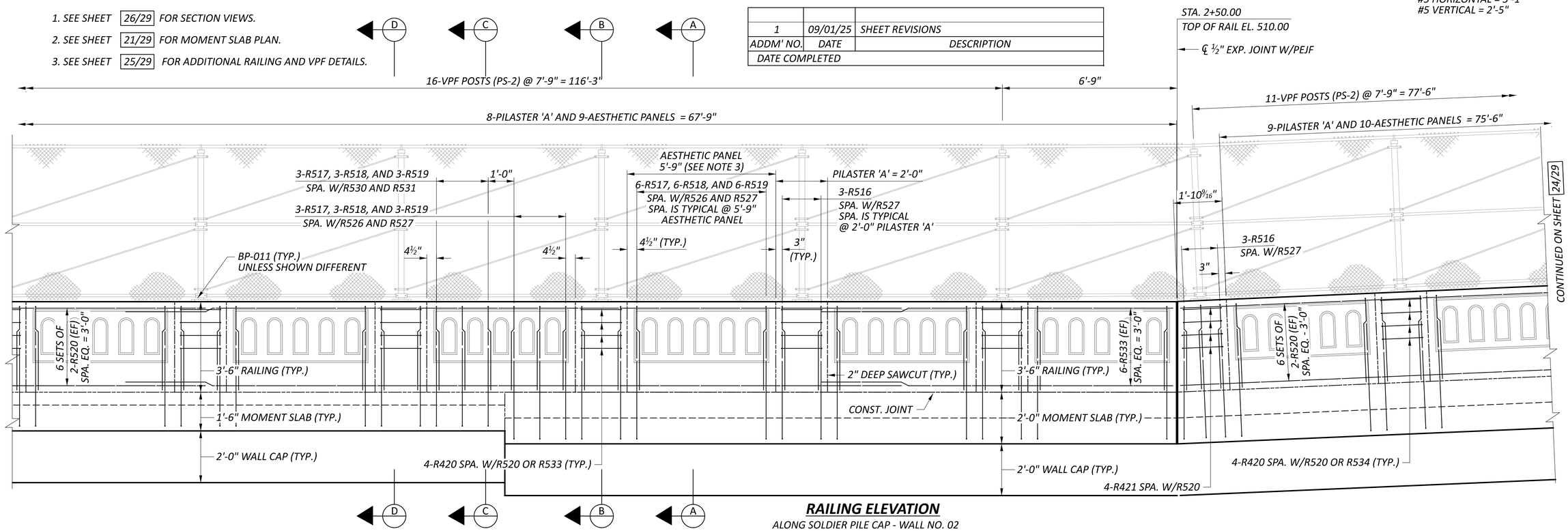

CONTINUED ON SHEET 24/29

RAILING ELEVATION

ALONG SOLDIER PILE CAP - WALL NO. 02

RETAINING WALL NO. 02 ALONG WINCHELL AVE.

DESIGN AGENCY
Palmer ENGINEERING
8350 E. KEMPER ROAD
SUITE B
CINCINNATI, OH 45249
(513) 469-1600

DESIGNER	RJB
REVIEWER	BJF 04/10/25
PROJECT ID	122048
SUBSET / TOTAL	23 / 29
SHEET / TOTAL	P.186 / P.421

HAM-IR75-1.05

MODEL: Sheet 4B PAPERSIZE: 34x22 (in.) DATE: 8/27/2025 TIME: 11:33:35 AM PLTDRV: OHDOT_PDF.pltcfg PENTBL: OHDOT_Pen.tbl USER: swalker@palmernet.com WORKSPACE: OHDOTCEv02 WORKSET: 122048 PRODUCT: OpenRoadsDesigner 24.00.00.205
pw:\\ohiodot-pw.bentley.com:ohiodot-pw-02\Documents\01 Active Projects\District 08\Hamilton\122048\02-Engineering_Palmer\Engineering\Structures\Wall_002\Sheets\122048_WALL002_WD001.dgn

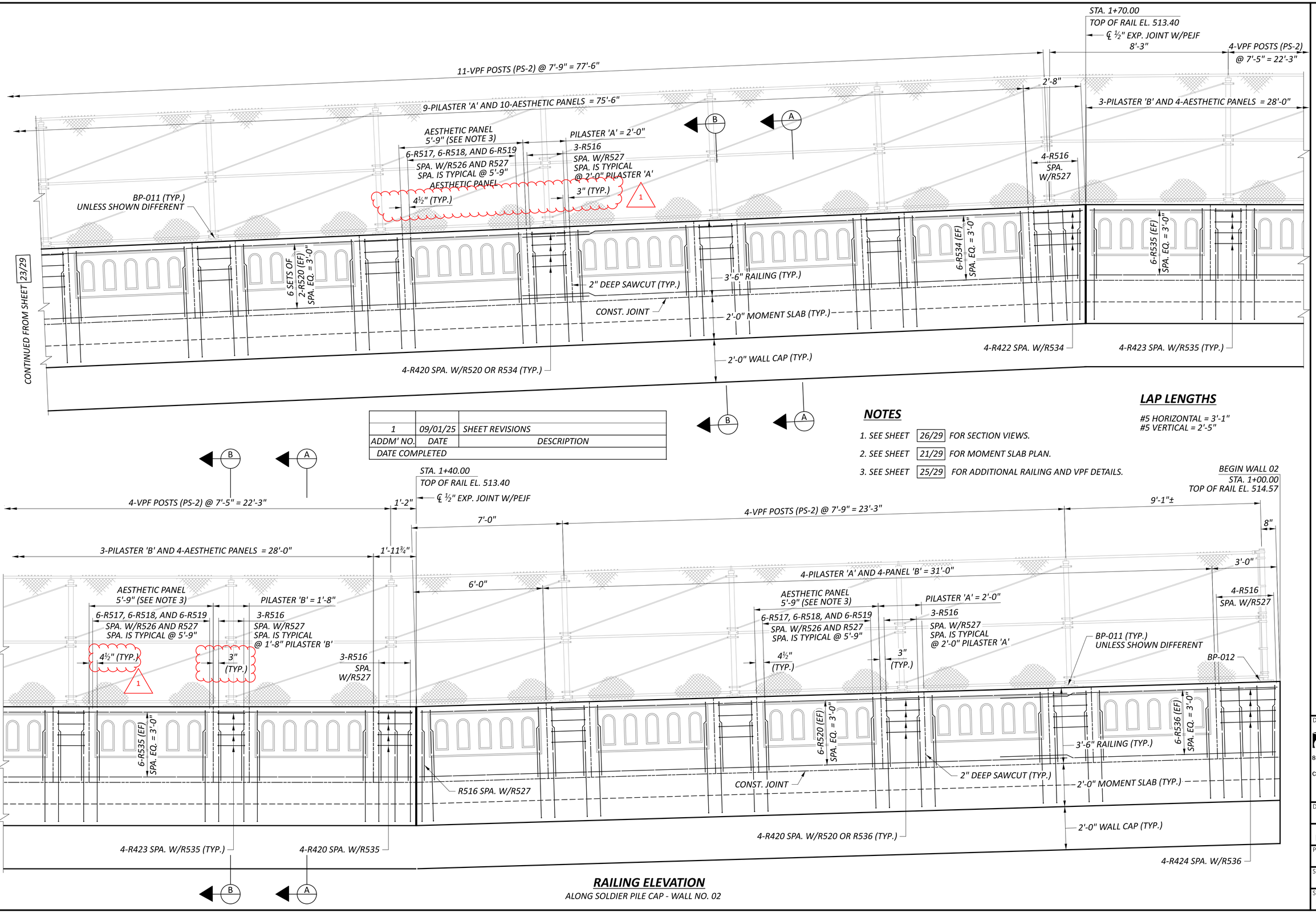

1	09/01/25	SHEET REVISIONS
ADDM' NO.	DATE	DESCRIPTION
DATE COMPLETED		

NOTES

1. SEE SHEET 26/29 FOR SECTION VIEWS.
2. SEE SHEET 21/29 FOR MOMENT SLAB PLAN.
3. SEE SHEET 25/29 FOR ADDITIONAL RAILING AND VPF DETAILS.

LAP LENGTHS

#5 HORIZONTAL = 3'-1"
#5 VERTICAL = 2'-5"

RAILING ELEVATION

ALONG SOLDIER PILE CAP - WALL NO. 02

RAILING DETAILS 2 OF 3
RETAINING WALL NO. 02 ALONG WINCHELL AVE.

DESIGN AGENCY
Palmer ENGINEERING
8350 E. KEMPER ROAD
SUITE B
CINCINNATI, OH 45249
(513) 469-1600

DESIGNER	RJB
REVIEWER	BJF 04/10/25
PROJECT ID	122048
SUBSET	24
TOTAL	29
SHEET	P.187
TOTAL	P.421

HAM-IR75-1.05

MODEL: Sheet 4C PAPERSIZE: 34x22 (in.) DATE: 8/27/2025 TIME: 11:33:36 AM PLTDRV: OHDOT_PDF.pltcfg PENTBL: OHDOT_Pen.tbl USER: swalker@palmernet.com WORKSPACE: OHDOTCEv02 WORKSET: 122048 PRODUCT: OpenRoadsDesigner 24.00.00.205
pw:\\ohiodot-pw.bentley.com:ohiodot-pw-02\Documents\01 Active Projects\District 08\Hamilton\122048\402-Engineering_PalmerEngineering\Structures\Wall_002\Sheets\122048_WALL002_WD001.dgn

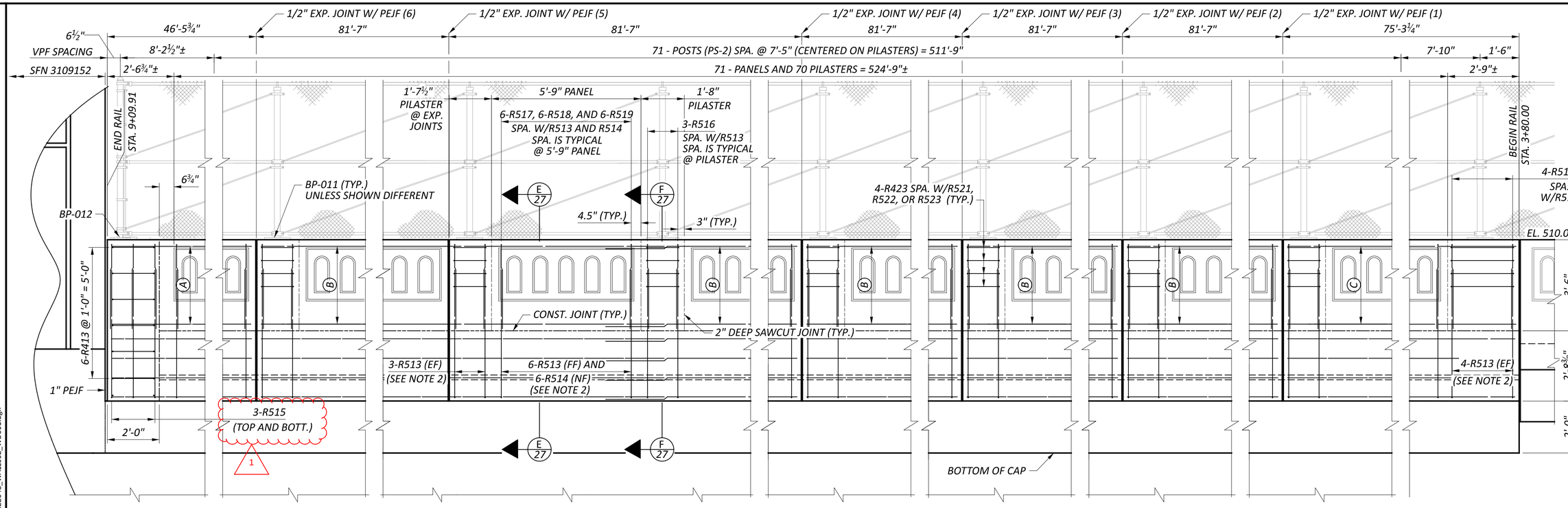

RAILING ELEVATION

ALONG DRILLED SHAFT CAP - WALL NO. 02

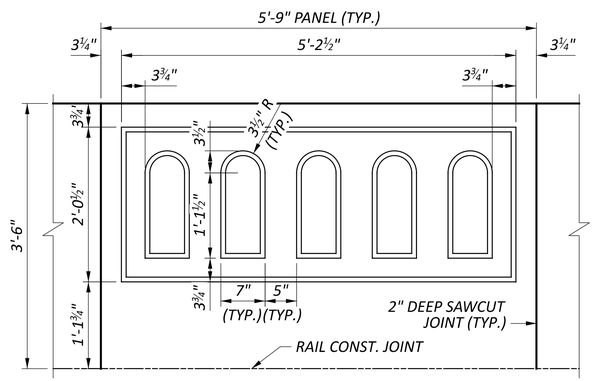

RAILING ELEVATION

5'-9' PANEL AESTHETIC DETAIL (SEE NOTE 3)

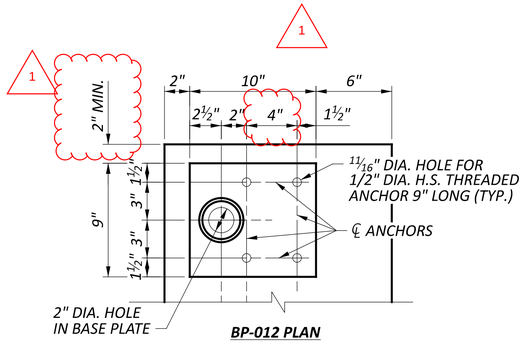

BP-012 PLAN

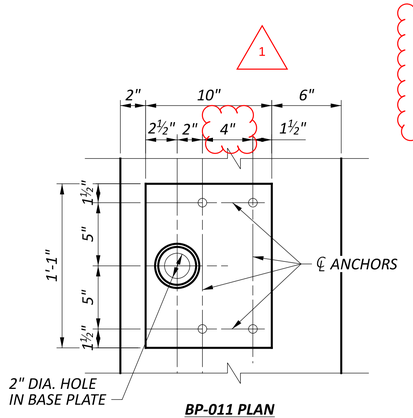

BP-011 PLAN

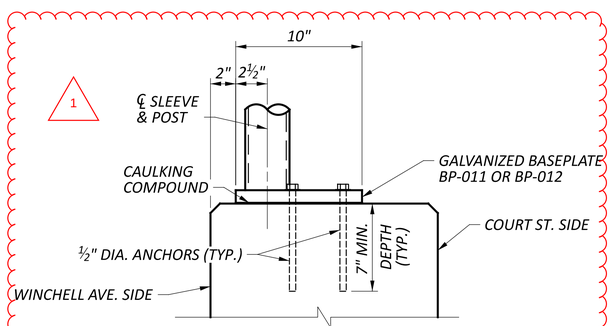

TYPICAL SECTION

BP-011 AND BP-012 BASE PLATE ASSY.

LAP LENGTHS

1

#5 HORIZONTAL = 3'-1"
#5 VERTICAL = 2'-5"

LEGEND

Ⓐ 6-R520 (EF) W/6-R521 (EF)

Ⓑ 6 SETS OF 2-R520 (EF) W/6-R522 (EF)

Ⓒ 6 SETS OF 2-R520 (EF) W/6-R523 (EF)

NOTES

1. SEE SHEET 4/29 AND 5/29 FOR GENERAL NOTES.
2. SEE SHEET 21/29 AND 22/29 FOR MOMENT SLAB DETAILS.
3. SEE SHEET S 20/29 AND 27/29 FOR SECTION VIEWS.
4. SEE STD. DWG. VPF-1-24 FOR ADDITIONAL DETAILS REGARDING THE BASEPLATE, POST SLEEVE, AND APPROVED ADHESIVE ANCHOR BOLT OPTIONS. BASE PLATES SHALL BE 50 KSI GALVANIZED STEEL.

1

RAILING DETAILS 3 OF 3
RETAINING WALL NO. 02 ALONG WINCHELL AVE.

DESIGN AGENCY
Palmer ENGINEERING
8350 E. KEMPER ROAD
SUITE B
CINCINNATI, OH 45249
(513) 469-1600

DESIGNER	RJB
REVIEWER	BJF 04/10/25
PROJECT ID	122048
SUBSET	25
TOTAL	29
SHEET	P.188
TOTAL	P.421

ADDM' NO.	DATE	DESCRIPTION
1	09/01/25	SHEET REVISIONS
DATE COMPLETED		

HAM-IR75-1.05

MODEL: Sheet 4 PAPERSIZE: 34x22 (in.) DATE: 8/27/2025 TIME: 2:30:59 PM PLTDRV: OHDOT_PDF.pltcfg PENTBL: OHDOT_Pen.tbl USER: swalker@palmernet.com WORKSPACE: OHDOTCEv02 WORKSET: 122048 PRODUCT: OpenRoadsDesigner 24.00.00.205
pw:\\ohiodot-pw.bentley.com:ohiodot-pw-02\Documents\01 Active Projects\District 08\Hamilton\122048\402-Engineering_PalmerEngineering\Structures\Wall_002\Sheets\122048_WALL002_WD001.dgn

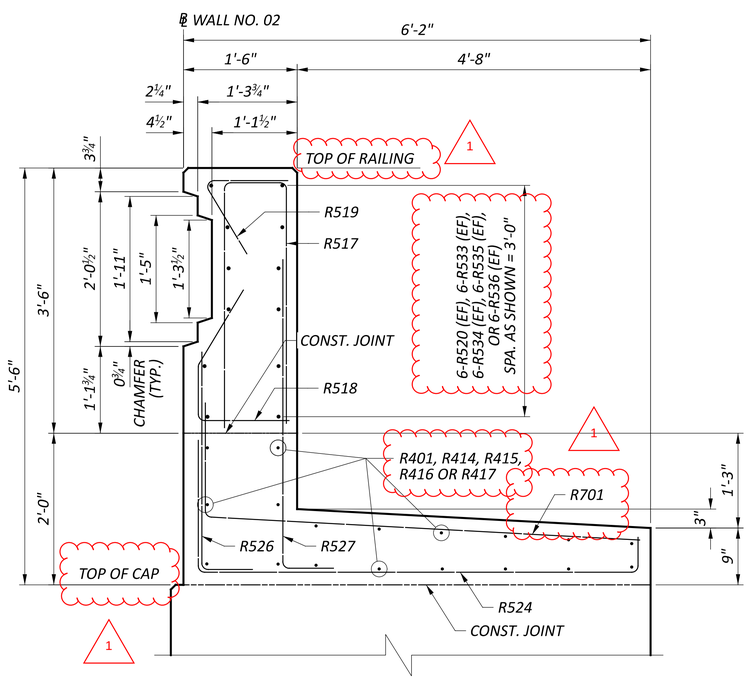

SECTION A-A

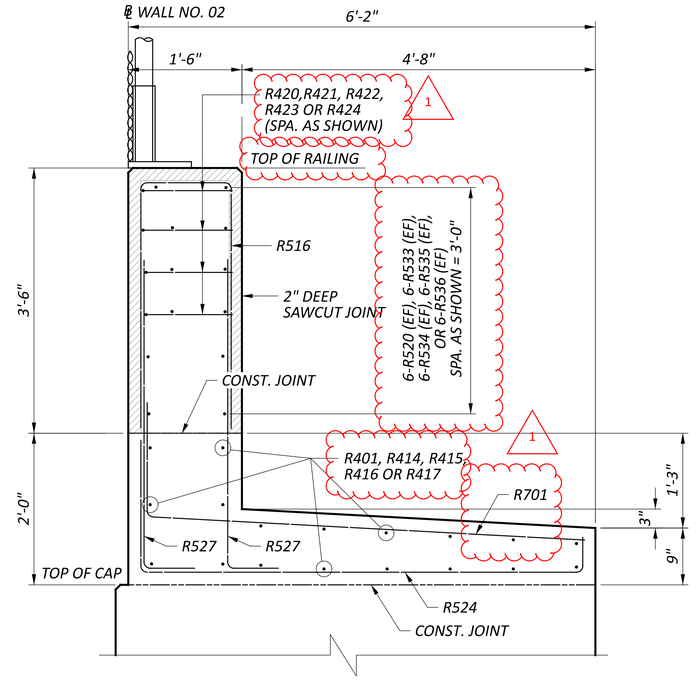

SECTION B-B

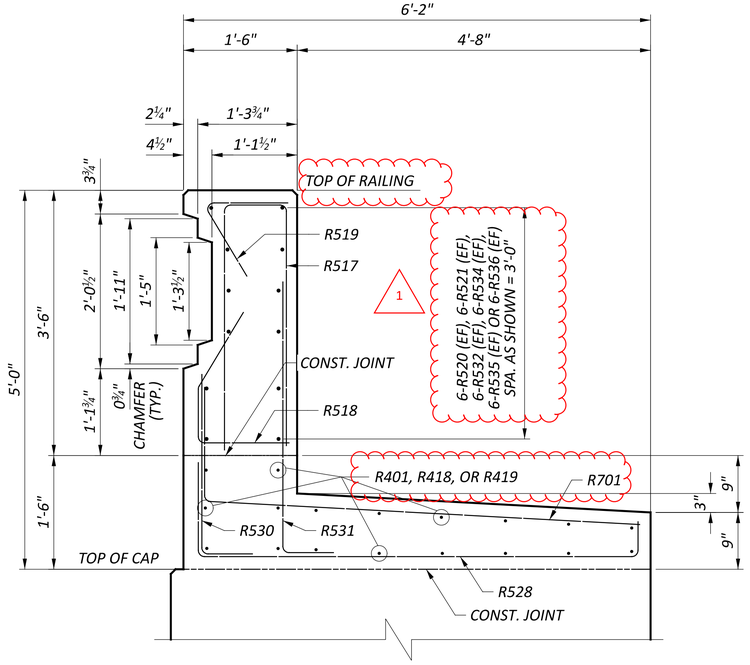

SECTION C-C

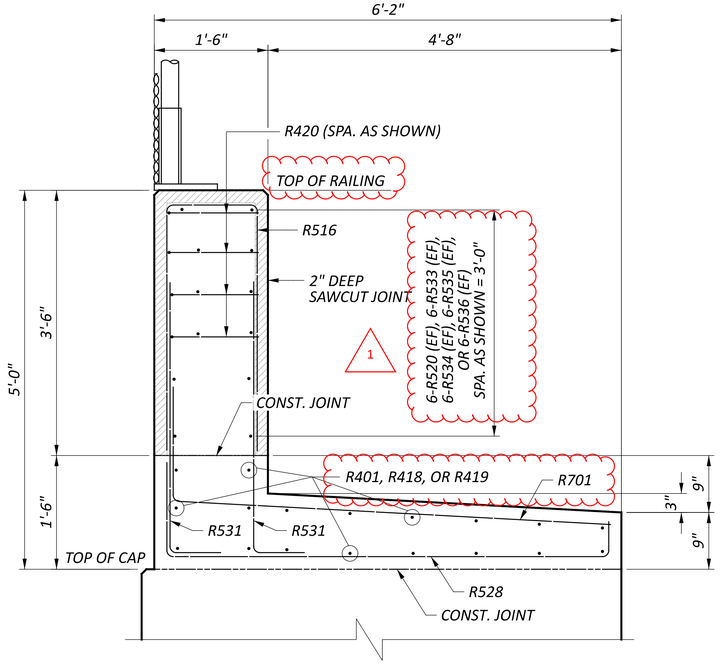

SECTION D-D

NOTES

1. SEE SHEETS 23/29 AND 24/29 FOR RAILING ELEVATION VIEWS AND LONGITUDINAL REINFORCING BAR IDENTIFICATION.
2. SEE SHEET 21/29 FOR MOMENT SLAB PLAN AND LONGITUDINAL REINFORCING BAR IDENTIFICATION.
3. SEE SHEET 25/29 FOR ADDITIONAL RAILING AND VPF DETAILS.

ADDM' NO.	DATE	DESCRIPTION
1	09/01/25	SHEET REVISIONS
DATE COMPLETED		

MOMENT SLAB AND RAILING DETAILS 1 OF 2
RETAINING WALL NO. 02 ALONG WINCHELL AVE.

DESIGN AGENCY
Palmer ENGINEERING
8350 E. KEMPER ROAD
SUITE B
CINCINNATI, OH 45249
(513) 469-1600

DESIGNER RJB
REVIEWER BJF 04/10/25
PROJECT ID 122048
SUBSET 26 TOTAL 29
SHEET P.189 TOTAL P.421

HAM-IR75-1.05

MODEL: Sheet 5A PAPERSIZE: 34x22 (in.) DATE: 8/27/2025 TIME: 11:33:38 AM PLTDRV: OHDOT_PDF.pltcfg PENTBL: OHDOT_Pen.tbl USER: swalker@palmernet.com WORKSPACE: OHDOTCEv02 WORKSET: 122048 PRODUCT: OpenRoadsDesigner 24.00.00.205
pw:\\ohiodot-pw.bentley.com:ohiodot-pw-02\Documents\01 Active Projects\District 08\Hamilton\122048\402-Engineering_PalmerEngineering\Structures\Wall_002\Sheets\122048_WALL002_WD001.dgn

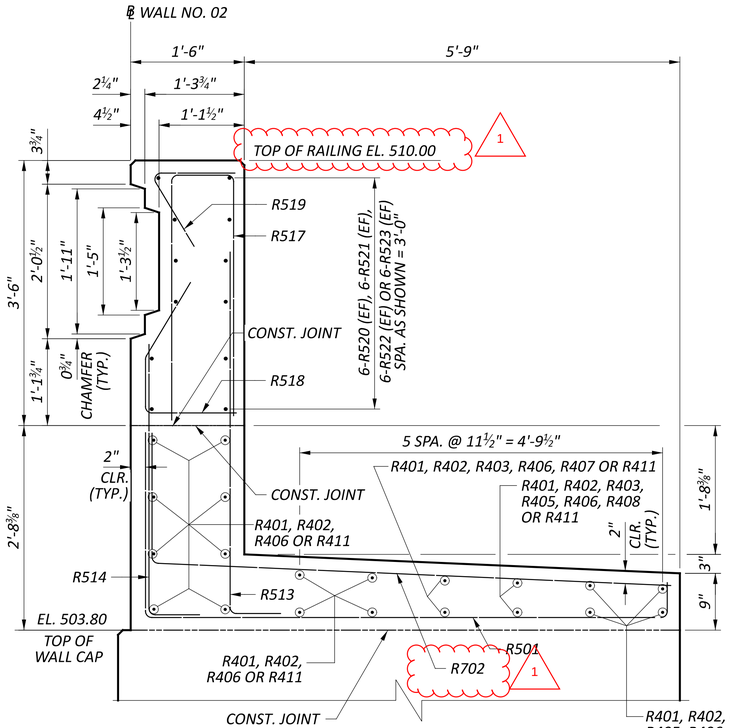

SECTION E-E

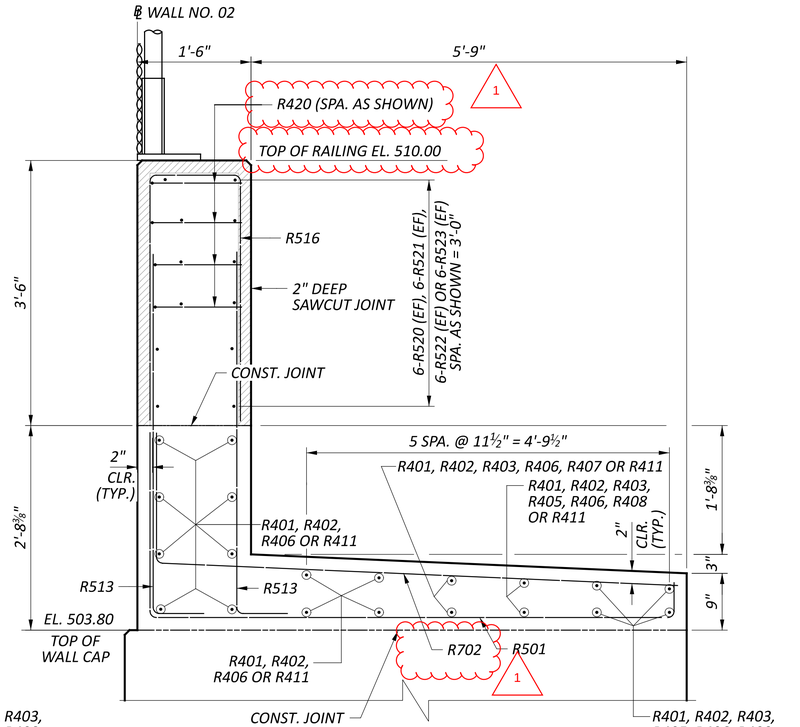

SECTION F-F

NOTES

1. SEE SHEETS 4/29 AND 5/29 FOR GENERAL NOTES.
2. SEE SHEET 22/29 FOR MOMENT SLAB DETAILS.
3. SEE SHEET 25/29 FOR RAILING ELEVATION AND ADDITIONAL DETAILS.
4. CUT THE TOP OF DS110X BARS AND REPAIR GALVANIZATION BY 711.02 OR PROVIDE STRAIGHT BARS AS NEEDED TO AVOID CATCH BASIN CUTOUT (TYP.)

LEGEND

1 ☆ REFER TO WALL ELEVATION VIEWS FOR BAR MARKS

1	09/01/25	SHEET REVISIONS
ADDM' NO.	DATE	DESCRIPTION
DATE COMPLETED		

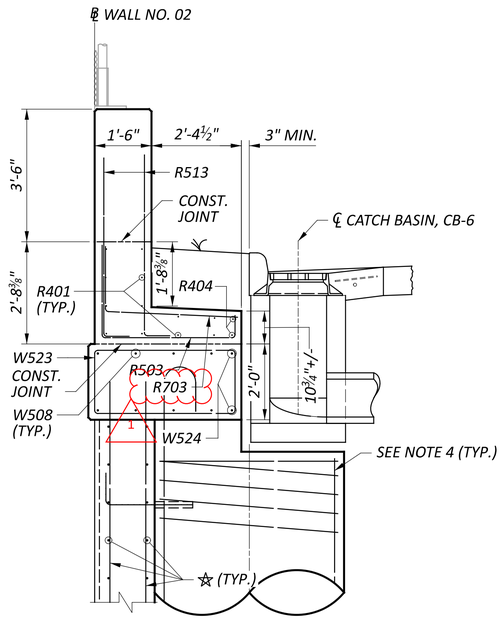

WALL SECTION

@ STA. 4+63.85

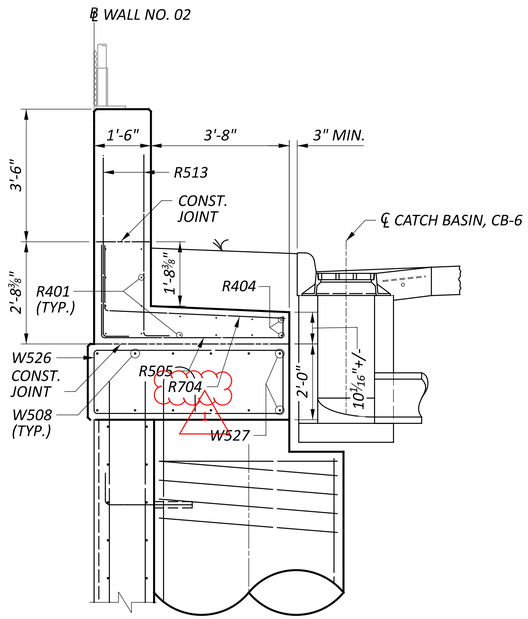

WALL SECTION

@ STA. 5+14.15

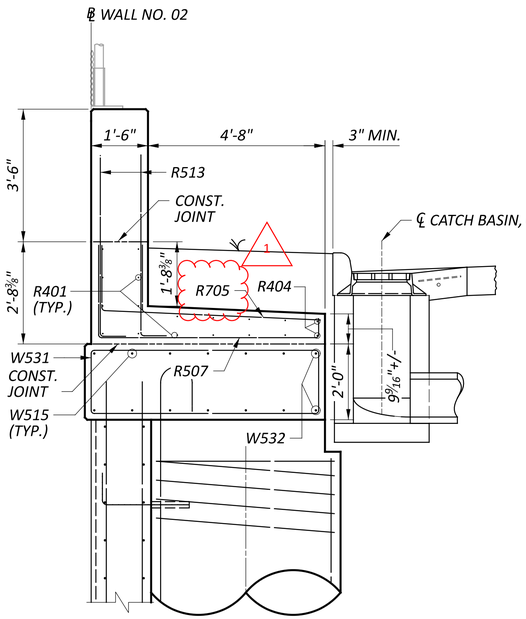

WALL SECTION

@ STA. 5+80.80

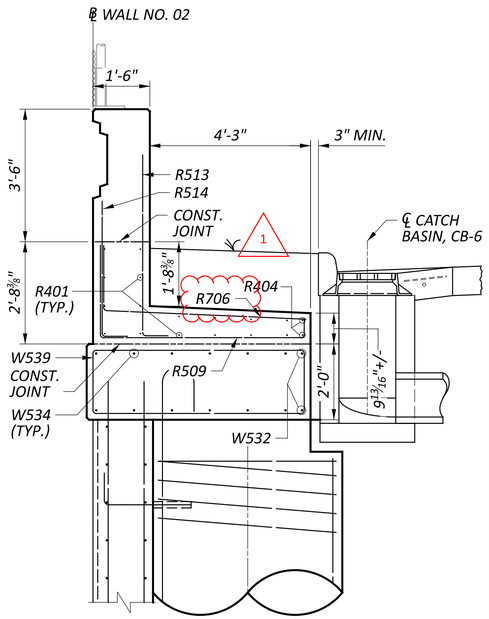

WALL SECTION

@ STA. 6+87.50

MOMENT SLAB AND RAILING DETAILS 2 OF 2
RETAINING WALL NO. 02 ALONG WINCHELL AVE.

DESIGN AGENCY
Palmer ENGINEERING
8350 E. KEMPER ROAD
SUITE B
CINCINNATI, OH 45249
(513) 469-1600

DESIGNER	RJB
REVIEWER	BJF 04/10/25
PROJECT ID	122048
SUBSET / TOTAL	27 / 29
SHEET / TOTAL	P.190 / P.421

HAM-IR75-1.05

MODEL: Sheet 5B PAPERSIZE: 34x22 (in.) DATE: 8/27/2025 TIME: 11:33:38 AM PLTDRV: OHDOT_PDF.pltcfg PENTBL: OHDOT_Pen.tbl USER: swalker@palmernet.com WORKSPACE: OHDOTCEv02 WORKSET: 122048 PRODUCT: OpenRoadsDesigner 24.00.00.205
pw:\\ohiodot-pw.bentley.com:ohiodot-pw-02\Documents\01 Active Projects\District 08\Hamilton\122048\02-Engineering_Palmer\Engineering\Structures\Wall_002\Sheets\122048_WALL002_WD001.dgn

REINFORCING STEEL LIST

MARK	NUMBER TOTAL	LENGTH	WEIGHT (LBS.)	TYPE	DIMENSIONS A	B	C	D	E	R	INC.
WALL NO. 02 (GALVANIZED STEEL REINFORCEMENT - GSR)											
W501	116	3' - 0"	363	STR							
W502	1,561	1' - 11"	3,053	1	0' - 8"	1' - 4"					
W503	572	8' - 10"	5,270	STR							
W504	32	7' - 2"	240	STR							
W505	4	12' - 0"	51	STR							
W506	916	11' - 0"	10,510	STR							
W507	5	10' - 7"	56	STR							
W508	142	23' - 8"	3,506	STR							
W509	5	19' - 8"	103	STR							
W510	291	15' - 11"	4,819	3	6' - 0"	1' - 8"					
W511	32	6' - 6"	217	STR							
W512	64	6' - 0"	401	STR							
W513	42	25' - 7"	1,121	STR							
	2	4' - 9"									
W514	SERIES	to	326	STR							0' - 0 ½"
	29	6' - 0"									
W515	482	27' - 8"	13,909	STR							
	2	9' - 6"									
W516	SERIES	to	522	STR							0' - 0 ½"
	25	10' - 6"									
	2	8' - 6"									
W517	SERIES	to	545	STR							0' - 0 ⅜"
	29	9' - 6"									
W518	56	25' - 9"	1,505	STR							
W519	28	21' - 8"	633	STR							
W520	531	18' - 1"	10,016	3	7' - 1"	1' - 8"					
W521	158	11' - 3"	1,854	STR							
W522	8	25' - 0"	209	STR							
W523	6	11' - 3"	71	3	3' - 8 ½"	1' - 8"					
W524	4	5' - 1"	22	16	4' - 6"						
W525	8	21' - 5"	179	STR							
W526	5	13' - 11"	73	3	5' - 0"	1' - 8"					
W527	2	7' - 4"	16	16	6' - 9"						
W528	6	19' - 1"	120	STR							
W529	174	13' - 1"	2,375	STR							
W530	4	13' - 10"	58	STR							
W531	5	15' - 11"	83	3	6' - 0"	1' - 8"					
W532	4	10' - 9"	45	17	9' - 7"						
W533	242	8' - 6"	2,146	STR							
W534	186	29' - 8"	5,756	STR							
W535	62	7' - 8"	496	STR							
W536	58	9' - 0"	545	STR							
W537	162	10' - 0"	1,690	STR							
W538	37	6' - 7"	255	STR							
W539	5	15' - 0"	79	3	5' - 7"	1' - 8"					
W540	4	17' - 9"	75	STR							
W541	202	24' - 8"	5,197	STR							
W542	80	15' - 8"	1,308	STR							
W543	26	13' - 0"	353	STR							
W544	40	12' - 4"	515	STR							
W545	44	18' - 8"	857	STR							
W546	67	22' - 1"	1,541	3	8' - 7"	2' - 2"					
W547	42	21' - 8"	950	STR							
W548	68	9' - 8"	686	STR							
W549	4	18' - 1"	76	3	6' - 7"	2' - 2"					
W550	41	6' - 2"	264	STR							
W551	145	9' - 0"	1,368	3	1' - 2"	3' - 1"					
W552	80	30' - 0"	2,504	STR							
W553	292	6' - 9"	2,044	1	0' - 10"	6' - 0"					
W554	37	8' - 10"	341	2	1' - 8"	0' - 10"	6' - 7"				
W555	25	29' - 5"	768	STR							

REINFORCING STEEL LIST

MARK	NUMBER TOTAL	LENGTH	WEIGHT (LBS.)	TYPE	DIMENSIONS A	B	C	D	E	R	INC.
WALL NO. 02 (GALVANIZED STEEL REINFORCEMENT - GSR)											
W556	37	8' - 4"	322	2	1' - 8"	0' - 10"	6' - 1"				
W557	37	11' - 9"	454	2	5' - 7"	0' - 10"	5' - 7"				
W558	20	12' - 8"	265	STR							
W559	35	5' - 1"	186	STR							
W560	2	9' - 11"	21	3	0' - 10"	3' - 10"					
W561	2	6' - 3"	13	3	0' - 10"	2' - 0"					
W562	4	17' - 5"	73	STR							
W563	8	3' - 0"	26	STR							
W564	21	4' - 2"	92	17	3' - 0"						
W565	3	9' - 3"	29	17	8' - 1"						
W566	72	7' - 10"	589	17	6' - 8"						
W567	12	5' - 3"	66	17	4' - 1"						
W568	15	3' - 2"	50	17	2' - 0"						
W569	6	6' - 2"	39	17	5' - 0"						
W570	4	9' - 3"	39	STR							
W601	44	19' - 8"	1,300	STR							
	GSR SUB TOTAL		95,649								
W801	4	11' - 8"	125	19	7' - 3"	3' - 2"	3' - 1"				
W802	4	8' - 5"	90	STR							
W803	36	23' - 8"	2,275	STR							
W804	145	15' - 11"	6,147	3	6' - 8"	1' - 7"					
W805	3	19' - 10"	159	17	18' - 0"						
W806	3	15' - 4"	123	17	13' - 6"						
W807	44	27' - 8"	3,251	STR							
W808	7	19' - 8"	368	STR							
	GSR SUB TOTAL		12,538								
	GSR SHEET TOTAL		108,187								

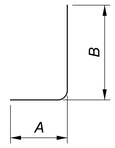

TYPE-1

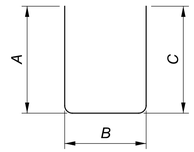

TYPE-2

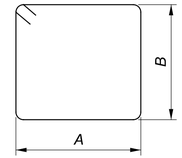

TYPE-3

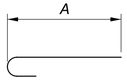

TYPE-16

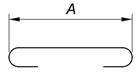

TYPE-17

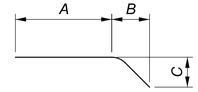

TYPE-19

REINFORCING BENDING DIAGRAMS

NOTE

SEE SHEET 11/29 FOR DRILLED SHAFT REINFORCEMENT INFORMATION

1	09/01/25	SHEET REVISIONS
ADDM' NO.	DATE	DESCRIPTION
DATE COMPLETED		

REINFORCING STEEL LIST 1 OF 2
RETAINING WALL NO. 02 ALONG WINCHELL AVE.

DESIGN AGENCY
Palmer ENGINEERING
8350 E. KEMPER ROAD
SUITE B
CINCINNATI, OH 45249
(513) 469-1600

DESIGNER RJB
REVIEWER BJF 04/10/25
PROJECT ID 122048
SUBSET 28 TOTAL 29
SHEET P.191 TOTAL P.421

HAM-IR75-1.05

MODEL: Sheet PAPERSIZE: 34x22 (in.) DATE: 8/27/2025 TIME: 11:33:44 AM PLTDRV: OHDOT_PDF.pltcfg PENTBL: OHDOT_Pen.tbl USER: swalker@palmernet.com WORKSPACE: OHDOTCEx02 WORKSET: 122048 PRODUCT: OpenRoadsDesigner 24.00.00.205
pw:\\ohiodot-pw.bentley.com:ohiodot-pw-02\Documents\01 Active Projects\District 08\Hamilton\122048\02-Engineering_PalmerEngineering\Structures\Wall_002\Sheets\122048_002_WL001.dgn

REINFORCING STEEL LIST

MARK	NUMBER TOTAL	LENGTH	WEIGHT (LBS.)	TYPE	DIMENSIONS A	B	C	D	E	R	INC.
WALL NO. 02 RAIL AND SLAB (GALVANIZED STEEL REINFORCEMENT - GSR)											
R401	362	30' - 0"	7,255	STR							
R402	20	20' - 0"	268	STR							
R403	8	5' - 10"	32	STR							
R404	12	10' - 0"	81	STR							
R405	6	17' - 10"	72	STR							
R406	84	26' - 3"	1,473	STR							
R407	2	15' - 7"	21	STR							
R408	6	20' - 1"	81	STR							
R409	4	13' - 9"	37	STR							
R410	4	7' - 9"	21	STR							
R411	20	18' - 9"	251	STR							
R412	6	13' - 2"	53	2	5' - 10"	1' - 8"	5' - 10"				
R413	6	17' - 4"	70	3	6' - 9"	1' - 8"					
R414	18	12' - 1"	146	STR							
R415	18	29' - 7"	356	STR							
R416	18	24' - 8"	297	STR							
R417	18	25' - 8"	309	STR							
R418	18	14' - 0"	169	STR							
R419	18	6' - 9"	82	STR							
R420	120	5' - 10"	468	3	1' - 2"	1' - 6"					
R421	4	5' - 8"	16	3	1' - 2"	1' - 5"					
R422	4	7' - 2"	20	3	1' - 2"	2' - 2"					
R423	296	5' - 2"	1,022	3	1' - 2"	1' - 2"					
R424	4	7' - 10"	21	3	1' - 2"	2' - 6"					
R425	4	11' - 2"	30	STR							
R501	612	9' - 5"	6,011	2	2' - 4"	6' - 11"	0' - 5"				
R502	NA										
R503	7	6' - 2"	45	2	2' - 4"	3' - 6"	0' - 6 ½"				
R504	NA										
R505	6	7' - 5"	47	2	2' - 4"	4' - 9 ½"	0' - 6"				
R506	NA										
R507	6	8' - 5"	53	2	2' - 4"	5' - 10"	0' - 5 ½"				
R508	NA										
R509	6	8' - 0"	51	2	2' - 4"	5' - 5"	0' - 6"				
R510	NA										
R511	2	7' - 1"	15	10	0' - 1 ½"	3' - 5"	0' - 5"	3' - 5"			
R512	4	4' - 5"	19	10	0' - 1"	2' - 1"	0' - 5"	2' - 1"			
R513	854	5' - 6"	4,788	1	0' - 9"	4' - 10"					
R514	426	4' - 3"	1,833	1	0' - 9"	3' - 6"					
R515	6	15' - 2"	95	2	4' - 3"	6' - 11"	4' - 3"				
R516	329	7' - 3"	2,488	2	3' - 2"	1' - 2"	3' - 2"				
R517	642	6' - 11"	4,604	2	3' - 2"	0' - 9 ½"	3' - 2"				
R518	642	2' - 10"	1,871	10	1' - 0"	0' - 7"	0' - 8 ½"	1' - 1"			
R519	642	2' - 1"	1,414	11	0' - 7"	0' - 11 ½"	1' - 1 ½"				
R520	240	30' - 0"	7,510	STR							
R521	12	19' - 3"	241	STR							
R522	60	27' - 5"	1716	STR							
R523	12	21' - 1"	264	STR							
R524	206	7' - 9"	1,666	2	1' - 9"	5' - 10"	0' - 5"				
R525	NA										
R526	135	3' - 5"	476	1	0' - 9"	2' - 9"					
R527	277	4' - 10"	1,385	1	0' - 9"	4' - 2"					
R528	121	7' - 2"	905	2	1' - 2"	5' - 10"	0' - 5"				
R529	NA										
R530	81	2' - 11"	243	1	0' - 9"	2' - 3"					
R531	161	4' - 3"	721	1	0' - 9"	3' - 8"					
R532	12	8' - 0"	101	STR							
R533	12	13' - 7"	171	STR							
R534	12	25' - 10"	324	STR							
R535	12	29' - 8"	372	STR							
R536	12	12' - 9"	160	STR							
R701	327	7' - 3"	4,825	19	5' - 9"	0' - 2"	1' - 6"				
R702	612	8' - 6"	10,592	19	6' - 10"	0' - 2"	1' - 8"				
R703	7	5' - 2"	74	19	3' - 6"	0' - 2"	1' - 8"				
R704	6	6' - 5"	79	19	4' - 9"	0' - 2"	1' - 8"				
R705	6	7' - 5"	91	19	5' - 9"	0' - 2"	1' - 8"				
R706	6	7' - 0"	86	19	5' - 4"	0' - 2"	1' - 8"				
GSR SHEET TOTAL			67,987								

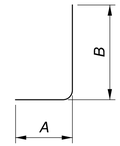

TYPE-1

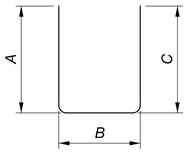

TYPE-2

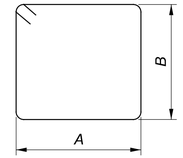

TYPE-3

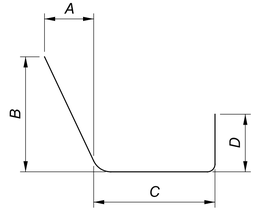

TYPE-10

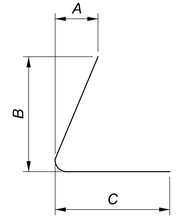

TYPE-11

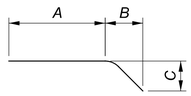

TYPE-19

REINFORCING BENDING DIAGRAMS

REINFORCING STEEL LIST 2 OF 2
RETAINING WALL NO. 02 ALONG WINCHELLL AVE.

ADDM' NO.	DATE	DESCRIPTION
1	09/01/25	SHEET REVISIONS
DATE COMPLETED		

DESIGN AGENCY
Palmer ENGINEERING
8350 E. KEMPER ROAD
SUITE B
CINCINNATI, OH 45249
(513) 469-1600

DESIGNER RJB
REVIEWER BJF 04/10/25
PROJECT ID 122048
SUBSET 29 TOTAL 29
SHEET P.192 TOTAL P.421

HAM-IR75-1.05

MODEL: Sheet - 2 PAPERSIZE: 34x22 (in.) DATE: 8/27/2025 TIME: 11:33:45 AM PLTDRV: OHDOT_PDF.pltcfg PENTBL: OHDOT_Pen.tbl USER: swalker@palmernet.com WORKSPACE: OHDOTCEv02 WORKSET: 122048 PRODUCT: OpenRoadsDesigner 24.00.00.205
pw:\\ohiodot-pw.bentley.com:ohiodot-pw-02\Documents\01 Active Projects\District 08\Hamilton\122048\402-Engineering_PalmerEngineering\Structures\Wall_002\Sheets\122048_002_WL001.dgn

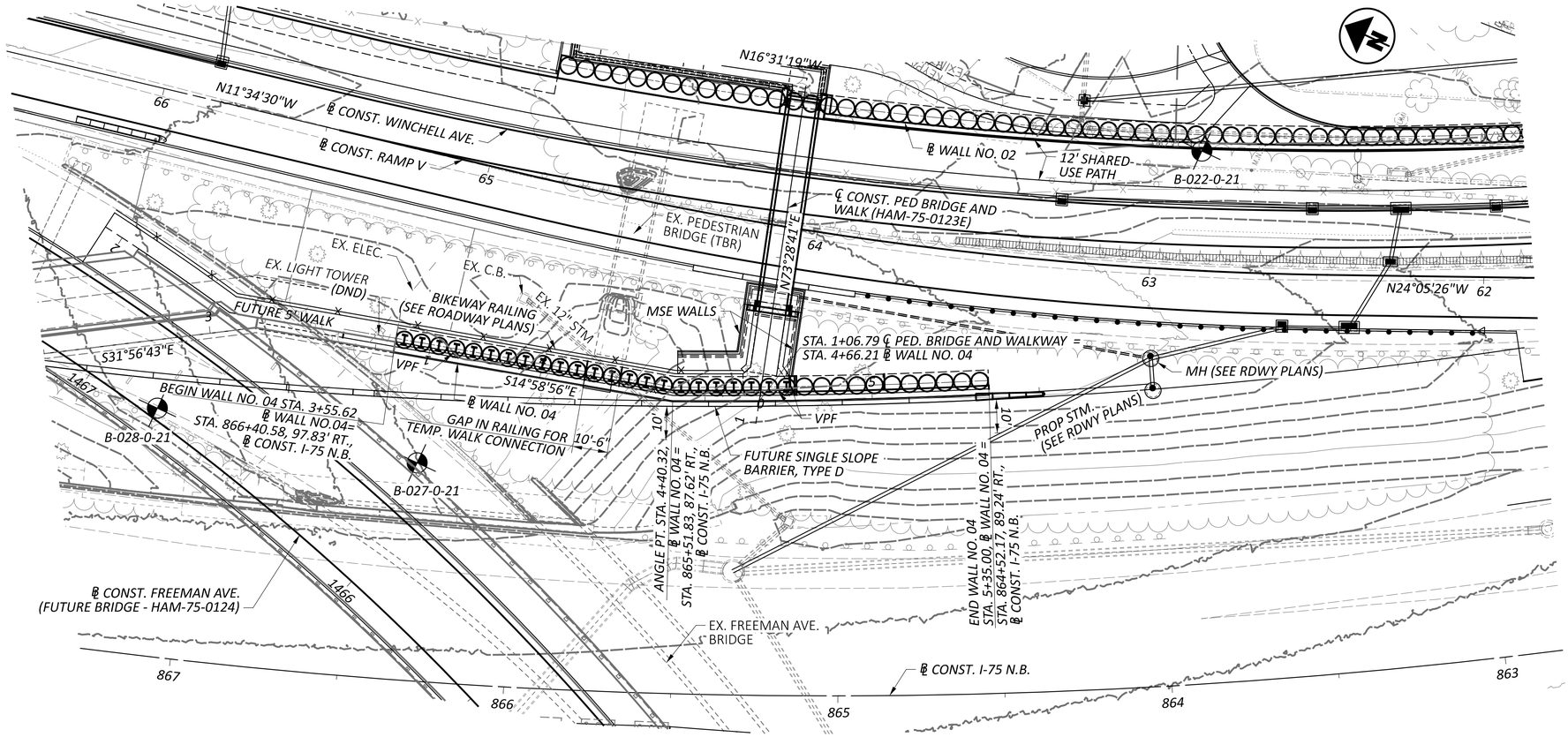

PLAN

LEGEND

PROJECT BORING LOCATION

1	09/01/25	SHEET REVISIONS
ADDM' NO.	DATE	DESCRIPTION
DATE COMPLETED		

NOTE: ALL EXISTING UTILITIES AND SEWERS SHALL BE REMOVED OR RELOCATED UNLESS OTHERWISE NOTED.

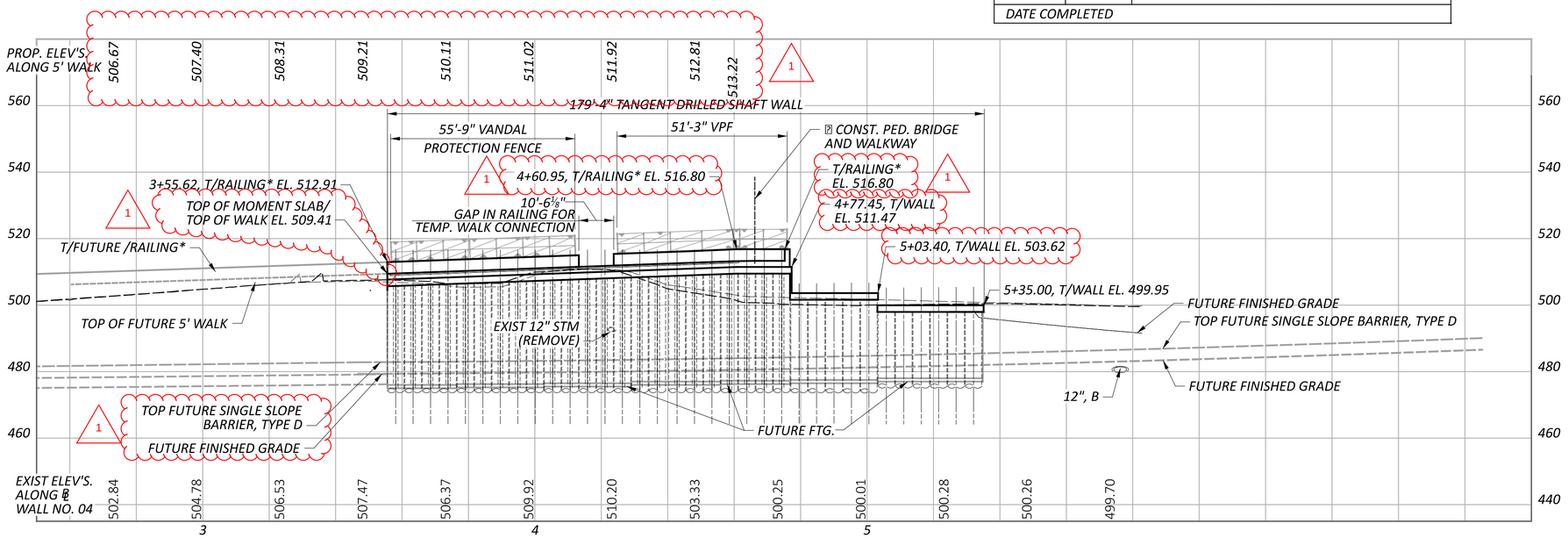

PROFILE ALONG ℄ WALL NO. 04

* DENOTES 42" AESTHETIC TEXAS C412 RAILING

PLAN AND PROFILE
RETAINING WALL NO. 04 ALONG I-75 NORTHBOUND
STA. 3+55.62 TO STA. 5+35.00

HAM-IR75-1.05

MODEL: BLP_Wall_4-6 - Plan 1 [Sheet] PAPERSIZE: 34x22 (in.) DATE: 8/27/2025 TIME: 1:14:11 PM PLTDRV: OHDOT_PDF.pltcfg PENTBL: OHDOT_Pen.tbl USER: swalker@palmernet.com WORKSPACE: OHDOTCEv02 WORKSET: 122048 PRODUCT: OpenRoadsDesigner 24.00.00.205
pw:\\ohiodot-pw.bentley.com:ohiodot-pw-02\Documents\01 Active Projects\District 08\Hamilton\122048\402-Engineering_PalmerEngineering\Structures\Wall_004\Sheets\122048_004_WP001.dgn

DESIGN AGENCY
Palmer ENGINEERING
8350 E. KEMPER ROAD
SUITE B
CINCINNATI, OH 45249
(513) 469-1600

DESIGNER RJB

REVIEWER BJF 04/12/25

PROJECT ID 122048

SUBSET 1 | TOTAL 10

SHEET P.193 | TOTAL P. 421

STANDARD DRAWINGS AND SUPPLEMENTAL SPECIFICATIONS

REFER TO THE FOLLOWING STANDARD BRIDGE DRAWINGS:

VPF-1-24 REVISED 7/19/24

REFER TO THE FOLLOWING SUPPLEMENTAL SPECIFICATION:
800 REVISED 7/19/24

DESIGN SPECIFICATIONS

THIS STRUCTURE CONFORMS TO THE 9TH EDITION OF THE "LRFD BRIDGE DESIGN SPECIFICATIONS" ADOPTED BY THE AMERICAN ASSOCIATION OF STATE HIGHWAY AND TRANSPORTATION OFFICIALS, 2020 AND THE ODOT BRIDGE DESIGN MANUAL, 2020.

DESIGN ASSUMPTIONS

SOIL UNIT WEIGHT, γ = 120 pcf
ANGLE OF INTERNAL FRICTION, ϕ 30°

DESIGN DATA

CONCRETE CLASS QC1 - COMPRESSIVE STRENGTH 4.0 KSI
(DRILLED SHAFT CAP AND MOMENT SLAB)

CONCRETE CLASS QC5, WITH 3/8" MAX. AGGREGATE SIZE - COMPRESSIVE STRENGTH 4.5 KSI (DRILLED SHAFTS)

CONCRETE CLASS QC SCC, WITH 1" MAX. AGGREGATE SIZE - COMPRESSIVE STRENGTH 4.5 KSI (TEXAS C412 RAILING)

GALVANIZED STEEL REINFORCEMENT - MIN. YIELD STRENGTH - 60 KSI

PERMANENT STEEL CASING - ASTM A252 GRADE 3 - MINIMUM YIELD STRESS 45 KSI

LATERALLY LOADED DRILLED SHAFTS, 60" TANGENT DRILLED SHAFT WALL - SHAFTS 1-23

THE MAXIMUM FACTORED LATERAL LOAD AND BENDING MOMENT TO BE SUPPORTED BY EACH DRILLED SHAFT ARE 249 KIPS, AND 2,905 KIP-FEET, RESPECTIVELY. THESE LOADS PRODUCE A MAXIMUM FACTORED BENDING MOMENT OF 5,560 KIP-FEET, AND A MAXIMUM FACTORED SHEAR OF 310 KIPS, WITHIN THE DRILLED SHAFT.

LATERALLY LOADED DRILLED SHAFTS, 60" TANGENT DRILLED SHAFT WALL - SHAFTS 24-34

THE MAXIMUM FACTORED LATERAL LOAD AND BENDING MOMENT TO BE SUPPORTED BY EACH DRILLED SHAFT ARE 152 KIPS, AND 1,493 KIP-FEET, RESPECTIVELY. THESE LOADS PRODUCE A MAXIMUM FACTORED BENDING MOMENT OF 2,842 KIP-FEET, AND A MAXIMUM FACTORED SHEAR OF 176 KIPS, WITHIN THE DRILLED SHAFT.

ITEM 507 - STEEL PILES, MISC.: SOLDIER PILES, W33X387

THIS WORK CONSISTS OF FURNISHING AND PLACING STEEL SOLDIER PILES INTO DRILLED HOLES. FURNISH SOLDIER PILES CONSISTING OF STRUCTURAL STEEL MEMBERS THAT MEET THE PLAN REQUIREMENTS AND CONFORM TO ASTM A572, GRADE 50 IN ACCORDANCE WITH C&MS 711.01. GALVANIZE SOLDIER PILES AS SHOWN ON THE PLANS AND IN ACCORDANCE WITH C&MS 711.02. DO NOT FIELD WELD OR SPLICE STEEL SOLDIER PILES.

THE DEPARTMENT WILL MEASURE SOLDIER PILES ALONG THE AXIS OF THE SOLDIER PILE FROM THE BOTTOM OF CAP ELEVATION TO THE BOTTOM OF THE DRILLED SHAFT, AS DETERMINED BY THE ENGINEER. THE DEPARTMENT WILL PAY FOR SOLDIER PILES AT THE CONTRACT UNIT PRICE PER FOOT FOR ITEM 507, STEEL PILES, MISC.: SOLDIER PILES, W33X387.

ITEM 512 - SEALING OF CONCRETE SURFACES (EPOXY-URETHANE)

SEAL SURFACES OF THE CAST-IN-PLACE CONCRETE WALL FACING, PILASTERS, RAILING AND COPING AS SHOWN IN THE PLANS WITH AN EPOXY URETHANE SEALER ACCORDING TO C&MS 512. COLOR SHALL BE LIGHT NEUTRAL (FEDERAL STD. #17778).

ITEM 512 - SEALING OF CONCRETE SURFACES, AS PER PLAN, (PERMANENT GRAFFITI PROTECTION)

APPLY A PERMANENT GRAFFITI COATING QUALIFIED ACCORDING TO S1083 THAT IS COMPATIBLE WITH THE CONCRETE SEALER OVER WHICH IT IS APPLIED. APPLY THE GRAFFITI COATING IN ACCORDANCE WITH THE MANUFACTURER'S PRINTED INSTRUCTIONS.

GRAFFITI PROTECTION SHALL BE APPLIED TO ALL SURFACES SEALED WITH EPOXY URETHANE SEALANT. GRAFFITI PROTECTION SHALL HAVE A CLEAR FINISH.

ITEM 513 - WELDED STUD SHEAR CONNECTORS, AS PER PLAN

WELD HEADED STEEL STUDS TO THE STEEL CASING TO CONNECT THE CAST-IN-PLACE CONCRETE COLLAR TO THE DRILLED SHAFT. ATTACH HEADED STUDS ACCORDING TO THE C&MS 513.22 AND AS SHOWN IN THE PLANS. THE CONTRACTOR MAY ATTACH THE STUDS EITHER BEFORE PLACING THE CASING IN THE DRILLED HOLE OR AFTER EXCAVATING BEHIND THE WALL. PROTECT THE HEADED STUDS FROM DAMAGE UNTIL THE CONCRETE COLLAR IS POURED. REPAIR OR REPLACE DAMAGED HEADED STUDS AT NO EXPENSE TO THE DEPARTMENT.

ITEM 517 - RAILING MISC.: TEXAS RAILING

THIS WORK CONSISTS OF FURNISHING AND PLACING TEXAS RAIL CONCRETE RAILING AS SPECIFIED IN THE PLANS.

ARCHITECTURAL FORMLINER IS NOT PERMITTED TO CREATE THE SHAPE OF THE RAILING.

USE CONCRETE CLASS QC SCC CONCRETE.

PAYMENT FOR THIS ITEM WILL BE ON A LINEAR FOOT BASIS. THE APPROXIMATE AVERAGE RAILING AREA PER FOOT OF TEXAS RAILING IS 8.7 SQ FT.

ITEM 607 - VANDAL PROTECTION FENCE, 6' STRAIGHT, COATED FABRIC, AS PER PLAN

PROVIDE 6' STRAIGHT VANDAL PROTECTION FENCE (PS-2 OF STANDARD DRAWING VPF-1-24) WITH THE FOLLOWING EXCEPTIONS:

1.) USE NON-STANDARD BASE PLATES AS DETAILED ON SHEET 7/10. BASE PLATES SHALL BE 50 KSI GALVANIZED STEEL.

2.) PVC COATING SHALL BE BLACK IN COLOR CLOSELY APPROACHING FEDERAL COLOR NUMBER 17038.

VANDAL FENCE POSTS, RAILS, BASE PLATES, ANCHOR BOLTS, AND ANY OTHER VANDAL FENCE ITEMS NOT RECIEVING A PVC COATING SHALL BE GALVANIZED AS NOTED IN THE STANDARD DRAWING AND TOPCOATED WITH AN ORGANIC COATING PER THE REQUIREMENTS OF AASHTO M181 FOR GRADE 2 POSTS. THE TOPCOAT COLOR SHALL MATCH THE PVC COATING COLOR.

PAYMENT FOR THIS WORK INCLUDES ALL MATERIALS, LABOR, EQUIPMENT, AND ANY MISCELLANEOUS APPURTENANCES NECESSARY TO COMPLETE INSTALLATION ACCORDING TO THE STANDARD DRAWING, PLANS, AND THIS PLAN NOTE.

ITEM 524 - DRILLED SHAFTS, 60" DIAMETER ABOVE BEDROCK, AS PER PLAN

THIS WORK CONSISTS OF FURNISHING AND INSTALLING DRILLED SHAFTS FOR WALL NO. 04. THE DRILLED SHAFTS ARE REINFORCED WITH STEEL PILES AND REINFORCING STEEL CAGES (1-23) AND REINFORCING STEEL CAGES (24-34). DRILLED SHAFTS 1-23 INCLUDE PERMANENT STEEL CASING. FURNISH AND INSTALL THE DRILLED SHAFTS ACCORDING TO C&MS 524.

EXCAVATE THE HOLE FOR THE DRILLED SHAFT WITHIN 3 INCHES OF THE PLAN LOCATION. PLACE THE SOLDIER PILE WITHIN THE HOLE SO IT IS VERTICAL AND NOT INCLINED MORE THAN 1 INCH BETWEEN TOP TO BOTTOM. PLACE THE SOLDIER PILE SO THAT THE FLANGES ARE PARALLEL TO THE CENTERLINE OF THE ROW OF DRILLED SHAFTS. DO NOT ALLOW THE ORIENTATION OF THE FLANGES TO VARY BY MORE THAN 10 DEGREES. SUPPORT THE SOLDIER PILE SO THAT IT DOES NOT MOVE DURING CONCRETE PLACEMENT.

USE CLASS QC 1 CONCRETE ACCORDING TO C&MS 511. PLACE CONCRETE TO THE ELEVATION FOR THE TOP OF THE DRILLED SHAFT. THE CONTRACTOR MAY PLACE CONCRETE USING THE FREE FALL METHOD PROVIDED THE DEPTH OF WATER IS LESS THAN 6 INCHES AND THE CONCRETE FALLS WITHOUT STRIKING THE SIDES OF THE HOLE. POURING CONCRETE ALONG THE WEB OF THE SOLDIER PILE IS ACCEPTABLE.

CASING SECTION LENGTH SHALL BE MAXIMIZED TO MINIMIZE NUMBER OF FIELD SPLICE LOCATIONS. THE USE OF SPIRAL WELDED PIPE IS PERMITTED.

CHECK THE POSITION, THE VERTICAL ALIGNMENT AND ORIENTATION OF THE SOLDIER PILE IMMEDIATELY AFTER CONCRETE PLACEMENT. MAKE CORRECTIONS AS NECESSARY TO MEET THE ABOVE TOLERANCES.

THE DEPARTMENT WILL MEASURE DRILLED SHAFTS ABOVE BEDROCK, AS PER PLAN, ALONG THE AXIS OF THE DRILLED SHAFT FROM THE GREATER OF THE EXISTING GROUND SURFACE TO THE BOTTOM OF THE DRILLED SHAFT OR THE BOTTOM OF THE CAP TO THE BOTTOM OF THE DRILLED SHAFT.

THIS ITEM SHALL ALSO INCLUDE FOR PAYMENT REINFORCING STEEL, AUGERED HOLE, AND THE #8 STONE PLACED IN THE AUGERED HOLE BETWEEN THE SHAFTS.

PLAN ABBREVIATIONS

ABUT.	ABUTMENT
BF	BACK FACE (BACKFILL SIDE)
BRG.	BEARING
C/C	CENTER TO CENTER
C.J.	CONSTRUCTION JOINT
DIA.	DIAMETER
EL.	ELEVATION
EF	EACH FACE
EQ. SPA.	EQUALLY SPACED
F.A.	FORWARD ABUTMENT
FF	FRONT FACE (CREEK SIDE)
MAX.	MAXIMUM
MIN.	MINIMUM
N.P.C.P.P.	NON-PERFORATED CORRUGATED PLASTIC PIPE
O/O	OUT TO OUT
PEJF	PREFORMED EXPANSION JOINT FILLER
P.C.P.P.	PERFORATED CORRUGATED PLASTIC PIPE
R.A.	REAR ABUTMENT
SPA.	SPACE, SPACES, SPACED
STA.	STATION
T.O.S.	TOP OF SLOPE
TYP.	TYPICAL

ADDM' NO.	DATE	DESCRIPTION
1	09/01/25	SHEET REVISIONS

DATE COMPLETED

GENERAL NOTES
RETAINING WALL NO. 04 ALONG I-75 NORTHBOUND

DESIGN AGENCY
Palmer ENGINEERING
8350 E. KEMPER ROAD
SUITE B
CINCINNATI, OH 45249
(513) 469-1600

DESIGNER RJB
REVIEWER BJF 04/12/25
PROJECT ID 122048
SUBSET 2 TOTAL 10
SHEET P.194 TOTAL P. 421

HAM-IR75-1.05

MODEL: Sheet PAPERSIZE: 34x22 (in.) DATE: 8/27/2025 TIME: 1:14:52 PM PLTDRV: OHDOT_PDF.pltcfg PENTBL: OHDOT_Pen.tbl USER: swalker@palmernet.com
pw:\\ohiodot-pw.bentley.com:ohiodot-pw-02\Documents\01 Active Projects\District 08\Hamilton\122048\402-Engineering_PalmerEngineering\Structures\Wall_004\Sheets\122048_004_WN001.dgn
WORKSPACE: OHDOTCivil02 WORKSET: 122048 PRODUCT: OpenRoadsDesigner 24.00.00.205

ESTIMATED QUANTITIES					CALC: RJB DATE: 8/18/25	CHECK: CVK DATE: 8/18/25
ITEM	ITEM EXT.	TOTAL 01/IMS/13	UNIT	DESCRIPTION	GENERAL	SHEET
503	21300	LS		UNCLASSIFIED EXCAVATION	LS	
507	00400	1872	FT	STEEL PILES, MISC.: SOLDIER PILES, W33x387	1872	
509	26000	13104	LB	GALVANIZED STEEL REINFORCEMENT	13104	
510	10000	8	EACH	DOWEL HOLES WITH NONSHRINK, NONMETALLIC GROUT	8	
511	53010	82	CY	CLASS QC1 CONCRETE, MISC.:SHAFT CAP & COLLAR	82	
511	53010	28	CY	CLASS QC1 CONCRETE, MISC.:MOMENT SLAB	28	
512	10000	245	SY	SEALING OF CONCRETE SURFACES	245	
512	10001	245	SY	SEALING OF CONCRETE SURFACES, AS PER PLAN	245	2 | 10
513	20001	28	EACH	WELDED STUD SHEAR CONNECTORS, AS PER PLAN	28	2 | 10
516	13200	10	SF	½" PREFORMED EXPANSION JOINT FILLER	10	
516	13600	41	SF	1" PREFORMED EXPANSION JOINT FILLER	41	
517	76300	111	FT	RAILING, MISC.:TEXAS RAILING	111	
524	94915	2528	FT	DRILLED SHAFTS, 60" DIAMETER, ABOVE BEDROCK, AS PER PLAN	2528	2 | 10
607	39900	112	FT	VANDAL PROTECTION FENCE, 6' STRAIGHT, COATED FABRIC	112	

1

1	09/01/25	SHEET REVISIONS
ADDM' NO.	DATE	DESCRIPTION
DATE COMPLETED		

ESTIMATED QUANTITIES
RETAINING WALL NO. 04 ALONG I-75 NORTHBOUND

DESIGN AGENCY
Palmer ENGINEERING
8350 E. KEMPER ROAD
SUITE B
CINCINNATI, OH 45249
(513) 469-1600

DESIGNER RJB

REVIEWER BJF 04/12/25

PROJECT ID 122048

SUBSET 3 | TOTAL 10

SHEET P.195 | TOTAL P. 421

HAM-IR75-1.05

MODEL: Sheet PAPERSIZE: 34x22 (in.) DATE: 8/27/2025 TIME: 1:15:00 PM PLTDRV: OHDOT_PDF.pltcfg PENTBL: OHDOT_Pen.tbl USER: swalker@palmernet.com WORKSPACE: OHDOTCEv02 WORKSET: 122048 PRODUCT: OpenRoadsDesigner 24.00.00.205
pw:\\ohiodot-pw.bentley.com:ohiodot-pw-02\Documents\01 Active Projects\District 08\Hamilton\122048\402-Engineering_PalmerEngineering\Structures\Wall_004\Sheets\122048_004_WQ001.dgn

MODEL: BLP_Wall_4-6 - Wall_4-Tangent_Drilled_Shaft-Plan 1 [Sheet] PAPERSIZE: 34x22 (in.) DATE: 8/27/2025 TIME: 1:15:06 PM PLTDRV: OHDOT_PDF.pltcfg PENTBL: OHDOT_Pen.tbl USER: swalker@palmernet.com WORKSPACE: OHDOTCEv02 WORKSET: 122048 PRODUCT: OpenRoadsDesigner 24.00.00.205
pw:\\ohiodot-pw.bentley.com:ohiodot-pw-02\Documents\01 Active Projects\District 08\Hamilton\122048\402-Engineering_PalmerEngineering\Structures\Wall_004\Sheets\122048_004_WT001.dgn

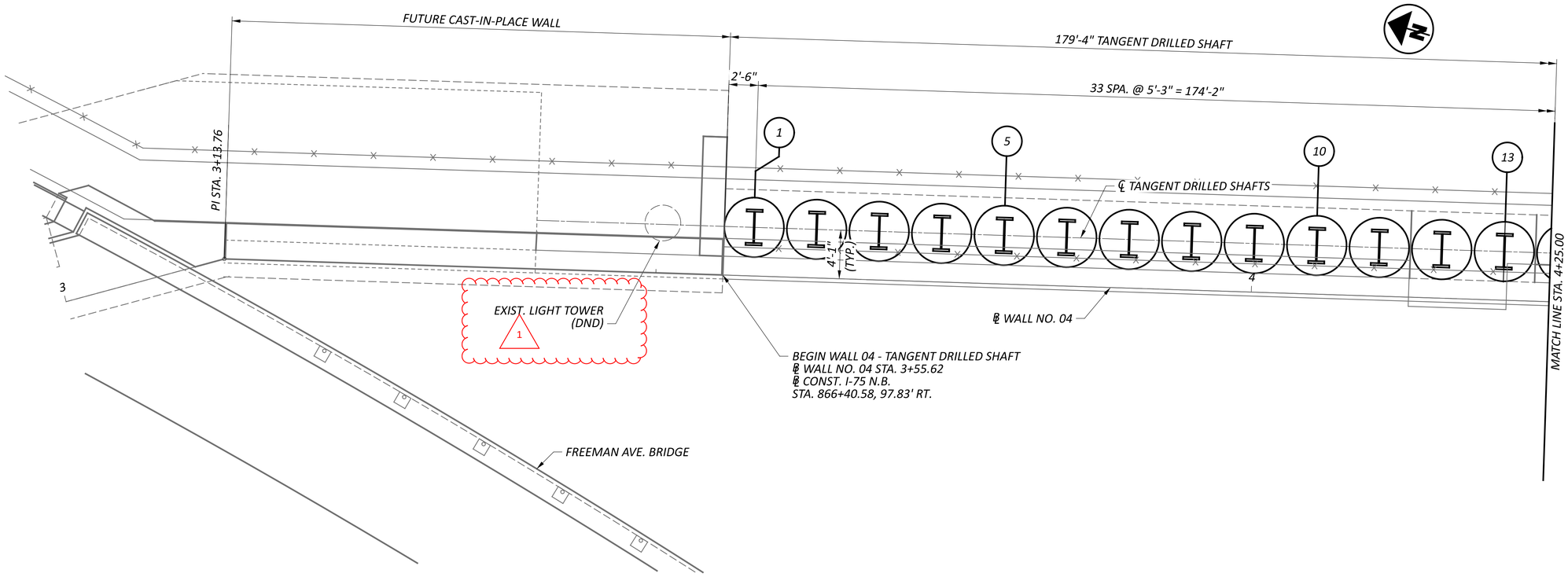

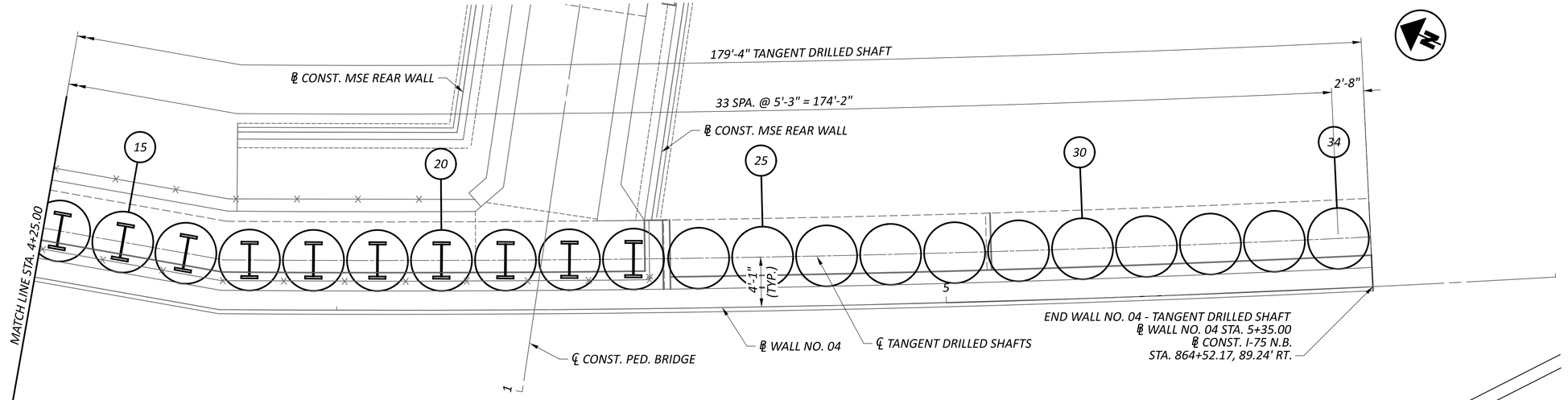

FOUNDATION PLAN - TANGENT DRILLED SHAFT

PROP. 12" STORM

NOTES

1. SEE SHEET 5/10 FOR ELEVATION TABLE.
2. SEE SHEET 2/10 FOR GENERAL NOTES.

ADDM' NO.	DATE	DESCRIPTION
1	09/01/25	SHEET REVISIONS
DATE COMPLETED		

HORIZONTAL SCALE IN FEET
0 2.5 5 10

FOUNDATION PLAN
RETAINING WALL NO. 04 ALONG I-75 NORTHBOUND

DESIGN AGENCY
Palmer ENGINEERING
8350 E. KEMPER ROAD
SUITE B
CINCINNATI, OH 45249
(513) 469-1600

DESIGNER RJB
REVIEWER BJF 04/12/25
PROJECT ID 112048
SUBSET 4 TOTAL 10
SHEET P.196 TOTAL P. 421

DRILLED SHAFT LOCATIONS AND ELEVATIONS - WALL NO. 04

SHAFT NUMBER	WALL TYPE	STA AT CL OF SHAFT	BOT. OF CAP / TOP OF SHAFT EL.	TOP OF PILE EL.	TOP OF CASING EL.	BOT OF SHAFT EL.	ESTIMATED CONC. SHAFT LENGTH (FT)	ESTIMATED PILE LENGTH (FT)	ITEM 524 DRILLED SHAFT LENGTH (FT)	CASING LENGTH (FT)	ASSUMED BOT. OF WALL FACING FOOTER EL.*
1	TANGENT DS	3+58.12	505.76	505.76	505.76	424.50	81.26	81.26	82.33	50.00	474.50
2	TANGENT DS	3+63.37	505.95	505.95	505.95	424.50	81.45	81.45	82.12	50.00	474.50
3	TANGENT DS	3+68.62	506.14	506.14	506.14	424.50	81.64	81.64	81.91	50.00	474.50
4	TANGENT DS	3+73.87	506.33	506.33	506.33	424.50	81.83	81.83	81.83	50.00	474.50
5	TANGENT DS	3+79.12	506.52	506.52	506.52	424.75	81.77	81.77	81.77	50.00	474.75
6	TANGENT DS	3+84.37	506.71	506.71	506.71	424.75	81.96	81.96	81.96	50.00	474.75
7	TANGENT DS	3+89.62	506.90	506.90	506.90	424.75	82.15	82.15	82.15	50.00	474.75
8	TANGENT DS	3+94.87	507.09	507.09	507.09	424.75	82.34	82.34	82.54	50.00	474.75
9	TANGENT DS	4+00.12	507.28	507.28	507.28	424.75	82.53	82.53	84.37	50.00	474.75
10	TANGENT DS	4+05.37	507.47	507.47	507.47	425.00	82.47	82.47	85.13	50.00	475.00
11	TANGENT DS	4+10.62	507.66	507.66	507.66	425.00	82.66	82.66	85.48	50.00	475.00
12	TANGENT DS	4+15.87	507.85	507.85	507.85	425.00	82.85	82.85	85.81	50.00	475.00
13	TANGENT DS	4+21.12	508.04	508.04	508.04	425.00	83.04	83.04	85.76	50.00	475.00
14	TANGENT DS	4+26.37	508.23	508.23	508.23	425.00	83.23	83.23	85.35	50.00	475.00
15	TANGENT DS	4+31.62	508.42	508.42	508.42	425.00	83.42	83.42	83.96	50.00	475.00
16	TANGENT DS	4+36.87	508.61	508.61	508.61	429.50	79.11	79.11	79.11	62.00	475.50
17	TANGENT DS	4+42.82	508.83	508.83	508.83	429.50	79.33	79.33	79.33	62.00	475.50
18	TANGENT DS	4+48.08	509.02	509.02	509.02	429.50	79.52	79.52	79.52	62.00	475.50
19	TANGENT DS	4+53.34	509.21	509.21	509.21	429.50	79.71	79.71	79.71	62.00	475.50
20	TANGENT DS	4+58.60	509.40	509.40	509.40	429.75	79.65	79.65	79.65	62.00	475.75
21	TANGENT DS	4+63.86	509.47	509.47	509.47	429.75	79.72	79.72	79.72	62.00	475.75
22	TANGENT DS	4+69.12	509.47	509.47	509.47	429.75	79.72	79.72	79.72	62.00	475.75
23	TANGENT DS	4+74.39	509.47	509.47	509.47	429.75	79.72	79.72	79.72	62.00	475.75
24	TANGENT DS	4+79.74	501.62	N/A	N/A	437.00	64.62	N/A	65.15	N/A	476.00
25	TANGENT DS	4+85.00	501.62	N/A	N/A	437.00	64.62	N/A	65.05	N/A	476.00
26	TANGENT DS	4+90.26	501.62	N/A	N/A	437.00	64.62	N/A	64.95	N/A	476.00
27	TANGENT DS	4+95.52	501.62	N/A	N/A	437.00	64.62	N/A	64.86	N/A	476.00
28	TANGENT DS	5+00.78	501.62	N/A	N/A	437.00	64.62	N/A	64.72	N/A	476.00
29	TANGENT DS	5+06.05	497.95	N/A	N/A	449.00	48.95	N/A	52.58	N/A	476.50
30	TANGENT DS	5+11.31	497.95	N/A	N/A	449.00	48.95	N/A	52.44	N/A	476.50
31	TANGENT DS	5+16.57	497.95	N/A	N/A	449.00	48.95	N/A	52.29	N/A	476.50
32	TANGENT DS	5+21.83	497.95	N/A	N/A	449.00	48.95	N/A	52.15	N/A	476.50
33	TANGENT DS	5+27.09	497.95	N/A	N/A	449.00	48.95	N/A	52.01	N/A	476.50
34	TANGENT DS	5+32.35	497.95	N/A	N/A	449.00	48.95	N/A	51.87	N/A	476.50

REINFORCING STEEL LIST (FOR REFERENCE ONLY)

MARK	NUMBER TOTAL	LENGTH	WEIGHT (LBS.)	TYPE	DIMENSIONS A	B	C
SP401	15	659' - 3"	6,606	27	0' - 12"	4' - 0"	50' - 0" *
SP402	8	808' - 7"	4,321	27	0' - 12"	4' - 0"	62' - 0" *
		SUBTOTAL **	10,927				
SP501	1	553' - 12"	578	27	0' - 9"	4' - 0"	31' - 3" *
SP502	1	558' - 1"	583	27	0' - 9"	4' - 0"	31' - 6" *
SP503	1	560' - 10"	585	27	0' - 9"	4' - 0"	31' - 8" *
SP504	2	563' - 7"	1,176	27	0' - 9"	4' - 0"	31' - 10" *
SP505	1	566' - 4"	591	27	0' - 9"	4' - 0"	32' - 0" *
SP506	1	569' - 1"	594	27	0' - 9"	4' - 0"	32' - 2" *
SP507	1	571' - 11"	597	27	0' - 9"	4' - 0"	32' - 4" *
SP508	2	574' - 8"	1,199	27	0' - 9"	4' - 0"	32' - 6" *
SP509	1	577' - 5"	603	27	0' - 9"	4' - 0"	32' - 8" *
SP510	1	580' - 2"	606	27	0' - 9"	4' - 0"	32' - 10" *
SP511	1	582' - 11"	608	27	0' - 9"	4' - 0"	33' - 0" *
SP512	1	587' - 0"	613	27	0' - 9"	4' - 0"	33' - 3" *
SP513	1	589' - 9"	616	27	0' - 9"	4' - 0"	33' - 5" *
SP514	1	319' - 8"	334	27	0' - 9"	4' - 0"	17' - 1" *
SP515	1	323' - 10"	338	27	0' - 9"	4' - 0"	17' - 4" *
SP516	1	326' - 7"	341	27	0' - 9"	4' - 0"	17' - 6" *
SP517	5	329' - 4"	1,718	27	0' - 9"	4' - 0"	17' - 8" *
SP518	5	1106' - 7"	5,771	27	0' - 9"	4' - 0"	64' - 8" *
SP519	6	847' - 6"	5,304	27	0' - 9"	4' - 0"	49' - 0" *
		SUBTOTAL **	22,755				
DS1101	72	84' - 5"	32,293	16	82' - 10" *		
DS1102	144	84' - 11"	65,000	16	83' - 4 ½" *		
DS1103	72	85' - 4"	32,644	16	83' - 9" *		
DS1104	108	85' - 8"	49,156	16	84' - 1" *		
DS1105	72	86' - 1"	32,930	16	84' - 6" *		
DS1106	72	86' - 5"	33,058	16	84' - 10" *		
DS1107	72	82' - 4"	31,496	16	80' - 9" *		
DS1108	216	82' - 9"	94,965	16	81' - 2" *		
DS1109	180	67' - 8"	64,713	16	66' - 1" *		
DS1110	216	52' - 0"	59,268	16	50' - 4 ½" *		
		SUBTOTAL**	495,523				

** = ESTIMATED TOTAL LENGTH*

*** SUBTOTALS ARE FOR REFERENCE ONLY (INCLUDE WITH ITEM 524 FOR PAYMENT)*

REINFORCING STEEL LOCATION

SHAFT NUMBER	BARS USED
1	SP401, SP501, DS1101
2	SP401, SP502, DS1101
3	SP401, SP503, DS1102
4	SP401, SP504, DS1102
5	SP401, SP504, DS1102
6	SP401, SP505, DS1102
7	SP401, SP506, DS1103
8	SP401, SP507, DS1103
9	SP401, SP508, DS1104
10	SP401, SP508, DS1104
11	SP401, SP509, DS1104
12	SP401, SP510, DS1105
13	SP401, SP511, DS1105
14	SP401, SP512, DS1106
15	SP401, SP513, DS1106
16	SP402, SP514, DS1107
17	SP402, SP515, DS1107
18	SP402, SP516, DS1108
19	SP402, SP517, DS1108
20	SP402, SP517, DS1108
21	SP402, SP517, DS1108
22	SP402, SP517, DS1108
23	SP402, SP517, DS1108
24	SP518, DS1109
25	SP518, DS1109
26	SP518, DS1109
27	SP518, DS1109
28	SP518, DS1109
29	SP519, DS1110
30	SP519, DS1110
31	SP519, DS1110
32	SP519, DS1110
33	SP519, DS1110
34	SP519, DS1110

1

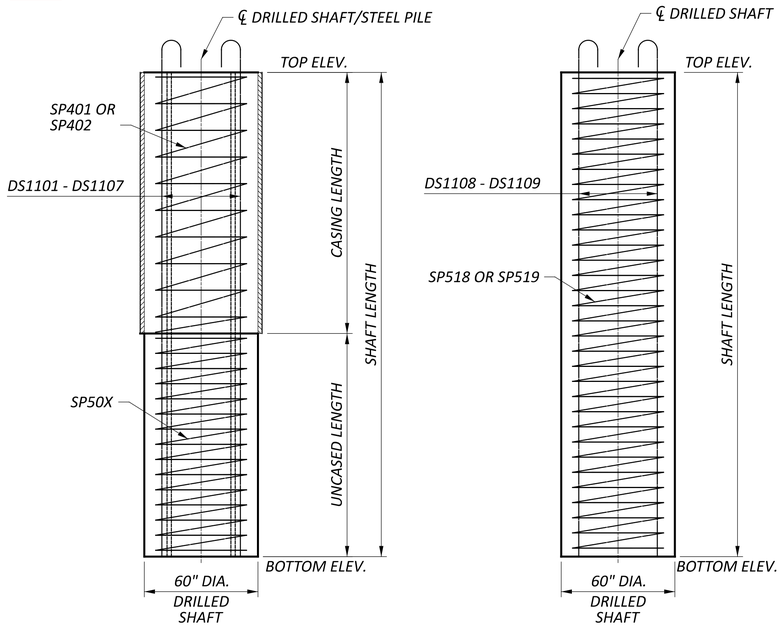

SHAFTS 1 - 23

SHAFTS 24 - 34

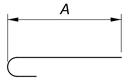

TYPE-16

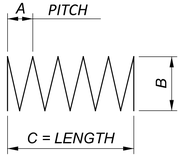

TYPE-27

NOTES

1. SEE SHEET 4/10 FOR FOUNDATION PLAN.

* THE ASSUMED BOTTOM OF WALL FACING FOOTER IS THE ASSUMED LOWEST ELEVATION OF DISTURBED SOIL. THIS IS THE BOTTOM ELEVATION USED FOR THE DESIGN GRADE OF THE RETAINING WALL.

1	09/01/25	SHEET REVISIONS
ADDM' NO.	DATE	DESCRIPTION
DATE COMPLETED		

CYLINDER PILE ELEVATION TABLE
RETAINING WALL NO. 04 ALONG I-75 NORTHBOUND

DESIGN AGENCY
Palmer ENGINEERING
8550 E. KEMPER ROAD
SUITE B
CINCINNATI, OH 45249
(513) 469-1600

DESIGNER RJB
REVIEWER BJF 04/12/25
PROJECT ID 122048
SUBSET 5 TOTAL 10
SHEET P.197 TOTAL P. 421

HAM-IR75-1.05

MODEL: Sheet PAPERSIZE: 34x22 (in.) DATE: 8/27/2025 TIME: 1:15:13 PM PLTDRV: OHDOT_PDF.pltcfg PENTBL: OHDOT_Pen.tbl USER: swalker@palmernet.com WORKSPACE: OHDOTCtv02 WORKSET: 122048 PRODUCT: OpenRoadsDesigner 24.00.00.205
pw:\\ohiodot-pw.bentley.com:ohiodot-pw-02\Documents\01 Active Projects\District 08\Hamilton\122048\02-Engineering_PalmerEngineering\Structures\Wall_004\Sheets\122048_004_WE002.dgn

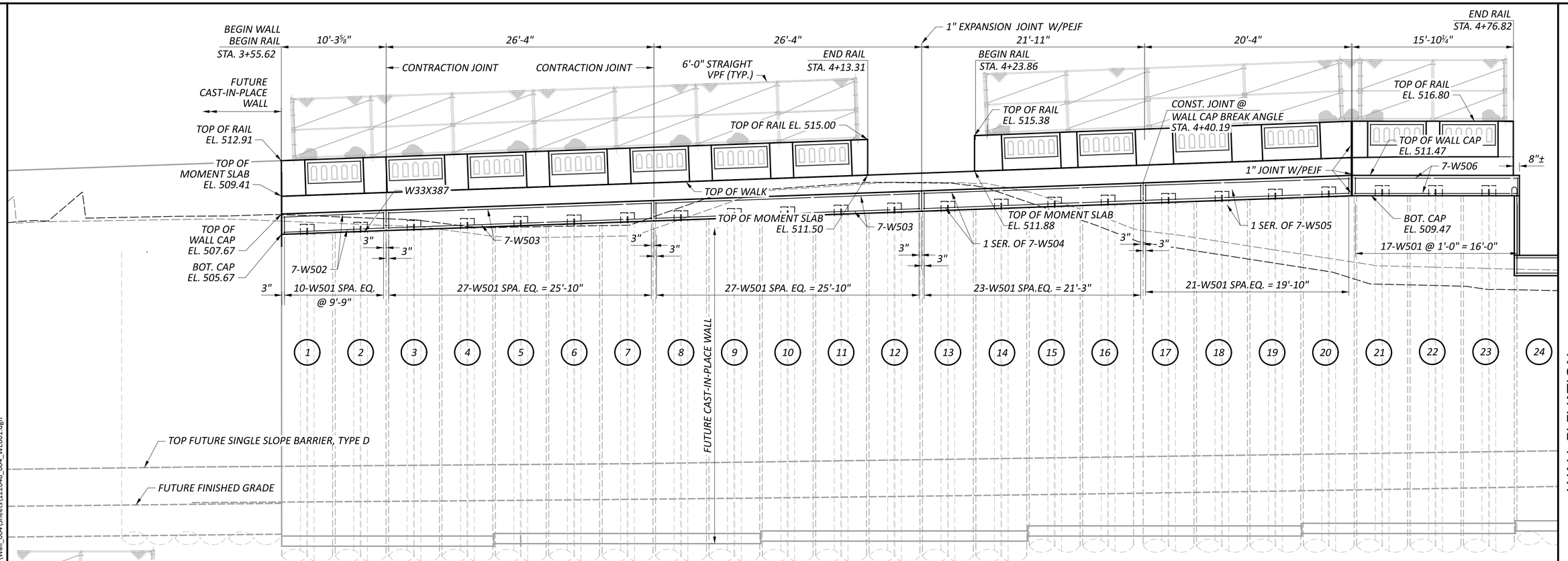

WALL NO. 04 ELEVATION

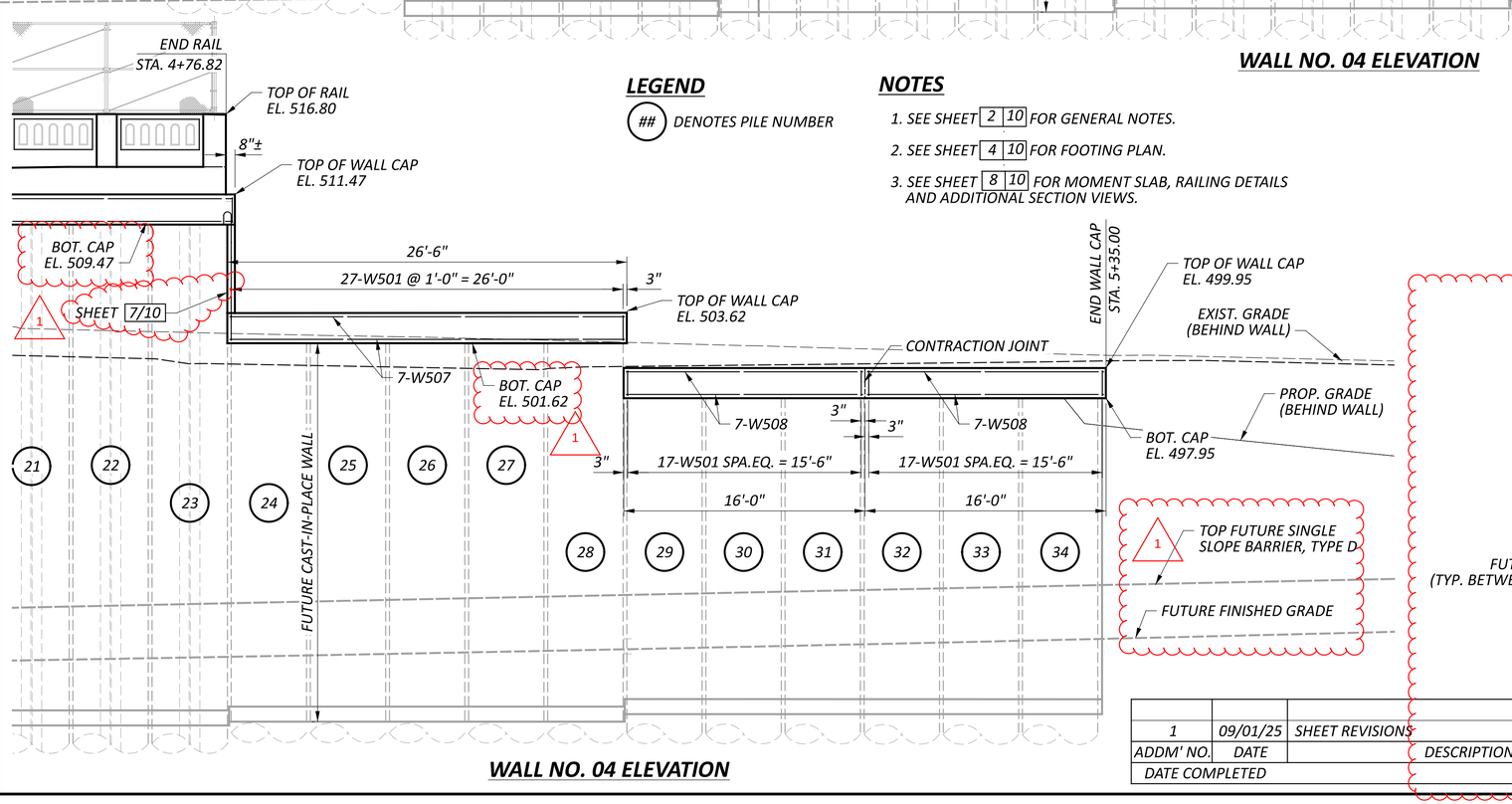

WALL NO. 04 ELEVATION

LEGEND

(##) DENOTES PILE NUMBER

NOTES

1. SEE SHEET 2 10 FOR GENERAL NOTES.
2. SEE SHEET 4 10 FOR FOOTING PLAN.
3. SEE SHEET 8 10 FOR MOMENT SLAB, RAILING DETAILS AND ADDITIONAL SECTION VIEWS.

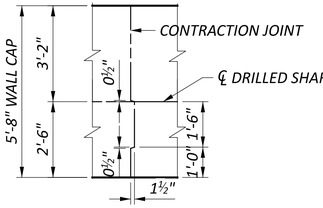

* BOTTOM OF CIP FACING IS ASSUMED TO BE 1' ABOVE THE ASSUMED BOTTOM OF WALL FACING FOOTER ON SHEET 5 10.

CONTRACTION JOINT PLAN

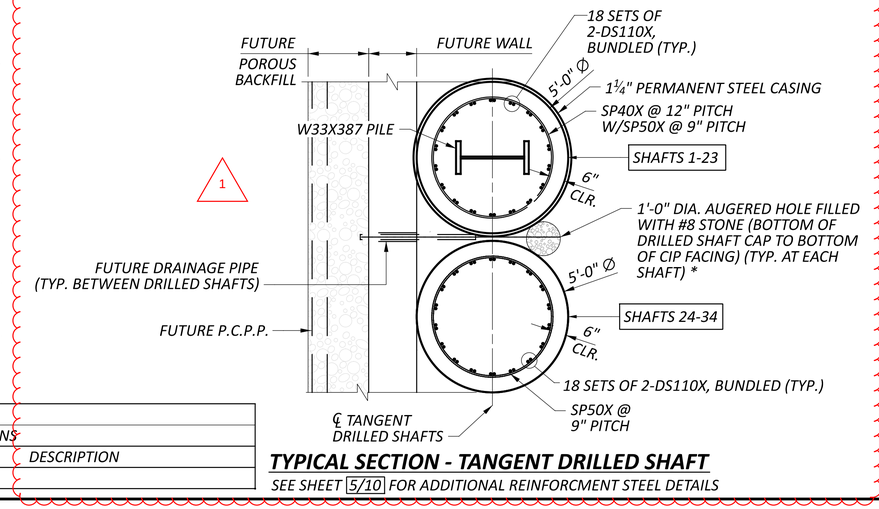

TYPICAL SECTION - TANGENT DRILLED SHAFT

SEE SHEET 5/10 FOR ADDITIONAL REINFORCMENT STEEL DETAILS

1	09/01/25	SHEET REVISIONS
ADDM' NO.	DATE	DESCRIPTION
DATE COMPLETED		

WALL ELEVATION
RETAINING WALL NO. 04 ALONG I-75 NORTHBOUND

DESIGN AGENCY
Palmer ENGINEERING
8350 E. KEMPER ROAD
SUITE B
CINCINNATI, OH 45249
(513) 469-1600

DESIGNER RJB
REVIEWER BJF 04/12/25
PROJECT ID 122048
SUBSET 6 TOTAL 10
SHEET P.198 TOTAL P. 421

HAM-IR75-1.05

MODEL: Plan--1 - Wall_4-Tangent_Drilled_Shaft-Plan-1 [Sheet] PAPERSIZE: 34x22 (in.) DATE: 8/27/2025 TIME: 4:45:33 PM PLTDRV: OHDOT_PDF.pltcfg PENTBL: OHDOT_Pen.tbl USER: swalker@palmernet.com WORKSPACE: OHDOTCEv02 WORKSET: 122048 PRODUCT: OpenRoadsDesigner 24.00.00.205
pw:\\ohiodot-pw.bentley.com:ohiodot-pw-02\Documents\01 Active Projects\District 08\Hamilton\122048\02-Engineering_PalmerEngineering\Structures\Wall_004\Sheets\122048_004_WE001.dgn

MODEL: Plan-1 - Wall_4-Tangent_Drilled_Shaft-Plan-2 [Sheet] PAPERSIZE: 34x22 (in.) DATE: 8/27/2025 TIME: 1:15:35 PM PLTDRV: OHDOT_PDF-pltcfg PENTBL: OHDOT_PenTbl.tbl USER: swalker@palmernet.com WORKSPACE: OHDOTCEv02 WORKSET: 122048 PRODUCT: OpenRoadsDesigner 24.00.00.205
pw:\\ohiodot-pw.bentley.com:ohiodot-pw-02\Documents\01 Active Projects\District 08\Hamilton\122048\402-Engineering_PalmerEngineering\Structures\Wall_004\Sheets\122048_004_WE001.dgn

HAM-IR75-1.06

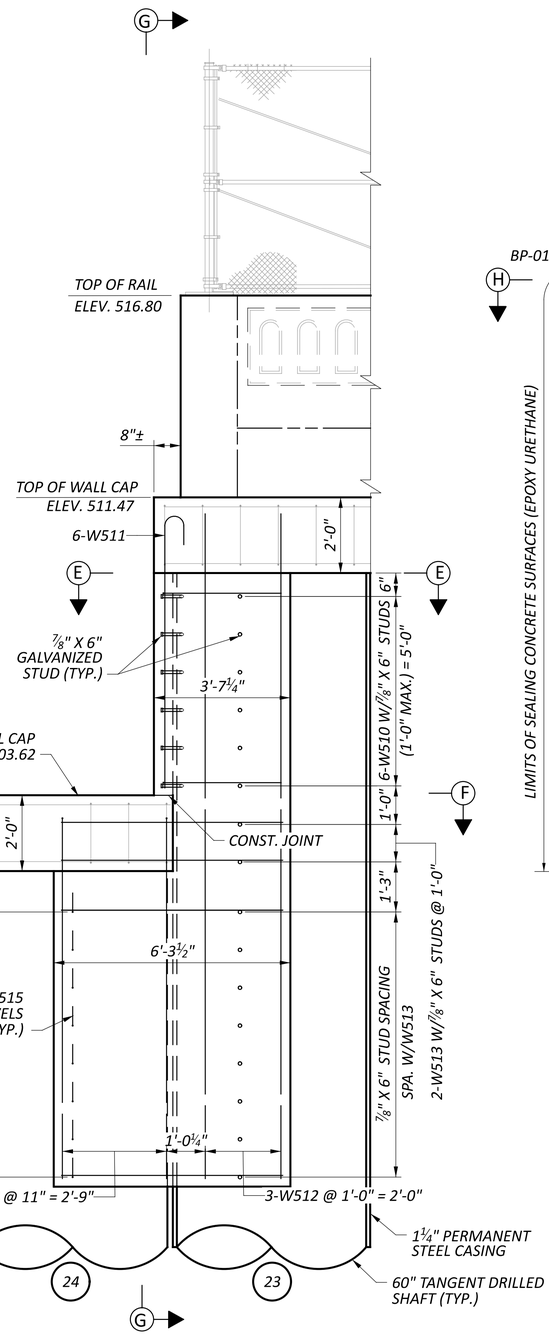

ELEVATION
SHAFT COLLAR

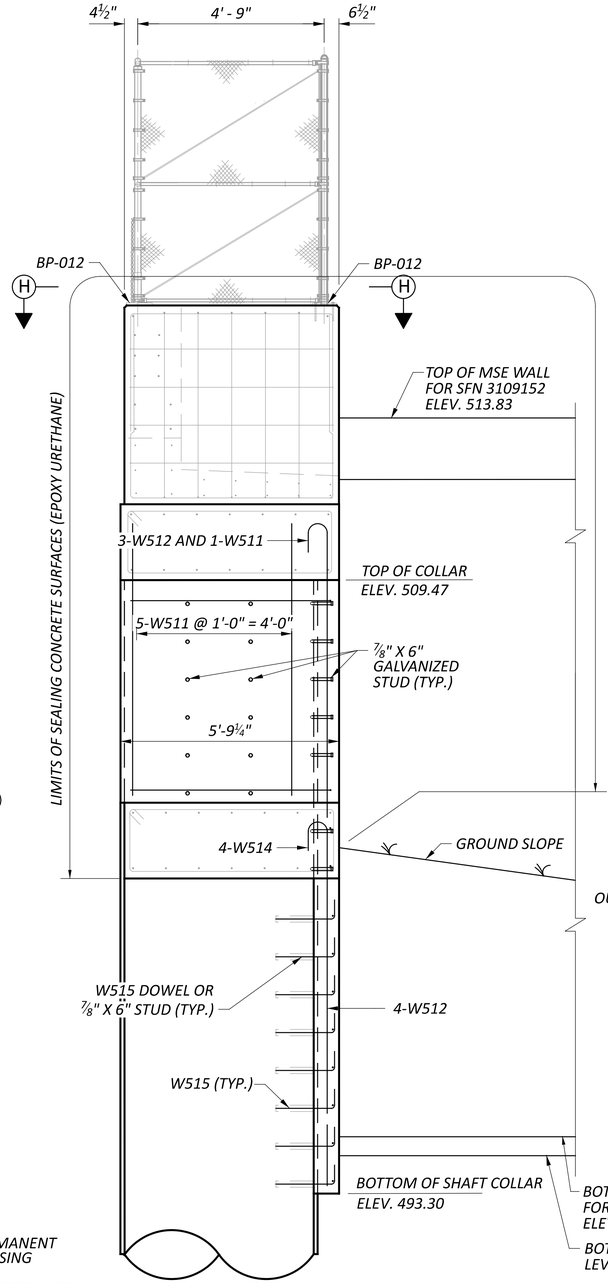

VIEW G-G

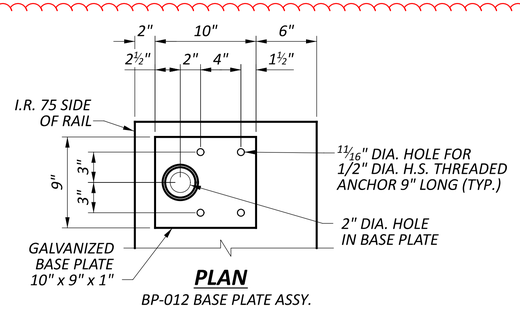

PLAN
BP-012 BASE PLATE ASSY.

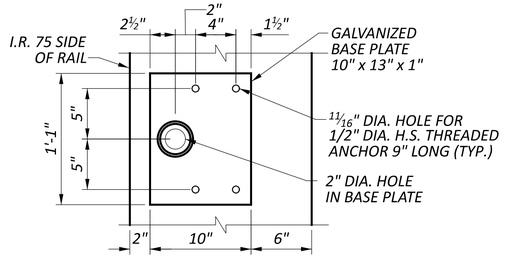

PLAN
BP-011 BASE PLATE ASSY.

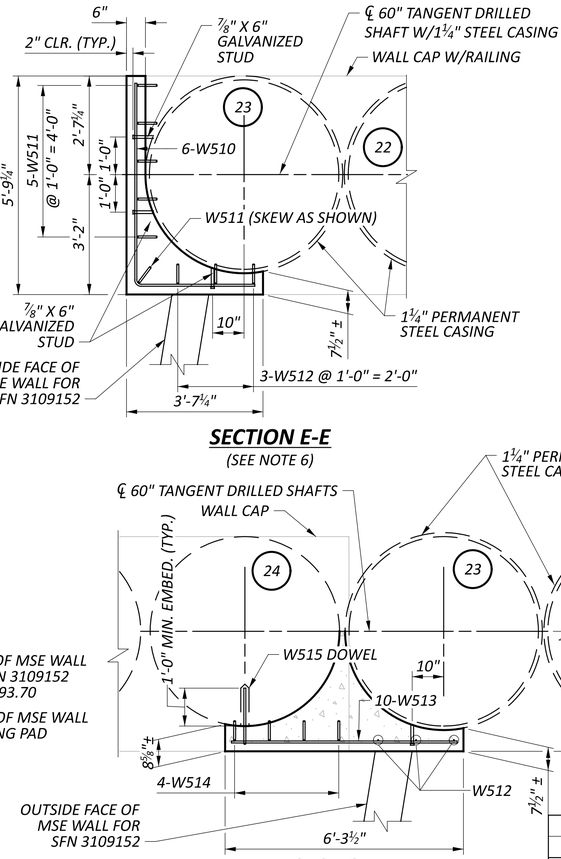

SECTION E-E
(SEE NOTE 6)

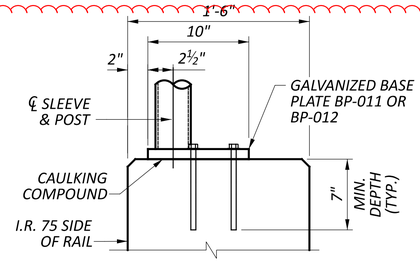

TYPICAL SECTION
BP-011 AND BP-012
BASE PLATE ASSY.

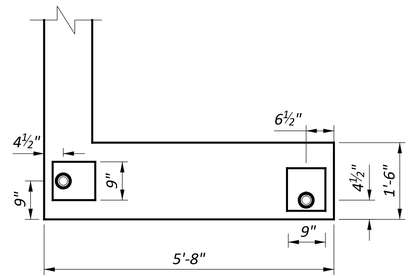

VIEW H-H
BASEPLATE ORIENTATION
(SEE NOTE 6)

SECTION F-F
(SEE NOTE 6)

1

LEGEND

(#) = 60" TANGENT DRILLED SHAFT NUMBER

NOTES

1. SEE SHEET 2/10 FOR GENERAL NOTES.
2. SEE SHEET 6/10 FOR WALL 04 ELEVATION.
3. SEE SHEET 8/10 AND 9/10 FOR RAILING DETAILS.
4. SEE STD. DWG. VPF-1-24 FOR ADDITIONAL DETAILS REGARDING THE BASEPLATE, POST SLEEVE, AND APPROVED ADHESIVE ANCHOR BOLT OPTIONS. BASEPLATE SHALL BE 50 KSI GALVANIZED STEEL.
5. 2" MIN. CLEAR COVER TYPICAL OVER STEEL REINFORCEMENT.
6. SEAL EXPOSED CONCRETE SURFACES WITH EPOXY-URETHANE.

ADDM' NO.	DATE	DESCRIPTION
1	09/01/25	SHEET REVISIONS
DATE COMPLETED		

DRILLED SHAFT COLLAR FOR MSE WALL AND VPF DETAILS
RETAINING WALL NO. 04 ALONG I-75 NORTHBOUND

DESIGN AGENCY
Palmer ENGINEERING
8350 E. KEMPER ROAD
SUITE B
CINCINNATI, OH 45249
(513) 469-1600

DESIGNER	RJB
REVIEWER	BJF 04/12/25
PROJECT ID	122048
SUBSET	7
TOTAL	10
SHEET	P.199
TOTAL	P. 421

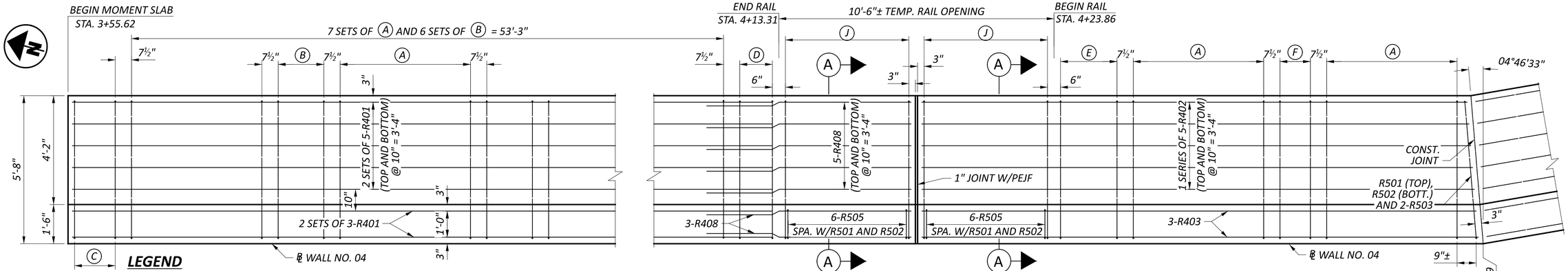

LEGEND

(A) 6-R501 (BOTT.), 6-R502 (TOP), 6-R503 AND 6-R504 @ 1'-0" = 5'-0"
(B) 3-R501 (BOTT.), 3-R502 (TOP) AND 6-R503 @ 10½" = 1'-9"
(C) 3-R501 (BOTT.), 3-R502 (TOP) AND 6-R503 @ 9⅜" = 1'-6¾"
(D) 3-R501 (BOTT.), 3-R502 (TOP) AND 6-R503 @ 7½" = 1'-3"
(E) 4-R501 (BOTT.), 4-R502 (TOP) AND 8-R503 SPA. EQ. = 2'-2"
(F) 3-R501 (BOTT.), 3-R502 (TOP) AND 6-R503 @ 7" = 1'-2"
(G) 4-R501 (BOTT.), 4-R502 (TOP) AND 8-R503 @ 10" = 2'-6"
(H) 4-R501 (BOTT.), 4-R502 (TOP) AND 8-R503 @ 11" = 2'-9"
(J) 6-R501 (BOTT.) AND 6-R502 (TOP) SPA. EQ. = 4'-9"

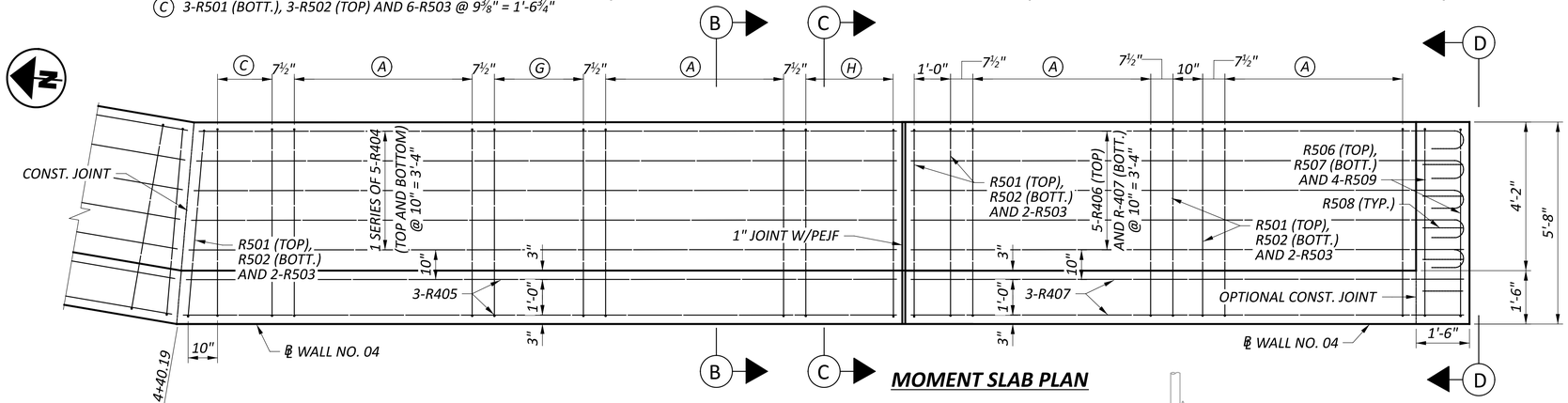

MOMENT SLAB PLAN

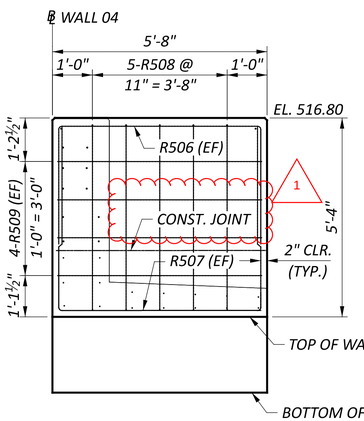

ELEVATION, VIEW D-D

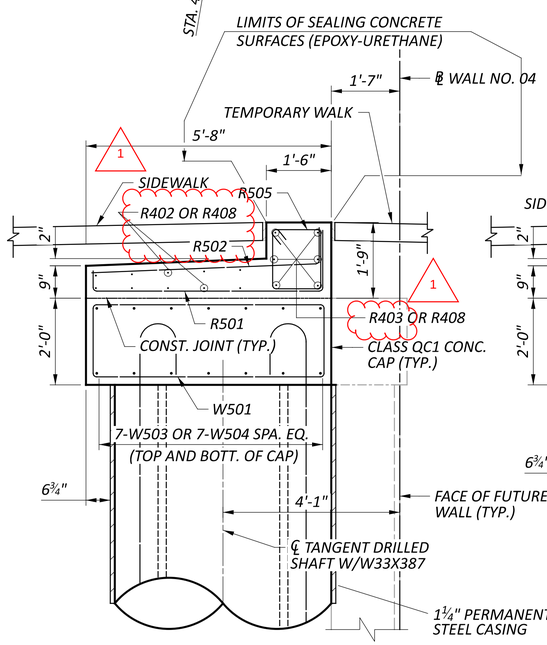

SECTION A-A

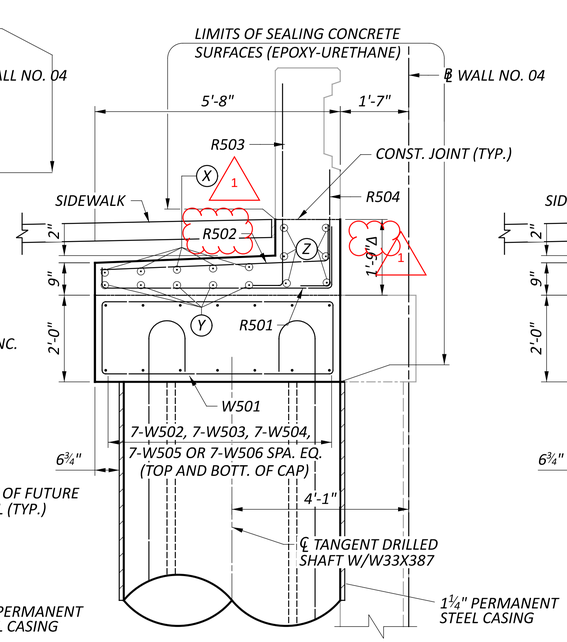

SECTION B-B
TYPICAL AT RAIL AESTHETIC LOCATIONS

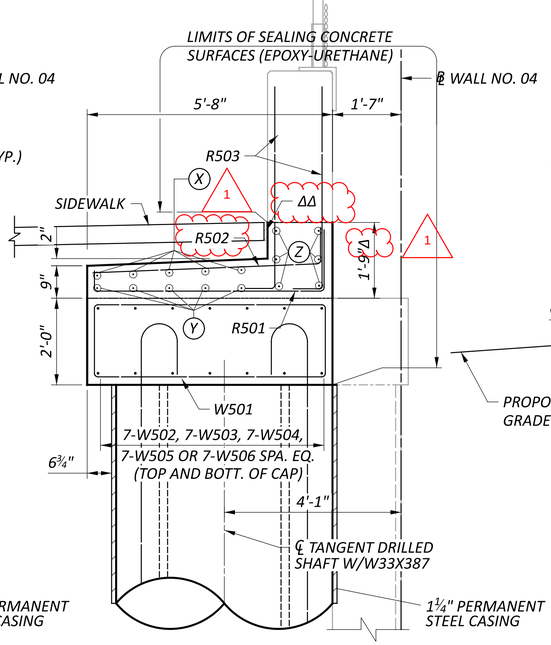

SECTION C-C
TYPICAL AT PILASTER LOCATIONS

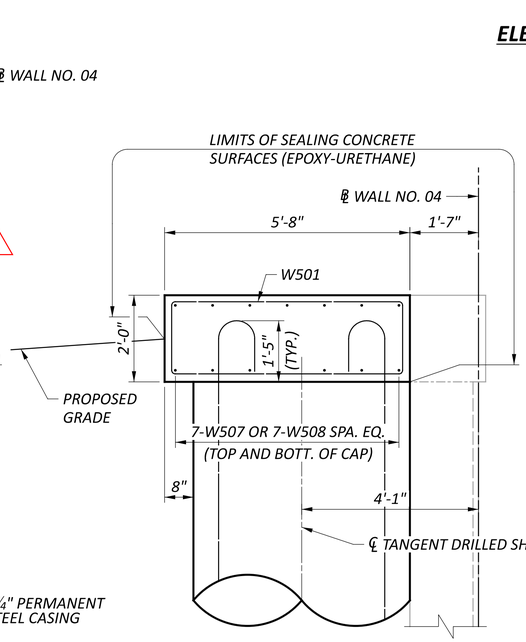

TYPICAL SECTION
STA. 4+76.82 - STA. 5+35.25

LEGEND

(X) R401, R402, R404 OR R406
(Y) R401, R402, R404 OR R407
(Z) R401, R403, R405 OR R407

Δ = VARIES 1'-9" TO 1'-10"
STA. 4+60.97 TO STA. 4+76.82

ΔΔ = ½" PEJF FROM STA. 4+61.39 +, TO PAID FOR WITH THIS PHASE

LAP LENGTH

#4 BARS - 2'-6" MIN.
#5 HORIZONTAL - 3'-1" MIN.
#5 VERTICAL - 2'-5" MIN.

NOTES

1. SEE SHEET 2 10 FOR GENERAL NOTES.
2. SEE SHEET 9 10 FOR RAILING DETAILS AND RAILING REINFORCING STEEL.
3. 2" MIN. CLEAR COVER TYPICAL OVER STEEL REINFORCEMENT.

ADDM' NO.	DATE	DESCRIPTION
1	09/01/25	SHEET REVISIONS

DATE COMPLETED

MOMENT SLAB DETAILS AND TYPICAL SECTIONS RETAINING WALL NO. 04 ALONG I-75 NORTHBOUND

DESIGN AGENCY
Palmer ENGINEERING
8350 E. KEMPER ROAD
SUITE B
CINCINNATI, OH 45249
(513) 469-1600

DESIGNER RJB
REVIEWER BJF 04/12/25
PROJECT ID 122048
SUBSET 8 TOTAL 10
SHEET P.200 TOTAL P. 421

HAM-IR75-1.05

MODEL: Sheet PAPERSIZE: 34x22 (in.) DATE: 8/27/2025 TIME: 1:15:47 PM PLTDRV: OHDOT_PDF.pltcfg PENTBL: OHDOT_Pen.tbl USER: swalker@palmernet.com WORKSPACE: OHDOTCtv02 WORKSET: 122048 PRODUCT: OpenRoadsDesigner 24.00.00.205
pw:\\ohiodot-pw.bentley.com:ohiodot-pw-02\Documents\01 Active Projects\District 08\Hamilton\122048\402-Engineering_PalmerEngineering\Structures\Wall_004\Sheets\122048_004_WD001.dgn

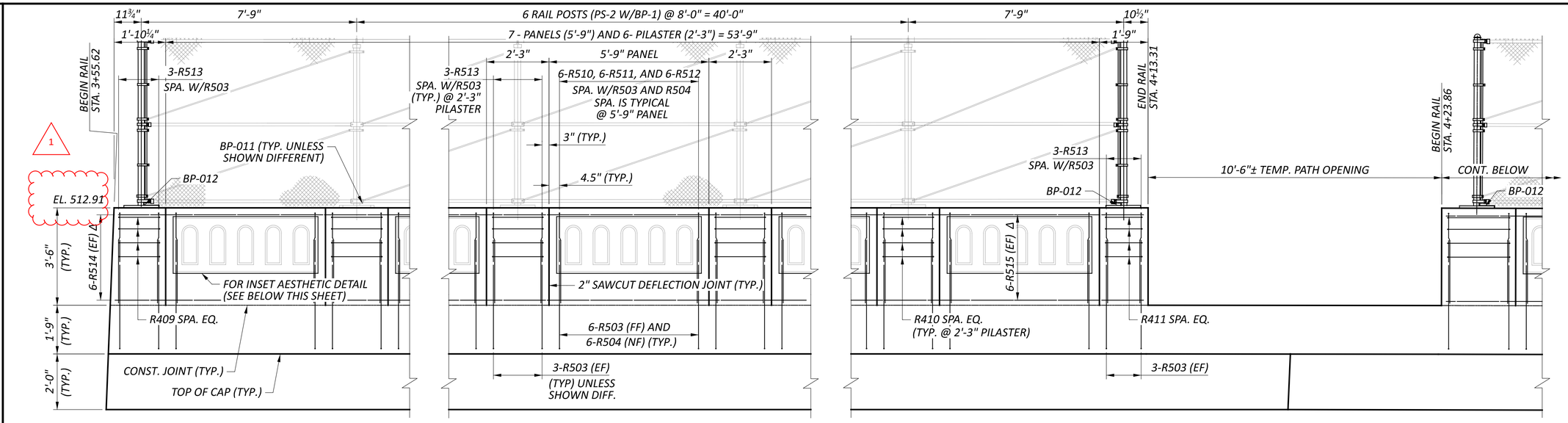

1	09/01/25	SHEET REVISIONS
ADDM' NO.	DATE	DESCRIPTION
DATE COMPLETED		

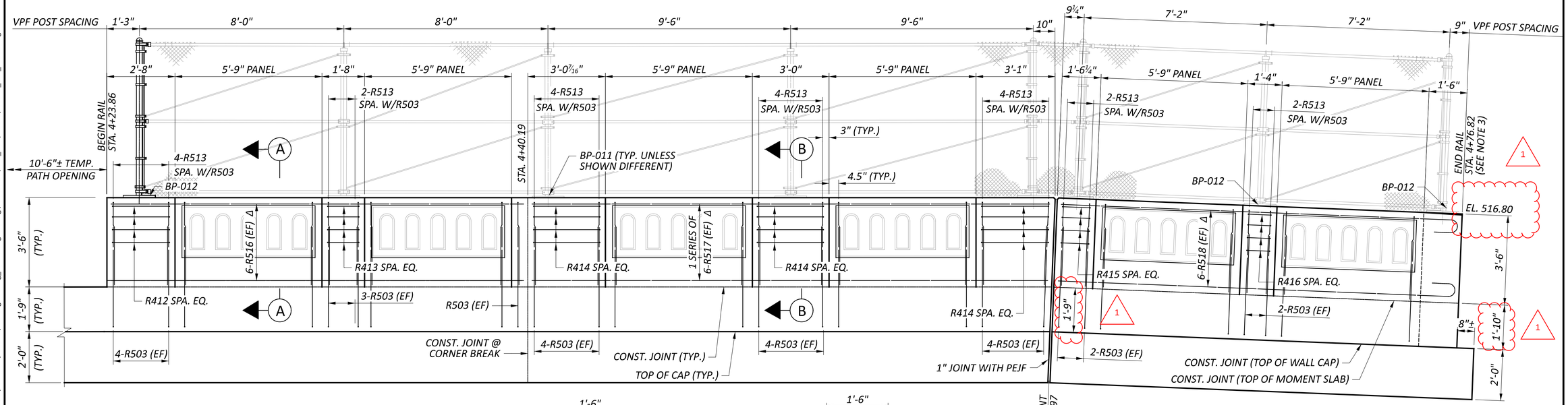

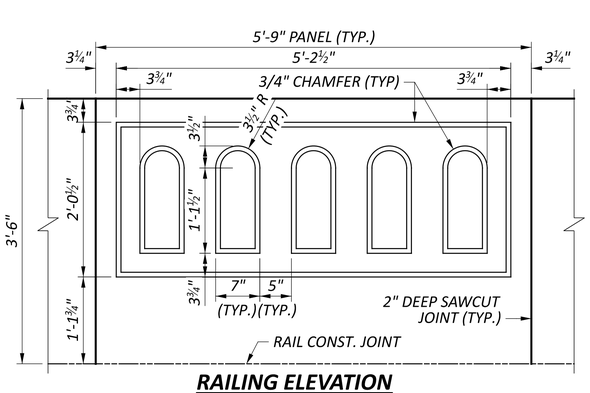

RAILING ELEVATION

5'-9' PANEL INSET AESTHETIC DETAIL

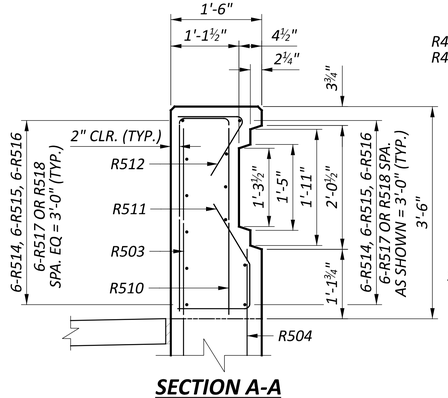

SECTION A-A

SECTION IS TYPICAL @ 5'-9" PANELS

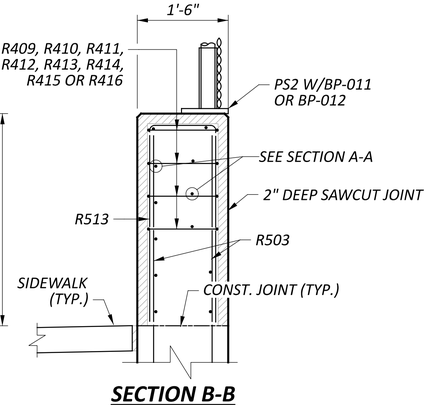

SECTION B-B

SECTION IS TYPICAL @ PILASTER

LAP LENGTH

#5 HORIZONTAL - 3'-1" MIN.
#5 VERTICAL - 2'-5" MIN.

LEGEND

Δ SEE SECTION VIEWS, THIS SHEET, FOR SPACING

NOTES

1. SEE SHEET 2 | 10 FOR GENERAL NOTES.
2. SEE STD. DWG. VPF-1-24 FOR ADDITIONAL DETAILS.
3. SEE SHEET 8 | 10 FOR MOMENT SLAB DETAILS AND END RAILING DETAILS.
4. SEE SHEET 6 | 10 FOR ELEVATION DETAILS AND ADDITIONAL RAILING ELEVATIONS.
5. SEE SHEET 7 | 10 FOR CUSTOM BASE PLATE DESIGNS.

RAILING DETAILS
RETAINING WALL NO. 04 ALONG I-75 NORTHBOUND

DESIGN AGENCY
Palmer ENGINEERING
8350 E. KEMPER ROAD
SUITE B
CINCINNATI, OH 45249
(513) 469-1600

DESIGNER	
RJB	
REVIEWER	
BJF	04/12/25
PROJECT ID	
122048	
SUBSET	TOTAL
9	10
SHEET	TOTAL
P.201	P. 421

HAM-IR75-1.05

MODEL: Sheet - 2 PAPERSIZE: 34x22 (in.) DATE: 8/27/2025 TIME: 1:15:49 PM PLTDRV: OHDOT_PDF.pltcfg PENTBL: OHDOT_Pen.tbl USER: swalker@palmernet.com WORKSPACE: OHDOTCivil02 WORKSET: 122048 PRODUCT: OpenRoadsDesigner 24.00.00.205
pw:\\ohiodot-pw.bentley.com:ohiodot-pw-02\Documents\01 Active Projects\District 08\Hamilton\122048\402-Engineering_PalmerEngineering\Structures\Wall_004\Sheets\122048_004_WD001.dgn

WALL NO. 04 REINFORCING STEEL LIST

MARK	NUMBER TOTAL	LENGTH	WEIGHT (LBS.)	TYPE	DIMENSIONS A	B	C	D	E	R	INC.
WALL NO. 04 (GALVANIZED STEEL REINFORCEMENT - GSR)											
W501	186	14' - 6"	2,822	3	5' - 4"	1' - 8"					
W502	14	9' - 11"	145	STR							
W503	28	26' - 0"	760	STR							
	2	21' - 1"									
W504	SERIES	to	312	STR							0' - 1"
	7	21' - 7"									
	2	19' - 6"									
W505	SERIES	to	289	STR							0' - 1"
	7	20' - 0"									
W506	14	16' - 2"	237	STR							
W507	14	26' - 0"	380	STR							
W508	28	15' - 6"	453	STR							
W509	NA										
W510	6	8' - 5"	53	1	5' - 4"	3' - 2"					
W511	6	7' - 11"	50	16	7' - 4"						
W512	3	18' - 1"	57	16	17' - 6"						
W513	10	5' - 11"	62	STR							
W514	4	10' - 4"	44	16	9' - 9"						
W515	8	2' - 0"	18	1	0' - 8"	1' - 6"					
R401	32	30' - 0"	642	STR							
	2	20' - 11"									
R402	SERIES	to	141	STR							0' - 0 ¾"
	5	21' - 2"									
R403	6	21' - 4"	86	STR							
	2	19' - 7"									
R404	SERIES	to	132	STR							0' - 1"
	5	19' - 11"									
R405	6	20' - 0"	81	STR							
R406	5	16' - 0"	54	16	15' - 6"						
R407	11	15' - 6"	114	STR							
R408	16	7' - 8"	82	STR							
R409	4	5' - 6"	15	3	1' - 4"	1' - 2"					
R410	24	6' - 4"	102	3	1' - 9"	1' - 2"					
R411	4	5' - 4"	15	3	1' - 3"	1' - 2"					
R412	4	7' - 2"	20	3	2' - 2"	1' - 2"					
R413	4	5' - 2"	14	3	1' - 2"	1' - 2"					
R414	12	7' - 10"	63	3	2' - 6"	1' - 2"					
R415	4	4' - 10"	13	3	1' - 0"	1' - 2"					
R416	4	4' - 6"	13	3	0' - 10"	1' - 2"					
R501	138	6' - 11"	996	2	1' - 5"	5' - 4"	0' - 5"				
R502	138	5' - 11"	857	11	0' - 0 ½"	0' - 9"	5' - 4"				
R503	174	5' - 0"	915	1	0' - 10"	4' - 4"					
R504	78	3' - 2"	258	1	0' - 10"	2' - 5 ½"					
R505	12	5' - 5"	68	3	1' - 1"	1' - 4"					
R506	2	10' - 1"	22	2	2' - 6"	5' - 4"	2' - 6"				
R507	2	14' - 9"	31	2	4' - 10"	5' - 4"	4' - 10"				
R508	5	12' - 9"	67	3	4' - 11"	1' - 2"					
R509	8	5' - 4"	45	STR							
R510	78	6' - 11"	560	2	3' - 2"	0' - 9 ½"	3' - 2"				
R511	78	2' - 11"	238	10	1' - 0"	0' - 7"	0' - 9"	1' - 2"			
R512	78	2' - 1"	169	11	0' - 6"	1' - 0"	1' - 1"				
R513	46	7' - 3"	348	2	3' - 2"	1' - 2"	3' - 2"				
R514	12	30' - 6"	382	STR							
R515	12	30' - 0"	376	STR							
R516	12	16' - 2"	203	STR							
	2	20' - 2"									
R517	SERIES	to	254	STR							0' - 0 ⅜"
	6	20' - 4"									
R518	12	16' - 1"	202	16	15' - 6"						
		GSR TOTAL =	13,260	LBS							

1

REINFORCING BENDING DIAGRAMS

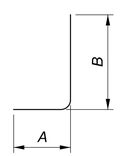

TYPE-1

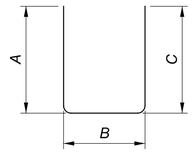

TYPE-2

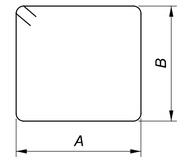

TYPE-3

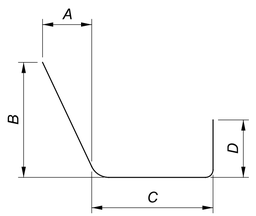

TYPE-10

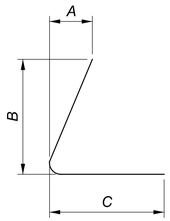

TYPE-11

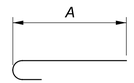

TYPE-16

1

NOTE

SEE SHEET 5/10 FOR ADDIONAL TANGENT DRILLED SHAFT REINFORCMENT STEEL DETAILS

1	*09/01/25*	*SHEET REVISIONS*
ADDM' NO.	*DATE*	*DESCRIPTION*
DATE COMPLETED		

REINFORCING STEEL LIST
RETAINING WALL NO. 04 ALONG I-75 NORTHBOUND

DESIGN AGENCY
Palmer ENGINEERING
8350 E. KEMPER ROAD
SUITE B
CINCINNATI, OH 45249
(513) 469-1600

DESIGNER RJB
REVIEWER BJF 04/12/25
PROJECT ID 122048
SUBSET 10 TOTAL 10
SHEET P.202 TOTAL P. 421

HAM-IR75-1.05

MODEL: Sheet PAPERSIZE: 34x22 (in.) DATE: 8/27/2025 TIME: 1:15:58 PM PLTDRV: OHDOT_PDF.pltcfg PENTBL: OHDOT_Pen.tbl USER: swalker@palmernet.com WORKSPACE: OHDOTCtv02 WORKSET: 122048 PRODUCT: OpenRoadsDesigner 24.00.00.205
pw:\\ohiodot-pw.bentley.com:ohiodot-pw-02\Documents\01 Active Projects\District 08\Hamilton\122048\02-Engineering_PalmerEngineering\Structures\Wall_004\Sheets\122048_004_WL001.dgn

REFERENCE NO.	SHEET NO.	ALIGNMENT	STATION FROM	STATION TO	SIDE	611 12" CONDUIT, TYPE B (SANITARY SEWER) FT	611 12" CONDUIT, TYPE B (SANITARY SEWER W/ CONCRETE ENCASEMENT)	611 MANHOLE ADJUSTED TO GRADE (SANITARY SEWER) EACH	611 MANHOLE, MISC.: STANDARD MANHOLE, TYPE B (SANITARY SEWER) EACH	839 SPECIAL - VALVE BOX ADJUSTED TO GRADE (GCWW) EACH	839 SPECIAL - FIRE HYDRANT REMOVED AND DISPOSED OF (GCWW) EACH	839 SPECIAL - FIRE HYDRANT SERVICE LINE SHORTENED AND ADJUSTED TO GRADE (GCWW) EACH
			SANITARY SEWER									
S-301	79	CLP_COURT	5+92.84		LT			1				
S-302	79 & 204	CLP_COURT	7+32.09		LT			1				
S-303	81 & 204	CLP_COURT	8+19.72		LT			1				
S-304	81 & 204	CLP_COURT	8+75.00		LT				1			
S-305	81 & 204	CLP_COURT	9+90.00	8+75.00	LT	115			1			
S-306	81 & 204	CLP_COURT	11+25.00	9+90.00	LT	38	103		1			
S-307	82	CLP_LINN	102+90.04		LT			1				
S-308	83	CLP_LINN	110+20.65		LT	1		1				
			WATER WORKS									
WW-301	78	CLP_COURT	5+56.83		RT							1
WW-302	80	CLP_COURT	9+45.47		RT						1	
WW-303	80	CLP_COURT	11+34.09		RT					1		
WW-304	80	CLP_COURT	11+59.70		RT						1	
WW-305	80	CLP_COURT	11+71.05		RT					1		
TOTALS CARRIED TO GENERAL SUMMARY						153	103	5	3	2	2	1

UTILITIES SUBSUMMARY

DESIGN AGENCY
WEPFER STRUCTUREPOINT INC.

DESIGNER LZS

REVIEWER KAM 03/03/25

PROJECT ID 122048

SHEET P.203 | TOTAL P.421

HAM-IR 75-1.05

MODEL: Sheet PAPERSIZE: 34x22 (in.) DATE: 8/28/2025 TIME: 10:03:32 AM PLTDRV: OHDOT_PDF.pltcfg PENTBL: OHDOT_Pen_Addendum.tbl USER: WORKSPACE: OHDOTCEv02 WORKSET: 122048 PRODUCT: OpenRoadsDesigner 10.12.02.4
pw:\\ohiodot-pw.bentley.com:ohiodot-pw-02\Documents\01 Active Projects\District 08\Hamilton\122048\403-Engineering_StructurePoint\Utilities\Sheets\122048_US301.dgn

ITEM 625 - SPECIAL, MAINTAIN EXISTING LIGHTING

EXISTING ROADWAYS WHICH ARE TO REMAIN OPEN TO TRAFFIC DURING CONSTRUCTION OF THIS PROJECT AND WHICH ARE LIGHTED SHALL HAVE THE LIGHTING MAINTAINED AS DESCRIBED HEREIN.

BEFORE ANY WORK IS STARTED IN THE IMMEDIATE VICINITY OF THE EXISTING LIGHTING CIRCUITS, REPRESENTATIVES OF ODOT, THE MAINTAINING AGENCY AND THE CONTRACTOR SHALL MAKE A VISUAL INSPECTION OF THE EXISTING ROADWAY LIGHTING CIRCUITS TO BE MAINTAINED. DURING THIS INSPECTION, A WRITTEN RECORD OF THE CONDITION OF EXISTING LIGHTING SHALL BE MADE BY ODOT'S REPRESENTATIVE. THIS WRITTEN REPORT SHALL NOTEINDIVIDUAL LUMINAIRES WHICH ARE NOT IN WORKING ORDER, INDIVIDUAL POLES WHICH ARE NOT STANDING, AND INDIVIDUAL CIRCUITS WHICH ARE NOT IN WORKING ORDER. THE COMPLETED REPORT SHALL BE SIGNED BY THE REPRESENTATIVES OF ODOT, THE MAINTAINING AGENCY AND THE CONTRACTOR.

IF, AS A RESULT OF THIS INSPECTION, IT IS DETERMINED THAT THE CONDITION OF THE EXISTING SYSTEM IS BELOW THAT REQUIRED FOR THE SAFETY OF THE TRAVELING PUBLIC, THEN THE MAINTAINING AGENCY SHALL MAKE THE REPAIRS NECESSARY TO RETURN THE SYSTEM TO AN ACCEPTABLE CONDITION. FOLLOWING THESE REPAIRS, THE SYSTEM SHALL AGAIN BE INSPECTED AND A REPORT SHALL BE MADE AND SIGNED AS OUTLINED HEREIN.

WHEN THE EXISTING SYSTEM IS IN AN ACCEPTABLE CONDITION, IT SHALL BE TURNED OVER TO THE CONTRACTOR WHO SHALL THEN BE REQUIRED TO MAINTAIN THE EXISTING LIGHTING TO THE CONDITION OUTLINED IN THIS REPORT WITH THE EXCEPTION OF KNOCKDOWNS DUE TO TRAFFIC CRASHES.

REPLACEMENT OF KNOCKED DOWNED UNITS SHALL BE DONE ONLY WHEN THE ENGINEER HAS DETERMINED THAT THE REPLACEMENT OF THE KNOCKED DOWN UNIT IS NECESSARY AND SHALL BE PAID SEPARATELY ON A UNIT BASIS.

BETTERMENTS SHALL BE COVERED IN ITEMS OF WORK PERTAINING TO THE CONSTRUCTION OF PERMANENT IMPROVEMENT.

WHEN THE SEQUENCE OF CONSTRUCTION ACTIVITIES REQUIRES, OR SHOULD THE CONTRACTOR DESIRE, THE REMOVAL OF THE EXISTING LIGHTING BEFORE THE NEW LIGHTING IS OPERATIONAL, THE CONTRACTOR SHALL BE RESPONSIBLE FOR PROVIDING TEMPORARY LIGHTING OF THIS PORTION OF THE ROADWAY.

PRIOR TO INSTALLING SUCH LIGHTING, THE CONTRACTOR SHALL PREPARE AND SUBMIT FOUR SETS OF THE TEMPORARY LIGHTING PLAN TO THE ENGINEER FOR REVIEW AND APPROVAL.

THIS PLAN SHALL SHOW LOCATIONS OF POLES, LENGTHS OF BRACKET ARMS, STYLES OF LUMINAIRES, MOUNTING HEIGHTS, WIRING METHODS AND OTHER PERTINENT INFORMATION. THE TEMPORARY LIGHTING SHALL PROVIDE AN AVERAGE INITIAL INTENSITY OF 1.2 FOOTCANDLES WITH AN AVERAGE TO MINIMUM UNIFORMITY NOT TO EXCEED 3:1. MOUNTING HEIGHT OF TEMPORARY LUMINAIRES SHALL NOT BE LESS THAN 30 FEET, AND THE MINIMUM OVERHEAD CONDUCTOR CLEARANCE SHALL BE 20 FEET. TEMPORARY OVERHEAD CONSTRUCTION SHALL NOT BE LESS THAN GRADE "B" FOR STRENGTH REQUIREMENTS AS DEFINED BY THE NATIONAL ELECTRIC SAFETY CODE. WOOD POLES WITH OVERHEAD WIRING MAY BE USED. HOWEVER, TEMPORARY LIGHTING SHALL MEET FEDERAL AND STATE SAFETY CRITERIA. IF BREAKAWAY POLES ARE USED TO MEET THESE CRITERIA, THEN UNDERGROUND WIRING SHALL BE USED. RECONDITIONED OR USED MATERIALS MAY BE FURNISHED FOR TEMPORARY LIGHTING. ALL MATERIALS NECESSARY TO COMPLETE THE TEMPORARY LIGHTING SHALL BE FURNISHED AND INSTALLED BY THE CONTRACTOR. WHEN NO LONGER NEEDED, THE TEMPORARY LIGHTING INSTALLATION SHALL BE REMOVED AND PROPERLY DISPOSED OF BY THE CONTRACTOR.

ITEM 625 - SPECIAL, MAINTAIN EXISTING LIGHTING (CONTINUED)

WHEN THE PROJECT BEGINS AND THE CONTRACTOR HAS TAKEN OVER MAINTENANCE OF THE EXISTING FACILITIES, THE CONTRACTOR IS RESPONSIBLE FOR ALL REQUIRED LAYOUTS AND LOCATIONS OF THE EXISTING AND PROPOSED ELECTRICAL CIRCUITS AND RELATED ITEMS WITHIN THE PROJECT LIMITS. THE CONTRACTOR SHALL LOCATE AND MARK ALL UNDERGROUND ELECTRICAL CIRCUITS (INCLUDING TRAFFIC LOOPS AND LOOP LEAD-INS) FOR THE DURATION OF THE PROJECT.

THE MAINTAINING AGENCY WILL PAY FOR ELECTRICAL ENERGY CONSUMED BY EXISTING POWER SERVICES AND BY PROPOSED PERMANENT POWER SERVICES AFTER ACCEPTANCE OF THE LIGHTING WORK. THE CONTRACTOR WILL PAY FOR ELECTRICAL ENERGY, INSTALLATION, REMOVAL AND MAINTENANCE OF ANY TEMPORARY POWER SERVICES.

THE LUMP SUM PRICE BID FOR ITEM SPECIAL "MAINTAIN EXISTING LIGHTING" SHALL INCLUDE PAYMENT FOR ALL LABOR, EQUIPMENT, MATERIALS AND INCIDENTALS NECESSARY TO MAINTAIN THE EXISTING LIGHTING AS SPECIFIED HEREIN.

THE UNIT PRICE BID FOR ITEM SPECIAL "REPLACEMENT OF EXISTING LIGHTING UNIT" SHALL BE FULL PAYMENT FOR THE REPLACEMENT OF AN EXISTING LIGHTING UNIT WHICH HAS BEEN KNOCKED DOWN AFTER THE AFOREMENTIONED INSPECTION AND SHALL INCLUDE ALL LABOR, EQUIPMENT, MATERIALS AND INCIDENTALS NECESSARY TO PROVIDE A REPLACEMENT FOR SUCH UNIT.

THE FOLLOWING ESTIMTED QUANTITIES HAVE BEEN INCLUDED IN THE GENERAL SUMMARY FOR THE WORK NOTED ABOVE:

ITEM 625 - SPECIAL, MAINTAIN EXISTING LIGHTING 1 1 LS
ITEM 625 - SPECIAL, REPLACEMENT OF EXISITNG LIGHT UNIT 2 EACH

1

LIGHTING GENERAL NOTES

DESIGN AGENCY
AMERICAN STRUCTUREPOINT INC.

DESIGNER
CDP

REVIEWER
EMS 03/03/25

PROJECT ID
122048

SHEET P.220A TOTAL P.421

HAM-IR 75-1.05

MODEL: Sheet 02 PAPERSIZE: 34x22 (in.) DATE: 8/28/2025 TIME: 10:03:42 AM PLTDRV: OHDOT_PDF.pltcfg PENTBL: OHDOT_Pen_Addendum.tbl USER: WORKSPACE: OHDOTCEv02 WORKSET: 122048 PRODUCT: OpenRoadsDesigner 10.12.02.4
pw:\\ohiodot-pw.bentley.com:ohiodot-pw-02\Documents\01 Active Projects\District 08\Hamilton\122048\03-Engineering_StructurePoint\Lighting\Sheets\122048_LN301.dgn

GENERAL NOTES:

REFER TO THE FOLLOWING STANDARD BRIDGE AND ROADWAY DRAWINGS:

AS-1-15 REVISED 1-20-23
AS-2-15 REVISED 7-21-23
EXJ-4-87 REVISED 1-19-24
GSD-1-19 REVISED 7-19-24
RM-2.1 REVISED 7-19-13
26999 DATED 01-03 (CITY OF CINCINNATI) 1

AND TO THE FOLLOWING SUPPLEMENTAL SPECIFICATIONS:

800 DATED 01-17-25
840 DATED 07-19-24
851 DATED 07-19-24

DESIGN SPECIFICATIONS:

THIS STRUCTURE CONFORMS TO THE 9TH EDITION OF THE "LRFD BRIDGE DESIGN SPECIFICATIONS"ADOPTED BY THE AMERICAN ASSOCIATION OF STATE HIGHWAY AND TRANSPORTATION OFFICIALS, 2020 AND THE ODOT BRIDGE DESIGN MANUAL, 2020 EDITION WITH REVISIONS THROUGH JULY 2024, EXCEPT AS NOTED ELSEWHERE IN THE PLANS.

SPECIAL DESIGN SPECIFICATIONS:

THIS BRIDGE REQUIRED THE USE OF A THREE-DIMENSIONAL MODEL USING THE FINITE ELEMENT DESIGN METHOD TO ANALYZE THE STRUCTURE. THE COMPUTER PROGRAM USED FOR STRUCTURAL ANALYSIS WAS MDX VERSION 2023.11.21. THIS PROGRAM WAS USED FOR THE DESIGN OF THE STEEL GIRDERS AND CROSSFRAMES AND TO CALCULATE REACTIONS FOR THE DESIGN OF THE BEARINGS AND SUBSTRUCTURES.

DEAD LOAD DISTRIBUTIONS: THE WEIGHT OF THE STEEL SUPERSTRUCTURE AND CONCRETE DECK WAS APPLIED TO EACH ELEMENT IN THE MODEL BASED ON LOCAL SECTION PROPERTIES. THE WEIGHT OF THE FUTURE WEARING SURFACE, SIDEWALK, RAISED MEDIAN, LIGHT POLES AND PLANTER POTS WAS APPLIED TO EACH GIRDER BASED ON TRIBUTARY AREA. PARAPET, SCREEN WALL, PILASTERS AND PLANTER WEIGHT WAS APPLIED TO THE EXTERIOR GIRDERS. 1

UNIT LOADS USED IN THE ANALYSIS ARE LISTED BELOW:

FUTURE WEARING SURFACE 60 LB/SF 1
PARAPET/PILASTERS + PLANTERS + SCREEN WALL + SIDEWALK + LIGHT POLES + RAISED MEDIAN:
GIRDER/BEAM LINES 1 & 9 (UNIT 1) - 4.268 KIPS/FT
GIRDER/BEAM LINES 1 & 9 (UNIT 2) - 3.640 KIPS/FT
GIRDER/BEAM LINES 2 & 8 (UNITS 1 & 2) - 1.448 KIPS/FT
GIRDER/BEAM LINES 3 & 7 (UNITS 1 & 2) - 0.880 KIPS/FT
GIRDER/BEAM LINE 5 (UNITS 1 & 2) - 0.750 KIPS/FT

LIVE LOAD DISTRIBUTION: THE DESIGN AND LOAD RATING ANALYSES WERE CARRIED OUT BY APPLYING TRUCK AND LANE LOADS DIRECTLY TO THE FINITE ELEMENT MODELS, RATHER THAN BY USING CALCULATED DISTRIBUTION FACTORS.

OPERATIONAL IMPORTANCE:

A LOAD MODIFIER OF 1.0 HAS BEEN ASSUMED FOR THE DESIGN OF THIS STRUCTURE IN ACCORDANCE WITH THE AASHTO LRFD BRIDGE DESIGN SPECIFICATIONS, ARTICLE 1.3.5 AND THE ODOT BRIDGE DESIGN MANUAL, 2020.

DESIGN LOADING:

HL-93
FUTURE WEARING SURFACE (FWS) OF 0.060 KSF
SATURATED SOIL UNIT WEIGHT OF 0.115 KCF
PLANTER WALL CONCRETE UNIT WEIGHT OF 0.150 KCF
SIDEWALK LIVE LOAD OF 0.075 KSF

DESIGN DATA:

CONCRETE CLASS QC3 COMPRESSIVE STRENGTH 4.5 KSI (DECK AND APPROACH SLABS)
CONCRETE CLASS QC2 COMPRESSIVE STRENGTH 4.5 KSI (SIDEWALKS, RAISED MEDIAN, AND PLANTER WALLS)
CONCRETE CLASS QC SCC COMPRESSIVE STRENGTH 4.5 KSI (PARAPETS)
CONCRETE CLASS QC3 COMPRESSIVE STRENGTH 4.0 KSI (SUBSTRUCTURE EXCLUDING FOOTINGS)
CONCRETE CLASS QC1 COMPRESSIVE STRENGTH 4.0 KSI (FOOTINGS)
GALVANIZED STEEL REINFORCEMENT MINIMUM YIELD STRENGTH 60 KSI
STRUCTURAL STEEL ASTM A709 GRADE 50W YIELD STRENGTH 50 KSI
STEEL CIP PILES ASTM A 252 GRADE 3 YIELD STRENGTH 45 KSI
STEEL SHEET PILING ASTM A572 GRADE 50 YIELD STRENGTH 50 KSI

DECK PROTECTION METHOD:

GALVANIZED REINFORCING STEEL
2½"CONCRETE COVER
CLASS QC3 CONCRETE

MONOLITHIC WEARING SURFACE:

MONOLITHIC WEARING SURFACE IS ASSUMED, FOR DESIGN PURPOSES, TO BE 1 INCH THICK.

EXISTING STRUCTURE PLANS:

THE EXISTING STRUCTURE PLANS ARE AVAILABLE ONLINE THROUGH THE FOLLOWING WEBSITE:ftp:///ftp.dot.state.oh.us/pub/Contracts/Attach/D08-113361/Reference%20Files/

IT IS THE RESPONSIBILITY OF THE CONTRACTOR TO BECOME FAMILIAR WITH ALL PERTINENT EXISTING DRAWINGS AND DETAILS RELEVANT TO THIS PROJECT.

ITEM 202 - STRUCTURE REMOVED, OVER 20 FOOT SPAN, AS PER PLAN:

IN ADDITION TO THE REQUIREMENTS OF CMS 202, THIS ITEM INCLUDES THE FOLLOWING WORK:

1. REMOVE THE EXISTING RAMP BRIDGE SUPERSTRUCTURES AND PIERS FROM GEST STREET TO LINN STREET. DO NOT REMOVE THE EXISTING ABUTMENTS, RETAINING WALLS AND EMBANKMENTS SUPPORTING THE GEST ST. RAMPS.

2. REMOVE EXISTING PIERS 1, 2, 3, 4, AND 6 DOWN TO THE BOTTOM OF FOOTING.

3. CUT OFF EXISTING PILES AT EXISTING PIER 1 AND EXISTING FORWARD ABUTMENT AS NOTED ON THE FOUNDATION PLANS.

MOT AND PHASE CONSTRUCTION:

THE EXISTING LINN ST. BRIDGE WILL BE CLOSED WITH A DETOUR OF TRAFFIC . REMOVE THE EXISTING SUPERSTRUCTURE AND THE EXISTING SUBSTRUCTURE DURING MOT PHASE 1. CONSTRUCT THE PROPOSED STRUCTURE DURING MOT PHASES 1 AND 2. SHORT TERM CLOSURES OF I-75 AND WINCHELL AVE. WILL BE REQUIRED FOR DEMOLITION AND ERECTION OF THE NEW SUPERSTRUCTURE.

SEE MAINTANENCE OF TRAFFIC PLANS FOR ADDITIONAL DETAILS AND NOTES.

PILE DESIGN LOADS (ULTIMATE BEARING VALUE):

THE ULTIMATE BEARING VALUE IS 251 KIPS PER PILE FOR THE REAR ABUTMENT PILES AND 316 KIPS PER PILE FOR THE FORWARD ABUTMENT PILES. THE ULTIMATE BEARING VALUE IS 383 KIPS PER PILE FOR THE PIER 1 PILES AND 377 KIPS PER PILE FOR THE PIER 2 PILES.

REAR ABUTMENT PILES:

12" DIA. CIP PILES 70 FEET LONG, ORDER LENGTH
1 DYNAMIC LOAD TESTING ITEM

FORWARD ABUTMENT PILES:

12" DIA. CIP PILES 85 FEET LONG, ORDER LENGTH
1 DYNAMIC LOAD TESTING ITEM

PIER 1 PILES:

14" DIA. CIP PILES 65 FEET LONG, ORDER LENGTH
1 DYNAMIC LOAD TESTING ITEM

PIER 2 PILES:

14" DIA. CIP PILES 85 FEET LONG, ORDER LENGTH
1 DYNAMIC LOAD TESTING ITEM

PROVIDE PLAIN CYLINDRICAL CASINGS WITH A MINIMUM PILE WALL THICKNESS OF 0.25 INCH AT ABUTMENTS AND AT PIERS FOR THE CAST-IN-PLACE REINFORCED CONCRETE PILES.

PILE DRIVING:

USE A PILE DRIVING HAMMER WITH A MINIMUM RATED ENERGY OF 42,000 FOOT-POUNDS TO INSTALL THE PILES. ENSURE THAT STRESSES IN THE PILES DURING DRIVING DO NOT EXCEED 40,500 POUNDS PER SQUARE INCH.

PILE DRIVING CONSTRAINTS:

PRIOR TO DRIVING ABUTMENT PILES TO THE ULTIMATE BEARING VALUE (UBV), CONSTRUCT THE MSE WALL AND THE BRIDGE APPROACH EMBANKMENT BEHIND THE ABUTMENT UP TO THE BOTTOM OF THE FOOTING FOR A MINIMUM DISTANCE OF 200-FT BEHIND EACH ABUTMENT. THE CONTRACTOR SHALL PRE-DRIVE ABUTMENT PILES BEFORE CONSTRUCTING MSE WALLS. PRE-DRIVING CONSISTS OF INSTALLING THE ABUTMENT PILES INTO THE SOIL ONLY AS FAR AS NECESSARY SO THAT THE PILE WILL REMAIN VERTICAL DURING MSE WALL CONSTRUCTION. INSTALL PILE SLEEVES AROUND PILES BEFORE CONSTRUCTING THE MSE WALL. PROVIDE AT LEAST THREE FEET OF PILE ABOVE THE TOP OF THE PILE SLEEVE TO MEET THE REQUIREMENTS OF C&MS 507.09 REGARDING SPLICES. DO NOT DRIVE ABUTMENT PILES TO THE UBV UNTIL AFTER THE ABOVE REQUIRED MSE WALL AND EMBANKMENT HAVE BEEN CONSTRUCTED AND A 60 CALENDAR DAY WAITING PERIOD HAS ELAPSED (REAR ABUTMENT ONLY). NO WAITING PERIOD IS REQUIRED AT THE FORWARD ABUTMENT. THE ENGINEER MAY ADJUST THE LENGTH OF THE WAITING PERIOD BASED ON SETTLEMENT PLATFORM READINGS. AFTER THE SPECIFIED WAITING PERIOD HAS ELAPSED, DRIVE ABUTMENT PILES TO THE UBV. IN ORDER TO REMOVE ANY NEGATIVE SKIN FRICTION THAT HAS DEVELOPED DURING THE WAITING PERIOD, DRIVE EACH ABUTMENT PILE A DISTANCE OF AT LEAST 0.5 INCH.

ITEM 507 - PREBORED HOLES, AS PER PLAN:

USE PREBORED HOLES, 20' DEEP, AT SPECIFIED LOCATIONS AT PIER 2 AS SHOWN ON THE FOUNDATION PLAN, TO VERIFY THAT EXISTING BATTERED PILES WILL NOT INTERFERE WITH PROPOSED PILES. NOTIFY THE ENGINEER IF PROPOSED PILES CANNOT BE DRIVEN AT THE PLAN LOCATIONS, SO THAT ALTERNATE LOCATIONS CAN BE APPROVED PRIOR TO DRIVING PILES.

PRIOR TO DRIVING PILES, BACKFILL THE PREBORED HOLES WITH DRY SAND.

PROPRIETARY RETAINING WALL DATA:

THE PROPRIETARY WALL SUPPLIER SHALL DESIGN THE INTERNAL STABILITY OF A MECHANICALLY STABILIZED EARTH (MSE) WALL IN ACCORDANCE WITH SS840 TO SUPPORT THE ABUTMENT. THE DESIGN FOR INTERNAL STABILITY SHALL INCLUDE A NOMINAL (I.E. UNFACTORED) HORIZONTAL STRIP LOAD DUE TO FRICTION (FR) FROM THE SUPERSTRUCTURE OF 1.15 K/FT AT THE REAR ABUTMENT AND 2.76 K/FT AT THE FORWARD ABUTMENT APPLIED PERPENDICULAR TO THE FACE OF WALL AT THE BASE OF THE CONCRETE FOOTING. THIS STRIP LOAD DOES NOT INCLUDE EARTH PRESSURE LOADS FROM THE ABUTMENT BACKFILL. HOWEVER, THE PROPRIETARY WALL SUPPLIER SHALL INCLUDE EARTH PRESSURE LOADS FROM THE ABUTMENT BACKFILL IN THE DESIGN CALCULATIONS.

FOUNDATION BEARING RESISTANCE:

THE REAR ABUTMENT REINFORCED SOIL MASS, AS DESIGNED, PRODUCES A MAXIMUM SERVICE LIMIT STATE BEARING PRESSURE OF 3.7 KIPS PER SQUARE FOOT AND A MAXIMUM STRENGTH LIMIT STATE BEARING PRESSURE OF 5.2 KIPS PER SQUARE FOOT. THE FACTORED BEARING RESISTANCE IS 5.9 KIPS PER SQUARE FOOT.

THE FORWARD ABUTMENT REINFORCED SOIL MASS, AS DESIGNED, PRODUCES A MAXIMUM SERVICE LIMIT STATE BEARING PRESSURE OF 4.6 KIPS PER SQUARE FOOT AND A MAXIMUM STRENGTH LIMIT STATE BEARING PRESSURE OF 6.7 KIPS PER SQUARE FOOT. THE FACTORED BEARING RESISTANCE IS 14.6 KIPS PER SQUARE FOOT.

ITEM 512 - SEALING OF CONCRETE SURFACES (EPOXY-URETHANE):

TINT SO THE FINAL COLOR IS FEDERAL COLOR STANDARD NO. 17778, LIGHT NEUTRAL.

ITEM 512 - SEALING OF CONCRETE SURFACES, AS PER PLAN, (PERMANENT GRAFFITI PROTECTION):

APPLY A PERMANENT GRAFFITI COATING QUALIFIED ACCORDING TO S1083 THAT IS COMPATIBLE WITH THE CONCRETE SEALER OVER WHICH IT IS APPLIED. THE GRAFFITI COATING SHALL BE CLEAR. APPLY THE GRAFFITI COATING IN ACCORDANCE WITH THE MANUFACTURER'S PRINTED INSTRUCTIONS. APPLY THE GRAFFITI COATING TO ALL EXPOSED CONCRETE SURFACES OF THE MSE WALLS, ABUTMENTS, PIERS, PARAPETS, AND PLANTER WALLS.

ITEM 514 - FIELD PAINTING STRUCTURAL STEEL, INTERMEDIATE COAT:
ITEM 514 - FIELD PAINTING STRUCTURAL STEEL, FINISH COAT:

APPLY INTERMEDIATE AND FINISH COATS IN THE FIELD PER CMS 514 TO THE SURFACES NOTED IN THE FOLLOWING DIAGRAMS (APPLIES TO BOTH FASCIA GIRDERS AND INCLUDES STIFFENERS AND SPLICE PLATES/BOLTS ON THE OUTBOARD (FASCIA) SIDE AND BOTTOM OF FASCIA GIRDERS).

ADDITIONALLY, PAINT THE LAST 10 FT OF EACH GIRDER END ADJACENT TO THE ABUTMENTS AND PIER 1 INCLUDING ALL CROSS-FRAMES AND OTHER STEEL WITHIN THESE LIMITS.

THE PRIME COAT SHALL BE 708.01. FOR THE ENDS OF INTERIOR GIRDERS, THE TOP COAT COLOR SHALL CLOSELY APPROACH FEDERAL STANDARD NO. 595B - 20045 OR 20059 (THE COLOR OF WEATHERING STEEL). FOR THE FASCIA GIRDERS, THE TOP COAT COLOR SHALL CLOSELY APPROACH FEDERAL STANDARD NO. 595B - 34058 (DARK GREEN).

USE TYPE I BOLTS FOR PAINTED WEATHERING STEEL LOCATIONS WITH COATING SYSTEMS THAT ARE ZINC BASED, SUCH AS OZEU, IZEU, GALVANIZING OR METALLIZING.

USE GRADE A325, TYPE III BOLTS FOR UN-COATED WEATHERING STEEL BOLT LOCATIONS. IF THE FAYING SURFACES UNDER BOTH THE HEAD AND NUT OF A WEATHERING STEEL MEMBER ARE COATED, SPECIFY GALVANIZED GRADE A325 TYPE I BOLTS. OTHERWISE, SPECIFY GRADE A325, TYPE III BOLTS.

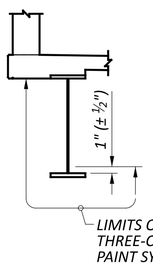

FASCIA GIRDER COATING LIMITS

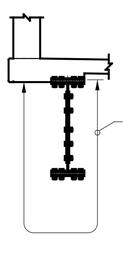

FASCIA GIRDER COATING LIMITS AT SPLICE

ITEM 526 - REINFORCED CONCRETE APPROACH SLABS WITH QC/QA (T=17"), AS PER PLAN:

THE REQUIREMENTS OF 511.03 AND 511.04 SHALL APPLY TO THIS ITEM OF WORK. THIS ITEM SHALL INCLUDE BUT IS NOT LIMITED TO THE CONCRETE AND STEEL REINFORCEMENT NECESSARY TO FORM AND PLACE THE APPROACH SLABS AS SHOWN IN THE PLANS. PAYMENT FOR THIS ITEM SHALL ALSO INCLUDE THE ITEMS LISTED ON STANDARD DRAWING AS-1-15 AND ALL OTHER NECESSARY MATERIALS, LABOR, AND EQUIPMENT AND SHALL BE INCLUDED IN THE UNIT PRICE BID PER SQUARE YARD FOR ITEM 526 - REINFORCED CONCRETE APPROACH SLABS WITH QC/QA (T=17"), AS PER PLAN.

THE REQUIREMENTS IN THE GENERAL NOTES FOR ITEM 511 - CLASS QC3 CONCRETE, MISC.: BRIDGE DECK, WITH QC/QA SHALL APPLY TO THIS ITEM OF WORK.

DECK PLACEMENT DESIGN ASSUMPTIONS:

THE FOLLOWING ASSUMPTIONS OF CONSTRUCTION MEANS AND METHODS WERE MADE FOR THE ANALYSIS AND DESIGN OF THE SUPERSTRUCTURE. THE CONTRACTOR IS RESPONSIBLE FOR THE DESIGN OF THE FALSEWORK SUPPORT SYSTEM WITHIN THESE PARAMATERS AND WILL ASSUME RESPONSIBILITY FOR SUPERSTRUCTURE ANALYSIS FOR DEVIATION FROM THESE DESIGN ASSUMPTIONS.

AN EIGHT WHEEL FINISHING MACHINE WITH A MAXIMUM WHEEL LOAD OF 2.86 KIPS.

A MINIMUM OUT-TO-OUT WHEEL SPACING AT EACH END OF THE MACHINE OF 103 INCHES.

A MAXIMUM SPACING OF OVERHANG FALSEWORK BRACKETS OF 48 INCHES.

A MAXIMUM DISTANCE FROM THE CENTERLINE OF THE FASCIA GIRDER TO THE FACE OF THE SAFETY HANDRAIL OF 65 INCHES.

FOR UNIT 1 DECK ONLY, ALL SCREED RAILS SHALL BE SUPPORTED ON THE GIRDERS. HAND WELDING OF RAIL SUPPORTS TO COMPRESSION REGIONS OF THE TOP FLANGE IS PERMITTED. ALTERNATE MEANS OF ATTACHMENT OF RAIL SUPPORTS TO TENSION REGIONS OF TOP FLANGES WILL BE REQUIRED. METHODS WHICH USE AUTOMATIC END-WELDED STUDS TO ATTACH RAIL SUPPORT BASE PLATES TO THE TENSION REGIONS ARE PERMITTED. ANY SUPPORT HARDWARE WHICH WILL REMAIN IN THE CONCRETE SHALL BE GALVANIZED. FOR TOP FLANGE STRESS CONDITIONS, SEE SHEET 35/88. 1

ITEM 511 - CLASS QC SCC CONCRETE WITH QC/QA, BRIDGE DECK (PARAPET), AS PER PLAN:

SEE SHEETS 58/88 TO 65/88 FOR PARAPET DETAILS, INCLUDING JOINT TREATMENTS. THIS ITEM INCLUDES PARAPETS ON BRIDGE AND APPROACH SLABS.

ITEM SPECIAL - STRUCTURES: TEMPORARY SUPPORTS FOR GIRDERS:

PROVIDE TEMPORARY SUPPORTS FOR THE UNIT 2 GIRDER ERECTION AS SHOWN ON SHEET 32/88.

ITEM 840 - AESTHETIC SURFACE TREATMENT:

1 USE CONCRETE FORM LINERS TO CREATE AESTHETIC SURFACE TREATMENT ON THE MSE WALL FACING PANELS. THE FORM LINER SHALL BE PATTERN 1107, MISSION FLUTE FROM SPEC FORMLINERS, INC., OR APPROVED EQUAL. THE FORM LINER RELIEF DEPTH SHALL BE 1.5 INCHES. FABRICATE AND INSTALL THE MSE WALL PANELS SUCH THAT THE VERTICAL FINS AND VALLEYS IN THE FRACTURE FIN AESTHETIC TREATMENT ALIGN VERTICALLY ACROSS ADJACENT PANELS FROM THE TOP OF THE WALL TO THE BOTTOM OF THE WALL. USE THE SAME FRACTURED FIN PATTERN ON ALL WALLS ON THE PROJECT.

FORM LINERS SHALL BE CAPABLE OF WITHSTANDING ANTICIPATED CONCRETE POUR PRESSURES WITHOUT LEAKAGE OR CAUSING PHYSICAL DEFECTS. FORM LINERS SHALL BE REMOVABLE WITHOUT CAUSING CONCRETE SURFACE DAMAGE. USE A FORM RELEASE PRODUCT AS RECOMMENDED BY THE FORM LINER MANUFACTURER. USE MANUFACTURER'S APPLICATION RATES AND ALL OTHER MANUFACTURER'S INSTRUCTIONS. FORM RELEASE PRODUCTS SHALL BE FULLY COMPATIBLE WITH THE FORM LINER MATERIAL AND THE EPOXY-URETHANE SEALER TO BE APPLIED TO THE FINISHED SURFACES.

ALIGN THE FORM LINER PATTERNS ACROSS ALL JOINTS BETWEEN MSE WALL PANELS.

FORM LINERS SHALL EXTEND A MINIMUM OF 1'-0" BELOW THE PROPOSED GROUND OR SIDEWALK SURFACE AT THE FRONT FACE OF THE WALL. FORM LINERS MAY EXTEND LOWER BUT THE PAY LIMITS SHALL BE 1'-0" BELOW THE PROPOSED GROUND OR SIDEWALK SURFACE.

PAYMENT WILL BE MADE AT THE UNIT PRICE BID FOR ITEM 840 - AESTHETIC SURFACE TREATMENT, WHICH SHALL BE FULL COMPENSATION FOR ALL LABOR, MATERIALS, EQUIPMENT, AND INCIDENTALS NECESSARY TO COMPLETE THIS ITEM AS SPECIFIED ABOVE AND IN A SATISFACTORY AND WORKMANLIKE MANNER.

ITEM 203 - EMBANKMENT AS PER PLAN:

PLACE AND COMPACT EMBANKMENT IN 6-INCH LIFTS FOR THE CONSTRUCTION OF THE APPROACH EMBANKMENT BETWEEN STATIONS 104+50 TO 111+00.

1 9-1-25

GENERAL NOTES - 1
BRIDGE NO. HAM-75-0104
LINN STREET OVER IR-75 AND GEST STREET

SFN 3109098
DESIGN AGENCY B&N burgessniple.com
DESIGNER MAB | CHECKER BES
REVIEWER JCS 12/15/24
PROJECT ID 122048
SUBSET 3 | TOTAL 88
SHEET P.245 | TOTAL P.421

HAM-IR 75-1.05

MODEL: Sheet PAPERSIZE: 34x22 (in.) DATE: 8/26/2025 TIME: 8:45:31 AM PLTDRV: OHDOT_PDF.pltcfg PENTBL: OHDOT_UTPen.tbl USER: WORKSPACE: OHDOTCtx02 WORKSET: 122048_SFN_3109098 pw:\\ohiodot-pw.bentley.com:ohiodot-pw-02\Documents\01 Active Projects\District 08\Hamilton\122048\401-Engineering_BurgessNiple\Structures\SFN_3109098\Sheets\122048_SFN_3109098_SN001.dgn

ITEM 503 - COFFERDAMS AND EXCAVATION BRACING, AS PER PLAN:

THE DESIGN SHOWN ON THE PLANS FOR TEMPORARY SUPPORT OF EXCAVATION IS ONE REPRESENTATIVE DESIGN THAT MAY BE USED TO CONSTRUCT THE PROJECT. THE CONTRACTOR MAY CONSTRUCT THE DESIGN SHOWN ON THE PLANS OR PREPARE AN ALTERNATE DESIGN TO SUPPORT THE SIDES OF EXCAVATIONS. IF CONSTRUCTING AN ALTERNATE DESIGN FOR TEMPORARY SUPPORT OF EXCAVATION, PREPARE AND PROVIDE PLANS IN ACCORDANCE WITH CMS 501.05.

THIS ITEM SHALL INCLUDE ALL MATERIALS AND LABOR FOR ANY TEMPORARY SHEETING NECESSARY TO CONSTRUCT THE MSE WALLS AT EACH ABUTMENT.

THE DEPARTMENT WILL PAY FOR THE TEMPORARY SUPPORT OF EXCAVATION AT THE CONTRACT LUMP SUM PRICE FOR COFFERDAMS AND EXCAVATION BRACING. THE DEPARTMENT WILL NOT MAKE ADDITIONAL PAYMENT FOR PROVIDING AN ALTERNATE DESIGN.

ITEM SPECIAL - STRUCTURAL SURVEY AND MONITORING OF VIBRATION:

MONITOR GROUND VIBRATIONS CAUSED BY PILE DRIVING TO MINIMIZE THE POTENTIAL FOR:

1) DAMAGE TO THE POLICE OFFICE, HOTEL AND PARKING GARAGES LOCATED NEAR THE REAR ABUTMENT.

2) UNACCEPTABLE LEVELS OF VIBRATION ANNOYANCE WITH RESPECT TO HUMAN RESPONSE AT THE POLICE OFFICE, HOTEL AND PARKING GARAGES LOCATED NEAR THE REAR ABUTMENT.

RETAIN AN EXPERIENCED VIBRATION SPECIALIST TO ESTABLISH THE ACCEPTABLE VIBRATION LIMITS AND TO PERFORM THE VIBRATION MONITORING. USE A VIBRATION SPECIALIST THAT IS AN EXPERT IN THE INTERPRETATION OF VIBRATION DATA, AND WHO MEETS ONE OF THE FOLLOWING CRITERIA: 1) IS A REGISTERED ENGINEER WITH AT LEAST TWO YEARS OF PROVEN EXPERIENCE IN MONITORING VIBRATIONS ON SIMILAR CONSTRUCTION PROJECTS, OR 2) HAS AT LEAST FIVE YEARS OF PROVEN EXPERIENCE IN MONITORING VIBRATIONS ON SIMILAR CONSTRUCTION PROJECTS. DO NOT USE A VIBRATION SPECIALIST THAT IS AN EMPLOYEE OF THE CONTRACTOR.

SUBMIT A RESUME OF THE CREDENTIALS OF THE PROPOSED VIBRATION SPECIALIST AT, OR BEFORE, THE PRECONSTRUCTION MEETING. INCLUDE IN THE RESUME A LIST OF CONSTRUCTION PROJECTS ON WHICH THE VIBRATION SPECIALIST WAS RESPONSIBLY IN CHARGE OF MONITORING THE VIBRATIONS. LIST A DESCRIPTION OF THE PROJECTS, WITH DETAILS OF THE VIBRATION INTERPRETATIONS MADE ON THE PROJECT. LIST THE NAMES AND TELEPHONE NUMBERS OF PROJECT OWNERS WITH SUFFICIENT KNOWLEDGE OF THE PROJECTS TO VERIFY THE SUBMITTED INFORMATION. OBTAIN THE ENGINEER'S ACCEPTANCE OF THE VIBRATION SPECIALIST BEFORE BEGINNING ANY PILE DRIVING WORK. ALLOW 30 DAYS FOR THE REVIEW OF THIS DOCUMENTATION.

USE SEISMOGRAPHS CAPABLE OF CONTINUOUSLY RECORDING THE PEAK PARTICLE VELOCITY FOR THREE MUTUALLY PERPENDICULAR COMPONENTS OF VIBRATION, AND OF PROVIDING A PERMANENT RECORD OF THE ENTIRE VIBRATION EVENT. USE A SUFFICIENT NUMBER OF SEISMOGRAPHS TO PROVIDE REDUNDANCY IN CASE ONE DEVICE SHOULD FAIL. SUBMIT A PLAN OF THE PROPOSED SEISMOGRAPH LOCATIONS TO THE ENGINEER FOR REVIEW.

THE VIBRATION SPECIALIST SHALL PERFORM THE FOLLOWING:

1. MEASURE THE AMBIENT GROUND VIBRATIONS NEAR EXISTING STRUCTURES BEFORE PILE DRIVING BEGINS.

2. ESTABLISH VIBRATION LIMITS TO MINIMIZE POTENTIAL DAMAGE TO EXISTING STRUCTURES AND EXPLAIN WHY THEY ARE BEING USED TO THE ENGINEER BEFORE DRIVING PILES NEAR EXISTING STRUCTURES.

3. MONITOR GROUND VIBRATIONS DURING PILE DRIVING.

4. IMMEDIATELY INFORM THE CONTRACTOR AND ENGINEER IF THE VIBRATION LIMITS ARE REACHED OR EXCEEDED.

5. FURNISH THE DATA RECORDED AND INCLUDE THE FOLLOWING:
   A. IDENTIFICATION OF SEISMOGRAPH.
   B. DISTANCE AND DIRECTION OF SEISMOGRAPH FROM PILE DRIVING.
   C. START TIME AND DURATION OF PILE DRIVING.
   D. LIST OF PILES DRIVEN DURING EACH MONITORING INTERVAL.

IMMEDIATELY SUSPEND ALL PILE DRIVING IF THE VIBRATION LIMITS ARE REACHED OR EXCEEDED. EVALUATE ALTERNATIVE CONSTRUCTION PROCEDURES, SUCH AS PREBORED HOLES, TO REDUCE THE VIBRATIONS.

SUBMIT THREE COPIES OF THE FINAL REPORT WHICH CONTAINS ALL MEASUREMENTS, INTERPRETATIONS, AND RECOMMENDATIONS TO THE ENGINEER.

THE DEPARTMENT WILL PAY FOR THIS ITEM AT THE CONTRACT LUMP SUM PRICE FOR ITEM SPECIAL - STRUCTURAL SURVEY AND MONITORING OF VIBRATION. THE DEPARTMENT WILL PAY THE FINAL TWENTY PERCENT AFTER THE ENGINEER RECEIVES THE FINAL REPORT.

THE DEPARTMENT WILL PAY ACCORDING TO C&MS 109.05 FOR ALTERNATIVE CONSTRUCTION PROCEDURES THAT THE ENGINEER DETERMINES ARE NECESSARY TO REDUCE VIBRATIONS.

BEFORE PILE DRIVING BEGINS, CONDUCT A CONDITION SURVEY OF ALL EXISTING BUILDING, STRUCTURES, AND UTILITIES WITHIN 200-FT OF THE PILE DRIVING WORK. THE PURPOSE OF THE SURVEY IS TO DOCUMENT THE CONDITION OF THE BUILDINGS, STRUCTURES, OR UTILITIES PRIOR TO PILE DRIVING, SO THAT CLAIMS OF DAMAGE CAUSED BY THE PILE DRIVING CAN BE VERIFIED.

RETAIN AN EXPERIENCED VIBRATION SPECIALIST TO PERFORM OR SUPERVISE THE CONDITION SURVEY. USE A VIBRATION SPECIALIST THAT MEETS THE QUALIFICATION REQUIREMENTS FOR VIBRATION MONITORING.

RECORD THE CONDITION OF EXISTING STRUCTURES AND BUILDING MATERIALS, USING WRITTEN TEXT, PHOTOGRAPHS, AND VIDEO RECORDINGS. INSPECT INTERIOR WALLS, CEILINGS, AND FLOORS THAT ARE ACCESSIBLE. INSPECT THE EXTERIOR OF THE BUILDING THAT IS VISIBLE FROM GROUND LEVEL. ALSO RECORD THE LOCATION, SIZE, AND TYPE OF ALL CRACKS AND OTHER STRUCTURAL DEFICIENCIES.

IF OWNERS OR OCCUPANTS FAIL TO ALLOW ACCESS TO THE PROPERTY FOR THE PRECONSTRUCTION CONDITION SURVEY, SEND A CERTIFIED LETTER TO THE OWNER OR OCCUPANT. DOCUMENT THE NOTIFICATION EFFORT AND THE CERTIFIED LETTER IN THE REPORT.

SUBMIT THREE COPIES OF A REPORT TO THE ENGINEER THAT SUMMARIZES THE PRECONSTRUCTION CONDITION OF THE BUILDINGS, STRUCTURES, AND UTILITIES, AND THAT IDENTIFIES AREAS OF CONCERN.

PAYMENT FOR THE PRECONSTRUCTION CONDITION SURVEY IS INCLUSIVE OF THE CONTRACT LUMP SUM PRICE FOR ITEM SPECIAL - STRUCTURAL SURVEY AND MONITORING OF VIBRATION.

ITEM 511 - CLASS QC3 CONCRETE, MISC.: PIER ABOVE FOOTINGS, WITH QC/QA
ITEM 511 - CLASS QC3 CONCRETE, MISC.: ABUTMENT NOT INCLUDING FOOTING, WITH QC/QA

THIS ITEM MODIFIES THE STANDARD 511 CONCRETE FOR STRUCTURES SPECIFICATION TO INCLUDE MACRO-SYNTHETIC, AND CORROSION INHIBITORS INTO THE SUBSTRUCTURE CONCRETE. THIS ITEM SHALL CONFORM TO CMS 511 WITH THE FOLLOWING CONDITIONS AND REVISIONS:

PROVIDE MATERIALS CONFORMING TO 511.02 EXCEPT AS MODIFIED BELOW:

PORTLAND CEMENT CONCRETE	499.03, CLASS QC 3 MEETING A DESIGN STRENGTH OF 4,000 PSI, WITH MACRO-SYNTHETIC FIBERS WITH MODIFICATION PER 511.02
FIBERS FOR CONCRETE	ASTM C 1116, TYPE III
CORROSION INHIBITOR	515.15

THE CLASS QC3 CONCRETE FOR THE SUBSTRUCTURE SHALL MEET THE FOLLOWING CRITERIA:

WATER/CEMENT RATIO = 0.40 MAXIMUM; MINIMUM 4 LBS/CY MACRO-SYTHETIC FIBERS (1.0 IN. MIN. TO 2.5 IN. MAX.) MEETING ASTM C1116 TYPE III SHALL BE ADDED TO THE MIX.

MIX SHALL INCLUDE A MIGRATING CORROSION INHIBITOR AS MANUFACTURED BY AN APPROVED SUPPLIER LISTED ON ODOT'S QUALIFIED APPROVED SUPPLIERS, ITEM 515.15. THE DOSAGE RATE LISTED ON THE ODOT QUALIFIED APPROVED SUPPLIERS LIST WILL APPLY.

THE MACRO-SYNTHETIC FIBERS SHALL BE INCORPORATED INTO THE MIX IN SUCH A WAY THAT NO 'BALLING' OCCURS. UPON INSPECTION OF THE MIX AT THE TIME OF PLACEMENT, IF ANY 'BALLING' OCCURS, THE ENGINEER SHALL REJECT THE REMAINDER OF THE LOAD AT ANY TIME DURING THE POUR. IT IS IMPORTANT TO FOLLOW INDUSTRY STANDARDS AND ASTM SPECIFICATIONS ON THE PREMIXING OF THE CEMENT, AGGREGATE, AND MACRO-SYNTHETIC FIBERS PRIOR TO THE ADDITION OF WATER AND ADMIXTURES. PROVIDE MACRO-SYNTHETIC-FIBERS THAT ARE MONOFILAMENT FIBERS MADE FROM VIRGIN POLYPROPYLENE, POLYETHYLENE, OR CO-POLYMERS THAT ARE INERT TO ALKALI ATTACK. ENSURE THE MACRO-SYTHETIC FIBERS HAVE A MINIMUM TENSILE STRENGTH OF 70 KSI, A MINIMUM MODULUS OF ELASTICITY OF 800 KSI, A MINIMUM FILAMENT DIAMETER OF 0.012 INCHES, AND ASPECT RATIO BETWEEN 60 AND 100, AND ARE BETWEEN 1.5 AND 2.5 INCHES IN LENGTH. STORE THE MACRO-SYTHETIC FIBERS ACCORDING TO THE MANUFACTURER'S RECOMMENDATION AND KEEP THE MATERIAL FREE FROM DUST, DIRT AND MOISTURE. PLACING THE BAG THAT THE FIBERS COME IN INTO THE CONCRETE MIX IS NOT PERMITTED.

USE A MINIMUM DOSAGE RATE OF MACRO-SYTHETIC FIBERS OF 4.0 LBS/CY OF CONCRETE. DETERMINE THE FINAL PROPOSED DOSAGE RATE THROUGH MIX TESTING. ENSURE THE FIBER REINFORCED CONCRETE MEETS OR EXCEEDS A MINIMUM EQUIVALENT FLEXURAL STRENGTH RATIO OF 25% ACCORDING TO ASTM C 1609. ENSURE THE FINAL PROPOSED MIX IS WORKABLE AND ABLE TO BE PRODUCED SUCH THAT BALLING OR CLUMPING OF THE FIBERS IS NOT A PROBLEM AS DETERMINED BY THE ENGINEER. UTILIZE A LABORATORY REGULARLY INSPECTED BY THE CEMENT AND CONCRETE REFERENCE LABORATORY (CCRL) OF THE NATIONAL INSTITUTE OF STANDARDS AND TECHNOLOGY, OR OTHER APPROVED REFERENCE LABORATORY, TO PERFORM THE TESTING. BEFORE USE, SUBMIT DOCUMENTATION TO THE PROJECT ENGINEER CERTIFYING BOTH THE MACRO-SYNTHETIC FIBERS AND THE MIX MEET OR EXCEED THE REQUIRED PROPERTIES. SAMPLING WILL BE ALLOWED FOR TESTING PURPOSES. A DEMONSTRATION OF THE MIX PRODUCTION OR TRIAL MIX, MAY BE REQUIRED BY THE ENGINEER PRIOR TO PLACING ANY OF THE MIX ON THE PROJECT.

THE BATCH WEIGHTS SHALL BE CORRECTED TO COMPENSATE FOR THE MOISTURE CONTAINED IN THE AGGREGATE AT THE TIME OF USE. A CHEMICAL ADMIXTURE (705.12, TYPE A OR D) SHALL BE USED. THE TRANSIT MIXER CHARGE SHALL BE LIMITED TO ¾ OF ITS RATED CAPACITY OR 6 CUBIC YARDS, WHICHEVER IS SMALLER. THE FIRST THREE TRANSIT MIXER LOADS ARE REQUIRED TO BE AT THE MINIMUM YARDAGE LISTED ABOVE TO SHOW PROOF OF THE SUCCESSFUL BATCHING OPERATION. AFTER CONSISTENCY IN THE DELIVERED MATERIAL HAS BEEN ESTABLISHED, THE CONCRETE SUPPLIER MAY INCREASE THE BATCH DELIVERED QUANTITIES AS LONG AS THE QUALITY REMAINS ACCEPTABLE TO THE ENGINEER. THE ENGINEER CAN REDUCE THE BATCH LOAD SIZE AT ANY TIME AS NEEDED TO CORRECT/IMPROVE CONCRETE QUALITY.

CONCRETE SUPPLIERS SHOULD RECOGNIZE THAT THE CORROSION INHIBITOR AND ADMIXTURES MAY HAVE AN EFFECT ON STRENGTH, ENTRAINED AIR CONTENT, WORKABILITY, ETC. OF THEIR CONCRETE MIXES. THE CORROSION INHIBITOR IS SUGGESTED TO BE A MCI PRODUCT BY CORTEC OR AN APPROVED EQUAL FROM THE QUALIFIED PRODUCTS LIST. THE CONCRETE SUPPLIER'S CHOICE OF ONE OF THESE CORROSION INHIBITORS DOES NOT ALLEVIATE MEETING DESIGN REQUIREMENTS. PLEASE BE ADVISED THAT SOME PRODUCTS ON THE LIST EFFECT THE DELIVERED MIX PROPERTIES GREATLY WHILE OTHER PRODUCTS DO NOT.

THE CONTRACTOR SHOULD BE ADVISED THAT CONCRETE RETARDING AGENTS MAY NEED TO BE ADDED TO OFFSET THE EFFECTS OF THE MIGRATING CORROSION INHIBITOR SELECTED.

ITEM 511 - CLASS QC3 CONCRETE, MISC.: BRIDGE DECK, WITH QC/QA:

THIS ITEM MODIFIES THE STANDARD 511 CONCRETE FOR STRUCTURES SPECIFICATION TO INCLUDE MACRO-SYNTHETIC, AND CORROSION INHIBITORS INTO THE SUPERSTRUCTURE CONCRETE. THIS ITEM SHALL CONFORM TO CMS 511 WITH THE FOLLOWING CONDITIONS AND REVISIONS:

PROVIDE MATERIALS CONFORMING TO 511.02 EXCEPT AS MODIFIED BELOW:

PORTLAND CEMENT CONCRETE	499.03, CLASS QC 3 MEETING A DESIGN STRENGTH OF 4,500 PSI, WITH MACRO-SYNTHETIC FIBERS WITH MODIFICATION PER 511.02
FIBERS FOR CONCRETE	ASTM C 1116, TYPE III
CORROSION INHIBITOR	515.15

THE CLASS QC3 CONCRETE FOR THE SUPERSTRUCTURE SHALL MEET THE FOLLOWING CRITERIA:

WATER/CEMENT RATIO = 0.40 MAXIMUM; MINIMUM 4 LBS/CY MACRO-SYTHETIC FIBERS (1.5 IN. MIN. TO 2.5 IN. MAX.) MEETING ASTM C1116 TYPE III SHALL BE ADDED TO THE MIX.

MIX SHALL INCLUDE A MIGRATING CORROSION INHIBITOR AS MANUFACTURED BY AN APPROVED SUPPLIER LISTED ON ODOT'S QUALIFIED APPROVED SUPPLIERS, ITEM 515.15. THE DOSAGE RATE LISTED ON THE ODOT QUALIFIED APPROVED SUPPLIERS LIST WILL APPLY.

THE MACRO-SYNTHETIC FIBERS SHALL BE INCORPORATED INTO THE MIX IN SUCH A WAY THAT NO 'BALLING' OCCURS. UPON INSPECTION OF THE MIX AT THE TIME OF PLACEMENT, IF ANY 'BALLING' OCCURS, THE ENGINEER SHALL REJECT THE REMAINDER OF THE LOAD AT ANY TIME DURING THE POUR. IT IS IMPORTANT TO FOLLOW INDUSTRY STANDARDS AND ASTM SPECIFICATIONS ON THE PREMIXING OF THE CEMENT, AGGREGATE, AND MACRO-SYNTHETIC FIBERS PRIOR TO THE ADDITION OF WATER AND ADMIXTURES. PROVIDE MACRO-SYNTHETIC-FIBERS THAT ARE MONOFILAMENT FIBERS MADE FROM VIRGIN POLYPROPYLENE, POLYETHYLENE, OR CO-POLYMERS THAT ARE INERT TO ALKALI ATTACK. ENSURE THE MACRO-SYTHETIC FIBERS HAVE A MINIMUM TENSILE STRENGTH OF 70 KSI, A MINIMUM MODULUS OF ELASTICITY OF 800 KSI, A MINIMUM FILAMENT DIAMETER OF 0.012 INCHES, AND ASPECT RATIO BETWEEN 60 AND 100, AND ARE BETWEEN 1.5 AND 2.5 INCHES IN LENGTH. STORE THE MACRO-SYTHETIC FIBERS ACCORDING TO THE MANUFACTURER'S RECOMMENDATION AND KEEP THE MATERIAL FREE FROM DUST, DIRT AND MOISTURE. PLACING THE BAG THAT THE FIBERS COME IN INTO THE CONCRETE MIX IS NOT PERMITTED.

USE A MINIMUM DOSAGE RATE OF MACRO-SYTHETIC FIBERS OF 4.0 LBS/CY OF CONCRETE. DETERMINE THE FINAL PROPOSED DOSAGE RATE THROUGH MIX TESTING. ENSURE THE FIBER REINFORCED CONCRETE MEETS OR EXCEEDS A MINIMUM EQUIVALENT FLEXURAL STRENGTH RATIO OF 25% ACCORDING TO ASTM C 1609. ENSURE THE FINAL PROPOSED MIX IS WORKABLE AND ABLE TO BE PRODUCED SUCH THAT BALLING OR CLUMPING OF THE FIBERS IS NOT A PROBLEM AS DETERMINED BY THE ENGINEER. UTILIZE A LABORATORY REGULARLY INSPECTED BY THE CEMENT AND CONCRETE REFERENCE LABORATORY (CCRL) OF THE NATIONAL INSTITUTE OF STANDARDS AND TECHNOLOGY, OR OTHER APPROVED REFERENCE LABORATORY, TO PERFORM THE TESTING. BEFORE USE, SUBMIT DOCUMENTATION TO THE PROJECT ENGINEER CERTIFYING BOTH THE MACRO-SYNTHETIC FIBERS AND THE MIX MEET OR EXCEED THE REQUIRED PROPERTIES. SAMPLING WILL BE ALLOWED FOR TESTING PURPOSES. A DEMONSTRATION OF THE MIX PRODUCTION OR TRIAL MIX, MAY BE REQUIRED BY THE ENGINEER PRIOR TO PLACING ANY OF THE MIX ON THE PROJECT.

THE BATCH WEIGHTS SHALL BE CORRECTED TO COMPENSATE FOR THE MOISTURE CONTAINED IN THE AGGREGATE AT THE TIME OF USE. A CHEMICAL ADMIXTURE (705.12, TYPE A OR D) SHALL BE USED. THE TRANSIT MIXER CHARGE SHALL BE LIMITED TO ¾ OF ITS RATED CAPACITY OR 6 CUBIC YARDS, WHICHEVER IS SMALLER. THE FIRST THREE TRANSIT MIXER LOADS ARE REQUIRED TO BE AT THE MINIMUM YARDAGE LISTED ABOVE TO SHOW PROOF OF THE SUCCESSFUL BATCHING OPERATION. AFTER CONSISTENCY IN THE DELIVERED MATERIAL HAS BEEN ESTABLISHED, THE CONCRETE SUPPLIER MAY INCREASE THE BATCH DELIVERED QUANTITIES AS LONG AS THE QUALITY REMAINS ACCEPTABLE TO THE ENGINEER. THE ENGINEER CAN REDUCE THE BATCH LOAD SIZE AT ANY TIME AS NEEDED TO CORRECT/IMPROVE CONCRETE QUALITY.

CONCRETE SUPPLIERS SHOULD RECOGNIZE THAT THE CORROSION INHIBITOR AND ADMIXTURES MAY HAVE AN EFFECT ON STRENGTH, ENTRAINED AIR CONTENT, WORKABILITY, ETC. OF THEIR CONCRETE MIXES. THE CORROSION INHIBITOR IS SUGGESTED TO BE A MCI PRODUCT BY CORTEC OR AN APPROVED EQUAL FROM THE QUALIFIED PRODUCTS LIST.

THE CONCRETE SUPPLIER'S CHOICE OF ONE OF THESE CORROSION INHIBITORS DOES NOT ALLEVIATE MEETING DESIGN REQUIREMENTS. PLEASE BE ADVISED THAT SOME PRODUCTS ON THE LIST EFFECT THE DELIVERED MIX PROPERTIES GREATLY WHILE OTHER PRODUCTS DO NOT.

APPROACH SLABS ARE TO USE THE SAME MIX DESIGN AS THE BRIDGE DECK. THE CONTRACTOR SHOULD BE ADVISED THAT CONCRETE RETARDING AGENTS MAY NEED TO BE ADDED TO OFFSET THE EFFECTS OF THE MIGRATING CORROSION INHIBITOR SELECTED.

THE CONTRACTOR SHALL PROVIDE TRADITIONAL BRIDGE DECK FORMS CONFORMING TO CMS 508. PERMANENT STAY-IN-PLACE (SIP) FORMS ARE NOT ALLOWED. THE PLACING OF THE DECK AND THE APPROACH SLABS IN THE SAME CONCRETE POUR IS NOT PERMITTED.

ITEM 513 - STRUCTURAL STEEL MEMBERS, LEVEL 3, AS PER PLAN:

THIS ITEM OF WORK INCLUDES ALL STRUCTURAL STEEL FOR UNIT 1 OF THE SUPERSTRUCTURE.

SEE BEAM DETAILS AND INTERMEDIATE DIAPHRAGM DETAILS FOR STIFFENER ORIENTATION.

SEE BEAM DETAILS FOR STIFFENER CLIP DIMENSIONS.

SEE INTERMEDIATE DIAPHRAGM DETAILS AND END CROSSFRAME DETAILS FOR BOLT HOLE SIZES.

ITEM 513 - STRUCTURAL STEEL MEMBERS, LEVEL 4, AS PER PLAN:

THIS ITEM OF WORK INCLUDES ALL STRUCTURAL STEEL FOR UNIT 2 OF THE SUPERSTRUCTURE.

SEE GIRDER DETAILS AND INTERMEDIATE CROSSFRAME DETAILS FOR STIFFENER ORIENTATION.

SEE GIRDER FIELD SPLICE DETAILS, INTERMEDIATE CROSSFRAME DETAILS AND END CROSSFRAME DETAILS FOR BOLT HOLE SIZES.

ITEM 518 - POROUS BACKFILL WITH GEOTEXTILE FABRIC, AS PER PLAN:

THIS ITEM SHALL INCLUDE THE AGGREGATE BACKFILL AND GEOTEXTILE FABRIC THAT ARE SHOWN IN THE TALL AND SHORT PLANTER AREAS ON SHEET 71/88 AND IN THE PLANTER POTS ON SHEET 74/88

FURNISH POROUS BACKFILL CONSISTING OF GRAVEL, WITH A NO. 57 SIZE GRADATION ACCORDING TO TABLE 703.01-1. COMPACTION IS NOT REQUIRED.

ITEM 605 - 6" UNCLASSIFIED PIPE UNDERDRAINS, AS PER PLAN:

THIS ITEM SHALL INCLUDE:

1. PIPES FOR PLANTER DRAINAGE OUTLETS AT ABUTMENTS, FROM BACK FACE OF ABUTMENT BACKWALL TO ROADWAY DRAINAGE STRUCTURES. SEE SHEET 72/88 FOR DETAILS.

FURNISH NON-PERFORATED PVC PIPES PER CMS 707.41.

1

1 9-1-25

GENERAL NOTES - 2
BRIDGE NO. HAM-75-0104
LINN STREET OVER IR-75 AND GEST STREET

SFN 3109098

DESIGN AGENCY
B&N
burgessniple.com

DESIGNER	CHECKER
MAB	BES

REVIEWER
JCS 12/15/24

PROJECT ID
122048

SUBSET	TOTAL
4	88

SHEET	TOTAL
P.246	P.421

HAM-IR 75-1.05

MODEL: Sheet PAPERSIZE: 34x22 (in.) DATE: 8/26/2025 TIME: 10:08:56 AM PLTDRV: OHDOT_PDF.pltcfg PENTBL: OHDOT_UTPen.tbl USER: WORKSPACE: OHDOTCEv02 WORKSET: 122048 PRODUCT: OpenRoadsDesigner 10.12.02.4
pw:\\ohiodot-pw.bentley.com:ohiodot-pw-02\Documents\01 Active Projects\District 08\Hamilton\122048\401-Engineering_BurgessNiple\Structures\SFN_3109098_SN002.dgn

ADHESIVE ANCHOR/DOWEL SYSTEM:

INSTALL ADHESIVE ANCHORS/DOWELS ACCORDING TO THE MANUFACTURER'S INSTALLATION INSTRUCTIONS PUBLISHED IN THE ICC-ES REPORTS LISTED BELOW.

THE HOLES FOR THE ADHESIVE ANCHORS SHALL BE DRILLED WITH A HAMMER DRILL AND CARBIDE BIT. PRIOR TO THE INSTALLATION OF THE ANCHORS, CLEAN AND DRY THE HOLES IN A MANNER CONSISTENT WITH THE MANUFACTURER'S REQUIREMENTS FOR DRY CONCRETE.

HTTPS://ICC-ES.ORG/EVALUATION-REPORT-PROGRAM/REPORTS-DIRECTORY/

SELECT FROM ONE OF THE FOLLOWING APPROVED PRODUCTS:
HILTI HIT-RE 500 V3 - ICC-ES ESR-3814
SIMPSON STRONG-TIE SET-3G - ICC-ES ESR-4057

FACTORED ANCHOR/DOWEL LOADS: SHEAR - 50 KIPS/BEARING (PIER 1 REAR FIXED BEARINGS)

SHEAR - 268 KIPS/BEARING (PIER 2 FIXED BEARINGS)

TENSION - 13.33 KIPS PER BASE PLATE (SCREEN WALL ANCHORS AT TOP OF PARAPET)

1 SHEAR - 2.00 KIPS PER BASE PLATE (SCREEN WALL ANCHORS AT TOP OF PARAPET)

SHEAR - 10.67 KIPS PER BASE PLATE (SCREEN WALL ANCHORS AT FRONT FACE OF PARAPET)

THE CONTRACTOR MAY USE A SUBSTITUTE ADHESIVE ANCHOR/DOWEL SYSTEM THAT MEETS THE ACCEPTANCE CRITERIA OF ICEES AC308 - POST-INSTALLED ADHESIVE ANCHORS IN CONCRETE ELEMENTS. THE SUBSTITUTE ANCHORS SHALL MEET OR EXCEED THE CAPACITY OF THE ADHESIVE ANCHOR/DOWEL SYSTEM LISTED ABOVE.

ADHESIVE ANCHORS/DOWELS SHALL NOT BE SUBSTITUTED WITH MECHANICAL ANCHORS.

THE CONTRACTOR SHALL SUPPLY DOCUMENTATION SEALED BY AN OHIO REGISTERED PROFESSIONAL ENGINEER ENSURING THAT THE SUBSTITUTE ADHESIVE ANCHOR/DOWEL SYSTEM PROVIDES SUFFICIENT CAPACITY FOR THIS APPLICATION IN ACCORDANCE WITH AASHTO LRFD SECTION 5.13. INSTALL THE ANCHORS ACCORDING TO THE MANUFACTURER'S INSTALLATION INSTRUCTIONS PUBLISHED IN THE ICC-ES REPORT.

ITEM SPECIAL - WATERPROOFING FOR PLANTER AREAS:

THIS ITEM SHALL INCLUDE FURNISHING AND INSTALLING MORTAR, FLASHING, WATERPROOFING, PROTECTION BOARD, AND COUNTERFLASHING. PERFORM WORK IN ACCORDANCE WITH CMS 512, EXCEPT AS MODIFIED BY PLAN NOTES AND DETAILS. SEE SHEETS 71/88 TO 73/88 FOR WATERPROOFING DETAILS AND ADDITIONAL REQUIREMENTS.

THE CONTRACTOR SHALL ENSURE THAT ALL PRODUCTS USED FOR THIS ITEM OF WORK ARE COMPATIBLE WITH EACH OTHER. FOLLOW MANUFACTURER'S INSTRUCTIONS REGARDING DELIVERY, STORAGE, SURFACE PREPARATION, AND INSTALLATION.

WATERPROOFING ACTIVITIES, INCLUDING PLACEMENT OF MORTAR, SHALL NOT COMMENCE UNTIL AT LEAST 14 DAYS AFTER COMPLETION OF DECK, PARAPET, AND PLANTER WALL CONCRETE PLACEMENTS.

PLACE MORTAR AT BOTTOM OF PLANTER AREAS PRIOR TO INSTALLING WATERPROOFING MATERIALS. PROVIDE A WOOD-FLOAT OR WOOD-TROWELED FINISH ON THE MORTAR. DO NOT PROVIDE A STEEL-TROWELED FINISH. WAIT AT LEAST 14 DAYS FOLLOWING MORTAR PLACEMENT BEFORE STARTING INSTALLATION OF WATERPROOFING.

FLASHING SHALL BE A 60 MIL UNCURED NEOPRENE ROLLED SHEET, AS FOLLOWS:

1. TENSILE STRENGTH: 1400 PSI MIN. PER ASTM D412, DIE C
2. ELONGATION: 267% MIN. PER ASTM D412, DIE C
3. TEAR RESISTANCE: 125 LBS/IN MIN. PER ASTM D412, DIE C
4. BRITTLENESS: NO BREAK AT -30 DEG. F PER ASTM D2137

PROTECT THE SURFACE OF THE WATERPROOFING DURING INSTALLATION AND UNTIL THE PROTECTION BOARD IS INSTALLED. DO NOT ALLOW CONSTRUCTION EQUIPMENT ON THE WATERPROOFING DURING INSTALLATION AND UNTIL THE PROTECTION BOARD IS INSTALLED.

PROTECTION BOARD INSTALLATION:

EMBED THE PROTECTION BOARD INTO THE WATERPROOFING MEMBRANE WHILE IT IS STILL HOT TO ENSURE A GOOD BOND. OVERLAP ADJOINING PROTECTION BOARD EDGES (DRY) A MINIMUM OF 2" TO ENSURE COMPLETE COVERAGE, OR ABUT ADJACENT EDGES AND APPLY PMPC TAPE AT JOINTS. THE COMPLETED MEMBRANE/PROTECTION BOARD ASSEMBLY MUST BE COVERED WITH SUBSEQUENT TOPPING MATERIALS AS SOON AS POSSIBLE, WITHIN 30 DAYS OF MEMBRANE INSTALLATION.

ITEM SPECIAL - WATERPROOFING FOR PLANTER AREAS (CONTINUED):

METHOD OF MEASUREMENT:

THE DEPARTMENT WILL MEASURE WATERPROOFING BY THE NUMBER OF SQUARE YARDS APPLIED TO THE HORIZONTAL AND VERTICAL SURFACES OF THE PLANTER AREAS.

BASIS OF PAYMENT:

THE WATERPROOFING WILL BE PAID FOR AT THE CONTRACT PRICE WHICH INCLUDES FURNISHING AND INSTALLING MORTAR, FLASHING, WATERPROOFING, PROTECTION BOARD, AND COUNTERFLASHING.

ITEM SPECIAL - PLANTER POTS:

1.0 SUMMARY:

A. WORK SHALL INCLUDE ALL ENGINEERING, FABRICATION, TOOLS, LABOR AND MATERIALS NECESSARY, INCLUDING INCIDENTALS TO SUCCESSFULLY FABRICATE AND INSTALL THE PLANTER POTS AS SHOWN ON THE CONSTRUCTION DRAWINGS.
B. THIS SECTION INCLUDES THE FOLLOWING:
   PLANTER POT, SEE SHEET 74/88 FOR DETAILS.
C. SIZES:
   3'-0" WIDE x 6'-0" LONG x 2'-0" TALL
D. MATERIAL AND FINISH:
   ALUMINUM 5052 POWDER COAT - BLACK COLOR
E. ACCESSORIES WITH EACH PLANTER:
   IRRIGATION FITTINGS, NEOPRENE RUBBER FEET, RIGID INSULATION BOARD AND DRAINAGE FITTINGS

1.1 REFERENCES:

ASTM B 117 - STANDARD PRACTICE FOR OPERATING SALT SPRAY (FOG) APPARATUS.
ASTM D 522 - STANDARD TEST METHODS FOR MANDREL BEND TEST OF ATTACHED ORGANIC COATINGS.
ASTM D 523 - STANDARD TEST METHOD FOR SPECULAR GLOSS.
ASTM D 2247 - STANDARD PRACTICE FOR TESTING WATER RESISTANCE OF COATINGS IN 100% RELATIVE HUMIDITY.
ASTM D 2794 - STANDARD TEST METHOD FOR RESISTANCE OF ORGANIC COATINGS TO THE EFFECTS OF RAPID DEFORMATION (IMPACT).
ASTM D 3359 - STANDARD TEST METHODS FOR MEASURING ADHESION BY TAPE TEST.
ASTM D 3363 - STANDARD TEST METHOD FOR FILM HARDNESS BY PENCIL TEST.
ASTM G 155 - STANDARD PRACTICE FOR OPERATING XENON ARC LIGHT APPARATUS FOR EXPOSURE OF NON-METALLIC.
ISO 1520 - PAINTS AND VARNISHES - CUPPING TEST.
ISO 2815 - PAINTS AND VARNISHES - BUCHHOLZ INDENTATION TEST.

1.2 SUBMITTALS:

A. PRODUCT DATA: SUBMIT MANUFACTURER'S PRODUCT DATA, STORAGE AND HANDLING REQUIREMENTS AND RECOMMENDATIONS, INSTALLATION METHODS AND AVAILABLE COLORS, STYLES, PATTERNS AND TEXTURES.
B. SHOP DRAWINGS: SUBMIT MANUFACTURER'S SHOP DRAWINGS, INCLUDING PLANS AND ELEVATIONS, INDICATING OVERALL DIMENSIONS, MATERIALS, TOLERANCES, WELDING, FASTENERS, HARDWARE, MOUNTING, FINISHES, AND ACCESSORIES.
C. SAMPLES: SUBMIT MANUFACTURER'S SAMPLES OF MATERIALS, FINISHES, AND FACTORY APPLIED COLOR FINISHES.
D. WARRANTY DATA ON MANUFACTURER'S LETTERHEAD.

1.3 QUALITY ASSURANCE:

A. PRODUCT SUPPORT: PRODUCTS ARE SUPPORTED WITH COMPLETE ENGINEERING DRAWINGS AND DESIGN PATENTS.
B. FACILITY OPERATOR: WELDERS AND MACHINE OPERATORS ARE CERTIFIED.

1.4 DELIVERY, STORAGE AND HANDLING:

A. DELIVERY: DELIVER MATERIALS TO SITE IN MANUFACTURER'S ORIGINAL, UNOPENED CONTAINERS AND PACKAGING, WITH LABELS CLEARLY IDENTIFYING PRODUCT NAME AND MANUFACTURER.
B. STORAGE: STORE MATERIALS IN CLEAN, DRY AREA IN ACCORDANCE WITH MANUFACTURER'S INSTRUCTIONS. KEEP MATERIALS IN MANUFACTURER'S ORGINAL, UNOPENED CONTAINERS AND PACKAGING UNTIL INSTALLATION.
C. HANDLING: PROTECT MATERIALS AND FINISH DURING HANDLING AND INSTALLATION TO PREVENT DAMAGE.

1.5 WARRANTY:

1 WARRANTY INFORMATION: PRODUCTS WILL BE FREE FROM DEFECTS IN MATERIAL AND/OR WORKMANSHIP FOR A PERIOD OF THREE YEARS FROM THE DATE OF FINAL ACCEPTANCE BY THE DEPARTMENT. THE WARRANTY DOES NOT APPLY TO DAMAGE RESULTING FROM ACCIDENT, ALTERATION, MISUSE, TAMPERING, NEGLIGENCE, OR ABUSE. SUPERFICIAL DAMAGE RESULTING FROM NORMAL USE: SCRATCHES, NICKS, AND ABRASIONS ARE TO BE CONSIDERED NORMAL WEAR AND TEAR, AND ARE NOT THE RESPONSIBILITY OF THE MANUFACTURER.

1.6 FINISHES:
A. FINISH ON METAL:

1. PRIMER: RUST INHIBITOR EPOXY PRIMER COAT 1.0-1.5 MILS ON FERROUS SUPPORTS
2. TOPCOAT: THERMOSETTING TGIC POLYESTER POWDER COAT, UV, CHIP, AND FLAKE RESISTANT.
3. COLOR: RAL 9004 BLACK, FINE TEXTURE.

B. TEST RESULTS:

1. SPECIFIC GRAVITY: 1.5 +/- .05
2. OPTIMAL STORAGE: < 80°F, 50% RH
3. PARTICLE DISTRIBUTION: +44 MICRONS (325 MESH) 30 - 40%
4. THEORETICAL COVERAGE: 59 SQ/FT @ 2.2 MILS
5. FILM THICKNESS: 2.2 TO 4.0 MILS
6. CURE SCHEDULE: 10 MINUTES @ 400
7. METAL TEMPERATURE: 18 MINUTES @ 375
8. 25 MINUTES @ 350
9. GLOSS: ASTM D523 4 - 7%
10. PENCIL HARDNESS: ASTM D3363 H-2H
11. FLEXIBILITY: ASTM D522 ⅛ IN
12. ADHESION: ASTM D3359 5B
13. DIRECT IMPACT: ASTM D2794 160 IN/LBS @ 2.2 MILS
14. REVERSE IMPACT: ASTM D2794 160 IN/LBS @ 2.2 MILS
15. SALT SPRAY HOURS: ASTM B117 1000
16. SALT SPRAY MATERIALS: CRS HENKEL B1000

2.0 MANUFACTURERS:

PROVIDE PRODUCTS FROM ONE OF THE FOLLOWING MANUFACTURERS:

A. KOMI SITE FURNISHINGS
   2825 HELSTON RD.
   COLUMBUS, OH 43220
   PHONE: (614) 578-9413
   WEBSITE: WWW.KOMISITEFURNISHINGS.COM

B. SPRUCE AND GANDER
   1782 LA COSTA MEADOWS DR.
   SUITE 104
   SAN MARCOS, CA 92078
   PHONE: (877) 650-7711
   WEBSITE: WWW.SPRUCEANDGANDER.COM

C. ORE INC.
   130 S. REDWOOD RD.
   NORTH SALT LAKE, UT 84054
   PHONE: (800) 936-0499
   WEBSITE: WWW.ORECONTAINERS.COM

D. WASSAU TILE
   PO BOX 1520
   WASSAU, WI 54402
   PHONE: (800) 388-8728
   WEBSITE: WWW.WASSAUTILE.COM

2.1 MISCELLANEOUS MATERIALS:

ANCHORS, FASTENERS, FITTINGS, AND HARDWARE:
STAINLESS STEEL MANUFACTURER'S STANDARD, CORROSION-RESISTANT-COATED OR NON-CORRODIBLE MATERIALS; COMMERCIAL QUALITY, TAMPERPROOF, VANDAL AND THEFT RESISTANT, CONCEALED, RECESSED, AND CAPPED OR PLUGGED.

3.0 EXAMINATION:

VERIFY THAT SUBSTRATES ARE STABLE AND CAPABLE OF SUPPORTING THE WEIGHT OF ITEMS COVERED UNDER THIS SECTION. VERIFY THAT SUBSTRATES HAVE BEEN ADEQUATELY PREPARED TO SECURELY ANCHOR THOSE ITEMS THAT WILL BE SURFACE MOUNTED. NOTIFY FIELD ENGINEER OF CONDITIONS THAT WOULD ADVERSELY AFFECT INSTALLATION OR SUBSEQUENT USE. DO NOT BEGIN INSTALLATION UNTIL UNACCEPTABLE CONDITIONS ARE CORRECTED.

3.1 INSTALLATION:

A. INSTALL PLANTERS IN ACCORDANCE WITH MANUFACTURER'S INSTRUCTIONS AT LOCATIONS INDICATED ON THE DRAWINGS.
B. INSTALL SITE FURNISHINGS LEVEL, PLUMB, SQUARE, ACCURATELY ALIGNED, CORRECTLY LOCATED, AND WITHOUT WARP AND POSITIONED AT LOCATIONS INDICATED ON DRAWINGS.

3.2 CLEANING:

A. CLEAN PLANTERS PROMPTLY AFTER INSTALLATION IN ACCORDANCE WITH MANUFACTURER'S INSTRUCTIONS. DO NOT USE HARSH CLEANING MATERIALS OR METHODS THAT COULD DAMAGE FINISH.
B. REMOVE TEMPORARY PROTECTIVE COVERINGS.
C. KEEP CLEAN UNTIL DATE OF FINAL COMPLETION.

3.3 ADJUSTING:

A. FINISH DAMAGE: REPAIR MINOR DAMAGES TO FINISH IN ACCORDANCE WITH MANUFACTURER'S INSTRUCTIONS AND AS APPROVED BY DESIGNER. REPAIR DAMAGED FINISHES TO MATCH ORIGINAL FINISH OR REPLACE COMPONENT.
B. COMPONENT DAMAGE: REMOVE AND REPLACE DAMAGED COMPONENTS THAT CANNOT BE SUCCESSFULLY REPAIRED AS DETERMINED BY DESIGNER.

3.4 PROTECTION:

PROTECT INSTALLED PLANTERS TO ENSURE THAT, EXCEPT FOR NORMAL WEATHERING, PLANTERS WILL BE WITHOUT DAMAGE OR DETERIORATION UNTIL DATE OF FINAL ACCEPTANCE.

4.0 METHOD OF MEASUREMENT:

PLANTER POTS SHALL BE MEASURED BY LUMP SUM FOR EACH INCLUDING CONTAINER AND INSTALLATION ACCESSORIES. REFER TO PLANTING SOILS, MULCH, DRAINAGE AGGREGATE, GEOTEXTILE FABRIC, PRECAST CONCRETE PLINTHS, AND IRRIGATION SECTIONS FOR METHOD OF MEASUREMENT FOR THESE SEPARATE ITEMS.

5.0 BASIS OF PAYMENT:

THE ACCEPTED PLANTER POTS WILL BE PAID FOR AT THE CONTRACT PRICE DESIGNATED FOR EACH AS SHOWN ON THE PLANS. ALL COSTS FOR WORK IN THIS SECTION ARE TO BE INCLUDED IN THE PRICE FOR EACH PLANTER POT. THE COSTS FOR PLANTING SOILS, PLANTS, MULCH, DRAINAGE AGGREGATE, GEOTEXTILE FABRIC, PRECAST CONCRETE PLINTHS, AND IRRIGATION SHALL BE INCLUDED ELSEWHERE.

ITEM 511 - CLASS QC2 CONCRETE WITH QC/QA, SIDEWALK, AS PER PLAN:
ITEM 511 - CLASS QC2 CONCRETE, MISC.: RAISED MEDIAN, WITH QC/QA:

PROVIDE A BROOM FINISH.

ITEM 511 - CONCRETE, MISC.: PRECAST CONCRETE PLINTHS:

SEE SHEET 74/88 FOR DETAILS AND ADDITIONAL REQUIREMENTS.

PROVIDE PRECAST CONCRETE PLINTHS FROM A PRECAST CONCRETE PRODUCER CERTIFIED UNDER SUPPLEMENT 1073. PRECAST PLINTHS SHALL BE DESIGNED BY THE MANUFACTURER TO SUPPORT THE DEAD LOAD SELF-WEIGHT OF THE PRECAST MEMBER, THE WEIGHT OF A FULLY-LOADED PLANTER POT SITTING ON TOP OF THE PLINTH (4.5 KIPS UNFACTORED LOAD), AS WELL AS ANY LIFTING AND ERECTION LOADS. THE PLINTHS SHALL BE DESIGNED TO PREVENT THERMAL AND FLEXURAL CRACKS FROM OCCURING DURING ANY STAGE OF CONSTRUCTION AND THROUGHOUT THE SERVICE LIFE OF THE BRIDGE. AT A MINIMUM, PROVIDE 1 LAYER OF # 4 BARS AT 12" MAX. SPACING IN EACH DIRECTION. PROVIDE 1.5" CLEAR COVER AT THE TOP SURFACE. PROVIDE ADDITIONAL REINFORCING STEEL NEAR THE TOP AND BOTTOM SURFACES AS NEEDED FOR LIFTING AND ERECTION.

CONCRETE FOR PRECAST PLINTHS SHALL BE CLASS QC3 AND SHALL HAVE A MINIMUM COMPRESSIVE STRENGTH OF 4 KSI WHEN FIRST LIFTED AND 5 KSI AT 28 DAYS. OBTAIN ALL CONCRETE FOR USE IN PRECAST CONCRETE PLINTHS FROM A SINGLE SUPPLIER USING CONSISTENT COMPONENTS IN ORDER TO OBTAIN A UNIFORM APPEARANCE.

REINFORCING STEEL SHALL CONFORM TO CMS 509 AND SHALL BE GALVANIZED.

PROVIDE SHOP DRAWINGS PER 501.04. THE REQUIREMENTS OF 501.04A, 501.04B, AND 501.04C SHALL APPLY.

PROVIDE A RUBBED FINISH PER 511.15B ON THE FOUR SIDES OF THE PLINTH. PROVIDE A STANDARD FINISH PER 511.15A ON THE TOP AND BOTTOM SURFACES.

PROVIDE A ½" BEVEL ON ALL EXPOSED EDGES, USING A TRIANGULAR STRIP BUILT INTO THE FORMS.

LIFTING LUGS SHALL BE DESIGNED AND INSTALLED BY THE PRECAST MANUFACTURER. FOLLOWING INSTALLATION, LUGS SHALL BE REMOVED AND GROUTED TO PROVIDE A SMOOTH, UNIFORM APPEARANCE.

TOLERANCES:

UNIT LENGTH AND WIDTH:	+/- ½"
UNIT HEIGHT:	+/- ⅛"
REINFORCING STEEL COVER:	- 0, + ¼"
POSITION OF REINFORCING STEEL, LIFTING INSERT, ETC:	+/- ¼"
SIZE OF SURFACES DEFECTS:	+/- ⅛"

REJECT PRECAST CONCRETE UNITS HAVING ANY OF THE CHARACTERISTICS DESCRIBED IN SECTION 851.05C OF SUPPLEMENTAL SPECIFICATION 851, OR NOT MEETING THE TOLERANCES SPECIFIED HEREIN.

ALL INSERTS, REINFORCING STEEL, LIFTING LUGS, AND OTHER REQUIRED APPURTENANCES SHALL BE FURNISHED AND SHOP-INSTALLED BY THE PRECAST MANUFACTURER. THESE ITEMS, TOGETHER WITH THE DESIGN, SHOP DRAWINGS, FABRICATION, DELIVERY AND INSTALLATION OF THE PLINTHS ON THE BRIDGE (INCLUDING GROUT BED, VALVE BOX, DRILLED OR FORMED HOLES IN SIDEWALK, THREADED BARS, AND ANY OTHER INCIDENTALS NECESSARY TO COMPLETE THE WORK), SHALL BE INCLUDED FOR PAYMENT WITH ITEM 511 - CONCRETE, MISC.: PRECAST CONCRETE PLINTHS.

1 9-1-25

GENERAL NOTES - 3
BRIDGE NO. HAM-75-0104
LINN STREET OVER IR-75 AND GEST STREET

SFN	3109098
DESIGN AGENCY	B&N burgessniple.com
DESIGNER	BES
CHECKER	MAB
REVIEWER	JCS 12/15/24
PROJECT ID	122048
SUBSET	5
TOTAL	88
SHEET	P.247
TOTAL	P.421

HAM-IR 75-1.05

MODEL: Sheet PAPERSIZE: 34x22 (in.) DATE: 8/26/2025 TIME: 8:45:48 AM PLTDRV: OHDOT_PDF.pltcfg PENTBL: OHDOT_UTPen.tbl USER: WORKSPACE: OHDOTCEv02 WORKSET: 122048 PRODUCT: OpenRoadsDesigner 10.12.02.4
pw:\\ohiodot-pw.bentley.com:ohiodot-pw-02\Documents\01 Active Projects\District 08\Hamilton\122048\401-Engineering_BurgessNiple\Structures\SFN_3109098\Sheets\SFN_3109098_SN003.dgn

ITEM 516 - ARMORLESS PREFORMED JOINT SEAL, AS PER PLAN:

THIS WORK CONSISTS OF INSTALLING THE ARMORLESS PREFORMED JOINT SEAL BETWEEN THE UNIT 1 AND UNIT 2 PLANTER WALLS AT THE PIER 1 EXPANSION JOINT. INSTALL THE ARMORLESS PREFORMED JOINT SEAL IN ACCORDANCE WITH THE MANUFACTURER'S SPECIFICATIONS AND UNDER THE SUPERVISION OF THE MANUFACTURER'S DESIGNATED REPRESENTATIVE.

SELECT THE ARMORLESS PREFORMED JOINT SEAL FROM ONE OF THE MANUFACTURERS LISTED BELOW:
R.J. WATSON, INC.
11035 WALDEN AVENUE
ALDEN, NY 14004-9616
PHONE: (716) 901-7020
FAX: (716) 901-7015
- SILICOFLEX SF500 (MAX. MOVEMENT RATING: 5")

WATSON BOWMAN ACME CORP.
95 PINEVIEW DRIVE
AMHERST, NY 14228-2121
PHONE: (716) 691-7566
FAX: (716) 691-9239
- WABO SPS-500 (MAX. MOVEMENT RATING: 5")

D.S. BROWN COMPANY
300 EAST CHERRY STREET
NORTH BALTIMORE, OH 45872-1227
PHONE: (419) 257-3561
FAX: (419) 257-2200
- V-500 (MAX. MOVEMENT RATING: 5")

THE SEAL AND ADHESIVE ARE AN INTEGRAL JOINT SYSTEM THAT SHALL BE DESIGNED AND SUPPLIED BY THE SAME MANUFACTURER.

RECESS THE JOINT SEAL AT LEAST ½" BELOW AND NO MORE THAN 2" BELOW THE TOP AND FACE OF PLANTER WALL. CONTINUALLY CHECK AND ADJUST THE DEPTH OF THE JOINT SEAL BY HAND AS NECESSARY BECAUSE WHEN THE JOINT SEAL OPENING CLOSES, THE JOINT SEAL WILL HAVE THE TENDENCY TO RISE. THEREFORE, AT THE JOINT SEAL'S MINIMUM WIDTH, THE TOP OF THE JOINT SEAL SHALL STILL BE AT LEAST ½" BELOW THE PLANTER WALL SURFACE.

SUBMIT THE JOINT SEAL INSTALLATION PROCEDURES TO THE ENGINEER AT LEAST SEVEN (7) DAYS BEFORE CONSTRUCTION BEGINS. THE DEPARTMENT'S ACCEPTANCE IS NOT REQUIRED.

THE DEPARTMENT WILL MEASURE THE ARMORLESS PREFORMED JOINT SEAL BY THE NUMBER OF FEET HORIZONTALLY AND VERTICALLY ALONG THE JOINT CENTERLINE.

THE DEPARTMENT WILL INCLUDE ALL MATERIALS, LABOR, EQUIPMENT, SURFACE PREPARATIONS, TOOLS, TRAFFIC CONTROL, AND INCIDENTALS NEEDED TO COMPLETE THE WORK DESCRIBED ABOVE IN THE CONTRACT PRICE FOR ITEM 516 - ARMORLESS PREFORMED JOINT SEAL, AS PER PLAN.

ITEM SPECIAL - BRIDGE PILASTER LETTERS:

DESCRIPTION:
THIS WORK CONSISTS OF PREPARING SHOP DRAWINGS, COORDINATING WITH THE CITY OF CINCINNATI, AND INSTALLING THE LETTERING ON THE BRIDGE PILASTERS AS SHOWN ON SHEET 63/88 AND AS SPECIFIED HEREIN.

SANDBLASTED GRAPHICS 1/8" DEPTH. IN-FILL RECESSED AREAS WITH SHERWIN WILLIAMS (SW 2849 WESTCHESTER GRAY) OR APPROVED EQUAL.

1
: FULL-SIZE ART FILE TO BE PROVIDED BY DOTE.
: SUBMIT SHOP DRAWINGS FOR REVIEW AND APPROVAL. THE CITY OF CINCINNATI SHALL HAVE 21 CALENDAR DAYS TO REVIEW THE SHOP DRAWINGS. IN THE EVENT THE SHOP DRAWINGS ARE NOT APPROVED, THE CITY OF CINCINNATI SHALL HAVE 21 CALENDAR DAYS TO REVIEW ANY RESUBMISSIONS UNTIL THE SHOP DRAWINGS ARE APPROVED.
: CONTRACTOR TO MEET ON-SITE WITH CITY STAFF TO CONFIRM LOCATIONS, PRIOR TO SANDBLASTING THE FINAL GRAPHICS INTO THE WALL. CONTACT BRIAN RHODES brian.rhodes@cincinnati-oh.gov /OR/ JOELL ANGEL-CHUMBLEY joell.angel-chumbley@cincinnati-oh.gov WITH ANTICIPATED INSTALL SCHEDULE.

METHOD OF MEASUREMENT:
THE DEPARTMENT WILL MEASURE THE BRIDGE PILASTER LETTERS BY THE NUMBER OF PILASTERS TO WHICH THE LETTERS ARE APPLIED.

BASIS OF PAYMENT:
THE DEPARTMENT WILL PAY FOR ACCEPTED QUANTITIES AT THE CONTRACT PRICE FOR ITEM SPECIAL - BRIDGE PILASTER LETTERS, WHICH SHALL INCLUDE ALL NECESSARY LABOR, MATERIALS, AND EQUIPMENT TO COMPLETE THIS ITEM OF WORK, INCLUDING PREPARING SHOP DRAWINGS, COORDINATING WITH THE CITY OF CINCINNATI, AND INSTALLING THE LETTERING.

ITEM 203 - GRANULAR MATERIAL, TYPE B, AS PER PLAN:

IN AREAS WHERE GRANULAR MATERIAL, TYPE B OVERLAPS WITH SELECT GRANULAR BACKFILL (I.E. IN THE AREAS OF SOIL REINFORCEMENT FOR THE MSE WALLS RUNNING PARALLEL TO ℄ CONST. CLP_LINN), THE GRANULAR MATERIAL, TYPE B, SHALL MEET THE REQUIREMENTS OF SUPPLEMENTAL SPECIFICATION 840.03.E. IN OTHER AREAS, GRANULAR MATERIAL, TYPE B SHALL CONFORM TO CMS 203.

ITEM 517 - RAILING MISC.: SIDEWALK RAILING AT REAR ABUTMENT MSE WALL:

THIS ITEM SHALL CONFORM TO CMS 517 EXCEPT AS NOTED HEREIN. SEE SHEET 65/88 FOR RAILING DETAILS AND ADDITIONAL REQUIREMENTS.

MECHANICAL CONNECTORS:

AN APPROVED TYPE OF MECHANICAL CONNECTOR FOR REINFORCING BARS SHALL BE PROVIDED. INSTALLATION OF CONNECTORS SHALL CONFORM WITH MANUFACTURER'S RECOMMENDED PROCEDURES.

CONNECTORS USED WITH GALVANIZED BARS SHALL BE GALVANIZED. COATING FOR BOTH CONNECTORS AND BARS SHALL CONFORM TO THE SAME SPECIFICATIONS. COATINGS WHICH HAVE BEEN DAMAGED OR WHICH OTHERWISE DO NOT MEET SPECIFICATIONS WITH RESPECT TO COLOR, CONTINUITY AND UNIFORMITY SHALL BE REPLACED WITH MATERIAL THAT MEETS THE SPECIFICATIONS.

SUPPLY AND INSTALL CAPS FOR MECHANICAL CONNECTORS TO PREVENT CONCRETE INTRUSION INTO THE CONNECTORS DURING THE DECK POUR.

CONNECTORS SHALL CONFORM WITH ITEM 509 AND ARE CONSIDERED INCIDENTAL TO THE BID PRICE PER POUND FOR ITEM 509.

ITEM 659 - TOPSOIL, AS PER PLAN:

THIS ITEM OF WORK SHALL CONFORM WITH CMS 659, EXCEPT AS NOTED BELOW.

TOPSOIL SHALL BE MACADAM 2/6MM AND 25% BY VOLUME ENRICHED BIOCHAR AND MATURE COMPOST MIXED EQUALLY.

THE COMPOST SHALL BE MATURE, AND THE BIOCHAR SHALL BE NUTRITIONALLY ENRICHED WITH HYGIENIZED ORGANIC FERTILIZER OR MINERAL FERTILIZER NPK 5-1-4 WITH MICRONUTRIENTS.

1

STANDARD ABBREVIATIONS LIST:

APPROX. = APPROXIMATE
BOT. OR BTM. = BOTTOM
BRG. = BEARINGS
BRGS. = BEARINGS
B.S. = BOTH SIDES
B# = BEAM NUMBER
c/c = CENTER-TO-CENTER
C.J. = CONSTRUCTION JOINT
CJP = COMPLETE JOINT PENETRATION
CLR. = CLEAR
CMS OR C&MS = CONSTRUCTION AND MATERIALS SPECIFICATIONS
CONST. = CONSTRUCTION
CS = INDICATES BUTT WELD SUBJECT TO COMPRESSIVE STRESSES ONLY
CVN = CHARPY V-NOTCH
DIA. = DIAMETER
EB = EASTBOUND
E.F. = EACH FACE
EL. = ELEVATION
EMBED. = EMBEDMENT
EQ. = EQUAL
EXP. = EXPANSION
F.A. = FORWARD ABUTMENT
F.F. = FAR FACE
F.S. = FIELD SPLICE
FWD = FORWARD
GFRP = GLASS FIBER REINFORCED POLYMER
G# = GIRDER NUMBER
HMWM = HIGH MOLECULAR WEIGHT METHACRYLATE
H.S. = HIGH STRENGTH
LF = LEFT FORWARD
LT. = LEFT
MAX. = MAXIMUM
M.C. = MECHANICAL CONNECTOR
M.E. = MATCH EXISTING
MIN. = MINIMUM
MGS = MIDWEST GUARDRAIL SYSTEM
NB = NORTHBOUND
N.F. = NEAR FACE
NPCPP = NON-PERFORATED CORRUGATED PLASTIC PIPE
O.D. = OUTSIDE DIAMETER
o/o = OUT-TO-OUT
PCB = PORTABLE CONCRETE BARRIER
PCPP = PERFORATED CORRUGATED PLASTIC PIPE
PEJF = PREFORMED EXPANSION JOINT FILLER
P.G. = PROFILE GRADE
PGD = PREFABRICATED GEOCOMPOSITE DRAIN
R.A. = REAR ABUTMENT
RAD. = RADIUS
RT. = RIGHT
SB = SOUTHBOUND
SCH = SCHEDULE
SHLD. = SHOULDER
SHT. = SHEET
S.O. OR SR = SERIES OF
SPA. = SPACES
STA. = STATION
SYMM. = SYMMETRICAL
TBR = TO BE REMOVED
TBRLO = TO BE RELOCATED BY OTHERS
T&B = TOP AND BOTTOM
T/R = TOP OF ROCK
t/t = TOE-TO-TOE
U.N.O. = UNLESS NOTED OTHERWISE
VAR. = VARIES
WB = WESTBOUND
W.P. = WORK POINT

1 9-1-25

GENERAL NOTES - 4
BRIDGE NO. HAM-75-0104
LINN STREET OVER IR-75 AND GEST STREET

SFN 3109098
DESIGN AGENCY B&N burgessniple.com
DESIGNER BES | CHECKER MAB
REVIEWER JCS 12/15/24
PROJECT ID 122048
SUBSET 6 | TOTAL 88
SHEET P.248 | TOTAL P.421

HAM-IR 75-1.05

MODEL: Sheet PAPERSIZE: 34x22 (in.) DATE: 8/26/2025 TIME: 8:45:56 AM PLTDRV: OHDOT_PDF.pltcfg PENTBL: OHDOT_UTPen.tbl USER: WORKSPACE: OHDOTCEv02 WORKSET: 122048 PRODUCT: OpenRoadsDesigner 10.12.02.4
pw:\\ohiodot-pw.bentley.com:ohiodot-pw-02\Documents\01 Active Projects\District 08\Hamilton\122048\401-Engineering_BurgessNiple\Structures\SFN_3109098\Sheets\122048_SFN_3109098_SN004.dgn

ITEM SPECIAL - STRUCTURES: SCREEN WALLS:

1. DESCRIPTION:

THIS WORK CONSISTS OF PREPARING SHOP DRAWINGS, FURNISHING, FABRICATING, COATING, AND ERECTING SCREEN WALLS.

SEE SHEETS 65A/88 TO 65E/88 FOR SCREEN WALL DETAILS.

2. FABRICATOR QUALIFICATIONS:

FABRICATOR SHALL HAVE ISO 9001 CERTIFICATIONS SUPPORTING DESIGN AND ENGINEERING WORK AS WELL AS QUALITY ASSURANCE.

FABRICATOR IS REQUIRED TO HAVE A WELDING COUPON.

FABRICATOR IS REQUIRED TO DEMONSTRATE AND DISCUSS RELEVANT EXPERIENCE WITH PROJECTS OF SIMILAR SCOPE AND INTENT.

FABRICATOR HAS BEEN IN BUSINESS NO LESS THAN 10 YEARS.

FABRICATOR SHALL PROVIDE PROOF THAT THEY HAVE MANUFACTURED A MINIMUM OF 3 SIMILAR PROJECTS OR PRODUCTS.

3. SHOP DRAWINGS:

SUBMIT SHOP DRAWINGS TO THE ODOT OFFICE OF MATERIALS MANAGEMENT (OMM) AND THE ODOT DISTRICT 8 OFFICE OF PLANNING AND ENGINEERING AT LEAST 3 DAYS BEFORE THE PRE-FABRICATION MEETING. THE SUBMISSION TO OMM SHALL INCLUDE A WRITTEN ACCEPTANCE LETTER AND EACH DRAWING. ALSO, FURNISH THE FABRICATOR'S QUALITY CONTROL SPECIALIST WITH THESE DRAWINGS BEFORE THE PRE-FABRICATION MEETING.

HAVE COMPETENT INDIVIDUALS PREPARE AND CHECK THE SHOP DRAWINGS. THE PREPARER(S) AND CHECKER(S) SHALL INITIAL EACH SHEET AND SHALL BE DIFFERENT INDIVIDUALS. PROVIDE, ON THE COVER SHEET OR SUBMITTAL LETTER, THE FIRST NAME, LAST NAME AND INITIALS OF EACH PREPARER AND CHECKER PERFORMING WORK ON THE SHOP DRAWINGS. HAVE AN OHIO REGISTERED ENGINEER SIGN, SEAL AND DATE THE SHOP DRAWING COVER SHEET OR SUBMITTAL LETTER ACCORDING TO ORC 4733 AND OAC 4733-35 CONFIRMING THAT THE SHOP DRAWINGS MEET THE INTENT OF THE CONTRACT. IF MULTIPLE PREPARERS OR MULTIPLE CHECKERS CREATED THE DRAWING, THEN THE COVER SHEET OR SUBMITTAL LETTER SHALL CLEARLY INDICATE THE PORTIONS FOR WHICH EACH PERSON IS RESPONSIBLE. HAVE ALL QUESTIONS AND COMMENTS ADDRESSED BEFORE SUBMITTING THE SHOP DRAWINGS.

THE CONTRACTOR'S WRITTEN ACCEPTANCE LETTER SHALL DOCUMENT ACCEPTANCE OF THE SHOP DRAWINGS INCLUDING CONFIRMATION OF FIELD VERIFICATION, AS REQUIRED, AND DESCRIPTIONS OF ISSUES RESOLVED BETWEEN THE CONTRACTOR, THE FABRICATOR, OR THE DEPARTMENT.

BY ACCEPTING THESE SHOP DRAWINGS, THE CONTRACTOR REPRESENTS TO THE DEPARTMENT THAT ALL DIMENSIONS AND ELEVATIONS OF EXISTING CONDITIONS SHOWN ON THE PLANS HAVE BEEN FIELD MEASURED AND VERIFIED, AND THAT THESE SHOP DRAWINGS COMPLY WITH ALL THE MATERIALS REQUIREMENTS, CONSTRUCTION REQUIREMENTS, CONTRACT REQUIREMENTS, AND PERFORMANCE CRITERIA. THE CONTRACTOR FURTHER REPRESENTS THAT THESE DRAWINGS HAVE BEEN COORDINATED AND VERIFIED WITH THE DETAILS OF THE WORK TO BE PERFORMED BY OTHER FABRICATORS AND ENTITIES ON THE PROJECT. THE DEPARTMENT WILL NOT MAKE ANY ALLOWANCE FOR ADDITIONAL COST OR DELAYS TO THE CONTRACTOR FOR INCORRECT FABRICATION AS A RESULT OF FAILURE TO COORDINATE OR PERFORM THIS ACCEPTANCE.

IF THE DEPARTMENT REQUESTS CHANGES ON THESE SHOP DRAWINGS, OR THE CONTRACTOR MAKES CHANGES IN ADDITION TO THOSE EXPRESSLY REQUESTED, REVISE THE SHOP DRAWINGS AND SUBMIT A NEW COVER SHEET, SIGNED, SEALED AND DATED BY AN OHIO REGISTERED ENGINEER WITH SUITABLE REVISION MARKS TO IDENTIFY THE CHANGES.

SCHEDULE THE PRE-FABRICATION MEETING AFTER OMM RECEIVES THE DRAWINGS. FABRICATION MAY BEGIN AFTER THE PRE-FABRICATION MEETING IS COMPLETE.

4. MATERIAL REQUIREMENTS:

SUBMIT MILL TEST REPORTS FOR STRUCTURAL STEEL AND ALUMINUM ACCORDING TO C&MS 501.06.B.

5. FABRICATION REQUIREMENTS:

FABRICATE COMPONENTS PER C&MS 513. CONDUCT A PRE-FABRICATION MEETING PER 513.07.

ALL PLAN DIMENSIONS ARE MEASURED ALONG THE HORIZONTAL. SEE SITE PLAN FOR VERTICAL PROFILE.

WELDING OF STEEL MEMBERS SHALL CONFORM TO THE REQUIREMENTS OF THE AASHTO/AWS D1.5M/D1.5 BRIDGE WELDING CODE. WELDING OF ALUMINUM MEMBERS SHALL CONFORM TO THE REQUIREMENTS OF AWS D1.2/D1.2M STRUCTURAL WELDING CODE - ALUMINUM.

PERFORM ALL SHOP WELDING PRIOR TO GALVANIZING OF STEEL MEMBERS AND PAINTING OF ALUMINUM MEMBERS.

6. COATINGS:

SEE SHEETS 65A/88 TO 65E/88 FOR GALVANIZING REQUIREMENTS.

PAINT SHALL BE A CATALYZED ACRYLIC POLYURETHANE PAINT SYSTEM, MATTHEWS PAINT SYSTEM OR APPROVED EQUAL, AND FINISHED WITH A HIGH-PERFORMANCE GRAFFITI-RESISTANT GLOSS CLEAR COAT. FINAL COLOR SHALL BE [TBD].

FOLLOW ALL MANUFACTURER'S WRITTEN INSTRUCTIONS REGARDING SURFACE PREPARATION, MIXING, STORAGE, EQUIPMENT, APPLICATION, COATING THICKNESSES, DRYING TIMES AND ANY OTHER INSTRUCTIONS PROVIDED BY THE MANUFACTURER.

PROTECT COATINGS DURING TRANSPORTATION AND ERECTION. REPAIR GALVANIZING DAMAGED DURING TRANSPORTATION OR ERECTION PER C&MS 711.02. REPAIR PAINT DAMAGED DURING TRANPORTATION OR ERECTION ACCORDING TO PAINT MANUFACTURER'S INSTRUCTIONS.

7. JOB STANDARD MOCK-UP:

PROVIDE A JOB STANDARD MOCK-UP FABRICATED, GALVANIZED, PAINTED, AND DELIVERED TO THE JOB SITE FOR ENGINEER'S APPROVAL BEFORE FABRICATION OF THE PROJECT SCREEN WALL BEGINS. THE JOB STANDARD MOCK-UP SHALL MEET THE FOLLOWING REQUIREMENTS:

A. PROVIDE PROPER HANDLING, STORAGE, DELIVERY, AND MAINTENANCE OF THE MOCK-UP THROUGHOUT THE DURATION OF THE PROJECT. THE DEPARTMENT SHALL TAKE POSSESSION OF THE MOCK-UP AT A TIME AGREED UPON BY THE ENGINEER AND CONTRACTOR.

B. THE MOCK-UP SHALL CONSIST OF 3 POSTS, 2 SCREEN WALL PANELS, AND A CLOSURE PLATE, AND SHALL REPLICATE THE SCREEN WALL SHOWN IN THE PLANS ADJACENT TO THE END PILASTER AT THE FORWARD ABUTMENT, LEFT PARAPET. THE MOCK-UP SHALL INCLUDE BASE PLATES, ANCHOR RODS, POSTS, STEEL CONNECTION ANGLES, ALUMINUM CONNECTION ANGLES, SCREEN WALL PANELS, MASKING ELEMENTS, BOLTS AND ASSOCIATED HARDWARE, AND A CLOSURE PLATE. ALL DETAILS AND CONNECTIONS SHALL BE AS SHOWN ON THE PLANS.

C. AFTER THE COMPONENT PARTS OF THE JOB STANDARD MOCK-UP HAVE BEEN DELIVERED TO THE JOB SITE, THE CONTRACTOR SHALL INSTALL THE MOCK-UP ON A TEMPORARY SECTION OF CONCRETE PARAPET WITH DIMENSIONS AND GRADE REPRESENTING THE PERMANENT CONCRETE PARAPET ONTO WHICH THE PRODUCTION SCREEN WALL WILL BE MOUNTED.

D. FOR ANY PORTIONS OF THE MOCK-UP REJECTED BY THE ENGINEER, REPAIR OR REPLACE, TO THE SATISFACTION OF THE ENGINEER, INCLUDING BUT NOT LIMITED TO COATINGS AND COATING COLORS.

E. FULL FABRICATION OF THE SCREEN WALLS WILL NOT COMMENCE UNTIL THE ENGINEER GIVES WRITTEN NOTICE OF ACCEPTANCE OF THE MOCK-UP.

F. THE MOCK-UP WILL BE USED BY THE ENGINEER FOR THE DURATION OF THE PROJECT TO ASSURE THE QUALITY AND CONSISTENCY OF ALL SCREEN WALL SECTIONS USED ON THE BRIDGE. THE ENGINEER WILL REJECT ANY AND ALL SECTIONS THAT DO NOT REPLICATE THE ACCEPTED PROPERTIES OF THE MOCK-UP.

8. METHOD OF MEASUREMENT:

THE DEPARTMENT WILL MEASURE SCREEN WALLS BY THE NUMBER OF FEET FROM CENTERLINE TO CENTERLINE OF END POSTS.

9. BASIS OF PAYMENT:

THE DEPARTMENT WILL PAY FOR ACCEPTED QUANTITIES AT THE UNIT PRICE BID PER FOOT FOR ITEM SPECIAL - STRUCTURES: SCREEN WALLS, WHICH SHALL BE FULL COMPENSATION FOR ALL LABOR, MATERIALS, EQUIPMENT, AND INCIDENTALS NECESSARY TO COMPLETE THIS ITEM OF WORK IN A SATISFACTORY AND WORKMANLIKE MANNER, AS SHOWN IN THE PLANS AND DESCRIBED HEREIN.

ITEM 507 - 12" CAST-IN-PLACE REINFORCED CONCRETE PILES, DRIVEN, AS PER PLAN:
ITEM 507 - 14"CAST-IN-PLACE REINFORCED CONCRETE PILES, DRIVEN, AS PER PLAN:

FOLLOWING REMOVAL OF EXISTING CONCRETE FOOTINGS WITHIN THE PROPOSED BRIDGE LIMITS, FIELD LOCATE, BY SURVEY, EACH OF THE EXISTING PILES AT THE FOLLOWING LOCATIONS AND PROVIDE A SCALED DRAWING TO THE ENGINEER ILLUSTRATING THE EXISTING PILES AND THE PROPOSED PILE LOCATIONS:

EXISTING PIER 1 (PROPOSED REAR ABUTMENT)

EXISTING PIER 2 (PROPOSED PIER 1)

EXISTING PIER 4 (PROPOSED PIER 2)

EXISTING FORWARD ABUTMENT (PROPOSED FORWARD ABUTMENT)

DEPICT POTENTIAL PILE CONFLICTS WITH CONFLICT DIMENSIONS ON THE DRAWING AND PROPOSE NEW LOCATIONS OF THE PILES. THE ENGINEER WILL COORDINATE WITH THE DESIGNER OF RECORD TO ADJUST THE PILE LAYOUT TO AVOID CONFLICTS. PROVIDE THE PILE LAYOUT DRAWING AT LEAST 10 WORKING DAYS PRIOR TO PROPOSED COMMENCEMENT OF PILE DRIVING OPERATIONS. THE ENGINEER WILL PROVIDE A MODIFIED PILE LAYOUT ON OR BEFORE 10 WORKING DAYS. BEGIN PILE DRIVING OPERATIONS FOLLOWING RECEIVING THE MODIFIED PILE LAYOUT. INCLUDE SPECIFIC TASKS IN THE CPM SCHEDULE FOR SUBMITTAL OF THE PILE LAYOUT DRAWING AS WELL AS TIME TO RECEIVE A MODIFIED PILE LAYOUT. DRIVE PILES TO THE DESIGNATED ULTIMATE BEARING VALUE PER THE REQUIREMENTS OF ITEM 507.

ITEM 509 - CONCRETE REINFORCEMENT, MISC.: ADDITIONAL GALVANIZED STEEL REINFORCEMENT FOR FOOTINGS:

IT IS ANTICIPATED THAT THE GALVANIZED REINFORCING STEEL, AS SHOWN IN THE PLANS FOR THE FOOTINGS, MAY CHANGE BASED ON THE LOCATION OF THE EXISTING PILING. SEE ITEM 507 - 12"CAST-IN-PLACE REINFORCED CONCRETE PILES, DRIVEN, AS PER PLAN AND ITEM 507 - 14"CAST-IN-PLACE REINFORCED CONCRETE PILES, DRIVEN, AS PER PLAN FOR ADDITIONAL INFORMATION. THE FINAL GALVANIZED REINFORCING STEEL DETAILS WILL BE PROVIDED WITH THE MODIFIED PILE LAYOUT REFERENCED IN ITEM 507 - 12"CAST-IN-PLACE REINFORCED CONCRETE PILES, DRIVEN, AS PER PLAN AND ITEM 507 - 14"CAST-IN-PLACE REINFORCED CONCRETE PILES, DRIVEN, AS PER PLAN. INCLUDE SPECIFIC TASKS IN THE CPM SCHEDULE FOR THE NECESSARY TIME REQUIRED TO OBTAIN ADDITIONAL GALVANIZED REINFORCING STEEL BASED ON THE FINAL REINFORCING DETAILS FOR THE FOOTINGS BASED ON THE MODIFIED PILE LAYOUT. COMPENSATION FOR ANY ADDITIONAL GALVANIZED REINFORCING STEEL REQUIRED BASED ON THE MODIFIED PILE LAYOUT WILL BE MADE UNDER THIS ITEM. IN ADDITION TO THE PROVISIONS OF ITEM 509, FIELD BEND AND/OR FIELD CUT THE STEEL REINFORCEMENT DESIGNATED IN THE PLANS, AS NECESSARY, IN ORDER TO MAINTAIN THE REQUIRED CLEARANCES AND BAR SPACINGS. REPAIR ALL DAMAGE TO THE BAR COATING ACCORDING TO C&MS 709.16.

A QUANTITY OF 4,000 LBS. OF ITEM 509 - CONCRETE REINFORCEMENT, MISC.: ADDITIONAL GALVANIZED STEEL REINFORCEMENT FOR FOOTINGS HAS BEEN INCLUDED FOR THIS PURPOSE.

511 - CLASS QC1 CONCRETE WITH QC/QA, FOOTING, AS PER PLAN:

THE DIMENSIONS OF THE FOOTINGS MAY CHANGE BASED ON THE LOCATION OF THE EXISTING PILING. A QUANTITY OF 10% OF THE FOOTING VOLUME HAS BEEN ADDED TO HELP ACCOUNT FOR PILE PLACEMENT VARIANCES. SEE ITEM 507 - 12" CAST-IN-PLACE REINFORCED CONCRETE PILES, DRIVEN, AS PER PLAN AND ITEM 507 - 14"CAST-IN-PLACE REINFORCED CONCRETE PILES, DRIVEN, AS PER PLAN FOR ADDITIONAL INFORMATION. THE FINAL DIMENSIONS OF THE FOOTINGS WILL BE PROVIDED WITH THE MODIFIED PILE LAYOUT REFERENCED IN ITEM 507 - 12"CAST-IN-PLACE REINFORCED CONCRETE PILES, DRIVEN, AS PER PLAN AND ITEM 507 - 14"CAST-IN-PLACE REINFORCED CONCRETE PILES, DRIVEN, AS PER PLAN. ADJUSTMENTS TO THE DIMENSIONS OF THE FOOTINGS BASED ON THE LOCATION OF THE EXISTING PILING IS CONSIDERED INCIDENTAL TO THIS ITEM. PAYMENT WILL BE IN ACCORDANCE WITH C&MS 511.23 AND CALCULATIONS FROM PLAN DIMENSIONS, IN PLACE, COMPLETED AND ACCEPTED WILL BE BASED UPON THE FINAL DIMENSIONS OF THE FOOTINGS PROVIDED WITH THE MODIFIED PILE LAYOUT REFERENCED IN ITEM 507 - 12"CAST-IN-PLACE REINFORCED CONCRETE PILES, DRIVEN, AS PER PLAN AND ITEM 507 - 14"CAST-IN-PLACE REINFORCED CONCRETE PILES, DRIVEN, AS PER PLAN.

ITEM SPECIAL - BRIDGE PILASTER STORY PANELS:

THIS ITEM OF WORK CONSISTS OF PREPARING SHOP DRAWINGS, FURNISHING, FABRICATING, COATING, AND ERECTING STORY PANELS ON THE CONCRETE END PILASTERS.

SEE SHEET 63A/88 FOR STORY PANEL DETAILS.

SECTIONS 2-6 OF THE GENERAL NOTES FOR ITEM SPECIAL - STRUCTURES: SCREEN WALLS SHALL APPLY TO THIS ITEM OF WORK.

JOB STANDARD MOCK-UP:

PROVIDE A JOB STANDARD MOCK-UP FABRICATED, COATED, AND DELIVERED TO THE JOB SITE FOR ENGINEER'S APPROVAL BEFORE FABRICATION OF THE PROJECT STORY PANELS BEGINS. THE JOB STANDARD MOCK-UP SHALL MEET THE FOLLOWING REQUIREMENTS:

A. PROVIDE PROPER HANDLING, STORAGE, DELIVERY, AND MAINTENANCE OF THE MOCK-UP THROUGHOUT THE DURATION OF THE PROJECT. THE DEPARTMENT SHALL TAKE POSSESSION OF THE MOCK-UP AT A TIME AGREED UPON BY THE ENGINEER AND CONTRACTOR.

B. THE MOCK-UP SHALL CONSIST OF A COMPLETED STORY PANEL, ADHERED TO A PREFORMED BEARING PAD AS SHOWN IN THE PLANS.

C. AFTER THE JOB STANDARD MOCK-UP HAS BEEN DELIVERED TO THE JOB SITE, THE CONTRACTOR SHALL STORE THE MOCK-UP IN A LOCATION AGREED UPON BY THE ENGINEER AND CONTRACTOR TO ALLOW FOR INSPECTION. MOUNTING OF THE MOCK-UP TO A CONCRETE ELEMENT IS NOT REQUIRED.

D. FOR ANY PORTIONS OF THE MOCK-UP REJECTED BY THE ENGINEER, REPAIR OR REPLACE, TO THE SATISFACTION OF THE ENGINEER, INCLUDING BUT NOT LIMITED TO COATINGS AND COATING COLORS.

E. FULL FABRICATION OF THE STORY PANELS WILL NOT COMMENCE UNTIL THE ENGINEER GIVES WRITTEN NOTICE OF ACCEPTANCE OF THE MOCK-UP.

F. THE MOCK-UP WILL BE USED BY THE ENGINEER FOR THE DURATION OF THE PROJECT TO ASSURE THE QUALITY AND CONSISTENCY OF ALL STORY PANELS USED ON THE BRIDGE. THE ENGINEER WILL REJECT ANY AND ALL PANELS THAT DO NOT REPLICATE THE ACCEPTED PROPERTIES OF THE MOCK-UP.

G. UPON APPROVAL BY THE ENGINEER, THE MOCK-UP MAY BE USED AS ONE OF THE PROJECT STORY PANELS.

METHOD OF MEASUREMENT:

THE DEPARTMENT WILL MEASURE STORY PANELS BY THE NUMBER OF EACH.

BASIS OF PAYMENT:

THE DEPARTMENT WILL PAY FOR ACCEPTED QUANTITIES AT THE UNIT PRICE BID PER EACH FOR ITEM SPECIAL - BRIDGE PILASTER STORY PANELS, WHICH SHALL BE FULL COMPENSATION FOR ALL LABOR, MATERIALS, EQUIPMENT, AND INCIDENTALS NECESSARY TO COMPLETE THIS ITEM OF WORK IN A SATISFACTORY AND WORKMANLIKE MANNER, AS SHOWN IN THE PLANS AND DESCRIBED HEREIN.

1 9-1-25

GENERAL NOTES - 4A
BRIDGE NO. HAM-75-0104
LINN STREET OVER IR-75 AND GEST STREET

SFN 3109098
DESIGN AGENCY B&N burgessniple.com
DESIGNER BES | CHECKER MAB
REVIEWER XAC 8/27/25
PROJECT ID 122048
SUBSET 6A | TOTAL 88
SHEET P.248A | TOTAL P.421

HAM-IR 75-1.05

MODEL: Sheet PAPERSIZE: 34x22 (in.) DATE: 8/28/2025 TIME: 9:48:35 AM PLTDRV: OHDOT_PDF.pltcfg PENTBL: OHDOT_UTPen.tbl USER: WORKSPACE: OHDOTCEv02 WORKSET: 122048 PRODUCT: OpenRoadsDesigner 10.12.02.4
pw:\\ohiodot-pw.bentley.com:ohiodot-pw-02\Documents\01 Active Projects\District 08\Hamilton\122048\401-Engineering_BurgessNiple\Structures\SFN_3109098\Sheets\122048_SFN_3109098_SN005.dgn

ESTIMATED QUANTITIES						CALC.	DATE	CHK'D	DATE	
						XAC/BES	4/9/2025	JDG/MAB	4/9/2025	
ITEM	ITEM EXT.	TOTAL	UNIT	DESCRIPTION	ABUT.	PIERS	SUPER.	GENERAL	SHT. REF.	
202	11003		LS	STRUCTURE REMOVED, OVER 20 FOOT SPAN, AS PER PLAN				LS	3/88	
202	22900	634	SY	APPROACH SLAB REMOVED				634		
202	30204		LS	STEPS REMOVED				LS		
203	20001	27	CY	EMBANKMENT, AS PER PLAN	27				3/88	
203	35111	864	CY	GRANULAR MATERIAL, TYPE B, AS PER PLAN	864				6/88	
503	11101		LS	COFFERDAMS AND EXCAVATION BRACING, AS PER PLAN				LS	4/88	
503	21300		LS	UNCLASSIFIED EXCAVATION		LS				
~~505~~	~~11100~~		~~LS~~	~~PILE DRIVING EQUIPMENT MOBILIZATION~~				~~LS~~		
507	00501	4120	FT	12" CAST-IN-PLACE REINFORCED CONCRETE PILES, DRIVEN, AS PER PLAN	4120				6A/88	1
~~507~~	~~00550~~	~~4400~~	~~FT~~	~~12" CAST-IN-PLACE REINFORCED CONCRETE PILES, FURNISHED~~	~~4400~~					
507	00601	5500	FT	14" CAST-IN-PLACE REINFORCED CONCRETE PILES, DRIVEN, AS PER PLAN		5500			6A/88	1
~~507~~	~~00650~~	~~5880~~	~~FT~~	~~14" CAST-IN-PLACE REINFORCED CONCRETE PILES, FURNISHED~~		~~5880~~				
507	92201	280	FT	PREBORED HOLES, AS PER PLAN		280			3/88	
~~509~~	~~26000~~	~~502351~~	~~LB~~	~~GALVANIZED STEEL REINFORCEMENT~~	~~27993~~	~~77520~~	~~396838~~			
509	40000	4000	LB	CONCRETE REINFORCEMENT, MISC.: ADDITIONAL GALVANIZED STEEL REINFORCEMENT FOR FOOTINGS	2000	2000			6A/88	1
~~511~~	~~34463~~	~~313~~	~~CY~~	~~CLASS QC SCC CONCRETE WITH QC/QA, BRIDGE DECK (PARAPET), AS PER PLAN~~			~~313~~		~~3/88~~	
511	46513	307	CY	CLASS QC1 CONCRETE WITH QC/QA, FOOTING, AS PER PLAN	146	161			6A/88	1
~~511~~	~~51513~~	~~510~~	~~CY~~	~~CLASS QC2 CONCRETE WITH QC/QA, SIDEWALK, AS PER PLAN~~			~~510~~		~~5/88~~	
511	53012	83	CY	CLASS QC2 CONCRETE, MISC.: RAISED MEDIAN, WITH QC/QA			83		5/88	
511	53012	98	CY	CLASS QC2 CONCRETE, MISC.: PLANTER WALLS, WITH QC/QA			98			
511	53014	1079	CY	CLASS QC3 CONCRETE, MISC.: BRIDGE DECK, WITH QC/QA			1079		4/88	
511	53014	237	CY	CLASS QC3 CONCRETE, MISC.: PIER ABOVE FOOTINGS, WITH QC/QA		237			4/88	
511	53014	155	CY	CLASS QC3 CONCRETE, MISC.: ABUTMENT NOT INCLUDING FOOTING, WITH QC/QA	155				4/88	
511	81300	48	EACH	CONCRETE, MISC.: PRECAST CONCRETE PLINTHS			48		5/88	
512	10001	3868	SY	SEALING OF CONCRETE SURFACES, AS PER PLAN	740	1316	1812		3/88	
512	10050	2827	SY	SEALING OF CONCRETE SURFACES (NON-EPOXY)			2827			
512	10100	3868	SY	SEALING OF CONCRETE SURFACES (EPOXY-URETHANE)	740	1316	1812		3/88	
512	33000	61	SY	TYPE 2 WATERPROOFING	61					
SPECIAL	51267200	844	SY	WATERPROOFING FOR PLANTERS AREAS			844		5/88	
513	10261	128300	LB	STRUCTURAL STEEL MEMBERS, LEVEL 3, AS PER PLAN			128300		4/88	
513	10281	1275300	LB	STRUCTURAL STEEL MEMBERS, LEVEL 4, AS PER PLAN			1275300		4/88	
513	20000	9784	EACH	WELDED STUD SHEAR CONNECTORS			9784			
514	00060	15361	SF	FIELD PAINTING STRUCTURAL STEEL, INTERMEDIATE COAT			15361		3/88	
514	00066	15361	SF	FIELD PAINTING STRUCTURAL STEEL, FINISH COAT			15361		3/88	
516	10010	182	FT	ARMORLESS PREFORMED JOINT SEAL			182			
516	10011	11	FT	ARMORLESS PREFORMED JOINT SEAL, AS PER PLAN			11		6/88	
516	11211	258	FT	STRUCTURAL EXPANSION JOINT INCLUDING ELASTOMERIC STRIP SEAL, AS PER PLAN			258		75-79/88	
516	13000	81	SF	¼" PREFORMED EXPANSION JOINT FILLER			81			
516	13200	64	SF	½" PREFORMED EXPANSION JOINT FILLER			64			
516	13900	356	SF	2" PREFORMED EXPANSION JOINT FILLER			356			
516	44101	9	EACH	ELASTOMERIC BEARING WITH INTERNAL LAMINATES AND LOAD PLATE (NEOPRENE), AS PER PLAN (13"x12"x2.358" EXP. BEARING)			9		45/88	
516	44101	9	EACH	ELASTOMERIC BEARING WITH INTERNAL LAMINATES AND LOAD PLATE (NEOPRENE), AS PER PLAN (13"x12"x2.358" FIXED BEARING)			9		45/88	
516	44201	4	EACH	ELASTOMERIC BEARING WITH INTERNAL LAMINATES AND LOAD PLATE (NEOPRENE), AS PER PLAN (23"x18"x3.448" FIXED BEARING)			4		45/88	
516	44201	5	EACH	ELASTOMERIC BEARING WITH INTERNAL LAMINATES AND LOAD PLATE (NEOPRENE), AS PER PLAN (20"x15"x3.448" FIXED BEARING)			5		45/88	
516	44301	4	EACH	ELASTOMERIC BEARING WITH INTERNAL LAMINATES AND LOAD PLATE (NEOPRENE), AS PER PLAN (18"x14"x4.068" EXP. BEARING)			4		45/88	
516	44301	5	EACH	ELASTOMERIC BEARING WITH INTERNAL LAMINATES AND LOAD PLATE (NEOPRENE), AS PER PLAN (16"x13"x4.068" EXP. BEARING)			5		45/88	
516	44301	4	EACH	ELASTOMERIC BEARING WITH INTERNAL LAMINATES AND LOAD PLATE (NEOPRENE), AS PER PLAN (19"x16"x4.068" EXP. BEARING)			4		45/88	
516	44301	5	EACH	ELASTOMERIC BEARING WITH INTERNAL LAMINATES AND LOAD PLATE (NEOPRENE), AS PER PLAN (17"x13"x4.068" EXP. BEARING)			5		45/88	
517	76300	29	FT	RAILING, MISC.: SIDEWALK RAILING AT REAR ABUTMENT MSE WALLS				29	6/88	
518	20000	276	SY	PREFABRICATED GEOCOMPOSITE DRAIN			276			
518	21201	65	CY	POROUS BACKFILL WITH GEOTEXTILE FABRIC, AS PER PLAN			65		4/88	
518	39800	767	FT	4" PERFORATED CORRUGATED PLASTIC PIPE			767			
518	62100	89	FT	STRUCTURE DRAINAGE, MISC.: NEOPRENE TROUGH AND DRAINAGE OUTLETS			89		80/88	
523	20000	4	EACH	DYNAMIC LOAD TESTING	2	2				
523	20500	4	EACH	RESTRIKE	2	2				
526	30011	602	SY	REINFORCED CONCRETE APPROACH SLABS WITH QC/QA (T=17"), AS PER PLAN				602	3/88	

1 9-1-25

ESTIMATED QUANTITIES - 1
BRIDGE NO. HAM-75-0104
LINN STREET OVER IR-75 AND GEST STREET

SFN 3109098
DESIGN AGENCY B&N burgessniple.com
DESIGNER BES | CHECKER XAC
REVIEWER JCS 01/02/25
PROJECT ID 122048
SUBSET 7 | TOTAL 88
SHEET P.249 | TOTAL P.421

HAM-IR 75-1.05

MODEL: Sheet PAPERSIZE: 34x22 (in.) DATE: 8/26/2025 TIME: 3:35:05 PM PLTDRV: OHDOT_PDF.pltcfg PENTBL: OHDOT_UTPen.tbl USER: WORKSPACE: OHDOTCEv02 WORKSET: 122048 PRODUCT: OpenRoadsDesigner 10.12.02.4
pw:\\ohiodot-pw.bentley.com:ohiodot-pw-02\Documents\01 Active Projects\District 08\Hamilton\122048\401-Engineering_BurgessNiple\Structures\SFN_3109098\Sheets\122048_SFN_3109098_SQ001.dgn

ESTIMATED QUANTITIES						CALC.	DATE	CHK'D	DATE
						XAC/BES	4/9/2025	JDG/MAB	4/9/2025
ITEM	ITEM EXT.	TOTAL	UNIT	DESCRIPTION	ABUT.	PIERS	SUPER.	GENERAL	SHT. REF.
526	90030	180	FT	TYPE C INSTALLATION				180	
SPECIAL	53000200		LS	STRUCTURES: TEMPORARY SUPPORTS FOR GIRDERS			LS		3/88
SPECIAL	53001300	728	FT	STRUCTURES: SCREEN WALLS			728		6A/88
SPECIAL	53014000		LS	STRUCTURAL SURVEY AND MONITORING OF VIBRATION				LS	4/88
601	21001	69	SY	CONCRETE SLOPE PROTECTION, AS PER PLAN	69				20,24/88
605	13301	316	FT	6" UNCLASSIFIED PIPE UNDERDRAINS, AS PER PLAN				316	4/88
605	98300	20	EACH	UNDERDRAINS, MISC.: CLEANOUT			20		72/88
605	98300	4	EACH	UNDERDRAINS, MISC.: DRAINAGE OUTLET AT ABUTMENT	4				72/88
605	98300	2	EACH	UNDERDRAINS, MISC.: DRAINAGE OUTLET AT PIER 1		2			72/88
608	40001	384	FT	CONCRETE STEPS, TYPE A, AS PER PLAN	384				25/88
659	00301	284	CY	TOPSOIL, AS PER PLAN			284		6/88
661	00500	21	CY	MULCH			21		
SPECIAL	69098000	2	EACH	BRIDGE PILASTER LETTERS			2		6/88
SPECIAL	69098000	2	EACH	BRIDGE PILASTER STORY PANELS			2		6A/88
SPECIAL	69098000	48	EACH	PLANTER POTS			48		5/88
840	20000	6010	SF	MECHANICALLY STABILIZED EARTH WALL	6010				
840	21000	3033	CY	WALL EXCAVATION	3033				
840	22000	717	SY	FOUNDATION PREPARATION	717				
840	23000	3283	CY	SELECT GRANULAR BACKFILL	3283				
840	25010	665	FT	6" DRAINAGE PIPE, PERFORATED	665				
840	25020	60	FT	6" DRAINAGE PIPE, NON-PERFORATED	60				
840	26000	420	FT	CONCRETE COPING	420				
840	26050	2812	SF	AESTHETIC SURFACE TREATMENT	2812				3/88
840	27000	5	DAY	ON-SITE ASSISTANCE	5				
840	28000		LS	SGB INSPECTION AND COMPACTION TESTING	LS				

1 9-1-25

ESTIMATED QUANTITIES - 2
BRIDGE NO. HAM-75-0104
LINN STREET OVER IR-75 AND GEST STREET

SFN 3109098

DESIGN AGENCY B&N burgessniple.com

DESIGNER	CHECKER
BES	XAC

REVIEWER JCS 01/02/25

PROJECT ID 122048

SUBSET	TOTAL
8	88

SHEET	TOTAL
P.250	P.421

HAM-IR 75-1.05

MODEL: Sheet PAPERSIZE: 34x22 (in.) DATE: 8/26/2025 TIME: 3:46:12 PM PLTDRV: OHDOT_PDF.pltcfg PENTBL: OHDOT_UTPen.tbl USER: WORKSPACE: OHDOTCEv02 WORKSET: 122048 PRODUCT: OpenRoadsDesigner 10.12.02.4
pw:\\ohiodot-pw.bentley.com:ohiodot-pw-02\Documents\01 Active Projects\District 08\Hamilton\122048\401-Engineering_BurgessNiple\Structures\SFN_3109098\Sheets\122048_SFN_3109098_SQ002.dgn

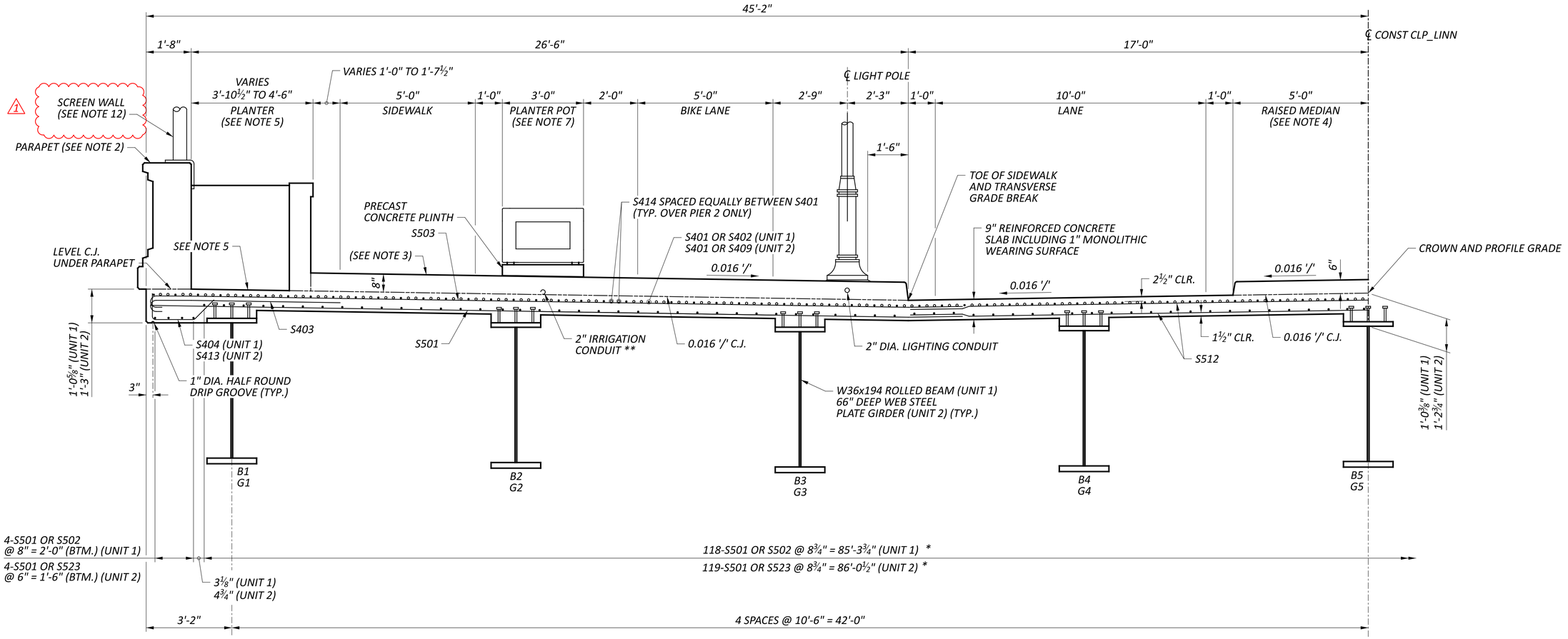

HALF TRANSVERSE SECTION

(SYMMETRIC ABOUT ℄ CONST CLP_LINN)
(CROSSFRAMES AND DIAPHRAGMS NOT SHOWN)

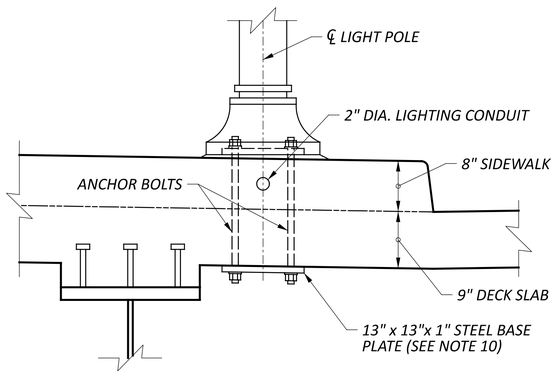

LIGHT POLE ANCHORAGE DETAIL

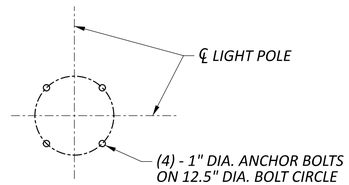

LIGHT POLE ANCHOR BOLT PLAN

LIGHT POLE LOCATIONS	
STATION	OFFSET
106+05.05	19.25' RT.
107+00.18	19.25' LT.
108+10.06	19.25' RT.
109+36.39	19.25' LT.

LEGEND:

* = ADJUST BAR SPACING AS NEEDED TO CLEAR SHEAR CONNECTORS

NOTES:

1. DECK SLAB CONCRETE QUANTITY: THE ESTIMATED QUANTITY OF DECK SLAB CONCRETE IS BASED ON THE CONSTANT DECK SLAB THICKNESS, AS SHOWN, PLUS THE QUANTITY OF CONCRETE THAT FORMS EACH BEAM/GIRDER HAUNCH. THE ESTIMATE ASSUMES A CONSTANT HAUNCH THICKNESS OF 3⅜" IN UNIT 1 AND 5¾" IN UNIT 2 AND A HAUNCH WIDTH EQUAL TO THE TOP FLANGE WIDTH. DEVIATE FROM THIS HAUNCH THICKNESS AS NECESSARY TO PLACE THE DECK SURFACE AT THE FINISHED GRADE. THE HAUNCH THICKNESS WAS MEASURED AT THE CENTERLINE OF THE BEAM/GIRDER, FROM THE SURFACE OF THE DECK TO THE BOTTOM OF THE TOP FLANGE MINUS THE DECK SLAB THICKNESS. THE AREA OF ALL EMBEDDED STEEL PLATES HAS BEEN DEDUCTED FROM THE HAUNCH QUANTITY IN ACCORDANCE WITH 511.23.
2. FOR PARAPET DETAILS, SEE SHEETS 58/88-65/88.
3. FOR SIDEWALK DETAILS, SEE SHEETS 55/88-56/88.
4. FOR RAISED MEDIAN DETAILS, SEE SHEET 57/88.
5. FOR PLANTER WALL AND PLANTER AREA DETAILS INCLUDING DRAINAGE AND WATERPROOFING DETAILS, SEE SHEETS 66/88-73/88.
6. FOR SEALING LIMITS, SEE SHEETS 55/88 AND 57/88.
7. FOR PLANTER POT AND PRECAST CONCRETE PLINTH DETAILS, SEE SHEET 74/88.
8. CONFIRM ANCHOR BOLT SIZE AND ANCHOR BOLT CIRCLE DIAMETER WITH LIGHT POLE MANUFACTURER.
9. ANCHOR BOLTS SHALL BE ASTM F3125, GRADE A325 OR ASTM F1554, GRADE 105. ANCHOR BOLTS SHALL BE GALVANIZED. ANCHOR BOLT LENGTH SHALL BE AS DETERMINED BY LIGHT POLE MANUFACTURER. ANCHOR BOLTS OR SLEEVES FOR ANCHOR BOLTS SHALL BE CAST-IN-PLACE. DRILLED HOLES ARE NOT PERMITTED.
10. CONFIRM THAT THE EDGE DISTANCE PROVIDED FROM THE CENTERLINE OF THE ANCHOR BOLTS TO THE EDGE OF THE STEEL BASE PLATE IS AT LEAST 2". ADJUST THE STEEL BASE PLATE SIZE AS NEEDED TO MEET THIS REQUIREMENT. STEEL BASE PLATES SHALL BE ASTM A709, GRADE 50, GALVANIZED.
11. SEE LIGHTING PLANS FOR ADDITIONAL DETAILS AND PAYMENT FOR ANCHOR BOLTS, JUNCTION BOXES, LIGHT POLES, AND CONDUITS.
12. FOR SCREEN WALL DETAILS, SEE SHEET 65A/88 TO 65E/88 .

1 9-1-25

TRANSVERSE SECTION
BRIDGE NO. HAM-75-0104
LINN STREET OVER IR-75 AND GEST STREET

SFN 3109098
DESIGN AGENCY B&N burgessniple.com
DESIGNER MES | CHECKER BCS
REVIEWER JCS 12/15/24
PROJECT ID 122048
SUBSET 47 | TOTAL 88
SHEET P.289 | TOTAL P.421

HAM-75-1.05

MODEL: Sheet PAPERSIZE: 34x22 (in.) DATE: 8/25/2025 TIME: 11:06:35 AM PLTDRV: OHDOT_PDF.pltcfg PENTBL: OHDOT_UTPen.tbl USER: WORKSPACE: OHDOTCEv02 WORKSET: 122048 PRODUCT: OpenRoadsDesigner 10.12.02.4
pw:\\ohiodot-pw.bentley.com:ohiodot-pw-02\Documents\01 Active Projects\District 08\Hamilton\122048\401-Engineering_BurgessNiple\Structures\SFN_3109098_ST001.dgn
ctures\SFN_3109098\Sheets\122048_SFN_3109098_ST001.dgn

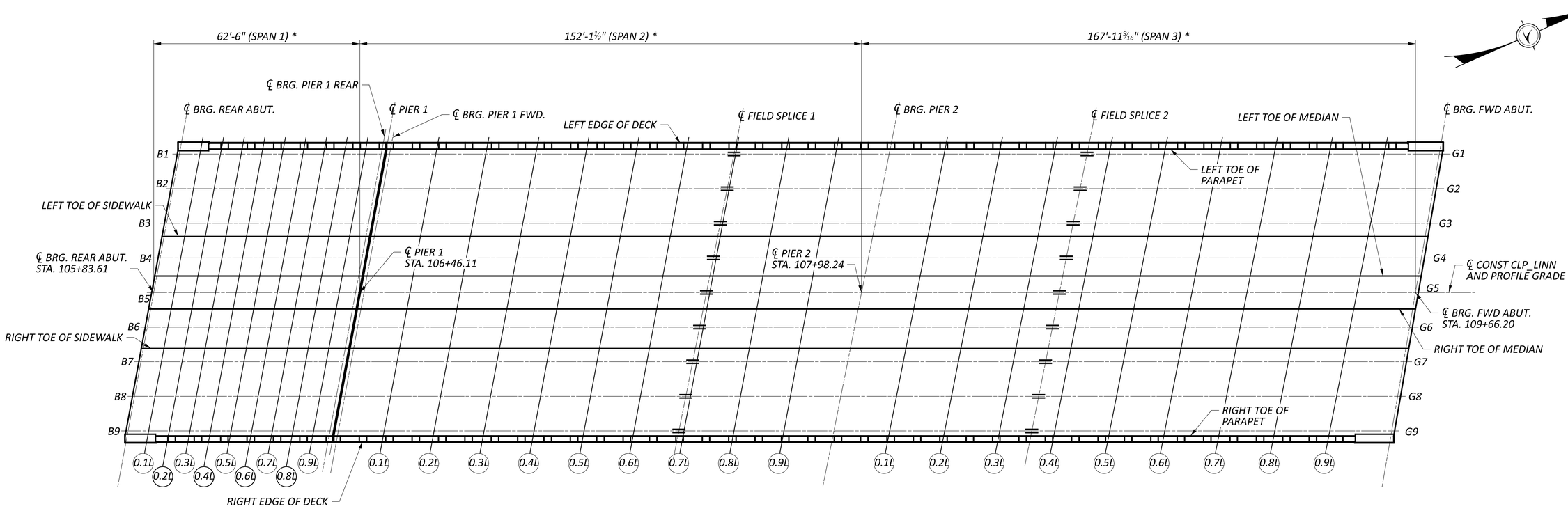

CRITICAL BRIDGE POINTS PLAN
(FOR USE WITH SCREED, TOP OF HAUNCH AND FINAL DECK ELEVATION TABLES)

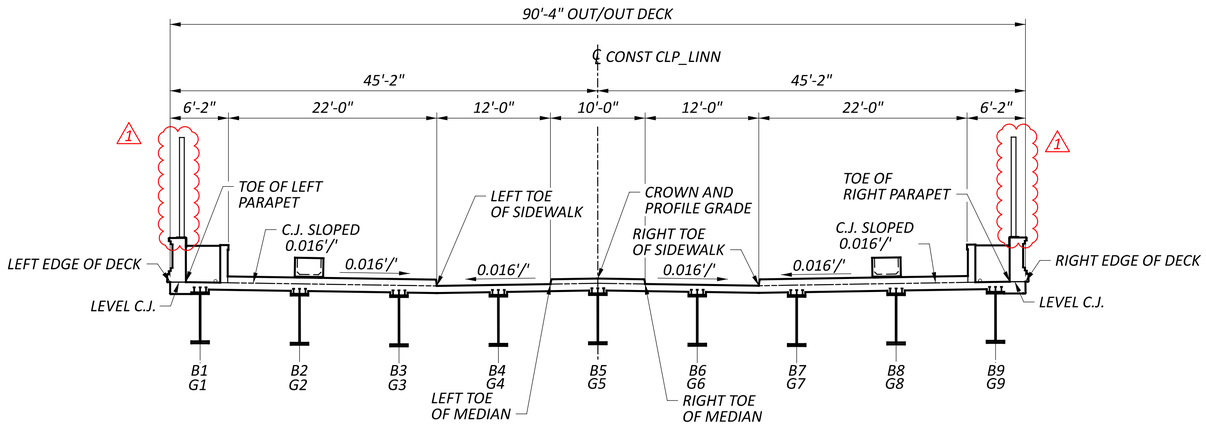

CRITICAL BRIDGE POINTS TRANSVERSE SECTION

LEGEND:

** = MEASURED ALONG ℄ CONST CLP_LINN*
L = SPAN LENGTH

NOTES:

1. *FOR TOP OF HAUNCH ELEVATION TABLES, SEE SHEET 53/88.*
2. *FOR FINISHED DECK ELEVATION TABLES, SEE SHEET 54/88.*
3. *FOR SCREED ELEVATION TABLES, SEE SHEET 52/88.*

1 9-1-25

CRITICAL BRIDGE POINTS LOCATION PLAN
BRIDGE NO. HAM-75-0104
LINN STREET OVER IR-75 AND GEST STREET

SFN 3109098
DESIGN AGENCY B&N burgessniple.com
DESIGNER MAB | CHECKER MES
REVIEWER JCS 12/18/24
PROJECT ID 122048
SUBSET 51 | TOTAL 88
SHEET P.293 | TOTAL P.421

HAM-75-1.05

MODEL: Sheet PAPERSIZE: 34x22 (in.) DATE: 8/25/2025 TIME: 11:07:15 AM PLTDRV: OHDOT_PDF.pltcfg PENTBL: OHDOT_UTPen.tbl USER: WORKSPACE: OHDOTCEv02 WORKSET: 122048 PRODUCT: OpenRoadsDesigner 10.12.02.4
pw:\\ohiodot-pw.bentley.com:ohiodot-pw-02\Documents\01 Active Projects\District 08\Hamilton\122048\401-Engineering_BurgessNiple\Structures\SFN_3109098\Sheets\122048_SFN_3109098_SS010.dgn

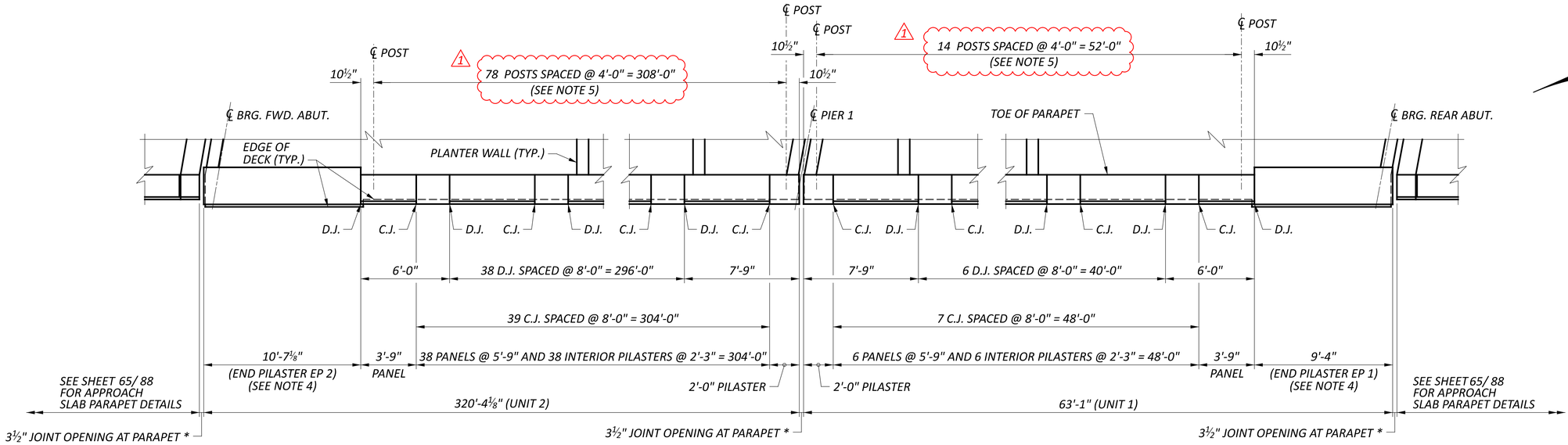

LEFT PARAPET PLAN

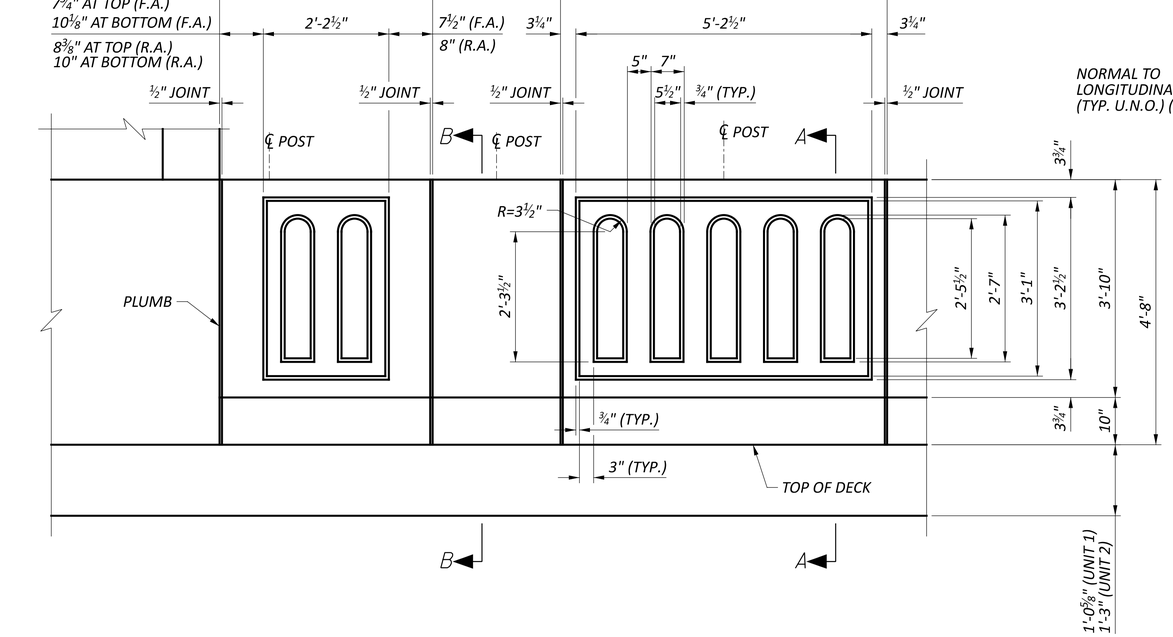

PARTIAL PARAPET ELEVATION

(EXTERIOR FACE)
(FORWARD ABUTMENT END SHOWN,
REAR ABUTMENT END SIMILAR)

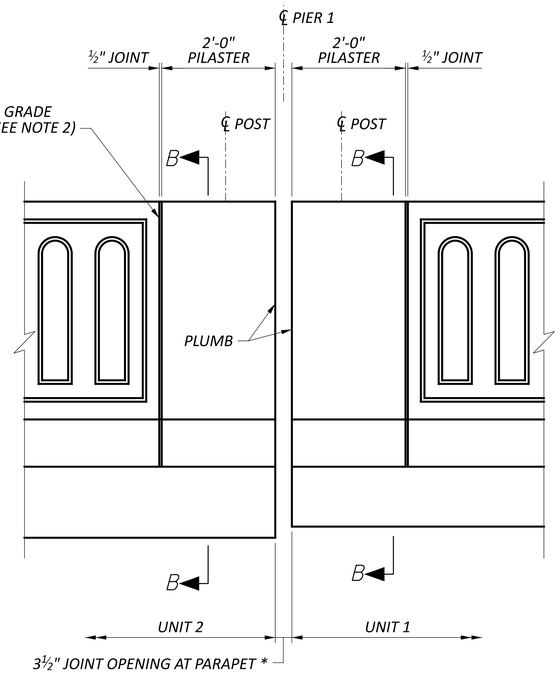

PARTIAL PARAPET ELEVATION AT PIER 1

(EXTERIOR FACE)

LEGEND:

C.J. = CONTRACTION JOINT
D.J. = DEFLECTION JOINT
* = PER ODOT STD. DWG. EXJ-4-87, DETAIL C, SHEET 3/4

NOTES:

1. FOR SECTIONS A-A, B-B AND JOINT DETAILS SEE SHEET 60/ 88 .
2. CONSTRUCT PILASTERS AND PANELS NORMAL TO THE LONGITUDINAL GRADE, EXCEPT AS NOTED BELOW. DEFLECTION JOINTS AT END PILASTERS SHALL BE PLUMB. ENDS OF PARAPETS AT ABUTMENTS AND PIER 1 SHALL BE PLUMB. LONGITUDINAL LINES SHALL BE PARALLEL TO THE LONGITUDINAL GRADE.
3. LONGITUDINAL DIMENSIONS SHOWN ARE MEASURED ALONG THE HORIZONTAL AT BASE OF PARAPET (TOP OF DECK), UNLESS NOTED OTHERWISE.
4. FOR END PILASTER DETAILS, SEE SHEET 63/88.
5. FOR POST DETAILS, SEE SHEET 65A/88 .

1 9-1-25

LEFT PARAPET PLAN AND ELEVATION
BRIDGE NO. HAM-75-0104
LINN STREET OVER IR-75 AND GEST STREET

SFN 3109098
DESIGN AGENCY B&N burgessniple.com
DESIGNER BES | CHECKER MAB
REVIEWER BCS 04/10/25
PROJECT ID 122048
SUBSET 58 | TOTAL 88
SHEET P.300 | TOTAL P.421

HAM-75-1.05

MODEL: Sheet PAPERSIZE: 34x22 (in.) DATE: 8/25/2025 TIME: 11:07:27 AM PLTDRV: OHDOT_PDF.pltcfg PENTBL: OHDOT_UTPen.tbl USER: WORKSPACE: OHDOTCEv02 WORKSET: 122048
pw:\\ohiodot-pw.bentley.com:ohiodot-pw-02\Documents\01 Active Projects\District 08\Hamilton\122048\401-Engineering_BurgessNiple\Structures\SFN_3109098\Sheets\122048_SFN_3109098_SA001.dgn

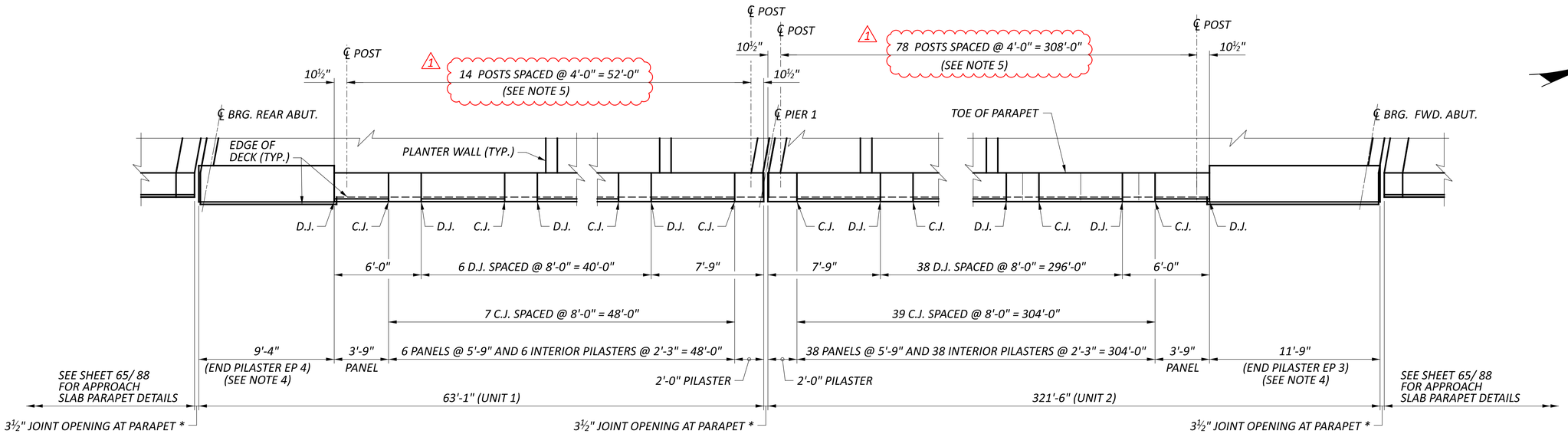

RIGHT PARAPET PLAN

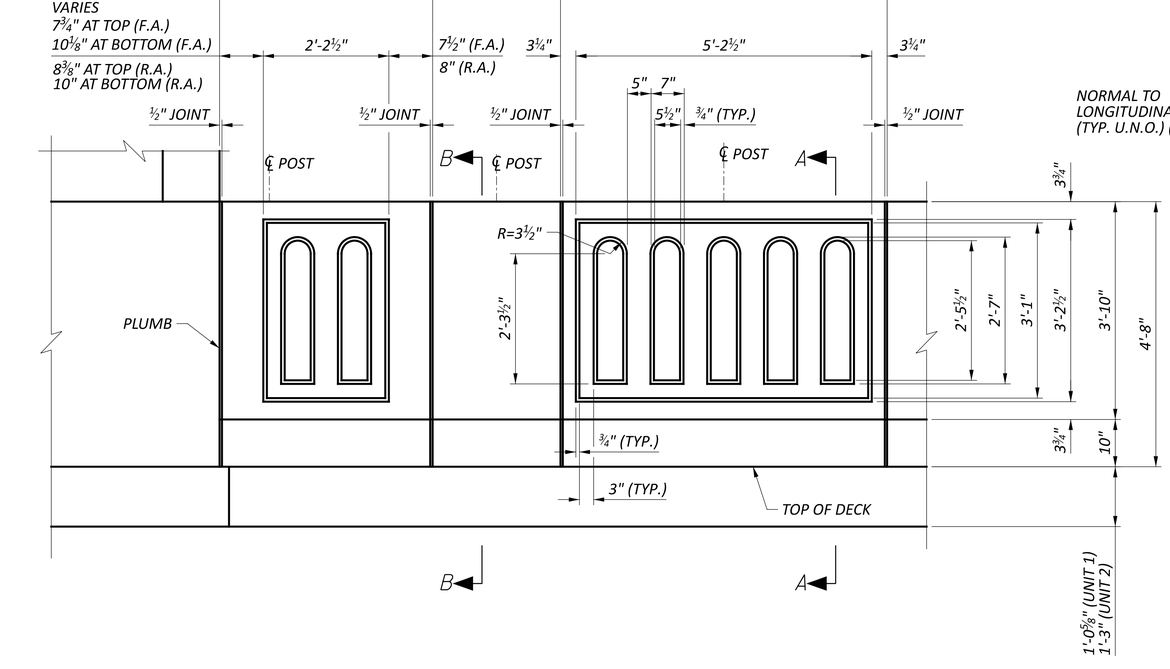

PARTIAL PARAPET ELEVATION

(EXTERIOR FACE)
(REAR ABUTMENT END SHOWN,
FORWARD ABUTMENT END SIMILAR)

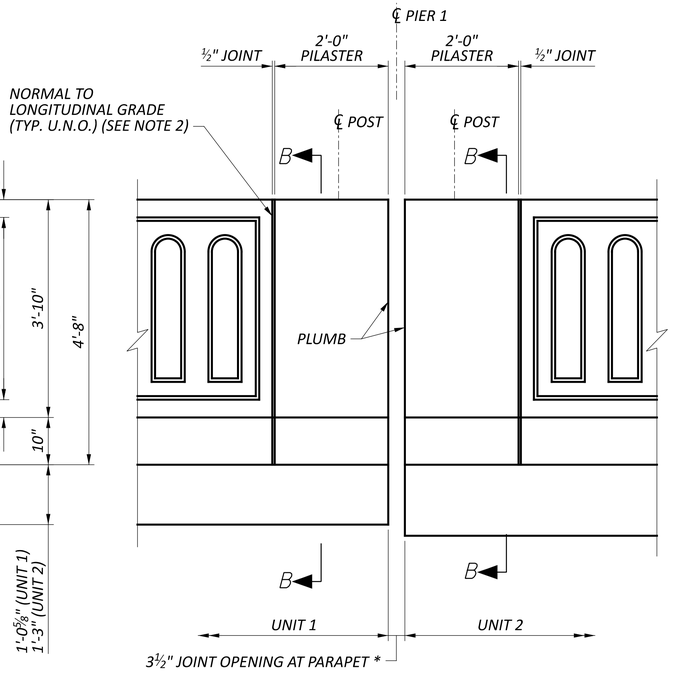

PARTIAL PARAPET ELEVATION AT PIER 1

(EXTERIOR FACE)

LEGEND:

C.J. = CONTRACTION JOINT
D.J. = DEFLECTION JOINT
* = PER ODOT STD. DWG. EXJ-4-87, DETAIL C, SHEET 3/4

NOTES:

1. FOR SECTIONS A-A, B-B AND JOINT DETAILS SEE SHEET 60/ 88 .
2. CONSTRUCT PILASTERS AND PANELS NORMAL TO THE LONGITUDINAL GRADE, EXCEPT AS NOTED BELOW. DEFLECTION JOINTS AT END PILASTERS SHALL BE PLUMB. ENDS OF PARAPETS AT ABUTMENTS AND PIER 1 SHALL BE PLUMB. LONGITUDINAL LINES SHALL BE PARALLEL TO THE LONGITUDINAL GRADE.
3. LONGITUDINAL DIMENSIONS SHOWN ARE MEASURED ALONG THE HORIZONTAL AT BASE OF PARAPET (TOP OF DECK), UNLESS NOTED OTHERWISE.
4. FOR END PILASTER DETAILS, SEE SHEET 63/88.
5. FOR POST DETAILS, SEE SHEET 65A/88 .

1 9-1-25

RIGHT PARAPET PLAN AND ELEVATION
BRIDGE NO. HAM-75-0104
LINN STREET OVER IR-75 AND GEST STREET

SFN	3109098
DESIGN AGENCY	B&N burgessniple.com
DESIGNER	BES
CHECKER	MAB
REVIEWER	BCS 04/10/25
PROJECT ID	122048
SUBSET	59
TOTAL	88
SHEET	P.301
TOTAL	P.421

HAM-75-1.05

MODEL: Sheet PAPERSIZE: 34x22 (in.) DATE: 8/25/2025 TIME: 11:07:36 AM PLTDRV: OHDOT_PDF.pltcfg PENTBL: OHDOT_UTPen.tbl USER: WORKSPACE: OHDOTCEv02 WORKSET: 122048 PRODUCT: OpenRoadsDesigner 10.12.02.4
pw:\\ohiodot-pw.bentley.com:ohiodot-pw-02\Documents\01 Active Projects\District 08\Hamilton\122048\401-Engineering_BurgessNiple\Structures\SFN_3109098\Sheets\SFN_3109098_SA004.dgn

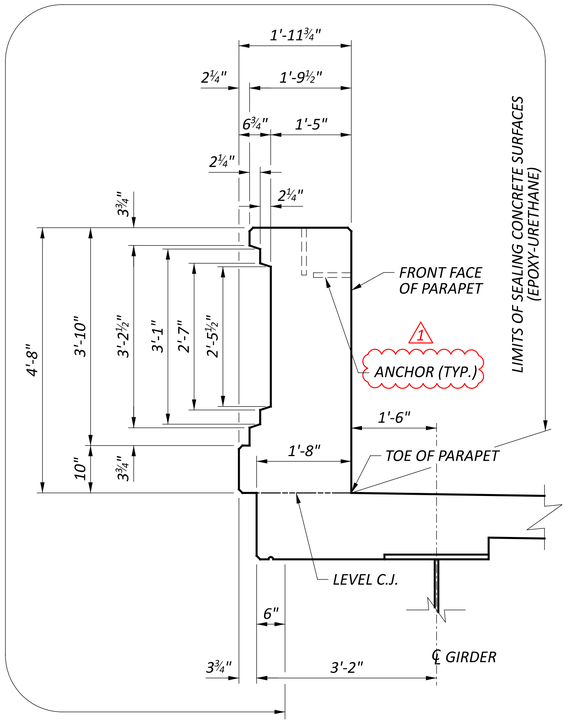

SECTION A-A

1 (SCREEN WALL AND REINFORCING NOT SHOWN FOR CLARITY)

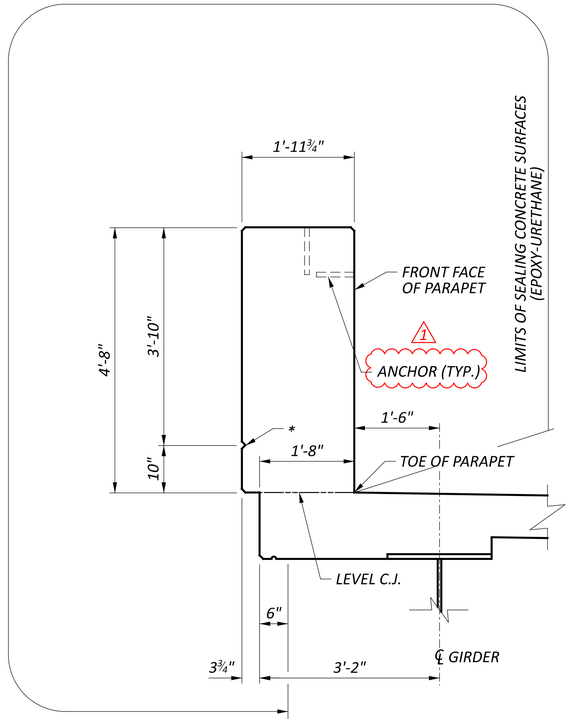

* = ¾" DEEP x 1½" WIDE V-GROOVE

SECTION B-B

1 (SCREEN WALL AND REINFORCING NOT SHOWN FOR CLARITY)

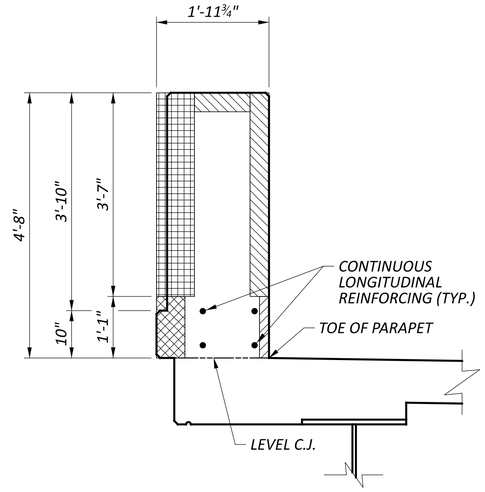

DEFLECTION JOINT

1 (SCREEN WALL AND DECK REINFORCING NOT SHOWN FOR CLARITY)

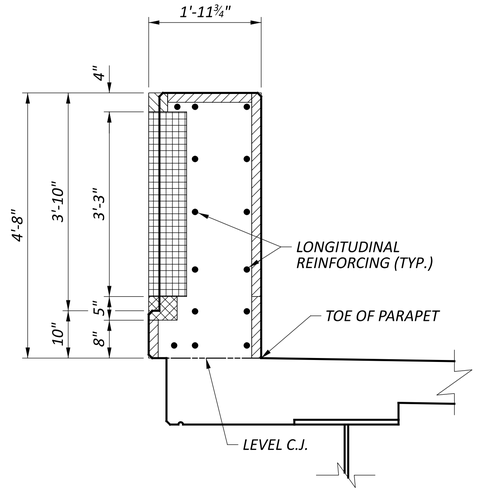

CONTRACTION JOINT

1 (SCREEN WALL AND DECK REINFORCING NOT SHOWN FOR CLARITY)

LEGEND:

- 8" WIDE PREFORMED JOINT MATERIAL
- 6" WIDE PREFORMED JOINT MATERIAL
- 4" WIDE PREFORMED JOINT MATERIAL
- 2" WIDE PREFORMED JOINT MATERIAL

NOTES:

1. DEFLECTION AND CONTRACTION JOINTS ARE TO BE CAST INTO THE PARAPETS AND HELD IN WITH CHAMFER STRIPS. THE EXCESS MATERIAL WILL BE TRIMMED TO THE BASE OF THE CHAMFER. THE MATERIAL THAT WILL BE USED NEEDS TO NOT ABSORB WATER AND HAVE SUFFICIENT RIGIDITY TO NOT SIGNIFICANTLY MOVE DURING THE CASTING OF THE PARAPET. THE JOINT MATERIAL IS TO BE 0.5" IN THICKNESS AND WILL BE NOMAFLEX BY NOMACO OR FIBER LITE BY W.R. MEADOWS OR SIMILAR PRODUCT APPROVED BY THE ENGINEER. COST SHALL BE INCIDENTAL TO THE PARAPET CONCRETE.

1 9-1-25

PARAPET DETAILS
BRIDGE NO. HAM-75-0104
LINN STREET OVER IR-75 AND GEST STREET

SFN	3109098
DESIGN AGENCY	B&N burgessniple.com
DESIGNER	BES
CHECKER	MAB
REVIEWER	BCS 04/10/25
PROJECT ID	122048
SUBSET	60
TOTAL	88
SHEET	P.302
TOTAL	P.421

HAM-75-1.05

MODEL: Sheet PAPERSIZE: 34x22 (in.) DATE: 8/25/2025 TIME: 11:07:45 AM PLTDRV: OHDOT_PDF.pltcfg PENTBL: OHDOT_UTPen.tbl USER: WORKSPACE: OHDOTCEv02 WORKSET: 122048 PRODUCT: OpenRoadsDesigner 10.12.02.4
pw:\\ohiodot-pw.bentley.com:ohiodot-pw-02\Documents\01 Active Projects\District 08\Hamilton\122048\401-Engineering_BurgessNiple\Structures\SFN_3109098_SA002.dgn
ctures\SFN_3109098\Sheets\122048_SFN_3109098_SA002.dgn

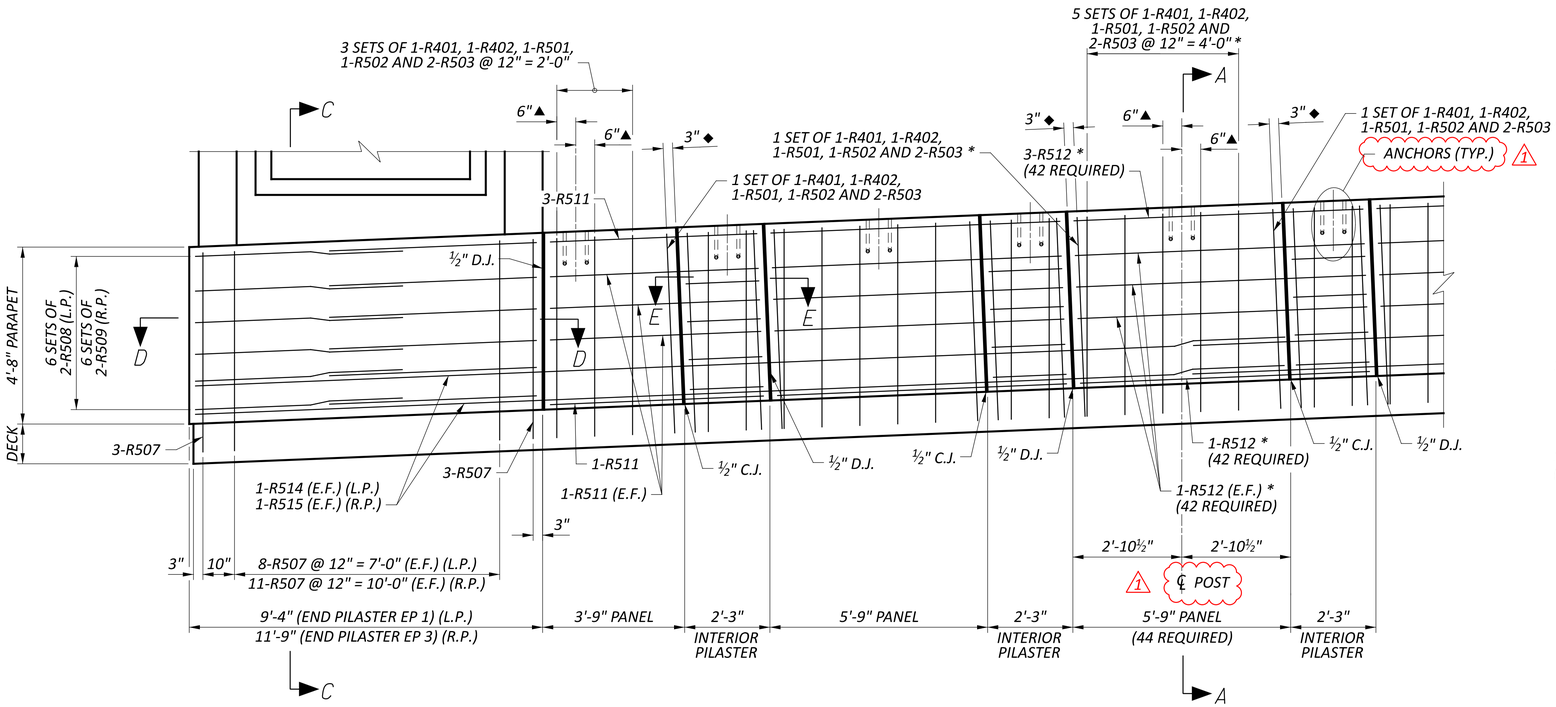

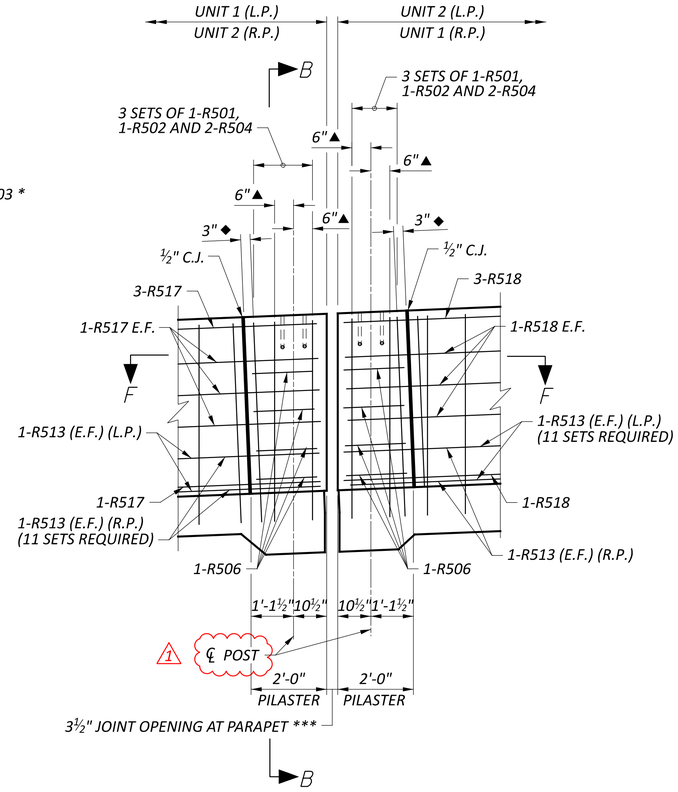

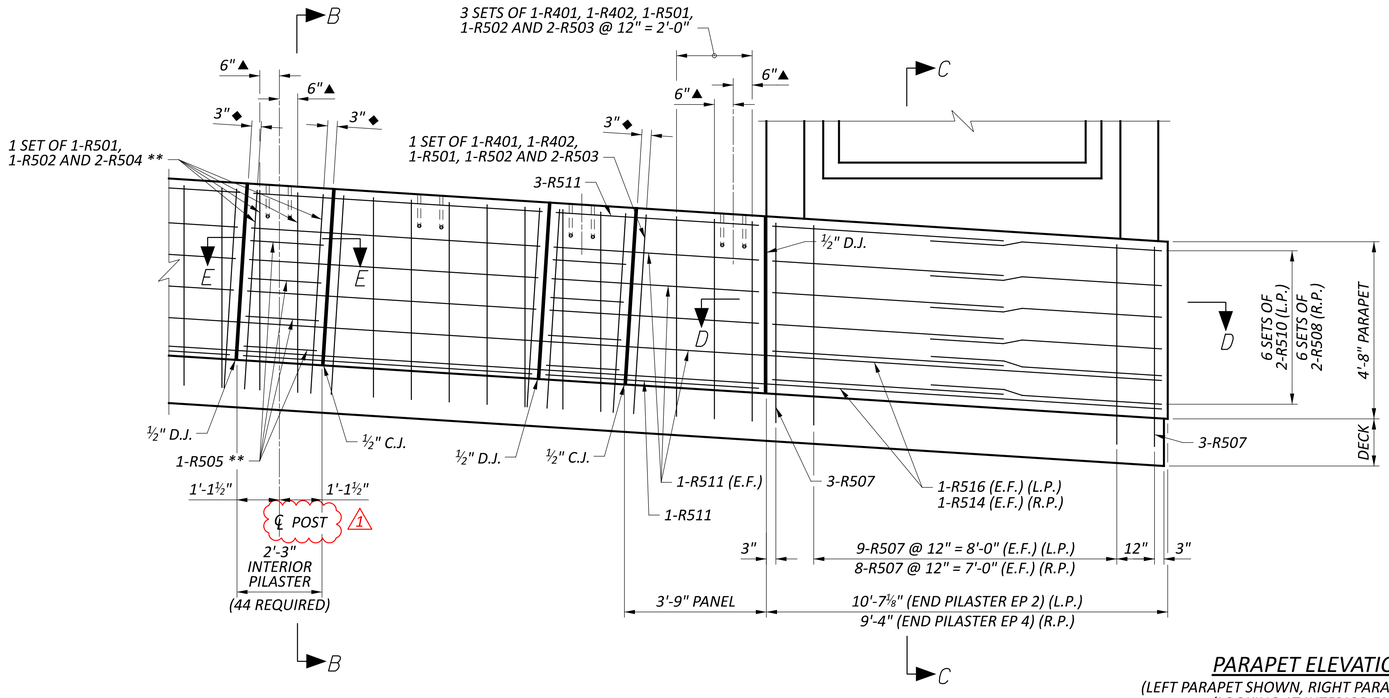

PARAPET ELEVATION

(LEFT PARAPET SHOWN, RIGHT PARAPET SIMILAR)
(LOOKING AT INTERIOR FACE)

MINIMUM LAP LENGTH

#5 BAR = 1'-11"

LEGEND:

* = TYPICAL REINFORCING FOR 5'-9" PANEL, PLACE 3 SETS OF BARS ON THE LOWER END OF THE PANEL AND 2 SETS OF BARS ON THE HIGHER END OF THE PANEL AS SHOWN.

** = TYPICAL REINFORCING FOR 2'-3" INTERIOR PILASTER

*** = PER ODOT STD. DWG. EXJ-4-87, DETAIL C, SHEET 3/4

◆ = REINFORCING BARS SHALL BE PLACED 3" FROM EACH DEFLECTION AND CONTRACTION JOINT. BARS SHALL BE PLACED NORMAL TO THE LONGITUDINAL GRADE.

▲ = REINFORCING BARS SHALL BE PLACED 6" ON EACH SIDE OF THE ℄ SCREEN WALL POSTS. BARS SHALL BE PLACED PLUMB. 1

(L.P.) = LEFT PARAPET

(R.P.) = RIGHT PARAPET

C.J. = CONTRACTION JOINT

D.J. = DEFLECTION JOINT

NOTES:

1. FOR PANEL, PILASTER, CONTRACTION JOINT, DEFLECTION JOINT AND SCREEN WALL POST LOCATIONS, SEE SHEETS 58/ 88 AND 59/ 88 .
2. FOR PARAPET JOINT DETAILS AND SECTIONS, SEE SHEET 60/ 88 .
3. FOR SECTIONS A-A, B-B, C-C, D-D, E-E AND F-F, SEE SHEET 62/ 88 .
4. ACCURATELY PLACE CONCRETE REINFORCEMENT IN THE VICINITY OF THE SCREEN WALL ANCHOR LOCATIONS TO AVOID INTERFERENCE WITH THE DRILLING OF ANCHOR ROD HOLES. 1
5. LONGITUDINAL DIMENSIONS SHOWN ARE MEASURED ALONG THE HORIZONTAL AT BASE OF PARAPET (TOP OF DECK), UNLESS NOTED OTHERWISE.
6. PLACE VERTICAL REINFORCING PLUMB, UNLESS NOTED OTHERWISE.
7. FOR REINFORCING EXTENDING FROM PARAPETS INTO PLANTERS, SEE SHEET 70/88.

1 9-1-25

PARAPET REINFORCING ELEVATION
BRIDGE NO. HAM-75-0104
LINN STREET OVER IR-75 AND GEST STREET

SFN	3109098
DESIGN AGENCY	B&N burgessniple.com
DESIGNER	BES
CHECKER	MAB
REVIEWER	BCS 04/10/25
PROJECT ID	122048
SUBSET	61
TOTAL	88
SHEET	P.303
TOTAL	P.421

HAM-75-1.05

MODEL: Sheet PAPERSIZE: 34x22 (in.) DATE: 8/25/2025 TIME: 11:07:53 AM PLTDRV: OHDOT_PDF.pltcfg PENTBL: OHDOT_UTPen.tbl USER: WORKSPACE: OHDOTCEv02 WORKSET: 122048 PRODUCT: OpenRoadsDesigner 10.12.02.4
pw:\\ohiodot-pw.bentley.com:ohiodot-pw-02\Documents\01 Active Projects\District 08\Hamilton\122048\401-Engineering_BurgessNiple\Structures\SFN_3109098\Sheets\122048_SFN_3109098_SA005.dgn

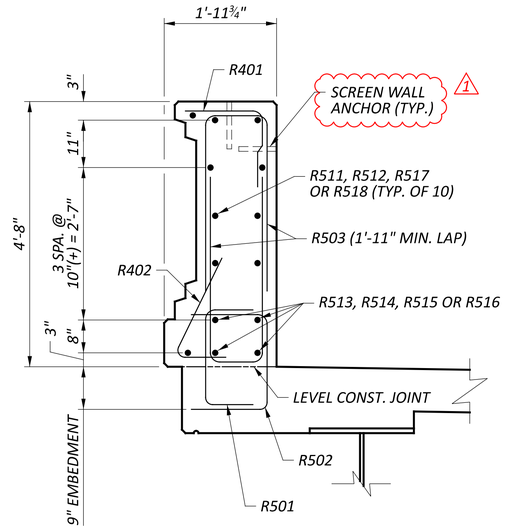

SECTION A-A

1 (DECK REINFORCING AND SCREEN WALL NOT SHOWN FOR CLARITY)

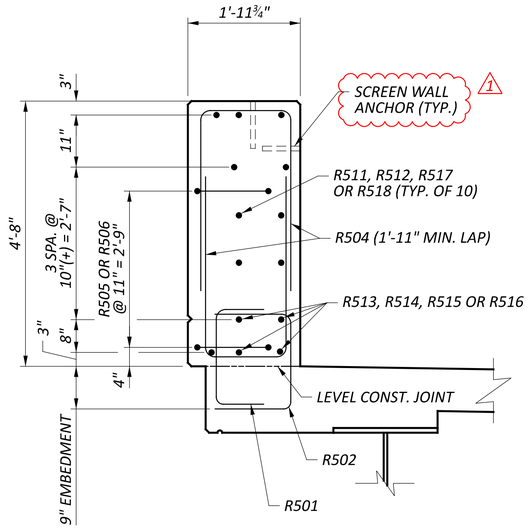

SECTION B-B

1 (DECK REINFORCING AND SCREEN WALL NOT SHOWN FOR CLARITY)

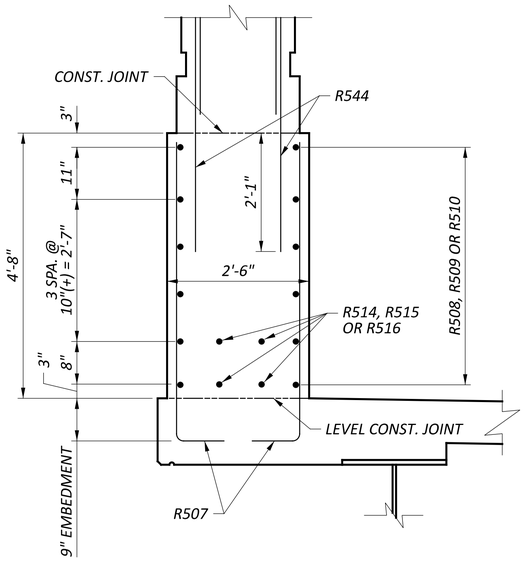

SECTION C-C

(DECK REINFORCING NOT SHOWN FOR CLARITY)

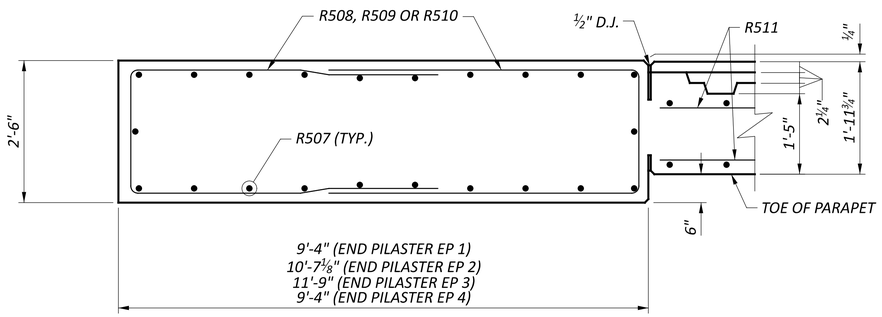

SECTION D-D

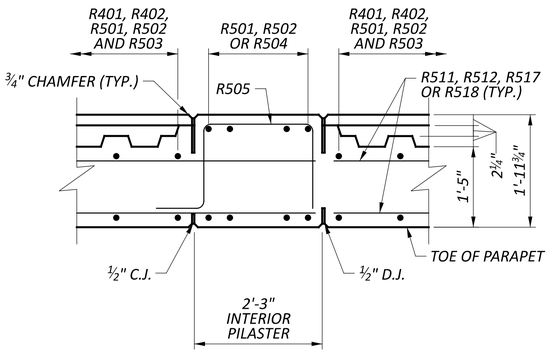

SECTION E-E

(LOCATIONS OF C.J. AND D.J. VARY, SEE PLAN VIEWS AND REINFORCING ELEVATION VIEW)

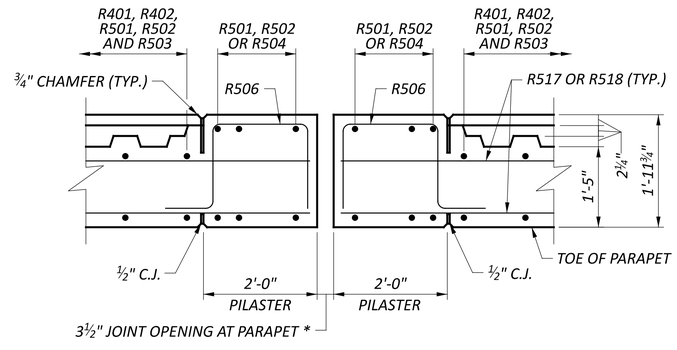

SECTION F-F

MINIMUM LAP LENGTH

#5 BAR = 1'-11"

LEGEND:

* = PER ODOT STD. DWG. EXJ-4-87, DETAIL C, SHEET 3/4
C.J. = CONTRACTION JOINT
D.J. = DEFLECTION JOINT

1 9-1-25

PARAPET REINFORCING SECTIONS
BRIDGE NO. HAM-75-0104
LINN STREET OVER IR-75 AND GEST STREET

SFN	3109098
DESIGN AGENCY	B&N burgessniple.com
DESIGNER	BES
CHECKER	MAB
REVIEWER	BCS 04/10/25
PROJECT ID	122048
SUBSET	62
TOTAL	88
SHEET	P.304
TOTAL	P.421

HAM-75-1.05

MODEL: Sheet PAPERSIZE: 34x22 (in.) DATE: 8/25/2025 TIME: 11:08:01 AM PLTDRV: OHDOT_PDF.pltcfg PENTBL: OHDOT_UTPen.tbl USER: WORKSPACE: OHDOTCEv02 WORKSET: 122048 PRODUCT: OpenRoadsDesigner 10.12.02.4
pw:\\ohiodot-pw.bentley.com:ohiodot-pw-02\Documents\01 Active Projects\District 08\Hamilton\122048\401-Engineering_Burgess&Niple\Structures\SFN_3109098_SA007.dgn
pw:\\ohiodot-pw.bentley.com:ohiodot-pw-02\Documents\01 Active Projects\District 08\Hamilton\122048\401-Engineering_Burgess&Niple\Structures\SFN_3109098\Sheets\122048_SFN_3109098_SA007.dgn

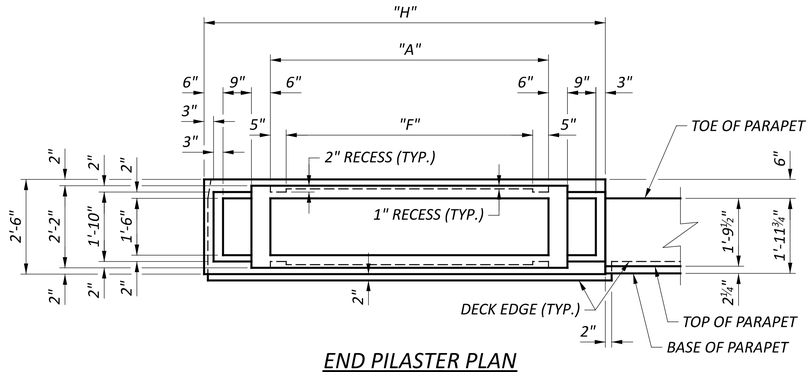

END PILASTER PLAN

(EP 2 SHOWN, EP 4 SIMILAR, EP 1 AND EP 3 OPPOSITE HAND)

END PILASTER DIMENSIONS							
	LOCATION	"A"	"F"	"H"	"J"	"K"	"L"
EP 1	LT. REAR	6'-1"	5'-3"	9'-4"	10'-4½"	18'-11½"	4½"
EP 2	LT. FORWARD	7'-4⅛"	6'-6⅛"	10'-7⅛"	10'-8"	19'-3"	8"
EP 3	RT. FORWARD	8'-6"	7'-8"	11'-9"	10'-8¼"	19'-3¼"	8¼"
EP 4	RT. REAR	6'-1"	5'-3"	9'-4"	10'-4½"	18'-11½"	4½"

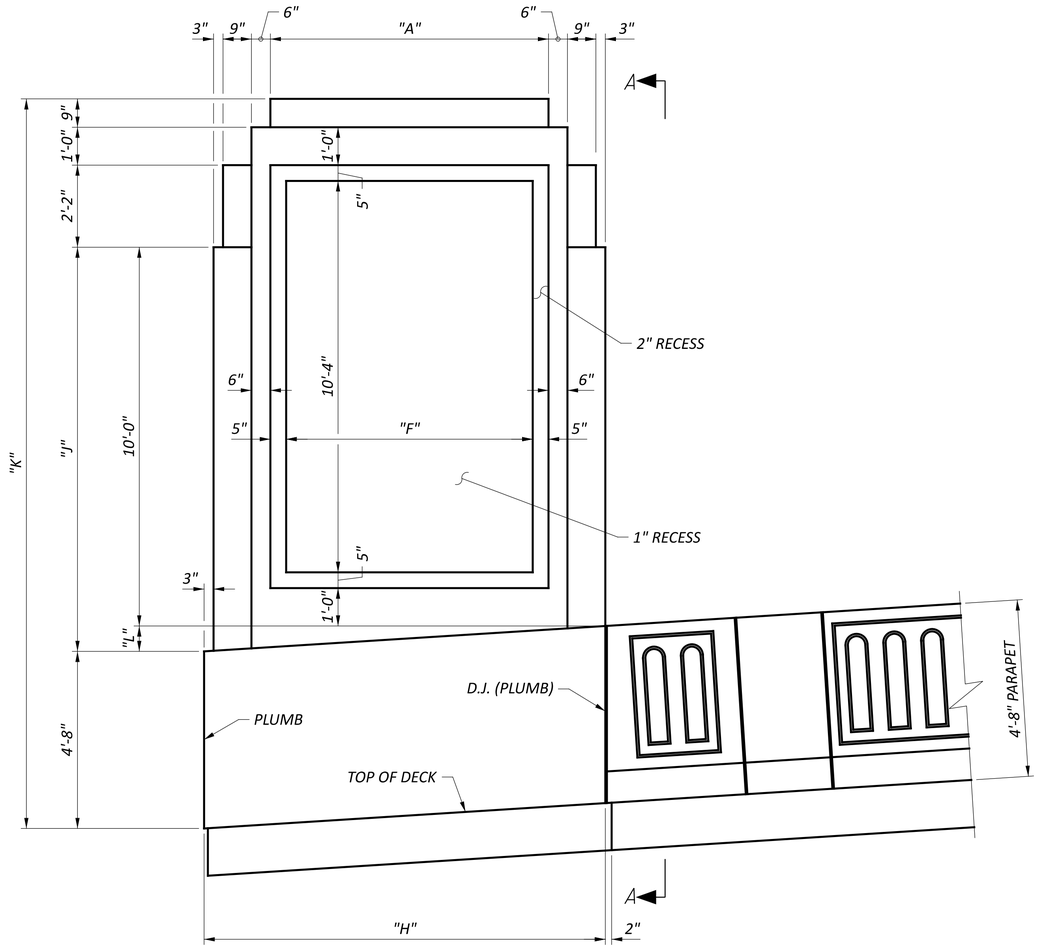

END PILASTER EXTERIOR ELEVATION

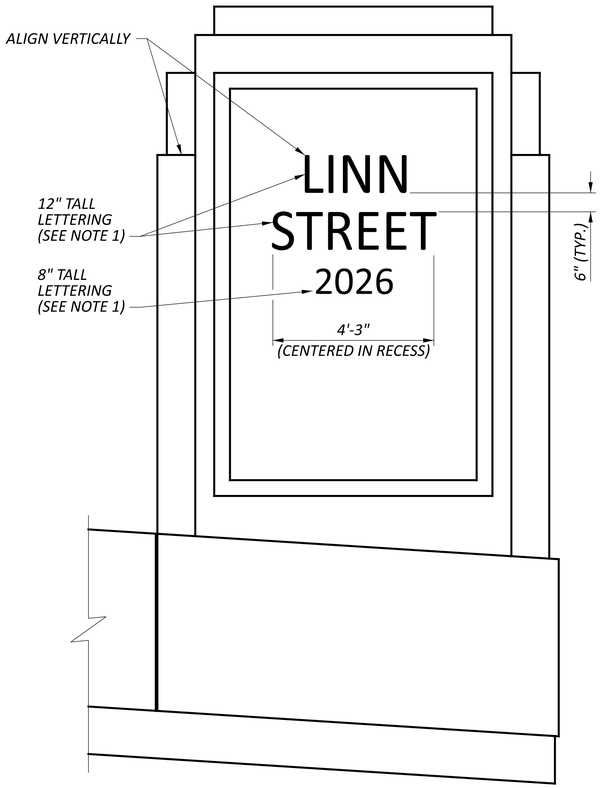

1 **END PILASTER INTERIOR ELEVATION**

(RIGHT REAR AND LEFT FORWARD END PILASTERS)
(SEE EXTERIOR ELEVATION FOR DIMENSIONS)

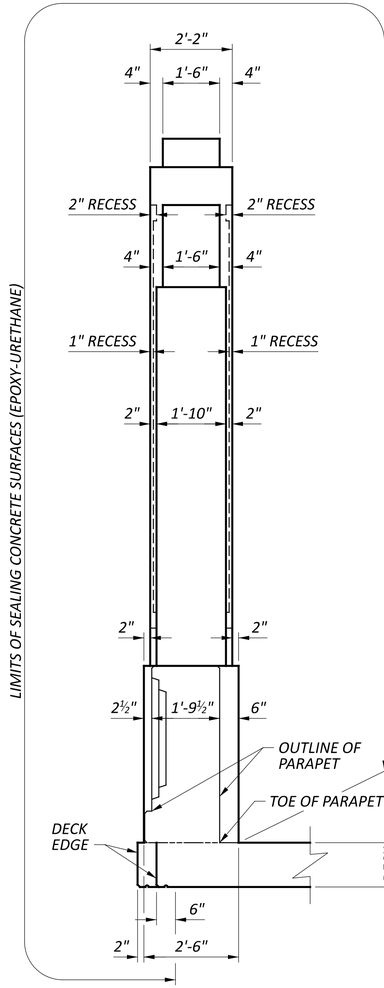

VIEW A-A

LEGEND:

D.J. = DEFLECTION JOINT

1 9-1-25

NOTES:

1. *SEE GENERAL NOTES FOR ADDITIONAL REQUIREMENTS FOR LETTERING.*
1 2. *SEE SHEET 63A/88 FOR END PILASTER INTERIOR ELEVATION AT LEFT REAR AND RIGHT FORWARD END PILASTERS.*

END PILASTER DETAILS - 1
BRIDGE NO. HAM-75-0104
LINN STREET OVER IR-75 AND GEST STREET

SFN 3109098
DESIGN AGENCY B&N burgessniple.com
DESIGNER BES | CHECKER MAB
REVIEWER BCS 04/10/25
PROJECT ID 122048
SUBSET 63 | TOTAL 88
SHEET P.305 | TOTAL P.421

HAM-75-1.05

MODEL: Sheet PAPERSIZE: 34x22 (in.) DATE: 8/26/2025 TIME: 11:23:55 AM PLTDRV: OHDOT_PDF.pltcfg PENTBL: OHDOT_UTPen.tbl USER: WORKSPACE: OHDOTCEv02 WORKSET: 122048_SFN_3109098_SA003.dgn
pw:\\ohiodot-pw.bentley.com:ohiodot-pw-02\Documents\01 Active Projects\District 08\Hamilton\122048\401-Engineering_BurgessNiple\Structures\SFN_3109098\Sheets\122048_SFN_3109098_SA003.dgn

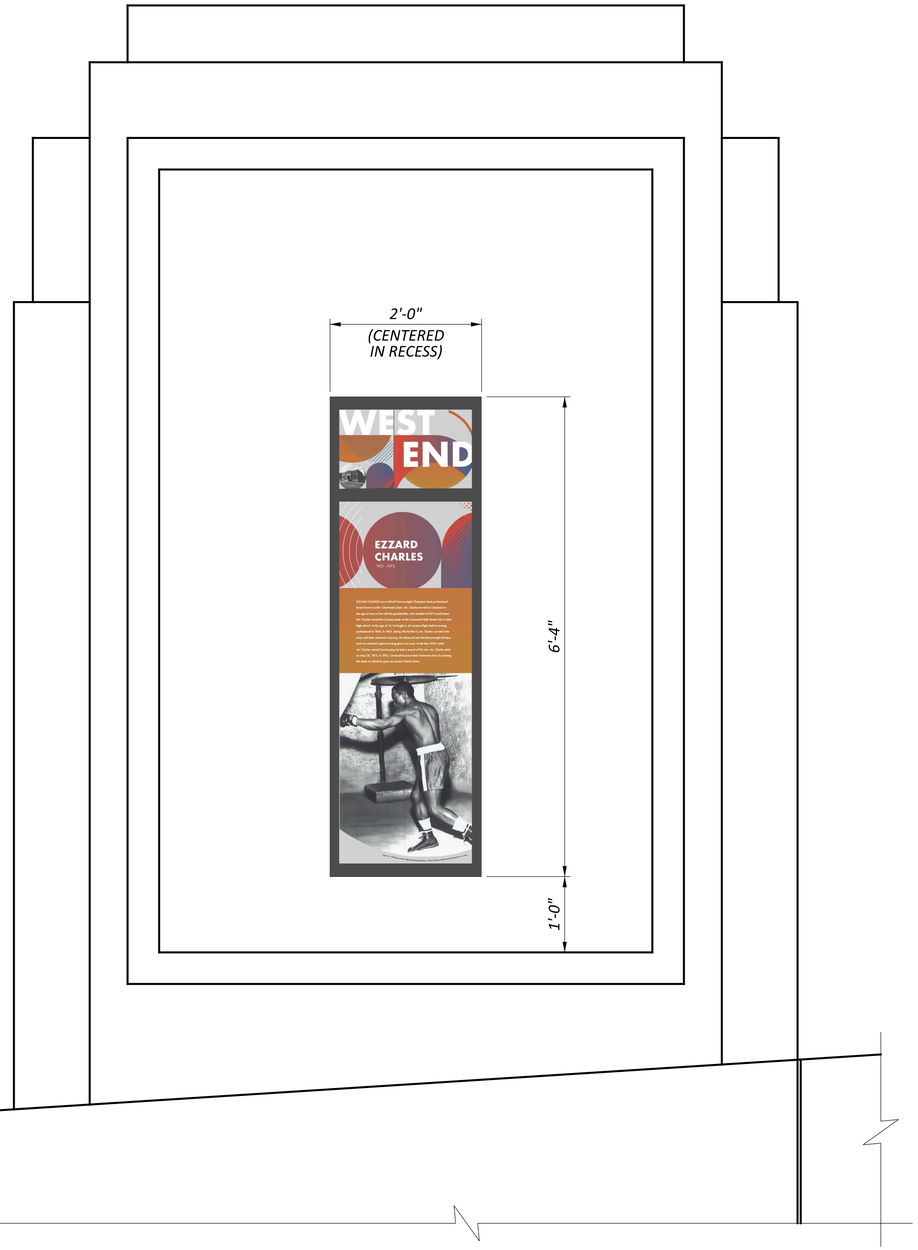

END PILASTER INTERIOR ELEVATION
(LEFT REAR AND RIGHT FORWARD END PILASTERS)

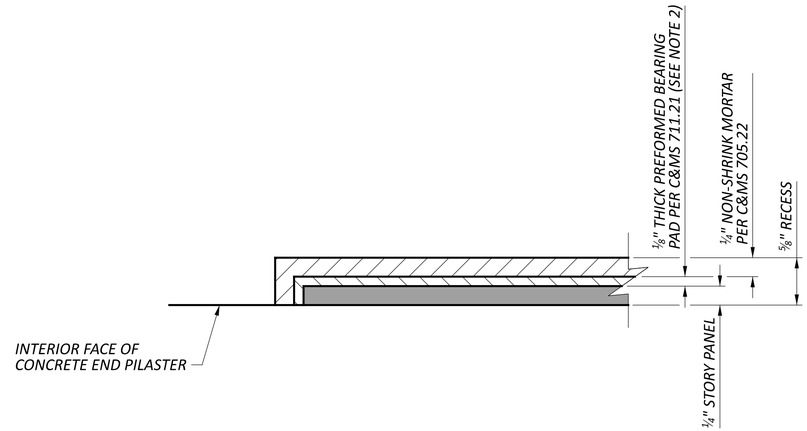

MOUNTING DETAIL
(TYP. AROUND PERIMETER OF STORY PANEL)
(FORM RECESS TO RECEIVE STORY PANEL
FOR FLUSH MOUNT INSTALLATION)

STORY PANEL NOTES:

INTERPRETIVE GRAPHIC PANEL SHALL CONSIST OF DIRECT EMBED PRODUCT AS FURNISHED BY DIRECT EMBED COATING, OR APPROVED EQUAL. STORY PANELS SHALL BE ALUMINUM ALLOY 5052-H32, 1/4" THICK. DIRECT EMBED PRODUCT PROCESS INCLUDES COATING THE ALUMINUM PANEL WITH EXTERIOR GRADE SUPER DURABLE POLYURETHANE POWDER COAT AND PERMANENTLY EMBEDDED HIGH RESOLUTION IMAGES (UV WHITE TEXTURED FINISH). MOUNT STORY PANEL TO INTERIOR FACE OF CONCRETE END PILASTER AS SHOWN.

CONTACT THE CITY OF CINCINNATI (JOELL ANGEL-CHUMBLEY---joell.angel-chumbley@cincinnati-oh.gov) TO OBTAIN IMAGE FOR STORY PANEL.

NOTES:

1. *FOR END PILASTER DIMENSIONS AND ADDITIONAL DETAILS, SEE SHEET 63/88.*
2. *ADHERE STORY PANEL TO PREFORMED BEARING PAD USING A TWO-COMPONENT EPOXY COMPOUND, MASTERBOND EP21LV, OR APPROVED EQUAL. FOLLOW MANUFACTURER'S INSTRUCTIONS REGARDING SURFACE PREPARATION, STORAGE, MIXING, APPLICATION, AND CURING. ENSURE THAT EPOXY IS FULLY CURED PRIOR TO SHIPPING TO JOB SITE.*

1 9-1-25

END PILASTER DETAILS - 2
BRIDGE NO. HAM-75-0104
LINN STREET OVER IR-75 AND GEST STREET

SFN 3109098

DESIGN AGENCY
B&N burgessniple.com

DESIGNER	CHECKER
BES	MAB

REVIEWER XAC 8/28/25

PROJECT ID 122048

SUBSET	TOTAL
63A	88

SHEET	TOTAL
P.305A	P.421

HAM-75-1.05

MODEL: Sheet PAPERSIZE: 34x22 (in.) DATE: 8/28/2025 TIME: 10:10:18 AM PLTDRV: OHDOT_PDF.pltcfg PENTBL: OHDOT_UTPen.tbl USER: WORKSPACE: OHDOTCEv02 WORKSET: 122048 PRODUCT: OpenRoadsDesigner 10.12.02.4
pw:\\ohiodot-pw.bentley.com:ohiodot-pw-02\Documents\01 Active Projects\District 08\Hamilton\122048\401-Engineering_BurgessNiple\Structures\SFN_3109098\Sheets\122048_SFN_3109098_SA015.dgn

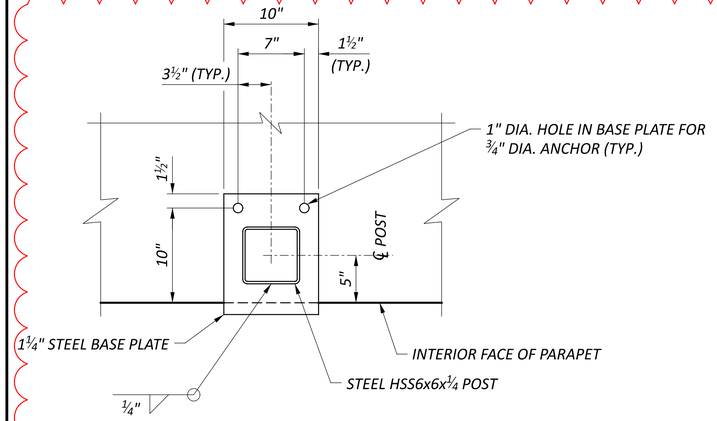

BASE PLATE PLAN

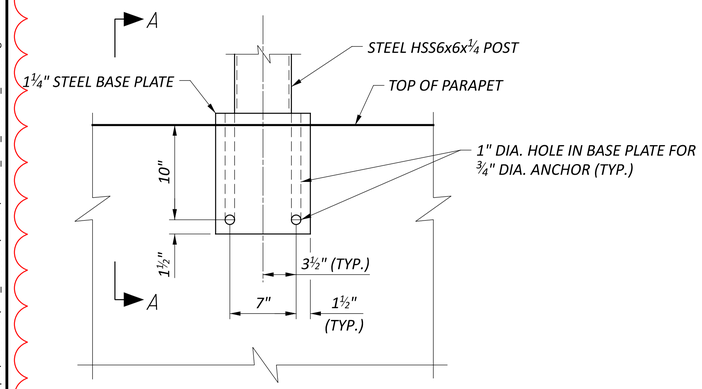

BASE PLATE ELEVATION

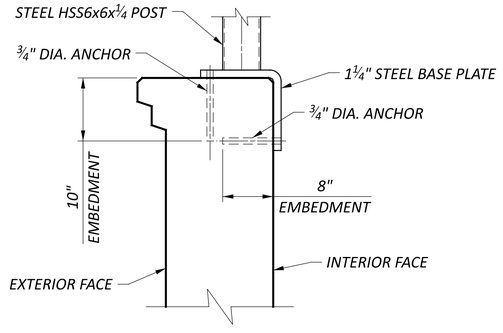

SECTION A-A

(REINFORCING NOT SHOWN FOR CLARITY)

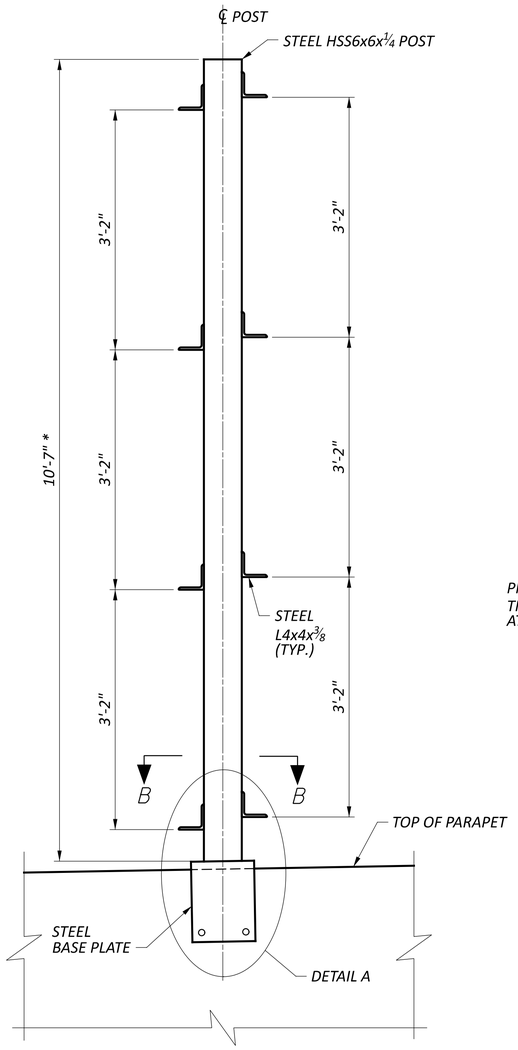

SCREEN WALL POST ELEVATION

(ELEVATION ALONG INTERIOR FACE OF PARAPET)
(SCREEN WALL PANELS AND MASKING ELEMENT NOT SHOWN FOR CLARITY)

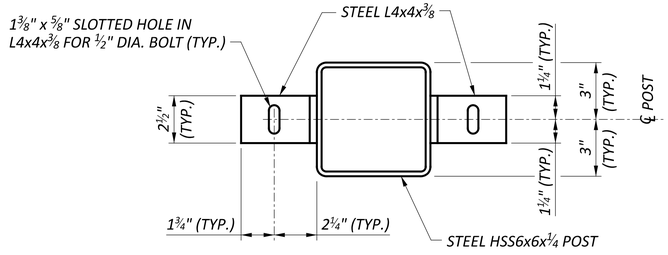

SECTION B-B

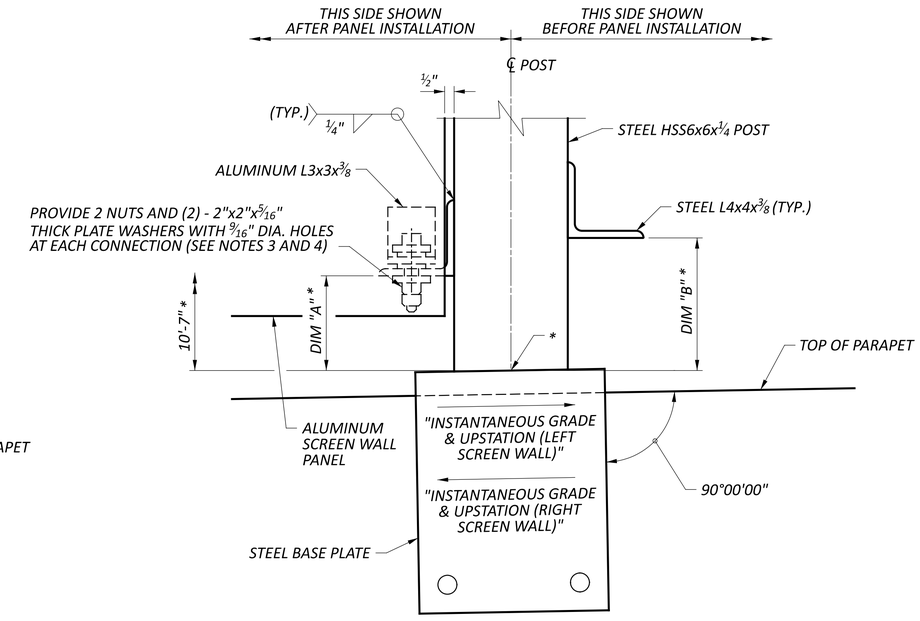

DETAIL A

(SEE NOTE 5)

NOTES:

1. POSTS SHALL BE ASTM A500, GRADE B. STEEL BASE PLATES, ANGLES AND PLATE WASHERS SHALL BE ASTM A709, GRADE 50. BOLTS SHALL BE ASTM F3125 GRADE A325. ANCHOR RODS SHALL BE ASTM F1554, GRADE 36, THREADED FULL-LENGTH. EACH ANCHOR ROD SHALL INCLUDE A NUT AND WASHER. POSTS, BASE PLATES, STEEL ANGLES, BOLTS, PLATE WASHERS AND ANCHOR RODS SHALL BE GALVANIZED ACCORDING TO C&MS 711.02 AND PAINTED [COLOR TBD].
2. ANCHOR RODS SHALL BE INSTALLED PER C&MS 510 USING NON-SHRINK, NON-METALLIC GROUT. FOR APPROVED GROUTS, SEE GENERAL NOTES FOR ADHESIVE ANCHOR/DOWEL SYSTEM ON SHEET 5/88.
3. PROVIDE LEXAN OR NYLON WASHERS AND BUSHINGS TO SEPARATE ALUMINUM FROM STEEL. PROVIDE LEXAN OR NYLON WASHERS BETWEEN ALUMINUM AND STEEL ANGLES AND BETWEEN ALUMINUM ANGLE AND STEEL PLATE WASHER. NYLON SHALL BE NYLON 6/6 MEETING FEDERAL SPECIFICATION LP 410A.
4. NUTS SHALL BE HAND TIGHTENED TO SNUG TIGHT CONDITION ONLY. DO NOT APPLY ADDITIONAL TENSION TO THE BOLTS. ENSURE THE BOTTOM NUT IS HAND TIGHTENED TO SNUG TIGHT CONDITION AGAINST THE TOP NUT TO PREVENT LOOSENING FROM VIBRATIONS.
5. INSTALL POSTS PLUMB IN BOTH DIRECTIONS. PROVIDE BEVEL CUT AT BOTTOM OF EACH POST. BEVEL CUT SHALL BE PARALLEL TO THE INSTANTANEOUS GRADE.
6. BASE PLATE SHIMS (IF NEEDED) SHALL BE MADE FROM ANY MULTI-POLYMER PLASTIC WITH A MINIMUM COMPRESSIVE STRENGTH OF 5,000 PSI.
7. FOR SCREEN WALL POST LOCATIONS, SEE SHEETS 58/ 88 AND 59/ 88 .
8. FOR SCREEN WALL CLOSURE PLATE DETAILS, SEE SHEET 65D/88 .
9. FOR SCREEN WALL PANEL AND MASKING ELEMENT DETAILS, SEE SHEETS 65C/88 AND 65E/88.

LEGEND:

* = DIMENSION IS MEASURED FROM THE TOP OF BASE PLATE AT THE ℄ POST LOCATION. FOR TABLE OF DIMENSIONS, SEE SHEET 65B/88.

1 9-1-25

SCREEN WALL POST AND ANCHOR DETAILS
BRIDGE NO. HAM-75-0104
LINN STREET OVER IR-75 AND GEST STREET

SFN	3109098
DESIGN AGENCY	B&N burgessniple.com
DESIGNER	BES
CHECKER	MAB
REVIEWER	XAC 8/27/25
PROJECT ID	122048
SUBSET	65A
TOTAL	88
SHEET	P.307A
TOTAL	P.421

HAM-75-1.05

MODEL: Sheet PAPERSIZE: 34x22 (in.) DATE: 8/27/2025 TIME: 11:17:59 AM PLTDRV: OHDOT_PDF.pltcfg PENTBL: OHDOT_UTPen.tbl USER: WORKSPACE: OHDOTCEv02 WORKSET: 122048 PRODUCT: OpenRoadsDesigner 10.12.02.4
pw:\\ohiodot-pw.bentley.com:ohiodot-pw-02\Documents\01 Active Projects\District 08\Hamilton\122048\401-Engineering_BurgessNiple\Structures\SFN_3109098\Sheets\122048_SFN_3109098_SA011.dgn

LEFT SCREEN WALL DIMENSION TABLE				
POST	STATION	INSTANTANEOUS GRADE (%)	DIM. A (IN.)	DIM. B (IN.)
1	106+01.14	4.05	-	6.94
2	106+05.14	4.05	5.00	6.94
3	106+09.14	4.05	5.00	6.94
4	106+13.14	4.05	5.00	6.94
5	106+17.14	4.05	5.00	6.94
6	106+21.14	4.05	5.00	6.94
7	106+25.14	4.05	5.00	6.94
8	106+29.14	4.05	5.00	6.94
9	106+33.14	4.05	5.00	6.94
10	106+37.14	4.05	5.00	6.94
11	106+41.14	4.05	5.00	6.94
12	106+45.14	4.05	5.00	6.94
13	106+49.14	4.05	5.00	6.92
14	106+53.14	3.95	5.00	-
15	106+55.18	3.88	-	6.83
16	106+59.18	3.75	5.00	6.77
17	106+63.18	3.62	5.00	6.71
18	106+67.18	3.49	5.00	6.65
19	106+71.18	3.36	5.00	6.58
20	106+75.18	3.23	5.00	6.52
21	106+79.18	3.10	5.00	6.46
22	106+83.18	2.97	5.00	6.40
23	106+87.18	2.84	5.00	6.33
24	106+91.18	2.71	5.00	6.27
25	106+95.18	2.58	5.00	6.21
26	106+99.18	2.45	5.00	6.15
27	107+03.18	2.32	5.00	6.08
28	107+07.18	2.20	5.00	6.02
29	107+11.18	2.07	5.00	5.96
30	107+15.18	1.94	5.00	5.90
31	107+19.18	1.81	5.00	5.84
32	107+23.18	1.68	5.00	5.77
33	107+27.18	1.55	5.00	5.71
34	107+31.18	1.42	5.00	5.65
35	107+35.18	1.29	5.00	5.59
36	107+39.18	1.16	5.00	5.52
37	107+43.18	1.03	5.00	5.46
38	107+47.18	0.90	5.00	5.40
39	107+51.18	0.77	5.00	5.34
40	107+55.18	0.64	5.00	5.28
41	107+59.18	0.51	5.00	5.21
42	107+63.18	0.38	5.00	5.15
43	107+67.18	0.25	5.00	5.09
44	107+71.18	0.12	5.00	5.03
45	107+75.18	-0.01	5.00	5.00
46	107+79.18	-0.14	5.04	5.00
47	107+83.18	-0.27	5.10	5.00
48	107+87.18	-0.40	5.16	5.00
49	107+91.18	-0.53	5.22	5.00
50	107+95.18	-0.66	5.29	5.00

LEFT SCREEN WALL DIMENSION TABLE (CONTINUED)				
POST	STATION	INSTANTANEOUS GRADE (%)	DIM. A (IN.)	DIM. B (IN.)
51	107+99.18	-0.79	5.35	5.00
52	108+03.18	-0.92	5.41	5.00
53	108+07.18	-1.05	5.47	5.00
54	108+11.18	-1.18	5.53	5.00
55	108+15.18	-1.31	5.60	5.00
56	108+19.18	-1.44	5.66	5.00
57	108+23.18	-1.57	5.72	5.00
58	108+27.18	-1.70	5.78	5.00
59	108+31.18	-1.83	5.85	5.00
60	108+35.18	-1.96	5.91	5.00
61	108+39.18	-2.09	5.97	5.00
62	108+43.18	-2.22	6.03	5.00
63	108+47.18	-2.35	6.09	5.00
64	108+51.18	-2.48	6.16	5.00
65	108+55.18	-2.61	6.22	5.00
66	108+59.18	-2.74	6.28	5.00
67	108+63.18	-2.87	6.34	5.00
68	108+67.18	-2.99	6.41	5.00
69	108+71.18	-3.12	6.47	5.00
70	108+75.18	-3.25	6.53	5.00
71	108+79.18	-3.38	6.59	5.00
72	108+83.18	-3.51	6.66	5.00
73	108+87.18	-3.64	6.72	5.00
74	108+91.18	-3.77	6.78	5.00
75	108+95.18	-3.90	6.84	5.00
76	108+99.18	-4.03	6.90	5.00
77	109+03.18	-4.16	6.97	5.00
78	109+07.18	-4.29	7.03	5.00
79	109+11.18	-4.42	7.09	5.00
80	109+15.18	-4.55	7.15	5.00
81	109+19.18	-4.68	7.22	5.00
82	109+23.18	-4.81	7.28	5.00
83	109+27.18	-4.94	7.34	5.00
84	109+31.18	-5.07	7.40	5.00
85	109+35.18	-5.20	7.47	5.00
86	109+39.18	-5.33	7.53	5.00
87	109+43.18	-5.46	7.59	5.00
88	109+47.18	-5.59	7.65	5.00
89	109+51.18	-5.72	7.71	5.00
90	109+55.18	-5.85	7.78	5.00
91	109+59.18	-5.98	7.84	5.00
92	109+63.18	-6.11	7.90	-

RIGHT SCREEN WALL DIMENSION TABLE				
POST	STATION	INSTANTANEOUS GRADE (%)	DIM. A (IN.)	DIM. B (IN.)
1	105+85.04	4.05	6.94	-
2	105+89.04	4.05	6.94	5.00
3	105+93.04	4.05	6.94	5.00
4	105+97.04	4.05	6.94	5.00
5	106+01.04	4.05	6.94	5.00
6	106+05.04	4.05	6.94	5.00
7	106+09.04	4.05	6.94	5.00
8	106+13.04	4.05	6.94	5.00
9	106+17.04	4.05	6.94	5.00
10	106+21.04	4.05	6.94	5.00
11	106+25.04	4.05	6.94	5.00
12	106+29.04	4.05	6.94	5.00
13	106+33.04	4.05	6.94	5.00
14	106+37.04	4.05	-	5.00
15	106+39.08	4.05	6.94	-
16	106+43.08	4.05	6.94	5.00
17	106+47.08	4.05	6.94	5.00
18	106+51.08	4.01	6.90	5.00
19	106+55.08	3.89	6.83	5.00
20	106+59.08	3.76	6.77	5.00
21	106+63.08	3.63	6.71	5.00
22	106+67.08	3.50	6.65	5.00
23	106+71.08	3.37	6.58	5.00
24	106+75.08	3.24	6.52	5.00
25	106+79.08	3.11	6.46	5.00
26	106+83.08	2.98	6.40	5.00
27	106+87.08	2.85	6.34	5.00
28	106+91.08	2.72	6.27	5.00
29	106+95.08	2.59	6.21	5.00
30	106+99.08	2.46	6.15	5.00
31	107+03.08	2.33	6.09	5.00
32	107+07.08	2.20	6.02	5.00
33	107+11.08	2.07	5.96	5.00
34	107+15.08	1.94	5.90	5.00
35	107+19.08	1.81	5.84	5.00
36	107+23.08	1.68	5.78	5.00
37	107+27.08	1.55	5.71	5.00
38	107+31.08	1.42	5.65	5.00
39	107+35.08	1.29	5.59	5.00
40	107+39.08	1.16	5.53	5.00
41	107+43.08	1.03	5.46	5.00
42	107+47.08	0.90	5.40	5.00
43	107+51.08	0.77	5.34	5.00
44	107+55.08	0.64	5.28	5.00
45	107+59.08	0.51	5.21	5.00
46	107+63.08	0.38	5.15	5.00
47	107+67.08	0.25	5.09	5.00
48	107+71.08	0.12	5.03	5.00
49	107+75.08	-0.01	5.00	5.00
50	107+79.08	-0.14	5.00	5.03

RIGHT SCREEN WALL DIMENSION TABLE (CONTINUED)				
POST	STATION	INSTANTANEOUS GRADE (%)	DIM. A (IN.)	DIM. B (IN.)
51	107+83.08	-0.27	5.00	5.10
52	107+87.08	-0.40	5.00	5.16
53	107+91.08	-0.53	5.00	5.22
54	107+95.08	-0.66	5.00	5.28
55	107+99.08	-0.79	5.00	5.35
56	108+03.08	-0.92	5.00	5.41
57	108+07.08	-1.05	5.00	5.47
58	108+11.08	-1.18	5.00	5.53
59	108+15.08	-1.30	5.00	5.60
60	108+19.08	-1.43	5.00	5.66
61	108+23.08	-1.56	5.00	5.72
62	108+27.08	-1.69	5.00	5.78
63	108+31.08	-1.82	5.00	5.84
64	108+35.08	-1.95	5.00	5.91
65	108+39.08	-2.08	5.00	5.97
66	108+43.08	-2.21	5.00	6.03
67	108+47.08	-2.34	5.00	6.09
68	108+51.08	-2.47	5.00	6.16
69	108+55.08	-2.60	5.00	6.22
70	108+59.08	-2.73	5.00	6.28
71	108+63.08	-2.86	5.00	6.34
72	108+67.08	-2.99	5.00	6.40
73	108+71.08	-3.12	5.00	6.47
74	108+75.08	-3.25	5.00	6.53
75	108+79.08	-3.38	5.00	6.59
76	108+83.08	-3.51	5.00	6.65
77	108+87.08	-3.64	5.00	6.72
78	108+91.08	-3.77	5.00	6.78
79	108+95.08	-3.90	5.00	6.84
80	108+99.08	-4.03	5.00	6.90
81	109+03.08	-4.16	5.00	6.97
82	109+07.08	-4.29	5.00	7.03
83	109+11.08	-4.42	5.00	7.09
84	109+15.08	-4.55	5.00	7.15
85	109+19.08	-4.68	5.00	7.21
86	109+23.08	-4.81	5.00	7.28
87	109+27.08	-4.94	5.00	7.34
88	109+31.08	-5.07	5.00	7.40
89	109+35.08	-5.20	5.00	7.46
90	109+39.08	-5.33	5.00	7.53
91	109+43.08	-5.46	5.00	7.59
92	109+47.08	-5.59	-	7.65

NOTES:

1. *FOR LOCATION OF DIMENSIONS, SEE DETAILS ON SHEET 65A/88 .*

1 9-1-25

SCREEN WALL POST DIMENSIONS
BRIDGE NO. HAM-75-0104
STREET OVER IR-75 AND GEST STREET
LINN STREET

SFN 3109098

DESIGN AGENCY

B&N burgessniple.com

DESIGNER	CHECKER
MAB	BES

REVIEWER: XAC 8/27/25

PROJECT ID: 122048

SUBSET	TOTAL
65B	88

SHEET	TOTAL
P.307B	P.421

HAM-IR 75-1.05

MODEL: Sheet PAPERSIZE: 34x22 (in.) DATE: 8/27/2025 TIME: 11:18:07 AM PLTDRV: OHDOT_PDF.pltcfg PENTBL: OHDOT_UTPen.tbl USER: WORKSPACE: OHDOTCEv02 WORKSET: 122048 PRODUCT: OpenRoadsDesigner 10.12.02.4
pw:\\ohiodot-pw.bentley.com:ohiodot-pw-02\Documents\01 Active Projects\District 08\Hamilton\122048\401-Engineering_BurgessNiple\Structures\SFN_3109098\Sheets\SFN_3109098_SA013.dgn

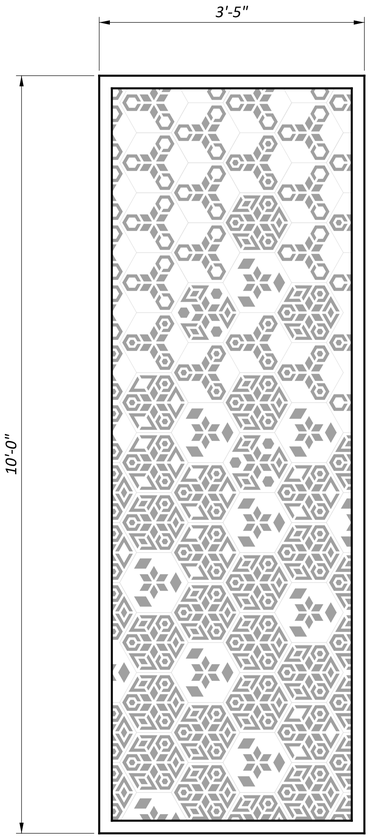

SCREEN WALL LASER CUT PANEL ELEVATION
(POLYGONS SHOWN AROUND EACH MODULE ARE FOR INFORMATION ONLY)

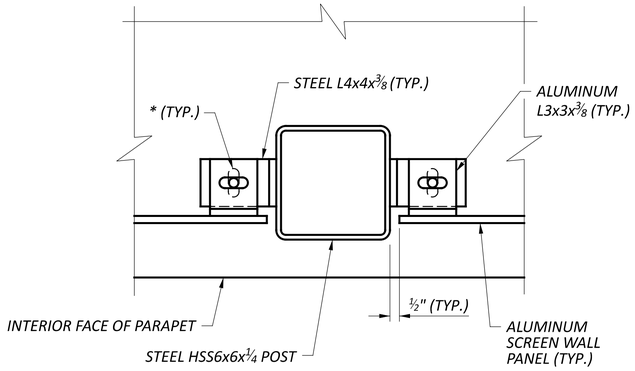

SCREEN WALL CONNECTION DETAIL
(MASKING ELEMENT NOT SHOWN FOR CLARITY)

LASER-CUT MODULE NOTES:

EACH 6-SIDED POLYGON MODULE IS DESIGNED TO THE FOLLOWING ENGINEERING CRITERIA:

1. LASER CUT LINEAR OPENINGS 1/2" x 3".
2. LASER CUT DIAMOND SHAPES 1 1/2" x 1 1/2".
3. LINEAR PATTERN ELEMENTS 3/8" WIDE x VARYING LENGTHS.
4. 2" WHITE BORDER AROUND ALL PANEL EDGES.
5. CONTACT ODOT DISTRICT 8 TO OBTAIN A MICROSTATION CADD DRAWING OF THE PANEL.

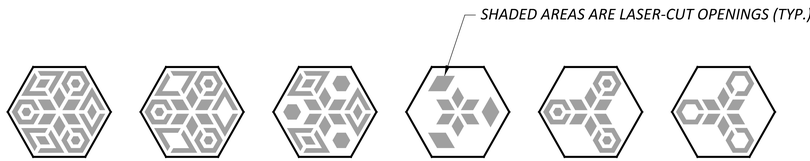

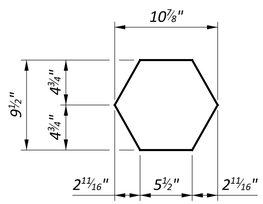

6-SIDED POLYGON MODULES

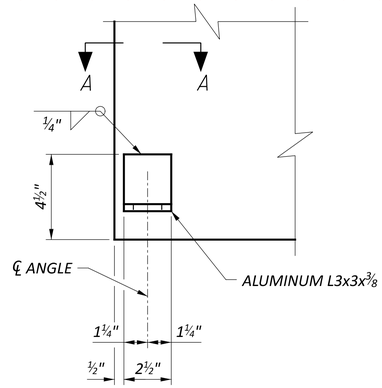

DETAIL A

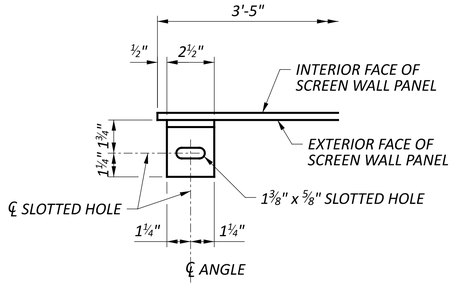

VIEW A-A

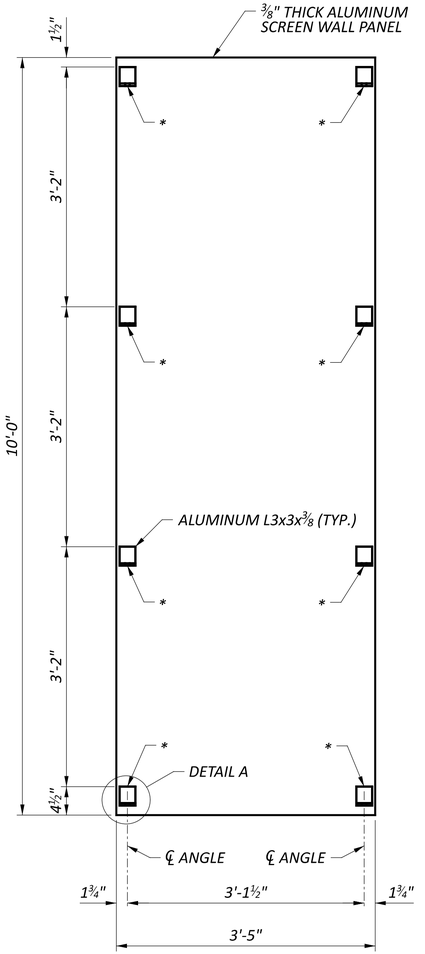

SCREEN WALL ELEVATION
(EXTERIOR FACE SHOWN)
(SEE NOTE 2)

LEGEND:

* = PROVIDE 2 NUTS AND (2) - 2"x2"x5/16" THICK PLATE WASHERS WITH 9/16" DIA. HOLES AT EACH CONNECTION

NOTES:

1. ALUMINUM PANELS AND ANGLES SHALL BE ALLOY 6061-T6 AND SHALL BE PAINTED [COLOR TBD].
2. INSTALL PANELS PLUMB AND LEVEL.

1 9-1-25

SCREEN WALL PANEL DETAILS
BRIDGE NO. HAM-75-0104
LINN STREET OVER IR-75 AND GEST STREET

SFN	3109098
DESIGN AGENCY	B&N burgessniple.com
DESIGNER	BES
CHECKER	MAB
REVIEWER	XAC 8/27/25
PROJECT ID	122048
SUBSET	65C
TOTAL	88
SHEET	P.307C
TOTAL	P.421

HAM-75-1.05

MODEL: Sheet PAPERSIZE: 34x22 (in.) DATE: 8/27/2025 TIME: 11:18:14 AM PLTDRV: OHDOT_PDF.pltcfg PENTBL: OHDOT_UTPen.tbl USER: WORKSPACE: OHDOTCEv02 WORKSET: 122048 PRODUCT: OpenRoadsDesigner 10.12.02.4
pw:\\ohiodot-pw.bentley.com:ohiodot-pw-02\Documents\01 Active Projects\District 08\Hamilton\122048\d01-Engineering_BurgessNiple\Structures\SFN_3109098\Sheets\SFN_3109098_SA012.dgn

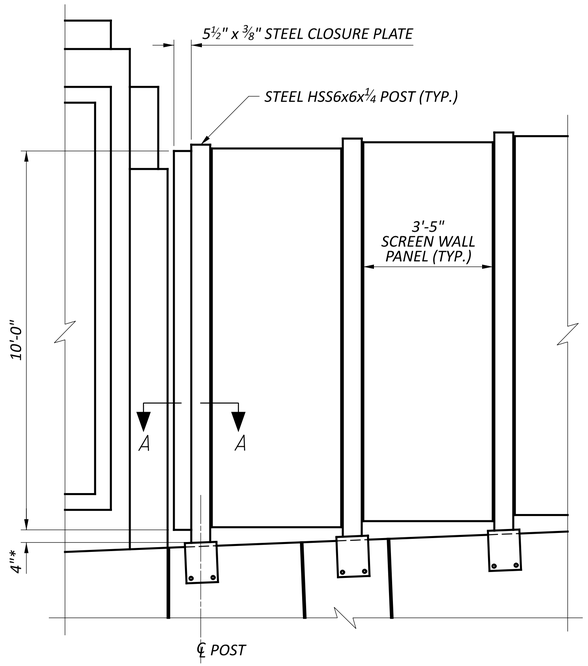

TYPICAL SCREEN WALL ELEVATION AT END PILASTER

(LEFT PARAPET INTERIOR FACE SHOWN,
RIGHT PARAPET INTERIOR FACE SIMILAR)
(MASKING ELEMENTS AND CONNECTION ANGLES NOT SHOWN FOR CLARITY)

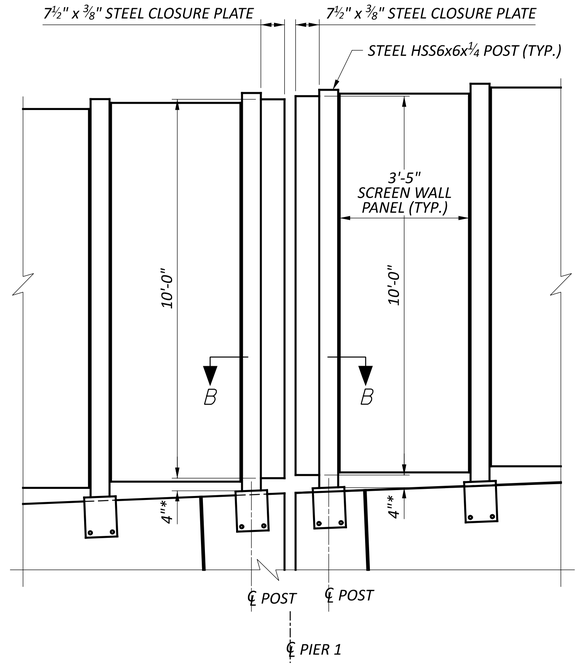

SCREEN WALL ELEVATION AT PIER 1

(LEFT PARAPET INTERIOR FACE SHOWN,
RIGHT PARAPET INTERIOR FACE SIMILAR)
(MASKING ELEMENTS AND CONNECTION ANGLES NOT SHOWN FOR CLARITY)

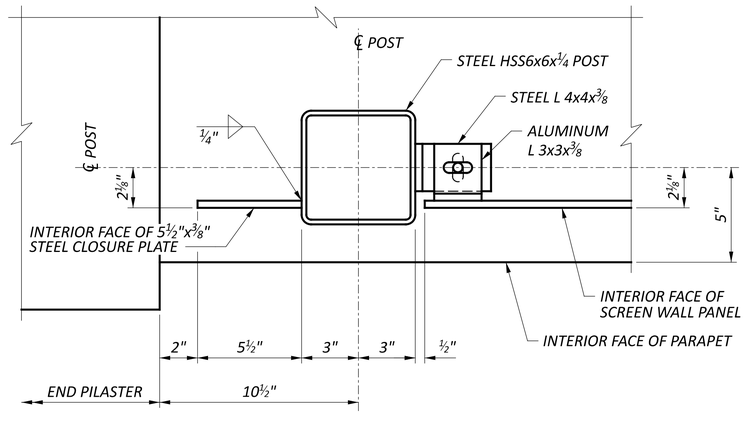

SECTION A-A

(BASE PLATE NOT SHOWN FOR CLARITY)

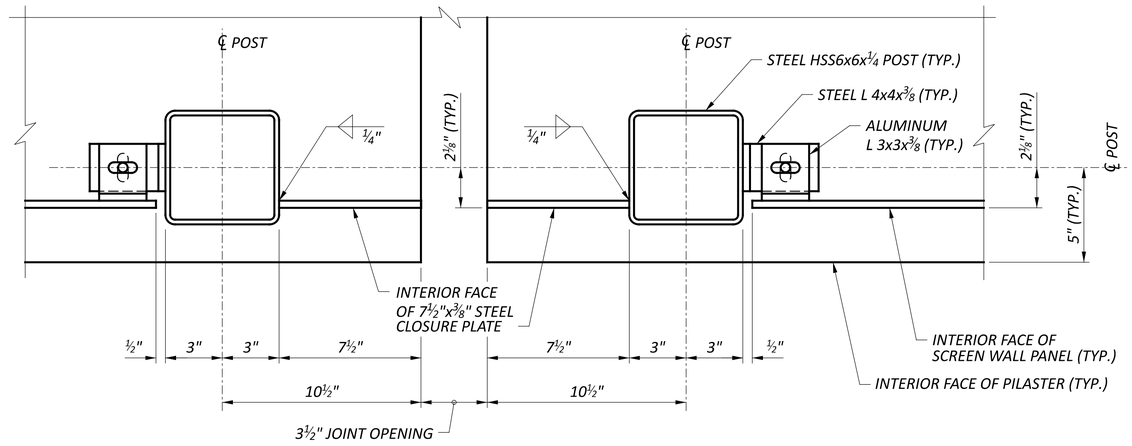

SECTION B-B

(BASE PLATE NOT SHOWN FOR CLARITY)

LEGEND:

** = 4" DIMENSION IS MEASURED FROM THE TOP OF BASE PLATE AT THE ℄ POST LOCATION TO BOTTOM OF CLOSURE PLATE*

NOTES:

1. *CLOSURE PLATES SHALL BE ASTM A709, GRADE 50. CLOSURE PLATES SHALL BE GALVANIZED ACCORDING TO C&MS 711.02 AND PAINTED [COLOR TBD].*
2. *FOR PARAPET PANEL, PILASTER, CONTRACTION JOINT, DEFLECTION JOINT AND SCREEN WALL POST LOCATIONS, SEE SHEETS 58/ 88 AND 59/ 88 .*
3. *FOR ADDITIONAL SCREEN WALL DETAILS, SEE SHEET 65A/88 AND 65C/88 .*

1 9-1-25

SCREEN WALL CLOSURE PLATE DETAILS
BRIDGE NO. HAM-75-0104
LINN STREET OVER IR-75 AND GEST STREET

SFN	3109098
DESIGN AGENCY	B&N burgessniple.com
DESIGNER	BES
CHECKER	MAB
REVIEWER	XAC 8/27/25
PROJECT ID	122048
SUBSET	65D
TOTAL	88
SHEET	P.307D
TOTAL	P.421

HAM-75-1.05

MODEL: Sheet PAPERSIZE: 34x22 (in.) DATE: 8/27/2025 TIME: 11:18:22 AM PLTDRV: OHDOT_PDF.pltcfg PENTBL: OHDOT_UTPen.tbl USER: WORKSPACE: OHDOTCEv02 WORKSET: 122048 PRODUCT: OpenRoadsDesigner 10.12.02.4
pw:\\ohiodot-pw.bentley.com:ohiodot-pw-02\Documents\01 Active Projects\District 08\Hamilton\122048\401-Engineering_BurgessNiple\Structures\SFN_3109098\Sheets\122048_SFN_3109098_SA010.dgn
ctures\SFN_3109098\Sheets\122048_SFN_3109098_SA010.dgn

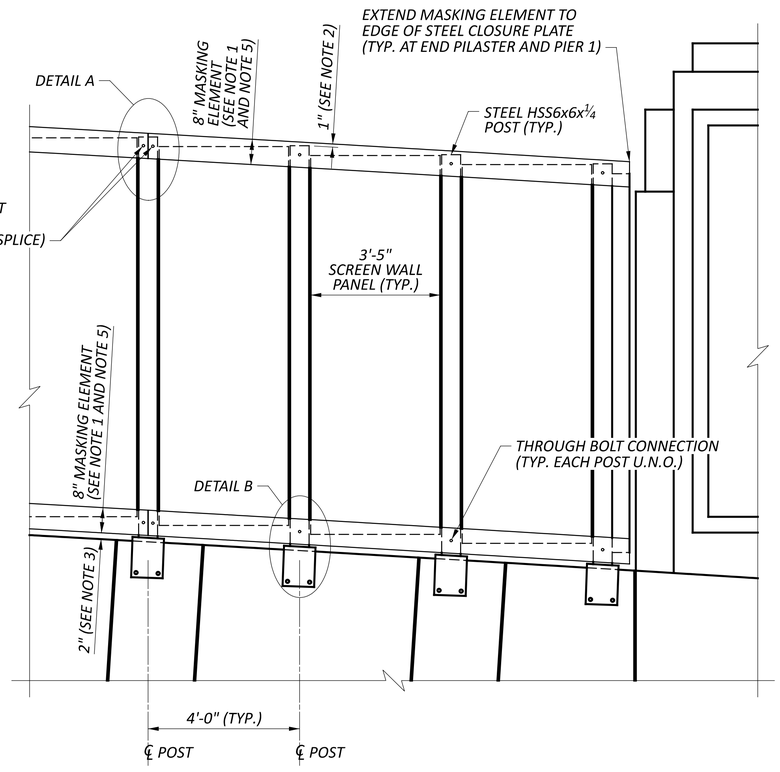

MASKING ELEMENT ELEVATION
(ELEVATION ALONG INSIDE FACE OF SCREEN WALL)

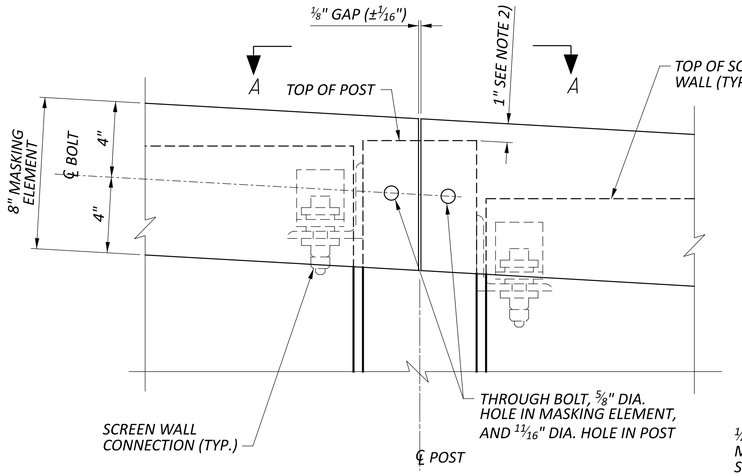

DETAIL A
(DISCONTINUOUS MASKING ELEMENT SHOWN AT TOP, SIMILAR AT BOTTOM)

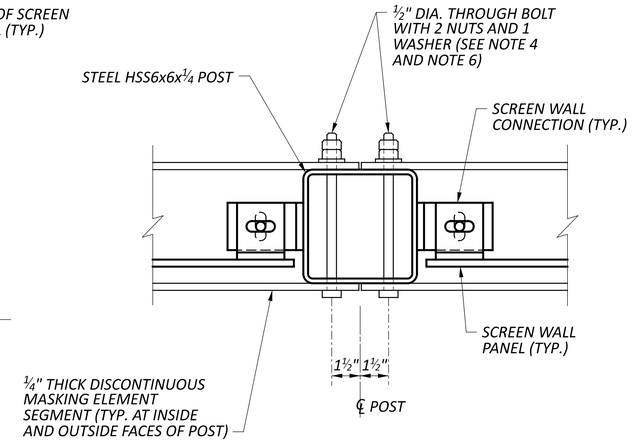

VIEW A-A

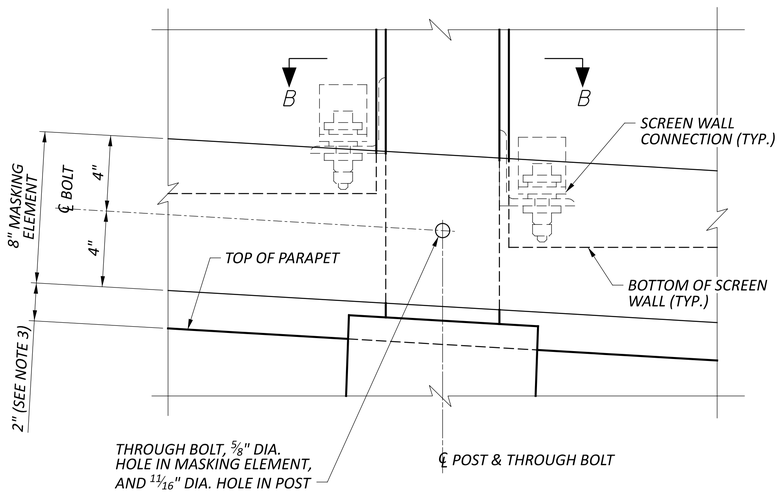

DETAIL B
(CONTINUOUS MASKING ELEMENT SHOWN AT BOTTOM, SIMILAR AT TOP)

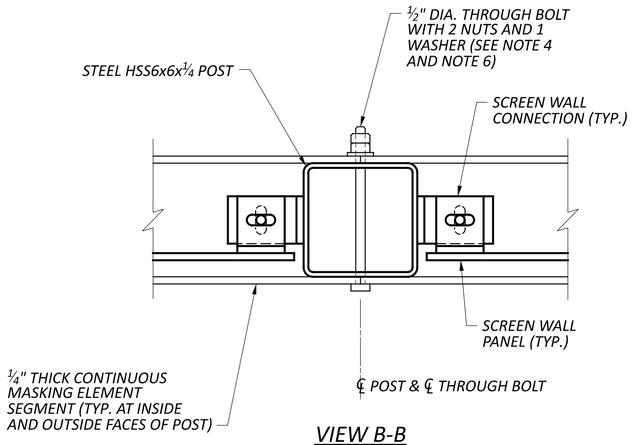

VIEW B-B

NOTES:

1. MASKING ELEMENTS ARE ALONG THE INSIDE FACE AND OUTSIDE FACE OF THE SCREEN WALL. MASKING ELEMENTS SHALL EXTEND ACROSS A MINIMUM OF 2 POST SPACES AND A MAXIMUM OF 3 POST SPACES. END MASKING ELEMENT SEGMENT NEAR ℄ OF A POST, LEAVING A GAP AS SHOWN IN DETAIL A. UNLESS NOTED OTHERWISE.
2. MAINTAIN 1" ± ⅛" CLEARANCE FROM TOP OF POST TO TOP OF MASKING ELEMENT.
3. MAINTAIN 2" ± ⅛" CLEARANCE FROM TOP OF PARAPET TO BOTTOM OF MASKING ELEMENT.
4. BOLTS SHALL BE ASTM F3125 GRADE A325. BOLTS SHALL BE GALVANIZED ACCORDING TO C&MS 711.02 AND PAINTED [COLOR TBD].
5. MASKING ELEMENTS SHALL BE ASTM A709, GRADE 50. MASKING ELEMENTS SHALL BE GALVANIZED ACCORDING TO C&MS 711.02 AND PAINTED [COLOR TBD].
6. NUTS SHALL BE HAND TIGHTENED TO SNUG TIGHT CONDITION ONLY. DO NOT APPLY ADDITIONAL TENSION TO THE BOLTS. ENSURE THE SECOND NUT IS HAND TIGHTENED TO SNUG TIGHT CONDITION AGAINST THE FIRST NUT.

1 9-1-25

MASKING ELEMENT DETAILS
BRIDGE NO. HAM-75-0104
LINN STREET OVER IR-75 AND GEST STREET

SFN	3109098
DESIGN AGENCY	B&N burgessniple.com
DESIGNER	BES
CHECKER	MAB
REVIEWER	XAC 8/27/25
PROJECT ID	122048
SUBSET	65E
TOTAL	88
SHEET	P.307E
TOTAL	P.421

HAM-75-1.05

MODEL: Sheet PAPERSIZE: 34x22 (in.) DATE: 8/27/2025 TIME: 11:18:29 AM PLTDRV: OHDOT_PDF.pltcfg PENTBL: OHDOT_UTPen.tbl USER: WORKSPACE: OHDOTCEv02 WORKSET: 122048 PRODUCT: OpenRoadsDesigner 10.12.02.4
pw:\\ohiodot-pw.bentley.com:ohiodot-pw-02\Documents\01 Active Projects\District 08\Hamilton\122048\401-Engineering_BurgessNiple\Structures\SFN_3109098\Sheets\122048_SFN_3109098_SA014.dgn

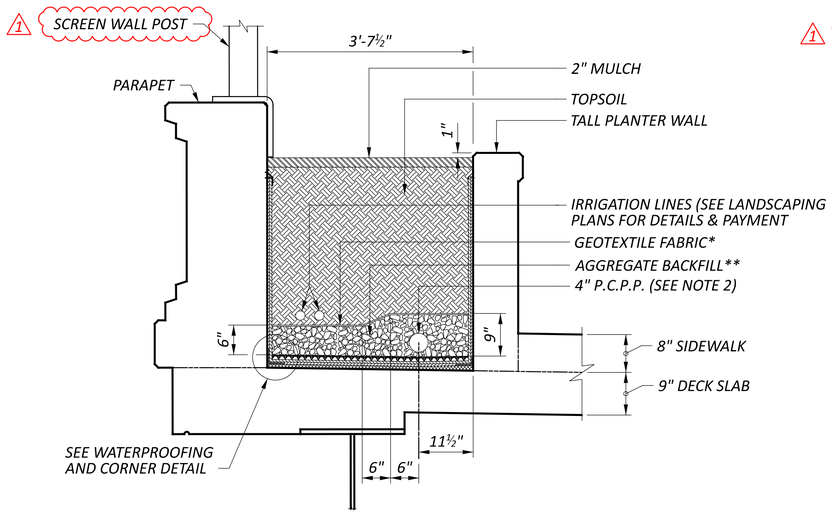

TALL PLANTER DETAIL
(SEE NOTE 1)

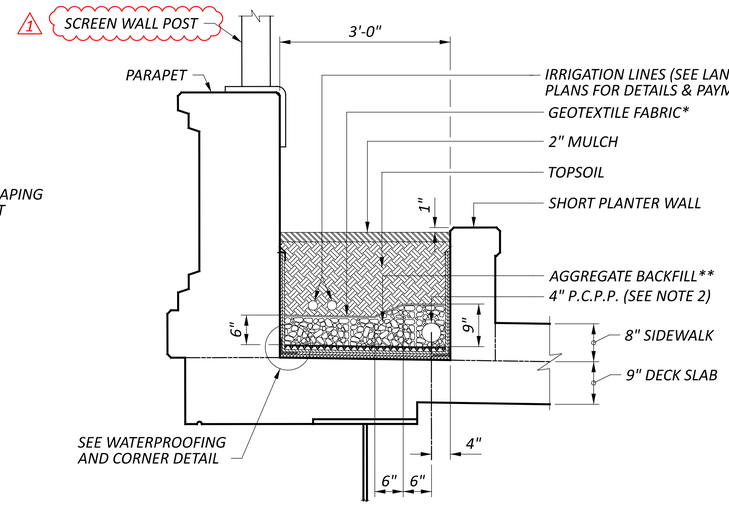

SHORT PLANTER DETAIL

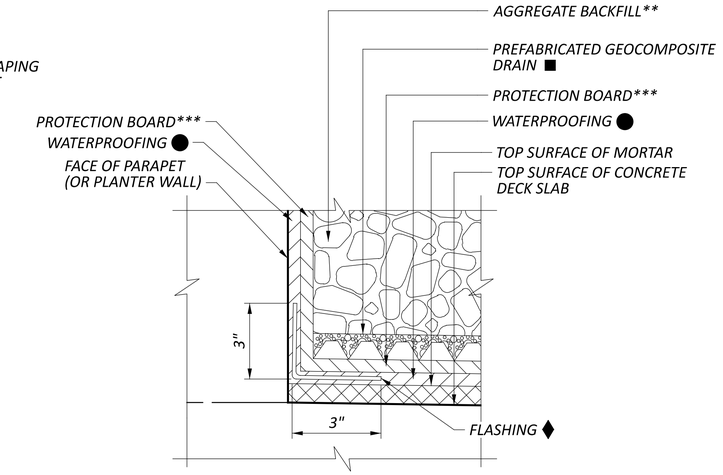

WATERPROOFING AND CORNER DETAIL
(APPLIES AT BASE OF PARAPET AND BASE OF PLANTER WALLS)
(SEE NOTE 1)

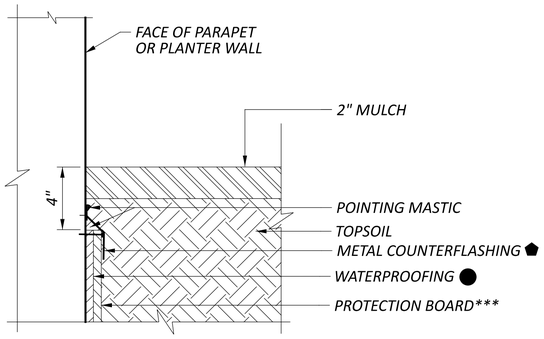

WATERPROOFING TERMINATION DETAIL 1
(APPLIES AT BACK FACE OF TALL AND SHORT PLANTER WALLS, AND FRONT FACE OF PARAPET FOR TALL AND SHORT PLANTERS)
(SEE NOTE 1)

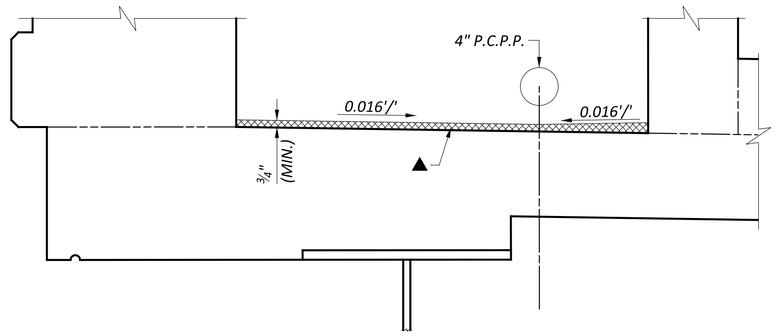

MORTAR DETAIL AT BASE OF PLANTER
(TALL PLANTER SHOWN, SHORT PLANTER SIMILAR)

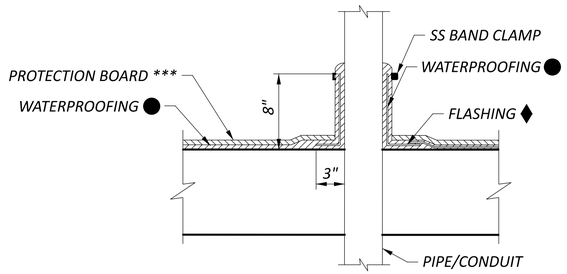

TYPICAL CAST-IN-PLACE PENETRATIONS

1 9-1-25

LEGEND:

* = GEOTEXTILE FABRIC SHALL CONFORM TO CMS 712.09, TYPE A

** = AGGREGATE BACKFILL SHALL CONFORM TO CMS TABLE 703.01-1, SIZE #57

*** = PROTECTION BOARD SHALL BE WR MEADOWS PROTECTION COURSE PC-3, TREMCO 2560 PROTECTION BOARD, OR APPROVED EQUAL

▲ = MORTAR SHALL BE QUICK SETTING CONCRETE MORTAR, TYPE 2, CONFORMING TO CMS 705.21

■ = PREFABRICATED GEOCOMPOSITE DRAIN (PGD) SHALL CONFORM TO CMS 518 AND 712.16. SUPPLY PGD MEETING THE PROPERTIES IN CMS TABLE 712.16-1 FOR CONVENTIONAL ABUTMENT/WALL HEIGHTS OF 30' TO 50'

⬟ = COUNTERFLASHING SHALL BE 1-PIECE, 24-GAUGE (MIN.) GALVANIZED STEEL, ATTACHED TO CONCRETE SURFACE AT 12" MAX. SPACING. ATTACHMENT HARDWARE SHALL BE GALVANIZED. OVERLAP INDIVIDUAL PIECES A MINIMUM OF 1"

♦ = INSTALL FLASHING AFTER APPLYING PRIMER AND FIRST COAT OF WATERPROOFING MEMBRANE, AND PRIOR TO APPLYING THE FABRIC REINFORCEMENT.

LEGEND CONTINUED:

● = WATERPROOFING SHALL BE A HOT-APPLIED RUBBERIZED ASPHALT WATERPROOFING MEMBRANE, AND SHALL BE FABRIC REINFORCED. TWO COATS OF MEMBRANE SHALL BE APPLIED, WITH THE FIRST COAT BEING 90 MILS THICKNESS AND THE SECOND COAT BEING 125 MILS THICKNESS. FABRIC REINFORCEMENT SHALL BE EMBEDDED INTO THE FIRST COAT WHILE IT IS STILL HOT. PRODUCT SHALL BE HRM 714 BY WR MEADOWS, MM6125 BY HYDROTECH, OR APPROVED EQUAL. PERFORM SURFACE PREPARATION AND APPLY PRIMER AS RECOMMENDED BY THE WATERPROOFING MANUFACTURER. FOLLOW ALL MANUFACTURER'S INSTRUCTIONS REGARDING INSTALLATION, INCLUDING WEATHER RESTRICTIONS AND SAFETY PRECAUTIONS.

NOTE:

1. PROVIDE WATERPROOFING AND PROTECTION BOARD ON ALL VERTICAL SURFACES OF PLANTER AREAS, INCLUDING TRANSVERSE PLANTER WALLS.

2. PLACE PIPE ON 1" BEDDING OF AGGREGATE BACKFILL.

DRAINAGE AND WATERPROOFING DETAILS - 1
BRIDGE NO. HAM-75-0104
LINN STREET OVER IR-75 AND GEST STREET

SFN	3109098
DESIGN AGENCY	B&N burgessniple.com
DESIGNER	BES
CHECKER	XAC
REVIEWER	JCS 12/18/24
PROJECT ID	122048
SUBSET	71
TOTAL	88
SHEET	P.313
TOTAL	P.421

HAM-75-1.05

MODEL: Sheet PAPERSIZE: 34x22 (in.) DATE: 8/25/2025 TIME: 11:08:41 AM PLTDRV: OHDOT_PDF.pltcfg PENTBL: OHDOT_UTPen.tbl USER: WORKSPACE: OHDOTCEv02 WORKSET: 122048 PRODUCT: OpenRoadsDesigner 10.12.02.4
pw:\\ohiodot-pw.bentley.com:ohiodot-pw-02\Documents\01 Active Projects\District 08\Hamilton\122048\401-Engineering_BurgessNiple\Structures\SFN_3109098\Sheets\122048_SFN_3109098_SM013.dgn

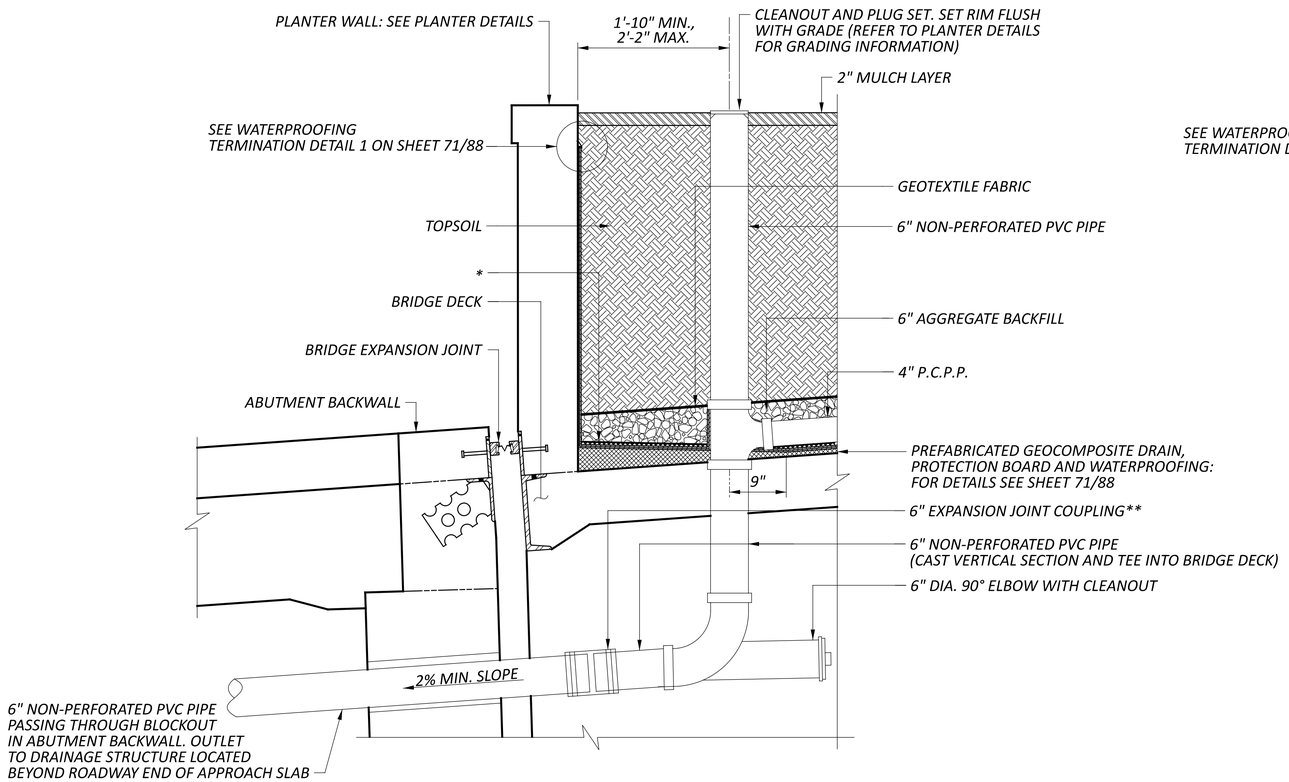

PLANTER DRAINAGE OUTLET AT ABUTMENT - SECTION

(4 OUTLET LOCATIONS)

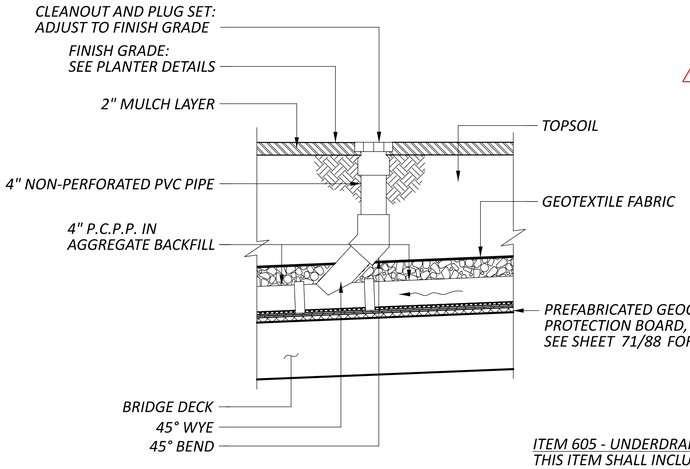

CLEANOUT DETAIL

ITEM 605 - UNDERDRAINS, MISC.: DRAINAGE OUTLET AT ABUTMENT:
THIS ITEM SHALL INCLUDE VERTICAL CLEANOUT AND PLUG SET, 90 DEG. ELBOW WITH CLEANOUT, EXPANSION JOINT COUPLING, 6" NON-PERFORATED PVC PIPE SEGMENTS PER CMS 707.41 FROM PLANTER SURFACE TO BACK FACE OF ABUTMENT BACKWALL, PIPE TEE, AND ANY INCIDENTALS NECESSARY TO COMPLETE THE CONNECTION OF THE 4" P.C.P.P. IN THE PLANTER TO THE 6" NON-PERFORATED PVC PIPE BEHIND THE ABUTMENT. CLEANOUT AND PLUG SET WITHIN PLANTER AREA SHALL BE BLACK. END PLUG IS TO BE LABELED 'C.O.' UPON TOP SURFACE FOR IDENTIFICATION PURPOSES. DRILL TWO (2) - ¼" DIA. HOLES IN END PLUG TO ALLOW VENTING.

ITEM 605 - UNDERDRAINS, MISC.: CLEANOUT:
THIS ITEM SHALL INCLUDE VERTICAL CLEANOUT AND PLUG SET, 4" NON-PERFORATED PVC PIPE PER CMS 707.41, 45 DEG. WYES AND BENDS, AND ANY INCIDENTALS NECESSARY TO COMPLETE THE INSTALLATION OF THE CLEANOUT.

CLEANOUT AND PLUG SET TO BE BLACK, END PLUG IS TO BE LABELED 'C.O.' UPON TOP SURFACE FOR IDENTIFICATION PURPOSES. DRILL TWO (2) - ¼" DIA. HOLES IN END PLUG TO ALLOW VENTING.

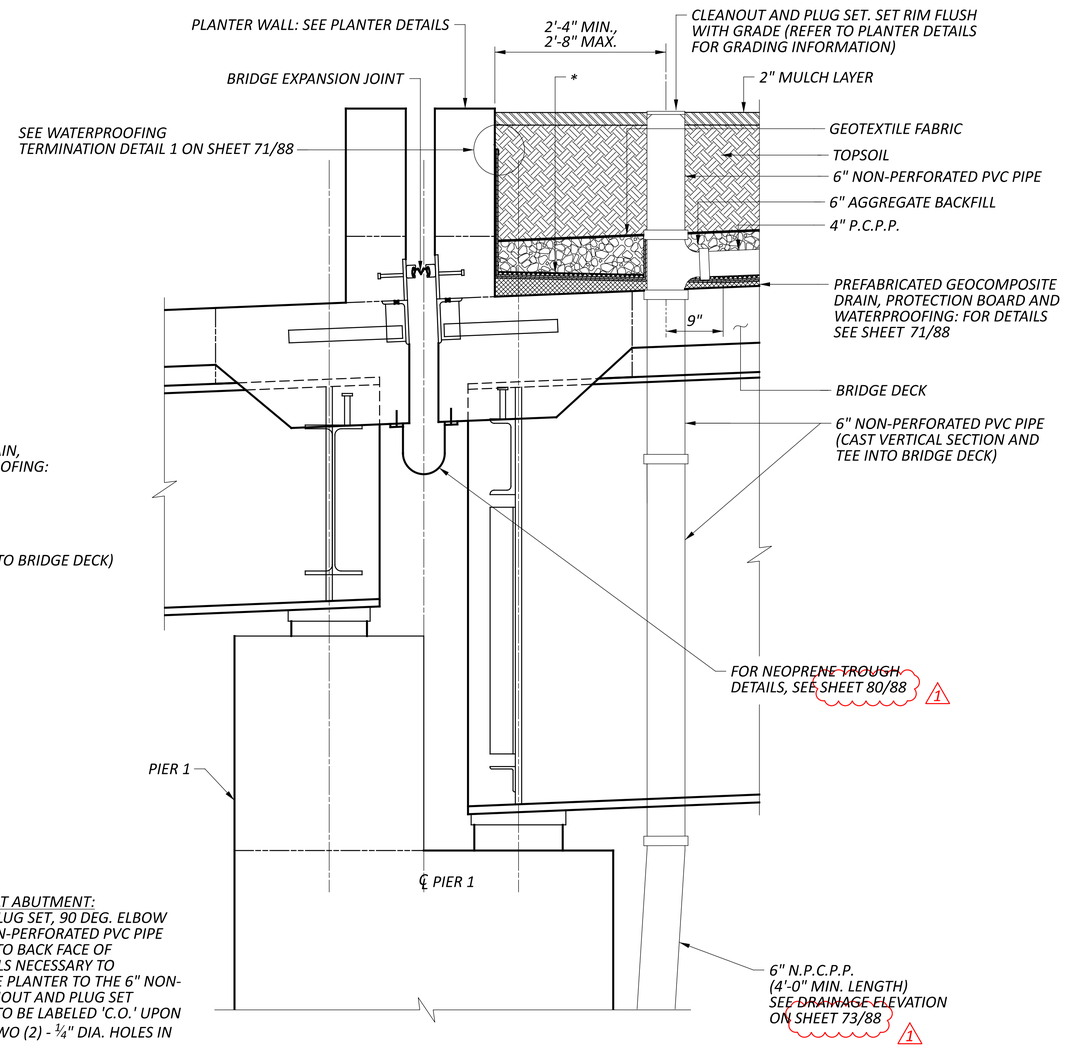

PLANTER DRAINAGE OUTLET AT PIER 1 - SECTION

(2 OUTLET LOCATIONS)

ITEM 605 - UNDERDRAINS, MISC.: DRAINAGE OUTLET AT PIER 1:
THIS ITEM SHALL INCLUDE VERTICAL CLEANOUT AND PLUG SET, 6" NON-PERFORATED PVC PIPE SEGMENTS PER CMS 707.41, 6" N.P.C.P.P. PER CMS 707.33, PIPE ELBOWS, TEES, CLEANOUTS, PLUGS, TIED CONCRETE BLOCK MAT, AND ANY INCIDENTALS NECESSARY TO COMPLETE THE CONNECTION OF THE 4" P.C.P.P. IN THE PLANTER TO THE OUTLET AT THE TIED CONCRETE BLOCK MAT. CLEANOUT AND PLUG SET WITHIN PLANTER AREA SHALL BE BLACK. END PLUG IS TO BE LABELED 'C.O.' UPON TOP SURFACE FOR IDENTIFICATION PURPOSES. DRILL TWO (2) - ¼" DIA. HOLES IN END PLUG TO ALLOW VENTING.

LEGEND:

** = PLACE MORTAR AT END OF BRIDGE SUPERSTRUCTURE UNIT TO PROVIDE ¼" PER FOOT MINIMUM SLOPE FROM PLANTER WALL TO 9" BEYOND CENTERLINE OF VERTICAL CLEANOUT. MORTAR SHALL BE QUICK SETTING CONCRETE MORTAR, TYPE 2, CONFORMING TO CMS 705.21.*

*** = EXPANSION COUPLING SHALL BE CAPABLE OF ACCOMMODATING 3" TOTAL MOVEMENT.*

1 9-1-25

DRAINAGE AND WATERPROOFING DETAILS - 2

BRIDGE NO. HAM-75-0104
LINN STREET OVER IR-75 AND GEST STREET

SFN	3109098
DESIGN AGENCY	B&N burgessniple.com
DESIGNER	BES
CHECKER	XAC
REVIEWER	JCS 12/18/24
PROJECT ID	122048
SUBSET	72
TOTAL	88
SHEET	P.314
TOTAL	P.421

HAM-75-1.05

MODEL: Sheet PAPERSIZE: 34x22 (in.) DATE: 8/26/2025 TIME: 2:24:57 PM PLTDRV: OHDOT_PDF.pltcfg PENTBL: OHDOT_UTPen.tbl USER: WORKSPACE: OHDOTCEv02 WORKSET: 122048 PRODUCT: OpenRoadsDesigner 10.12.02.4
pw:\\ohiodot-pw.bentley.com:ohiodot-pw-02\Documents\01 Active Projects\District 08\Hamilton\122048\401-Engineering_BurgessNiple\Structures\SFN_3109098\Sheets\122048_SFN_3109098_SM012.dgn

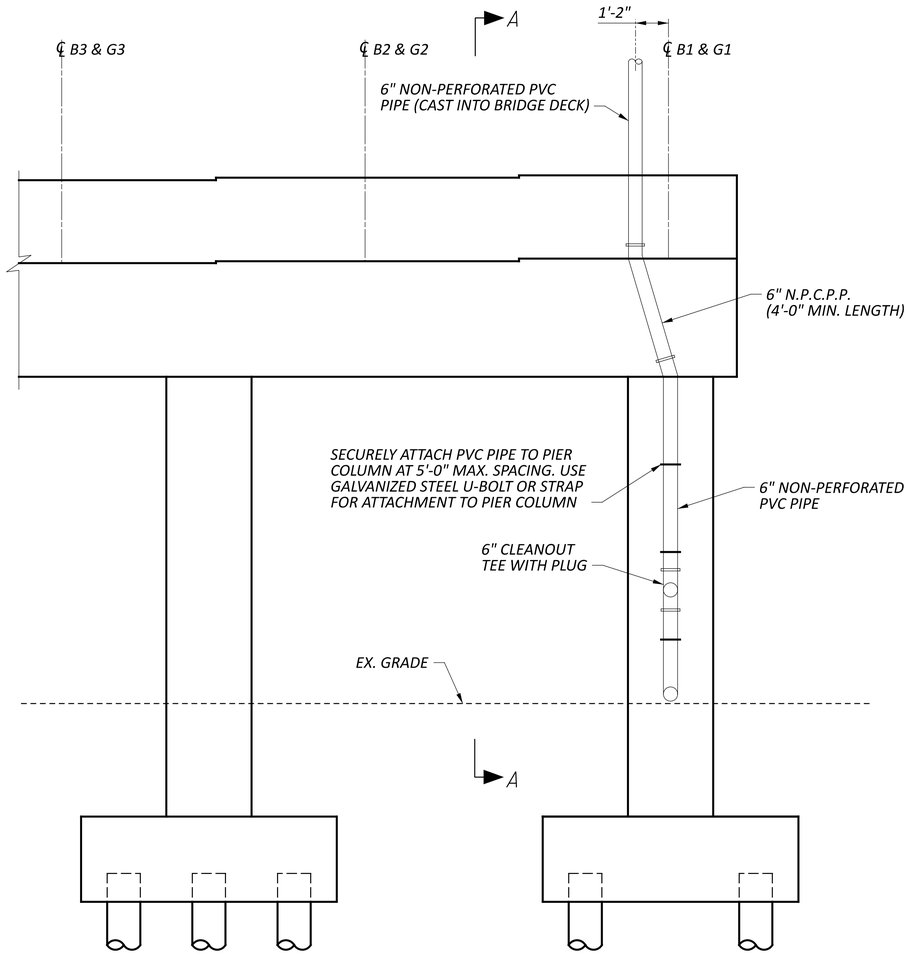

PLANTER DRAINAGE OUTLET ELEVATION AT PIER 1

(TYPICAL AT EACH END OF PIER 1)
(LOOKING DOWNSTATION)

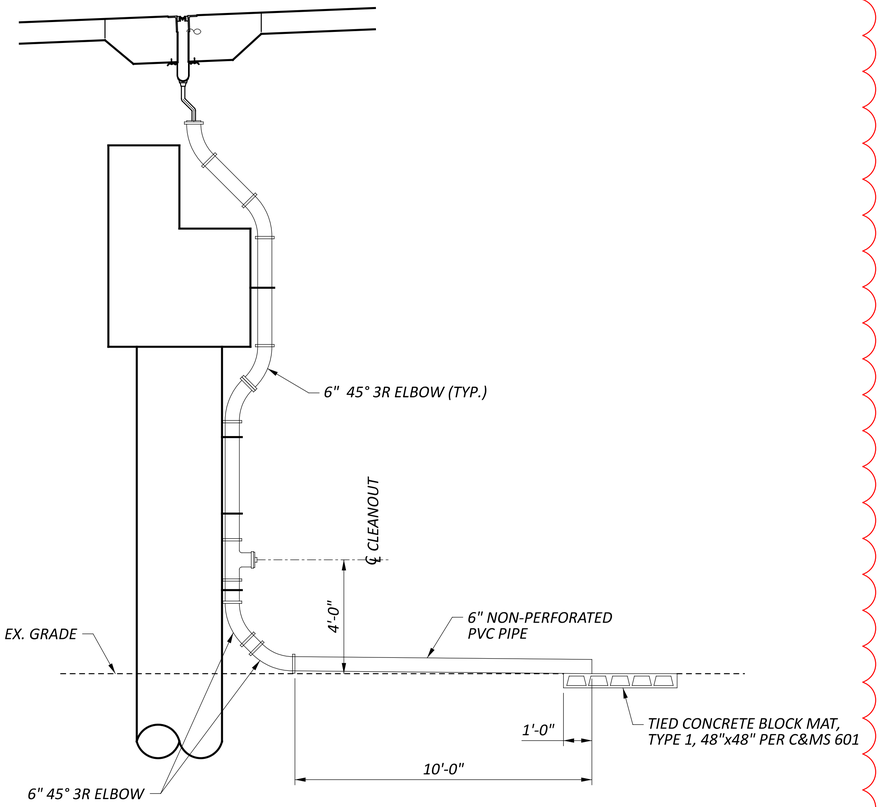

VIEW A-A

(SHOWN AT NEOPRENE TROUGH DRAINAGE OUTLET)
(SEE SHEET 80/88 FOR LOCATION OF VIEW)

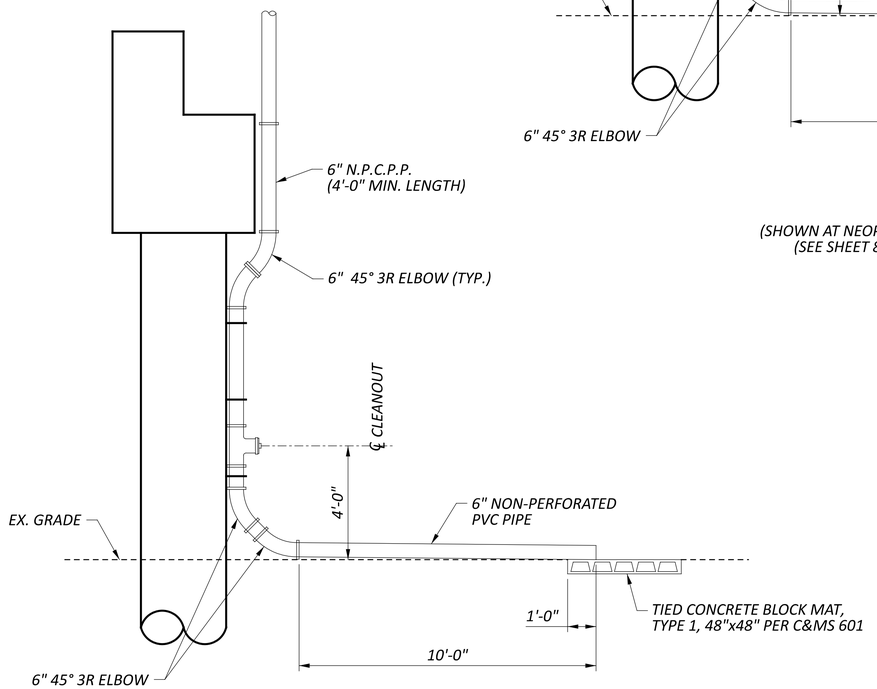

VIEW A-A

(SHOWN AT PLANTER DRAINAGE OUTLET)

1 9-1-25

DRAINAGE AND WATERPROOFING DETAILS - 3

BRIDGE NO. HAM-75-0104
LINN STREET OVER IR-75 AND GEST STREET

SFN	3109098
DESIGN AGENCY	B&N burgessniple.com
DESIGNER	BES
CHECKER	XAC
REVIEWER	JCS 12/18/24
PROJECT ID	122048
SUBSET	73
TOTAL	88
SHEET	P.315
TOTAL	P.421

HAM-75-1.05

MODEL: Sheet PAPERSIZE: 34x22 (in.) DATE: 8/27/2025 TIME: 8:36:45 AM PLTDRV: OHDOT_PDF.pltcfg PENTBL: OHDOT_UTPen.tbl USER: WORKSPACE: OHDOTCEv02 WORKSET: 122048 PRODUCT: OpenRoadsDesigner 10.12.02.4
pw:\\ohiodot-pw.bentley.com:ohiodot-pw-02\Documents\01 Active Projects\District 08\Hamilton\122048\401-Engineering_BurgessNiple\Structures\SFN_3109098\Sheets\SFN_3109098_SM021.dgn

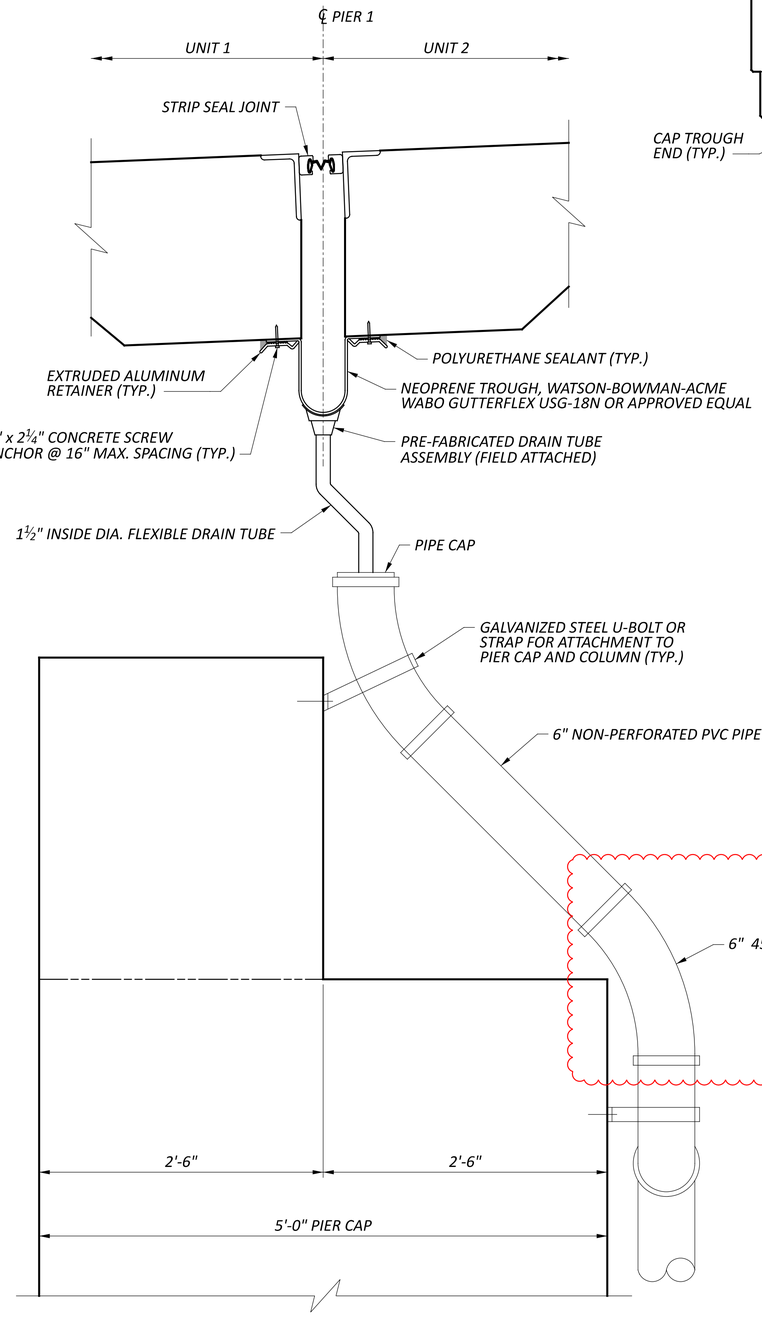

SECTION B-B

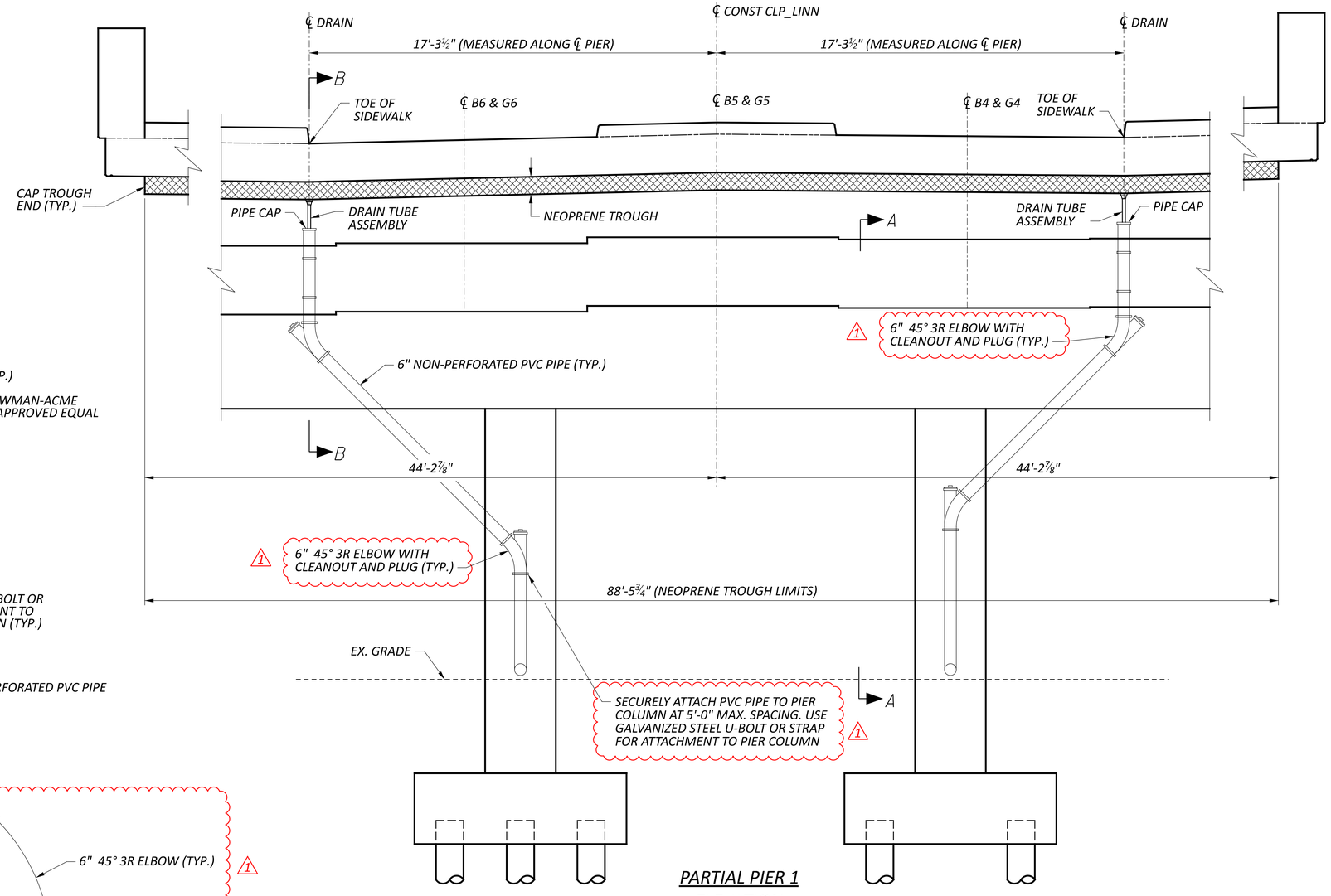

PARTIAL PIER 1 ELEVATION

(LOOKING DOWN STATION)

ITEM 518 - STRUCTURE DRAINAGE, MISC.: NEOPRENE TROUGH AND DRAINAGE OUTLETS:

THIS ITEM SHALL INCLUDE THE NEOPRENE TROUGH, INCLUDING ATTACHMENT TO THE UNDERSIDE OF THE DECK, AND ALL COMPONENTS OF THE DRAINAGE SYSTEM BELOW THE TROUGH, INCLUDING THE VERTICAL AND HORIZONTAL RUNS OF 6" NON-PERFORATED PVC PIPE, PIPE ELBOWS, TEES, CLEANOUTS, PLUGS, AND TIED CONCRETE BLOCK MAT. FURNISH NON-PERFORATED PVC PIPES PER CMS 707.41 . FOLLOW MANUFACTURER'S INSTRUCTIONS FOR INSTALLATION OF TROUGH.

METHOD OF MEASUREMENT:
THE DEPARTMENT WILL MEASURE THE NEOPRENE TROUGH BY THE NUMBER OF FEET, FROM END TO END OF TROUGH.

BASIS OF PAYMENT:
THE NEOPRENE TROUGH WILL BE PAID FOR AT THE CONTRACT PRICE PER FOOT, WHICH SHALL INCLUDE THE TROUGH, ATTACHMENT TO THE UNDERSIDE OF THE DECK, AND ALL COMPONENTS OF THE DRAINAGE SYSTEM BELOW THE TROUGH INCLUDING VERTICAL AND HORIZONTAL RUNS OF 6" NON-PERFORATED PVC PIPE, PIPE ELBOWS, TEES, CLEANOUTS, PLUGS, TIED CONCRETE BLOCK MAT AND OTHER INCIDENTALS AS SHOWN ON THIS SHEET AND AS NECESSARY TO COMPLETE THE WORK IN A SATISFACTORY AND WORKMANLIKE MANNER.

1 9-1-25

NOTES:

1. FOR VIEW A-A, SEE SHEET 73/88 .

NEOPRENE TROUGH DETAILS AT PIER 1
BRIDGE NO. HAM-75-0104
LINN STREET OVER IR-75 AND GEST STREET

HAM-75-1.05

SFN 3109098
DESIGN AGENCY B&N burgessniple.com
DESIGNER BES | CHECKER MAB
REVIEWER JCS 12/18/24
PROJECT ID 122048
SUBSET 80 | TOTAL 88
SHEET P.322 | TOTAL P.421

MODEL: Sheet PAPERSIZE: 34x22 (in.) DATE: 8/26/2025 TIME: 2:25:46 PM PLTDRV: OHDOT_PDF.pltcfg PENTBL: OHDOT_UTPen.tbl USER: WORKSPACE: OHDOTCEv02 WORKSET: 122048 PRODUCT: OpenRoadsDesigner 10.12.02.4
pw:\\ohiodot-pw.bentley.com:ohiodot-pw-02\Documents\01 Active Projects\District 08\Hamilton\122048\401-Engineering_BurgessNiple\Structures\SFN_3109098\Sheets\122048_SFN_3109098_SX006.dgn

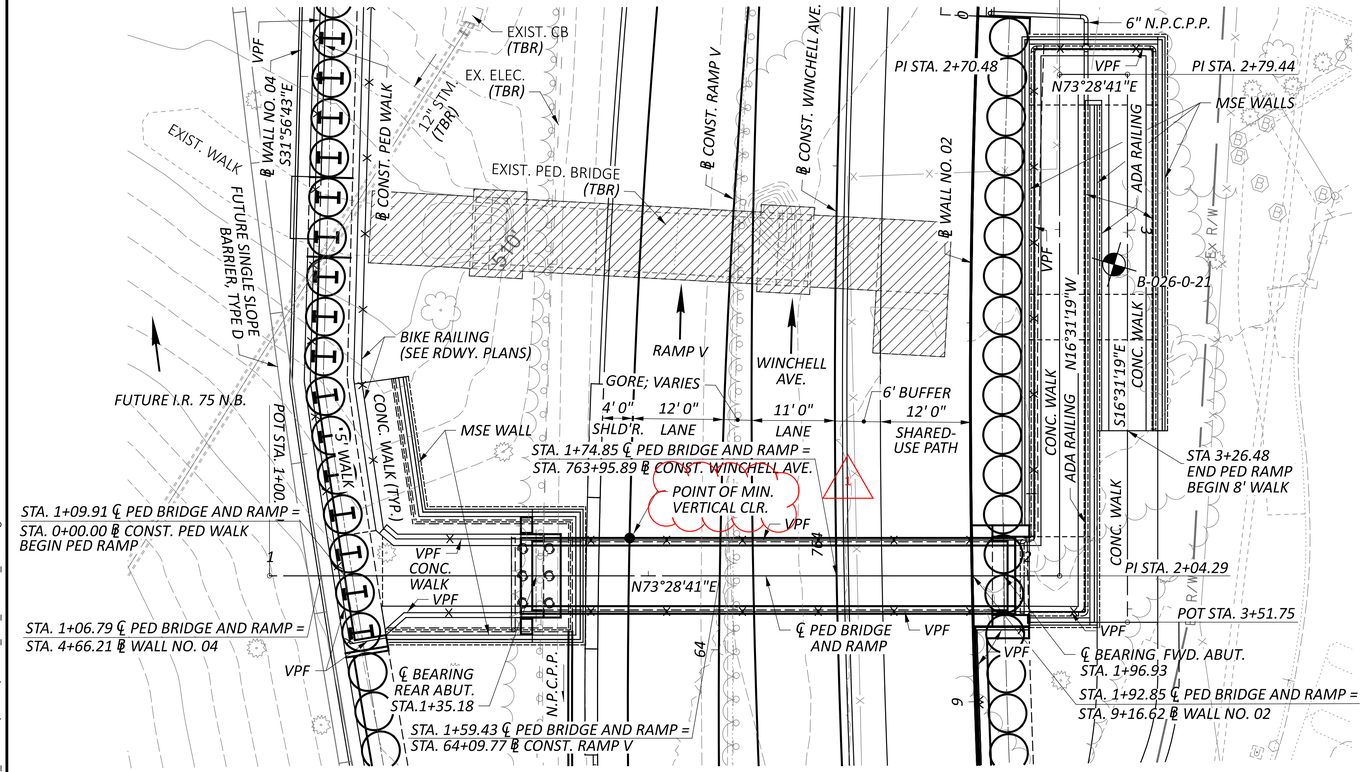

1	09/01/25	SHEET REVISIONS
ADDM' NO.	DATE	DESCRIPTION
DATE COMPLETED		

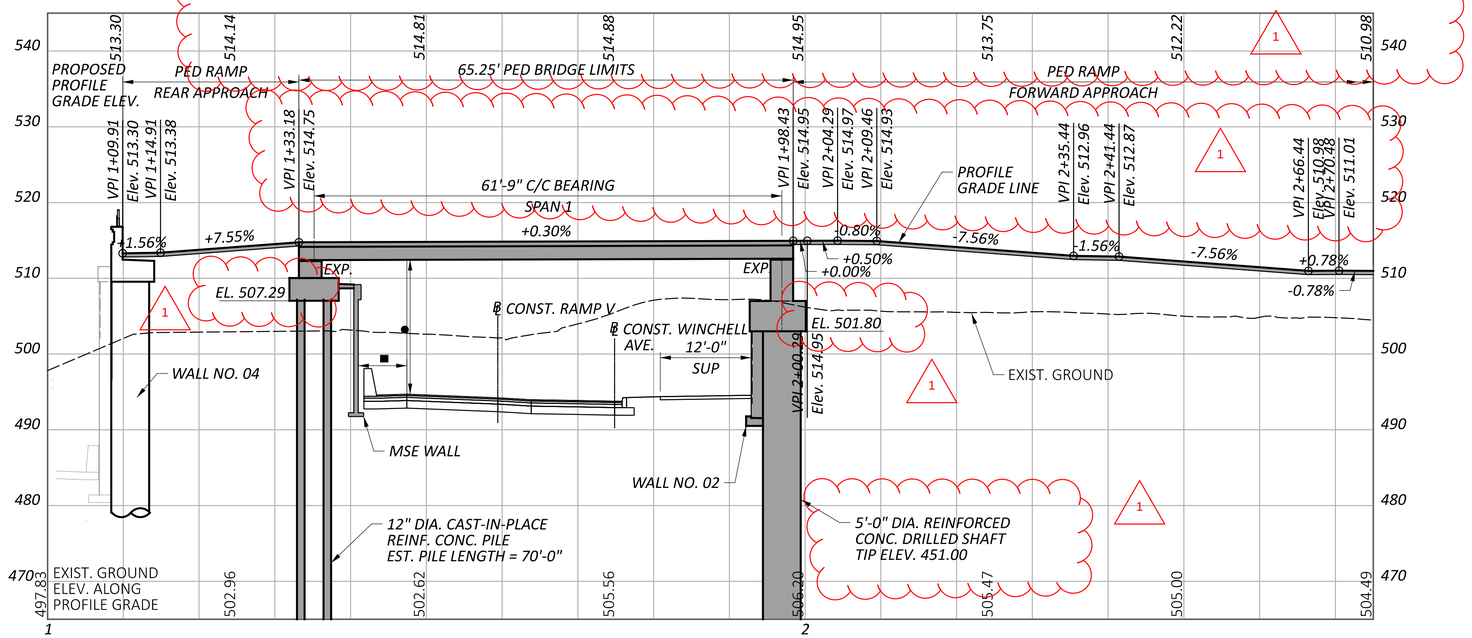

BENCHMARK DATA

BM #1 STA.	63+71.02 ,	ELEV.	491.77 ,	OFFSET 308.82' LT.,	IRON PIN
BM #2 STA.	63+92.86 ,	ELEV.	492.97 ,	OFFSET 251.23' LT.,	MAG SPIKE
BM #3 STA.	63+56.30 ,	ELEV.	490.92 ,	OFFSET 106.06' LT.,	MAG SPIKE

FOR ADDITIONAL BENCHMARK INFORMATION. SEE ROADWAY PLAN SHEET P.2

NOTES

EARTHWORK LIMITS SHOWN ARE APPROXIMATE. ACTUAL SLOPES SHALL CONFORM TO PLAN CROSS SECTIONS.

LEGEND

PROJECT BORING LOCATION

17'-6" REQUIRED MINIMUM VERTICAL CLEARANCE
17'-6⅛" ACTUAL MINIMUM VERTICAL CLEARANCE.
5'-8" REQUIRED MINIMUM HORIZONTAL CLEARANCE
6'-3¾" ACTUAL MINIMUM HORIZONTAL CLEARANCE

EXISTING STRUCTURE TO BE REMOVED

TBR = TO BE REMOVED
SUP = SHARED-USE PATH

EXISTING STRUCTURE

TYPE: REINFORCED CONCRETE RIGID FRAME
SPANS: 36'-0"± CLEAR FACE/FACE PIERS
WIDTH: 8'-0"± TOE/TOE CURB
LOADING: 85 PSF PEDESTRIAN LOAD
SKEW: NONE
WEARING SURFACE: NONE
APPROACH SLABS: NONE
ALIGNMENT: TANGENT
CROWN: 0.0104 FT/FT
STRUCTURE FILE NUMBER: 3109151
DATE BUILT: 1961
DISPOSITION: TO BE REMOVED

PROPOSED STRUCTURE

TYPE: SINGLE SPAN, PRESTRESSED CONCRETE BOX BEAMS WITH COMPOSITE REINFORCED CONCRETE DECK SUPPORTED ON CONCRETE STUB ABUTMENT SUPPORTED ON PILES BEHIND MSE WALL EMBANKMENT AND STUB ABUTMENT SUPPORTED ON DRILLED SHAFTS

SPANS: 61'-9" C/C BEARINGS
WIDTH: 8'-0" TOE/TOE CURB
LOADING: 90 PSF PEDESTRIAN LOAD
SKEW: NONE
WEARING SURFACE: NONE
APPROACH SLABS: NONE
ALIGNMENT: TANGENT
CROWN: NONE
DECK AREA: 653 SF

COORDINATES: LATITUDE 39°06'25.27" N
LONGITUDE 84°31'50.13" W

SITE PLAN
BRIDGE NO. HAM-75-0123E
PEDESTRIAN BRIDGE OVER RAMP V AND WINCHELL AVE.

SFN	3109152
DESIGN AGENCY	Palmer Engineering
	8350 E. KEMPER ROAD SUITE B CINCINNATI, OH 45249 (513) 469-1600
DESIGNER	RJB
CHECKER	TES
REVIEWER	BJF 04/11/25
PROJECT ID	122048
SUBSET	1
TOTAL	22
SHEET	P.331
TOTAL	P.421

HAM-IR75-1.05

MODEL: 10 Scale Sheet PAPERSIZE: 34x22 (in.) DATE: 8/27/2025 TIME: 12:56:38 PM PLTDRV: OHDOT_PDF.pltcfg PENTBL: OHDOT_Pen.tbl USER: swalker@palmernet.com WORKSPACE: OHDOTCEv02 WORKSET: 122048 PRODUCT: OpenRoadsDesigner 24.00.00.205
pw:\\ohiodot-pw.bentley.com:ohiodot-pw-02\Documents\01 Active Projects\District 08\Hamilton\122048\402-Engineering_PalmerEngineering\Structures\SFN_3109152_SP001.dgn

STANDARD DRAWINGS AND SUPPLEMENTAL SPECIFICATIONS

REFER TO THE FOLLOWING STANDARD BRIDGE DRAWINGS:

PSBD-2-07	REVISED	7/20/18
VPF-1-24	REVISED	1/17/25

1

AND TO THE FOLLOWING SUPPLEMENTAL SPECIFICATION(S):

840 DATED 1/17/25

DESIGN SPECIFICATIONS

THIS STRUCTURE CONFORMS TO THE "LRFD BRIDGE DESIGN SPECIFICATIONS" ADOPTED BY THE AMERICAN ASSOCIATION OF STATE HIGHWAY AND TRANSPORTATION OFFICIALS, 9TH EDITION, LRFD GUIDE SPECIFICATIONS FOR THE DESIGN OF PEDESTRIAN BRIDGES, 2009, AND THE ODOT BRIDGE DESIGN MANUAL, 2020.

REDUNDANCY

THE FOLLOWING ITEM WAS CONSIDERED NON-REDUNDANT FOR DESIGN AND INCLUDE A LOAD MODIFIER EQUAL TO 1.05 IN ACCORDANCE WITH THE AASHTO LRFD BRIDGE DESIGN SPECIFICATIONS, ARTICLE 1.3.4: PS BOX BEAMS.

OPERATIONAL IMPORTANCE

A LOAD MODIFIER OF 1.05 HAS BEEN ASSUMED FOR THE DESIGN OF THE PRESTRESSED BOX BEAMS IN ACCORDANCE WITH THE AASHTO LRFD BRIDGE DESIGN SPECIFICATIONS, ARTICLE 1.3.5 AND THE ODOT BRIDGE DESIGN MANUAL, 2020.

DESIGN LOADING

PEDESTRIAN LIVE LOAD: 0.090 KSF

DESIGN DATA

CONCRETE CLASS QC1 - COMPRESSIVE STRENGTH 4.0 KSI
(SUBSTRUCTURE)
CONCRETE CLASS QC2 - COMPRESSIVE STRENGTH 4.5 KSI
(SUPERSTRUCTURE)
CONCRETE CLASS QC5, WITH 1" MAX. AGGREGATE SIZE - COMPRESSIVE STRENGTH 4.5 KSI
(DRILLED SHAFTS)

GALVANIZED STEEL REINFORCEMENT - MIN. YIELD STRENGTH - 60 KSI

STEEL CIP PILES – ASTM A252 GRADE 2 - YIELD STRENGTH 35 KSI

CONCRETE FOR PRESTRESSED BEAMS:
COMPRESSIVE STRENGTH (FINAL) - 7.0 KSI
COMPRESSIVE STRENGTH (RELEASE) - 5.0 KSI

PRESTRESSING STRAND:
AREA = 0.167 SQ. IN.
ULTIMATE STRENGTH = 270 KSI
INITIAL STRESS = 202.5 KSI (LOW RELAXATION STRANDS)

MONOLITHIC WEARING SURFACE

MONOLITHIC WEARING SURFACE IS ASSUMED, FOR DESIGN PURPOSES, TO BE 1 INCH THICK.

ITEM 202 - STRUCTURE REMOVED, OVER 20' SPAN

REMOVE THE EXISTING PEDESTRIAN BRIDGE AT THE LOCATION SHOWN ON SHEET 1/22 IN ITS ENTIRETY.

LATERALLY LOADED DRILLED SHAFTS, 60" TANGENT DRILLED SHAFT WALL - SHAFTS 138-141 - FORWARD ABUTMENT

1

THE MAXIMUM FACTORED LATERAL LOAD AND BENDING MOMENT TO BE SUPPORTED BY EACH DRILLED SHAFT ARE 52 KIPS, AND 281 KIP-FEET, RESPECTIVELY. THESE LOADS PRODUCE A MAXIMUM FACTORED BENDING MOMENT OF 2,443 KIP-FEET, AND A MAXIMUM FACTORED SHEAR OF 137 KIPS, WITHIN THE DRILLED SHAFT.

FRICTION DRILLED SHAFTS

1

THE MAXIMUM FACTORED LOAD TO BE SUPPORTED BY EACH DRILLED SHAFT IS 271 KIPS AT THE ABUTMENTS. THIS LOAD IS RESISTED BY FRICTIONAL SIDE RESISTANCE ALONG THE LENGTH OF THE DRILLED SHAFT AND BY THE TIP RESISTANCE. THE FACTORED SIDE RESISTANCE IS 289 KIPS, ASSUMED TO ACT ALONG THE BOTTOM 32 FEET OF THE DRILLED SHAFT, AND THE FACTORED TIP RESISTANCE IS 18 KIPS.

PILES DESIGN LOADS (ULTIMATE BEARING VALUE)

THE ULTIMATE BEARING VALUE IS 80 KIPS PER PILE FOR THE REAR ABUTMENT PILES.

ABUTMENT PILES:
6 PILES 75 FEET LONG, ORDER LENGTH.
1 DYNAMIC LOAD TESTING ITEM.

PROVIDE PLAIN CYLINDRICAL CASINGS WITH A MINIMUM PILE THICKNESS OF 0.25 INCH FOR THE CAST-IN-PLACE REINFORCED CONCRETE PILES.

ITEM 507 - CAST-IN-PLACE REINFORCED CONCRETE PILES, DRIVEN, AS PER PLAN

1

THIS ITEM INCLUDES THE FURNISHING AND PLACEMENT OF THE PILE SLEEVES PRIOR TO DRIVING PILES.

ITEM 511 - CLASS QC2 CONCRETE, AS PER PLAN.

THIS ITEM INCLUDES THE POLYSTYRENE AT THE ABUTMENT SEATS. FURNISH THE POLYSTYRENE MATERIAL MEETING THE REQUIREMENTS OF ASTM C578 TYPE IV. NEATLY CUT MATERIAL AS NECESSARY TO ALLOW FOR PROPER INSTALLATION. JOINTS AT ABUTTING PIECES SHALL BE SEALED WITH DUCT TAPE. ALLOWABLE TOLERANCE FOR THE TOTAL THICKNESS OF THE MATERIAL SHALL BE -0", +1/2". DO NOT PLACE MORE THAN TWO LAYERS OF POLYSTYRENE TO ACHIEVE TOTAL THICKNESS.

ITEM 512 - SEALING OF CONCRETE SURFACES, AS PER PLAN, (PERMANENT GRAFFITI PROTECTION)

APPLY A PERMANENT GRAFFITI COATING QUALIFIED ACCORDING TO S1083 THAT IS COMPATIBLE WITH THE CONCRETE SEALER OVER WHICH IT IS APPLIED. APPLY THE GRAFFITI COATING IN ACCORDANCE WITH THE MANUFACTURER'S PRINTED INSTRUCTIONS.

ITEM 512 - SEALING OF CONCRETE SURFACES (EPOXY-URETHANE)

SEAL SURFACES OF THE CAST-IN-PLACE CONCRETE WALL FACING, PILASTERS, RAILING AND COPING AS SHOWN IN THE PLANS WITH AN EPOXY URETHANE SEALER ACCORDING TO C&MS 512. COLOR SHALL BE LIGHT NEUTRAL (FEDERAL STD. 595C #17778)

ITEM 517 - RAILING, MISC.: PEDESTRIAN ADA COMPLIANT RAILING

THIS ITEM SHALL CONSIST OF FURNISHING AND INSTALLING A RAILING AT THE FORWARD APPROACH MSE RAMP THAT IS COMPLIANT WITH THE AMERICANS AND DISABILITIES ACT (ADA) STANDARDS, U.S. ACCESS BOARD PROPOSED GUIDELINES FOR PEDESTRIAN FACILITIES IN THE PUBLIC RIGHT-OF-WAY (PROWAG) SECTION R-409, AND ODOT MULTIMODAL DESIGN SECTION 4.7.3 AND 5.4 AND THE ODOT MULTIMODAL DESIGN. THIS INCLUDES BUT IS NOT LIMITED TO THE POST DESIGN, THE HANDRAIL DESIGN, AND TERMINATIONS AND EXTENSIONS.

THE RAILING AND OTHER DESIGN ELEMENTS SHALL ALSO BE DESIGNED FOR LOADS IN ACCORDANCE WITH AASHTO 13.8.2. THIS INCLUDES BUT ITS NOT LIMITED TO THE POST, HANDRAIL, BASEPLATE, ANCHOR BOLTS AND WELDS AND OTHER CONNECTION ITEMS. GALVANIZE ALL PARTS OF STEEL AND IRON RAILING, BASEPLATES AND ANCHOR BOLTS.

THE POST, RAILS, BASE PLATES, AND ANCHOR BOLTS SHALL BE PAINTED BLACK. PAINTING SHALL BE INCLUDED WITH THIS ITEM FOR PAYMENT.

PILE DRIVING CONSTRAINTS - REAR ABUTMENT

1

PRIOR TO DRIVING ABUTMENT PILES TO THE ULTIMATE BEARING VALUE (UBV), CONSTRUCT THE MSE WALL AND THE BRIDGE APPROACH EMBANKMENT BEHIND THE ABUTMENT UP TO THE BOTTOM OF THE FOOTING UNTIL REAR APPR. MSE WALL POT STA. 0+71.06 FOR LEFT SIDE AND UNTIL REAR APPR. MSE WALL POT STA. 1+34.21 FOR RIGHT SIDE. THE CONTRACTOR MAY PRE-DRIVE ABUTMENT PILES BEFORE CONSTRUCTING MSE WALLS. PRE-DRIVING CONSISTS OF INSTALLING THE ABUTMENT PILES INTO THE SOIL ONLY AS FAR AS NECESSARY SO THAT THE PILE WILL REMAIN VERTICAL DURING MSE WALL CONSTRUCTION. IF PRE-DRIVING PILES, INSTALL PILE SLEEVES AROUND PILES BEFORE CONSTRUCTING THE MSE WALL. PROVIDE AT LEAST 3-FT OF PILE ABOVE THE TOP OF THE PILE SLEEVE TO MEET THE REQUIREMENTS OF C&MS 507.09 REGARDING SPLICES. IN LIEU OF SPECIFYING A WAITING PERIOD, A DOWNDRAG ANALYSIS WAS PERFORMED AND IT WAS DETERMINED THAT THE DOWNDRAG LOADS ARE NOT ANTICIPATED TO BE A CONCERN FOR THE PROJECT PROPOSED PILE FOUNDATIONS. THEREFORE, NO WAITING PERIOD IS REQUIRED.

IF NOT PRE-DRIVING ABUTMENT PILES, INSTALL THE ABUTMENT PILES THROUGH PILE SLEEVES AFTER THE ABOVE REQUIRED MSE WALL AND EMBANKMENT HAVE BEEN CONSTRUCTED.

PROPRIETARY RETAINING WALL DATA

THE PROPRIETARY WALL SUPPLIER SHALL DESIGN THE INTERNAL STABILITY OF A MECHANICALLY STABILIZED EARTH (MSE) WALL IN ACCORDANCE WITH SS840 TO SUPPORT THE ABUTMENT. THE DESIGN FOR INTERNAL STABILITY SHALL INCLUDE A NOMINAL (I.E. UNFACTORED) HORIZONTAL STRIP LOAD DUE TO FRICTION (FR) FROM THE SUPERSTRUCTURE OF 3.3 K/FT APPLIED PERPENDICULAR TO THE FACE OF WALL AT THE BASE OF THE CONCRETE FOOTING. THIS STRIP LOAD DOES NOT INCLUDE EARTH PRESSURE LOADS FROM THE ABUTMENT BACKFILL. HOWEVER, THE PROPRIETARY WALL SUPPLIER SHALL INCLUDE EARTH PRESSURE LOADS FROM THE ABUTMENT BACKFILL IN THE DESIGN CALCULATIONS.

1	09/01/25	SHEET REVISIONS
ADDM' NO.	DATE	DESCRIPTION
DATE COMPLETED		

ITEM 607 - VANDAL PROTECTION FENCE, 8', STRAIGHT, COATED FABRIC, AS PER PLAN
ITEM SPECIAL - VANDAL PROTECTION FENCE, 12'

THESE ITEMS SHALL CONSIST OF FURNISHING AND INSTALLING 8 AND 12 FOOT TALL VANDAL PROTECTION FENCES. VANDAL FENCE SHALL HAVE A BLACK PVC COATING. PVC COATING SHALL BE BLACK IN COLOR CLOSELY APPROACHING FEDERAL COLOR NUMBER 17038. VANDAL FENCE POSTS, RAILS, HANDRAIL, HADRAIL SLEEVE AND PLATE ASSEMBLY, BASE PLATES, ANCHOR BOLTS AND ANY OTHER VANDAL FENCE ITEMS NOT RECEIVING A PVC COATING SHALL BE PAINTED BLACK. PAINTING AND PVC COATING SHALL BE INCLUDED WITH THIS ITEM FOR PAYMENT.

PAYMENT FOR THIS WORK INCLUDES ALL MATERIAL, LABOR, EQUIPMENT AND ANY MISCELLANEOUS APPURTENANCES NECESSARY TO COMPLETE INSTALLATION IN ACCORDANCE WITH THE PLANS, AND STANDARD CONSTRUCTION DRAWING VPF-1-24. THE DEPARTMENT WILL PAY FOR ACCEPTED QUANTITIES AT THE CONTRACT UNIT PRICE BID FOR PER FOOT FOR ITEMS 607 - VANDAL PROTECTION FENCE, 8', AS PER PLAN AND SPECIAL - VANDAL PROTECTION FENCE, 12' .

ITEM 840 - AESTHETIC SURFACE TREATMENT

USE CONCRETE FORM LINERS TO CREATE AESTHETIC SURFACE TREATMENT ON THE MSE WALL FACING PANELS. THE FORM LINER SHALL BE PATTERN 1107, MISSION FLUTE FROM SPEC FORMLINERS, INC. OR APPROVED EQUAL. THE FORM LINER RELIEF DEPTH SHALL BE 1.5". FABRICATE AND INSTALL THE MSE WALL PANELS SUCH THAT THE VERTICAL FINS AND VALLEYS IN THE FRACTURE FIN AESTHETIC TREATMENT ALIGN VERTICALLY ACROSS ADJACENT PANELS FROM THE TOP OF THE WALL TO THE BOTTOM OF THE WALL. USE THE SAME FRACTURED FIN PATTERN ON ALL WALLS ON THE PROJECT.

1

FORM LINERS SHALL BE CAPABLE OF WITHSTANDING ANTICIPATED CONCRETE POUR PRESSURES WITHOUT LEAKAGE OR CAUSING PHYSICAL DEFECTS. FORM LINERS SHALL BE REMOVABLE WITHOUT CAUSING CONCRETE SURFACE DAMAGE. USE FORM RELEASE PRODUCT AS RECOMMENDED BY THE FORM LINER MANUFACTURER. USE MANUFACTURER'S APPLICATION RATES AND ALL OTHER MANUFACTURER'S INSTRUCTIONS. FORM RELEASE PRODUCT SHALL BE FULLY COMPATIBLE WITH THE FORM LINER MATERIAL AND EPOXY-URETHANE SEALER TO BE APPLIED TO THE FINISHED SURFACES.

ALIGN THE FORM LINER PATTERNS ACROSS ALL JOINTS BETWEEN CONCRETE FACING.

PLAN ABBREVIATIONS

ABUT.	ABUTMENT
BF	BACK FACE (BACKFILL SIDE)
BRG.	BEARING
C/C	CENTER TO CENTER
C.J.	CONSTRUCTION JOINT
DIA.	DIAMETER
EL.	ELEVATION
EF	EACH FACE
EQ. SPA.	EQUALLY SPACED
F.A.	FORWARD ABUTMENT
FF	FRONT FACE (CREEK SIDE)
MAX.	MAXIMUM
MIN.	MINIMUM
N.P.C.P.P.	NON-PERFORATED CORRUGATED PLASTIC PIPE
O/O	OUT TO OUT
PEJF	PREFORMED EXPANSION JOINT FILLER
P.C.P.P.	PERFORATED CORRUGATED PLASTIC PIPE
R.A.	REAR ABUTMENT
SPA.	SPACE, SPACES, SPACED
STA.	STATION
T.O.S.	TOP OF SLOPE
TYP.	TYPICAL

GENERAL NOTES
BRIDGE NO. HAM-75-0123E
PEDESTRIAN BRIDGE OVER RAMP V AND WINCHELL AVE.

SFN 3109152

DESIGN AGENCY
Palmer ENGINEERING
8350 E. KEMPER ROAD
SUITE B
CINCINNATI, OH 45249
(513) 469-1600

DESIGNER	CHECKER
RJB	TES

REVIEWER BJF 04/11/25

PROJECT ID 122048

SUBSET	TOTAL
2	22

SHEET	TOTAL
P.332	P.421

HAM-IR75-1.05

MODEL: Sheet PAPERSIZE: 34x22 (in.) DATE: 8/27/2025 TIME: 12:57:16 PM PLTDRV: OHDOT_PDF.pltcfg PENTBL: OHDOT_Pen.tbl USER: swalker@palmernet.com WORKSPACE: OHDOTCEx02 WORKSET: 122048 PRODUCT: OpenRoadsDesigner 24.00.00.205
pw:\\ohiodot-pw.bentley.com:ohiodot-pw-02\Documents\01 Active Projects\District 08\Hamilton\122048\402-Engineering_PalmerEngineering\Structures\SFN_3109152_SN001.dgn

ESTIMATED QUANTITIES

ITEM	ITEM EXT.	TOTAL 02/IMS/13	UNIT	DESCRIPTION	ABUT	CALC: RJB DATE: 8/18/25 SUPER	GENERAL	CHECK: CVK DATE: 8/18/25 MSE	SHEET
202	11002	LS		STRUCTURE REMOVED, OVER 20 FOOT SPAN			LS		
503	11100	LS		COFFERDAMS AND EXCAVATION BRACING			LS		
503	21300	LS		UNCLASSIFIED EXCAVATION			LS		
505	11100	LS		PILE DRIVING EQUIPMENT MOBILIZATION			LS		
507	00501	420	FT	12" CAST-IN-PLACE REINFORCED CONCRETE PILES, DRIVEN, AS PER PLAN	420				2 | 22
507	00550	450	FT	12" CAST-IN-PLACE REINFORCED CONCRETE PILES, FURNISHED	450				
509	26000	7,791	LB	GALVANIZED STEEL REINFORCEMENT	3,273	4,518			
511	31611	16	CY	CLASS QC2 CONCRETE, SUPERSTRUCTURE, AS PER PLAN		16			2 | 22
511	43510	41	CY	CLASS QC1 CONCRETE, ABUTMENT INCLUDING FOOTING	41				
511	34448	10	CY	CLASS QC2 CONCRETE, BRIDGE DECK (PARAPET)		10			
512	10001	470	SY	SEALING OF CONCRETE SURFACES, AS PER PLAN	44	116		310	2 | 22
512	33000	6	SY	TYPE 2 WATERPROOFING	6				
515	12040	3	EACH	PRESTRESSED CONCRETE COMPOSITE BOX BEAM BRIDGE MEMBERS, LEVEL 1, CB21-36 (62'-9" Long)	3				
516	13200	33	SF	½" PREFORMED EXPANSION JOINT FILLER			33		
516	13600	32	SF	1" PREFORMED EXPANSION JOINT FILLER			32		
516	13900	23	SF	2" PREFORMED EXPANSION JOINT FILLER	23				
516	14020	28	FT	SEMI-INTEGRAL ABUTMENT EXPANSION JOINT SEAL	28				
516	31010	26	FT	2" DEEP JOINT SEALER			26		
516	43100	12	EACH	ELASTOMERIC BEARING WITH INTERNAL LAMINATES ONLY (NEOPRENE) (8.5"x8"x1.564")	12				
517	76302	166	EACH	RAILING, MISC.:PEDESTRIAN ADA COMPLIANT RAILING			166		2 | 22
518	21200	4	CY	POROUS BACKFILL WITH GEOTEXTILE FABRIC	4				
518	40001	23	FT	6" PERFORATED CORRUGATED PLASTIC PIPE, AS PER PLAN	23				6 & 8 |22
518	40011	130	FT	6" NON-PERFORATED CORRUGATED PLASTIC PIPE, INCLUDING SPECIALS, AS PER PLAN	130				13 | 22
601	21000	6	SY	CONCRETE SLOPE PROTECTION	6				
607	39911	131	FT	VANDAL PROTECTION FENCE, 8' STRAIGHT, COATED FABRIC, AS PER PLAN			131		2 & 7 | 22
SPECIAL	60740000	131	FT	VANDAL PROTECTION FENCE, 12' STRAIGHT, COATED FABRIC		131			2 & 20 | 22
608	13000	1,279	SF	6" CONCRETE WALK			1,279		
608	98000	470	SF	WALKWAY, MISC.: 10" CONCRETE WALK			470		7 & 14 | 22
625	33000	1	EACH	STRUCTURE GROUNDING SYSTEM			1		
840	20000	3,589	SF	MECHANICALLY STABILIZED EARTH WALL				3,589	
840	21000	595	CY	WALL EXCAVATION				595	
840	22000	220	SY	FOUNDATION PREPARATION				220	
840	23000	752	CY	SELECT GRANULAR BACKFILL				752	
840	23050	111	CY	NATURAL SOIL				111	
840	25010	298	FT	6" DRAINAGE PIPE, PERFORATED				298	
840	25020	29	FT	6" DRAINAGE PIPE, NON-PERFORATED				29	
840	26000	293	FT	CONCRETE COPING				293	
840	26050	3,589	SF	AESTHETIC SURFACE TREATMENT				3,589	
840	27000	5	DAY	ON-SITE ASSISTANCE				5	
840	28000	LS		SGB INSPECTION AND COMPACTION TESTING				LS	

1

ADDM' NO.	DATE	DESCRIPTION
1	09/01/25	SHEET REVISIONS
DATE COMPLETED		

ESTIMATED QUANTITIES
BRIDGE NO. HAM-75-0123E
PEDESTRIAN BRIDGE OVER RAMP V AND WINCHELL AVE.

SFN 3109152

DESIGN AGENCY
Palmer ENGINEERING
8350 E. KEMPER ROAD
SUITE B
CINCINNATI, OH 45249
(513) 469-1600

DESIGNER CDVK | CHECKER BJF
REVIEWER BJF 04/11/25
PROJECT ID 122048
SUBSET 3 | TOTAL 22
SHEET P.333 | TOTAL P.421

HAM-IR75-1.05

MODEL: Sheet PAPERSIZE: 34x22 (in.) DATE: 8/28/2025 TIME: 7:29:07 AM PLTDRV: OHDOT_PDF.pltcfg PENTBL: OHDOT_Pen.tbl USER: swalker@palmernet.com WORKSPACE: OHDOTCivil02 WORKSET: 122048 PRODUCT: OpenRoadsDesigner 24.00.00.205
pw:\\ohiodot-pw.bentley.com:ohiodot-pw-02\Documents\01 Active Projects\District 08\Hamilton\122048\02-Engineering_PalmerEngineering\Structures\SFN_3109152\Sheets\122048_SFN_3109152_SQ001.dgn

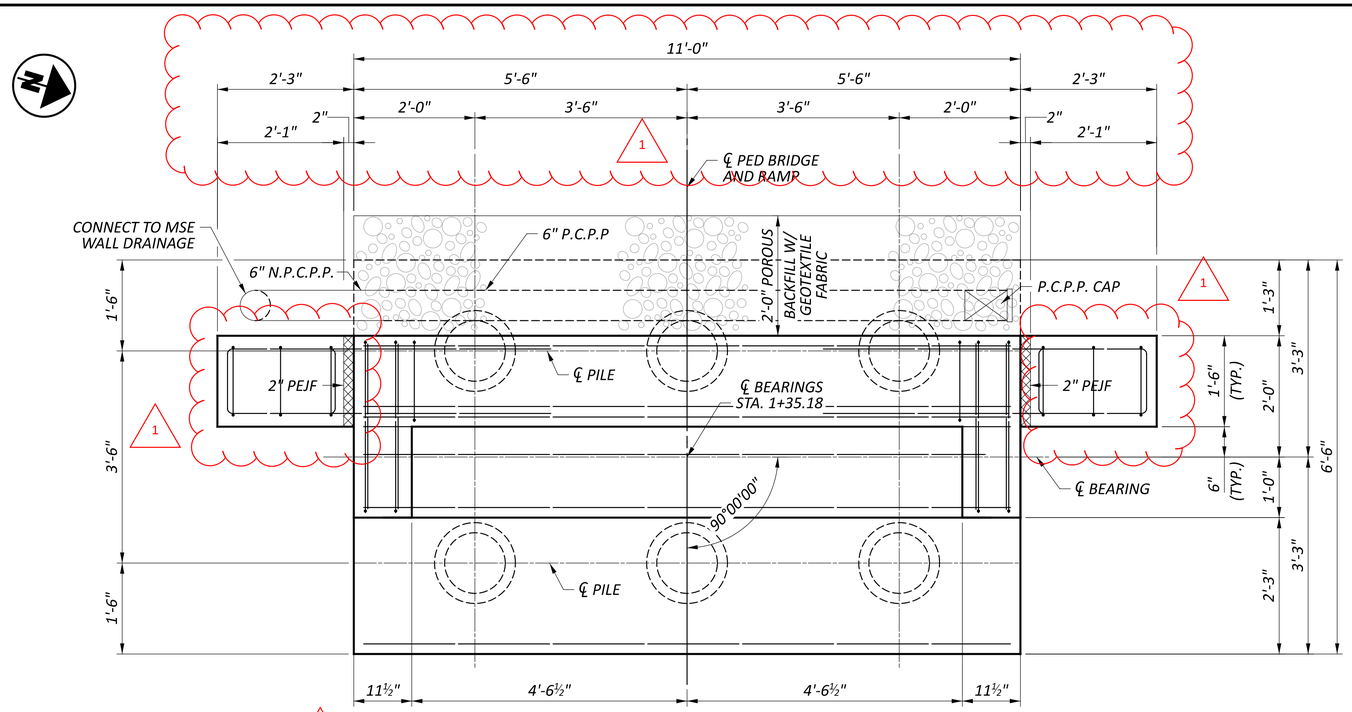

REAR ABUTMENT PLAN

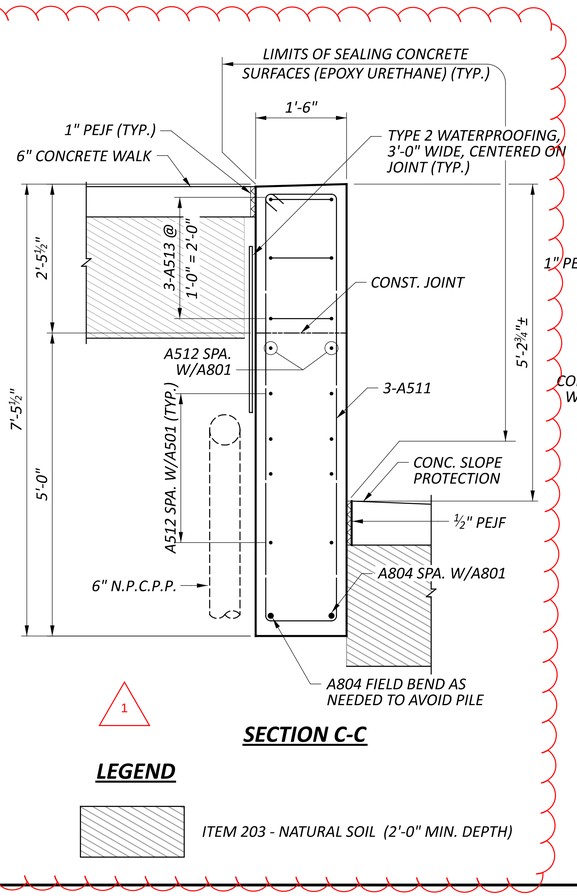

SECTION C-C

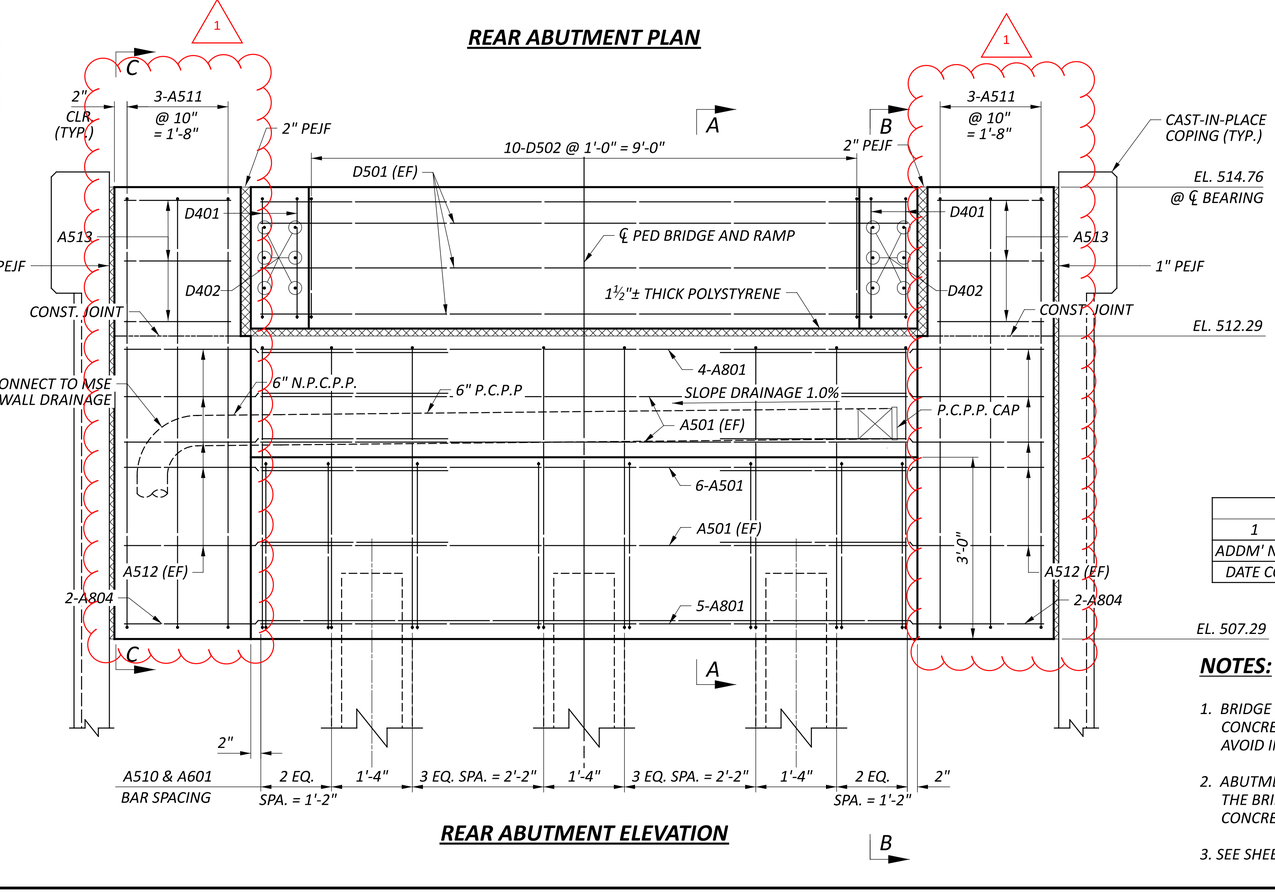

REAR ABUTMENT ELEVATION

LEGEND

ITEM 203 - NATURAL SOIL (2'-0" MIN. DEPTH)

NOTES:

1. BRIDGE SEAT REINFORCEMENT, SETTING ANCHORS: ACCURATELY PLACE CONCRETE REINFORCEMENT IN THE VICINITY OF THE BRIDGE SEAT TO AVOID INTERFERENCE WITH DRILLING OF ANCHOR BAR HOLES.
2. ABUTMENT CONCRETE: DO NOT PLACE ABUTMENT CONCRETE ABOVE THE BRIDGE SEAT CONSTRUCTION JOINT UNTIL THE PRESTRESSED CONCRETE BOX BEAMS HAVE BEEN ERECTED.
3. SEE SHEET 5 22 FOR SECTION VIEWS.

1	09/01/25	SHEET REVISIONS
ADDM' NO.	DATE	DESCRIPTION
DATE COMPLETED		

REAR ABUTMENT PLAN AND ELEVATION
BRIDGE NO. HAM-75-0123E
PEDESTRIAN BRIDGE OVER RAMP V AND WINCHELL AVE.

HAM-IR75-1.05

SFN 3109152

DESIGN AGENCY
Palmer ENGINEERING
8350 E. KEMPER ROAD
SUITE B
CINCINNATI, OH 45249
(513) 469-1600

DESIGNER	CHECKER
RJB	TES

REVIEWER BJF 04/11/25

PROJECT ID 122048

SUBSET	TOTAL
4	22

SHEET	TOTAL
P.334	P.421

MODEL: Abutment Plan and Elevation_PAPERSIZE_34x22 (in.) DATE: 9/22/2025 TIME: 12:57:31 PM USER: swalker@palmernet.com WORKSPACE: OHDOTCEv02 WORKSET: 122048 PRODUCT: OpenRoadsDesigner 24.00.00.205
pw:\\ohiodot-pw.bentley.com:ohiodot-pw-02\Documents\01 Active Projects\District 08\Hamilton\122048\402-Engineering_PalmerEngineering\Structures\SFN_3109152_SR001.dgn

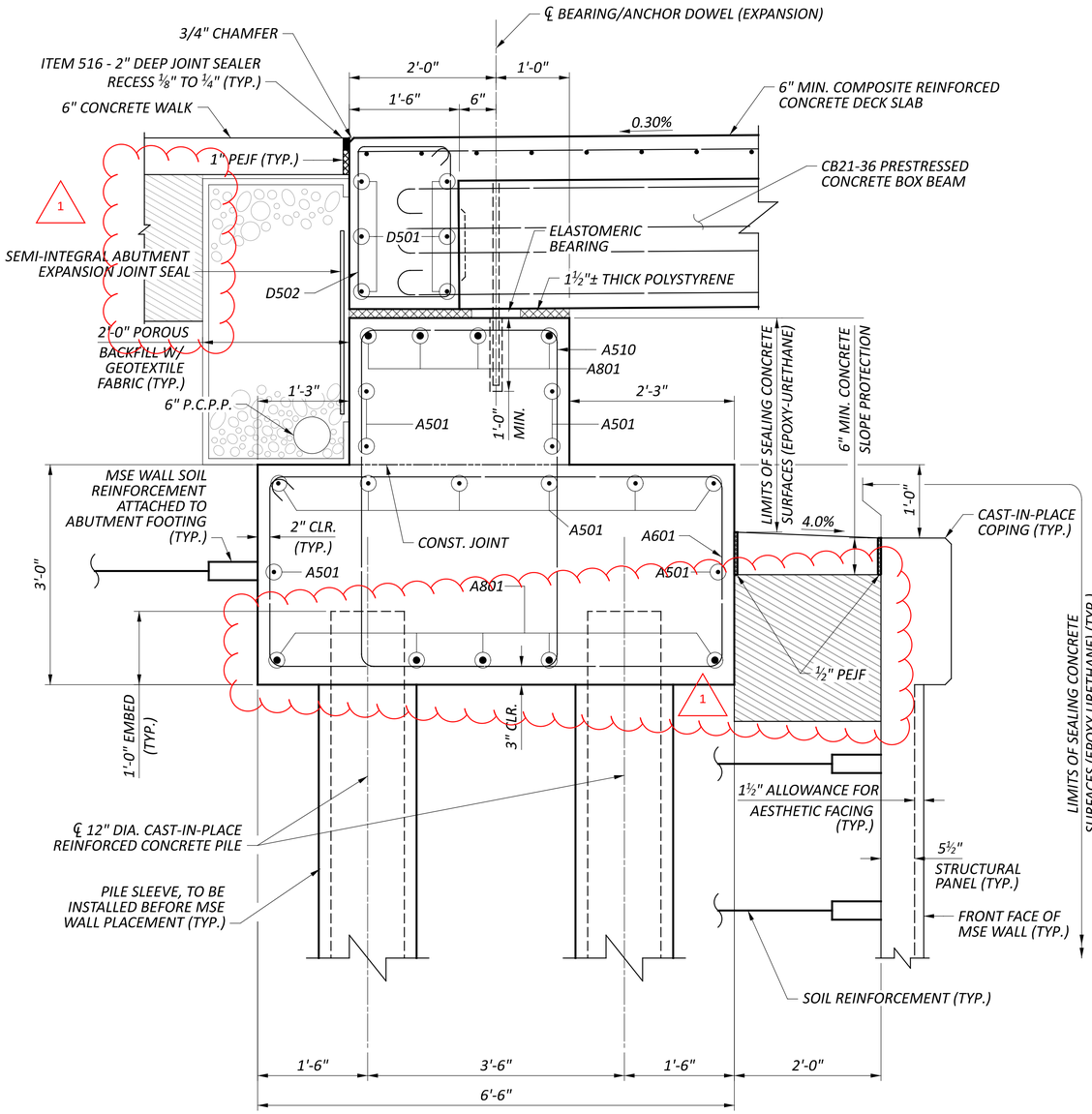

SECTION A-A

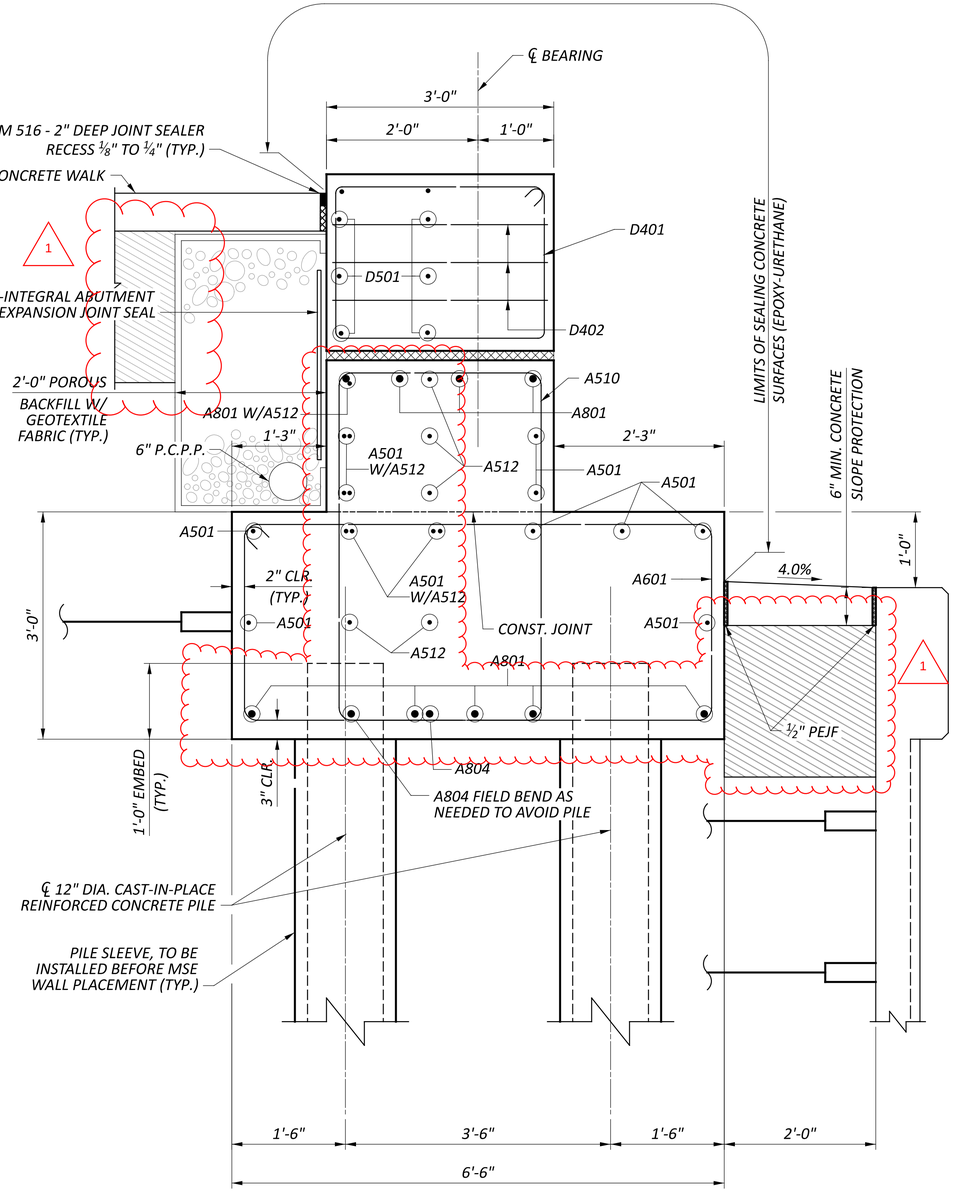

SECTION B-B

1	09/01/25	SHEET REVISIONS
ADDM' NO.	DATE	DESCRIPTION
DATE COMPLETED		

LEGEND

ITEM 203 - NATURAL SOIL (2'-0" MIN. DEPTH)

NOTES:

1. SEE SHEET 4 22 FOR ELEVATION VIEWS.

REAR ABUTMENT SECTION
BRIDGE NO. HAM-75-0123E
PEDESTRIAN BRIDGE OVER RAMP V AND WINCHELL AVE.

SFN 3109152

DESIGN AGENCY

Palmer ENGINEERING

8350 E. KEMPER ROAD
SUITE B
CINCINNATI, OH 45249
(513) 469-1600

DESIGNER	CHECKER
RJB	TES

REVIEWER: BJF 04/11/25

PROJECT ID: 122048

SUBSET	TOTAL
5	22

SHEET	TOTAL
P.335	P.421

HAM-IR75-1.05

MODEL: Abutment Section PAPERSIZE: 34x22 (in.) DATE: 8/27/2025 TIME: 12:57:32 PM PLTDRV: OHDOT_PDF.pltcfg PENTBL: OHDOT_Pen.tbl USER: swalker@palmernet.com WORKSPACE: OHDOTCEv02 WORKSET: 122048 PRODUCT: OpenRoadsDesigner 24.00.00.205
pw:\\ohiodot-pw.bentley.com:ohiodot-pw-02\Documents\01 Active Projects\District 08\Hamilton\122048\402-Engineering_PalmerEngineering\Structures\SFN_3109152\Sheets\122048_SFN_3109152_SR001.dgn

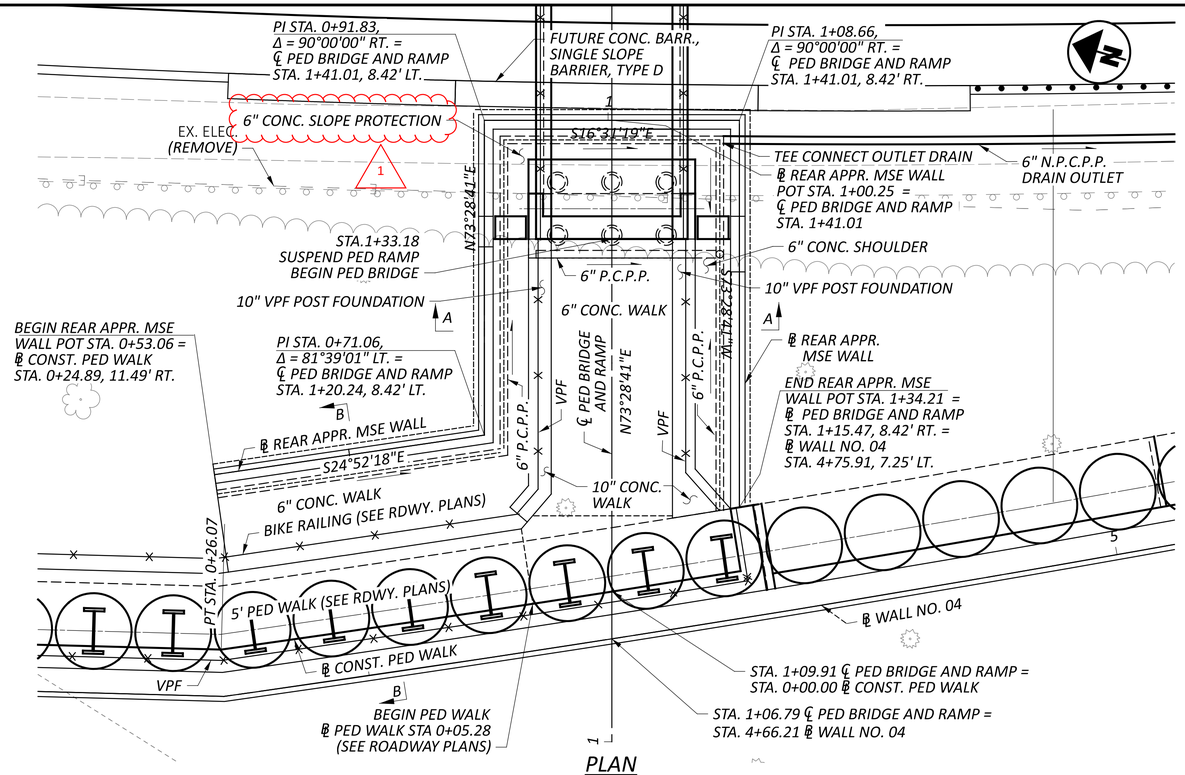

PLAN

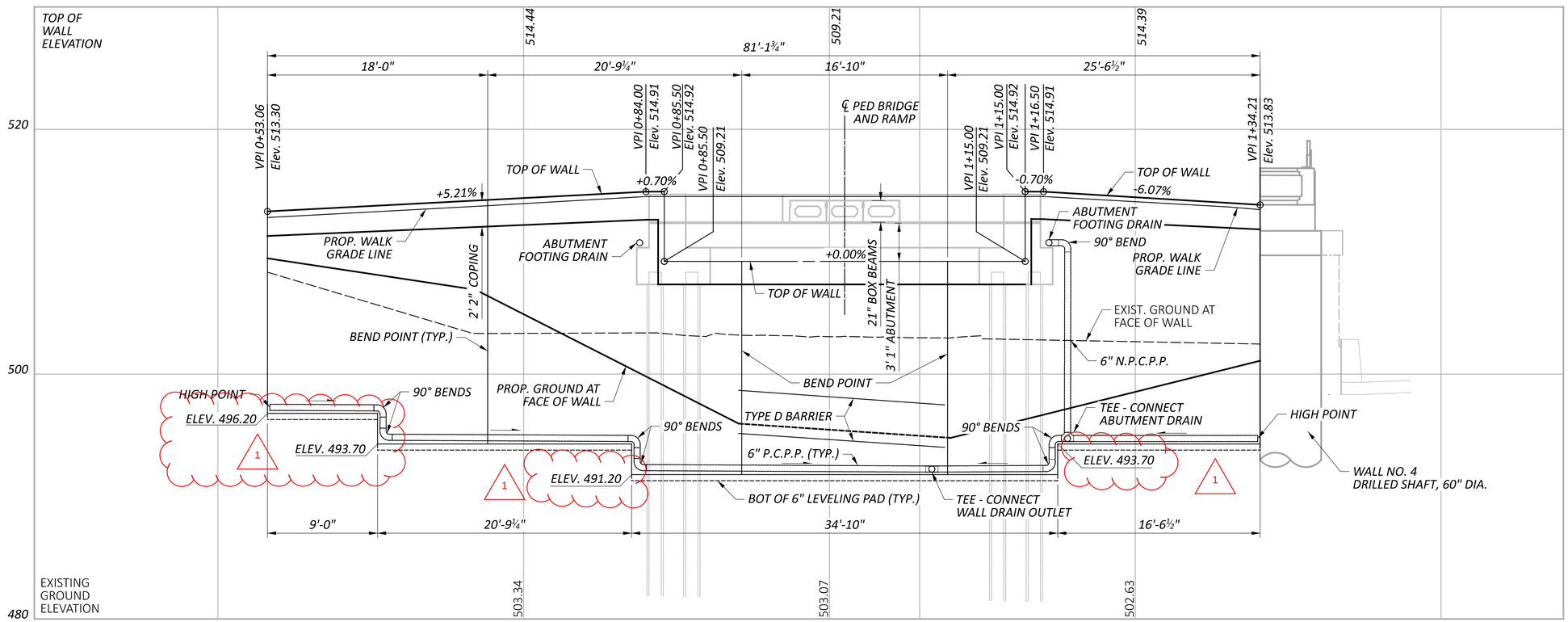

PROFILE ALONG ℄ REAR APPROACH MSE WALL

BENCHMARK DATA

BM #1 STA.	63+71.02 ,	ELEV. 491.77 ,	OFFSET	308.82' LT.,	IRON PIN
BM #2 STA.	63+92.86 ,	ELEV. 492.97 ,	OFFSET	251.23' LT.,	MAG SPIKE
BM #3 STA.	63+56.30 ,	ELEV. 490.92 ,	OFFSET	106.06' LT.,	MAG SPIKE

FOR ADDITIONAL BENCHMARK INFORMATION. SEE ROADWAY PLAN SHEET P.2

NOTES

EARTHWORK LIMITS SHOWN ARE APPROXIMATE. ACTUAL SLOPES SHALL CONFORM TO PLAN CROSS SECTIONS.

1	09/01/25	SHEET REVISIONS
ADDM' NO.	DATE	DESCRIPTION
DATE COMPLETED		

HORIZONTAL SCALE IN FEET
0 2.5 5 10

WALL PLAN AND ELEVATION REAR APPROACH MSE WALL ALONG WEST APPROACH TO PEDESTRIAN BRIDGE

DESIGN AGENCY
Palmer ENGINEERING
8350 E. KEMPER ROAD
SUITE B
CINCINNATI, OH 45249
(513) 469-1600

DESIGNER RJB
REVIEWER BJF 04/11/25
PROJECT ID 122048
SUBSET 6 TOTAL 22
SHEET P.336 TOTAL P.421

HAM-IR75-1.05

MODEL: BLP_MSE_REAR - Plan [Sheet] PAPERSIZE: 34x22 (in.) DATE: 8/27/2025 TIME: 12:57:47 PM PLTDRV: OHDOT_PDF.pltcfg PENTBL: OHDOT_Pen.tbl USER: swalker@palmernet.com WORKSPACE: OHDOTCEv02 WORKSET: 122048 PRODUCT: OpenRoadsDesigner 24.00.00.205
pw:\\ohiodot-pw.bentley.com:ohiodot-pw-02\Documents\01 Active Projects\District 08\Hamilton\122048\402-Engineering_PalmerEngineering\Structures\SFN_3109152\Sheets\SFN_3109152_WP100.dgn

MODEL: Sheet PAPERSIZE: 34x22 (in.) DATE: 8/27/2025 TIME: 12:57:56 PM PLTDRV: OHDOT_PDF.pltcfg PENTBL: OHDOT_Pen.tbl USER: swalker@palmernet.com WORKSPACE: OHDOTCEx02 WORKSET: 122048 PRODUCT: OpenRoadsDesigner 24.00.00.205
pw:\\ohiodot-pw.bentley.com:ohiodot-pw-02\Documents\01 Active Projects\District 08\Hamilton\122048\402-Engineering_PalmerEngineering\Structures\Structures\SFN_3109152\Sheets\122048_SFN_3109152_SW001.dgn

HAM-IR75-1.05

MSE WALL COPING JOINT DETAIL

(MAX. JOINT SPACING IS 20'-0")
*INCLUDE WITH ITEM 840 - CONCRETE COPING

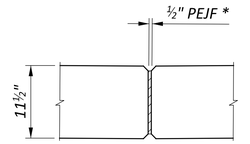

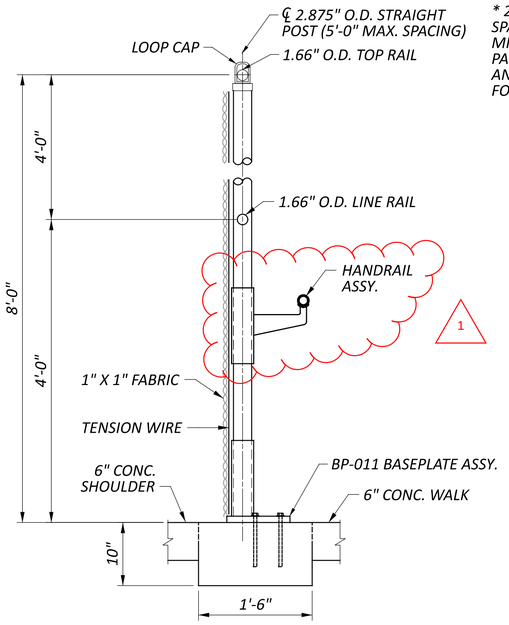

POST AND FOUNDATION SECTION

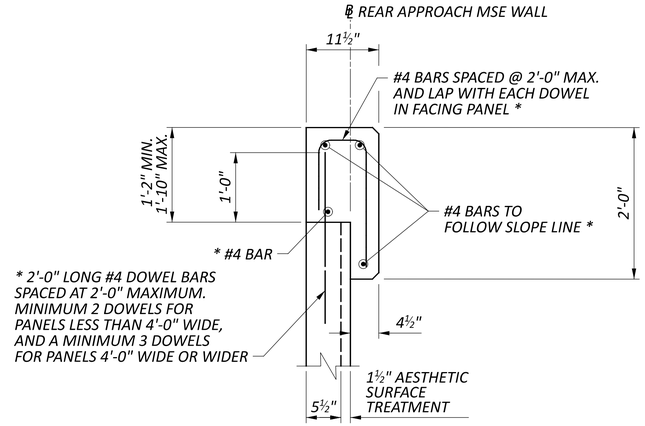

MSE WALL COPING TYPICAL SECTION

(ALL REINFORCING STEEL TO BE GALVANIZED)
* - INCLUDED WITH CONCRETE COPING FOR PAYMENT

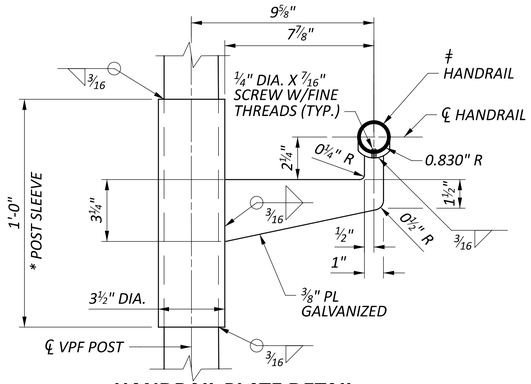

HANDRAIL PLATE DETAIL

* POST SLEEVES SHALL BE 3.5 INCH OUTSIDE DIAMETER PIPE, ASTM A53, 35,000 PSI MINIMUM YIELD STRENGTH, 7.58 LB/FT, GALVANIZED ACCORDING TO 711.02.

ǂ HANDRAIL SHALL BE SWEDGED END PIPE 1.660 " O.D. PER C&MS 710.03 TYPE I GRADE 2 - FY = 50 KSI.

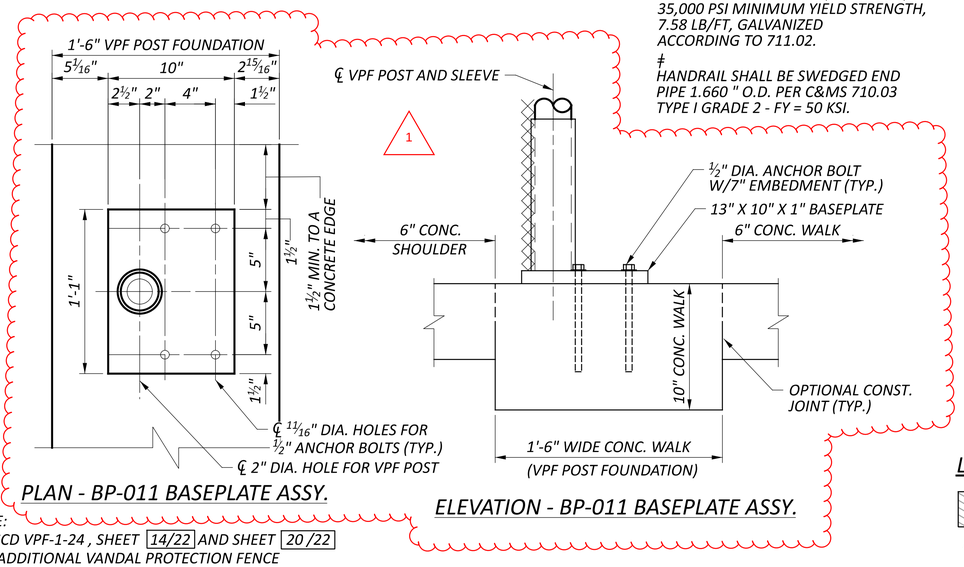

PLAN - BP-011 BASEPLATE ASSY.

ELEVATION - BP-011 BASEPLATE ASSY.

NOTE:
SEE SCD VPF-1-24 , SHEET 14/22 AND SHEET 20/22 FOR ADDITIONAL VANDAL PROTECTION FENCE AND BASE PLATE BP-011 DETAILS.

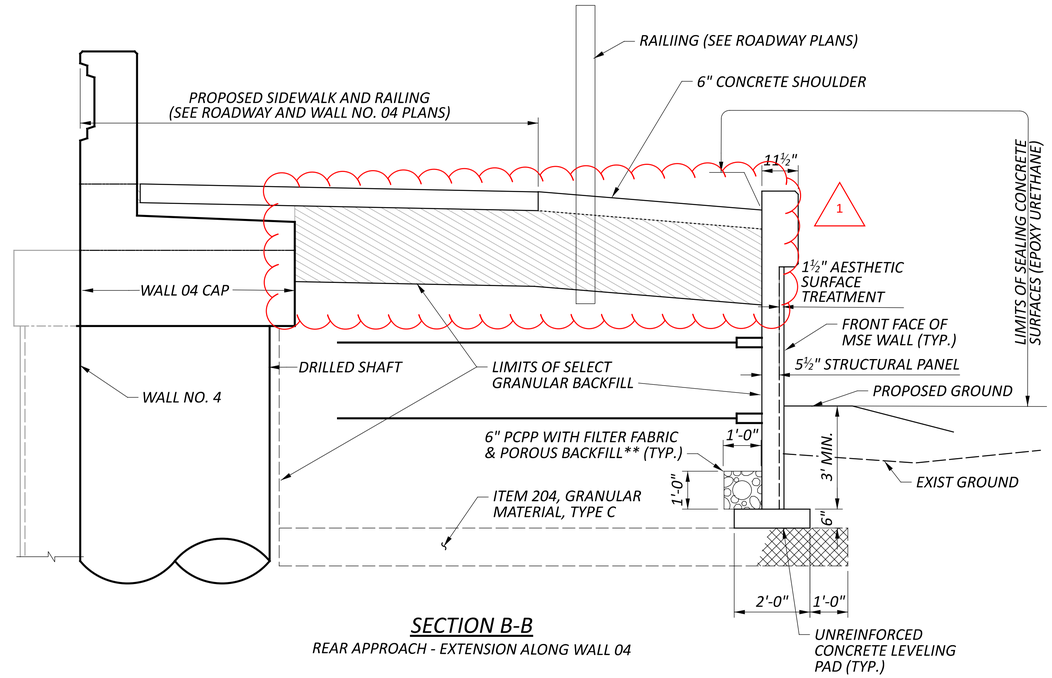

SECTION B-B

REAR APPROACH - EXTENSION ALONG WALL 04

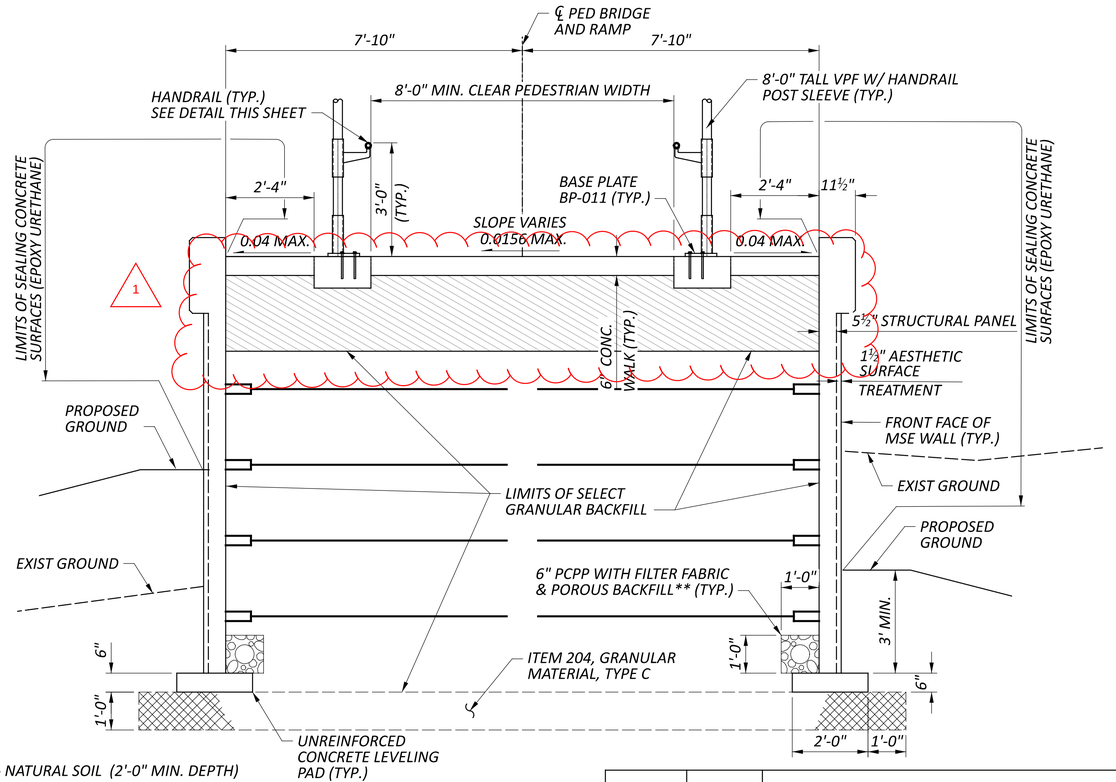

SECTION A-A

REAR APPROACH

LEGEND

ITEM 203 - NATURAL SOIL (2'-0" MIN. DEPTH)

** TO BE INCLUDED WITH MSE WALL P.C.P.P. FOR PAYMENT

ADDM' NO.	DATE	DESCRIPTION
1	09/01/25	SHEET REVISIONS
DATE COMPLETED		

MSE WALL DETAILS - REAR ABUTMENT
BRIDGE NO. HAM-75-0123E
PEDESTRIAN BRIDGE OVER RAMP V AND WINCHELL ACE.

DESIGN AGENCY
Palmer ENGINEERING
8350 E. KEMPER ROAD
SUITE B
CINCINNATI, OH 45249
(513) 469-1600

DESIGNER	
RJB	
REVIEWER	
BJF	04/11/25
PROJECT ID	
122048	
SUBSET	TOTAL
7	22
SHEET	TOTAL
P.337	P.421

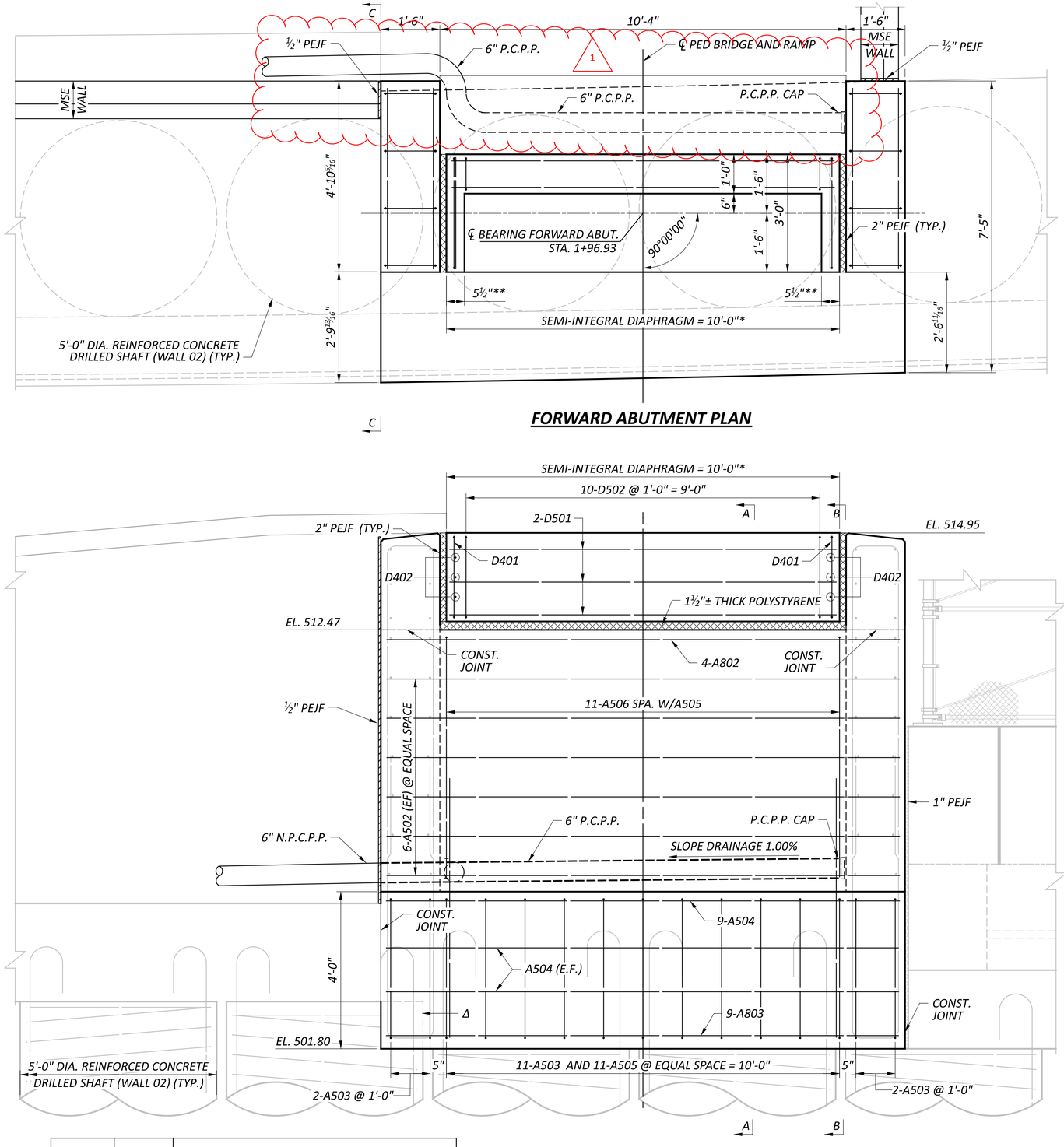

FORWARD ABUTMENT PLAN

FORWARD ABUTMENT ELEVATION

1	09/01/25	SHEET REVISIONS
ADDM' NO.	DATE	DESCRIPTION
DATE COMPLETED		

LEGEND

* = PLUS FIT-UP
** = MINUS FIT UP
Δ = ADJUST OR TRIM REINFORCEMENT STEEL AS NEEDED TO AVOID INTERFERENCE WITH TANGENT DRILLED SHAFT (TYP. - SHAFT 138 & 141)

LAP SPLICES:

#5 = 2'-6"

NOTES:

1. SEE SHEET 9 22 FOR SECTION VIEW.
2. SEE SHEET 10 22 FOR WINGWALL DETAILS AND REINFORCING.
3. SEE SHEET P.183 FOR WALL 02 DETAILS AND REINFORCING.
4. SEE SHEET 11 22 THRU 14 22 FOR MSE WALL DETAILS.
5. MATCH CURVATURE OF FACE OF ABUTMENT FOOTING TO CURVATURE OF WALL 2.

FORWARD ABUTMENT PLAN AND ELEVATION
BRIDGE NO. HAM-75-0123E
PEDESTRIAN BRIDGE OVER RAMP V AND WINCHELL AVE.

SFN 3109152

DESIGN AGENCY
Palmer ENGINEERING
8350 E. KEMPER ROAD
SUITE B
CINCINNATI, OH 45249
(513) 469-1600

DESIGNER	CHECKER
RJB	TES

REVIEWER BJF 04/11/25

PROJECT ID 122048

SUBSET	TOTAL
8	22

SHEET	TOTAL
P.338	P.421

HAM-IR75-1.05

MODEL: Abutment Plan and Elevation PAPERSIZE: 34x22 (in.) DATE: 8/27/2025 TIME: 12:58:05 PM PLTDRV: OHDOT_PDF.pltcfg PENTBL: OHDOT_Pen.tbl USER: swalker@palmernet.com WORKSPACE: OHDOTCEv02 WORKSET: 122048 PRODUCT: OpenRoadsDesigner 24.00.00.205
pw:\\ohiodot-pw.bentley.com:ohiodot-pw-02\Documents\01 Active Projects\District 08\Hamilton\122048\02-Engineering_PalmerEngineering\Structures\SFN_3109152\Sheets\122048_SFN_3109152_SF001.dgn

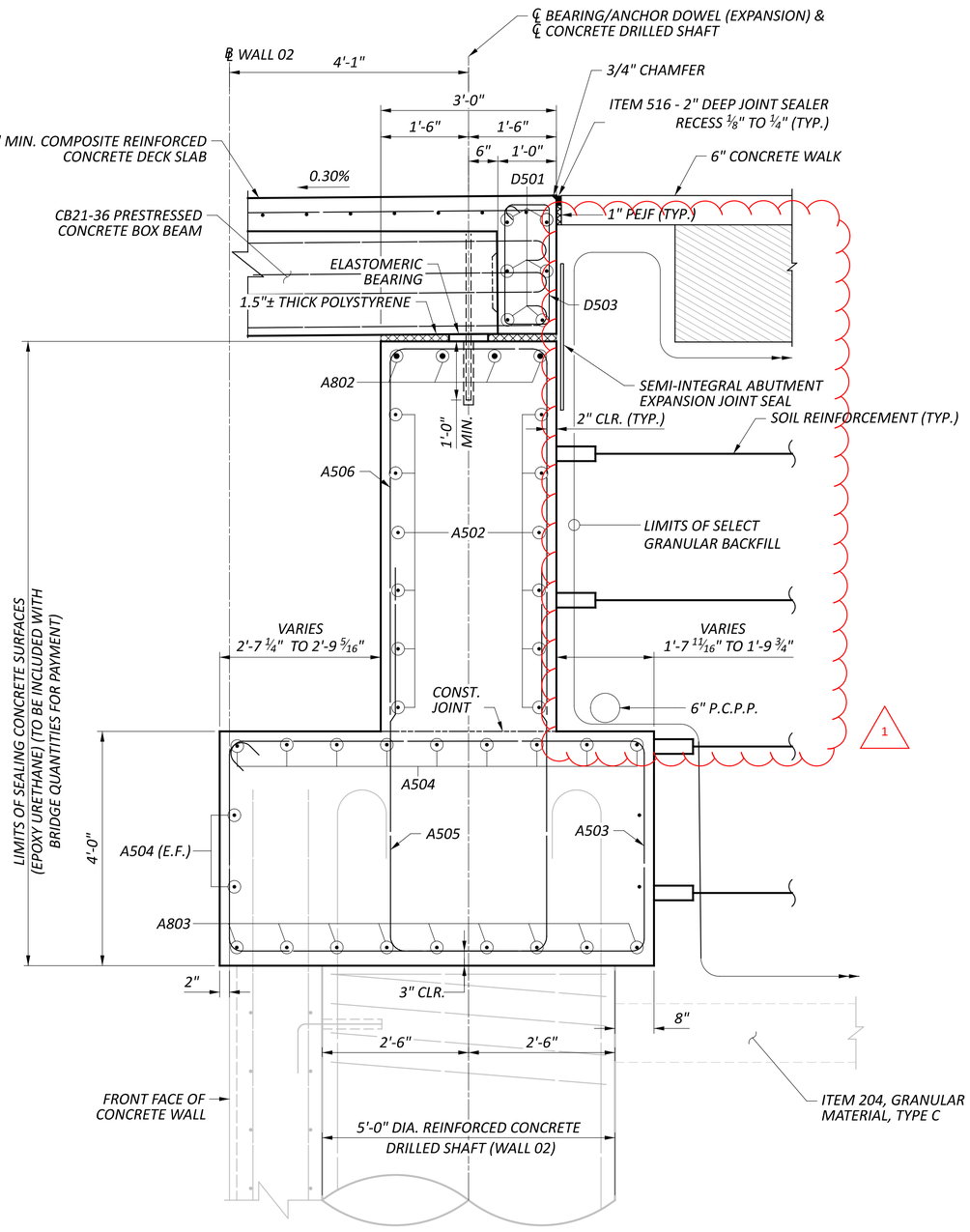

SECTION A-A

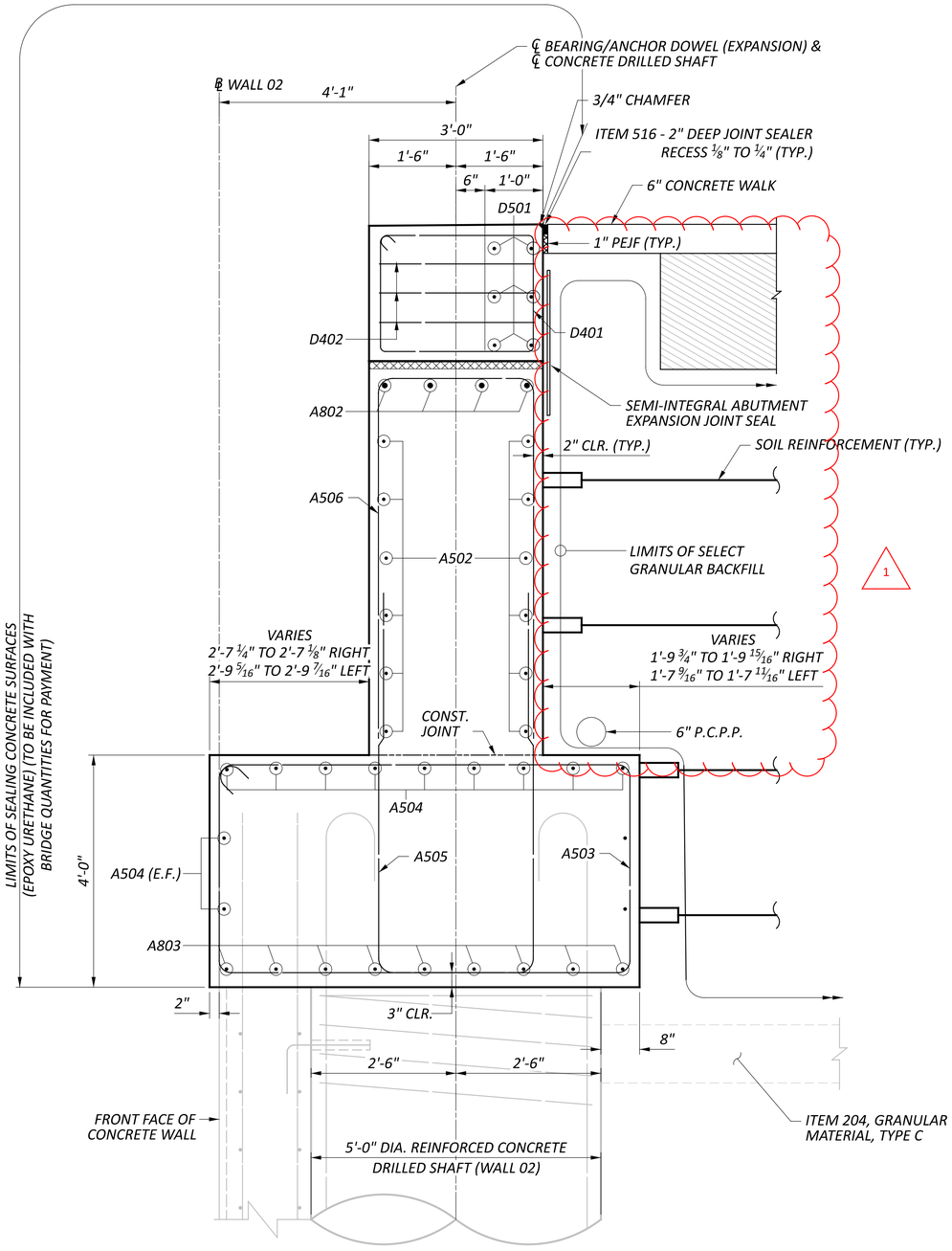

SECTION B-B

1	09/01/25	SHEET REVISIONS
ADDM' NO.	DATE	DESCRIPTION
DATE COMPLETED		

LEGEND

1 ITEM 203 - NATURAL SOIL (2'-0" MIN. DEPTH)

LAP SPLICES:

#5 = 2'-0" (GALVANIZED) 1

NOTES:

1. SEE SHEET 8 22 FOR PLAN AND ELEVATION VIEWS.
2. SEE SHEET P.183 FOR WALL 02 DETAILS AND REINFORCING.

FORWARD ABUTMENT SECTION
BRIDGE NO. HAM-75-0123E
PEDESTRIAN BRIDGE OVER RAMP V AND WINCHELL AVE.

SFN 3109152

DESIGN AGENCY

Palmer ENGINEERING
8350 E. KEMPER ROAD
SUITE B
CINCINNATI, OH 45249
(513) 469-1600

DESIGNER	CHECKER
RJB	TES

REVIEWER BJF 04/11/25

PROJECT ID 122048

SUBSET	TOTAL
9	22

SHEET	TOTAL
P.339	P.421

HAM-IR75-1.05

MODEL: Abutment Section PAPERSIZE: 34x22 (in.) DATE: 8/27/2025 TIME: 12:58:06 PM PLTDRV: OHDOT_PDF.pltcfg PENTBL: OHDOT_Pen.tbl USER: swalker@palmernet.com WORKSPACE: OHDOTCEv02 WORKSET: 122048 PRODUCT: OpenRoadsDesigner 24.00.00.205
pw:\\ohiodot-pw.bentley.com:ohiodot-pw-02\Documents\01 Active Projects\District 08\Hamilton\122048\v02-Engineering_ PalmerEngineering\Structures\SFN_3109152_SFN_3109152_SF001.dgn

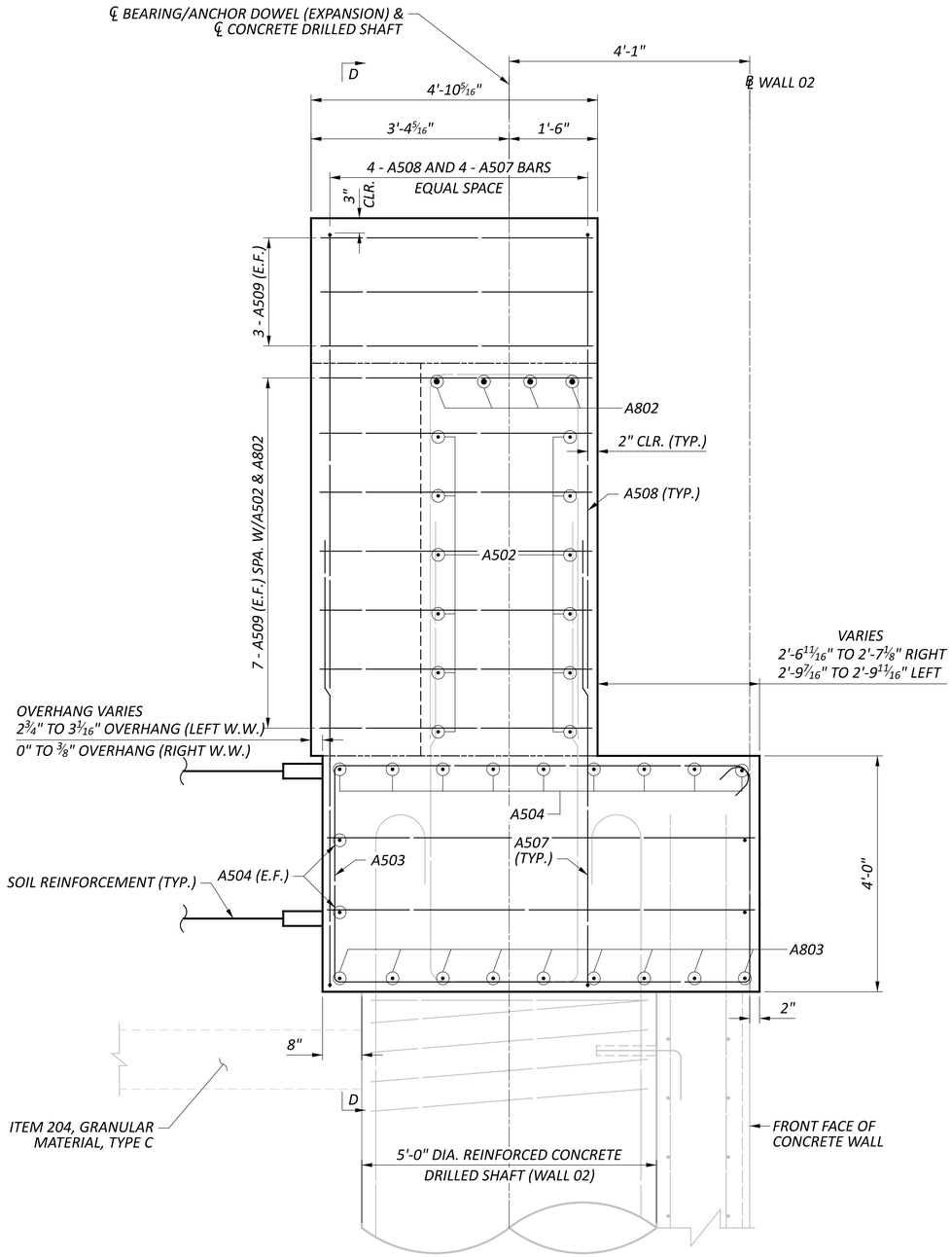

VIEW C-C

LEFT WINGWALL SHOWN
RIGHT WINGWALL SIMILAR

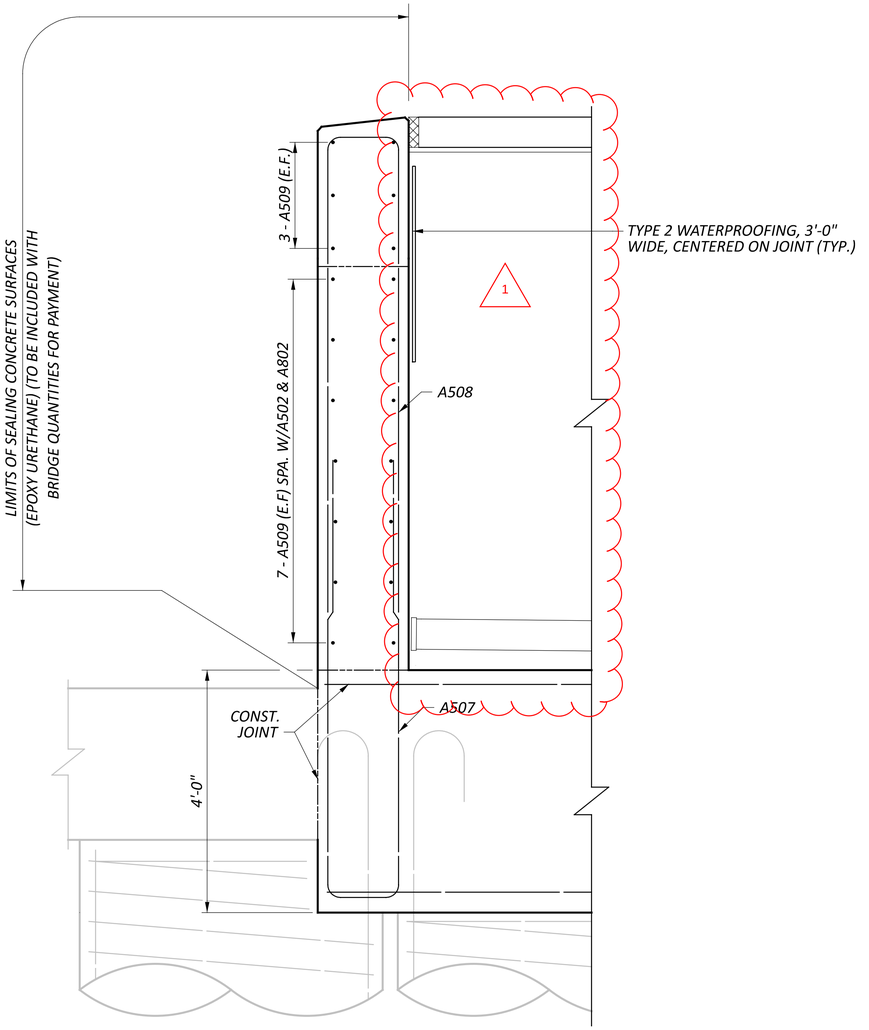

SECTION D-D

LEFT WINGWALL SHOWN
RIGHT WINGWALL SIMILAR
(SEE ELEVATION VIEW FOR FOOTING DETAILS)

LAP SPLICES:

#5 = 2'-6"

NOTES:

1. SEE SHEET 8 22 FOR PLAN AND ELEVATION VIEWS.
2. SEE SHEET P.183 FOR WALL 02 DETAILS AND REINFORCING.

1	09/01/25	SHEET REVISIONS
ADDM' NO.	DATE	DESCRIPTION
DATE COMPLETED		

FORWARD ABUTMENT WINGWALL DETAILS
BRIDGE NO. HAM-75-0123E
PEDESTRIAN BRIDGE OVER RAMP V AND WINCHELL AVE.

SFN 3109152

DESIGN AGENCY
Palmer ENGINEERING
8350 E. KEMPER ROAD
SUITE B
CINCINNATI, OH 45249
(513) 469-1600

DESIGNER	CHECKER
RJB	TES

REVIEWER: BJF 04/11/25

PROJECT ID: 122048

SUBSET	TOTAL
10	22

SHEET	TOTAL
P.340	P.421

HAM-IR75-1.05

MODEL: Abutment Wingwall PAPERSIZE: 34x22 (in.) DATE: 8/27/2025 TIME: 12:58:08 PM PLTDRV: OHDOT_PDF.pltcfg PENTBL: OHDOT_Pen.tbl USER: swalker@palmernet.com WORKSPACE: OHDOTCEv02 WORKSET: 122048 PRODUCT: OpenRoadsDesigner 24.00.00.205
pw:\\ohiodot-pw.bentley.com:ohiodot-pw-02\Documents\01 Active Projects\District 08\Hamilton\122048\402-Engineering_PalmerEngineering\Structures\SFN_3109152\Sheets\122048_SFN_3109152_SF001.dgn

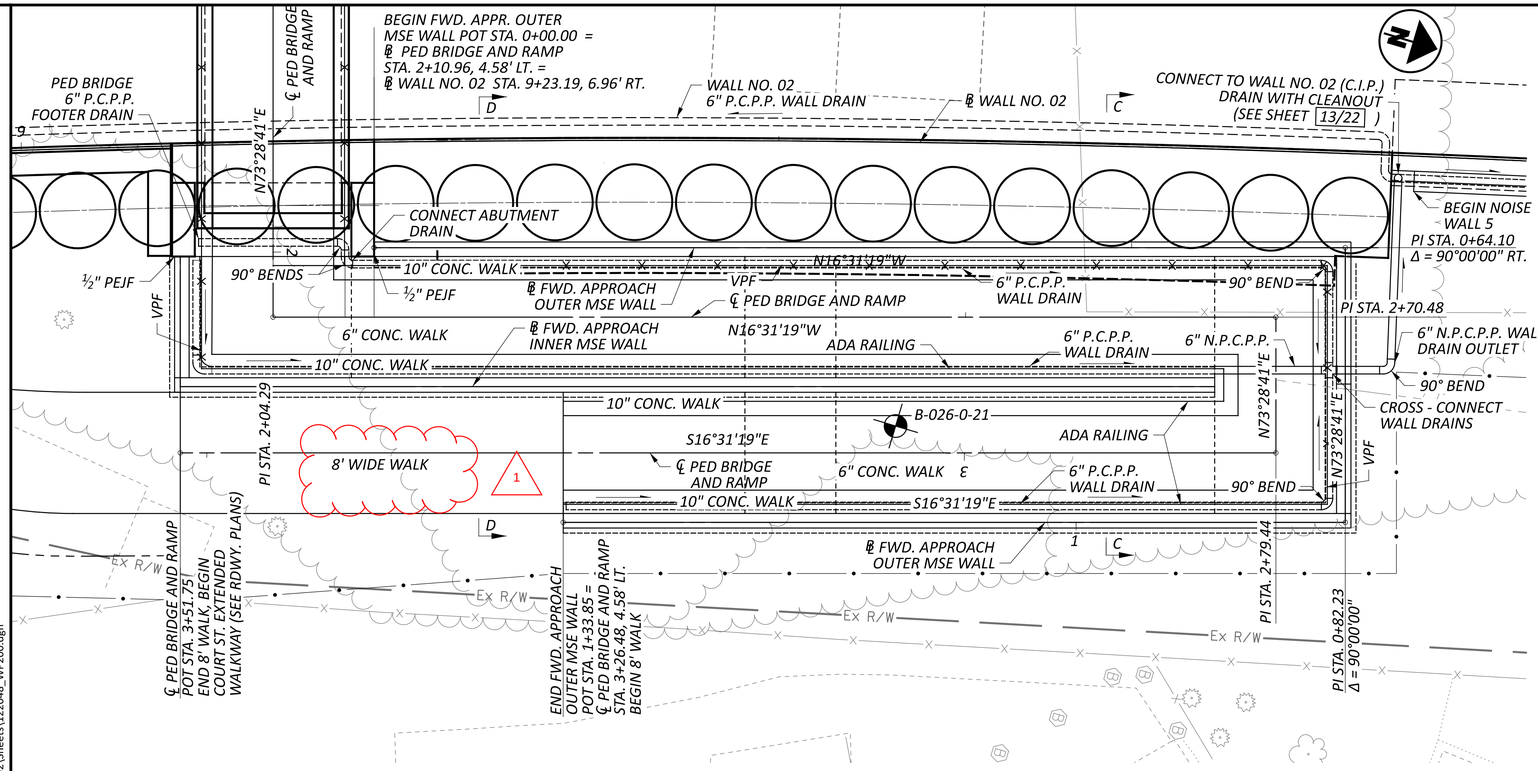

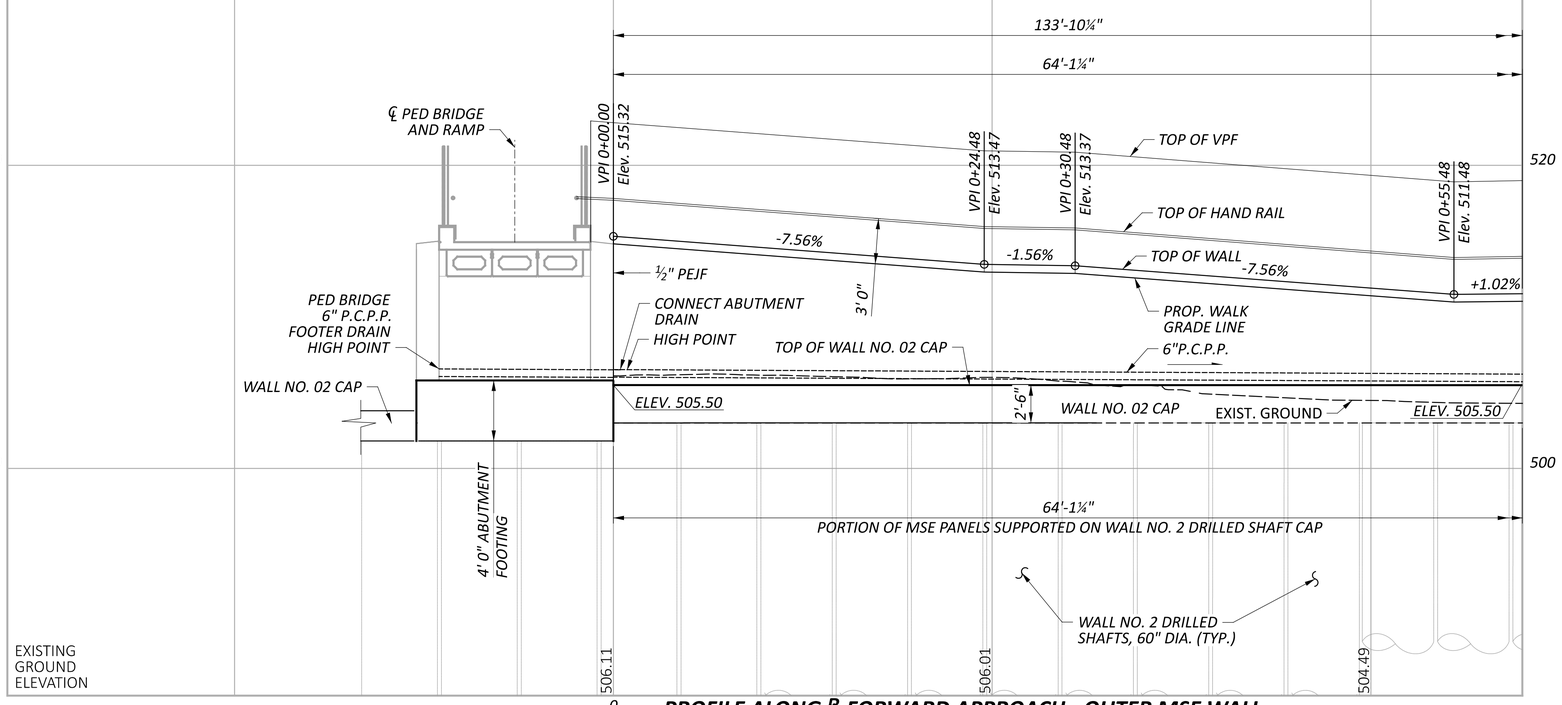

PROFILE ALONG ℄ FORWARD APPROACH - OUTER MSE WALL

BENCHMARK DATA

BM #1 STA.	63+71.02 ,	ELEV. 491.77 ,	OFFSET 308.82' LT.,	IRON PIN
BM #2 STA.	63+92.86 ,	ELEV. 492.97 ,	OFFSET 251.23' LT.,	MAG SPIKE
BM #3 STA.	63+56.30 ,	ELEV. 490.92 ,	OFFSET 106.06' LT.,	MAG SPIKE

FOR ADDITIONAL BENCHMARK INFORMATION. SEE ROADWAY PLAN SHEET P.2

NOTES

EARTHWORK LIMITS SHOWN ARE APPROXIMATE. ACTUAL SLOPES SHALL CONFORM TO PLAN CROSS SECTIONS.

LEGEND

PROJECT BORING LOCATION

HORIZONTAL SCALE IN FEET
0 2.5 5 10

WALL PLAN AND ELEVATION (1 OF 2)
FWD. APPROACH OUTER MSE WALL
ALONG EAST APPROACH TO PEDESTRIAN BRIDGE

1	09/01/25	SHEET REVISIONS
ADDM' NO.	DATE	DESCRIPTION
DATE COMPLETED		

DESIGN AGENCY
Palmer ENGINEERING
8350 E. KEMPER ROAD
SUITE B
CINCINNATI, OH 45249
(513) 469-1600

DESIGNER RJB
REVIEWER BJF 04/11/25
PROJECT ID 122048
SUBSET 11 TOTAL 22
SHEET P.341 TOTAL P.421

HAM-IR75-1.05

MODEL: BLP_MSE_FWD_OUTER - Fwd Appr Outer MSE Plan 1 [Sheet] PAPERSIZE: 34x22 (in.) DATE: 8/27/2025 TIME: 12:58:25 PM PLTDRV: OHDOT_PDF.pltcfg PENTBL: OHDOT_Pen.tbl USER: swalker@palmernet.com WORKSPACE: OHDOTCEv02 WORKSET: 122048 PRODUCT: OpenRoadsDesigner 24.00.00.205
pw:\\ohiodot-pw.bentley.com:ohiodot-pw-02\Documents\01 Active Projects\District 08\Hamilton\122048\i402-Engineering_PalmerEngineering\Structures\SFN_3109152\Sheets\122048_WP200.dgn

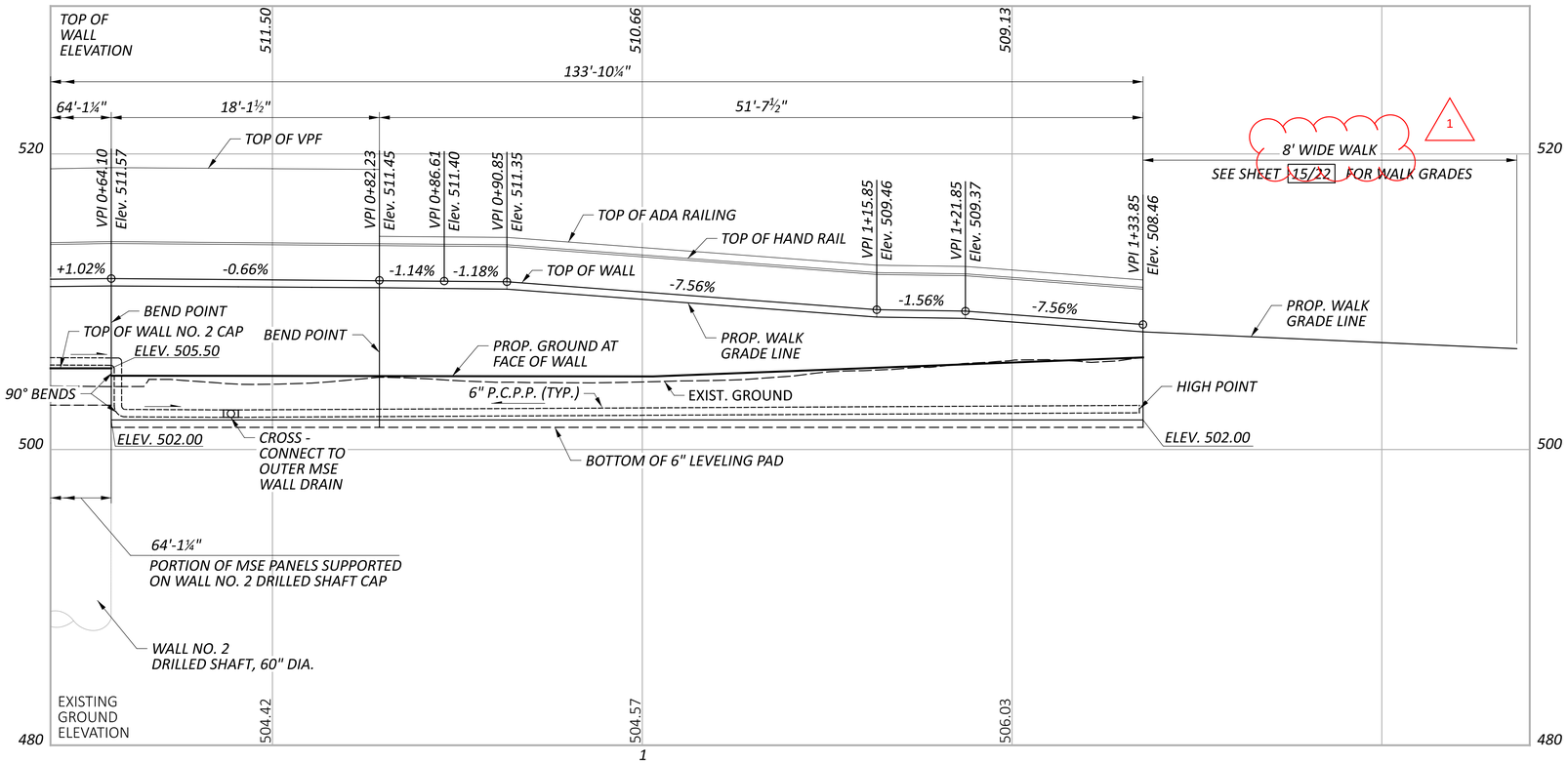

1

PROFILE ALONG ℄ FORWARD APPROACH - OUTER MSE WALL

1	09/01/25	SHEET REVISIONS
ADDM' NO.	DATE	DESCRIPTION
DATE COMPLETED		

HORIZONTAL SCALE IN FEET
0 2.5 5 10

WALL PLAN AND ELEVATION (2 OF 2)
FWD. APPROACH OUTER MSE WALL
ALONG EAST APPROACH TO PEDESTRIAN BRIDGE

DESIGN AGENCY
Palmer ENGINEERING
8350 E. KEMPER ROAD
SUITE B
CINCINNATI, OH 45249
(513) 469-1600

DESIGNER RJB
REVIEWER BJF 04/11/25
PROJECT ID 122048
SUBSET 12 TOTAL 22
SHEET P.342 TOTAL P.421

HAM-IR75-1.05

MODEL: Plan--1 - Profile 2 [Sheet] PAPERSIZE: 34x22 (in.) DATE: 8/27/2025 TIME: 12:58:27 PM PLTDRV: OHDOT_PDF.pltcfg PENTBL: OHDOT_Pen.tbl USER: swalker@palmernet.com WORKSPACE: OHDOTCtx02 WORKSET: 122048 PRODUCT: OpenRoadsDesigner 24.00.00.205
pw:\\ohiodot-pw.bentley.com:ohiodot-pw-02\Documents\01 Active Projects\District 08\Hamilton\122048\Engineering\02-Engineering\Structures\SFN_3109152\Sheets\122048_WP200.dgn

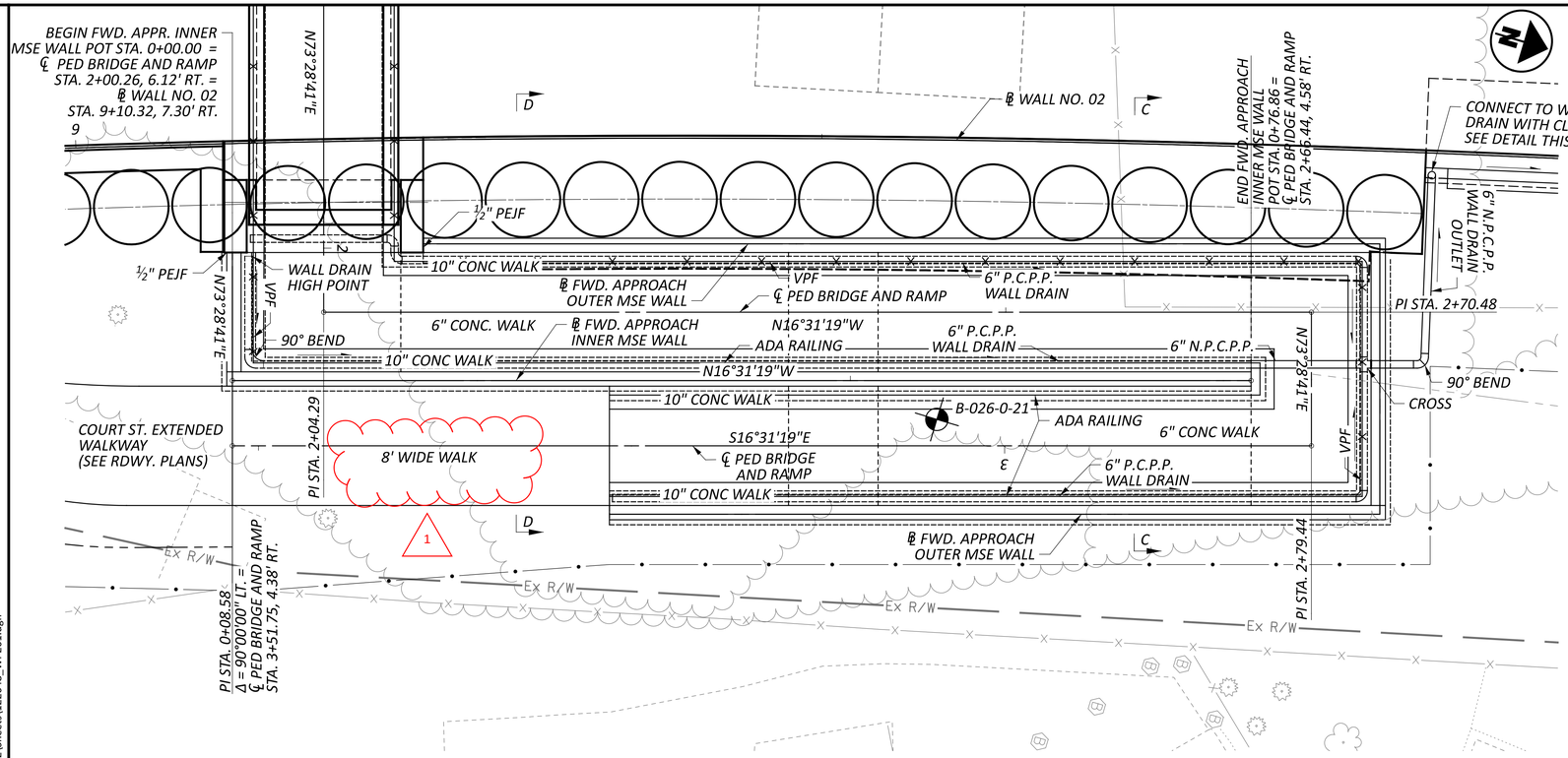

BENCHMARK DATA

BM #1 STA.	63+71.02,	ELEV. 491.77,	OFFSET	308.82' LT.,	IRON PIN
BM #2 STA.	63+92.86,	ELEV. 492.97,	OFFSET	251.23' LT.,	MAG SPIKE
BM #3 STA.	63+56.30,	ELEV. 490.92,	OFFSET	106.06' LT.,	MAG SPIKE

FOR ADDITIONAL BENCHMARK INFORMATION. SEE ROADWAY PLAN SHEET P.2

℄ WALL NO. 02 CURVE DATA
P.I. = STA. 8+28.09
Δ = 20°17'25" RT
Dc = 04°31'20"
R = 1,267.00'
T = 226.72'
L = 448.69'
E = 20.12'

NOTES

EARTHWORK LIMITS SHOWN ARE APPROXIMATE. ACTUAL SLOPES SHALL CONFORM TO PLAN CROSS SECTIONS.

LEGEND

PROJECT BORING LOCATION

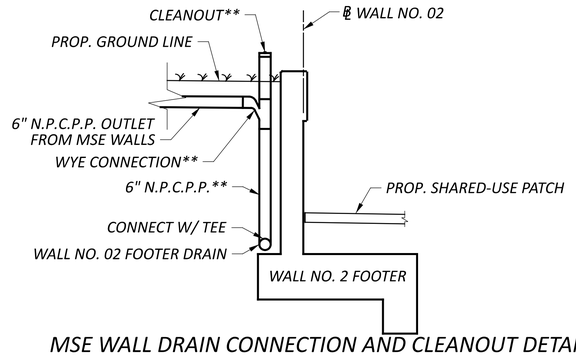

MSE WALL DRAIN CONNECTION AND CLEANOUT DETAIL
***TO BE INCLUDED WITH ITEM 518 - 6" NON-PERFORATED CORRUGATED PLASTIC PIPE, INCLUDING SPECIALS, AS PER PLAN*

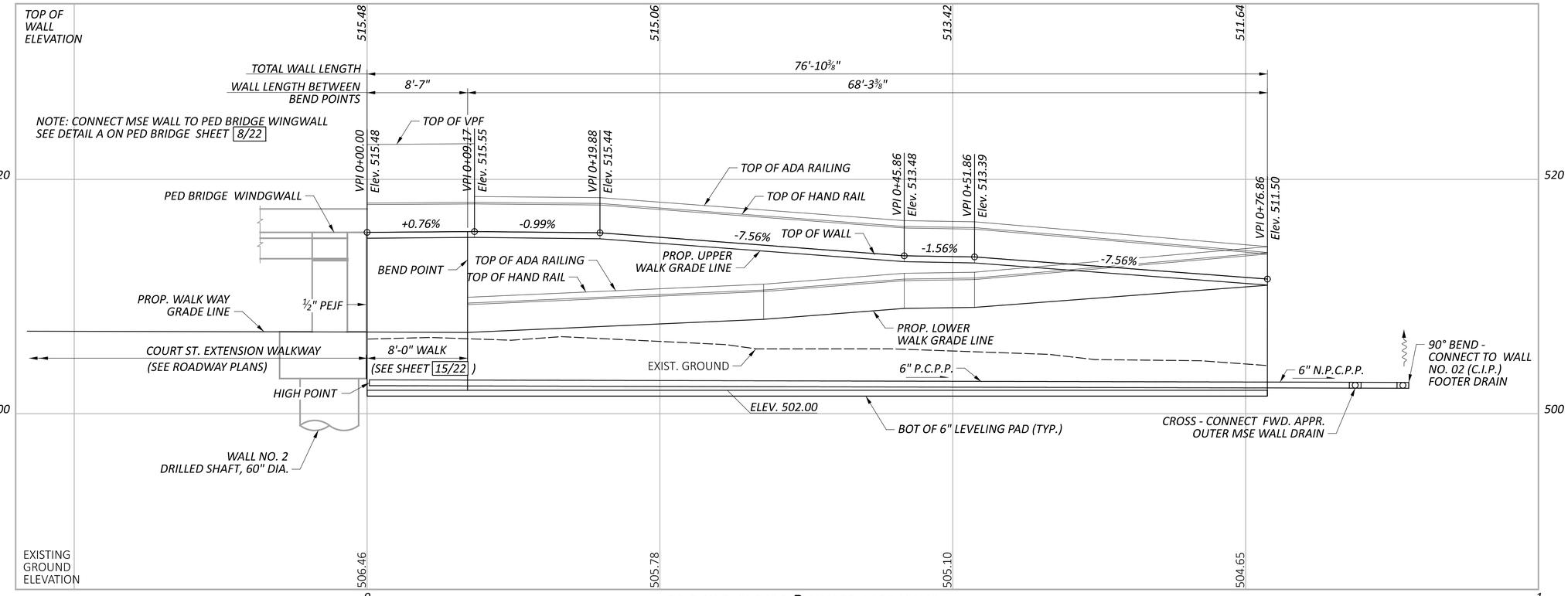

PROFILE ALONG ℄ INNER MSE WALL

1	09/01/25	SHEET REVISIONS
NO.	DATE	DESCRIPTION
ADDM'		
DATE COMPLETED		

HORIZONTAL SCALE IN FEET
0 2.5 5 10

WALL PLAN AND ELEVATION
FWD. APPROACH INNER MSE WALL
ALONG EAST APPROACH TO PEDESTRIAN BRIDGE

DESIGN AGENCY
Palmer ENGINEERING
8350 E. KEMPER ROAD
SUITE B
CINCINNATI, OH 45249
(513) 469-1600

DESIGNER RJB
REVIEWER BJF 04/11/25
PROJECT ID 122048
SUBSET 13 TOTAL 22
SHEET P.343 TOTAL P.421

HAM-IR75-1.05

MODEL: BLP_MSE_FWD_INNER - Plan 1 [Sheet] PAPERSIZE: 34x22 (in.) DATE: 8/27/2025 TIME: 12:58:36 PM PLTDRV: OHDOT_PDF.pltcfg PENTBL: OHDOT_Pen.tbl USER: pw:\\ohiodot-pw.bentley.com:ohiodot-pw-02\Documents\01 Active Projects\District 08\Hamilton\122048\402-Engineering_PalmerEngineering\Structures\SFN_3109152_WP201.dgn

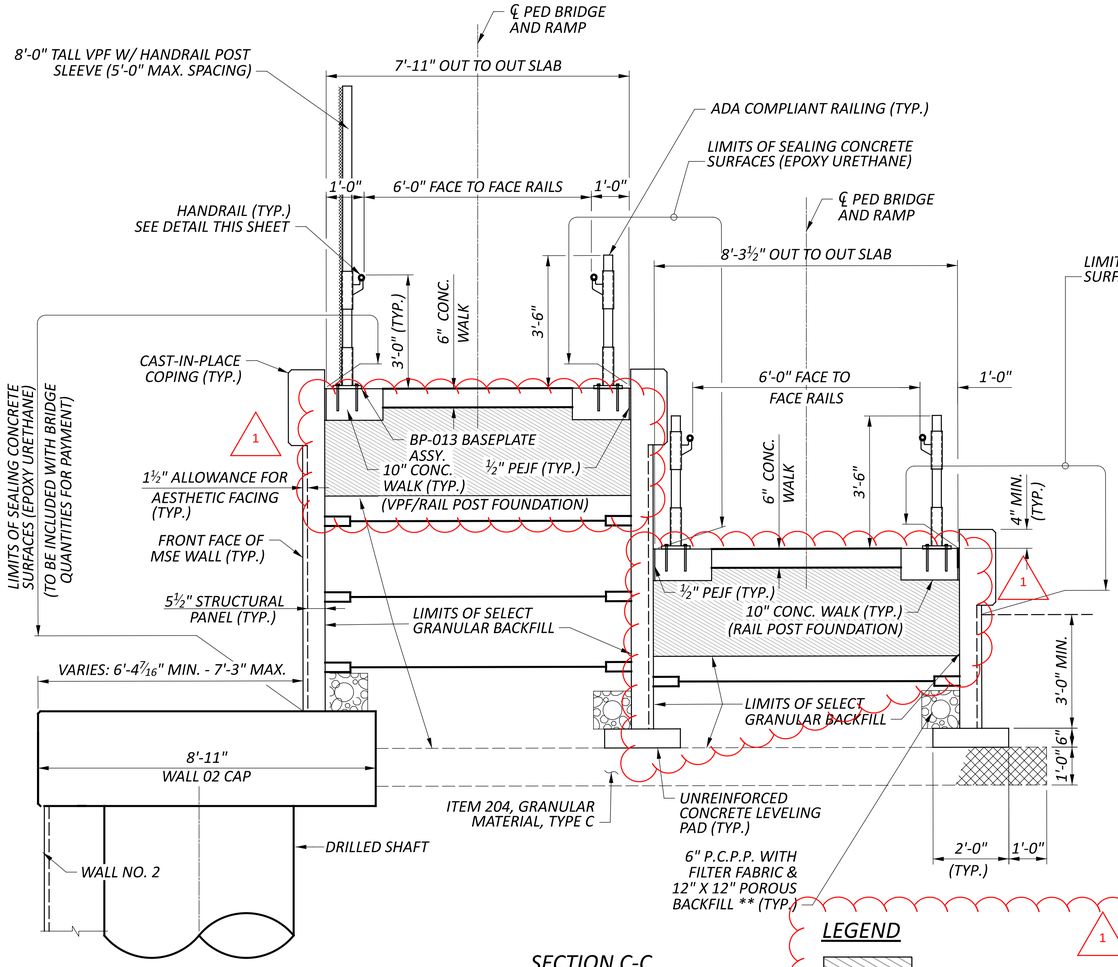

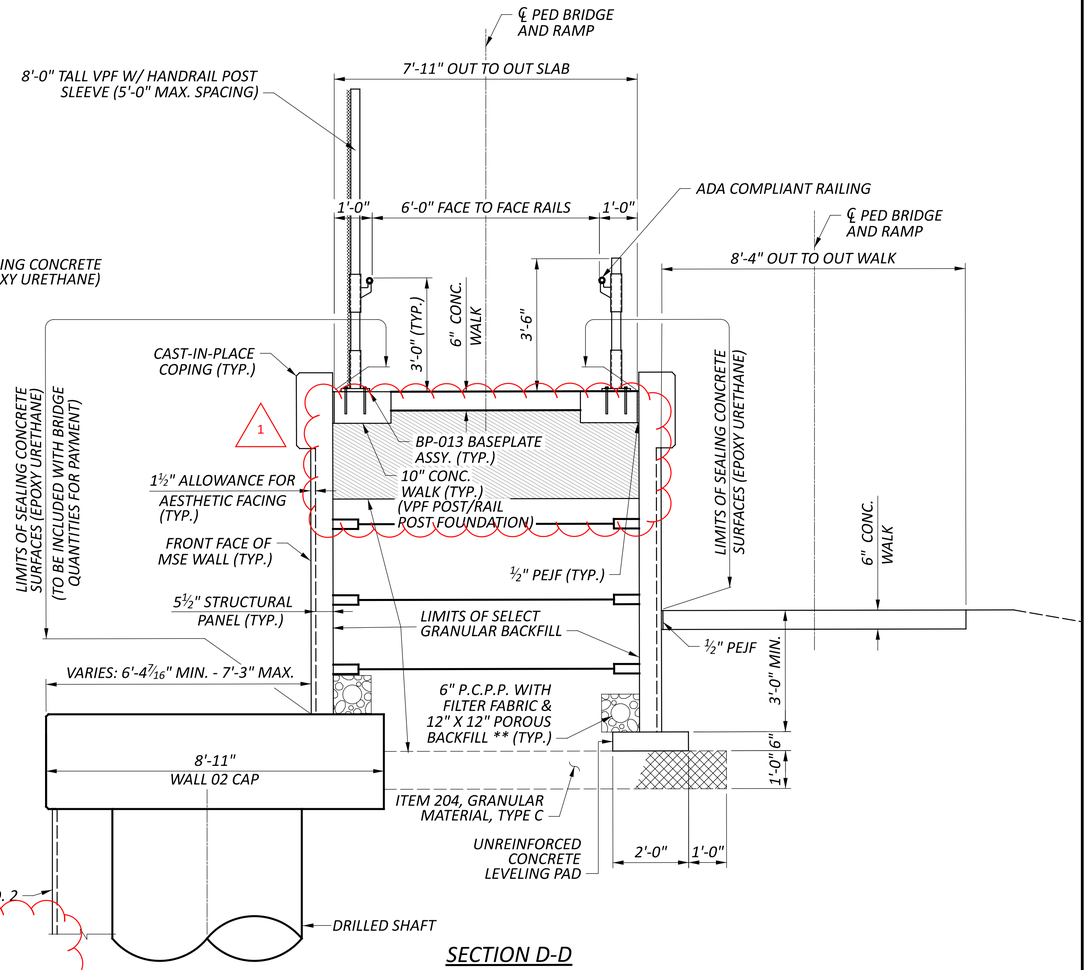

SECTION C-C
FORWARD APPROACH DUAL RAMP

SECTION D-D
FORWARD APPROACH AT GRADE LANDING

LEGEND

1 — ITEM 203 - NATURAL SOIL (2'-0" MIN. DEPTH)

** TO BE INCLUDED WITH MSE WALL P.C.P.P. FOR PAYMENT

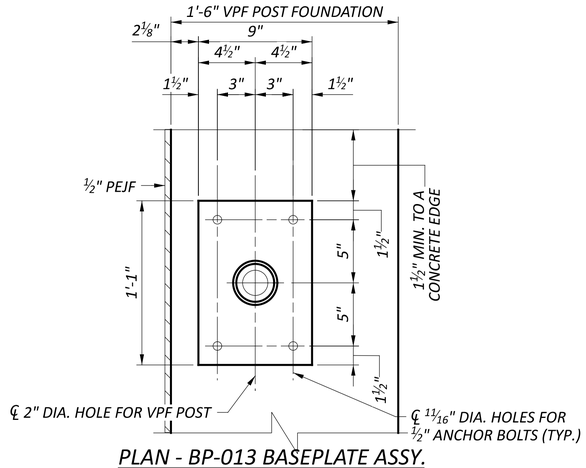

PLAN - BP-013 BASEPLATE ASSY.

NOTE:
SEE SCD VPF-1-24 , SHEET 7/22 AND SHEET 20/22 FOR ADDITIONAL VANDAL PROTECTION FENCE AND BASE PLATE BP-011 DETAILS. BASE PLATE SHALL BE 50 KSI GALVANIZED STEEL.

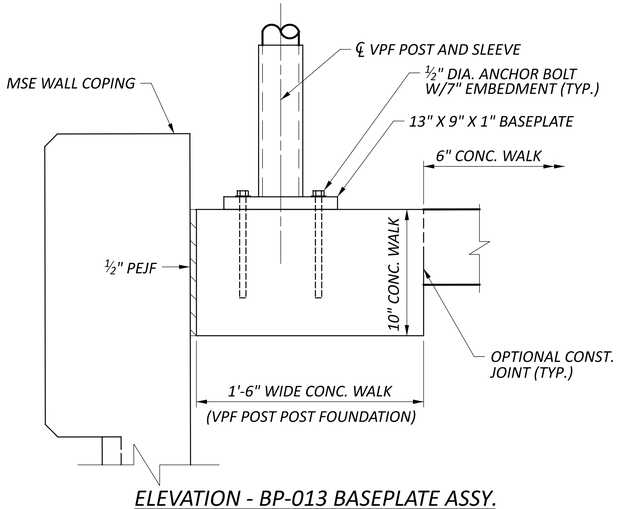

ELEVATION - BP-013 BASEPLATE ASSY.

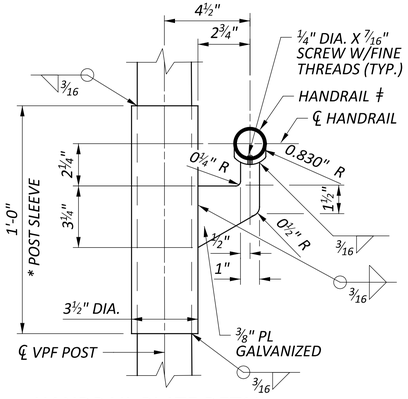

HANDRAIL PLATE DETAIL

* POST SLEEVES SHALL BE 3.5 INCH OUTSIDE DIAMETER PIPE, ASTM A53, 35,000 PSI MINIMUM YIELD STRENGTH, 7.58 LB/FT, GALVANIZED ACCORDING TO 711.02.

ǂ HANDRAIL SHALL BE SWEDGED END PIPE 1.660 " O.D. PER C&MS 710.03 TYPE I GRADE 2 - FY = 50 KSI.

DESCRIPTION	DATE COMPLETED
SHEET REVISIONS	09/01/25
ADDM' NO.	1

MSE WALL DETAILS - FORWARD ABUTMENT
BRIDGE NO. HAM-75-0123E
PEDESTRIAN BRIDGE OVER RAMP V AND WINCHELL AVE.

DESIGN AGENCY
Palmer ENGINEERING
8350 E. KEMPER ROAD
SUITE B
CINCINNATI, OH 45249
(513) 469-1600

DESIGNER: RJB
REVIEWER: BJF 04/11/25
PROJECT ID: 122048
SUBSET: 14 | TOTAL: 22
SHEET: P.344 | TOTAL: P.421

HAM-IR75-1.05

MODEL: Sheet 2 PAPERSIZE: 34x22 (in.) DATE: 8/27/2025 TIME: 12:58:47 PM PLTDRV: OHDOT_PDF.pltcfg PENTBL: OHDOT_Pen.tbl USER: swalker@palmernet.com WORKSPACE: OHDOTCEx02 WORKSET: 122048 PRODUCT: OpenRoadsDesigner 24.00.00.205
pw:\\ohiodot-pw.bentley.com:ohiodot-pw-02\Documents\01 Active Projects\District 08\Hamilton\122048\d02-Engineering_PalmerEngineering\Structures\SFN_3109152\Sheets\122048_SFN_3109152_SW001.dgn

MODEL: CLP_PED_BRIDGE - Plan 2 [Sheet] PAPERSIZE: 34x22 (in.) DATE: 8/27/2025 TIME: 12:58:55 PM PLTDRV: OHDOT_PDF.pltcfg PENTBL: OHDOT_Pen.tbl USER: swalker@palmernet.com WORKSPACE: OHDOTCtx02 WORKSET: 122048 PRODUCT: OpenRoadsDesigner 24.00.00.205
pw:\\ohiodot-pw.bentley.com:ohiodot-pw-02\Documents\01 Active Projects\District 08\Hamilton\122048\02-Engineering_Palmer\Engineering\Structures\SFN_3109152\Sheets\122048_SFN_3109152_SW002.dgn

HAM-IR75-1.05

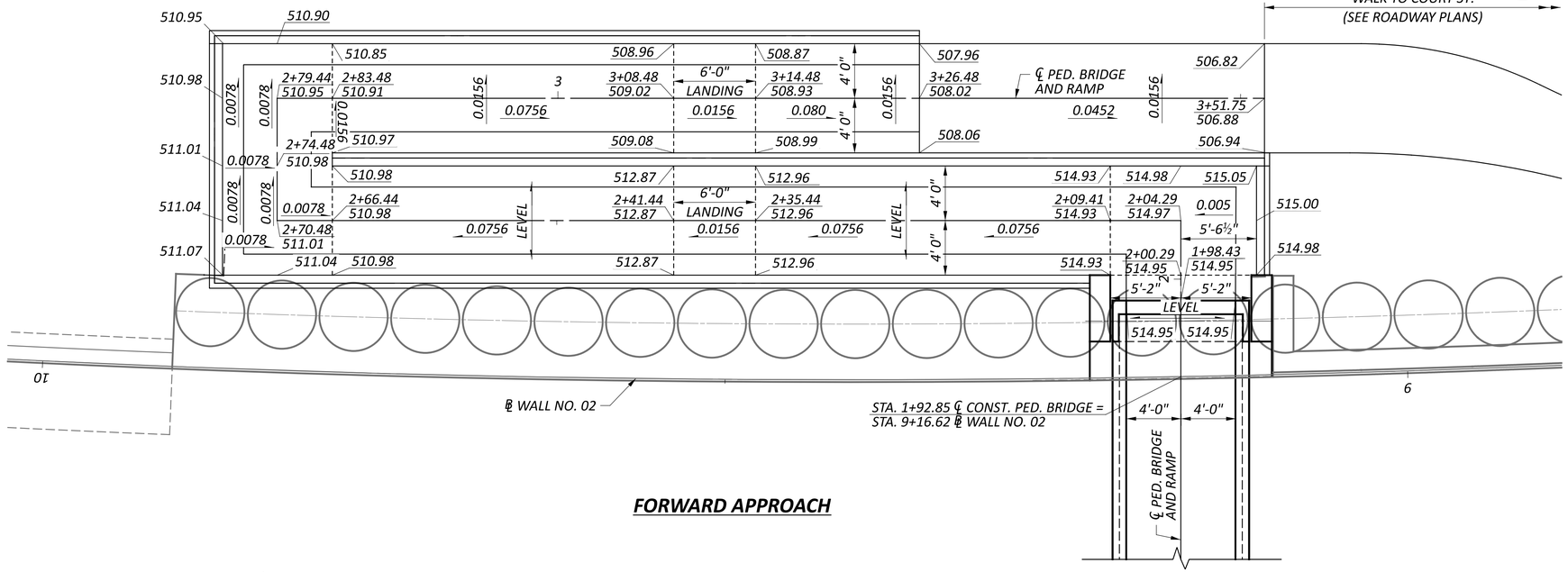

FORWARD APPROACH

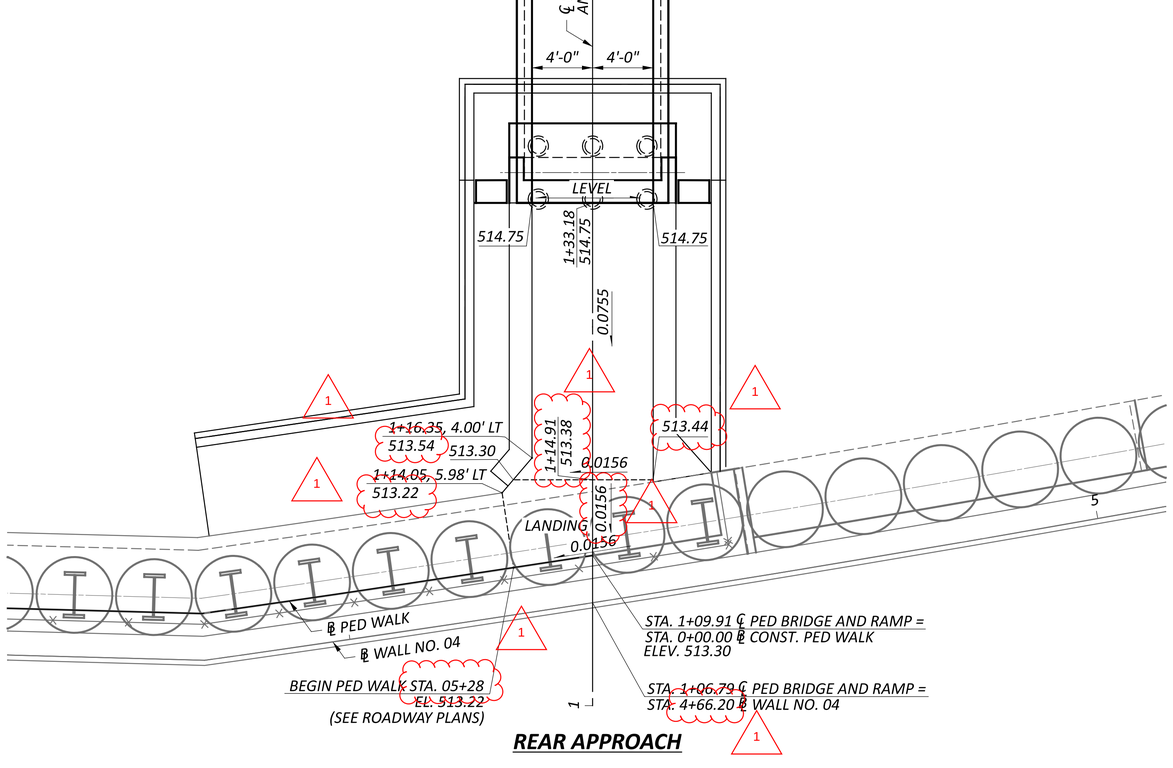

REAR APPROACH

1	09/01/25	SHEET REVISIONS
ADDM' NO.	DATE	DESCRIPTION
DATE COMPLETED		

PEDESTRIAN RAMP GRADE DETAILS
BRIDGE NO. HAM-75-0123E
PEDESTRIAN BRIDGE OVER RAMP V AND WINCHELL AVE.

DESIGN AGENCY
Palmer ENGINEERING
8350 E. KEMPER ROAD
SUITE B
CINCINNATI, OH 45249
(513) 469-1600

DESIGNER RJB
REVIEWER BJF 04/11/25
PROJECT ID 122048
SUBSET 15 | TOTAL 22
SHEET P.345 | TOTAL P.421

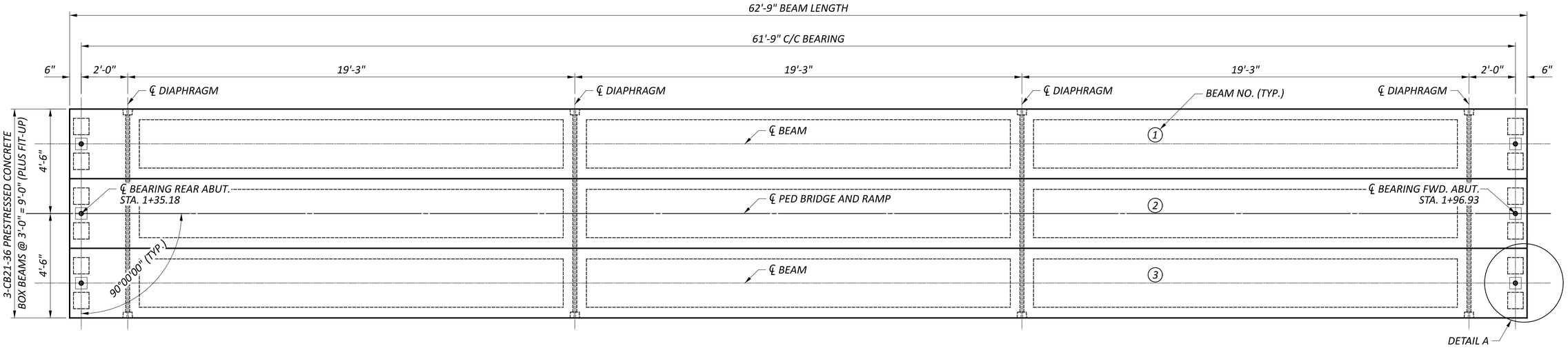

FRAMING PLAN

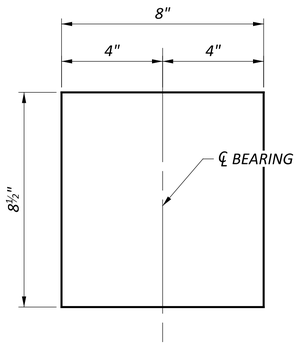

BEARING PLAN

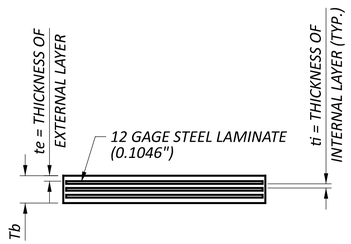

BEARING ELEVATION

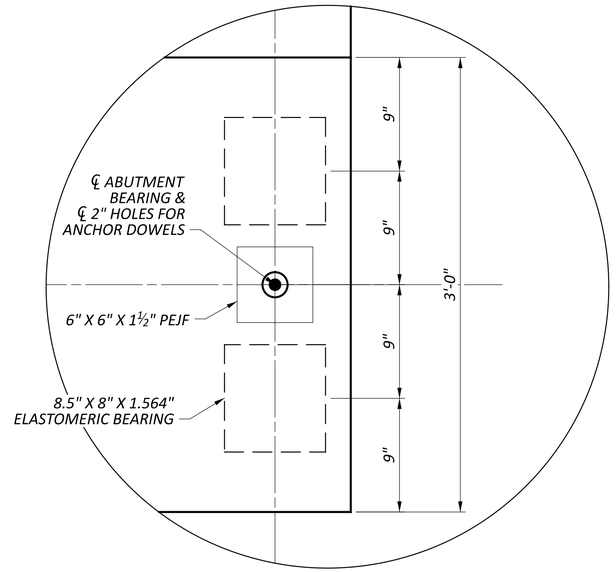

DETAIL A

BEARING SCHEDULE

LOCATION	UNFACTORED LOAD (KIPS)			DIMENSION (IN)					NO. OF ti	NO. OF te	NO. OF STEEL LAMINATES (12 GAGE)	NUMBER REQUIRED
	DL	PL	MAXIMUM DESIGN LOAD	WIDTH	LENGTH	Tb	ti	te				
ABUTMENTS	18.4	4.2	22.6	8.5	8	1.564	0.375	0.25	2	2	3	12

1

1	09/01/25	SHEET REVISIONS
ADDM' NO.	DATE	DESCRIPTION
DATE COMPLETED		

NOTES:

1. THE ELASTOMER SHALL HAVE HARDNESS OF 50 DUROMETER. THE BEARINGS WERE DESIGNED IN ACCORDANCE WITH SECTION 14.7.6 (METHOD A) OF THE AASHTO LRFD BRIDGE DESIGN SPECIFICATIONS. THE LONG-TERM COMPRESSION PROOF LOAD TEST (AASHTO STANDARD SPECIFICATIONS FOR HIGHWAY BRIDGES, DIVISION II, SECTION 18.7.2.8) IS NOT REQUIRED.

2. ALL BEARINGS SHALL BE MARKED PRIOR TO SHIPPING. THE MARKS SHALL INCLUDE THE BEARING LOCATION ON THE BRIDGE, AND A DIRECTION ARROW THAT POINTS UP-STATION. ALL MARKS SHALL BE PERMANENT.

FRAMING PLAN
BRIDGE NO. HAM-75-0123E
PEDESTRIAN BRIDGE OVER RAMP V AND WINCHELL AVE.

SFN 3109152

DESIGN AGENCY
Palmer ENGINEERING
8350 E. KEMPER ROAD
SUITE B
CINCINNATI, OH 45249
(513) 469-1600

DESIGNER	CHECKER
RJB	TES

REVIEWER: BJF 04/11/25

PROJECT ID: 122048

SUBSET	TOTAL
16	22

SHEET	TOTAL
P.346	P.421

HAM-IR75-1.05

MODEL: Sheet PAPERSIZE: 34x22 (in.) DATE: 8/27/2025 TIME: 12:59:03 PM PLTDRV: OHDOT_PDF.pltcfg PENTBL: OHDOT_Pen.tbl USER: swalker@palmernet.com WORKSPACE: OHDOTCEx02 WORKSET: 122048 PRODUCT: OpenRoadsDesigner 24.00.00.205
pw:\\ohiodot-pw.bentley.com:ohiodot-pw-02\Documents\01 Active Projects\District 08\Hamilton\122048\402-Engineering_PalmerEngineering\Structures\SFN_3109152_SS001.dgn

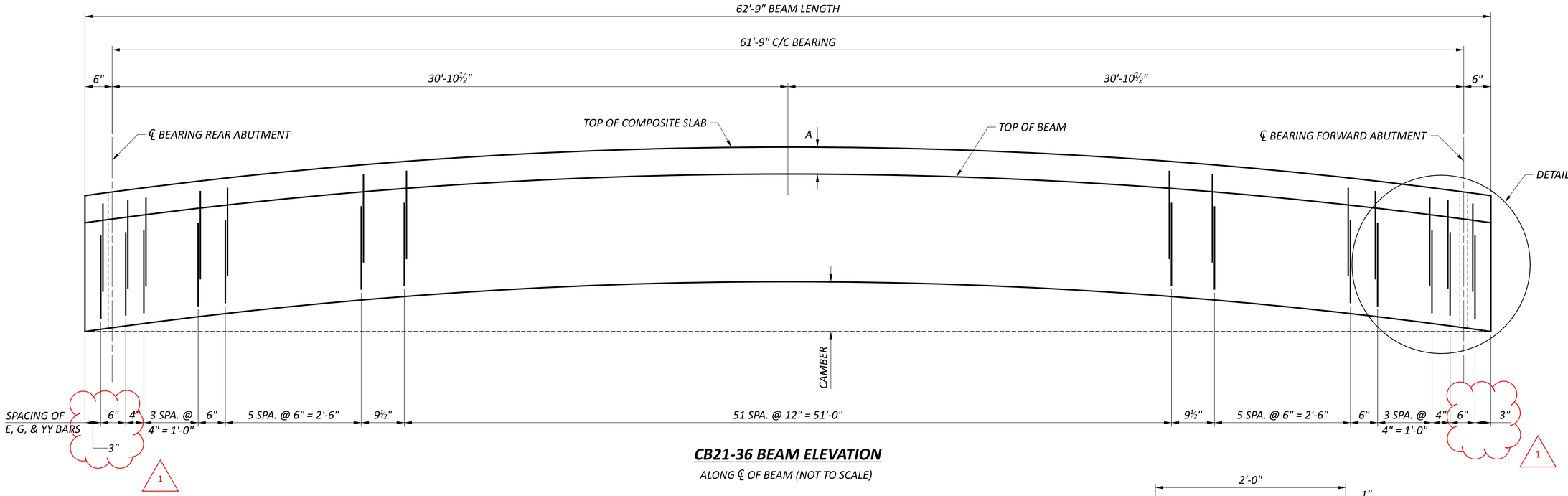

CB21-36 BEAM ELEVATION

ALONG ℄ OF BEAM (NOT TO SCALE)

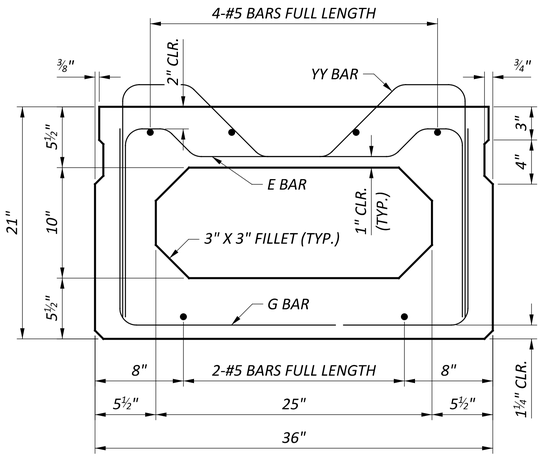

CB21-36 MILD REINFORCING

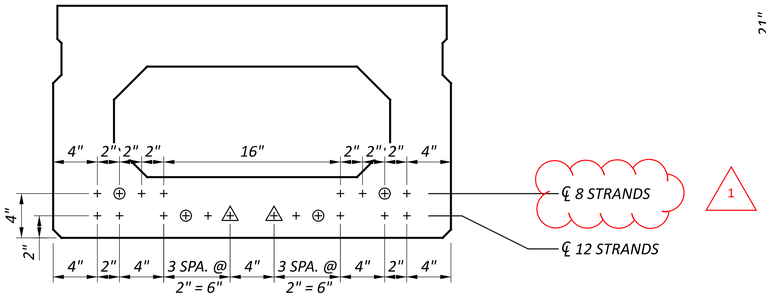

CB21-36 STRAND PATTERN

△ - DEBOND STRAND 6'-3" FROM END OF BEAM

⊕ - DEBOND STRAND 3'-0" FROM END OF BEAM

1

TOPPING THICKNESS @ CL OF BEAM (DIM. A) (IN.)			
	REAR ABUT.	MIDSPAN	FWD. ABUT.
ALL BEAMS	7.13	6.00	7.13

1

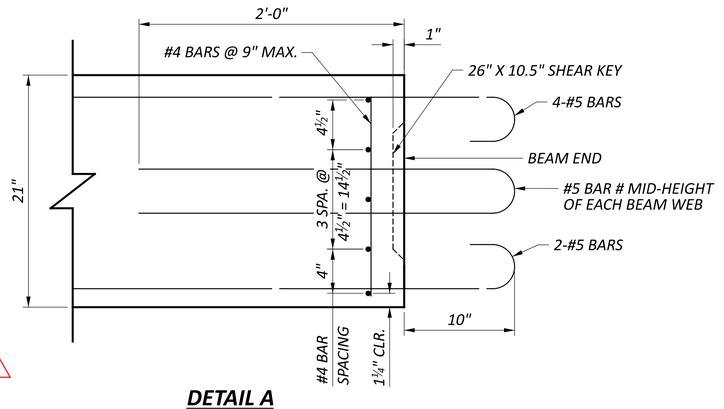

DETAIL A

NOTES:

1. TERMINATE FULL LENGTH TOP AND BOTTOM BARS WITH A STANDARD 180 DEGREE HOOK AS SHOWN.
2. SEE STANDARD DRAWING PSBD-2-07 FOR ADDITIONAL DETAILS.
3. ESTIMATED CAMBER AT DAY 0 (D0) IS 1.29".
4. ESTIMATED CAMBER AT DAY 0 (D30) IS 2.21".
5. DEFLECTION DUE TO REMAINING DEAD LOAD (CONCRETE DECK, RAILING, ETC.) IS 1.03".
6. THE BEAM SEAT ELEVATIONS ASSUME ESTIMATED CAMBER (D30).
7. DECK SLAB THICKNESS FOR CONCRETE QUANTITY: THE ESTIMATED QUANTITY OF DECK CONCRETE IS MEASURED ACCORDING TO CMS 511. IN ADDITION TO THE DESIGN SLAB THICKNESS, THE QUANTITY INCLUDES A VARIABLE HAUNCH THICKNESS THAT PROVIDES AN ALLOWANCE FOR VERTICAL GRADE ADJUSTMENT AND BEAM CAMBER.
8. SEE SHEET 16 22 FOR BEARING PAD DETAILS.
9. BARS PROJECTING INTO THE DECK OR INTO THE ABUTMENT DIAPHRAGM SHALL BE GALVANIZED.

1

1

1	09/01/25	SHEET REVISIONS
ADDM' NO.	DATE	DESCRIPTION
DATE COMPLETED		

BEAM DETAILS
BRIDGE NO. HAM-75-0123E
PEDESTRIAN BRIDGE OVER RAMP V AND WINCHELL AVE.

SFN 3109152

DESIGN AGENCY

Palmer ENGINEERING
8350 E. KEMPER ROAD
SUITE B
CINCINNATI, OH 45249
(513) 469-1600

DESIGNER	CHECKER
RJB	TES

REVIEWER BJF 04/11/25

PROJECT ID 122048

SUBSET	TOTAL
17	22

SHEET	TOTAL
P.347	P.421

HAM-IR75-1.05

MODEL: Sheet PAPERSIZE: 34x22 (in.) DATE: 8/28/2025 TIME: 6:36:48 AM PLTDRV: OHDOT_PDF.pltcfg PENTBL: OHDOT_Pen.tbl USER: swalker@palmernet.com WORKSPACE: OHDOTCEv02 WORKSET: 122048 PRODUCT: OpenRoadsDesigner 24.00.00.205
pw:\\ohiodot-pw.bentley.com:ohiodot-pw-02\Documents\01 Active Projects\District 08\Hamilton\122048\402-Engineering_PalmerEngineering\Structures\SFN_3109152\Sheets\122048_SFN_3109152_SS002.dgn

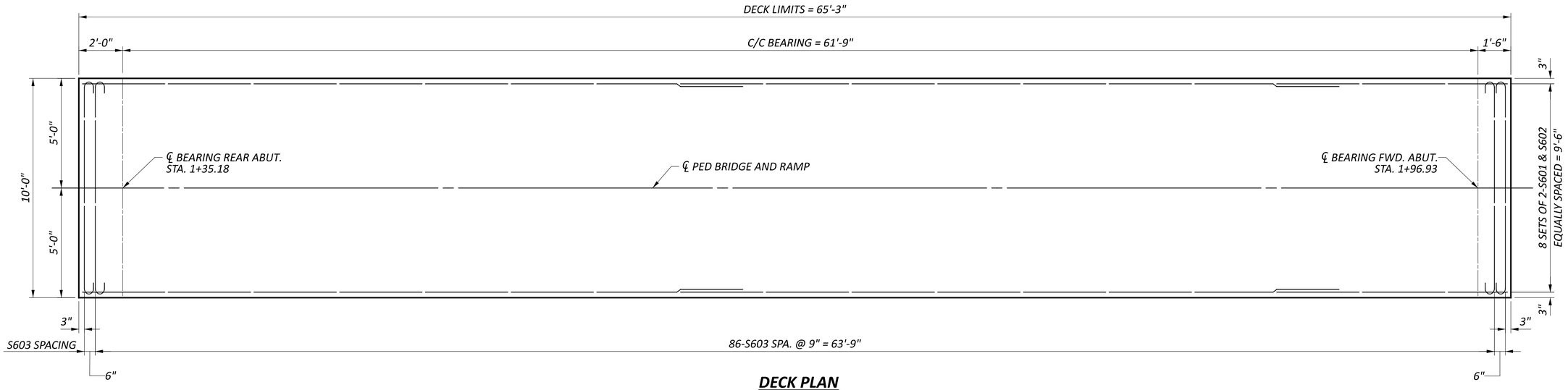

DECK PLAN

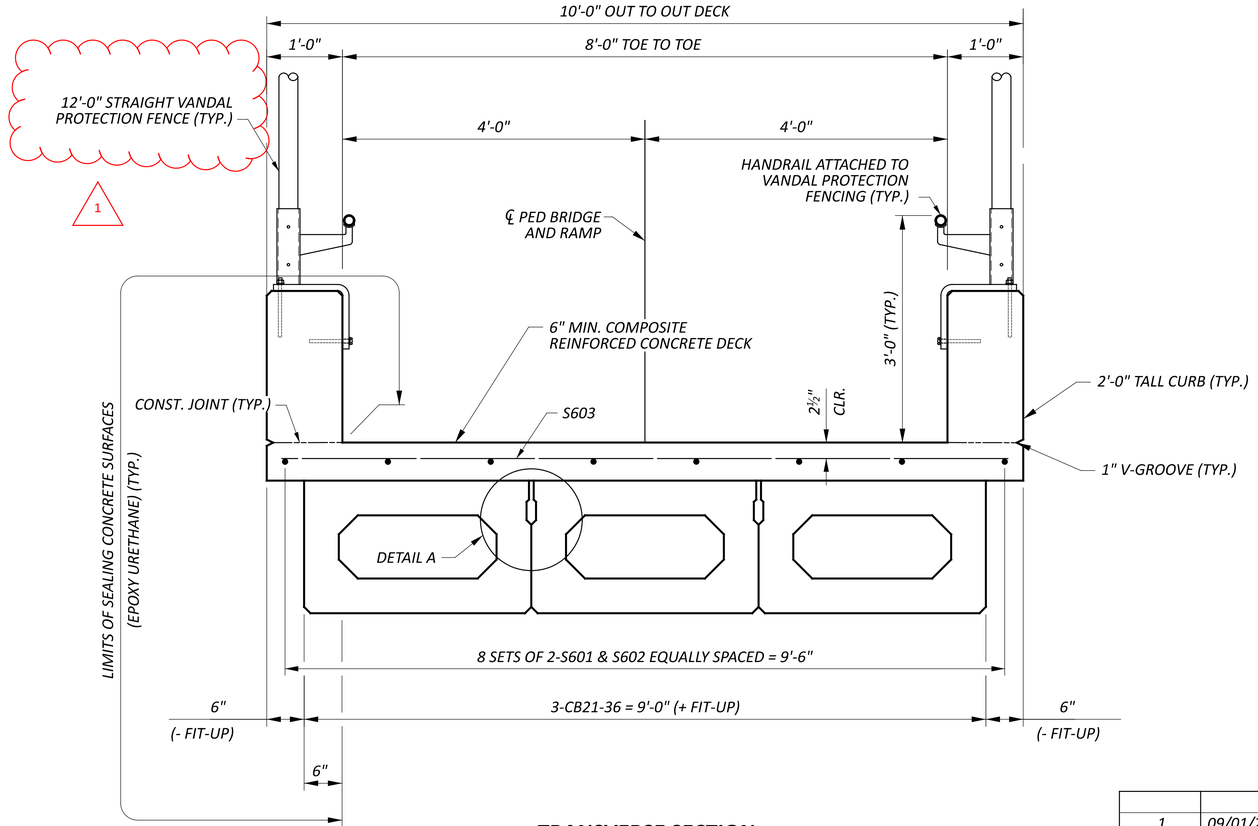

TRANSVERSE SECTION

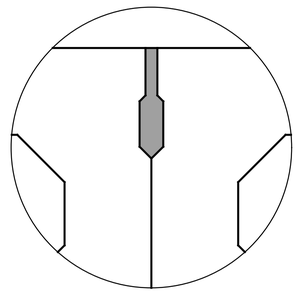

DETAIL 'A'

SHEAR KEYWAYS SHALL BE MORTARED TO A FINISHED PLANE BETWEEN THE TOP EDGES OF THE ADJACENT BEAMS WHERE VERTICAL OFFSET OCCURS WITHIN TOLERANCES.

LAP SPLICES:

#6 = 2'-10" (LONGITUDINAL)

NOTES:

1. SEE SHEETS 4 22 THROUGH 9 22 FOR END DIAPHRAGM DETAILS.

1	09/01/25	SHEET REVISIONS
ADDM' NO.	DATE	DESCRIPTION
DATE COMPLETED		

DECK PLAN AND TRANSVERSE SECTION
BRIDGE NO. HAM-75-0123E
PEDESTRIAN BRIDGE OVER RAMP V AND WINCHELL AVE.

SFN 3109152

DESIGN AGENCY
Palmer ENGINEERING
8350 E. KEMPER ROAD
SUITE B
CINCINNATI, OH 45249
(513) 469-1600

DESIGNER	CHECKER
RJB	TES

REVIEWER: BJF 04/11/25

PROJECT ID: 122048

SUBSET	TOTAL
18	22

SHEET	TOTAL
P.348	P.421

HAM-IR75-1.05

MODEL: Sheet PAPERSIZE: 34x22 (in.) DATE: 8/27/2025 TIME: 12:59:16 PM PLTDRV: OHDOT_PDF.pltcfg PENTBL: OHDOT_Pen.tbl USER: swalker@palmernet.com WORKSPACE: OHDOTCEx02 WORKSET: 122048 PRODUCT: OpenRoadsDesigner 24.00.00.205
pw:\\ohiodot-pw.bentley.com:ohiodot-pw-02\Documents\01 Active Projects\District 08\Hamilton\122048\402-Engineering_PalmerEngineering\Structures\SFN_3109152_SD001.dgn

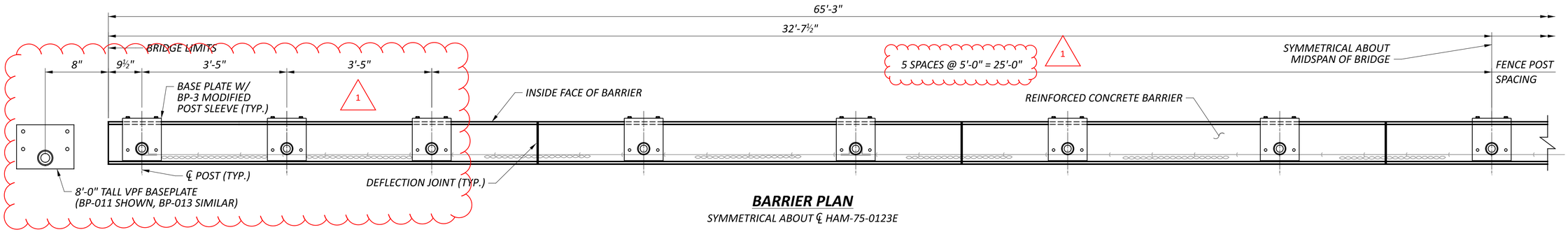

BARRIER PLAN

SYMMETRICAL ABOUT ℄ HAM-75-0123E

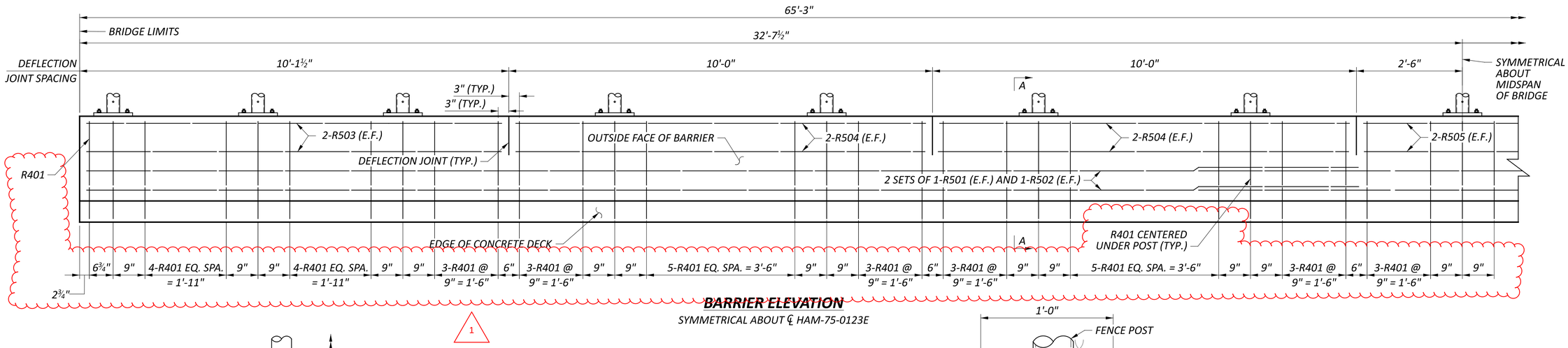

BARRIER ELEVATION

SYMMETRICAL ABOUT ℄ HAM-75-0123E

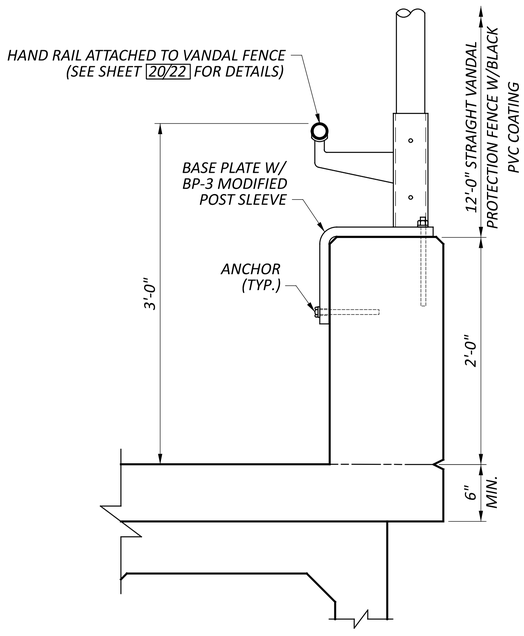

TYPICAL BARRIER SECTION

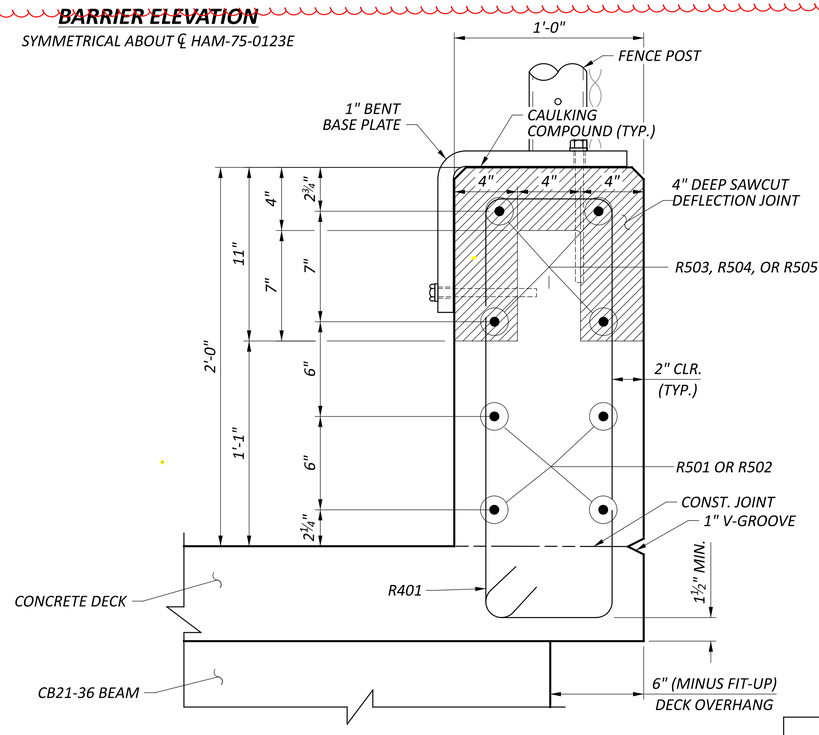

SECTION A-A

LAP SPLICES

#5 = 3'-2" (LONGITUDINAL)

1	09/01/25	SHEET REVISIONS
ADDM' NO.	DATE	DESCRIPTION
DATE COMPLETED		

BARRIER DETAILS
BRIDGE NO. HAM-75-0123E
PEDESTRIAN BRIDGE OVER RAMP V AND WINCHELL AVE.

SFN 3109152

DESIGN AGENCY

Palmer ENGINEERING
8350 E. KEMPER ROAD
SUITE B
CINCINNATI, OH 45249
(513) 469-1600

DESIGNER	CHECKER
RJB	TES

REVIEWER BJF 04/11/25

PROJECT ID 122048

SUBSET	TOTAL
19	22

SHEET	TOTAL
P.349	P.421

HAM-IR75-1.05

MODEL: Elevation Sheet PAPERSIZE: 34x22 (in.) DATE: 8/28/2025 TIME: 7:36:53 AM PLTDRV: OHDOT_PDF.pltcfg PENTBL: OHDOT_Pen.tbl USER: swalker@palmernet.com WORKSPACE: OHDOTCEv02 WORKSET: 122048 PRODUCT: OpenRoadsDesigner 24.00.00.205
pw:\\ohiodot-pw.bentley.com:ohiodot-pw-02\Documents\01 Active Projects\District 08\Hamilton\122048\402-Engineering_PalmerEngineering\Structures\SFN_3109152\Sheets\122048_SFN_3109152_SA001.dgn

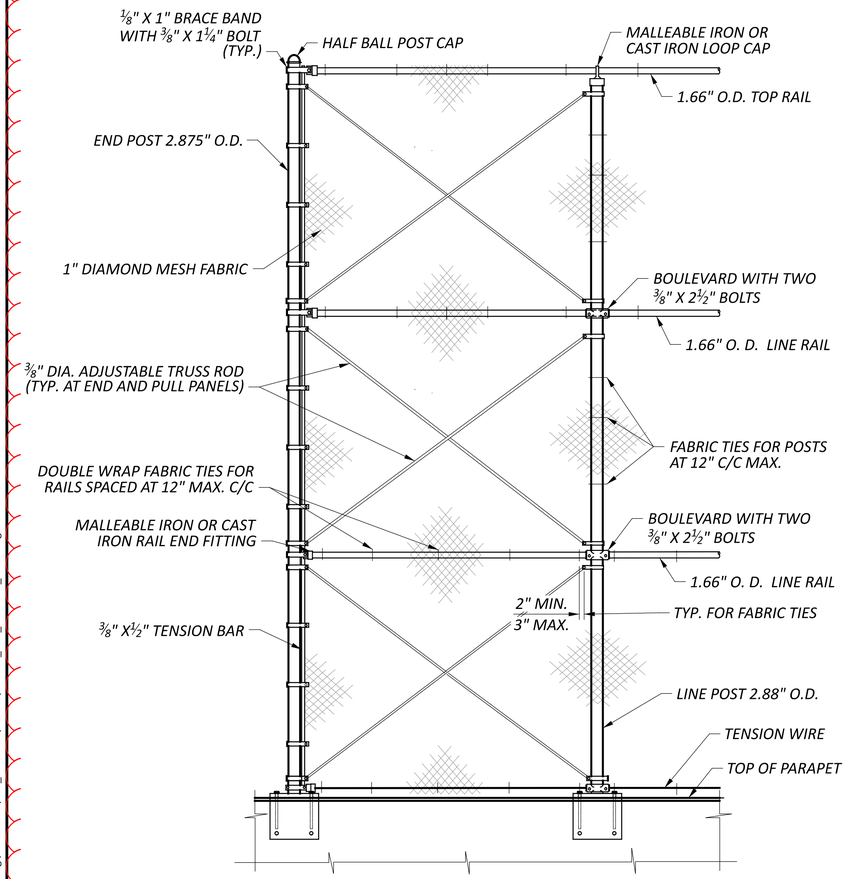

INSIDE ELEVATION OF STRAIGHT VANDAL PROTECTION FENCE

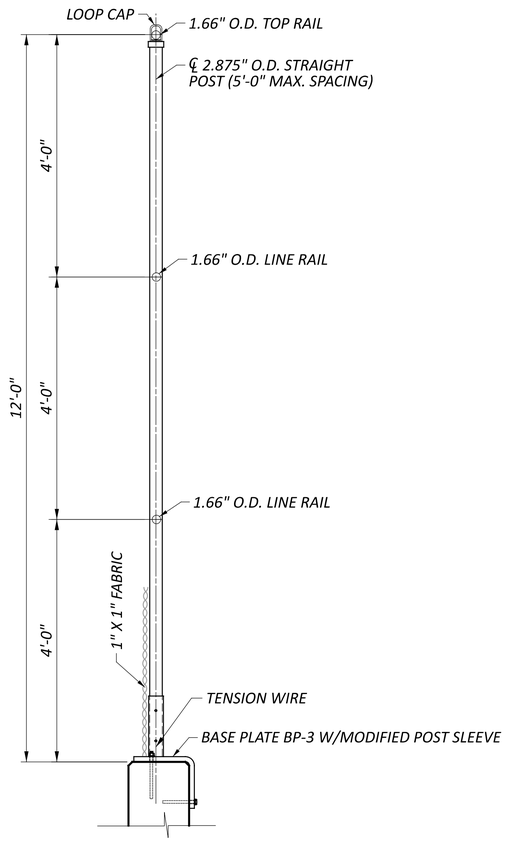

POST SECTION

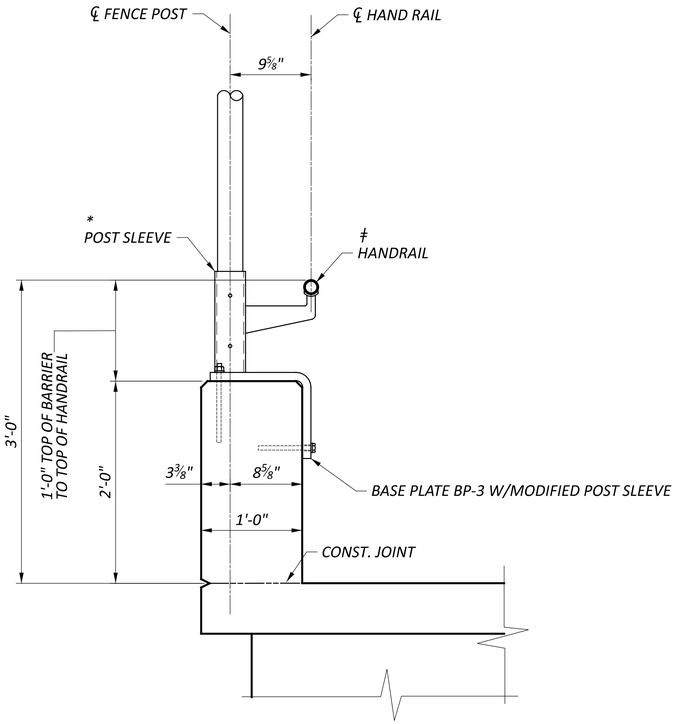

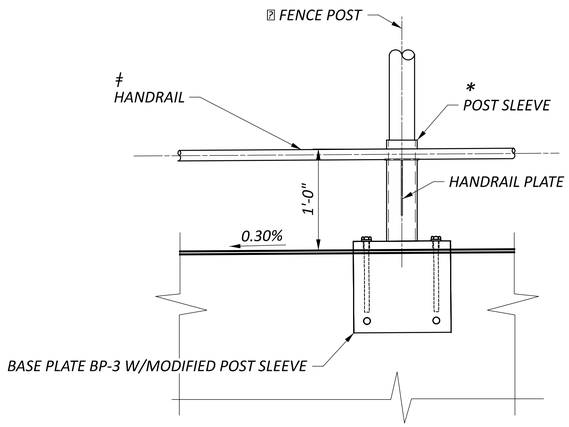

HANDRAIL ELEVATION DETAIL SLOPED AREA

1

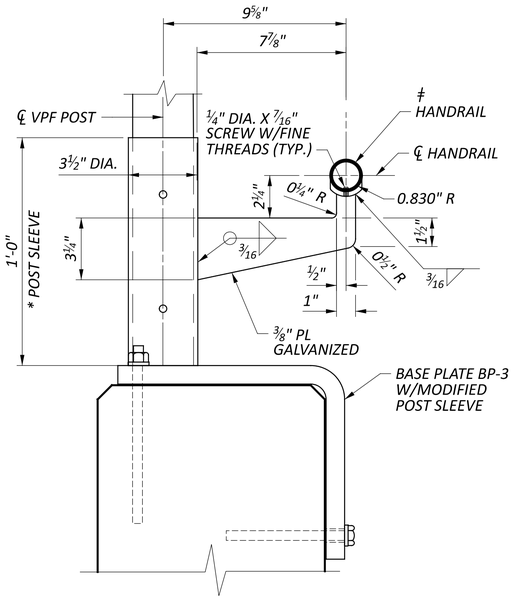

HANDRAIL PLATE DETAIL

LEGEND

*
POST SLEEVES SHALL BE 3.5 INCH OUTSIDE DIAMETER PIPE, ASTM A53, 35,000 PSI MINIMUM YIELD STRENGTH, 7.58 LB/FT, GALVANIZED ACCORDING TO 711.02.

ǂ
HANDRAIL SHALL BE SWEDGED END PIPE 1.660 " O.D. PER C&MS 710.03 TYPE I GRADE 2 - FY = 50 KSI.

1	09/01/25	SHEET REVISIONS
ADDM' NO.	DATE	DESCRIPTION
DATE COMPLETED		

NOTES:

DECK PLAN: SEE SHEET 18/22 .

RAILING PLAN: SEE SHEET 19/22 .

CONCRETE BARRIER REINFORCING, SETTING ANCHORS:
ACCURATELY PLACE REINFORCING STEEL IN THE CONCRETE BARRIER TO AVOID INTERFERENCE WITHTHE DRILLING OF FENCE ANCHOR BAR HOLES.

VANDAL PROTECTION FENCE, 12' STRAIGHT, COATED FABRIC:
FOR DIMENSIONS AND DETAILS NOT SHOWN, SEE STANDARD CONSTRUCTION DRAWING VPF-1-24. BASE PLATES SHALL BE 50 KSI GALVANIZED STEEL.

FENCE DETAILS
BRIDGE NO. HAM-75-0123E
PEDESTRIAN BRIDGE OVER RAMP V AND WINCHELL AVE.

SFN 3109152

DESIGN AGENCY
Palmer ENGINEERING
8350 E. KEMPER ROAD
SUITE B
CINCINNATI, OH 45249
(513) 469-1600

DESIGNER	CHECKER
AJP	RJB

REVIEWER BJF 04/11/25

PROJECT ID 122048

SUBSET	TOTAL
20	22

SHEET	TOTAL
P.350	P.421

HAM-IR75-1.05

MODEL: Fence Sheet PAPERSIZE: 34x22 (in.) DATE: 8/27/2025 TIME: 12:59:22 PM PLTDRV: OHDOT_PDF.pltcfg PENTBL: OHDOT_Pen.tbl USER: swalker@palmernet.com WORKSPACE: OHDOTCEv02 WORKSET: 122048 PRODUCT: OpenRoadsDesigner 24.00.00.205
pw:\\ohiodot-pw.bentley.com:ohiodot-pw-02\Documents\01 Active Projects\District 08\Hamilton\122048\02-Engineering_Palmer\Engineering\Structures\SFN_3109152\Sheets\122048_SFN_3109152_SA001.dgn

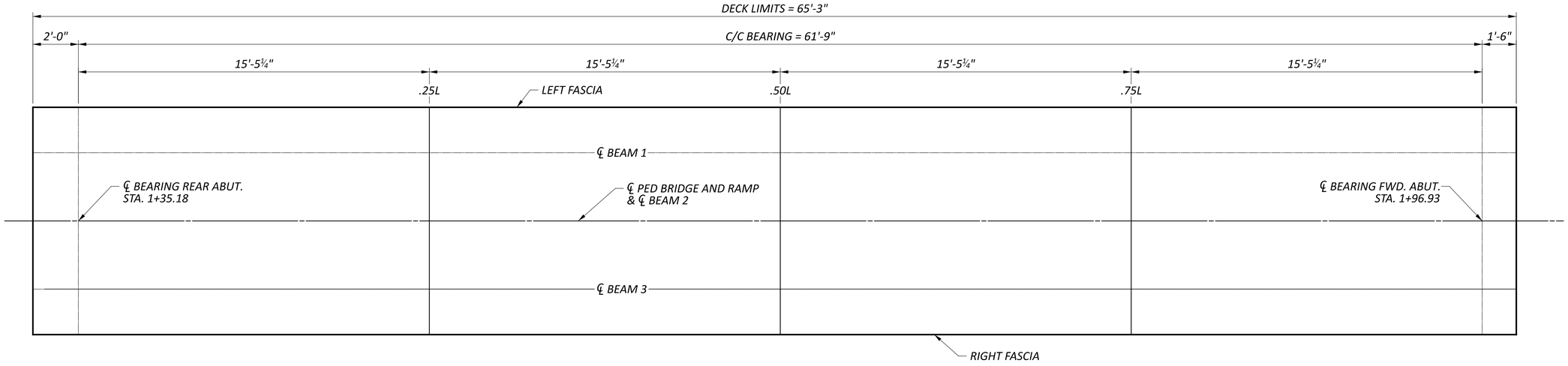

PLAN

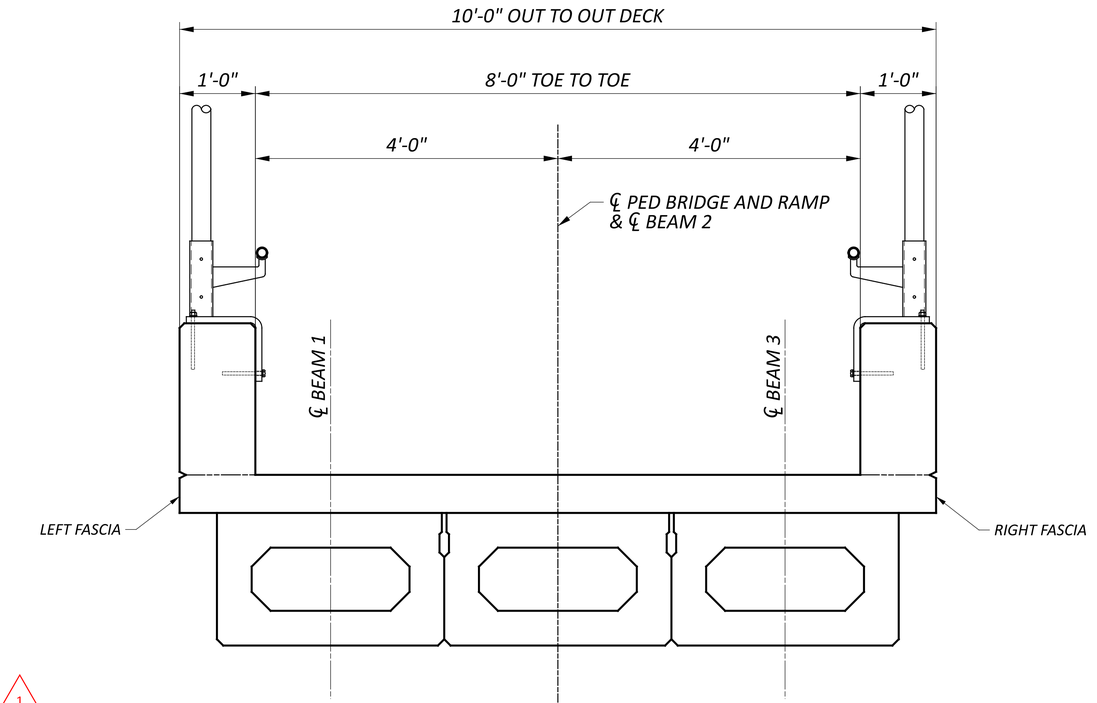

TRANSVERSE SECTION

FINAL DECK SURFACE & SCREED ELEVATIONS

LOCATION		CL BRG. REAR ABUT.	SPAN 1			CL BRG. FWD. ABUT.
			0.25L	0.50L	0.75L	
LEFT FASCIA	STATION	01+35.18	01+50.62	01+66.06	01+81.49	01+96.93
	SCREED ELEVATION	514.76	514.87	514.94	514.96	514.95
	FINAL DECK SURFACE ELEVATION	514.76	514.81	514.85	514.90	514.95
CL BEAM 1	STATION	01+35.18	01+50.62	01+66.06	01+81.49	01+96.93
	FINAL DECK SURFACE ELEVATION	514.76	514.81	514.85	514.90	514.95
CL CONST. PED BRIDGE AND RAMP & BEAM 2	STATION	01+35.18	01+50.62	01+66.06	01+81.49	01+96.93
	SCREED ELEVATION	514.76	514.87	514.94	514.96	514.95
	FINAL DECK SURFACE ELEVATION	514.76	514.81	514.85	514.90	514.95
CL BEAM 3	STATION	01+35.18	01+50.62	01+66.06	01+81.49	01+96.93
	FINAL DECK SURFACE ELEVATION	514.76	514.81	514.85	514.90	514.95
RIGHT FASCIA	STATION	01+35.18	01+50.62	01+66.06	01+81.49	01+96.93
	SCREED ELEVATION	514.76	514.87	514.94	514.96	514.95
	FINAL DECK SURFACE ELEVATION	514.76	514.81	514.85	514.90	514.95

1

1	09/01/25	SHEET REVISIONS
ADDM' NO.	DATE	DESCRIPTION
DATE COMPLETED		

NOTES:

1. *FINAL DECK SURFACE ELEVATIONS SHOWN REPRESENT THE DECK SURFACE LOCATION AFTER ALL ANTICIPATED DEAD LOAD DEFLECTIONS HAVE OCCURRED.*

2. *OFFSETS REFERENCE ℄ PED BRIDGE AND RAMP.*

DECK ELEVATIONS
BRIDGE NO. HAM-75-0123E
PEDESTRIAN BRIDGE OVER RAMP V AND WINCHELL AVE.

SFN 3109152

DESIGN AGENCY
Palmer ENGINEERING
8350 E. KEMPER ROAD
SUITE B
CINCINNATI, OH 45249
(513) 469-1600

DESIGNER	CHECKER
RJB	TES

REVIEWER: BJF 04/11/25

PROJECT ID: 122048

SUBSET	TOTAL
21	22

SHEET	TOTAL
P.351	P.421

HAM-IR75-1.05

MODEL: Sheet PAPERSIZE: 34x22 (in.) DATE: 8/27/2025 TIME: 12:59:28 PM PLTDRV: OHDOT_PDF.pltcfg PENTBL: OHDOT_Pen.tbl USER: swalker@palmernet.com WORKSPACE: OHDOTCEx02 WORKSET: 122048 PRODUCT: OpenRoadsDesigner 24.00.00.205
pw:\\ohiodot-pw.bentley.com:ohiodot-pw-02\Documents\01 Active Projects\District 08\Hamilton\122048\402-Engineering_PalmerEngineering\Structures\SFN_3109152\Sheets\122048_SFN_3109152_SD002.dgn

REINFORCING STEEL LIST

MARK	NUMBER REAR	NUMBER FWD.	NUMBER TOTAL	LENGTH	WEIGHT (LBS.)	TYPE	DIMENSIONS A	B	C	D	E	R	INC.
ABUTMENTS (GALVANIZED STEEL REINFORCEMENT - GSR)													
A501	12		12	10' - 8"	134	STR							
A502		12	12	13' - 0"	163	STR							
A503		15	15	21' - 11"	343	3	3' - 7"	7' - 1"					
A504		13	13	13' - 0"	177	STR							
A505		11	11	15' - 3"	175	2	6' - 5"	2' - 8"	6' - 5"				
A506		11	11	15' - 1"	174	2	6' - 4"	2' - 8"	6' - 4"				
A507		8	8	13' - 9"	115	2	6' - 5"	1' - 2"	6' - 5"				
A508		8	8	18' - 3"	153	2	8' - 8"	1' - 2"	8' - 8"				
A509		40	40	4' - 6"	188	STR							
A510	14		14	15' - 0"	220	3	2' - 8"	4' - 7"					
A511	6		6	16' - 11"	106	3	1' - 2"	7' - 0"					
A512	20		20	5' - 4"	112	STR							
A513	6		6	6' - 5"	40	3	1' - 9"	1' - 2"					
A601	14		14	18' - 4"	386	3	6' - 2"	2' - 7"					
A801	9		9	10' - 8"	257	STR							
A802		4	4	13' - 0"	139	STR							
A803		9	9	13' - 0"	313	STR							
A804	4		4	7' - 3"	78	STR							
ABUTMENTS GSR SUBTOTAL =					**3,273**	**LBS.**							
DIAPHRAGMS (GSR)													
D401	4	2	6	9' - 10"	40	3	2' - 8"	2' - 0"					
D402	12	6	18	2' - 8"	33	STR							
D501	6	6	12	10' - 8"	134	STR							
D502	10	10	20	6' - 11"	144	3	1' - 2"	2' - 0"					
DIAPHRAGMS GSR SUBTOTAL =					**351**	**LBS.**							
DECK (GALVANIZED STEEL REINFORCEMENT - GSR)													
S601		16		30' - 0"	721	STR							
S602		8		10' - 7"	128	STR							
S603		88		11' - 0"	1,454	17	9' - 8"						
DECK GSR SUBTOTAL =					**2,303**	**LBS.**							
RAILING (GSR)													
R401		178		6' - 3"	744	3	0' - 8"	2' - 2 ½"					
R501		16		30' - 0"	501	STR							
R502		8		11' - 3"	94	STR							
R503		16		9' - 9"	163	STR							
R504		32		9' - 8"	323	STR							
R505		8		4' - 8"	39	STR							
RAILING GSR SUBTOTAL =					**1,864**	**LBS.**							
GSR TOTAL =					**7,791**	**LBS.**							

1

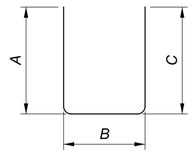

TYPE-2

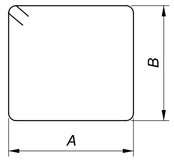

TYPE-3



TYPE-17

1	09/01/25	SHEET REVISIONS
ADDM' NO.	DATE	DESCRIPTION
DATE COMPLETED		

REINFORCING STEEL LIST
BRIDGE NO. HAM-75-0123E
PEDESTRIAN BRIDGE OVER RAMP V AND WINCHELL AVE.

SFN 3109152

DESIGN AGENCY

Palmer ENGINEERING
8350 E. KEMPER ROAD
SUITE B
CINCINNATI, OH 45249
(513) 469-1600

DESIGNER	CHECKER
CDVK	RJB

REVIEWER BJF 04/11/25

PROJECT ID 122048

SUBSET	TOTAL
22	22

SHEET	TOTAL
P.352	P.421

HAM-IR75-1.05

MODEL: Sheet PAPERSIZE: 34x22 (in.) DATE: 8/28/2025 TIME: 7:33:51 AM PLTDRV: OHDOT_PDF.pltcfg PENTBL: OHDOT_Pen.tbl USER: swalker@palmernet.com WORKSPACE: OHDOTCivil02 WORKSET: 122048 PRODUCT: OpenRoadsDesigner 24.00.00.205
pw:\\ohiodot-pw.bentley.com:ohiodot-pw-02\Documents\01 Active Projects\District 08\Hamilton\122048\402-Engineering_PalmerEngineering\Structures\SFN_3109152\Sheets\122048_SFN_3109152_SL001.dgn

LANDSCAPE IRRIGATION SYSTEM

1.0 GENERAL REQUIREMENTS

A. THE WORK SHALL INCLUDE THE FOLLOWING: FURNISH AND INSTALL A FULLY AUTOMATIC IRRIGATION SYSTEM, INCLUDING ALL LABOR, MATERIALS, EQUIPMENT AND SERVICES REQUIRED TO PROVIDE A COMPLETE AND FULLY OPERATING SYSTEM, AS SPECIFIED HEREIN AND AS DIAGRAMMED IN THE DRAWINGS.
B. THE DRAWINGS ARE SCHEMATIC AND TOGETHER WITH THE SPECIFICATIONS ARE INTENDED TO COMPLEMENT EACH OTHER. THE CONTRACTOR SHALL FURNISH AND INSTALL ALL PARTS, WHICH MAY BE REQUIRED BY THE DRAWINGS AND OMITTED BY THE SPECIFICATIONS, OR VICE VERSA, JUST AS THOUGH REQUIRED BY BOTH. SHOULD THERE APPEAR TO BE DISCREPANCIES OR QUESTION OF INTENT, THE CONTRACTOR SHALL REFER THE MATTER TO THE PROJECT ENGINEER FOR DECISION, AND THIS INTERPRETATION SHALL BE FINAL, CONCLUSIVE AND BINDING.
C. ALL NECESSARY FIELD CHANGES TO THE DRAWINGS TO AVOID ANY OBSTACLES SHALL BE MADE BY THE CONTRACTOR WITH THE PRIOR APPROVAL OF THE PROJECT ENGINEER.
D. TRENCH EXCAVATION, BACK FILLING AND BEDDING MATERIALS, TOGETHER WITH THE TESTING OF THE COMPLETED INSTALLATION SHALL BE INCLUDED IN THIS WORK.
E. ALL PARTS NECESSARY FOR THE PROPER AND COMPLETE EXECUTION OF THE WORK, WHETHER OR NOT INDICATED ON THE DRAWINGS, SHALL BE FURNISHED.
F. THE DIAGRAMATIC IRRIGATION SYSTEM SHOWN ON THE DRAWINGS AND DESCRIBED WITHIN THESE SPECIFICATIONS REPRESENTS A SINGLE CONTROLLER AND IRRIGATION SYSTEM FOR EACH BRIDGE LANDSCAPE SUPPLIED FROM MUNICIPAL WATER. A MINIMUM 65-PSI STATIC AND 60-PSI DYNAMIC PRESSURE AT FULL SYSTEM FLOW IS REQUIRED FROM THE IRRIGATION CONTRACTOR'S POINT OF CONNECTION DOWNSTREAM OF THE BACKFLOW PREVENTER.
G. THE WORK UNDER THIS SECTION SHALL COMPLY WITH ALL ORDINANCES AND REGULATIONS OF AUTHORITIES HAVING JURISDICTION. THE CONTRACTOR SHALL OBTAIN AND PAY FOR ANY AND ALL PERMITS, TESTS AND CERTIFICATIONS REQUIRED FOR THE EXECUTION OF WORK UNDER THIS SECTION. FURNISH COPIES OF PERMITS, CERTIFICATIONS AND APPROVAL NOTICES TO THE PROJECT ENGINEER PRIOR TO REQUESTING PAYMENT. THE CONTRACTOR SHALL INCLUDE IN THEIR BID ANY CHARGES BY THE WATER DEPARTMENT, UTILITY COMPANY, OR OTHER AUTHORITIES FOR WORK DONE BY THEM AND CHARGED TO THE CONTRACTOR.
H. THE CONTRACTOR SHALL BECOME FULLY INFORMED OF EXISTING CONDITIONS ON THE SITE BEFORE SUBMITTING A BID, AND SHALL BE FULLY RESPONSIBLE FOR CARRYING OUT ALL WORK REQUIRED TO FULLY AND PROPERLY EXECUTE THE WORK OF THE CONTRACT. NO CLAIM FOR EXTRA COMPENSA- TION OR EXTENSION OF TIME WILL BE ALLOWED ON ACCOUNT OF ACTUAL CONDITIONS INCONSISTENT WITH THOSE ASSUMED.

1.1 METHOD OF MEASUREMENT

LANDSCAPE IRRIGATION SYSTEM SHALL BE MEASURED BY LUMP SUM FOR EACH SEPARATE SYSTEM INCLUDING BRIDGE AND ADJACENT STREETSCAPE SEGMENT WHERE APPLICABLE.

1.2 BASIS OF PAYMENT

THE ACCEPTED LANDSCAPE IRRIGATION SYSTEM WILL BE PAID FOR AT THE CONTRACT PRICE DESIGNATED FOR EACH BRIDGE SHOWN ON THE PLANS. ALL COSTS FOR WORK IN THIS SECTION ARE TO BE INCLUDED IN THE LUMP SUM PRICE FOR EACH LANDSCAPE IRRIGATION SYSTEM.

1.3 REFERENCES

APPLICABLE REQUIREMENTS OF ACCEPTED STANDARDS AND CODES SHALL APPLY TO THE WORK OF THIS SECTION AND SHALL BE SO LABELED OR LISTED:

AMERICAN SOCIETY FOR TESTING & MATERIALS (ASTM)

ASTM: D1784 RIGID POLY (VINYL CHLORIDE) (PVC) COMPOUNDS AND CHLORINATED POLY (VINYL CHLORIDE) (CPVC) COMPOUNDS.

ASTM: D1785 POLY (VINYL CHLORIDE) (PVC) PLASTIC PIPE, SCHEDULES 40, 80, AND CL200.

ASTM: D2464 THREADED POLY (VINYL CHLORIDE) (PVC) PLASTIC PIPE FITTINGS, SCHEDULE 80.

ASTM: D2466 POLY (VINYL CHLORIDE) (PVC) PLASTIC PIPE FITTINGS, SCHEDULE 40

ASTM: D2564 SOLVENT CEMENTS FOR POLY (VINYL CHLORIDE) (PVC) PLASTIC PIPING SYSTEMS

ASTM: D2737-99 POLYETHYLENE (PE) PRESSURE RATED TUBE.

NATIONAL PLUMBING CODE (NPC)

NATIONAL ELECTRIC CODE (NEC)

NATIONAL SANITARY FOUNDATION (NSF)

AMERICAN SOCIETY OF AGRICULTURAL ENGINEERS (ASAE)

UNDERWRITERS LABORATORIES, INC. (UL)

OCCUPATIONAL SAFETY AND HEALTH REGULATIONS (OSHA)

1.4 SUBMITTALS

A. SHOP DRAWINGS: SUBMIT THE PROPOSED IRRIGATION SYSTEM PER THE DIAGRAMS AND DESIGN SPECIFICATIONS PROVIDED. SUBMIT PLANS FOR REVIEW BY THE DEPARTMENT PER THE PROJECT REQUIREMENTS FOLLOWING FIELD MEASUREMENTS AND VERIFICATION OF ALL KNOWN UTILTIY CONFLICTS. NOTE ANY DEVIATION FROM THE DESIGN SPECIFICATIONS WHETHER SUGGESTED OR REQUIRED. PLANS MUST MEET REQUIREMENTS OF PERMITTING TO CONSTRUCT.
B. PRODUCT SPECIFICATION SHEETS OF ALL PROPOSED EQUIPMENT TO BE INSTALLED FOR APPROVAL BY PROJECT ENGINEER PRIOR TO THE START OF WORK. THE IRRIGATION SYSTEM MAY NOT COMMENCE UNTIL PRODUCT SHEETS ARE SUBMITTED AND APPROVED. SUBMITTALS SHALL BE MARKED TO SHOW PROPER NOZZLES, SIZES, FLOWS, AND EQUIPMENT TO BE INCLUDED: DRIP TUBING, FLOOD BUBBLER ASSEMBLIES, VALVES, MANUAL AND AUTOMATIC, CONTROLLERS, VALVE BOXES, PIPE AND FITTINGS, WIRE AND CONNECTORS, QUICK COUPLING VALVES, RAIN SENSOR, AND CONTROLS, AIR VACUUM / RELIEF VALVES, AND MISCELLANEOUS MATERIALS.
C. PROJECT RECORD DOCUMENTS: THE CONTRACTOR SHALL PROVIDE AND KEEP UP-TO-DATE A COMPLETE REDLINED RECORD SET OF DRAWINGS OF THE SYSTEM AS THE PROJECT PROCEEDS. DRAWINGS SHALL BE CORRECTED DAILY, SHOWING EVERY CHANGE FROM THE ORIGINAL DRAWINGS AND SPECIFICATIONS. RECORD DRAWINGS SHALL SPECIFY AND EXACTLY LOCATE EACH VALVE BOX LOCATION TO BE REFERENCED BY DISTANCE FROM A MINIMUM OF TWO PERMANENT LOCATIONS. CONTROLLER(S), RAIN SENSOR(S), AIR VACUUM RELIEF VALVES, FLUSHING VALVES, QUICK COUPLING VALVES, WATER METERS, BACK FLOW PREVENTION DEVICE AND ALL OTHER EQUIPMENT SHALL BE INDICATED ON THE DRAWINGS. ALL WIRE ROUTING, WIRE SIZE AND SPLICES SHALL BE INDICATED. MAIN LINE PIPE AND WIRE ROUTE SHALL HAVE TWO (2) DISTINCTLY DIFFERENT GRAPHIC SYMBOLS (LINE TYPES). THIS REDLINED RECORD SET OF DRAWINGS SHALL BE KEPT AT JOB SITE AND SHALL BE USED ONLY AS A RECORD SET. THIS RECORD SET OF DRAWINGS SHALL BE AVAILABLE AT ALL TIMES FOR OBSERVATION AND SHALL BE KEPT IN A LOCATION DESIGNATED BY PROJECT ENGINEER. SHOULD THIS RECORD SET OF DRAWINGS NOT BE AVAILABLE FOR REVIEW OR NOT BE UP-TO-DATE AT THE TIME OF THE OBSERVATION, IT WILL BE ASSUMED NO WORK HAS BEEN COMPLETED. PROVIDE COPIES OF THE REDLINED RECORD SET OF DRAWINGS FOR PROJECT ENGINEER REVIEW. MAKE NEAT AND LEGIBLE NOTATIONS ON THIS RECORD SET OF DRAWINGS AS THE WORK PROCEEDS, SHOWING THE WORK AS ACTUALLY INSTALLED. FOR EXAMPLE, SHOULD A PIECE OF EQUIPMENT BE INSTALLED IN A LOCATION THAT DOES NOT MATCH THE PLAN, INDICATE THAT EQUIPMENT IN A GRAPHIC MANNER IN THE LOCATION OF INSTALLATION AND SO AS TO MATCH THE ORIGINAL SYMBOLS AS INDICATED IN THE IRRIGATION LEGEND. SHOULD THE EQUIPMENT BE DIFFERENT FROM THAT SPECIFIED, INDICATE WITH A NEW GRAPHIC SYMBOL BOTH ON THE DRAWINGS AND THE IRRIGATION LEGEND. THE RELOCATED EQUIPMENT DIMENSIONS AND NORTHING AND EASTING COORDINATES SHOULD THEN BE TRANSFERRED TO THE APPROPRIATE DRAWING IN THIS RECORD SET OF DRAWINGS AT THE PROPER TIME. ON OR BEFORE THE DATE OF FINAL FIELD OBSERVATION, DELIVER CORRECTED AND COMPLETED CAD COMPUTER PLOTS OF "RECORD DRAWINGS" AND ELECTRONIC FILES ON DISK TO THE PROJECT ENGINEER AS PART OF CONTRACT CLOSEOUT. DELIVERY OF PLOTS WILL NOT RELIEVE CONTRACTOR OF THE RESPONSIBILITY OF FURNISHING REQUIRED INFORMATION THAT MAY HAVE BEEN OMITTED FROM THE PRINTS.
D. AT THE END OF EACH SEGMENT OF THE PROJECT THE CONTRACTOR SHALL SUBMIT THE FOLLOWING TO THE PROJECT ENGINEER: PLUMBING PERMITS (IF NONE REQUIRED, SO STATE), MATERIAL APPROVALS, PRESSURE LINE TESTS (BY WHOM APPROVED AND DATE), MATERIALS FURNISHED (RECIPIENT AND DATE).
E. MAINTENANCE AND OPERATING BINDERS SHALL INCLUDE: TABLE OF CONTENTS, WRITTEN DESCRIPTION OF IRRIGATION SYSTEM, SYSTEM DRAWINGS: ONE (1) COPY OF THE ORIGINAL IRRIGATION PLAN; ONE (1) COPY OF THE RECORD DRAWING; ONE (1) REPRODUCIBLE OF THE RECORD DRAWING; ONE (1) COPY OF THE CONTROLLER VALVE SYSTEM WIRING DIAGRAM, LISTING OF MANUFACTURERS, MANUFACTURERS' DATA WHERE MULTIPLE MODEL, TYPE AND SIZE LISTINGS ARE INCLUDED; CLEARLY AND CONSPICUOUSLY INDICATING THOSE THAT ARE PERTINENT TO THIS INSTALLATION, "APPROVED" SUBMITTALS OF ALL IRRIGATION EQUIPMENT, OPERATION INSTRUCTION, MAINTENANCE INSTRUCTION, COMPLETE TROUBLESHOOTING CHARTS, PARTS LIST, WINTERIZATION AND SPRING START-UP PROCEDURES, GUARANTEE DATA, NAMES, ADDRESSES AND TELEPHONE NUMBERS OF RECOMMENDED REPAIR AND SERVICE COMPANIES, AND A COPY OF THE SUGGESTED SYSTEM OPERATING SCHEDULE WHICH SHALL CALL OUT THE CONTROLLER PROGRAM REQUIRED (ZONE RUN TIME IN MINUTES PER DAY AND DAYS PER WEEK) IN ORDER TO PROVIDE THE DESIRED AMOUNT OF WATER TO EACH AREA UNDER NO-RAIN CONDITIONS.

1.5 QUALITY ASSURANCE

A. INSTALLER: A FIRM WHICH HAS AT LEAST FIVE (5) YEARS EXPERIENCE IN WORK OF THE TYPE AND SIZE REQUIRED BY THIS SECTION AND WHICH IS ACCEPTABLE TO THE PROJECT ENGINEER.
B. REFERENCES: THE CONTRACTOR MUST SUPPLY THREE REFERENCES FOR WORK OF THIS TYPE AND SIZE WITH THEIR BID INCLUDING NAMES AND PHONE NUMBERS OF CONTACT PERSON(S).
C. THE PROJECT ENGINEER WILL BE ON SITE AT VARIOUS TIMES TO OBSERVE THE SYSTEM IS BEING INSTALLED ACCORDING TO THE SPECIFICATIONS AND DRAWINGS.
D. COVERAGE TEST: AFTER COMPLETION OF THE SYSTEM, TEST THE OPERATION OF ENTIRE SYSTEM AND ADJUST AS DIRECTED BY THE PROJECT ENGINEER. DEMONSTRATE TO THE PROJECT ENGINEER THAT ALL IRRIGATED AREAS ARE BEING ADEQUATELY COVERED. FURNISH AND INSTALL MATERIALS REQUIRED TO CORRECT ANY GAPS IN COVERAGE.
E. DURING FINAL ADJUSTMENTS AND PROJECT ENGINEER REVIEW, THE CONTRACTOR SHALL BE RESPONSIBLE FOR HAVING TWO-WAY COMMUNICATION AND SUFFICIENT PERSONNEL TO PROVIDE INSTANTANEOUS COMMUNICATION BETWEEN THE OBSERVATION AREA AND THE CONTROLLER FOR THE SYSTEM.

1.6 STORAGE AND HANDLING

STORE AND HANDLE ALL MATERIALS IN COMPLIANCE WITH MANUFACTURER INSTRUCTIONS AND RECOMMENDATIONS. PROTECT FROM ALL POSSIBLE DAMAGE. MINIMIZE ON-SITE STORAGE.

1.7 WARRANTY

A. THE CONTRACTOR SHALL OBTAIN IN THE CITY'S NAME THE STANDARD WRITTEN MANUFACTURER'S GUARANTEE OF ALL MATERIALS FURNISHED UNDER THIS SECTION WHERE SUCH GUARANTEES ARE OFFERED IN THE MANUFACTURER'S PUBLISHED PRODUCT DATA. ALL THESE GUARANTEES SHALL BE IN ADDITION TO, AND NOT IN LIEU OF, OTHER LIABILITIES THAT THE CONTRACTOR MAY HAVE BY LAW.
B. IN ADDITION TO THE MANUFACTURERS GUARANTEES THE CONTRACTOR SHALL WARRANT THE ENTIRE IRRIGATION SYSTEM, BOTH PARTS AND LABOR FOR A PERIOD OF ONE (1) YEAR FROM THE DATE OF FINAL ACCEPTANCE BY THE DEPARTMENT. AS PART OF THE ONE-YEAR WARRANTY THE CONTRACTOR SHALL PERFORM THE FIRST YEAR-END WINTERIZATION AND SPRING START-UP FOR THE IRRIGATION SYSTEM. SHOULD ANY PROBLEMS DEVELOP WITHIN THE WARRANTY PERIOD BECAUSE OF INFERIOR OR FAULTY MATERIALS OR WORKMANSHIP, CORRECTIONS SHALL BE MADE TO THE SATISFACTION OF THE DESIGNER AT NO ADDITIONAL EXPENSE TO THE CITY. A WRITTEN WARRANTY SHOWING DATE OF COMPLETION AND PERIOD OF WARRANTY SHALL BE SUPPLIED UPON COMPLETION OF EACH SEGMENT OF THE PROJECT.

1.8 PROJECT CONDITIONS

A. THE CONTRACTOR SHALL AT ALL TIMES COORDINATE HIS WORK CLOSELY WITH THE PROJECT ENGINEER TO EFFICIENTLY BRING THE PROJECT TO COMPLETION. THE PROJECT ENGINEER SHALL BE NOTIFIED AS TO THE START OF WORK, PROGRESSION AND COMPLETION, AS WELL AS ANY CHANGES TO THE DRAWINGS BEFORE THE CHANGE IS MADE.
B. THE CONTRACTOR SHALL ALSO COORDINATE THE WORK WITH OTHER TRADES.
C. THE CONTRACTOR SHALL BE HELD RESPONSIBLE FOR AND SHALL PAY FOR ANY DAMAGE TO OTHER WORK CAUSED BY HIS WORK, PERSONNEL, OR SUB-CONTRACTORS. REPAIRS OF SUCH DAMAGE (IF ANY) SHALL BE DONE BY THE CONTRACTOR WHO INSTALLED THE WORK, AS DIRECTED BY THE PROJECT ENGINEER.
D. CONTRACTOR SHALL INCLUDE IN THE BID, AN ALLOWANCE FOR FOUR (4) HOURS OF INSTRUCTION OF CITY PERSONNEL UPON COMPLETION OF CHECK/TEST/START-UP/ADJUSTMENT OPERATIONS BY A COMPETENT OPERATOR (THE PROJECT ENGINEER SHALL BE NOTIFIED AT LEAST ONE (1) WEEK IN ADVANCE OF CHECK/TEST/STARTUP/ADJUSTMENT OPERATIONS). UPON COMPLETION OF WORK AND PRIOR TO APPLICATION FOR ACCEPTANCE AND FINAL PAYMENT, A MINIMUM OF THREE (3) THREE RING, HARD COVER BINDERS, SHALL BE SUBMITTED TO THE PROJECT ENGINEER. AFTER REVIEW AND APPROVAL, THE COPIES WILL BE FORWARDED TO THE CITY.
E. NOTIFY ALL CITY DEPARTMENTS AND/OR PUBLIC UTILITY OWNERS CONCERNED, OF THE TIME AND LOCATION OF ANY WORK THAT MAY AFFECT THEM. COOPERATE AND COORDINATE WITH THEM IN THE PROTECTION AND/OR REPAIRS OF ANY UTILITIES. PROVIDE AND INSTALL TEMPORARY SUPPORT, ADEQUATE PROTECTION AND MAINTENANCE OF ALL STRUCTURES, DRAINS, SEWERS, AND OTHER OBSTRUCTIONS ENCOUNTERED. WHERE GRADE OR ALIGNMENT IS OBSTRUCTED, THE OBSTRUCTION SHALL BE PERMANENTLY SUPPORTED, RELOCATED, REMOVED OR RECONSTRUCTED AS DIRECTED BY THE PROJECT ENGINEER.

1.9 PRE-INSTALLATION CONFERENCE

BEFORE WORK COMMENCES, HOLD A CONFERENCE WITH THE PROJECT ENGINEER TO DISCUSS GENERAL DETAILS OF THE WORK. EXAMINE ALL CONTRACT DOCUMENTS APPLYING TO THIS SECTION NOTING ANY DISCREPANCIES AND BRINGING THE SAME TO THE ATTENTION OF THE PROJECT ENGINEER FOR TIMELY RESOLUTION. ALL WORK INDICATED ON DRAWINGS SHALL BE PROVIDED WHETHER OR NOT SPECIFICALLY MENTIONED IN THE SPECIFICATIONS. IF THERE ARE AMBIGUITIES BETWEEN DRAWINGS AND SPECIFICATIONS, AND SPECIFIC INTERPRETATION OR CLARIFICATION IS NOT ISSUED PRIOR TO BIDDING, THE INTERPRETATION OR CLARIFICATION WILL BE MADE ONLY BY PROJECT ENGINEER, AND CONTRACTOR SHALL COMPLY WITH THE DECISIONS. IN THE EVENT THE INSTALLATION CONTRADICTS THE DIRECTIONS GIVEN, THE INSTALLATION SHALL BE CORRECTED BY CONTRACTOR AT NO ADDITIONAL COST.

2.0 PRODUCTS

ALL MATERIALS TO BE INCORPORATED IN THIS SYSTEM SHALL BE NEW AND WITHOUT FLAWS OR DEFECTS AND OF QUALITY AND PERFORMANCE AS SPECIFIED AND MEETING THE REQUIREMENTS OF THE SYSTEM. ALL MATERIAL OVERAGES AT THE COMPLETION OF THE INSTALLATION ARE THE PROPERTY OF THE CONTRACTOR AND SHALL BE REMOVED FROM THE SITE. NO MATERIAL SUBSTITUTIONS FROM THE IRRIGATION PRODUCTS DESCRIBED IN THESE SPECIFICATIONS AND SHOWN ON THE DRAWINGS SHALL BE MADE WITHOUT PRIOR APPROVAL AND ACCEPTANCE FROM THE PROJECT ENGINEER.

A. PVC IRRIGATION PIPE: ALL PIPE SHALL BEAR THE FOLLOWING MARKINGS: MANUFACTURER'S NAME, NOMINAL PIPE SIZE, SCHEDULE OR CLASS, PRESSURE RATING IN PSI, AND DATE OF EXTRUSION. ALL PIPE IN SIZES 2-1/2 INCHES AND SMALLER SHALL BE PVC, CLASS 200, TYPE 1120, SDR 21, SOLVENT-WELD PVC, CONFORMING TO ASTM NO. D2241 AS MANUFACTURED BY CERTAINTEED, CRESLINE OR JM.
B. PVC PIPE SLEEVES: ALL PIPE SLEEVES BENEATH NON-SOIL AREAS SHALL BE PVC, CLASS 200 WATER PIPE AS MANUFACTURED BY CERTAINTEED, CRESLINE OR JM. MINIMUM SLEEVE SIZE TO BE TWICE THE SIZE OF THE LINE IT WILL BE CARRYING.
C. WIRE CONDUIT: CONDUIT FOR WIRING BENEATH NON-SOIL AREAS SHALL BE PVC, SCH-40 CONDUIT WITH SOLVENT-WELD JOINTS, AS MANUFACTURED BY CERTAINTEED, CRESLINE OR JM. SWEEP ELLS SHALL BE STANDARD ELECTRICAL TYPE PVC SCHEDULE 40 LONG SWEEP ELBOWS. CAP SWEEP ELL WITH TRI-PLUG WITH THE RING FOR SECURING NYLON PULL ROPE. CONDUIT FOR ABOVE GROUND WIRING TO RAIN SENSORS OR CONTROLLERS SHALL BE GALVANIZED, RIGID METALLIC CONDUIT.
D. PVC IRRIGATION FITTINGS: FITTINGS FOR SOLVENT WELD PVC PIPE, 2-1/2 INCH AND SMALLER IN SIZE, SHALL BE SCHEDULE 40 SOLVENT WELD PVC FITTINGS AS MANUFACTURED BY DURA, LASCO, SPEARS OR EQUAL. FITTINGS SHALL BEAR MANUFACTURER'S NAME OR TRADEMARK, MATERIAL DESIGNATION, SIZE, AND APPLICABLE I.P.S. SCHEDULE. ALL PVC THREADED CONNECTIONS IN AND OUT OF VALVES SHALL BE MADE USING SCHEDULE 80 TOE NIPPLES AND SCHEDULE 40 COUPLERS OR SOCKET FITTINGS. SCHEDULE 40 THREADS WILL NOT BE APPROVED FOR INSTALLATION. PVC SOLVENT SHALL BE NSF APPROVED, FOR TYPE I AND TYPE II PVC PIPE, AND SCHEDULE 40 AND 80 FITTINGS. CEMENT IS TO MEET ASTM D2564 AND FF493 FOR POTABLE WATER PIPES. PVC SOLVENT CEMENT SHALL BE RECTORSEAL GOLD, IPS WELD-ON 711, OATEY HEAVY DUTY CEMENT OR EQUAL, AND SHALL BE USED IN CONJUNCTION WITH THE APPROPRIATE PRIMER. PRIMER SHALL BE NSF APPROVED, AND FORMULATED FOR PVC AND CPVC PIPE APPLICATIONS. PRIMER IS TO MEET ASTM F 656. PRIMER SHALL BE RECTORSEAL JIM PR-2, IPS WELD-ON P-68 CLEAR, OATEY CLEAR PRIMER FOR PVC AND CPVC. ALL NIPPLES TO BE SCHEDULE 80 PVC.
E. POLYETHYLENE IRRIGATION PIPE: PIPING 1-1/4 INCH AND SMALLER IN SIZE MAY ALSO BE INSTALLED WITH POLYETHYLENE (PE) PIPE, SDR 15, CLASS 100, TYPE III, GRADE 3, CLASS C CONFORMING TO ASTM D2239, WITH A MINIMUM PRESSURE RATING OF 100 PSI. POLYETHYLENE PIPE SHALL ONLY BE USED IN AREAS WHERE A FLEXIBLE PIPING IS NEEDED, SUCH AS SERVING THE FREE-STANDING PLANTERS VIA THE PVC SLEEVING IN THE BRICK SIDEWALK AREAS.
F. POLYETHYLENE IRRIGATION FITTINGS: FITTINGS FOR POLYETHYLENE PIPE SHALL BE INSERT PVC OR NYLON TYPE FITTINGS. FITTINGS SHALL CONFORM TO NSF STANDARDS AND BE ATTACHED WITH TWO (2) DOG-EARED STAINLESS STEEL CLAMPS PER PIPE TO FITTING CONNECTION. SUPPLY ONLY PIPES AND FITTINGS THAT ARE MARKED BY THE MANUFACTURER WITH THE APPROPRIATE ASTM DESIGNATIONS AND PRESSURE RATINGS AND ARE FREE FROM CRACKS, WRINKLES, BLISTERS, DENTS OR OTHER DAMAGE. FITTINGS SHALL BE PER ASTM D2609 AS MANUFACTURED BY DURA OR LASCO.
G. VALVE BOXES: ALL VALVE BOXES SHALL BE MANUFACTURED FROM UNFORMED RESIN WITH A TENSILE STRENGTH OF 3,100-5,500 PSI CONFORMING TO ASTM D638. ALL BOXES SHALL BE GREEN IN COLOR. COVERS SHALL BE GREEN IN COLOR UNLESS OTHERWISE SPECIFIED. VALVE BOXES FOR AIR RELIEF VALVES AND FLUSHING VALVES ON DRIP ZONES SHALL BE 6-INCH ROUND VALVE BOXES WITH METAL DETECTION. VALVE BOXES FOR SINGLE 1 INCH AND 1-1/2 INCH ELECTRIC VALVES, ISOLATION VALVES AND QUICK COUPLING VALVES SHALL BE 10-INCH ROUND VALVE BOXES WITH METAL DETECTION AND BOLT DOWN COVERS. VALVE BOXES FOR SINGLE 2 INCH AND DUAL ELECTRIC VALVES SHALL BE 12-INCH STANDARD VALVE BOXES WITH METAL DETECTION AND BOLT DOWN COVERS. WHEN MULTIPLE ELECTRIC VALVES ARE INSTALLED IN THE SAME AREA, THEY ARE TO BE INSTALLED TWO (2) VALVES PER BOX IN A 12-INCH STANDARD BOX. VALVE BOXES FOR WIRE SPLICES SHALL BE 10 INCH ROUND VALVE BOXES WITH DETECTABLE DISKS. ALL SPLICES SHALL BE IN SEPARATE VALVE BOXES AND NOT INCLUDED WITH ISOLATION VALVES. 24 VOLT SPLICES SHALL HAVE GRAY LIDS. VALVE BOX EXTENSIONS SHALL BE PROVIDED AND INSTALLED AS REQUIRED FOR PROPER BOX DEPTH. VALVE BOX EXTENSIONS SHALL BE MADE BY THE SAME MANUFACTURER. VALVE BOXES SHALL BE MANUFACTURED BY PENTEK, CARSON SPECIFICATION GRADE OR NDS PRO SERIES.

IRRIGATION SPECS 1
BRIDGE NO. HAM-75-0104
LINN STREET OVER IR-75 AND GEST STREET

DESIGN AGENCY
MKSK
LANDSCAPE ARCHITECTURE + URBAN PLANNING

DESIGNER	CHECKER
LHW	JRB

REVIEWER	
JRB	4.14.25

PROJECT ID	
122048	

SHEET	TOTAL
P.371	P.421

HAM-75-1.05

X:\Columbus\2024\c24127-I-75 Hamilton Bridges\BIM_CAD_GIS\CAD\Sheets\c24127 Spec Sheets-Irrig.dwg