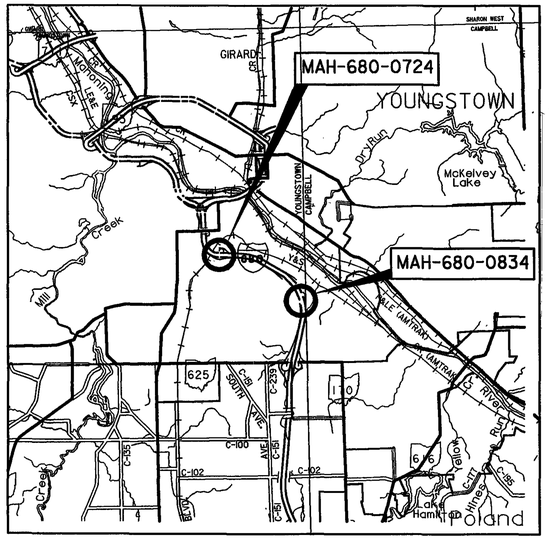

LOCATION MAP

LATITUDE: N41°04'54"	LONGITUDE: W80°38'35"	MAH-680-0724
N41°04'24"	W80°37'34"	MAH-680-0834

SCALE IN MILES

0 1 2 3 4

PORTION TO BE IMPROVED
INTERSTATE & DIVIDED HIGHWAY
UNDIVIDED STATE & FEDERAL ROUTES
OTHER ROADS

DESIGN DESIGNATION - SEE SCHEMATIC PLAN ON SHEET 2

DESIGN EXCEPTIONS

DESIGN FEATURE	APPROVAL DATES	SHEET NUMBERS
MAH-680-7.24		
LANE WIDTH		4
HORIZONTAL CLEARANCE		62
MAH-680-8.34		
HORIZONTAL CLEARANCE		79

STATE OF OHIO
DEPARTMENT OF TRANSPORTATION

MAH-680-7.24/8.34

PART 2
MAHONING COUNTY
FOR PART 1, SEE MAH-680-4.14

INDEX OF SHEETS:

TITLE SHEET	1
SCHEMATIC PLAN	2
TYPICAL SECTIONS	3-5
GENERAL NOTES	6-9
MAINTENANCE OF TRAFFIC GENERAL NOTES	10-16
MAINTENANCE OF TRAFFIC GENERAL SUMMARY	17
DETOUR PLANS	18-20
GENERAL SUMMARY	21-22
PAVEMENT CALCULATIONS	23-24
MISCELLANEOUS CALCULATIONS	25
PROJECT SITE PLAN	26
PLAN AND PROFILE - GIBSON STREET	27-28
ESTIMATED QUANTITIES - GIBSON STREET	29
CROSS SECTIONS - GIBSON STREET	30-34
PLAN AND PROFILE - SHIRLEY ROAD	35-36
ESTIMATED QUANTITIES - SHIRLEY ROAD	37
CROSS SECTIONS - SHIRLEY ROAD	38-44
DRIVEWAY DETAILS	45-46
UNDERDRAIN DETAILS	47
SIGNING AND PAVEMENT MARKING NOTES	48
TRAFFIC CONTROL GENERAL SUMMARY	49
TRAFFIC CONTROL SUBSUMMARIES	50-53
SIGNING AND PAVEMENT MARKING PLANS	54-57
LIGHTING PLAN - GIBSON STREET	58
LIGHTING PLAN - SHIRLEY ROAD	59-61
STRUCTURES OVER 20':	
MAH-680-0724	62-78
MAH-680-0834	79-99
RIGHT-OF-WAY	100-107

PROJECT DESCRIPTION

THIS PROJECT CONSISTS OF THE REPLACEMENT OF TWO EXISTING BRIDGE DECKS OVER IR-680 AND RECONSTRUCTION OF THE APPROACHES OF GIBSON STREET (0.09 MILES) AND SHIRLEY ROAD (0.14 MILES). THIS PROJECT ALSO INCLUDES IMPROVEMENTS TO UTILITIES AND STRUCTURE CLEARANCES.

PROJECT EARTH DISTURBED AREA = 1.1 ACRES
ESTIMATED CONTRACTOR EARTH DISTURBED AREA = 0.6 ACRES
NOTICE OF INTENT EARTH DISTURBED AREA = 4.9 ACRES

LIMITED ACCESS

THIS IMPROVEMENT IS ESPECIALLY DESIGNED FOR THROUGH TRAFFIC AND HAS BEEN DECLARED A LIMITED ACCESS HIGHWAY OR FREEWAY BY ACTION OF THE DIRECTOR IN ACCORDANCE WITH THE PROVISIONS OF SECTION 5511.02 OF THE OHIO REVISED CODE.

2002 SPECIFICATIONS

THE STANDARD SPECIFICATIONS OF THE STATE OF OHIO, DEPARTMENT OF TRANSPORTATION, INCLUDING CHANGES AND SUPPLEMENTAL SPECIFICATIONS LISTED IN THE PROPOSAL SHALL GOVERN THIS IMPROVEMENT.

TRAFFIC REROUTED

I HEREBY APPROVE THESE PLANS AND DECLARE THAT THE MAKING OF THIS IMPROVEMENT WILL REQUIRE THE CLOSING TO TRAFFIC OF THE LOCAL STREETS AND THAT DETOURS WILL BE PROVIDED AS INDICATED ON SHEET 18-20.

FEDERAL PROJECT NO. E034(746)
PID NO. 22484
CONSTRUCTION PROJECT NO.
RAILROAD INVOLVEMENT NONE
MAH-680-7.24/8.34

UNDERGROUND UTILITIES
TWO WORKING DAYS
BEFORE YOU DIG
CALL 1-800-362-2764 (TOLL FREE)
OHIO UTILITIES PROTECTION SERVICE
NON-MEMBERS
MUST BE CALLED DIRECTLY

PLAN PREPARED BY:

GLAUS PYLE SCHOMER BURNS & DEHAVEN, INC.
GPD ASSOCIATES
527 South Main Street, Suite 2531 Akron, Ohio 44311
330-572-2100, Fax 330-572-2101

ENGINEERS SEAL:

STATE OF OHIO
RALPH A. HENDRICK
33588
REGISTERED PROFESSIONAL ENGINEER

SIGNED Ralph A. Hendrick
DATE: 03/30/04

STANDARD CONSTRUCTION DRAWINGS	SUPPLEMENTAL SPECIFICATIONS
SEE PART 1	SEE PART 1
	SPECIAL PROVISIONS

APPROVED
DATE 3-11-05 DISTRICT DEPUTY DIRECTOR

APPROVED
DATE 4-21-05 DIRECTOR, DEPARTMENT OF TRANSPORTATION

\\Akron0\Da ... 00169\Dgn\22179GTA.dgn
03/29/2004

SYMBOLS:

- VALVE
- METER
- MAN HOLE
- PED
- BOX/HAND HOLE
- FIRE HYDRANT
- MISC.
- TRAVERSE
- TV POLE
- POWER POLE
- TELE. POLE
- LIGHT POLE

CODES:

- —W— WATER
- —G— GAS
- —T— TELEPHONE
- —TV— CATV
- —E— ELECTRIC
- —TC— TRAFFIC CONTROL
- —STM— STORM SEWER
- —SAN— SANITARY SEWER
- —SFM— SANITARY FORCE MAIN
- —UNK— UNKNOWN
- ---------- (DATUR)

ABBREVIATIONS:

TC	TRAFFIC CONTROL
G.T.S.	GAS TEST STATION
PFI	PER FIELD INSPECTION
TV	CATV
N.A.P.	NO ASSOCIATED PIPING FOUND FROM STRUCTURE TO ANY OTHER UTILITY OR STRUCTURE.
(AATFI)	ABANDONED ACCORDING TO FIELD INSPECTION
(AATUR)	ABANDONED ACCORDING TO UTILITY RECORDS
(DATFI)	DEPICTED ACCORDING TO FIELD INSPECTION, NO ELECTRONIC INFORMATION WAS OBTAINED.
(DATUR)	DEPICTED ACCORDING TO UTILITY RECORDS, NO ELECTRONIC INFORMATION WAS OBTAINED.
(FO)	FIBER OPTIC
E———	UTILITY END POINT
E.O.I.	END OF ELECTRONIC DESIGNATING INFORMATION
E.O.R.I.	END OF RECORD INFORMATION

UNLESS OTHERWISE NOTED, UTILITY LINE LIMITS DEPICTED REPRESENT FIELD DESIGNATING LIMITS AND NOT ENDPOINTS OF UTILITIES.

UTILITY INFORMATION LABELED "DATUR" IS DERIVED FROM AVAILABLE RECORDS. SUCH INFORMATION MAY NOT BE ACCURATE OR RELIABLE. SO-DEEP EXPRESSLY DISCLAIMS RESPONSIBILITY FOR THE ACCURACY OR RELIABILITY OF UTILITY INFORMATION THAT IS DEPICTED ACCORDING TO RECORDS.

DEPTH AND SIZE INFORMATION SHOWN HEREON IS TAKEN FROM AVAILABLE UTILITY RECORDS, AND HAS NOT BEEN VERIFIED.

UTILITY DEPTH AND SIZE INFORMATION IS UNAVAILABLE UNLESS OTHERWISE SHOWN ON PLAN SHEETS.

TRAFFIC CONTROL SENSORS IN PAVING ARE NOT SHOWN HEREON.

DESIGN DESIGNATION

GIBSON STREET

CURRENT YEAR ADT (2004)	= 3100
DESIGN YEAR ADT (2024)	= 3220
DESIGN HOURLY VOLUME (2024)	= 322
DIRECTIONAL DISTRIBUTION	= 55%
TRUCKS (24 HOUR B&C)	= 3%
TRUCKS (PEAK HOUR)	= 2%
DESIGN SPEED	= 40 MPH
LEGAL SPEED	= 35 MPH
DESIGN FUNCTIONAL CLASSIFICATION	= URBAN LOCAL

SHIRLEY ROAD

CURRENT YEAR ADT (2004)	= 8270
DESIGN YEAR ADT (2024)	= 8590
DESIGN HOURLY VOLUME (2024)	= 859
DIRECTIONAL DISTRIBUTION	= 55%
TRUCKS (24 HOUR B&C)	= 3%
TRUCKS (PEAK HOUR)	= 2%
DESIGN SPEED	= 40 MPH
LEGAL SPEED	= 35 MPH
DESIGN FUNCTIONAL CLASSIFICATION	= URBAN COLLECTOR

IR-680 (7.24)

CURRENT YEAR ADT (2004)	= 51910
DESIGN YEAR ADT (2024)	= 65630
DESIGN HOURLY VOLUME (2024)	= 5907
DIRECTIONAL DISTRIBUTION	= 57%
TRUCKS (24 HOUR B&C)	= 8%
TRUCKS (PEAK HOUR)	= 4%
DESIGN SPEED	= 60 MPH
LEGAL SPEED	= 55 MPH
DESIGN FUNCTIONAL CLASSIFICATION	= URBAN INTERSTATE

IR-680 (8.34)

CURRENT YEAR ADT (2004)	= 46740
DESIGN YEAR ADT (2024)	= 59100
DESIGN HOURLY VOLUME (2024)	= 5319
DIRECTIONAL DISTRIBUTION	= 57%
TRUCKS (24 HOUR B&C)	= 8%
TRUCKS (PEAK HOUR)	= 4%
DESIGN SPEED	= 60 MPH
LEGAL SPEED	= 55 MPH
DESIGN FUNCTIONAL CLASSIFICATION	= URBAN INTERSTATE

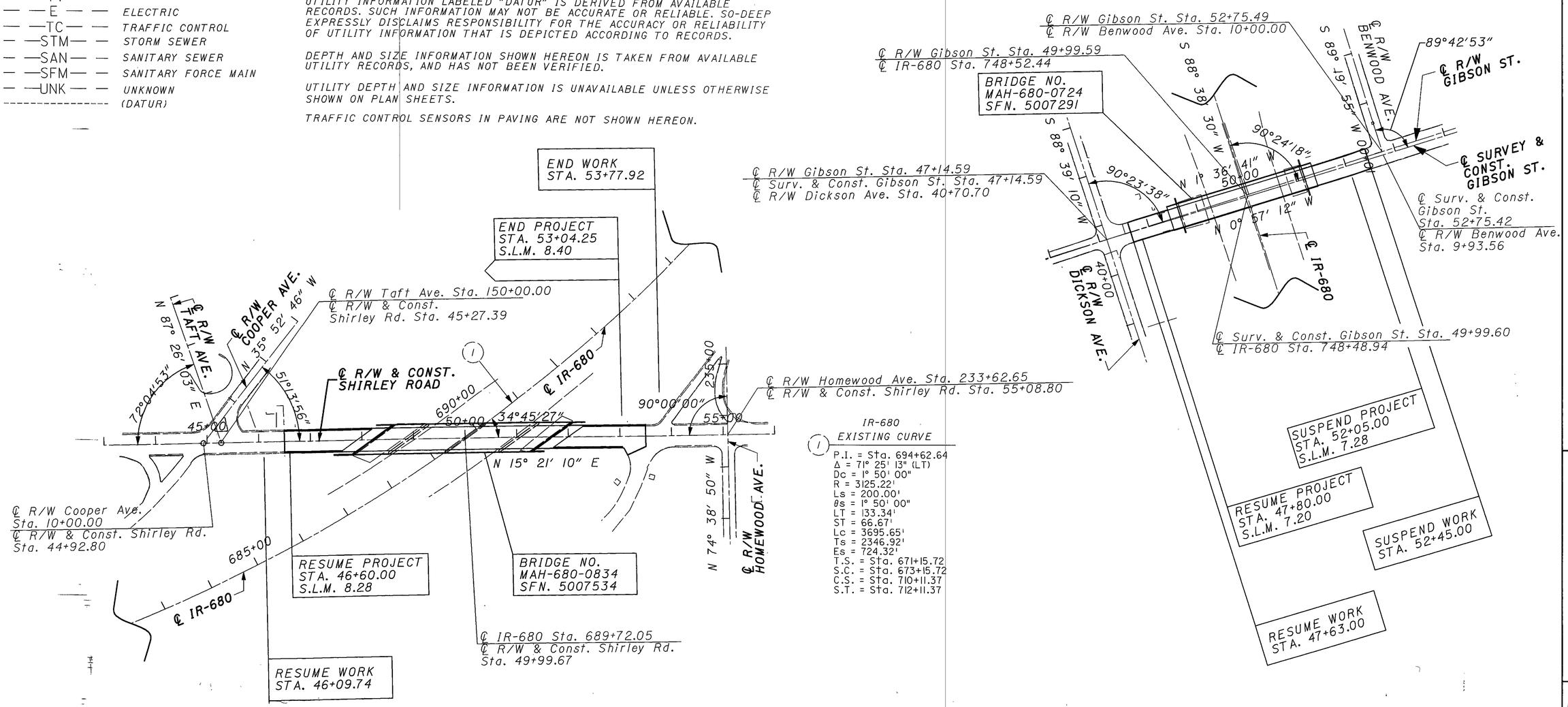

(1) IR-680 EXISTING CURVE

P.I. = Sta. 694+62.64
Δ = 71° 25' 13" (LT)
Dc = 1° 50' 00"
R = 3125.22'
Ls = 200.00'
θs = 1° 50' 00"
LT = 133.34'
ST = 66.67'
Lc = 3695.65'
Ts = 2346.92'
Es = 724.32'
T.S. = Sta. 671+15.72
S.C. = Sta. 673+15.72
C.S. = Sta. 710+11.37
S.T. = Sta. 712+11.37

N

HORIZONTAL SCALE IN FEET 50 100 200

SCHEMATIC PLAN

MAH-680-7.24/8.34

\\Akr-m01\Data\civil\2001659\01\dgn\2273684.dgn
03/30/2004
06:22:49 PM

EXISTING LEGEND

- (A) EXISTING FLEXIBLE PAVEMENT 9" +/-
- (B) EXISTING CONCRETE WALK
- (C) EXISTING CONCRETE CURB
- (D) NOT USED
- (E) EXISTING AGGREGATE BASE 6" +/-
- (F) EXISTING CONCRETE CURB AND GUTTER
- (G) NOT USED
- (H) EXISTING GUARDRAIL
- (I) EXISTING FLEXIBLE PAVEMENT 11" +/-
- (J) NOT USED

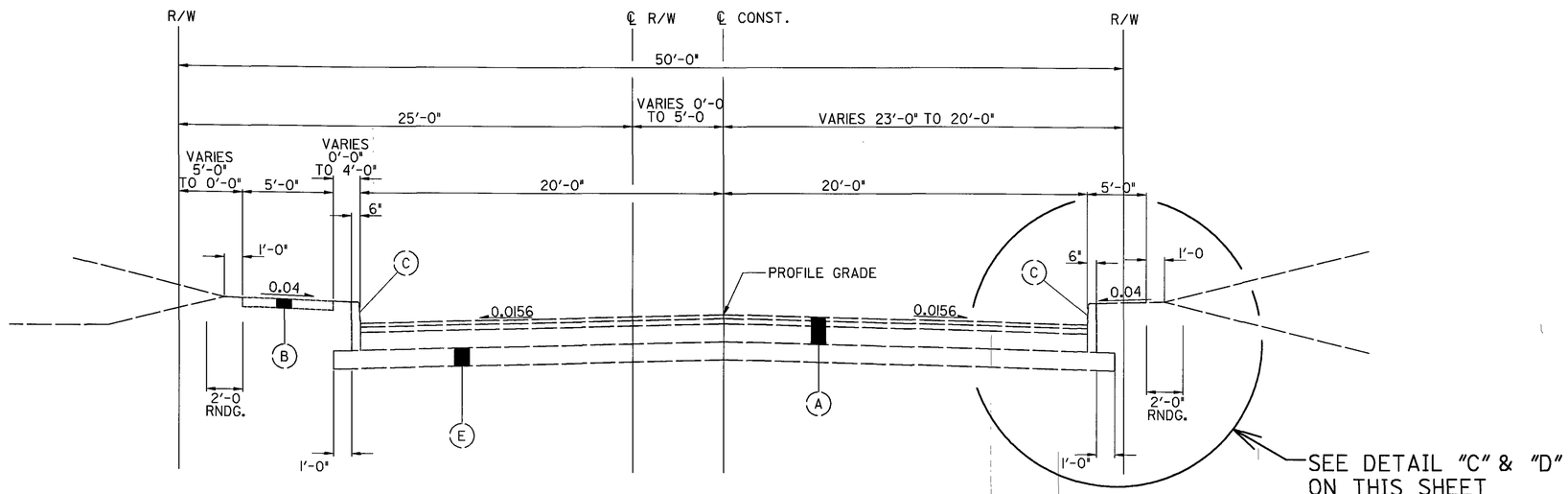

GIBSON STREET

LIMITING STATIONS
STA. 47+63.00 TO STA. 48+44.47
STA. 51+36.64 TO STA. 52+45.00

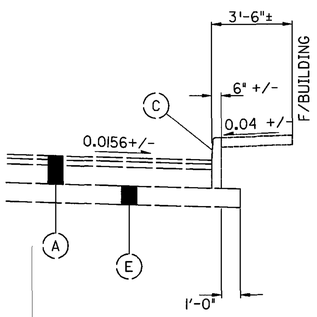

DETAIL "C"

GIBSON STREET STA. 47+45.00 TO STA. 47+93.69

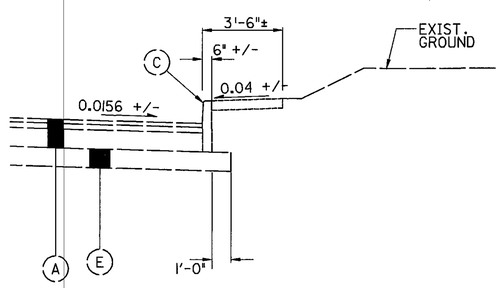

DETAIL "D"

GIBSON STREET STA. 47+93.69 TO STA. 48+44.47

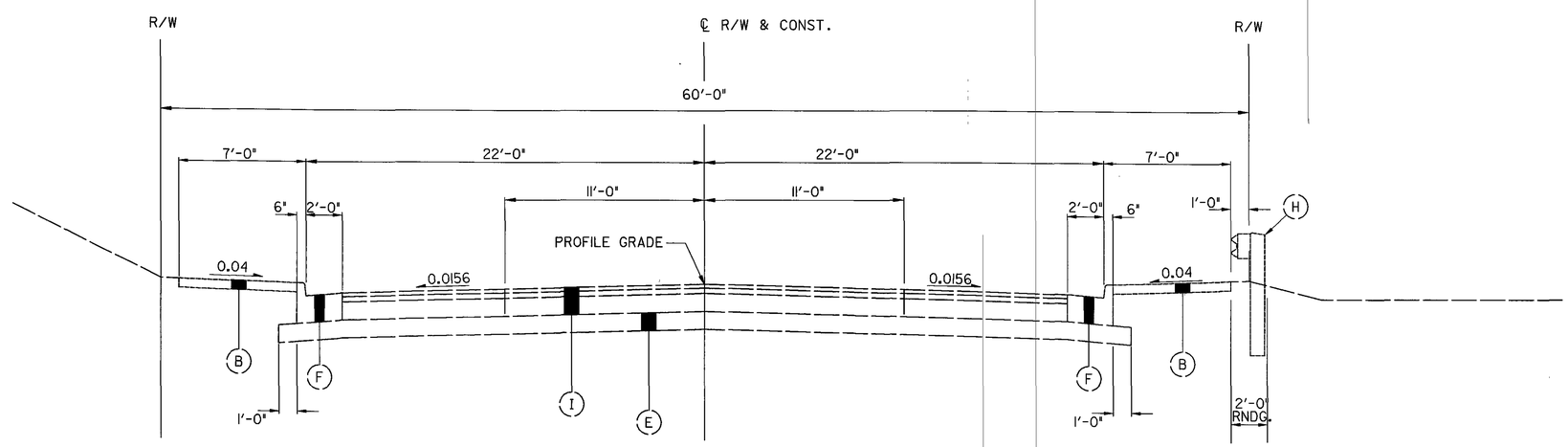

SHIRLEY ROAD

LIMITING STATIONS
STA. 45+75.00 TO STA. 47+90.17
STA. 52+00.01 TO STA. 53+85.00

EXISTING TYPICAL SECTIONS

MAH-680-7.24/ 8.34

\\Akron01\Data\civil\200169\01\dgn\221795YC.dgn
03/30/2004
06:22:42 PM

PROPOSED LEGEND

1. ITEM 446 - 1-1/4" ASPHALT CONCRETE SURFACE COURSE, TYPE 1, PG 64-28
2. ITEM 446 - 1-3/4" ASPHALT CONCRETE INTERMEDIATE COURSE, TYPE 2, PG 64-28
3. ITEM 301 - 6" ASPHALT CONCRETE BASE, PG 64-28
4. ITEM 304 - 6" AGGREGATE BASE
5. ITEM 609 - COMBINATION CURB AND GUTTER, TYPE 2
6. ITEM 609 - CURB, TYPE 2-A
7. ITEM 609 - CURB, TYPE 6
8. ITEM 608 - 4" CONCRETE WALK
9. ITEM 659 - SEEDING AND MULCHING
10. ITEM 407 - TACK COAT FOR INTERMEDIATE COURSE
11. ITEM 407 - TACK COAT
12. ITEM 408 - PRIME COAT
13. NOT USED
14. ITEM 301 - 8" ASPHALT CONCRETE BASE, PG 64-28
15. ITEM 605 - 6" SHALLOW PIPE UNDERDRAINS WITH FABRIC WRAP
16. ITEM 204 - SUBGRADE COMPACTION
17. ITEM 526 - REINFORCED CONCRETE APPROACH SLAB, AS PER PLAN (T=13")
18. ITEM 526 - REINFORCED CONCRETE APPROACH SLAB (T=17")
19. NOT USED
20. ITEM 606 - GUARDRAIL, TYPE 5
21. ITEM 605 - 6" UNCLASSIFIED PIPE UNDERDRAINS WITH FABRIC WRAP
22. ITEM 609 - CURB, TYPE 6, AS PER PLAN
23. ITEM 608 - 4" CONCRETE WALK, AS PER PLAN
24. NOT USED
25. ITEM 622 - CONCRETE BARRIER, SINGLE SLOPE, TYPE D
26. ITEM 622 - CONCRETE BARRIER, SINGLE SLOPE, TYPE D, AS PER PLAN

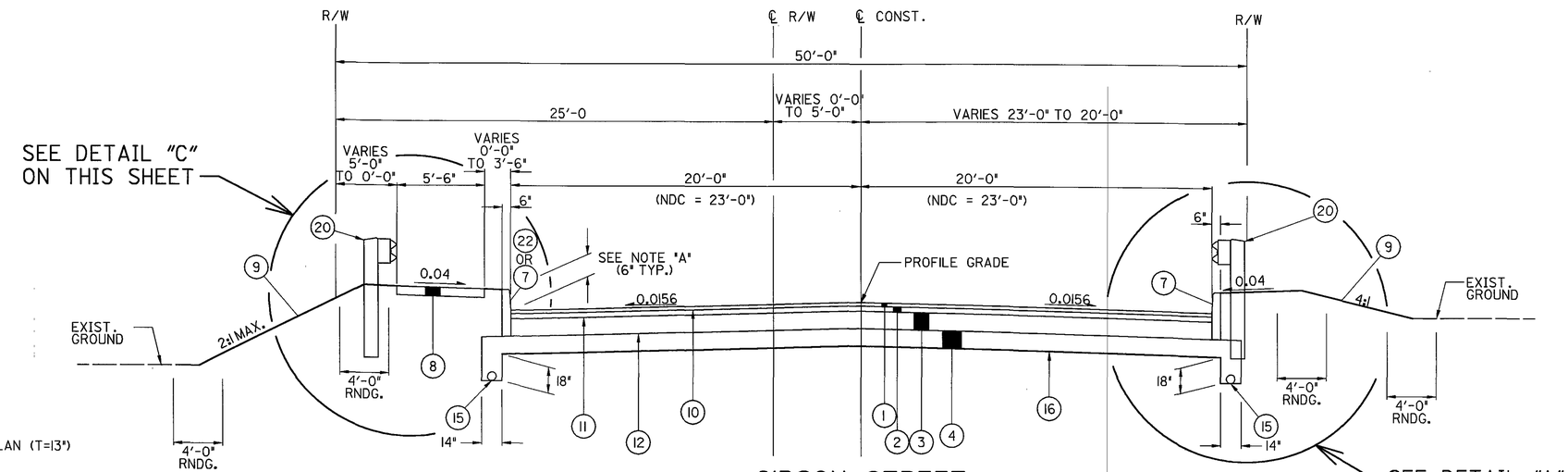

GIBSON STREET

LIMITING STATIONS
STA. 47+63.00 TO STA. 48+44.47 = 81.47 LIN. FT.
STA. 51+36.64 TO STA. 52+45.00 = 108.36 LIN. FT.
TOTAL = 189.83 LIN.FT.

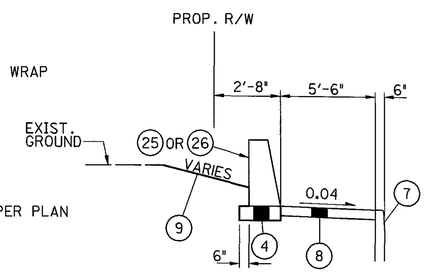

DETAIL "C"

GIBSON STREET STA. 47+94.47 TO STA. 48+44.47

NOTE "A"

TRANSITION CURB HEIGHT 6" TO 8"
FROM STA. 48+34.47 TO STA. 48+44.47
AND STA. 51+36.64 TO STA. 51+46.64

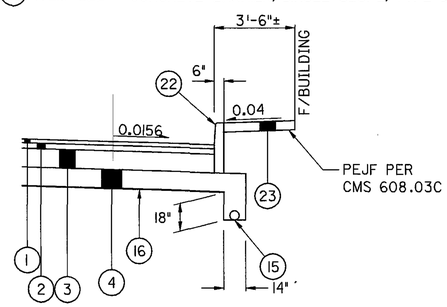

DETAIL "A"

GIBSON STREET STA. 47+63.00 TO STA. 47+93.69

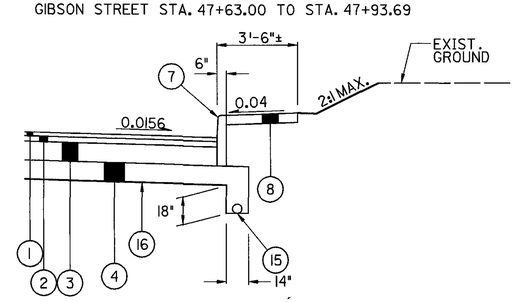

DETAIL "B"

GIBSON STREET STA. 47+93.69 TO STA. 48+15.09

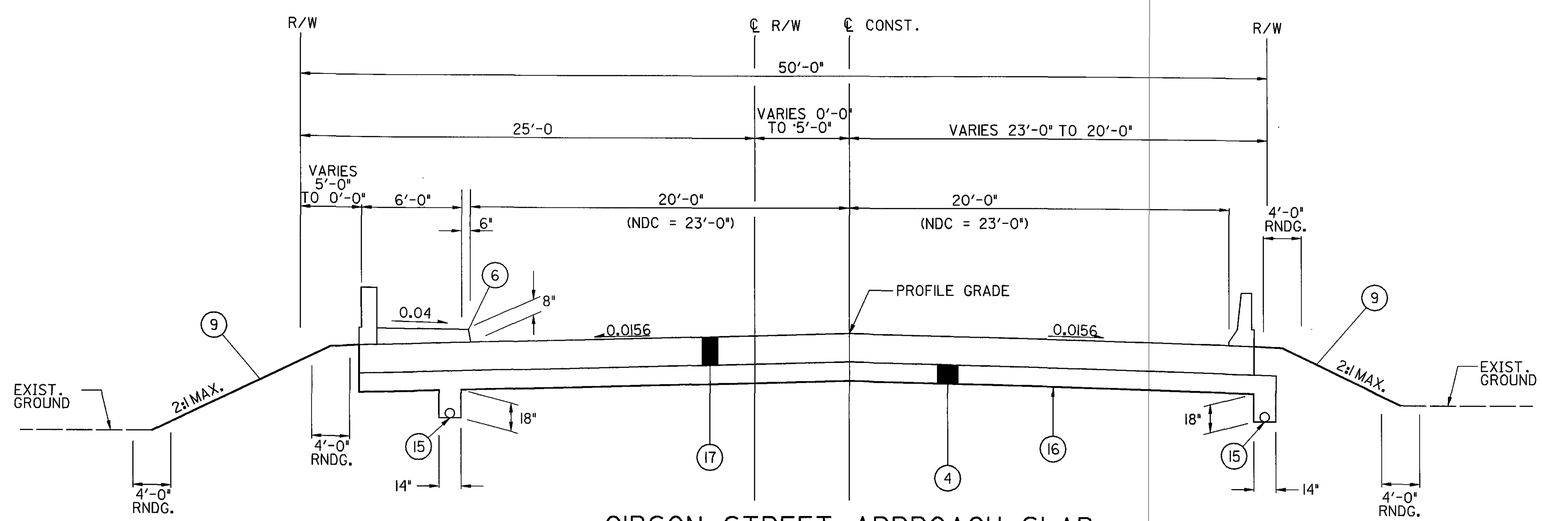

GIBSON STREET APPROACH SLAB

LIMITING STATIONS
STA. 48+44.47 TO STA. 48+64.47 = 20.00 LIN. FT.
STA. 51+16.64 TO STA. 51+36.64 = 20.00 LIN. FT.
TOTAL = 40.00 LIN.FT.

PROPOSED TYPICAL SECTIONS

MAH-680-7.24/8.34

\\Akron\Data\civil\200169\01\dgn\22179GTA.dgn
03/30/2004
06:22:56 PM

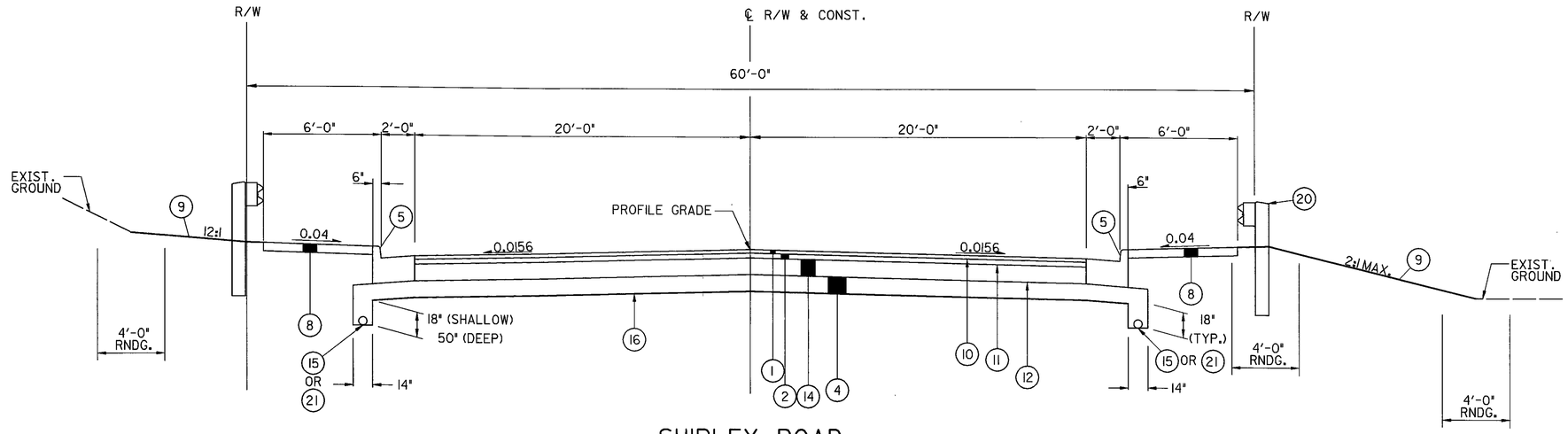

SHIRLEY ROAD

LIMITING STATIONS

STA. 46+50.00 TO STA. 47+90.17 = 140.17 LIN. FT.
STA. 52+00.01 TO STA. 53+50.00 = 149.99 LIN. FT.
TOTAL = 290.16 LIN.FT.

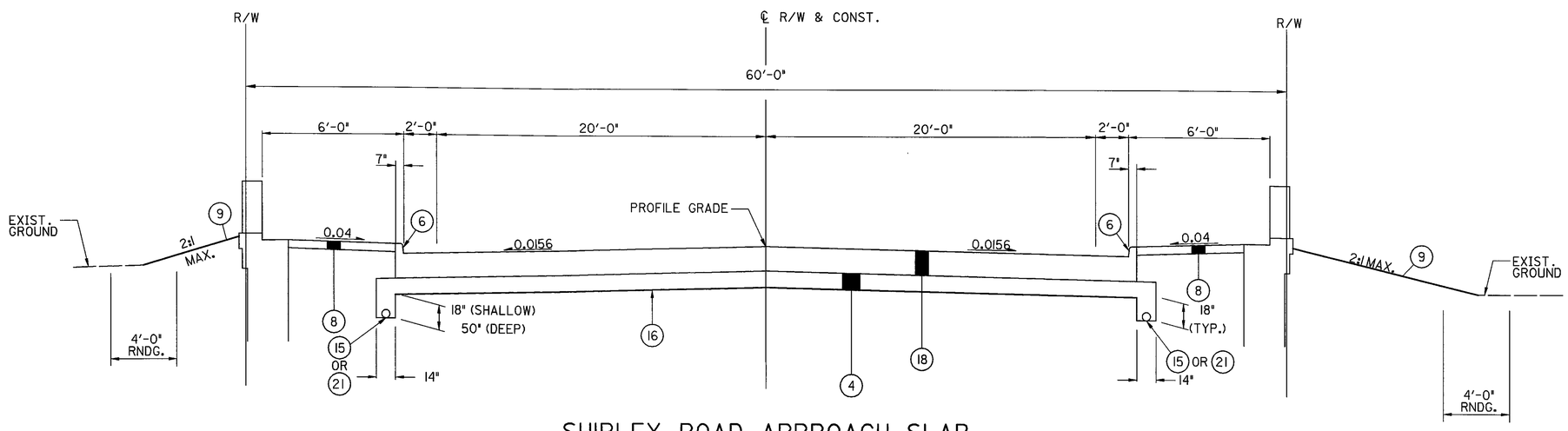

SHIRLEY ROAD APPROACH SLAB

LIMITING STATIONS

STA. 47+90.17 TO STA. 48+20.17 = 30.00 LIN. FT.
STA. 51+70.01 TO STA. 52+00.01 = 30.00 LIN. FT.
TOTAL = 60.00 LIN.FT.

FOR PROPOSED LEGEND, SEE SHEET 4

PROPOSED TYPICAL SECTIONS

MAH-680-7.24/8.34

\\Akrn01\Data\civil\200169\01\dgn\22179GTB.dgn
03/30/2004
06:23:25 PM

GENERAL

ROUNDING

THE ROUNDING AT SLOPE BREAKPOINTS SHOWN ON THE TYPICAL SECTIONS APPLY TO ALL CROSS-SECTIONS EVEN THOUGH OTHERWISE SHOWN.

UTILITIES

LISTED BELOW ARE ALL UTILITIES LOCATED WITHIN THE PROJECT CONSTRUCTION LIMITS TOGETHER WITH THEIR RESPECTIVE OWNERS:

SBC
SABRENA LAMPLEY
50 W. BOWERY ST.; 4TH FLOOR
AKRON, OH 44308
(330) 384-8057

AT&T
ATTN: JEFF BALLINGER
229 WEST 7TH STREET,
10TH FLOOR
CINCINNATI, OH 45020
(513) 784-5338

CITY OF YOUNGSTOWN,
WATER DEPT.
ATTN: GENE LESON
26 SOUTH PHELPS STREET
YOUNGSTOWN, OH 44503
(330) 743-5338

DOMINION EAST OHIO
ATTN: JIM SYMPSON
1165 WEST RAYEN AVENUE
YOUNGSTOWN, OH 44502
(330) 742-8138

DOMINION TELECOM
ATTN: DOUG PIERCE
ALLEGHENY CENTER MALL,
SUITE 108
PITTSBURGH, PA 15212
(412) 321-8432

DOMINION EAST OHIO
GAS SUPPLY OPERATIONS
ATTN: FRANK MARTIN
7015 FREEDOM AVE., N.W.
NORTH CANTON, OH 44720
(330) 266-2120

MAHONING VALLEY SANITARY DISTRICT
ATTN: MARTY KIELBASA
P.O. BOX 4119
YOUNGSTOWN, OH 44515-4119
(330) 799-6315

MCI/WORLDCOM
ATTN: INVESTIGATIONS
DEPT. 2855/642
JEFF BACHELDER
2250 LAKESIDE BOULEVARD
RICHARDSON, TX 75082

OHIO EDISON
ATTN: BILL SPEECE
730 SOUTH AVENUE
YOUNGSTOWN, OH 44502
(330) 740-7635

QWEST COMMUNICATIONS
ATTN: CLIFF CALDWELL
10645 WILLIAMS ROAD
WEST SALEM, OH 44287
(330) 948-1884

TIME WARNER CABLE
ATTN: DON JUGENHEIMER
4352 YOUNGSTOWN ROAD
WARREN, OH 44484
(330) 369-7138

CONTINGENCY QUANTITIES

THE CONTRACTOR SHALL NOT ORDER MATERIALS OR PERFORM WORK FOR ITEMS DESIGNATED BY PLAN NOTE TO BE USED "AS DIRECTED BY THE ENGINEER" UNLESS AUTHORIZED BY THE ENGINEER. THE ACTUAL WORK LOCATIONS AND QUANTITIES USED FOR SUCH ITEMS SHALL BE INCORPORATED INTO THE FINAL CHANGE ORDER GOVERNING COMPLETION OF THIS PROJECT.

CONSTRUCTION NOISE

ACTIVITIES AND LAND USE ADJACENT TO THIS PROJECT MAY BE AFFECTED BY CONSTRUCTION NOISE. IN ORDER TO MINIMIZE ANY ADVERSE CONSTRUCTION NOISE IMPACTS, ANY POWER-OPERATED CONSTRUCTION-TYPE DEVICE SHALL NOT BE OPERATED BETWEEN THE HOURS OF 9:00 PM AND 7:00 AM. IN ADDITION, ANY SUCH DEVICE SHALL NOT BE OPERATED AT ANY TIME IN SUCH A MANNER THAT THE NOISE CREATED SUBSTANTIALLY EXCEEDS THE NOISE CUSTOMARILY AND NECESSARILY ATTENDANT TO THE REASONABLE AND EFFICIENT PERFORMANCE OF SUCH EQUIPMENT.

ELEVATION DATUM

ALL ELEVATIONS ARE BASED ON U.S.G.S. DATUM NAVD 88.

WORK LIMITS

THE WORK LIMITS SHOWN ON THESE PLANS ARE FOR PHYSICAL CONSTRUCTION ONLY. THE INSTALLATION AND OPERATION OF ALL TEMPORARY TRAFFIC CONTROL AND TEMPORARY TRAFFIC CONTROL DEVICES REQUIRED BY THESE PLANS SHALL BE PROVIDED BY THE CONTRACTOR WHETHER INSIDE OR OUTSIDE THESE WORK LIMITS.

CONVERSION OF STANDARD CONSTRUCTION DRAWINGS

THE METRIC STANDARD DRAWINGS REFERENCED IN THIS PLAN SHALL BE CONVERTED TO ENGLISH UNITS USING THE SI (METRIC) TO ENGLISH CONVERSION FACTORS PROVIDED IN SECTION 109.02 OF THE 2002 CONSTRUCTION AND MATERIAL SPECIFICATIONS. CONVERSIONS SHALL BE APPROPRIATELY PRECISE AND SHALL REFLECT STANDARD INDUSTRY ENGLISH VALUES WHERE SUITABLE.

EXISTING PLANS

EXISTING PLANS ENTITLED MAH-680-6.98 MAY BE INSPECTED IN THE ODOT DISTRICT 4 OFFICE IN RAVENNA, OH.

ROADWAY

CLEARING AND GRUBBING

ALTHOUGH THERE ARE NO TREES OR STUMPS SPECIFICALLY MARKED FOR REMOVAL WITHIN THE LIMITS OF THE PROJECT, A LUMP SUM QUANTITY HAS BEEN INCLUDED IN THE GENERAL SUMMARY FOR ITEM 201, CLEARING AND GRUBBING. ALL PROVISIONS AS SET FORTH IN THE SPECIFICATIONS UNDER THIS ITEM SHALL BE INCLUDED IN THE LUMP SUM PRICE BID FOR ITEM 201, CLEARING AND GRUBBING.

UNSUITABLE FOUNDATION SOILS

IF UNSUITABLE FOUNDATION SOILS ARE ENCOUNTERED IN THE AREAS OF THE PROPOSED ROADBED, THEY SHALL BE REMOVED AND REPLACED WITH SUITABLE MATERIAL MEETING THE REQUIREMENTS OF 203.02.R. THE LOCATIONS AND DIMENSIONS WILL BE AS DETERMINED BY THE ENGINEER.

THE FOLLOWING CONTINGENCY QUANTITIES HAVE BEEN INCLUDED IN THE GENERAL SUMMARY TO BE USED AS DIRECTED BY THE ENGINEER:

ITEM 203, EMBANKMENT 200 CU. YD.

ITEM 203, EXCAVATION 200 CU. YD.

ADDITIONAL SOIL INFORMATION

NO SUBSURFACE INVESTIGATION WAS PERFORMED IN THIS PROJECT. MORE INFORMATION, IF ANY, MAY BE OBTAINED FROM MAH-680-6.98, IN DISTRICT 4, THE OFFICE OF MATERIALS MANAGEMENT, OR THE OFFICE OF STRUCTURAL ENGINEERING.

FENCE LENGTHS

THE LENGTHS OF FENCE SHOWN IN THE PLANS ARE HORIZONTAL DIMENSIONS. MEASUREMENTS OF THE FINAL QUANTITIES SHALL BE MADE IN ACCORDANCE WITH ITEM 607.

AIRWAY/HIGHWAY CLEARANCE FOR AIRPORTS AND HELIPORTS

THIS PROJECT HAS BEEN IDENTIFIED AS BEING WITHIN THE INFLUENCE AREA OF A PUBLIC USE AIRPORT OR HELIPORT. THE CONTRACTOR IS ADVISED THAT NO TEMPORARY STRUCTURES OR CONSTRUCTION EQUIPMENT AT MAXIMUM OPERATING HEIGHT SHALL EXCEED A HEIGHT OF AMSL. IF ANY TEMPORARY STRUCTURES OR CONSTRUCTION EQUIPMENT WILL EXCEED THIS HEIGHT, THE CONTRACTOR IS ADVISED THAT COORDINATION WITH THE FEDERAL AVIATION ADMINISTRATION (FAA) WILL BE NECESSARY PRIOR TO ERECTING SUCH TEMPORARY STRUCTURES OR OPERATING SUCH EQUIPMENT ON THE PROJECT. THE CONTRACTOR WILL BE REQUIRED TO SUBMIT FORM 7460-1 TO THE FAA. A COPY OF THE SUBMISSION AND TWO COPIES OF FORM 7460-1 SHALL BE FORWARDED TO THE ODOT OFFICE OF AVIATION. THE CONTRACTOR IS ADVISED THAT NO TEMPORARY STRUCTURES OR CONSTRUCTION EQUIPMENT SHALL EXCEED THE PERMISSIBLE HEIGHT, UNTIL A COPY OF THE FAA APPROVAL AND ODOT OFFICE OF AVIATION PERMIT HAS BEEN FURNISHED TO THE PROJECT ENGINEER.

THE FEDERAL AVIATION ADMINISTRATION
GREAT LAKES REGIONAL OFFICE
AIR TRAFFIC DIVISION AGL-530
2300 EAST DEVON AVENUE
DES PLAINES, ILLINOIS 60018
(847) 294-7566

OHIO DEPARTMENT OF TRANSPORTATION
OFFICE OF AVIATION
2829 WEST DUBLIN-GRANVILLE ROAD
COLUMBUS, OHIO 43235
(614) 793-5046

CONNECTION BETWEEN EXISTING AND PROPOSED GUARDRAIL

WHEN IT IS NECESSARY TO SPLICE PROPOSED GUARDRAIL TO EXISTING GUARDRAIL, ONLY THE EXISTING GUARDRAIL SHALL BE CUT, DRILLED, OR PUNCHED. THE CONNECTION SHALL BE MADE USING A "W-BEAM RAIL SPLICE" AS SHOWN IN AASHTO M 180. PAYMENT SHALL BE INCLUDED IN THE CONTRACT PRICE FOR THE RESPECTIVE GUARDRAIL ITEMS.

CALCULATED CML
CHECKED MVJ

GENERAL NOTES

MAH-680-7.24/8.34

\\Akron01\Data\civil\200169\01\dgn\22179GNA.dgn
03/30/2004
06:23:37 PM

ITEM 606 - ANCHOR ASSEMBLY, TYPE B-98

THIS ITEM SHALL CONSIST OF FURNISHING AND INSTALLING EITHER OF THE FOLLOWING GUARDRAIL END TERMINALS.

1) THE SRT-350, GUARDRAIL END TERMINAL AS MANUFACTURED BY TRINITY INDUSTRY, 1170 N. STATE STREET, GIRARD, OHIO 44420 (TELEPHONE: 330-346-0721).

THE LENGTH OF THE SRT-350 SYSTEM IS CONSIDERED TO BE 37'-6", INCLUSIVE OF THREE 12'-6" LONG RAIL ELEMENTS. INSTALLATION SHALL BE AT THE LOCATIONS SPECIFIED IN THE PLANS, IN ACCORDANCE WITH THE MANUFACTURER'S SPECIFICATIONS AS DETAILED ON THE FOLLOWING PRE-APPROVED SHOP DRAWINGS:

DWG. NO.	DRAWING NAME	DWG./ REV. DATE	ODOT APPROVAL DATE
SS444	SLOTTED RAIL TERMINAL POST LAYOUT AND ERECTION DETAILS SRT-350 (12.5, 8 POST)	7/12/99 Rev. 1	8/27/99
SS425M	SLOTTED RAIL TERMINAL SRT-350 POST LAYOUT AND ERECTION DETAILS (12.5, 9 POST)	6/21/97 Rev. 1	3/6/98

2) THE FLEAT-350 MANUFACTURED BY ROAD SYSTEMS, INC., 2516 MALLORY LANE, STOW, OHIO, 44224, (TELEPHONE: 815-464-5917).

THE LENGTH OF THE FLEAT-350 IS CONSIDERED TO BE 37'-6", INCLUSIVE OF THREE 12'-6" LONG RAIL ELEMENTS. INSTALLATION SHALL BE AT THE LOCATIONS SPECIFIED IN THE PLANS, IN ACCORDANCE WITH THE MANUFACTURER'S SPECIFICATIONS AS DETAILED ON THE FOLLOWING PRE-APPROVED SHOP DRAWINGS:

DWG. NO.	DRAWING NAME	DWG./ REV. DATE	ODOT APPROVAL DATE
FLT-M	FLARED ENERGY ABSORBING TERMINAL (FLEAT-350) ASSEMBLY	4/16/98	7/31/98

REFER TO THE MANUFACTURER'S INSTRUCTION REGARDING THE INSTALLATION OF, AND THE GRADING AROUND, THE FOUNDATION TUBES AND GROUND STRUT. THE TOP OF ANY FOUNDATION TUBE SHOULD BE LESS THAN 4-INCHES ABOVE THE GROUND. THE PLACEMENT OF THE FOUNDATION TUBES SHOULD BE AN APPROPRIATE DEPTH BELOW THE LEVEL LINE IN ORDER TO MAINTAIN THE FINISHED GUARDRAIL HEIGHT OF 27-3/4-INCHES FROM THE EDGE OF THE SHOULDER.

ON-SITE GRADING IS REQUIRED IF THE TOP OF THE FOUNDATION TUBES OR TOP OF THE GROUND STRUT DOES PROJECT MORE THAN 4 INCHES ABOVE THE GROUND LINE.

THE FACE OF THE TYPE B-98 IMPACT HEAD SHALL BE COVERED WITH TYPE G REFLECTIVE SHEETING, PER CMS 730.19: APPROXIMATELY 36" W X 12" H FOR THE SRT-350 AND 14" W X 20" H FOR THE FLEAT.

PAYMENT FOR THE ABOVE WORK SHALL BE MADE AT THE UNIT PRICE BID FOR ITEM 606, ANCHOR ASSEMBLY, TYPE B-98, EACH, AND SHALL INCLUDE ALL LABOR, TOOLS, EQUIPMENT AND MATERIALS NECESSARY TO CONSTRUCT A COMPLETE AND FUNCTIONAL ANCHOR ASSEMBLY SYSTEM, INCLUDING REFLECTIVE SHEETING AND ALL RELATED HARDWARE, GRADING, EMBANKMENT AND EXCAVATION NOT SEPARATELY SPECIFIED, AS REQUIRED BY THE MANUFACTURER.

ITEM SPECIAL - MAILBOX SUPPORT

THIS WORK SHALL CONSIST OF FURNISHING AND ERECTING MAILBOX SUPPORTS AND ANY ASSOCIATED MOUNTING HARDWARE IN ACCORDANCE WITH PLAN DETAILS, AND ATTACHING AN OWNER-SUPPLIED MAILBOX AT LOCATIONS SPECIFIED IN THE PLAN, OR OTHERWISE ESTABLISHED BY THE ENGINEER.

WOOD POSTS SHALL BE NOMINAL 4" BY 4" SQUARE OR 4 1/2" DIAMETER ROUND, AND CONFORM TO 710.14.

STEEL POSTS SHALL BE NOMINAL PIPE SIZE 2" I.D., AND CONFORM TO AASHTO M 181.

HARDWARE (PLATES, SCREWS, BOLTS, ETC.) SHALL BE COMMERCIAL-GRADE GALVANIZED STEEL.

POSTS SHALL BE SET PER THE FIRST PARAGRAPH OF 606.03, AND SHALL IN NO INSTANCE BE ENCASED IN CONCRETE.

SUPPORT HARDWARE SHALL ACCOMMODATE EITHER A SINGLE OR A DOUBLE MAILBOX INSTALLATION, AND NO MORE THAN TWO BOXES MAY BE MOUNTED ON A SINGLE POST.

THE MAILBOX SHALL BE SECURELY AND NEATLY ATTACHED BY THE CONTRACTOR TO THE NEW SUPPORT. THE CONTRACTOR SHALL FURNISH ALL NECESSARY ATTACHMENT HARDWARE (NUTS, BOLTS, PLATES, SPACERS, AND WASHERS) AS NECESSARY TO ACCOMMODATE THE COMPLETE INSTALLATION.

IN THE ABSENCE OF A NEW BOX SUPPLIED BY THE OWNER, THE CONTRACTOR SHALL SALVAGE THE EXISTING BOX AND PLACE IT ON THE NEW SUPPORT. DUE CARE SHALL BE EXERCISED IN SUCH AN OPERATION, AND THE CONTRACTOR SHALL BE RESPONSIBLE FOR REPAIRING OR REPLACING ANY BOX DAMAGED BY IMPROPER HANDLING ON HIS PART, AS JUDGED AND DIRECTED BY THE ENGINEER.

THE CONTRACTOR SHALL BE RESPONSIBLE FOR COORDINATING WITH THE LOCAL POST MASTER REGARDING THE TIMING OF THE MOVEMENT OF ANY MAILBOX TO A NEW LOCATION.

PAYMENT UNDER THIS ITEM SHALL BE LIMITED TO FINAL PERMANENT INSTALLATIONS. TEMPORARY INSTALLATIONS SHALL BE IN ACCORDANCE WITH 107.10. HOWEVER, THE SAME MATERIAL AND SIZE LIMITATIONS AS FOR PERMANENT INSTALLATIONS SHALL APPLY.

MAILBOX SUPPORTS, COMPLETE IN PLACE, WILL BE PAID FOR AT THE CONTRACT UNIT PRICE PER EACH, FOR ITEM SPECIAL MAILBOX SUPPORT, (SINGLE) (DOUBLE).

ITEM 202 - REMOVAL MISC. : WOODEN POST

THE FOLLOWING QUANTITIY HAS BEEN CARRIED TO THE GENERAL SUMMARY FOR REMOVAL OF WOODEN POSTS NEAR THE PARK DRIVE ON GIBSON STREET.

ITEM 202, REMOVAL MISC. : WOODEN POST 10 EACH

ITEM 204 - PROOF ROLLING

AN ESTIMATED QUANTITY FOR THIS ITEM HAS BEEN PROVIDED IN THE GENERAL SUMMARY FOR USE AS DIRECTED BY THE ENGINEER.

ITEM 204, PROOF ROLLING 2 HOURS

LOCATION OF GUARDRAIL

THE LOCATION OF GUARDRAIL RUNS AND IMPACT ATTENUATORS, AS SHOWN IN THESE PLANS, SHALL BE APPROVED BY THE ENGINEER PRIOR TO INSTALLATION. THE LOCATION OF THESE ITEMS SHALL BE STAKED BY THE CONTRACTOR PRIOR TO REVIEW BY THE ENGINEER. THE ENGINEER SHALL BE SATISFIED THAT ALL INSTALLATIONS WILL AFFORD MAXIMUM PROTECTION FOR TRAFFIC. EXTREME CARE SHALL BE TAKEN WHEN PLACING GUARDRAIL POST ADJACENT TO DRAINAGE STRUCTURES. ANY DAMAGE TO DRAINAGE STRUCTURES CAUSED BY GUARDRAIL PLACEMENT SHALL BE THE RESPONSIBILITY OF THE CONTRACTOR. THE COST OF STAKING SHALL BE INCLUDED IN THE LUMP SUM BID ITEM 623 - CONSTRUCTION LAYOUT STAKES.

ITEM 608 - CONCRETE STEPS, TYPE A, AS PER PLAN

THE PROPOSED CONCRETE STEPS NORTH OF THE HOUSE ON THE NORTHEAST CORNER OF GIBSON STREET AND DICKSON AVENUE SHALL MATCH THE EXISTING WALK WIDTH. THE EXISTING WALK WIDTH MAY DEVIATE FROM SCD RM-2.1. ALL OTHER DIMENSIONS SHALL FOLLOW PLANS AND SCD RM-2.1. SEE SHEET 31 FOR DETAILS.

EROSION CONTROL

SEEDING AND MULCHING

THE FOLLOWING QUANTITIES ARE PROVIDED TO PROMOTE GROWTH AND CARE OF PERMANENT SEEDED AREAS:

659, TOPSOIL	92 CU. YD.
659, SEEDING AND MULCHING	832 SQ. YD.
659, REPAIR SEEDING AND MULCHING	42 SQ. YD.
659, INTER-SEEDING	42 SQ. YD.
659, COMMERCIAL FERTILIZER	0.11 TON
659, LIME	0.17 ACRE
659, WATER	5 M. GAL.

SEEDING AND MULCHING SHALL BE APPLIED TO ALL AREAS OF EXPOSED SOIL BETWEEN THE RIGHT-OF-WAY LINES, AND WITHIN THE CONSTRUCTION LIMITS FOR AREAS OUTSIDE THE RIGHT-OF-WAY LINES COVERED BY WORK AGREEMENT OR SLOPE EASEMENT. QUANTITY CALCULATIONS FOR SEEDING AND MULCHING ARE BASED ON THESE LIMITS.

DRAINAGE

RESIDENTIAL AND COMMERCIAL DRAINAGE CONNECTIONS

EXISTING ROOF DRAINS, FOOTER DRAINS, OR YARD DRAINS, DISTURBED BY THE WORK, SHALL BE PROVIDED WITH UNOBSTRUCTED OUTLETS BY CONNECTING A CONDUIT THROUGH THE CURB OR INTO A DRAINAGE STRUCTURE. THE LOCATION, TYPE, SIZE AND GRADE OF THE NEW CONDUIT REQUIRED TO REPLACE OR EXTEND THE EXISTING DRAIN WILL BE DETERMINED BY THE ENGINEER.

THE FOLLOWING CONDUIT TYPES MAY BE USED: 707.33, 707.41 NON-PERFORATED, 707.42, 707.43, 707.45, 707.46, 707.47, 707.51, 707.52 SDR35.

THE FOLLOWING ESTIMATED QUANTITIES HAVE BEEN INCLUDED IN THE GENERAL SUMMARY FOR USE AS DIRECTED BY THE ENGINEER FOR THE WORK NOTED ABOVE:

603, 6" CONDUIT, TYPE B, FOR DRAINAGE CONNECTION	100 FT.
603, 6" CONDUIT, TYPE C, FOR DRAINAGE CONNECTION	100 FT.
603, 6" CONDUIT, TYPE E, FOR DRAINAGE CONNECTION	100 FT.
603, 6" CONDUIT, TYPE F, FOR DRAINAGE CONNECTION	100 FT.

CALCULATED CML CHECKED MVJ

GENERAL NOTES

MAH-680-7.24/8.34

\\Akrnd\Data\civil\200169\01\dgn\227996NB.dgn
03/30/2004
06:23:54 PM

DRAINAGE CONTINUED

REVIEW OF DRAINAGE FACILITIES

BEFORE ANY WORK IS STARTED ON THE PROJECT AND AGAIN BEFORE FINAL ACCEPTANCE BY THE STATE, REPRESENTATIVES OF THE STATE AND THE CONTRACTOR, ALONG WITH LOCAL REPRESENTATIVES, SHALL MAKE AN INSPECTION OF ALL EXISTING SEWERS WHICH ARE TO REMAIN IN SERVICE AND WHICH MAY BE AFFECTED BY THE WORK. THE CONDITION OF THE EXISTING CONDUITS AND THEIR APPURTENANCES SHALL BE DETERMINED BY FIELD OBSERVATIONS. RECORDS OF THE INSPECTION SHALL BE KEPT IN WRITING BY THE STATE.

ALL NEW CONDUITS, INLETS, CATCH BASINS, AND MANHOLES CONSTRUCTED AS PART OF THE PROJECT SHALL BE FREE OF ALL FOREIGN MATTER AND IN A CLEAN CONDITION BEFORE THE PROJECT WILL BE ACCEPTED BY THE STATE.

ALL EXISTING SEWERS INSPECTED INITIALLY BY THE ABOVE MENTIONED PARTIES SHALL BE MAINTAINED AND LEFT IN A CONDITION REASONABLY COMPARABLE TO THAT DETERMINED BY THE ORIGINAL INSPECTION. ANY CHANGE IN THE CONDITION RESULTING FROM THE CONTRACTOR'S OPERATIONS SHALL BE CORRECTED BY THE CONTRACTOR TO THE SATISFACTION OF THE ENGINEER.

PAYMENT FOR ALL OPERATIONS DESCRIBED ABOVE SHALL BE INCLUDED IN THE CONTRACT PRICE FOR THE PERTINENT 603 CONDUIT ITEMS.

ITEM 604 MANHOLE RECONSTRUCTED TO GRADE/ADJUSTED TO GRADE

THIS ITEM SHALL CONFORM TO THE REQUIREMENTS OF ITEM 604 AND ALSO INCLUDE ALL LABOR, EQUIPMENT AND MATERIALS NECESSARY TO ADJUST ALL MANHOLES TO THE PROPOSED GRADE.

ALL CASTINGS SHALL BE ADJUSTED TO THE FINISHED ROADWAY ELEVATION BY THE CONTRACTOR. THE DEPTH OF AN ADJUST TO GRADE SHALL BE 1FT. OR LESS AND THE WORK SHALL BE AS OUTLINED IN 604.03. ANY WORK BEYOND 1FT. DEPTH SHALL BE PAID UNDER THE ITEM 604 - CATCH BASIN, OR MANHOLE RECONSTRUCTED TO GRADE. THE TIME BETWEEN ADJUSTING THE CASTINGS SHALL BE KEPT TO AN ABSOLUTE MINIMUM. NO ADJUSTING RINGS SHALL BE PERMITTED.

CROSSINGS AND CONNECTIONS TO EXISTING PIPES AND UTILITIES

WHERE PLANS PROVIDE FOR A PROPOSED CONDUIT TO BE CONNECTED TO, OR CROSS OVER OR UNDER AN EXISTING SEWER OR UNDERGROUND UTILITY, THE CONTRACTOR SHALL LOCATE THE EXISTING PIPES OR UTILITIES BOTH AS TO LINE AND GRADE BEFORE STARTING TO LAY THE PROPOSED CONDUIT.

IF IT IS DETERMINED THAT THE ELEVATION OF THE EXISTING CONDUIT, OR EXISTING APPURTENANCE TO BE CONNECTED, DIFFERS FROM THE PLAN ELEVATION OR RESULTS IN A CHANGE IN THE PLAN CONDUIT SLOPE, THE ENGINEER SHALL BE NOTIFIED BEFORE STARTING CONSTRUCTION OF ANY PORTION OF THE PROPOSED CONDUIT WHICH WILL BE AFFECTED BY THE VARIANCE IN THE EXISTING ELEVATIONS.

IF IT IS DETERMINED THAT THE PROPOSED CONDUIT WILL INTERSECT AN EXISTING SEWER OR UNDERGROUND UTILITY IF CONSTRUCTED AS SHOWN ON THE PLAN, THE ENGINEER SHALL BE NOTIFIED BEFORE STARTING CONSTRUCTION OF ANY PORTION OF THE PROPOSED CONDUIT WHICH WOULD BE AFFECTED BY THE INTERFERENCE WITH AN EXISTING FACILITY.

PAYMENT FOR ALL THE OPERATIONS DESCRIBED ABOVE SHALL BE INCLUDED IN THE CONTRACT PRICE FOR THE PERTINENT 603 CONDUIT ITEM.

PAVEMENT

EXISTING PAVEMENT THICKNESS

WHERE THE TYPICAL SECTIONS INDICATE EXISTING PAVEMENT THICKNESSES, THESE THICKNESSES ARE ORIGINAL DESIGN THICKNESSES AND MAY NOT REPRESENT THE AS-BUILT DESIGN THICKNESS' WHICH WILL BE ENCOUNTERED BY THE CONTRACTOR. WHERE THE THICKNESS OF THE EXISTING PAVEMENT LAYERS DIFFER FROM THOSE INDICATED ON THE PLANS, NO ADDITIONAL PAYMENT WILL BE MADE FOR OPERATIONS RELATED TO THIS DIFFERENCE; INCLUDING BUT NOT LIMITED TO PAVEMENT PLANING AND FULL DEPTH PAVEMENT SAWING.

ITEM 608 - 4" CONCRETE WALK, AS PER PLAN
ITEM 609 - CURB, TYPE 6, AS PER PLAN

THE PROPOSED SIDEWALK ALONG THE WEST SIDE OF THE HOUSE LOCATED ON THE NORTHEAST CORNER OF GIBSON STREET/DICKSON AVENUE SHALL BE CONSTRUCTED AS TO NOT EXPOSE ANY ADDITIONAL FOUNDATION ON THE HOME. SLOPE THE SIDEWALK AWAY FROM THE HOME AT 4% BEGINNING AT THE EXISTING HOME/WALK INTERFACE. THE EXISTING CONCRETE STEP AT THE SOUTHWEST CORNER OF THE HOME IS TO REMAIN. THE TRANSITION OF THE CURB HEIGHT AND SIDEWALK ELEVATION SHALL BEGIN NORTH OF THE WALK BEHIND THE HOME AT STA. 48+15.06 TO MEET THE PROPOSED TYPICAL CURB HEIGHT AND SIDEWALK ELEVATION.

ITEM 622 - CONCRETE BARRIER, SINGLE SLOPE, TYPE D, AS PER PLAN

THIS ITEM SHALL CONSIST OF CONSTRUCTING CONCRETE BARRIER PER ITEM 622 AND DETAILS BELOW.
ALL LABOR, EQUIPMENT AND MATERIALS TO COMPLETE THE ABOVE-DESCRIBED WORK SHALL BE INCLUDED IN THE UNIT BID PRICE FOR ITEM 622 - CONCRETE BARRIER, SINGLE SLOPE, TYPE D, AS PER PLAN.

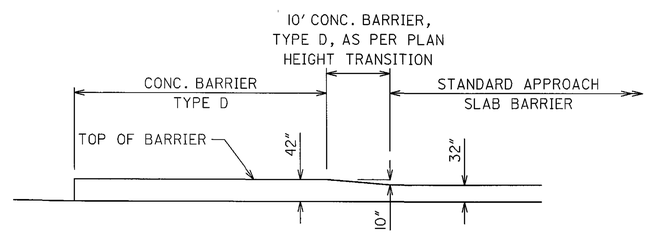

BARRIER TRANSITION
PROFILE VIEW

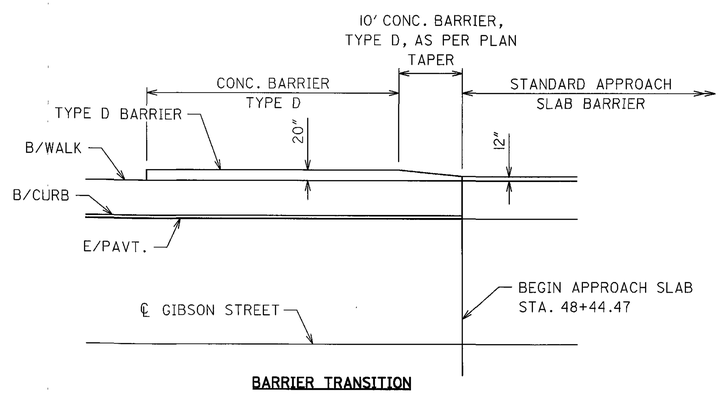

BARRIER TRANSITION
PLAN VIEW

ITEM 604 - MANHOLE RECONSTRUCTED TO GRADE, AS PER PLAN

THE EXISTING MANHOLE (RC-20) LOCATED ON SHIRLEY ROAD AT STATION 47+79.86, 12.83' RT. SHALL BE RECONSTRUCTED TO GRADE AS PER ITEM 604. THE CONTRACTOR IS TO SUPPLY A FLAT SLAB TOP AS PER MH-1.2 WITHOUT ACCESS. THE RECONSTRUCTED MANHOLE IS TO BE BURIED APPROXIMATELY ONE FOOT BELOW THE APPROACH SLAB'S BASE.

WATER WORK AND SANITARY SEWER

WATER MAIN NOTES

THIS WORK SHALL CONSIST OF WORK DESCRIBED BY ITEM 638 WITH THE FOLLOWING CONDITIONS:

THE CONTRACTOR MUST MAINTAIN A 12-INCH MINIMUM VERTICAL CLEARANCE FROM THE EDGE OF ALL WATER MAINS TO THE EDGE OF ALL STORM SEWER PIPES AND/OR INLET LEAD PIPES WHERE THEY CROSS.

THE CONTRACTOR MUST MAINTAIN A 4-FOOT MINIMUM HORIZONTAL CLEARANCE FROM THE EDGE OF ALL WATER MAINS TO THE EDGE OF ALL STORM SEWER PIPE INLETS AND STORM SEWER MANHOLES.

THE CONTRACTOR MUST MAINTAIN A 10-FOOT MINIMUM HORIZONTAL CLEARANCE FROM THE EDGE OF ALL WATER MAINS TO THE EDGE OF ALL SANITARY SEWER AND/OR FORCE MAIN PIPES.

THE CONTRACTOR MUST MAINTAIN AN 18-INCH MINIMUM VERTICAL CLEARANCE FROM THE EDGE OF ALL WATER MAINS AND/OR SERVICES TO THE OUTSIDE EDGE OF ALL SANITARY SEWER PIPES WHERE THEY CROSS.

THE CONTRACTOR MUST MAINTAIN A 12-INCH MINIMUM VERTICAL CLEARANCE FROM THE EDGE OF ALL WATER MAINS TO THE EDGE OF ALL DIRECT BURIAL CONDUITS, CONCRETE ENCASED ELECTRICAL CONDUITS, LIGHT POLE BASES, AND HAND HOLE PULL BOXES.

THE CONTRACTOR MUST MAINTAIN A 36-INCH MINIMUM HORIZONTAL CLEARANCE FROM THE EDGE OF ALL WATER MAINS TO THE EDGE OF ALL DIRECT BURIAL CONDUITS, CONCRETE ENCASED ELECTRICAL CONDUITS, LIGHT POLE BASES, AND HAND HOLE PULL BOXES.

BOOSTER PUMPS ARE NOT PERMITTED ON SERVICE CONNECTIONS.

WATER MAIN AND FITTINGS: DUCTILE IRON COMPLYING WITH 748.

IF RESTRAINED JOINTS ARE USED IN LIEU OF CONCRETE THRUST BLOCKS, PIPE RESTRAINT LENGTHS SHALL COMPLY WITH DUCTILE IRON PIPE RESEARCH ASSOCIATION REQUIREMENTS.

IN CASING PIPE, ALL JOINTS SHALL BE BOLTLESS RESTRAINED PER 748.

ALL NEW WATER MAINS ARE TO BE COMPLETELY WRAPPED WITH POLYETHYLENE ENCASEMENT AS SPECIFIED IN 638.12 AND 748.07.

BEFORE ACCEPTANCE, THE WATER MAIN SHALL BE PRESSURE TESTED ACCORDING TO AWWA C-600, LATEST EDITION, AND DISINFECTED ACCORDING TO AWWA C-651, LATEST EDITION.

THE CONTRACTOR SHALL SUPPLY A TEMPORARY AND SAFE WATER SERVICE TO ALL USERS THAT WILL HAVE THEIR WATER SERVICE INTERRUPTED BY THIS CONSTRUCTION.

THE CONTRACTOR'S PERSONNEL SHALL NOT OPERATE ANY EXISTING VALVES ON CITY WATER MAINS AT ANY TIME. VALVES SHALL BE OPENED OR CLOSED BY CITY PERSONNEL ONLY.

NO TAPS FOR WATER SERVICES SHALL BE MADE UNTIL AFTER THE WATER MAIN HAS BEEN SUCCESSFULLY PRESSURE TESTED AND STERILIZED.

USE EXTREME CAUTION WHEN EXCAVATING IN THE AREA OF EXISTING WATER MAIN PIPES, VALVES, HYDRANTS, AND THRUST BLOCKS, STORM SEWERS, UTILITY LINES AND OTHER APPURTENANCES. DAMAGE AND REPAIR OF EXISTING ITEMS WILL BE THE RESPONSIBILITY OF THE CONTRACTOR.

ALL EXISTING FACILITIES NOT SCHEDULED FOR REMOVAL, ABANDONMENT OR REPLACEMENT THAT ARE DAMAGED BY THE CONTRACTOR SHALL BE REPAIRED BY THE CONTRACTOR AT THE EXPENSE OF THE CONTRACTOR.

THE CONTRACTOR SHALL BE RESPONSIBLE FOR THE REMOVAL AND DISPOSAL OF ALL HYDRANTS, VALVES AND VALVE BOXES THAT ARE ABANDONED AS A RESULT OF CONSTRUCTION OF THE PROPOSED WATERLINE.

LEAD OR STEEL WATER SERVICES SHALL BE REPLACED FROM THE NEW MAIN TO THE CURB STOP OR METER WITH 1" TYPE K COPPER. NEW WATER SERVICES SHALL MEET THE CITY STANDARDS.

2" MANUAL BLOWOFF ASSEMBLIES SHALL BE CONSIDERED INCIDENTAL TO WATERLINE INSTALLATION. THE COST OF THE 2" MANUAL BLOWOFF ASSEMBLIES SHALL BE INCLUDED IN THE PRICE BID FOR WATERLINES.

CALCULATED CML
CHECKED MVJ

GENERAL NOTES

MAH-680-7.24/8.34

\\vikrn01\data\civil\200169\01\dgn\221796NC.dgn
03/30/2004
06:24:08 PM

WATER WORKS AND SANITARY SEWER CONTINUED

WATER SERVICE AND SANITARY SEWER SERVICE INTERRUPTIONS

THE CONTRACTOR IS RESPONSIBLE TO MAINTAIN WATER AND SANITARY SEWER SERVICES TO ALL PROPERTY OWNERS AT ALL TIMES AT NO ADDITIONAL COST.

THE CONTRACTOR MAY DISRUPT SERVICE TO A PROPERTY FOR A PERIOD OF UP TO 24 HOURS. THE CONTRACTOR SHALL NOTIFY THE PROPERTY OWNER AT LEAST 24 HOURS IN ADVANCE OF THE SERVICE DISRUPTION. DISRUPTION PERIODS GREATER THAN 24 HOURS MUST BE APPROVED BY THE ENGINEER.

PAYMENT FOR THE ABOVE WORK SHALL BE INCLUDED IN THE CONTRACT PRICE BID FOR THE PERTINENT WATERWORK OR SANITARY ITEMS.

WATER WORK CONTINGENCY QUANTITIES

THE FOLLOWING ESTIMATED QUANTITIES HAVE BEEN INCLUDED IN THE GENERAL SUMMARY TO BE USED AS DIRECTED BY THE ENGINEER:

ITEM 202 - PIPE REMOVED, 24" AND UNDER	50 FT.
ITEM 638 - SERVICE BOX ADJUSTED TO GRADE	3 EACH
ITEM 638 - 8" WATER MAIN DUCTILE IRON PIPE ANSI CLASS 52, PUSH-ON JOINTS AND FITTINGS, AS PER PLAN	50 FT.
ITEM 638 - VALVE BOX ADJUSTED TO GRADE	1 EACH
ITEM 638 - POLYETHYLENE ENCASEMENT	50 FT.

EXISTING 8" WATER MAIN ON SHIRLEY ROAD STRUCTURE

THE EXISTING 8" WATER MAIN ATTACHED TO THE SHIRLEY ROAD STRUCTURE IS TO REMAIN IN SERVICE AND BE RAISED WITH THE STRUCTURE DECK. THE FOLLOWING ESTIMATED QUANTITIES HAVE BEEN INCLUDED IN THE PLANS TO RECONNECT THE WATER MAIN:

ITEM 202 - PIPE REMOVED, 24" AND UNDER	150 FT.
ITEM 638 - 8" WATER MAIN DUCTILE IRON PIPE ANSI CLASS 52, PUSH-ON JOINTS AND FITTINGS, AS PER PLAN	150 FT.
ITEM 638 - 8" GATE VALVE AND VALVE BOX, AS PER PLAN	2 EACH
ITEM 638 - POLYETHYLENE ENCASEMENT	150 FT.

ITEM 638 - 8" WATERMAIN, DUCTILE IRON PIPE, ANSI CLASS 52, PUSH-ON JOINTS AND FITTINGS, AS PER PLAN

THIS WORK SHALL CONSIST OF WORK DESCRIBED BY ITEM 638 WITH THE FOLLOWING CONDITIONS:
CITY OF YOUNGSTOWN

ALL CONSTRUCTION MATERIALS AND TESTING TO BE INSPECTED AND OR WITNESSED BY AN
AGENT OF THE CITY OF YOUNGSTOWN WATER DEPT. BY ORDER OF THE WATER COMMISSIONER.

ALL MATERIALS, METHODS OF CONSTRUCTION, ETC. TO BE IN ACCORDANCE WITHIN THE CITY OF
YOUNGSTOWN, WATER DEPT. SPECIFICATIONS.

CITY OF YOUNGSTOWN WATER DEPT. SHALL BE NOTIFIED 48 HOURS PRIOR TO BEGINNING
CONSTRUCTION AT (330)743-5338.

DEVIATION FROM THESE PLANS, AS APPROVED, WILL NOT BE PERMITTED WITHOUT WRITTEN
AUTHORIZATION FROM THE CITY OF YOUNGSTOWN WATER DEPT. ENGINEER.

PRIOR TO THE START OF CONSTRUCTION A PRE-CONSTRUCTION MEETING WILL BE HELD WITH THE
CHIEF ENGINEER OF THE WATER DEPT.

ITEM 638 - 8" GATE VALVE AND VALVE BOX, AS PER PLAN

CITY OF YOUNGSTOWN
ALL WATER VALVES THROUGH 12 INCH SHALL BE RESILIENT SEAT GATE VALVES, OPEN CLOCKWISE AND CONFORM TO AWWA STANDARDS C-500.

LIGHTING

ITEM 625 - STRUCTURE GROUNDING SYSTEM - AS PER PLAN

THIS ITEM SHALL CONSIST OF GROUNDING EACH LIGHT POLE AND STRUCTURE JUNCTION BOX AND RECONNECTING THE EXISTING STRUCTURE GROUND SYSTEM FOR BRIDGE NO. MAH-680-0724 AND BRIDGE NO. MAH-680-0834 TO THE NEW BRIDGE STEEL. THE CONTRACTOR SHALL INSPECT EACH GROUND CONNECTION AND VERIFY WORK REQUIRED WITH ENGINEER PRIOR TO WORK. PROVIDE ALL CABLE, CONNECTORS, LABOR, MATERIAL AND INCIDENTALS NECESSARY TO COMPLETE THE WORK AS SHOWN ON STANDARD CONSTRUCTION DRAWING HL-50.21. PAYMENT SHALL BE MADE FOR EACH ITEM 625 - "STRUCTURE GROUNDING SYSTEM - AS PER PLAN"

ITEM 625 - LIGHT POLE ANCHOR BOLTS ON STRUCTURES

ANCHOR BOLTS FOR MOUNTING LIGHT POLES ON BRIDGES AND RETAINING WALLS SHALL CONFORM TO THE REQUIREMENTS OF 725.01 AND DETAILS SHOWN ON THE PLANS AND STANDARD DRAWINGS, OR THE APPROVED SHOP DRAWINGS, FOR THE RESPECTIVE POLES TO BE PLACED THEREON. PAYMENT SHALL BE MADE AT THE UNIT PRICE BID FOR EACH SET OF THE SIZE REQUIRED AND NECESSARY TO INSTALL ONE POLE, AND THIS PAYMENT SHALL CONSTITUTE FULL COMPENSATION FOR FURNISHING AND PLACING THE BOLTS.

ITEM 625 -CABLE SPLICING KIT

THIS ITEM SHALL CONSIST OF PROVIDING AND INSTALLING AN APPROVED CABLE SPLICING KIT AS DESCRIBED IN PARAGRAPH 5 OF SECTION 725.15 OF THE ODOT CONSTRUCTION AND MATERIAL SPECIFICATIONS. THE COST OF ALL MATERIALS, LABOR, AND EQUIPMENT NECESSARY FOR THIS ITEM SHALL BE INCLUDED IN THE UNIT BID PRICE FOR EACH ITEM 625 - CABLE SPLICING KIT

CONDUIT ON STRUCTURE

EXPANSION FITTINGS FOR CONDUIT ON STRUCTURES SHALL BE OZ TYPE DX, CROUSE-HINDS TYPE XJ-4, APPLETON TYPE XJ-4, OR EQUAL APPROVED BY THE ENGINEER, FOR BRIDGES NO. 680-0724 AND NO. 680-0834 EACH EXPANSION FITTING SHALL HAVE A COPPER EXTERNAL BONDING JUMPER.

625.07 - 725.13 UNDERPASS LUMINARIES

UNDERPASS LUMINARIES SHALL BE HOLOPHANE "UNDERPASS WALLPACK", WESTINGHOUSE, OR GENERAL ELECTRIC WL-250 UNDERPASS UNIT OR EQUAL APPROVED BY THE ENGINEER, AND SHALL BE FURNISHED WITH AN INTEGRAL FUSE HOLDER AND 10-AMPERE FUSE. THE INTEGRAL HIGH PRESSURE SODIUM BALLAST SHALL BE OF A REGULATOR TYPE RATED FOR 480 VOLTS, 100 WATTS.

ITEM 202 LUMINAIRE REMOVED, AS PER PLAN

UNDERPASS LUMINARIES SHALL BE REMOVED, COMPLETE WITH CONDUIT AND WIRE, SOWN TO THE PULLBOX. THE UNIT PRICE FOR BID FOR "ITEM 202 - LUMINAIRE REMOVED, AS PER PLAN" SHALL INCLUDE ALL PAYMENT FOR ALL EQUIPMENT AND LABOR NECESSARY TO COMPLETE THE WORK AS SPECIFIED.

ITEM 625 - SERVICE TO UNDERPASS LIGHTING, AS PER PLAN

THIS ITEM SHALL CONSIST OF PROVIDING COMPLETE ELECTRICAL SERVICE, EXCEPT FOR LUMINAIRES AND STRUCTURE GROUNDING, FOR AN UNDERPASS LIGHTING SYSTEM ON BRIDGE NO. MAH-680-0834 (OVER) THE MAINLINE. THE INSTALLATION WORK SHALL INCLUDE CONDUITS, CONDUIT GROUNDING, MOUNTINGS, FITTINGS, JUNCTION BOXES, CABLES, TRENCHING, AND ALL INCIDENTALS NECESSARY TO COMPLETE, READY FOR USE, THE SERVICE AS DETAILED ON SHEET NOS. 60 & 61. THE UNIT PRICE BID FOR "ITEM 625 - SERVICE TO UNDERPASS LIGHTING, AS PER PLAN" SHALL INCLUDE PAYMENT FOR ALL EQUIPMENT, LABOR, AND MATERIALS NECESSARY TO COMPLETE THE WORK AS SPECIFIED. COMPONENT PARTS NOT SPECIFICALLY MENTIONED BUT REQUIRED FOR SATISFACTORY OPERATION OF THIS ITEM SHALL BE FURNISHED AND CONSIDERED PAID FOR AS PART OF THE ITEM.

ITEM 625 - DISCONNECT EXISTING CIRCUIT, AS PER PLAN

THIS ITEM SHALL CONSIST OF DISCONNECTING AND REMOVING ALL CONDUIT, FITTINGS AND WIRING TO THE UNDERPASS LUMINAIRES ON BRIDGE NO. MAH-680-0834 OVER THE MAINLINE. THE UNIT PRICE BID FOR "ITEM 625 - DISCONNECT EXISTING CIRCUIT, AS PER PLAN" SHALL INCLUDE PAYMENT FOR ALL EQUIPMENT, LABOR AND MATERIALS NECESSARY TO COMPLETE THE WORK AS SPECIFIED.

625.03 GENERAL

THE POWER SUPPLY AGENCY FOR THIS PROJECT IS:

OHIO EDISON CO.
730 SOUTH AVE.
YOUNGSTOWN, OHIO 44502
(330)740-7635
ATTN: BILL SPEECE

POWER SERVICE: 120/240 VOLT, 3 WIRE, SINGLE PHASE, GROUNDED NEUTRAL

GUARANTEE

THE CONTRACTOR SHALL GUARANTEE THAT THE LIGHTING SYSTEM INSTALLED AS PART OF THIS CONTRACT SHALL OPERATE SATISFACTORILY FOR A PERIOD OF 90 DAYS FOLLOWING COMPLETION OF THE 10-DAY PERFORMANCE TEST. IN THE EVENT OF UNSATISFACTORY OPERATION, THE CONTRACTOR SHALL CORRECT FAULTY INSTALLATIONS, MAKE REPAIRS AND REPLACE DEFECTIVE PARTS WITH NEW PARTS OF EQUAL OR BETTER QUALITY. EQUIPMENT, MATERIAL AND LABOR COSTS INCURRED IN CORRECTING AN UNSATISFACTORY OPERATION SHALL BE BORNE BY THE CONTRACTOR.

CUSTOMARY MANUFACTURER'S GUARANTEES FOR THE FOREGOING ITEMS SHALL BE TURNED OVER TO THE STATE FOLLOWING ACCEPTANCE OF THE EQUIPMENT.

THE COST OF GUARANTEEING THE LIGHTING SYSTEM SHALL BE INCIDENTAL TO AND INCLUDED IN THE CONTRACT UNIT PRICE OF THE VARIOUS ITEMS MAKING UP THE SYSTEM.

HIGH-PRESSURE SODIUM LAMPS

HIGH-PRESSURE SODIUM LAMPS SHALL BE OF THE WATTAGE INDICATED ON THE PLANS AND SHALL BE GENERAL ELECTRIC "LUCALOX," SYLVANIA "LUMALOX," WESTINGHOUSE "CERVALUX," OR EQUAL APPROVED BY THE ENGINEER AND SHALL CONFORM TO SECTION 725.14 OF THE ODOT SPECIFICATIONS. 150 WATT HPS LAMPS SHALL BE OF THE 100 VOLT DESIGN, ANSI S56.

625.07 - 725.11 LUMINAIRES

STYLE B LUMINAIRES SHALL HAVE SINGLE RATED 120 VOLT, 250 WATT, INTEGRAL REGULATOR BALLASTS FOR USED WITH HIGH PRESSURE SODIUM LAMPS AND SHALL BE GENERAL ELECTRIC M400, COOPER OVD 255 OV-25, ITT AMERICAN ELECTRIC 125/266, OR 125/126 OR EQUAL APPROVED BY THE ENGINEER.

UNDERDRAINS FOR PULLBOXES

REFERENCE IS MADE TO STANDARD DRAWINGS FOR DETAILS OF DRAINING PULLBOXES, UNDERDRAINS FOR PULLBOXES SHALL BE USED AS DIRECTED BY THE ENGINEER AND SHALL BE PROVIDED WHERE THE LENGTH REQUIRED FOR A SATISFACTORY OUTLET DOES NOT EXCEED APPROXIMATELY 20 FEET. AN ESTIMATED QUANTITY OF 40 LIN. FT. OF ITEM 603 - "4 INCH CONDUIT, TYPE E" IS INCLUDED IN THE GENERAL SUMMARY FOR THIS PURPOSE.

SEQUENCE OF CONSTRUCTION

THIS PROJECT CONSISTS OF THE RECONSTRUCTION OF THE GIBSON STREET (MAH-680-0724) AND SHIRLEY ROAD (MAH-680-0834) BRIDGES OVER INTERSTATE 680. THE VERTICAL CLEARANCE OF GIBSON STREET AND SHIRLEY ROAD OVER I-680 ARE BEING IMPROVED TO 15'-6". ASSOCIATED ROADWAY RECONSTRUCTION, SIGNING AND PAVEMENT MARKING AND SIDEWALK WORK IS BEING PERFORMED AS NECESSARY.

PHASE 1:

THE CONTRACTOR SHALL CLOSE THE GIBSON STREET (MAH-680-0724) OVERPASS TO TRAFFIC. TRAFFIC SHALL BE DETOURED VIA DICKSON AVENUE, SOUTH AVENUE, AND LEE AVENUE. THE CONTRACTOR SHALL PERFORM ALL BRIDGE REHABILITATION, PAINTING AND FULL DEPTH PAVEMENT REPLACEMENT UPTO BUT NOT INCLUDING THE FINAL PAVEMENT COURSE. UPON COMPLETION OF THE FULL DEPTH PAVEMENT RECONSTRUCTION, THE CONTRACTOR SHALL ERECT THE PERMANENT SIGNAGE. UPON COMPLETION OF PHASE 1 CONSTRUCTION ACTIVITIES, THE CONTRACTOR SHALL RE-OPEN GIBSON STREET TO TRAFFIC.

PHASE 2:

THE CONTRACTOR SHALL CLOSE THE SHIRLEY ROAD (MAH-680-0834) OVERPASS TO TRAFFIC. TRAFFIC SHALL BE DETOURED VIA SOUTH SHIRLEY ROAD, MIDLOTHIAN BOULEVARD, LOVELAND ROAD AND POWERS WAY. THE CONTRACTOR SHALL PERFORM ALL BRIDGE REHABILITATION, PAINTING AND FULL DEPTH PAVEMENT REPLACEMENT UPTO BUT NOT INCLUDING THE FINAL PAVEMENT COURSE. UPON COMPLETION OF THE FULL DEPTH PAVEMENT RECONSTRUCTION, THE CONTRACTOR SHALL ERECT THE PERMANENT SIGNAGE. UPON COMPLETION OF PHASE 2 CONSTRUCTION ACTIVITIES, THE CONTRACTOR SHALL RE-OPEN SHIRLEY ROAD TO TRAFFIC.

PHASE 3:

THE CONTRACTOR SHALL PLACE SURFACE COURSE OF PAVEMENT AND PERMANENT PAVEMENT MARKINGS THROUGHOUT THE PROJECT LIMITS, UNDER FLAGGER CONTROL. THE CONTRACTOR SHALL BE REQUIRED TO PERFORM FINAL PAVING AND STRIPING OPERATIONS DURING NON PEAK HOURS. ALL LANES MUST BE OPEN TO TRAFFIC, IN A PASSABLE CONDITION AS DETERMINED BY THE ENGINEER, AND AVAILABLE FOR USE DURING PEAK HOURS. PEAK HOURS ARE DETERMINED TO BE BETWEEN 7:00 AM AND 9:00 AM AS WELL AS 3:00 PM TO 6:00 PM.

RESTRICTIONS:

THE FOLLOWING RESTRICTIONS ARE IMPLEMENTED WITHIN THE ABOVE SEQUENCE OF CONSTRUCTION AND SHALL BE REQUIRED TO BE IMPLEMENTED IN ANY ALTERNATE SEQUENCE OF CONSTRUCTION PRESENTED BY THE CONTRACTOR:

1. THE SHIRLEY ROAD BRIDGE CAN NOT BE CLOSED CONCURRENTLY WITH ANY OTHER ROAD CLOSURE IN THE MAH-680-8.18 CONTRACT OR IN THE MAH-680-7.24/8.34 CONTRACT.
2. THE GIBSON STREET BRIDGE MAY BE CONSTRUCTED CONCURRENTLY WITH THE MAH-680-8.18 CONTRACT.
3. ANY REQUIRED LANE CLOSURES ON I-680 SHALL BE ENACTED PER THE ALLOWABLE LANE CLOSURE NOTE.
4. ANY REQUIRED ROAD CLOSURES ON I-680 SHALL BE ENACTED PER THE ALLOWABLE ROAD CLOSURE NOTE.

ALTERNATE MAINTENANCE OF TRAFFIC METHODS

THE SEQUENCE OF CONSTRUCTION NOTE PROVIDED IN THESE PLANS IS NOT TO BE CONSIDERED AS THE ONLY SEQUENCE OR METHOD OF CONSTRUCTION THAT MAY BE EMPLOYED ON THIS PROJECT.

ALTERNATE SEQUENCES OF CONSTRUCTION MAY BE UTILIZED, PROVIDED THAT THE ALTERNATE SEQUENCE OF CONSTRUCTION IS SUBMITTED TO THE ENGINEER A MINIMUM OF 30 DAYS BEFORE IMPLEMENTATION, AND PROVIDED THAT THE ENGINEER APPROVES THE REQUESTED ALTERNATE SEQUENCE OF CONSTRUCTION IN WRITING.

ANY ALTERNATE SEQUENCE OF CONSTRUCTION SHALL ADHERE TO THE RESTRICTIONS DESCRIBED IN THE SEQUENCE OF CONSTRUCTION NOTE AND SHALL NOT WAIVE ANY LIQUIDATED DAMAGES PROVISIONS.

NOTICE OF CLOSURE SIGNS

NOTICE OF CLOSURE SIGNS, AS DETAILED BELOW, SHALL BE ERECTED BY THE CONTRACTOR AT LEAST ONE WEEK IN ADVANCE OF THE SCHEDULED ROAD OR RAMP CLOSURE. THE SIGNS SHALL BE ERECTED ON THE RIGHT-HAND SIDE OF THE ROAD/RAMP FACING TRAFFIC. THEY SHALL BE PLACED SO AS NOT TO INTERFERE WITH THE VISIBILITY OF ANY OTHER TRAFFIC CONTROL SIGNS. ON ROADWAYS, THEY SHOULD BE ERECTED AT THE POINT OF CLOSURE. THE SIGNS MAY BE ERECTED ANYWHERE ON RAMPS AS LONG AS THEY ARE VISIBLE TO THE MOTORISTS USING THE RAMP. ON ENTRANCE RAMPS, THE SIGN SHALL BE ERECTED WELL IN ADVANCE OF THE MERGE AREA TO AVOID DISTRACTING MORTORISTS.

THE COST OF THE NOTICE OF CLOSURE SIGNS IS CONSIDERED TO BE INCIDENTAL TO AND INCLUDED IN ITEM 614 - MAINTAINING TRAFFIC.

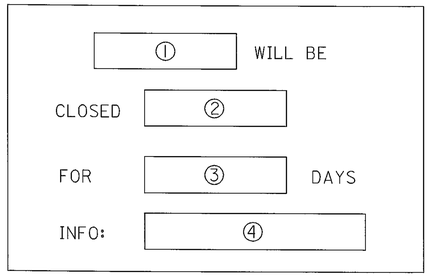

OC-60A-60

OVERLAY 1 - EITHER SHIRLEY RD. OR GIBSON ST. WHICHEVER IS APPROPRIATE

OVERLAY 2 - MONTH AND DATE FORMAT OF CLOSURE

OVERLAY 3 - NUMERICAL DURATION OF ROAD/BRIDGE CLOSURE

OVERLAY 4 - (330-297-0801 EXT. 339)

DETOUR NOTIFICATION

THE CONTRACTOR SHALL ADVISE THE OHIO DEPARTMENT OF TRANSPORTATION'S OFFICE (330-297-0801 EXT. 339) AND THE CITY OF YOUNGSTOWN ENGINEER'S OFFICE (330-742-8800) EIGHTEEN CALENDAR DAYS IN ADVANCE OF WHEN THE DETOUR ROUTE SHOULD BE IN EFFECT. THE CONTRACTOR SHALL BE RESPONSIBLE FOR THE PROVISION ERECTION AND MAINTENANCE OF ALL TRAFFIC CONTROL DEVICES REQUIRED FOR THE PROJECT, INCLUDING THOSE ON THE DETOUR ROUTES.

CALCULATED MAH
CHECKED BJT

MAINTENANCE OF TRAFFIC
GENERAL NOTES

MAH-680-7.24/8.34

\\akron\Data\civil\20169\0\MD\dgn\trafcontrol\22798MB.dgn
03/30/2004
06:41:20 PM

ALLOWABLE LANE CLOSURE TIME LIMITATIONS

THE CONTRACTOR MAY CLOSE LANES ON I-680 DURING THE FOLLOWING PERIODS FOR PAINTING:

GIBSON STREET BRIDGE

WEEKDAY	WEEKENDS
1 - LANE ONLY	1 - LANE ONLY
7:00 AM - 8:00 AM 3:00 PM - 7:00 PM	4:00 PM - 6:00 PM
	2 - LANES
2 - LANES	12:00 AM - 4:00 PM 6:00 PM - 12:00 AM
7:00 PM - 7:00 AM 8:00 AM - 3:00 PM	

SHIRLEY ROAD BRIDGE

WEEKDAY	WEEKENDS
1 - LANE ONLY	1 - LANE ONLY
7:00 AM - 8:00 AM 11:00 AM - 7:00 PM	1:00 PM - 4:00 PM 5:00 PM - 7:00 PM
2 - LANES	2 - LANES
7:00 PM - 7:00 AM 8:00 AM - 11:00 AM	12:00 AM - 1:00 PM 4:00 PM - 5:00 PM 7:00 PM - 12:00 AM

ALL TIMES SHOWN ARE TAKEN FROM THE ODOT DISTRICT 4 PERMITTED LANE CLOSURES CHART.

NO LANE CLOSURES ARE PERMITTED ON HOLIDAYS OR HOLIDAY WEEKENDS. THIS INCLUDES THE DAY BEFORE OR AFTER THE HOLIDAY OR HOLIDAY WEEKEND. THE FOLLOWING ARE CONSIDERED HOLIDAYS: EASTER, MEMORIAL DAY, FOURTH OF JULY, LABOR DAY, THANKSGIVING, CHRISTMAS DAY AND NEW YEARS DAY.

OMUTCD CLARIFICATION

ANY REFERENCE TO THE LATEST EDITION AND REVISION OF THE OHIO MANUAL OF UNIFORM TRAFFIC CONTROL DEVICES (OMUTCD) SHALL BE INTERPRETED AS:

THE CONTRACTOR SHALL BE REQUIRED TO UTILIZE THE 1972 EDITION, REVISION 21 OF THE OMUTCD (WHICH TOOK EFFECT JUNE 1, 1999).

ALLOWABLE ROAD CLOSURE TIME LIMITATIONS

THE CONTRACTOR MAY TEMPORARILY CLOSE I-680 DURING THE FOLLOWING PERIODS FOR STEEL ERECTION AND OVERHEAD SIGN ERECTION. THE CONTRACTOR SHALL UTILIZED OHIO STATE HIGHWAY PATROL FORCES TO CLOSE THE HIGHWAY BY THE STOPPING TRAFFIC ON THE I-680 NOTE CONTAINED IN THIS PLAN. THE CONTRACTOR SHALL BE ALLOWED TO CLOSE THE HIGHWAY FOR 10 MINUTES IN ANY 30 MINUTE PERIOD DURING THE FOLLOWING TIMES:

ROAD CLOSURE RESTRICTIONS FOR STEEL ERECTION:

WEEKDAY	WEEKENDS
11:00 PM - 5:00 AM	12:00 AM SAT - 9:00 AM SAT 11:00 PM SAT - 8:00 AM SUN 11:00 PM SUN - 5:00 AM MON

NO ROAD CLOSURES ARE PERMITTED ON HOLIDAYS OR HOLIDAY WEEKENDS. THIS INCLUDES THE DAY BEFORE OR AFTER THE HOLIDAY OR HOLIDAY WEEKEND. THE FOLLOWING ARE CONSIDERED HOLIDAYS: EASTER, MEMORIAL DAY, FOURTH OF JULY, LABOR DAY, THANKSGIVING, CHRISTMAS DAY AND NEW YEARS DAY.

CONTRACTOR'S EQUIPMENT - OPERATION AND STORAGE

A QUALIFIED FLAGGER SHALL BE EMPLOYED WHERE THE CONTRACTOR'S EQUIPMENT MUST MERGE WITH THE TRAFFIC STREAM ON I-680. THE CONTRACTOR'S EQUIPMENT SHALL BE EQUIPPED WITH AT LEAST ONE AMBER FLASHING LIGHT. PAVERS, ROLLERS AND OTHER EQUIPMENT MAY BE PARKED IN AREAS ALONG THE HIGHWAY WHEN PAVING OPERATIONS ARE SCHEDULED TO CONTINUE WITHIN THE NEXT WORKDAY. OTHERWISE THE EQUIPMENT SHALL BE STORED AT A STORAGE AREA OUTSIDE THE R/W, THE LOCATION OF WHICH SHALL HAVE PRIOR APPROVAL OF THE ENGINEER. WHEN PARKING ALONG THE HIGHWAY THE EQUIPMENT SHALL BE PLACED AND DELINEATED AS PER 614.03. NO EQUIPMENT SHALL BE PARKED IN THE MEDIAN OF THE HIGHWAY. ADEQUATE BARRICADES AND LIGHTS SHALL BE PLACED ON THE PAVEMENT SIDE OF THE EQUIPMENT TO IDENTIFY THE LIMITS OF THE EQUIPMENT. ALL OTHER EQUIPMENT, INCLUDING PRIVATE VEHICLES, SHALL BE STORED AT THE APPROVED CONTRACTOR'S STORAGE AREA. NO EQUIPMENT SHALL BE PARKED ON PRIVATE PROPERTY UNLESS PRIOR APPROVAL OF THE OWNER AND THE PROJECT ENGINEER/SUPERVISOR HAS BEEN GRANTED.

DETOUR DURATION

THE MAXIMUM LENGTH OF TIME FOR ANY OF THE DETOUR ROUTES TO BE IN EFFECT SHALL BE 180 CONSECUTIVE CALENDAR DAYS. CONSTRUCTION WORK MAY BE PERFORMED BEFORE AND AFTER THE DETOUR LIMITATION DATES, BUT THERE SHALL BE NO RESTRICTIONS (LANE WIDTH REDUCTIONS, TEMPORARY ROADWAYS, OR ONE WAY TRAFFIC) TO THROUGH OR LOCAL TRAFFIC. IT SHALL BE THE RESPONSIBILITY OF THE CONTRACTOR TO SCHEDULE AND PERFORM THE CONSTRUCTION WORK WITHIN THE DETOUR LIMITATION TIME. THE FAILURE OF THE CONTRACTOR TO MEET THE DETOUR LIMITATION DATES WILL CAUSE SEPARATE LIQUIDATED DAMAGES OF $1,250 PER CALENDAR DAY OF OVERRUN OF DETOUR LIMITATION TIME TO BE ASSESSED. THE CONTRACTOR WILL COMPLY WITH ALL PROVISIONS OF 108.07 OF THE DEPARTMENT OF TRANSPORTATION CONSTRUCTION AND MATERIAL SPECIFICATIONS.

ITEM 614 - DETOUR SIGNING

THIS ITEM SHALL INCLUDE ALL LABOR AND MATERIAL COSTS ASSOCIATED WITH THE PROVISION, ERECTION AND MAINTENANCE OF THE DETOUR ROUTE(S) SIGNING. COMPENSATION TO THE CONTRACTOR SHALL BE PAID AT THE LUMP SUM BID PRICE FOR ITEM 614 - DETOUR SIGNING.

CALCULATED MAH
CHECKED BJT

MAINTENANCE OF TRAFFIC
GENERAL NOTES

MAH-680-7.24/8.34

\\Akrnd\Data\civil\200169\DD\dgn\trafcontrol\22179MB.dgn
03/30/2004
08:46:27 PM

ITEM 614 - LAW ENFORCEMENT OFFICER WITH PATROL CAR

IN ADDITION TO THE REQUIREMENTS OF 614 AND THE LATEST EDITION OF THE OHIO MANUAL OF UNIFORM TRAFFIC CONTROL DEVICES (OMUTCD). A UNIFORMED LAW ENFORCEMENT OFFICER AND OFFICIAL PATROL CAR WITH WORKING TOP MOUNTED EMERGENCY FLASHING LIGHTS SHOULD BE PROVIDED FOR CONTROLLING TRAFFIC AS DIRECTED BY ENGINEER FOR THE FOLLOWING TASKS:

FOR LANE CLOSURES: DURING INITIAL SET-UP PERIODS, TEAR DOWN PERIODS, SUBSTANTIAL SHIFTS OF A CLOSURE POINT OR WHEN NEW LANE CLOSURE ARRANGEMENTS ARE INITIATED.

DURING THE ENTIRE ADVANCE PREPARATION AND CLOSURE SEQUENCE WHERE COMPLETE BLOCKAGE OF TRAFFIC IS REQUIRED.

LAW ENFORCEMENT OFFICERS (L.E.O.'S) SHOULD NOT BE USED WHERE THE OMUTCD INTENDS THAT FLAGGERS BE USED. THE LEO'S ARE CONSIDERED TO BE EMPLOYED BY THE CONTRACTOR AND THE CONTRACTOR SHALL BE RESPONSIBLE FOR THEIR ACTIONS. ALTHOUGH THEY ARE EMPLOYED BY THE CONTRACTOR, THE PROJECT ENGINEER SHALL HAVE CONTROL OVER THEIR PLACEMENT. THE OFFICIAL PATROL CAR SHALL BE A PUBLIC SAFETY VEHICLE AS REQUIRED BY THE OHIO REVISED CODE.

THE CONTRACTOR SHALL MAKE ARRANGEMENTS FOR THESE SERVICES WITH:

THE OHIO STATE HIGHWAY PATROL
CANFIELD PATROL POST
500 SOUTH BROAD STREET
CANFIELD, OHIO 44406
PHONE: (330)-533-6866

IF AFTER CONTACTING THE OHIO HIGHWAY PATROL, IT IS DETERMINED THAT THEY CANNOT SUPPLY THE LEO, THEN AN AUTHORIZED MUNICIPAL OR COUNTY POLICE OFFICER WITH A MARKED AND FLASHER-LIGHT EQUIPPED OFFICIAL POLICE OR PATROL CAR SHALL BE PROVIDED.

LAW ENFORCEMENT OFFICERS WITH PATROL CAR REQUIRED BY THE TRAFFIC MAINTENANCE TASKS ABOVE SHALL BE PAID FOR ON AN HOURLY BASIS UNDER ITEM 614 LAW ENFORCEMENT OFFICER WITH PATROL CAR. THE FOLLOWING ESTIMATED QUANTITIES HAVE BEEN CARRIED TO THE GENERAL SUMMARY:

ITEM 614, LAW ENFORCEMENT OFFICER WITH PATROL CAR
1000 HOURS

THE HOURS PAID SHALL INCLUDE MINIMUM SHOW-UP TIME REQUIRED BY THE LAW ENFORCEMENT AGENCY INVOLVED.

IF THE CONTRACTOR WISHES TO UTILIZE LEO'S FOR FLAGGING AND TRAFFIC CONTROL OTHER THAN FOR THAT REQUIRED IN THESE PLANS, HE MAY DO SO AT THIS OWN EXPENSE. PAYMENT FOR THE EXCESS ABOVE THE CONTRACT REQUIREMENTS WILL BE INCLUDED UNDER ITEM 614 MAINTAINING TRAFFIC.

MAINTENANCE OF TRAFFIC

THIS ITEM SHALL CONSIST OF MAINTENANCE OF TRAFFIC ON EXISTING ROADWAYS AND RAMPS IN ACCORDANCE WITH THE OHIO MANUAL OF UNIFORM TRAFFIC CONTROL DEVICES FOR STREETS AND HIGHWAYS, CURRENT EDITION, LATEST REVISION, THE SPECIFICATIONS AND THE FOLLOWING:

1. THE CONTRACTOR SHALL INFORM THE DISTRICT OFFICE (330) 297-0801 EXT 209, EIGHTEEN (18) DAYS PRIOR TO THE BEGINNING OF WORK.

2. CONES SHALL NOT BE ACCEPTABLE TRAFFIC CONTROL DEVICES FOR LANE RESTRICTIONS OR LANE REDUCTIONS THAT ARE IN OPERATION ONE-HALF HOUR AFTER SUNSET OR ONE HALF-HOUR BEFORE SUNRISE. ALL NIGHTTIME LANE RESTRICTIONS SHALL REQUIRE DRUMS OR BARRICADES AT A MAXIMUM SPACING OF FIFTY (50) FEET.

3. LANE RESTRICTIONS OR LANE REDUCTIONS SHALL NOT BE PERMITTED AFTER NORMAL WORKING HOURS. NORMAL WORKING HOURS SHALL BE THOSE HOURS DURING WHICH THE CONTRACTOR HAS A FULL COMPLEMENT OF EMPLOYEES AND EQUIPMENT ACTIVELY REMOVING AND/OR PLACING PAVEMENT MATERIALS.

4. THE CONTRACTOR SHALL FURNISH, ERECT, MAINTAIN AND SUBSEQUENTLY REMOVE ALL FLAGS, BARRICADES, SIGNS, SIGN SUPPORTS AND FURNISH AND MAINTAIN ALL FLAGGERS, WATCHERS AND INCIDENTALS RELATED THERETO.

5. NO FULL DEPTH BRIDGE REPAIR SHALL BE PERFORMED OVER AN OPEN LANE. A SAFETY NET OR PLATFORM SHALL BE REQUIRED TO PROTECT THE ROADWAY, RAILROAD OR STREAM DURING THE REMOVAL OF THE EXISTING CONCRETE PARAPET AND DECK. THE CONTRACTOR SHALL PROVIDE A SAFETY NET OR PLATFORM OF SUITABLE STRENGTH ON THE UNDERSIDE OF THE DECK. THE DESIGN OF THE NET OR PLATFORM SHALL CONFORM WITH OSHA REQUIREMENTS AND THE APPROVAL OF THE ENGINEER AND SHALL REMAIN IN PLACE UNTIL THE WORK HAS BEEN COMPLETED AND ACCEPTED OR AS DIRECTED BY THE ENGINEER. THE CONTRACTOR SHALL SUBMIT A DEMOLITION PLAN AND SAFETY NET OR PLATFORM DESIGN 10 DAYS PRIOR TO COMMENCING ANY DEMOLITION FOR APPROVAL BY THE ENGINEER. THE SUBMITTAL SHALL BE IN WRITING TO THE DISTRICT CONSTRUCTION ENGINEER WITH A COPY TO THE PROJECT ENGINEER.

6. ONLY DURING OFF-PEAK PERIODS (ie. ANY PERIOD OTHER THAN 6-8AM AND 3-6PM) SHALL THE CONTRACTOR INSTALL AND SUBSEQUENTLY RESET ALL TRAFFIC CONTROL NECESSARY FOR THE WORK ZONE FOR EACH CONSTRUCTION PHASE.

7. ALL WORK AND TRAFFIC CONTROL DEVICES SHALL BE IN ACCORDANCE WITH CMS 614 AND OTHER APPLICABLE PORTIONS OF THE SPECIFICATIONS, AS WELL AS THE OHIO MANUAL OF UNIFORM TRAFFIC CONTOL DEVICES. PAYMENT FOR ALL LABOR, EQUIPMENT AND MATERIALS SHALL BE INCLUDED IN THE LUMP SUM CONTRACT PRICE FOR ITEM 614, MAINTAINING TRAFFIC, UNLESS SPARATELY ITEMIZED IN THE PLAN.

ITEM 614 PORTABLE CHANGEABLE MESSAGE SIGN, CLASS 1, AS PER PLAN

THE CONTRACTOR SHALL FURNISH, INSTALL, MAINTAIN AND REMOVE, WHEN NO LONGER NEEDED, 2 PORTABLE CHANGEABLE MESSAGE SIGNS [PCMS], ON SITE, FOR THE DURATION OF TIME SPECIFIED IN THIS NOTE, EACH SIGN SHALL BE OF A TYPE SHOWN ON A LIST OF APPROVED PCMS UNITS MAINTAINED BY THE DIRECTOR. THE CLASS 1 UNITS SHALL HAVE A MINIMUM LEGIBILITY DISTANCE OF 1250 FEET.

EACH SIGN SHALL BE TRAILER MOUNTED AND EQUIPPED WITH A FUNCTIONAL DIMMING MECHANISM TO DIM THE SIGN DURING DARKNESS AND A TAMPER AND VANDAL PROOF ENCLOSURE. EACH SIGN SHALL BE PROVIDED WITH APPROPRIATE TRAINING AND OPERATION INSTRUCTIONS TO ENABLE ON-SITE PERSONNEL TO OPERATE AND TROUBLESHOOT THE UNIT. THE SIGN SHALL ALSO BE CAPABLE OF BEING POWERED BY AN ELECTRICAL SERVICE DROP FROM A LOCAL UTILITY COMPANY.

PLACEMENT, OPERATION, MAINTENANCE AND ALL ACTIVATION OF THE SIGNS BY THE CONTRACTOR SHALL BE AS DIRECTED BY THE ENGINEER. THE PCMS SHALL BE LOCATED IN A HIGHLY VISIBLE POSITION YET PROTECTED FROM TRAFFIC. THE PCMS SHOULD NOT BE LOCATED IN THE MEDIAN OF THE HIGHWAY UNLESS IT IS PROTECTED FROM BOTH DIRECTIONS OF TRAFFIC. THE PCMS SHOULD BE LOCATED BEHIND GUARDRAIL WHEREVER POSSIBLE. THE CONTRACTOR SHALL, AT THE DIRECTION OF THE ENGINEER, RELOCATE THE PCMS TO IMPROVE THE VISIBILITY OR ACCOMMODATE CHANGED CONDITIONS. WHEN NOT IN USE, THE PCMS WILL BE OFF, FACING AWAY FROM ALL TRAFFIC AND SHALL DISPLAY ONE OR MORE HIGH INTENSITY YELLOW REFLECTIVE SHEETING SURFACES OF 9-INCH BY 15-INCH MINIMUM SIZE FACING TRAFFIC.

THE ENGINEER SHALL BE PROVIDED ACCESS TO EACH SIGN UNIT AND SHALL BE PROVIDED WITH APPROPRIATE TRAINING AND OPERATION INSTRUCTIONS TO ENABLE PERSONNEL TO OPERATE AND TROUBLESHOOT THE UNIT AND TO REVISE SIGN MESSAGES, IF NECESSARY.

ALL MESSAGES TO BE DISPLAYED ON THE SIGN WILL BE PROVIDED BY THE CONTRACTOR. A LIST OF ALL PROPOSED PREPROGRAMMED MESSAGES WILL BE GIVEN TO THE ENGINEER PRIOR TO CONSTRUCTION. THE SIGN SHALL HAVE TWO DIFFERENT MEMORIES [PROM AND RAM] AND CAPABILITY TO STORE UP TO 99 MESSAGES IN EACH MEMORY. THE SIGN LEGEND SHALL BE CAPABLE OF BEING CHANGED IN THE FIELD. IN ORDER TO CONVEY A MAXIMUM OF INFORMATION AT A SINGLE GLANCE, ONLY THREE LINE PRESENTATION FORMATS WITH A MAXIMUM OF SIX MESSAGE PHASES WILL BE PERMITTED. NORMALLY, ONLY A MAXIMUM OF THREE MESSAGE PHASES SHOULD BE EMPLOYED. PCMS FORMAT SHALL PERMIT THE COMPLETE MESSAGE FOR EACH PHASE TO BE READ AT LEAST ONCE.

THE PCMS SHALL CONTAIN AN ACCURATE CLOCK AND PROGRAMMING LOGIC WHICH WILL ALLOW THE SIGN TO BE ACTIVATED, DE-ACTIVATED OR MESSAGES CHANGED AUTOMATICALLY AT DIFFERENT TIMES OF THE DAY FOR DIFFERENT DAYS OF THE WEEK.

THE PCMS SHALL CONTAIN A CELLULAR TELEPHONE DATA LINK WHICH WILL [IN ACTIVE CELLULAR AREAS] ALLOW REMOTE SIGN ACTIVATION, DEACTIVATION, MESSAGE CHANGES, MESSAGE ADDITIONS AND REVISIONS TO TIME OF DAY PROGRAMS. THE SYSTEM SHALL ALSO PERMIT VERIFICATION OF CURRENT AND PROGRAMMED MESSAGES.

ITEM 614 PORTABLE CHANGEABLE MESSAGE SIGN, CLASS I, AS PER PLAN, CONT.

THE PCMS UNIT SHALL BE MAINTAINED IN GOOD WORKING ORDER BY THE CONTRACTOR IN ACCORDANCE WITH THE PROVISIONS OF 614. THE CONTRACTOR SHALL PRIOR TO ACTIVATING THE UNIT, MAKE ARRANGEMENTS WITH AN AUTHORIZED SERVICE AGENT FOR THE PCMS TO ASSURE PROMPT SERVICE IN THE EVENT OF FAILURE. ANY FAILURE SHALL NOT RESULT IN THE SIGN BEING OUT OF SERVICE FOR MORE THAN 12 HOURS INCLUDING WEEKENDS. FAILURE TO COMPLY MAY RESULT IN AN ORDER TO STOP WORK AND OPEN ALL TRAFFIC LANES AND/OR IN THE DEPARTMENT TAKING APPROPRIATE ACTION TO SAFELY CONTROL TRAFFIC AND THE ENTIRE COST TO CONTROL TRAFFIC ACCRUED BY THE DEPARTMENT WILL BE DEDUCTED FROM MONEYS DUE, OR TO BECOME DUE THE CONTRACTOR ON HIS CONTRACT.

THE CONTRACTOR SHALL BE RESPONSIBLE FOR 24 HOURS PER DAY OPERATION AND MAINTENANCE OF THESE SIGNS ON THE PROJECT FOR THE DURATION OF THE PHASES. THE REQUIREMENT TO FURNISH, INSTALL, MAINTAIN AND REMOVE A PCMS UNIT ON THIS PROJECT SHALL NOT IN ANY WAY RELIEVE THE CONTRACTOR OF HIS RESPONSIBILITIES AS OUTLINED IN 614.02.

PAYMENT FOR THE ABOVE DESCRIBED ITEM SHALL BE AT THE CONTRACT UNIT PRICE BID FOR EACH SIGN MONTH OF ITEM 614 PORTABLE CHANGEABLE MESSAGE SIGN, CLASS I, AS PER PLAN AND SHALL INCLUDE ALL LABOR, MATERIALS, EQUIPMENT, FUELS, LUBRICATING OILS, SOFTWARE, HARDWARE AND INCIDENTALS TO PERFORM THE ABOVE DESCRIBED WORK.

ITEM 614 PORTABLE CHANGEABLE MESSAGE SIGN, AS PER PLAN
20 SIGN MONTH

MAINTENANCE OF TRAFFIC, AS DIRECTED

THE FOLLOWING QUANTITIES HAVE BEEN INCLUDED FOR USE WITH VARIOUS MAINTENANCE OF TRAFFIC OPERATIONS AND HAVE BEEN CARRIED TO THE GENERAL SUMMARY FOR USE AS DIRECTED BY THE ENGINEER.

ITEM 614-WORKZONE IMPACT ATTENUATOR (UNIDIRECTIONAL)	8	EACH
ITEM 614-BARRIER REFLECTOR, TYPE B	50	EACH
ITEM 614-WORKZONE LANE LINE, CLASS I, 740.06, TYPE I	3.0	MILES
ITEM 614-WORKZONE EDGE LINE, CLASS I, 740.06, TYPE I	2.0	MILES
ITEM 614-OBJECT MARKER, ONE WAY	50	EACH
ITEM 622-PORTABLE CONCRETE BARRIER, 32"	4000	FT

TRAFFIC CONTROL INSPECTOR

THE CONTRACTOR SHALL DESIGNATE AN INDIVIDUAL OTHER THAN THE SUPERINTENDENT AND SUBJECT TO THE APPROVAL OF THE ENGINEER, TO CONTINUOUSLY INSPECT ALL TRAFFIC CONTROL DEVICES WHENEVER CONSTRUCTION WORK IS BEING PERFORMED WITHIN THE WORK LIMITS OF THE PROJECT. THE DESIGNATED INDIVIDUAL SHALL ALSO INSPECT ALL TRAFFIC DEVICES AT THE BEGINNING AND AT THE END OF EACH WORK DAY. THE DESIGNATED INDIVIDUAL OR A QUALIFIED REPRESENTATIVE SHALL ALSO BE AVAILABLE ON AN AROUND THE CLOCK BASIS TO REPAIR AND/OR REPLACE DAMAGED OR MISSING TRAFFIC CONTROL DEVICES. THESE INDIVIDUALS SHALL BE EQUIPPED WITH CELLULAR PHONES AND THEIR NAMES AND PHONE NUMBERS SHALL BE GIVEN TO THE PROJECT ENGINEER AT THE PRE-CONSTRUCTION MEETING. THE DESIGNATED INDIVIDUAL MAY HAVE OTHER CONSTRUCTION RELATED DUTIES AS LONG AS IMMEDIATE ATTENTION IS GIVEN TO TRAFFIC CONTROL. PAYMENT FOR THE SERVICES OF THE TRAFFIC CONTROL INSPECTOR SHALL BE INCLUDED IN THE LUMP SUM PRICE BID FOR ITEM 614 MAINTAINING TRAFFIC.

CALCULATED MAH
CHECKED BJT

MAINTENANCE OF TRAFFIC
GENERAL NOTES

MAH-680-7.24/8.34

\\Akrn01\Data\elvin200869\0N10\dgn\trafcontrol22179MNB.dgn
03/30/2004
08:11:36 PM

INCIDENT MANAGEMENT

THE CONTRACTOR SHALL MAKE ALL PORTABLE CHANGEABLE MESSAGE SIGNS AVAILABLE FOR USE BY JERRY JONES, ODOT DISTRICT 4 HIGHWAY MANAGEMENT TRAFFIC COORDINATOR, FOR TRAFFIC INCIDENT MANAGEMENT PURPOSES. SHOULD IT BE NECESSARY FOR ODOT TO UTILIZE THE CONTRACTOR'S PCMS, ODOT PERSONNEL WILL PROGRAM THE APPROPRIATE INCIDENT MANAGEMENT MESSAGE INTO THE PCMS DIRECTLY. THE CONTRACTOR SHALL RETURN THE PCMS TO THE APPROPRIATE CONSTRUCTION MESSAGE IMMEDIATELY AFTER THE TRAFFIC INCIDENT HAS BEEN RESOLVED. ANY ADDITIONAL LABOR COST RESULTING FROM THIS

RESOLVED. ANY ADDITIONAL LABOR COST RESULTING FROM THIS
SPECIFICATION SHALL BE INCIDENTAL AND INCLUDED IN ITEM 614 - PORTABLE CHANGEABLE MESSAGE SIGN, AS PER PLAN.

FLOODLIGHTING

FLOODLIGHTING OF THE WORK SITE FOR OPERATIONS CONDUCTED DURING NIGHT TIME PERIODS SHALL BE ACCOMPLISHED SO THAT THE LIGHTS DO NOT CAUSE GLARE TO THE DRIVERS ON THE ROADWAY. TO ENSURE THE ADEQUACY OF THE FLOODLIGHT PLACEMENT, THE CONTRACTOR AND THE ENGINEER SHALL DRIVE THROUGH THE WORK SITE EACH NIGHT WHEN THE LIGHTING IS IN PLACE AND OPERATIVE PRIOR TO COMMENCING ANY WORK. IF GLARE IS DETECTED, THE LIGHT PLACEMENT AND SHIELDING SHALL BE ADJUSTED TO THE SATISFACTION OF THE ENGINEER BEFORE WORK PROCEEDS. PAYMENT FOR ALL LABOR, EQUIPMENT AND MATERIALS SHALL BE INCLUDED IN THE LUMP SUM CONTRACT PRICE FOR ITEM 614- MAINTAINING TRAFFIC.

ACCESS TO PROPERTIES

THE CONTRACTOR SHALL MAINTAIN ACCESS TO ALL PROPERTIES (RESIDENTIAL, COMMERCIAL, AND INDUSTRIAL) WITHIN THE CONSTRUCTION LIMITS AT ALL TIMES DURING ALL PHASES OF CONSTRUCTION. THE FOLLOWING ESTIMATED QUANTITIES HAVE BEEN INCLUDED IN THE GENERAL SUMMARY FOR USE AS DIRECTED BY THE ENGINEER FOR THE MAINTENANCE OF DRIVEWAYS:

ITEM 614-ASPHALT CONCRETE FOR MAINTAINING TRAFFIC	- 40	C.Y.
ITEM 410-TRAFFIC COMPACTED SURFACE, TYPE A OR B	- 40	C.Y.
ITEM 410-TRAFFIC COMPACTED SURFACE, TYPE C	- 40	C.Y.

DUST CONTROL

THE CONTRACTOR SHALL FURNISH AND APPLY WATER FOR DUST CONTROL AS DIRECTED BY THE ENGINEER. THE FOLLOWING CONTINGENCY QUANTITY HAS BEEN INCLUDED FOR DUST CONTROL PURPOSES:

ITEM 616-WATER 250 M GAL

NOTIFICATION AND CONTACTS

THE CONTRACTOR SHALL FURNISH AND APPLY WATER WRITING AND VIA TELEPHONE AT LEAST EIGHTEEN (18) CALENDAR DAYS PRIOR TO THE BEGINNING OF CONSTRUCTION ACTIVITIES. INCLUDED IN THE NOTIFICATION SHALL BE THE PROJECTED DATES AND TIME FRAMES OF ANY TOTAL ROAD CLOSURES:

1. OHIO DEPARTMENT OF TRANSPORTATION
   DISTRICT 4
   705 OAKWOOD STREET
   RAVENNA, OHIO 44266
   330-297-0801

2. MAHONING COUNTY ENGINEER'S OFFICE
   940 BEARS DEN ROAD
   YOUNGSTOWN, OHIO 44511
   330-799-1581

3. CITY OF YOUNGSTOWN ENGINEERING DEPARTMENT
   26 SOUTH PHELPS STREET
   YOUNGSTOWN, OHIO 44503
   330-742-8800

4. CITY OF YOUNGSTOWN POLICE DEPARTMENT
   116 WEST BOARDMAN STRET
   YOUNGSTOWN, OHIO 44503
   330-742-8800

5. YOUNGSTOWN CITY OF SCHOOL DISTRICT
   20 WEST WOOD STREET
   YOUNGSTOWN, OHIO 44503
   330-744-6900

6. CITY OF YOUNGSTOWN FIRE DEPARTMENT
   420 MARTIN LUTHER KING BLVD.
   YOUNGSTOWN, OHIO 44502
   330-747-9326

7. THE OHIO STATE HIGHWAY PATROL
   CANFIELD PATROL POST
   500 SOUTH BROAD STREET.
   YOUNGSTOWN, OHIO 44406
   330-533-6866

SHOULD THE PROJECT DATES AND TIME FRAMES OF THE START AND END OF TOTAL ROAD CLOSURES CHANGE THROUGHOUT THE DURATION OF THE PROJECT, THE ABOVE AGENCIES MUST BE NOTIFIED IMMEDIATELY OF SUCH CHANGES.

CALCULATED MAH
CHECKED BJT

MAINTENANCE OF TRAFFIC
GENERAL NOTES

MAH-680-7.24/8.34

\\Akron01\Data\civil\200169\DN10\dgn\trafcontrol\22179MN8.dgn
03/30/2004
06:36:44 PM

ITEM 614 - WORK ZONE IMPACT ATTENUATOR, (UNIDIRECTIONAL)

THIS ITEM SHALL CONSIST OF FURNISHING AND INSTALLING EITHER OF THE FOLLOWING IMPACT ATTENUATORS:

1. THE QUADGUARD CZ, (610 MM WIDE 6-BAY) TEMPORARY IMPACT ATTENUATOR MANUFACTURED BY ENERGY ABSORPTION SYSTEMS, INC., ONE EAST WACKER DRIVE, CHICAGO, IL 60601 (TELEPHONE: 312-467-6750).

   THE LENGTH OF THE 6-BAY QUADGUARD CZ IS 20.75 FT. INSTALLATION SHALL BE AT THE LOCATIONS SPECIFIED IN THE PLANS, IN ACCORDANCE WITH THE MANUFACTURER'S SPECIFICATIONS AS DETAILED ON THE FOLLOWING PRE-APPROVED SHOP DRAWINGS:

DWG NO.	DRAWING NAME	DWG./REV. DATE	ODOT APPROVAL DATE
QSCZCVR-T4	QUADGUARD CZ SYSTEM FOR CONSTRUCTION ZONES	5/13/99 REV. J	8/27/99
35-40-10	QUADGUARD SYSTEM CONCRETE PAD, CZ, QG	11/19/97 REV. D	8/27/99
35-40-16	QUADGUARD SYSTEM BACKUP ASSEMBLY, CZ, QG,	7/30/99 REV. F	8/27/99
354051Z	QUADGUARD CZ SYSTEM NOSE ASSEMBLY, CZ, QG, 24, 30, 36	5/17/99	8/27/99
35-40-18	TRANSITION ASSEMBLY, 4 OFFSET, QG	6/25/99 REV. F	8/27/99
3540260	QUADGUARD SYSTEM PCMB ANCHOR ASSEMBLY	11/19/97 REV. C	8/27/99

2. THE TRACC (TRINITY ATTENUATING CRASH CUSHION) MANUFACTURED BY SYRO INC., 1170 N. STATE STREET, GIRARD, OHIO 44420 (TELEPHONE: 330-545-4373).

   THE TRACC IS 21 FT LONG AND 2.62 FT WIDE. INSTALLATION SHALL BE AT THE LOCATIONS SPECIFIED IN THE PLANS, IN ACCORDANCE WITH THE MANUFACTURER'S SPECIFICATIONS AS DETAILED ON THE FOLLOWING PRE-APPROVED SHOP DRAWINGS:

DWG NO.	DRAWING NAME	DWG./REV. DATE	ODOT APPROVAL DATE
SS450M	CRASH-CUSHION ATTENUATING TERMINAL PLAN, ELEVATION & SECTIONS	3/12/99 REV. 1	8/27/99
SS455	TRACC TRANSITION TO W-BEAM MEDIAN BARRIER PLAN, ELEVATION & SECTIONS	2/18/99	8/27/99
SS461	TRACC TRANSITION TO CONCRETE SAFETY SHAPE BARRIER PLAN, ELEVATION & SECTIONS	6/30/99 REV. 1	8/27/99
SS462	TRACC TRANSITION TO CONCRETE BARRIER SINGLE SLOPE PLAN, ELEVATION & SECTIONS	6/30/99	8/27/99

THE CONTRACTOR SHALL PROVIDE A REPLACEMENT UNIT WHEN AN IMPACT IS SEVERE ENOUGH TO REQUIRE COMPLETE REPLACEMENT OF THE ATTENUATOR. THE CONTRACTOR SHALL HAVE A SPARE PARTS PACKAGE AVAILABLE ON THE PROJECT SITE AT ALL TIMES WHEN AN ATTENUATOR IS IN PLACE. THE CONTRACTOR SHALL PROVIDE A MINIMUM OF ONE COMPLETE SPARE PARTS PACKAGE FOR EVERY 1 TO 6 UNITS INSTALLED ON THE PROJECT SITE. FOR EXAMPLE, 5 INSTALLED UNITS REQUIRE 1 SPARE PARTS PACKAGE AND 7 INSTALLED UNITS REQUIRE 2 SPARE PARTS PACKAGES.

PAYMENT FOR THE ABOVE WORK SHALL BE MADE AT THE UNIT PRICE BID FOR ITEM 614, TEMPORARY IMPACT ATTENUATOR, (UNIDIRECTIONAL), EACH, AND SHALL INCLUDE ALL LABOR, TOOLS, EQUIPMENT AND MATERIALS NECESSARY TO CONSTRUCT, MAINTAIN, REPAIR, REPLACE OR RELOCATE A COMPLETE AND FUNCTIONAL IMPACT ATTENUATOR SYSTEM, INCLUDING ALL RELATED BACKUPS, TRANSITIONS, LEVELING PADS, HARDWARE AND GRADING, NOT SEPARATELY SPECIFIED, AS REQUIRED BY THE MANUFACTURER.

STOPPING TRAFFIC ON I-680

ANY TIME TRAFFIC MUST BE COMPLETELY STOPPED ON I-680 IT SHALL BE DONE IN THE FOLLOWING MANNER: THE COMPLETE TRAFFIC STOPPAGE ON ALL LANES OF ANY DIRECTIONAL ROADWAY SHALL BE NO MORE THAN 10 MINUTES IN ANY ONE CONSECUTIVE 30 MINUTE PERIOD.

A MINIMUM OF TWO (2) LAW ENFORCEMENT OFFICERS (LEO) WITH PATROL CARS SHALL BE USED TO PACE MOTORISTS TO A STOP. THERE SHALL BE ONE LEO FOR EACH LANE ON THE FREEWAY.

AFTER TRAFFIC HAS BEEN SLOWED, ONE (1) PATROL CAR SHALL TRAVEL ALONG THE ROADWAY SHOULDER 500 FEET BEHIND THE BACKUP OF STOPPED VEHICLES. WHERE STOPPAGE OCCURS IN THE VICINITY OF I-680 ENTRANCES, THE CONTRACTOR SHALL PLACE FLAGGERS ON THE RAMPS TO STOP TRAFFIC. PATROL CARS SHALL HAVE FLASHING BEACONS TO PROVIDE ADEQUATELY VISIBILITY TO APPROACHING MOTORISTS.

THE CONTRACTOR/PERMITEE SHALL ERECT AND MAINTAIN "ROAD WORK AHEAD" (OW-134-48), "PREPARE TO STOP" (OW-152-48), AND "STOP AHEAD" (OW-45-48) SIGNS. EACH SIGN SHALL BE EQUIPPED WITH A TYPE B FLASHING BARRICADE WARNING LIGHT IN ACCORDANCE WITH SECTION 7G-6 OF THE OMUTCD. PATROL CARS AND SIGNS SHALL BE LOCATED IN ACCORDANCE WITH THE DETAIL BELOW.

A PORTABLE CHANGEABLE MESSAGE SIGN, TYPE TO BE ON ODOT'S PREAPPROVED LIST, SHALL BE PLACED 1.5 TO 2 MILES IN ADVANCE OF THE CLOSURE OR AS DIRECTED BY THE ENGINEER. THE FOLLOWING MESSAGE SHALL BE DISPLAYED ON THE PCM UNLESS DIRECTED OTHERWISE BY THE ENGINEER:

	MESSAGE	DURATION
MESSAGE PHRASE 1	ROAD WORK AHEAD	1.5 SEC.
MESSAGE PHRASE 2	REDUCE SPEED	1.5 SEC.
MESSAGE PHRASE 3	PREPARE TO STOP	1.5 SEC.

* EACH COMPLETE MESSAGE WILL BE FOLLOWED BY A BANK SCREEN LASTING 0.3 SECOND.*

THE CONTRACTOR SHALL NOTIFY THE ENGINEER/PERMIT OFFICE AND THE ODOT PUBLIC INFORMATION OFFICE, 330-297-0801 EXT-211, THREE (3) DAYS PRIOR TO ANY MAINLINE TRAFFIC STOPPAGE.

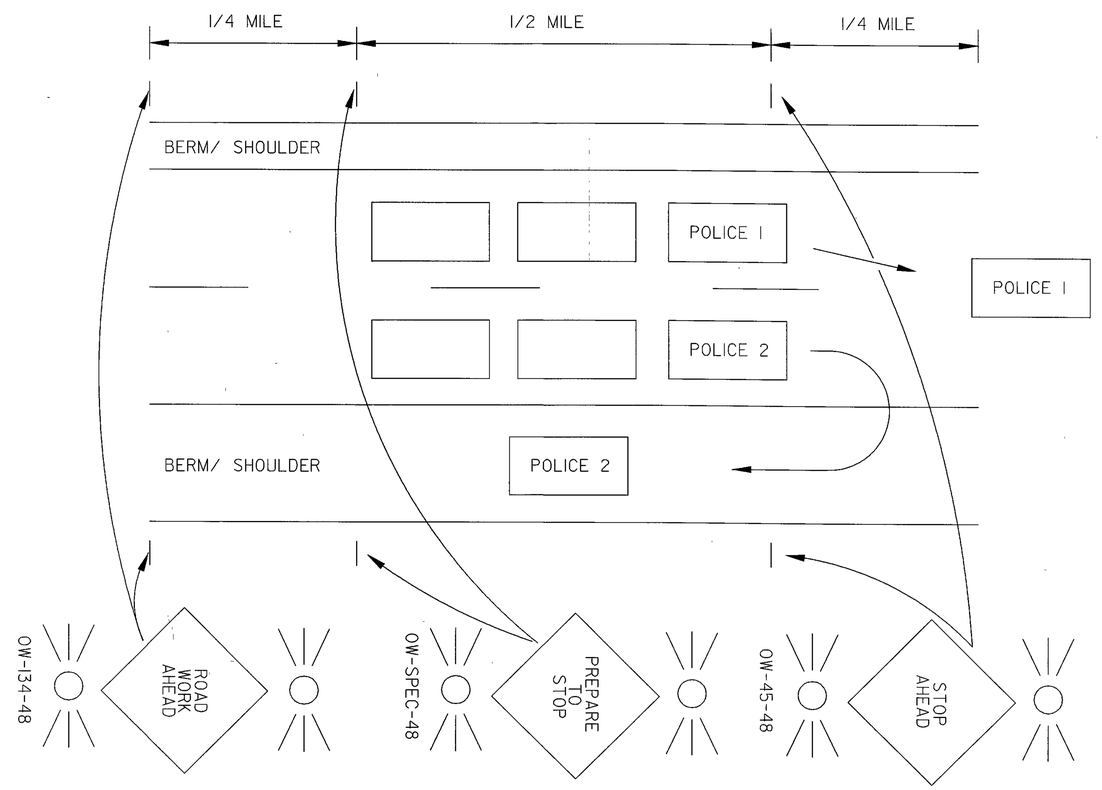

CALCULATED MAH
CHECKED BJT

MAINTENANCE OF TRAFFIC
GENERAL NOTES

MAH-680-7.24/8.34

\\Akron1\Data\civil\2001169\DN10\dgn\trafficontrol\22179MNB.dgn
03/30/2004
08:46:51 PM

ITEM	SHEET NUMBERS																	ITEM	ITEM EXT.	TOTAL QUANT.	UNIT	DESCRIPTION	SHEET NUMBER
								11		12		13		14								**MAINTENANCE OF TRAFFIC**	
410														40				410	12000	40	CU YD	TRAFFIC COMPACTED SURFACE, TYPE A OR B	
410														40				410	13000	40	CU YD	TRAFFIC COMPACTED SURFACE, TYPE C	
614										1000								614	11100	1000	HOUR	LAW ENFORCEMENT OFFICER WITH PATROL CAR	
614												8						614	12336	8	EACH	WORKZONE IMPACT ATTENUATOR (UNIDIRECTIONAL)	
614								LUMP										614	12420	LUMP		DETOUR SIGNING	
614														40				614	13000	40	CU YD	ASPHALT CONCRETE FOR MAINTAINING TRAFFIC	
614												50						614	13300	50	EACH	BARRIER REFLECTOR, TYPE B	
614												50						614	13350	50	EACH	OBJECT MARKER, ONE WAY	
614												20						614	18601	20	SIGN MONTH	PORTABLE CHANGEABLE MESSAGE SIGN, AS PER PLAN	12 & 13
614												3.00						614	20200	3.00	MILE	WORK ZONE LANE LINE, CLASS I, 740.06, TYPE 1	
614												2.00						614	22200	2.00	MILE	WORK ZONE EDGE LINE, CLASS 1, 740.06, TYPE 1	
616														250				616	10000	250	M GAL	WATER	
622												4000						622	40020	4000	FT	PORTABLE CONCRETE BARRIER, 32"	
0																							
0																							
0																							
0																							

DATE 8/1/03 | DATE 8/1/03

CALCULATED MAH | CHECKED BJT

MAINTENANCE OF TRAFFIC GENERAL SUMMARY

MAH-680-7.24 / 8.34

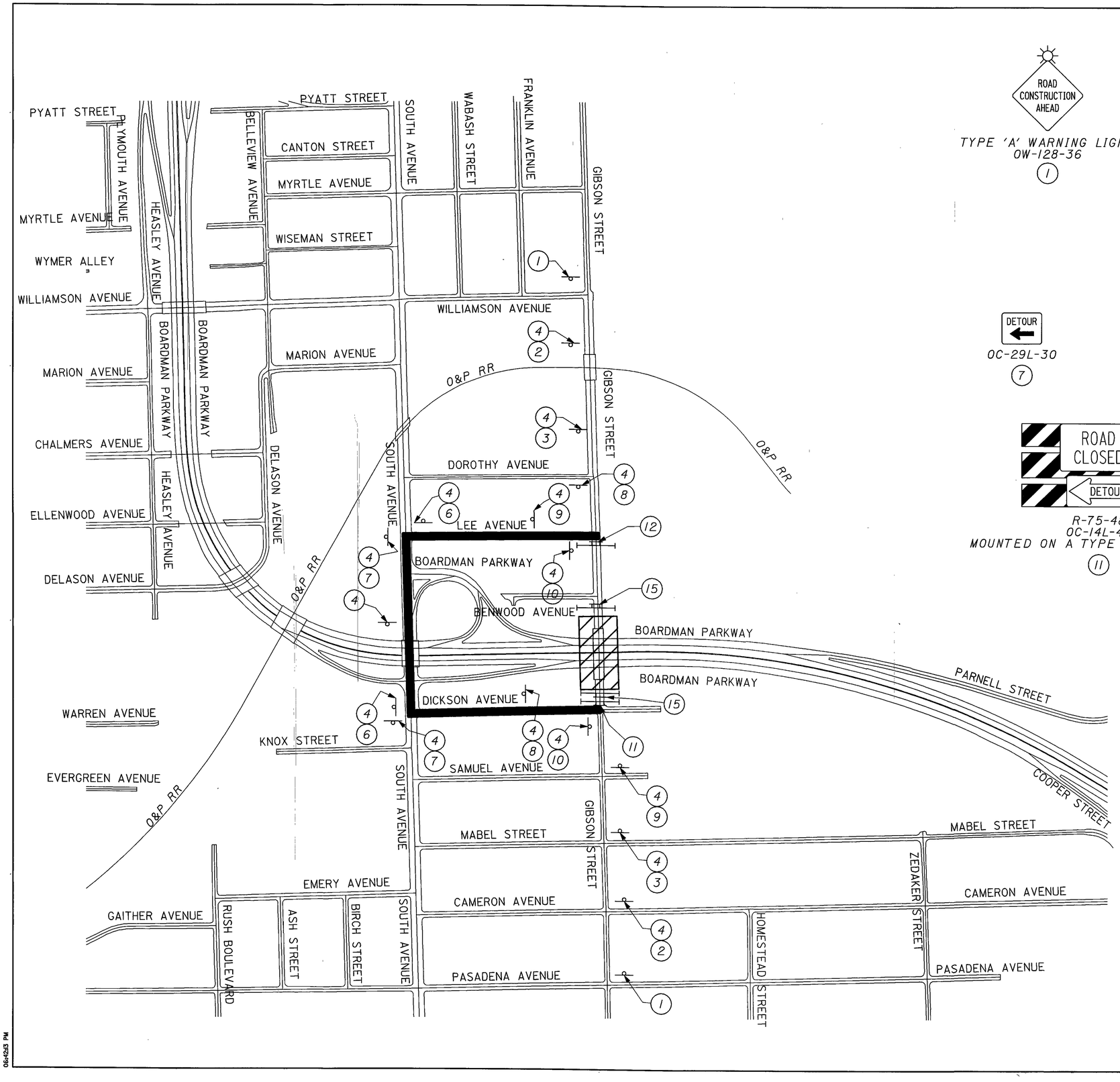

TYPE 'A' WARNING LIGHT
OW-128-36
(1)

TYPE 'A' WARNING LIGHT
OW-120-36
(2)

TYPE 'A' WARNING LIGHT
OW-127-36
(3)

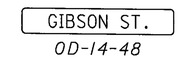

OD-14-48
(4)

OC-29R-30
(6)

OC-29L-30
(7)

OC-29AR-30
(8)

OC-29AL-30
(9)

OC-30-24
(10)

R-75-48
OC-14L-48
MOUNTED ON A TYPE III BARRICADE
(11)

R-76A-60
OC-14R-48
MOUNTED ON A TYPE III BARRICADE
(12)

R-75-48
MOUNTED ON GATES AND BARRICADES AS PER STANDARD CONSTRUCTION DRAWING MT-101.60
(15)

MAP LEGEND

- SIGN
- TYPE III BARRICADE
- CONSTRUCTION ZONE
- DETOUR ROUTE

NOT TO SCALE

CALCULATED

CHECKED

GIBSON STREET BRIDGE OVER I-680
DETOUR PLAN

MAH-680-7.24/8.34

18
107

\\akron01\bare\civil\200169.01\10\dgn\trafcontrol\22179MA.dgn
03/30/2004
06:42:23 PM

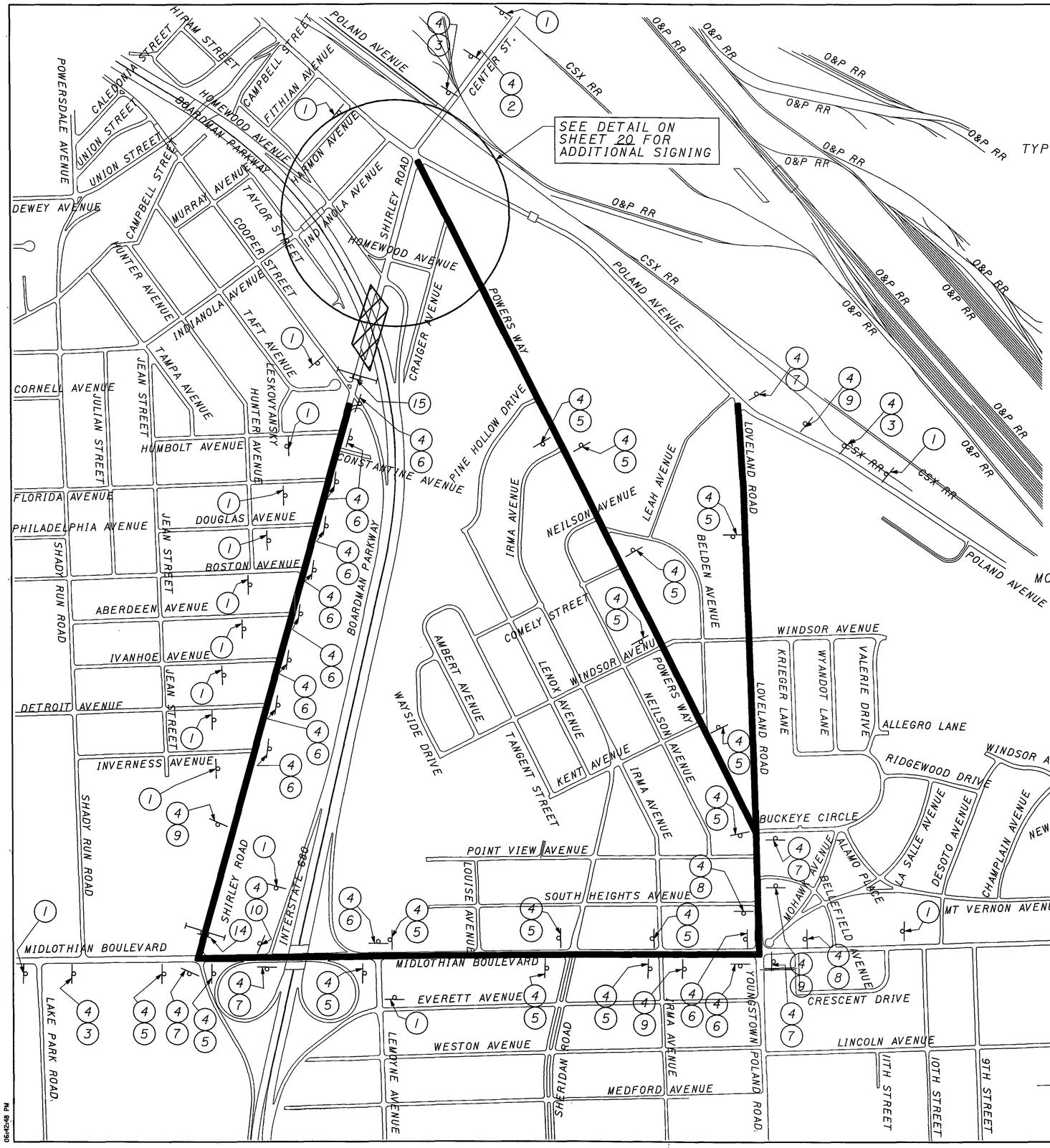

ROAD CONSTRUCTION AHEAD
TYPE 'A' WARNING LIGHT
OW-128-36
(1)

ROAD CLOSED AHEAD
TYPE 'A' WARNING LIGHT
OW-120-36
(2)

DETOUR AHEAD
TYPE 'A' WARNING LIGHT
OW-127-36
(3)

SHIRLEY RD.
OD-14-48
(4)

DETOUR
OC-29-30
(5)

DETOUR
OC-29R-30
(6)

DETOUR
OC-29L-30
(7)

DETOUR
OC-29AR-30
(8)

DETOUR
OC-29AL-30
(9)

END DETOUR
OC-30-24
(10)

ROAD CLOSED
0.2 MILES AHEAD
LOCAL TRAFFIC ONLY
DETOUR
R-76A-60
OC-14L-48
MOUNTED ON A TYPE III BARRICADE
(13)

ROAD CLOSED
1.2 MILES AHEAD
LOCAL TRAFFIC ONLY
DETOUR
R-76A-60
OC-14R-48
MOUNTED ON A TYPE III BARRICADE
(14)

ROAD CLOSED
R-75-48
MOUNTED ON GATES
AND BARRICADES
AS PER STANDARD CONSTRUCTION
DRAWING MT-101.60
(15)

MAP LEGEND

- SIGN
- TYPE III BARRICADE
- CONSTRUCTION ZONE
- DETOUR ROUTE

NOT TO SCALE

CALCULATED
CHECKED

SHIRLEY ROAD BRIDGE OVER I-680
DETOUR PLAN

MAH-680-7.24/8.34

\\Mirn01\Data\civil\2006169\01\82\dgn\traffcontrol\22T3MAC.dgn
03/30/2004
09:42:49 PM

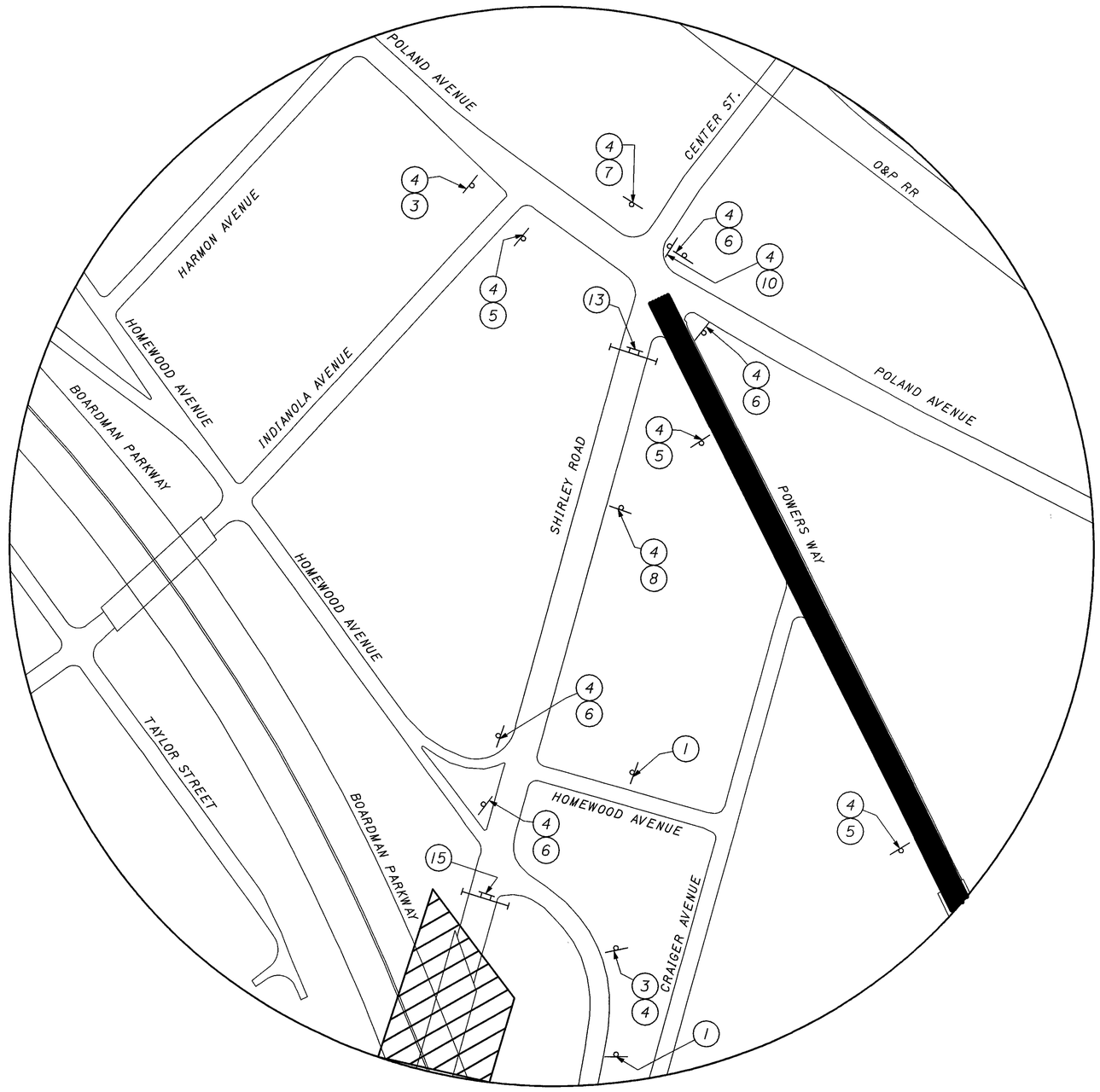

DETAIL 'A'

TYPE 'A' WARNING LIGHT
OW-128-36
(1)

TYPE 'A' WARNING LIGHT
OW-120-36
(2)

TYPE 'A' WARNING LIGHT
OW-127-36
(3)

OD-14-48
(4)

OC-29-30
(5)

OC-29R-30
(6)

OC-29L-30
(7)

OC-29AR-30
(8)

OC-29AL-30
(9)

OC-30-24
(10)

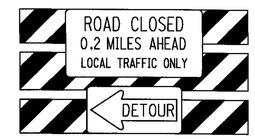

R-76A-60
OC-14L-48
MOUNTED ON A TYPE III BARRICADE
(13)

R-76A-60
OC-14R-48
MOUNTED ON A TYPE III BARRICADE
(14)

R-75-48
MOUNTED ON GATES
AND BARRICADES
AS PER STANDARD CONSTRUCTION
DRAWING MT-101.60
(15)

MAP LEGEND

- SIGN
- TYPE III BARRICADE
- CONSTRUCTION ZONE
- DETOUR ROUTE

NOT TO SCALE

CALCULATED

CHECKED

SHIRLEY ROAD BRIDGE OVER I-680
DETOUR PLAN

MAH-680-7.24/8.34

\\akrn01\data\civil\200169\0\02\dgn\trafficontrol\22179MMCL.dgn
03/30/2004
06:43:02 PM

SHEET NUMBER												ITEM	ITEM EXT.	GRAND TOTAL	UNIT	DESCRIPTION	SEE SHEET NO.
6	7	9	23	24	25	26	29	37	45	46	47						
																ROADWAY	
LUMP												201	11000	LUMP		CLEARING AND GRUBBING	6
					325							202	22900	325	SQ. YD.	APPROACH SLAB REMOVED	
					7				56			202	23000	63	SQ. YD.	PAVEMENT REMOVED	
					5144							202	30000	5144	SQ. FT.	WALK REMOVED	
							9					202	30200	9	FT.	STEPS REMOVED	
					562							202	32000	562	FT.	CURB REMOVED	
					535							202	32500	535	FT.	CURB AND GUTTER REMOVED	
		200										202	35100	200	FT.	PIPE REMOVED, 24" AND UNDER	
								137.5				202	38000	137.5	FT.	GUARDRAIL REMOVED	
								3				202	58100	3	EACH	CATCH BASIN REMOVED	
							130	270				202	75000	400	FT.	FENCE REMOVED	
							1					202	75254	1	EACH	GATE REMOVED FOR REUSE	
	10											202	98100	10	EACH	REMOVAL MISC.: WOODEN POST	7
200					1200							203	10000	1400	CU. YD.	EXCAVATION	
200					1414							203	20000	1614	CU. YD.	EMBANKMENT	
			1107	1866					124	93		204	10000	3190	SQ. YD.	SUBGRADE COMPACTION	
			0.55	0.93					0.07	0.04		204	45000	2	HOUR	PROOF ROLLING	
								1				604	39500	1	EACH	MONUMENT BOX ADJUSTED TO GRADE	
							112.5	262.5				606	13000	375.0	FT.	GUARDRAIL, TYPE 5	
								3				606	22000	3	EACH	ANCHOR ASSEMBLY, TYPE B-98	
							1	2				606	26500	3	EACH	ANCHOR ASSEMBLY, TYPE T	
							3	3				606	35000	6	EACH	BRIDGE TERMINAL ASSEMBLY, TYPE 1	
							130	290				607	23000	420	FT.	FENCE, TYPE CLT	
			1219	3110								608	10000	4329	SQ. FT.	4" CONCRETE WALK	
			90									608	10001	90	SQ. FT.	4" CONCRETE WALK, AS PER PLAN	8
			81	330								608	15000	411	SQ. FT.	8" CONCRETE WALK	
							9					608	40001	9	FT.	CONCRETE STEPS, TYPE A, AS PER PLAN	7
							40					622	10160	40	FT.	CONCRETE BARRIER, SINGLE SLOPE, TYPE D	
							10					622	10161	10	FT.	CONCRETE BARRIER, SINGLE SLOPE, TYPE D, AS PER PLAN	8
										1		SPECIAL	69050100	1	EACH	MAILBOX SUPPORT SYSTEM, SINGLE	7
																EROSION CONTROL	
					98							601	21000	98	SQ. YD.	CONCRETE SLOPE PROTECTION	
	92											659	00300	92	CU. YD.	TOPSOIL	
	832											659	10000	832	SQ. YD.	SEEDING AND MULCHING	
	42											659	14000	42	SQ. YD.	REPAIR SEEDING AND MULCHING	
	42											659	15000	42	SQ. YD.	INTER-SEEDING	
	0.11											659	20000	0.11	TON	COMMERCIAL FERTILIZER	
	0.17											659	31000	0.17	ACRE	LIME	
	5											659	35000	5	M. GAL.	WATER	
						1						832	10000	1	EACH	STORM WATER POLLUTION PREVENTION PLAN	
						LUMP						832	30000	2000	EACH	EROSION CONTROL	
																DRAINAGE	
	100						10					603	00900	110	FT.	6" CONDUIT, TYPE B	
	100											603	01100	100	FT.	6" CONDUIT, TYPE C	
	100											603	01400	100	FT.	6" CONDUIT, TYPE E	
	100						30				70	603	01500	200	FT.	6" CONDUIT, TYPE F	
								90				603	04400	90	FT.	12" CONDUIT, TYPE B	
								66				603	04600	66	FT.	12" CONDUIT, TYPE C	
								3				604	00800	3	EACH	CATCH BASIN, NO. 3A	
								1				604	04500	1	EACH	CATCH BASIN, NO. 2-2B	
							3					604	09000	3	EACH	CATCH BASIN ADJUSTED TO GRADE	
								1				604	31500	1	EACH	MANHOLE, NO. 3	
								1				604	34500	1	EACH	MANHOLE ADJUSTED TO GRADE	
								1				604	35501	1	EACH	MANHOLE RECONSTRUCTED TO GRADE, AS PER PLAN	8
							230				401	605	11110	631	FT.	6" SHALLOW PIPE UNDERDRAINS WITH FABRIC WRAP	
							117				142	605	13410	259	FT.	6" UNCLASSIFIED PIPE UNDERDRAINS WITH FABRIC WRAP	

CALCULATED CML
CHECKED CWL

GENERAL SUMMARY

MAH-680-7.24/8.34

\\Micro0\Dgnfo\civil\200869\0N\dgn\22179G6A.dgn
03/30/2004
06:43:22 PM

SHEET NUMBER											ITEM	ITEM EXT.	GRAND TOTAL	UNIT	DESCRIPTION	SEE SHEET NO.
9	23	24	29	37	45	46	58	59								
															PAVEMENT	
	141	295									301	46010	436	CU. YD.	ASPHALT CONCRETE BASE, PG64-28	
	184	311			16	18					304	20000	529	CU. YD.	AGGREGATE BASE	
	63	99									407	10000	162	GALLON	TACK COAT	
	34	53									407	14000	87	GALLON	TACK COAT FOR INTERMEDIATE COURSE	
	337	530				19					408	10000	886	GALLON	PRIME COAT	
	41	64									446	46040	105	CU. YD.	ASPHALT CONCRETE INTERMEDIATE COURSE, TYPE 2, PG64-28	
	29	46									446	47010	75	CU. YD.	ASPHALT CONCRETE SURFACE COURSE, TYPE 1, PG64-28	
						3					448	48020	3	CU. YD.	ASPHALT CONCRETE SURFACE COURSE, TYPE 1, PG64-22 (DRIVEWAYS)	
					54						452	12001	54	SQ. YD.	8" NON-REINFORCED CONCRETE PAVEMENT, AS PER PLAN	6
		555									609	12000	555	FT.	COMBINATION CURB AND GUTTER, TYPE 2	
	329										609	26000	329	FT.	CURB, TYPE 6	
	51										609	26001	51	FT.	CURB, TYPE 6, AS PER PLAN	8
															WATER WORK	
200											638	01201	200	FT.	8" WATER MAIN DUCTILE IRON PIPE ANSI CLASS 52, PUSH-ON	9
															JOINTS AND FITTINGS, AS PER PLAN	
200											638	06200	200	FT.	POLYETHYLENE ENCASEMENT	
2											638	07901	2	EACH	8" GATE VALVE AND VALVE BOX, AS PER PLAN	9
1			1	1							638	10800	3	EACH	VALVE BOX ADJUSTED TO GRADE	
3				2							638	10900	5	EACH	SERVICE BOX ADJUSTED TO GRADE	
															LIGHTING	
								4			202	75507	4	EACH	LUMINAIRE REMOVED, AS PER PLAN	9
								2			202	75801	2	EACH	DISCONNECT EXISTING CIRCUIT, AS PER PLAN	9
							20	20			603	00400	40	FT.	4" CONDUIT, TYPE E	9
							1	2			625	00500	3	EACH	CONNECTOR KIT, TYPE II	
							1	2			625	00600	3	EACH	CONNECTOR KIT, TYPE III	
								4			625	01500	4	EACH	CABLE SPLICING KIT	
							1	2			625	02912	3	EACH	LIGHT POLE, DESIGN A8B30	
							4	8			625	10614	12	EACH	LIGHT POLE ANCHOR BOLTS ON STRUCTURE	
							302	596			625	23000	898	FT.	NO. 4 AWG 600 VOLT DISTRIBUTION CABLE	
							110	220			625	23400	330	FT.	NO. 10 AWG POLE AND BRACKET CABLE	
							141	278			625	25400	419	FT.	CONDUIT, 2", 725.04	
							1	2			625	26250	3	EACH	LUMINAIRE, CONVENTIONAL, TYPE III, 250 WATT, 120V, 725.11	
								4			625	27500	4	EACH	LUMINAIRE, UNDERPASS, HIGH PRESSURE SODIUM, 100 WATT, 480V	9
							1	2			625	29920	3	EACH	STRUCTURE JUNCTION BOX	
							1	1			625	30700	2	EACH	PULLBOX, 725.08, 18"	
							1	1			625	33001	2	EACH	STRUCTURE GROUNDING SYSTEM, AS PER PLAN	9
								1			625	37101	1	EACH	SERVICE TO UNDERPASS LIGHTING, AS PER PLAN	9
															FOR TRAFFIC CONTROL QUANTITIES, SEE SHEET NO. 49	
															FOR STRUCTURE QUANTITIES, SEE SHEET NO. 64, 81	
															FOR MAINTENANCE OF TRAFFIC QUANTITIES, SEE SHEET NO. 17	
											614	11000	LUMP		MAINTAINING TRAFFIC	
											623	10000	LUMP		CONSTRUCTION LAYOUT STAKES	
											624	10000	LUMP		MOBILIZATION	

CALCULATED CWL
CHECKED CWL

GENERAL SUMMARY

MAH-680-7.24/8.34

\\Mirror0\Data0\ch/fl\2008659\0R\dgn\22179968.dgn
03/30/2004
06:45:34 PM

FLEXIBLE PAVEMENT AREAS

STA. 47+63.00 TO STA. 47+80.00 RIGHT SIDE
[(19.55+20.00)/2](17.00) = 336.18 SQ. FT.

STA. 47+63.00 TO 47+80.00 LEFT SIDE
[(20.10+20.00)/2](17.00) = 340.85 SQ. FT.

STA. 47+80.00 TO STA. 48+44.47 BOTH SIDES
(20.00+20.00)(64.47) = 2578.80 SQ. FT.

STA. 51+36.64 TO STA. 52+05.00 BOTH SIDES
(20.00+20.00)(68.36) = 2734.40 SQ. FT.

STA. 52+05.00 TO STA. 52+45.00 RIGHT SIDE
[(20.00+18.64)/2](40.00) = 772.80 SQ. FT.

STA. 52+05.00 TO STA. 52+45.00 LEFT SIDE
[(20.00+21.40)/2](40.00) = 828.00 SQ. FT.

GIBSON STREET TOTAL = 7591.03 SQ. FT.

RIGID PAVEMENT AREAS

STA. 48+44.47 TO STA. 48+64.47 (APPROACH SLAB AREA)
(20.00+20.00)(20.00) = 800.00 SQ. FT.

STA. 51+16.64 TO STA. 51+36.64 (APPROACH SLAB AREA)
(20.00+20.00)(20.00) = 800.00 SQ. FT.

1600.00 SQ. FT.

ITEM 204 - SUBGRADE COMPACTION

STA. 47+63.00 TO STA. 52+45.00
[2(4864.47-4763.00)((6/12)+(14/12))+
2(5245.00-5116.64)((6/12)+(14/12))+
(7591.03+1600.00)](1/9) = 1106.72 SQ. YD.

ITEM 204 - PROOF ROLLING

STA. 47+63.00 TO STA. 52+45.00
[2(4864.47-4763.00)((6/12)+(14/12))+
2(5245.00-5116.64)((6/12)+(14/12))+
(7591.03+1600.00)](1/9)(1/2000) = 0.55 HRS.

ITEM 301 - ASPHALT CONCRETE BASE, PG 64-28

STA. 47+63.00 TO STA. 52+45.00
(7591.03)(6/12)(1/27) = 140.57 CU. YD.

ITEM 304 - AGGREGATE BASE

STA. 47+63.00 TO STA. 52+45.00
(7591.03+1600.00)(6/12)(1/27)+[(17.01+64.29+
20.00+20.00+68.56+40.02)+(17.00+64.64+20.00
+20.00+68.15+40.02)](6/12)(6/12)(1/27)+[(17.01+
64.29+20.00+20.00+68.56+40.02)+(17.00+64.64+
20.00+20.00+68.15+40.02)](14/12)(6/12)(1/27) = 184.39 CU. YD.

ITEM 407 - TACK COAT

STA. 47+63.00 TO STA. 52+45.00
(7591.03)(1/9)(0.075) = 63.26 GAL.

ITEM 407 - TACK COAT FOR INTERMEDIATE COURSE

STA. 47+63.00 TO STA. 52+45.00
(7591.03)(1/9)(0.040) = 33.74 GAL.

ITEM 408 - PRIME COAT

STA. 47+63.00 TO STA. 52+45.00
(7591.03)(1/9)(0.40) = 337.38 GAL.

ITEM 446 - ASPHALT CONCRETE INTERMEDIATE COURSE, TYPE 2, PG 64-28

STA. 47+63.00 TO STA. 52+45.00
(7591.03)(1.75/12)(1/27) = 41.00 CU. YD.

ITEM 446 - ASPHALT CONCRETE SURFACE COURSE, TYPE 1, PG 64-28

STA. 47+63.00 TO STA. 52+45.00
(7591.03)(1.25/12)(1/27) = 29.29 CU. YD.

ITEM 608 - 4" CONCRETE WALK

STA. 47+63.00 TO STA. 47+80.00 LEFT SIDE
[(5.12+5.50)/2](17.00) = 90.27 SQ. FT.

STA. 47+80.00 TO STA. 48+44.47 LEFT SIDE
(5.50)(64.47) = 354.59 SQ. FT.

STA. 48+44.47 TO STA. 48+64.47 LEFT SIDE
(5.50)(20.00) = 110.00 SQ. FT.

STA. 51+16.64 TO STA. 51+36.64 LEFT SIDE
(5.50)(20.00) = 110.00 SQ. FT.

STA. 51+36.64 TO STA. 51+48.90 LEFT SIDE
(5.50)(12.26) = 67.43 SQ. FT.

STA. 51+48.90 TO STA. 51+67.25 LEFT SIDE
(5.50)(18.35) = 100.93 SQ. FT.

STA. 51+81.98 TO STA. 52+05.00 LEFT SIDE
(5.50)(23.02) = 126.61 SQ. FT.

STA. 52+05.00 TO STA. 52+45.00 LEFT SIDE
[(5.50+4.26)/2](40.00) = 195.20 SQ. FT.

STA. 47+93.69 TO STA. 48+15.09 RIGHT SIDE
(3.00)(21.40) = 64.20 SQ. FT.

GIBSON STREET TOTAL = 1219.23 SQ. FT.

ITEM 608 - 4" CONCRETE WALK, AS PER PLAN

STA. 47+63.00 TO STA. 47+67.16 RIGHT SIDE
(2.50)(4.16) = 10.40 SQ. FT.

STA. 47+67.16 TO STA. 47+93.69 RIGHT SIDE
(3.00)(26.53) = 79.59 SQ. FT.

GIBSON STREET TOTAL = 89.99 SQ. FT.

ITEM 608 - 8" CONCRETE WALK

STA. 51+67.25 TO STA. 51+81.98 LEFT SIDE
(5.50)(14.73) = 81.02 SQ. FT.

ITEM 609 - CONCRETE CURB, TYPE 6

STA. 47+63.00 TO STA. 48+34.47 LEFT SIDE = 71.47 FT.

STA. 51+46.64 TO STA. 52+45.00 LEFT SIDE = 98.36 FT.

STA. 47+93.69 TO STA. 48+44.47 RIGHT SIDE = 50.78 FT.

STA. 51+36.64 TO STA. 52+45.00 RIGHT SIDE = 108.36 FT.

GIBSON STREET TOTAL = 328.97 FT.

ITEM 609 - CONCRETE CURB, TYPE 6, AS PER PLAN

STA. 47+63.00 TO STA. 47+93.69 RIGHT SIDE = 30.69 FT.

STA. 48+34.47 TO STA. 48+44.47 LEFT SIDE = 10.00 FT.

STA. 51+36.64 TO STA. 51+46.64 LEFT SIDE = 10.00 FT.

GIBSON STREET TOTAL = 50.69 FT.

GIBSON STREET PAVEMENT CALCULATION SUBSUMMARY

ITEM	DESCRIPTION	TOTAL
204	SUBGRADE COMPACTION	1107 SQ. YD.
204	PROOF ROLLING	0.55 HRS.
301	ASPHALT CONCRETE BASE, PG 64-28	141 CU. YD.
304	AGGREGATE BASE	184 CU. YD.
407	TACK COAT	63 GAL.
407	TACK COAT FOR INTERMEDIATE COURSE	34 GAL.
408	PRIME COAT	337 GAL.
446	ASPHALT CONCRETE INTERMEDIATE COURSE, TYPE 2, PG 64-28	41 CU. YD.
446	ASPHALT CONCRETE SURFACE COURSE, TYPE 1, PG 64-28	29 CU. YD.
608	4" CONCRETE WALK	1219 SQ. FT.
608	4" CONCRETE WALK, AS PER PLAN	90 SQ. FT.
608	8" CONCRETE WALK	81 SQ. FT.
609	CURB, TYPE 6	329 FT.
609	CURB, TYPE 6, AS PER PLAN	51 FT.

QUANTITIES CARRIED TO THE GENERAL SUMMARY ON SHEET NO. 21-22

CALCULATED CML CHECKED MVJ

PAVEMENT CALCULATIONS - GIBSON STREET

MAH-680-7.24/8.34

\\akron\bcha\civil\2001169\DI\ID\dgn\roadway\22795CA.dgn
03/30/2004
06:45:23 PM

FLEXIBLE PAVEMENT AREAS

PAVEMENT AREA
STA. 46+50.00 TO STA. 46+60.00 BOTH SIDES
(1/2)(20.15+20.00+19.99+20.00)(10.00) = 400.70 SQ. FT.

STA. 46+60.00 TO STA. 47+90.17 BOTH SIDES
(20.00+20.00)(130.17) = 5206.80 SQ. FT.

STA. 52+00.01 TO STA. 53+04.25 BOTH SIDES
(20.00+20.00)(104.24) = 4169.60 SQ. FT.

STA. 53+04.25 TO STA. 53+50.00 BOTH SIDES
GEOPAK CALCULATION = 2148.69 SQ. FT.

SHIRLEY ROAD TOTAL = 11925.79 SQ. FT.

AREA FOR 44" EXTENSION (ITEMS 204 & 304)
STA. 46+50.00 TO STA. 46+60.00 BOTH SIDES
(2)(44/12)(10.00) = 73.33 SQ. FT.

STA. 46+60.00 TO STA. 47+90.17 BOTH SIDES
(2)(44/12)(130.17) = 954.58 SQ. FT.

STA. 52+00.01 TO STA. 53+04.25 BOTH SIDES
(2)(44/12)(104.24) = 764.43 SQ. FT.

STA. 53+04.25 TO STA. 53+50.00 BOTH SIDES
GEOPAK CALCULATION = 233.80 SQ. FT.

SHIRLEY ROAD TOTAL = 2026.14 SQ. FT.

RIGID PAVEMENT AREAS

PAVEMENT AREA
STA. 47+90.17 TO STA. 48+20.17 (APPROACH SLAB AREA)
(22.00+22.00)(30.00) = 1320.00 SQ. FT.

STA. 51+70.01 TO STA. 52+00.01 (APPROACH SLAB AREA)
(22.00+22.00)(30.00) = 1320.00 SQ. FT.

SHIRLEY ROAD TOTAL = 2640.00 SQ. FT.

AREA FOR 20" EXTENSION (ITEMS 204 & 304)
STA. 47+90.17 TO STA. 48+20.17 (APPROACH SLAB AREA)
(2)(20/12)(30.00) = 100.00 SQ. FT.

STA. 51+70.01 TO STA. 52+00.01 (APPROACH SLAB AREA)
(2)(20/12)(30.00) = 100.00 SQ. FT.

SHIRLEY ROAD TOTAL = 200.00 SQ. FT.

ITEM 204 - SUBGRADE COMPACTION

STA. 46+50.00 TO STA. 53+50.00
(11925.79+2026.14+2640.00+200.00)(1/9) = 1865.77 SQ. YD.

ITEM 204 - PROOF ROLLING

STA. 46+50.00 TO STA. 53+50.00
(11925.79+2026.14+2640.00+200.00)(1/9)(1/2000) = 0.93 HRS.

ITEM 301 - ASPHALT CONCRETE BASE, PG 64-28

STA. 46+50.00 TO STA. 53+50.00
(11925.79)(8/12)(1/27) = 294.46 CU. YD.

ITEM 304 - AGGREGATE BASE

STA. 46+50.00 TO STA. 53+50.00
(11925.79+2026.14+2640.00+200.00)(6/12)(1/27) = 310.96 CU. YD.

ITEM 407 - TACK COAT

STA. 46+50.00 TO STA. 53+50.00
(11925.79)(1/9)(0.075) = 99.38 GAL.

ITEM 407 - TACK COAT FOR INTERMEDIATE COURSE

STA. 46+50.00 TO STA. 53+50.00
(11925.79)(1/9)(0.040) = 53.00 GAL.

ITEM 408 - PRIME COAT

STA. 46+50.00 TO STA. 53+50.00
(11925.79)(1/9)(0.40) = 530.04 GAL.

ITEM 446 - ASPHALT CONCRETE INTERMEDIATE COURSE, TYPE 2, PG 64-28

STA. 46+50.00 TO STA. 53+50.00
(11925.79)(1.75/12)(1/27) = 64.41 CU. YD.

ITEM 446 - ASPHALT CONCRETE SURFACE COURSE, TYPE 1, PG 64-28

STA. 46+50.00 TO STA. 53+50.00
(11925.79)(1.25/12)(1/27) = 46.01 CU. YD.

ITEM 608 - 4" CONCRETE WALK

RIGHT SIDE
STA. 46+50.00 TO STA. 46+60.00
(1/2)(5.60+5.50)(10.00) = 55.50 SQ. FT.

STA. 46+60.00 TO STA. 47+48.01
(5.50)(88.01) = 484.06 SQ. FT.

STA. 47+48.01 TO STA. 47+61.35
(4.75)(13.34) = 63.37 SQ. FT.

STA. 47+61.35 TO STA. 47+84.26
(4.67)(22.91) = 106.99 SQ. FT.

STA. 51+34.21 TO STA. 51+52.34
(4.67)(18.13) = 84.67 SQ.FT.

STA. 51+52.34 TO STA. 51+71.28
(5.42)(18.94) = 102.65 SQ. FT.

STA. 51+71.28 TO STA. 53+04.25
(5.50)(132.97) = 731.34 SQ. FT.

STA. 53+04.25 TO 53+09.60
GEOPAK CALCULATION = 19.13 SQ. FT.

LEFT SIDE
STA. 46+50.00 TO STA 46+60.00
(1/2)(5.87+5.50)(10.00) = 56.85 SQ. FT.

STA. 46+60.00 TO STA. 47+36.83
(5.50)(76.83) = 422.57 SQ. FT.

STA. 47+54.83 TO STA. 47+76.97
(5.50)(22.14) = 121.77 SQ. FT.

STA. 48+18.99 TO STA. 48+28.72
(5.42)(9.73) = 52.74 SQ. FT.

STA. 48+28.72 TO STA. 48+56.08
(4.67)(27.36) = 22.69 SQ. FT.

STA. 52+05.82 TO STA. 52+28.75
(4.67)(22.93) = 107.08 SQ.FT.

STA. 52+28.75 TO STA. 52+32.81
(4.75)(4.06) = 19.29 SQ. FT.

STA. 52+32.81 TO STA. 53+40.00
(5.50)(107.19) = 589.55 SQ.FT.

STA. 53+40.00 TO STA. 53+50.00
(1/2)(5.69+5.50)(10.00) = 55.95 SQ. FT.

EXISTING WALK CONNECTION (STA. 47+00 LEFT)
(2.14)(6.36) = 13.61 SQ. FT.

SHIRLEY ROAD TOTAL = 3109.81 SQ. FT.

ITEM 608 - 8" CONCRETE WALK

LEFT SIDE
STA. 47+36.83 TO STA. 47+54.83
(5.50)(18.00) = 99.00 SQ. FT.

STA. 47+76.97 TO STA. 48+18.99
(5.50)(42.02) = 231.11 SQ. FT.

SHIRLEY ROAD TOTAL = 330.11 SQ. FT.

ITEM 609 - COMBINATION CURB AND GUTTER, TYPE 2

STA. 46+50.00 TO STA. 47+61.35 RIGHT SIDE = 111.35 FT.

STA. 51+71.28 TO STA. 53+16.26 RIGHT SIDE = 153.39 FT.

STA. 46+50.00 TO STA. 48+18.99 LEFT SIDE = 168.99 FT.

STA. 52+28.75 TO STA. 53+50.00 LEFT SIDE = 121.25 FT.

SHIRLEY ROAD TOTAL = 554.98 FT.

SHIRLEY ROAD PAVEMENT CALCULATION SUBSUMMARY

ITEM	DESCRIPTION	TOTAL
204	SUBGRADE COMPACTION	1866 SQ. YD.
204	PROOF ROLLING	0.93 HRS.
301	ASPHALT CONCRETE BASE, PG 64-28	295 CU. YD.
304	AGGREGATE BASE	311 CU. YD.
407	TACK COAT	99 GAL.
407	TACK COAT FOR INTERMEDIATE COURSE	53 GAL.
408	PRIME COAT	530 GAL.
446	ASPHALT CONCRETE INTERMEDIATE COURSE, TYPE 2, PG 64-28	64 CU. YD.
446	ASPHALT CONCRETE SURFACE COURSE, TYPE 1, PG 64-28	46 CU. YD.
608	4" CONCRETE WALK	3110 SQ. FT.
608	8" CONCRETE WALK	330 SQ. FT.
609	COMBINATION CURB AND GUTTER, TYPE 2	555 FT.
QUANTITIES CARRIED TO THE GENERAL SUMMARY ON SHEET NO. 21-22.		

CALCULATED CWL CHECKED MVJ

PAVEMENT CALCULATIONS - SHIRLEY ROAD

MAH-680-7.24/8.34

\\Akron\Data\civil\200169\N12\dgn\roadway\22796CC.dgn
03/30/2004
06:45:46 PM

ITEM 202 - PAVEMENT REMOVED

GIBSON STREET

GEOPAK CALCULATION = 7 SQ. YD.

ITEM 202 - CURB REMOVED

GIBSON STREET

GEOPAK CALCULATION = 434 FT.

SHIRLEY ROAD

GEOPAK CALCULATION = 128 FT.

TOTAL = 562 FT.

ITEM 202 - CURB AND GUTTER REMOVED

SHIRLEY ROAD

GEOPAK CALCULATION = 535 FT.

ITEM 202 - WALK REMOVED

GIBSON STREET

GEOPAK CALCULATION = 1317 SQ. FT.

SHIRLEY ROAD

GEOPAK CALCULATION = 3827 SQ. FT.

TOTAL = 5144 SQ. FT.

ITEM 202 - APPROACH SLAB REMOVED

GIBSON STREET

(2) (20') (40') (1/9) = 177.78 SQ. YD.

SHIRLEY ROAD

(2) (22') (30') (1/9) = 146.67 SQ. YD.

TOTAL = 324.45 SQ. YD.

ITEM 601 - CONCRETE SLOPE PROTECTION

BRIDGE NO. MAH-680-0724 (SEE SITE PLAN ON SHEET NO. 62)

FORWARD ABUTMENT = 25 SQ. YD.

REAR ABUTMENT = 25 SQ. YD.

BRIDGE NO. MAH-680-0834 (SEE SITE PLAN ON SHEET NO. 79)

FORWARD ABUTMENT = .48 SQ. YD.

TOTAL = 98 SQ. YD.

ITEM 626 - BARRIER REFLECTOR, TYPE A

GIBSON STREET = 8 EACH

SHIRLEY ROAD = 7 EACH

TOTAL = 15 EACH **

EARTHWORK SUBSUMMARY

SHEET NO.	LOCATION STATION FROM	LOCATION STATION TO	ITEM 203 EXCAVATION CU. YD.	ITEM 203 EMBANKMENT CU. YD.	ITEM 659 SEEDING & MULCHING SQ. YD.
	GIBSON STREET				
30	46+50.00	47+80.00	30	1	41
31	48+00.00	48+44.47	36	30	108
32	48+64.47	51+36.64	11	59	88
33	51+60.69	52+05.00	4	12	28
34	52+45.00	53+50.00	0	0	1
	SHIRLEY ROAD				
38	46+00.00	46+50.00	9	5	62
39	47+00.00	47+46.00	18	11	22
40	47+50.00	47+72.61	11	40	42
42	47+90.17	48+20.17	4	55	32
43	51+70.01	52+50.00	23	148	317
44	53+00.00	54+00.00	6	5	91
	EARTHWORK FOR ASPH. PVMT. REMOVAL				
	GIBSON STREET		422	422	
	SHIRLEY ROAD		626	626	
	TOTALS		1200	1414	832 *

QUANTITIES DENOTED BY AN (*) HAVE BEEN CARRIED TO THE GENERAL NOTES ON SHEET NO. 7

QUANTITIES DENOTED BY AN (**) HAVE BEEN CARRIED TO THE TRAFFIC CONTROL GENERAL SUMMARY ON SHEET NO. 49

ALL OTHER QUANTITIES HAVE BEEN CARRIED TO THE GENERAL SUMMARY ON SHEET NO. 21-22

CML CHECKED MVJ

MISCELLANEOUS CALCULATIONS

MAH-680-7.24/8.34

\\Akrmd\Data\civil\2001659\Dgn\22739CD.dgn
03/30/2004
06:46:06 PM

PROJECT DATA (GIBSON & SHIRLEY)

TOTAL AREA (RIGHT-OF-WAY):	0.1 + 0.5 = 0.6 ACRES	RUNOFF COEFFICIENT FOR PRE-CONSTRUCTION SITE:	0.71 / 0.86
PROJECT EARTH DISTURBED AREA:	0.4 + 0.7 = 1.1 ACRES	RUNOFF COEFFICIENT FOR POST-CONSTRUCTION SITE:	0.71 / 0.86
ESTIMATED CONTRACTOR EARTH DISTURBED AREA:	0.3 + 0.3 = 0.6 ACRES	IMMEDIATE RECEIVING WATERS:	N/A
NOTICE OF INTENT EARTH DISTURBED AREA:	4.9 ACRES	SUBSEQUENT RECEIVING WATER:	MAHONING R.
IMPERVIOUS (PAVED) AREA FOR PRE-CONSTRUCTION SITE:	0.2 + 0.4 = 0.6 ACRES		
IMPERVIOUS (PAVED) AREA FOR POST CONSTRUCTION SITE:	0.2 + 0.4 = 0.6 ACRES		

USGS QUADRANGLE MAPS:

No. N4107.5-W8045/7.5
WARREN, OHIO

No. N4107.5-W8037.5/7.5
SHARON WEST, OHIO

No. N4100-W8045/7.5
SALEM, OHIO

No. N4100-W8037.5/7.5
NEW MIDDLETON, OHIO

LATITUDE: N41°04'54"
LONGITUDE: W80°38'35"

MAH-680-0724

LATITUDE: N41°04'24"
LONGITUDE: W80°37'34"

MAH-680-0834

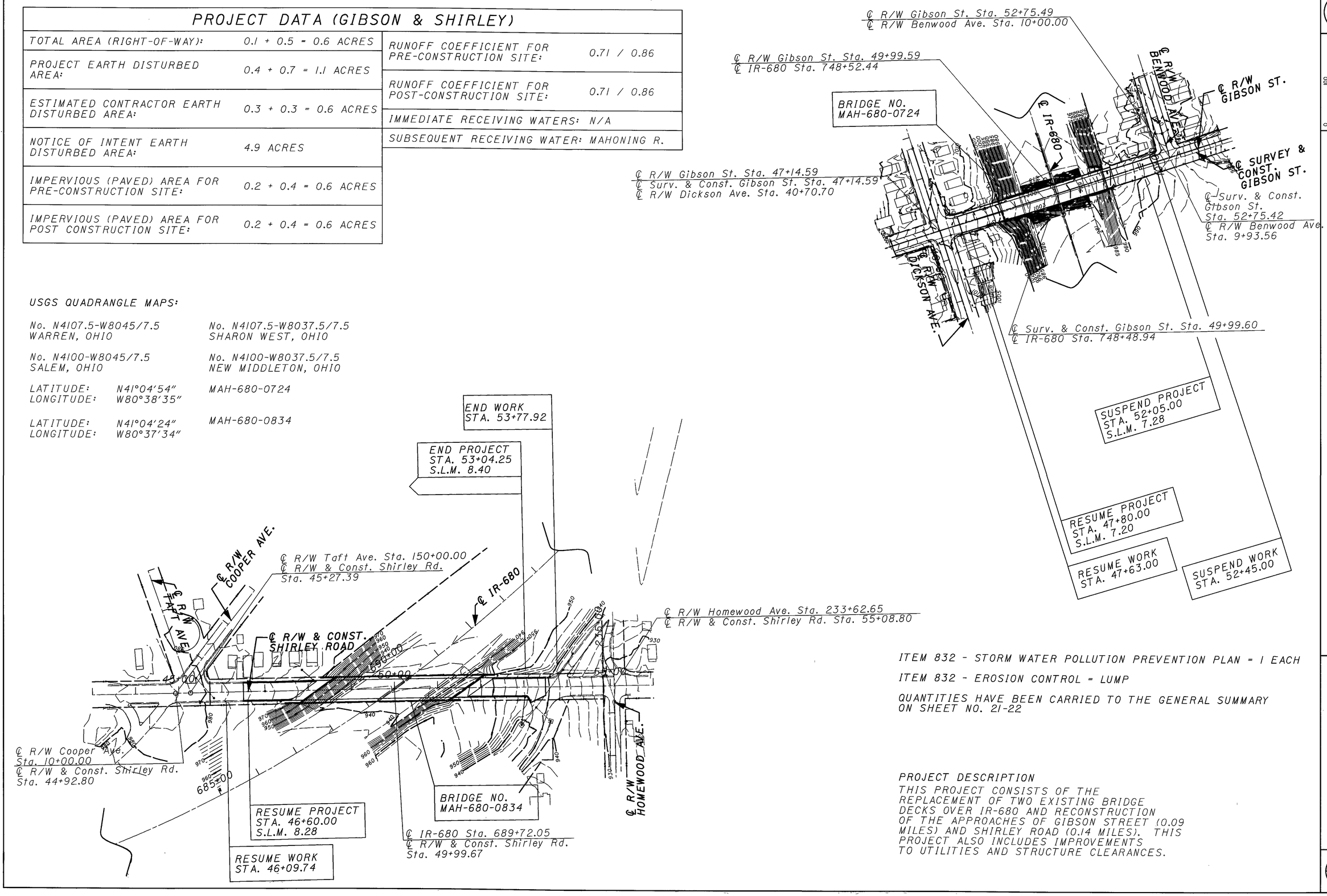

ITEM 832 - STORM WATER POLLUTION PREVENTION PLAN = 1 EACH

ITEM 832 - EROSION CONTROL = LUMP

QUANTITIES HAVE BEEN CARRIED TO THE GENERAL SUMMARY ON SHEET NO. 21-22

PROJECT DESCRIPTION

THIS PROJECT CONSISTS OF THE REPLACEMENT OF TWO EXISTING BRIDGE DECKS OVER IR-680 AND RECONSTRUCTION OF THE APPROACHES OF GIBSON STREET (0.09 MILES) AND SHIRLEY ROAD (0.14 MILES). THIS PROJECT ALSO INCLUDES IMPROVEMENTS TO UTILITIES AND STRUCTURE CLEARANCES.

PROJECT SITE PLAN

MAH-680-7.24/8.34

\\Akrron\Data\civil\200169\01\dgn\227386A.dgn
03/30/2004
06:46:25 PM

AJ-1
STA. 48+30.29, 20.00' LT.
CB ADJUSTED TO GRADE
EX. T/CURB ELEV. = 1006.50
PROP. T/CURB ELEV. = 1006.59
℄ EX. 12" (E) = 1002.90
PROP. 6" U.D. (S) = 1003.34

AJ-2
STA. 48+29.79, 20.00' RT.
CB ADJUSTED TO GRADE
EX. T/CURB ELEV. = 1006.67
PROP. T/CURB ELEV. = 1006.60
℄ EX. 12" (W,S) = 1002.10
PROP. 6" U.D. (S) = 1003.35

℄ Surv. & Const. Gibson St. Sta. 47+14.59
℄ R/W Gibson St. Sta. 47+14.59
℄ R/W Dickson Ave.
Sta. 40+70.70

Benchmark #1:
Top of Iron Pin
Sta. 47+40.57, 31.17' Lt.
Elev. = 1010.13

For Existing and Proposed Structure Data, See Sheet 62.

For Estimated Quantities, See Sheet 29.

For Structure Plans, See Sheet 62-78.

For Barrier Wall Details, See Sheet 8.

NOTE "A"
TRANSITION CURB HEIGHT 6" TO 8" FROM STA. 48+34.47 TO STA. 48+44.47 (LEFT SIDE)

Resume Work Sta. 47+63.00

Resume Project Sta. 47+80.00 S.L.M. 7.20

SEE NOTE "A"

BM#1

Remove and Replace Walk and Curb. Adjust House Drains for Positive Drainage. Match Existing Walk Width

* 17' Taper Length
37.78:1 Pavement Taper Lt.
170:1 Pavement Taper Rt.
45.95:1 Sidewalk Taper Lt.

Const. Limits

℄ EXISTING R/W

℄ SURVEY & CONST. GIBSON STREET

Ex. 6" Water Capped

End Approach Slab Sta. 48+64.47

Begin Approach Slab Sta. 48+44.47

Bridge No. MAH-680-0724

90°24'18"

N1°36'41"W

N0°57'12"W

℄ Surv. & Const. Gibson St. Sta. 49+99.60
℄ IR-680 Sta. 748+48.94

OVERHEAD SIGN

MATCHLINE STA. 51+00

Vertical Clearance Location

HORIZONTAL SCALE IN FEET 0 10 20 40

CALCULATED CML
CHECKED MVJ

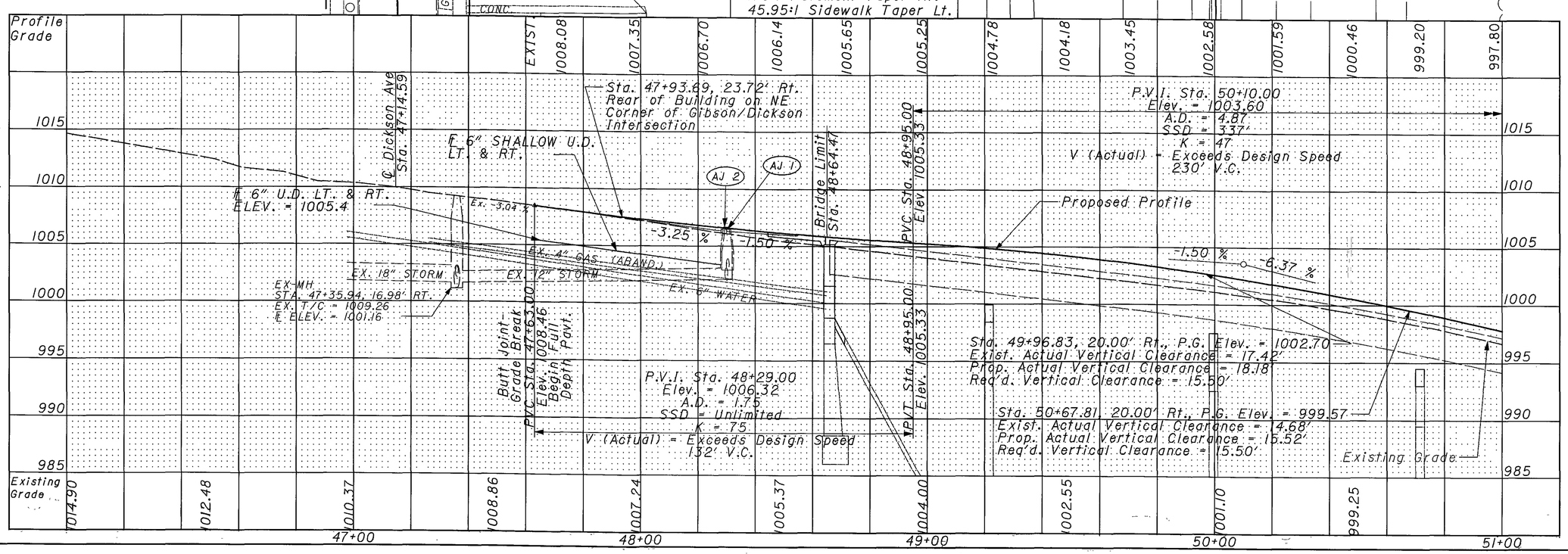

PLAN AND PROFILE - GIBSON STREET BEGIN TO STA. 51+00

MAH-680-7.24/8.34

\\Akron01\Data\civil\200169\DN10\dgn\roadway\22173GPA.dgn
03/30/2004
08:46:47 PM

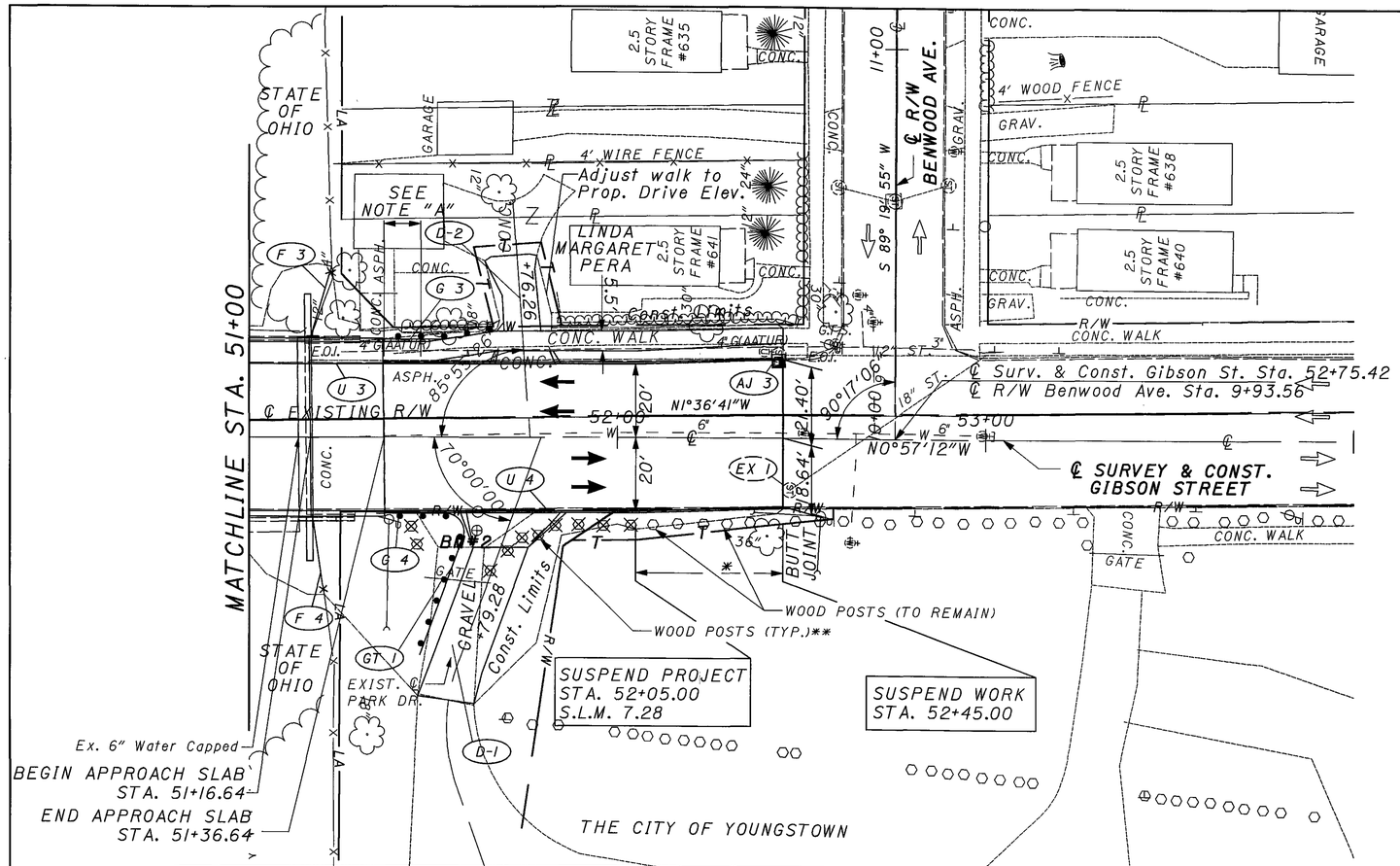

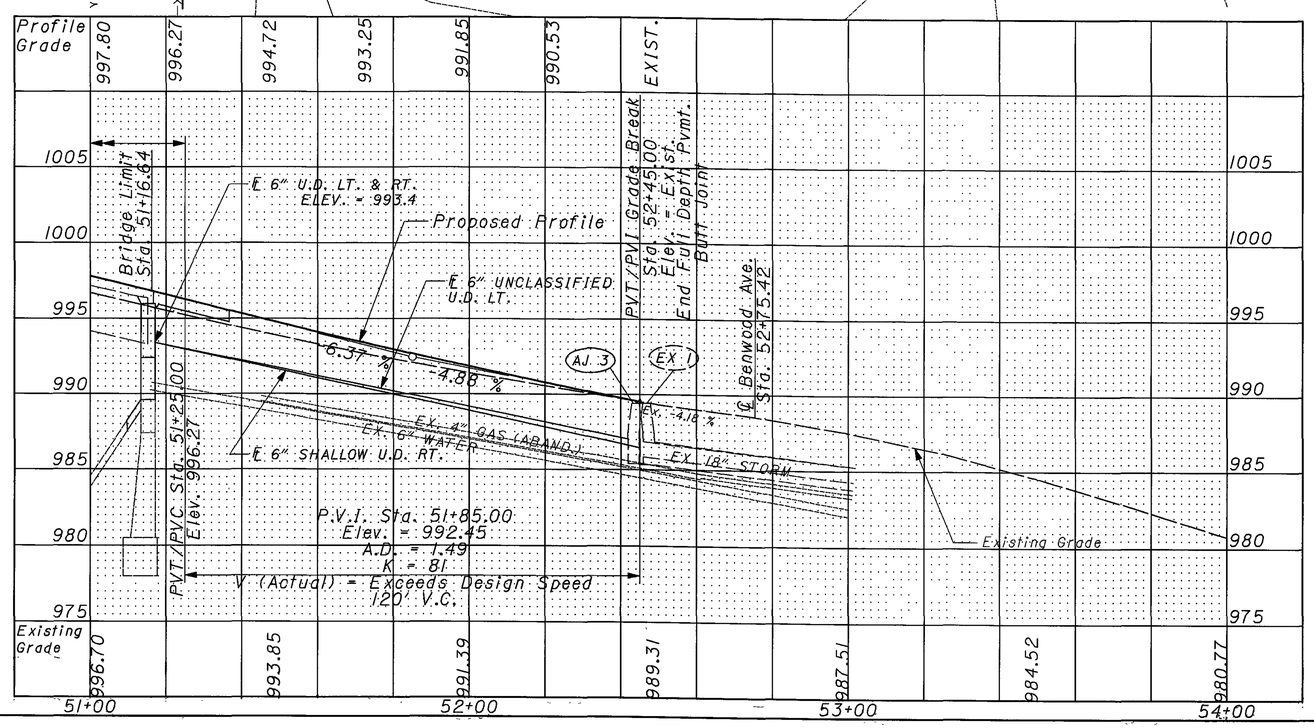

AJ-3
STA. 52+43.85, 21.36' LT.
CB ADJUSTED TO GRADE
EX. T/CURB ELEV. = 989.36
PROP. T/CURB ELEV. = 989.39
℄ EX. 12" (N) = 986.54
PROP. 6" U.D. (S) = 987.04

EX-1
STA. 52+46.83, 14.04' RT.
EX. T/C ELEV. = 989.22
℄ EX. 18" (NW) = 984.74
PROP. 6" U.D. (S) = 986.47

* 40' TAPER LENGTH
28.57:1 PAVEMENT TAPER LT.
29.41:1 PAVEMENT TAPER RT.
32.26:1 SIDEWALK TAPER LT.

** SEE GENERAL NOTE ROADWAY MISC. ON SHEET 7 .

NOTE "A"
TRANSITION CURB HEIGHT 6" TO 8"
STA. 51+36.64 TO STA. 51+46.64 (LEFT SIDE)

FOR STRUCTURE PLANS, SEE SHEET 62-78.
FOR EXISTING & PROPOSED STRUCTURE DATA, SEE SHEET 62.
FOR ESTIMATED QUANTITIES, SEE SHEET 29.
FOR DRIVEWAY DETAILS AND QUANTITIES, SEE SHEET 45.

Benchmark #2:

Boat Spike in Walk
Sta. 51+61.88, 25.31' Rt.
Elev. = 992.77

HORIZONTAL SCALE IN FEET 0 10 20 40

CALCULATED CML
CHECKED MVJ

PLAN AND PROFILE - GIBSON STREET
STA. 51+00 TO END

MAH-680-7.24/ 8.34

\\Mkrn01\Data\civil\200169\DI\80\dgn\roadway\22739PB.dgn
03/30/2004
06:47:03 PM

REF NO.	SHEET NO.	STATION TO STATION	202 STEPS REMOVED FT.	202 FENCE REMOVED FT.	202 GATE REMOVED FOR REUSE EACH	603 6" CONDUIT, TYPE B FT.	603 6" CONDUIT, TYPE F FT.	604 CATCH BASIN ADJUSTED TO GRADE EACH	605 6" UNCLASSIFIED UNDERDRAINS WITH FABRIC WRAP FT.	605 6" SHALLOW PIPE UNDERDRAIN WITH FABRIC WRAP FT.	606 GUARDRAIL, TYPE 5 FT.	606 ANCHOR ASSEMBLY, TYPE T EACH	606 BRIDGE TERMINAL ASSEMBLY, TYPE 1 EACH	607 FENCE, TYPE CLT FT.	608 CONCRETE STEPS, TYPE A, AS PER PLAN FT.	622 CONCRETE BARRIER, SINGLE SLOPE, TYPE D FT.	622 CONCRETE BARRIER, SINGLE SLOPE, TYPE D, AS PER PLAN FT.	638 VALVE BOX ADJUSTED TO GRADE EACH
AJ-1	27	STA. 48+30.29, 21.12' LT.						1										
AJ-2	27	STA. 48+29.79, 21.61' RT.						1										
AJ-3	28	STA. 52+43.85, 22.65' LT.						1										
B-1	27	STA. 47+94.47 TO STA. 48+44.47														40	10	
F-1	27	STA. 48+00.00 TO STA. 48+60.66 LT.		70										70				
F-2	27	STA. 48+50.00 RT.		20										20				
F-3	28	STA. 51+20.00 LT.		20										20				
F-4	28	STA. 51+20.00 RT.		20										20				
G-2	27	STA. 48+15.60 TO STA. 48+46.75 RT.									31.25		1					
G-3	28	STA. 51+34.28 TO STA. 51+65.36 LT.									31.25		1					
G-4	28	STA. 51+34.75 (GIBSON) TO PARK DRIVE									50.00	1	1					
GT-1	28	STA. 51+56.70			1													
ST-1	27	STA. 48+14.40 RT.	9												9			
WJ-1	27	STA. 48+24.89, 22.00' LT.																1
U-1	27	STA. 47+65.00 TO AJ-1					10			55								
U-2	27	STA. 47+65.00 TO AJ-2					10			55								
U-3	28	STA. 51+17.00 TO AJ-3					10		117									
U-4	28	STA. 51+17.00 TO EX-1				10				120								
TOTALS CARRIED TO GENERAL SUMMARY			9	130	1	10	30	3	117	230	112.50	1	3	130	9	40	10	1

CALCULATED CML
CHECKED MVJ

ESTIMATED QUANTITIES - GIBSON STREET

MAH-680-7.24/8.34

\\Akron01\data\civil\20016SV01\01\dgn\roadway\22179GSA.dgn
03/30/2004
06:47:46 PM

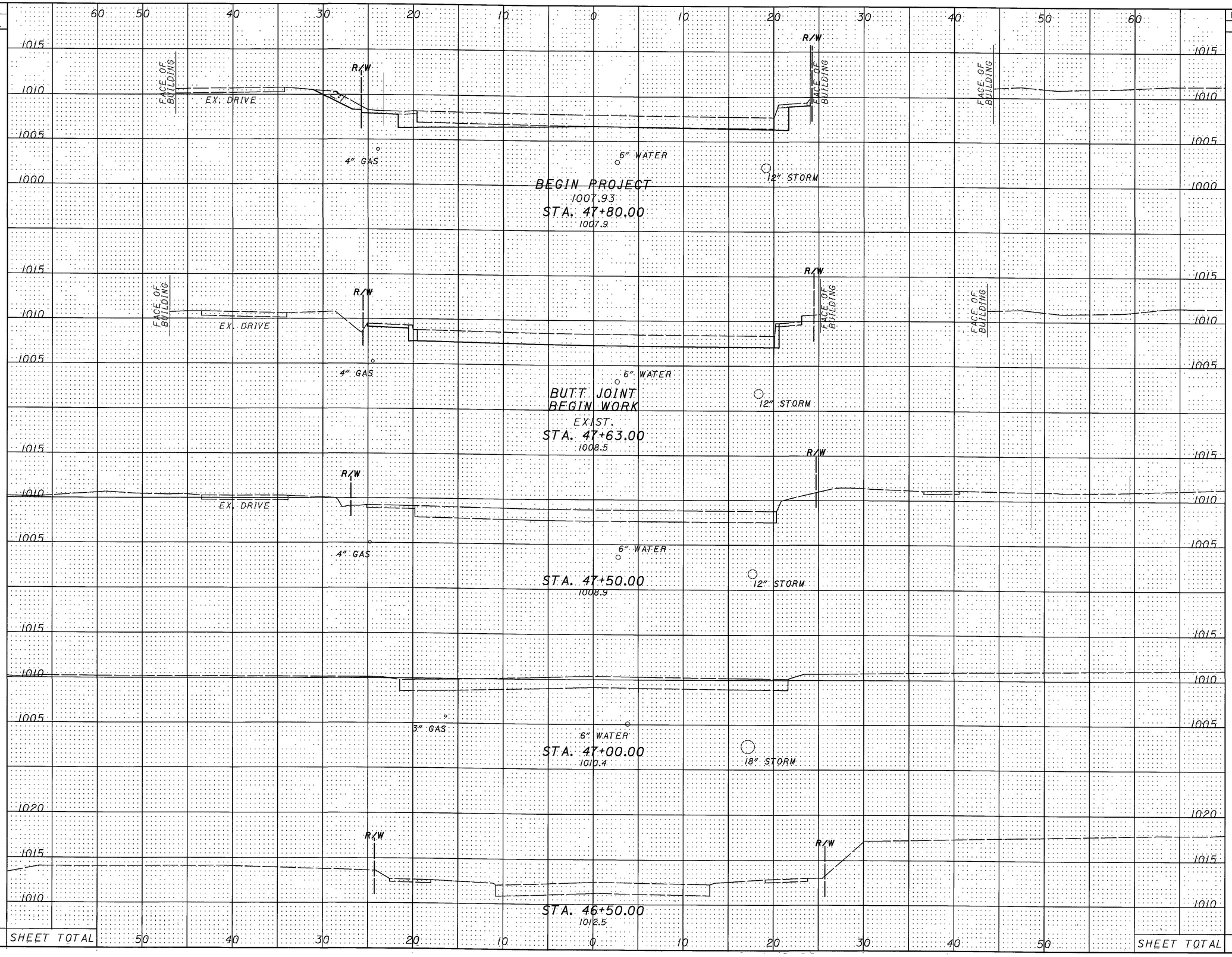

SEEDING END WIDTH	SEEDING SQ. YDS.	END AREA CUT	END AREA FILL	VOLUME CUT	VOLUME FILL
6	26	26	0	22	1
	11			8	0
6		0	0		
	4				
0					
	41 SHEET TOTAL			30	1

CALCULATED CWL
CHECKED MVJ

CROSS SECTIONS - GIBSON STREET
STA. 46+50.00 TO STA. 47+80.00

MAH-680-7.24/8.34

30/107

\\akron0\bdata\civil\200869\0\U0\dgn\roadway\22f9gxsu.dgn
03/30/2004
06:47:30 PM

SEEDING	
END WIDTH	SQ. YDS.
	41
10	
	67
17	
108	SHEET TOTAL

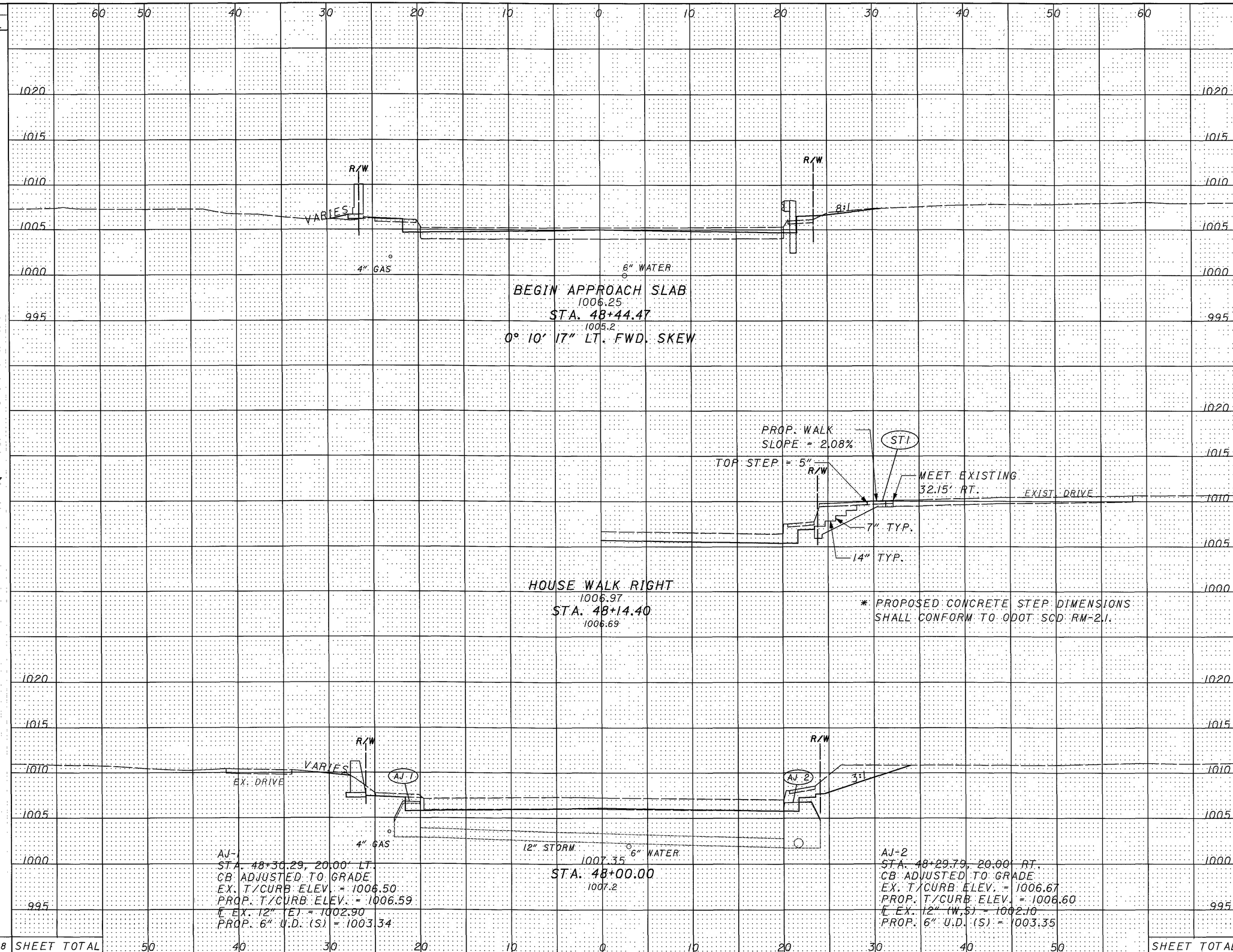

END AREA		VOLUME	
CUT	FILL	CUT	FILL
		5	27
5	2		
		31	3
32	1		
SHEET TOTAL		36	30

CALCULATED CWL
CHECKED MVJ

CROSS SECTIONS - GIBSON STREET
STA. 48+00.00 TO STA. 48+44.47

MAH-680-7.24/8.34

\\Mkm01\Data\civil\200869.01\MD\dgn\roadway\22179gcb.dgn
03/30/2004
06:41:40 PM

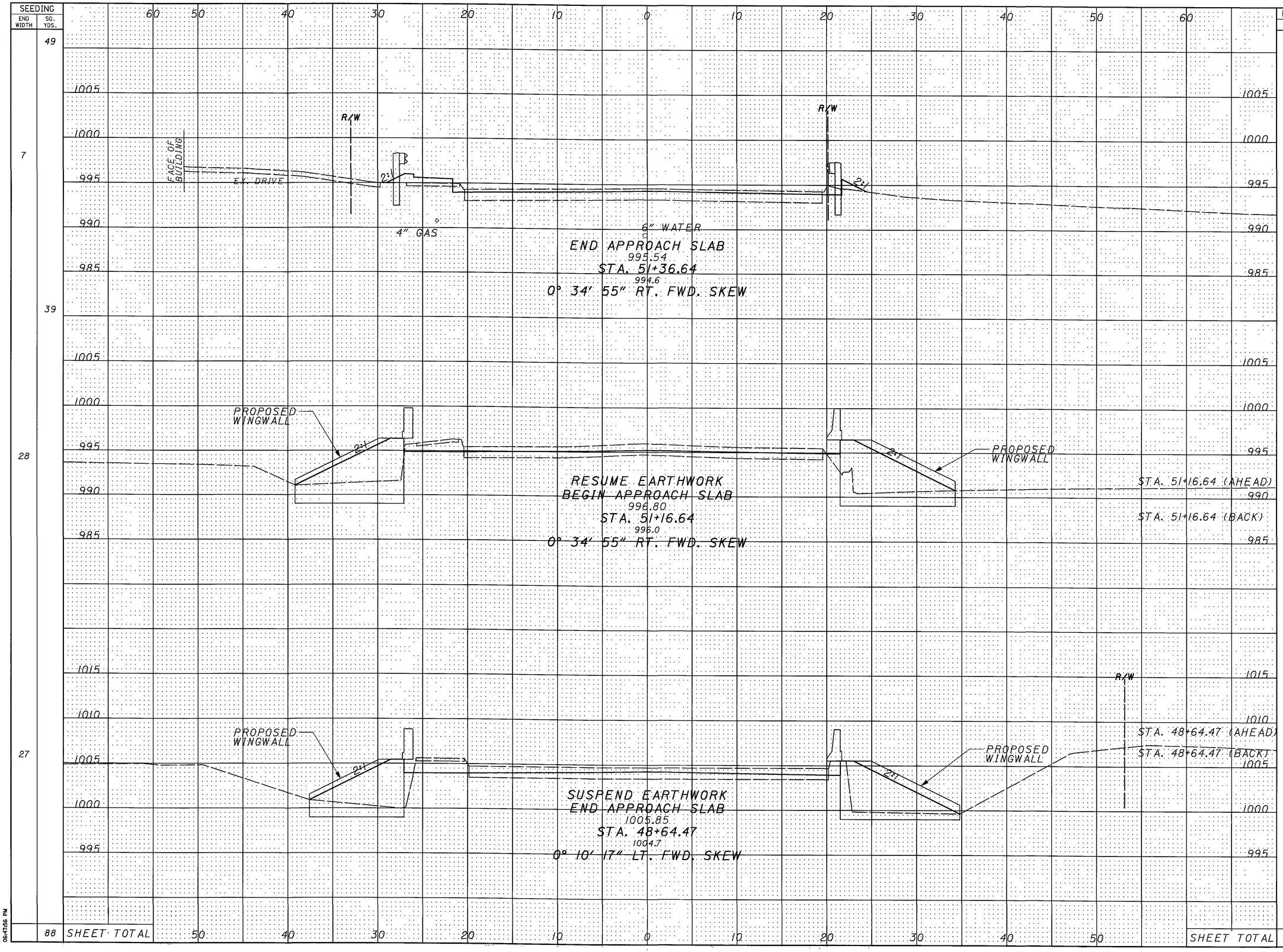
SEEDING
END WIDTH
SQ. YDS.
49
7
39
28
27
88
SHEET TOTAL
60 50 40 30 20 10 0 10 20 30 40 50 60
1005
1000
995
990
985
1015
1010
R/W
FACE OF BUILDING
EX. DRIVE
2:1
4" GAS
6" WATER
END APPROACH SLAB
995.54
STA. 51+36.64
994.6
0° 34' 55" RT. FWD. SKEW
PROPOSED WINGWALL
RESUME EARTHWORK
BEGIN APPROACH SLAB
996.80
STA. 51+16.64
996.0
0° 34' 55" RT. FWD. SKEW
STA. 51+16.64 (AHEAD)
STA. 51+16.64 (BACK)
STA. 48+64.47 (AHEAD)
STA. 48+64.47 (BACK)
SUSPEND EARTHWORK
END APPROACH SLAB
1005.85
STA. 48+64.47
1004.7
0° 10' 17" LT. FWD. SKEW
END AREA
CUT
FILL
3
6
6
74
0
0
0
0
8
71
SHEET TOTAL
VOLUME
CUT
FILL
8
29
3
30
11
59
CALCULATED
CWL
CHECKED
MVJ
CROSS SECTIONS - GIBSON STREET
STA. 48+64.47 TO STA. 51+36.64
MAH-680-7.24/8.34
32
107
\\Akrndfl\Data\civil\200169\0\ND\dgn\roadway\22179pxc.dgn
03/30/2004
05:47:56 PM

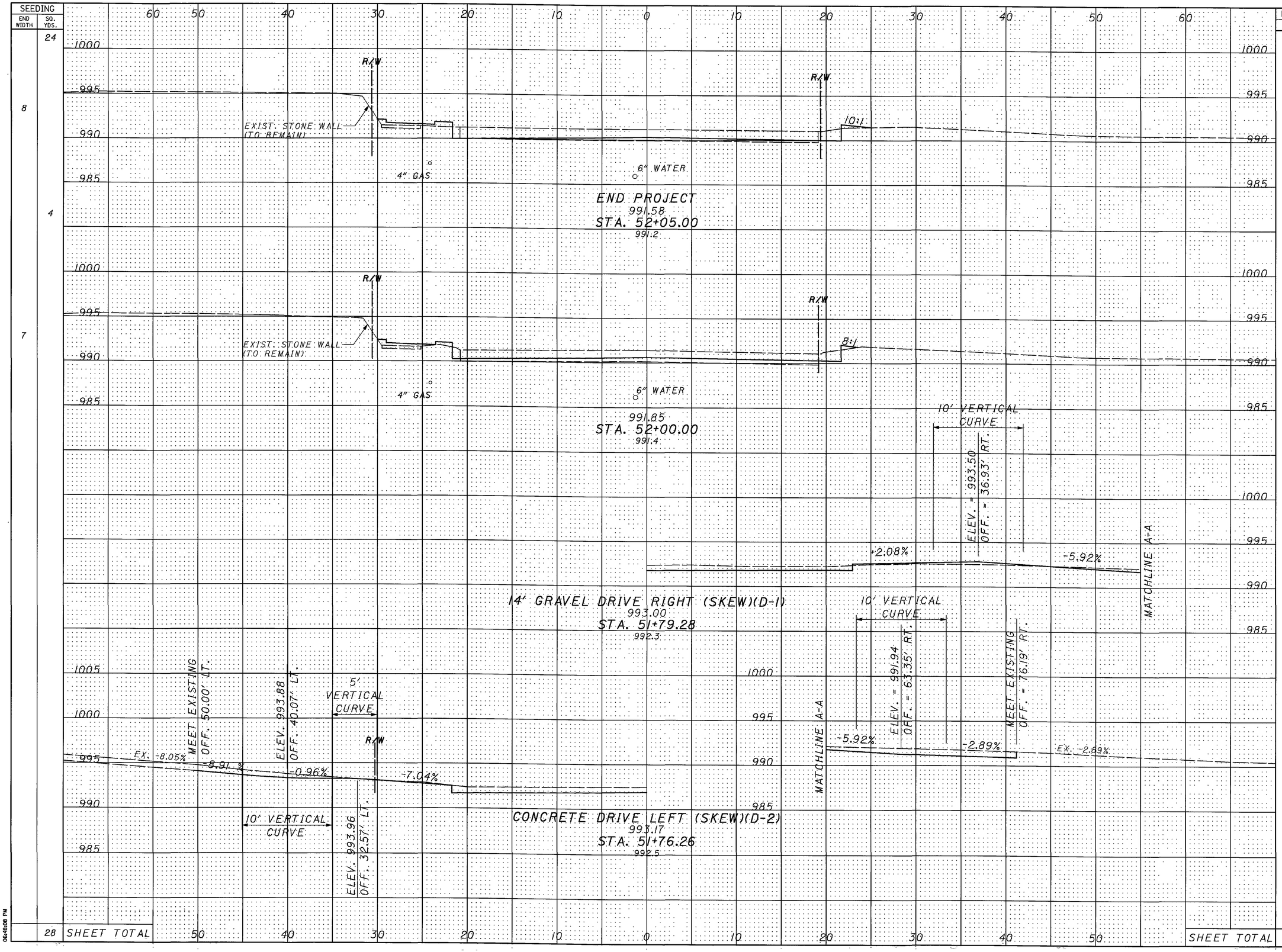

END AREA CUT	END AREA FILL	VOLUME CUT	VOLUME FILL
		3	9
4	12		
		1	3
4	19		
SHEET TOTAL		4	12

CALCULATED CWL
CHECKED MVJ

CROSS SECTIONS - GIBSON STREET
STA. 51+76.26 TO STA. 52+05.00

MAH-680-7.24/8.34

\\Mcrnj\Data\civil\2001169\0\110\dgn\roadway\22179gxd.dgn
03/30/2004
06:48:08 PM

SEEDING	
END WIDTH	SQ. YDS.
0	
1	
3	
1	SHEET TOTAL

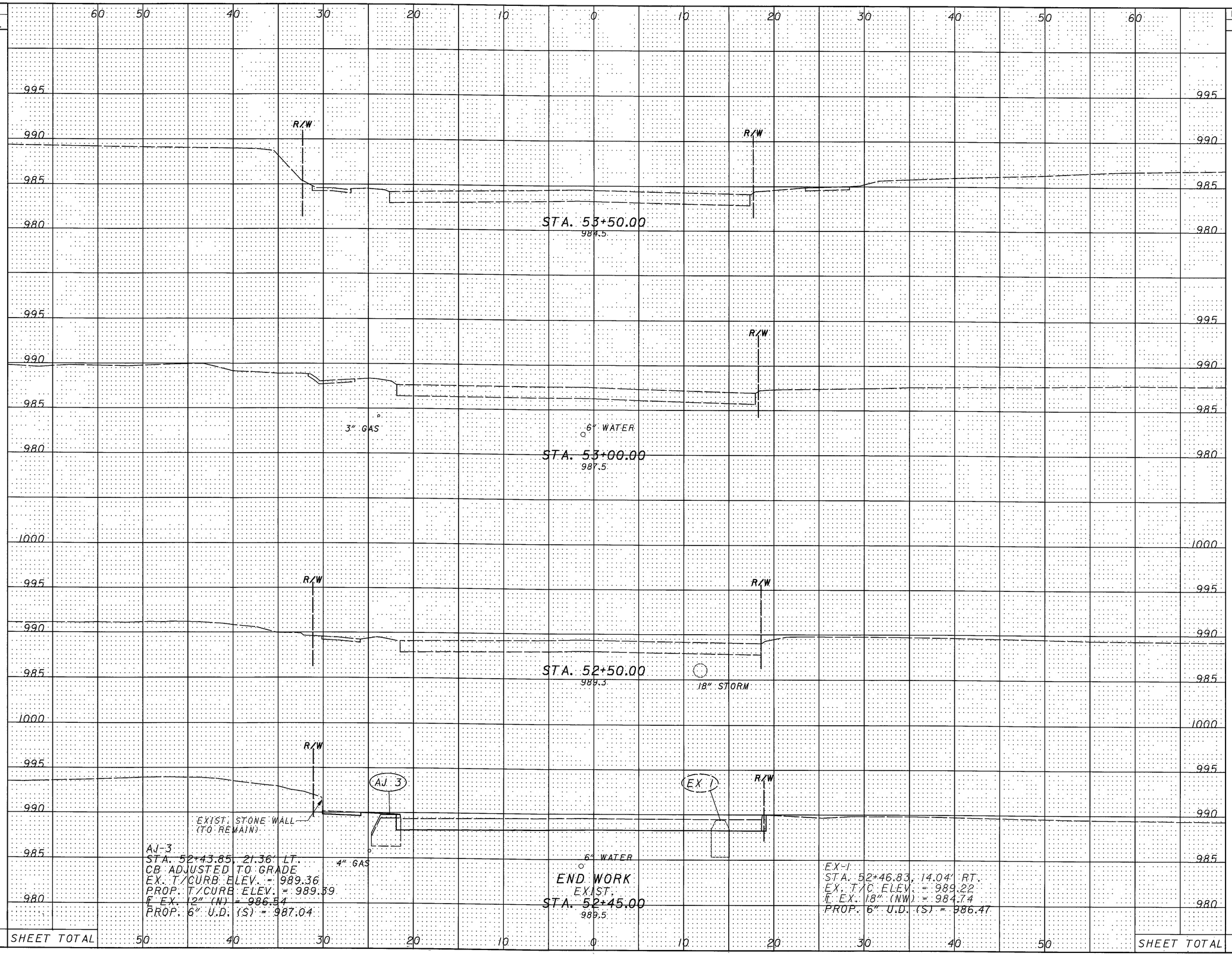

END AREA		VOLUME	
CUT	FILL	CUT	FILL
0	0		
SHEET TOTAL		0	0

CALCULATED CWL
CHECKED MVJ

CROSS SECTIONS - GIBSON STREET
STA. 52+45.00 TO STA. 53+50.00

MAH-680-7.24/8.34

\\Akrnd\Data\civil\20116\9\01\01\dgn\roadway\22179pxe.dgn
03/30/2004
06:48:24 PM

NOTE "A"

CROSS SLOPE OF PROPOSED WALK TO VARY TO MEET EXISTING WALK IN FRONT OF HOUSE.

* TAPER PAVEMENT AND WALK LT./RT. IN 10 FEET TO MEET EXISTING

** SEE GENERAL NOTE ON SHEET 9

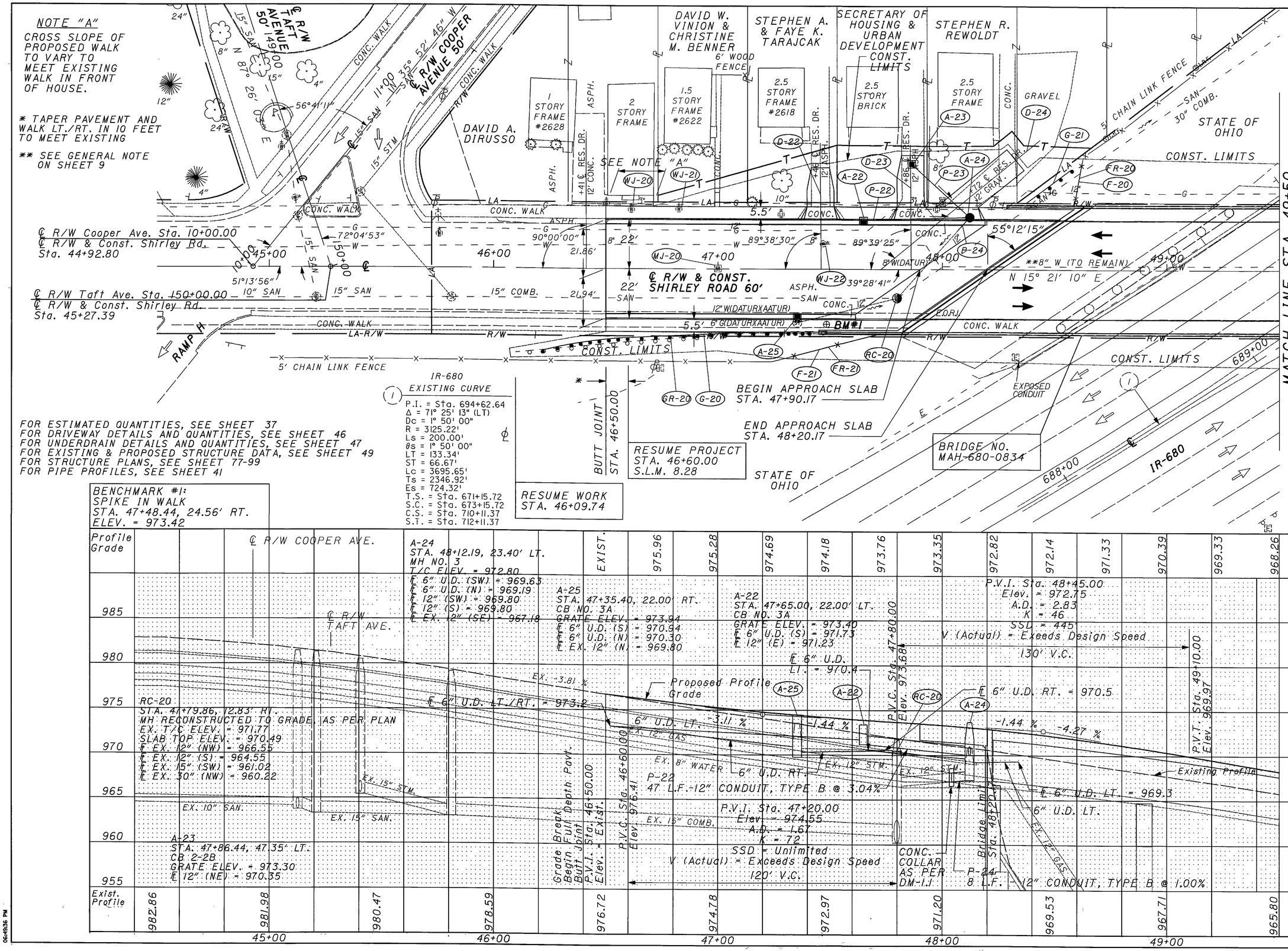

FOR ESTIMATED QUANTITIES, SEE SHEET 37
FOR DRIVEWAY DETAILS AND QUANTITIES, SEE SHEET 46
FOR UNDERDRAIN DETAILS AND QUANTITIES, SEE SHEET 47
FOR EXISTING & PROPOSED STRUCTURE DATA, SEE SHEET 49
FOR STRUCTURE PLANS, SEE SHEET 77-99
FOR PIPE PROFILES, SEE SHEET 41

HORIZONTAL SCALE IN FEET 0 10 20 40

CALCULATED CWL CHECKED MVJ

PLAN AND PROFILE - SHIRLEY ROAD BEGIN TO STA. 49+50

MAH-680-7.24/8.34

\\akron0\data\civil\200869.01\l2\dgn\roadway\22f79GPD.dgn 03/30/2004 06:49:36 PM

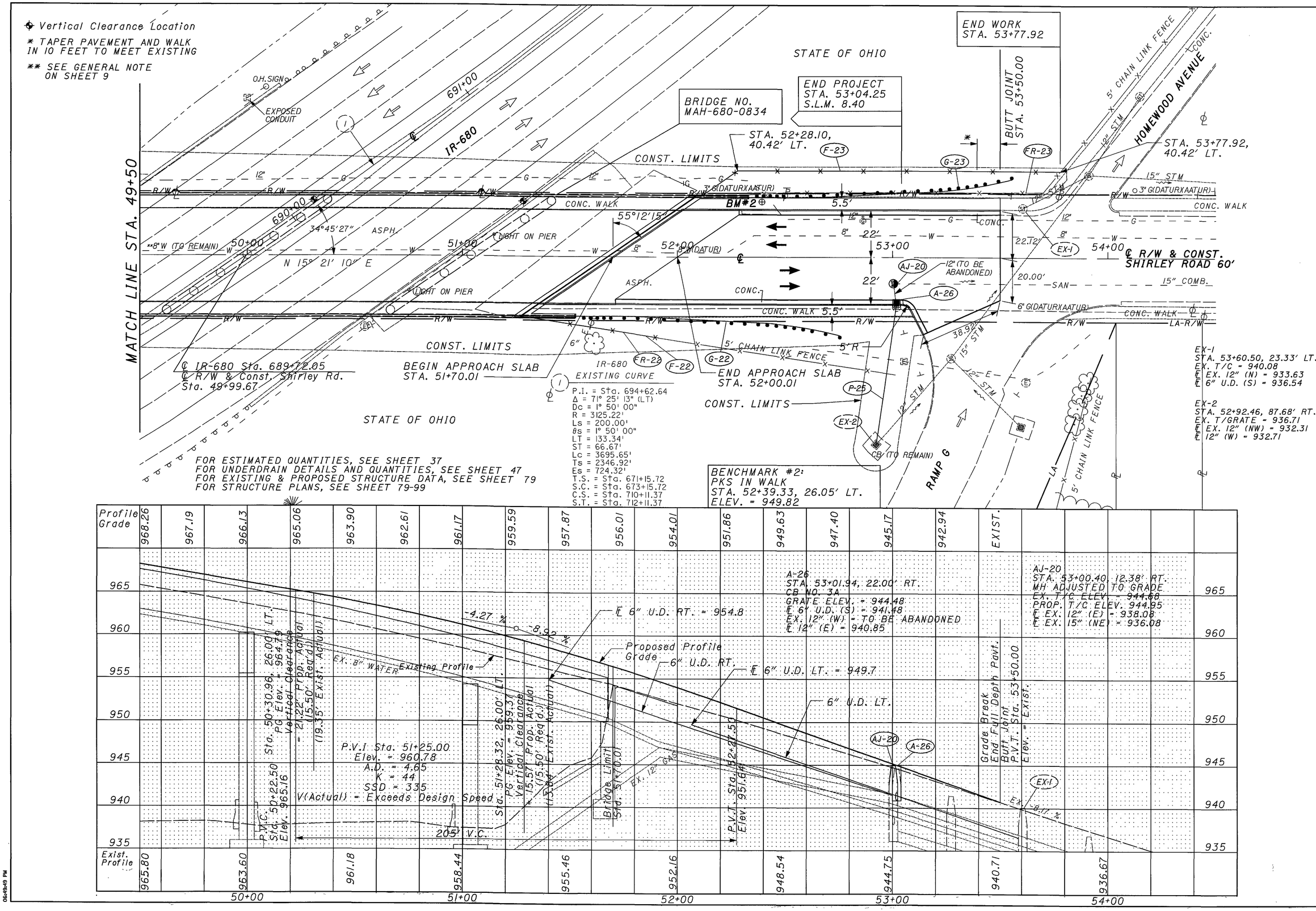

HORIZONTAL SCALE IN FEET 0 10 20 40

CALCULATED CWL CHECKED MVJ

PLAN AND PROFILE - SHIRLEY ROAD STA. 49+50 TO END

MAH-680-7.24/8.34

\\Mkrnd\Data\civil\200169\0\12\dgn\roadway\2217SGPE.dgn 03/30/2004 06:49:49 PM

REF NO.	SHEET NO.	STATION TO STATION	202 GUARDRAIL REMOVED	202 FENCE REMOVED	202 CATCH BASIN REMOVED	603 12" CONDUIT, TYPE B	603 12" CONDUIT, TYPE C	604 MANHOLE RECONSTRUCTED TO GRADE, AS PER PLAN	604 MANHOLE ADJUSTED TO GRADE	604 CATCH BASIN, NO. 3A	604 MONUMENT BOX ADJUSTED TO GRADE	604 CATCH BASIN, NO. 2-2B	604 MANHOLE, NO. 3	606 ANCHOR ASSEMBLY, TYPE B-98	606 GUARDRAIL, TYPE 5	606 ANCHOR ASSEMBLY, TYPE T	606 BRIDGE TERMINAL ASSEMBLY, TYPE 1	607 FENCE, TYPE CLT	638 VALVE BOX ADJUSTED TO GRADE	638 SERVICE BOX ADJUSTED TO GRADE
			FT.	FT.	EACH	FT.	FT.	EACH	EACH	EACH	EACH	EACH	EACH	EACH	FT.	EACH	EACH	FT.	EACH	EACH
A-22	35	STA. 47+65.00, 22.00' LT.								1										
A-23	35	STA. 47+86.44, 47.35' LT.										1								
A-24	35	STA. 48+12.19, 23.40' LT.			1								1							
A-25	35	STA. 47+35.40, 22.00' RT.			1					1										
A-26	36	STA. 53+01.94, 22.00' RT.			1					1										
AJ-20	36	STA. 53+00.40, 12.38' RT.							1											
F-20	35	STA. 48+58.72 TO STA. 48+62.26 LT.																20		
F-21	35	STA. 47+32.52 TO STA. 47+71.21 RT.																40		
F-22	36	STA. 51+31.80 TO STA. 51+91.10 RT.																60		
F-23	36	STA. 52+11.68 TO STA. 53+77.92 LT.																170		
FR-20	35	STA. 48+58.72 TO STA. 48+62.26 LT.		20																
FR-21	35	STA. 47+32.52 TO STA. 47+71.21 RT.		40																
FR-22	36	STA. 51+31.80 TO STA. 51+91.10 RT.		60																
FR-23	36	STA. 52+33.25 TO STA. 53+77.92 LT.		150																
G-20	35	STA. 46+31.00 TO STA. 47+47.11 RT.												1	87.5		1			
G-21	35	STA. 48+37.34 TO STA. 48+57.26 LT.														2				
G-22	36	STA. 51+50.24 TO STA. 52+75.54 RT.												1	87.5		1			
G-23	36	STA. 52+30.70 TO STA. 53+55.41 LT.												1	87.5		1			
GR-20	35	STA. 46+09.74 TO STA. 47+48.66 RT.	137.5																	
MJ-20	35	STA. 46+99.95, 0.22' LT.									1									
P-22	35	A-22 TO A-24				47														
P-23	35	A-23 TO A-24				35														
P-24	35	A-24				8														
P-25	36	A-26 TO EX. CB					66													
RC-20	35	STA. 47+79.86, 12.83' RT.						1												
WJ-20	35	STA. 46+61.33, 26.64' LT.																		1
WJ-21	35	STA. 46+82.46, 26.91' LT.																		1
WJ-22	35	STA. 47+46.99, 11.39' LT.																	1	
TOTALS CARRIED TO GENERAL SUMMARY			137.5	270	3	90	66	1	1	3	1	1	1	3	262.5	2	3	290	1	2

CALCULATED CML
CHECKED MVJ

ESTIMATED QUANTITIES - SHIRLEY ROAD

MAH-680-7.24/8.34

\\Mkrnfd\Data\civil\220165\DN\02\dgn\roadway\22279650c.dgn
03/30/2004
06:50:58 PM

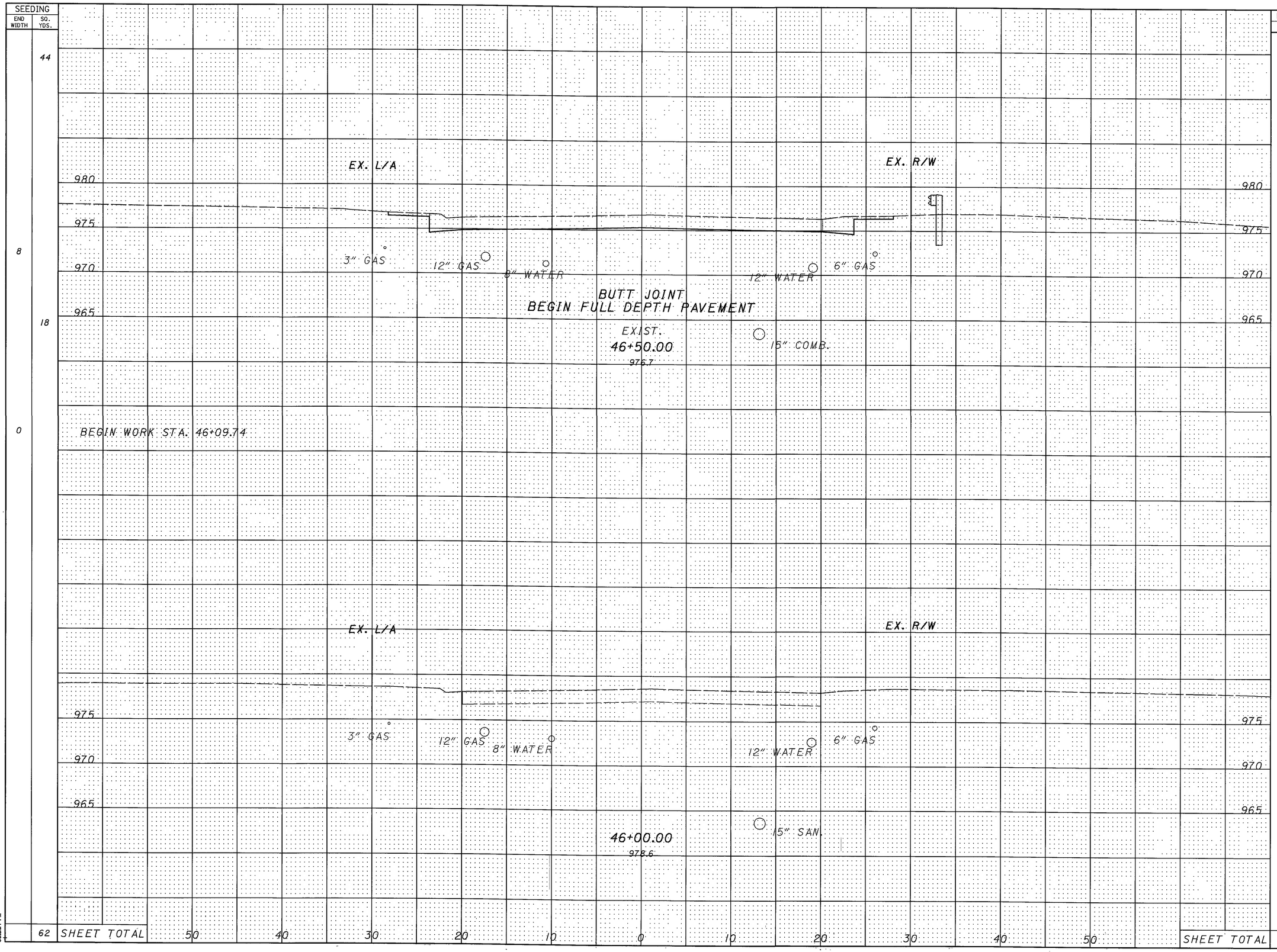

CALCULATED CWL
CHECKED MVJ

CROSS SECTIONS - SHIRLEY ROAD
STA. 46+00.00 TO STA. 46+50.00

MAH-680-7.24/8.34

38
107

\\dkrm01\Data\civil\200169\01\82\dgn\roadway\2217960X0.dgn
03/30/2004
06:54:41 PM

SEEDING END WIDTH	SEEDING SQ. YDS.
	22
8	
22	SHEET TOTAL

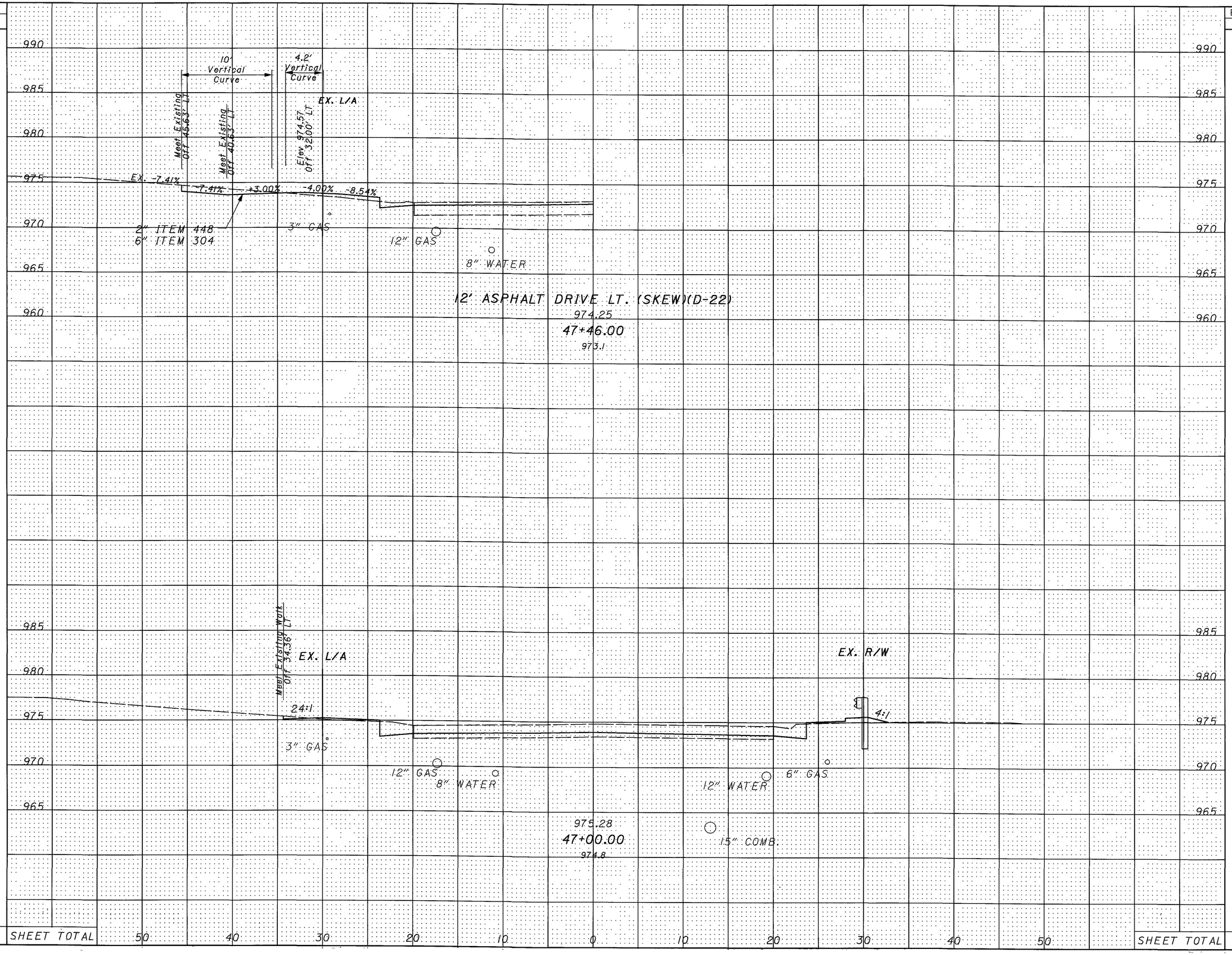

END AREA CUT	END AREA FILL	VOLUME CUT	VOLUME FILL
		18	11
10	5		
SHEET TOTAL		18	11

CALCULATED CWL
CHECKED MVJ

CROSS SECTIONS - SHIRLEY ROAD
STA. 47+00.00 TO STA. 47+46.00

MAH-680-7.24/ 8.34

\\Mkrndh\Data\civil\200169\0\02\dgn\roadway\221796XP.dgn
03/30/2004
06:35:25 PM

SEEDING END WIDTH	SEEDING SQ. YDS.
	42
0	
42	SHEET TOTAL

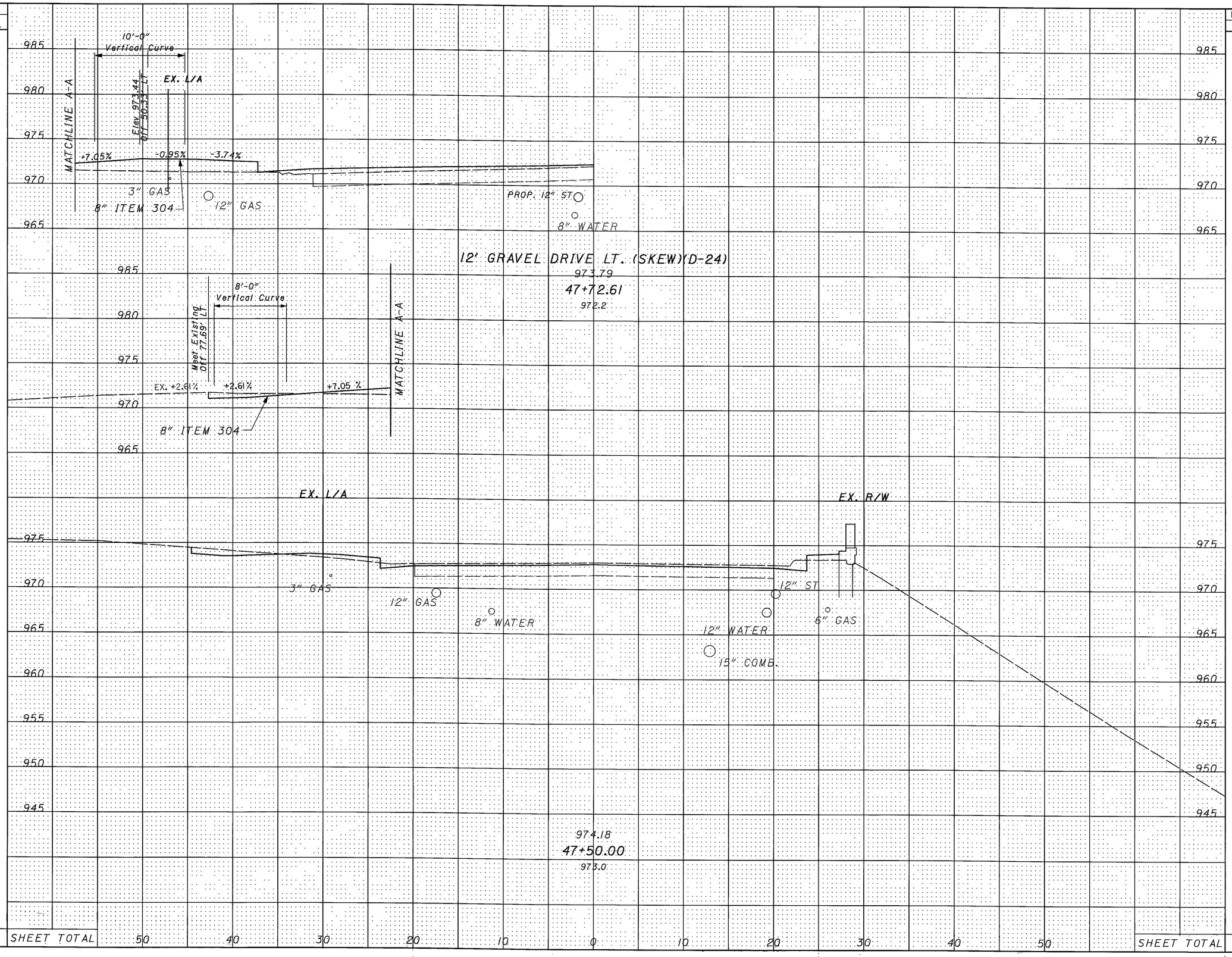

END AREA CUT	END AREA FILL	VOLUME CUT	VOLUME FILL
		11	40
9	7		
SHEET TOTAL		11	40

CALCULATED CWL
CHECKED MVJ

CROSS SECTIONS - SHIRLEY ROAD
STA. 47+50.00 TO STA. 47+72.61

MAH-680-7.24/8.34

\\akrn01\bdata\civil\200169\01\12\dgn\roadway\22796X0.dgn
03/30/2004
06:51:40 PM

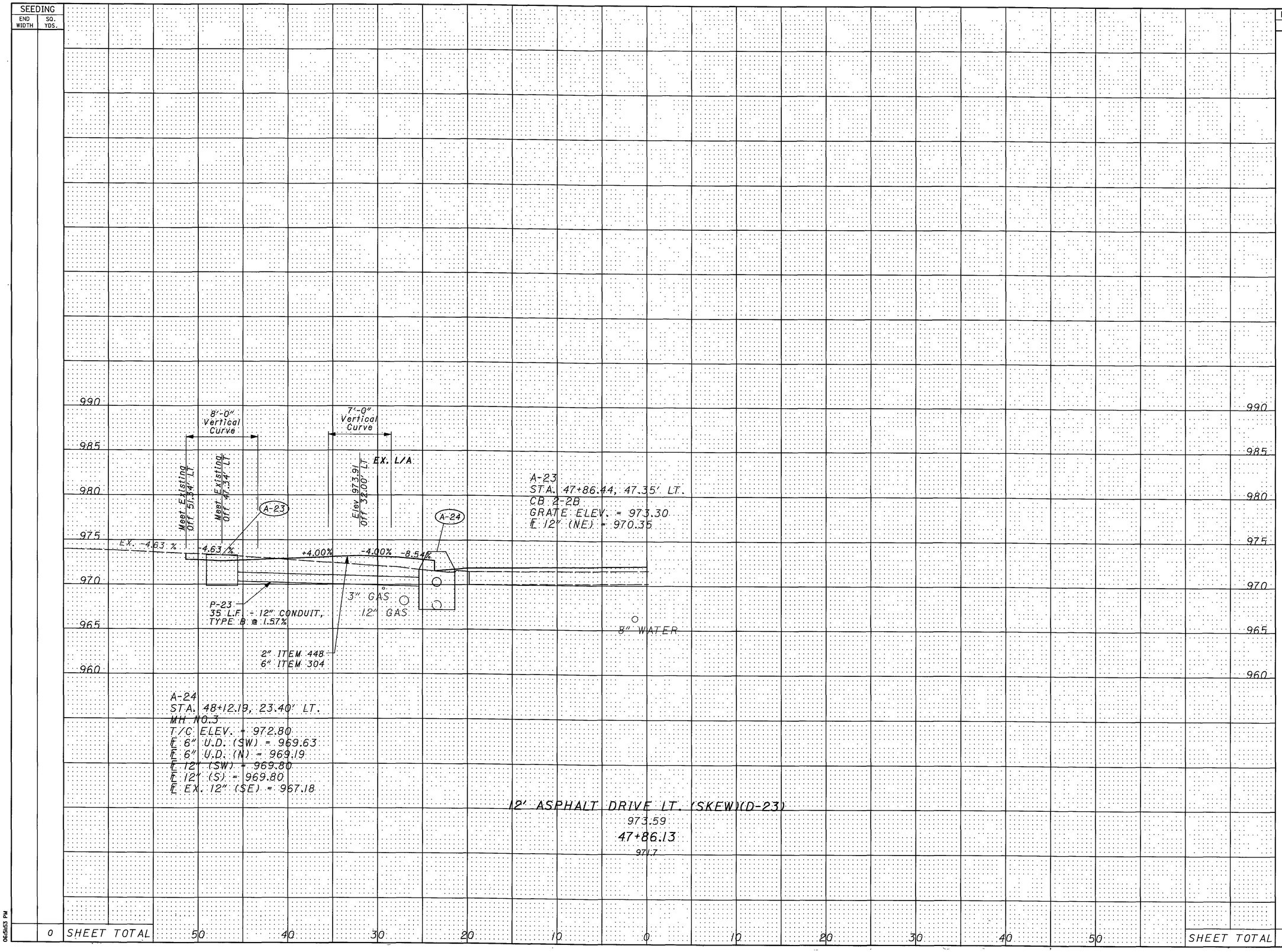
SEEDING
END WIDTH
SQ. YDS.
990
985
980
975
970
965
960
8'-0" Vertical Curve
7'-0" Vertical Curve
Meet Existing Off 51.34' LT.
Meet Existing Off 47.34' LT.
Elev 973.91 Off 32.00' LT.
EX. L/A
A-23
A-24
EX. -4.63 %
-4.63 %
+4.00%
-4.00%
-8.54%
P-23
35 L.F. - 12" CONDUIT, TYPE B @ 1.57%
3" GAS
12" GAS
8" WATER
2" ITEM 448
6" ITEM 304
A-23
STA. 47+86.44, 47.35' LT.
CB 2-2B
GRATE ELEV. = 973.30
E 12" (NE) = 970.35
A-24
STA. 48+12.19, 23.40' LT.
MH NO.3
T/C ELEV. = 972.80
E 6" U.D. (SW) = 969.63
E 6" U.D. (N) = 969.19
E 12" (SW) = 969.80
E 12" (S) = 969.80
E EX. 12" (SE) = 967.18
12' ASPHALT DRIVE LT. (SKEW)(D-23)
973.59
47+86.13
971.7
0
SHEET TOTAL
50
40
30
20
10
0
10
20
30
40
50
SHEET TOTAL
END AREA
CUT
FILL
VOLUME
CUT
FILL
0
0
CALCULATED CWL
CHECKED MVJ
CROSS SECTIONS - SHIRLEY ROAD
STA. 47+86.13
MAH-680-7.24/8.34
41
107
\\akron\Data\civil\200169\UNI2\dgn\roadway\2217920R.dgn
03/30/2004
06:51:53 PM

SEEDING		END AREA		VOLUME	
END WIDTH	SQ. YDS.	CUT	FILL	CUT	FILL
0					
	32				
19					
	32			4	55
				5	46
				4	55

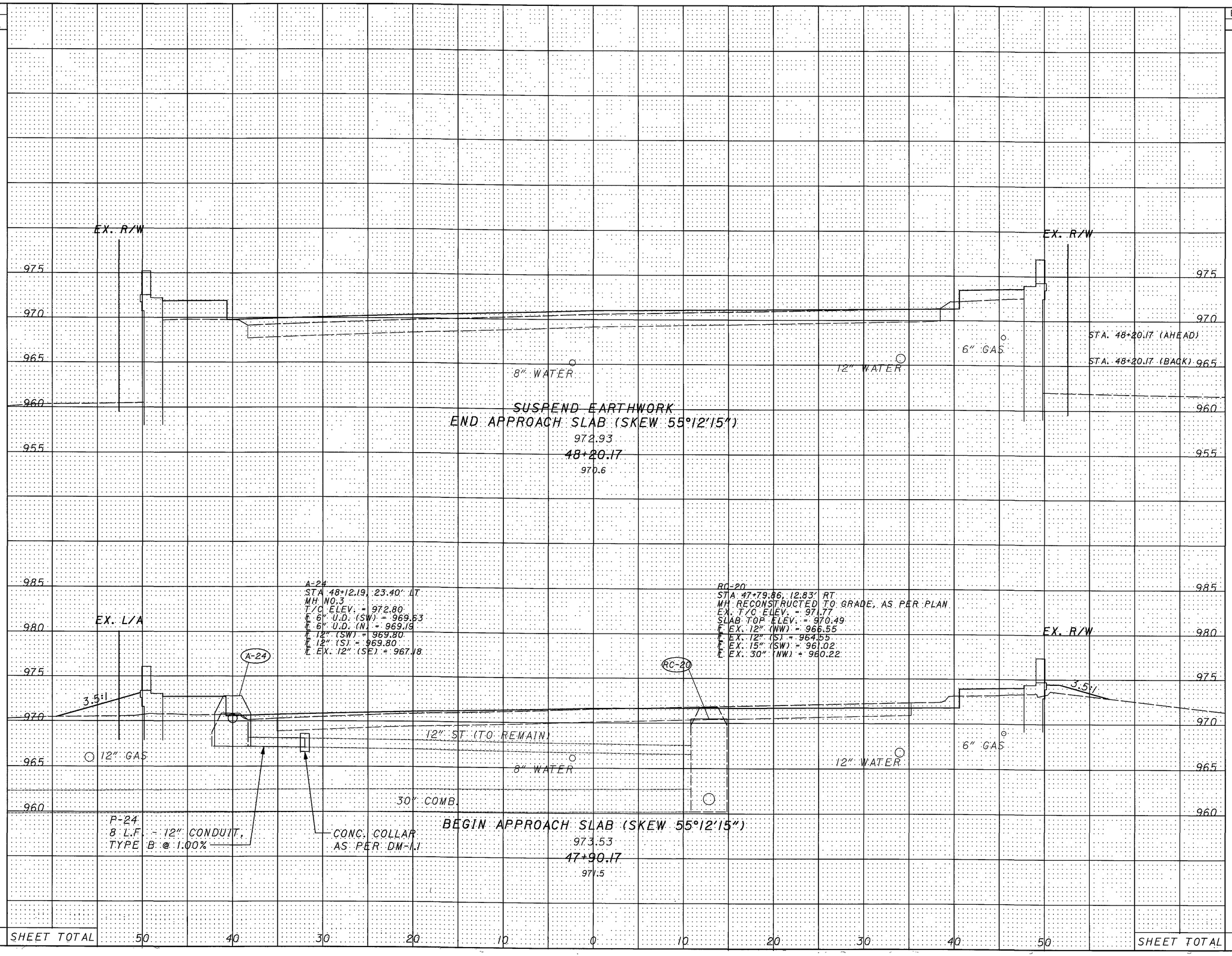

CALCULATED CWL
CHECKED MVJ

CROSS SECTIONS - SHIRLEY ROAD
STA. 47+90.17 TO STA. 48+20.17

MAH-680-7.24/8.34

\\akrnt0\data\civil\200869\0\l2\dgn\roadway\22798XS.dgn
03/30/2004
06:52:07 PM

SEEDING END WIDTH	SEEDING SQ. YDS.
18	89
40	161
0	67
	317 SHEET TOTAL

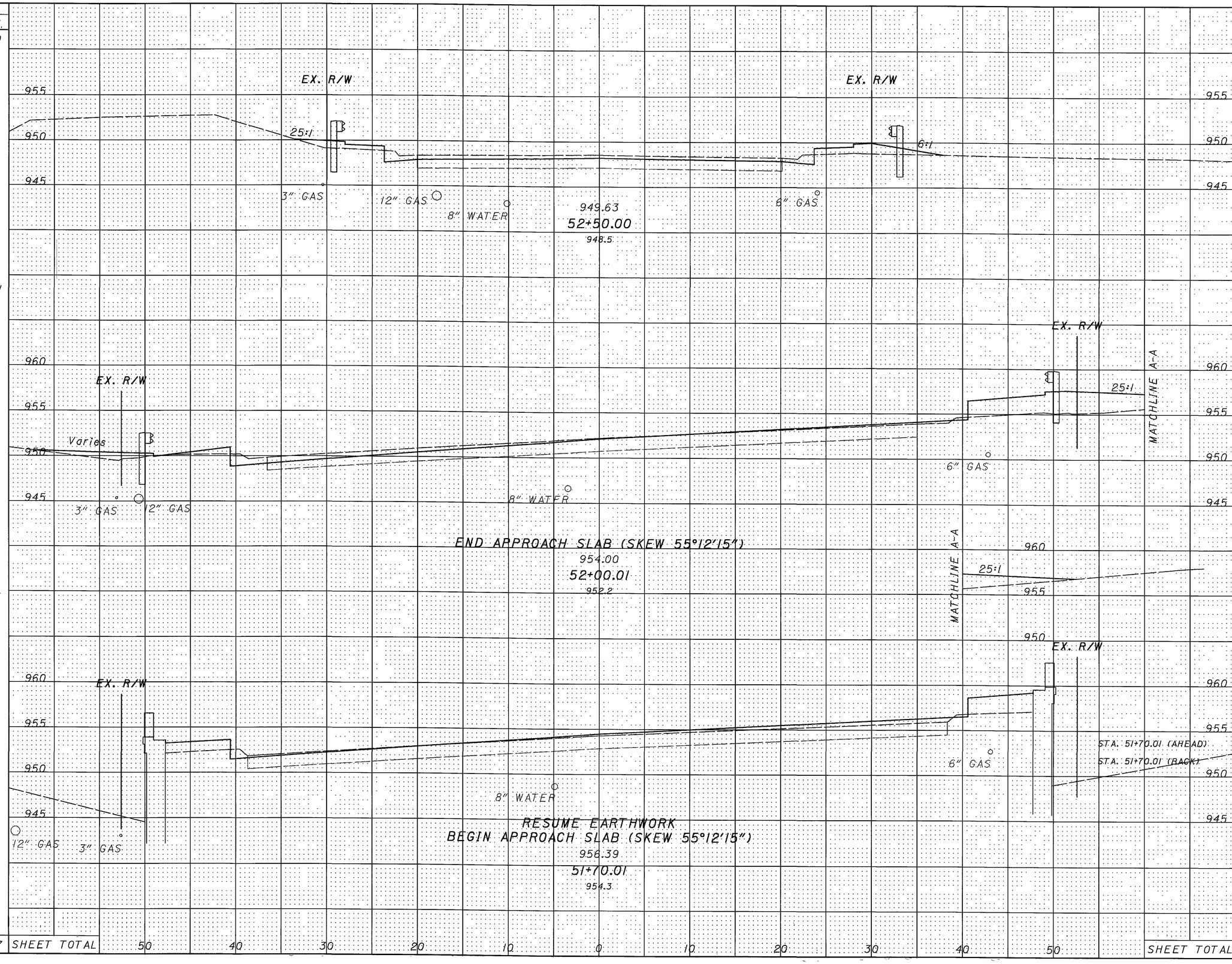

END AREA CUT	END AREA FILL	VOLUME CUT	VOLUME FILL
		11	19
6	15		
		9	73
4	64		
		3	56
2	37		
0	0		
		23	148

STA. 51+70.01 (AHEAD)
STA. 51+70.01 (BACK)
SHEET TOTAL

CALCULATED CWL
CHECKED MVJ

CROSS SECTIONS - SHIRLEY ROAD
STA. 51+70.01 TO STA. 52+50.00

MAH-680-7.24/8.34

\\akrnd\Data\civil\200869\0\02\dgn\roadway\22796XT.dgn
03/30/2004
06:52:20 PM

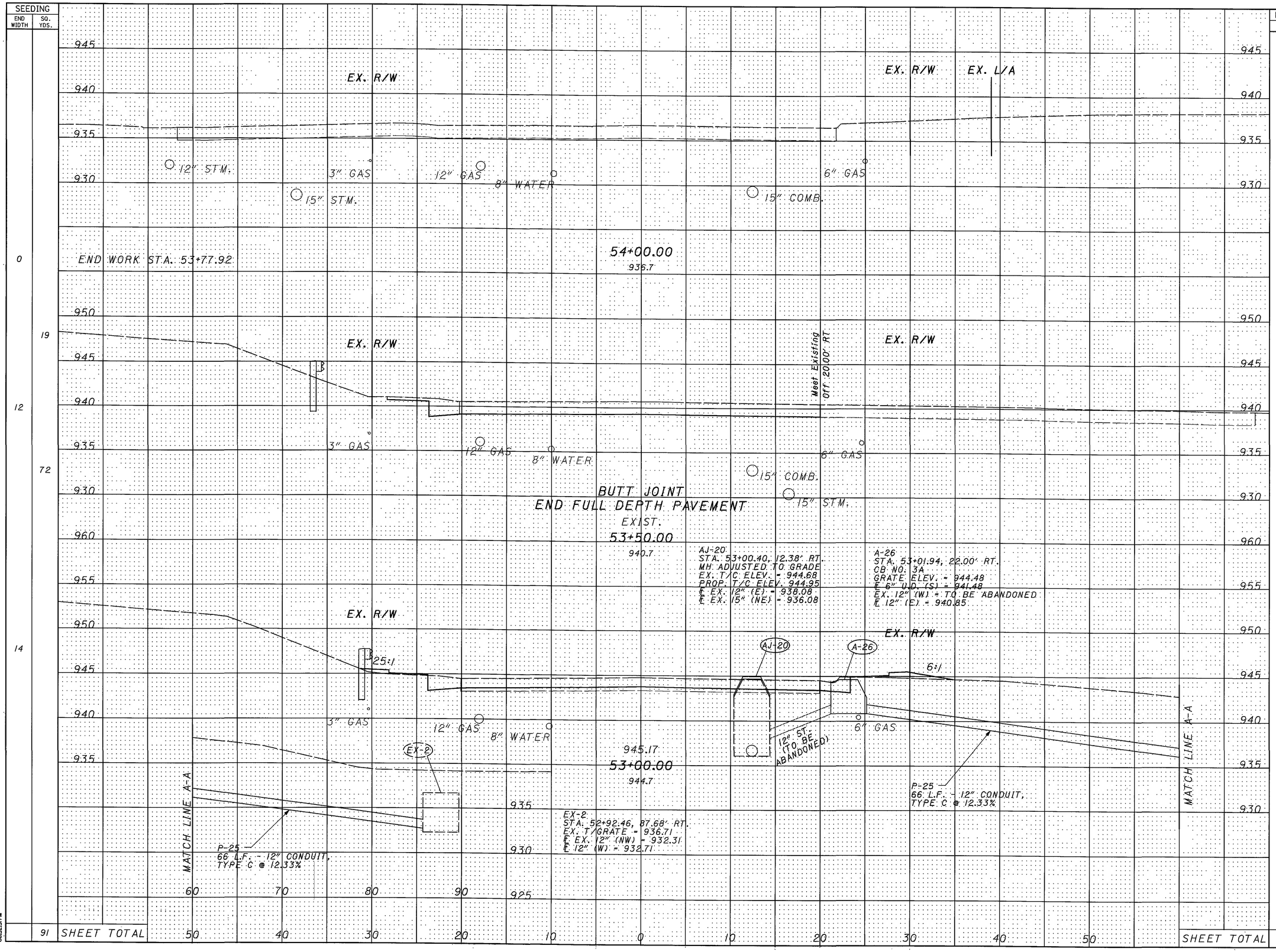

END AREA CUT	END AREA FILL	VOLUME CUT	VOLUME FILL
0	0		
		6	5
6	5		
SHEET TOTAL		6	5

CALCULATED CWL
CHECKED MVJ

CROSS SECTIONS - SHIRLEY ROAD
STA. 53+00.00 TO STA. 54+00.00

MAH-680-7.24/8.34

\\akron\data\civil\200169\01\12\dgn\roadway\22f902t.dgn
03/30/2004
06:52:31 PM

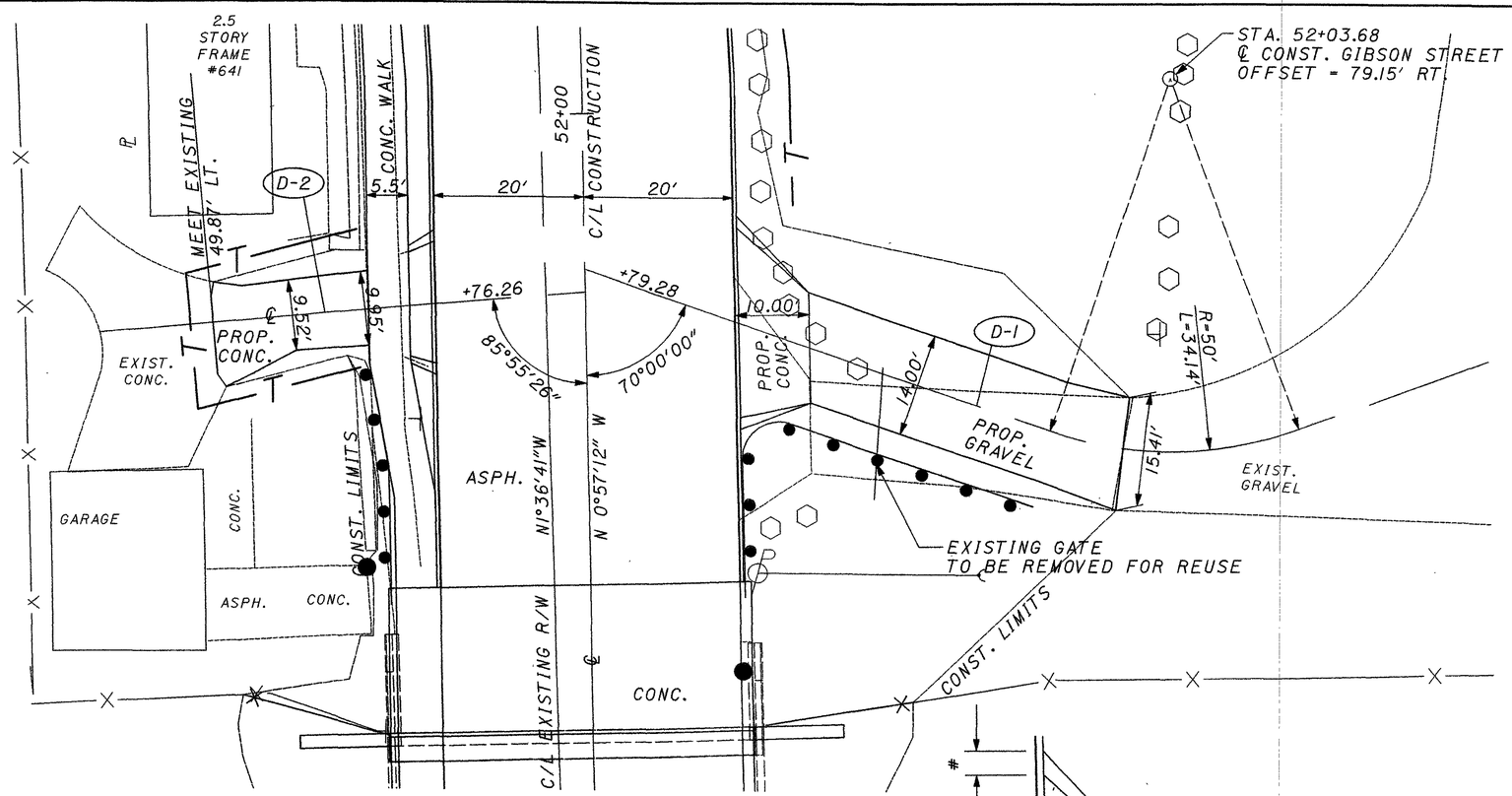

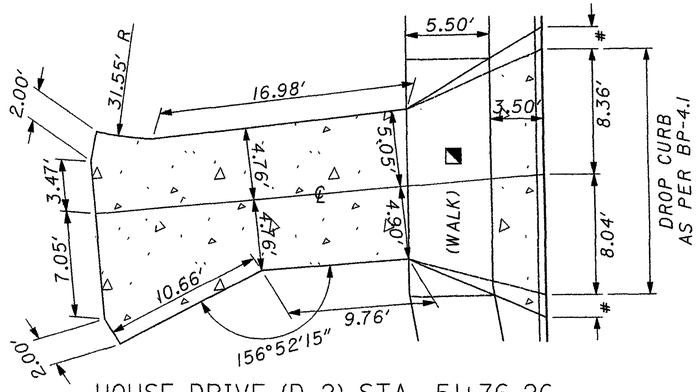

HOUSE DRIVE (D-2) STA. 51+76.26

N.T.S.

▲ ITEM 304 - 8" AGGREGATE BASE

▭ ITEM 452 - 8" NON-REINFORCED CONCRETE PAVEMENT, AS PER PLAN

◪ 8" CONC. WALK

18" CURB HEIGHT TRANSITION

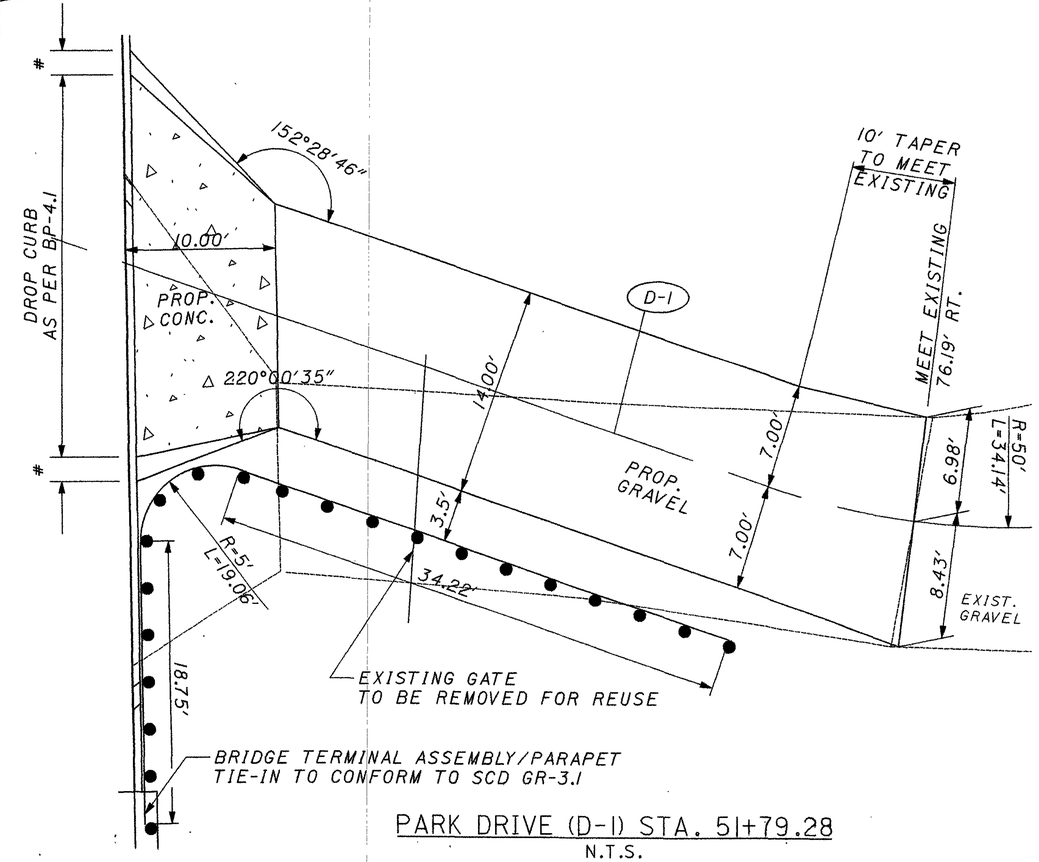

PARK DRIVE (D-1) STA. 51+79.28

N.T.S.

NOTE: QUANTITIES CARRIED TO GENERAL SUMMARY SHEETS 21-22

DRIVEWAY SUBSUMMARY QUANTITIES

CODE	STATION	STREET	SIDE	USAGE	EXISTING MATERIAL	APRON AREA	DRIVE AREA	202 PAVEMENT REMOVED	204 SUBGRADE COMPACTION	204 PROOF ROLLING	304 8" AGG. BASE	452 8" NON-REINF. CONC. PVMT AS PER PLAN
						SQ. YD.	SQ. YD.	SQ. YD.	SQ. YD.	HOUR	CU. YD.	SQ. YD.
D-1	51+79.28	GIBSON	RT.	FIELD	CINDER	23.03	70.03	25.00	93.06	0.05	15.56	23.03
D-2	51+76.26	GIBSON	LT.	RES.	CONCRETE	6.20	25.04	31.24	31.24	0.02	-	31.24
					DRIVEWAY TOTALS			56.24	124.30	0.07	15.56	54.27

HORIZONTAL SCALE IN FEET 0 5 10 20

CALCULATED CML CHECKED MVJ

DRIVE DETAILS - GIBSON STREET

MAH-680-7.24/8.34

\\akr-m01\data\civil\200169\01\01\dgn\roadway\201790M.dgn
03/30/2004 06:53:52 PM

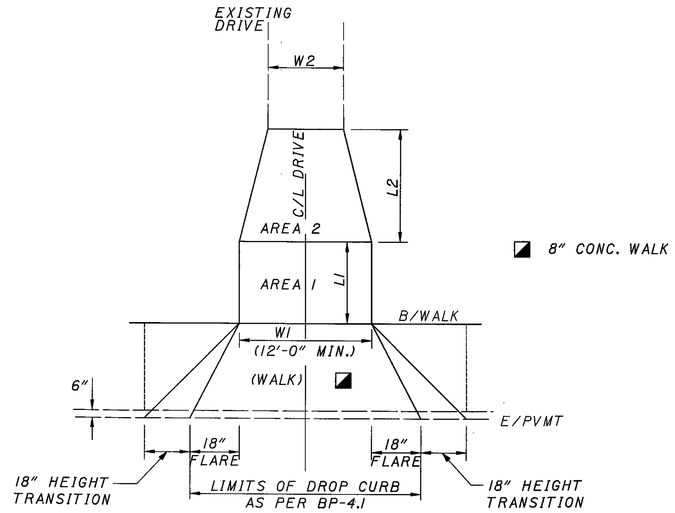

DRIVE DETAIL - TYPE 1 (FLARE W/CURBED ROADWAY)
N.T.S.

EXISTING MATERIALS	USAGE	INSIDE LIMITS OF APRON	OUTSIDE LIMITS OF APRON (UNLESS NOTED IN CROSS SECTIONS) (AREA 1 & 2)
GRAVEL	RESIDENTIAL	ITEM 608 - 8" CONCRETE WALK	8" ITEM 304 AGGREGATE BASE
ASPHALT	RESIDENTIAL	ITEM 608 - 8" CONCRETE WALK	2" ITEM 448 ASPHALT CONCRETE SURFACE COURSE, TYPE 1, PG 64-22 (DRIVEWAYS) ITEM 408 PRIME COAT @ 0.40 GAL/S.Y. 6" ITEM 304 AGGREGATE BASE

DRIVEWAY ESTIMATED QUANTITIES

SHEET	CODE	STATION	STREET	SIDE	USAGE	APRON TYPE	EXISTING MATERIAL	L1	W1	L2	W2	AREA 1	AREA 2		204 SUBGRADE COMPACTION	204 PROOF ROLLING	304 6" AGG. BASE	304 8" AGG. BASE	408 PRIME COAT	448 2" ASPH. CONC. SURFACE COURSE, TYPE 1, PG64-22 (DRIVEWAYS)	SPECIAL MAILBOX SUPPORT SYSTEM, SINGLE
								FT.	FT.	FT.	FT.	SQ. YD.	SQ. YD.		SQ. YD.	HOUR	CU. YD.	CU. YD.	GAL.	CU. YD.	EACH
35	D-22	47+46.00	SHIRLEY RD.	LT.	RES.	1	ASPHALT	7.63	12.00	10.00	8.15	10.17	9.06		19.23	0.01	3.21		7.69	1.07	
35	D-23	47+86.13	SHIRLEY RD.	LT.	RES.	1	ASPHALT	13.34	12.00	10.00	9.91	17.79	11.01		28.80	0.01	4.80		11.52	1.60	
35	D-24	47+72.61	SHIRLEY RD.	LT.	RES.	1	GRAVEL	33.65	12.00			44.87			44.87	0.02		9.97			1
TOTALS CARRIED TO THE GENERAL SUMMARY ON SHEET NO. 21-22.															92.90	0.04	17.98		19.21	2.67	1

HORIZONTAL SCALE IN FEET 0 5 10 20

CALCULATED CWL
CHECKED CWL

DRIVE DETAILS - SHIRLEY ROAD

MAH-680-7.24/8.34

\\Akrnd1\Data\civil\200169\01\dgn\22179MB.dgn
03/30/2004
06:56:41 PM

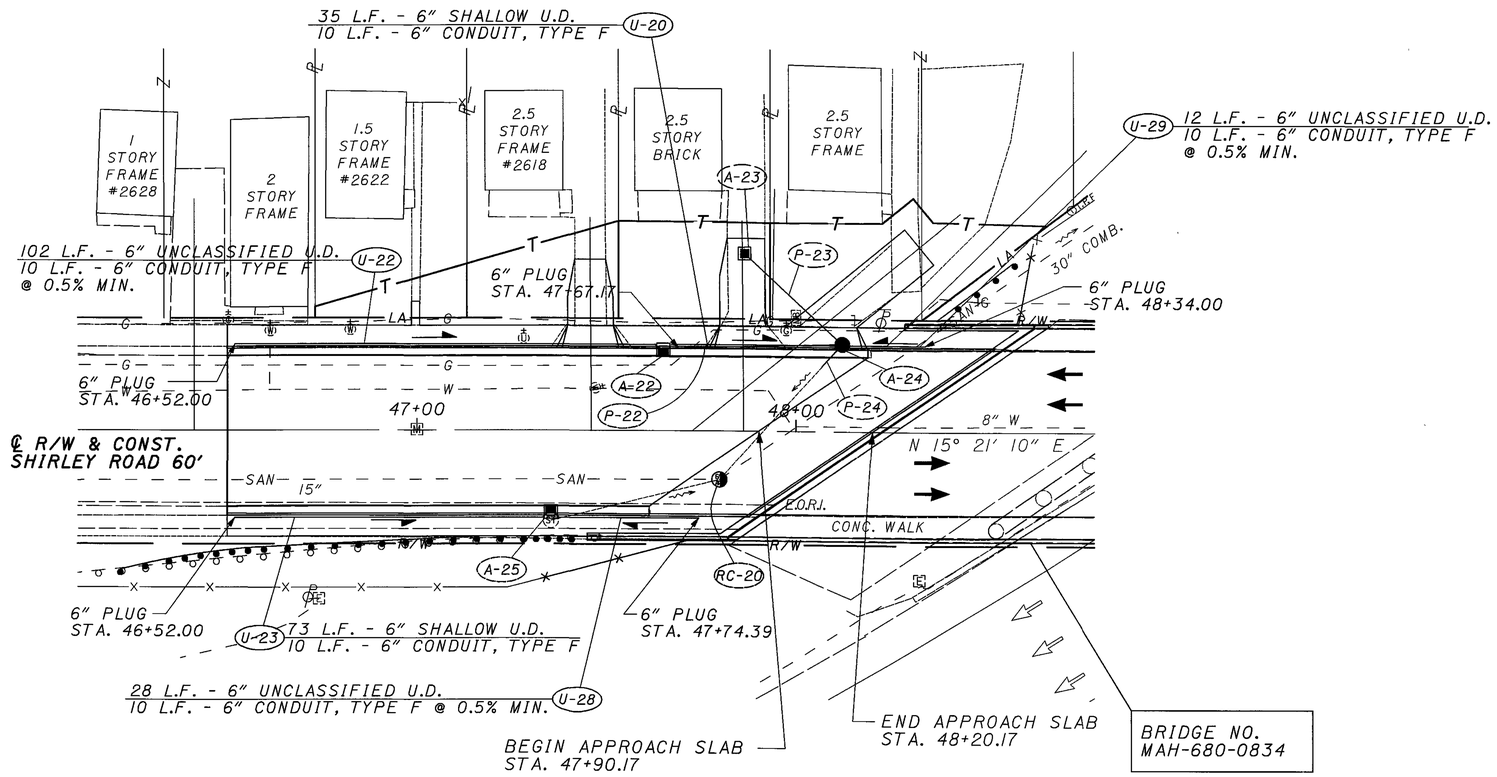

	UNDERDRAIN ESTIMATED QUANTITIES			
		603	605	605
REF NO.	STATION TO STATION	6" CONDUIT, TYPE F	6" SHALLOW PIPE UNDERDRAINS WITH FABRIC WRAP	6" UNCLASSIFIED UNDERDRAINS WITH FABRIC WRAP
		FT.	FT.	FT.
U-20	47+67.17 TO A-24	10	35	
U-22	46+52.00 TO A-22	10		102
U-23	46+52.00 TO A-25	10	73	
U-25	52+06.68 TO EX-1	10	142	
U-27	51+40.35 TO A-26	10	151	
U-28	47+74.39 TO A-25	10		28
U-29	48+34.00 TO A-24	10		12
	TOTALS CARRIED TO GENERAL SUMMARY ON SHEET NO. 21-22	70	401	142

FOR UNDERDRAIN INVERTS AT STRUCTURES, SEE SHEETS 35-36.

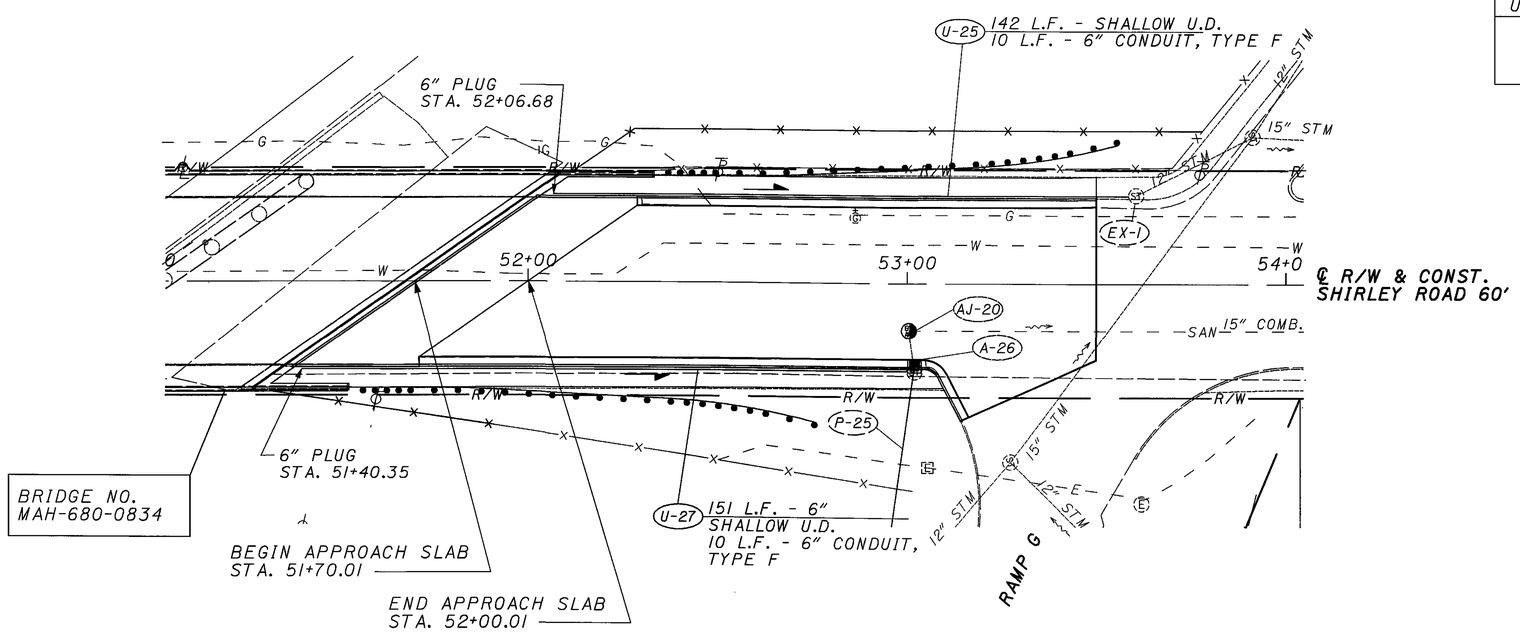

HORIZONTAL SCALE IN FEET 0 10 20 40

CALCULATED CWL
CHECKED MVJ

UNDERDRAIN DETAILS - SHIRLEY ROAD

MAH-680-7.24/8.34

\\Akrndh\Data\civil\200169\01\02\dgn\roadway\2217B00C.dgn
03/30/2004
06:54:33 PM

OMUTCD CLARIFICATION

ANY REFERENCE TO THE LATEST EDITION AND REVISION OF THE OHIO MANUAL OF UNIFORM TRAFFIC CONTROL DEVICES (OMUTCD) SHALL BE INTERPRETED AS:

THE CONTRACTOR SHALL BE REQUIRED TO UTILIZE THE 1972 EDITION, REVISION 21 OF THE OMUTCD (WHICH TOOK EFFECT JUNE 1, 1999).

SIGN FLAT SHEET, AS PER PLAN

THIS ITEM SHALL BE AS DESCRIBED IN ITEM 630 EXCEPT THAT WHEN THE W-68-36 SIGN IS SPECIFIED IT SHALL BE EQUIPPED WITH HINGES TO ALLOW THE MESSAGE TO BE COVERED IN THE SEASONS WHEN IT IS NOT IN USE. ALL ADDITIONAL COST FOR THIS WORK SHALL BE INCIDENTAL AND INCLUDED IN THE UNIT BID PRICE FOR ITEM 630 - SIGN, FLAT SHEET, AS PER PLAN.

ITEM 630 - REMOVAL OF GROUND MOUNTED SIGN AND STORAGE, AS PER PLAN

THIS ITEM SHALL BE AS OUTLINED IN 630 EXCEPT THAT ANY REMOVED SIGNS FROM WITHIN THE CITY OF YOUNGSTOWN SHALL BE STORED ON THE PROJECT FOR EVENTUAL DELIVERY TO THE CITY OF YOUNGSTOWN SIGNAL SHOP.

UPON COMPLETION OF ALL SIGN REMOVAL, THE CONTRACTOR SHALL CONTACT THE CITY OF YOUNGSTOWN SIGNAL SHOP TO ARRANGE A MUTUALLY AGREEABLE TIME FOR DELIVERY OF REMOVED SIGNS. THE CITY OF YOUNGSTOWN SIGNAL SHOP IS LOCATED AT 1034 LOIS COURT. LOIS COURT IS LOCATED ONE BLOCK EAST OF MARKET STREET BETWEEN MYRTLE AVENUE AND PYATT STREET. THE SIGNAL SHOP'S TELEPHONE NUMBER IS (330)-743-2141 EXT. 32. THE CONTRACTOR SHALL NOTIFY CITY OF YOUNGSTOWN PERSONNEL A MINIMUM OF 24 HOURS IN ADVANCE OF WHEN A DELIVERY WILL BE MADE.

ALL COSTS ASSOCIATED WITH THIS ITEM SHALL BE INCLUDED IN THE INCREMENTAL BID PRICE FOR ITEM 630 - REMOVAL OF GROUND MOUNTED SIGN AND STORAGE, AS PER PLAN.

CALCULATED MAH
CHECKED BJT

SIGNING AND PAVEMENT MARKING
GENERAL NOTES

MAH-680-7.24/ 8.34

\\Akrnd1\Data\civil\200169\DND\dgn\trafficontrol\22179TNB.dgn
03/30/2004
06:54:56 PM

ITEM	25	50	51	52	53
626	15				
630				79.1	153.3
630					11.4
630				27.8	56.6
630				9	9
630				4	8
630				1	5
630				5	10
642		0.27	0.18		
642		0.15	0.10		
642		125	100		
642		2	2		
642		1	1		

ITEM	ITEM EXT.	TOTAL QUANT.	UNIT	DESCRIPTION	SHEET NO.
				TRAFFIC CONTROL	
626	00100	15	EACH	BARRIER REFLECTOR, TYPE A	
630	03100	232.4	FT	GROUND MOUNTED SUPPORT, NO. 3 POST	
630	08004	11.4	FT	ONE WAY SUPPORT, NO. 3 POST	
630	80100	84.4	SQ FT	SIGN, FLAT SHEET	
630	80101	18	SQ FT	SIGN, FLAT SHEET, AS PER PLAN	48
630	85001	18	EACH	REMOVAL OF GROUND MOUNTED SIGN AND STORAGE, AS PER PLAN	48
630	85100	6	EACH	REMOVAL OF GROUND MOUNTED SIGN AND REERECTION	
630	86002	15	EACH	REMOVAL OF GROUND MOUNTED POST SUPPORT AND DISPOSAL	
642	00200	0.45	MILES	LANE LINE, TYPE 1	
642	00300	0.25	MILES	CENTER LINE, TYPE 1	
642	00400	225	FT	CHANNELIZING LINE, TYPE 1	
642	01302	4	EACH	LANE ARROW, TYPE 2	
642	01412	2	EACH	WORD ON PAVEMENT, 96", TYPE 2	

CHECKED BJT | DATE

CALCULATED MAH | DATE 10/23/03

TRAFFIC CONTROL GENERAL SUMMARY

MAH-680-7.24 / 8.34

SHEET NO.	LOCATION	STATION FROM	STATION TO	SIDE	642 LANE LINE, TYPE 1 FT	642 CENTER LINE, TYPE 1 FT	642 CHANNELIZING LINE, TYPE 1 FT	642 LANE ARROW, TYPE 2 EACH	642 WORD ON PAVEMENT, 96", TYPE 2 EACH		
56	SHIRLEY ROAD	45+75	49+50	RT.	375.00						
56	SHIRLEY ROAD	45+75	49+50	CEN.		375.00					
56	SHIRLEY ROAD	45+75	47+00	LT.			125.00				
56	SHIRLEY ROAD	47+00	49+50	LT.	250.00						
56	SHIRLEY ROAD	45+75		LT.				1			
56	SHIRLEY ROAD	46+34		LT.					1		
56	SHIRLEY ROAD	46+92		LT.				1			
57	SHIRLEY ROAD	49+50	53+25	RT.	375.00						
57	SHIRLEY ROAD	49+50	53+25	CEN.		375.00					
57	SHIRLEY ROAD	49+50	53+25	LT.	375.00						
TOTALS CARRIED TO THE TRAFFIC CONTROL GENERAL SUMMARY					1375.00	750.00	125	2	1		
MILES					0.27	0.15					

CHECKED BJT | DATE 9/1/03

CALCULATED MAH | DATE 7/31/03

PAVEMENT MARKING SUBSUMMARY

MAH-680-7.24 / 8.34

SHEET NO.	LOCATION	STATION FROM	STATION TO	SIDE	642 LANE LINE, TYPE 1	642 CENTER LINE, TYPE 1	642 CHANNELIZING LINE, TYPE 1	642 LANE ARROW, TYPE 2	642 WORD ON PAVEMENT, 96", TYPE 2		
					FT	FT	FT	EACH	EACH		
54	GIBSON STREET	47+45	51+00	RT.	355.00						
54	GIBSON STREET	47+45	51+00	CEN.		355.00					
54	GIBSON STREET	47+45	48+45	LT.			100.00				
54	GIBSON STREET	48+45	51+00	LT.	255.00						
54	GIBSON STREET	47+45		LT.				1			
54	GIBSON STREET	47+95		LT.					1		
54	GIBSON STREET	48+37		LT.				1			
55	GIBSON STREET	51+00	52+75	RT.	175.00						
55	GIBSON STREET	51+00	52+50	CEN.		150.00					
55	GIBSON STREET	51+00	52+50	LT.	150.00						
TOTALS CARRIED TO THE TRAFFIC CONTROL GENERAL SUMMARY					935.00	505.00	100	2	1		
MILES					0.18	0.10					

CHECKED BJT | DATE 8/1/03

CALCULATED MAH | DATE 7/31/03

PAVEMENT MARKING SUBSUMMARY

MAH-680-7.24 / 8.34

SHEET NO.	REFERENCE NO.	LOCATION	STATION	SIDE	CODE	SIZE (INCHES)	630 GROUND MOUNTED SUPPORT, NO. 3 POST	630 ONE WAY SUPPORT, NO. 3 POST	630 SIGN, FLAT SHEET	630 SIGN, FLAT SHEET, AS PER PLAN	630 REMOVAL OF GROUND MOUNTED SIGN AND STORAGE, AS PER PLAN	630 REMOVAL OF GROUND MOUNTED SIGN AND REERECTION	630 REMOVAL OF GROUND MOUNTED POST SUPPORT AND DISPOSAL	
							FT	FT	SQ FT	SQ FT	EACH	EACH	EACH	
56	S-16	SHIRLEY ROAD	46+00	RT.	W-68-36	36" X 36"	14.1			9.00				
56	S-18	SHIRLEY ROAD	48+25	LT.	R-36R-24	24" X 30"	12.8		5.00					
56	S-19	SHIRLEY ROAD	47+00	LT.	R-31Q-30	30" X 30"	12.8		6.25					
56	S-20	SHIRLEY ROAD	45+75	LT.	R-31Q-30	30" X 30"	14.8		6.25					
					R-120-24	24" X 24"			4.00					
57	S-21	SHIRLEY ROAD	52+50	LT.	R-31Q-30	30" X 30"	12.8		6.25					
56	R-16	SHIRLEY ROAD		RT.	W-68						1		1	
56	R-17	SHIRLEY ROAD		RT.	R-108-SPECIAL		11.9					1	1	
56	R-18	SHIRLEY ROAD		LT.	R-36R						1		1	
56	R-19	SHIRLEY ROAD		LT.	R-120						1		1	
57	R-20	SHIRLEY ROAD		LT.	R-31Q						1		1	
TOTALS CARRIED TO THE TRAFFIC CONTROL GENERAL SUMMARY							79.1		27.8	9.0	4	1	5	

CHECKED BJT DATE 8/1/03

CALCULATED MAH DATE 7/31/03

SIGNING SUBSUMMARY

MAH-680-7.24 / 8.34

SHEET NO.	REFERENCE NO.	LOCATION	STATION	SIDE	CODE	SIZE (INCHES)	630 GROUND MOUNTED SUPPORT, NO. 3 POST	630 ONE WAY SUPPORT, NO. 3 POST	630 SIGN, FLAT SHEET	630 SIGN, FLAT SHEET, AS PER PLAN	630 REMOVAL OF GROUND MOUNTED SIGN AND STORAGE, AS PER PLAN	630 REMOVAL OF GROUND MOUNTED SIGN AND REERECTION	630 REMOVAL OF GROUND MOUNTED POST SUPPORT AND DISPOSAL	
							FT	FT	SQ FT	SQ FT	EACH	EACH	EACH	
54	S-4	GIBSON STREET	47+55	RT.	R-55-12	12" X 18"	11.9		1.50					
54	S-5	GIBSON STREET	48+40	RT.	W-75-30	30" X 30"	13.5		6.25					
54	S-6	GIBSON STREET	48+48	LT.	R-31B-36	36" X 30"	12.8		7.50					
54	S-7	GIBSON STREET	47+45	LT.	R-31B-36	36" X 30"	12.8		7.50					
54	R-5	GIBSON STREET		RT.	R-55						1		1	
54	R-6	GIBSON STREET		RT.	W-75						1			
54	R-7	GIBSON STREET		LT.	R-108-SPECIAL							1	1	
54	R-8	GIBSON STREET		LT.	X-6L						1		1	
55	S-8	GIBSON STREET	51+40	RT.	W-SPECIAL		14.1							
55	S-9	PARK DRIVE	301+00	RT.	R-14B-30	30" X 30"	12.8		6.25					
					R-10-24	24" X 30"			5.00					
55	S-10	GIBSON STREET	51+78	RT.	R-43R-36	36" X 12"		11.4	3.00					
					R-43L-36	36" X 12"			3.00					
55	S-11	GIBSON STREET	53+00	RT.	R-10-24	24" X 30"	12.8		5.00					
55	S-12	GIBSON STREET	53+00	LT.	D-14-48	48" X 8"	12.1		2.67					
					D-14-48	48" X 8"			2.67					
55	S-13	GIBSON STREET	52+50	LT.	W-68-36	36" X 36"	14.1			9.00				
55	S-14	GIBSON STREET	51+65	LT.	R-32R-30	30" X 30"	12.8		6.25					
55	R-9	GIBSON STREET		RT.	R-SPECIAL							1	1	
55	R-10	PARK DRIVE		RT.	R-14B						1		1	
					R-10						1			
55	R-11	GIBSON STREET		RT.	R-43R						1		1	
55	R-12	GIBSON STREET		RT.	R-55		11.9					1		
					META SIGN							1		
55	R-13	GIBSON STREET		RT.	R-10						1		1	
55	R-14	GIBSON STREET		LT.	W-68						1			
55	R-15	GIBSON STREET		LT.	R-108-SPECIAL		11.9					1	1	
55	R-23	GIBSON STREET			EMPTY POST								1	
55	R-24	GIBSON STREET			EMPTY POST								1	
TOTALS CARRIED TO THE TRAFFIC CONTROL GENERAL SUMMARY							153.3	11.4	56.6	9.0	8	5	10	

CALCULATED MAH DATE 7/31/03

CHECKED BJT DATE 8/1/03

SIGNING SUBSUMMARY

MAH-680-7.24 / 8.34

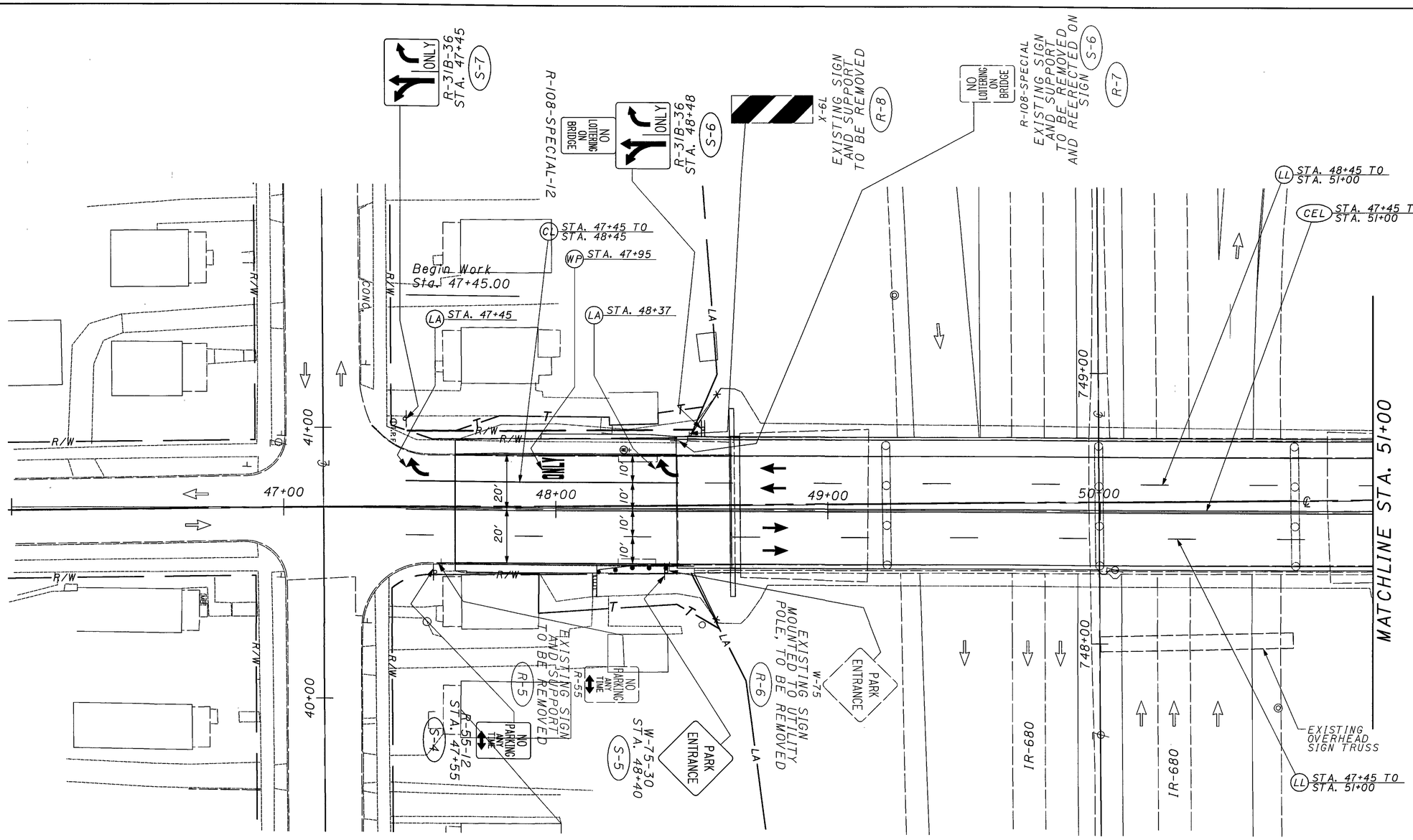

NOTES: 1. ALL PAVEMENT MARKINGS SHALL BE ODOT ITEM 642 - PAINT PAVEMENT MARKINGS.

LEGEND

CEL	CENTER LINE		EXISTING SIGN AND SUPPORT
CL	CHANNELIZING LINE		PROPOSED SIGN AND SUPPORT
LL	LANE LINE		TRAFFIC FLOW ARROW
LA	LANE ARROW	R-#	EXISTING SIGN TO BE REMOVED
WP	WORD ON PAVEMENT	S-#	PROPOSED SIGN TO BE ERECTED

N

0 10 20 40
HORIZONTAL SCALE IN FEET

CALCULATED CML
CHECKED MVJ

SIGNING AND PAVEMENT MARKING PLAN
GIBSON STREET - BEGIN TO 51+00

MAH-680-7.24/8.34

\\Mkrn01\Data\civil\20169\01\dgn\trafcontrol\22797TPA.dgn
03/30/2004
06:55:22 PM

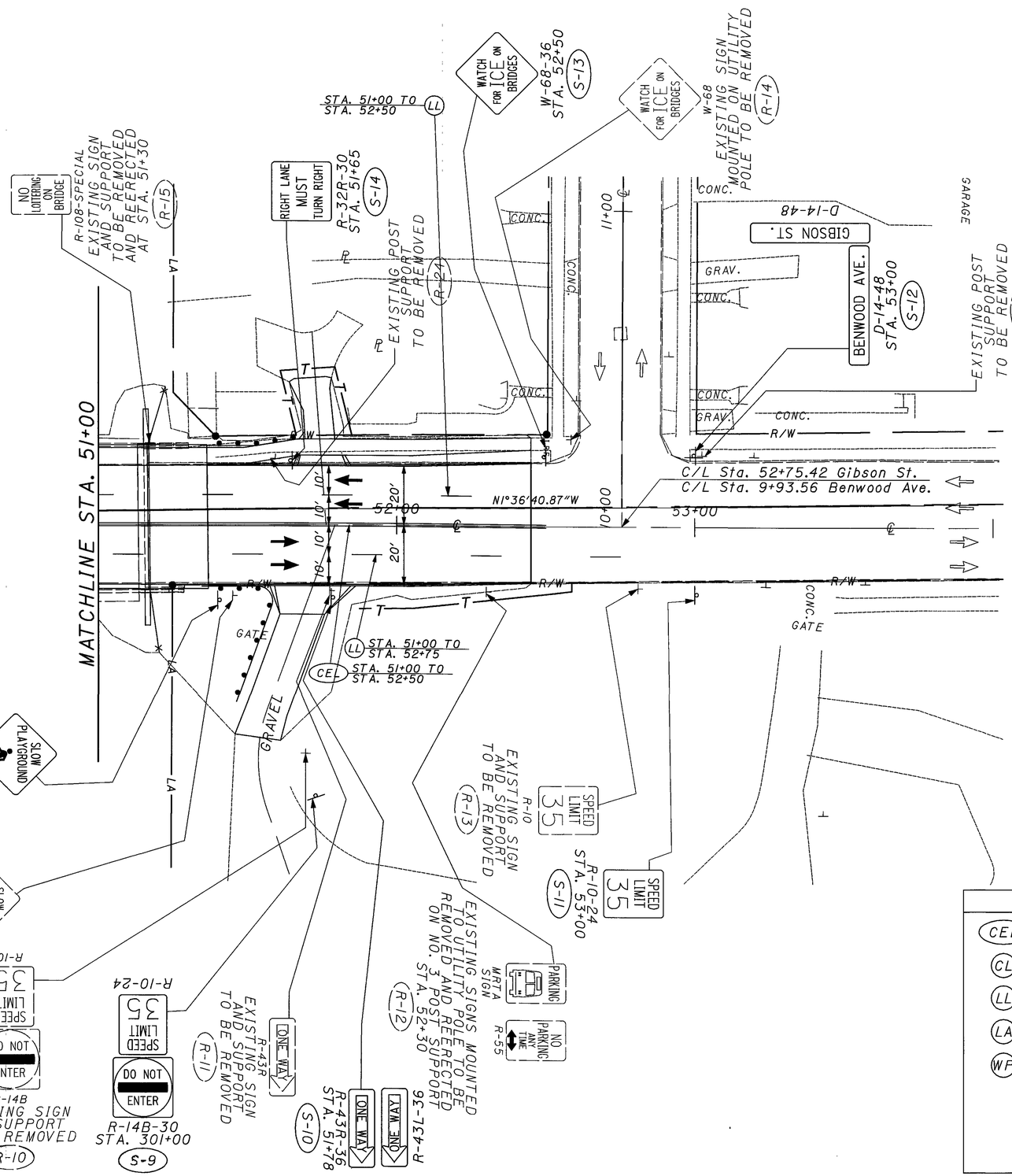

NOTES: 1. ALL PAVEMENT MARKINGS SHALL BE ODOT ITEM 642 - PAINT PAVEMENT MARKINGS.

(S-15) NOT USED

LEGEND			
(CEL)	CENTER LINE	⊥	EXISTING SIGN AND SUPPORT
(CL)	CHANNELIZING LINE	-o/-oo	PROPOSED SIGN AND SUPPORT
(LL)	LANE LINE	←	TRAFFIC FLOW ARROW
(LA)	LANE ARROW	(R-#)	EXISTING SIGN TO BE REMOVED
(WP)	WORD ON PAVEMENT	(S-#)	PROPOSED SIGN TO BE ERECTED

N

0 10 20 40
HORIZONTAL SCALE IN FEET

CALCULATED CML
CHECKED MVJ

SIGNING AND PAVEMENT MARKING PLAN
GIBSON STREET - STA. 51+00 TO END

MAH-680-7.24/8.34

\\Akrnd1\Data\civil\200169\ONI0\dgn\trafcontrol\22179TPB.dgn
03/30/2004
06:05:36 PM

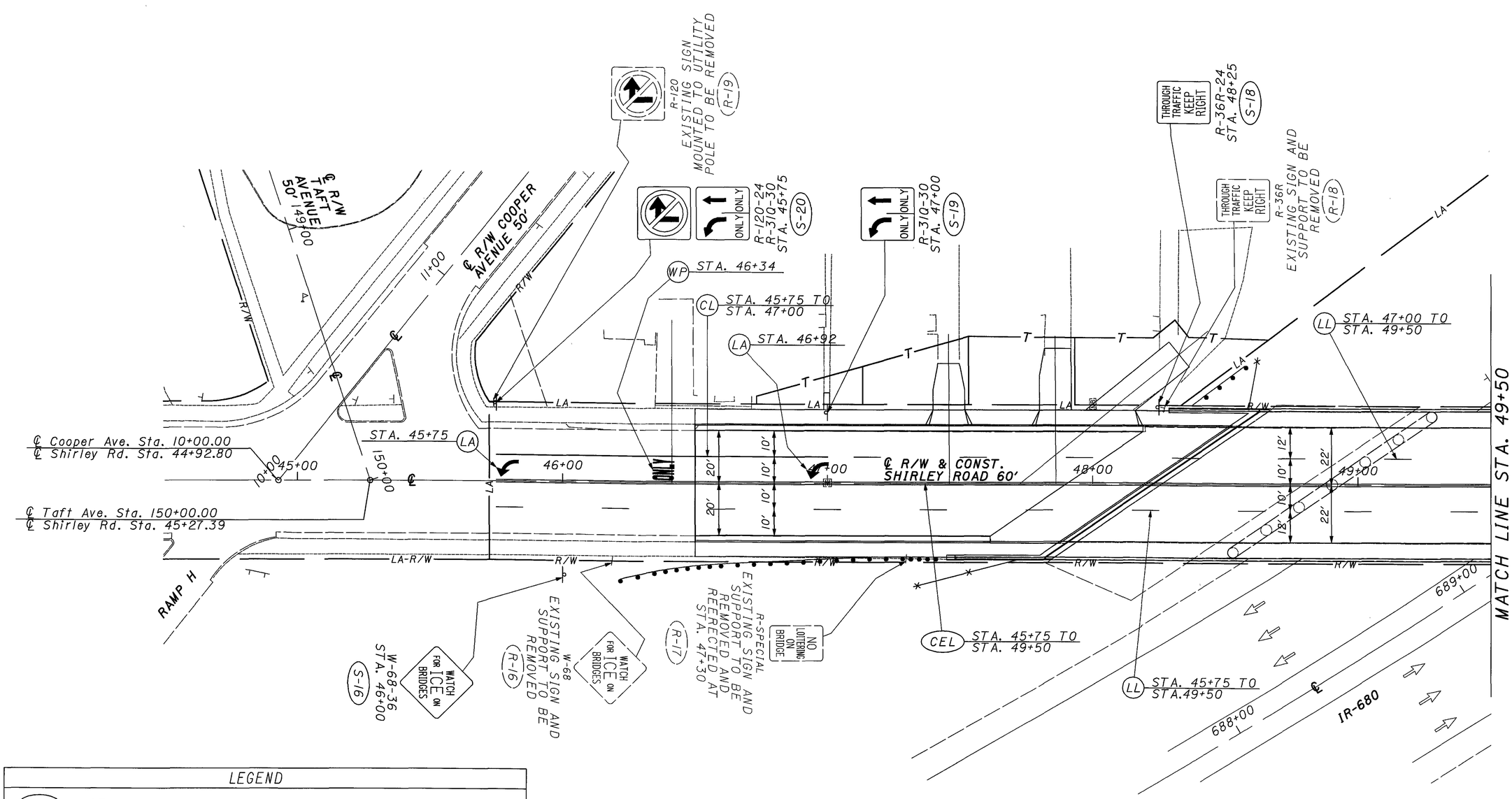

LEGEND

(CEL)	CENTER LINE	⊥	EXISTING SIGN AND SUPPORT
(CL)	CHANNELIZING LINE	○/○○	PROPOSED SIGN AND SUPPORT
(LL)	LANE LINE	←	TRAFFIC FLOW ARROW
(LA)	LANE ARROW	(R-#)	EXISTING SIGN TO BE REMOVED
(WP)	WORD ON PAVEMENT	(S-#)	PROPOSED SIGN TO BE ERECTED

NOTES:

1. ALL PAVEMENT MARKINGS SHALL BE ODOT ITEM 642 - PAINT PAVEMENT MARKINGS.

(S-17) NOT USED

0 10 20 40 HORIZONTAL SCALE IN FEET

CALCULATED CWL
CHECKED MVJ

SIGNING AND PAVEMENT MARKING PLAN
SHIRLEY ROAD - BEGIN TO STA. 49+50

MAH-680-7.24/8.34

\\akrm01\Data\civil\200169\01\12\dgn\trafficontrol\22175TP0.dgn
03/30/2004
06:55:57 PM

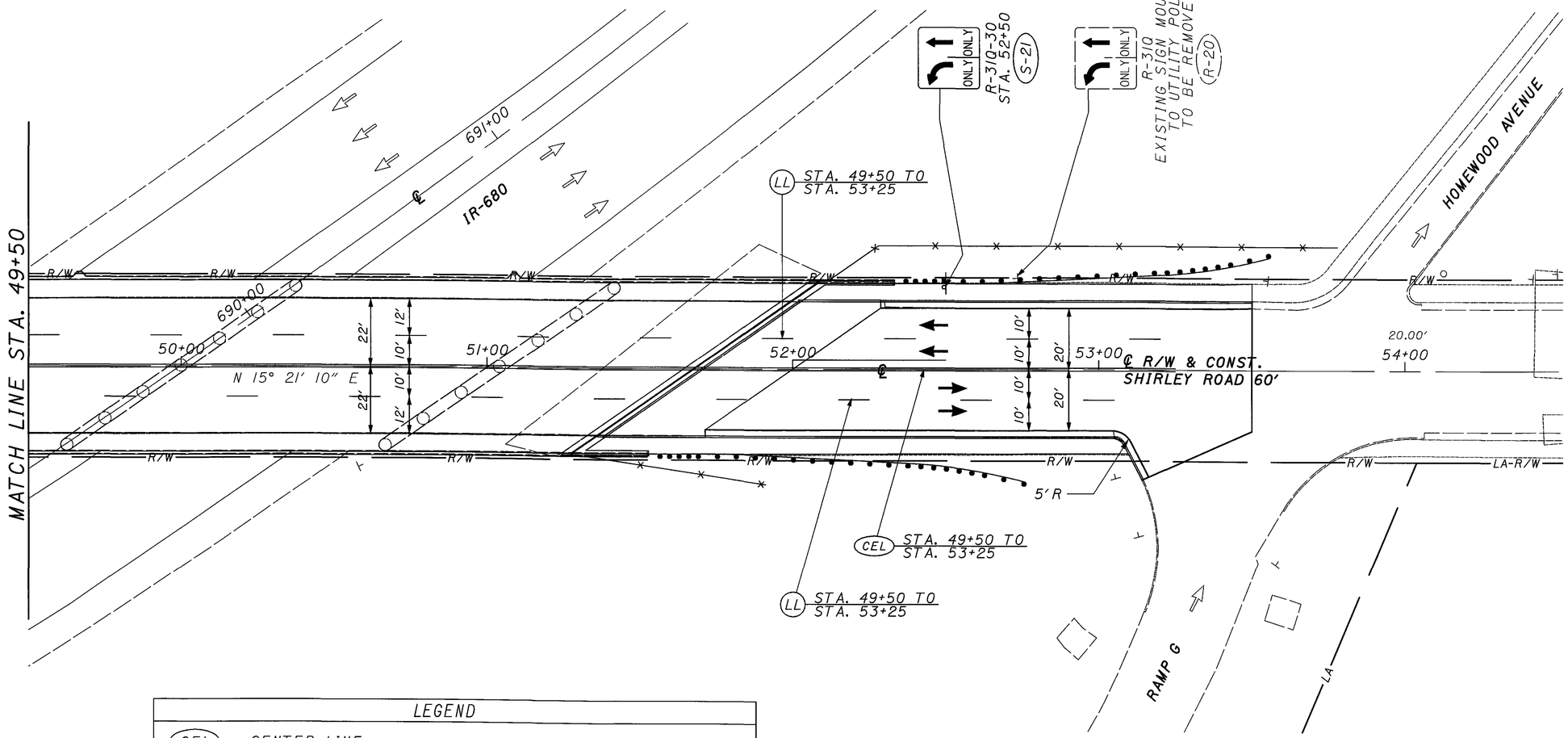

LEGEND			
CEL	CENTER LINE	⊥	EXISTING SIGN AND SUPPORT
CL	CHANNELIZING LINE		PROPOSED SIGN AND SUPPORT
LL	LANE LINE	←	TRAFFIC FLOW ARROW
LA	LANE ARROW	R-#	EXISTING SIGN TO BE REMOVED
WP	WORD ON PAVEMENT	S-#	PROPOSED SIGN TO BE ERECTED

NOTES:

1. ALL PAVEMENT MARKINGS SHALL BE ODOT ITEM 642 - PAINT PAVEMENT MARKINGS.

0 10 20 40
HORIZONTAL SCALE IN FEET

CALCULATED CWL
CHECKED MVJ

SIGNING AND PAVEMENT MARKING PLAN
SHIRLEY ROAD - STA. 49+50 TO END

MAH-680-7.24/8.34

\\akron0\data\civil\200169\GN\12\dgn\trafcontrol\22T3TFE.dgn
03/30/2004
06:56:28 PM

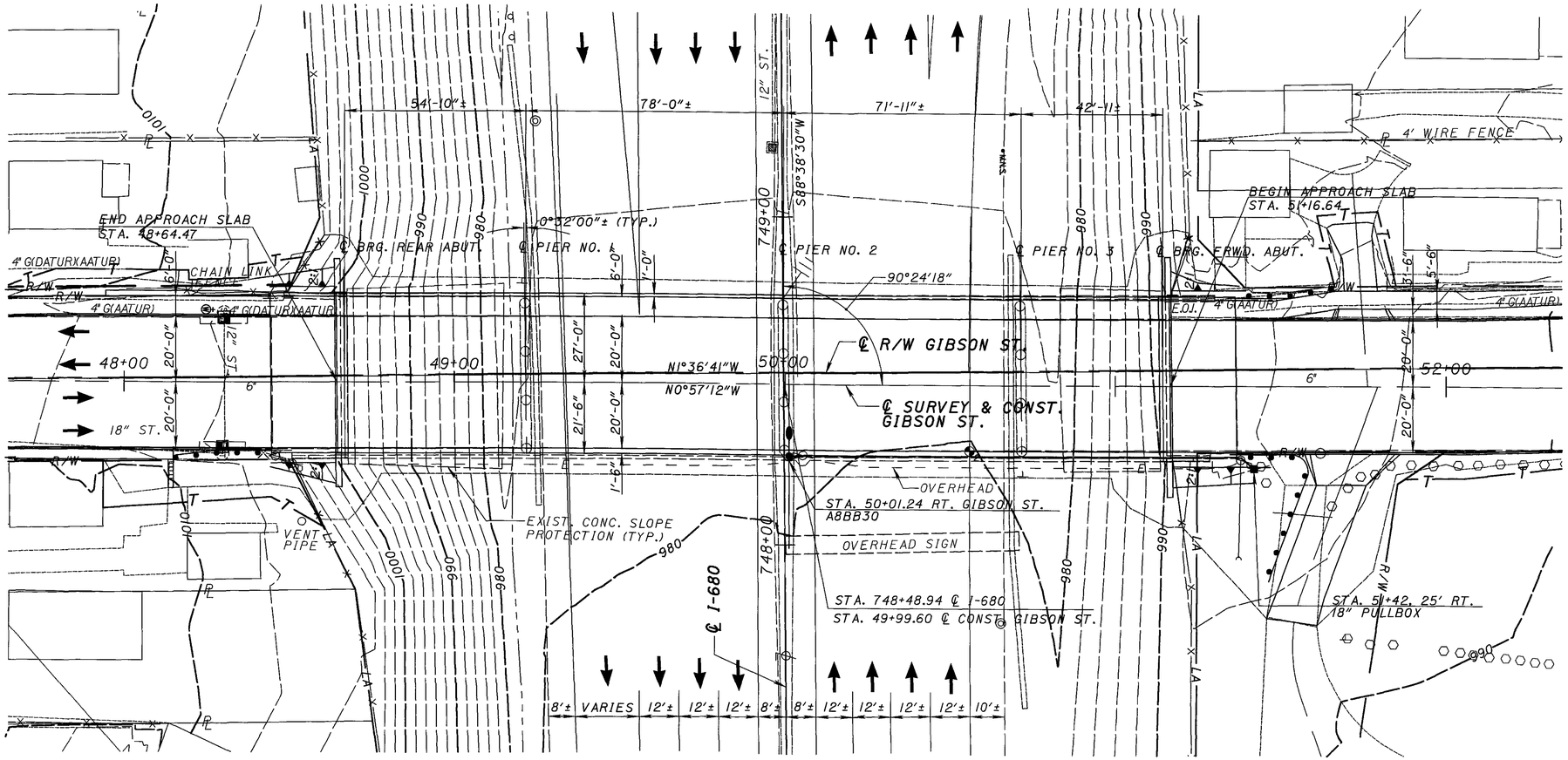

EARTHWORK LIMITS SHOWN ARE APPROXIMATE. ACTUAL SLOPES SHALL CONFORM TO PLAN CROSS-SECTIONS.

FOR BENCHMARKS SEE SHEET NO. 27-28

REF NO.	STATION TO STATION		SIDE	603 4" CONDUIT, TYPE E	625 STRUCTURE GROUNDING SYSTEM, AS PER PLAN	625 LIGHT POLE ANCHOR BOLTS ON STRUCTURE	625 PULLBOX, 18", 725.08,	625 CONDUIT, 2", 725.04	625 LIGHT POLE, DESIGN A8B30	625 LUMINAIRE, CONVENTIONAL, TYPE III, 250 WATT, 120V, 725.11	625 NO. 10 AWG POLE AND BRACKET CABLE	625 CONNECTOR KIT, TYPE II	625 CONNECTOR KIT, TYPE III	625 STRUCTURE JUNCTION BOX	625 NO. 4 AWG 600V DISTRIBUTION CABLE
	FROM	TO		FT.	EACH	EACH	EACH	FT.	EACH	EACH	FT.	EACH	EACH	EACH	FT.
	STA. REF. TO GIBSON ST.														
1	50+01.24		RT			4			1	1	110	1	1	1	
2	50+00	51+42	LT		1										
3	50+01.24		RT					141							302
4	51+42		RT	20			1								
	TOTAL THIS SHEET			20	1	4	1	141	1	1	110	1	1	1	302

QUANTITIES CARRIED TO GENERAL SUMMARY, SEE SHEET 21-22

LIGHTING KEY

- BRIDGE MOUNTED LIGHT POLE, 250W, TYPE III DISTRIBUTION
- PROPOSED PULLBOX
- 2" CONDUIT IN PARAPET
- EXISTING PULLBOX
- EXISTING OVERHEAD LINES
- STRUCTURE GROUND SUPPORT
- EXISTING LIGHT POLE
- EXISTING POWER POLE

HORIZONTAL SCALE IN FEET 0 10 20 40

CALCULATED CWL
CHECKED JZ

LIGHTING PLAN
GIBSON STREET

MAH-680-7.24/8.34

\\Akrnd\Data\civil\200869\DN\D\dgn\lighting\22795LPA.dgn
03/30/2004
06:57:28 PM

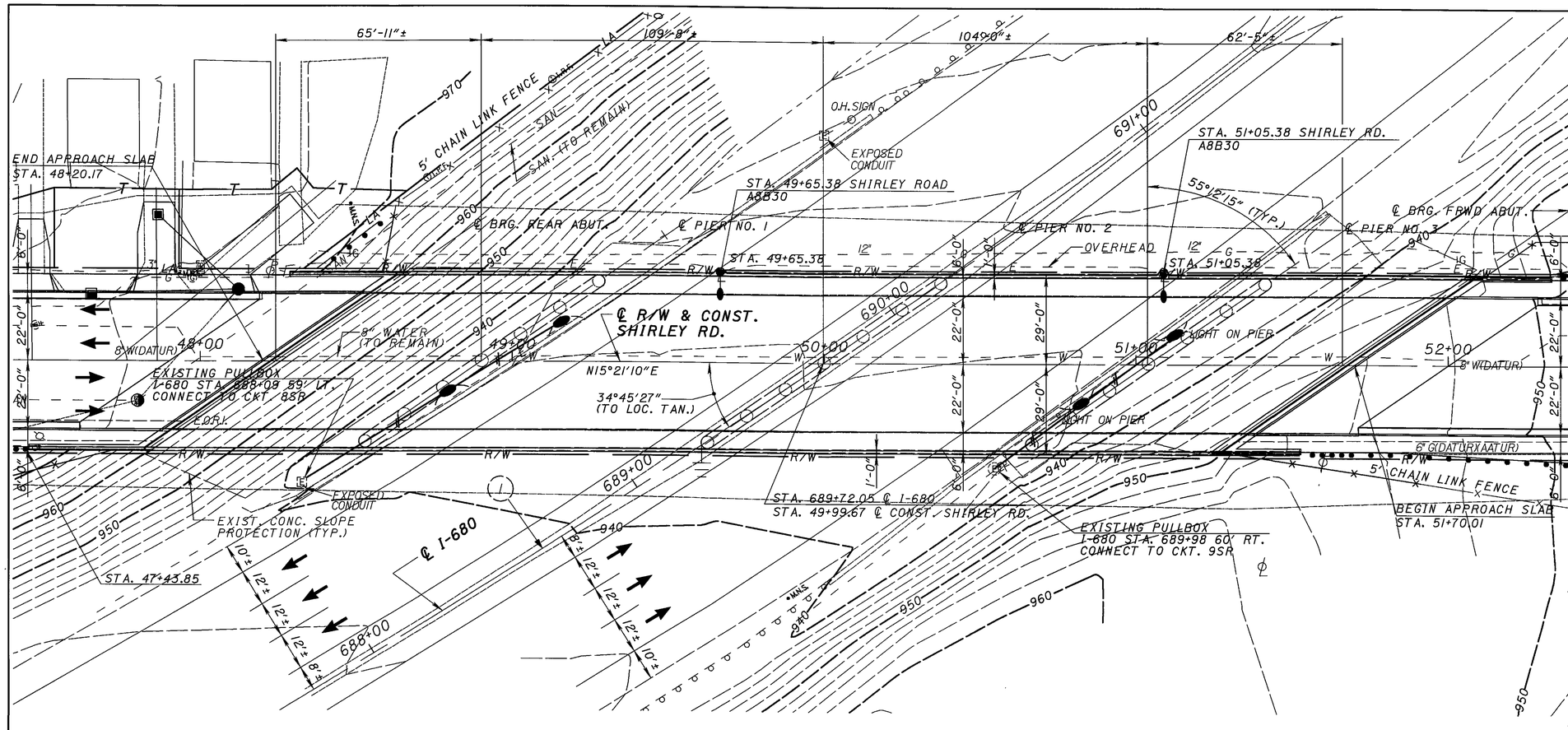

IR-680
EXISTING CURVE

P.I. = Sta. 694+62.64
Δ = 71° 25' 13" (LT)
Dc = 1° 50' 00"
R = 3125.22'
Ls = 200.00'
θs = 1° 50' 00"
LT = 133.34'
ST = 66.67'
Lc = 3695.65'
Ts = 2346.92'
Es = 724.32'
T.S. = Sta. 671+15.72
S.C. = Sta. 673+15.72
C.S. = Sta. 710+11.37
S.T. = Sta. 712+11.37

LIGHTING KEY

- BRIDGE MOUNTED LIGHT POLE, 250W TYPE II DISTRIBUTION
- PROPOSED PULLBOX
- 2" CONDUIT IN PARAPET
- EXISTING PULLBOX
- UNDERPASS LUMINAIRE 150W
- 1½" DUCT CABLE WITH 2-1/C #4 AWG 600 VOLT IN 24" DEEP TRENCH
- EXISTING DUCT CABLES
- STRUCTURE GROUND SUPPORT
- EXISTING LIGHT POLE

EARTHWORK LIMITS SHOWN ARE APPROXIMATE. ACTUAL SLOPES SHALL CONFORM TO PLAN CROSS-SECTIONS.

FOR BENCHMARKS SEE SHEET NO. 35-36.

REF NO.	STATION TO STATION FROM	TO	SIDE	202 LUMINAIRE REMOVED, AS PER PLAN	202 DISCONNECT EXISTING CIRCUIT, AS PER PLAN	603 4" CONDUIT, TYPE E	625 STRUCTURE GROUNDING SYSTEM, AS PER PLAN	625 CABLE SPLING KIT	625 LIGHT POLE ANCHOR BOLTS ON STRUCTURE	625 LUMINAIRE, UNDERPASS	625 SERVICE TO UNDERPASS LIGHTING, AS PER PLAN	625 PULLBOX, 725.08, 18"	625 CONDUIT, 2", 725.04	625 LIGHT POLE, DESIGN A8B30	625 LUMINAIRE, CONVENTIONAL, TYPE III, 250 WATT, 120V, 725.11	625 NO. 10 AWG POLE AND BRACKET CABLE	625 CONNECTOR KIT, TYPE II	625 CONNECTOR KIT, TYPE III	625 STRUCTURE JUNCTION BOX	625 NO. 4 AWG 600V DISTRIBUTION CABLE
				EACH	EACH	FT.	EACH	EACH	EACH	EACH	EACH	EACH	FT.	EACH	EACH	FT.	EACH	EACH	EACH	FT.
1	REF. TO BRIDGE #MAH-680-0834		LT&RT	4	2					4	1									
2	STA. REF. TO I-680																			
3	688+09		LT					2												
4	689+98		RT					2												
5	STA. REF. TO SHIRLEY RD.																			
6	49+65.38		LT						4					1	1	110	1	1	1	
7	49+65.38	51+05.38	LT										140							300
8	51+05.38		LT						4					1	1	110	1	1	1	
9	51+05.38	52+43	LT										138							296
10	49+61		RT				1													
11	52+43		LT			20						1								
12	TOTAL THIS SHEET			4	2	20	1	4	8	4	1	1	278	2	2	220	2	2	2	596

QUANTITIES CARRIED TO GENERAL SUMMARY, SEE SHEET 21-22.

HORIZONTAL SCALE IN FEET 0 10 20 40

CALCULATED CWL
CHECKED JZ

LIGHTING PLAN SHIRLEY ROAD

MAH-680-7.24/8.34

\\Akrn01\data\civil\200169\01\12\dgn\lighting\22179LPC.dgn
03/30/2004
06:57:51 PM

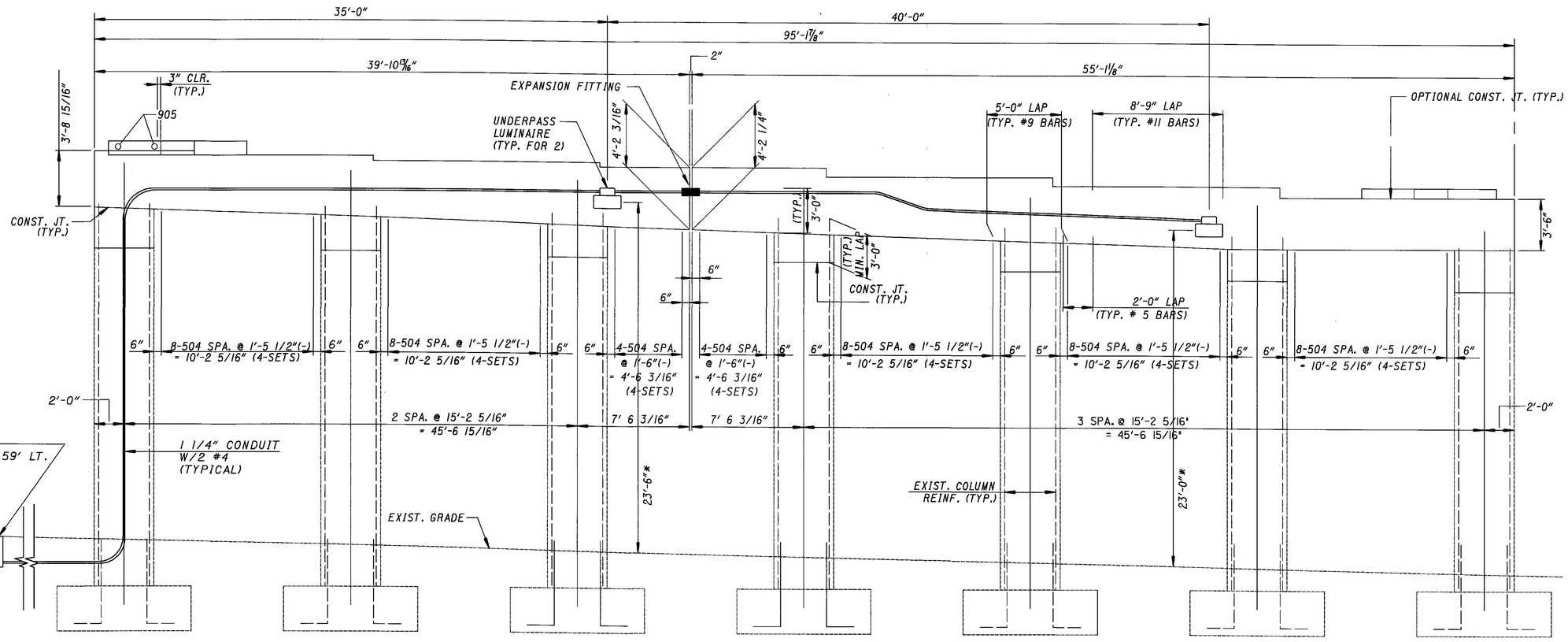

PIER No. 1 EAST ELEVATION

1/4" = 1'-0"

HORIZONTAL SCALE IN FEET

CALCULATED CWL

CHECKED JZ

UNDERPASS LIGHTING MOUNTING DETAIL-EAST ELEVATION SHIRLEY ROAD

MAH-680-7.24/8.34

\\akrmd\Data\civil\200169\01\02\dgn\lighting\22779LP01.dgn
03/30/2004
06:35:05 PM

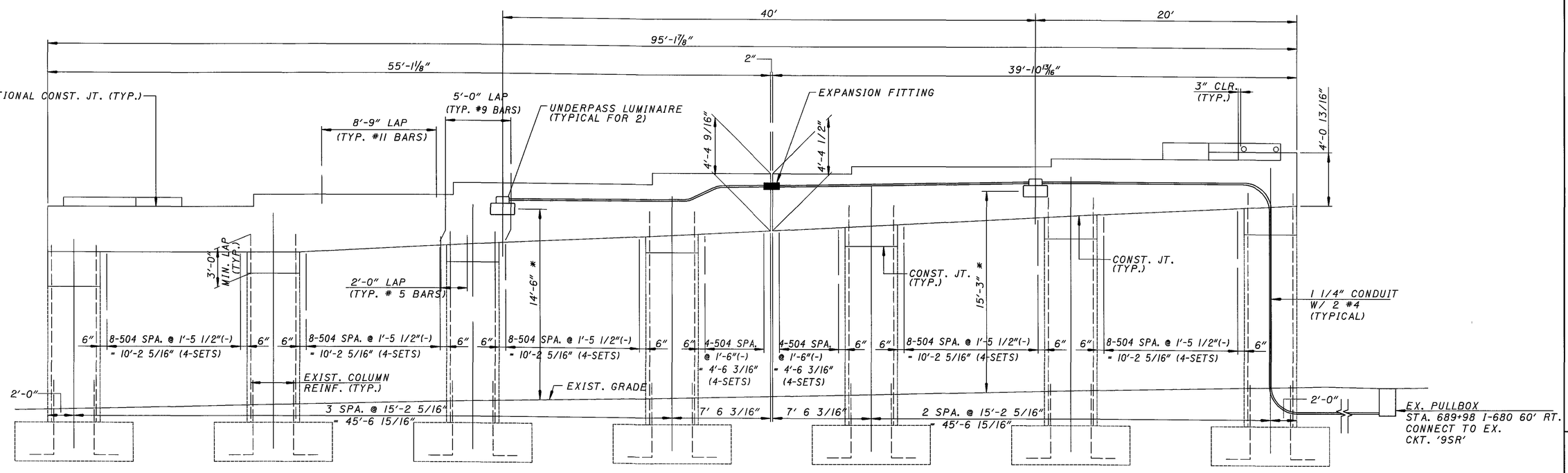

PIER No. 3 WEST ELEVATION

1/4" = 1'-0"

HORIZONTAL SCALE IN FEET

CALCULATED CWL
CHECKED JZ

UNDERPASS LIGHTING MOUNTING DETAIL-WEST ELEVATION
SHIRLEY ROAD

MAH-680-7.24/8.34

\\Akron\Data\civil\200169\DN\12\dgn\lighting\23795LPE.dgn
03/30/2004
06:35:47 PM

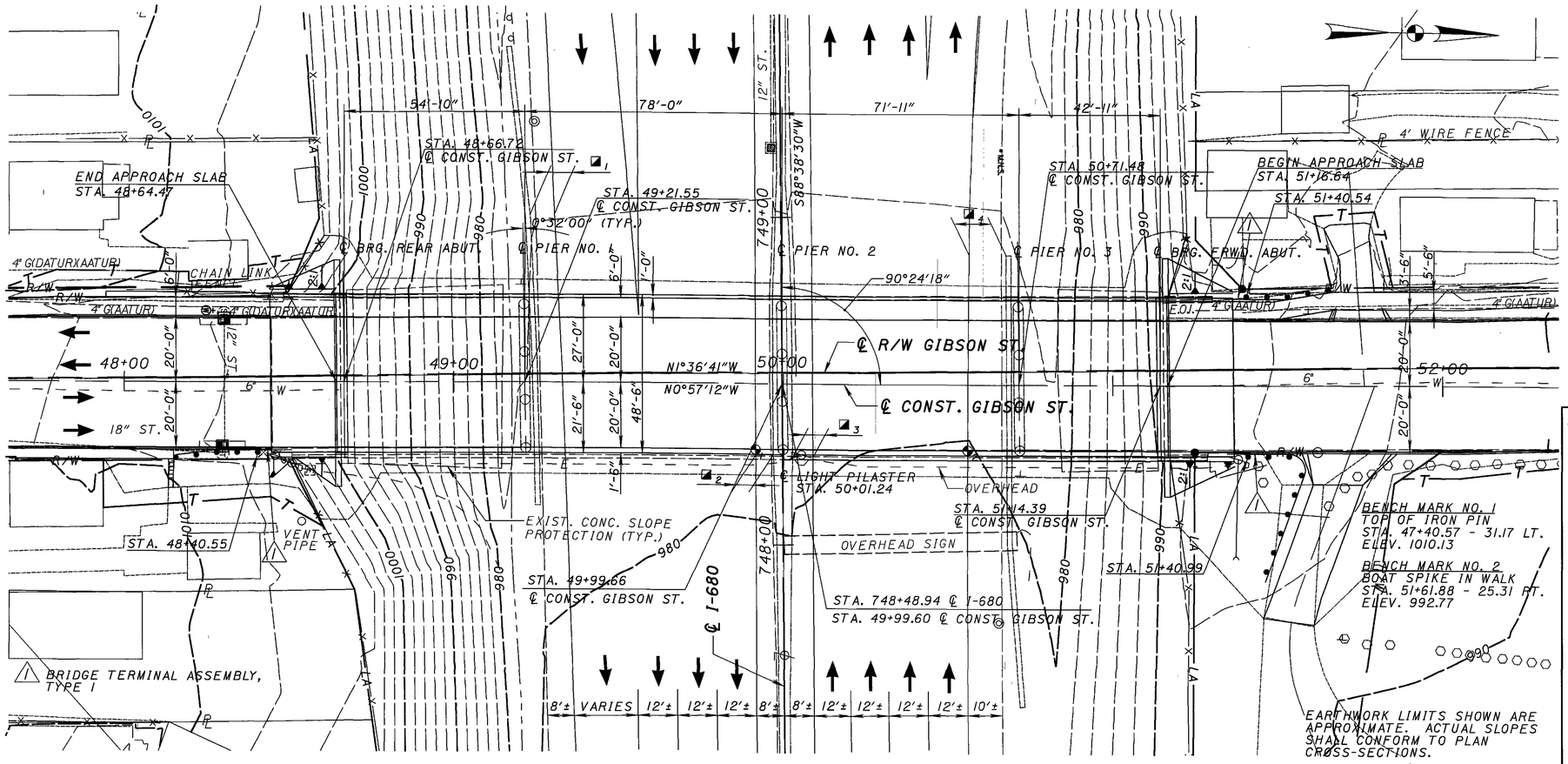

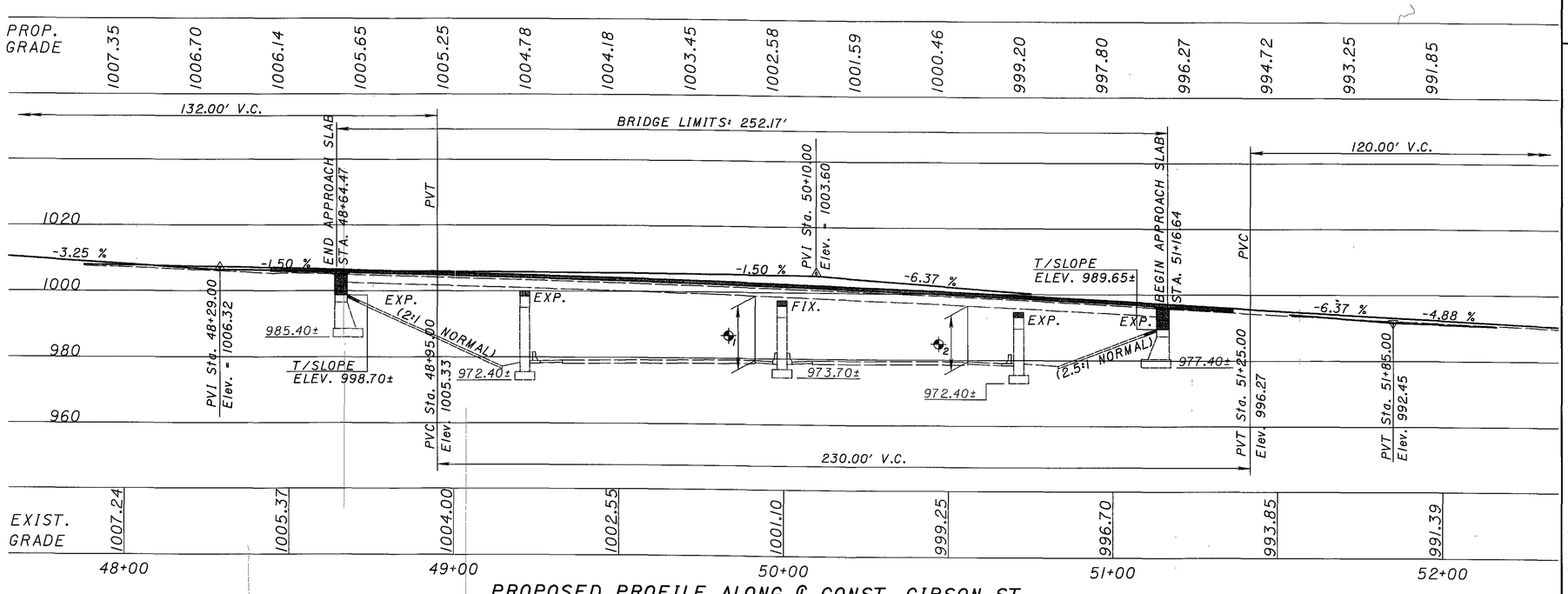

PROPOSED PROFILE ALONG ℄ CONST. GIBSON ST.

VERTICAL CLEARANCES

ϕ_1 18.21' PROP. ACTUAL 15.50' REQ'D
17.42' EXIST. ACTUAL

ϕ_2 15.54' PROP. ACTUAL 15.50' REQ'D
14.68' EXIST. ACTUAL

HORIZONTAL CLEARANCES

◪1 8.68' ACTUAL 12.00' REQ'D

◪2 5.09' ACTUAL 12.00' REQ'D

◪3 5.06' ACTUAL 12.00' REQ'D

◪4 11.54' ACTUAL 12.00' REQ'D

TRAFFIC DATA:

ADT	(2004)	3100
ADTT	(2004)	93
ADT	(2024)	3220
ADTT	(2024)	97

EXISTING STRUCTURE

TYPE:	CONTINUOUS STEEL BEAMS (ASTM A36 STEEL) WITH REINFORCED CONCRETE DECK SLAB AND SUBSTRUCTURE
SPANS:	54'-10"±, 78'-0"±, 71'-11"±, 42'-11"±, C/C BEARINGS
ROADWAY:	40'-0"± FACE TO FACE CURBS, WITH 6'-0" SIDEWALK (LEFT) AND 2'-0"± WIDE CURB (RIGHT)
LOADING:	HS20-44
SKEW:	0° 32' 00"± RF
ALIGNMENT:	TANGENT
CROWN:	0.0156± FT/FT
WEARING COURSE:	MONOLITHIC CONCRETE
APPROACH SLABS:	20'-0"±
DATE BUILT:	1973
SFN:	5007291

PROPOSED STRUCTURE

PROPOSED WORK:	REPLACE EXISTING DECK SLAB WITH NEW COMPOSITE DECK SLAB. MODIFY EXIST. SUBSTR. UNITS TO RAISE BEAM SEATS. MODIFY EXIST. ABUTMENTS AND WINGWALLS TO SEMI-INTEGRAL DESIGN. REPLACE EXIST. BEARINGS WITH NEW ELASTOMERIC BEARINGS. SPOT PAINT EXIST. STEEL, AND SEAL CONCRETE SURFACES.
TYPE:	CONTINUOUS COMPOSITE STEEL BEAMS WITH REINFORCED CONCRETE DECK SLAB AND SUBSTRUCTURE (EXISTING BEAMS AND SUBSTRUCTURE UNITS SALVAGED)
SPANS:	54'-10", 78'-0", 71'-11", 42'-11" C/C BEARINGS
ROADWAY:	40'-0" FACE OF CURB TO TOE OF PARAPET, WITH 6'-0" SIDEWALK (LEFT)
LOADING:	HS20-44 (CASE II) AND ALTERNATE MILITARY LOADING. F.W.S. = 60 PSF.
SKEW:	0° 32' 00" RF
ALIGNMENT:	TANGENT
CROWN:	0.0156
WEARING COURSE:	MONOLITHIC CONCRETE
APPROACH SLAB:	20'-0" (AS-I-81 MODIFIED)
STRUCTURE COORDINATES:	LAT. N 41° 04' 54" LONG. W 80° 38' 34"

DESIGN AGENCY: GPD ASSOCIATES

DESIGNED	CHECKED	DRAWN	REVISED	REVIEWED	DATE	STRUCTURE FILE NUMBER
B.J.M.	L.P.C.	R.P.R.		K.S.J.	3-31-04	5007291

MAHONING COUNTY
STA. 48+64.47
STA. 51+16.64

SITE PLAN
BRIDGE NO. MAH - 680 - 0724
GIBSON ST. OVER I-680

MAH-680-7.24/8.34

1 / 17

62 / 107

\\Akron01\bara\civil\200169\DI\DI\dgn\structure\T24SPI.dgn
03/31/2004
11:45:05 AM

DESIGN SPECIFICATIONS

THE PROPOSED REHABILITATION WORK FOR THIS STRUCTURE CONFORMS TO "STANDARD SPECIFICATIONS FOR HIGHWAY BRIDGES" ADOPTED BY THE AMERICAN ASSOCIATION OF STATE HIGHWAY AND TRANSPORTATION OFFICIALS, 2002, AND THE ODOT BRIDGE DESIGN MANUAL.

DESIGN DATA

DESIGN LOADING:	HS 20–44 (CASE II) AND THE ALTERNATE MILITARY LOADING FUTURE WEARING SURFACE (FWS) OF 60 PSF
HIGH PERFORMANCE CONCRETE HPC:	COMPRESSIVE STRENGTH 4500 PSI (SUPERSTRUCTURE)
CONCRETE CLASS C:	COMPRESSIVE STRENGTH 4000 PSI (SUBSTRUCTURE)
REINFORCING STEEL:	ASTM A615 OR A996 GRADE 60, MINIMUM YIELD STRENGTH, 60,000 PSI.
DECK PROTECTION METHOD:	EPOXY COATED REINFORCING STEEL, 2 1/2" CONCRETE COVER, HIGH PERFORMANCE CONCRETE.
MONOLITHIC WEARING SURFACE:	MONOLITHIC WEARING SURFACE IS ASSUMED, FOR DESIGN PURPOSES, TO BE 1" THICK
STRUCTURAL STEEL:	ASTM A572/A709 GRADE 50 YIELD STRENGTH 50,000 PSI

REFERENCES

REFERENCE SHALL BE MADE TO STANDARD DRAWINGS:

NO. AS–1–81 REVISED 07–19–02
NO. HL–20.14 DATED 01–17–03
NO. SICD–1–96 REVISED 07–19–02
NO. VPF–1–90 REVISED 07–19–02

AND TO SUPPLEMENTAL SPECIFICATIONS:

864 DATED 07–11–00
954 DATED 09–09–97

EXISTING STRUCTURE PLANS

THE EXISTING STRUCTURE PLANS (PROJECT NO. MAH–680–6.98) ARE ON FILE AND MAY BE REVIEWED IN THE OFFICE OF THE ODOT DISTRICT 4 DEPUTY DIRECTOR, 705 OAKWOOD ST., RAVENNA, OHIO 44266

CONTINGENCY QUANTITIES

THE CONTRACTOR SHALL NOT ORDER MATERIALS OR PERFORM WORK LISTED IN THE GENERAL SUMMARY FOR ITEMS DESIGNATED BY PLAN NOTE TO BE USED "AS DIRECTED BY THE ENGINEER" UNLESS AUTHORIZED BY THE ENGINEER. THE ACTUAL WORK LOCATIONS AND QUANTITIES USED AT THE ENGINEER'S DISCRETION SHALL BE MADE A MATTER OF RECORD BY INCORPORATION IN THE FINAL CHANGE ORDER GOVERNING COMPLETION OF THIS PROJECT.

UNDERGROUND UTILITIES

THE LOCATIONS OF THE UNDERGROUND UTILITIES SHOWN ON THE PLANS HAVE BEEN OBTAINED BY DILIGENT FIELD CHECKS AND AVAILABLE RECORDS. IT IS BELIEVED THAT THEY ARE ESSENTIALLY CORRECT, BUT THE STATE OF OHIO DOES NOT GUARANTEE THEIR ACCURACY OR COMPLETENESS.

UTILITY LINES

THE UTILITIES SHALL BEAR ALL EXPENSE INVOLVED IN RELOCATING (INSTALLING) THE AFFECTED UTILITY LINES. THE CONTRACTOR AND UTILITIES ARE TO COOPERATE BY ARRANGING THEIR WORK IN SUCH A MANNER THAT INCONVENIENCE TO EITHER WILL BE HELD TO A MINIMUM.

ITEM 503, UNCLASSIFIED EXCAVATION, AS PER PLAN

THE BACKFILL MATERIAL BEHIND THE ABUTMENTS SHALL BE TYPE B GRANULAR MATERIAL, 703.16.C, PLACED AND COMPACTED IN 6 INCH LIFTS.

PROPOSED WORK

1. REMOVE ENTIRE EXISTING DECK ABOVE THE BEAMS, INCLUDING EXPANSION JOINTS, SCUPPERS AND LIGHTING POLE.
2. REMOVE EXISTING APPROACH SLABS.
3. REMOVE EXISTING ABUTMENT BACKWALLS AND PORTIONS OF WINGWALLS.
4. REMOVE EXISTING END CROSSFRAMES.
5. WELD SHEAR CONNECTORS TO EXISTING BEAMS.
6. RAISE EXISTING BEAMS, REMOVE BEARINGS AND CONSTRUCT ABUTMENT AND PIER BRIDGE SEAT CAPS.
7. FIELD DRILL HOLES IN BEAM ENDS AS PER PLAN.
8. SET NEW LAMINATED ELASTOMERIC BEARINGS WITH LOAD PLATE AND HP 10X42 STEEL SHAPE AT ABUTMENTS AND WITH LOAD PLATE AT PIERS, AND PLACE BEAMS ON BEARINGS.
9. CONSTRUCT DECK AS PER PLAN.
10. RECONSTRUCT ABUTMENT BACKWALLS AND PORTIONS OF WINGWALLS AS PER PLAN.
11. PATCH PORTIONS OF PIERS AS REQUIRED.
12. SEAL CONCRETE SURFACES AS PER PLAN.
13. CONSTRUCT APPROACH SLABS AS PER PLAN.
14. INSTALL VANDAL PROTECTION FENCE
15. REPAIR CONCRETE SLOPE PROTECTION.
16. SPOT PAINT EXISTING AND NEW STEEL.

PORTIONS OF STRUCTURE REMOVED, AS PER PLAN

DESCRIPTION: THIS WORK CONSISTS OF THE REMOVAL OF CONCRETE DECK INCLUDING SIDEWALK, CURBS, PARAPETS, RAILINGS, LIGHT POLE, DECK JOINTS, SCUPPERS AND OTHER APPURTENANCES FROM STEEL SUPPORTING SYSTEMS (BEAMS, CROSS FRAMES, ETC.), END CROSSFRAMES AND PORTIONS OF THE ABUTMENTS AND WINGWALLS TO THE LIMITS INDICATED IN THE PLANS. THE PROVISIONS OF ITEM 202 APPLY EXCEPT AS SPECIFIED BY THE FOLLOWING NOTES. PERFORM WORK CAREFULLY DURING DECK REMOVALS TO PROTECT PORTIONS OF SUCH SYSTEMS THAT ARE TO BE SALVAGED AND INCORPORATED INTO THE PROPOSED STRUCTURE. IN THIS RESPECT, THE USE OF EXPLOSIVES, HEADACHE BALLS AND/OR HOE–RAM TYPE OF EQUIPMENT IS PROHIBITED.

PROTECTION OF TRAFFIC: PRIOR TO DEMOLITION OF ANY PORTIONS OF THE EXISTING SUPERSTRUCTURE, SUBMIT PLANS FOR THE PROTECTION OF TRAFFIC ADJACENT TO AND/OR UNDER THE STRUCTURE TO THE DIRECTOR AT LEAST 30 DAYS BEFORE CONSTRUCTION BEGINS. THESE PLANS SHALL INCLUDE PROVISIONS FOR ANY DEVICES AND STRUCTURES THAT MAY BE NECESSARY TO ENSURE SUCH PROTECTION. MAINTAIN TEMPORARY VERTICAL CLEARANCES SPECIFIED ON THE PLANS OR IN THE PROPOSAL AT ALL TIMES EXCEPT AS OTHERWISE APPROVED BY THE DIRECTOR.

PROTECTION OF STEEL SUPPORT SYSTEMS: BEFORE DECK SLAB CUTTING IS PERMITTED, DRAW THE OUTLINE OF PRIMARY STEEL MEMBERS IN CONTACT WITH THE BOTTOM OF THE DECK ON THE SURFACE OF THE DECK. DRILL SMALL DIAMETER PILOT HOLES 2 INCHES OUTSIDE THESE LINES TO CONFIRM THE LOCATION OF FLANGE EDGES. DECK CUTS OVER OR WITHIN 2 INCHES OF FLANGE EDGES SHALL NOT EXTEND LOWER THAN THE BOTTOM LAYER OF DECK SLAB REINFORCING STEEL. CUTS MADE OUTSIDE 2 INCHES OF FLANGE EDGES MAY EXTEND THE FULL DEPTH OF THE DECK. PERFORM WORK CAREFULLY DURING CUTTING OF THE DECK SLAB TO AVOID DAMAGING STEEL MEMBERS THAT ARE TO BE INCORPORATED INTO THE PROPOSED STRUCTURE.

REMOVAL METHODS: THE CONTRACTOR MAY REMOVE CONCRETE BY CUTTING AND BY MEANS OF HAND OPERATED PNEUMATIC HAMMERS EMPLOYING POINTED OR BLUNTED CHISEL TYPE TOOLS. FOR REMOVALS OVER STEEL BEAMS, THE CONTRACTOR MAY USE A HAMMER HEAVIER THAN 35 POUNDS BUT NOT TO EXCEED 90 POUNDS UNLESS APPROVED BY THE ENGINEER. REMOVAL METHODS OVER BRIDGE MEMBERS SHALL ENSURE ADEQUATE DEPTH CONTROL AND PREVENT NICKING OR GOUGING THE PRIMARY STEEL MEMBERS.

DECK REMOVALS: DUE TO THE POSSIBLE PRESENCE OF WELDED ATTACHMENTS TO EXISTING STRUCTURAL STEEL (FINISHING MACHINE, SCUPPER AND FORM SUPPORTS, ETC.) PERFORM WORK CAREFULLY DURING DECK REMOVAL TO AVOID DAMAGING STRINGERS THAT ARE TO REMAIN. REPLACE OR REPAIR STRINGERS DAMAGED BY THE REMOVAL OPERATIONS AT NO COST TO THE PROJECT. SUBMIT PROPOSED REPAIRS, DEVELOPED BY AN OHIO REGISTERED PROFESSIONAL ENGINEER, IN WRITING TO THE DIRECTOR AT LEAST 20 DAYS BEFORE PERFORMING REPAIR WORK.

SUBSTRUCTURE CONCRETE REMOVAL: REMOVE CONCRETE BY MEANS OF APPROVED PNEUMATIC HAMMERS EMPLOYING POINTED AND BLUNT CHISEL TOOLS. HYDRAULIC HOE–RAM TYPE HAMMERS WILL NOT BE PERMITTED. THE WEIGHT OF THE HAMMER SHALL NOT BE MORE THAN 35 POUNDS FOR REMOVAL WITHIN 18 INCHES OF PORTIONS TO BE PRESERVED. OUTSIDE THE 18 INCH LIMIT, THE CONTRACTOR MAY USE HAMMERS NOT EXCEEDING 90 POUNDS UPON THE APPROVAL OF THE ENGINEER. DO NOT PLACE PNEUMATIC HAMMERS IN DIRECT CONTACT WITH REINFORCING STEEL THAT IS TO BE RETAINED IN THE REBUILT STRUCTURE.

CUT LINE CONSTRUCTION JOINT PREPARATION: SAW CUT BOUNDARIES OF PROPOSED CONCRETE REMOVALS 1 INCH DEEP. REMOVE CONCRETE TO A ROUGH SURFACE. LEAVE THE EXISTING REINFORCING STEEL, IF REQUIRED IN THE PLANS, IN PLACE. INSTALL DOWEL BARS IF SPECIFIED. PRIOR TO CONCRETE PLACEMENT ABRASIVELY CLEAN JOINT SURFACES AND EXISTING EXPOSED REINFORCEMENT TO REMOVE LOOSE AND DISINTEGRATED CONCRETE AND LOOSE RUST. THOROUGHLY CLEAN THE JOINT SURFACE AND EXPOSED REINFORCEMENT OF ALL DIRT, DUST, RUST OR OTHER FOREIGN MATERIAL BY THE USE OF WATER, AIR UNDER PRESSURE, OR OTHER METHODS THAT PRODUCE SATISFACTORY RESULTS. EXISTING REINFORCING STEEL DOES NOT HAVE TO HAVE A BRIGHT STEEL FINISH, BUT REMOVE ALL PACK AND LOOSE RUST. THOROUGHLY DRENCH EXISTING CONCRETE SURFACES WITH CLEAN WATER AND ALLOW TO DRY TO A DAMP CONDITION BEFORE PLACING CONCRETE.

EXTRANEOUS MEMBERS: REMOVE EXISTING EXTRANEOUS MEMBERS (I.E., FINISHING MACHINE AND FORM SUPPORTS AND THE SUPPORT FOR SCUPPERS WHICH ARE TO BE REMOVED) ATTACHED BY WELDED CONNECTIONS TO THE DESIGNATED TENSION PORTIONS OF THE TOP FLANGES OF EXISTING STEEL MEMBERS AND GRIND THE FLANGE SURFACES SMOOTH. CAREFULLY GRIND PARALLEL TO THE FLANGES.

LOADING LIMITATIONS: NO PART OF THE STRUCTURE SHALL BE SUBJECTED TO UNIT STRESSES THAT EXCEED 136.5% OF ALLOWABLE UNIT STRESSES AS DEFINED IN THE AASHTO STANDARD SPECIFICATIONS FOR HIGHWAY BRIDGES DUE EITHER TO DEMOLITION, ERECTION OR CONSTRUCTION METHODS, OR TO THE USE OR MOVEMENT OF DEMOLITION OR ERECTION EQUIPMENT ON OR ACROSS THE STRUCTURE. SUBMIT STRUCTURAL ANALYSIS COMPUTATIONS, BY AN OHIO REGISTERED PROFESSIONAL ENGINEER, SHOWING THE ALLOWABLE STRESSES AND THE MAXIMUM STRESSES PRODUCED BY THE REMOVAL METHODS OR EQUIPMENT TO THE DIRECTOR AT LEAST 20 DAYS BEFORE CONSTRUCTION BEGINS.

MEASUREMENT & PAYMENT: THE DEPARTMENT WILL MEASURE THE QUANTITY OF REMOVALS ON A LUMP SUM BASIS. THE DEPARTMENT WILL PAY FOR THE ACCEPTED QUANTITIES OF REMOVALS AT THE CONTRACT PRICE FOR ITME 202, PORTIONS OF STRUCTURE REMOVED, AS PER PLAN.

EXISTING STRUCTURE VERIFICATION

DETAILS AND DIMENSIONS SHOWN ON THESE PLANS PERTAINING TO THE EXISTING STRUCTURE HAVE BEEN OBTAINED FROM PLANS OF THE EXISTING STRUCTURE AND FROM FIELD OBSERVATIONS AND MEASUREMENTS. CONSEQUENTLY, THEY ARE INDICATIVE OF THE EXISTING STRUCTURE AND PROPOSED WORK BUT THEY SHALL BE CONSIDERED TENTATIVE AND APPROXIMATE. THE CONTRACTOR IS REFERRED TO CMS SECTIONS 102.05, 105.02 AND 513.04.

BASE CONTRACT BID PRICES UPON A RECOGNITION OF THE UNCERTAINTIES DESCRIBED ABOVE AND UPON A PREBID EXAMINATION OF THE EXISTING STRUCTURE. HOWEVER, THE DEPARTMENT WILL PAY FOR ALL PROJECT WORK BASED UPON ACTUAL DETAILS AND DIMENSIONS WHICH HAVE BEEN VERIFIED IN THE FIELD.

SEALING OF CONCRETE SURFACES

EPOXY–URETHANE SHALL BE THE "LIGHT NEUTRAL" COLOR MEETING FEDERAL COLOR STANDARD NO. 17778 AS PER THE DETAILS IN THE PLANS.

ASBESTOS NOTIFICATION:

AN ASBESTOS SURVEY OF THE GIBSON ST. BRIDGE OVER I–680 SCHEDULED FOR REHABILITATION WAS CONDUCTED BY A CERTIFIED ASBESTOS HAZARD EVALUATION SPECIALIST. THE SURVEY DETERMINED THAT NO ASBESTOS IS PRESENT ON THE BRIDGE.

A COPY OF THE OHIO ENVIRONMENTAL PROTECTION AGENCY (OEPA) NOTIFICATION OF THE DEMOLITION AND RENOVATION FORM, PARTIALLY COMPLETED AND SIGNED BY THE BRIDGE OWNER WILL BE PROVIDED TO THE SUCCESSFUL BIDDER. THE CONTRACTOR SHALL COMPLETE THE FORM AND SUBMIT IT TO:

MAHONING–TRUMBULL AIR
POLLUTION CONTROL
OAK HILL/RENAISSANCE PLACE
SECOND FLOOR, ROOM 25
345 OAK HILL AVENUE
YOUNGSTOWN, OHIO 44502
ROBERT RAMHOFF, DIRECTOR
(330)744–1928
FAX (330)744–1928

AT LEAST TEN (10) WORKING DAYS PRIOR TO START OF THE BRIDGE DEMOLITION WORK, THE CONTRACTOR SHALL PROVIDE A COPY OF THE COMPLETED FORM TO THE ENGINEER.

INFORMATION REQUIRED ON THE FORM WILL INCLUDE: THE CONTRACTOR'S NAME AND ADDRESS, THE SCHEDULED DATES FOR THE START AND COMPLETION OF THE BRIDGE REMOVAL OR RENOVATION AND A DESCRIPTION OF THE PLANNED DEMOLITION OR RENOVATION WORK AND THE METHOD(S) TO BE USED. A COPY OF THE OEPA FORM IS AVAILABLE FOR INSPECTION AT THE ODOT DISTRICT 4 OFFICE, 705 OAKWOOD STREET, RAVENNA, OHIO 44266.

BASIS FOR PAYMENT: THE CONTRACTOR SHALL FURNISH ALL FEES, LABOR, AND MATERIAL NECESSARY TO COMPLETE AND SUBMIT THE OEPA NOTIFICATION FORM. PAYMENT FOR THIS WORK SHALL BE INCLUDED IN ITEM 202 – PORTIONS OF STRUCTURE REMOVED, OVER 20' SPAN, AS PER PLAN.

REQUIRED MINIMUM BAR LAP LENGTHS *

BAR SIZE	OTHER	TOP
#4	1'–11"	2'–9"
#5	2'–5"	3'–5"
#6	2'–11"	4'–1"
#7	3'–8"	5'–2"
#8	4'–11"	6'–10"
#9	6'–2"	8'–8"
#10	7'–10"	11'–0"
#11	9'–8"	13'–6"

* UNLESS NOTED OTHERWISE IN PLANS.

INSPECTION OF EXISTING STRUCTURAL STEEL

THE ENGINEER WILL VISUALLY INSPECT ALL EXISTING TOP FLANGE COVER PLATE FILLET WELDS TO ENSURE THE WELDS, PLATES AND BEAMS ARE FREE OF DEFECTS AND CRACKS. IF NECESSARY, REMOVE ALL DECK SLAB HAUNCH FORMS IMMEDIATELY ADJACENT TO SUCH WELDS THAT MAY INTERFERE WITH THE ENGINEER'S INSPECTION. THE INSPECTION WILL NOT TAKE PLACE UNTIL THE TOP FLANGES ARE CLEANED ACCORDING TO 511.10, BUT IT WILL BE DONE BEFORE THE DECK SLAB REINFORCEMENT IS INSTALLED. THE DEPARTMENT WILL PAY FOR THE COST ASSOCIATED WITH THIS INSPECTION WITH ITEM 511, SUPERSTRUCTURE CONCRETE. THE ENGINEER WILL REPORT ALL CRACKS FOUND TO THE OFFICE OF CONSTRUCTION ADMINISTRATION, BRIDGE CONSTRUCTION SPECIALIST, ALONG WITH SPECIFIC INFORMATION ON LOCATION OF THE CRACKS, LENGTH, AND DEPTH SO AN EVALUATION AND REPAIR OR REPLACEMENT RECOMMENDATION CAN BE MADE.

ABBREVIATIONS

B.S.	BOTH SIDES	U.N.	UNLESS NOTED
N.S.	NEAR SIDE	SPL.	SPLICE
F.S.	FAR SIDE	CLR.	CLEAR
SER.	SERIES	EA.	EACH
TYP.	TYPICAL	MIN.	MINIMUM
EQ.	EQUAL	EXIST.	EXISTING
DIM.	DIMENSION	BM.	BEAM
SPA.	SPACES	BOT.	BOTTOM
FRWD.	FORWARD	P.E.J.F.	PREFORMED EXPANSION JOINT FILLER
ABUT.	ABUTMENT		
REHAB.	REHABILITATION	PERF.	PERFORATED
VAR.	VARIES	C.P.P.	CORRUGATED PLASTIC PIPE
SIM.	SIMILAR		
OPP.	OPPOSITE	C.M.P.	CORRUGATED METAL PIPE

DESIGN AGENCY
GPD ASSOCIATES
GLAUS PYLE SCHOMER BURNS & DEHAVEN INC.

DESIGNED	DRAWN	REVIEWED	DATE
L.P.C.	R.H.C.	K.S.J.	3–31–04
CHECKED	REVISED	STRUCTURE FILE NUMBER	
P.J.W.		5007291	

STRUCTURE GENERAL NOTES
BRIDGE NO. MAH – 680 – 0724
GIBSON ST. OVER I–680

MAH–680–7.24/8.34

Cad File: G:\CIVIL\2001169\01\110\DWG\STRUCT\DWG\2001169_11007Y.DWG
Date: 03–31–04 Time: 11:03 AM TW = 0d0'0.00"
Technician: RRYMER

ITEM 516. JACKING AND TEMPORARY SUPPORT OF SUPERSTRUCTURE, AS PER PLAN

THIS WORK CONSISTS OF RAISING OR RE-POSITIONING EXISTING STRUCTURES TO THE DIMENSIONS AND REQUIREMENTS DEFINED IN THE PROJECT PLANS.

SUBMITTAL REQUIREMENTS: AN OHIO REGISTERED ENGINEER SHALL PREPARE, SEAL AND DATE PLANS FOR A JACKING SYSTEM, INCLUDING ANY TEMPORARY OR PERMANENT SUPPORTS, SUFFICIENT TO PERFORM THE WORK DESCRIBED IN THE PLANS. SUBMIT THREE SETS OF THESE PLANS TO THE DIRECTOR FOR APPROVAL AT LEAST THIRTY (30) DAYS BEFORE ACTUAL WORK IS TO BEGIN.

JACKING SUBMITTALS SHALL INCLUDE AT LEAST THE FOLLOWING:

1. THE SIGNATURE AND NUMBER, OR PROFESSIONAL SEAL, OF THE OHIO REGISTERED PROFESSIONAL ENGINEER WHO PREPARED THE SUBMITTAL.
2. CALCULATIONS AND ANALYSES OF THE STRUCTURE TO DETERMINE AND DEFINE THE ACTUAL LOADING APPLIED AT THE JACKING POINTS.
3. A DRAWING SHOWING THE PHYSICAL AND DIMENSIONAL POSITION OF THE JACKS WITH RESPECT TO THE STRUCTURE INCLUDING CLEARANCES AND CENTER OF LIFT.
4. A SCHEMATIC LAYOUT OF JACKS, CHECK VALVES, PUMPS WITH 3 WAY RETRACTOR VALVE, PRESSURE GAGES, FLOW CONTROL VALVES, ETC. IN ACCORDANCE WITH MANUFACTURER'S RECOMMENDATIONS. ALL JACKS FOR EACH ABUTMENT OR PIER SHALL BE CONNECTED TOGETHER. ALL JACKS AT EACH ABUTMENT OR PIER SHALL BE THE SAME SIZE.
5. ANALYSIS AND CALCULATIONS OF THE STRESSES INDUCED OR CREATED IN THE STRUCTURE AND ANY TEMPORARY OR PERMANENT SUPPORTS. DESIGN CALCULATIONS FOR ANY TEMPORARY OR PERMANENT SUPPORTS.
6. PHYSICAL DIMENSIONS, MATERIALS, AND FABRICATION DETAILS OF ANY TEMPORARY OR PERMANENT SUPPORTS. HORIZONTAL AND VERTICAL MOVEMENT RESTRAINT SHALL BE PROVIDED.
7. A STEP BY STEP PROCEDURE DETAILING ALL STEPS IN THE JACKING OPERATION.
8. METHOD OF ATTACHMENT TO STRUCTURAL MEMBERS. WELDING TO TENSION AREAS WILL NOT BE PERMITTED.

JACKING SYSTEM REQUIREMENTS:

THE ENTIRE SYSTEM INCLUDING JACKS SHALL HAVE 20% MORE CAPACITY THAN REQUIRED BASED ON CALCULATED LOADS. FOR LIFTS GREATER THAN 1 INCH, JACKS SHALL HAVE LOCKING NUTS TO POSITIVELY LOCK AND SUPPORT THE STRUCTURE DURING THE LIFT. JACKS SHALL HAVE A SWIVEL LOAD CAP, A DOMED PISTON HEAD OR SOME OTHER DEVICE TO PROTECT AGAINST THE EFFECTS OF SIDE LOAD ON THE JACK. DO NOT USE JACKS ALONE TO SUPPORT LOADS EXCEPT DURING THE ACTUAL JACKING OPERATION. USE TEMPORARY SUPPORTS, BLOCKING OR OTHER METHODS APPROVED BY THE DIRECTOR. DO NOT USE SINGLE ACTING RAMS WITH NO OVER-TRAVEL PROTECTION SYSTEM. HAVE SPARE EQUIPMENT AVAILABLE ON SITE IN ORDER TO PROCEED WITH THE JACKING IN THE EVENT OF BREAKDOWN. PROVIDE A LIST OF SPARE EQUIPMENT TO THE ENGINEER.

JACKING OPERATION REQUIREMENTS:

AT A MINIMUM, A JACKING OPERATION SHALL LIFT ALL BEAMS AT ANY ONE ABUTMENT OR PIER SIMULTANEOUSLY. THE ONLY EXCEPTION IS THE SITUATION WHERE THE WORK INVOLVES REPLACING OR REHABILITATING INDIVIDUAL BEARINGS; NO PERMANENT SHIMMING IS REQUIRED AND THE HEIGHT OF THE LIFT SHALL NOT EXCEED ¼ INCH. THE MAXIMUM DIFFERENTIAL JACKING HEIGHT BETWEEN ANY ADJACENT ABUTMENTS OR PIERS SHALL BE 1 INCH OR LESS. IF THIS 1 INCH LIMIT IS TO BE EXCEEDED, PROVIDE CALCULATIONS SHOWING THAT THE SUPERSTRUCTURE COMPONENTS WILL NOT BE TEMPORARILY STRESSED BEYOND ALLOWABLE STRESSES AND THAT NO PERMANENT STRESSES WILL BE INDUCED IN THE COMPONENTS AFTER THEY OBTAIN THEIR FINAL POSITION. IF, DURING THE JACKING OPERATIONS, CRACKING OF THE CONCRETE SUPERSTRUCTURE, SEPARATION OF THE CONCRETE DECK FROM THE STEEL STRINGERS, OR OTHER DAMAGE TO THE STRUCTURE IS VISUALLY OBSERVED, IMMEDIATELY CEASE THE JACKING OPERATION AND INSTALL SUPPORTS TO THE SATISFACTION OF THE ENGINEER. ANALYZE THE DAMAGE AND SUBMIT A METHOD OF CORRECTION TO THE ENGINEER FOR APPROVAL. EPOXY INJECT ALL BEAMS THAT SEPARATE FROM THE DECK FOR THE DISTANCE OF THE SEPARATION IN ACCORDANCE WITH ODOT'S PROPOSAL NOTE "CONCRETE REPAIR BY EPOXY INJECTION". THE DEPARTMENT WILL NOT PAY FOR THE COST OF THIS EPOXY INJECTION OR OTHER REQUIRED REPAIRS. THE BRIDGE BEARINGS SHALL BE FULLY SEATED AT ALL CONTACT AREAS. IF FULL SEATING IS NOT ATTAINED, SUBMIT A REPAIR PLAN TO THE ENGINEER. THE DEPARTMENT WILL NOT PAY FOR THE REPAIR COSTS TO ENSURE FULL SEATING ON BEARINGS.

METHOD OF MEASUREMENT:

THE DEPARTMENT WILL MEASURE THIS WORK ON A LUMP SUM BASIS.

BASIS OF PAYMENT:

THE DEPARTMENT WILL PAY FOR THE ACCEPTED QUANTITIES AT THE CONTRACT PRICE FOR ITEM 516, JACKING AND TEMPORARY SUPPORT OF SUPERSTRUCTURE, AS PER PLAN.

ITEM 516 SEMI-INTEGRAL ABUTMENT EXPANSION JOINT SEAL, AS PER PLAN

INSTALL A 3 FOOT WIDE NEOPRENE SHEET AT LOCATIONS SHOWN IN THE PLANS. SECURE THE NEOPRENE SHEETING TO THE CONCRETE WITH 1 1/4" X #10 GAGE (LENGTH X SHANK DIAMETER) GALVANIZED BUTTON HEAD SPIKES THROUGH A 1 INCH OUTSIDE DIAMETER, #10 GAGE GALVANIZED WASHER. MAXIMUM FASTENER SPACING IS 9 INCHES. USE OF OTHER SIMILAR GALVANIZED DEVICES WHICH WILL NOT DAMAGE EITHER THE NEOPRENE OR THE CONCRETE MAY BE USED SUBJECT TO THE APPROVAL OF THE ENGINEER.

CENTER THE NEOPRENE STRIPS ON ALL JOINTS. FOR HORIZONTAL JOINTS, SECURE THE HORIZONTAL NEOPRENE STRIP BY USING A SINGLE LINE OF FASTENERS, STARTING AT 6 INCHES, +/-, FROM THE TOP OF THE NEOPRENE STRIP. FOR THE VERTICAL JOINTS SECURE THE VERTICAL NEOPRENE STRIP BY USING A SINGLE VERTICAL LINE OF FASTENERS, STARTING AT 6 INCHES, +/-, FROM THE VERTICAL EDGE OF THE NEOPRENE STRIP NEAREST TO THE CENTERLINE OF ROADWAY. FOR VERTICAL JOINTS, INSTALL 2 ADDITIONAL FASTENERS AT 6 INCHES, CENTER TO CENTER, ACROSS THE TOP OF THE NEOPRENE STRIP ON THE SAME SIDE OF THE VERTICAL JOINT AS THE SINGLE VERTICAL ROW OF FASTENERS IS LOCATED.

THE VERTICAL NEOPRENE STRIPS SHOULD COMPLETELY OVERLAP THE HORIZONTAL STRIPS. LAP LENGTHS OF THE HORIZONTAL STRIPS THAT ARE NOT VULCANIZED OR ADHESIVE BONDED, SHALL BE AT LEAST 1 FOOT IN LENGTH, OR 6 INCHES IN LENGTH IF THE LAP IS VULCANIZED OR ADHESIVE BONDED. NO LAPS ARE ACCEPTABLE IN VERTICALLY INSTALLED NEOPRENE STRIPS.

THE NEOPRENE SHEETING SHALL BE 3/32" THICK GENERAL PURPOSE, HEAVY DUTY NEOPRENE SHEET WITH NYLON FABRIC REINFORCEMENT. THE SHEETING SHALL BE "FAIRPRENE NUMBER NN-0003", BY E. I. DUPONT DE NEMOURS AND COMPANY, INC., "WINGPRENE" BY THE GOODYEAR TIRE AND RUBBER COMPANY, OR AN APPROVED ALTERNATE. THE NEOPRENE SHEETING SHALL CONFORM TO THE FOLLOWING:

DESCRIPTION OF TEST	ASTM METHOD	REQUIREMENT
THICKNESS, INCHES	D 751	0.094" +/- .01
BREAKING STRENGTH, GRAB, LBS, MIN. (LONG x TRANS.)	D 751	700 X 700
ADHESIVE STRIP, 1" WIDE x 2" LONG, LBS. MIN.	D 751	9
BURST STRENGTH PSI, MIN.	D 751	1400
HEAT AGING 70 HOURS, 212° F, 180° BEND WITHOUT CRACKING	D 2136	NO CRACKING OF COATING
LOW TEMPERATURE BRITTLENESS, 1 HR, -40° F, BEND AROUND 1/4" MANDREL	D 2136	NO CRACKING OF COATING

METHOD OF MEASUREMENT:

THE DEPARTMENT WILL MEASURE THE TOTAL LENGTH OF JOINT TO BE SEALED BY THE NUMBER OF FEET.

BASIS OF PAYMENT:

THE DEPARTMENT WILL PAY FOR ACCEPTED QUANTITIES AT THE CONTRACT PRICE FOR ITEM 516, SEMI-INTEGRAL ABUTMENT EXPANSION JOINT SEAL, AS PER PLAN.

BONDING GROUT

THE BONDING GROUT TO BE USED BETWEEN OLD AND NEW CONCRETE SHALL BE "SIKA ARMATEC 110" AS MANUFACTURED BY SIKA CORPORATION, 201 POLITO AVENUE, LYNDHURST, NEW JERSEY 07071; "EUCO NO. 452 EPOXY SYSTEM" AS MANUFACTURED BY THE EUCLID CHEMICAL CO., 19218 REDWOOD ROAD, CLEVELAND, OHIO 44110; "CONCRESIVE STANDARD LIQUID" AS MANUFACTURED BY MASTER BUILDERS, INC., 23700 CHAGRIN BOULEVARD, CLEVELAND, OHIO 44122; OR AN APPROVED ALTERNATE. SURFACE PREPARATION MIXING AND PLACING OF GROUT SHALL BE IN ACCORDANCE WITH THE MANUFACTURER'S INSTRUCTION. BONDING GROUT IS INCLUDED WITH ITEM 511, CLASS C CONCRETE, ABUTMENT.

ESTIMATED QUANTITIES

CALCULATED: R.H.C. DATE: 11/14/02
CHECKED: P.J.W. DATE: 11/14/02

	ITEM	EXT	TOTAL	UNITS	DESCRIPTION	ABUT	PIER	SUPER	GENERAL	A.P.P. REF. SHT. NO.
	202	11203	LUMP		PORTIONS OF STRUCTURE REMOVED, OVER 20 FOOT SPAN, AS PER PLAN				LUMP	2
	503	21301	LUMP		UNCLASSIFIED EXCAVATION, AS PER PLAN	LUMP				2
	509	10000	154,148	POUND	EPOXY COATED REINFORCING STEEL	6,025	3,851	144,272		
	510	10000	369	EACH	DOWEL HOLES WITH NON-SHRINK, NON-METALLIC GROUT	177	192			
	511	43200	29	CU YD	CLASS C CONCRETE, PIER		29			
	511	45700	66	CU YD	CLASS C CONCRETE, ABUTMENT	66				
	511	50001	438	CU YD	CLASS HP CONCRETE, BRIDGE DECK, AS PER PLAN			438		3
	511	50100	57	CU YD	CLASS HP CONCRETE, BRIDGE DECK (PARAPET)			57		
	511	52000	LUMP		CLASS HP CONCRETE, TEST SLAB				LUMP	
	513	20000	3,852	EACH	WELDED STUD SHEAR CONNECTORS			3,852		
▲	514	00050	1,000	SQ FT	SURFACE PREPARATION OF EXISTING STRUCTURAL STEEL				1,000	
▲	514	00056	1,000	SQ FT	FIELD PAINTING OF EXISTING STRUCTURAL STEEL, PRIME COAT				1,000	
▲	514	00060	1,000	SQ FT	FIELD PAINTING STURCTURAL STEEL, INTERMEDIATE COAT				1,000	
▲	514	00066	1,000	SQ FT	FIELD PAINTING STRUCTURAL STEEL, FINISH COAT				1,000	
	514	00101	LUMP		SURFACE PREPARATION OF EXISTING STRUCTURAL STEEL, PRESSURE WASHING, AS PER PLAN				LUMP	3
◑	514	00504	8	MAN HR	GRINDING FINS, TEARS, SLIVERS ON EXISTING STRUCTURAL STEEL				8	
	516	13600	22	SQ FT	1" PREFORMED EXPANSION JOINT FILLER	22				
	516	13900	32	SQ FT	2" PREFORMED EXPANSION JOINT FILLER	32				
	516	14021	111	FT	SEMI-INTEGRAL ABUTMENT EXPANSION JOINT SEAL, AS PER PLAN	111				3
	516	44101	12	EACH	ELASTOMERIC BEARING WITH INTERNAL LAMINATES AND LOAD PLATE (9"x 14"x 2.94" THICK), AS PER PLAN			12		10
	516	44101	6	EACH	ELASTOMERIC BEARING WITH INTERNAL LAMINATES AND LOAD PLATE (12"x 19"x 2.75" THICK), AS PER PLAN			6		10
	516	44101	6	EACH	ELASTOMERIC BEARING WITH INTERNAL LAMINATES AND LOAD PLATE (11.5"x 20"x 2.13" THICK), AS PER PLAN			6		10
	516	44101	6	EACH	ELASTOMERIC BEARING WITH INTERNAL LAMINATES AND LOAD PLATE (13"x 20"x 2.94" THICK), AS PER PLAN			6		10
	516	47001	LUMP		JACKING AND TEMPORARY SUPPORT OF SUPERSTRUCTURE, AS PER PLAN				LUMP	3
	518	21230	LUMP		POROUS BACKFILL WITH FILTER FABRIC	LUMP				
	518	40000	144	FT	6" PERFORATED CORRUGATED PLASTIC PIPE	144				
	518	40011	52	FT	6" NON-PERFORATED CORRUGATED PLASTIC PIPE, INCLUDING SPECIALS	52				
◪	519	11101	177	SQ FT	PATCHING CONCRETE STRUCTURE, AS PER PLAN		118		59	3
	526	15001	216	SQ YD	REINFORCED CONCRETE APPROACH SLABS (T=13"), AS PER PLAN			216		15,16
	SPECIAL	60739900	259	FT	SPECIAL-VANDAL PROTECTION FENCE, 6' STRAIGHT, COATED FABRIC	7		252		
	SPECIAL	60739930	287	FT	SPECIAL-VANDAL PROTECTION FENCE, 12' CURVED, COATED FABRIC	35		252		
	864	10100	1,225	SQ YD	SEALING OF CONCRETE SURFACES (EPOXY-URETHANE)	100	376	749		

▲ ITEM 514 - AN ALLOWANCE OF 1,000 SQ. FT. HAS BEEN INCLUDED FOR SPOT PAINTING OF EXISTING STRUCTURAL STEEL.

◑ ITEM 514 - AN ALLOWANCE OF 8 MAN HOUR HAS BEEN INCLUDED FOR SPOT PAINTING OF EXISTING STRUCTURAL STEEL.

◪ ITEM 519 - AN ALLOWANCE OF 59 SQ. FT. HAS BEEN INCLUDED FOR FUTURE DETERIORATION.

CONCRETE PARAPETS

AS SOON AS A CONCRETE SAW CAN BE OPERATED WITHOUT DAMAGING THE FRESHLY PLACED CONCRETE, SAW CUT 1 1/4 INCH DEEP CONTROL JOINTS INTO THE PERIMETER OF THE CONCRETE PARAPET STARTING AND ENDING AT THE SIDEWALK. PLACE THE SAWCUTS AT THE SPACINGS SHOWN IN THE PLANS. USE AN EDGE GUIDE, FENCE, OR JIG TO ENSURE THAT THE CUT JOINT IS STRAIGHT, TRUE AND ALIGNED ON ALL FACES OF THE PARAPET. THE JOINT WIDTH SHALL BE THE WIDTH OF THE SAW BLADE, A NOMINAL WIDTH OF 1/4 INCH. SEAL THE PERIMETER OF THE DEFLECTION CONTROL JOINT TO A MINIMUM DEPTH OF 1 INCH WITH A POLYURETHANE OR POLYMERIC MATERIAL CONFORMING TO ASTM C920, TYPE S. LEAVE THE BOTTOM 1/2" OF THE INSIDE AND OUTSIDE FACE UNSEALED TO ALLOW WATER TO ESCAPE.

ITEM 503, UNCLASSIFIED EXCAVATION, AS PER PLAN

THE BACKFILL MATERIAL BEHIND THE ABUTMENTS SHALL BE TYPE B GRANULAR MATERIAL, 703.16.C, PLACED AND COMPACTED IN 6 INCH LIFTS.

ITEM 511 - CLASS HP CONCRETE, BRIDGE DECK, AS PER PLAN

EXPANDED POLYSTYRENE FILLER OR REMOVABLE FORMS SHALL BE USED IN FORMING TO PROVIDE THE CLEARANCE REQUIRED BETWEEN THE ABUTMENT AND SUPERSTRUCTURE AND SHALL BE INCLUDED WITH ITEM 511 - CLASS HP CONCRETE, BRIDGE DECK, AS PER PLAN.

ITEM 514 - FIELD PAINTING OF STRUCTURAL STEEL

THE CONTRACTOR SHALL MATCH EXISTING COLOR AND FINISH FOR AREAS TO BE SPOT PAINTED TO THE SATISFACTION OF THE ENGINEER. ODOT RECORDS INDICATE THAT THE STRUCTURE WAS PREVIOUSLY PAINTED WITH "BLUE" COLOR MEETING FEDERAL COLOR STANDARD NO. 15450.

ITEM 519, PATCHING CONCRETE STRUCTURE, AS PER PLAN

PRIOR TO THE SURFACE CLEANING SPECIFIED IN 519.04 AND WITHIN 24 HOURS OF PLACING PATCHING MATERIAL, BLAST CLEAN ALL SURFACES TO BE PATCHED INCLUDING THE EXPOSED REINFORCING STEEL. ACCEPTABLE METHODS INCLUDE HIGH-PRESSURE WATER BLASTING WITH OR WITHOUT ABRASIVES IN THE WATER, ABRASIVE BLASTING WITH CONTAINMENT, OR VACUUM ABRASIVE BLASTING.

ITEM 514-SURFACE PREPARATION OF EXISTING STEEL, PRESSURE WASHING, AS PER PLAN

THIS WORK CONSISTS OF A PRESSURE WASHING OF THE ENTIRE EXISTING STEEL STRUCTURE IN ACCORDANCE WITH THE PROVISIONS LISTED IN 514.12 AND IS TO INCLUDE ALL LABOR AND MATERIALS TO COMPLETE THE WASHING. PRESSURE WASHING WILL OCCUR PRIOR TO ANY REQUIRED REPAIR PAINTING SURFACE PREPARATION AND REPAIR FIELD PAINTING. IT WILL BE THE CONTRACTORS RESPONSIBILITY TO SCHEDULE THE WASHING WITHIN THE GUIDELINES ESTABLISHED IN THE MAINTENANCE OF TRAFFIC PLAN UNLESS A SEPARATE SCHEDULE IS APPROVED BY THE ENGINEER.

DESIGN AGENCY
GPD ASSOCIATES
GLAUS PYLE SCHOMER BURNS & DEHAVEN INC.

DATE 3-31-04
REVIEWED K.S.J.
STRUCTURE FILE NUMBER 5007291
DRAWN R.H.C.
REVISED
DESIGNED L.P.C.
CHECKED P.J.W.

ESTIMATED QUANTITIES & STRUCTURE GENERAL NOTES
BRIDGE NO. MAH - 680 - 0724
GIBSON ST. OVER I-680

MAH-680-7.24/8.34

Cad File: G:\CIVIL\2001169\01\10\DWG\STRUCT\DWG\2001169_110QTY.DWG
Date: 03-30-04 Time: 3:43 PM TW = 0000:00:00
Technician: RRYMER

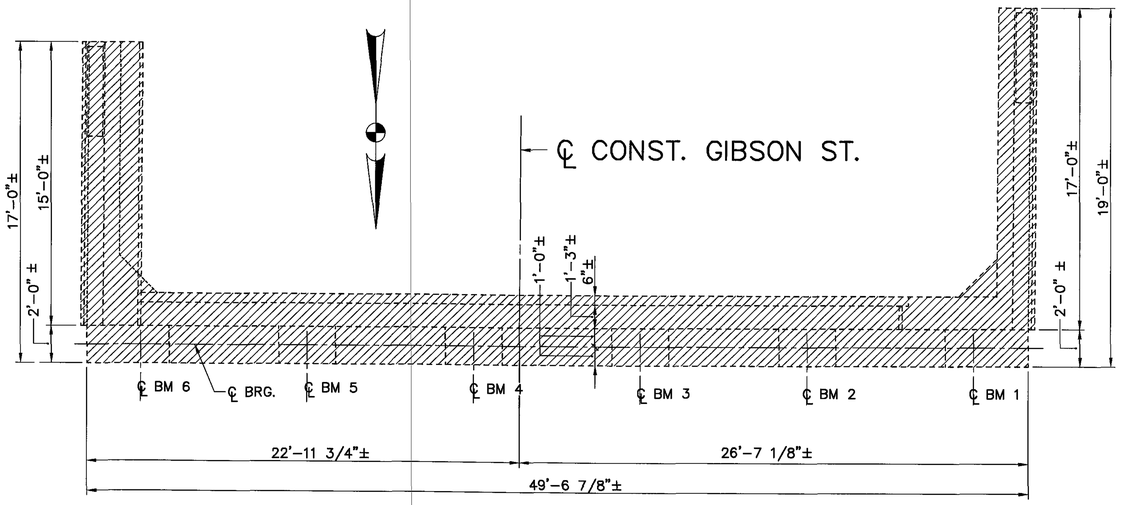

PLAN
REAR ABUT.

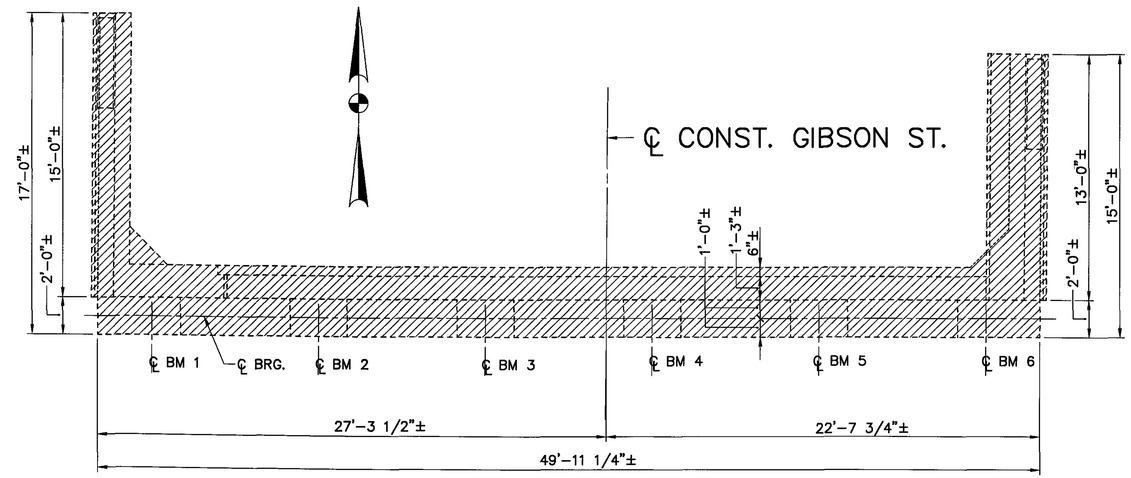

PLAN
FRWD. ABUT.

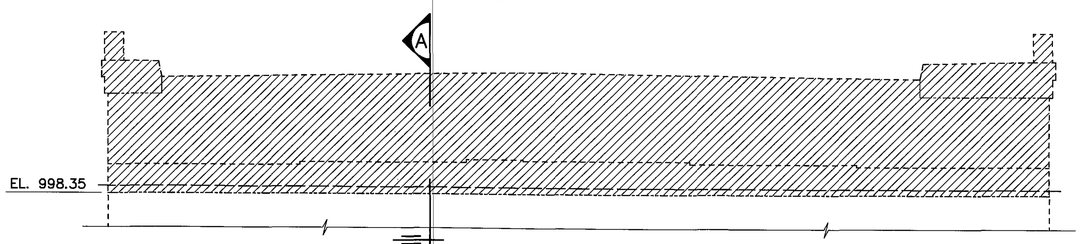

ELEVATION
REAR ABUT.

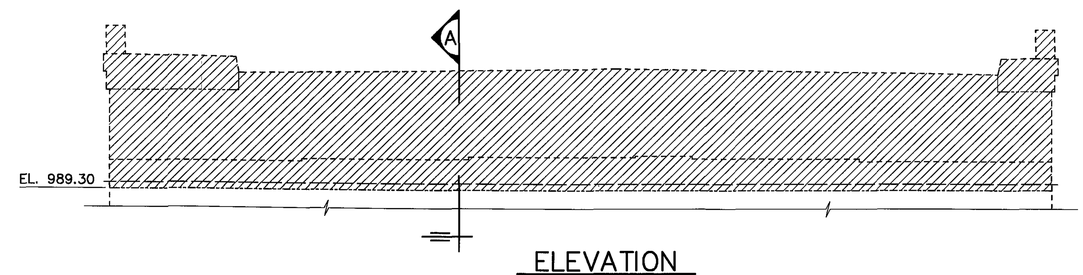

ELEVATION
FRWD. ABUT.

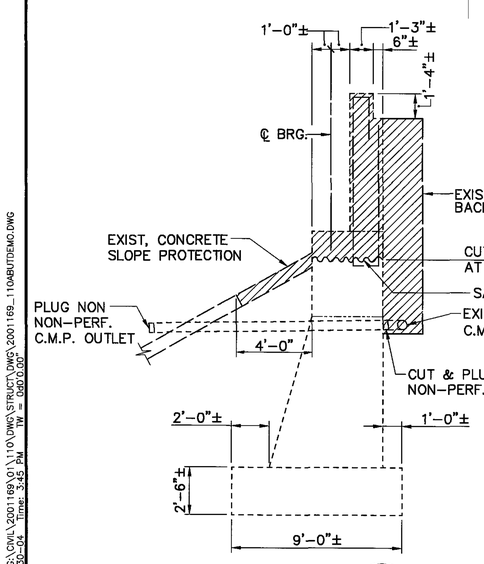

SECTION A

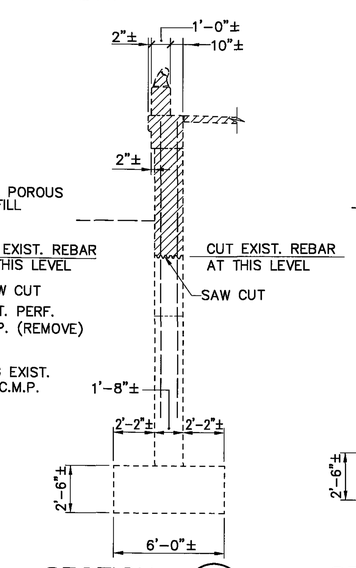

SECTION B

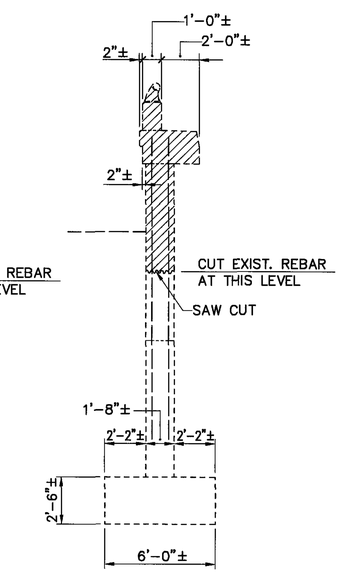

SECTION C

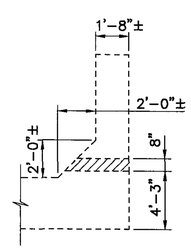

SECTION D
SECTION E SIM.

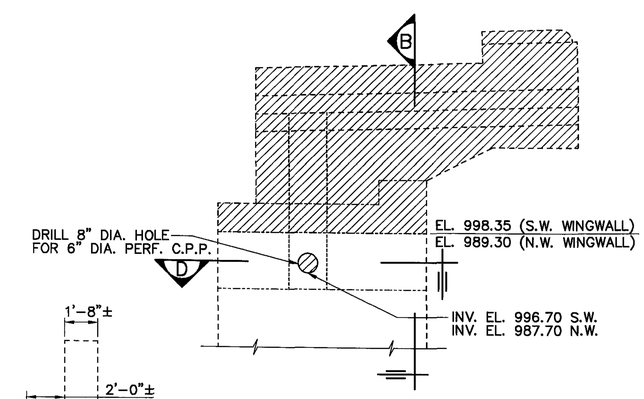

ELEVATION
SOUTHWEST WINGWALL SHOWN
NORTHWEST WINGWALL SIM. BUT OPP. HAND

NOTE: PIPE RAILING NOT SHOWN (TYP.)

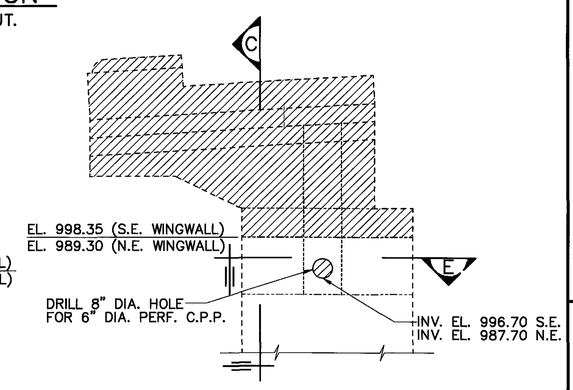

ELEVATION
SOUTHEAST WINGWALL SHOWN
NORTHEAST WINGWALL SIM. BUT OPP. HAND

LEGEND

INDICATES REMOVAL LIMITS, ITEM 202, PORTIONS OF STRUCTURE REMOVED, OVER 20 FT. SPAN, AS PER PLAN

DESIGN AGENCY
CLAUS PYLE SCHOMER BURNS & DEHAVEN INC.
GPD ASSOCIATES
525 South Main Street, Suite 1231 Akron, Ohio 44311
330-972-2100 / Fax 330-972-2101

DATE	REVIEWED	DRAWN	DESIGNED
3-31-04	K.S.J.	R.H.C.	L.P.C.
STRUCTURE FILE NUMBER		REVISED	CHECKED
5007291			P.J.W.

REMOVAL PLAN
BRIDGE NO. MAH – 680 – 0724
GIBSON ST. OVER I-680

MAH-680-7.24/8.34

Cad File: G:\CIVIL\2001169\01\110\DWG\STRUCT\DWG\2001169_110ABUTDEMO.DWG
Date: 03-30-04 Time: 3:45 PM W = 0.00 0.00
Technician: RRYMER

ELEVATIONS			
Ⓐ	Ⓑ	Ⓒ	Ⓓ
1004.21	1004.55	1004.13	1005.53
Ⓕ	Ⓖ	Ⓗ	Ⓙ
1005.85	1005.54	1006.33	1000.56
Ⓚ	Ⓛ	Ⓜ	Ⓝ
1000.71	1000.85	1000.80	1000.64
Ⓟ			
1000.51			

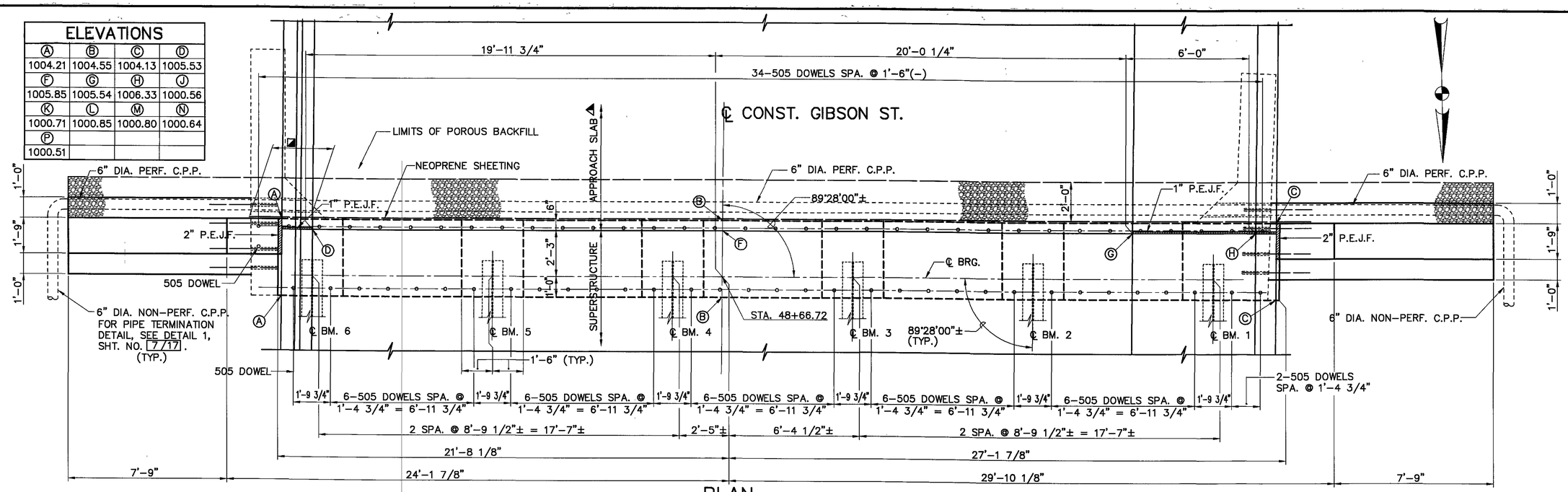

PLAN

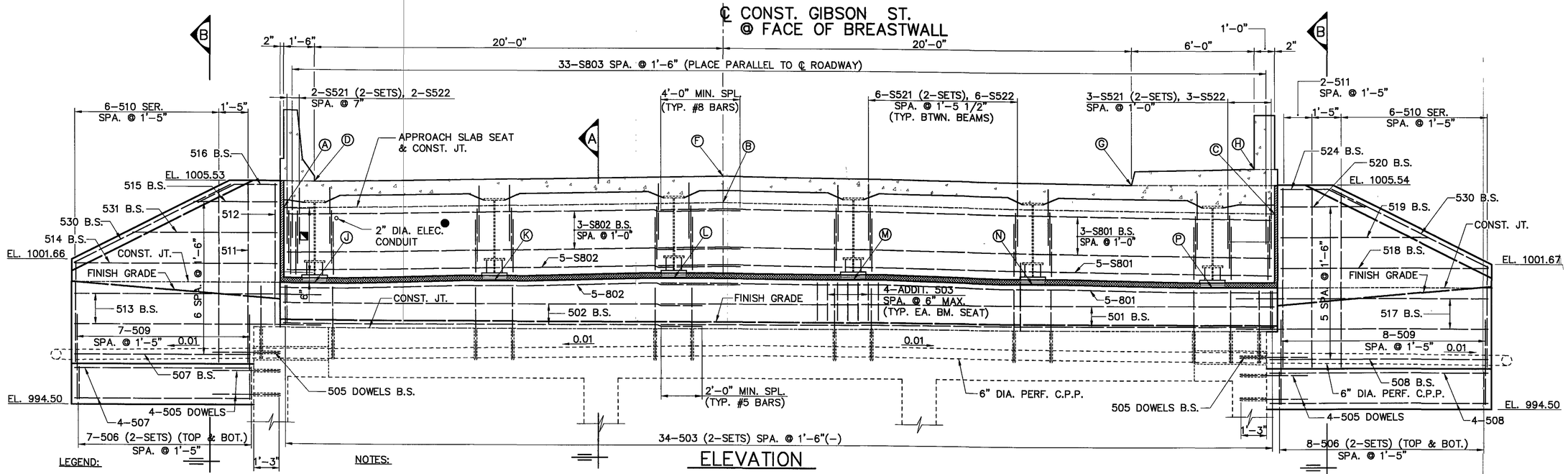

ELEVATION

LEGEND:

- ▲ FOR APPROACH SLAB DETAILS, SEE SHT. NOS. 15/17 & 16/17.
- ◪ INDICATES LIMITS OF VERTICAL NEOPRENE SHEETING, 3'-0" WIDE, TYP. AT ALL WINGWALLS.
- ● INCLUDED WITH LIGHTING QUANTITIES, SHT. NO. 58/107.

NOTES:

1. PREFIX "A" WILL BE ADDED TO ALL REBAR MARKS SHOWN FOR THE ABUTMENTS EXCEPT THOSE REBARS PREFIXED WITH "S". SEE REINFORCING SCHEDULE.
2. ALL REINFORCING SHALL BE EPOXY COATED.
3. MINIMUM CLEARANCE TO REBARS SHALL BE 2" UNLESS OTHERWISE NOTED.
4. FOR SECTIONS A AND B, SEE SHT. NO. 7/17.
5. PRIOR TO PLACEMENT OF NEW CONCRETE, THE EXISTING CONCRETE SURFACE SHALL BE THOROUGHLY CLEANED BY SAND-BLASTING AND/OR OTHER APPROVED METHODS SO THAT IT IS FREE OF LOOSE OF DISINTEGRATED CONCRETE, DUST, LAITANCE, GREASE, RUST AND OTHER FOREIGN MATTER. ALL EXISTING REBARS SHALL BE CLEANED BY WIRE BRUSH OR SANDBLASTING TO REMOVE ANY RUST. A BONDING GROUT SHALL BE USED BETWEEN OLD CONCRETE AND NEW CONCRETE. BONDING GROUT IS INCLUDED WITH ITEM 511, CLASS C CONCRETE, ABUTMENT FOR PAYMENT.
6. FOR BONDING GROUT NOTE, SEE SHT. NO. 3/17.
7. ABUTMENT DIAPHRAGM CONCRETE, STEEL SUPERSTRUCTURE: PLACE THE CONCRETE ENCASING THE STRUCTURAL STEEL MEMBERS WITH THE DECK CONCRETE OR AT LEAST 48 HOURS BEFORE PLACEMENT OF THE DECK CONCRETE.
8. FOR BEARING DETAILS, SEE SHT. NO. 10/17.
9. FOR SLAB DETAILS, SEE SHT. NO. 12/17 AND FOR RAILING DETAILS, SEE SHT. NO. 14/17.

DESIGN AGENCY
CLAUS PFILE SCHOMER BURNS & DEHAVEN INC.
GPD ASSOCIATES
520 South Main Street, Suite 2311, Akron, Ohio 44311
330-572-2100, Fax 330-572-2101

DESIGNED	DRAWN	REVIEWED	DATE
R.H.C.	R.P.R.	K.S.J.	3-31-04
CHECKED	REVISED	STRUCTURE FILE NUMBER	
P.J.W.		5007291	

REAR ABUTMENT
BRIDGE NO. MAH - 680 - 0724
GIBSON ST. OVER I-680

MAH-680-7.24/8.34

Cad File: G:\CIVIL\2001169\01\110\DWG\STRUCT\DWG\2001169_110ABUT.DWG
Date: 03-30-04 Time: 3:46 PM Tw = 0:00:0.00
Technician: RRYMER

ELEVATIONS			
Ⓐ	Ⓑ	Ⓒ	Ⓓ
995.32	995.72	995.38	997.29
Ⓕ	Ⓖ	Ⓗ	Ⓙ
996.50	996.80	996.48	991.62
Ⓚ	Ⓛ	Ⓜ	Ⓝ
991.75	991.89	991.95	991.80
Ⓟ			
991.65			

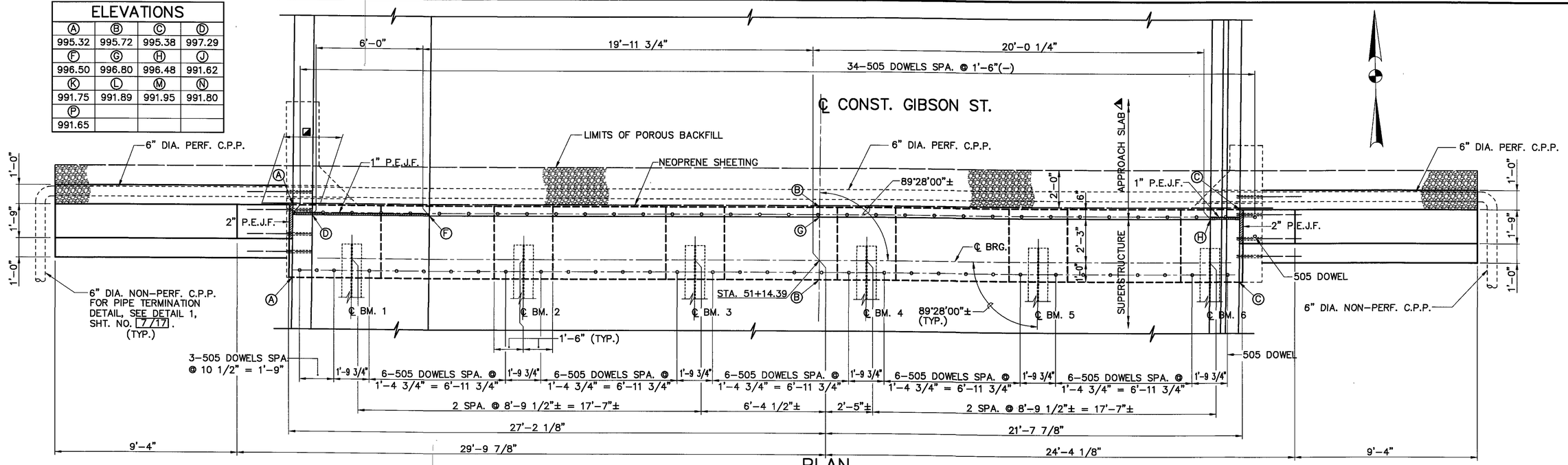

PLAN

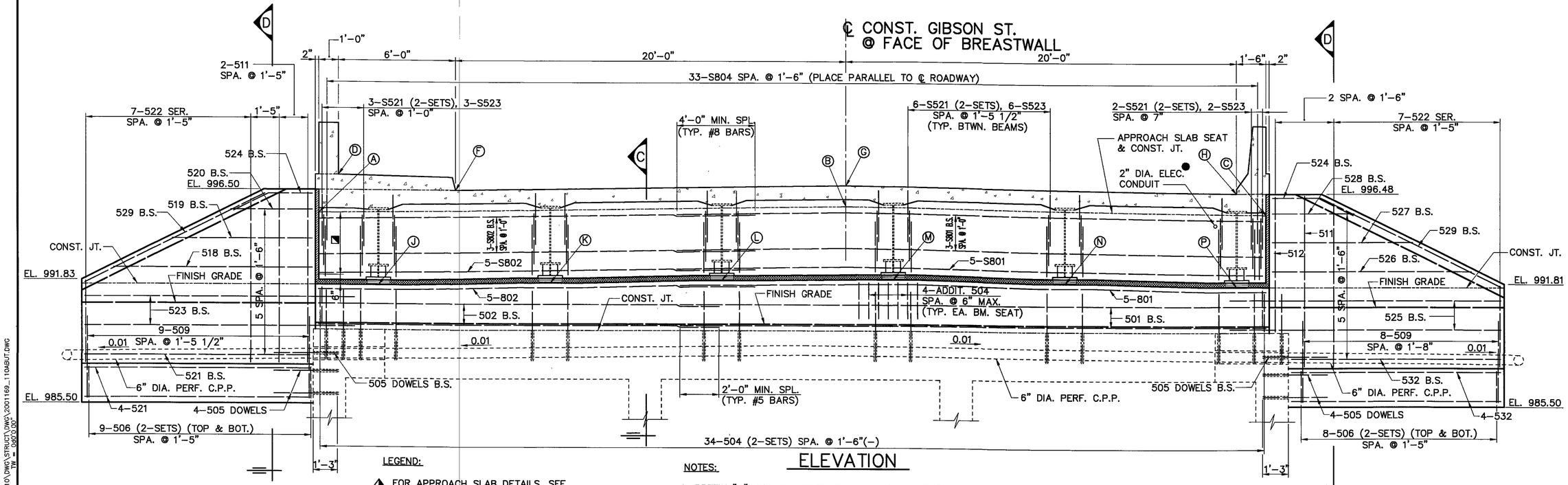

ELEVATION

LEGEND:

▲ FOR APPROACH SLAB DETAILS, SEE SHT. NOS. 15/17 & 16/17.

◪ INDICATES LIMITS OF VERTICAL NEOPRENE SHEETING, 3'-0" WIDE, TYP. AT ALL WINGWALLS.

● INCLUDED WITH LIGHTING QUANTITIES, SHT. NO. 58/107.

NOTES:

1. PREFIX "A" WILL BE ADDED TO ALL REBAR MARKS SHOWN FOR THE ABUTMENTS EXCEPT THOSE REBARS PREFIXED WITH "S". SEE REINFORCING SCHEDULE.
2. ALL REINFORCING SHALL BE EPOXY COATED.
3. MINIMUM CLEARANCE TO REBARS SHALL BE 2" UNLESS OTHERWISE NOTED.
4. FOR SECTIONS C & D, SEE SHT. NO. 7/17.
5. FOR ADDITIONAL NOTES, SEE SHT. NO. 5/17.

DESIGN AGENCY
CLAUS PILE SCHOWER BURNS & DEHAVEN INC.
GPD ASSOCIATES
300 South Main Street, Suite 231, Akron, Ohio 44311
330-572-2100, Fax 330-572-2101

DESIGNED	DRAWN	REVIEWED	DATE
R.H.C.	R.P.R.	K.S.J.	3-31-04
CHECKED	REVISED	STRUCTURE FILE NUMBER	
P.J.W.		5007291	

FORWARD ABUTMENT
BRIDGE NO. MAH - 680 - 0724
GIBSON ST. OVER I-680

MAH-680-7.24/8.34

6/17

67/107

Cad File: G:\CIVIL\20011169\01\110\DWG\STRUCT\DWG\20011169_110ABUT.DWG
Date: 03-30-04 Time: 3:46 PM Yr = 0000.000
Technician: RRYMER

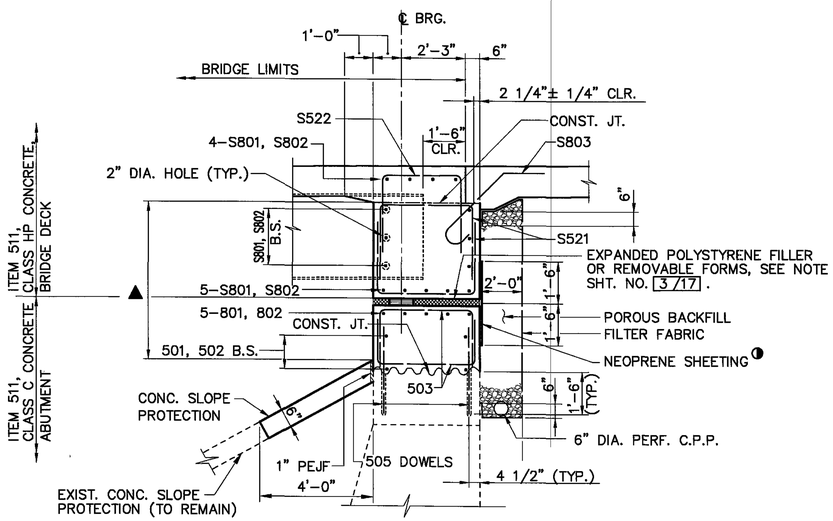

SECTION (A)

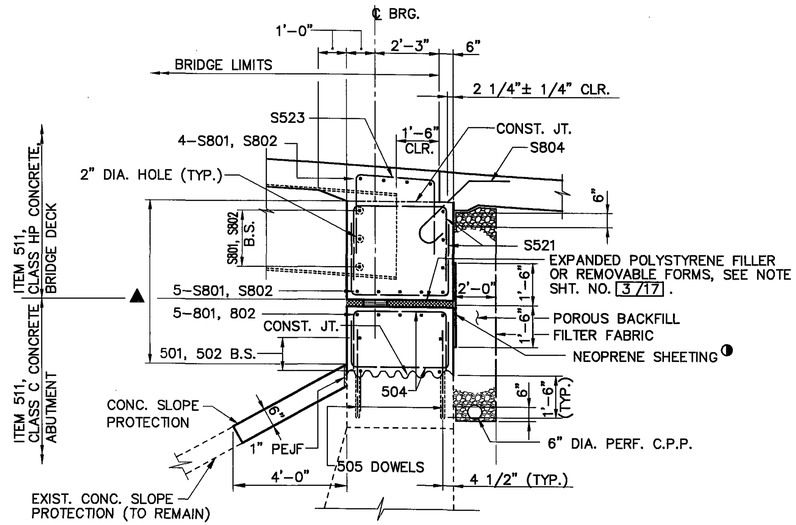

SECTION (C)

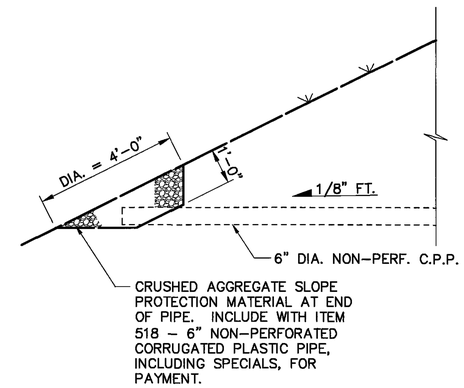

DETAIL (1)

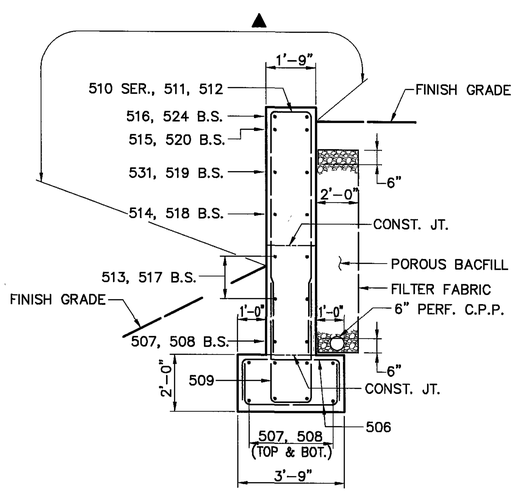

SECTION (B)

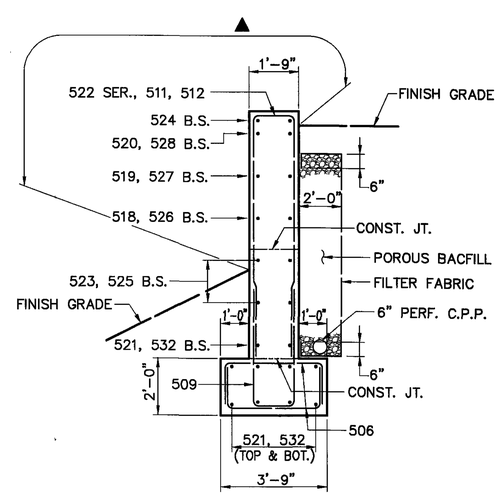

SECTION (D)

NOTES:

1. PREFIX "A" WILL BE ADDED TO ALL REBAR MARKS SHOWN FOR THE ABUTMENTS EXCEPT THOSE REBARS PREFIXED WITH "S". SEE REINFORCING SCHEDULE.
2. ALL REINFORCING SHALL BE EXPOXY COATED.
3. FOR LOCATIONS OF SECTIONS A & B, SEE SHT. NO. 5/17. FOR LOCATIONS OF SECTIONS C & D, SEE SHT. NO. 6/17. FOR LOCATION OF DETAIL 1, SEE SHT. NOS. 5/17 & 6/17.
4. FOR ADDITIONAL NOTES, SEE SHT. NO. 5/17.

◑ NEOPRENE SHEETING, 3'-0" WIDE TO EXTEND FULL LENGTH OF BRG. SEAT PLUS 1'-6" LAP ONTO WINGWALL EA. END.

▲ LIMITS OF "ITEM 864-SEALING OF CONCRETE SURFACES (EPOXY-URETHANE)"

DESIGN AGENCY
CLAUS PILE SCHOMER BURNS & DEWAYNE INC.
GPD ASSOCIATES
320 Springside Drive, Suite 320 Akron, Ohio 44333
330-572-2100, Fax 330-572-2101

DESIGNED	DRAWN	REVIEWED	DATE
R.H.C.	R.P.R.	K.S.J.	3-31-04
CHECKED	REVISED	STRUCTURE FILE NUMBER	
P.J.W.		5007291	

ABUTMENT DETAILS
BRIDGE NO. MAH - 680 - 0724
GIBSON ST. OVER I-680

MAH-680-7.24/8.34

Cad File: G:\CIVIL\2001169\01\110\DWG\STRUCT\DWG\2001169_110ABUT.DWG
Date: 03-30-04 Time: 3:46 PM TW = 0.00'/0.00'
Technician: RRYMER

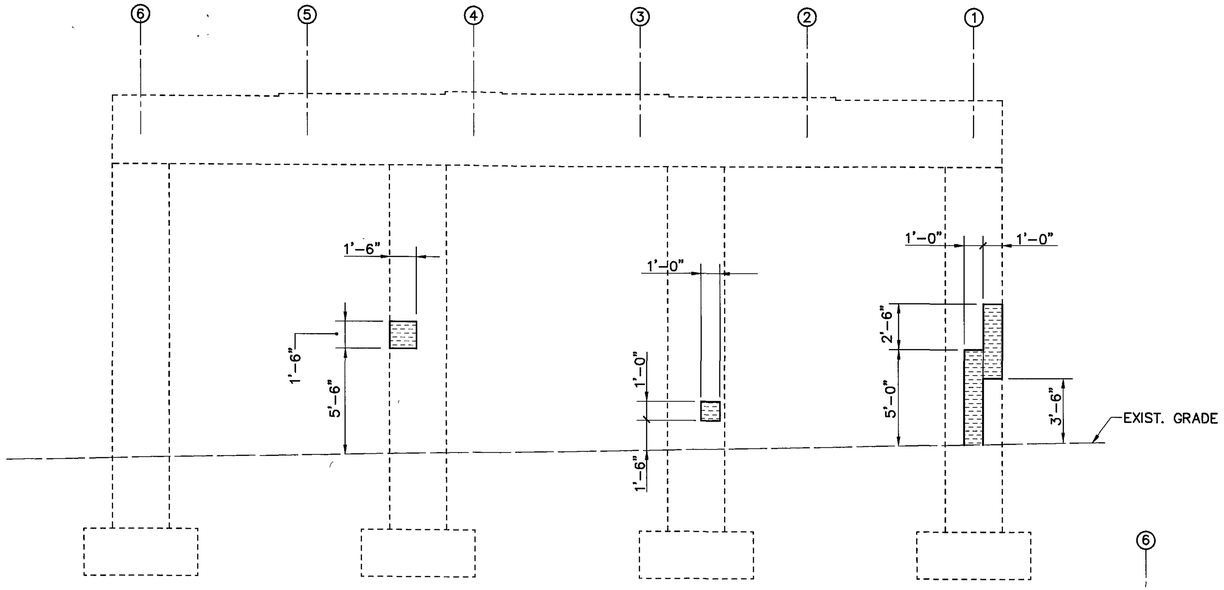

PIER NO. 1 – NORTH ELEV.

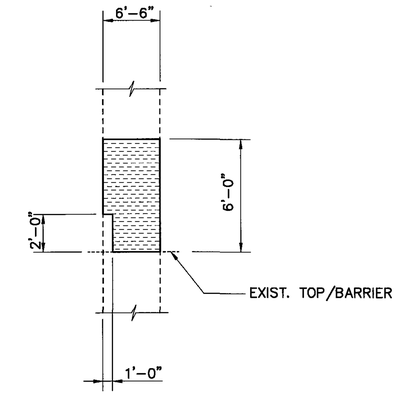

SECTION A

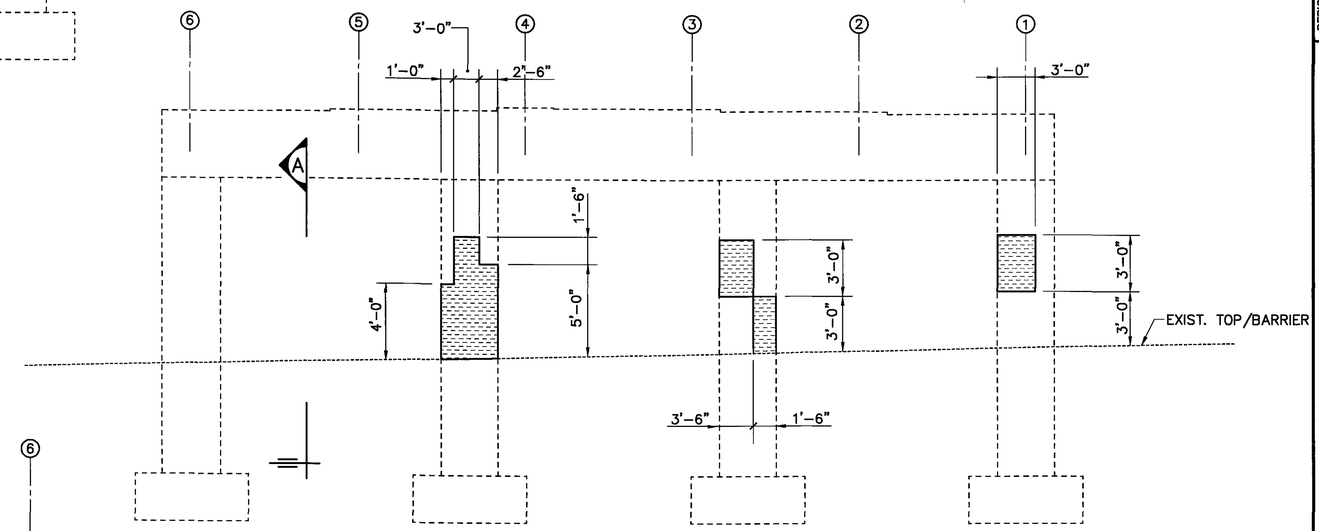

PIER NO. 2 – NORTH ELEV.

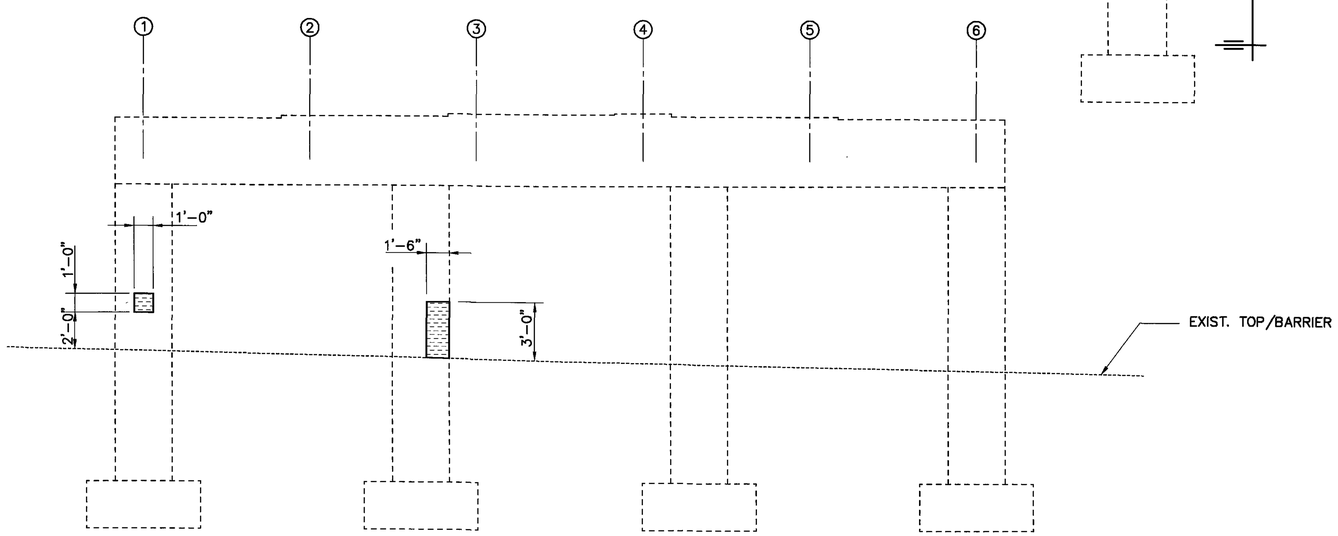

PIER NO. 2 – SOUTH ELEV.

NOTE:

1. FOR PATCHING CONCRETE STRUCTURE NOTE, SEE SHT. NO. 3/17.

LEGEND

INDICATES AREA TO BE PATCHED PER ITEM 519, PATCHING CONCRETE STRUCTURE, AS PER PLAN.

STRUCTURE INSPECTION PERFORMED IN NOVEMBER, 2002.

DESIGN AGENCY
GLAUS PYLE SCHOMER BURNS & DEHAVEN INC.
GPD ASSOCIATES
520 South Main Street, Suite 2531 Akron, Ohio 44311
330-372-2100 - Fax 330-372-2101

DESIGNED	DRAWN	REVIEWED	DATE
R.H.C.	R.P.R.	K.S.J.	3-31-04
CHECKED	REVISED	STRUCTURE FILE NUMBER	
P.J.W.		5007291	

PIER REPAIR DETAILS
BRIDGE NO. MAH – 680 – 0724
GISBOSN ST. OVER I-680

MAH-680-7.24/8.34

Cad File: G:\CIVIL\2001169\01\110\DWG\STRUCT\DWG\2001169_110PIER-PATCH.DWG
Date: 03-30-04 Time: 3:52 PM TN = 0.0070.00"
Technician: RRYMER

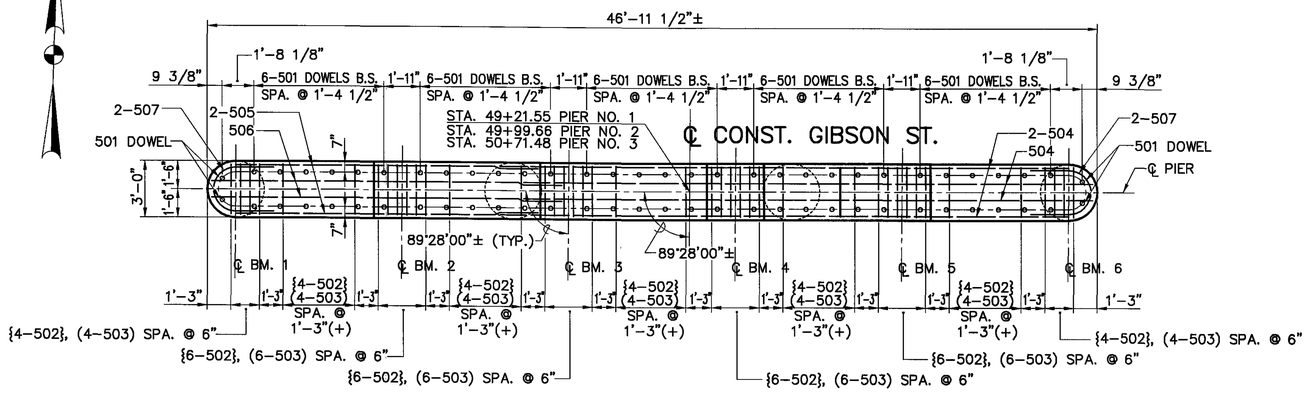

PLAN

{ } INDICATES PIER NO. 1 & 3
( ) INDICATES PIER NO. 2

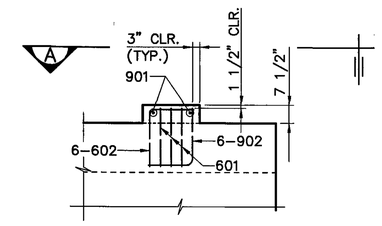

DETAIL 1

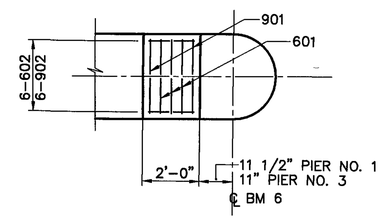

VIEW A

PIER NOS. 1 & 3 ONLY

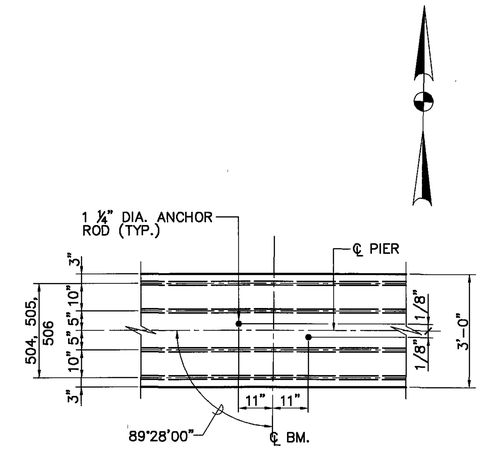

ANCHOR ROD LAYOUT

PIER NO. 2

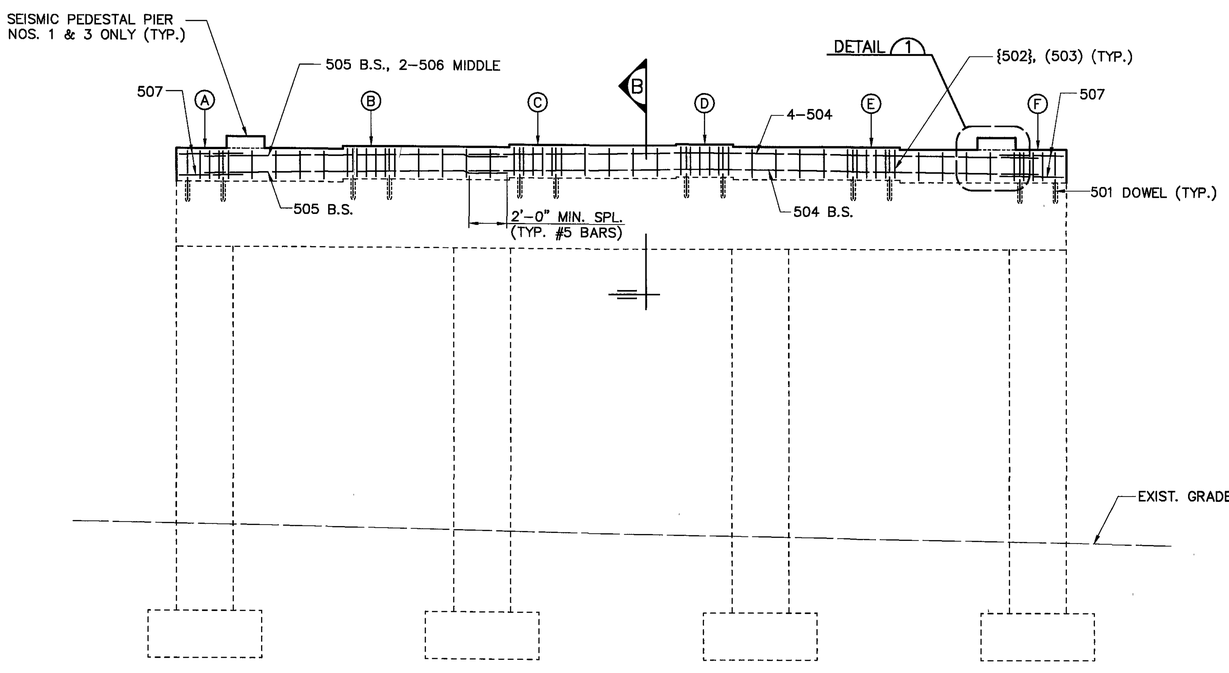

ELEVATION

ELEVATIONS						
	Ⓐ	Ⓑ	Ⓒ	Ⓓ	Ⓔ	Ⓕ
PIER NO. 1	999.45	999.60	999.73	999.80	999.67	999.54
PIER NO. 2	997.34	997.47	997.61	997.66	997.50	997.40
PIER NO. 3	994.51	994.64	994.77	994.85	994.69	994.58

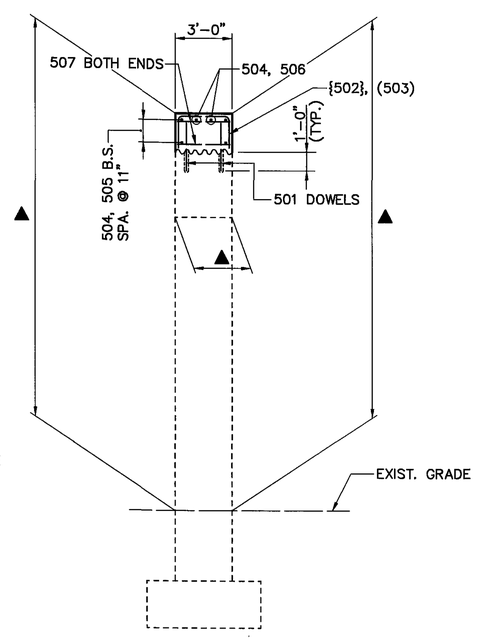

END VIEW

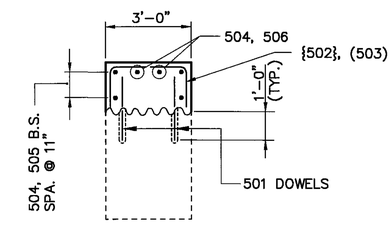

SECTION B

NOTES:

1. PREFIX "P" WILL BE ADDED TO ALL REBAR MARKS FOR THE PIERS. SEE REINFORCING SCHEDULE.
2. ALL REINFORCING STEEL SHALL BE EPOXY COATED.
3. MINIMUM CLEARANCE TO REBARS SHALL BE 2" UNLESS NOTED OTHERWISE.
4. BRIDGE SEAT REINFORCING, SETTING ANCHORS (PIER NO. 2): ACCURATELY PLACE REINFORCING STEEL IN THE VICINITY OF THE BRIDGE SEAT TO AVOID INTERFERENCE WITH THE DRILLING OF BEARING ANCHOR HOLES OR THE PRE-SETTING OF BEARING ANCHORS.
5. FOR BEARING DETAILS, SEE SHT. NO. 10/17 .

LEGEND:

▲ LIMITS OF "ITEM 864 – SEALING OF CONCRETE SURFACES (EPOXY-URETHANE)."

DESIGN AGENCY
GLAUS PYLE SCHOMER BURNS & DEHAVEN INC
GPD ASSOCIATES
525 South Main Street, Suite 231, Akron, Ohio 44311
330-372-2100, Fax 330-372-2101

DESIGNED	DRAWN	REVIEWED	DATE
L.P.C.	R.P.R.	K.S.J.	3-31-04
CHECKED	REVISED	STRUCTURE FILE NUMBER	
P.J.W.		5007291	

PIER REHAB. DETAILS
BRIDGE NO. MAH – 680 – 0724
GIBSON ST. OVER I-680

MAH-680-7.24/8.34

Cad File: G:\CIVIL\2001169\01\110\DWG\STRUCT\DWG\2001169_110PIER-MOD.DWG
Date: 03-30-04 Time: 3:53 PM TW = 0.00'0.00"
Technician: RRYMER

* W/O IMPACT

BEARING SCHEDULE

SUB-STRUCTURE	BEAMS	STEEL LOAD PLATE A	B	E	F	G	H	ELASTOMERIC PAD L	W	T	NO. OF INTER. LAYERS	ti	te	STEEL LAMINATES NO.	THICK.	TYPE	MIN. DEAD LOAD (K)	MAX. DEAD LOAD (K)	LIVE * LOAD (K)	TOTAL LOAD (K)
REAR ABUT.	1 THRU 6	11"	1'-1"	1"	1/2"	1 1/2"	–	9"	1'-2"	2.94"	7	0.28"	0.19"	8	0.0747"	EXP.	45.3	52.9	67.4	120.3
PIER NO. 1	1 THRU 6	1'-2"	1'-9"	1/2"	1/2"	2 1/8"	2 7/16"	1'-1"	1'-8"	2.94"	5	0.39"	0.27"	6	0.0747"	EXP.	113.7	143.3	81.8	225.1
PIER NO. 2	1 THRU 6	1'-0 1/2"	2'-2"	1/2"	3"	2 1/8"	2 5/8"	11 1/2"	1'-8"	2.13"	4	0.33"	0.22"	5	0.0747"	FIX	122.2	153.9	85.2	239.1
PIER NO. 3	1 THRU 6	1'-1"	1'-8"	1/2"	1/2"	2 3/8"	3 1/16"	1'-0"	1'-7"	2.75"	5	0.36"	0.25"	6	0.0747"	EXP.	92.7	117.6	91.2	208.8
FRWD. ABUT.	1 THRU 6	11"	1'-3"	1"	1/2"	1 1/2"	–	9"	1'-2"	2.94"	7	0.28"	0.19"	8	0.0747"	EXP.	37.4	42.9	63.9	106.8

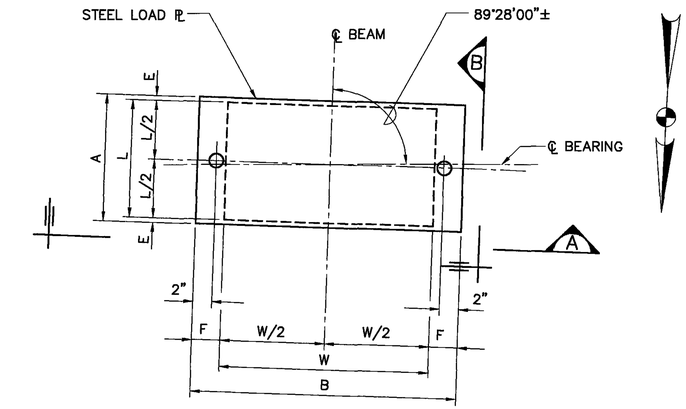

PLAN

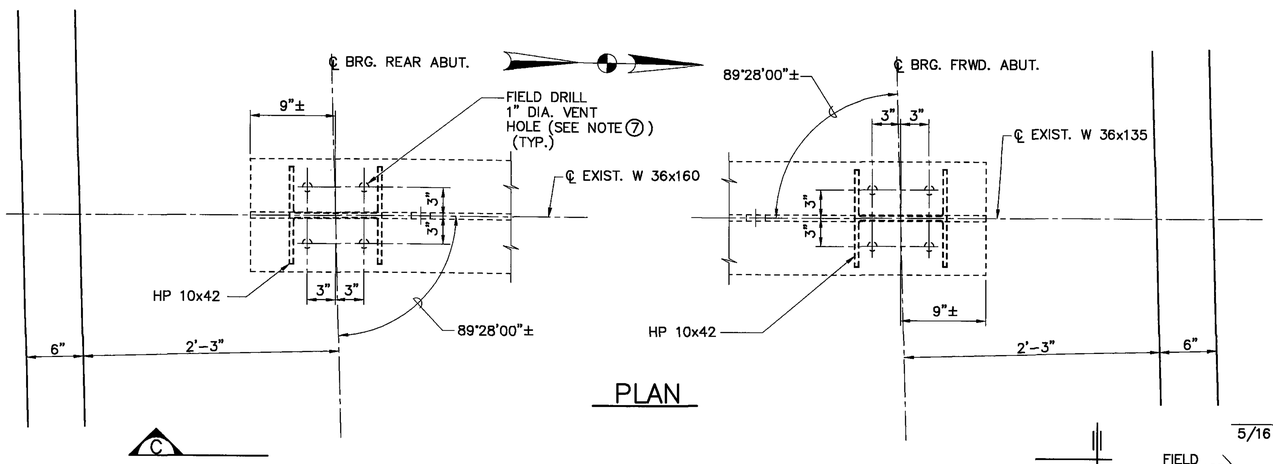

PLAN

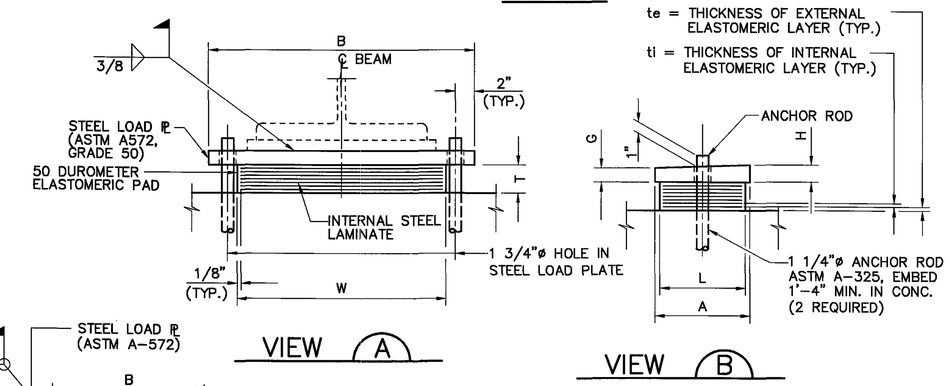

FIXED BEARING DETAIL

PIER NO. 2

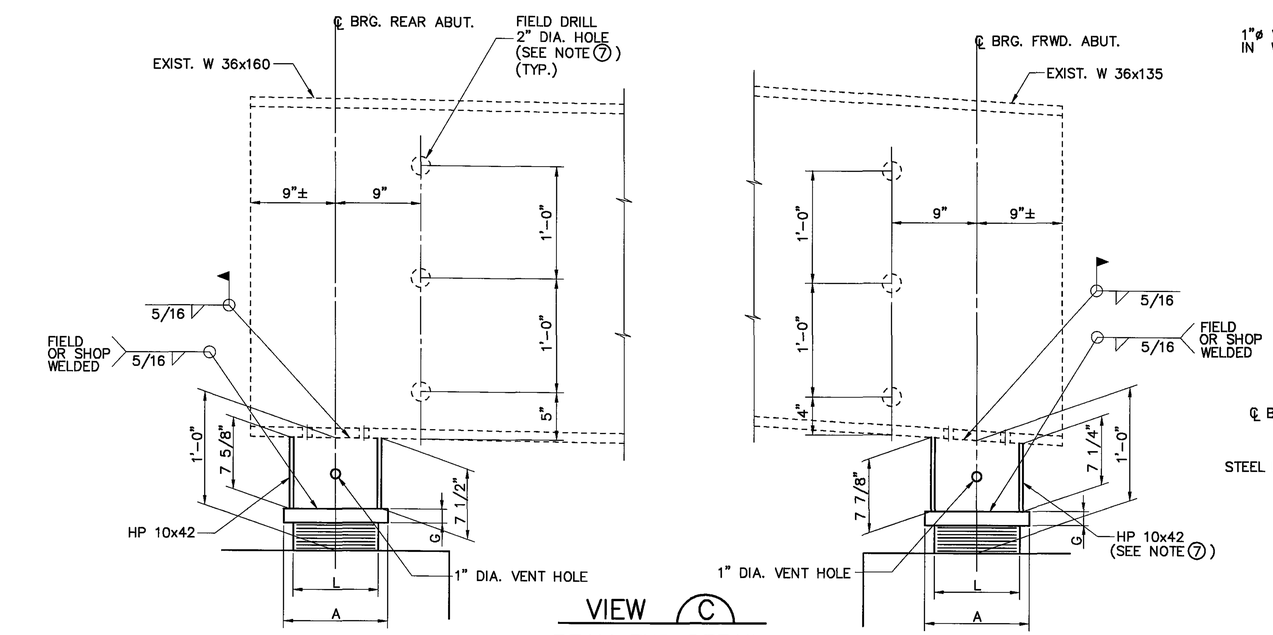

VIEW C

BEAM END DETAIL

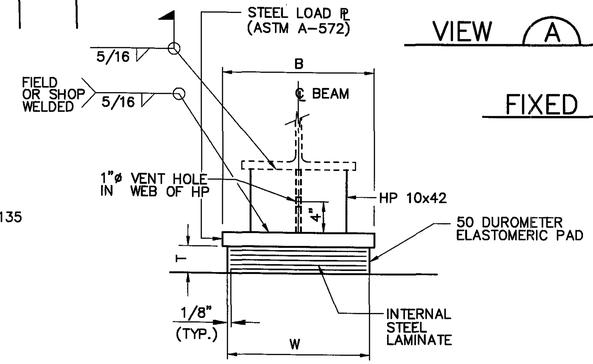

VIEW D

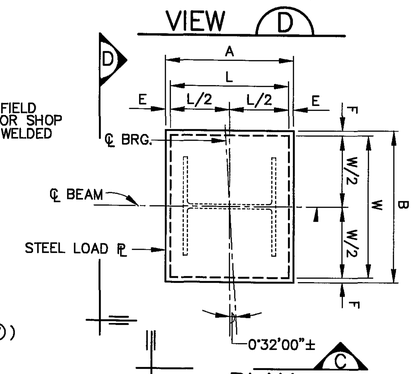

PLAN

EXPANSION BEARING DETAIL

ABUTMENTS

NOTES:

1. ELASTOMERIC BEARINGS: THE ELASTOMER SHALL HAVE A HARDNESS OF 50 DUROMETER. THE BEARINGS WERE DESIGNED UNDER DIVISION I, SECTION 14.6.6 (METHOD A) OF THE AASHTO STANDARD SPECIFICATIONS FOR HIGHWAY BRIDGES.
2. WELDING: CONTROL WELDING SO THAT THE PLATE TEMPERATURE AT THE ELASTOMER BONDED SURFACE DOES NOT EXCEED 300°F AS DETERMINED BY USE OF PYROMETRIC STICKS OR OTHER TEMPERATURE MONITORING DEVICES.
3. THE STEEL LOAD PLATE AND HP SHAPE FOR BEARINGS SHALL BE ASTM A572 STEEL, GRADE 50, PAINTED.
4. THE STEEL LOAD PLATE SHALL BE BONDED BY VULCANIZATION TO THE ELASTOMER DURING THE MOLDING PROCESS.
5. FOR EXPANSION BEARING DETAIL AT PIERS, SEE SHT. NO. 13/17 .
6. ANCHOR RODS SHALL BE GALVANIZED AS PER C&MS 711.02. ANCHOR RODS SHALL EXTEND 1 INCH ABOVE THE LOAD PLATE (PIER NO. 2 BEARINGS).
7. FIELD DRILLING OF HOLES IN BEAM ENDS AND THE COST OF FURNISHING AND INSTALLING HP 10X42 STEEL SHAPES AT THE ABUTMENT BEARINGS ARE INCLUDED WITH ITEM "516–ELASTOMERIC BEARING WITH INTERNAL LAMINATES AND LOAD PLATE (NEOPRENE), AS PER PLAN," FOR PAYMENT.
8. BEARING REPOSITIONING: IF THE STEEL IS ERECTED AT AN AMBIENT TEMPERATURE HIGHER THAN 80°F OR LOWER THAN 40°F AND THE BEARING SHEAR DEFLECTION EXCEEDS 1/6 OF THE BEARING HEIGHT AT 60°F (±) 10°F, RAISE THE BEAMS OR GIRDERS TO ALLOW THE BEARINGS TO RETURN TO THEIR UNDEFORMED SHAPE AT 60°F (±) 10°F.

DESIGN AGENCY
GLALS PYLE SCHOMER BURNS & DEHAVEN INC.
GPD ASSOCIATES
320 South Main Street, Suite 2531 Akron, Ohio 44311
330-572-2100 , Fax 330-572-2101

DESIGNED	DRAWN	REVIEWED	DATE
L.P.C.	R.P.R.	K.S.J.	3-31-04
CHECKED	REVISED	STRUCTURE FILE NUMBER	
P.J.W.		5007291	

LAMINATED ELASTOMERIC BEARINGS
BRIDGE NO. MAH – 680 – 0724
GIBSON ST. OVER I-680

MAH-680-7.24/8.34

Cad File: G:\CIVIL\2001169\0\1\110\DWG\STRUCT\DWG\2001169_110BRG.DWG
Date: 02-30-04 Time: 3:52 PM Pen # 0001/0.00"
Technician: RRYMER

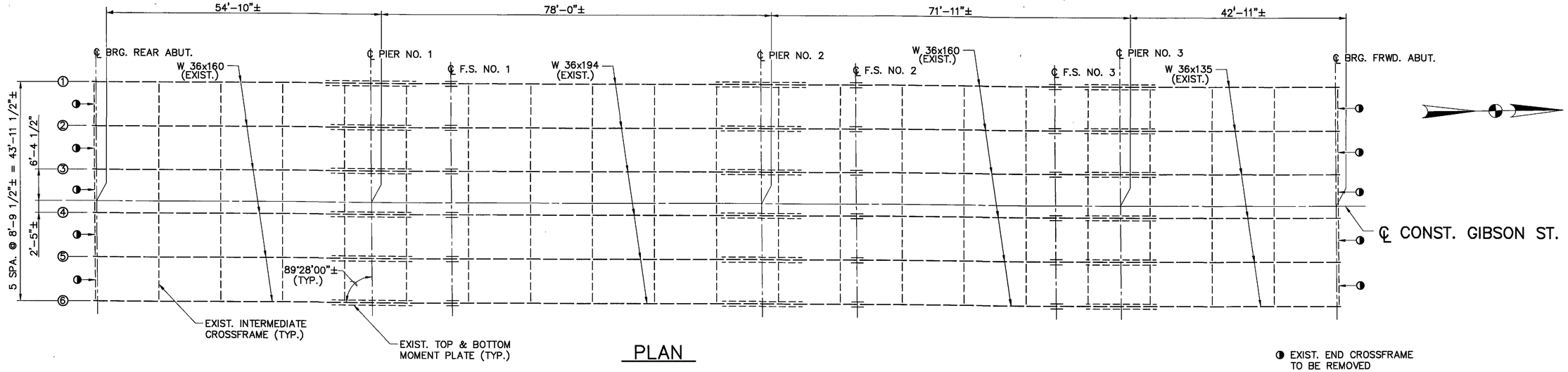

PLAN

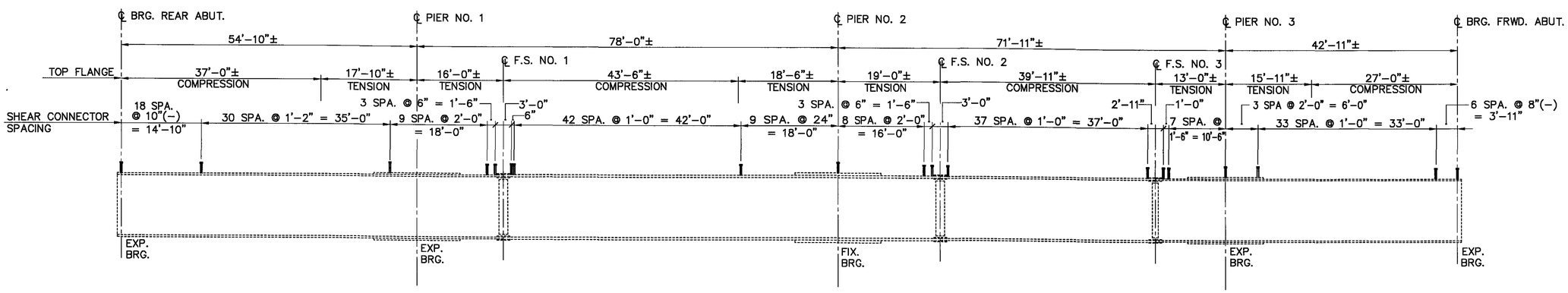

ELEVATION

EX. BMS. 1 THRU. 6

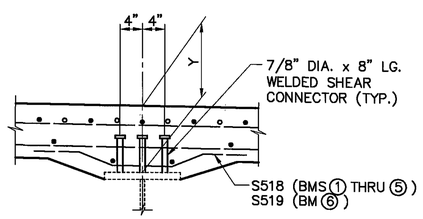

DETAIL 1

DEPTH OF SLAB OVER BEAM, Y					
LOCATION	REAR ABUT.	PIER NO. 1	PIER NO. 2	PIER NO. 3	FRWD. ABUT.
BM. 1	0'-11 13/16"	1'-6 15/16"	1'-5 3/8"	1'-1 3/16"	1'-0 3/4"
BM. 2	0'-11 1/8"	1'-6 5/16"	1'-5 1/16"	1'-0 11/16"	1'-0 1/16"
BM. 3	0'-10 13/16"	1'-6 3/8"	1'-5"	1'-0 11/16"	0'-11 15/16"
BM. 4	0'-11 15/16"	1'-6 1/4"	1'-5 1/16"	1'-0 7/16"	0'-11 7/8"
BM. 5	0'-11"	1'-6 1/8"	1'-5 5/16"	1'-0 11/16"	1'-0"
BM. 6	0'-11 1/8"	1'-6"	1'-4 13/16"	1'-0 1/4"	1'-0 1/16"

NOTES:

1. WELD ATTACHMENT OF SUPPORTS FOR CONCRETE DECK FINISHING MACHINE TO AREAS OF THE FASCIA STRINGER FLANGES DESIGNATED "COMPRESSION". DO NOT WELD ATTACHMENTS TO AREAS DESIGNATED "TENSION". FILLET WELDS TO COMPRESSION FLANGES SHALL BE AT LEAST 1" FROM EDGE OF FLANGE, BE AT LEAST 2" LONG, AND BE AT LEAST 1/4" FOR THICKNESSES UP TO 3/4" OR 5/16" FOR GREATER THAN 3/4" THICK.
2. FOR BEARING DETAILS, SEE SHT. NO. 10/17.
3. FOR LOCATION OF DETAIL 1, SEE SHT. NO. 12/17 .

DESIGN AGENCY
CLAUS PILE SCHOMER BURNS & DISHAVEN INC.
GPD ASSOCIATES
523 South Main Street, Suite 201, Akron, Ohio 44311
330-572-2100 ; Fax 330-572-2101

DATE	REVIEWED	DRAWN	DESIGNED
3-31-04	K.S.J.	R.P.R.	L.P.C.
STRUCTURE FILE NUMBER	REVISED		CHECKED
5007291			P.J.W.

FRAMING PLAN
BRIDGE NO. MAH - 680 - 0724
GIBSON ST. OVER I-680

MAH-680-7.24/8.34

Cad File: G:\CIVIL\2001169\01\110\DWG\STRUCT\DWG\2001169_110FRAME.DWG
Date: 03-30-04 Time: 3:55 PM TW = 000'0.00"
Technician: RRYMER

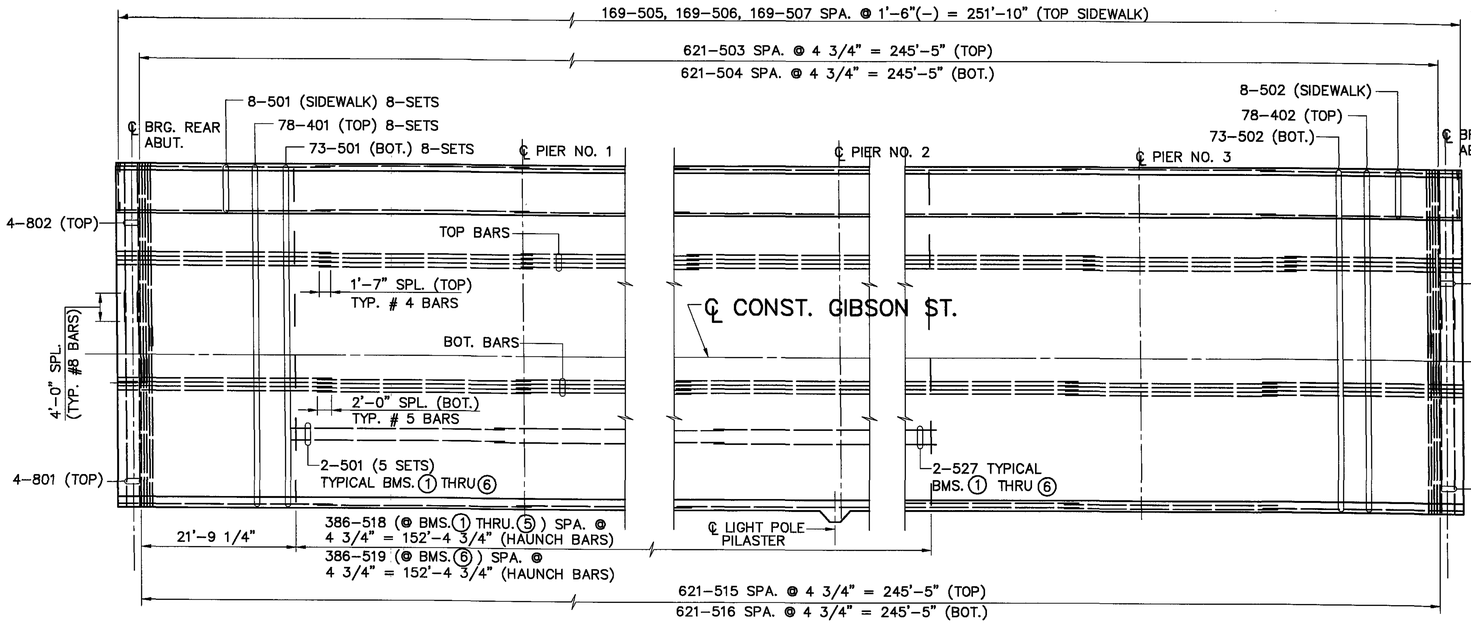

SLAB PLAN

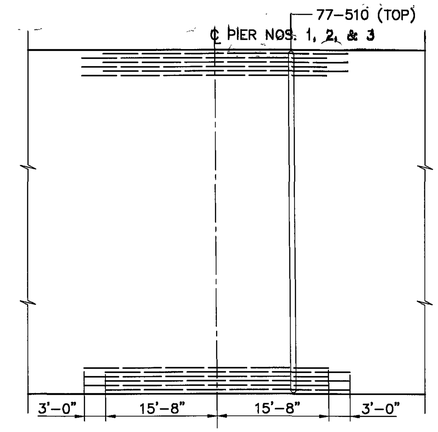

ADDITIONAL REINFORCING OVER PIERS

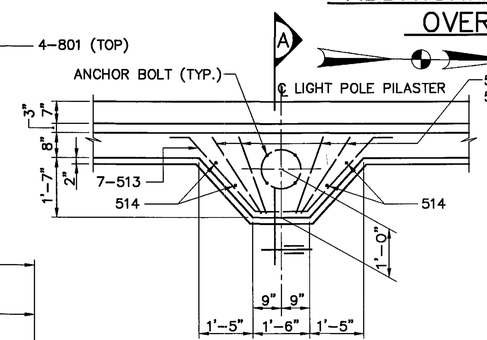

LIGHT POLE PILASTER DETAIL

(PARAPET REINFORCING NOT SHOWN)
(SEE NOTE 10)

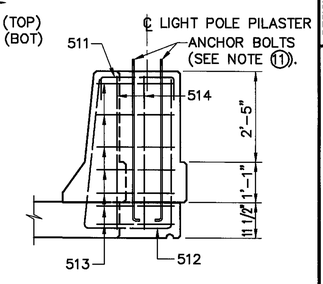

SECTION A

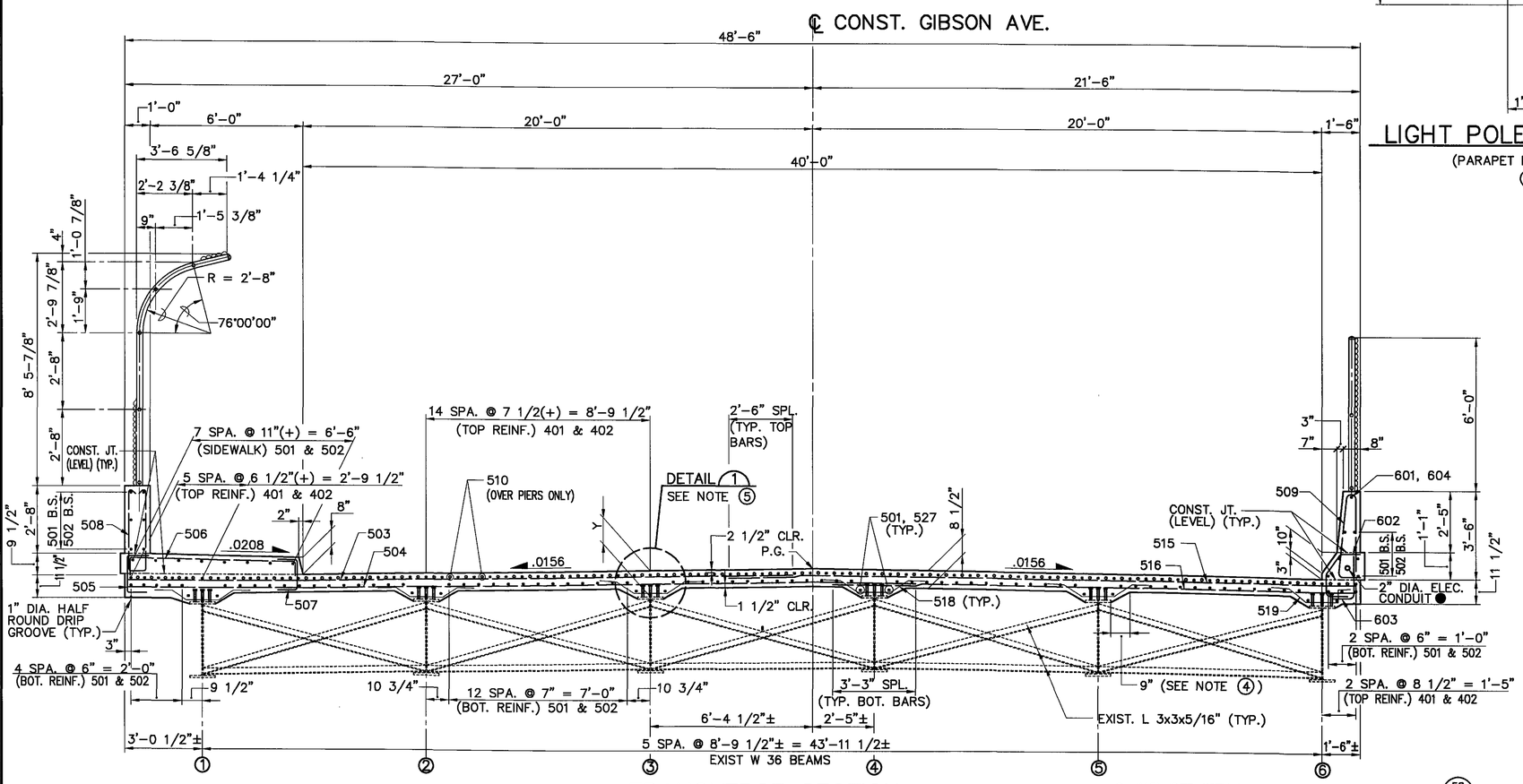

TRANSVERSE SECTION

● INCLUDED WITH LIGHTING QUANTITIES, SHT. NO. 58/107.

NOTES:

1. PREFIX "S" WILL BE ADDED TO ALL REBARS SHOWN FOR DECK SLAB. SEE REINFORCING SCHEDULE.
2. ALL REINFORCING STEEL SHALL BE EPOXY COATED.
3. MINIMUM CLEARANCE TO REBARS SHALL BE 2" UNLESS NOTED OTHERWISE.
4. DECK SLAB CONCRETE QUANTITY: THE ESTIMATED QUANTITY OF DECK SLAB CONCRETE IS BASED ON THE CONSTANT DECK SLAB THICKNESS, AS SHOWN, PLUS THE QUANTITY OF CONCRETE THAT FORMS EACH BEAM HAUNCH. THE ESTIMATE ASSUMES A CONSTANT HAUNCH THICKNESS OF 6.8 INCHES AND A CONSTANT HAUNCH WIDTH OUTSIDE THE EDGE OF EACH BEAM FLANGE OF 9 INCHES. DEVIATE FROM THIS HAUNCH THICKNESS AS NECESSARY TO PLACE THE DECK SURFACE AT THE FINISHED GRADE. THE ALLOWABLE TOLERANCE FOR THE HAUNCH WIDTH OUTSIDE THE EDGE OF EACH BEAM FLANGE IS ± 3 INCHES.
5. DECK SLAB DEPTH (Y): FOR TABULATION OF "Y", SEE DETAIL SHT. NO. 11/17.
6. FOR SCREED ELEVATIONS AND SEALING OF CONCRETE SURFACES, SEE SHT. NO. 13/17.
7. QUANTITIES OF CONCRETE FOR RAILING AND PARAPET ARE INCLUDED WITH ITEM 511, CLASS HP CONCRETE, BRIDGE DECK (PARAPET), FOR PAYMENT.
8. QUANTITIES OF CONCRETE FOR SIDEWALK ARE INCLUDED WITH ITEM 511, CLASS HP CONCRETE, BRIDGE DECK, AS PER PLAN FOR PAYMENT.
9. FOR CHAIN LINK FENCE DETAILS, SEE STD. DWG. NO. VPF-1-90.
10. FOR RAILING DETAILS AND POST SPACINGS, SEE SHT. NO. 14/17.
11. FOR LIGHT POLE PILASTER DETAILS NOT SHOWN, SEE STD. DWG. HL-20.14.
12. ANCHOR BOLTS ARE INCLUDED WITH ITEM 625, LIGHT POLE, AS PER PLAN FOR PAYMENT, SEE SHT. NO. 58/107.

DESIGN AGENCY
GLAUS PYLE SCHOMER BURNS & DEHAVEN, INC.
CPD ASSOCIATES
323 Wolf Ledge Pkwy., Akron, OH 44311
330-572-2100 Fax 330-572-2101

DESIGNED	DRAWN	REVIEWED	DATE
S.A.M.	R.H.C.	K.S.J.	3-31-04
CHECKED	REVISED	STRUCTURE FILE NUMBER	
P.J.W.		5007291	

SLAB PLAN & TRANSVERSE SECTION
BRIDGE NO. MAH - 680 - 0724
GIBSON ST. OVER I-680

MAH-680-7.24/8.34

Cad File: G:\CIVIL\2001169\01\10\DWG\STRUCT\DWG\2001169_110SLAB.DWG
Date: 03-30-04 Time: 3:56 PM TW = 0.00'0.00"
Technician: RRYMER

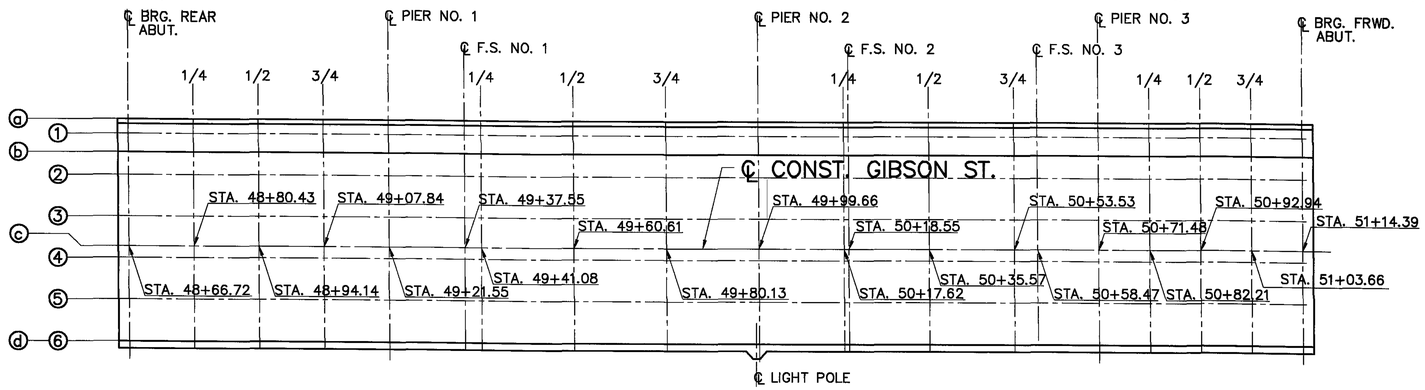

PLAN
SCREED ELEVATIONS

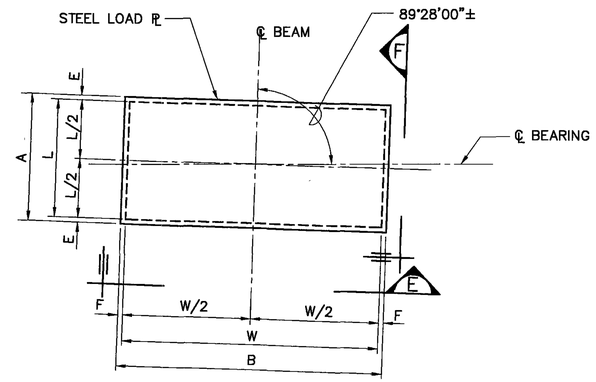

PLAN

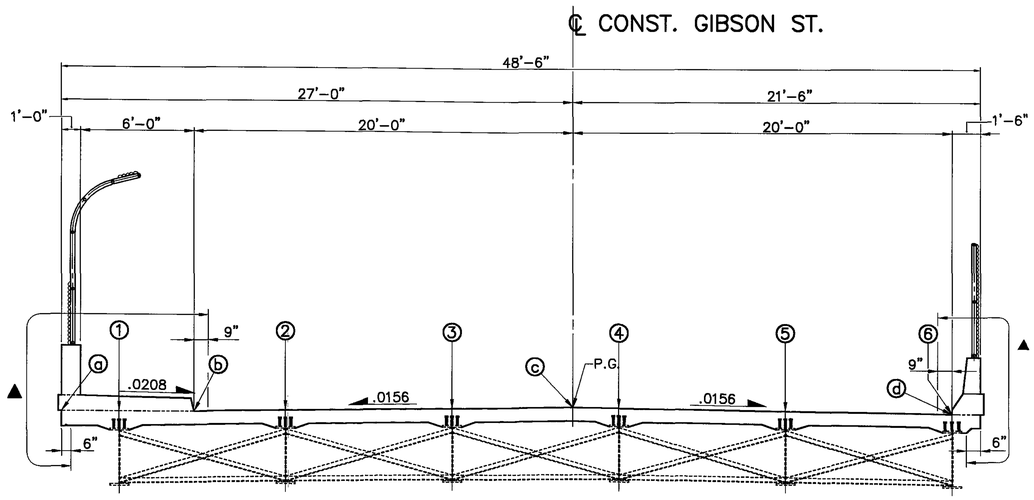

TRANSVERSE SECTION

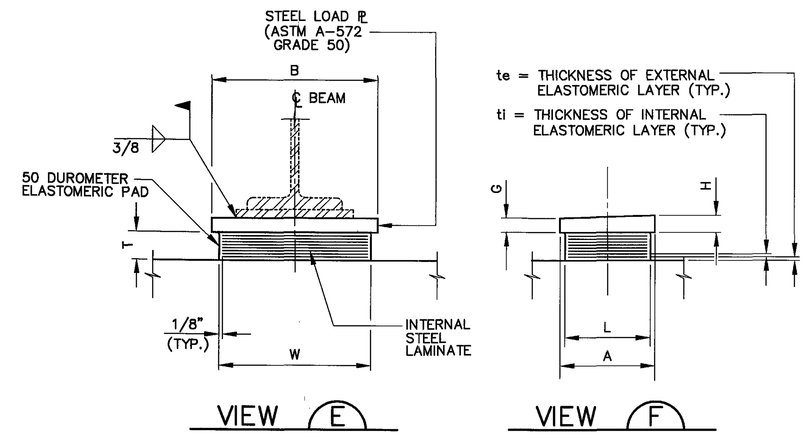

EXPANSION BEARING DETAIL

PIER NOS. 1 & 3

DECK SCREED ELEVATION TABLE

LOCATION	REAR ABUT.	SPAN NO. 1			℄ PIER NO. 1	SPAN NO. 2				℄ PIER NO.2	SPAN NO. 3					℄ PIER NO.3	SPAN NO. 4			FRWD. ABUT
		1/4	1/2	3/4		F.S. NO. 1	1/4	1/2	3/4		1/4	F.S. NO. 2	1/2	3/4	F.S. NO. 3		1/4	1/2	3/4	
ⓐ	1005.49	1005.27	1005.05	1004.82	1004.55	1004.22	1004.13	1003.63	1003.02	1002.30	1001.61	1001.58	1000.86	1000.01	999.77	999.09	998.51	997.92	997.30	996.65
①	1005.49	1005.27	1005.05	1004.82	1004.55	1004.22	1004.13	1003.63	1003.00	1002.30	1001.61	1001.58	1000.86	1000.01	999.77	999.08	998.51	997.92	997.30	996.64
ⓑ	1005.49	1005.27	1005.05	1004.82	1004.55	1004.22	1004.13	1003.62	1003.00	1002.29	1001.61	1001.58	1000.86	1000.01	999.76	999.08	998.51	997.92	997.30	996.64
②	1005.57	1005.34	1005.12	1004.89	1004.62	1004.28	1004.20	1003.70	1003.07	1002.37	1001.68	1001.65	1000.93	1000.08	999.83	999.16	998.58	997.99	997.37	996.72
③	1005.70	1005.48	1005.26	1005.03	1004.76	1004.42	1004.34	1003.83	1003.21	1002.50	1001.82	1001.78	1001.07	1000.22	999.97	999.29	998.71	998.12	997.50	996.85
ⓒ	1005.80	1005.57	1005.36	1005.13	1004.86	1004.52	1004.44	1003.93	1003.31	1002.60	1001.91	1001.88	1001.16	1000.31	1000.06	999.39	998.81	998.22	997.60	996.94
④	1005.76	1005.54	1005.32	1005.09	1004.82	1004.48	1004.40	1003.89	1003.27	1002.56	1001.88	1001.84	1001.12	1000.28	1000.03	999.35	998.77	998.18	997.56	996.90
⑤	1005.63	1005.40	1005.18	1004.95	1004.68	1004.34	1004.26	1003.75	1003.13	1002.42	1001.73	1001.70	1000.98	1000.13	999.88	999.20	998.63	998.04	997.42	996.76
⑥	1005.49	1005.26	1005.04	1004.81	1004.54	1004.20	1004.12	1003.60	1002.98	1002.28	1001.59	1001.56	1000.84	999.99	999.74	999.06	998.49	997.89	997.27	996.62
ⓓ	1005.49	1005.26	1005.04	1004.81	1004.54	1004.20	1004.12	1003.60	1002.98	1002.28	1001.59	1001.56	1000.84	999.99	999.74	999.06	998.49	997.89	997.27	996.62

NOTES:

1. SCREED ELEVATIONS SHOWN ARE FOR THE DECK SLAB SURFACE PRIOR TO CONCRETE PLACEMENT. ALLOWANCE HAS BEEN MADE FOR ANTICIPATED DEAD LOAD DEFLECTIONS.
2. FOR ADDITIONAL BEARING DETAILS, SEE SHT. NO. 10/17 .

▲ LIMITS OF ITEM 864, SEALING OF CONCRETE SURFACES (EPOXY-URETHANE)

DESIGN AGENCY
GLAUS PYLE SCHOMER BURNS & DEHAVEN INC.
CPD ASSOCIATES
323 South Main Street, Suite 2311 Akron, Ohio 44311
330-972-2100 Fax 330-972-2101

DESIGNED	DRAWN	REVIEWED	DATE
L.P.C.	R.P.R.	K.S.J.	3-31-04
CHECKED	REVISED	STRUCTURE FILE NUMBER	
P.J.W.		5007291	

MISCELLANEOUS DETAILS
BRIDGE NO. MAH - 711- 680 - 0724
GIBSON ST. OVER I-680

MAH-680-7.24/8.34

Cad File: G:\CIVIL\2001169\Roadway\STRUCT\DWG\2001169_110SCREED.DWG
Date: 03-30-04 Time: 3:37 PM
Technician: RRYMER

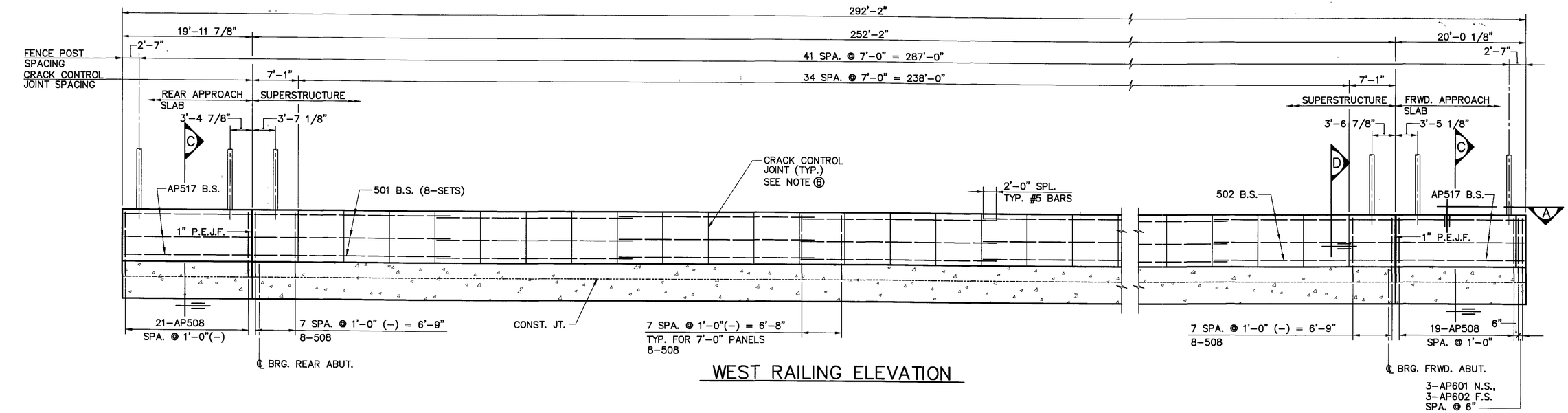

WEST RAILING ELEVATION

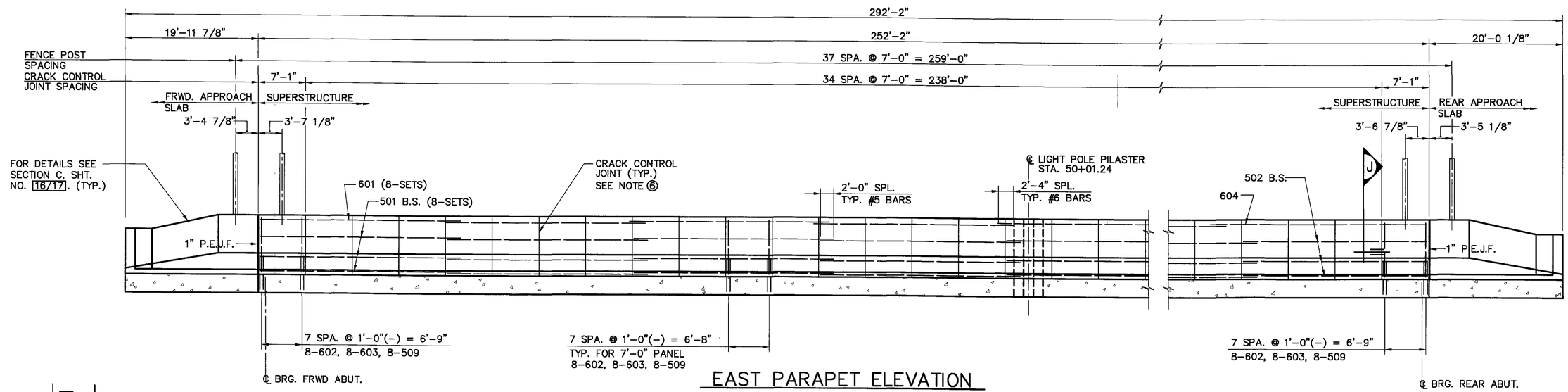

EAST PARAPET ELEVATION

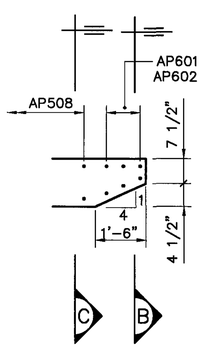

VIEW A

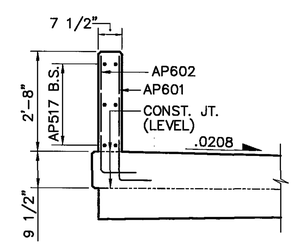

SECTION B

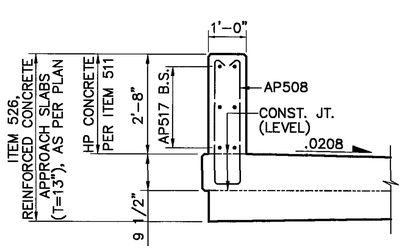

SECTION C

APPROACH SLAB AND SIDEWALK BARS NOT SHOWN

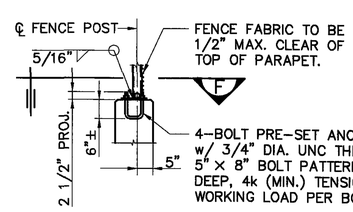

SECTION D

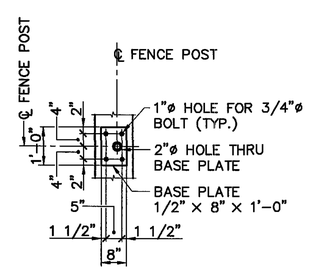

SECTION F

NOTES:

1. PREFIX "S" WILL BE ADDED TO ALL REBAR MARKS SHOWN FOR THE DECK SLAB EXCEPT THOSE BARS PREFIXED WITH "AP". SEE REINFORCING SCHEDULE.
2. MINIMUM CLEARANCE TO ALL REBARS SHALL BE 2" UNLESS NOTED OTHERWISE.
3. ALL REINFORCING STEEL SHALL BE EPOXY COATED.
4. QUANTITIES OF CONCRETE FOR RAILING AND PARAPET ARE INCLUDED WITH ITEM 511, CLASS HP CONCRETE, BRIDGE DECK (PARAPET), FOR PAYMENT.
5. FOR SECTION J, SEE SHT. NO. 16/17.
6. FOR CONCRETE PARAPET NOTE, SEE SHT. NO. 3/17.
7. FOR CHAIN LINK FENCE DETAILS, SEE STD. DWG. NO. VPF-1-90.
8. FOR LIGHT POLE PILASTER DETAIL, SEE SHT. NO. 12/17.

DESIGN AGENCY
GLASS PYLE SCHOMER BURNS & DEHAVEN, INC.
GPD ASSOCIATES
320 South Arlington Street, Suite 251 / Akron, Ohio 44311
330-972-2100 / Fax 330-972-2101

DESIGNED	DRAWN	REVIEWED	DATE
S.A.M.	R.P.R.	K.S.J.	3-31-04
CHECKED	REVISED	STRUCTURE FILE NUMBER	
P.J.W.		5007291	

RAILING ELEVATION
BRIDGE NO. MAH - 680 - 0724
GIBSON ST. OVER I-680

MAH-680-7.24/8.34

Cad File: G:\CIVIL\2001169\01\110\DWG\STRUCT\DWG\2001169_110RAILELEV.DWG
Date: 03-30-04 Time: 4:58 PM TM = 0.00:0.00
Technician. RRYMER

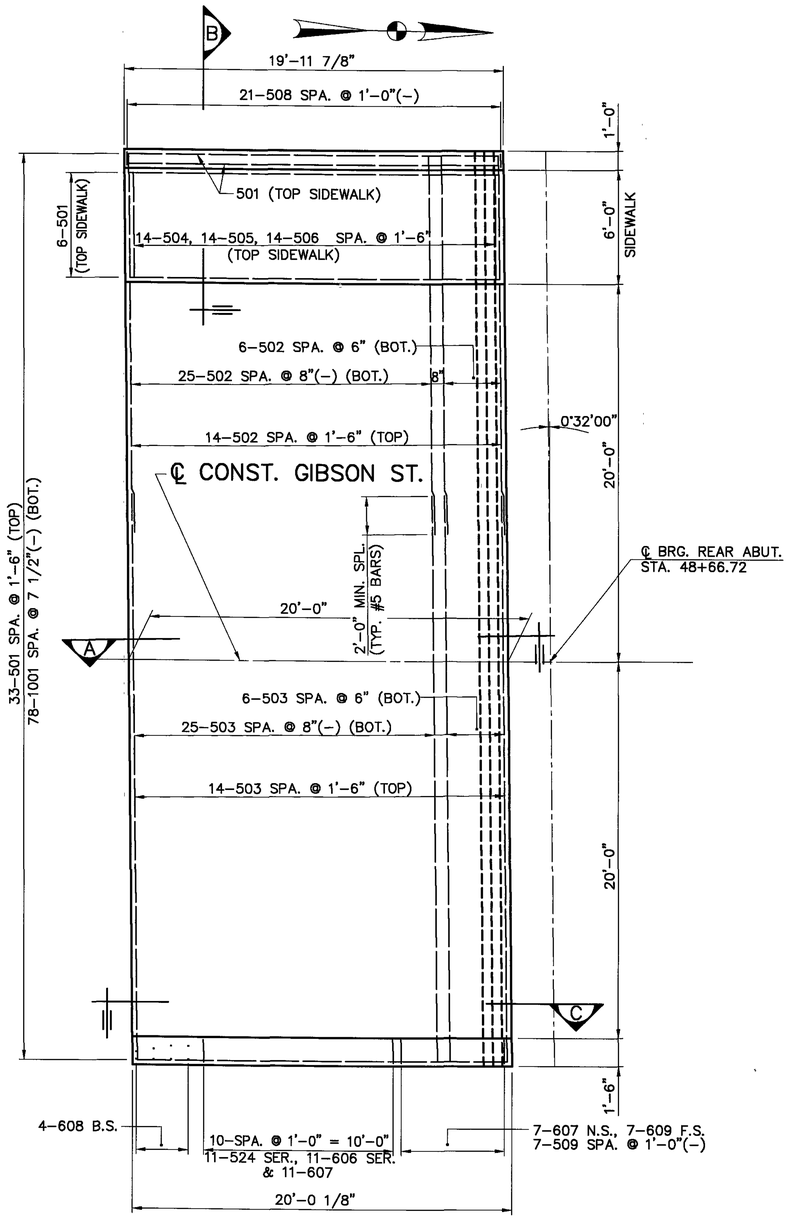

PLAN

REAR APPROACH SLAB

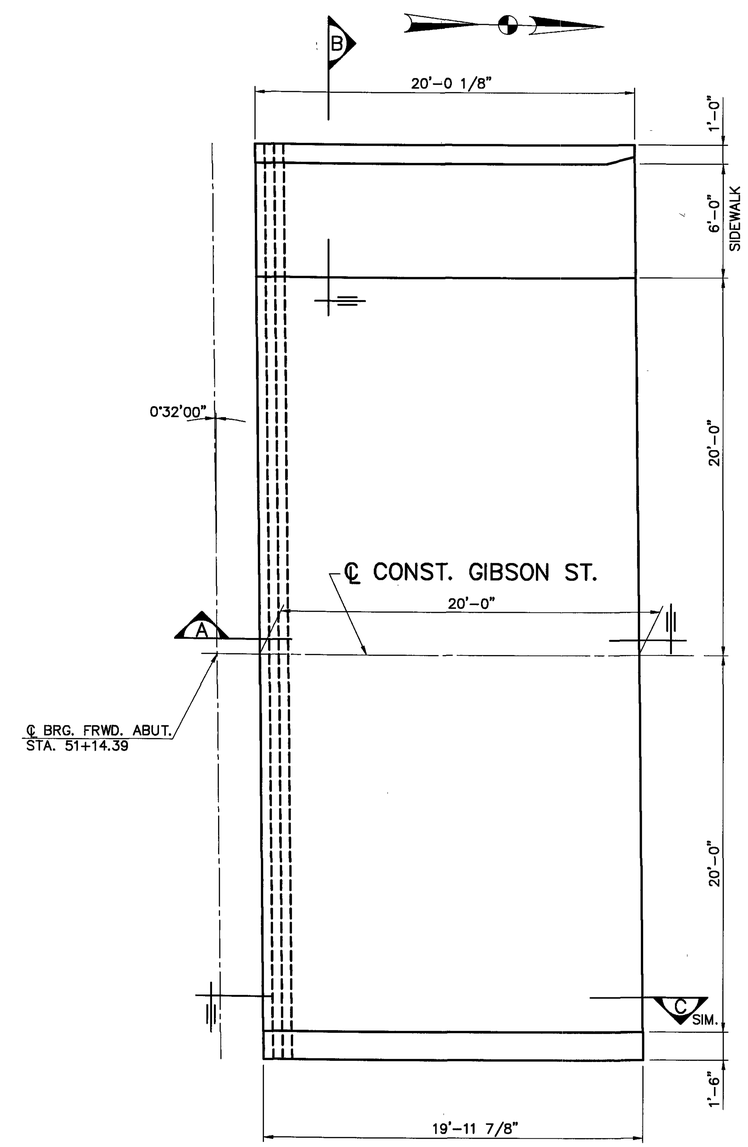

PLAN

FRWD. APPROACH SLAB

DETAILS AND REINFORCING SIMILAR TO REAR APPROACH SLAB, BUT OPP. HAND

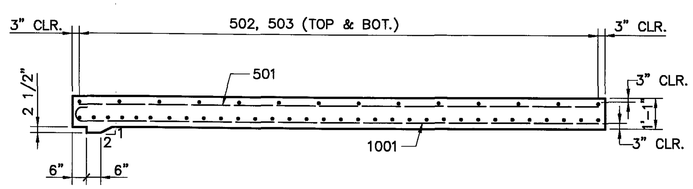

SECTION A

NOTES:

1. PREFIX "AP" WILL BE ADDED TO ALL REBAR MARKS SHOWN FOR THE APPROACH SLABS. SEE REINFORCING SCHEDULE.
2. MINIMUM CLEARANCE TO REBARS SHALL BE 2" UNLESS NOTED.
3. ALL REINFORCING STEEL SHALL BE EPOXY COATED.
4. FOR SECTIONS B & C, SEE SHT. NO. 16/17.
5. FOR DETAILS NOT SHOWN, SEE STD. DWG. NO. AS-1-81.

DESIGN AGENCY
CHALLOPTER, MCGOWAN, BUCKNER & GRAHAM INC.
GPD ASSOCIATES
520 South Main Street, Suite 2331 Akron, Ohio 44311
330-372-2100 / Fax 330-372-2101

DESIGNED	DRAWN	REVIEWED	DATE
L.P.C.	R.P.R.	K.S.J.	3-31-04
CHECKED	REVISED	STRUCTURE FILE NUMBER	
P.J.W.		5007291	

APPROACH SLABS
BRIDGE NO. MAH - 680 - 0724
GIBSON ST. OVER I-680

MAH-680-7.24/8.34

Cad File: G:\CIVIL\2001169\01\110\DWG\STRUCT\DWG\2001169_110APPSLAB.DWG
Date: 03-30-04 Time: 3:59 PM W = 0.00"/0.00"
Technician: RRYMER

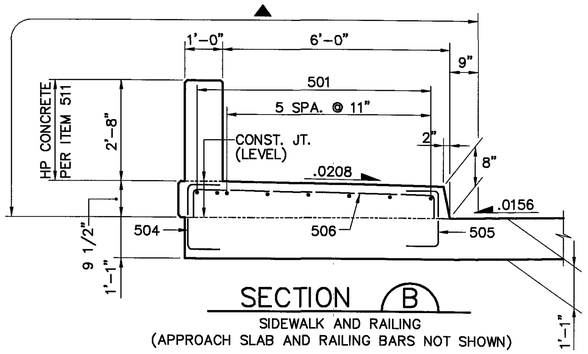

SECTION B

SIDEWALK AND RAILING
(APPROACH SLAB AND RAILING BARS NOT SHOWN)

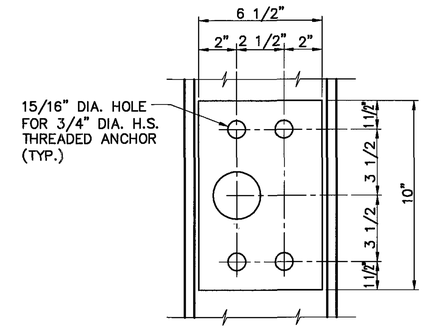

SECTION K

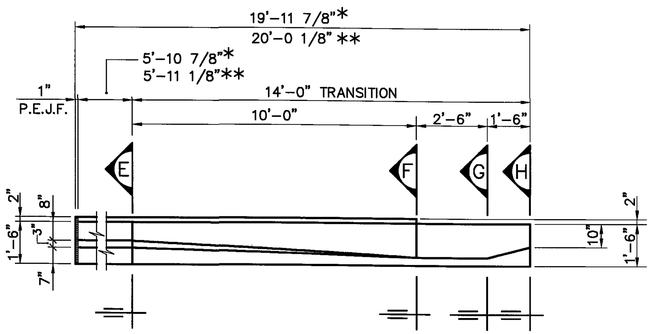

VIEW D

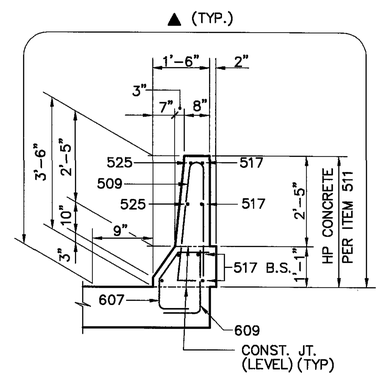

SECTION E

(APPROACH SLAB BARS NOT SHOWN)

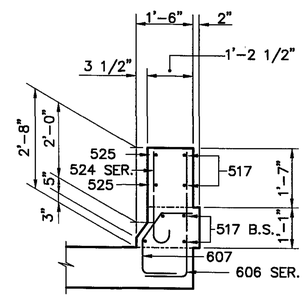

SECTION F

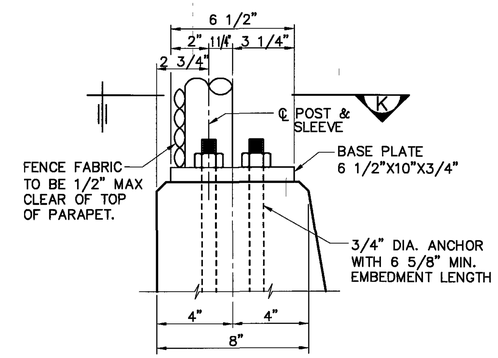

SECTION J

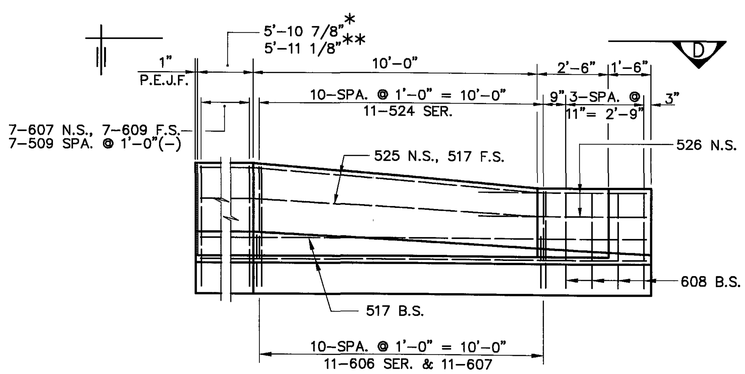

SECTION C

* REAR APPR. SLAB
** FRWD. APPR. SLAB

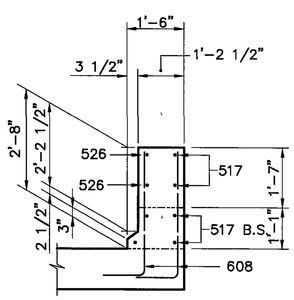

SECTION G

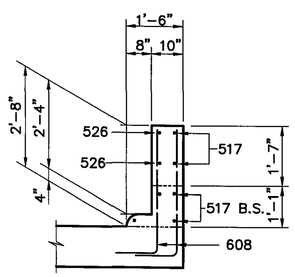

SECTION H

NOTES:

1. PREFIX "AP" WILL BE ADDED TO ALL REBAR MARKS SHOWN FOR THE APPROACH SLABS.
2. FOR APPROACH SLAB PARAPET, RAILING AND FENCE DETAILS, SEE SHT. NO. 14/17.
3. FOR DETAILS NOT SHOWN, SEE STD. DWG. NO. AS-1-81.
4. ITEM 526, REINFORCED CONCRETE APPROACH SLAB, AS PER PLAN: PARAPET AND RAILING ON APPROACH SLAB SHALL BE HIGH PERFORMANCE CONCRETE AS PER ITEM 511. APPROACH SLAB SIDEWALK, PARAPET AND RAILING CONCRETE, REINFORCING STEEL AND SEALING IS INCLUDED WITH ITEM 526, REINFORCED CONCRETE APPROACH SLABS (T=13"), AS PER PLAN FOR PAYMENT.
5. FOR LOCATIONS OF SECTIONS B & C, SEE SHT. NO. 15/17.
6. FOR LOCATION OF SECTION J, SEE SHT. NO. 14/17.

▲ LIMITS OF ITEM 864 – SEALING OF CONCRETE SURFACES (EPOXY-URETHANE)

DESIGN AGENCY
CLAUS PILE BATCHMAN & BRAVEN INC.
GPD ASSOCIATES
320 South Main Street, Suite 2531 Akron, Ohio 44311
330-572-2100, Fax 330-572-2101

DESIGNED	DRAWN	REVIEWED	DATE
L.P.C.	R.P.R.	K.S.J.	3-31-04
CHECKED	REVISED	STRUCTURE FILE NUMBER	
P.J.W.		5007291	

MISCELLANEOUS DETAILS
BRIDGE NO. MAH – 680 – 0724
GIBSON ST. OVER I-680

MAH-680-7.24/8.34

Cad File: G:\CIVIL\2001169\01\110\DWG\STRUCT\DWG\2001169_110APPSLAB.DWG
Date: 03-30-04 Time: 3:59 PM TW = 0x0'0.00"
Technician: RRYMER

ABUTMENT, EPOXY COATED BARS

MARK	NUMBER REAR	NUMBER FRWD	NUMBER TOTAL	LENGTH	WEIGHT (LB)	TYPE	DIMENSIONS A	DIMENSIONS B	DIMENSIONS C	SERIES INC.
A501	4	4	8	30' 0"	250	ST				
A502	4	4	8	20' 6"	171	ST				
A503	92		92	6' 10"	656	103	3' 5"	1' 10"		
A504		92	92	7' 2"	688	103	3' 5"	2' 0"		
A505	88	89	177	3' 6"	646	ST				
A506	30	34	64	6' 5"	428	103	3' 4"	1' 8"		
A507	10		10	8' 7"	90	ST				
A508	10		10	10' 7"	110	ST				
A509	15	17	32	9' 6"	317	103	1' 5"	4' 2"		
A510S	2 SER OF 6		2 SER OF 6	11' 0" TO 18' 0"	181	103	1' 5"	4' 11" TO 8' 5"		1' 4 3/4"
A511	3	3	6	18' 8"	117	103	1' 5"	8' 9"		
A512	1	1	2	15' 0"	31	103	1' 5"	6' 11"		
A513	4		4	12' 0"	50	ST				
A514	2		2	9' 10"	21	ST				
A515	2		2	4' 0"	8	ST				
A516	2		2	4' 3"	9	105	2' 3"	2' 0"	11"	
A517	4		4	12' 3"	51	ST				
A518	2	2	4	10' 1"	42	ST				
A519	2	2	4	7' 2"	30	ST				
A520	2	2	4	4' 2"	17	ST				
A521		10	10	11' 6"	120	ST				
A522S		2 SER OF 7	2 SER OF 7	9' 4" TO 17' 10"	198	103	1' 5"	4' 1" TO 8' 4"		1' 5"
A523		4	4	13' 9"	57	ST				
A524	2	4	6	4' 5"	28	105	2' 5"	2' 0"	11"	
A525		4	4	13' 10"	58	ST				
A526		2	2	10' 2"	21	ST				
A527		2	2	7' 2"	15	ST				
A528		2	2	4' 2"	9	ST				
A529		4	4	10' 3"	43	ST				
A530	4		4	8' 6"	35	ST				
A531	2		2	7' 0"	15	ST				
A532		10	10	10' 8"	111	ST				
A801	5	5	10	30' 0"	801	ST				
A802	5	5	10	22' 6"	601	ST				

PIER, EPOXY COATED BARS

MARK	NUMBER 1	NUMBER 2	NUMBER 3	NUMBER TOTAL	LENGTH	WEIGHT (LB)	TYPE	DIMENSIONS A	DIMENSIONS B	DIMENSIONS C
P501	64	64	64	192	2' 6"	501	ST			
P502	52		52	104	5' 5"	588	103	2' 8"	1' 6"	
P503		52		52	5' 9"	312	103	2' 8"	1' 8"	
P504	6	6	6	18	30' 0"	563	ST			
P505	4	4	4	12	16' 0"	200	ST			
P506	2	2	2	6	18' 6"	116	ST			
P507	4	4	4	12	8' 0"	100	119	1' 3"	2' 0"	
P601	6		6	12	6' 4"	114	103	2' 8"	2' 0"	
P602	12		12	24	3' 4"	120	102	1' 6"	2' 0"	
P901	4		4	8	2' 8"	972	ST			
P902	12		12	24	3' 3"	265	102	1' 6"	2' 0"	

SLAB, EPOXY COATED BARS

MARK	NO.	LENGTH	WEIGHT (LB)	TYPE	DIMENSIONS A	DIMENSIONS B	DIMENSIONS C	SERIES INC.
S401	624	30' 0"	12,505	ST				
S402	78	25' 0"	1,303	ST				
S501	804	30' 0"	25,157	ST				
S502	93	28' 4"	2,748	ST				
S503	621	26' 2"	16,948	ST				
S504	621	30' 11"	20,025	ST				
S505	169	2' 9"	485	103	1' 4"	0' 10"		
S506	169	7' 5"	1,307	103	6' 8"	0' 6"		
S507	169	2' 5"	426	103	1' 0"	0' 10"		
S508	288	7' 8"	2,303	124	3' 2"	0' 8"		
S509	288	7' 1"	2,128	132				
S510	231	34' 4"	8,272	ST				
S511	4	3' 4"	14	103	1' 11"	0' 10"		
S512	4	10' 1"	42	134				
S513	7	7' 3"	53	133	1' 4"	1' 8"	1' 11"	
S514	4	4' 0"	17	ST				
S515	621	24' 6"	15,869	ST				
S516	621	20' 6"	13,278	ST				
S518	1,930	4' 11"	9,897	136				
S519	386	4' 1"	1,644	137				
S521	140	8' 4"	1,217	103	3' 5"	2' 7"		
S522	35	8' 2"	298	103	2' 11"	2' 9"		
S523	35	7' 11"	289	135				
S527	12	13' 8"	171	ST				
S601	8	30' 0"	360	ST				
S602	288	3' 2"	1,370	112	0' 10 1/2"	0' 6"	0' 9"	
S603	288	2' 4"	1,009	102	1' 7"	0' 11"		
S604	1	32' 0"	48	ST				
S801	30	30' 0"	2,403	ST				
S802	30	22' 2"	1,776	ST				
S803	33	5' 5"	477	116	3' 1"			
S804	33	4' 11"	433	116	2' 8"			

APPROACH SLAB, EPOXY COATED BARS

MARK	NUMBER REAR	NUMBER FRWD	NUMBER TOTAL	LENGTH	WEIGHT (LB)	TYPE	DIMENSIONS A	DIMENSIONS B	DIMENSIONS C	SERIES INC.
AP501	41	41	82	19' 6"	1,668	ST				
AP502	45	45	90	20' 0"	1,877	ST				
AP503	45	45	90	30' 0"	2,816	ST				
AP504	14	14	28	2' 11"	85	103	1' 6"	0' 10"		
AP505	14	14	28	2' 8"	78	103	1' 3"	0' 10"		
AP506	14	14	28	7' 6"	219	104	6' 6"	0' 9"	0' 6"	
AP508	21	19	40	7' 8"	320	124	3' 2"	0' 8"		
AP509	7	7	14	7' 1"	103	132				
AP517	12	12	24	19' 8"	492	ST				
AP524	1 SER OF 11	1 SER OF 11	2 SER OF 11	3' 0" TO 3' 10"	78	101	2' 5" TO 3' 3"			0' 1"
AP525	2	2	4	16' 0"	67	ST				
AP526	2	2	4	5' 8"	24	138				
AP601		3	3	4' 8"	21	102	3' 0"	1' 10"		
AP602		3	3	4' 6"	20	102	2' 10"	1' 10"		
AP606	1 SER OF 11	1 SER OF 11	2 SER OF 11	4' 1" TO 4' 11"	149	102	3' 4" TO 4' 2"	11"		0' 1"
AP607	18	18	36	3' 3"	176	112	1' 0"	6"	9"	
AP608	8	8	16	4' 2"	100	102	3' 4"	1' 0"		
AP609	7	7	14	2' 7"	54	102	1' 9"	1' 0"		
AP1001	78	78	156	20' 11"	14,041	101	19' 6"			
				TOTAL	22,388					

STANDARD BAR TYPES

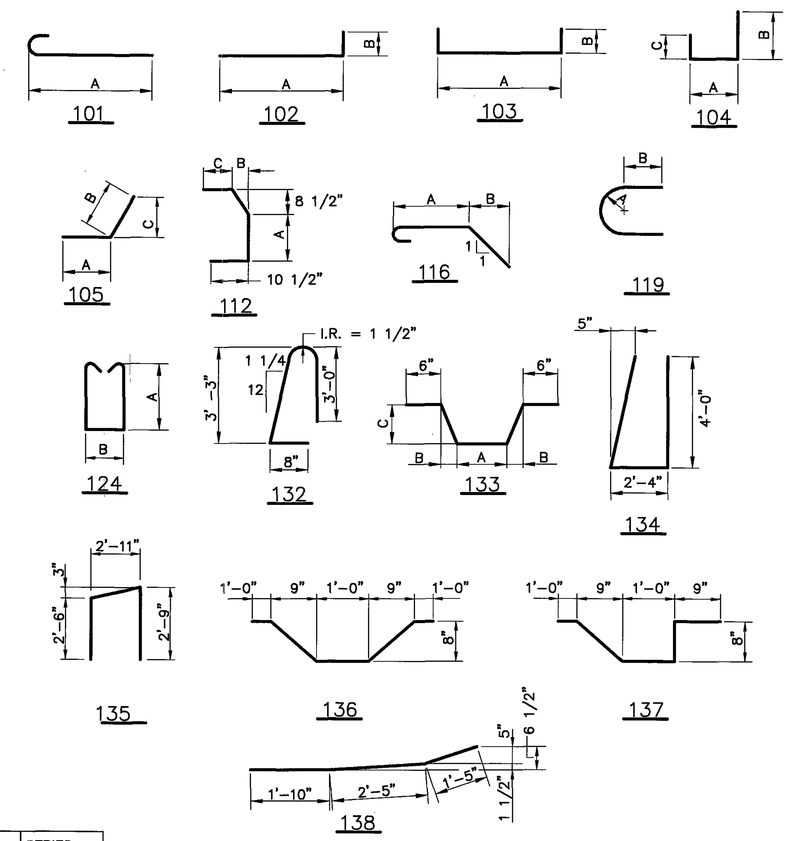

NOTES:

1. BAR DIMENSIONS ARE OUT TO OUT UNLESS NOTED OTHERWISE.
2. ALL BARS ARE EPOXY COATED.
3. I.R. DENOTES INSIDE RADIUS
4. WHEN NO BAR LEG DIMENSIONS ARE SHOWN, IT INDICATES STANDARD BEND.
5. BAR SIZE AND LOCATION ARE INDICATED IN THE BAR MARK. THE FIRST ALPHABETICAL LETTER INDICATES LOCATION. THE NEXT DIGIT OF THE THREE DIGIT SERIES AND THE NEXT TWO DIGITS OF THE FOUR DIGIT SERIES INDICATE BAR SIZE NUMBER.

EXAMPLES:

S 501 — NO. 5 SIZE BAR; SLAB

A 522S — SERIES BAR; NO. 5 SIZE BAR; ABUTMENT

SUMMARY AND GRAND TOTAL OF BAR WEIGHTS

ABUTMENTS	6,025
PIERS	3,851
SLAB	144,272
GRAND TOTAL	154,148

DESIGN AGENCY
G.L.G.J.S. PYLE SCHOMER BURKS & DEFRAVEN, INC.
GPD ASSOCIATES
520 South Main Street, Suite 2531 Akron, Ohio 44311
330-372-2100 , Fax 330-372-2101

DESIGNED	DRAWN	REVIEWED	DATE
L.P.C.	R.P.R.	K.S.J.	3-31-04
CHECKED	REVISED	STRUCTURE FILE NUMBER	
P.J.W.		5007291	

REINFORCING SCHEDULE
BRIDGE NO. MAH - 680 - 0724
GIBSON ST. OVER I-680

MAH-680-7.24/8.34

17/17

78/107

Cad File: G:\CIVIL\2001169\01\110\DWG\STRUCT\DWG\2001169_110REBAR.DWG
Date: 03-30-04 Time: 4:00 PM TN = 0000.000'
Technician: RRYMER

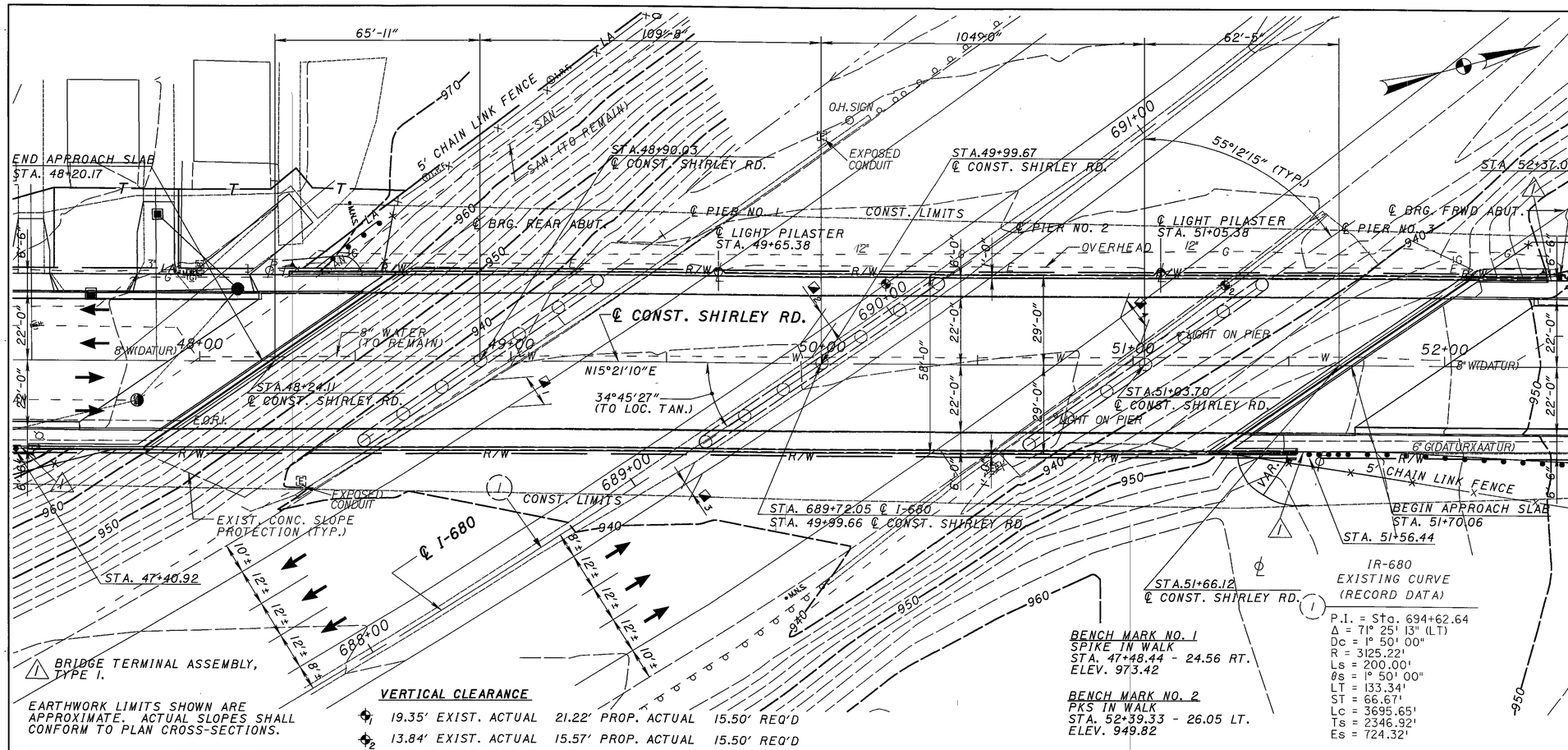

VERTICAL CLEARANCE

◆1	19.35' EXIST. ACTUAL	21.22' PROP. ACTUAL	15.50' REQ'D
◆2	13.84' EXIST. ACTUAL	15.57' PROP. ACTUAL	15.50' REQ'D

HORIZONTAL CLEARANCE

◪1	10.33' ACTUAL	12.00' REQ'D	
◪2	4.50' ACTUAL	12.00' REQ'D	
◪3	4.04' ACTUAL	12.00' REQ'D	
◪4	10.06' ACTUAL	12.00' REQ'D	

TRAFFIC DATA:
ADT (2004) 8270
ADTT (2004) 248
ADT (2024) 8590
ADTT (2024) 258

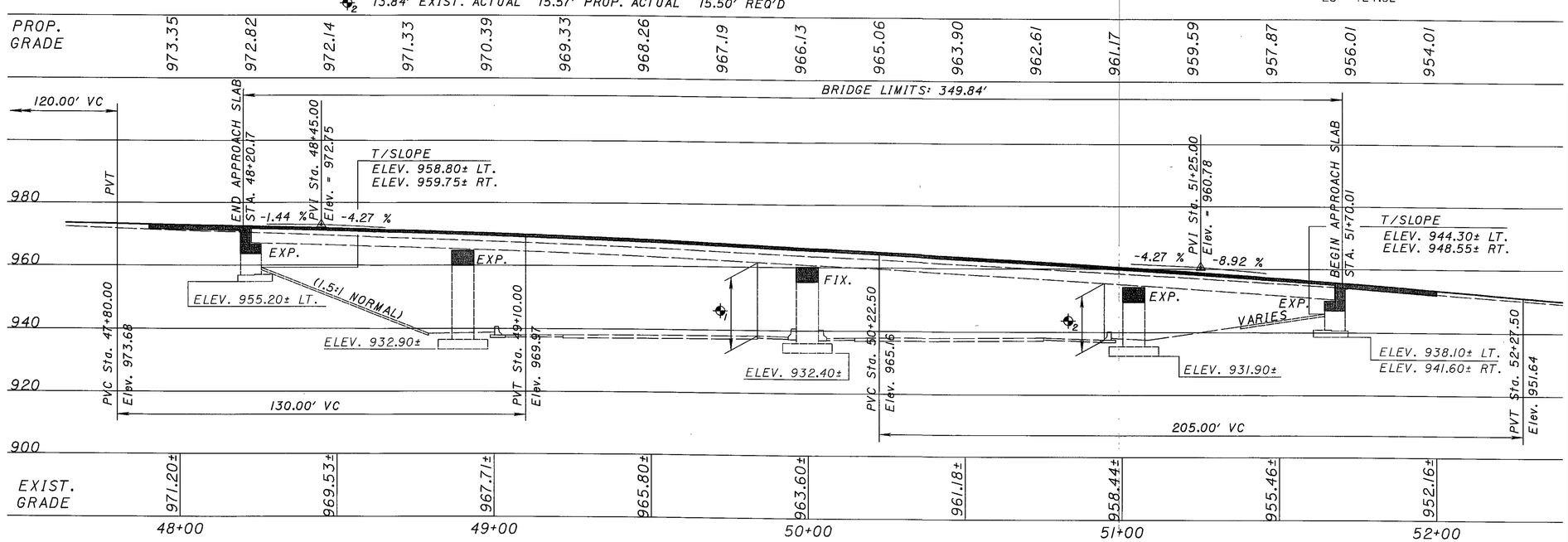

PROFILE ALONG ℄ CONST. SHIRLEY RD.

EXISTING STRUCTURE

TYPE:	CONTINUOUS STEEL WELDED PLATE GIRDERS (ASTM A36 STEEL) WITH REINFORCED CONCRETE DECK SLAB AND SUBSTRUCTURE
SPANS:	65'-11"±, 109'-8"±, 104'-0"±, 62'-5"±, C/C BEARINGS
ROADWAY:	44'-0"± FACE TO FACE CURBS, WITH 6'-0" SIDEWALK (LEFT AND RIGHT)
LOADING:	HS20-44
SKEW:	55° 12' 15"± LF
ALIGNMENT:	TANGENT
CROWN:	0.0156± FT/FT
WEARING COURSE:	ASPHALT CONCRETE
APPROACH SLABS:	30'-0"±
DATE BUILT:	1973
SFN:	5007534

PROPOSED STRUCTURE

PROPOSED WORK:	REPLACE EXISTING DECK SLAB WITH NEW COMPOSITE DECK SLAB. MODIFY EXIST. ABUTMENTS AND WINGWALLS TO RAISE BEAM SEATS. CONSTRUCT NEW PIER CAPS. REPLACE EXIST. BEARINGS WITH NEW ELASTOMERIC BEARINGS. REPLACE EXIST. CORRODED CROSSFRAMES. SPOT PAINT EXIST. STEEL, AND SEAL CONCRETE SURFACES.
TYPE:	CONTINUOUS COMPOSITE STEEL WELDED PLATE GIRDERS WITH REINFORCED CONCRETE DECK SLAB AND SUBSTRUCTURE (EXISTING GIRDERS AND SUBSTRUCTURE UNITS SALVAGED).
SPANS:	65'-11", 109'-8", 104'-0", 62'-5" C/C BEARINGS
ROADWAY:	44'-0" FACE TO FACE CURBS, WITH 6'-0" SIDEWALK (LEFT AND RIGHT)
LOADING:	HS20-44 (CASE II) AND ALTERNATE MILITARY LOADING. F.W.S. = 30 PSF.
SKEW:	55° 12' 15" LF
ALIGMENT:	TANGENT
CROWN:	0.0156
WEARING COURSE:	MONOLITHIC CONCRETE
APPROACH SLAB:	30'-0" (AS-1-81 MODIFIED)
STRUCTURE COORDINATES:	LAT. N 41° 04' 25" LONG. W 80° 37' 33"

DESIGN AGENCY
GPD ASSOCIATES

DESIGNED	CHECKED	DRAWN	REVISED	REVIEWED	DATE
B.J.M.	L.P.C.	R.P.R.		K.S.J.	3-31-04

STRUCTURE FILE NUMBER 5007534

MAHONING COUNTY
STA. 48+20.17
STA. 51+70.01

SITE PLAN

BRIDGE NO. MAH - 680 - 0834
SHIRLEY RD. OVER I-680

MAH-680-7.24/8.34

\\Akron01\data\civil\2001169\01\2\dgn\structure\834ep3.dgn
03/31/2004
11:45:57 AM

DESIGN SPECIFICATIONS

THE PROPOSED REHABILITATION WORK FOR THIS STRUCTURE CONFORMS TO "STANDARD SPECIFICATIONS FOR HIGHWAY BRIDGES" ADOPTED BY THE AMERICAN ASSOCIATION OF STATE HIGHWAY AND TRANSPORTATION OFFICIALS, 2002, AND THE ODOT BRIDGE DESIGN MANUAL.

DESIGN DATA

DESIGN LOADING:	HS 20-44 (CASE II) AND THE ALTERNATE MILITARY LOADING FUTURE WEARING SURFACE (FWS) OF 30 PSF
HIGH PERFORMANCE CONCRETE HPC:	COMPRESSIVE STRENGTH 4500 PSI (SUPERSTRUCTURE)
CONCRETE CLASS C:	COMPRESSIVE STRENGTH 4000 PSI (SUBSTRUCTURE)
REINFORCING STEEL:	ASTM A615 OR A996 GRADE 60, MINIMUM YIELD STRENGTH, 60,000 PSI.
STRUCTURAL STEEL	ASTM A572/A709 GRADE 50 YIELD STRENGTH 50,000 PSI
DECK PROTECTION METHOD:	EPOXY COATED REINFORCING STEEL, 2 1/2" CONCRETE COVER, HIGH PERFORMANCE CONCRETE.
MONOLITHIC WEARING SURFACE:	MONOLITHIC WEARING SURFACE IS ASSUMED, FOR DESIGN PURPOSES, TO BE 1" THICK

REFERENCES

REFERENCE SHALL BE MADE TO STANDARD DRAWINGS:

NO. AS-1-81 REVISED 07-19-02
NO. EXJ-4-87 REVISED 07-19-02
NO. GSD-1-96 REVISED 07-19-02
NO. HL-20.14 REVISED 01-17-03
NO. VPF-1-90 REVISED 07-19-02

AND TO SUPPLEMENTAL SPECIFICATIONS:

864 DATED 07-11-00
954 DATED 09-09-97

EXISTING STRUCTURE PLANS

THE EXISTING STRUCTURE PLANS (PROJECT NO. MAH-680-6.98) ARE ON FILE AND MAY BE REVIEWED IN THE OFFICE OF THE ODOT DISTRICT 4 DEPUTY DIRECTOR, 705 OAKWOOD ST., RAVENNA, OHIO 44266

CONTINGENCY QUANTITIES

THE CONTRACTOR SHALL NOT ORDER MATERIALS OR PERFORM WORK LISTED IN THE GENERAL SUMMARY FOR ITEMS DESIGNATED BY PLAN NOTE TO BE USED "AS DIRECTED BY THE ENGINEER" UNLESS AUTHORIZED BY THE ENGINEER. THE ACTUAL WORK LOCATIONS AND QUANTITIES USED AT THE ENGINEER'S DISCRETION SHALL BE MADE A MATTER OF RECORD BY INCORPORATION IN THE FINAL CHANGE ORDER GOVERNING COMPLETION OF THIS PROJECT.

UNDERGROUND UTILITIES

THE LOCATIONS OF THE UNDERGROUND UTILITIES SHOWN ON THE PLANS HAVE BEEN OBTAINED BY DILIGENT FIELD CHECKS AND AVAILABLE RECORDS. IT IS BELIEVED THAT THEY ARE ESSENTIALLY CORRECT, BUT THE STATE OF OHIO DOES NOT GUARANTEE THEIR ACCURACY OR COMPLETENESS.

UTILITY LINES

THE UTILITIES SHALL BORE ALL EXPENSE INVOLVED IN RELOCATING (INSTALLING) THE AFFECTED UTILITY LINES. THE CONTRACTOR AND UTILITIES ARE TO COOPERATE BY ARRANGING THEIR WORK IN SUCH A MANNER THAT INCONVENIENCE TO EITHER WILL BE HELD TO A MINIMUM.

PROPOSED WORK

1. REMOVE ENTIRE EXISTING DECK ABOVE THE GIRDERS, INCLUDING, ASPHALT WEARING SURFACE, EXPANSION JOINTS, SCUPPERS AND LIGHTING POLE.
2. REMOVE EXISTING APPROACH SLABS.
3. REMOVE EXISTING ABUTMENT BACKWALLS AND PORTIONS OF BEAM SEATS AND WINGWALLS.
4. REPLACE DETERIORATED END CROSS-FRAMES AS DIRECTED BY THE ENGINEER.
5. WELD SHEAR CONNECTORS TO EXISTING GIRDERS.
6. RAISE EXISTING GIRDERS, REMOVE BEARINGS AND PORTIONS OF PIER COLUMNS, AND CONSTRUCT ABUTMENT SEAT CAPS AND PORTIONS OF PIER COLUMNS AND PIER CAPS.
7. SET NEW LAMINATED ELASTOMERIC BEARINGS WITH LOAD PLATE AT ABUTMENTS AND PIERS AND PLACE GIRDERS ON BEARINGS.
8. CONSTRUCT DECK AS PER PLAN.
9. RECONSTRUCT ABUTMENT BACKWALLS AND PORTIONS OF WINGWALLS AS PER PLAN.
10. INSTALL NEW ELASTOMERIC STRIP SEAL EXPANSION JOINTS.
11. PATCH PORTIONS OF ABUTMENT BREAST WALLS AND PIERS AS REQUIRED.
12. SEAL CONCRETE SURFACES AS PER PLAN.
13. CONSTRUCT APPROACH SLABS AS PER PLAN.
14. INSTALL VANDAL FENCE.
15. REPAIR CONCRETE SLOPE PROTECTION.
16. SPOT PAINT EXISTING AND NEW STEEL.

PORTIONS OF STRUCTURE REMOVED, OVER 20 FT. SPAN, AS PER PLAN

DESCRIPTION: THIS WORK CONSISTS OF THE REMOVAL OF CONCRETE DECK INCLUDING SIDEWALK, CURBS, PARAPETS, RAILINGS, LIGHT POLE, DECK JOINTS, SCUPPERS AND OTHER APPURTENANCES FROM STEEL SUPPORTING SYSTEMS (BEAMS, CROSS FRAMES, ETC.), END CROSSFRAMES AND PORTIONS OF THE ABUTMENTS AND WINGWALLS TO THE LIMITS INDICATED IN THE PLANS. THE PROVISIONS OF ITEM 202 APPLY EXCEPT AS SPECIFIED BY THE FOLLOWING NOTES. PERFORM WORK CAREFULLY DURING DECK REMOVALS TO PROTECT PORTIONS OF SUCH SYSTEMS THAT ARE TO BE SALVAGED AND INCORPORATED INTO THE PROPOSED STRUCTURE. IN THIS RESPECT, THE USE OF EXPLOSIVES, HEADACHE BALLS AND/OR HOE-RAM TYPE OF EQUIPMENT IS PROHIBITED.

PROTECTION OF TRAFFIC: PRIOR TO DEMOLITION OF ANY PORTIONS OF THE EXISTING SUPERSTRUCTURE, SUBMIT PLANS FOR THE PROTECTION OF TRAFFIC ADJACENT TO AND/OR UNDER THE STRUCTURE TO THE DIRECTOR AT LEAST 30 DAYS BEFORE CONSTRUCTION BEGINS. THESE PLANS SHALL INCLUDE PROVISIONS FOR ANY DEVICES AND STRUCTURES THAT MAY BE NECESSARY TO ENSURE SUCH PROTECTION. MAINTAIN TEMPORARY VERTICAL CLEARANCES SPECIFIED ON THE PLANS OR IN THE PROPOSAL AT ALL TIMES EXCEPT AS OTHERWISE APPROVED BY THE DIRECTOR.

PROTECTION OF STEEL SUPPORT SYSTEMS: BEFORE DECK SLAB CUTTING IS PERMITTED, DRAW THE OUTLINE OF PRIMARY STEEL MEMBERS IN CONTACT WITH THE BOTTOM OF THE DECK ON THE SURFACE OF THE DECK. DRILL SMALL DIAMETER PILOT HOLES 2 INCHES OUTSIDE THESE LINES TO CONFIRM THE LOCATION OF FLANGE EDGES. DECK CUTS OVER OR WITHIN 2 INCHES OF FLANGE EDGES SHALL NOT EXTEND LOWER THAN THE BOTTOM LAYER OF DECK SLAB REINFORCING STEEL. CUTS MADE OUTSIDE 2 INCHES OF FLANGE EDGES MAY EXTEND THE FULL DEPTH OF THE DECK. PERFORM WORK CAREFULLY DURING CUTTING OF THE DECK SLAB TO AVOID DAMAGING STEEL MEMBERS THAT ARE TO BE INCORPORATED INTO THE PROPOSED STRUCTURE.

REMOVAL METHODS: THE CONTRACTOR MAY REMOVE CONCRETE BY CUTTING AND BY MEANS OF HAND OPERATED PNEUMATIC HAMMERS EMPLOYING POINTED OR BLUNTED CHISEL TYPE TOOLS. FOR REMOVALS OVER STEEL BEAMS, THE CONTRACTOR MAY USE A HAMMER HEAVIER THAN 35 POUNDS BUT NOT TO EXCEED 90 POUNDS UNLESS APPROVED BY THE ENGINEER. REMOVAL METHODS OVER BRIDGE MEMBERS SHALL ENSURE ADEQUATE DEPTH CONTROL AND PREVENT NICKING OR GOUGING THE PRIMARY STEEL MEMBERS.

DECK REMOVALS: DUE TO THE POSSIBLE PRESENCE OF WELDED ATTACHMENTS TO EXISTING STRUCTURAL STEEL (FINISHING MACHINE, SCUPPER AND FORM SUPPORTS, ETC.) PERFORM WORK CAREFULLY DURING DECK REMOVAL TO AVOID DAMAGING STRINGERS THAT ARE TO REMAIN. REPLACE OR REPAIR STRINGERS DAMAGED BY THE REMOVAL OPERATIONS AT NO COST TO THE PROJECT. SUBMIT PROPOSED REPAIRS, DEVELOPED BY AN OHIO REGISTERED PROFESSIONAL ENGINEER, IN WRITING TO THE DIRECTOR AT LEAST 20 DAYS BEFORE PERFORMING REPAIR WORK.

SUBSTRUCTURE CONCRETE REMOVAL: REMOVE CONCRETE BY MEANS OF APPROVED PNEUMATIC HAMMERS EMPLOYING POINTED AND BLUNT CHISEL TOOLS. HYDRAULIC HOE-RAM TYPE HAMMERS WILL NOT BE PERMITTED. THE WEIGHT OF THE HAMMER SHALL NOT BE MORE THAN 35 POUNDS FOR REMOVAL WITHIN 18 INCHES OF PORTIONS TO BE PRESERVED. OUTSIDE THE 18 INCH LIMIT, THE CONTRACTOR MAY USE HAMMERS NOT EXCEEDING 90 POUNDS UPON THE APPROVAL OF THE ENGINEER. DO NOT PLACE PNEUMATIC HAMMERS IN DIRECT CONTACT WITH REINFORCING STEEL THAT IS TO BE RETAINED IN THE REBUILT STRUCTURE.

CUT LINE CONSTRUCTION JOINT PREPARATION: SAW CUT BOUNDARIES OF PROPOSED CONCRETE REMOVALS 1 INCH DEEP. REMOVE CONCRETE TO A ROUGH SURFACE. LEAVE THE EXISTING REINFORCING STEEL, IF REQUIRED IN THE PLANS, IN PLACE. INSTALL DOWEL BARS IF SPECIFIED. PRIOR TO CONCRETE PLACEMENT ABRASIVELY CLEAN JOINT SURFACES AND EXISTING EXPOSED REINFORCEMENT TO REMOVE LOOSE AND DISINTEGRATED CONCRETE AND LOOSE RUST. THOROUGHLY CLEAN THE JOINT SURFACE AND EXPOSED REINFORCEMENT OF ALL DIRT, DUST, RUST OR OTHER FOREIGN MATERIAL BY THE USE OF WATER, AIR UNDER PRESSURE, OR OTHER METHODS THAT PRODUCE SATISFACTORY RESULTS. EXISTING REINFORCING STEEL DOES NOT HAVE TO HAVE A BRIGHT STEEL FINISH, BUT REMOVE ALL PACK AND LOOSE RUST. THOROUGHLY DRENCH EXISTING CONCRETE SURFACES WITH CLEAN WATER AND ALLOW TO DRY TO A DAMP CONDITION BEFORE PLACING CONCRETE.

EXTRANEOUS MEMBERS: REMOVE EXISTING EXTRANEOUS MEMBERS (I.E., FINISHING MACHINE AND FORM SUPPORTS AND THE SUPPORT FOR SCUPPERS WHICH ARE TO BE REMOVED) ATTACHED BY WELDED CONNECTIONS TO THE DESIGNATED TENSION PORTIONS OF THE TOP FLANGES OF EXISTING STEEL MEMBERS AND GRIND THE FLANGE SURFACES SMOOTH. CAREFULLY GRIND PARALLEL TO THE FLANGES.

LOADING LIMITATIONS: NO PART OF THE STRUCTURE SHALL BE SUBJECTED TO UNIT STRESSES THAT EXCEED 136.5% OF ALLOWABLE UNIT STRESSES AS DEFINED IN THE AASHTO STANDARD SPECIFICATIONS FOR HIGHWAY BRIDGES DUE EITHER TO DEMOLITION, ERECTION OR CONSTRUCTION METHODS, OR TO THE USE OR MOVEMENT OF DEMOLITION OR ERECTION EQUIPMENT ON OR ACROSS THE STRUCTURE. SUBMIT STRUCTURAL ANALYSIS COMPUTATIONS, BY AN OHIO REGISTERED PROFESSIONAL ENGINEER, SHOWING THE ALLOWABLE STRESSES AND THE MAXIMUM STRESSES PRODUCED BY THE REMOVAL METHODS OR EQUIPMENT TO THE DIRECTOR AT LEAST 20 DAYS BEFORE CONSTRUCTION BEGINS.

MEASUREMENT & PAYMENT: THE DEPARTMENT WILL MEASURE THE QUANTITY OF REMOVALS ON A LUMP SUM BASIS. THE DEPARTMENT WILL PAY FOR THE ACCEPTED QUANTITIES OF REMOVALS AT THE CONTRACT PRICE FOR ITME 202, PORTIONS OF STRUCTURE REMOVED, AS PER PLAN.

EXISTING STRUCTURE VERIFICATION

DETAILS AND DIMENSIONS SHOWN ON THESE PLANS PERTAINING TO THE EXISTING STRUCTURE HAVE BEEN OBTAINED FROM PLANS OF THE EXISTING STRUCTURE AND FROM FIELD OBSERVATIONS AND MEASUREMENTS. CONSEQUENTLY, THEY ARE INDICATIVE OF THE EXISTING STRUCTURE AND PROPOSED WORK BUT THEY SHALL BE CONSIDERED TENTATIVE AND APPROXIMATE. THE CONTRACTOR IS REFERRED TO CMS SECTIONS 102.05, 105.02 AND 513.04.

BASE CONTRACT BID PRICES UPON A RECOGNITION OF THE UNCERTAINTIES DESCRIBED ABOVE AND UPON A PREBID EXAMINATION OF THE EXISTING STRUCTURE. HOWEVER, THE DEPARTMENT WILL PAY FOR ALL PROJECT WORK BASED UPON ACTUAL DETAILS AND DIMENSIONS WHICH HAVE BEEN VERIFIED IN THE FIELD.

SEALING OF CONCRETE SURFACES

EPOXY-URETHANE SHALL BE THE "LIGHT NEUTRAL" COLOR MEETING FEDERAL COLOR STANDARD NO. 17778 AS PER THE DETAILS IN THE PLANS.

ASBESTOS NOTIFICATION:

AN ASBESTOS SURVEY OF THE SHIRLEY RD. BRIDGE OVER I-680 SCHEDULED FOR REHABILITATION WAS CONDUCTED BY A CERTIFIED ASBESTOS HAZARD EVALUATION SPECIALIST. THE SURVEY DETERMINED THAT NO ASBESTOS IS PRESENT ON THE BRIDGE.

A COPY OF THE OHIO ENVIRONMENTAL PROTECTION AGENCY (OEPA) NOTIFICATION OF THE DEMOLITION AND RENOVATION FORM, PARTIALLY COMPLETED AND SIGNED BY THE BRIDGE OWNER WILL BE PROVIDED TO THE SUCCESSFUL BIDDER. THE CONTRACTOR SHALL COMPLETE THE FORM AND SUBMIT IT TO:

MAHONING-TRUMBULL AIR
POLLUTION CONTROL
OAK HILL/RENAISSANCE PLACE
SECOND FLOOR, ROOM 25
345 OAK HILL AVENUE
YOUNGSTOWN, OHIO 44503
ROBERT RAMHOFF, DIRECTOR
(330)744-1928
FAX (330)744-1928

AT LEAST TEN (10) WORKING DAYS PRIOR TO START OF THE BRIDGE DEMOLITION WORK, THE CONTRACTOR SHALL PROVIDE A COPY OF THE COMPLETED FORM TO THE ENGINEER.

INFORMATION REQUIRED ON THE FORM WILL INCLUDE: THE CONTRACTOR'S NAME AND ADDRESS, THE SCHEDULED DATES FOR THE START AND COMPLETION OF THE BRIDGE REMOVAL OR RENOVATION AND A DESCRIPTION OF THE PLANNED DEMOLITION OR RENOVATION WORK AND THE METHOD(S) TO BE USED. A COPY OF THE OEPA FORM IS AVAILABLE FOR INSPECTION AT THE ODOT DISTRICT 4 OFFICE, 705 OAKWOOD STREET, RAVENNA, OHIO 44266.

BASIS FOR PAYMENT: THE CONTRACTOR SHALL FURNISH ALL FEES, LABOR, AND MATERIAL NECESSARY TO COMPLETE AND SUBMIT THE OEPA NOTIFICATION FORM. PAYMENT FOR THIS WORK SHALL BE INCLUDED IN ITEM 202 - PORTIONS OF STRUCTURE REMOVED, OVER 20' SPAN, AS PER PLAN.

REQUIRED MINIMUM BAR LAP LENGTHS *

BAR SIZE	OTHER	TOP
#4	1'-11"	2'-9"
#5	2'-5"	3'-5"
#6	2'-11"	4'-1"
#7	3'-8"	5'-2"
#8	4'-11"	6'-10"
#9	6'-2"	8'-8"
#10	7'-10"	11'-0"
#11	9'-8"	13'-6"

* UNLESS NOTED OTHERWISE IN PLANS.

INSPECTION OF EXISTING STRUCTURAL STEEL

THE ENGINEER WILL VISUALLY INSPECT ALL EXISTING BUTT WELDED SPLICES TO ENSURE THE WELDS, PLATES AND GIRDERS ARE FREE OF DEFECTS AND CRACKS. IF NECESSARY, REMOVE ALL DECK SLAB HAUNCH FORMS IMMEDIATELY ADJACENT TO SUCH WELDS THAT MAY INTERFERE WITH THE ENGINEER'S INSPECTION. THE INSPECTION WILL NOT TAKE PLACE UNTIL THE TOP FLANGES ARE CLEANED ACCORDING TO 511.10, BUT IT WILL BE DONE BEFORE THE DECK SLAB REINFORCEMENT IS INSTALLED. THE DEPARTMENT WILL PAY FOR THE COST ASSOCIATED WITH THIS INSPECTION WITH ITEM 511, SUPERSTRUCTURE CONCRETE. THE ENGINEER WILL REPORT ALL CRACKS FOUND TO THE OFFICE OF CONSTRUCTION ADMINISTRATION, BRIDGE CONSTRUCTION SPECIALIST, ALONG WITH SPECIFIC INFORMATION ON LOCATION OF THE CRACKS, LENGTH, AND DEPTH SO AN EVALUATION AND REPAIR OR REPLACEMENT RECOMMENDATION CAN BE MADE.

ABBREVIATIONS

B.S.	BOTH SIDES	U.N.	UNLESS NOTED
N.S.	NEAR SIDE	SPL.	SPLICE
F.S.	FAR SIDE	CLR.	CLEAR
SER.	SERIES	EA.	EACH
TYP.	TYPICAL	MIN.	MINIMUM
EQ.	EQUAL	EXIST.	EXISTING
DIM.	DIMENSION	GIRD.	GIRDER
SPA.	SPACES	BOT.	BOTTOM
FRWD.	FORWARD	P.E.J.F.	PREFORMED EXPANSION JOINT FILLER
ABUT.	ABUTMENT	PERF.	PERFORATED
REHAB.	REHABILITATION	C.P.P.	CORRUGATED PLASTIC PIPE
VAR.	VARIES	C.M.P.	CORRUGATED METAL PIPE
SIM.	SIMILAR		
OPP.	OPPOSITE		

DESIGN AGENCY
GLAUS PYLE SCHOMER BURNS & DEHAVEN, INC.
GPD ASSOCIATES
320 South Main Street, Suite 251, Akron, Ohio 44311
330-972-2180, Fax 330-972-0191

DESIGNED	DRAWN	REVIEWED	DATE
L.P.C.	R.P.R.	K.S.J.	3-31-04
CHECKED	REVISED	STRUCTURE FILE NUMBER	
P.J.W.		5007534	

STRUCTURE GENERAL NOTES
BRIDGE NO. MAH - 680 - 0834
SHIRLEY RD. OVER I-680

MAH-680-7.24/8.34

Cad File: G:\CIVIL\20011169.01\112\DWG\STRUCT\DWG\2001169_1120TY.DWG
Date: 03-31-04 Time: 11:15 AM XREF: RW = 0400'0.00"
Technician: RRYMER

ITEM 516. JACKING AND TEMPORARY SUPPORT OF SUPERSTRUCTURE, AS PER PLAN

THIS WORK CONSISTS OF RAISING OR RE–POSITIONING EXISTING STRUCTURES TO THE DIMENSIONS AND REQUIREMENTS DEFINED IN THE PROJECT PLANS.

AN OHIO REGISTERED ENGINEER SHALL PREPARE, SEAL AND DATE PLANS FOR A JACKING SYSTEM, INCLUDING ANY TEMPORARY OR PERMANENT SUPPORTS, SUFFICIENT TO PERFORM THE WORK DESCRIBED IN THE PLANS. SUBMIT THREE SETS OF THESE PLANS TO THE DIRECTOR FOR APPROVAL AT LEAST THIRTY (30) DAYS BEFORE ACTUAL WORK IS TO BEGIN.

JACKING SUBMITTALS SHALL INCLUDE AT LEAST THE FOLLOWING:

1. THE SIGNATURE AND NUMBER, OR PROFESSIONAL SEAL, OF THE OHIO REGISTERED PROFESSIONAL ENGINEER WHO PREPARED THE SUBMITTAL.
2. CALCULATIONS AND ANALYSES OF THE STRUCTURE TO DETERMINE AND DEFINE THE ACTUAL LOADING APPLIED AT THE JACKING POINTS.
3. A DRAWING SHOWING THE PHYSICAL AND DIMENSIONAL POSITION OF THE JACKS WITH RESPECT TO THE STRUCTURE INCLUDING CLEARANCES AND CENTER OF LIFT.
4. A SCHEMATIC LAYOUT OF JACKS, CHECK VALVES, PUMPS WITH 3 WAY RETRACTOR VALVE, PRESSURE GAGES, FLOW CONTROL VALVES, ETC. IN ACCORDANCE WITH MANUFACTURER'S RECOMMENDATIONS. ALL JACKS FOR EACH ABUTMENT OR PIER SHALL BE CONNECTED TOGETHER. ALL JACKS AT EACH ABUTMENT OR PIER SHALL BE THE SAME SIZE.
5. ANALYSIS AND CALCULATIONS OF THE STRESSES INDUCED OR CREATED IN THE STRUCTURE AND ANY TEMPORARY OR PERMANENT SUPPORTS. DESIGN CALCULATIONS FOR ANY TEMPORARY OR PERMANENT SUPPORTS.
6. PHYSICAL DIMENSIONS, MATERIALS, AND FABRICATION DETAILS OF ANY TEMPORARY OR PERMANENT SUPPORTS. HORIZONTAL AND VERTICAL MOVEMENT RESTRAINT SHALL BE PROVIDED.
7. A STEP BY STEP PROCEDURE DETAILING ALL STEPS IN THE JACKING OPERATION.
8. METHOD OF ATTACHMENT TO STRUCTURAL MEMBERS. WELDING TO TENSION AREAS WILL NOT BE PERMITTED.

JACKING SYSTEM REQUIREMENTS:

THE ENTIRE SYSTEM INCLUDING JACKS SHALL HAVE 20% MORE CAPACITY THAN REQUIRED BASED ON CALCULATED LOADS. FOR LIFTS GREATER THAN 1 INCH, JACKS SHALL HAVE LOCKING NUTS TO POSITIVELY LOCK AND SUPPORT THE STRUCTURE DURING THE LIFT. JACKS SHALL HAVE A SWIVEL LOAD CAP, A DOMED PISTON HEAD OR SOME OTHER DEVICE TO PROTECT AGAINST THE EFFECTS OF SIDE LOAD ON THE JACK. DO NOT USE JACKS ALONE TO SUPPORT LOADS EXCEPT DURING THE ACTUAL JACKING OPERATION. USE TEMPORARY SUPPORTS, BLOCKING OR OTHER METHODS APPROVED BY THE DIRECTOR. DO NOT USE SINGLE ACTING RAMS WITH NO OVER–TRAVEL PROTECTION SYSTEM. HAVE SPARE EQUIPMENT AVAILABLE ON SITE IN ORDER TO PROCEED WITH THE JACKING IN THE EVENT OF BREAKDOWN. PROVIDE A LIST OF SPARE EQUIPMENT TO THE ENGINEER.

JACKING OPERATION REQUIREMENTS:

AT A MINIMUM, A JACKING OPERATION SHALL LIFT ALL GIRDERS AT ANY ONE ABUTMENT OR PIER SIMULTANEOUSLY. THE ONLY EXCEPTION IS THE SITUATION WHERE WORK INVOLVES REPLACING OR REHABILITATING INDIVIDUAL BEARINGS; NO PERMANENT SHIMMING IS REQUIRED AND THE HEIGHT OF THE LIFT SHALL NOT EXCEED ¼ INCH. THE MAXIMUM DIFFERENTIAL JACKING HEIGHT BETWEEN ANY ADJACENT ABUTMENTS OR PIERS SHALL BE 1 INCH OR LESS. IF THIS 1 INCH LIMIT IS TO BE EXCEEDED, PROVIDE CALCULATIONS SHOWING THAT THE SUPERSTRUCTURE COMPONENTS WILL NOT BE TEMPORARILY STRESSED BEYOND ALLOWABLE STRESSES AND THAT NO PERMANENT STRESSES WILL BE INDUCED IN THE COMPONENTS AFTER THEY OBTAIN THEIR FINAL POSITION. IF, DURING THE JACKING OPERATIONS, CRACKING OF THE CONCRETE SUPERSTRUCTURE, SEPARATION OF THE CONCRETE DECK FROM THE STEEL STRINGERS, OR OTHER DAMAGE TO THE STRUCTURE IS VISUALLY OBSERVED, IMMEDIATELY CEASE THE JACKING OPERATION AND INSTALL SUPPORTS TO THE SATISFACTION OF THE ENGINEER. ANALYZE THE DAMAGE AND SUBMIT A METHOD OF CORRECTION TO THE ENGINEER FOR APPROVAL. EPOXY INJECT ALL GIRDERS THAT SEPARATE FROM THE DECK FOR THE DISTANCE OF THE SEPARATION IN ACCORDANCE WITH ODOT'S PROPOSAL NOTE "CONCRETE REPAIR BY EPOXY INJECTION". THE DEPARTMENT WILL NOT PAY FOR THE COST OF THIS EPOXY INJECTION OR OTHER REQUIRED REPAIRS. THE BRIDGE BEARINGS SHALL BE FULLY SEATED AT ALL CONTACT AREAS. IF FULL SEATING IS NOT ATTAINED, SUBMIT A REPAIR PLAN TO THE ENGINEER. THE DEPARTMENT WILL NOT PAY FOR THE REPAIR COSTS TO ENSURE FULL SEATING ON BEARINGS.

METHOD OF MEASUREMENT:

THE DEPARTMENT WILL MEASURE THIS WORK ON A LUMP SUM BASIS.

BASIS OF PAYMENT:

THE DEPARTMENT WILL PAY FOR THE ACCEPTED QUANTITIES AT THE CONTRACT PRICE FOR ITEM 516, JACKING AND TEMPORARY SUPPORT OF SUPERSTRUCTURE, AS PER PLAN.

BONDING GROUT

THE BONDING GROUT TO BE USED BETWEEN OLD AND NEW CONCRETE WALLS AT THE REAR AND FORWARD ABUTMENTS SHALL BE "SIKA ARMATEC 110" AS MANUFACTURED BY SIKA CORPORATION, 201 POLITO AVENUE, LYNDHURST, NEW JERSEY 07071; "EUCO NO. 452 EPOXY SYSTEM" AS MANUFACTURED BY THE EUCLID CHEMICAL CO., 19218 REDWOOD ROAD, CLEVELAND, OHIO 44110; "CONCRESIVE STANDARD LIQUID" AS MANUFACTURED BY MASTER BUILDERS, INC., 23700 CHAGRIN BOULEVARD, CLEVELAND, OHIO 44122; OR AN APPROVED ALTERNATE. SURFACE PREPARATION MIXING AND PLACING OF GROUT SHALL BE IN ACCORDANCE WITH THE MANUFACTURER'S INSTRUCTION. BONDING GROUT IS INCLUDED WITH ITEM 511, CLASS C CONCRETE, ABUTMENT.

CONCRETE PARAPETS

AS SOON AS A CONCRETE SAW CAN BE OPERATED WITHOUT DAMAGING THE FRESHLY PLACED CONCRETE, SAW CUT 1 1/4 INCH DEEP CONTROL JOINTS INTO THE PERIMETER OF THE CONCRETE PARAPET STARTING AND ENDING AT SIDEWALK. PLACE THE SAWCUTS AT THE SPACINGS SHOWN IN THE PLANS. USE AN EDGE GUIDE, FENCE, OR JIG TO ENSURE THAT THE CUT JOINT IS STRAIGHT, TRUE AND ALIGNED ON ALL FACES OF THE PARAPET. THE JOINT WIDTH SHALL BE THE WIDTH OF THE SAW BLADE, A NOMINAL WIDTH OF 1/4 INCH. SEAL THE PERIMETER OF THE DEFLECTION CONTROL TO A MINIMUM DEPTH OF 1 INCH WITH A POLYURETHANE OR POLYMERIC MATERIAL CONFORMING TO ASTM C920, TYPE S. LEAVE THE BOTTOM 1/2" OF THE INSIDE AND OUTSIDE FACE UNSEALED TO ALLOW WATER TO ESCAPE.

ITEM 511. CLASS HP CONCRETE, TEST SLAB

THIS ITEM IS INCLUDED WITH BRIDGE NO. MAH–680–0724 FOR PAYMENT.

ITEM 519. PATCHING CONCRETE STRUCTURE, AS PER PLAN

PRIOR TO THE SURFACE CLEANING SPECIFIED IN 519.04 AND WITHIN 24 HOURS OF PLACING PATCHING MATERIALS, BLAST CLEAN ALL SURFACES TO BE PATCHED INCLUDING THE EXPOSED REINFORCING STEEL. ACCEPTABLE METHODS INCLUDE HIGH–PRESSURE WATER BLASTING WITH OR WITHOUT ABRASIVES IN THE WATER, ABRASIVE BLASTING WITH CONTAINMENT, OR VACUUM ABRASIVE BLASTING.

ITEM 513–STRUCTURAL STEEL MEMBERS, LEVEL UF, AS PER PLAN:

ALL REQUIREMENTS OF 513 APPLY TO SHOP FABRICATED MEMBERS. PERFORM WORK FOR FIELD FABRICATED MEMBERS ACCORDING TO ITEM 513, EXCEPT AS MODIFIED HEREIN. THE DEPARTMENT WILL NOT REQUIRE THE CONTRACTOR PERFORMING FIELD FABRICATION TO BE PRE–QUALIFIED AS SPECIFIED IN SUPPLEMENT 1078. SUBMIT A WRITTEN LETTER OF MATERIAL ACCEPTANCE, 501.06, TO THE ENGINEER. PROVIDE SHOP DRAWINGS ACCORDING TO 513.06 OR SUPPLY THE ENGINEER WITH "AS–BUILT" DRAWINGS MEETING 513.06 AFTER COMPLETION OF FIELD FABRICATION. THE ENGINEER WILL REVIEW THE SUBMITTED DRAWINGS FOR CONCURRENCE WITH THE FINAL AS–BUILT CONDITION. IF NECESSARY, THE ENGINEER MAY CONTACT THE OFFICE OF STRUCTURAL ENGINEERING FOR TECHNICAL ASSISTANCE. IF THE ENGINEER IS SATISFIED WITH THE "AS–BUILT" DRAWINGS AND THE DELIVERED MATERIALS, SUPPLY A COPY OF THE DRAWINGS, STAMPED AND DATED, ALONG WITH MICROFILM, TO THE OFFICE OF STRUCTURAL ENGINEERING FOR RECORD PURPOSES.

THE FOLLOWING MEMBERS ARE INCLUDED IN THIS ITEM: END CROSSFRAME MEMBERS

ITEM 503. UNCLASSIFIED EXCAVATION, AS PER PLAN

THE BACKFILL MATERIAL BEHIND THE ABUTMENTS SHALL BE TYPE B GRANULAR MATERIAL, 703.16.C, PLACED AND COMPACTED IN 6 INCH LIFTS.

ESTIMATED QUANTITIES

CALCULATED: R.H.C. DATE: 11/14/02
CHECKED: P.J.W. DATE: 11/15/03

	ITEM	EXT	TOTAL	UNITS	DESCRIPTION	ABUT	PIER	SUPER	GENERAL	A.P.P. REF. SHT. NO.
	202	11203	LUMP		PORTIONS OF STRUCTURE REMOVED, OVER 20 FOOT SPAN, AS PER PLAN				LUMP	2
	503	21301	LUMP		UNCLASSIFIED EXCAVATION, AS PER PLAN	LUMP				3
	509	10000	262,981	POUND	EPOXY COATED REINFORCING STEEL	29,421	29,765	203,795		
	510	10000	505	EACH	DOWEL HOLES WITH NON–SHRINK, NON–METALLIC GROUT	505				
	511	43200	196	CU YD	CLASS C CONCRETE, PIER		196			
	511	45700	268	CU YD	CLASS C CONCRETE, ABUTMENT	268				
	511	50000	795	CU YD	CLASS HP CONCRETE, BRIDGE DECK	795				
	511	50100	80	CU YD	CLASS HP CONCRETE, BRIDGE DECK (PARAPET)	12		68		
■	513	10201	2,000	POUND	STRUCTURAL STEEL MEMBERS, LEVEL UF, AS PER PLAN				2,000	3
	513	20000	4,893	EACH	WELDED STUD SHEAR CONNECTORS			4,893		
▲	514	00050	1,000	SQ FT	SURFACE PREPARATION OF EXISTING STRUCTURAL STEEL				1,000	
▲	514	00056	1,000	SQ FT	FIELD PAINTING OF EXISTING STRUCTURAL STEEL, PRIME COAT				1,000	
▲	514	00060	1,000	SQ FT	FIELD PAINTING STRUCTURAL STEEL, INTERMEDIATE COAT				1,000	
▲	514	00066	1,000	SQ FT	FIELD PAINTING STRUCTURAL STEEL, FINISH COAT				1,000	
	514	00101	LUMP		SURFACE PREPARATION OF EXISTING STRUCTURAL STEEL, PRESSURE WASHING, AS PER PLAN				LUMP	3
◑	516	00504	8	MAN HR	GRINDING FINS, TEARS, SLIVERS ON EXISTING STRUCTURAL STEEL				8	
	516	11210	197	FT	STRUCTURAL EXPANSION JOINT INCLUDING ELASTOMERIC STRIP SEAL			197		
	516	44101	14	EACH	ELASTOMERIC BEARING WITH INTERNAL LAMINATES AND LOAD PLATE (9"x 13.5"x 2.94" THICK), AS PER PLAN			14		14
	516	44101	14	EACH	ELASTOMERIC BEARING WITH INTERNAL LAMINATES AND LOAD PLATE (14"x 22"x 2.63" THICK), AS PER PLAN			14		14
	516	44101	7	EACH	ELASTOMERIC BEARING WITH INTERNAL LAMINATES AND LOAD PLATE (14"x 23"x 2.41" THICK), AS PER PLAN			7		14
	516	47001	LUMP		JACKING AND TEMPORARY SUPPORT OF SUPERSTRUCTURE, AS PER PLAN				LUMP	3
	518	21230	LUMP		POROUS BACKFILL WITH FILTER FABRIC	LUMP				
	518	40000	247	FT	6" PERFORATED CORRUGATED PLASTIC PIPE	247				
	518	40010	117	FT	6" NON–PERFORATED CORRUGATED PLASTIC PIPE, INCLUDING SPECIALS.	117				
◪	519	11101	194	SQ FT	PATCHING CONCRETE STRUCTURE, AS PER PLAN	82	47		65	3
	526	30001	301	SQ YD	REINFORCED CONCRETE APPROACH SLABS (T=17"), AS PER PLAN			301		
	SPECIAL	60739930	800	FT	VANDAL PROTECTION FENCE, 12' CURVED, COATED FABRIC	110		690		
	864	10100	2,704	SQ YD	SEALING OF CONCRETE SURFACES (EPOXY–URETHANE)	1,246	835	623		

▲ ITEM 514 – AN ALLOWANCE OF 1,000 SQ. FT. HAS BEEN INCLUDED FOR SPOT PAINTING OF EXISTING STRUCTURAL STEEL.

◑ ITEM 514 – AN ALLOWANCE OF 8 MAN HOUR HAS BEEN INCLUDED FOR SPOT PAINTING OF EXISTING STRUCTURAL STEEL.

◪ ITEM 519 – AN ALLOWANCE OF 65 SQ. FT. HAS BEEN INCLUDED FOR FUTURE DETERIORATION.

■ ITEM 513 – AN ALLOWANCE OF 2,000 POUNDS HAS BEEN INCLUDED FOR REPLACING DETERIORATED END CROSSFRAME MEMBERS.

ITEM 514 – FIELD PAINTING OF STRUCTURAL STEEL

THE CONTRACTOR SHALL MATCH EXISTING COLOR AND FINISH FOR AREAS TO BE SPOT PAINTED TO THE SATISFACTION OF THE ENGINEER. ODOT RECORDS INDICATE THAT THE STRUCTURE WAS PREVIOUSLY PAINTED WITH "BLUE" COLOR MEETING FEDERAL COLOR STANDARD NO. 15450.

ITEM 514–SURFACE PREPARATION OF EXISTING STEEL, PRESSURE WASHING, AS PER PLAN

THIS WORK CONSISTS OF A PRESSURE WASHING OF THE ENTIRE EXISTING STEEL STRUCTURE IN ACCORDANCE WITH THE PROVISIONS LISTED IN 514.12 AND IS TO INCLUDE ALL LABOR AND MATERIALS TO COMPLETE THE WASHING. PRESSURE WASHING WILL OCCUR PRIOR TO ANY REQUIRED REPAIR PAINTING SURFACE PREPARATION AND REPAIR FIELD PAINTING. IT WILL BE THE CONTRACTORS RESPONSIBILITY TO SCHEDULE THE WASHING WITHIN THE GUIDELINES ESTABLISHED IN THE MAINTENANCE OF TRAFFIC PLAN UNLESS A SEPARATE SCHEDULE IS APPROVED BY THE ENGINEER.

DESIGN AGENCY
GLASS PYLE SCHOWNER BURNS & DEWANN INC.
GPD ASSOCIATES
320 South Main Street, Suite 231 Akron, Ohio 44311
330-972-0108 / Fax 330-972-0110

DESIGNED	DRAWN	REVIEWED	DATE
L.P.C.	R.P.R.	K.S.J.	3–31–04
CHECKED	REVISED	STRUCTURE FILE NUMBER	
P.J.W.		5007534	

ESTIMATED QUANTITIES & STRUCTURE GENERAL NOTES
BRIDGE NO. MAH – 680 – 0834
SHIRLEY RD. OVER I–680

MAH–680–7.24/8.34

Cad File: G:\CIVIL\2001169\01\112\DWG\STRUCT\DWG\2001169_112GTY.DWG
Date: 03–31–04 Time: 1:15 AM Tw = 0d0'0.00"
Technician. RRYMER

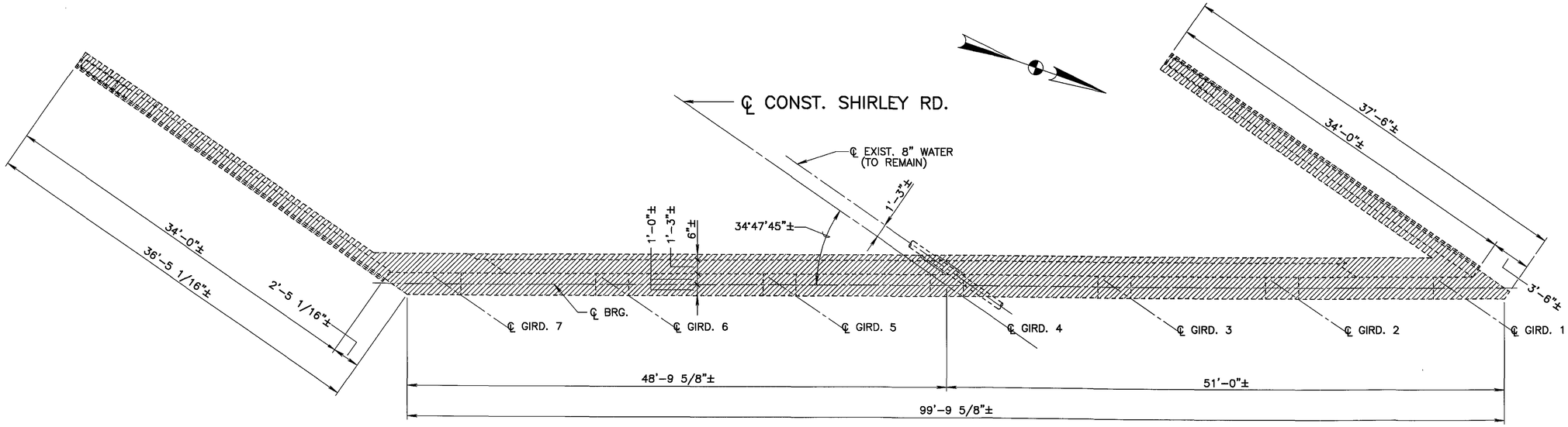

PLAN

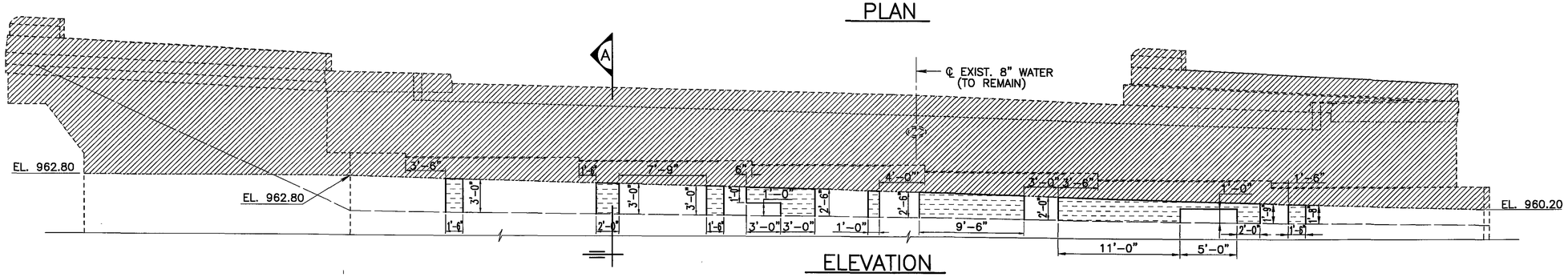

ELEVATION

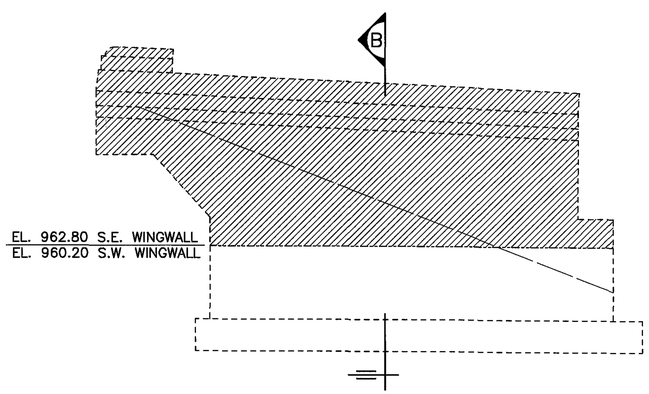

ELEVATION

SOUTHEAST WINGWALL SHOWN
SOUTHWEST WINGWALL SIM.

NOTE: PIPE RAILING NOT SHOWN (TYP.)

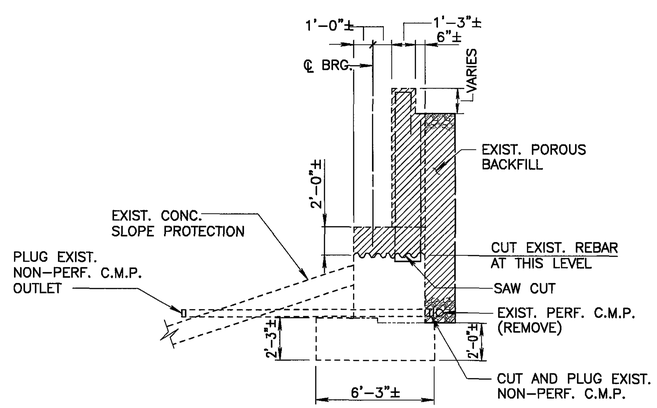

SECTION A

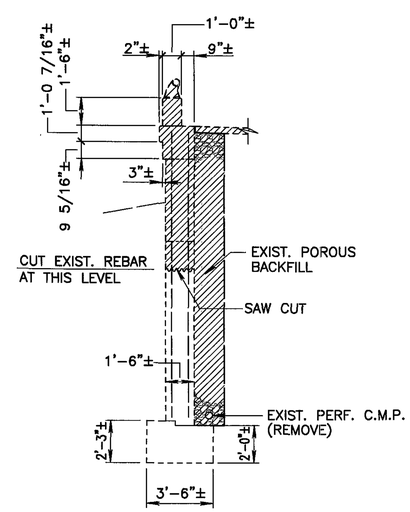

SECTION B

NOTE:

1. FOR PATCHING CONCRETE STRUCTURE NOTE, SEE SHT. NO. 3/21 .

LEGEND

INDICATES AREA TO BE PATCHED PER ITEM 519, PATCHING CONCRETE STRUCTURE, AS PER PLAN

INDICATES REMOVAL LIMITS, ITEM 202, PORTIONS OF STRUCTURE REMOVED, OVER 20 FT. SPAN, AS PER PLAN

STRUCTURE INSPECTION PERFORMED IN NOVEMBER, 2002.

DESIGN AGENCY
GLAUS PYLE SCHOMER BURNS & DEWANEY, INC.
GPD ASSOCIATES
320 South Main Street, Suite 2331 Akron, Ohio 44311
330-972-0100 / Fax 330-972-0101

DESIGNED	DRAWN	REVIEWED	DATE
L.P.C.	R.P.R.	K.S.J.	3-31-04
CHECKED	REVISED	STRUCTURE FILE NUMBER	
P.J.W.		5007534	

REAR ABUTMENT REMOVAL PLAN & REPAIR DETAILS

BRIDGE NO. MAH – 680 – 0834
SHIRLEY RD. OVER I-680

MAH-680-7.24/8.34

Cad File: G:\DWG\2001169\01\112\DWG\STRUCT\DWG\2001169_112ABUTDEMO.DWG
Date: 03-31-04 Time: 11:09 AM TW = 060'0.00"
Technician: RRYMER

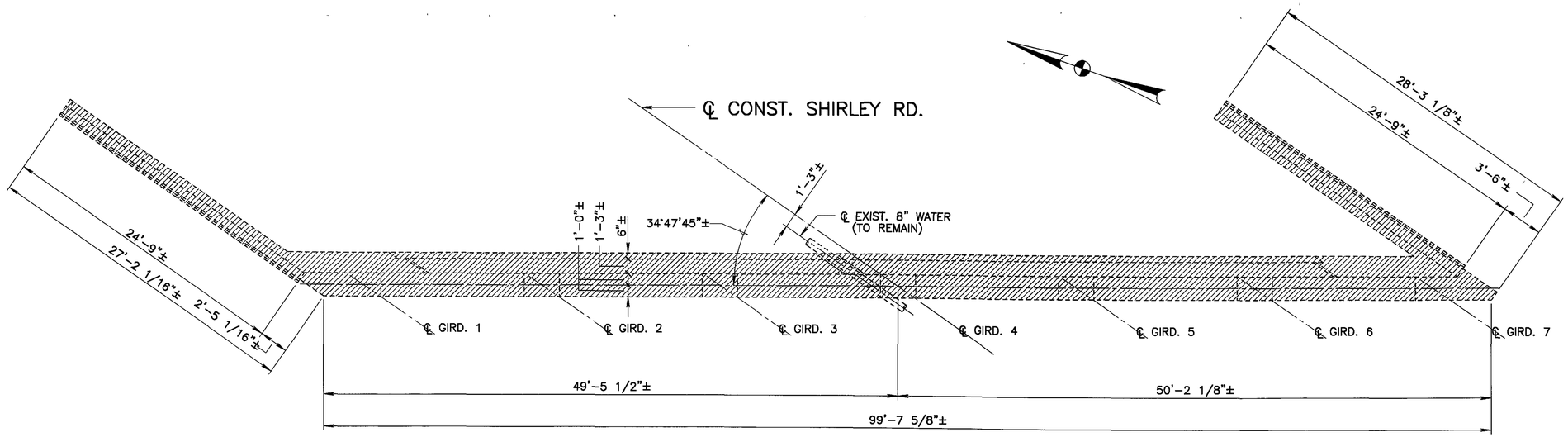

PLAN

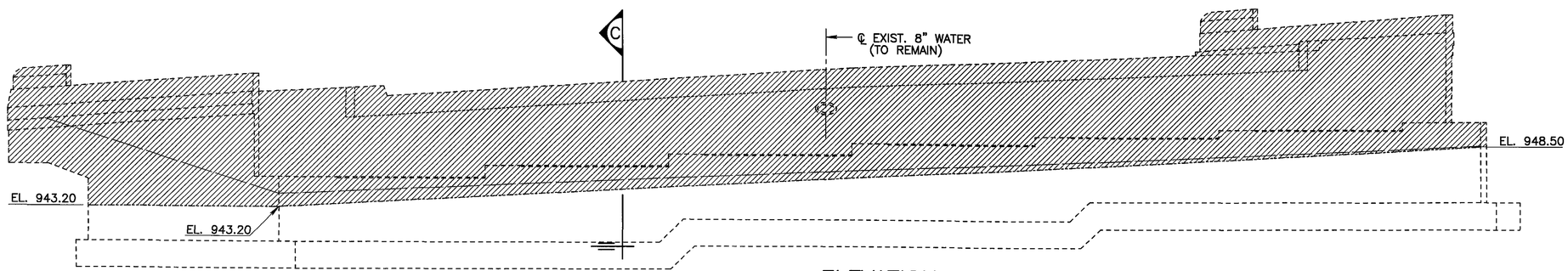

ELEVATION

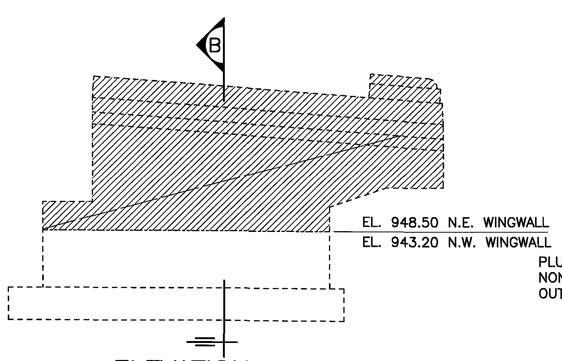

ELEVATION

NORTHEAST WINGWALL SHOWN
NORTHWEST WINGWALL SIM.

NOTE: PIPE RAILING NOT SHOWN (TYP.)

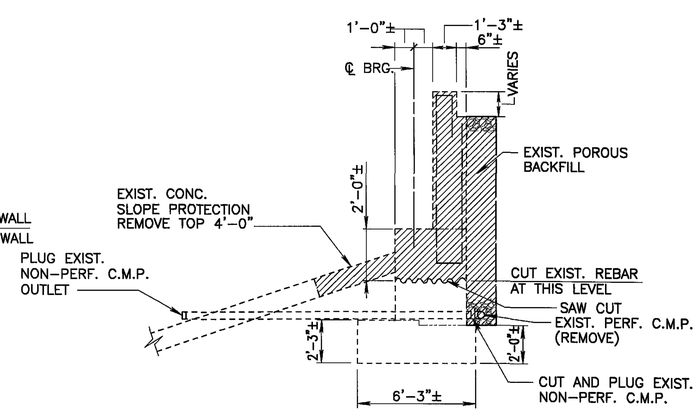

SECTION C

NOTES:

1. FOR SECTION B, SEE SHT. NO. 4/21 .

LEGEND

INDICATES REMOVAL LIMITS, ITEM 202, PORTIONS OF STRUCTURE REMOVED, OVER 20 FT. SPAN, AS PER PLAN

STRUCTURE INSPECTION PERFORMED IN NOVEMBER, 2002.

DESIGN AGENCY
GLAUS PYLE SCHOMER BURNS & DEHAVEN INC.
GPD ASSOCIATES
370 South Main Street, Suite 2231 Akron, Ohio 44311
330-372-2100 / Fax 330-372-2101

DESIGNED	DRAWN	REVIEWED	DATE
L.P.C.	R.P.R.	K.S.J.	3-31-04
CHECKED	REVISED	STRUCTURE FILE NUMBER	
P.J.W.		5007534	

FRWD. ABUTMENT REMOVAL PLAN
BRIDGE NO. MAH - 680 - 0834
SHIRLEY RD. OVER I-680

MAH-680-7.24/8.34

5/21

83/107

Cad File: G:\CIVIL\2001169\01\112\DWG\STRUCT\DWG\2001169_112ABUTDEMO.DWG
Date: 03-31-04 Time: 1:11 PM TB # 0000.000
Technician: RCUMMINS

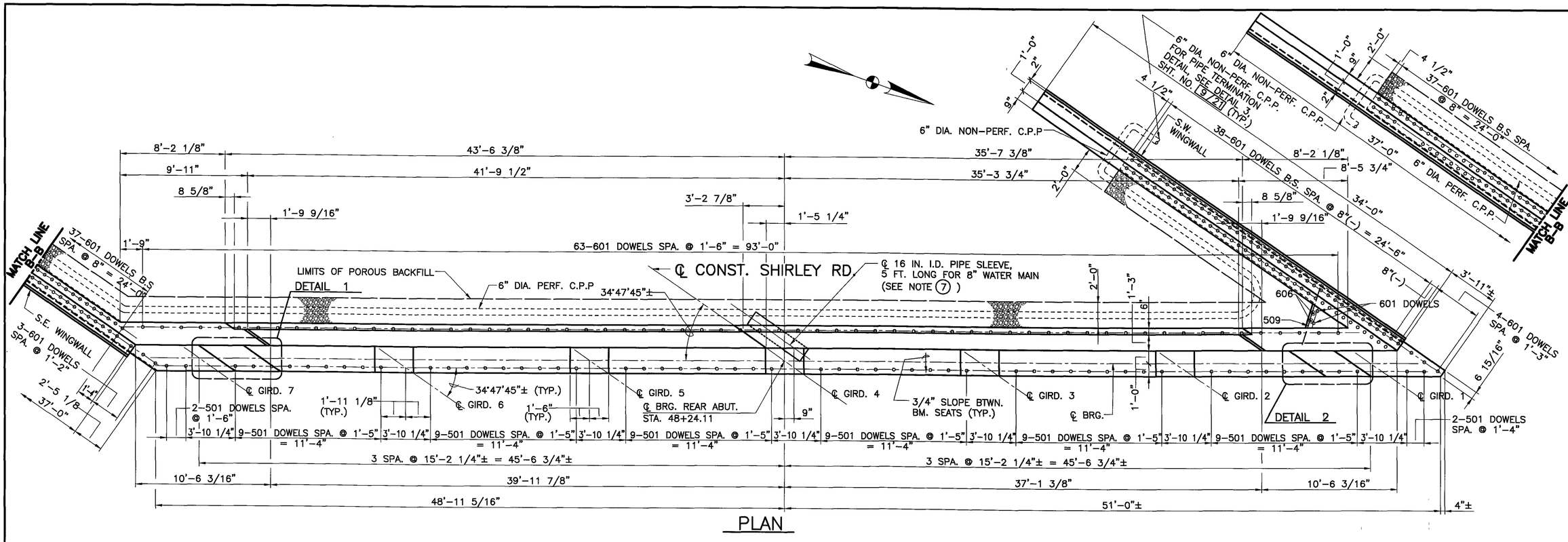

PLAN

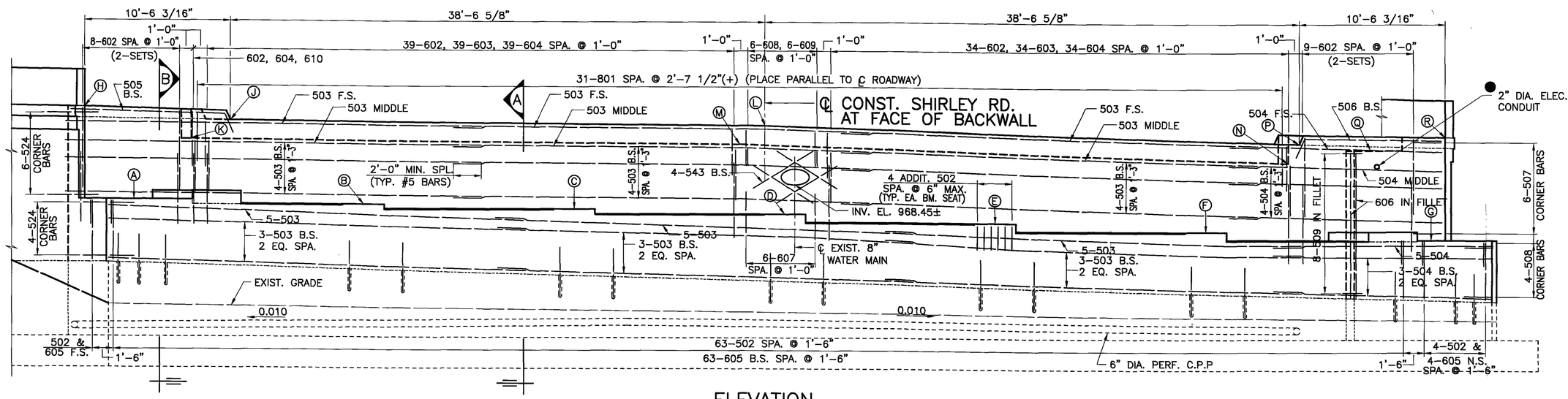

ELEVATION

ELEVATIONS					
Ⓐ	Ⓑ	Ⓒ	Ⓓ	Ⓔ	Ⓕ
967.35	967.05	966.74	966.40	965.81	965.23
Ⓖ	Ⓗ	Ⓙ	Ⓚ	Ⓛ	Ⓜ
964.66	974.10	973.17	971.79	972.87	971.51
Ⓝ	Ⓟ	Ⓠ	Ⓡ		
970.29	971.67	971.24	972.19		

NOTES:

1. PREFIX "A" WILL BE ADDED TO ALL REBAR MARKS SHOWN FOR THE ABUTMENTS. SEE REINFORCING SCHEDULE.
2. ALL REINFORCING SHALL BE EPOXY COATED.
3. MINIMUM CLEARANCE TO REBARS SHALL BE 2" UNLESS NOTED OTHERWISE.
4. QUANTITIES OF CONCRETE FOR RAILING ARE INCLUDED WITH ITEM 511, CLASS HP CONCRETE BRIDGE DECK (PARAPET), FOR PAYMENT.
5. PRIOR TO THE PLACEMENT OF NEW CONCRETE, THE EXISTING CONCRETE SURFACE SHALL BE THOROUGHLY CLEANED BY SANDBLASTING AND/OR OTHER APPROVED METHODS SO THAT IT IS FREE OF LOOSE OR DISINTEGRATED CONCRETE, DUST, LAITANCE, GREASE, RUST AND OTHER FOREIGN MATTER. ALL EXISTING REBARS SHALL BE CLEANED BY WIRE BRUSH OR SANDBLASTED TO REMOVE ANY RUST. A BONDING GROUT SHALL BE USED BETWEEN OLD CONCRETE AND NEW CONCRETE. BONDING GROUT IS INCLUDED WITH ITEM 511, CLASS C CONCRETE, ABUTMENT, FOR PAYMENT.
6. FOR BONDING GROUT NOTE, SEE SHT. NO. 3/21 .
7. OPENING FOR 8 IN. WATER MAIN: 16" I.D. SLEEVE SHALL BE FURNISHED AND INSTALLED BY BRIDGE CONTRACTOR PRIOR TO PLACING CONCRETE. COST OF THE SLEEVE IS INCLUDED IN ITEM 511 CLASS C CONCRETE, ABUTMENT FOR PAYMENT. PIPE SLEEVE SHALL CONFORM TO CMS 748.06.
8. BACKWALL CONCRETE: IN ADDITION TO 511.10, DO NOT PLACE BACKWALL CONCRETE ABOVE THE OPTIONAL CONSTRUCTION JOINT AT THE APPROACH SLAB SEAT UNTIL AFTER THE DECK CONCRETE IN THE SPAN ADJACENT TO THE ABUTMENT HAS BEEN PLACED.
9. FOR SOUTHWEST AND SOUTHEAST WINGWALL DETAILS, SEE SHT NO. 7/21 .
10. FOR SECTIONS A AND B, SEE SHT. NO. 7/21 .
11. FOR DETAILS 1 AND 2, SEE SHT NO. 9/21 .

● INCLUDED WITH LIGHTING QUANTITIES, SHT. NO. 59/107 .

DESIGN AGENCY
GLALIS PYLE SCHLOMER BURNS & DEHAVEN, INC.
GPD ASSOCIATES
320 South Main Street, Suite 237, Akron, Ohio 44311
(330) 762-2187, Fax (330) 762-2191

DESIGNED	DRAWN	REVIEWED	DATE
R.H.C.	R.H.C.	K.S.J.	3-31-04
CHECKED	REVISED	STRUCTURE FILE NUMBER	
P.J.W.		5007534	

REAR ABUTMENT
BRIDGE NO. MAH - 680 - 0834
SHIRLEY RD. OVER I-680

MAH-680-7.24/8.34

Cad File: G:\CIVIL\2001169\01\112\DWG\STRUCT\DWG\2001169_112ABUT.DWG
Date: 03-31-04 Time: 11:08 AM TW = 0d0:0.00"
Technician: RRYMER

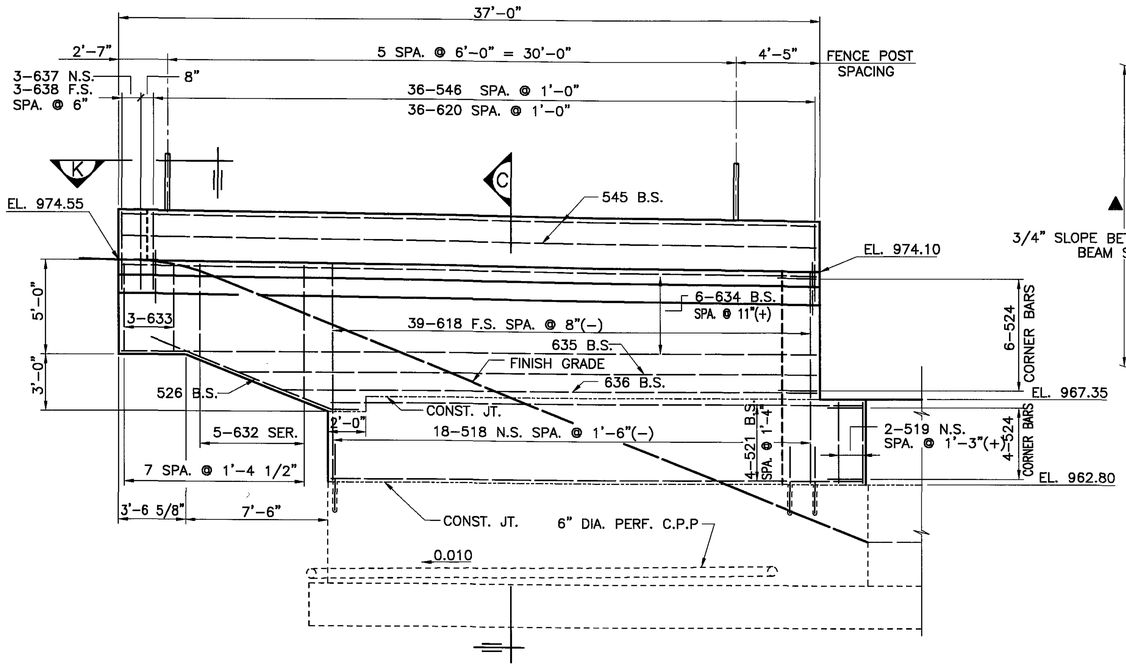

ELEVATION—SOUTHEAST WINGWALL

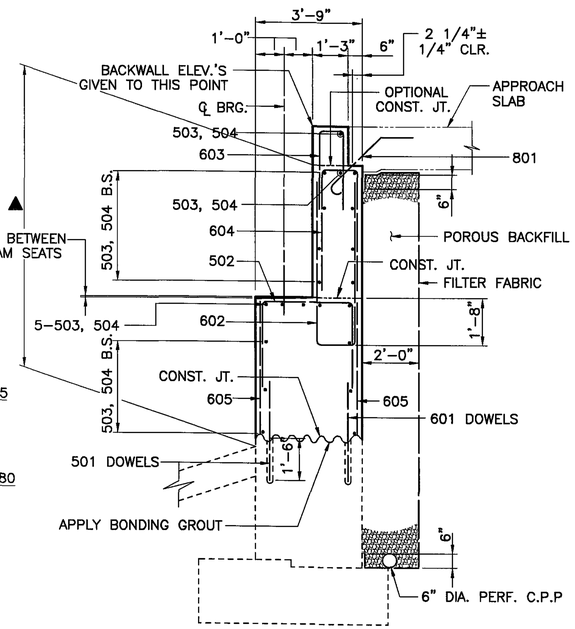

SECTION A

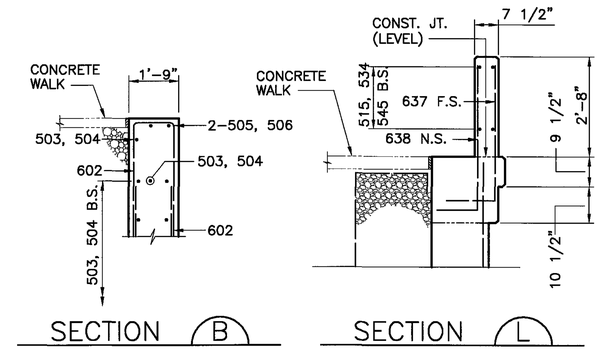

SECTION B

SECTION L

LEGEND

▲ LIMITS OF "ITEM 864, SEALING OF CONCRETE SURFACES (EPOXY-URETHANE)."

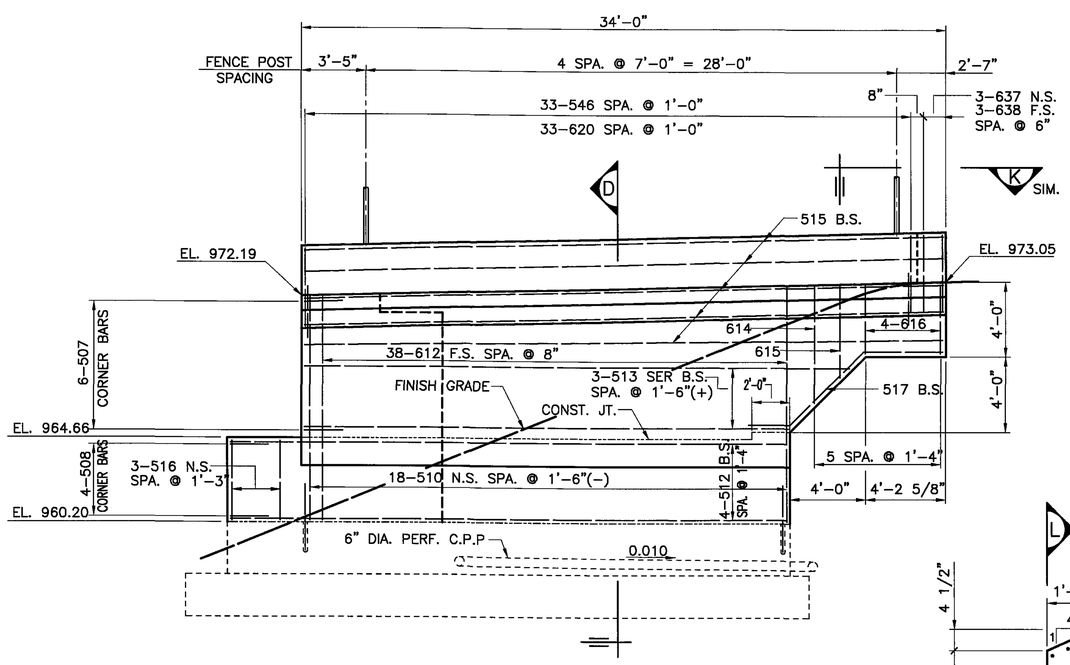

ELEVATION—SOUTHWEST WINGWALL

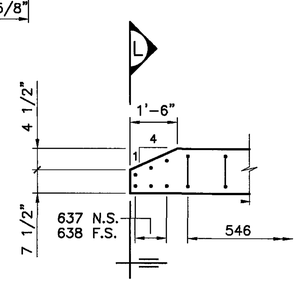

VIEW K

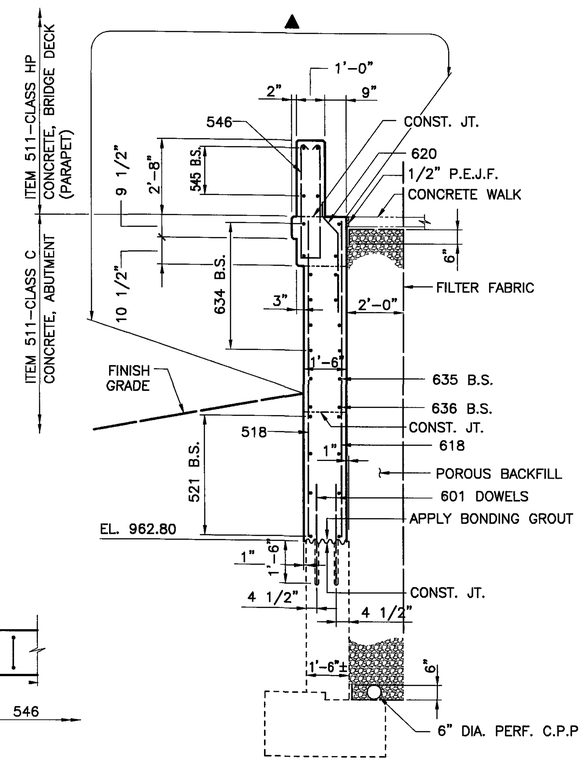

SECTION C

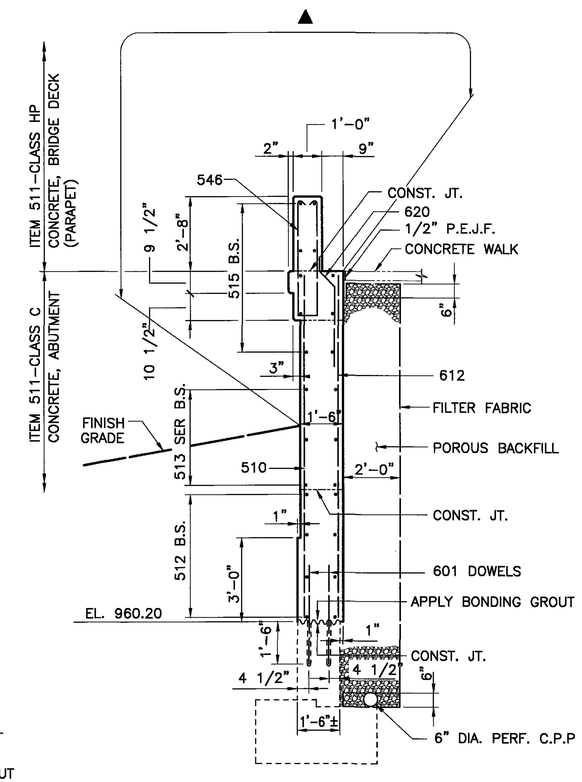

SECTION D

NOTES:

1. PREFIX "A" WILL BE ADDED TO ALL REBAR MARKS SHOWN FOR THE ABUTMENTS. SEE REINFORCING SCHEDULE.
2. ALL REINFORCING SHALL BE EPOXY COATED.
3. FOR ADDITIONAL NOTES, SEE SHT. NO. 6/21 .
4. FOR LOCATION OF SECTION A, SEE SHT. NO. 6/21 .
5. FOR LOCATION OF SECTION B, SEE SHT. NOS. 6/21 & 8/21

DESIGN AGENCY
GLAUS PYLE SCHOMER BURNS & DEWAYNE, INC.
GPD ASSOCIATES
525 South Main Street, Suite 2251 Akron, Ohio 44311
330-972-2100, Fax 330-972-2101

DESIGNED	DRAWN	REVIEWED	DATE
R.H.C.	R.H.C.	K.S.J.	3-31-04
CHECKED	REVISED	STRUCTURE FILE NUMBER	
P.J.W.		5007534	

REAR ABUTMENT DETAILS
BRIDGE NO. MAH - 680 - 0834
SHIRLEY RD. OVER I-680

MAH-680-7.24/8.34

Cad File: G:\CIVIL\2001169\01\112\DWG\STRUCT\DWG\2001169_1124BUT.DWG
Date: 03-31-04 Time: 11:08 AM PW = 0d0'0.00"
Technician RRYMER

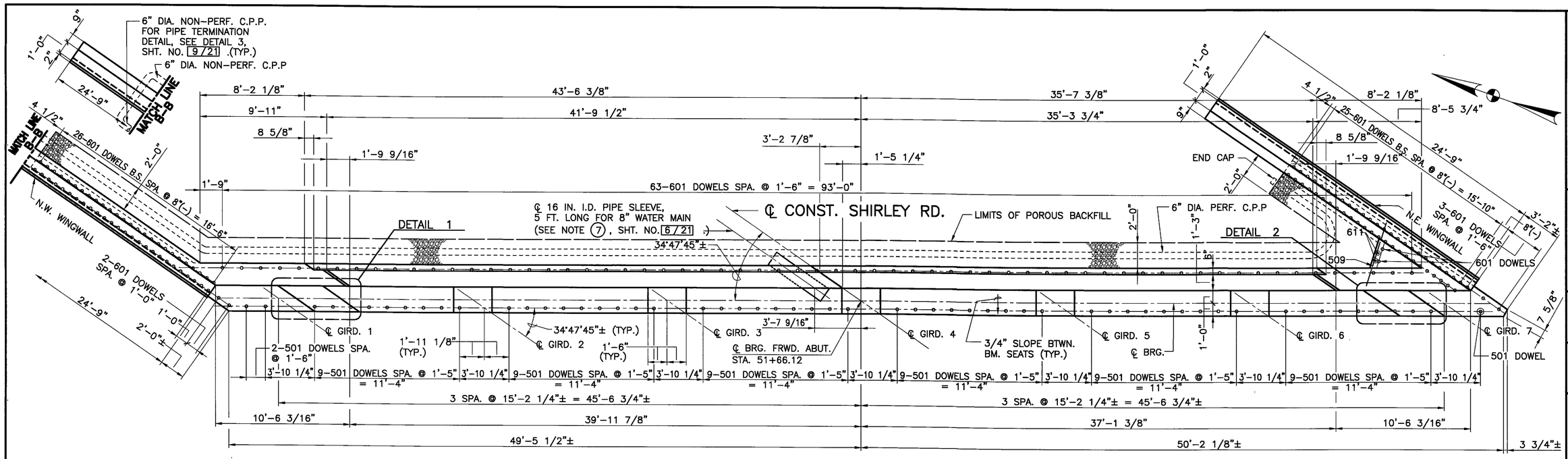

PLAN

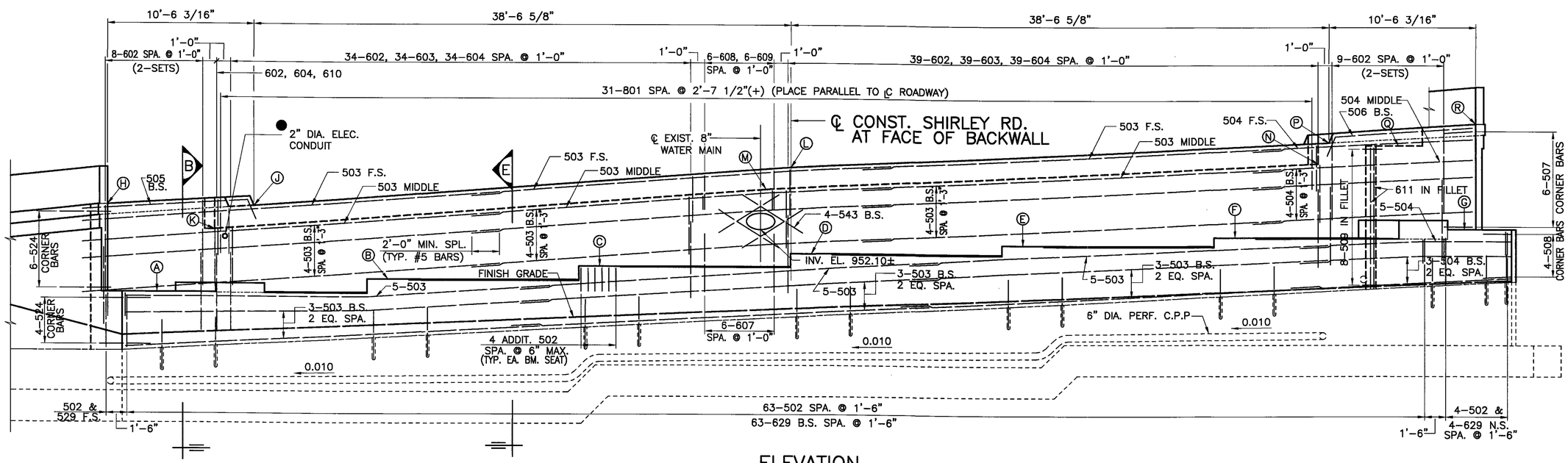

ELEVATION

ELEVATIONS					
Ⓐ	Ⓑ	Ⓒ	Ⓓ	Ⓔ	Ⓕ
947.47	948.45	949.43	950.37	951.05	951.68
Ⓖ	Ⓗ	Ⓙ	Ⓚ	Ⓛ	Ⓜ
952.30	953.77	953.71	952.03	956.56	954.98
Ⓝ	Ⓟ	Ⓠ	Ⓡ		
956.98	958.50	958.29	959.87		

● INCLUDED WITH LIGHTING QUANTITIES, SHT. NO. 59/107 .

NOTES:

1. PREFIX "A" WILL BE ADDED TO ALL REBAR MARKS SHOWN FOR THE ABUTMENTS. SEE REINFORCING SCHEDULE.
2. ALL REINFORCING SHALL BE EPOXY COATED.
3. FOR NORTHEAST & NORTHWEST WINGWALL DETAILS, SEE SHT. NO. 9/21 .
4. FOR SECTION B, SEE SHT. NO. 7/21 .
5. FOR SECTION E AND DETAILS 1 AND 2, SEE SHT. NO. 9/21 .
6. FOR ADDITIONAL NOTES, SEE SHT. NO. 6/21 .

DESIGN AGENCY
GPD ASSOCIATES
GLAUS PYLE SCHOMER BURNS & DEWAYNE INC.
525 South Main Street, Suite 2251 Akron, Ohio 44311
330-972-2195 , Fax 330-972-2101

DESIGNED	DRAWN	REVIEWED	DATE
R.H.C.	R.H.C.	K.S.J.	3-31-04
CHECKED	REVISED	STRUCTURE FILE NUMBER	
P.J.W.		5007534	

FRWD. ABUTMENT
BRIDGE NO. MAH - 680 - 0834
SHIRLEY RD. OVER I-680

MAH-680-7.24/8.34

8/21

86/107

Cad File: G:\DWL\2001169\01\112\DWG\STRUCT\DWG\2001169_112ABUT.DWG
Date: 03-31-04 Time: 11:08 AM TW = 0d0'0.00"
Technician: RRYMER

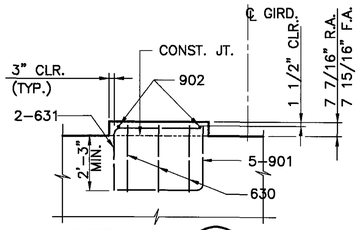

SECTION J

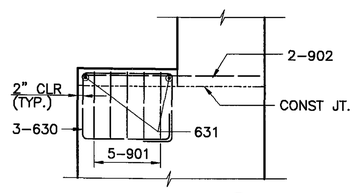

SECTION H

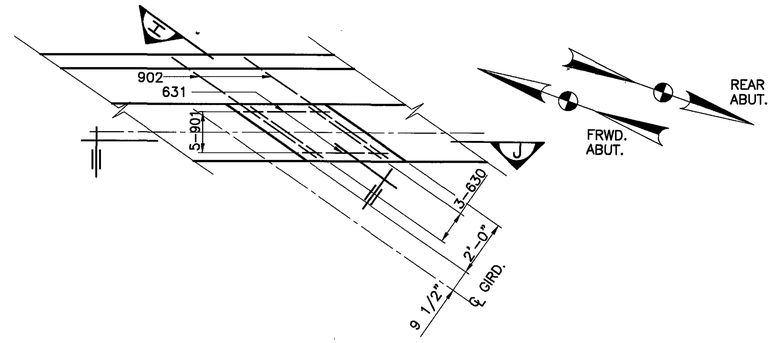

DETAIL 1 SHOWN

DETAIL 2 SIMILAR

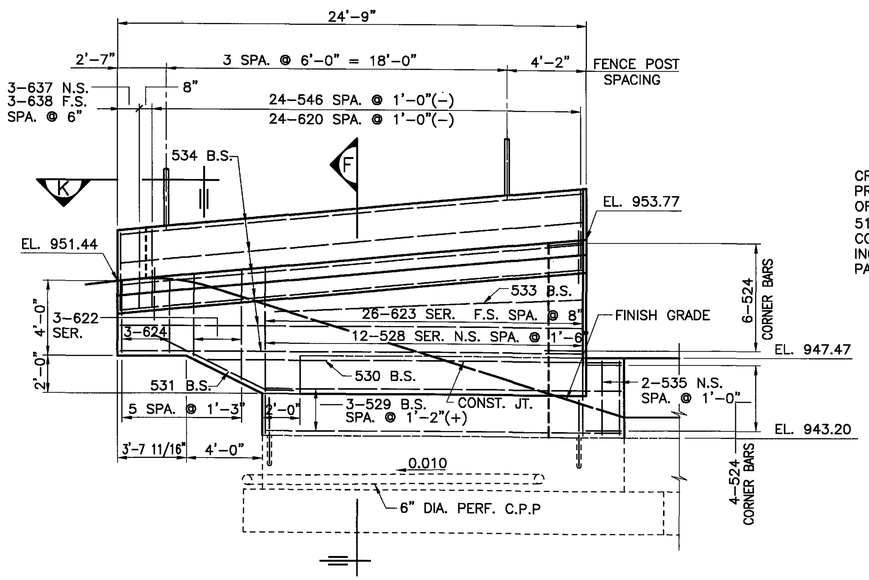

ELEVATION–NORTHWEST WINGWALL

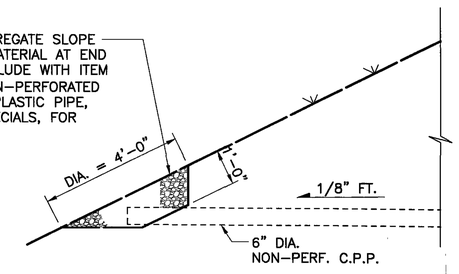

DETAIL 3

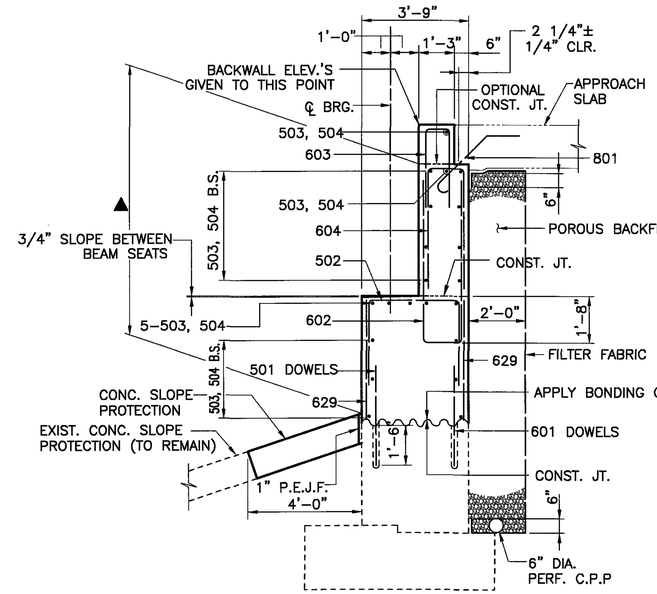

SECTION E

LEGEND

▲ LIMITS OF "ITEM 864, SEALING OF CONCRETE SURFACES (EPOXY–URETHANE)."

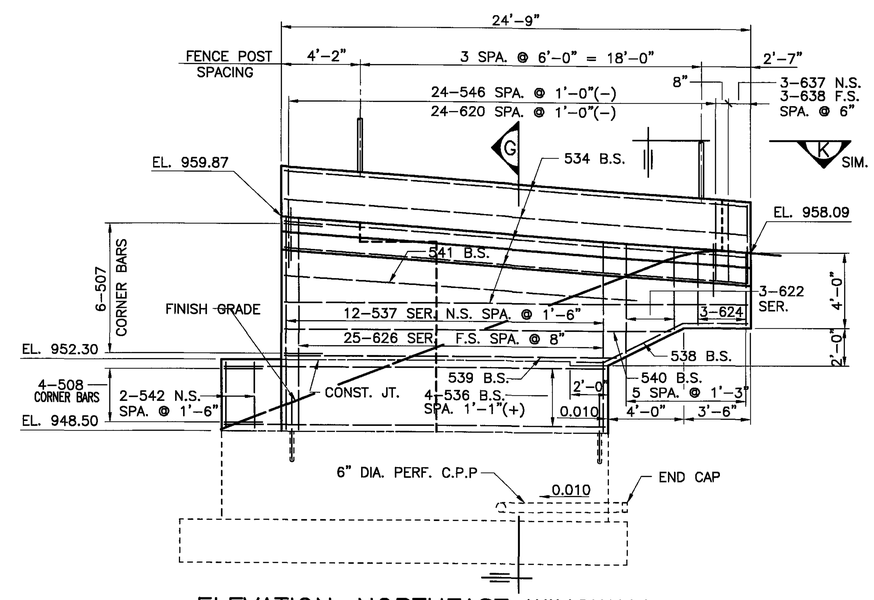

ELEVATION–NORTHEAST WINGWALL

NOTES:

1. PREFIX "A" WILL BE ADDED TO ALL REBAR MARKS SHOWN FOR THE ABUTMENTS. SEE REINFORCING SCHEDULE.
2. ALL REINFORCING SHALL BE EPOXY COATED.
3. FOR ADDITIONAL NOTES, SEE SHT. NO. 6/21 .
4. FOR VIEW K, SEE SHT. NO. 7/21 .
5. FOR LOCATION OF SECTION E, SEE SHT. NO. 8/21 .
6. FOR LOCATION OF DETAILS 1 & 2, SEE SHT. NOS. 6/21 & 8/21 .

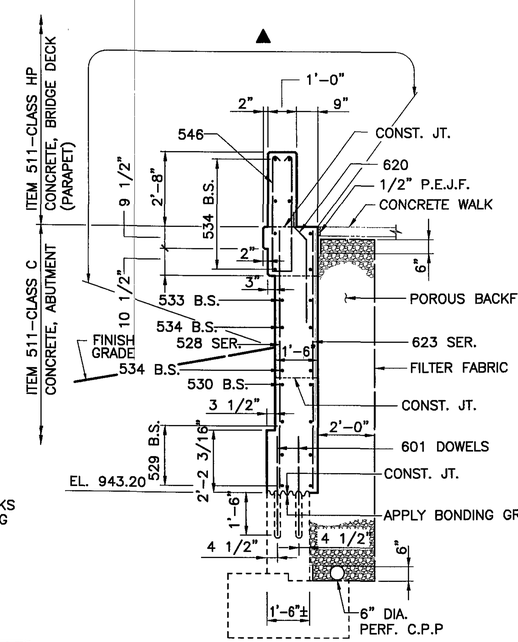

SECTION F

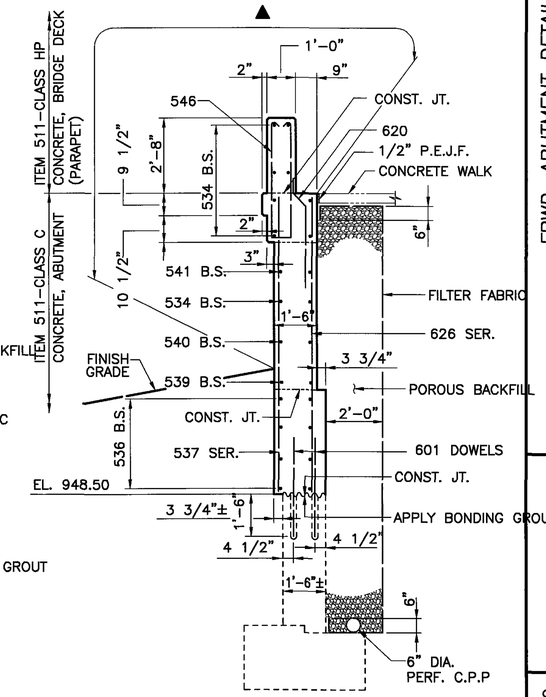

SECTION G

DESIGN AGENCY
CLAUS PYLE SCHOMER BURNS & DEWAEN INC.
GPD ASSOCIATES
350 South Main Street, Suite 233, Akron, Ohio 44311
330-572-2100, Fax 330-572-2101

DESIGNED	DRAWN	REVIEWED	DATE
R.H.C.	R.H.C.	K.S.J.	3–31–04
CHECKED	REVISED	STRUCTURE FILE NUMBER	
P.J.W.		5007534	

FRWD. ABUTMENT DETAILS
BRIDGE NO. MAH – 680 – 0834
SHIRLEY RD. OVER I–680

MAH–680–7.24/8.34

Cad File: G:\DWG\2001169\01\112\DWG\STRUCT\DWG\2001169_112ABUT.DWG
Date: 03–31–04 Time: 11:08 AM TW = 0.00\0.00"
Technician: RRYMER

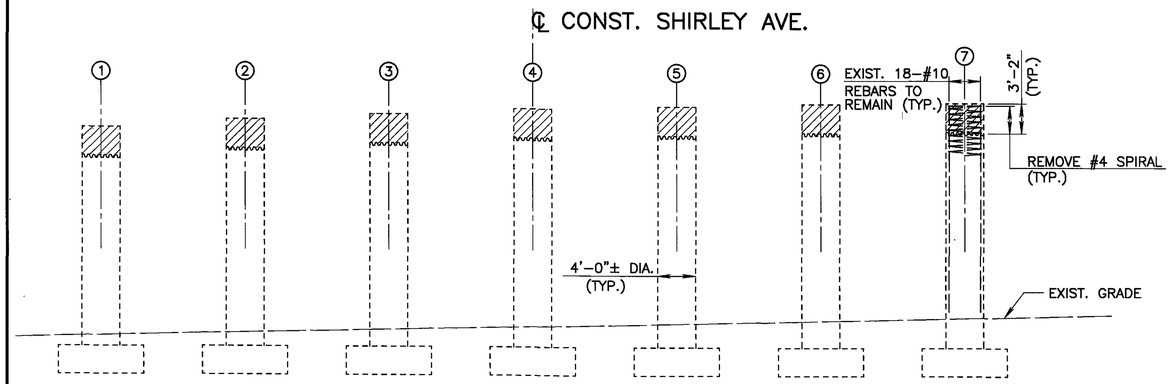

PIER NO. 1 SOUTH ELEV.

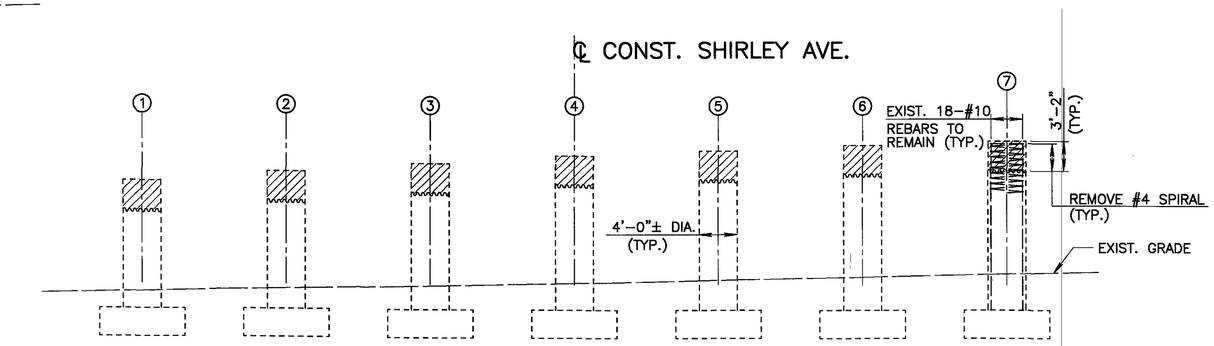

PIER NO. 3 SOUTH ELEV.

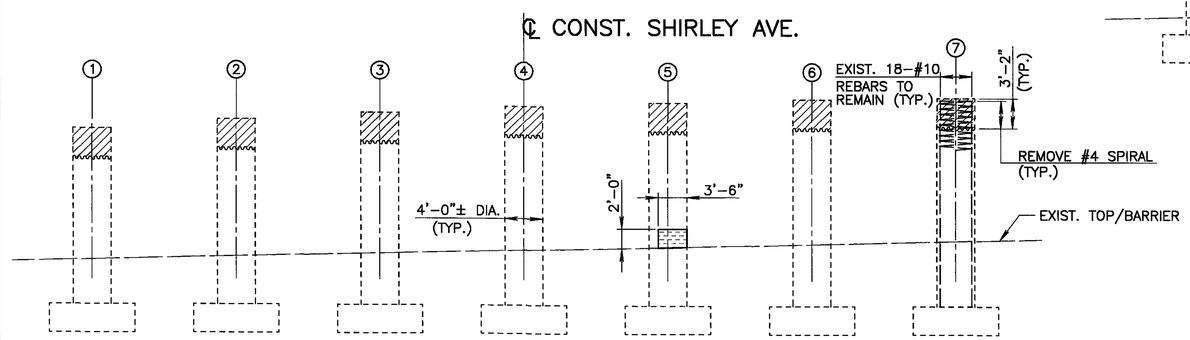

PIER NO. 2 SOUTH ELEV.

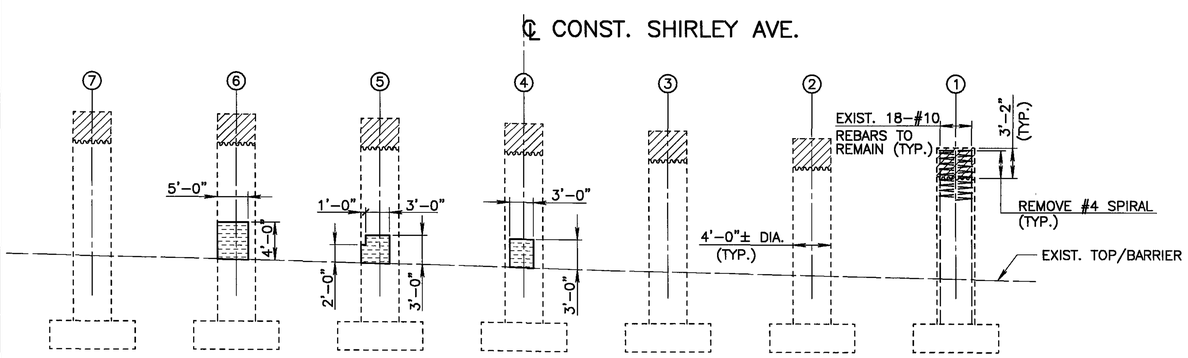

PIER NO. 2 NORTH ELEV.

NOTE:
FOR PATCHING CONCRETE STRUCTURE NOTE, SEE SHT. NO. 3/21 .

LEGEND

INDICATES AREA TO BE PATCHED PER ITEM 519, PATCHING CONCRETE STRUCTURE, AS PER PLAN

INDICATES REMOVAL LIMITS, ITEM 202, PORTIONS OF STRUCTURE REMOVED, OVER 20 FT. SPAN, AS PER PLAN

STRUCTURE INSPECTION PERFORMED IN NOVEMBER, 2002.

DESIGN AGENCY
GLAUS PYLE SCHOMER BURNS & DEHAVEN INC.
GPD ASSOCIATES
520 South Main Street, Suite 2531 Akron, Ohio 44311
330-972-2100 , Fax 330-972-2101

DESIGNED	DRAWN	REVIEWED	DATE
L.P.C.	R.P.R.	K.S.J.	3–31–04
CHECKED	REVISED	STRUCTURE FILE NUMBER	
P.J.W.		5007534	

PIER REMOVAL & REPAIR PLAN
BRIDGE NO. MAH – 680 – 0834
SHIRLEY RD. OVER I–680

MAH–680–7.24/8.34

Cad File: G:\CIVIL\20011169\01\112\DWG\STRUCT\DWG\20011169_112PIER-PATCH.DWG
Date: 03-31-04, Time: 11:12 AM, TW = 0d0'0.00"
Technician RRYMER

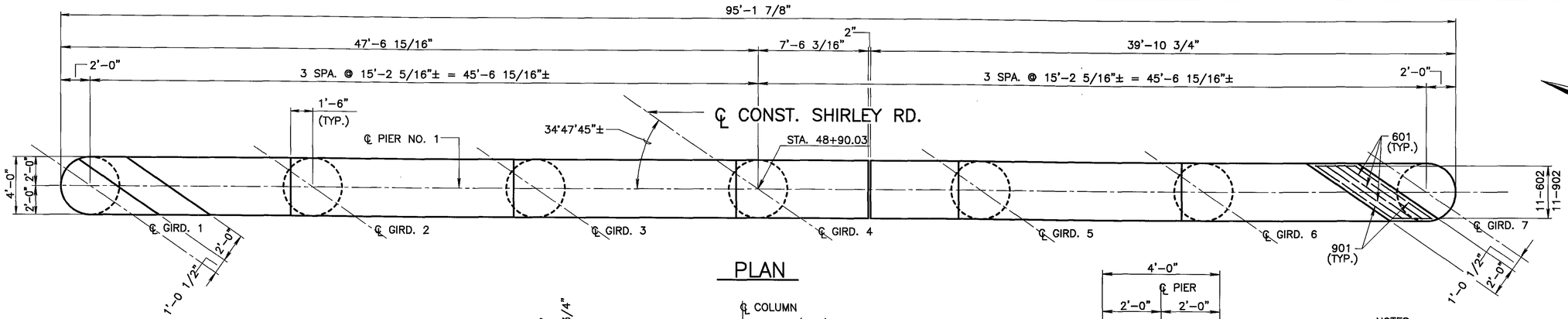

PLAN

ELEVATIONS							
Ⓐ	Ⓑ	Ⓒ	Ⓓ	Ⓔ	Ⓕ	Ⓖ	Ⓗ
962.25	962.95	963.52	964.11	964.39	964.72	964.99	958.75
Ⓙ	Ⓚ	Ⓛ	Ⓜ	Ⓝ	Ⓟ	Ⓠ	Ⓡ
958.75	959.19	959.70	960.21	960.72	961.22	962.91	965.65

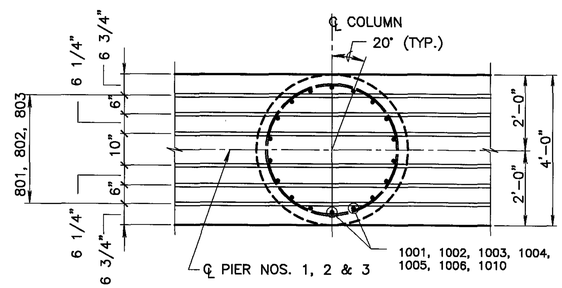

SECTION (B)

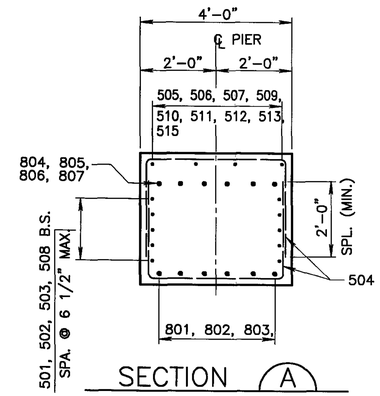

SECTION (A)

NOTES:

1. PREFIX "P" WILL BE ADDED TO ALL REBAR MARKS EXCEPT THOSE INDICATING SPIRALS, FOR THE PIERS. SPIRALS ARE PREFIXED "SP". SEE REINFORCING SCHEDULE.
2. ALL REINFORCING STEEL SHALL BE EPOXY COATED.
3. MINIMUM CLEARANCE TO REBARS SHALL BE 2" UNLESS NOTED OTHERWISE.
4. FOR BEARING DETAILS, SEE SHT. NO. 14/21 .
5. PROPOSED #4 SPIRAL DIAMETER SHALL MATCH THE DIAMETER OF THE EXIST. #4 SPIRAL. THE CONTRACTOR SHALL VERIFY THE EXIST. SPIRAL DIAMETER.

LEGEND:

▲ LIMITS OF "ITEM 864 – SEALING OF CONCRETE SURFACES (EPOXY–URETHANE)."

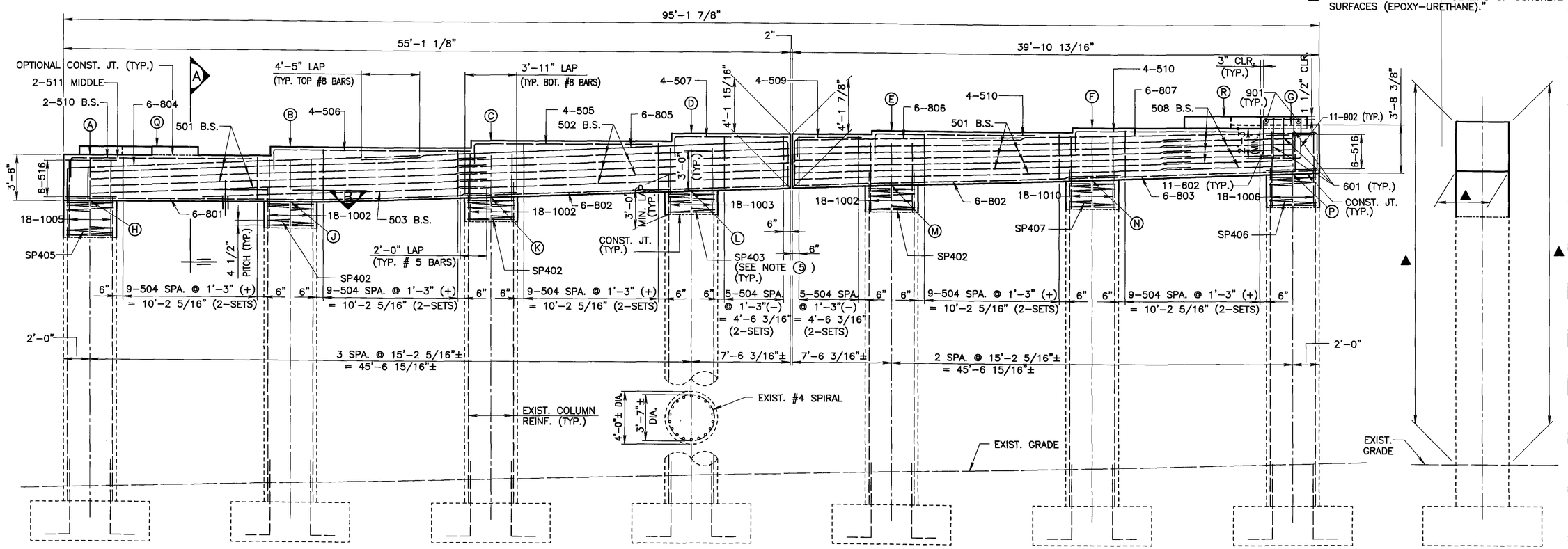

ELEVATION

END VIEW
(PIER COLUMN & CAP REINF. NOT SHOWN)

DESIGN AGENCY
GULLIS POLI SCHOWER BURNS & DRIAVEN INC.
GPD ASSOCIATES
320 South Main Street, Suite 231, Akron, Ohio 44311
330-972-7817 FAX 330-972-7818

DESIGNED	DRAWN	REVIEWED	DATE
R.H.C.	R.H.C.	K.S.J.	3-31-04
CHECKED	REVISED	STRUCTURE FILE NUMBER	
P.J.W.		5007534	

PIER NO. 1 MODIFICATION
BRIDGE NO. MAH – 680 – 0834
SHIRLEY RD. OVER I-680

MAH-680-7.24/8.34

11/21

89/107

Cad File: G:\CIVIL\2001169\01\112\DWG\STRUCT\DWG\2001169_112PIER-MOD.DWG
Date: 03-31-04 Time: 11:11 AM TW = 0d0'0.00"
Technician: RRYMER

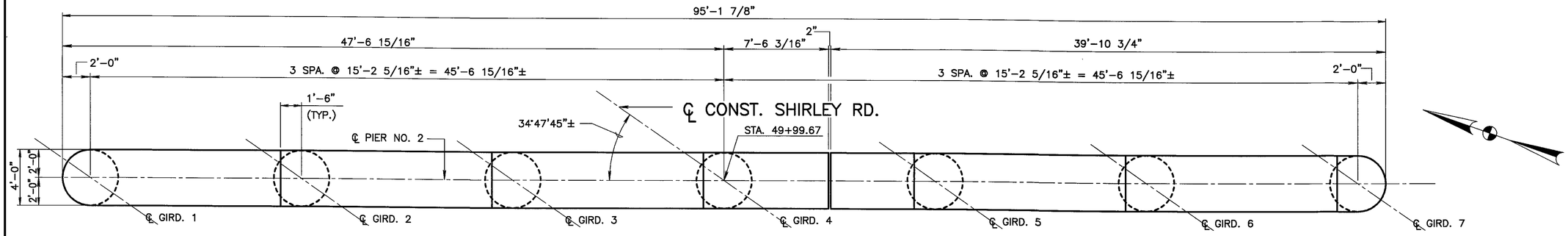

PLAN

ELEVATIONS							
Ⓐ	Ⓑ	Ⓒ	Ⓓ	Ⓔ	Ⓕ	Ⓖ	Ⓗ
957.37	958.16	958.89	959.60	960.05	960.44	960.82	953.87
Ⓙ	Ⓚ	Ⓛ	Ⓜ	Ⓝ	Ⓟ		
953.87	954.42	955.05	955.68	956.31	956.94		

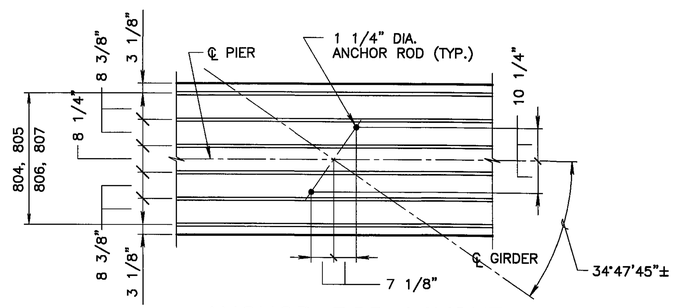

ANCHOR ROD LAYOUT

NOTES:

1. PREFIX "P" WILL BE ADDED TO ALL REBAR MARKS EXCEPT THOSE INDICATING SPIRALS, FOR THE PIER. SPIRALS ARE PREFIXED "SP". SEE REINFORCING SCHEDULE.
2. ALL REINFORCING STEEL SHALL BE EPOXY COATED.
3. BRIDGE SEAT REINFORCING, SETTING ANCHORS: ACCURATELY PLACE REINFORCING STEEL IN THE VICINITY OF THE BRIDGE SEAT TO AVOID INTERFERENCE WITH THE DRILLING OF BEARING ANCHOR HOLES OR THE PRE-SETTING OF BEARING ANCHORS.
4. FOR SECTIONS A & B, SEE SHT. NO. 11/21 .
5. FOR ADDITIONAL NOTES, SEE SHT. NO. 11/21 .

LEGEND:

▲ LIMITS OF "ITEM 864 – SEALING OF CONCRETE SURFACES (EPOXY-URETHANE)."

ELEVATION

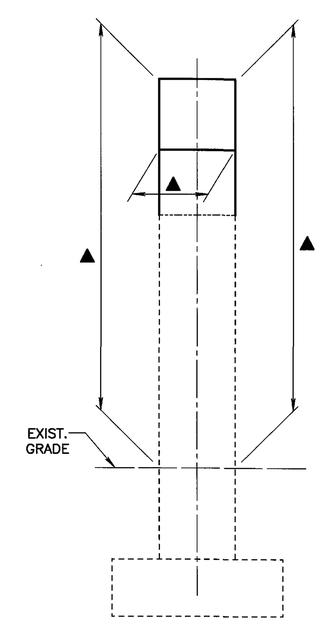

END VIEW

(PIER COLUMN & CAP REINF. NOT SHOWN)

DESIGN AGENCY
GLAUS PYLE SCHOMER BURNS & DEWENTER INC.
GPD ASSOCIATES
320 South Main Street, Suite 2331 Akron, Ohio 44311
330-972-2100 , Fax 330-972-2101

DESIGNED	DRAWN	REVIEWED	DATE
R.H.C.	R.H.C.	K.S.J.	3-31-04
CHECKED	REVISED	STRUCTURE FILE NUMBER	
P.J.W.		5007534	

PIER NO. 2 MODIFICATION
BRIDGE NO. MAH – 680 – 0834
SHIRLEY RD. OVER I-680

MAH-680-7.24/8.34

12/21

90/107

Cad File: G:\CIVIL\2001169\01\112\DWG\STRUCT\DWG\2001169_112PIER-M00.DWG
Date: 03-31-04 Time: 11:11 AM TW = 0d0'0.00"

Technician: RRYMER

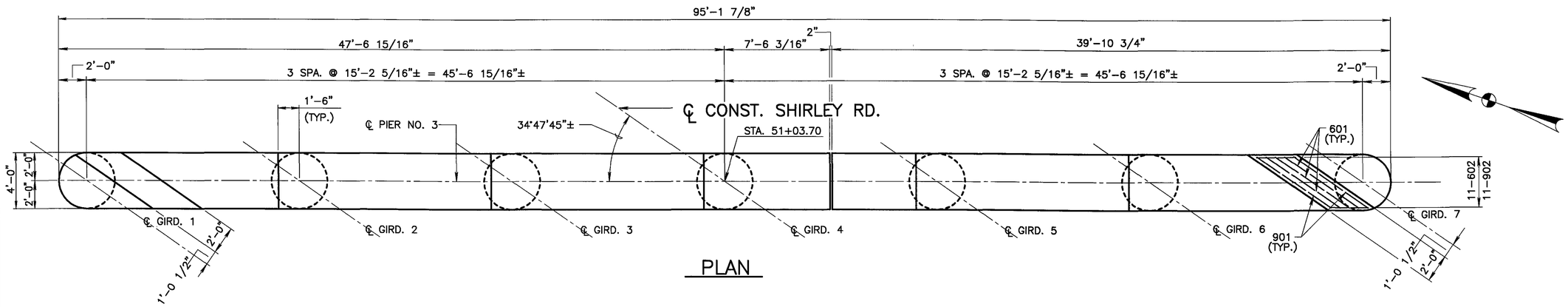

PLAN

ELEVATIONS							
Ⓐ	Ⓑ	Ⓒ	Ⓓ	Ⓔ	Ⓕ	Ⓖ	Ⓗ
951.48	952.40	953.30	954.17	954.71	955.31	955.87	947.98
Ⓙ	Ⓚ	Ⓛ	Ⓜ	Ⓝ	Ⓟ	Ⓠ	Ⓡ
947.98	948.66	949.44	950.22	951.01	951.79	952.17	956.56

NOTES:

1. PREFIX "P" WILL BE ADDED TO ALL REBAR MARKS EXCEPT THOSE INDICATING SPIRALS, FOR THE PIER. SPIRALS ARE PREFIXED "SP". SEE REINFORCING SCHEDULE.
2. ALL REINFORCING STEEL SHALL BE EPOXY COATED.
3. FOR SECTIONS A AND B, SEE SHT. NO. 11/21 .
4. FOR ADDITIONAL NOTES, SEE SHT. NO. 11/21 .

LEGEND:

▲ LIMITS OF "ITEM 864 – SEALING OF CONCRETE SURFACES (EPOXY-URETHANE)."

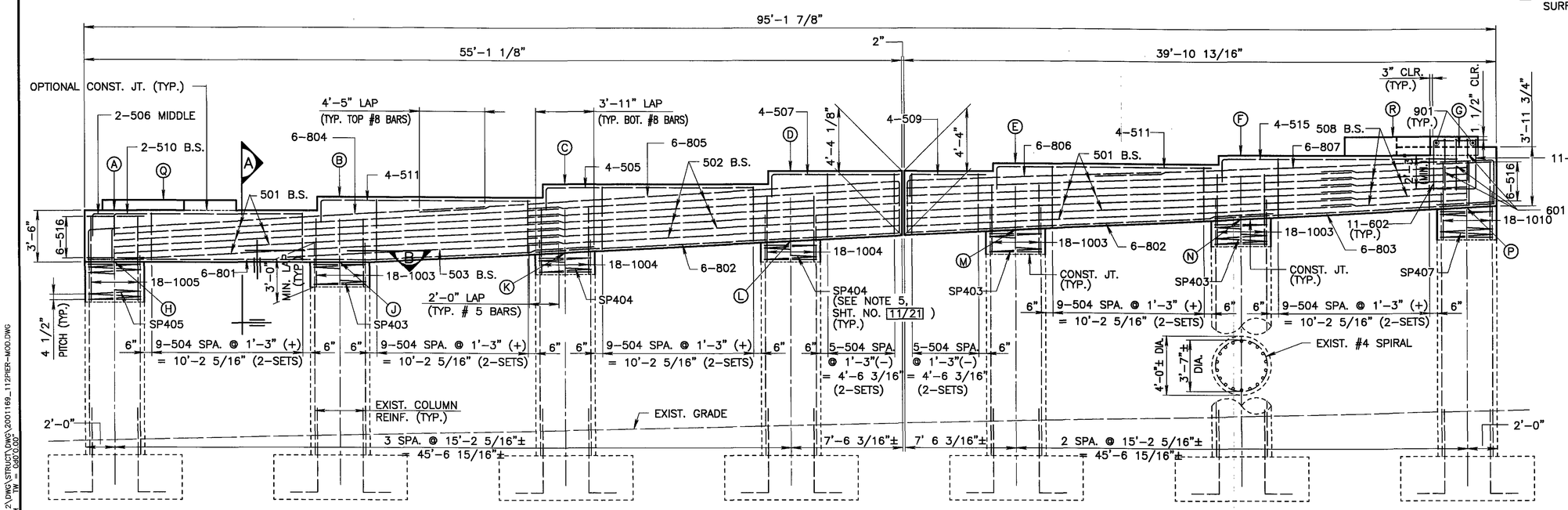

ELEVATION

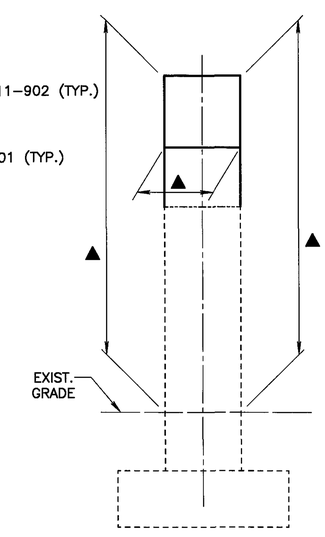

END VIEW

(PIER COLUMN & CAP REINF. NOT SHOWN)

DESIGN AGENCY
GAUL PYLE SCHOMER BURNS & DEWANN INC.
GPD ASSOCIATES
320 South Main Street, Suite 231, Akron, Ohio 44311
330-572-2100 / Fax 330-572-2101

DESIGNED	DRAWN	REVIEWED	DATE
R.H.C.	R.H.C.	K.S.J.	3-31-04
CHECKED	REVISED	STRUCTURE FILE NUMBER	
P.J.W.		5007534	

PIER NO. 3 MODIFICATION
BRIDGE NO. MAH – 680 – 0834
SHIRLEY RD. OVER I-680

MAH-680-7.24/8.34

13/21

91/107

Cad File: G:\CIVIL\2001169\01\112\DWG\STRUCT\DWG\2001169_112PIER-MOD.DWG
Date: 03-31-04 Time: 11:11 AM TW = 0.00:00:00
Technician: RRYMER

* W/O IMPACT

BEARING SCHEDULE

SUB-STRUCTURE	STEEL LOAD PLATE A	B	E	F	G	H	ELASTOMERIC PAD L	W.	T	NO. OF INTER. LAYERS	ti	te	STEEL LAMINATES NO.	THICK.	TYPE	MIN. DEAD LOAD (K)	MAX. DEAD LOAD (K)	LIVE * LOAD (K)	TOTAL LOAD (K)
REAR ABUT.	10"	1'-5"	1/2"	1 3/4"	1 1/2"	1 3/4"	9"	1'-1 1/2"	2.94"	7	0.28"	0.19"	8	0.0747"	EXP.	32.1	40.1	69.4	109.5
PIER NO. 1	1'-3"	1'-11"	1/2"	1/2"	2"	2 1/2"	1'-2"	1'-10"	2.63"	4	0.42"	0.29"	5	0.0747"	EXP.	156.9	193.9	97.5	291.4
PIER NO. 2	1'-3"	2'-5"	1/2"	3"	2"	2 11/16"	1'-2"	1'-11"	2.41"	4	0.38"	0.26"	5	0.0747"	FIX.	186.3	229.5	106.3	335.8
PIER NO. 3	1'-3"	1'-11"	1/2"	1/2"	2"	2 7/8"	1'-2"	1'-10"	2.63"	4	0.42"	0.29"	5	0.0747"	EXP.	143.2	177.4	93.8	271.2
FRWD. ABUT.	10"	1'-5"	1/2"	1 3/4"	1 1/2"	2 1/4"	9"	1'-1 1/2"	2.94"	7	0.28"	0.19"	8	0.0747"	EXP.	31.7	39.5	68.9	108.4

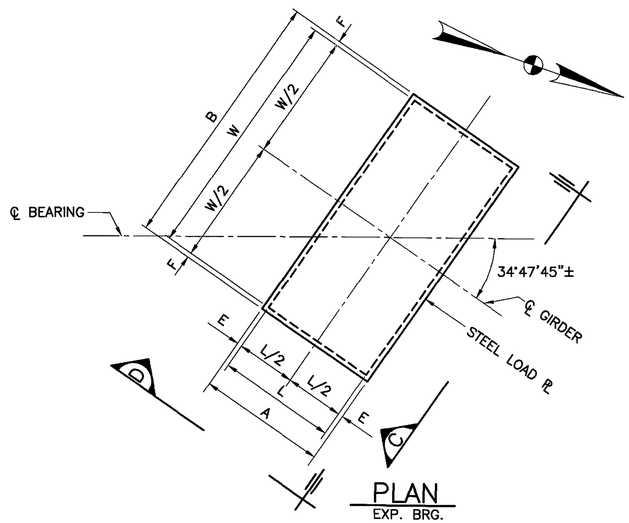

PLAN
EXP. BRG.

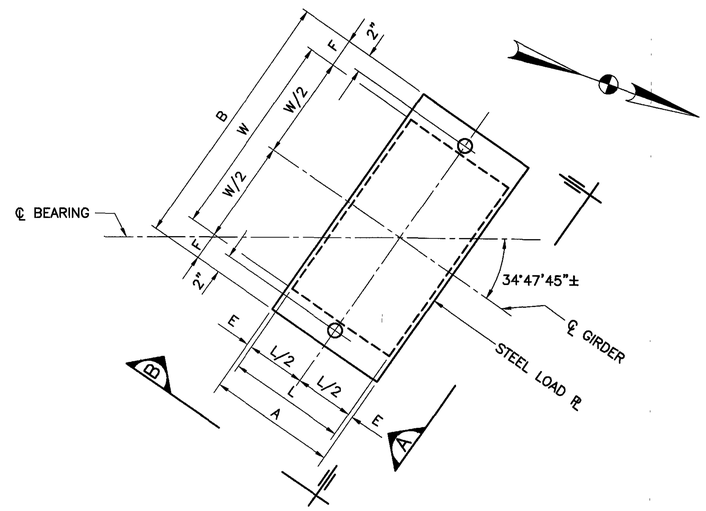

PLAN
FIXED BRG.

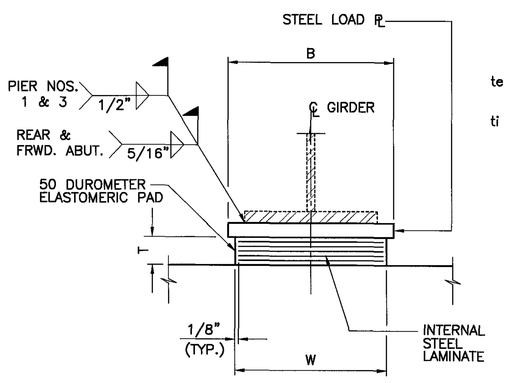

VIEW C

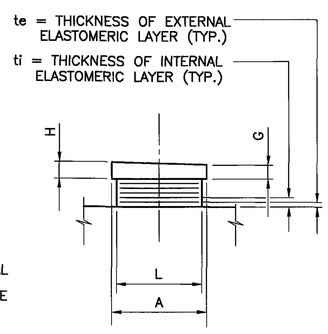

VIEW D

EXPANSION BEARING DETAIL

REAR ABUT., PIER NO. 1, PIER NO. 3 & FRWD. ABUT.

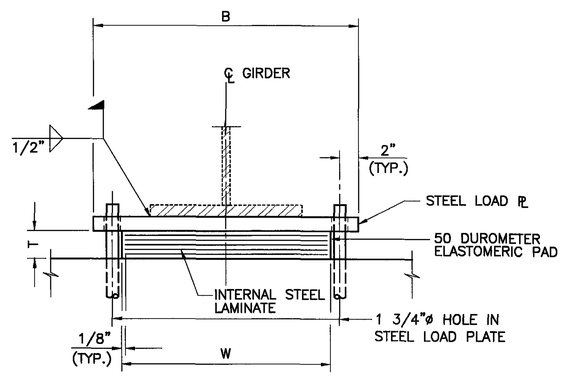

VIEW A

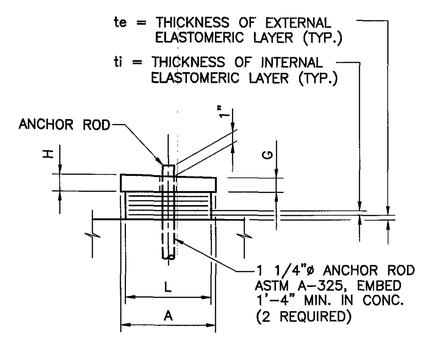

VIEW B

FIXED BEARING DETAIL

PIER NO. 2

NOTES:

1. ELASTOMERIC BEARINGS: THE ELASTOMER SHALL HAVE A HARDNESS OF 50 DUROMETER. THE BEARINGS WERE DESIGNED UNDER DIVISION I, SECTION 14.6.6 (METHOD A) OF THE AASHTO STANDARD SPECIFICATIONS FOR HIGHWAY BRIDGES.
2. WELDING: CONTROL WELDING SO THAT THE PLATE TEMPERATURE AT THE ELASTOMER BONDED SURFACE DOES NOT EXCEED 300°F AS DETERMINED BY USE OF PYROMETRIC STICKS OR OTHER TEMPERATURE MONITORING DEVICES.
3. THE STEEL LOAD PLATE FOR BEARINGS SHALL BE ASTM A572 STEEL, GRADE 50, PAINTED.
4. THE STEEL LOAD PLATE SHALL BE BONDED BY VULCANIZATION TO THE ELASTOMER DURING THE MOLDING PROCESS.
5. ANCHOR RODS SHALL BE GALVANIZED AS PER CMS 711.02. ANCHOR RODS SHALL EXTEND 1 INCH ABOVE THE LOAD PLATE (PIER NO. 2 BEARINGS).
6. BEARING REPOSITIONING: IF THE STEEL IS ERECTED AT AN AMBIENT TEMPERATURE HIGHER THAN 80°F OR LOWER THAN 40°F AND THE BEARING SHEAR DEFLECTION EXCEEDS 1/6 OF THE BEARING HEIGHT AT 60°F (±) 10°F, RAISE THE BEAMS OR GIRDERS TO ALLOW THE BEARINGS TO RETURN TO THEIR UNDEFORMED SHAPE AT 60°F (±) 10°F.

DESIGN AGENCY
CLAUS FYLE SCHOMER BURNS & DEWAYNE INC.
GPD ASSOCIATES
320 South Main Street, Suite 2331 Akron, Ohio 44311
330-972-2100 / Fax 330-972-2101

DESIGNED	DRAWN	REVIEWED	DATE
L.P.C.	R.P.R.	K.S.J.	3-31-04
CHECKED	REVISED	STRUCTURE FILE NUMBER	
P.J.W.		5007534	

LAMINATED ELASTOMERIC BEARINGS
BRIDGE NO. MAH - 680 - 0834
SHIRLEY RD. OVER I-680

MAH-680-7.24/8.34

Cad File: G:\CIVIL\2001169\01\112\DWG\STRUCT\DWG\2001169_112BRG.DWG
Date: 03-31-04 Time: 11:10 AM TW = 060'0.00"
Technician: RRYMER

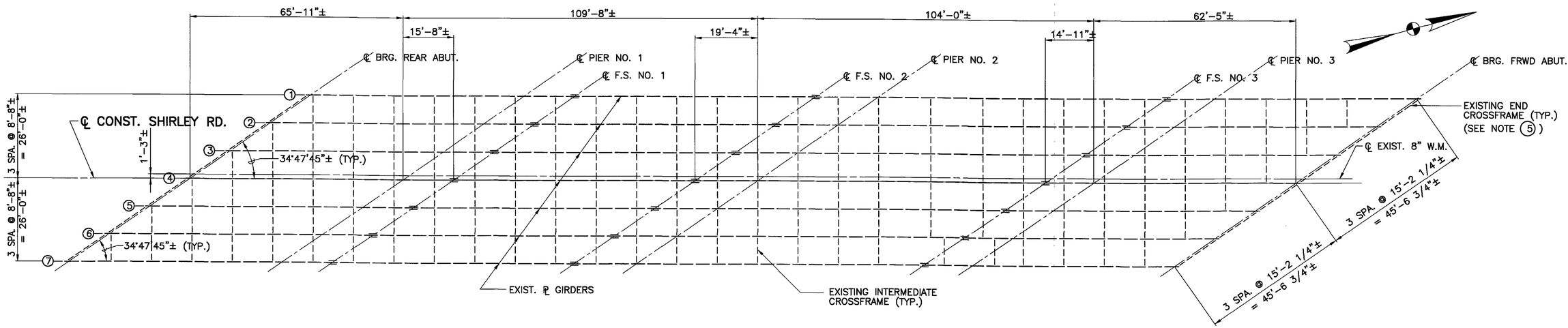

PLAN

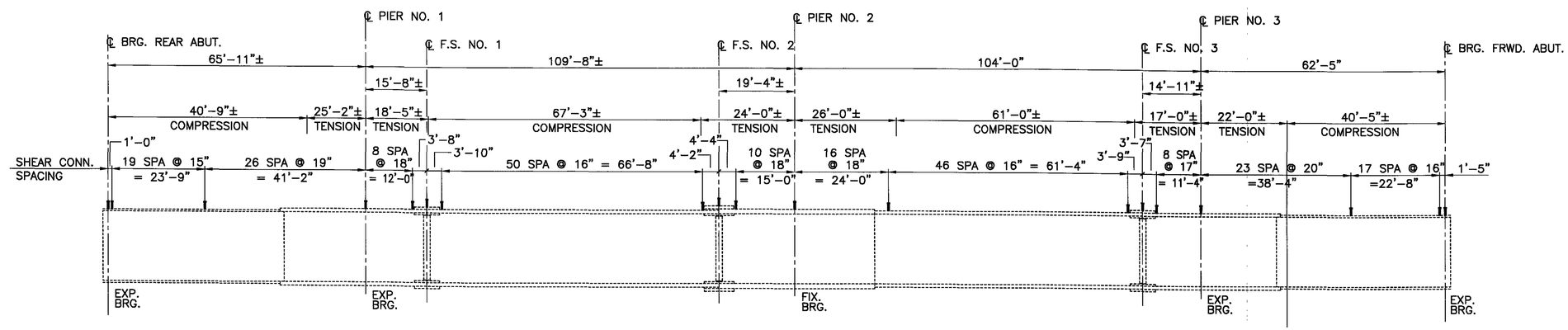

ELEVATION

EXIST. GIRDERS 1 THRU 7

NOTES:

1. FOR SHEAR CONNECTOR DETAIL, SEE SHT. NO. 17/21 .
2. WELD ATTACHMENT OF SUPPORTS FOR CONCRETE DECK FINISHING MACHINE TO AREAS OF THE FASCIA STRINGER FLANGES DESIGNATED "COMPRESSION". DO NOT WELD ATTACHMENTS TO AREAS DESIGNATED "TENSION". FILLET WELDS TO COMPRESSION FLANGES SHALL BE AT LEAST 1" FROM EDGE OF FLANGE, BE AT LEAST 2" LONG, AND BE AT LEAST 1/4" FOR THICKNESSES UP TO 3/4" OR 5/16" FOR GREATER THAN 3/4" THICK.
3. FOR EXP. JT. DETAILS, SEE SHT. NO. 18/21 .
4. FOR BEARING DETAILS, SEE SHT. NO. 14/21 .
5. AS DIRECTED BY ENGINEER, DETERIORATED END CROSSFRAME MEMBERS SHALL BE REPLACED PER STD. DWG. NO. GSD-1-96.
6. END CROSSFRAME REPLACEMENTS SHALL BE ASTM A572 STEEL, GRADE 50, PAINTED.

DESIGN AGENCY
CLAUS PFUE SCHEMMER BURNS & DEHAVEN INC
GPD ASSOCIATES
320 South Main Street, Suite 2531 Akron, Ohio 44311
330-972-2100 , Fax 330-972-2101

DESIGNED	DRAWN	REVIEWED	DATE
L.P.C.	R.H.C.	K.S.J.	3-31-04
CHECKED	REVISED	STRUCTURE FILE NUMBER	
P.J.W.		5007534	

FRAMING PLAN
BRIDGE NO. MAH - 680 - 0834
SHIRLEY RD. OVER I-680

MAH-680-7.24/8.34

Cad File: G:\CIVIL\2001169\01\112\DWG\STRUCT\DWG\2001169_112FRAME.DWG
Date: 03-31-04 Time: 11:10 AM TW = 0d0'0.00"
Technician: RRYMER

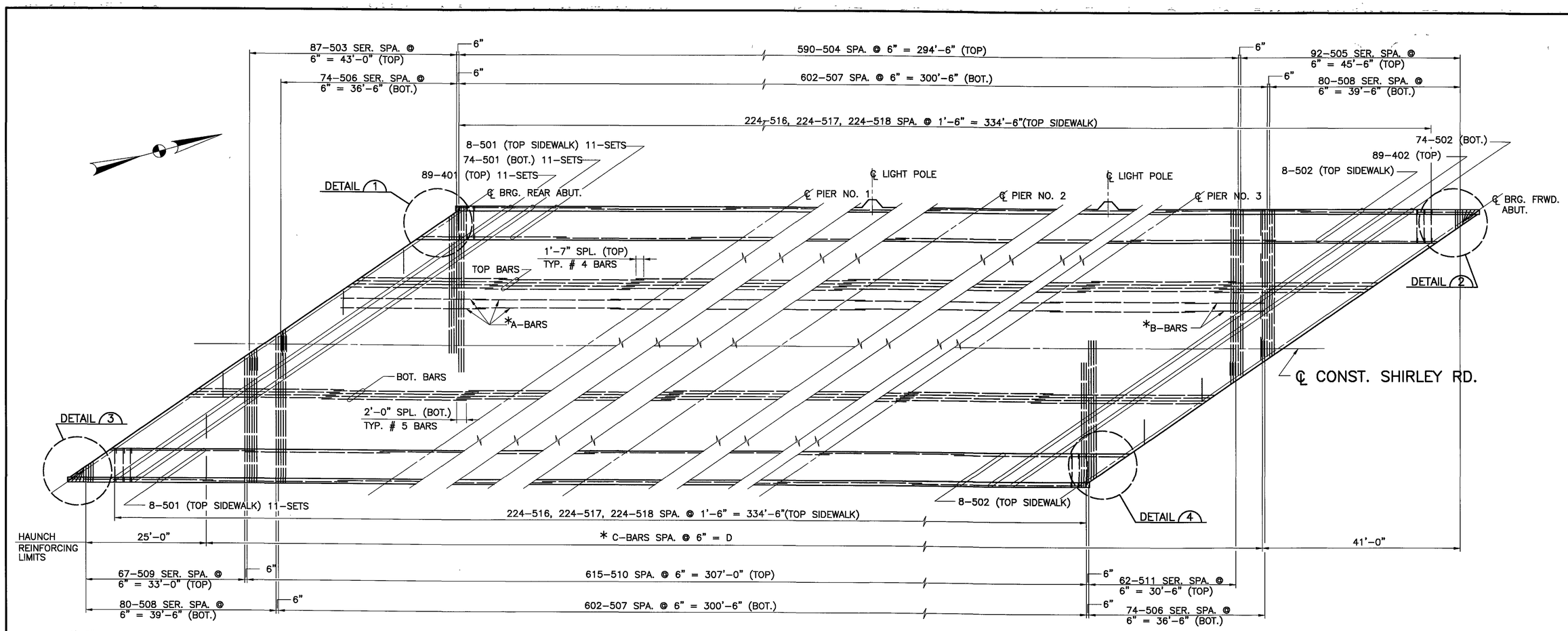

SLAB PLAN

* SEE HAUNCH REINFORCING TABLE

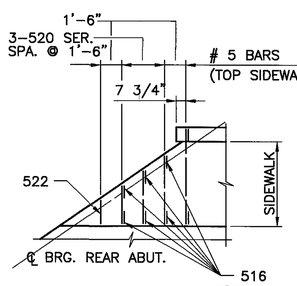

DETAIL 1 / DETAIL 4 SIM.
(SIDEWALK BARS)

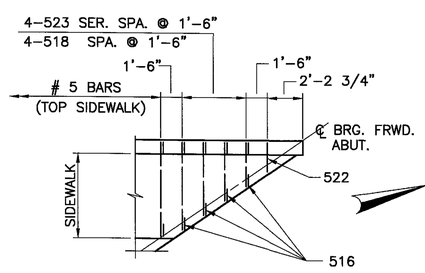

DETAIL 2 / DETAIL 3 SIM.
(SIDEWALK BARS)

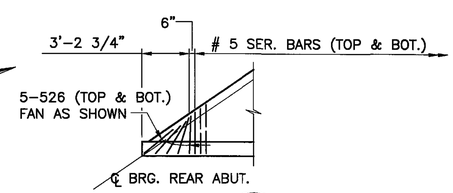

DETAIL 3 / DETAIL 2 SIM.
(SLAB BARS)

HAUNCH REINFORCING TABLE

GIRDER	REINFORCING STEEL			D
	A–BARS	B–BARS	C–BARS	
GIRD. 1	2–501 10–SETS	2–535	599–531	299'–0"
GIRD. 2	2–501 10–SETS	2–532	623–531	311'–0"
GIRD. 3	2–501 11–SETS	2–533	648–531	323'–6"
GIRD. 4	2–501 11–SETS	2–534	673–531	336'–0"
GIRD. 5	2–501 11–SETS	2–534	673–531	336'–0"
GIRD. 6	2–501 11–SETS	2–535	656–531	327'–6"
GIRD. 7	2–501 11–SETS	2–536	632–531	315'–6"

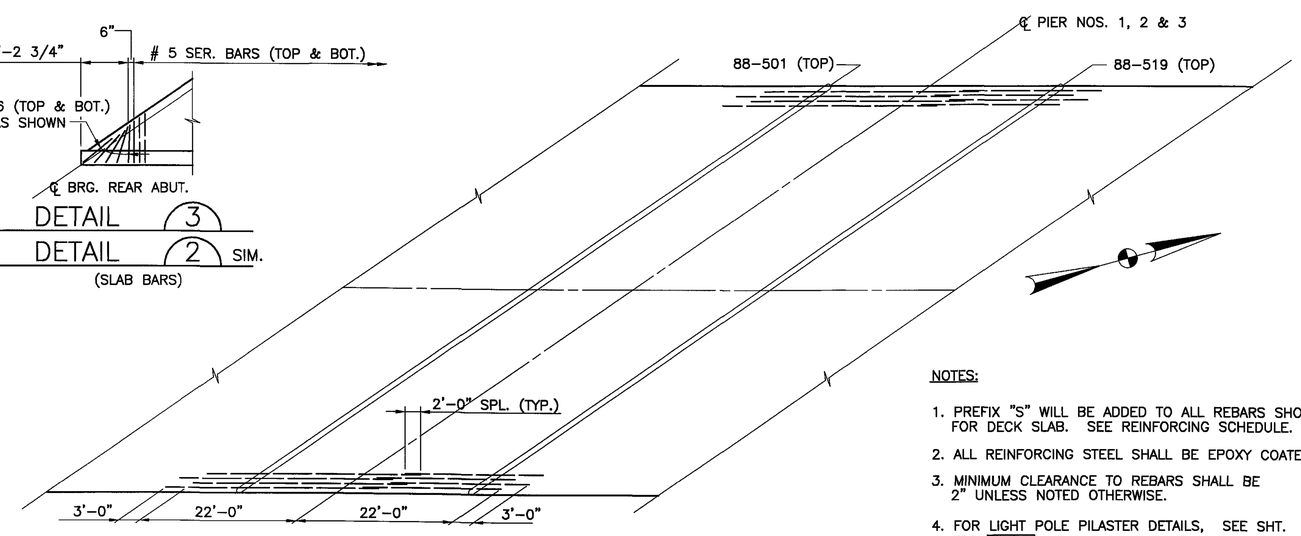

ADDITIONAL REINFORCING OVER PIERS

NOTES:

1. PREFIX "S" WILL BE ADDED TO ALL REBARS SHOWN FOR DECK SLAB. SEE REINFORCING SCHEDULE.
2. ALL REINFORCING STEEL SHALL BE EPOXY COATED.
3. MINIMUM CLEARANCE TO REBARS SHALL BE 2" UNLESS NOTED OTHERWISE.
4. FOR LIGHT POLE PILASTER DETAILS, SEE SHT. NO. 19/21 .
5. FOR TRANSVERSE SECTION, SEE SHT. NO. 17/21 .

DESIGN AGENCY
CLAUS PFILE SCHOWER BUDNICK & DEHAVEN, INC.
GPD ASSOCIATES
520 South Main Street, Suite 2331 Akron, Ohio 44311
330-372-2100, Fax 330-372-2101

DESIGNED	DRAWN	REVIEWED	DATE
S.A.M.	R.H.C.	K.S.J.	3–31–04
CHECKED	REVISED	STRUCTURE FILE NUMBER	
P.J.W.		5007534	

SLAB PLAN
BRIDGE NO. MAH – 680 – 0834
SHIRLEY RD. OVER I–680

MAH–680–7.24/8.34

Cad File: G:\CIVIL\2001169\01\112\DWG\STRUCT\DWG\2001169_112SLAB.DWG
Date: 03–31–04 Time: 11:18 AM TW = 0d0'0.00"
Technician. RRYMER

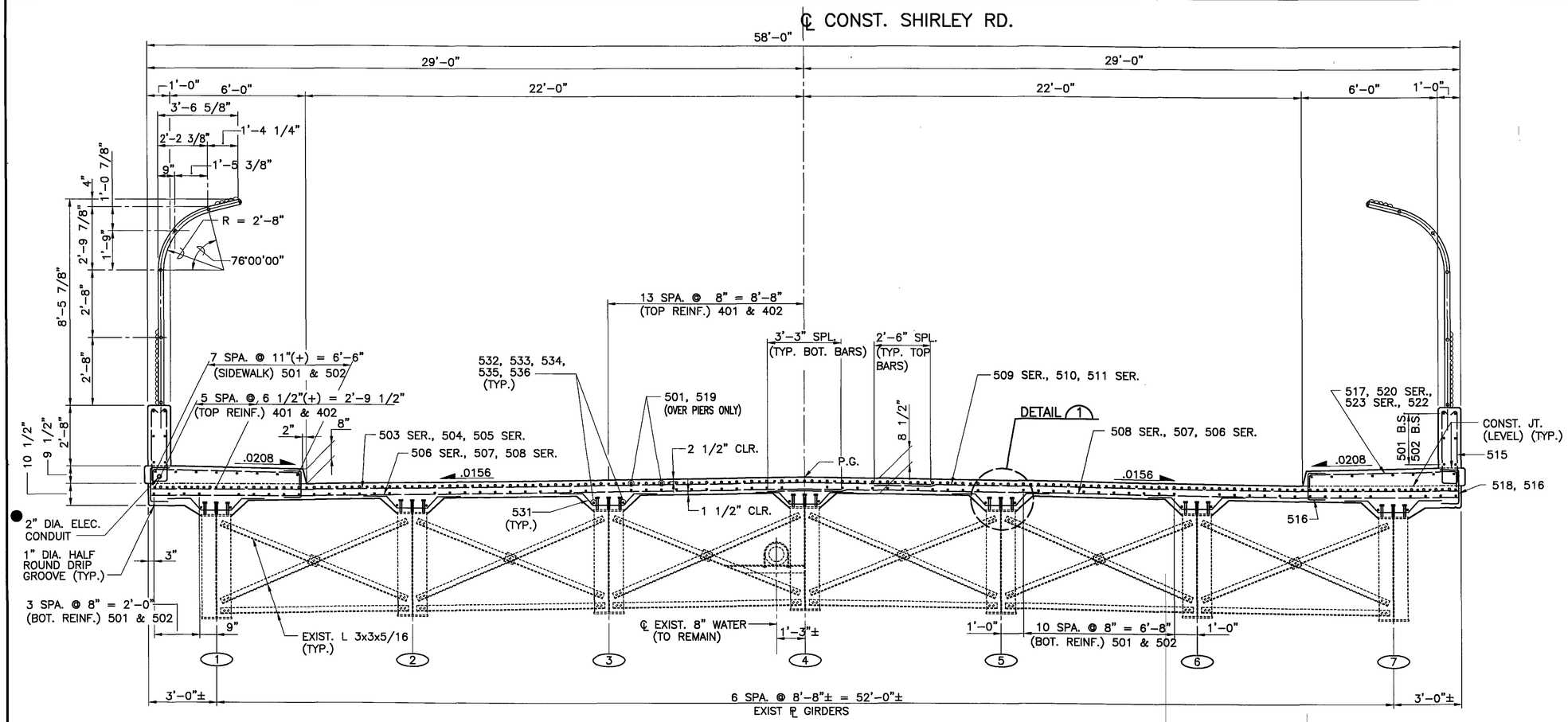

TRANSVERSE SECTION

DEPTH OF SLAB OVER GIRDER, Y					
LOCATION	REAR ABUT.	PIER NO. 1	PIER NO. 2	PIER NO. 3	FRWD. ABUT.
GIRD. 1	1'-9 7/8"	1'-5 7/8"	1'-7 1/8"	1'-6 1/2"	10 1/2
GIRD. 2	1'-7 7/8"	1'-5"	1'-5 15/16"	1'-7 1/16"	11 7/8"
GIRD. 3	1'-6 13/16"	1'-6 1/8"	1'-5 3/16"	1'-7 5/8"	1'-1 3/4"
GIRD. 4	1'-5 1/8"	1'-6 9/16"	1'-4 11/16"	1'-8 5/16"	1'-3 1/2"
GIRD. 5	1'-2 13/16"	1'-7 1/4"	1'-4 1/8"	1'-9 1/8"	1'-4 13/16"
GIRD. 6	1'-0 7/16"	1'-6 13/16"	1'-4 3/16"	1'-8 3/4"	1'-6 1/4"
GIRD. 7	10 1/2"	1'-7 1/8"	1'-4 7/16"	1'-8 13/16"	1'-8 3/16"

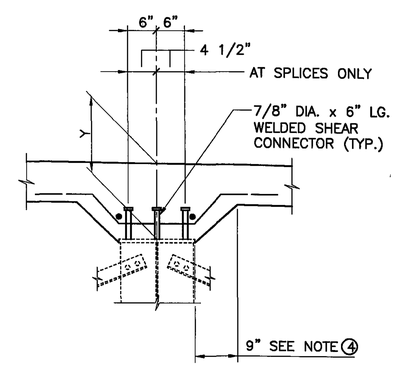

DETAIL 1

● INCLUDED WITH LIGHTING QUANTITIES, SHT. NO. 59/107.

NOTES:

1. PREFIX "S" WILL BE ADDED TO ALL REBARS SHOWN FOR DECK SLAB. SEE REINFORCING SCHEDULE.
2. ALL REINFORCING STEEL SHALL BE EPOXY COATED.
3. MINIMUM CLEARANCE TO REBARS SHALL BE 2" UNLESS NOTED OTHERWISE.
4. DECK SLAB CONCRETE QUANTITY: THE ESTIMATED QUANTITY OF DECK SLAB CONCRETE IS BASED ON THE CONSTANT DECK SLAB THICKNESS, AS SHOWN, PLUS THE QUANTITY OF CONCRETE THAT FORMS EACH GIRDER HAUNCH. THE ESTIMATE ASSUMES A CONSTANT HAUNCH THICKNESS OF 8.2 INCHES AND A CONSTANT HAUNCH WIDTH OUTSIDE THE EDGE OF EACH GIRDER FLANGE OF 9 INCHES. DEVIATE FROM THIS HAUNCH THICKNESS AS NECESSARY TO PLACE THE DECK SURFACE AT THE FINISHED GRADE. THE ALLOWABLE TOLERANCE FOR THE HAUNCH WIDTH OUTSIDE THE EDGE OF EACH BEAM FLANGE IS ± 3 INCHES.
5. FOR SLAB PLAN, SEE SHT. NO. 16/21 .
6. QUANTITY OF CONCRETE FOR SIDEWALK IS INCLUDED WITH ITEM 511, CLASS HP CONCRETE, BRIDGE DECK, AS PER PLAN FOR PAYMENT.
7. THE QUANTITY OF CONCRETE FOR RAILING IS INCLUDED WITH ITEM 511, CLASS HP CONCRETE, BRIDGE DECK (PARAPET), FOR PAYMENT.
8. FOR SCREED ELEVATIONS, AND SEALING OF CONCRETE SURFACES, SEE SHT. NO. 18/21 .
9. FOR CHAIN LINK FENCE DETAILS, SEE STD. DWG. NO. VPF-1-90.
10. FOR RAILING DETAILS, SEE SHT. NO. 19/21 .

DESIGN AGENCY
GALLUP PYLE SCHOMER BURNS & DEHAVEN INC.
GPD ASSOCIATES
520 South Main Street, Suite 2531 Akron, Ohio 44311
330-375-2190 / Fax 330-375-2191

DESIGNED	DRAWN	REVIEWED	DATE
S.A.M.	R.H.C.	K.S.J.	3-31-04
CHECKED	REVISED	STRUCTURE FILE NUMBER	
P.J.W.		5007534	

TRANSVERSE SECTION
BRIDGE NO. MAH - 680 - 0834
SHIRLEY RD. OVER I-680

MAH-680-7.24/8.34

Cad File: G:\CIVIL\2001169\01\112\DWG\STRUCT\DWG\2001169_1125U46.DWG
Date: 03-31-04 Time: 11:18 AM Ver. 0800.0.0
Technician. RRYMER

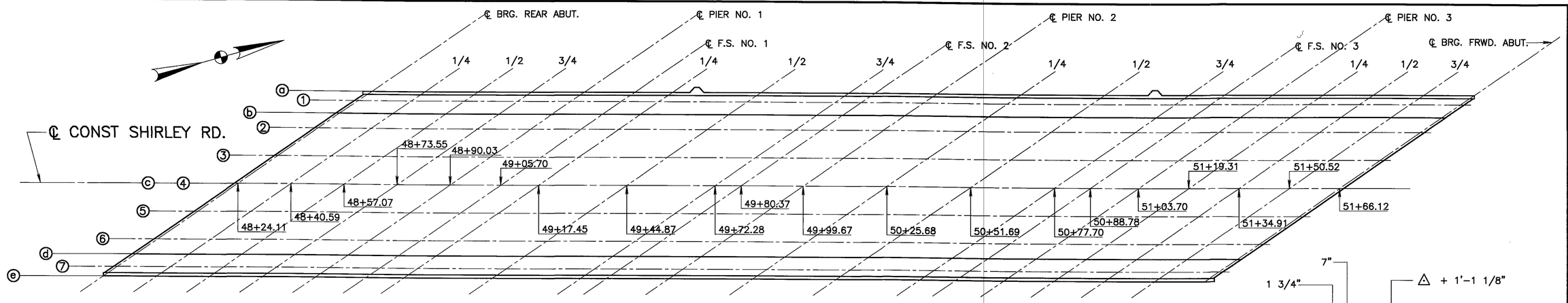

PLAN
SCREED ELEVATIONS

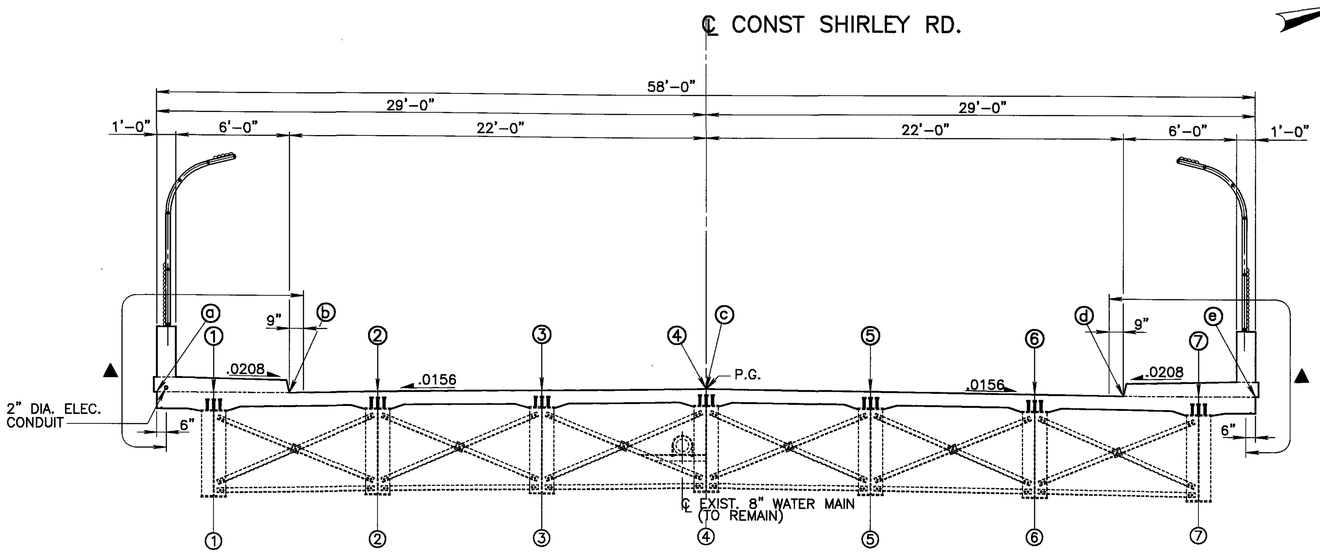

TRANSVERSE SECTION

▲ LIMITS OF "ITEM 864, SEALING OF CONCRETE SURFACES (EPOXY-URETHANE)."

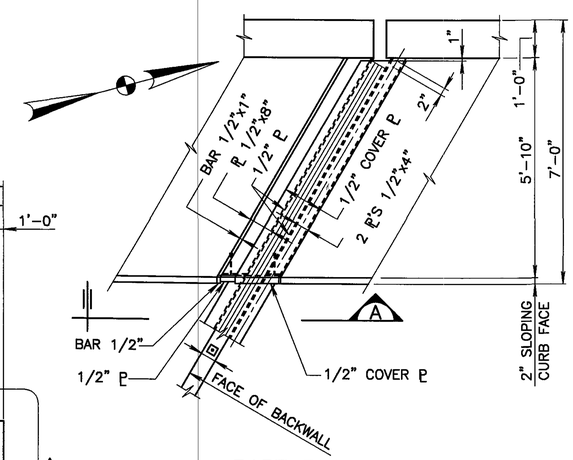

PART PLAN

REAR ABUT. LT. SHOWN, FRWD. ABUT. RT. SIM.
REAR ABUT. RT. & FRWD. ABUT. LT. OPP. HAND

EXPANSION JOINT

LEGEND

⊡ – THIS DIMENSION IS THE SUM OF (2 x STEEL RETAINER WIDTH) AND (DIM. "A")

△ – THIS DIMENSION IS ⊡ / COS 55°12'15"

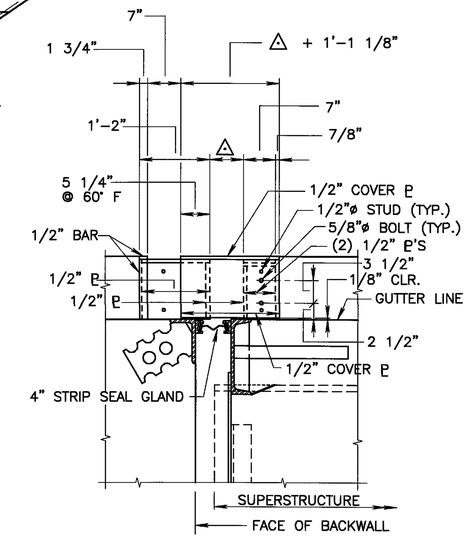

SECTION (A)

JOINT INSTALLATION TABLE

AMBIENT TEMPERATURE AT JOINT INSTALLATION (F)	DIMENSION "A"	
	REAR ABUT.	FRWD. ABUT.
90°	1 7/8"	1 7/8"
80°	2"	2"
70°	2 1/16"	2 1/16"
60°	2 1/8"	2 1/8"
50°	2 3/16"	2 3/16"
40°	2 1/4"	2 1/4"
30°	2 3/8"	2 3/8"

DECK SCREED ELEVATION TABLE

LOCATION	REAR ABUT.	SPAN NO. 1			℄ PIER NO. 1	SPAN NO. 2					℄ PIER NO.2	SPAN NO. 3				℄ PIER NO.3	SPAN NO. 4			FRWD. ABUT
		1/4	1/2	3/4		F.S. NO. 1	1/4	1/2	3/4	F.S. NO. 2		1/4	1/2	3/4	F.S. NO. 3		1/4	1/2	3/4	
ⓐ	971.30	970.73	970.10	969.40	968.70	968.05	967.57	966.42	965.22	964.87	963.97	962.69	961.27	959.65	958.90	957.85	956.73	955.55	954.31	953.01
①	971.44	970.89	970.27	969.59	968.88	968.24	967.75	966.61	965.40	965.05	964.17	962.92	961.52	959.92	959.19	958.16	957.04	955.88	954.66	953.37
ⓑ	971.62	971.09	970.49	969.83	969.13	968.48	968.00	966.85	965.65	965.30	964.43	963.21	961.85	960.29	959.56	958.55	957.46	956.32	955.12	953.85
②	971.90	971.39	970.82	970.17	969.49	968.84	968.36	967.22	966.01	965.66	964.80	963.63	962.30	960.78	960.07	959.08	958.01	956.89	955.71	954.47
③	972.38	971.92	971.39	970.79	970.15	969.51	969.03	967.89	966.68	966.33	965.47	964.36	963.11	961.65	960.98	960.03	959.01	957.93	956.80	955.60
④,ⓒ	972.83	972.42	971.93	971.38	970.78	970.18	969.70	968.55	967.35	966.99	966.14	965.05	963.87	962.50	961.85	960.94	959.96	958.94	957.85	956.69
⑤	972.98	972.61	972.17	971.66	971.10	970.54	970.09	968.95	967.75	967.39	966.54	965.45	964.34	963.03	962.42	961.55	960.62	959.63	958.59	957.47
⑥	973.09	972.77	972.37	971.91	971.40	970.88	970.46	969.35	968.14	967.79	966.93	965.85	964.76	963.53	962.95	962.13	961.24	960.30	959.29	958.22
ⓓ	973.14	972.84	972.47	972.03	971.54	971.04	970.64	969.56	968.35	968.00	967.15	966.06	964.98	963.78	963.22	962.42	961.55	960.64	959.66	958.61
⑦	973.23	972.96	972.60	972.19	971.72	971.24	970.85	969.80	968.60	968.25	967.39	966.31	965.22	964.05	963.51	962.73	961.88	960.99	960.03	959.00
ⓔ	973.30	973.04	972.70	972.30	971.85	971.38	971.00	969.98	968.78	968.43	967.58	966.49	965.41	964.25	963.72	962.95	962.12	961.24	960.30	959.29

NOTES:

1. SCREED ELEVATIONS SHOWN ARE FOR THE DECK SLAB SURFACE PRIOR TO CONCRETE PLACEMENT. ALLOWANCE HAS BEEN MADE FOR ANTICIPATED DEAD LOAD DEFLECTIONS.
2. ALL STRUCTURAL STEEL SHALL BE ASTM A572, GRADE 50.
3. FOR ADDITIONAL EXPANSION JOINT DETAILS, SEE STD. DWG. NO. EXJ-4-87
4. INSTALLATION OF SEAL: DURING INSTALLATION OF THE SUPPORT/ARMOR FOR THE SUPERSTRUCTURE SIDE OF THE EXPANSION JOINT SEAL, OBSERVE THE SEATING OF BEAMS ON BEARINGS TO ASSURE THAT POSITIVE BEARING IS MAINTAINED.

DESIGN AGENCY
GLAUS PYLE SCHOMER BURNS & DEWANEY, INC.
GPD ASSOCIATES
323 South Main Street, Suite 2331, Akron, Ohio 44311
330-972-2180 / Fax 330-972-2101

DESIGNED	DRAWN	REVIEWED	DATE
L.P.C.	R.H.C.	K.S.J.	3-31-04
CHECKED	REVISED	STRUCTURE FILE NUMBER	
P.J.W.		5007534	

SUPERSTRUCTURE DETAILS
BRIDGE NO. MAH – 680 – 0834
SHIRLEY RD. OVER I-680

MAH-680-7.24/8.34

Cad File: G:\CIVIL\2001169\Proj\Struct\DWG\2001169_112SCREED.DWG
Date: 03-31-04 Time: 1:17 AM
Technician. RRYMER

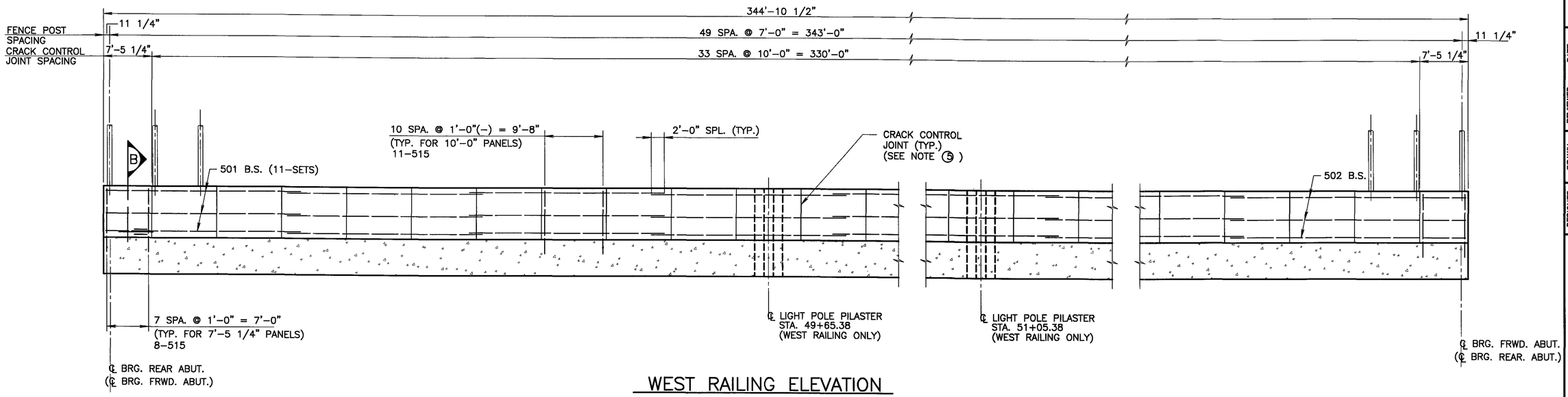

WEST RAILING ELEVATION

EAST RAILING SIMILAR BUT OPPOSITE HAND AND AS NOTED IN ( ).

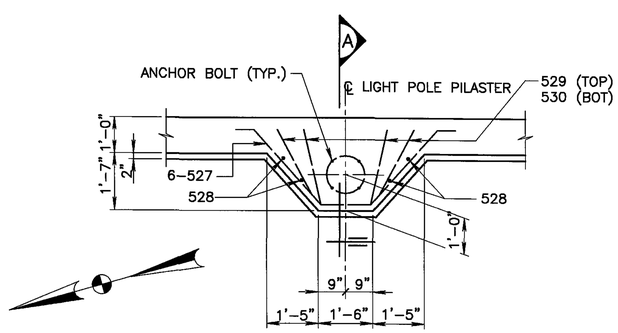

LIGHT POLE PILASTER DETAIL

(PARAPET REINFORCING NOT SHOWN)
(SEE NOTE 8)

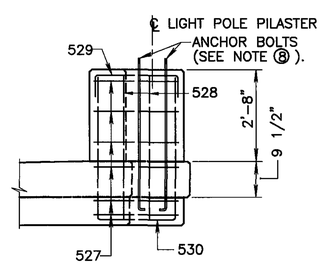

SECTION A

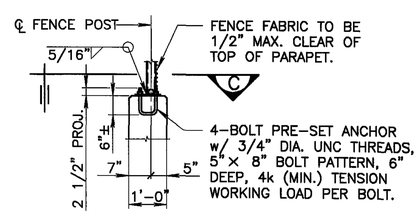

SECTION B

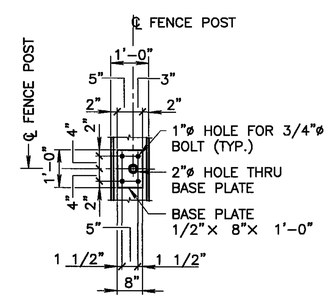

SECTION C

NOTES:

1. PREFIX "S" WILL BE ADDED TO ALL REBAR MARKS SHOWN FOR THE DECK SLAB. SEE REINFORCING SCHEDULE.
2. MINIMUM CLEARANCE TO ALL REBARS SHALL BE 2" UNLESS NOTED OTHERWISE.
3. ALL REINFORCING STEEL SHALL BE EPOXY COATED.
4. QUANTITY OF CONCRETE FOR RAILING IS INCLUDED WITH ITEM 511, CLASS HP CONCRETE, BRIDGE DECK (PARAPET), FOR PAYMENT.
5. FOR CONCRETE PARAPET NOTE, SEE SHT. NO. 3/21 .
6. FOR CHAIN LINK FENCE DETAILS, SEE STD. DWG. NO. VPF-1-90.
7. FOR LIGHT POLE PILASTER DETAILS NOT SHOWN, SEE STD. DWG. NO. HL-20.14.
8. ANCHOR BOLTS ARE INCLUDED WITH ITEM 625, LIGHT POLE AS PER PLAN, FOR PAYMENT, SEE SHT. NO. 59/107 .

DESIGN AGENCY
CLAUS PFILE SCHOMER BURNS & DEHAVEN, INC.
GPD ASSOCIATES
520 South Main Street, Suite 2531 Akron, Ohio 44311
330-372-2100 / Fax 330-372-2101

DESIGNED	DRAWN	REVIEWED	DATE
L.P.C.	R.H.C.	K.S.J.	3-31-04
CHECKED	REVISED	STRUCTURE FILE NUMBER	
P.J.W.		5007534	

RAILING ELEVATION
BRIDGE NO. MAH - 680 - 0834
SHIRLEY RD. OVER I-680

MAH-680-7.24/8.34

Cad File: G:\GRL\2001169\01\112\DWG\STRUCT\DWG\2001169_112RAILELEV.DWG
Date: 03-31-04 Time: 11:16 AM TW = 0d0:0.00"
Technician: RRYMER

ABUTMENT, EPOXY COATED BARS

MARK	NUMBER REAR	NUMBER FRWD	NUMBER TOTAL	LENGTH	WEIGHT (LB)	TYPE	DIMENSIONS A	DIMENSIONS B	DIMENSIONS C	SERIES INC.
A501	58	57	115	3' 6"	420	ST				
A502	96	96	192	9' 2"	1,836	103	3' 5"	3' 0"		
A503	63	63	126	30' 0"	3,943	ST				
A504	21	21	42	18' 0'	789	ST				
A505	2	2	4	12' 6"	52	105	11' 0"	1' 6"	1' 5"	
A506	2	2	4	11' 4"	47	105	9' 10"	1' 6"	1' 5"	
A507	6	6	12	4' 3"	53	123	2' 0"	0' 5"	1' 6"	
A508	4	4	8	3' 10"	32	122	2' 0"	2' 0"	1' 2"	
A509	8	8	16	4' 9"	79	ST				
A510	18		18	12' 4"	232	ST				
A512	8		8	29' 4"	245	ST				
A513S	2 SER OF 3		2 SER OF 3	25' 6" TO 28' 8"	169	ST				1' 7"
A515	10		10	33' 8"	351	ST				
A516	3		3	4' 2"	13	ST				
A517	2		2	11' 1"	23	132	5' 7"	4' 2"	4' 0"	
A518	18		18	11' 1"	208	ST				
A519	2		2	4' 3"	9	ST				
A521	8		8	28' 0"	234	ST				
A524	10	10	20	4' 0"	83	105	2' 0"	2' 0"	1' 2"	
A526	2		2	11' 8"	24	105	1' 5"	10' 3"	3' 10"	
A528S		1 SER 12	1 SER 12	8' 9" TO 10' 4"	119	ST				0' 1 3/4"
A529		6	6	18' 9"	117	ST				
A530		2	2	21' 9"	45	ST				
A531		2	2	8' 1"	17	105	1' 5"	6' 8"	3' 2"	
A533		2	2	16' 3"	34	ST				
A534		22	22	24' 5"	560	ST				
A535		2	2	3' 11"	8	ST				
A536		8	8	20' 1"	168	ST				
A537S		1 SER OF 12	1 SER OF 12	9' 11" TO 11' 2"	132	ST				0' 1 3/8"
A538		2	2	9' 1"	19	132	4' 5"	3' 4"	2' 0"	
A539		2	2	17' 6"	37	ST				
A540		2	2	20' 4"	42	ST				
A541		2	2	18' 7"	39	ST				
A542		2	2	3' 5"	7	ST				
A543	8	8	16	5' 0"	83	ST				
A545	4		4	36' 8"	153	ST				
A546	69	48	117	9' 4"	1,139	124	4' 0"	0' 8"		
A601	222	172	394	3' 6"	2,071	ST				
A602	108	108	216	13' 3"	4,299	103	1' 5"	6' 1"		
A603	73	73	146	6' 9"	1,480	103	0' 11"	3' 1"		
A604	74	74	148	9' 5"	2,093	103	1' 5"	4' 2"		
A605	131		131	3' 8"	721	ST				
A606	2		2	10' 5"	31	ST				
A607	6	6	12	11' 9"	212	107	1' 5"	4' 2"		
A608	6	6	12	3' 1"	56	103	1' 5"	1' 0"		
A609	6	6	12	5' 5"	98	103	0' 11"	2' 5"		
A610	1	1	2	8' 7"	26	103	0' 11"	4' 0"		
A611		2	2	9' 11"	30	ST				
A612	38		38	11' 9"	671	ST				

ABUTMENT, EPOXY COATED BARS

MARK	NUMBER REAR	NUMBER FRWD	NUMBER TOTAL	LENGTH	WEIGHT (LB)	TYPE	DIMENSIONS A	DIMENSIONS B	DIMENSIONS C	SERIES INC.
A614	1		1	13' 2"	20	103	1' 2"	6' 2"		
A615	1		1	10' 6"	16	103	1' 2"	4' 10"		
A616	4		4	8' 0"	48	103	1' 2"	3' 7"		
A618	39		39	11' 0"	644	ST				
A620	69	48	117	3' 10"	674	133				
A622S		2 SER 3	2 SER 3	9' 4" TO 12' 2"	97	103	1' 2"	4' 3" TO 5' 8"		1' 5"
A623S		1 SER OF 26	1 SER OF 26	8' 9" TO 10' 4"	373	ST				0' 0 3/4"
A624		6	6	8' 4"	75	103	1' 2"	3' 9"		
A626S		1 SER OF 25	1 SER OF 25	9' 11" TO 11' 1"	394	ST				0' 0 5/8"
A629		131	131	2' 9"	541	ST				
A630	6	6	12	12' 9"	230	134	2' 10"	2' 11"		
A631	4	4	8	5' 7"	67	102	3' 0"	2' 9"		
A632S	1 SER OF 5		1 SER OF 5	10' 6" TO 14' 10"	95	103	1' 2"	4' 10" TO 7' 0"		1' 1"
A633	3		3	10' 0"	45	103	1' 2"	4' 7"		
A634	12		12	36' 8"	661	ST				
A635	2		2	30' 6"	92	ST				
A636	2		2	28' 0"	84	ST				
A637	6	6	12	5' 4"	96	102	3' 8"	1' 10"		
A638	6	6	12	5' 6"	99	102	3' 10"	1' 10"		
A801	31	31	62	7' 2"	1,186	116	4' 11"	1' 0"		
A901	10	10	20	5' 6"	374	102	3' 0"	2' 9"		
A902	4	4	8	5' 11"	161	ST				

FOR BAR TYPE DIAGRAMS AND REINFORCING NOTES, SEE SHT. NO. 21/21 .

DESIGN AGENCY
GLAUS PYLE SCHOMER BURNS & DEHAVEN, INC.
GPD ASSOCIATES
320 South Main Street, Suite 253 Akron, Ohio 44311
330-972-2100 / Fax 330-972-2101

DESIGNED R.H.C. | DRAWN R.P.R. | REVIEWED K.S.J. | DATE 3-31-04
CHECKED P.J.W. | REVISED | STRUCTURE FILE NUMBER 5007534

REINFORCING SCHEDULE
BRIDGE NO. MAH - 680 - 0834
SHIRLEY RD. OVER I-680

MAH-680-7.24/8.34

Cad File: G:\CIVIL\2001169\01\112\DWG\STRUCT\DWG\2001169_112REBAR.DWG
Date: 03-31-04 Time: 11:16 AM TW = 0.00'0.00"
Technician: RRYMER

PIER, EPOXY COATED BARS

MARK	NUMBER 1	NUMBER 2	NUMBER 3	TOTAL	LENGTH	WEIGHT (LB)	TYPE	DIMENSIONS A	DIMENSIONS B	DIMENSIONS C	SERIES INC.
SP401		1		1	2' 10"	78	120	3' 7"	4.5"		
SP402	3	1		4	1' 9"	228	120	3' 7"	4.5"		
SP403	1	2	3	6	1' 6"	312	120	3' 7"	4.5"		
SP404			2	2	1' 3"	94	120	3' 7"	4.5"		
SP405	1		1	2	2' 7"	147	120	3' 7"	4.5"		
SP406	1	1		2	2' 4"	137	120	3' 7"	4.5"		
SP407	1	2	1	4	2' 0"	247	120	3' 7"	4.5"		
P501	20	22	22	64	30' 0"	2,003	ST				
P502	10	12	12	34	25' 0"	887	ST				
P503	2	2	2	6	22' 0"	138	ST				
P504	110	110	110	330	9' 9"	3,356	103	3' 8"	3' 2"		
P505	4	8	4	16	14' 11"	249	102	13' 6"	1' 6"		
P506	4		2	6	16' 0"	100	102	14' 8"	1' 6"		
P507	4	4	4	12	10' 0"	125	102	8' 8"	1' 6"		
P508	12	12	12	36	10' 0"	375	ST				
P509	4	4	4	12	6' 5"	80	102	5' 0"	1' 6"		
P510	10	6	2	18	13' 8"	257	102	12' 4"	1' 6"		
P511	2	6	8	16	15' 5"	257	102	14' 0"	1' 6"		
P512		2		2	2' 8"	6	102	1' 4"	1' 6"		
P513		2		2	4' 5"	9	102	3' 0"	1' 6"		
P515			4	4	17' 0"	71	102	15' 8"	1' 6"		
P516	12	12	12	36	6' 10"	257	119	1' 9"	2' 0"		
P601	6		6	12	12' 11"	233	103	6' 4"	3' 5"		
P602	22		22	44	6' 4"	419	102	3' 0"	3' 6"		
P801	6	6	6	18	34' 4"	1,650	ST				
P802	12	12	12	36	24' 9"	2,379	ST				
P803	6	6	6	18	18' 10"	905	ST				
P804	6	6	6	18	28' 7"	1,374	102	26' 10"	2' 0"		
P805	6	6	6	18	35' 7"	1,710	102	32' 5"	3' 5"		
P806	6	6	6	18	20' 8"	993	102	17' 6"	3' 5"		
P807	6	6	6	18	29' 7"	1,422	102	26' 10"	3' 0"		
P901	4		4	8	6' 4"	172	ST				
P902	22		22	44	6' 1"	910	102	3' 0"	3' 5"		
P1001		18		18	6' 0"	465	ST				
P1002	54	18		72	4' 11"	1,523	ST				
P1003	18	36	54	108	4' 8"	2,169	ST				
P1004			36	36	4' 5"	684	ST				
P1005	18		18	36	5' 9"	891	ST				
P1006	18	18		36	5' 6"	852	ST				
P1010	18	36	18	72	5' 2"	1,601	ST				

SLAB, EPOXY COATED BARS

MARK	NO.	LENGTH	WEIGHT (LB)	TYPE	DIMENSIONS A	DIMENSIONS B	DIMENSIONS C	SERIES INC.
S401	979	30' 0"	19,619	ST				
S402	89	33' 0"	1,962	ST				
S501	1,536	30' 0"	48,061	ST				
S502	102	38' 0"	4,043	ST				
S503S	1 SER OF 87	3' 4" TO 33' 3"	1,660	ST				0' 4 1/8"
S504	590	34' 5"	21,179	ST				
S505S	1 SER OF 92	3' 0" TO 34' 5"	1,795	ST				0' 4 1/8"
S506S	2 SER OF 74	3' 10" TO 29' 3"	2,553	ST				0' 4 1/8"
S507	1,204	30' 6"	38,301	ST				
S508S	2 SER OF 80	3' 0" TO 30' 6"	2,795	ST				0' 4 1/8"
S509S	1 SER OF 67	3' 0" TO 25' 9"	1,005	ST				0' 4 1/8"
S510	615	25' 9"	16,517	ST				
S511S	1 SER OF 62	3' 0" TO 24' 7"	892	ST				0' 4 1/4"
S515	758	7' 10"	6,193	124	3' 3"	0' 8"		
S516	468	2' 5"	1,180	103	1' 0"	0' 10"		
S517	448	7' 3"	3,388	103	6' 6"	0' 6"		
S518	456	2' 7"	1,229	103	1' 2"	0' 10"		
S519	264	19' 0"	5,232	ST				
S520S	2 SER 3	3' 5" TO 5' 6"	28	103	2' 8" TO 4' 9"	0' 6"		1' 0 1/2"
S522	4	3' 5"	14	103	1' 8"	1' 0"		
S523S	2 SER 4	3' 9" TO 6' 10"	44	103	3' 0" TO 6' 1"	0' 6"		1' 0 3/8"
S526	20	3' 0"	63	ST				
S527	12	8' 1"	101	136				
S528	8	4' 0"	33	ST				
S529	8	3' 0"	25	103	2' 1"	0' 7"		
S530	8	9' 10"	82	103	2' 1"	4' 0"		
S531	4,504	5' 5"	25,446	135				
S532	2	34' 0"	71	ST				
S533	2	18' 6"	39	ST				
S534	4	31' 0"	129	ST				
S535	4	22' 6"	94	ST				
S536	2	10' 6"	22	ST				

SUMMARY AND GRAND TOTAL OF BAR WEIGHTS

ABUTMENTS	29,421
PIERS	29,765
SLAB	203,795
GRAND TOTAL	262,981

STANDARD BAR TYPES

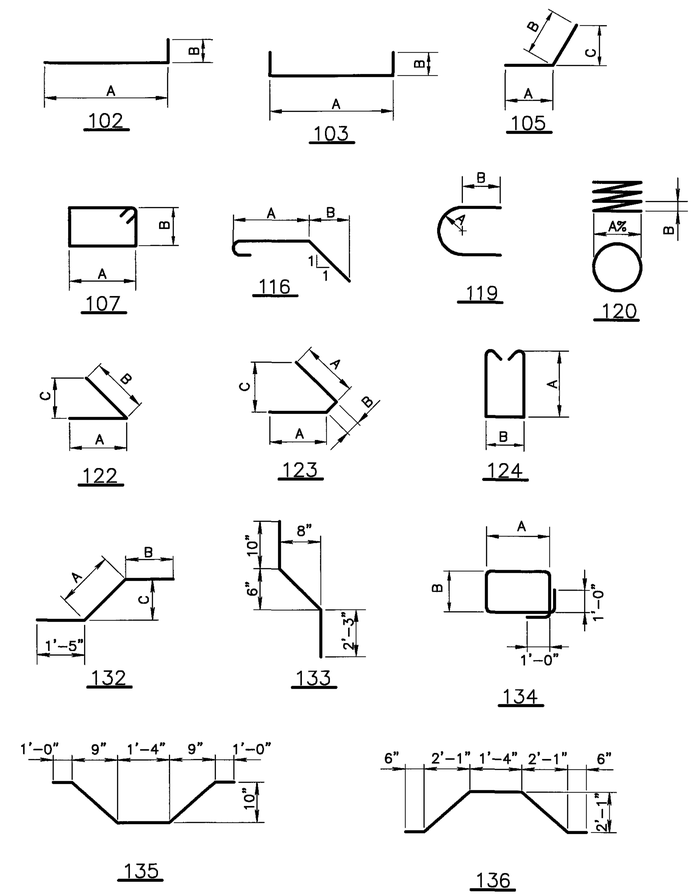

NOTES:

1. BAR DIMENSIONS ARE OUT TO OUT UNLESS NOTED OTHERWISE.
2. ALL BARS ARE EPOXY COATED.
3. I.R. DENOTES INSIDE RADIUS
4. WHEN NO BAR LEG DIMENSIONS ARE SHOWN, IT INDICATES STANDARD BEND.
5. BAR SIZE AND LOCATION ARE INDICATED IN THE BAR MARK. THE FIRST ALPHABETICAL LETTER INDICATES LOCATION. THE NEXT DIGIT OF THE THREE DIGIT SERIES AND THE NEXT TWO DIGITS OF THE FOUR DIGIT SERIES INDICATE BAR SIZE NUMBER.

EXAMPLES:

S 501 — NO. 5 SIZE BAR; SLAB

A 513S — SERIES BAR; NO. 5 SIZE BAR; ABUTMENT

DESIGN AGENCY
GLAUS PYLE SCHOMER BURNS & DEWAYNE, INC.
GPD ASSOCIATES
320 South Main Street, Suite 2331 Akron, Ohio 44311
330/972-2100 , Fax 330/972-2101

DESIGNED	DRAWN	REVIEWED	DATE
R.H.C.	R.P.R.	K.S.J.	3-31-04
CHECKED	REVISED	STRUCTURE FILE NUMBER	
P.J.W.		5007534	

REINFORCING SCHEDULE
BRIDGE NO. MAH – 680 – 0834
SHIRLEY RD. OVER I-680

MAH-680-7.24/8.34

Cad File: G:\CIVIL\2001169\01\112\DWG\STRUCT\DWG\2001169_112REBAR.DWG
Date: 03-31-04 Time: 11:16 AM TW = 0d0'0.00"
Technician: RRYMER

MAH - 680 - 7.24

TOWNSHIP 2N, RANGE 2W
CITY OF YOUNGSTOWN
YOUNGSTOWN TOWNSHIP
MAHONING COUNTY

CONVENTIONAL SIGNS

County Line
Township Line
Section Line
Corporation Line or
Fence Line (existing) (proposed)
Center Line
Trees ,Stumps (to be removed)
Utility Poles: Telephone , Power , Light
Right of Way (only) R/W
Standard Highway Ease. SH
Temp. Right of Way T
Exist. Right of Way Ex R/W
Exist. Stand. High. Ease. Ex SH
Exist. Channel Ease. Ex CH
Exist. Utility Ease. Ex U
Property Line (in existing fence)
Railroad or
Guardrail (existing) (proposed)
Construction Limits Construction Limits

PROPERTY OWNERS

1. MURIEL H. TAVOLARIO
A.P.N. 53-038-0-082
2. MILDRED B. BAYTOS,
AKA MILDRED BAYTOS
A.P.N. 53-038-0-001
3. LINDA MARGARET PERA
53-038-0-092
A.P.N. 53-038-0-093
4. CITY OF YOUNGSTOWN
A.P.N. 53-038-0-091

UTILITY OWNERS & ADRESSES

LISTED BELOW ARE ALL UTILITIES LOCATED WITHIN THE PROJECT CONSTRUCTION LIMITS TOGETHER WITH THEIR RESPECTIVE OWNERS

SBC
SABRENA LAMPLEY
50 W. BOWERY ST., 4TH FLOOR
AKRON, OH, 44308
(330) 384-8057

AT&T
ATTN: JEFF BALLINGER
229 WEST 7TH STREET,
10TH FLOOR
CINCINNATI, OH 45020
(513) 784-5338

MAHONING VALLEY SANITARY DISTRICT
ATTN: MARTY KIELBASA
P.O. BOX 4119
YOUNGSTOWN, OH 44515-4119
(330) 799-6315

CITY OF YOUNGSTOWN,
WATER DEPT.
ATTN: GENE LESON
26 SOUTH PHELPS STREET
YOUNGSTOWN, OH 44503
(330) 743-5338

MCI/WORLDCOM
ATTN: INVESTIGATIONS
DEPT. 2855/642
JEFF BACHELDER
2250 LAKESIDE BOULEVARD
RICHARDSON, TX 75082

DOMINION EAST OHIO
ATTN: JIM SYMPSON
1165 WEST RAYEN AVENUE
YOUNGSTOWN, OH 44502
(330) 742-8138

OHIO EDISON
ATTN: BILL SPEECE
730 SOUTH AVENUE
YOUNGSTON, OH 44502
(330) 740-7635

DOMINION TELECOM
ATTN: DOUG PIERCE
ALLEGHENY CENTER MALL,
SUITE 108
PITTSBURG, PA 15212
(412) 321-8432

QWEST COMMUNICATIONS
ATTN: CLIFF CALDWELL
10645 WILLIAMS ROAD
WEST SALEM, OH 44287
(330) 948-1884

DOMINION EAST OHIO
GAS SUPPLY OPERATIONS
ATTN: FRANK MARTIN
7015 FREEDOM AVE., N.W.
NORTH CANTON, OH 44720
(330) 266-2120

TIME WARNER CABLE
ATTN: DON JUGENHEIMER
4352 YOUNGSTOWN ROAD
WARREN, OH 44484
(330) 369-7138

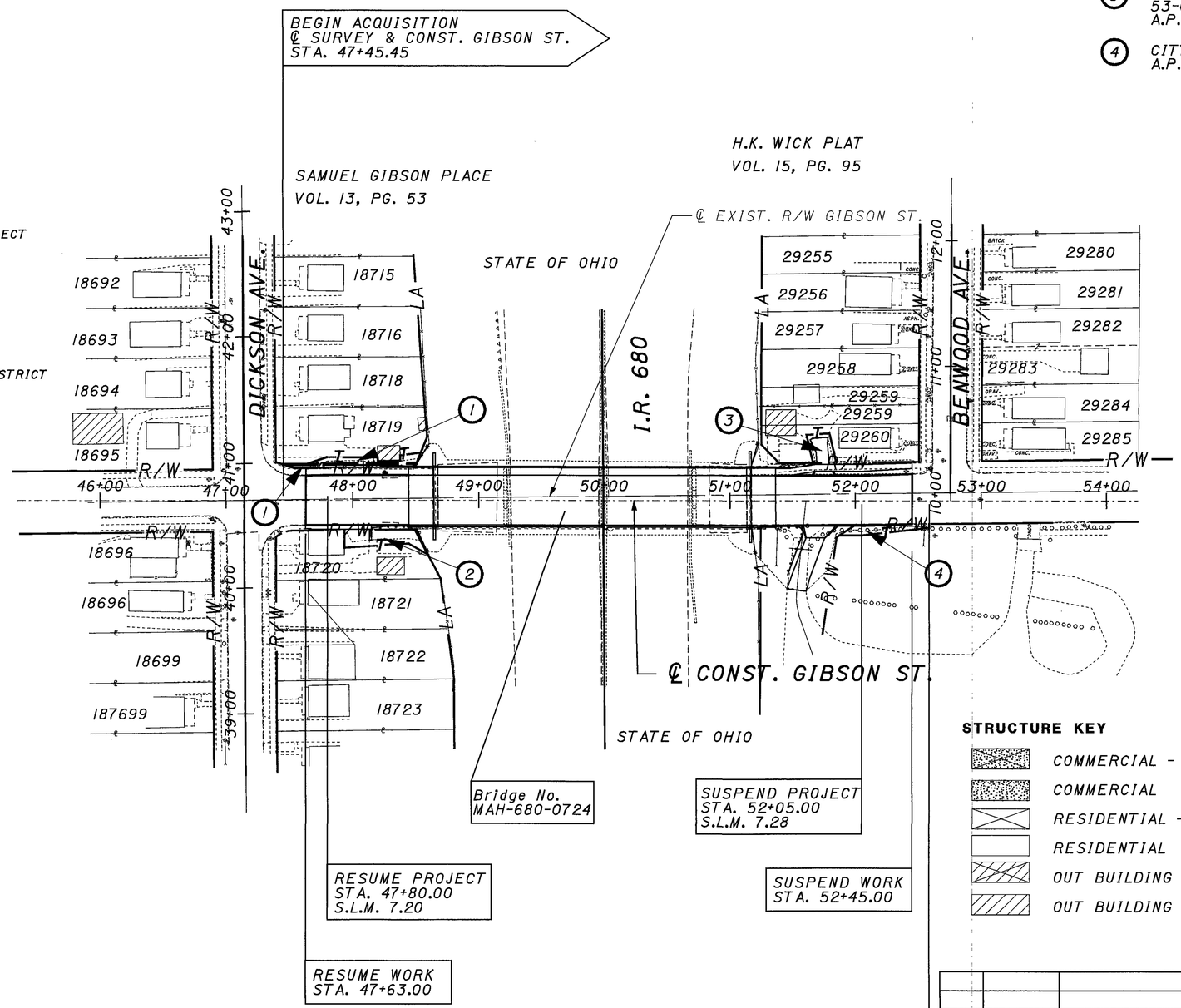

STRUCTURE KEY

- COMMERCIAL - TO BE REMOVED
- COMMERCIAL
- RESIDENTIAL - TO BE REMOVED
- RESIDENTIAL
- OUT BUILDING - TO BE REMOVED
- OUT BUILDING

UNDERGROUND UTILITIES

THE LOCATION FOR THE UNDERGROUND UTILITIES SHOWN ON THE PLANS ARE AS REQUIRED BY SECTION 153.64 O.R.C.. OBTAINED FROM THE OWNERS OF THE UTILITY

REV	DATE	
DJH	7/08/04	NAME CHANGE PARCEL 2

PLAN COMPLETION DATE

SCALE IN FEET 25 50 100

PID NO. 22484

R/W DESIGNER R.L.W.
R/W REVIEWER J.E.K.

PROPERTY MAP - GIBSON STREET
BEGIN TO END

MAH-680-7.24/8.34

$FILE$
$DATE$
$TIME$

TOTAL NUMBER OF
____OWNERSHIPS
____TOTAL TAKES
____OWNERSHIPS WITH STRUCTURES INVOLVED
____OWNERSHIPS WITH "P" ITEMS

SUMMARY OF ADDITIONAL RIGHT OF WAY

GRANTEE: ALL RIGHT OF WAY ACQUIRED IN THE NAME OF THE STATE OF OHIO, DEPARTMENT OF TRANSPORTATION UNLESS OTHERWISE NOTED

PARCEL NO.	OWNER	SHEET NO.	OWNERS RECORD BOOK	OWNERS RECORD PAGE	AUDITOR'S PARCEL	RECORD AREA	TOTAL P.R.O.	GROSS TAKE	P.R.O. IN TAKE	NET TAKE	STRUCTURE	NET RESIDUE LEFT	NET RESIDUE RIGHT	TYPE FUND	REMARKS AND PERSONALTY	AS ACQUIRED BOOK	AS ACQUIRED PAGE
														STATE			
1-WD	Muriel H. Tavolario		1376	487	53-038-0-082	0.1277 (c)	0	0.0069	0	0.0069		0.1208			FOR HIGHWAY PURPOSES		
1-T		3			53-038-0-082	0.1277 (c)	0	0.0090	0	0.0090		-			FOR GRADING PURPOSES		
2-T	Mildred B. Baytos, aka Mildred Baytos	3	O.R 5450	0711	53-038-0-001	0.1095 (c)	0	0.0183	0	0.0183			-		FOR GRADING PURPOSES		
3-T	Linda Margaret Pera	4	O.R. 5248	2593	53-038-0-092	0.0837 (c)	0	0.0096	0	0.0096		-			FOR GRADING PURPOSES & DRIVE RECONSTRUCTION		
		4	O.R. 5248	2593	53-038-0-093	0.0430 (c)	0	0	0	0							
					TOTAL	0.1267 (c)	0	0.0096	0	0.0096							
4-T	The City of Youngstown	4	445	131	53-038-0-091	18.13	0	0.0093	0	0.0093			-		FOR GRADING PURPOSES		
														STATE			

NOTE: UNDER NO CIRCUMSTANCES ARE TEMPORARY EASEMENTS TO BE USED FOR STORAGE OF MATERIAL OR EQUIPMENT BY THE CONTRACTOR, UNLESS OTHERWISE NOTED.

NOTE: ALL TEMPORARY PARCELS TO BE OF 18 MONTHS DURATION.

NET RESIDUE = RECORDED AREA - TOTAL P.R.O. - NET TAKE
ALL AREAS IN ACRES
(c) = CALCULATED RECORD AREA

FIELD REVIEW BY	OWNERSHIP VERIFIED BY	REVISION	DATE	DESCRIPTION
		DJH	7/08/04	Name change parcel 2

DATE OF COMPLETION

FEDERAL PROJECT NO.

PID NO. 22484

STATE JOB NO. 445100

R/W DESIGNER R.L.W.
R/W REVIEWER J.E.K.

SUMMARY OF ADDITIONAL RIGHT OF WAY

MAH-680-7.24/8.34

twardl 07-MAR-2005 8:37AM
Projects\22484\Right of Way\mah-680-7.24\22179RSA.dgn
#FILE#
#DATE#
#TIME#

MAH - 680 - 7.24

TOWNSHIP 2N, RANGE 2W
CITY OF YOUNGSTOWN
YOUNGSTOWN TOWNSHIP
MAHONING COUNTY

Begin Acquisition
℄ Survey & Const. Gibson St.
Sta. 47+45.45

Resume Work
Sta. 47+63.00

Resume Project
Sta. 47+80.00
S.L.M. 7.20

BASIS OF EXISTING RIGHT OF WAY
THE EXISTING R/W WIDTH AND LOCATION WERE DETERMINED USING: TAX MAPS, DEEDS, PLATS, KS ASSOCIATES SURVEY AND PREVIOUS PLANS ON FILE FROM THE OHIO DEPARTMENT OF TRANSPORTATION, DISTRICT 4 OFFICES IN RAVENNA, OHIO.

1. SAMUEL GIBSON PLACE PLAT VOL. 13, PG. 53
2. H.K. WICK PLAT VOL. 15, PG. 95
3. MAH-680-6.98

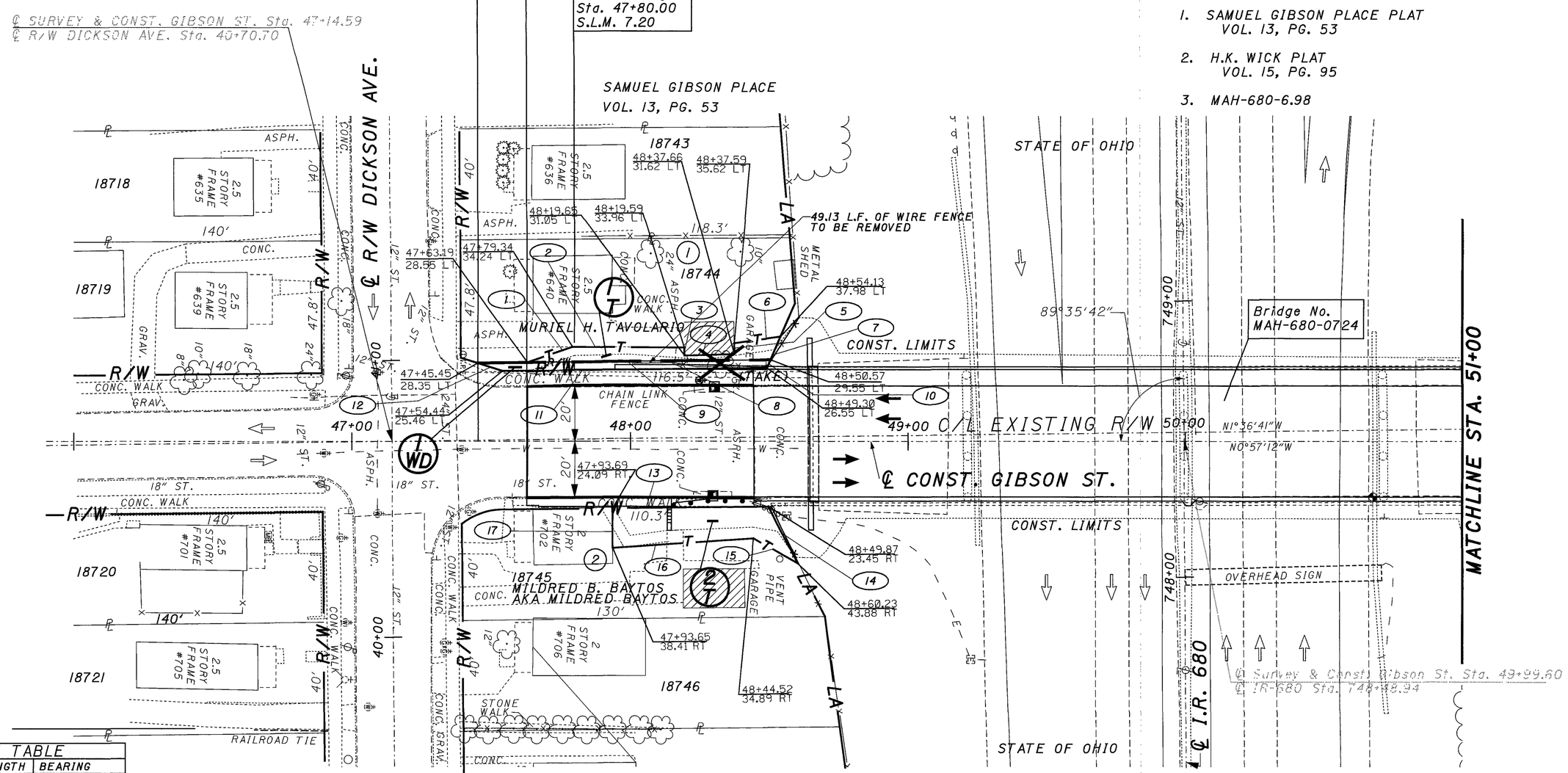

LINE TABLE		
LINE	LENGTH	BEARING
1	17.12	N 20°23'18" W
2	40.26	N 00°32'29"W
3	2.91	N 87°48'52"E
4	18.01	N 02°46'17"W
5	4.00	N 88°05'36"W
6	16.70	N 09°04'30"W
7	9.15	S 68°02'03"E
8	87.38	S 01°36'41" E
9	105.12	N 01°36'41" W
10	3.26	S 68°01'54" E
11	94.87	S 01°36'41" E
12	9.44	S 16°51'05"W
13	56.18	N 01°36'41" W
14	22.91	N 62°09'26"E
15	18.10	S 28°48'25"W
16	60.00	S 04°54'41"E
17	14.32	S 89°13'27"W

STRUCTURE KEY

- COMMERCIAL - TO BE REMOVED
- COMMERCIAL
- RESIDENTIAL - TO BE REMOVED
- RESIDENTIAL
- OUT BUILDING - TO BE REMOVED
- OUT BUILDING

REV	DATE	
DJH	7/08/04	NAME CHANGE PARCEL 2

PLAN COMPLETION DATE

SCALE IN FEET 0 10 20 40

PID NO. 22484

R/W DESIGNER R.L.W.
R/W REVIEWER J.E.K.

RIGHT-OF-WAY PLAN - GIBSON ST.
BEGIN TO STA. 51+00

MAH-680-7.24/8.34

3/14

102/107

MAH - 680 - 7.24

TOWNSHIP 2N, RANGE 2W
CITY OF YOUNGSTOWN
YOUNGSTOWN TOWNSHIP
MAHONING COUNTY

BASIS OF EXISTING RIGHT OF WAY
THE EXISTING R/W WIDTH AND LOCATION WERE DETERMINED USING: TAX MAPS, DEEDS, PLATS, KS ASSOCIATES SURVEY AND PREVIOUS PLANS ON FILE FROM THE OHIO DEPARTMENT OF TRANSPORTATION, DISTRICT 4 OFFICES IN RAVENNA, OHIO.

1. SAMUEL GIBSON PLACE PLAT VOL. 13, PG. 53
2. H.K. WICK PLAT VOL. 15, PG. 95
3. MAH-680-6.98

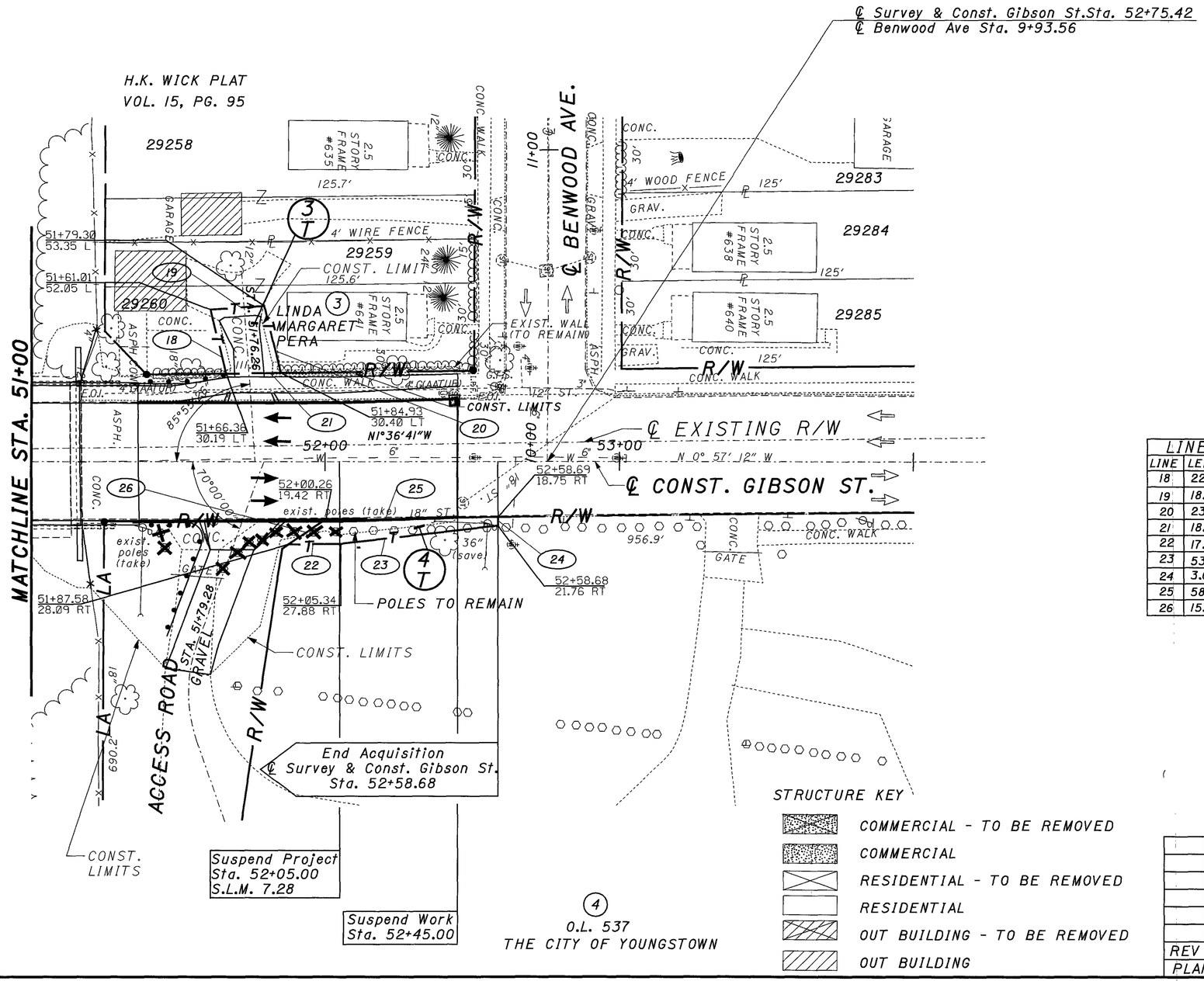

LINE TABLE		
LINE	LENGTH	BEARING
18	22.50	S 75°18'02"W
19	18.34	N 05°01'48"W
20	23.63	N 75°15'48"E
21	18.57	S 01°36'41"E
22	17.77	N 01°36'41"W
23	53.69	N 07°30'31"W
24	3.00	S 89°20'25"W
25	58.44	S 01°36'41"E
26	15.39	S 35°18'08"E

STRUCTURE KEY

- COMMERCIAL - TO BE REMOVED
- COMMERCIAL
- RESIDENTIAL - TO BE REMOVED
- RESIDENTIAL
- OUT BUILDING - TO BE REMOVED
- OUT BUILDING

REV	DATE
PLAN COMPLETION DATE	

SCALE IN FEET 0 10 20 40

PID NO. 22484

R/W DESIGNER R.L.W
R/W REVIEWER J.E.K.

RIGHT-OF-WAY PLAN - GIBSON ST.
STA. 51+00 TO END

MAH-680-7.24/8.34

MAH - 680 - 8.34

TOWNSHIP 2N, RANGE 2W
CITY OF YOUNGSTOWN
YOUNGSTOWN TOWNSHIP
MAHONING COUNTY

CONVENTIONAL SIGNS

County Line
Township Line
Section Line
Corporation Line or
Fence Line (existing) (proposed)
Center Line
Trees ,Stumps (to be removed)
Utility Poles: Telephone , Power , Light
Right of Way (only) R/W
Standard Highway Ease. SH
Temp. Right of Way T
Exist. Right of Way Ex R/W
Exist. Stand. High. Ease. Ex SH
Exist. Channel Ease. Ex CH
Exist. Utility Ease. Ex U
Property Line (in existing fence)
Railroad or
Guardrail (existing) (proposed)
Construction Limits Construction Limits

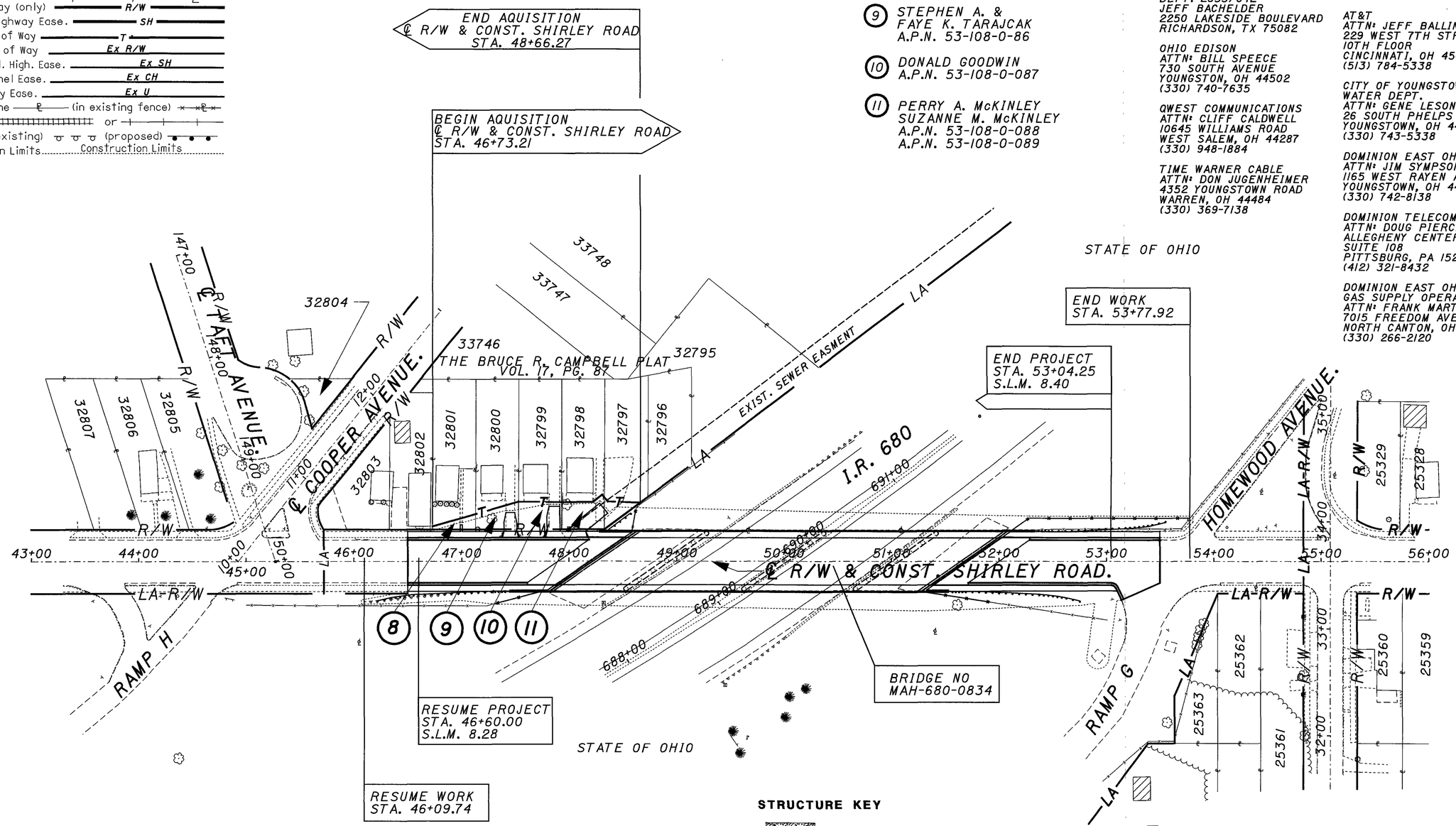

PROPERTY OWNERS

8 DAVID W. VINION &
CHRISTINE M. BENNER
A.P.N. 53-108-0-085

9 STEPHEN A. &
FAYE K. TARAJCAK
A.P.N. 53-108-0-86

10 DONALD GOODWIN
A.P.N. 53-108-0-087

11 PERRY A. McKINLEY
SUZANNE M. McKINLEY
A.P.N. 53-108-0-088
A.P.N. 53-108-0-089

UTILITY OWNERS & ADRESSES

LISTED BELOW ARE ALL UTILITIES LOCATED WITHIN THE PROJECT CONSTRUCTION LIMITS TOGETHER WITH THEIR RESPECTIVE OWNERS

MAHONING VALLEY SANITARY DISTRICT
ATTN: MARTY KIELBASA
P.O. BOX 4119
YOUNGSTOWN, OH 44515-4119
(330) 799-6315

MCI/WORLDCOM
ATTN: INVESTIGATIONS
DEPT. 2855/642
JEFF BACHELDER
2250 LAKESIDE BOULEVARD
RICHARDSON, TX 75082

OHIO EDISON
ATTN: BILL SPEECE
730 SOUTH AVENUE
YOUNGSTON, OH 44502
(330) 740-7635

QWEST COMMUNICATIONS
ATTN: CLIFF CALDWELL
10645 WILLIAMS ROAD
WEST SALEM, OH 44287
(330) 948-1884

TIME WARNER CABLE
ATTN: DON JUGENHEIMER
4352 YOUNGSTOWN ROAD
WARREN, OH 44484
(330) 369-7138

SBC
SABRENA LAMPLEY
50 W. BOWERY ST., 4TH FLOOR
AKRON, OH, 44308
(330) 384-8057

AT&T
ATTN: JEFF BALLINGER
229 WEST 7TH STREET,
10TH FLOOR
CINCINNATI, OH 45020
(513) 784-5338

CITY OF YOUNGSTOWN,
WATER DEPT.
ATTN: GENE LESON
26 SOUTH PHELPS STREET
YOUNGSTOWN, OH 44503
(330) 743-5338

DOMINION EAST OHIO
ATTN: JIM SYMPSON
1165 WEST RAYEN AVENUE
YOUNGSTOWN, OH 44502
(330) 742-8138

DOMINION TELECOM
ATTN: DOUG PIERCE
ALLEGHENY CENTER MALL,
SUITE 108
PITTSBURG, PA 15212
(412) 321-8432

DOMINION EAST OHIO
GAS SUPPLY OPERATIONS
ATTN: FRANK MARTIN
7015 FREEDOM AVE., N.W.
NORTH CANTON, OH 44720
(330) 266-2120

UNDERGROUND UTILITIES

THE LOCATION FOR THE UNDERGROUND UTILITIES SHOWN ON THE PLANS ARE AS REQUIRED BY SECTION 153.64 O.R.C. OBTAINED FROM THE OWNERS OF THE UTILITY

STRUCTURE KEY

COMMERCIAL - TO BE REMOVED
COMMERCIAL
RESIDENTIAL - TO BE REMOVED
RESIDENTIAL
OUT BUILDING - TO BE REMOVED
OUT BUILDING

REV	DATE	
DJH	6/21/04	NAME CHANGE PARCEL'S 10 & 11
PLAN COMPLETION DATE		

SCALE IN FEET 0 25 50 100

R/W DESIGNER R.L.W.
R/W REVIEWER J.E.K.

PID NO. 22484

PROPERTY MAP - SHIRLEY ROAD
BEGIN TO END

MAH-680-7.24/ 8.34

TOTAL NUMBER OF
____OWNERSHIPS
____TOTAL TAKES
____OWNERSHIPS WITH STRUCTURES INVOLVED
____OWNERSHIPS WITH "P" ITEMS

SUMMARY OF ADDITIONAL RIGHT OF WAY

GRANTEE: ALL RIGHT OF WAY ACQUIRED IN THE NAME OF THE STATE OF OHIO, DEPARTMENT OF TRANSPORTAION UNLESS OTHERWISE NOTED

PARCEL NO.	OWNER	SHEET NO.	OWNERS RECORD BOOK	OWNERS RECORD PAGE	AUDITOR'S PARCEL	RECORD AREA	TOTAL P.R.O.	GROSS TAKE	P.R.O. IN TAKE	NET TAKE	STRUCTURE	NET RESIDUE LEFT	NET RESIDUE RIGHT	TYPE FUND	REMARKS AND PERSONALTY	AS ACQUIRED BOOK	AS ACQUIRED PAGE
7-T	Not Used													STATE	FOR GRADING PURPOSES		
8-T	David W. Vinion & Christine M. Benner	7	O.R. 3204	68	53-108-0-085	0.1343 (c)	0	0.0080	0	0.0080		-			FOR GRADING PURPOSES		
9-T	Stephen A. Tarajcak & Faye K. Tarajcak	7	O.R. 948	162	53-108-0-086	0.1294 (c)	0	0.0185	0	0.0185		-			FOR GRADING PURPOSES & DRIVE RECONSTRUCTION		
10-T	Donald Goodwin	7	O.R. 5353	869	53-108-0-087	0.1294 (c)	0	0.0236	0	0.0236		-			FOR GRADING PURPOSES & DRIVE RECONSTRUCTION		
11-T	Perry A. McKinley and Suzanne M. McKinley	7	O.R. 5372	2605	53-108-0-088	0.1162 (c)	0	0.0244	0	0.0244		-			FOR GRADING PURPOSES & DRIVE RECONSTRUCTION		
		7			53-108-0-089	0.1294 (c)	0	0.0100	0	0.0100					12' WIDE RESIDENTIAL ACCESS POINT; O.R. 5464, PG 1481		
					TOTAL	0.2456 (c)	0	0.0344	0	0.0344							
														STATE			

NOTE: UNDER NO CIRCUMSTANCES ARE TEMPORARY EASEMENTS TO BE USED FOR STORAGE OF MATERIAL OR EQUIPMENT BY THE CONTRACTOR, UNLESS OTHERWISE NOTED.

NOTE: ALL TEMPORARY PARCELS TO BE OF 18 MONTHS DURATION.

NET RESIDUE = RECORDED AREA - TOTAL P.R.O. - NET TAKE
ALL AREAS IN ACRES
(c) = CALCULATED RECORD AREA

FIELD REVIEW BY	OWNERSHIP VERIFIED BY	REV	DATE	DESCRIPTION
		DJH	8/19/04	ADDED RES. ACCESS POINT PCL 11
		DJH	6/21/04	NAME CHANGE PARCEL'S 10 AND 11

DATE OF COMPLETION

FEDERAL PROJECT NO.

PID NO. 22484

STATE JOB NO. 445100

R/W DESIGNER R.L.W.
R/W REVIEWER J.E.K.

SUMMARY OF ADDITIONAL RIGHT OF WAY

MAH-680-7.24/8.34

$FILE$
$DATE$
$TIME$

MAH - 680 - 8.34

TOWNSHIP 2N, RANGE 2W
CITY OF YOUNGSTOWN
YOUNGSTOWN TOWNSHIP
MAHONING COUNTY

BASIS OF EXISTING RIGHT OF WAY
THE EXISTING R/W WIDTH AND LOCATION WERE DETERMINED USING: TAX MAPS, DEEDS, PLATS, KS ASSOCIATES SURVEY AND PREVIOUS PLANS ON FILE FROM THE OHIO DEPARTMENT OF TRANSPORTATION, DISTRICT 4 OFFICES IN RAVENNA, OHIO.

1. THE BRUCE R. CAMPBELL PLAT VOL. 17, PG. 87

2. MAH-680-6.98

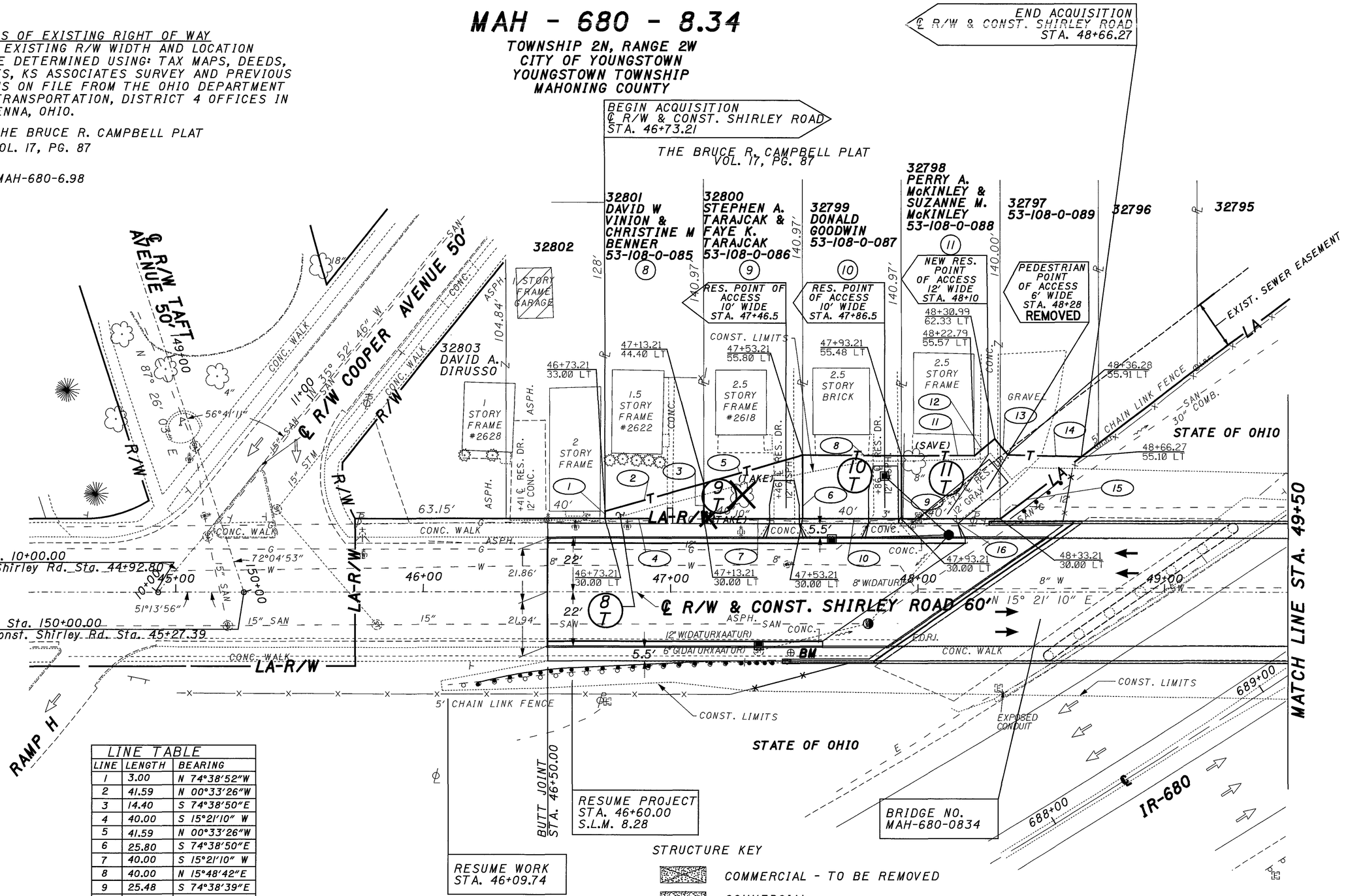

LINE TABLE		
LINE	LENGTH	BEARING
1	3.00	N 74°38'52"W
2	41.59	N 00°33'26"W
3	14.40	S 74°38'50"E
4	40.00	S 15°21'10" W
5	41.59	N 00°33'26"W
6	25.80	S 74°38'50"E
7	40.00	S 15°21'10" W
8	40.00	N 15°48'42"E
9	25.48	S 74°38'39"E
10	40.00	S 15°21'10" W
11	29.57	N 15°11'19" E
12	10.63	N 24°07'30"W
13	8.32	N 65°52'33"E
14	30.00	N 16°53'47"E
15	41.51	S 21°51'20"E
16	40.00	S 15°21'10"W

STRUCTURE KEY

- COMMERCIAL - TO BE REMOVED
- COMMERCIAL
- RESIDENTIAL - TO BE REMOVED
- RESIDENTIAL
- OUT BUILDING - TO BE REMOVED
- OUT BUILDING

REV	DATE	
DJH	8/19/04	ADDED NEW RES. ACCESS POINT; PCL 11
DJH	6/21/04	NAME CHANGE PARCEL'S 10 & 11

PLAN COMPLETION DATE

SCALE IN FEET 0 10 20 40

PID NO. 22484

R/W DESIGNER R.L.W.
R/W REVIEWER J.E.K.

RIGHT-OF-WAY PLAN - SHIRLEY ROAD
BEGIN TO STA. 49+50

MAH-680-7.24/8.34

*FILES
*DATES
*TIMES

BASIS OF EXISTING RIGHT OF WAY
THE EXISTING R/W WIDTH AND LOCATION WERE DETERMINED USING: TAX MAPS, DEEDS, PLATS, KS ASSOCIATES SURVEY AND PREVIOUS PLANS ON FILE FROM THE OHIO DEPARTMENT OF TRANSPORTATION, DISTRICT 4 OFFICES IN RAVENNA, OHIO.

1. THE BRUCE R. CAMPBELL PLAT VOL. 17, PG. 87

2. MAH-680-6.98

MAH - 680 - 8.34

TOWNSHIP 2N, RANGE 2W
CITY OF YOUNGSTOWN
YOUNGSTOWN TOWNSHIP
MAHONING COUNTY

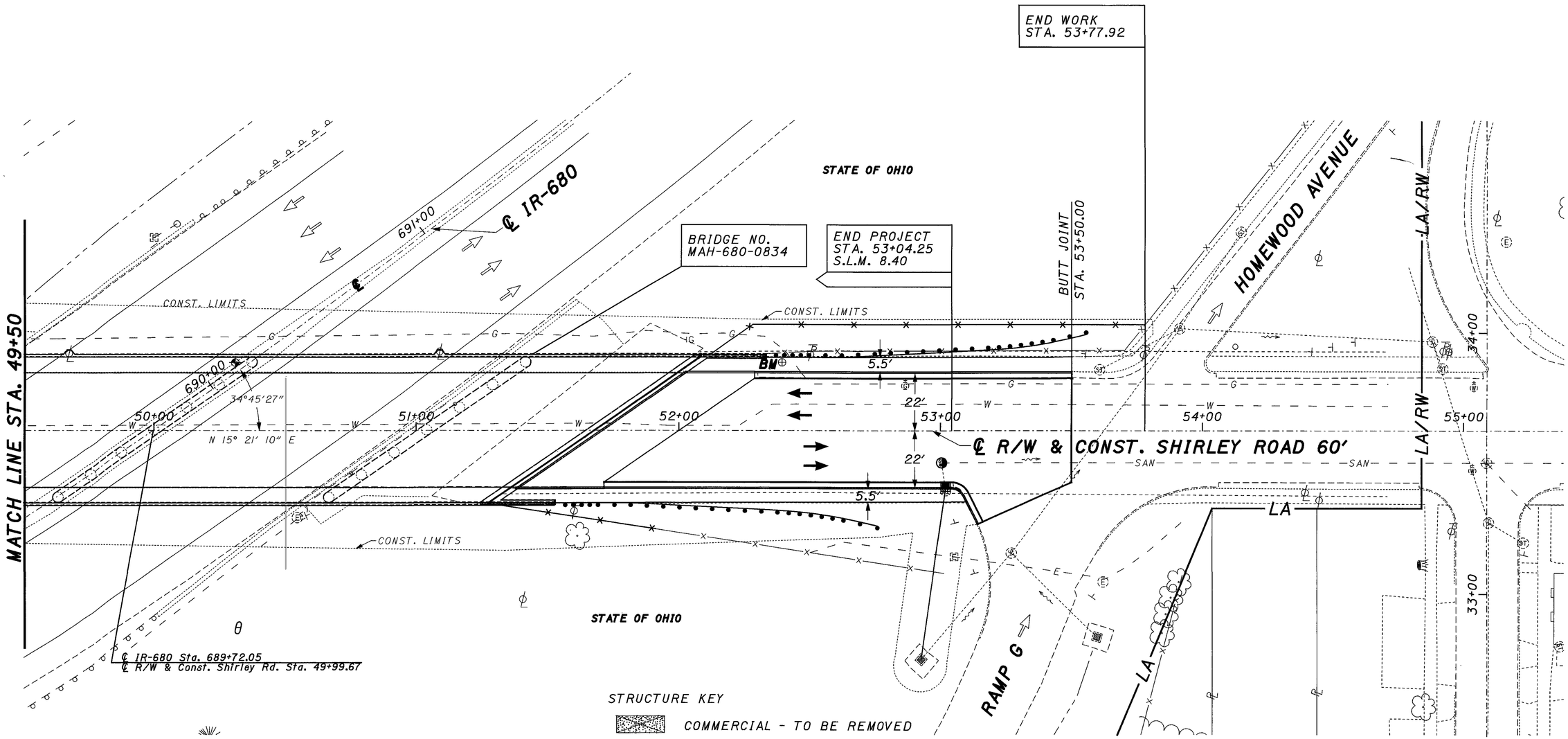

STRUCTURE KEY

- COMMERCIAL - TO BE REMOVED
- COMMERCIAL
- RESIDENTIAL - TO BE REMOVED
- RESIDENTIAL
- OUT BUILDING - TO BE REMOVED
- OUT BUILDING

REV	DATE
PLAN COMPLETION DATE	

HORIZONTAL SCALE IN FEET 0 10 20 40

PID NO. 22484

R/W DESIGNER R.L.W.
R/W REVIEWER J.E.K.

RIGHT-OF-WAY PLAN - SHIRLEY ROAD
STA. 49+50 TO END

MAH-680-7.24/8.34

8/14

107/107

$FILE$
$DATE$
$TIME$

BASIS OF EXISTING RIGHT OF WAY
THE EXISTING R/W WIDTH AND LOCATION WERE DETERMINED USING: TAX MAPS, DEEDS, PLATS, KS ASSOCIATES SURVEY AND PREVIOUS PLANS ON FILE FROM THE OHIO DEPARTMENT OF TRANSPORTATION, DISTRICT 4 OFFICES IN RAVENNA, OHIO.

1. THE BRUCE R. CAMPBELL PLAT VOL. 17, PG. 87

2. MAH-680-6.98

MAH - 680 - 8.34

TOWNSHIP 2N, RANGE 2W
CITY OF YOUNGSTOWN
YOUNGSTOWN TOWNSHIP
MAHONING COUNTY

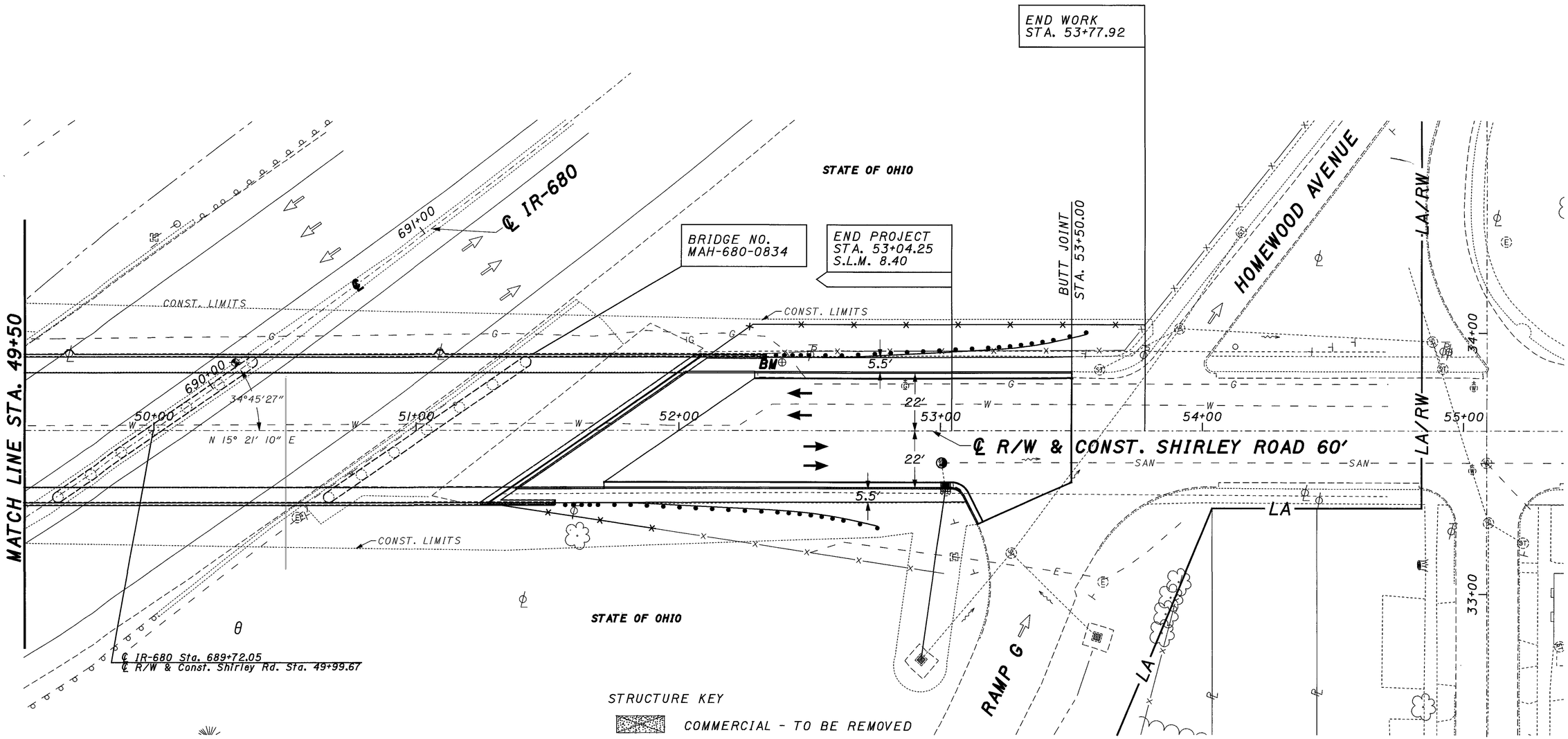

STRUCTURE KEY

- COMMERCIAL - TO BE REMOVED
- COMMERCIAL
- RESIDENTIAL - TO BE REMOVED
- RESIDENTIAL
- OUT BUILDING - TO BE REMOVED
- OUT BUILDING

REV	DATE
PLAN COMPLETION DATE	

HORIZONTAL SCALE IN FEET 0 10 20 40

PID NO. 22484

R/W DESIGNER R.L.W.
R/W REVIEWER J.E.K.

RIGHT-OF-WAY PLAN - SHIRLEY ROAD
STA. 49+50 TO END

MAH-680-7.24/8.34

8/14

107/107

$FILE$
$DATE$
$TIME$

MAH - 680 - 8.34

TOWNSHIP 2N, RANGE 2W
CITY OF YOUNGSTOWN
YOUNGSTOWN TOWNSHIP
MAHONING COUNTY

BASIS OF EXISTING RIGHT OF WAY
THE EXISTING R/W WIDTH AND LOCATION WERE DETERMINED USING: TAX MAPS, DEEDS, PLATS, KS ASSOCIATES SURVEY AND PREVIOUS PLANS ON FILE FROM THE OHIO DEPARTMENT OF TRANSPORTATION, DISTRICT 4 OFFICES IN RAVENNA, OHIO.

1. THE BRUCE R. CAMPBELL PLAT VOL. 17, PG. 87

2. MAH-680-6.98

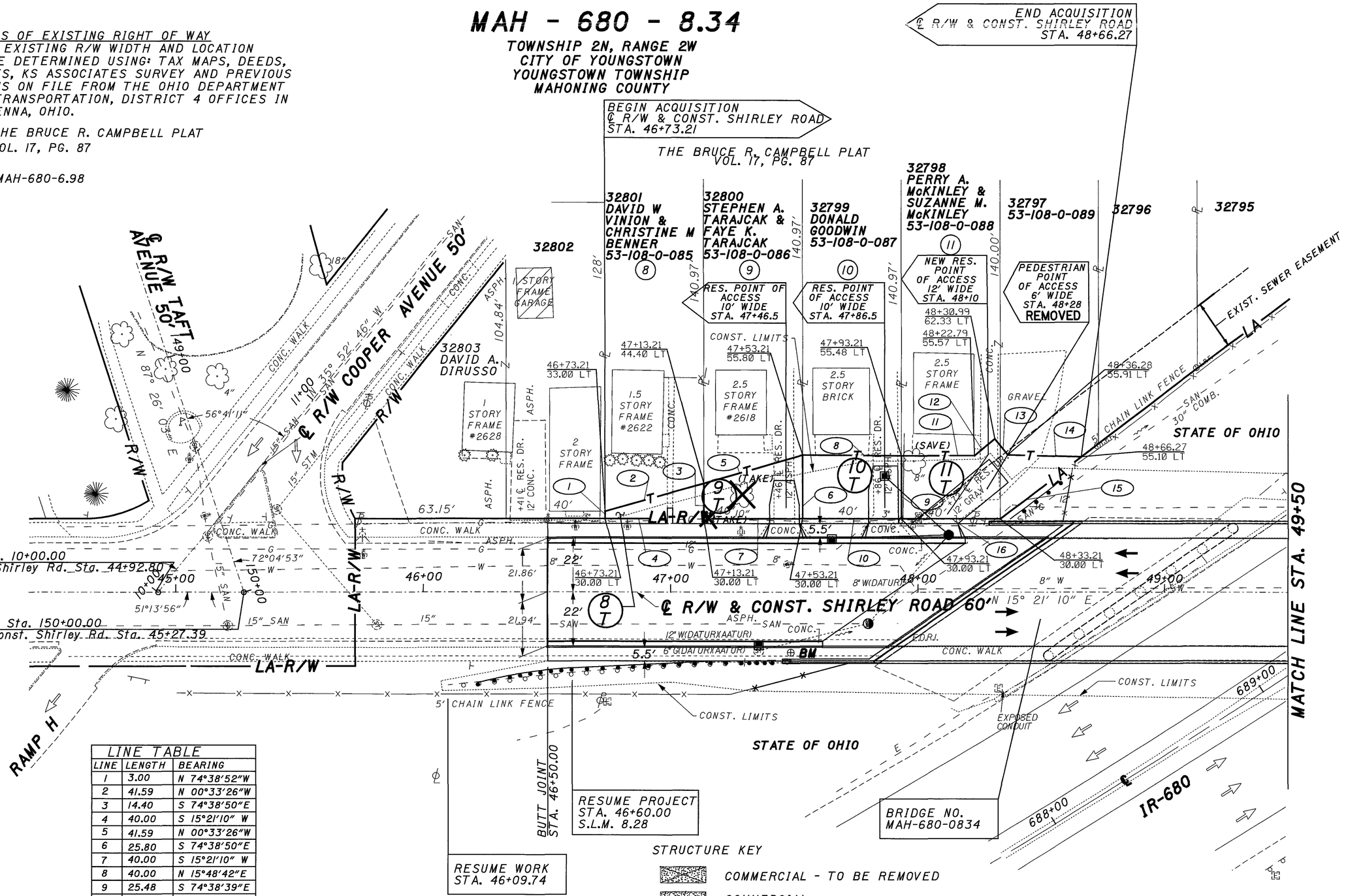

LINE TABLE		
LINE	LENGTH	BEARING
1	3.00	N 74°38'52"W
2	41.59	N 00°33'26"W
3	14.40	S 74°38'50"E
4	40.00	S 15°21'10" W
5	41.59	N 00°33'26"W
6	25.80	S 74°38'50"E
7	40.00	S 15°21'10" W
8	40.00	N 15°48'42"E
9	25.48	S 74°38'39"E
10	40.00	S 15°21'10" W
11	29.57	N 15°11'19" E
12	10.63	N 24°07'30"W
13	8.32	N 65°52'33"E
14	30.00	N 16°53'47"E
15	41.51	S 21°51'20"E
16	40.00	S 15°21'10"W

STRUCTURE KEY

- COMMERCIAL - TO BE REMOVED
- COMMERCIAL
- RESIDENTIAL - TO BE REMOVED
- RESIDENTIAL
- OUT BUILDING - TO BE REMOVED
- OUT BUILDING

REV	DATE	
DJH	8/19/04	ADDED NEW RES. ACCESS POINT; PCL 11
DJH	6/21/04	NAME CHANGE PARCEL'S 10 & 11

PLAN COMPLETION DATE

SCALE IN FEET 0 10 20 40

PID NO. 22484

R/W DESIGNER R.L.W.
R/W REVIEWER J.E.K.

RIGHT-OF-WAY PLAN - SHIRLEY ROAD
BEGIN TO STA. 49+50

MAH-680-7.24/8.34

*FILES
*DATES
*TIMES

TOTAL NUMBER OF
____OWNERSHIPS
____TOTAL TAKES
____OWNERSHIPS WITH STRUCTURES INVOLVED
____OWNERSHIPS WITH "P" ITEMS

SUMMARY OF ADDITIONAL RIGHT OF WAY

GRANTEE: ALL RIGHT OF WAY ACQUIRED IN THE NAME OF THE STATE OF OHIO, DEPARTMENT OF TRANSPORTAION UNLESS OTHERWISE NOTED

PARCEL NO.	OWNER	SHEET NO.	OWNERS RECORD BOOK	OWNERS RECORD PAGE	AUDITOR'S PARCEL	RECORD AREA	TOTAL P.R.O.	GROSS TAKE	P.R.O. IN TAKE	NET TAKE	STRUCTURE	NET RESIDUE LEFT	NET RESIDUE RIGHT	TYPE FUND	REMARKS AND PERSONALTY	AS ACQUIRED BOOK	AS ACQUIRED PAGE
7-T	Not Used													STATE	FOR GRADING PURPOSES		
8-T	David W. Vinion & Christine M. Benner	7	O.R. 3204	68	53-108-0-085	0.1343 (c)	0	0.0080	0	0.0080		-			FOR GRADING PURPOSES		
9-T	Stephen A. Tarajcak & Faye K. Tarajcak	7	O.R. 948	162	53-108-0-086	0.1294 (c)	0	0.0185	0	0.0185		-			FOR GRADING PURPOSES & DRIVE RECONSTRUCTION		
10-T	Donald Goodwin	7	O.R. 5353	869	53-108-0-087	0.1294 (c)	0	0.0236	0	0.0236		-			FOR GRADING PURPOSES & DRIVE RECONSTRUCTION		
11-T	Perry A. McKinley and Suzanne M. McKinley	7	O.R. 5372	2605	53-108-0-088	0.1162 (c)	0	0.0244	0	0.0244		-			FOR GRADING PURPOSES & DRIVE RECONSTRUCTION		
		7			53-108-0-089	0.1294 (c)	0	0.0100	0	0.0100					12' WIDE RESIDENTIAL ACCESS POINT; O.R. 5464, PG 1481		
					TOTAL	0.2456 (c)	0	0.0344	0	0.0344							
														STATE			

NOTE: UNDER NO CIRCUMSTANCES ARE TEMPORARY EASEMENTS TO BE USED FOR STORAGE OF MATERIAL OR EQUIPMENT BY THE CONTRACTOR, UNLESS OTHERWISE NOTED.

NOTE: ALL TEMPORARY PARCELS TO BE OF 18 MONTHS DURATION.

NET RESIDUE = RECORDED AREA - TOTAL P.R.O. - NET TAKE
ALL AREAS IN ACRES
(c) = CALCULATED RECORD AREA

FIELD REVIEW BY	OWNERSHIP VERIFIED BY	REV	DATE	DESCRIPTION
		DJH	8/19/04	ADDED RES. ACCESS POINT PCL 11
		DJH	6/21/04	NAME CHANGE PARCEL'S 10 AND 11

DATE OF COMPLETION

FEDERAL PROJECT NO.

PID NO. 22484

STATE JOB NO. 445100

R/W DESIGNER R.L.W.
R/W REVIEWER J.E.K.

SUMMARY OF ADDITIONAL RIGHT OF WAY

MAH-680-7.24/8.34

$FILE$
$DATE$
$TIME$

MAH - 680 - 8.34

TOWNSHIP 2N, RANGE 2W
CITY OF YOUNGSTOWN
YOUNGSTOWN TOWNSHIP
MAHONING COUNTY

CONVENTIONAL SIGNS

County Line
Township Line
Section Line
Corporation Line or
Fence Line (existing) (proposed)
Center Line
Trees ,Stumps (to be removed)
Utility Poles: Telephone , Power , Light
Right of Way (only) R/W
Standard Highway Ease. SH
Temp. Right of Way T
Exist. Right of Way Ex R/W
Exist. Stand. High. Ease. Ex SH
Exist. Channel Ease. Ex CH
Exist. Utility Ease. Ex U
Property Line (in existing fence)
Railroad or
Guardrail (existing) (proposed)
Construction Limits Construction Limits

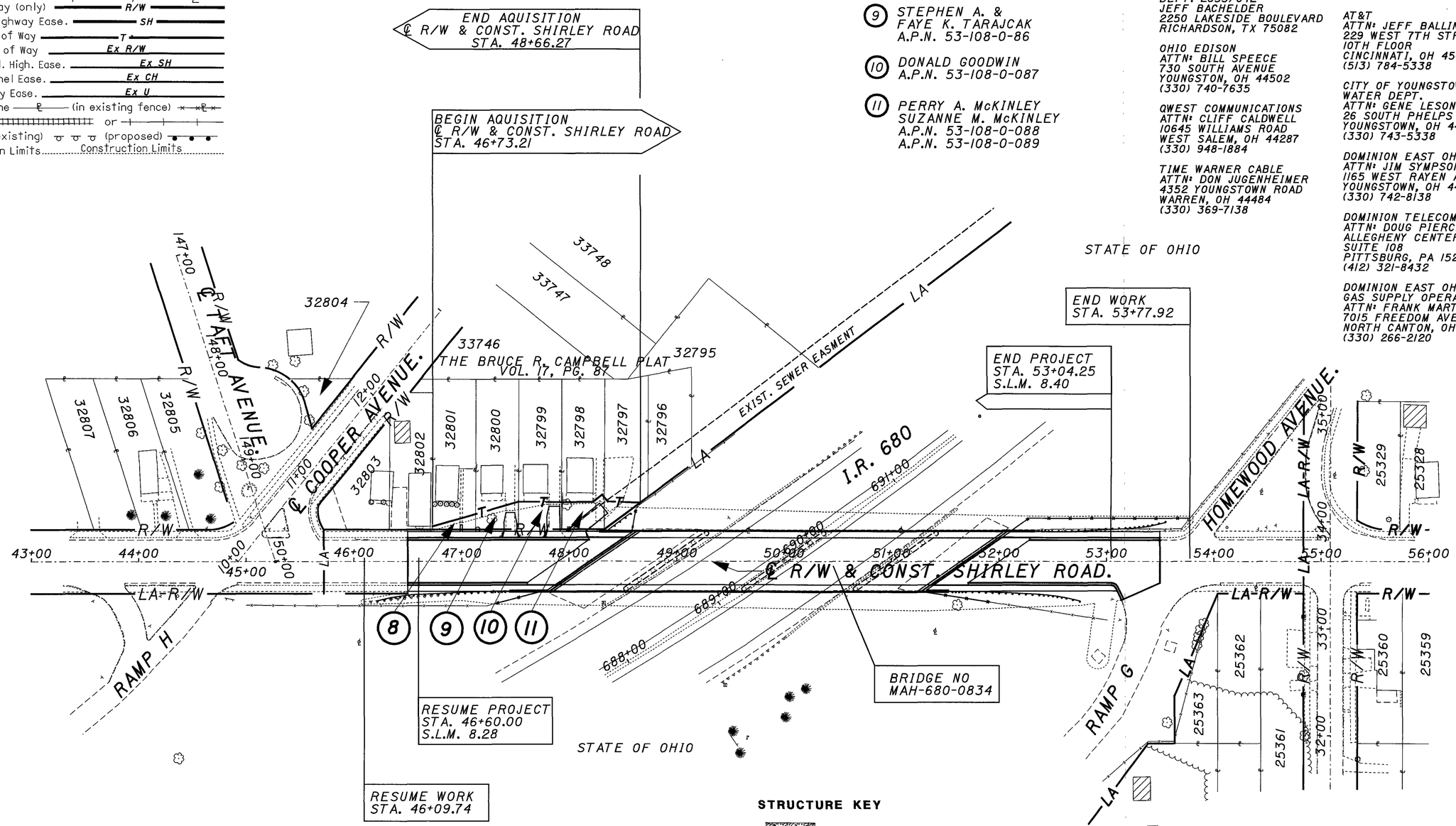

PROPERTY OWNERS

8 DAVID W. VINION &
CHRISTINE M. BENNER
A.P.N. 53-108-0-085

9 STEPHEN A. &
FAYE K. TARAJCAK
A.P.N. 53-108-0-86

10 DONALD GOODWIN
A.P.N. 53-108-0-087

11 PERRY A. McKINLEY
SUZANNE M. McKINLEY
A.P.N. 53-108-0-088
A.P.N. 53-108-0-089

UTILITY OWNERS & ADRESSES

LISTED BELOW ARE ALL UTILITIES LOCATED WITHIN THE PROJECT CONSTRUCTION LIMITS TOGETHER WITH THEIR RESPECTIVE OWNERS

MAHONING VALLEY SANITARY DISTRICT
ATTN: MARTY KIELBASA
P.O. BOX 4119
YOUNGSTOWN, OH 44515-4119
(330) 799-6315

MCI/WORLDCOM
ATTN: INVESTIGATIONS
DEPT. 2855/642
JEFF BACHELDER
2250 LAKESIDE BOULEVARD
RICHARDSON, TX 75082

OHIO EDISON
ATTN: BILL SPEECE
730 SOUTH AVENUE
YOUNGSTON, OH 44502
(330) 740-7635

QWEST COMMUNICATIONS
ATTN: CLIFF CALDWELL
10645 WILLIAMS ROAD
WEST SALEM, OH 44287
(330) 948-1884

TIME WARNER CABLE
ATTN: DON JUGENHEIMER
4352 YOUNGSTOWN ROAD
WARREN, OH 44484
(330) 369-7138

SBC
SABRENA LAMPLEY
50 W. BOWERY ST., 4TH FLOOR
AKRON, OH, 44308
(330) 384-8057

AT&T
ATTN: JEFF BALLINGER
229 WEST 7TH STREET,
10TH FLOOR
CINCINNATI, OH 45020
(513) 784-5338

CITY OF YOUNGSTOWN,
WATER DEPT.
ATTN: GENE LESON
26 SOUTH PHELPS STREET
YOUNGSTOWN, OH 44503
(330) 743-5338

DOMINION EAST OHIO
ATTN: JIM SYMPSON
1165 WEST RAYEN AVENUE
YOUNGSTOWN, OH 44502
(330) 742-8138

DOMINION TELECOM
ATTN: DOUG PIERCE
ALLEGHENY CENTER MALL,
SUITE 108
PITTSBURG, PA 15212
(412) 321-8432

DOMINION EAST OHIO
GAS SUPPLY OPERATIONS
ATTN: FRANK MARTIN
7015 FREEDOM AVE., N.W.
NORTH CANTON, OH 44720
(330) 266-2120

UNDERGROUND UTILITIES

THE LOCATION FOR THE UNDERGROUND UTILITIES SHOWN ON THE PLANS ARE AS REQUIRED BY SECTION 153.64 O.R.C. OBTAINED FROM THE OWNERS OF THE UTILITY

STRUCTURE KEY

COMMERCIAL - TO BE REMOVED
COMMERCIAL
RESIDENTIAL - TO BE REMOVED
RESIDENTIAL
OUT BUILDING - TO BE REMOVED
OUT BUILDING

REV	DATE	
DJH	6/21/04	NAME CHANGE PARCEL'S 10 & 11
PLAN COMPLETION DATE		

SCALE IN FEET 0 25 50 100

R/W DESIGNER R.L.W.
R/W REVIEWER J.E.K.

PID NO. 22484

PROPERTY MAP - SHIRLEY ROAD
BEGIN TO END

MAH-680-7.24/ 8.34

MAH - 680 - 7.24

TOWNSHIP 2N, RANGE 2W
CITY OF YOUNGSTOWN
YOUNGSTOWN TOWNSHIP
MAHONING COUNTY

BASIS OF EXISTING RIGHT OF WAY
THE EXISTING R/W WIDTH AND LOCATION WERE DETERMINED USING: TAX MAPS, DEEDS, PLATS, KS ASSOCIATES SURVEY AND PREVIOUS PLANS ON FILE FROM THE OHIO DEPARTMENT OF TRANSPORTATION, DISTRICT 4 OFFICES IN RAVENNA, OHIO.

1. SAMUEL GIBSON PLACE PLAT VOL. 13, PG. 53
2. H.K. WICK PLAT VOL. 15, PG. 95
3. MAH-680-6.98

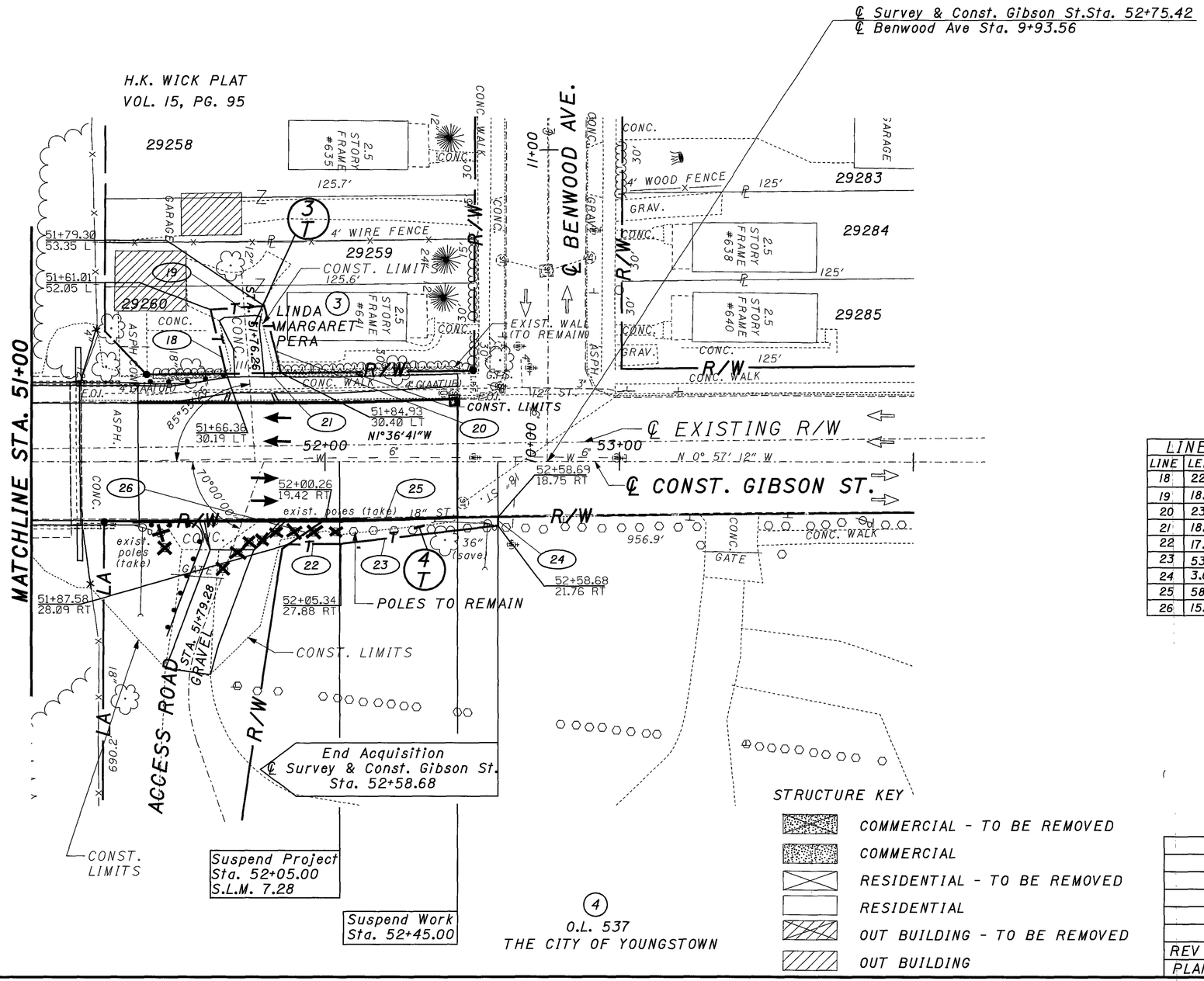

LINE TABLE		
LINE	LENGTH	BEARING
18	22.50	S 75°18'02"W
19	18.34	N 05°01'48"W
20	23.63	N 75°15'48"E
21	18.57	S 01°36'41"E
22	17.77	N 01°36'41"W
23	53.69	N 07°30'31"W
24	3.00	S 89°20'25"W
25	58.44	S 01°36'41"E
26	15.39	S 35°18'08"E

STRUCTURE KEY

- COMMERCIAL - TO BE REMOVED
- COMMERCIAL
- RESIDENTIAL - TO BE REMOVED
- RESIDENTIAL
- OUT BUILDING - TO BE REMOVED
- OUT BUILDING

REV	DATE
PLAN COMPLETION DATE	

SCALE IN FEET 0 10 20 40

PID NO. 22484

R/W DESIGNER R.L.W
R/W REVIEWER J.E.K.

RIGHT-OF-WAY PLAN - GIBSON ST.
STA. 51+00 TO END

MAH-680-7.24/8.34

MAH - 680 - 7.24

TOWNSHIP 2N, RANGE 2W
CITY OF YOUNGSTOWN
YOUNGSTOWN TOWNSHIP
MAHONING COUNTY

Begin Acquisition
℄ Survey & Const. Gibson St.
Sta. 47+45.45

Resume Work
Sta. 47+63.00

Resume Project
Sta. 47+80.00
S.L.M. 7.20

BASIS OF EXISTING RIGHT OF WAY
THE EXISTING R/W WIDTH AND LOCATION WERE DETERMINED USING: TAX MAPS, DEEDS, PLATS, KS ASSOCIATES SURVEY AND PREVIOUS PLANS ON FILE FROM THE OHIO DEPARTMENT OF TRANSPORTATION, DISTRICT 4 OFFICES IN RAVENNA, OHIO.

1. SAMUEL GIBSON PLACE PLAT VOL. 13, PG. 53
2. H.K. WICK PLAT VOL. 15, PG. 95
3. MAH-680-6.98

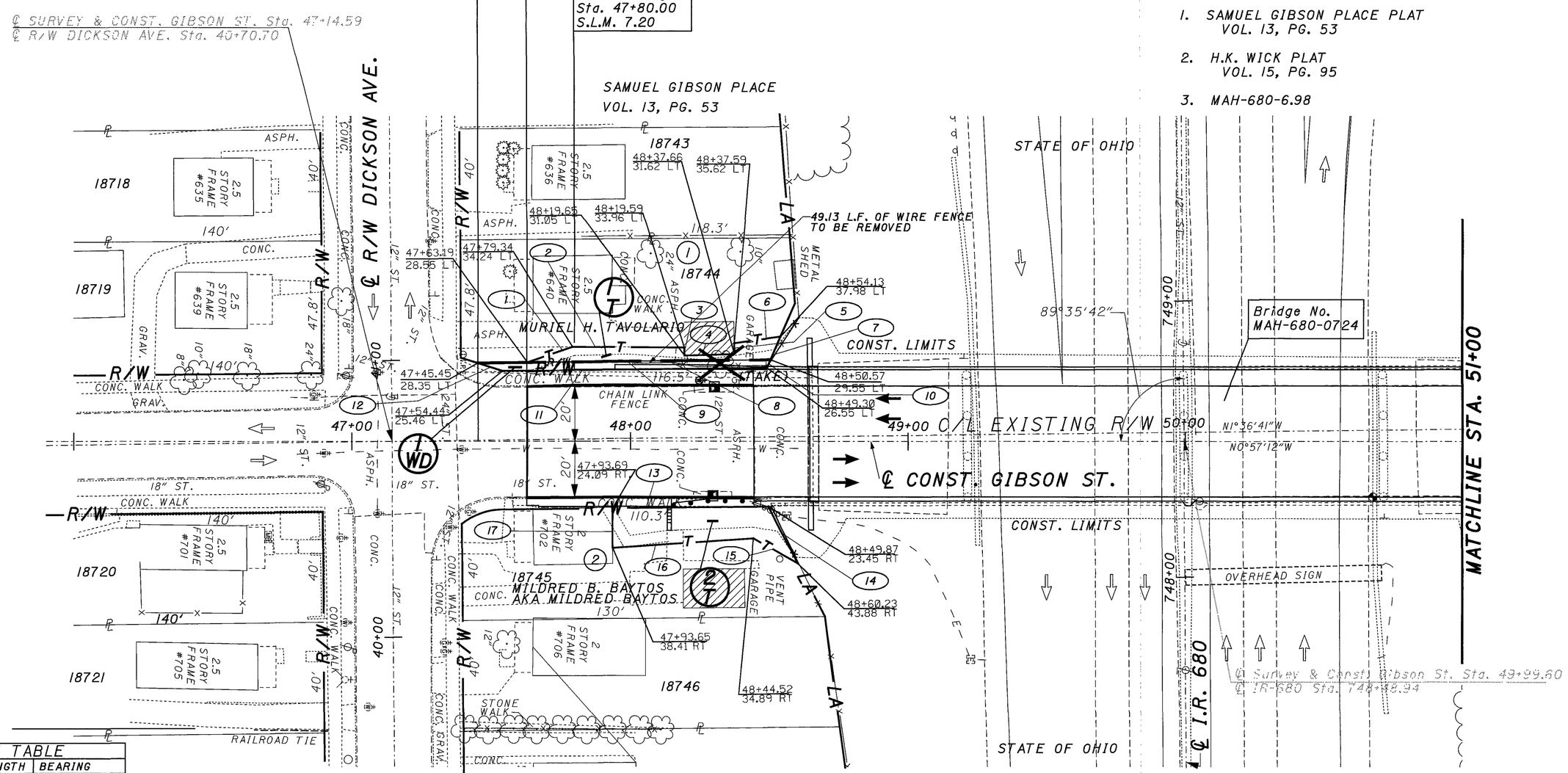

LINE TABLE		
LINE	LENGTH	BEARING
1	17.12	N 20°23'18" W
2	40.26	N 00°32'29"W
3	2.91	N 87°48'52"E
4	18.01	N 02°46'17"W
5	4.00	N 88°05'36"W
6	16.70	N 09°04'30"W
7	9.15	S 68°02'03"E
8	87.38	S 01°36'41" E
9	105.12	N 01°36'41" W
10	3.26	S 68°01'54" E
11	94.87	S 01°36'41" E
12	9.44	S 16°51'05"W
13	56.18	N 01°36'41" W
14	22.91	N 62°09'26"E
15	18.10	S 28°48'25"W
16	60.00	S 04°54'41"E
17	14.32	S 89°13'27"W

STRUCTURE KEY

- COMMERCIAL - TO BE REMOVED
- COMMERCIAL
- RESIDENTIAL - TO BE REMOVED
- RESIDENTIAL
- OUT BUILDING - TO BE REMOVED
- OUT BUILDING

REV	DATE	
DJH	7/08/04	NAME CHANGE PARCEL 2

PLAN COMPLETION DATE

SCALE IN FEET 0 10 20 40

PID NO. 22484

R/W DESIGNER R.L.W.
R/W REVIEWER J.E.K.

RIGHT-OF-WAY PLAN - GIBSON ST.
BEGIN TO STA. 51+00

MAH-680-7.24/8.34

3/14

102/107

TOTAL NUMBER OF
____OWNERSHIPS
____TOTAL TAKES
____OWNERSHIPS WITH STRUCTURES INVOLVED
____OWNERSHIPS WITH "P" ITEMS

SUMMARY OF ADDITIONAL RIGHT OF WAY

GRANTEE: ALL RIGHT OF WAY ACQUIRED IN THE NAME OF THE STATE OF OHIO, DEPARTMENT OF TRANSPORTATION UNLESS OTHERWISE NOTED

PARCEL NO.	OWNER	SHEET NO.	OWNERS RECORD BOOK	OWNERS RECORD PAGE	AUDITOR'S PARCEL	RECORD AREA	TOTAL P.R.O.	GROSS TAKE	P.R.O. IN TAKE	NET TAKE	STRUCTURE	NET RESIDUE LEFT	NET RESIDUE RIGHT	TYPE FUND	REMARKS AND PERSONALTY	AS ACQUIRED BOOK	AS ACQUIRED PAGE
														STATE			
1-WD	Muriel H. Tavolario		1376	487	53-038-0-082	0.1277 (c)	0	0.0069	0	0.0069		0.1208			FOR HIGHWAY PURPOSES		
1-T		3			53-038-0-082	0.1277 (c)	0	0.0090	0	0.0090		-			FOR GRADING PURPOSES		
2-T	Mildred B. Baytos, aka Mildred Baytos	3	O.R 5450	0711	53-038-0-001	0.1095 (c)	0	0.0183	0	0.0183			-		FOR GRADING PURPOSES		
3-T	Linda Margaret Pera	4	O.R. 5248	2593	53-038-0-092	0.0837 (c)	0	0.0096	0	0.0096		-			FOR GRADING PURPOSES & DRIVE RECONSTRUCTION		
		4	O.R. 5248	2593	53-038-0-093	0.0430 (c)	0	0	0	0							
					TOTAL	0.1267 (c)	0	0.0096	0	0.0096							
4-T	The City of Youngstown	4	445	131	53-038-0-091	18.13	0	0.0093	0	0.0093			-		FOR GRADING PURPOSES		
														STATE			

NOTE: UNDER NO CIRCUMSTANCES ARE TEMPORARY EASEMENTS TO BE USED FOR STORAGE OF MATERIAL OR EQUIPMENT BY THE CONTRACTOR, UNLESS OTHERWISE NOTED.

NOTE: ALL TEMPORARY PARCELS TO BE OF 18 MONTHS DURATION.

NET RESIDUE = RECORDED AREA - TOTAL P.R.O. - NET TAKE
ALL AREAS IN ACRES
(c) = CALCULATED RECORD AREA

FIELD REVIEW BY	OWNERSHIP VERIFIED BY	REVISION	DATE	DESCRIPTION
		DJH	7/08/04	Name change parcel 2

DATE OF COMPLETION

FEDERAL PROJECT NO.

PID NO. 22484

STATE JOB NO. 445100

R/W DESIGNER R.L.W.
R/W REVIEWER J.E.K.

SUMMARY OF ADDITIONAL RIGHT OF WAY

MAH-680-7.24/8.34

twardl 07-MAR-2005 8:37AM
Projects\22484\Right of Way\mah-680-7.24\22179RSA.dgn
#FILE#
#DATE#
#TIME#

MAH - 680 - 7.24

TOWNSHIP 2N, RANGE 2W
CITY OF YOUNGSTOWN
YOUNGSTOWN TOWNSHIP
MAHONING COUNTY

CONVENTIONAL SIGNS

County Line
Township Line
Section Line
Corporation Line or
Fence Line (existing) (proposed)
Center Line
Trees ,Stumps (to be removed)
Utility Poles: Telephone , Power , Light
Right of Way (only) R/W
Standard Highway Ease. SH
Temp. Right of Way T
Exist. Right of Way Ex R/W
Exist. Stand. High. Ease. Ex SH
Exist. Channel Ease. Ex CH
Exist. Utility Ease. Ex U
Property Line (in existing fence)
Railroad or
Guardrail (existing) (proposed)
Construction Limits Construction Limits

PROPERTY OWNERS

1. MURIEL H. TAVOLARIO
A.P.N. 53-038-0-082
2. MILDRED B. BAYTOS,
AKA MILDRED BAYTOS
A.P.N. 53-038-0-001
3. LINDA MARGARET PERA
53-038-0-092
A.P.N. 53-038-0-093
4. CITY OF YOUNGSTOWN
A.P.N. 53-038-0-091

UTILITY OWNERS & ADRESSES

LISTED BELOW ARE ALL UTILITIES LOCATED WITHIN THE PROJECT CONSTRUCTION LIMITS TOGETHER WITH THEIR RESPECTIVE OWNERS

SBC
SABRENA LAMPLEY
50 W. BOWERY ST., 4TH FLOOR
AKRON, OH, 44308
(330) 384-8057

AT&T
ATTN: JEFF BALLINGER
229 WEST 7TH STREET,
10TH FLOOR
CINCINNATI, OH 45020
(513) 784-5338

MAHONING VALLEY SANITARY DISTRICT
ATTN: MARTY KIELBASA
P.O. BOX 4119
YOUNGSTOWN, OH 44515-4119
(330) 799-6315

CITY OF YOUNGSTOWN,
WATER DEPT.
ATTN: GENE LESON
26 SOUTH PHELPS STREET
YOUNGSTOWN, OH 44503
(330) 743-5338

MCI/WORLDCOM
ATTN: INVESTIGATIONS
DEPT. 2855/642
JEFF BACHELDER
2250 LAKESIDE BOULEVARD
RICHARDSON, TX 75082

DOMINION EAST OHIO
ATTN: JIM SYMPSON
1165 WEST RAYEN AVENUE
YOUNGSTOWN, OH 44502
(330) 742-8138

OHIO EDISON
ATTN: BILL SPEECE
730 SOUTH AVENUE
YOUNGSTON, OH 44502
(330) 740-7635

DOMINION TELECOM
ATTN: DOUG PIERCE
ALLEGHENY CENTER MALL,
SUITE 108
PITTSBURG, PA 15212
(412) 321-8432

QWEST COMMUNICATIONS
ATTN: CLIFF CALDWELL
10645 WILLIAMS ROAD
WEST SALEM, OH 44287
(330) 948-1884

DOMINION EAST OHIO
GAS SUPPLY OPERATIONS
ATTN: FRANK MARTIN
7015 FREEDOM AVE., N.W.
NORTH CANTON, OH 44720
(330) 266-2120

TIME WARNER CABLE
ATTN: DON JUGENHEIMER
4352 YOUNGSTOWN ROAD
WARREN, OH 44484
(330) 369-7138

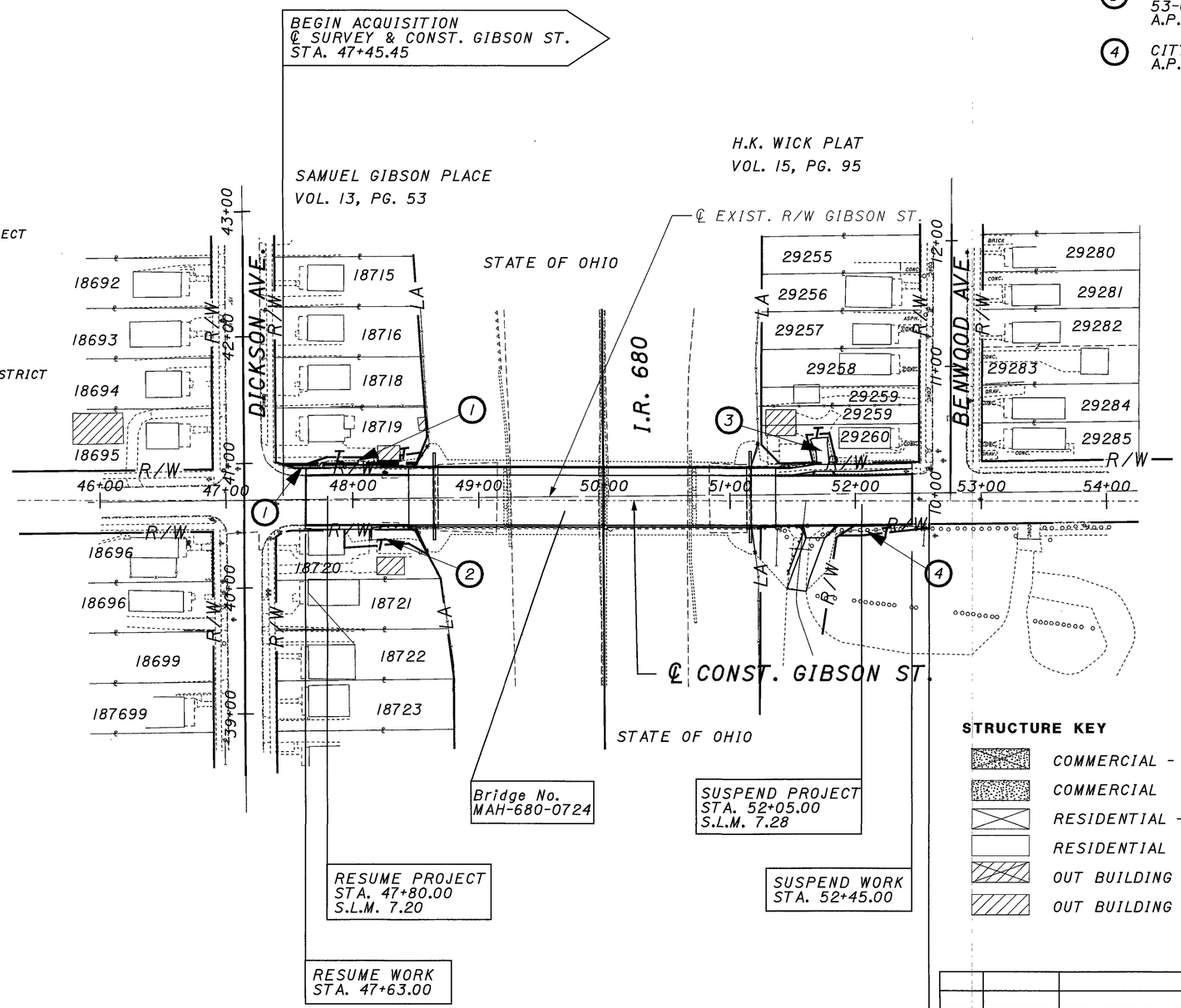

STRUCTURE KEY

- COMMERCIAL - TO BE REMOVED
- COMMERCIAL
- RESIDENTIAL - TO BE REMOVED
- RESIDENTIAL
- OUT BUILDING - TO BE REMOVED
- OUT BUILDING

UNDERGROUND UTILITIES

THE LOCATION FOR THE UNDERGROUND UTILITIES SHOWN ON THE PLANS ARE AS REQUIRED BY SECTION 153.64 O.R.C.. OBTAINED FROM THE OWNERS OF THE UTILITY

REV	DATE	
DJH	7/08/04	NAME CHANGE PARCEL 2

PLAN COMPLETION DATE

SCALE IN FEET 25 50 100

PID NO. 22484

R/W DESIGNER R.L.W.
R/W REVIEWER J.E.K.

PROPERTY MAP - GIBSON STREET
BEGIN TO END

MAH-680-7.24/8.34

$FILE$
$DATE$
$TIME$