MED - IR 71 - 15.78
000239
PID#7885

05/10/00
DIST. 03

STATE OF OHIO
DEPARTMENT OF TRANSPORTATION
MED - 71 - 15.78

City of Brunswick
Medina, Granger, Brunswick Hills
And Montville Townships
Medina County

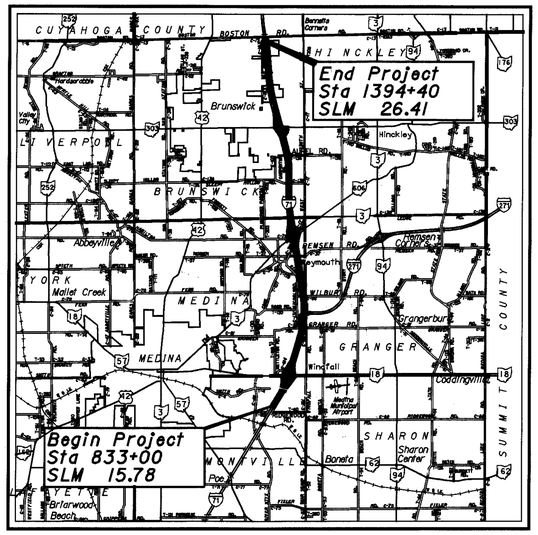

LOCATION MAP

LATITUDE: 41° 08′ 38″ LONGITUDE: 81° 47′ 30″

0 1 2 3 4
SCALE IN MILES

N

PORTION TO BE IMPROVED
STATE & FEDERAL ROUTES
OTHER ROADS

DESIGN DESIGNATION

CURRENT ADT (2000)	56,530
DESIGN YEAR ADT (2020)	72,470
DESIGN HOURLY VOLUME (2020)	7,247
DIRECTIONAL DISTRIBUTION	55 %
TRUCKS (24 HOUR B&C)	22 %
DESIGN SPEED	70 MPH
LEGAL SPEEDS	55 MPH and 65 MPH

DESIGN FUNCTIONAL CLASSIFICATION -
Interstate Rural/Urban

DESIGN EXCEPTIONS

IR 71 - NONE REQUIRED

PLAN PREPARED BY:
District One
Ohio Department
of Transportation

GRANGER RD	APPRV DATE	SHT
SSD	12/14/99	408,409
SHOULDER WIDTH	12/14/99	402

INDEX OF SHEETS:

Title Sheet	1	Noise Walls	664-679
Schematic Plan	2-7	Structure Index & Misc. Sheets	680-686
Typical Sections - Proposed	8-22	MED-71-1685 L&R over SR 18	687-720,720A
Typical Sections - Existing	23-30	MED-71-1828 Granger Road over IR 71	721-736
General Notes	31-36	MED-71-1870 L&R OVER IR 271	737-775
Maintenance Of Traffic	37-67, 42A, 42B, 42C, 63A	MED-71-1918 L&R over Wilbur Road	776-797
General Summary	68-74	MED-71-1988 over ROCKY RIVER	798-820
Subsummary Sheets	75-76, 76A, 77-128	MED-71-2088E RAMP B @ SR3	821-836
Calculation Sheets	129-146A	MED-71-2090 L&R over SR 3	837-867
Superelevation Tables	147-148	MED-71-2092W RAMP C @ SR 3	868-895
Storm Water Pollution Prevention Plan	149-171	MED-71-2402 L&R over SR 303	896-931
IR 71 Plan & Profile Sheets	172-218	Miscellaneous Overhead Sheets	932-940
IR 71 Cross-Sections	219-374		
SR 18	375-382, 384-401	Sheets Not Used - 383, 420, 481, 644, 645 & 646	
Granger Road	402-419		
IR 271 Connector "W"	421-448		
IR 271 Connector "E"	449-452		
SR 3	453-457, 457A, 458-465		
Rest Areas	466-480		
SR 303	482-484, 484A, 485, 485A, 486-500		
Miscellaneous Details	501-502		
Drainage Details	503-512, 512A, 513-516		
Culvert Details	517-530		
Drainage Profiles	531-536, 536A		
Underdrain Details	537-550		
Traffic Control	551-560, 560A-560B		
Signing	561-606, 561A, 569A-E, 574A-C		
Lighting	607-643		
Landscaping	647-663		

UNDERGROUND UTILITIES
TWO WORKING DAYS
BEFORE YOU DIG
CALL 1-800-362-2764 (TOLL FREE)
OHIO UTILITIES PROTECTION SERVICE
NON-MEMBERS
MUST BE CALLED DIRECTLY

OIL & GAS PRODUCERS
UNDERGROUND PROTECTION SERVICE
P.O. Box 206
Granville, OH 43023-0206
800-925-0988
(Fax) 740-587-0446

ENGINEERS SEAL:

STATE OF OHIO
John Wesley Rogers
E-43661
REGISTERED
PROFESSIONAL ENGINEER

For Signing, Pavement Marking, Guardrail, Pavement Calculations & Maintenance of Traffic except at SR 18, Granger Road and IR 271.

SIGNED John W. Rogers
DATE: December 15, 1999

For additional Seal Blocks, See Sheet 2 of 940.

PROJECT DESCRIPTION

Reconstruction of 10.6 miles of IR 71 existing lanes and shoulders including construction of widened inside shoulders from Begin Project to SR 303 and additional lanes from SR 303 to End Project. Also reconstruction of the connection lanes between IR 71 and IR 271. The work shall consist of but is not limited to new pavement and shoulders, new underdrains, rehabilitation or replacement of existing drainage, new guardrail, upgrading of signing, replacement of fencing, lighting at the IR 271, SR 3 and SR 303 interchanges, noise walls, replacement of Rest Area parking Areas, pavement markings and rehabilitation or replacement of structures.

LIMITED ACCESS

THIS IMPROVEMENT IS ESPECIALLY DESIGNED FOR THROUGH TRAFFIC AND HAS BEEN DECLARED A LIMITED ACCESS HIGHWAY OR FREEWAY BY ACTION OF THE DIRECTOR IN ACCORDANCE WITH THE PROVISIONS OF SECTION 5511.02 OF THE REVISED CODE OF OHIO.

1997 SPECIFICATIONS

The Standard Specifications of the State of Ohio, Department of Transportation, including changes and supplemental specifications listed in the proposal shall govern this improvement.

I hereby approve the plans and declare that the making of this improvement will not require the closing to traffic of the highway and provisions for the maintenance and safety of the traffic will be as set forth on the plans and estimate.

"Under authority of Section 4511.21, Division (I) of the Revised Code of Ohio, the revised prima facia speed limits as indicated herein are determined to be reasonable andsafe and are hereby established for the duration of this project. The prima facia speed limit or limits hereby established shall become effective when appropriate signs giving notice thereof are erected."

APPROVED James D. Mawhorn
DATE 12-17-99 DISTRICT DEPUTY DIRECTOR

APPROVED Gordon Proctor Jr.
DATE 2-18-00 DIRECTOR, DEPARTMENT OF TRANSPORTATION

STANDARD CONSTRUCTION DRAWINGS

BP-1.1M	10-28-94	GR-1.1M	10-21-97	CB-1.2M	7-12-95	AS-1-81	09-15-94	TC-22.10M	03-13-97	TC-61.10M	03-31-94	HL-20.22M	03-31-95	MT-95.40M	04-25-94	806	09-09-97
BP-2.1M	04-08-97	GR-1.2M	1-3-96	CB-2.1M	7-12-95	GR-3.5M	10-21-97	TC-22.20M	02-01-94	TC-65.10M	11-01-95	HL-20.23M	03-31-95	MT-97.10M	04-25-94	814	06-02-98
BP-2.2M	10-21-97	GR-1.3M	11-30-94	CB-2.2M	7-12-95	BR-1M	01-06-99	TC-31.21M	03-31-94	TC-65.11M	11-01-95			MT-98.12M	06-24-93	815	05-30-96
BP-2.3	04-29-99	GR-2.1M	04-14-98	CB-3.1M	7-12-95	BS-1-93	12-19-94	TC-32.10M	03-31-94	TC-65.12M	11-01-95	HL-30.11M	03-31-95	MT-98.13M	06-24-93	816	04-21-97
BP-2.4M	10-28-94	GR-3.1M	10-21-97	CB-3.2M	7-12-95	CS-1-93	06-30-95	TC-32.11M	03-31-94	TC-71.10M	09-01-93	HL-30.21M	05-01-95	MT-98.14M	06-24-93	825	9-14-99
BP-2.5M	04-08-97	GR-3.2M	10-21-97	CB-3.4M	7-12-95	EXJ-4-87M	02-18-97	MT-102.10M	01-30-95	TC-72.20M	09-01-93	HL-30.22M	03-31-95	MT-98.15M	06-24-93	842	01-06-99
BP3.1M	10-28-94	GR-4.1M	11-30-94	HW-2.1M	07-12-95	VPF-1-90M	03-20-95	TC-41.10M	03-31-94	TC-82.10M	11-24-93	HL-30.31M	05-01-95	MT-98.16M	06-24-93	844	01-06-99
BP-4.1M	10-28-94	GR-4.2M	10-21-97	HW-2.2M	07-12-95	GSD-1-96	02-12-97	TC-41.20M	07-01-94	TC-83.10M	11-24-93	GR-4.3M	10-27-97	MT-98.17M	04-25-94	855	6-30-98
BP-5.1M	10-28-94	GR-6.1M	1-3-96	I-2.2M	09-06-95	PCB-1-91	07-06-99	TC-41.50M	07-01-94	RM-4.5M	10-21-97	HL-40.10M	03-31-95	MT-98.18M	04-25-94	863	10-12-99
BP-9.1	04-29-99	GR-6.2M	1-3-96	MH-1.1M	10-21-97	SBR-1-99	01-12-99	TC-42.10M	03-31-94	HL-10.11M	05-01-95	HL-50.11M	03-31-95	MT-99.20M	01-30-95	870	08-10-99
BP-9.2	04-29-99	RM-1.1	04-29-99	MH-1.2M	09-06-95	HW-1.1M	07-12-95	TC-42.20M	03-31-94	HL-10.12M	05-01-95	HL-50.21M	08-31-94	MT-101.60M	04-25-94	899	10-21-98
F-1.1M	4-8-97	RM-4.1M	10-21-97	MH-3.1M	09-06-95	TC-7.65M	02-01-94	TC-82.11M	01-19-99	HL-10.13M	05-01-95	HL-60.11M	05-01-95	MT102.20M	01-30-95	880	06-15-99
F-2.1M	4-8-97	RM-4.2M	10-21-97	DM-1.1M	10-21-97	TC-12.30M	02-01-94	TC-51.11M	09-30-94	HL-10.31M	03-31-95	HL-60.21M	03-31-95	MT-105.10M	04-25-94	904	05-05-98
F-3.1M	4-21-95	RM-4.3M	10-21-97	DM-4.2M	6-30-95	TC-18.26M	02-01-94	TC-51.12M	03-31-94	HL-20.11M	03-31-95	HL-60.31M	03-31-95	MT-105.11M	04-25-94	905	04-01-98
F-3.3M	4-21-95	RM-4.4M	10-21-97	DM-4.3	04-29-99	TC-21.10M	12-10-96	TC-52.10M	07-29-94	HL-20.15M	03-31-95	MT-95.31M	04-25-94	MT-95.32M	04-25-94	906	05-05-98
F-3.4M	4-8-97	CB-1.1M	7-12-95	DM-4.4	04-29-99	TC-21.20M	12-10-96	TC-52.20M	07-29-94	HL-20.21M	08-31-94	MT-95.30M	04-25-94			907	08-10-99

SUPPLEMENTAL SPECIFICATIONS		SPECIAL PROVISIONS	
		Waterway Permit	
		NWP#	DATE:
		3 & 14	01-28-98
		SUPPLEMENTAL	
		SPECIFICATIONS	
910	07-28-98		
911	07-10-97		
954	09-09-97		
877	4-13-99		
925	5-14-99		

FEDERAL PROJECT NO. TE21-6000(267)
PID NO. 7885
CONSTRUCTION PROJECT NO.
RAILROAD INVOLVEMENT NONE

MED - 71 - 15.78

1
940

Str. No. MED - 71 - 1569 L&R

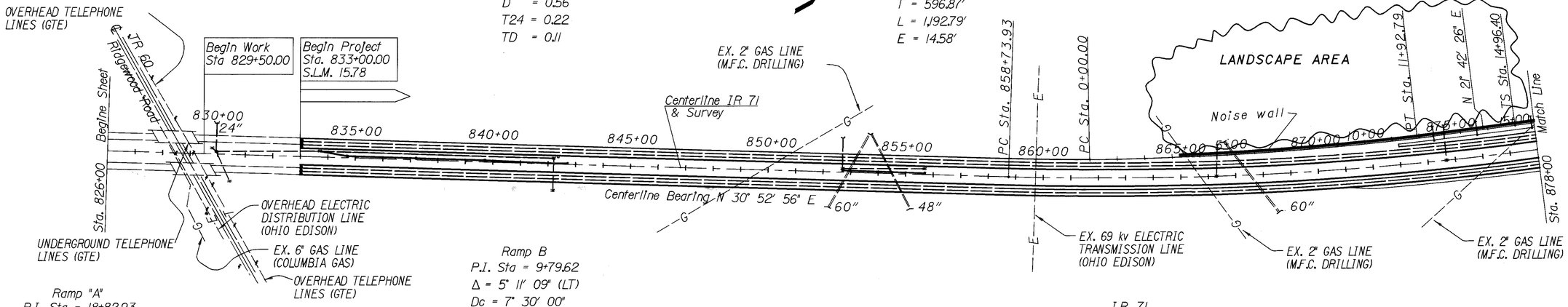

IR 71
ADT (2000) = 34,900
ADT (2020) = 49,130
K = 0.11
D = 0.56
T24 = 0.22
TD = 0.11

Ramp "A"
P.I. Sta = 5+96.87
Δ = 5° 35' 47" (LT)
Dc = 0° 28' 09"
R = 12,211.62'
T = 596.87'
L = 1,192.79'
E = 14.58'

Ramp "A"
P.I. Sta = 18+82.93
Δ = 22° 00' 00" (LT)
Dc = 3° 56' 21"
R = 1,454.52'
Ls = 200.00'
Theta = 3° 56' 21"
LT = 133.37'
ST = 66.70'
x = 199.91'
y = 4.58'
k = 99.98'
p = 1.15'
Δc = 14° 07' 18" (LT)
Lc = 358.49'
Ts = 382.94'
Es = 28.39'

Ramp B
P.I. Sta = 9+79.62
Δ = 5° 11' 09" (LT)
Dc = 7° 30' 00"
R = 763.94'
Δc = 6° 58' 20" (LT)
Lc = 92.96'
Es = 49.15'

Ramp B
P.I. Sta = 2+52.20
Δ = 46° 30' 57" (RT)
Dc = 20° 00' 00"
R = 286.48'
Δc = 21° 30' 57" (RT)
Lc = 107.58'
Es = 27.92'

Ramp B
P. I. Sta. = 13+19.97
Δ = 7° 24' 41" (LT)
Dc = 01° 30' 00"
R = 3,819.72'
T = 247.39'
L = 494.10'
E = 8.00'
D = 9° 00' 00" (RT)
Ls = 200.00'
Theta = 06° 00' 00"
LT = 122.45'
ST = 77.96'

I.R. 71
P.I. Sta. = 87+38.41
Δ = 13° 36' 15" (LT)
Dc = 00° 28' 00"
R = 12,277.67
T = 1,464.48
L = 2,915.18
E = 87.03'
Max. Super Rate = 0.018

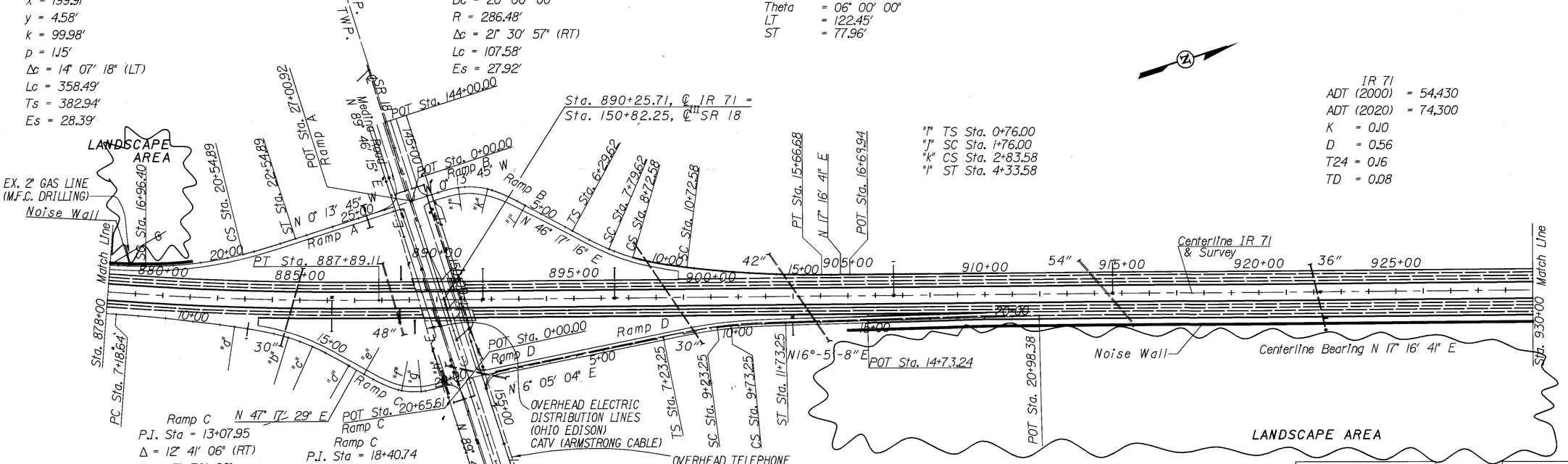

IR 71
ADT (2000) = 54,430
ADT (2020) = 74,300
K = 0.10
D = 0.56
T24 = 0.16
TD = 0.08

Ramp C
P.I. Sta = 13+07.95
Δ = 12° 41' 06" (RT)
Dc = 7° 30' 00"
R = 763.94'
Δc = 7° 03' 49" (RT)
Lc = 94.18'
Es = 200.88'

Ramp C
P.I. Sta = 18+40.74
Δ = 47° 29' 36" (LT)
Dc = 24° 00' 00"
R = 238.73'
Δc = 17° 29' 36" (LT)
Lc = 72.89'
Es = 25.19'

"a" CS Sta. 11+53.36
"b" SC Sta. 13+53.36
"c" CS Sta. 14+47.55
"d" ST Sta. 15+97.55
"e" TS Sta. 16+62.18
"f" SC Sta. 18+12.18
"g" CS Sta. 18+85.06
"h" TS Sta. 19+85.06

DESIGN DESIGNATION
MEDINA ROAD (S.R. 18)
CURRENT A.D.T. (2000) = 12,250
DESIGN YEAR A.D.T. (2020) = 35,850
D.H.V. (2020) = 3,585

Ramp D
P.I. Sta = 10+72.01
Δ = 11° 11' 37" (RT)
Dc = 1° 36' 35"
R = 3,559.36'
Ls = 250.00'
Theta = 2° 00' 44"
LT = 166.68'
ST = 83.34'
x = 249.97'
y = 2.93'
k = 124.99'
p = 0.73'
Δc = 7° 10' 09" (RT)
Lc = 445.37'
Ts = 473.86'
Es = 17.78'

ENGINEERS SEAL: FOR I.R. 271 CONNECTION 'W' DRAINAGE, NOISE BARRIERS
STATE OF OHIO DEAN A PALMER E-37475 REGISTERED PROFESSIONAL ENGINEER
SIGNED: Dean A Palmer
DATE: 12/14/99

ENGINEERS SEAL:
STATE OF OHIO DAVID F. TRAINI E-49751 REGISTERED PROFESSIONAL ENGINEER
SIGNED: David F Traini
DATE: 12-16-99

DATE : 15-DEC-1999
TIME : 08:59
DESIGN FILE : i:\pd_med_ir71\dgn\schematics\gb1.dgn
USERNAME : jrogers

HORIZONTAL SCALE IN FEET
0 100 200 400
CALCULATED June
CHECKED DJV

SCHEMATIC PLAN
Sta. 826+00 to Sta. 930+00

MED - 71 - 15.78

2
940

Str. No. MED - 71 - 1828

IR 71
ADT (2000) = 54,430
ADT (2020) = 74,300
K = 0.10
D = 056
T24 = 0.16
TD = 0.08

Connector W
P.I. Sta = 955+61.72
Δ = 6° 11' 21" (LT)
Dc = 0° 22' 08"
R = 15,536.07'
T = 839.92'
L = 1,678.20'
E = 22.69'

Connector W
P.I. Sta = 968+15.48
Δ = 4° 54' 48" (LT)
Dc = 0° 50' 33"
R = 6,800.00'
T = 291.74'
L = 583.12'
E = 6.26'

IR 71
P.I. Sta = 984+41.65
Δ = 26° 45' 35" (LT)
Dc = 0° 22' 00"
R = 15,626.07'
T = 3,716.85'
L = 7,298.08'
E = 435.97'

CH 21
P.I. Sta = 46+38.02
Δ = 2° 49' 12" (LT)
Dc = 2° 00' 00"
R = 2,864.79'
T = 70.51'
L = 141.00'
E = 0.87'

Nichols Rd.
P.I. Sta = 2+08.27
Δ = 9° 09' 32" (LT)
Dc = 8° 00' 00"
R = 716.20'
T = 57.37'
L = 114.49'
E = 2.29'

℄ PROP. CONNECTION 'W' I.R. 271
P.I. Sta = 974+61.07
Δ = 25° 03' 12" (LT)
Dc = 5° 30' 00"
R = 1,041.74'
Ls = 200.00'
Theta = 5° 30' 00"
LT = 133.40'
ST = 66.73'
x = 199.82'
y = 6.40'
k = 99.97'
p = 1.60'
Δc = 14° 03' 12" (LT)
Lc = 255.51'
Ts = 331.78'
Es = 27.04'

Begin Work
Sta. 44+53

POT Sta. 40+00.03
N 89° 56' 37" E 445.00'
PC Sta. 45+67.51
PC Sta. 1+50.90
PT Sta. 2+65.39
POT Sta. 4+99.19
POT Sta. 0+02.71
Nichols Rd.
N 11° 20' 05" W
5+00
N 2° 10' 33" W
PT Sta. 47+08.51

Match Line
Centerline IR 71 & Survey
Sta. 937+55.07 Begin Taper
Sta. 945+95.07 End Taper
PC Sta. 947+24.80
Sta. 930+00
Centerline Bearing N 17° 16' 41" E
935+00 940+00 945+00 950+00 955+00 960+00 965+00 970+00 975+00 980+00
42" 30" 24" 24" 24"
"a" "b" "c" "d" "e" "f" "g"
Match Line
Sta. 982+00

Sta. 964+78.75, ℄ IR 71 =
Sta. 49+41.23, ℄ Granger Rd.
EX. COAX LINE (AT&T)
POT Sta. 0+00.00
Windfall Rd.
S 0° 06' 19" E
PC Sta. 54+77.16
PT Sta. 56+11.26
CH 21 Granger Road
Granger Road
P.I. Sta = 55+44.52
Δ = 2° 40' 12" (RT)
Dc = 2° 00' 00"
R = 2,864.79'
T = 66.76'
L = 133.50'
E = 0.78'
End Work
Sta. 54+00

POT Sta. 969+33.40
POT Sta. 970+35.01
PC Sta. 971+68.80
PT Sta. 979+68.80
N 13° 50' 55" E
TS Sta. 980+62.95
OVERHEAD ELECTRIC DISTRIBUTION LINES (OHIO EDISON)
MEDINA TWP.
GRANGER TWP.

E.B. 271
P.I. Sta = 975+02.16
Δ = 4° 40' 08" (RT)
Dc = 0° 30' 00"
R = 11,459.16'
T = 467.15'
L = 933.79'
E = 9.52'

"a" POT Sta. 970+27.07 ℄ I.R. 71 = ℄ SB IR 271 Sta. 970+27.07
"b" TS Sta. 971+29.29
"c" SC Sta. 973+29.29
"d" CS Sta. 975+84.80
"e" ST Sta. 977+84.80
"f" TS Sta. 977+97.74
"g" SC Sta. 979+97.74

Connector W
P.I. Sta = 988+87.94
Δ = 107° 24' 37" (RT)
Dc = 8° 00' 00"
R = 716.20'
Ls = 300.00'
Theta = 12° 00' 00"
LT = 200.46'
ST = 100.42'
x = 298.69'
y = 20.88'
k = 149.78'
p = 5.23'
Δc = 83° 24' 37" (RT)
Lc = 1,042.63'
Ts = 1,132.07'
Es = 502.55'

℄ PROP. CONNECTION 'W' I.R. 271
P.I. Sta = 989+07.34
Δ = 107° 24' 36" (RT)
Dc = 7° 45' 00"
R = 739.30'
Δc = 91° 54' 37" (RT)
Lc = 1,185.94'
Es = 513.42'

Eastbound IR 271
P.I. Sta = 987+77.90
Δ = 76° 09' 04" (RT)
Dc = 8° 00' 00"
R = 716.20'
Ls = 300.00'
Theta = 12° 00' 00"
LT = 200.46'
ST = 100.42'
x = 298.69'
y = 20.88'
k = 149.78'
p = 5.23'
Δc = 52° 09' 05" (RT)
Lc = 651.89'
Ts = 714.96'
Es = 200.25'

Sta. 988+95.46 B Connection W
Sta. 987+47.47 IR 71

DESIGN DESIGNATION
GRANGER ROAD (C.H. 21)
CURRENT A.D.T. (2000) = 3,330
DESIGN YEAR A.D.T. (2020) = 4,680
D.H.V. (2020) = 610
D (DIRECTIONAL DISTRIB.) = 55%
T (PERCENT (B & C TRUCKS) = 13%
V (LEGAL SPEED) = 55 M.P.H.
FUNCTIONAL CLASSIFICATION = RURAL LOCAL

IR 71
P.I. Sta = 984+41.65
Δ = 26° 45' 35" (LT)
Dc = 0° 22' 00"
R = 15,626.07'
T = 3,716.85'
L = 7,298.08'
E = 435.97'

IR 71
ADT (2000) = 34,010
ADT (2020) = 46,690
K = 0.10
D = 056
T24 = 0.12
TD = 0.06

Wilbur Road
℄ CH 66
POT Sta. 43+00.00
N 89° 45' 00" E 1020+22.88
PT Sta. 1020+22.88
EX. COAX LINE (AT&T)
AT&T Cable
Centerline IR 71 & Survey
Match Line
Sta. 1034+00
985+00 990+00 995+00 1000+00 1005+00 1010+00 1015+00 1020+00 1025+00 1030+00
Sta. 982+00
SC Sta. 983+62.95
42" 36" 36" 42"
Centerline Bearing N 9° 28' 54" W
EX. FIBER OPTIC LINE (AT&T)
EX. 6" GAS LINE IN 10" CASING (COLUMBIA GAS)
EX. 345 kv TRANSMISSION LINE (OHIO EDISON)
Sta. 1013+06.01, ℄ IR 71 =
Sta. 49+83.28, ℄ Wilbur Rd.
N 89° 22' 29" E
MEDINA TWP.
GRANGER TWP.
POT Sta. 55+00.00
Begin Work
Sta. 998+98.25
CS Sta. 990+14.84
ST Sta. 993+14.84
990+00
IR 271

℄ PROP. CONNECTION 'W' I.R. 271
P.I. Sta = 995+12.33
Δ = 1° 12' 02" (RT)
Dc = 0° 28' 00"
R = 12,277.67'
T = 128.65'
L = 257.28'
E = 0.67'

℄ PROP. CONNECTION 'W' I.R. 271
P.I. Sta = 997+69.61
Δ = 1° 12' 02" (LT)
Dc = 0° 28' 00"
R = 12,277.67'
T = 128.65'
L = 257.28'
E = 0.67'

DESIGN DESIGNATION
WILBUR ROAD (C.H. 66)
CURRENT A.D.T. (2000) = 840
DESIGN YEAR A.D.T. (2020) = 1,170
D.H.V. (2020) = 117
D (DIRECTIONAL DISTRIB.) = 55%
T (PERCENT (B & C TRUCKS) = 13%
V (LEGAL SPEED) = 55 M.P.H.
FUNCTIONAL CLASSIFICATION = RURAL LOCAL

There are no existing landscaped areas within the work limits on this sheet.

Str. No. MED - 71 - 1870 L&R

Str. No. MED - 71 - 1918 L&R

HORIZONTAL SCALE IN FEET
0 100 200 400
CALCULATED JRR CHECKED RLS

SCHEMATIC PLAN
Sta. 930+00 To Sta. 1034+00

MED - 71 - 15.78

3
940

DESIGN FILE : i:\pd_med_ir71\dgn\schematics\gb2.dgn
USERNAME : jrogers
DATE : 07-DEC-1999
TIME : 14:08

Str. No. MED - 71 - 1992 L&R

Str. No. MED - 71 - 2034

There are no existing landscaped areas within the work limits on this sheet.

IR 71
ADT (2000) = 34,010
ADT (2020) = 46,690
K = 0.10
D = 0.56
T24 = 0.12
TD = 0.06

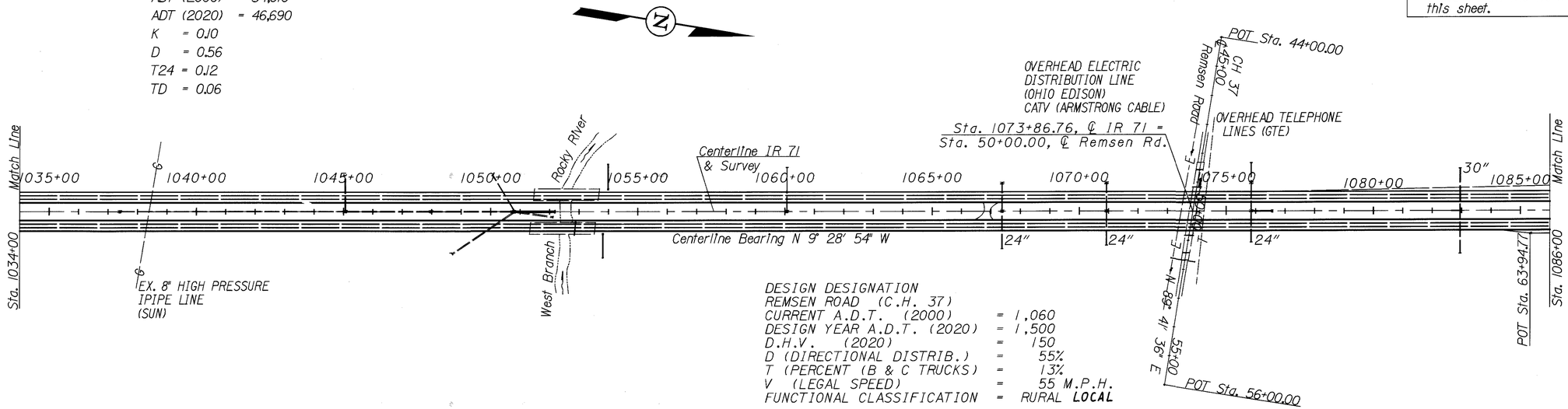

DESIGN DESIGNATION
REMSEN ROAD (C.H. 37)
CURRENT A.D.T. (2000) = 1,060
DESIGN YEAR A.D.T. (2020) = 1,500
D.H.V. (2020) = 150
D (DIRECTIONAL DISTRIB.) = 55%
T (PERCENT (B & C TRUCKS) = 13%
V (LEGAL SPEED) = 55 M.P.H.
FUNCTIONAL CLASSIFICATION = RURAL LOCAL

IR 71
ADT (2000) = 34,010
ADT (2020) = 46,690
K = 0.10
D = 0.56
T24 = 0.12
TD = 0.06

Ramp D
P.I. Sta = 76+08.62
Δ = 25° 00' 18" (LT)
Dc = 3° 00' 00"
R = 1,909.86'
Δc = 22° 00' 18" (LT)
Lc = 733.50'
Es = 46.84'

Ramp C
P.I. Sta = 83+88.05
Δ = 27° 59' 10" (RT)
Dc = 6° 00' 00"
R = 954.93'
Δc = 21° 59' 10" (RT)
Lc = 366.44'
Es = 30.11'

Ramp C
P.I. Sta = 90+40.36
Δ = 11° 31' 05" (LT)
Dc = 2° 30' 00"
R = 2,291.83'
Δc = 9° 01' 05" (LT)
Lc = 360.72'
Es = 11.99'

Ramp C
P.I. Sta = 96+13.98
Δ = 10° 11' 13" (LT)
Dc = 1° 30' 00"
R = 3,819.72'
T = 340.46'
L = 679.13'
E = 15.14'

IR 71
ADT (2000) = 44,560
ADT (2020) = 61,280
K = 0.10
D = 0.56
T24 = 0.10
TD = 0.05

"AA" Sta. 1104+55.56, ℄ IR 71 =
Sta. 900+70.63, ℄ SR 3

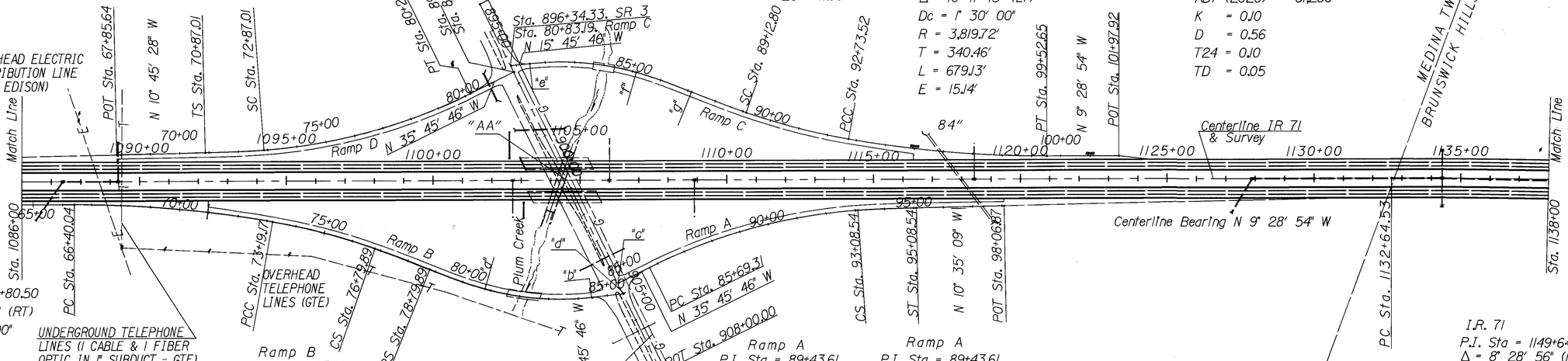

UNDERGROUND TELEPHONE
LINES (1 CABLE & 1 FIBER
OPTIC IN 1" SUBDUCT - GTE)

Ramp B
P.I. Sta = 69+80.50
Δ = 10° 11' 13" (RT)
Dc = 1° 30' 00"
R = 3,819.72'
T = 340.46'
L = 679.13'
E = 15.14'

Ramp B
P.I. Sta = 75+53.95
Δ = 11° 31' 05" (RT)
Dc = 2° 30' 00"
R = 2,291.83'
Δc = 9° 01' 05" (RT)
Lc = 360.72'
Es = 11.99'

Ramp B
P.I. Sta = 82+14.54
Δ = 27° 59' 10" (LT)
Dc = 6° 00' 00"
R = 954.93'
Δc = 21° 59' 10" (LT)
Lc = 366.44'
Es = 30.11'

EX. GAS LINE
IN 4" CASING
(COLUMBIA GAS)

Ramp A
P.I. Sta = 89+43.61
Δ = 25° 10' 37" (RT)
Dc = 3° 00' 00"
R = 1,909.86'
T = 739.23'
L = 739.23'
E = 47.49'

Ramp A
P.I. Sta = 89+43.61
Δ = 25° 10' 37" (RT)
Dc = 3° 00' 00"
R = 1,909.86'
T = 739.23'
L = 739.23'
E = 47.49'

I.R. 71
P.I. Sta = 1149+64.08
Δ = 8° 28' 56" (RT)
Dc = 0° 15' 00"
R = 22,918.23'
T = 1,699.54'
L = 3,392.88'
E = 62.93'

"d" SC Sta. 80+79.89
"b" PT Sta. 84+46.33
"c" POT Sta. 84+50.93
"d" POT Sta. 85+56.33
"e" PC Sta. 81+46.36
"f" CS Sta. 85+12.80
"g" SRS Sta. 87+12.80

DESIGN DESIGNATION
WEYMOUTH ROAD (S.R. 3)
CURRENT A.D.T. (2000) = 17,560
DESIGN YEAR A.D.T. (2020) = 26,740
D.H.V. (2020) = 2,674
D (DIRECTIONAL DISTRIB.) = 55%
T (PERCENT (B & C TRUCKS) = 13%
V (LEGAL SPEED) = 55 M.P.H.
FUNCTIONAL CLASSIFICATION = RURAL ARTERIAL

Str. No. MED - 71 - 2088E

Str. No. MED - 71 - 2090 L&R

DATE : 02-DEC-1999
TIME : 13:05
DESIGN FILE : i:\pd_med_ir71\dgn\schematics\gb3.dgn
USERNAME : jrogers

HORIZONTAL SCALE IN FEET
0 100 200 400

CALCULATED jrr
CHECKED RLS

SCHEMATIC PLAN
Sta. 1034+00 to Sta. 1138+00

MED - 71 - 15.78

4
940

Str. No. MED - 71 - 2242

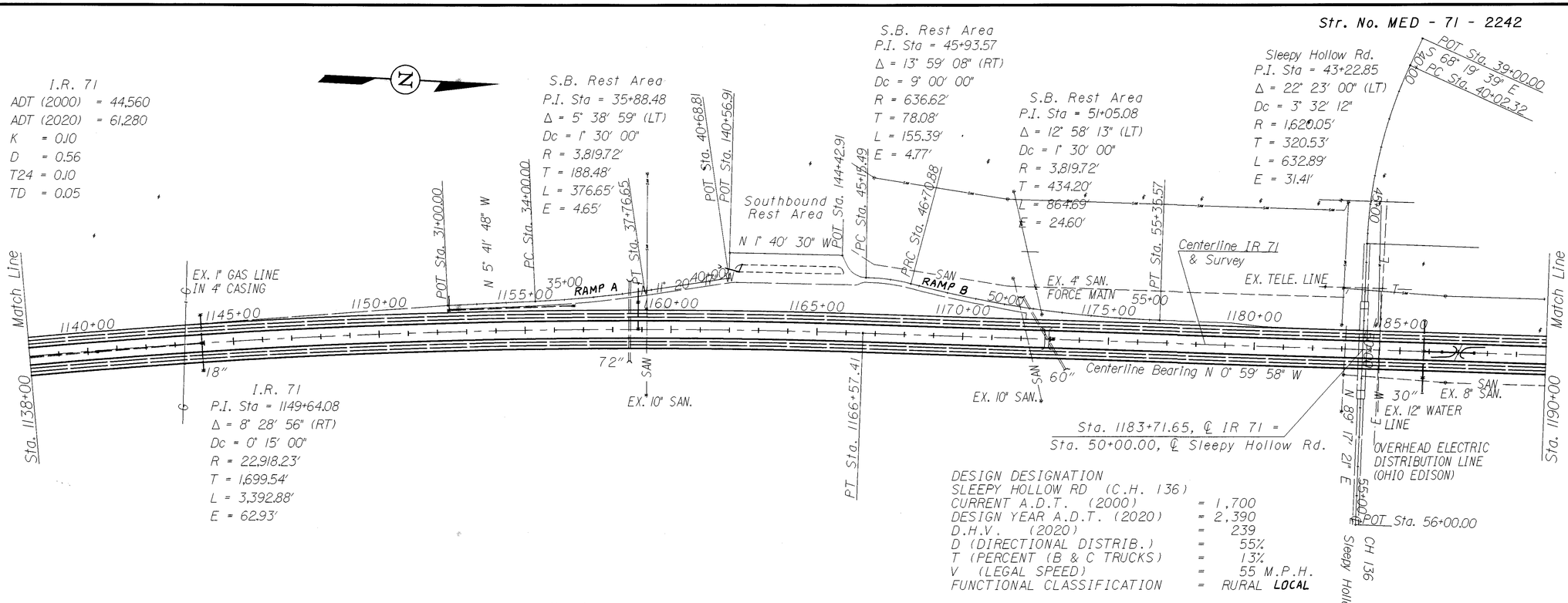

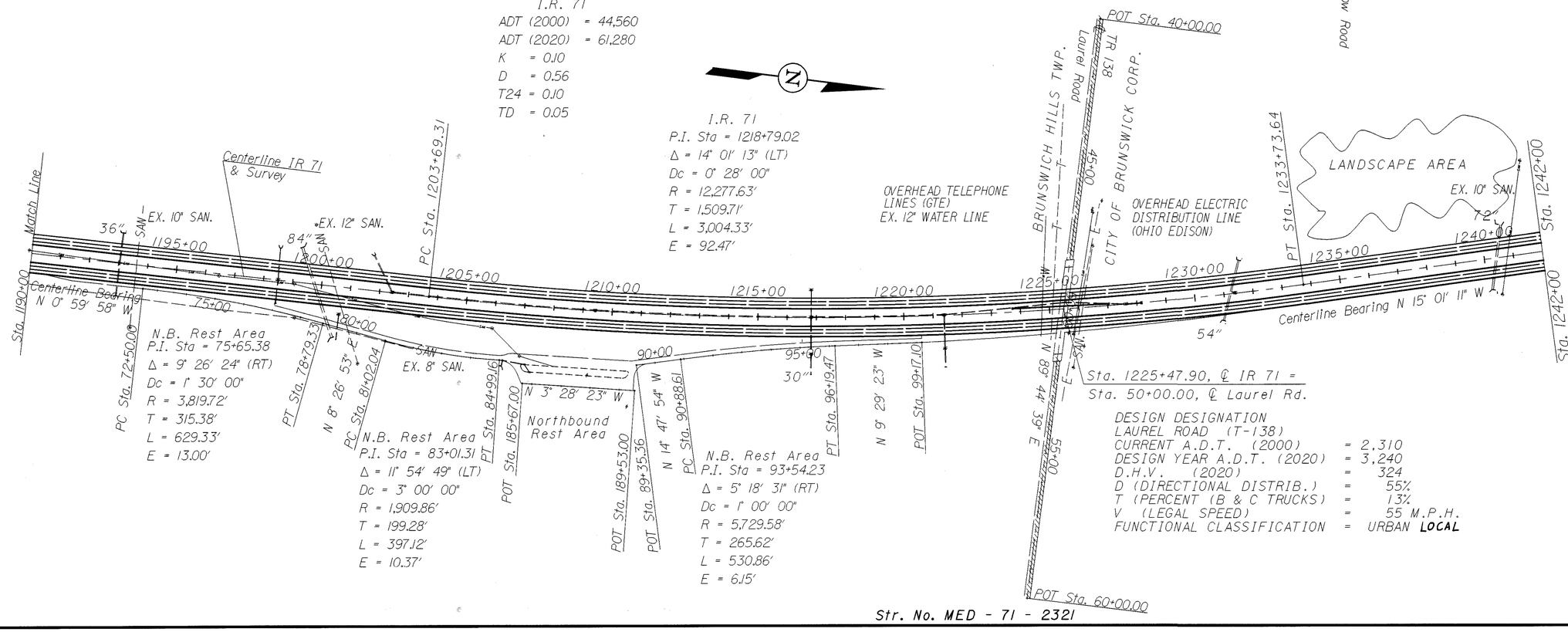

Str. No. MED - 71 - 2321

HORIZONTAL SCALE IN FEET
0 100 200 400

CALCULATED JRR
CHECKED RJS

SCHEMATIC PLAN
Sta. 1138+00 to Sta. 1242+00

MED - 71 - 15.78

5
940

DESIGN FILE : i:\pd_med_ir71\dgn\schematics\gb4.dgn
USERNAME : jrogers
DATE : 07-DEC-1999
TIME : 14:08

Str. No. MED - 71 - 2402 L&R

"a" PC Sta. 44+17.52
"b" PT Sta. 47+56.68
"c" TS Sta. 45+20.26
"d" SC Sta. 47.20.26
"e" CS Sta. 48+96.07
"f" ST Sta. 50+96.07

IR 71
ADT (2000) = 44,560
ΔDT (2020) = 61,280
K = 0.10
D = 0.56
T24 = 0.10
TD = 0.05

Ramp "A"
P.I. Sta = 45+87.41
Δ = 8° 28' 44" (RT)
Dc = 2° 30' 00"
R = 2,291.83'
T = 169.89'
L = 339.16'
E = 6.29'

Ramp "A"
P.I. Sta = 48+31.13
Δ = 61° 31' 16" (LT)
Dc = 16° 22' 13"
R = 350.00'
Ls = 200.00'
Theta = 16° 22' 13"
LT = 133.91'
ST = 67.19'

x = 198.37'
y = 18.94'
k = 99.73'
p = 4.75'
Δc = 28° 46' 50" (LT)
Lc = 175.81'
Ts = 310.87'
Es = 62.83'

Ramp "B"
P.I. Sta = 49+49.13
Δ = 90° 00' 00" (LT)
Dc = 24° 54' 40"
R = 230.00'
Ls = 200.00'
Theta = 24° 54' 40"
LT = 134.68'
ST = 67.89'

x = 196.25'
y = 28.60'
k = 99.37'
p = 7.20'
Δc = 40° 10' 40" (LT)
Lc = 161.28'
Ts = 336.57'
Es = 105.45'

Ramp "B"
P.I. Sta = 57+84.65
Δ = 14° 16' 00" (LT)
Dc = 1° 30' 00"
R = 3,819.72'
T = 478.03'
L = 951.11'
E = 29.80'

"u" TS Sta. 46+12.56
"v" SC Sta. 48+12.56
"w" CS Sta. 49+73.84
"x" POT Sta. 51+73.84
"y" ST Sta. 51+73.84
"z" PC Sta. 53+06.62

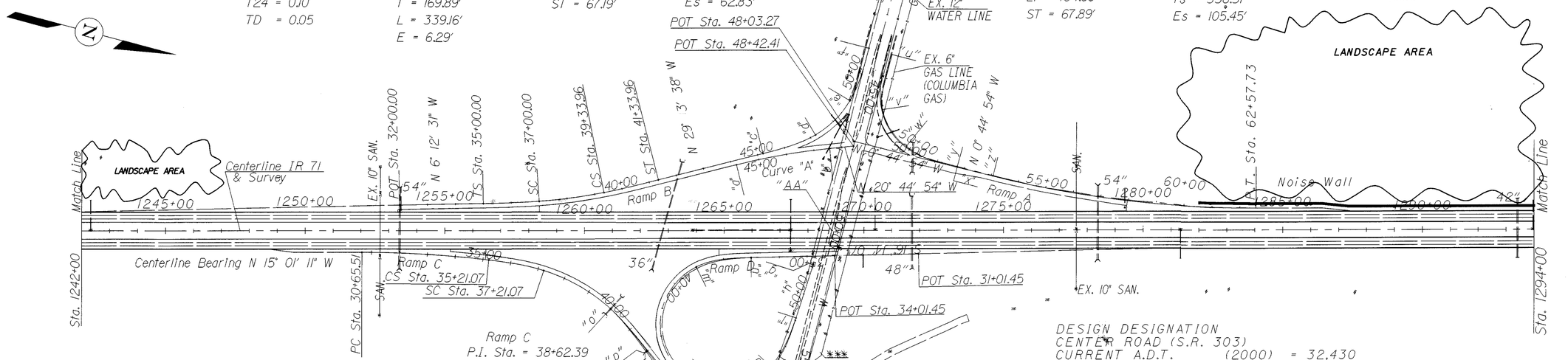

"g" POT Sta. 51+09.93
"h" N 87° 21' 10" W
"i" ST Sta. 49+09.46
"j" CS Sta.47+09.46
"k" PT Sta.44+67.82
"l" ST Sta. 43+99.21
"m" SC Sta. 39+01.45
"n" TS Sta. 37+01.45
"o" CS Sta. 39+99.21
"p" ST Sta. 41+97.21
"q" N 38° 55' 26" E
"r" TS Sta. 41+99.18
"s" ST Sta. 43+99.18
"t" PC Sta. 43+99.18
"u" TS Sta. 46+12.56
"v" SC Sta. 48+12.56
"w" CS Sta. 49+73.84
"x" POT Sta. 51+73.84
"y" ST Sta. 51+73.84
"z" PC Sta. 53+06.62

IR 71
ADT (2000) = 44,560
ΔDT (2020) = 61,280
K = 0.10
D = 0.56
T24 = 0.10
TD = 0.05

Ramp "A"
P.I. Sta = 45+87.41
Δ = 8° 28' 44" (RT)
Dc = 2° 30' 00"
R = 2,291.83'
T = 169.89'
L = 339.16'
E = 6.29'

Ramp C
P.I. Sta. = 38+62.39
Δ = 34° 01' 48" (RT)
Dc = 9° 00'
R = 636.62'
Ls = 200.00'
Theta = 9° 00'
LT = 133.51'
ST = 66.82'
x = 199.51'
y = 10.45'
k = 99.92'
p = 2.62'
Δc = 25° 01' 48" (RT)
Lc = 278.11'
Ec = 15.49'
Tc = 141.31'

Ramp CD
P.I. Sta = 44+33.72
Δ = 15° 38' 15" (LT)
Dc = 22° 46' 54"
R = 251.50'
T = 34.54'
L = 68.64'
E = 2.36'

Ramp D
P.I. Sta = 39+33.97
Δ = 251° 06' 21" (LT)
Dc = 24° 54' 40"
R = 230.00'
Ls = 200.00'
Theta = 24° 54' 40"
LT = 134.68'
ST = 67.89'
x = 196.25'
y = 28.60'
k = 99.37'
p = 7.20'
Δc = 201° 17' 01" (LT)
Lc = 808.01'
Ts = 232.52'
Es = 42.01'

DESIGN DESIGNATION
CENTER ROAD (S.R. 303)
CURRENT A.D.T. (2000) = 32,430
DESIGN YEAR A.D.T. (2020) = 38,430
D.H.V. (2020) = 3,840

* OVERHEAD TELEPHONE LINES (GTE)
** OVERHEAD ELECTRIC DISTRIBUTION LINE (OHIO EDISON)
*** UNDERGROUND ELECTRIC FOR LIGHTING (OHIO EDISON)

"AA" Sta. 1268+85.23, ℄ IR 71 = Sta. 50+00.00, ℄ SR 303

POT Sta. 47+56.54 (Proposed)
POT Sta. 60+00.00
SR 303
N 38° 55' 26" E
108.68'

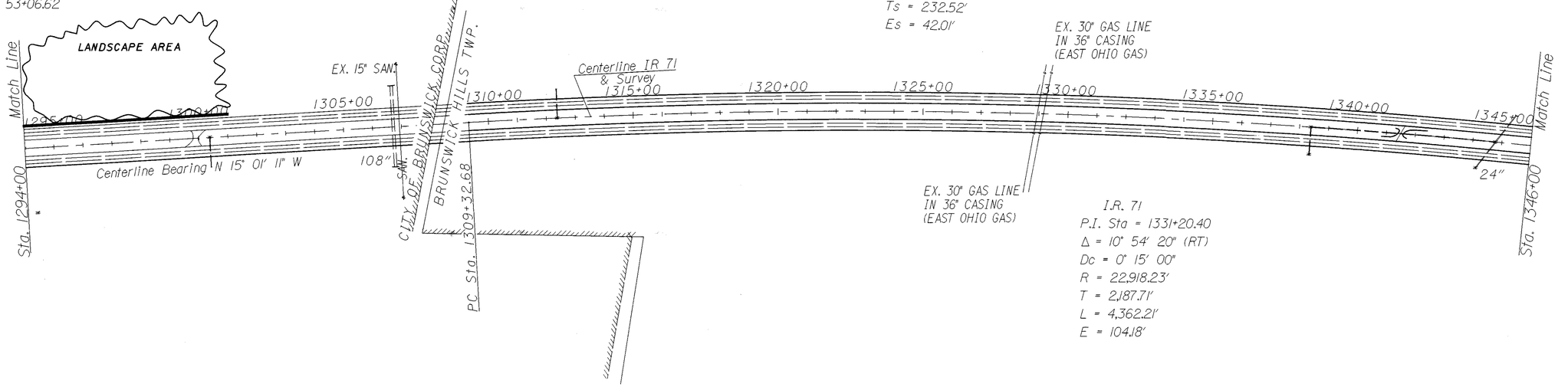

HORIZONTAL SCALE IN FEET
0 100 200 400

CALCULATED Jmr
CHECKED R.L.S

SCHEMATIC PLAN
Sta. 1242+00 to Sta. 1346+00

MED - 71 - 15.78

6
940

DESIGN FILE : i:\pd_med_ir71\dgn\schematics\gb5.dgn
USERNAME : jrogers
DATE : 07-DEC-1999
TIME : 14:08

DATE : 07-DEC-1999 DESIGN FILE : i:\pd_med_ir71\dgn\schematics\gb6.dgn
TIME : 13:31 USERNAME : jrogers

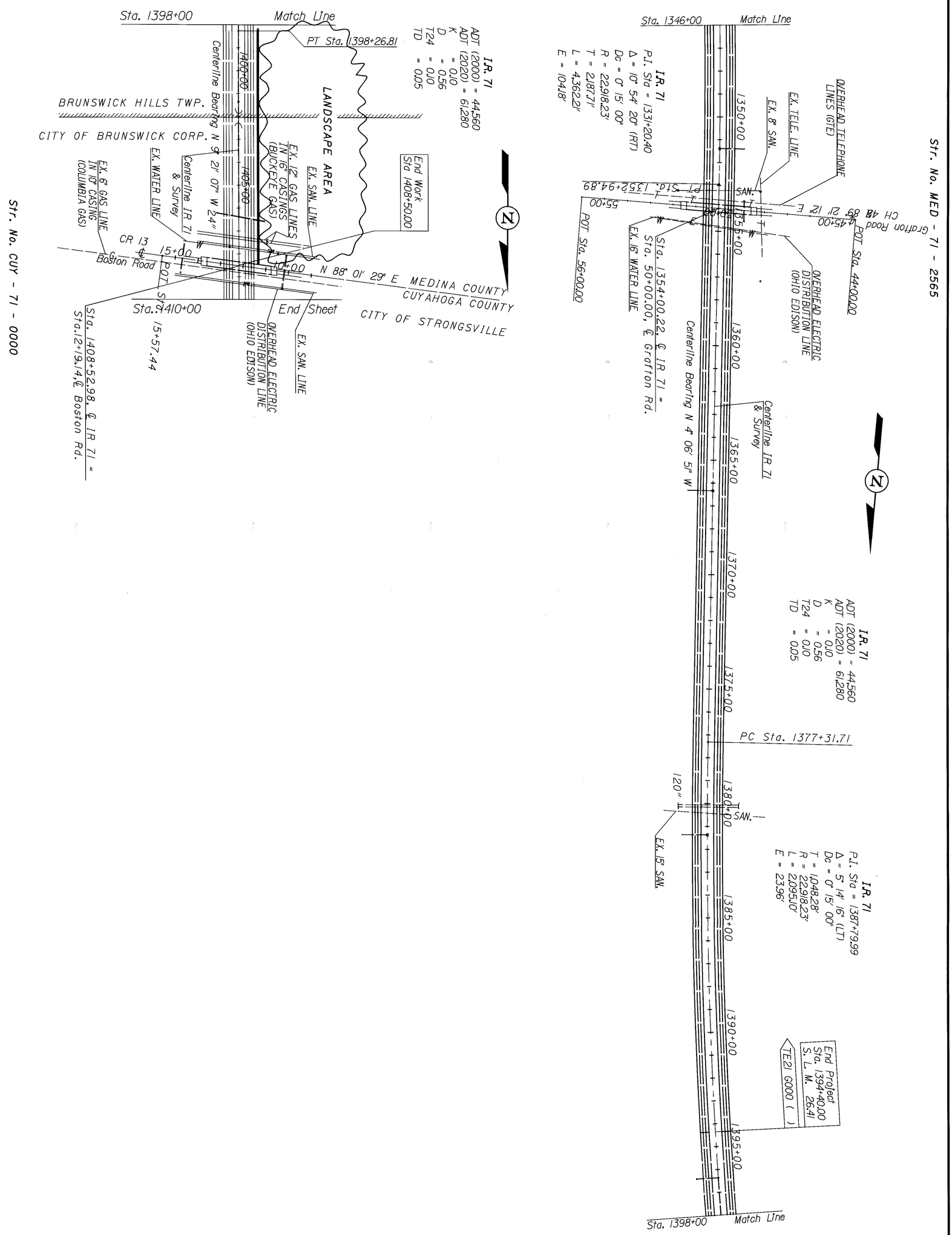

7 / 940	MED - 71 - 15.78	**SCHEMATIC PLAN** **Sta. 1346+00 to Sta. 1410+00**	CALCULATED JWP CHECKED RLS 0 100 200 400 HORIZONTAL SCALE IN FEET

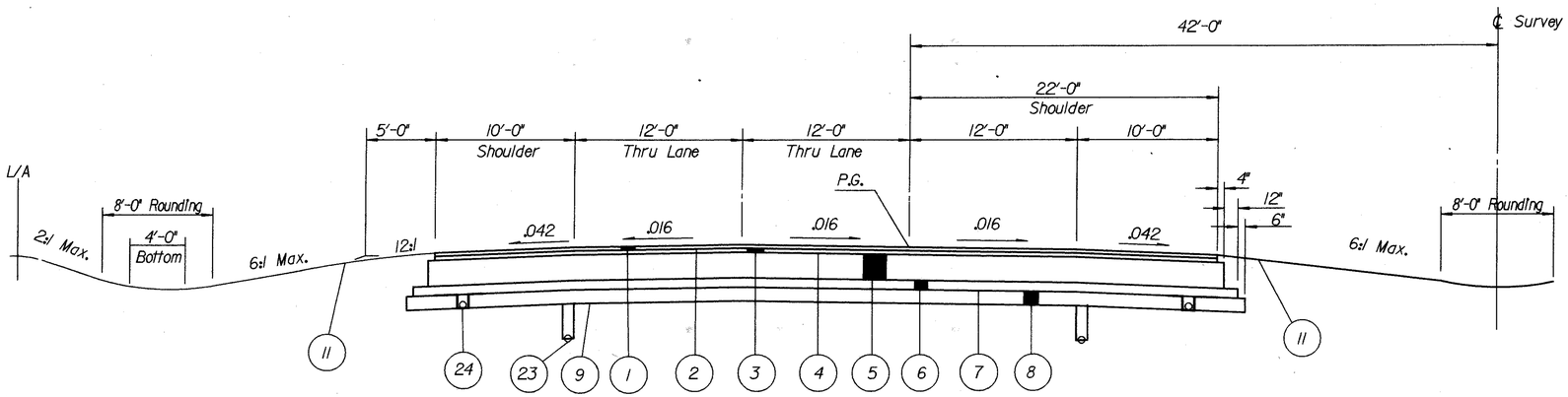

NORMAL SECTION SOUTHBOUND LANES

Applies @:

Sta. 833+00.00 to Sta. 856+00.00 = 2,300.00 Lin. Ft.
Sta. 893+75.00 to Sta. 904+05.30 = 1,030.30 Lin. Ft.
Total = 3,330.30 Lin. Ft.

NOTE: THERE SHALL BE NO DEDUCTION FOR ITEM 304 DUE TO THE INSTALLATION OF UNDERDRAINS. FOR UNDERDRAIN NOTES AND DETAILS SEE SHEETS 35, 538 AND 550.

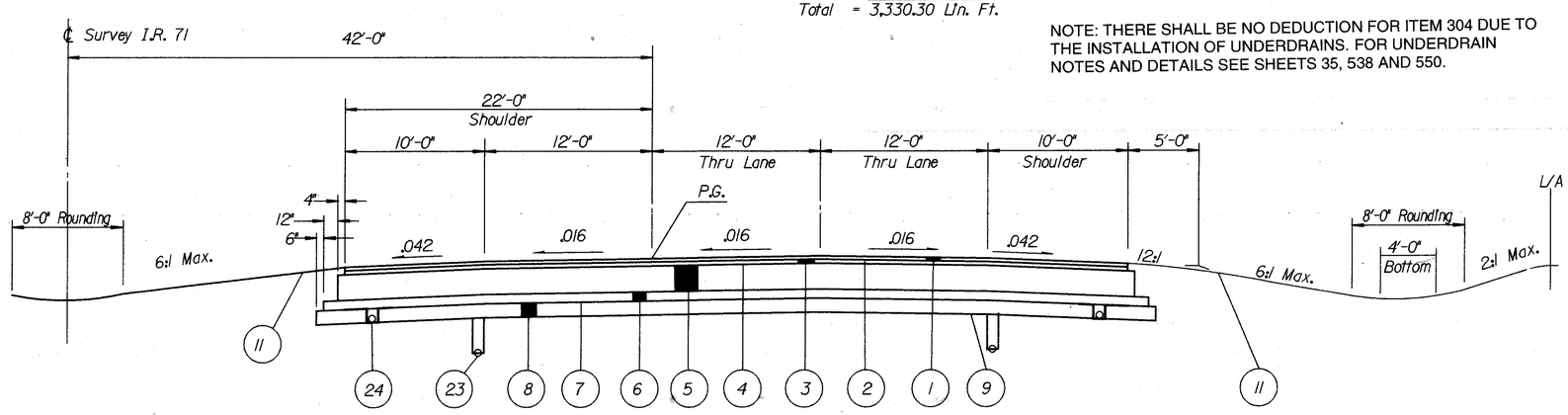

NORMAL SECTION NORTHBOUND LANES

Applies @:

Sta. 833+00.00 to Sta. 856+00.00 = 2,300.00 Lin. Ft.
Sta. 893+75.00 to Sta. 938+45.25 = 4,470.25 Lin. Ft.
Total = 6,770.25 Lin. Ft.

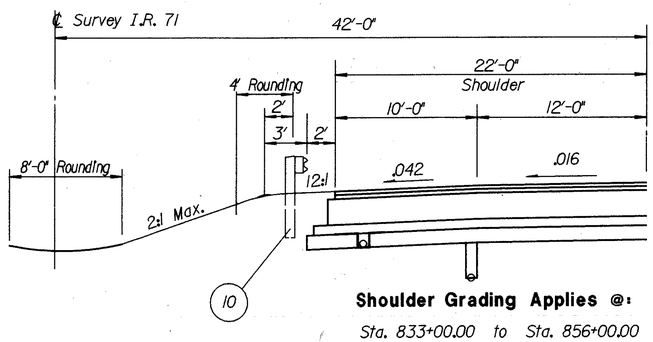

Shoulder Grading Applies @:

Sta. 833+00.00 to Sta. 856+00.00 NB

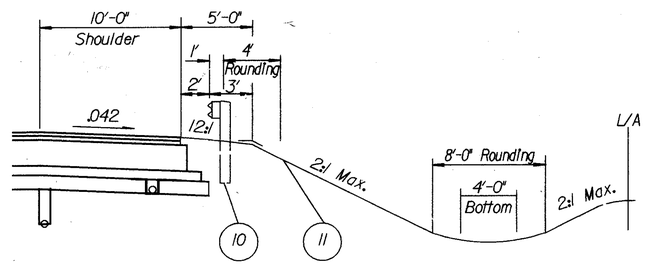

Shoulder Grading Applies @:

See Plan And Profile Sheets for Guardrail locations

NOTE: MAINLINE I-71 PAVEMENT WARRANTY
THE MAINLINE PAVEMENT BUILDUP ON I-71 SHOWN AS REFERENCES 1-5 AND 25 ARE FOR INFORMATION ONLY. THESE ITEMS ARE TO BE ITEM 880 ASPHALT CONCRETE (7 YEAR WARRANTY).

PROPOSED LEGEND

1	1 ½"	Item 858 Asphalt Concrete Surface Course, 12.5mm, Type A (446)
2		Item 407 Tack Coat for Intermediate Course (See the General Notes)
3	1 ¾"	Item 858 Asphalt Concrete Intermediate Course, 19mm, Type A (446)
4		Item 407 Tack Coat (See the General Notes)
5	11"	Item 302 Bituminous Aggregate Base, PG64-22
6	4"	Item 855 Asphalt Treated Free Draining Base
7		Item 408 Bituminous Prime Coat - Applied at the rate of 0.4 Gals./SY.
8	6"	Item 304 Aggregate Base
9		Item 203 Subgrade Compaction
10		Guardrail, Type 5
11		Item 870, Seeding And Mulching
12		Item 615 Temporary Pavement, As Per Plan (See Sheet 40.)
13		Item 830 Curb, Type 6, As Per Plan (See Sheet 506.)
14		Item 254 Pavement Planing, Bituminous
15	Varies	Item 302 Bituminous Aggregate Base, PG64-22 Varies from 11" to 9"
16	9¼"	Item 304 Aggregate Base
17		Item 611 Reinforced Concrete Approach Slab (T=15")
18		Item 830 Concrete Median
19	11"	Item 452 Plain Concrete Pavement
20	Varies	Item 452 Plain Concrete Pavement Varies from 9" to 11"
21		Item 611 Reinforced Concrete Approach Slab (T=12")
22	12¼"	Item 304 Aggregate Base
23		Item 605 4" Shallow Pipe Underdrain
24		Item 605 4" Shallow Pipe Underdrain with Fabric Wrap, 712.09 Type A
25	9"	Item 302 Bituminous Aggregate Base, PG64-22

PROPOSED TYPICAL SECTIONS

MED-71-15.78

DESIGN FILE : i:\pd_MED_IR71\DGN\Typicals\proposed\gy01.dgn
USERNAME : jpuente
DATE : 29-NOV-1999
TIME : 10:39

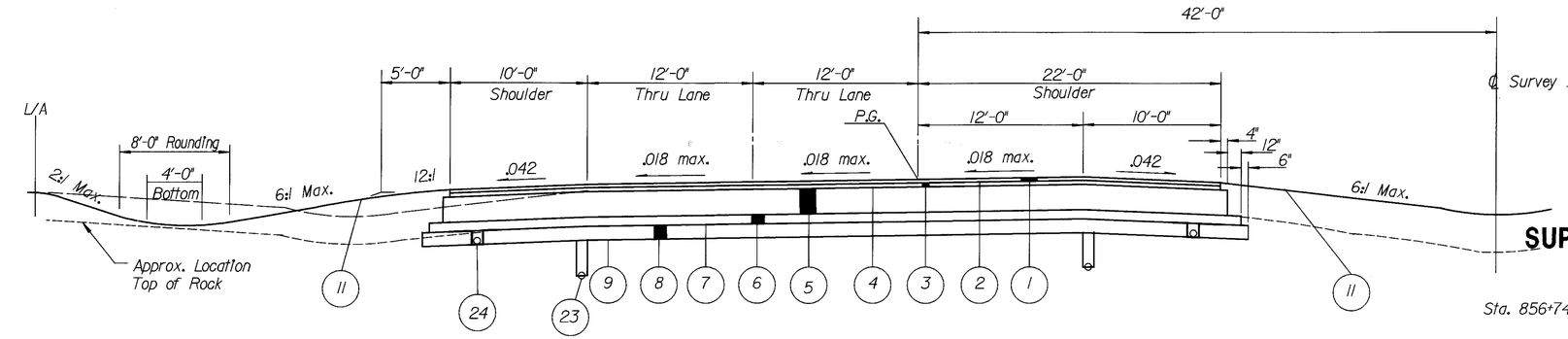

SUPERELEVATED SECTION SOUTHBOUND LANES

Applies @:

Sta. 856+74.00 to Sta. 864+00.00 = 726.00 Lin. Ft.
Total = 726.00 Lin. Ft.

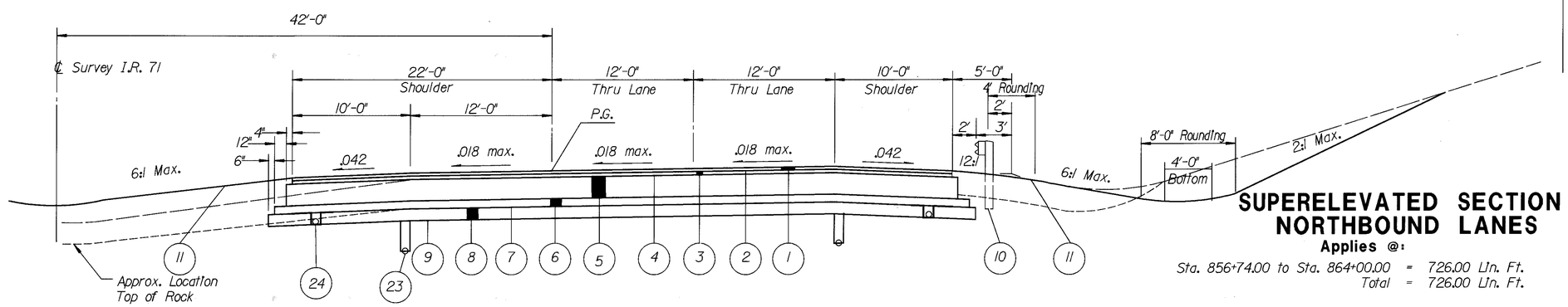

SUPERELEVATED SECTION NORTHBOUND LANES

Applies @:

Sta. 856+74.00 to Sta. 864+00.00 = 726.00 Lin. Ft.
Total = 726.00 Lin. Ft.

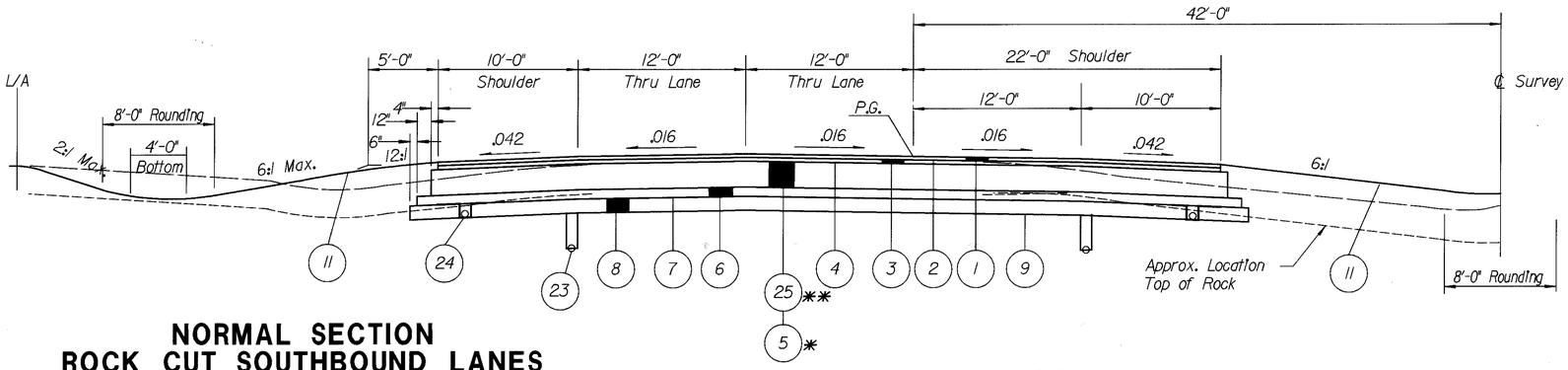

NORMAL SECTION ROCK CUT SOUTHBOUND LANES

Applies @:

* Sta. 856+00.00 to Sta. 856+74.00 = 74.00 Lin. Ft.
** Sta. 1020+00.00 to Sta. 1024+00.00 = 400.00 Lin. Ft.

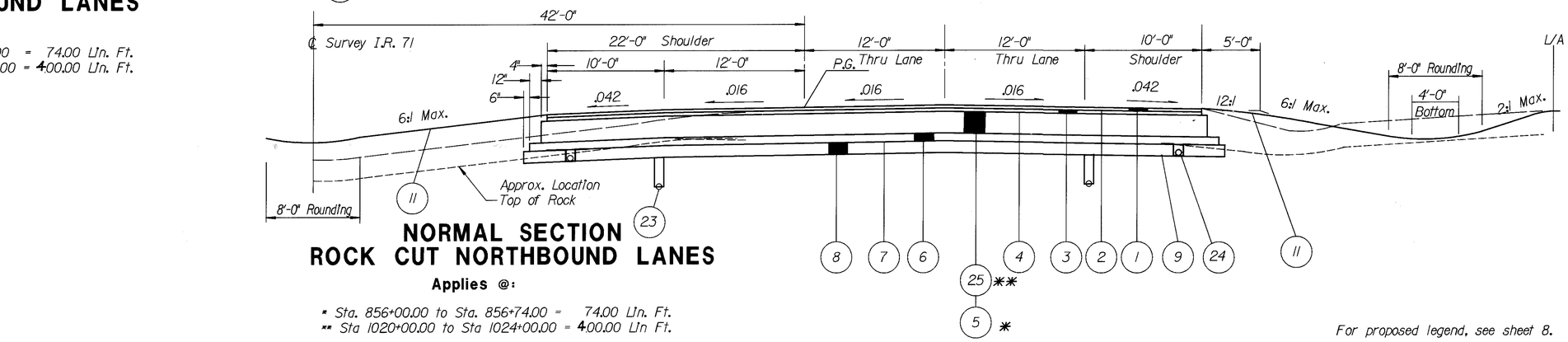

NORMAL SECTION ROCK CUT NORTHBOUND LANES

Applies @:

* Sta. 856+00.00 to Sta. 856+74.00 = 74.00 Lin. Ft.
** Sta 1020+00.00 to Sta 1024+00.00 = 400.00 Lin Ft.

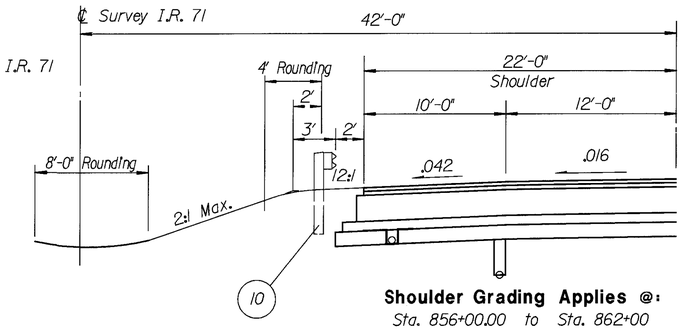

Shoulder Grading Applies @:

Sta. 856+00.00 to Sta. 862+00

For proposed legend, see sheet 8.

PROPOSED TYPICAL SECTIONS

MED-71-15.78

DESIGN FILE : I:\pd_MED_IR71\DGN\Typicals\proposed\gy02.dgn
USERNAME : jpuente
DATE : 29-NOV-1999
TIME : 10:41

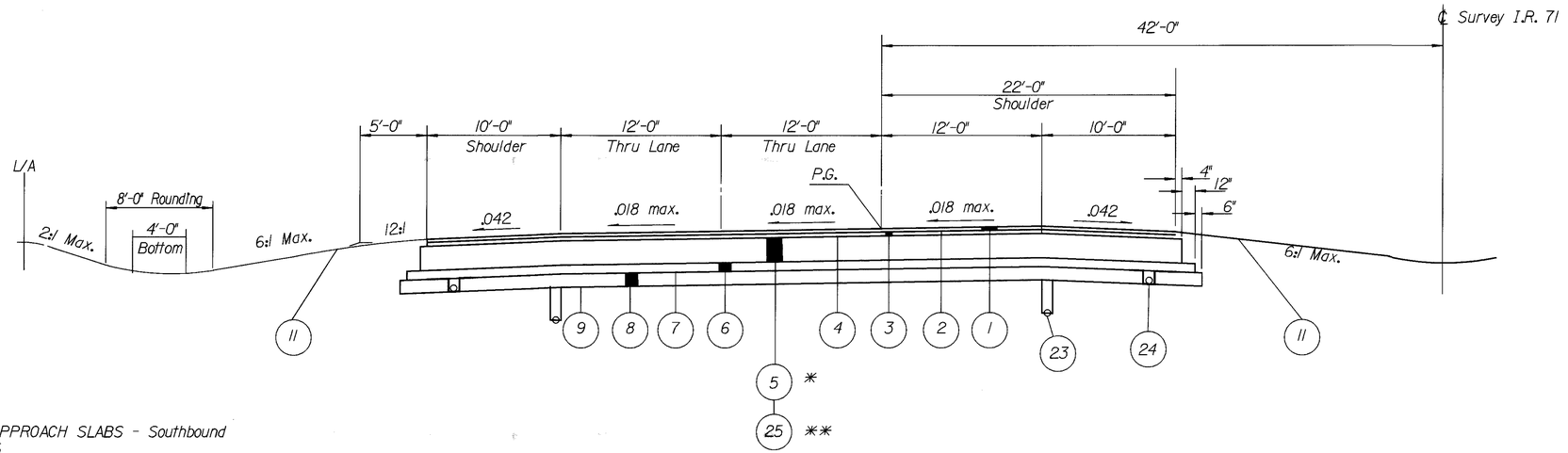

STRUCTURE & APPROACH SLABS - Southbound
MED - 71 - 1685
Sta. 888+95.43 to Sta. 891+22.11 = 226.66 Lin. Ft.

SUPERELEVATED SECTION SOUTHBOUND LANES

Applies @:

Sta. 864+00.00 to Sta. 893+75.00	=	2,975.00 Lin. Ft.
** Sta. 1201+69.00 to Sta. 1203+00.00	=	131.00 Lin. Ft.
* Sta. 1203+00.00 to Sta. 1235+74.00	=	3,274.00 Lin. Ft.
Deduct for structure & approach slabs	=	- 226.66 Lin. Ft.
Total	=	6,153.34 Lin. Ft.

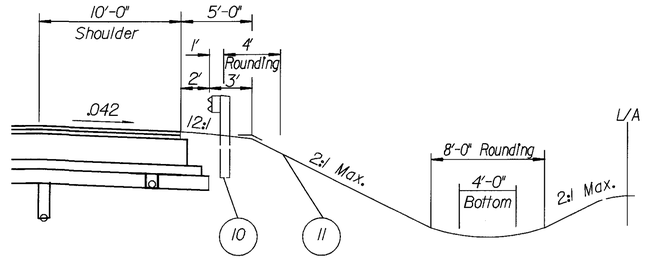

Shoulder Grading Applies @:

See Plan And Profile Sheets for Guardrail locations

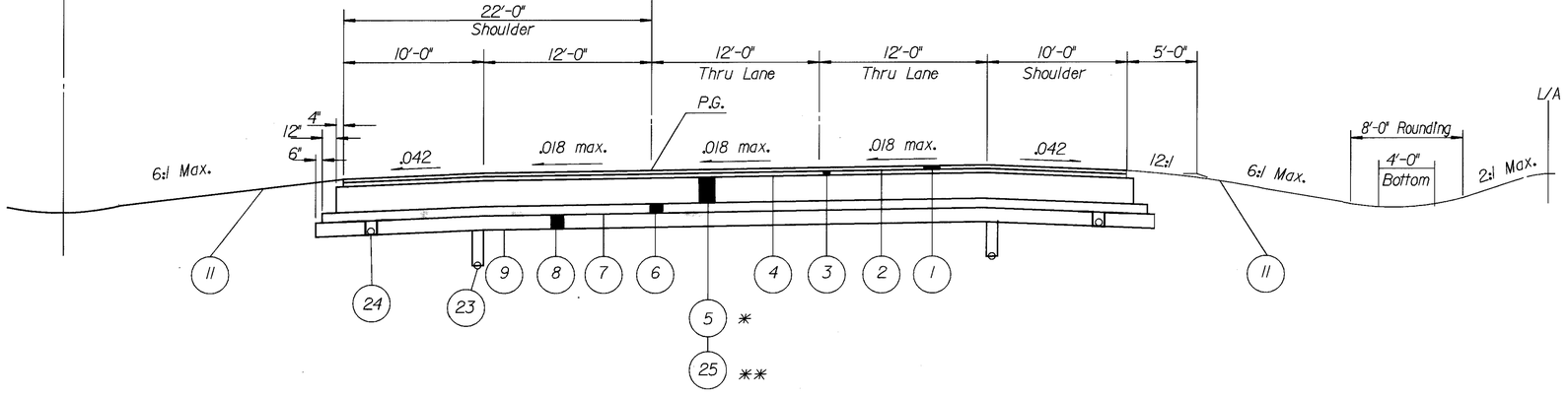

SUPERELEVATED SECTION NORTHBOUND LANES

Applies @:

Sta. 864+00.00 to Sta. 893+75.00	=	2,975.00 Lin. Ft.
** Sta. 1201+69.00 to Sta. 1203+00.00	=	131.00 Lin. Ft.
* Sta. 1203+00.00 to Sta. 1235+74.00	=	3,274.00 Lin. Ft.
Deduct for structure & approach slabs	=	- 226.66 Lin. Ft.
Total	=	6,153.34 Lin. Ft.

STRUCTURE & APPROACH SLABS - Northbound
MED - 71 - 1685
Sta. 889+29.49 to Sta. 891+56.17 = 226.66 Lin. Ft.

For Proposed Legend, see sheet 8.

For Superelevation Tables, see sheets 147-148.

PROPOSED TYPICAL SECTIONS

MED-71-15.78

10
940

DESIGN FILE : i:\pd_MED_JR71\DGN\Typicals\proposed\gy03.dgn
USERNAME : jpuente
DATE : 29-NOV-1999
TIME : 11:08

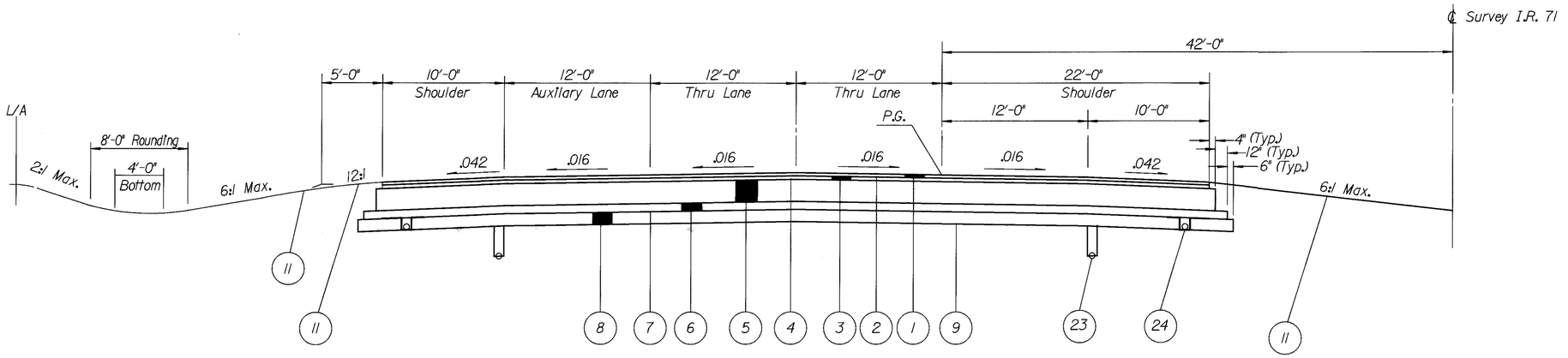

NORMAL SECTION SOUTHBOUND LANES

Applies @:

Sta. 904+05.30 to Sta. 964+00.00 = 5,994.70 Lin. Ft.

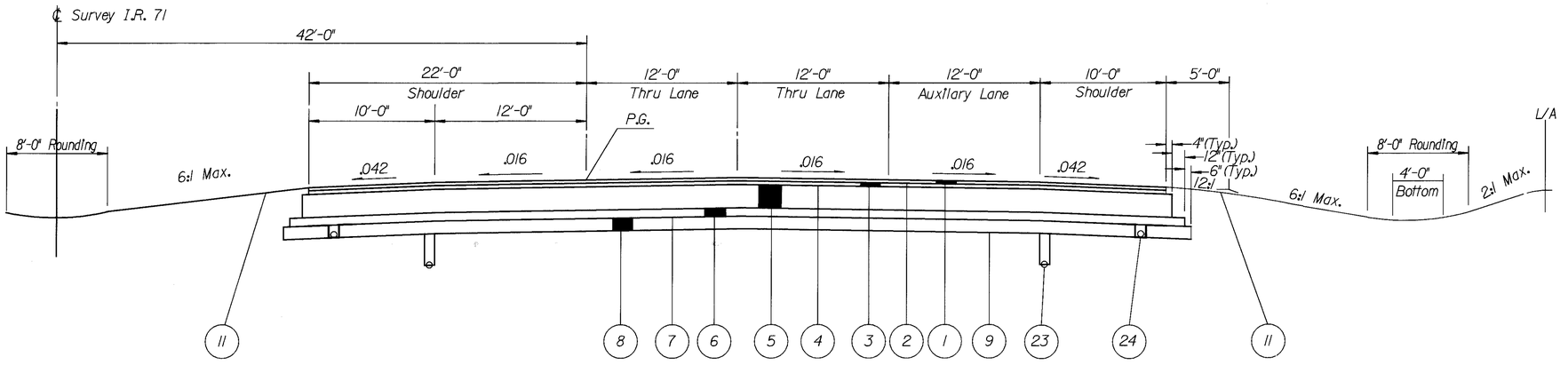

NORMAL SECTION NORTHBOUND LANES

Applies @:

Sta. 938+45.25 to Sta. 969+33.40 = 3,088.15 Lin. Ft.

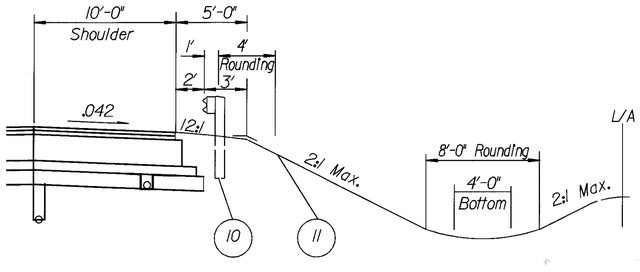

Shoulder Grading Applies @:

See Plan And Profile Sheets for Guardrail locations

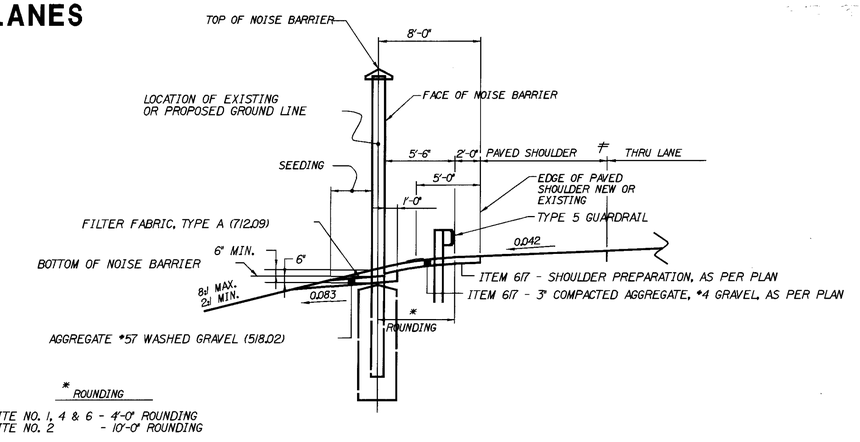

NOISE BARRIER TYPICAL SECTION

For Proposed Legend, see sheet 8.

PROPOSED TYPICAL SECTIONS

MED-71-15.78

11
940

DESIGN FILE : I:\pd_MED_JR71\DGN\Typicals\proposed\gy04.dgn
USERNAME : jpuente
DATE : 29-NOV-1999
TIME : 12:43

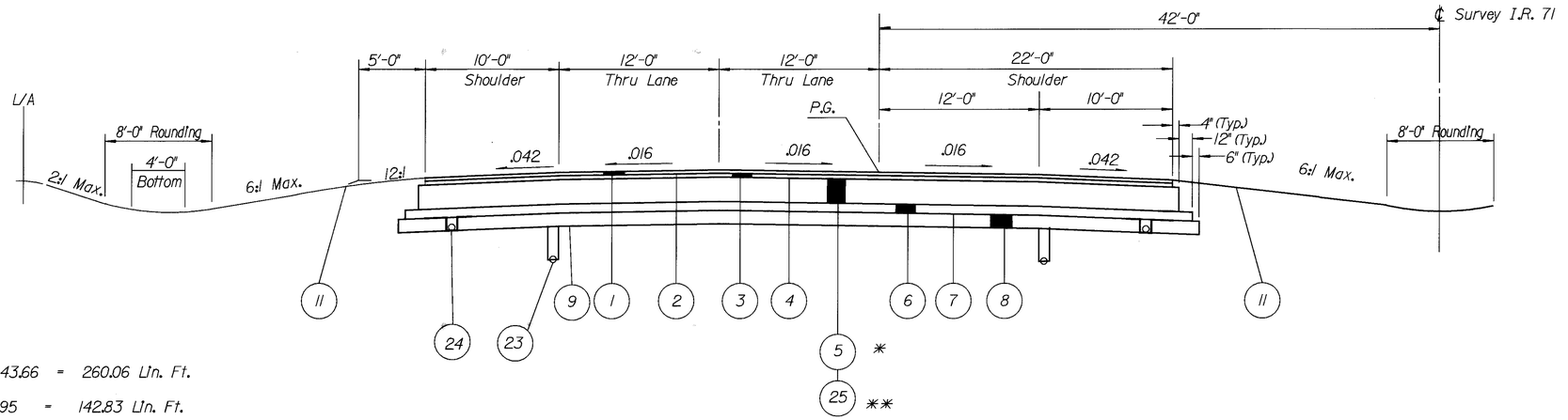

APPROACH SLABS AND
STRUCTURES - Southbound
MED - 71 - 1870
Sta. 985+83.60 to Sta. 988+43.66 = 260.06 Lin. Ft.
MED - 71 - 1918
Sta. 1012+40.12 to Sta. 1013+82.95 = 142.83 Lin. Ft.
MED - 71 - 1992
Sta. 1051+15.59 to Sta. 1053+86.09 = 270.50 Lin. Ft.
MED - 71 - 2090
Sta. 1102+80.42 to Sta 1105+62.91 = 282.49 Lin. Ft.
Total = 955.88 Lin. Ft.

NORMAL SECTION SOUTHBOUND LANES

Applies @:

* Sta . 964+00.00 to Sta. 977+00.00 = 1,300.00 Lin. Ft.
** Sta. 977+00.00 to Sta. 1020+00.00 = 4,300.00 Lin. Ft.
** Sta. 1024+00.00 to Sta. 1201+69.00 = 17,769.00 Lin. Ft.
* Sta. 1235+74.00 to Sta. 1260+00.00 = 2,426.00 Lin. Ft.
Deduct for structures = 955.88 Lin. Ft.
Total = 24,840.70 Lin. Ft.

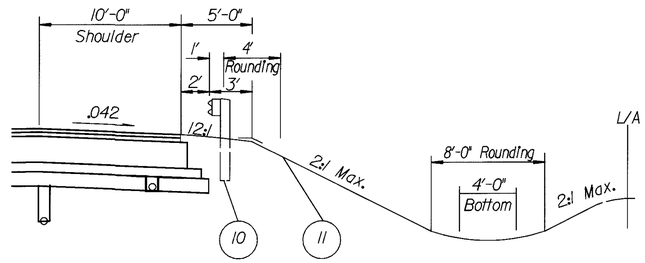

Shoulder Grading Applies @:

See Plan And Profile Sheets for Guardrail locations

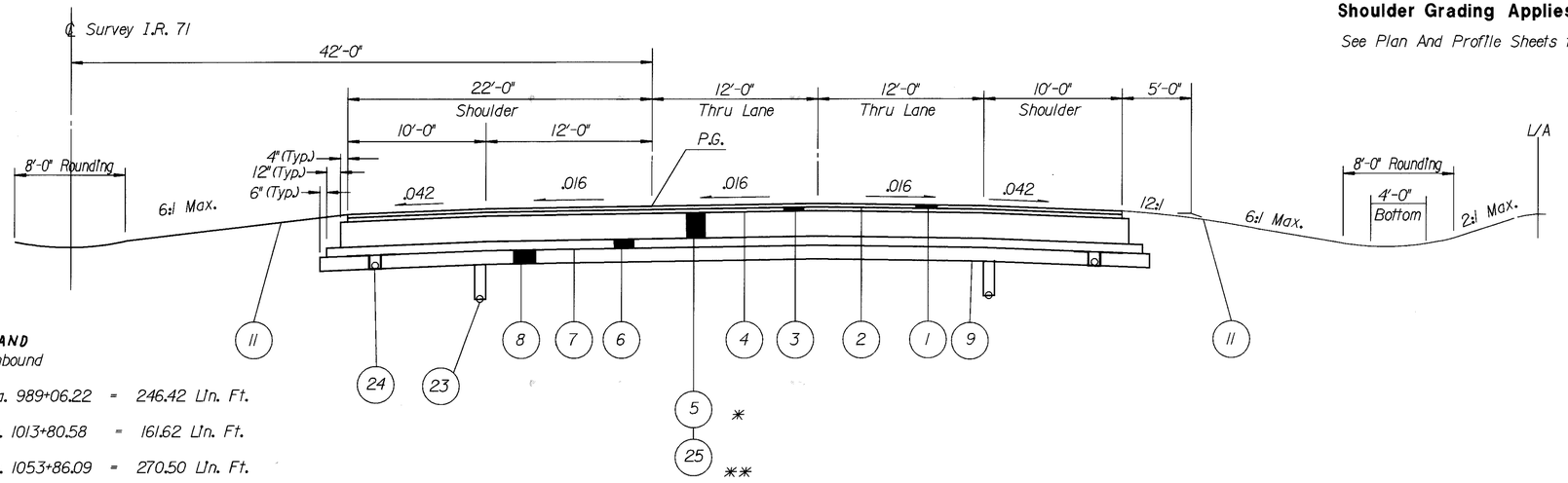

APPROACH SLABS AND
STRUCTURES - Northbound
MED - 71 - 1870
Sta. 986+59.80 to Sta. 989+06.22 = 246.42 Lin. Ft.
MED - 71 - 1918
Sta. 1012+18.96 to Sta. 1013+80.58 = 161.62 Lin. Ft.
MED - 71 - 1992
Sta. 1051+15.59 to Sta. 1053+86.09 = 270.50 Lin. Ft.
MED - 71 - 2090
Sta. 1103+05.49 to Sta. 1105+87.89 = 285.27 Lin. Ft.
Total = 963.81 Lin. Ft.

NORMAL SECTION NORTHBOUND LANES

Applies @:

* Sta. 969+33.40 to Sta. 977+00.00 = 766.60 Lin. Ft.
** Sta. 977+00.00 to Sta. 1020+00.00 = 4,300.00 Lin. Ft.
** Sta. 1024+00.00 to Sta. 1201+69.00 = 17,769.00 Lin. Ft.
* Sta. 1235+74.00 to Sta. 1260+00.00 = 2,426.00 Lin. Ft.
Deduct for structures = 963.81 Lin. Ft.
Total = 24,341.13 Lin. Ft.

For Proposed Legend see sheet 8 .

DESIGN FILE : I:\pd_MED_IR71\DGN\Typicals\proposed\gy05.dgn
USERNAME : jpuente
DATE : 29-NOV-1999
TIME : 12:58

PROPOSED TYPICAL SECTIONS

MED-71-15.78

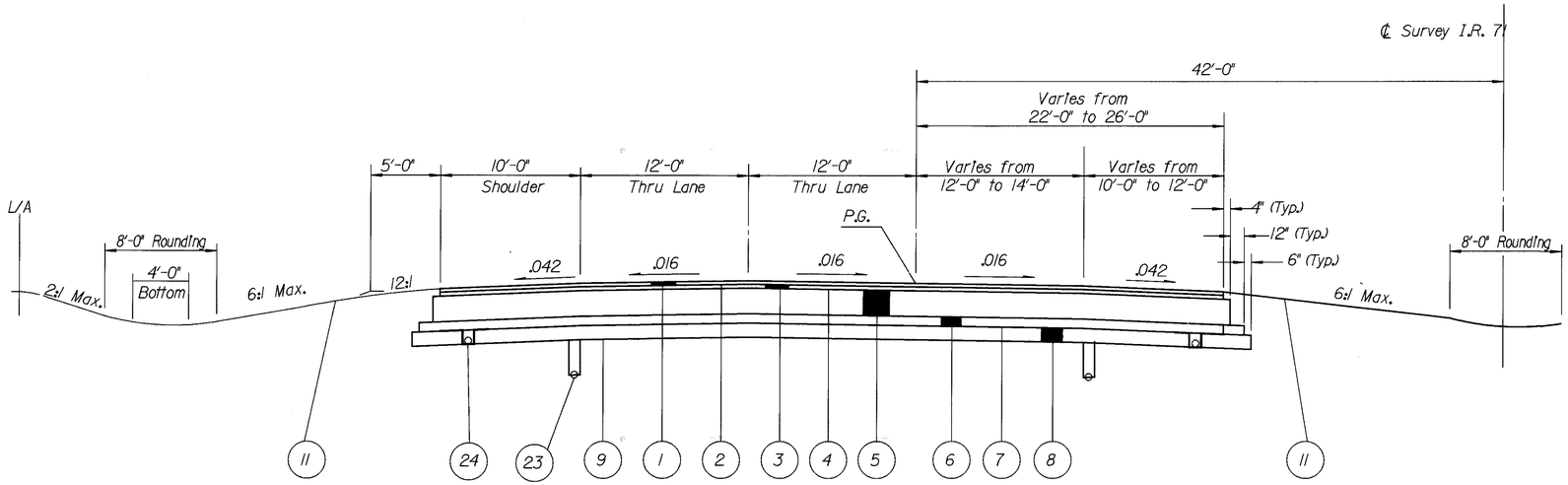

NORMAL SECTION SOUTHBOUND LANES

Applies @:

Sta. 1260+00.00 to Sta. 1263+00.00 = 300.00 Lin. Ft.
(Lane Taper to SR 303)

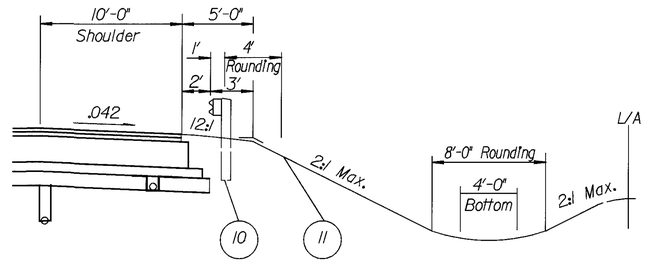

Shoulder Grading Applies @:

See Plan And Profile Sheets for Guardrail locations

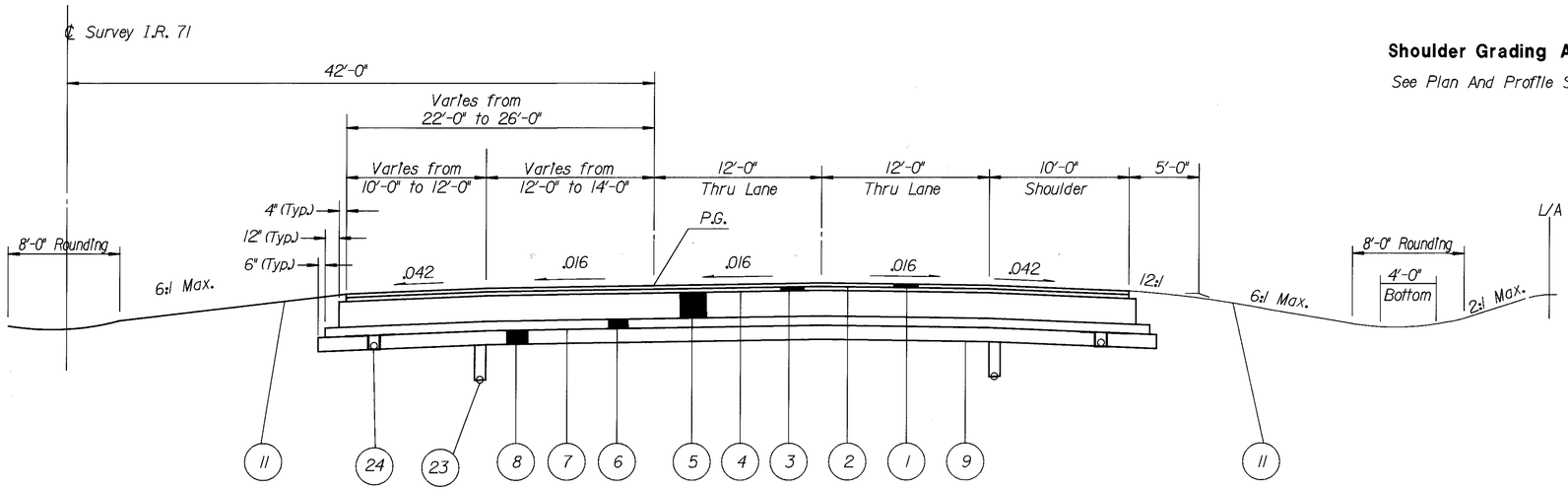

NORMAL SECTION NORTHBOUND LANES

Applies @:

Sta. 1260+00.00 to Sta. 1263+00.00 = 300.00 Lin. Ft.
(Lane Taper to SR 303)

For Proposed Legend, see sheet 8.

DESIGN FILE : i:\pd_MED_IR71\DGN\Typicals\proposed\gy06.dgn
USERNAME : jpuente
DATE : 29-NOV-1999
TIME : 13:01

PROPOSED TYPICAL SECTIONS

MED-71-15.78

13
940

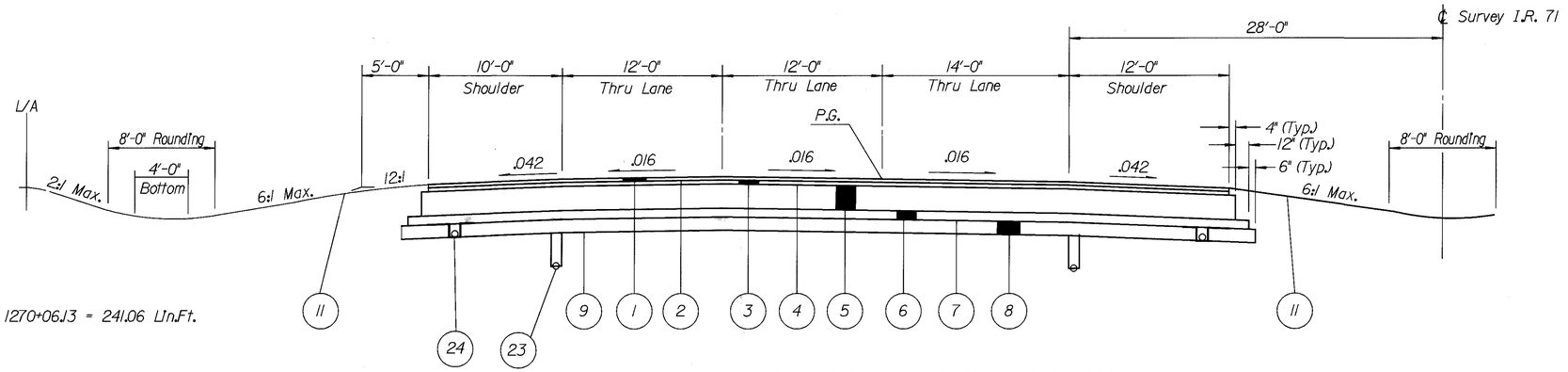

STRUCTURE
MED - 71 - 2402
Sta. 1267+65.07 to Sta. 1270+06.13 = 241.06 Lin.Ft.

NORMAL SECTION SOUTHBOUND LANES

Applies @:

Sta. 1263+00.00 to Sta. 1394+40.00 = 13,140.00 Lin. Ft.
Deduct for structure = 241.06 Lin. Ft.
Total = 12,898.94 Lin. Ft.

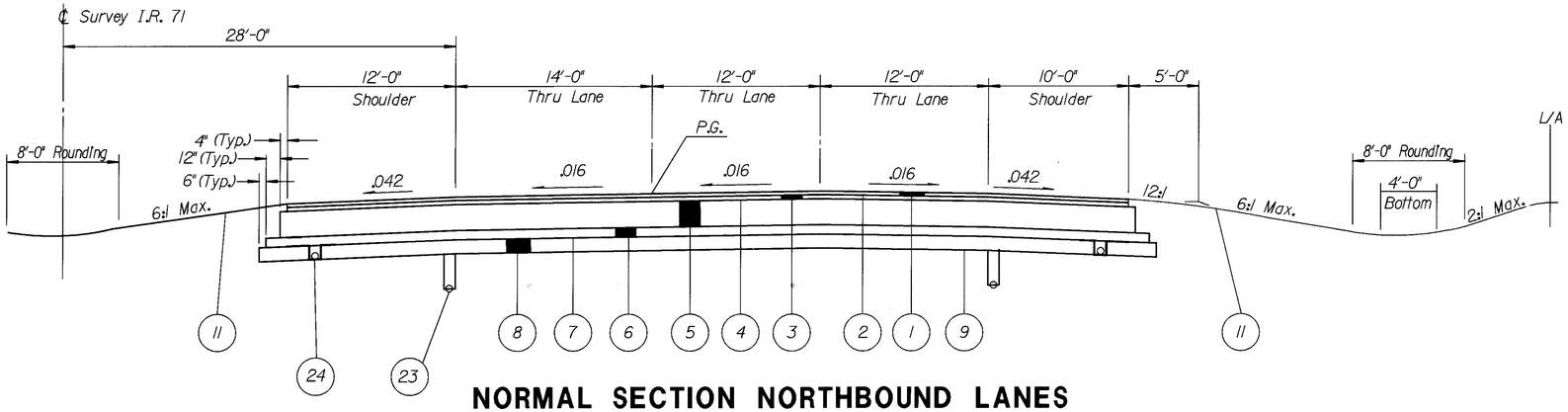

STRUCTURE
MED - 71 - 2402
Sta. 1267+65.07 to Sta. 1270+06.13 = 241.06 Lin.Ft.

NORMAL SECTION NORTHBOUND LANES

Applies @:

Sta. 1263+00.00 to Sta. 1394+40.00 = 13,140.00 Lin. Ft.
Deduct for structure = 241.06 Lin. Ft.
Total = 12,898.94 Lin. Ft.

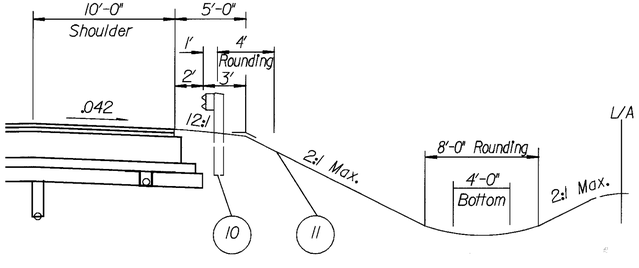

Shoulder Grading Applies @:

See Plan And Profile Sheets for Guardrail locations

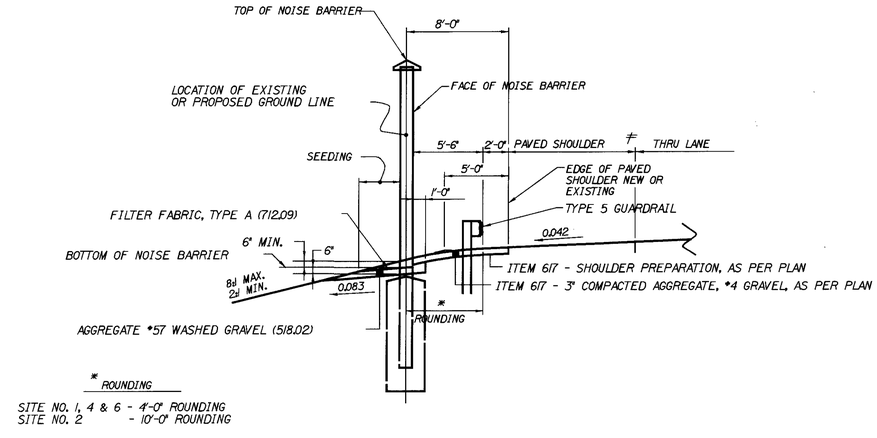

NOISE BARRIER TYPICAL SECTION

For Proposed Legend, see sheet 8.

DESIGN FILE : i:\pd_MED_IR71\DGN\Typicals\proposed\gy07.dgn
USERNAME : jpuente
DATE : 29-NOV-1999
TIME : 13:04

PROPOSED TYPICAL SECTIONS

MED-71-15.78

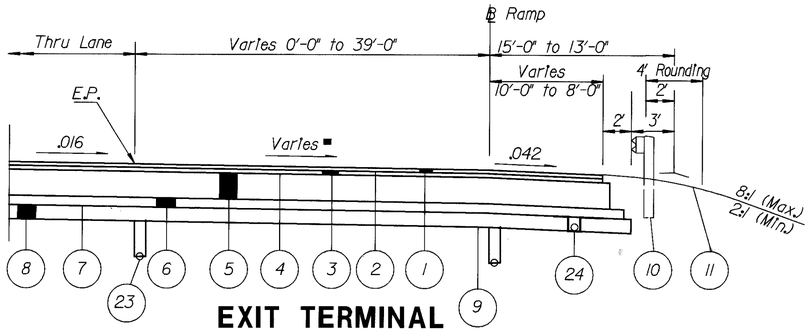

EXIT TERMINAL DECELERATION LANE

Applies @:

S.R. 18 - Ramp C Sta. 0+00.00 to Sta. 11+86.77
S.R. 3 - Ramp B Sta. 62+94.77 to Sta. 70+97.00
- Ramp C Sta. 94+97.92 to Sta. 102+97.92
S.R. 303 - Ramp A Sta. 58+15.93 to Sta. 66+15.93
- Ramp C Sta. 27+21.07 to Sta. 35+21.07
Rest Area - Ramp B Sta. 50+81.56 to Sta. 58+81.56
- Ramp C Sta. 69+03.50 to Sta. 77+03.50

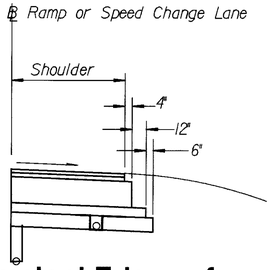

Typical Edge of Shoulder Treatment

■ See pavement elevations on sheets .

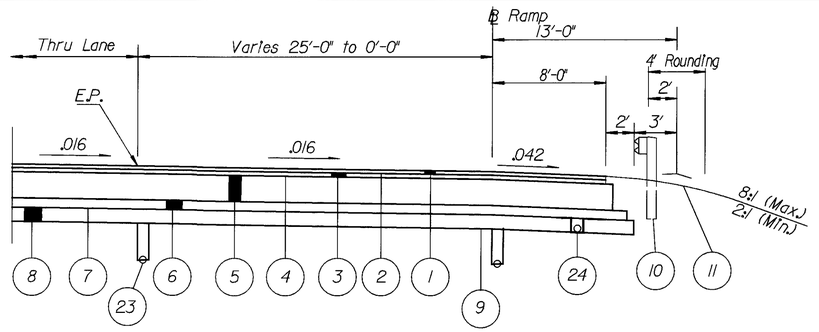

ENTRANCE TERMINAL ACCELERATION LANE

Applies @:

S.R. 18 - Ramp A Sta. 0+00.00 to Sta. 11+92.79
S.R. 3 - Ramp A Sta. 98+06.87 to Sta. 110+06.64
- Ramp D Sta. 55+85.64 to Sta. 67+85.64
S.R. 303 - Ramp B Sta. 18+86.20 to Sta. 31+93.03
- Ramp D Sta. 21+05.28 to Sta. 34+01.28
Rest Area - Ramp A Sta. 18+95.63 to Sta. 31+00.00
- Ramp D Sta. 99+17.10 to Sta. 111+25.02

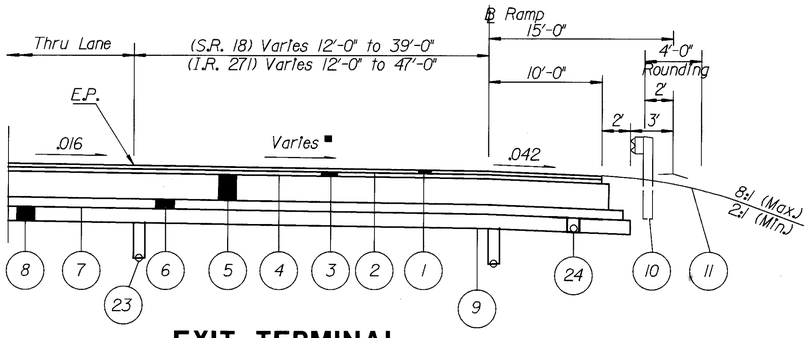

EXIT TERMINAL DECELERATION LANE

Applies @:

SR 18 - Ramp B Sta. 11+13.19 to Sta. 15+66.68
IR 271 EB - Sta. 969+33.40 to Sta. 976+92.92

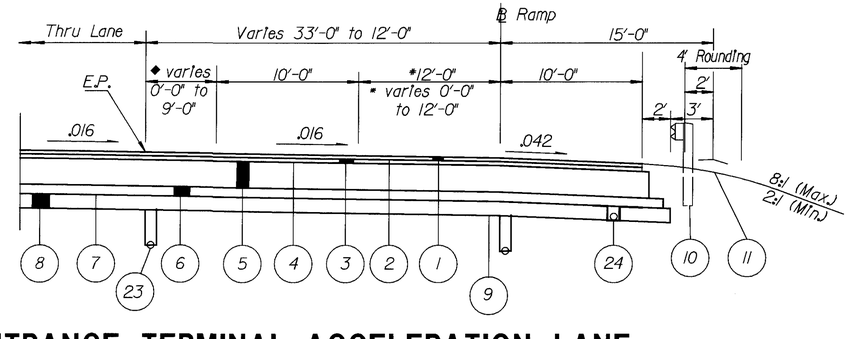

ENTRANCE TERMINAL ACCELERATION LANE

Applies @:

IR 271 WB - ▪ Sta 937+55.07 to Sta. 945+95.07
* Sta. 945+95.07 to Sta. 965+95.07
◆▪ Sta. 965+95.07 to Sta. 970+27.07

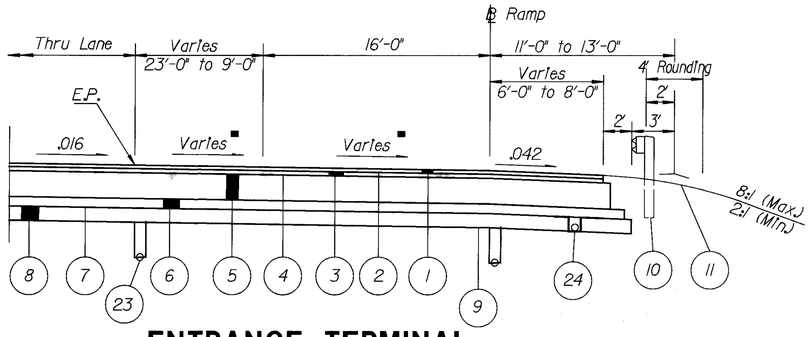

ENTRANCE TERMINAL PACING LANE

Applies @:

S.R. 18 - Ramp A Sta. 11+92.79 to Sta. 16+96.40
S.R. 3 - Ramp A Sta. 93+02.65 to Sta. 98+06.87
- Ramp D Sta. 67+85.64 to Sta. 72+77.26
S.R. 303 - Ramp B Sta. 31+93.03 to Sta. 37+00.00
- Ramp D Sta. 38+13.48 to Sta. 34+01.28
Rest Area - Ramp A Sta. 31+00.00 to Sta. 35+17.53
- Ramp D Sta. 94+81.23 to Sta. 99+17.10

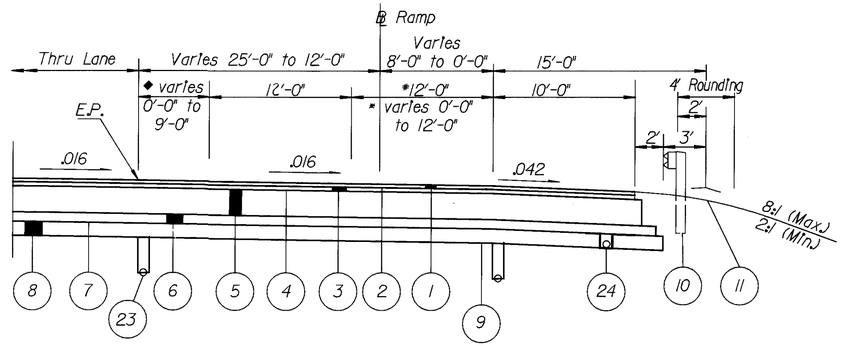

ENTRANCE TERMINAL ACCELERATION LANE

Applies @:

S.R. 18 - Ramp D *Sta. 905+73.25 to Sta. 938+45.25
* Sta. 910+05.25 to Sta. 930+05.25
▪ Sta. 930+05.25 to Sta. 938+45.25
◆ Sta. 905+73.25 to Sta. 910+02.25

For Proposed Legend, see sheet 8.

DESIGN FILE : i:\pd_med_1r71\dgn\typicals\proposed\gy08.dgn
USERNAME : jrogers
DATE : 01-DEC-1999
TIME : 14:08

PROPOSED TYPICAL SECTIONS

MED-71-15.78

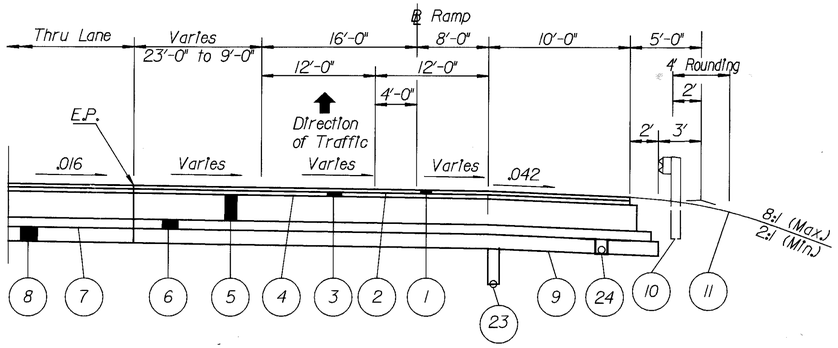

ENTRANCE TERMINAL PACING LANE

Applies @:

Sta. 9+85.26 to Sta. 14+74.55
SR 18 Ramp D

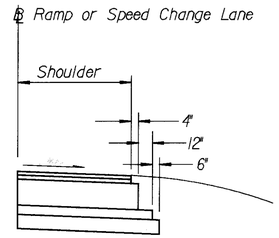

Typical Edge of Shoulder Treatment

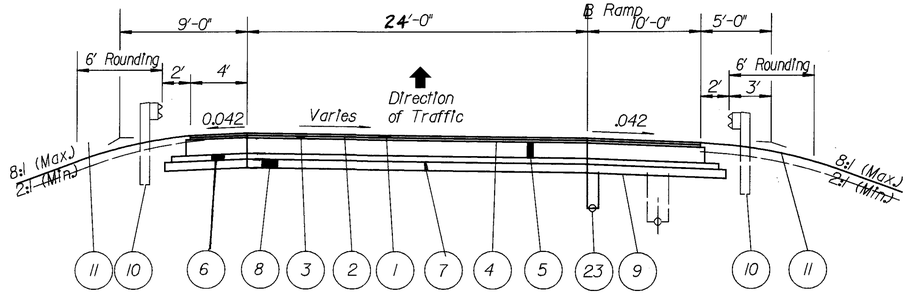

IR 271 RAMPS

Applies @:

WB Ramp Sta. 973+64.26 to Sta. 998+98.25
EB Ramp Sta. 976+92.92 to Sta. 980+62.95
NOTE: SEE SUPERELEVATION TABLE ON SHEET 424

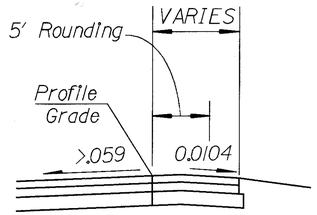

RAMP OUTSIDE SHOULDER DETAIL

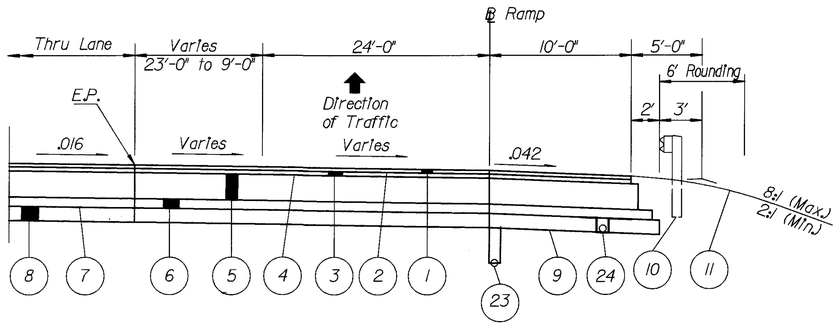

ENTRANCE TERMINAL PACING LANE

Applies @:

IR 271 WB Sta. 970+27.07 to Sta. 973+04.15

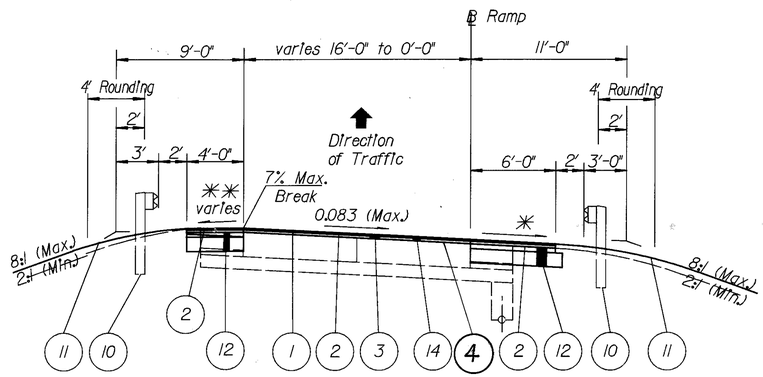

SUPERELEVATED SECTION

Applies @:

Sta. 44+17.52 to Sta. 47+96.07
SR 303 Ramp A

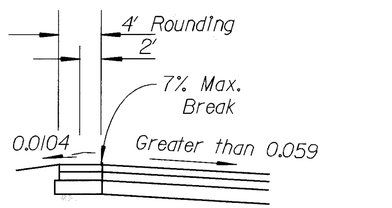

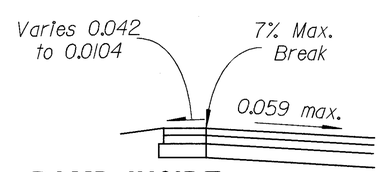

RAMP INSIDE SHOULDER DETAILS

NOTE: Superelevations on ramps shall match that of the existing concrete pavement.

For Proposed Legend, see sheet 8.

PROPOSED TYPICAL SECTIONS

MED-71-15.78

16
940

DESIGN FILE : i:\pd_med_lr71\dgn\typicals\proposed\gy09.dgn
USERNAME : jrogers
DATE : 06-DEC-1999
TIME : 08:05

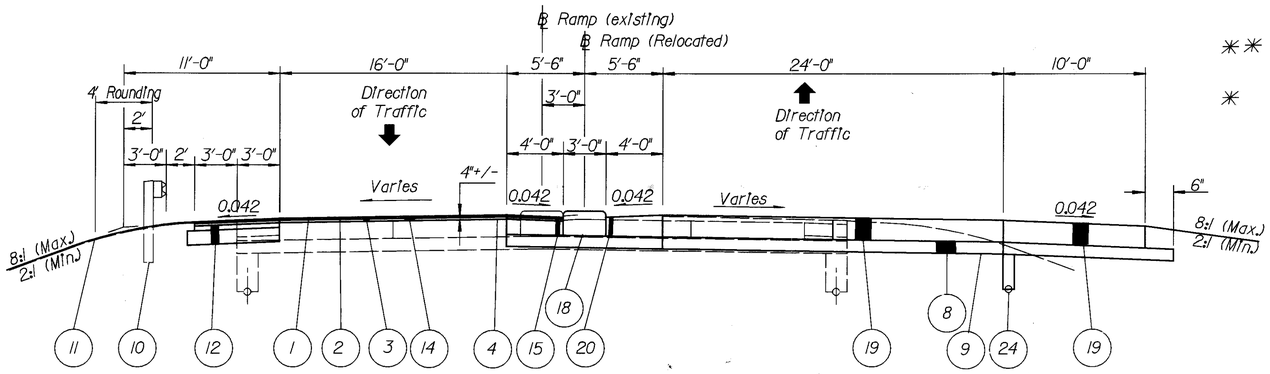

SUPERELEVATED SECTION
S.R. 303 INTERCHANGE RAMPS C&D

Applies @:

Sta. 43+99.18 to Sta. 47+21.54

** see shoulder details on this sheet

* Varies 0.042 or rate of superelevation if greater

■ See pavement elevations on sheets 468, 471, 474, 480 and 481.

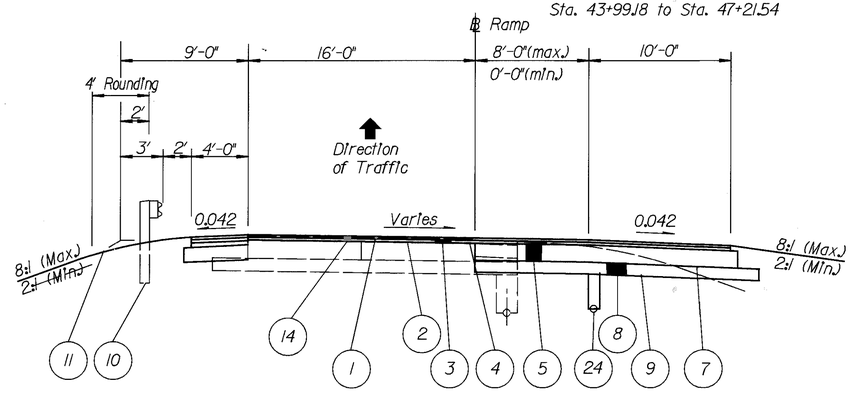

SUPERELEVATED SECTION
S.R. 303 INTERCHANGE RAMP C

Applies @:

Sta. 39+99.21 to Sta. 43+99.18

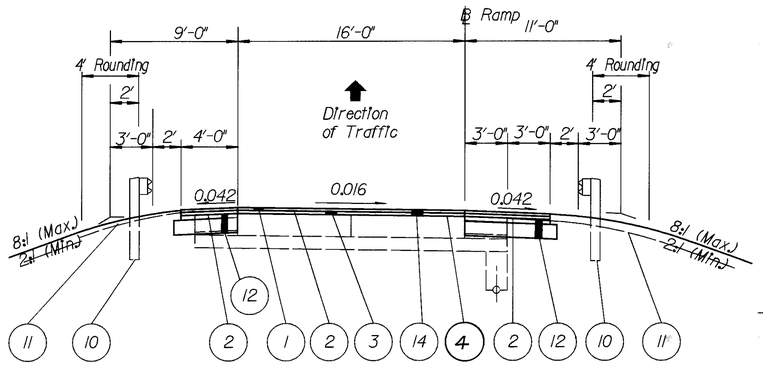

NORMAL SECTION

Applies @:

S.R. 3 - Ramp D Sta. 80+20.51 to Sta. 81+29.92
S.R. 303 - Ramp B Sta. 41+33.96 to Sta. 45+20.26
Rest Area - Ramp C Sta. 78+79.33 to Sta. 81+02.04
Ramp D Sta. 89+35.36 to Sta. 90+88.61

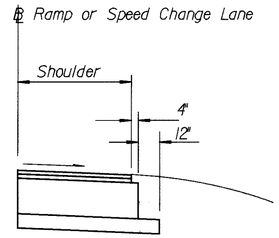

Typical Edge of Shoulder Treatment For Asphalt Pavement

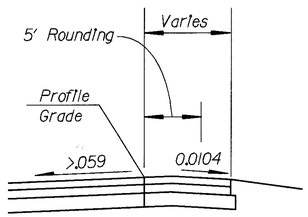

RAMP OUTSIDE SHOULDER DETAIL

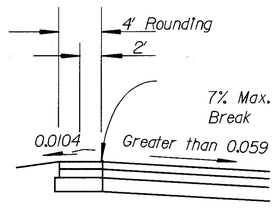

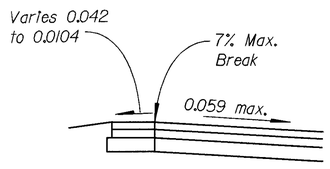

RAMP INSIDE SHOULDER DETAILS

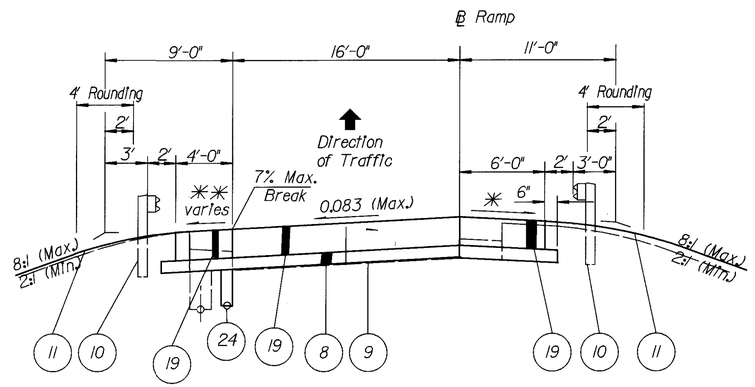

SUPERELEVATED SECTION
RAMPS B & C @ S.R. 3 INTERCHANGE

Applies @:

Ramp B Sta. 82+84.69 to Sta. 84+96.74
Ramp C Sta. 80+95.99 to Sta. 83+48.24
See Joint Details on sht. 465.

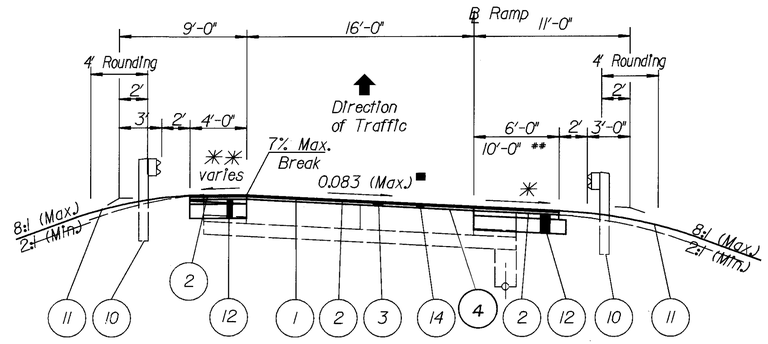

SUPERELEVATED SECTION

Applies @:

Rest Area : Ramp C Sta. 77+03.15 to Sta. 78+79.33
Ramp C Sta. 81+02.04 to Sta. 84+99.16
Ramp D Sta. 90+88.61 to Sta. 94+81.23
Ramp A Sta. 35+17.53 to Sta. 40+26.65
Ramp B Sta. 45+15.49 to Sta. 50+81.56

S.R. 3: Ramp A - Sta. 84+62.93 to Sta. 93+08.54
Ramp B - Sta. 70+96.38 to Sta. 81+41.97
Ramp C - Sta. 84+51.76 to Sta. 94+96.69
Ramp D - Sta. 72+77.17 to Sta. 80+20.51

S.R. 303: Ramp B - Sta. 36+99.08 to Sta. 41+17.52
Ramp B Spur - Sta. 44+17.52 to Sta. 50+96.07
Ramp A - Sta. 52+88.51 to Sta. 58+15.93
Ramp A Spur - Sta. 46+12.56 to Sta. 51+73.84
** Ramp C - Sta. 35+21.07 to Sta. 39+99.21
Ramp D - Sta. 43+99.18 to Sta. 38+13.48
Sta. 51+09.93 to Sta. 44+67.82

NOTE: Superelevations on ramps shall match that of the existing concrete pavement.

For Proposed Legend see sheet 8.

PROPOSED TYPICAL SECTIONS

MED-71-15.78

DESIGN FILE : I:\pd_med_lr71\dgn\typicals\proposed\gy10.dgn
USERNAME : jrogers
DATE : 01-DEC-1999
TIME : 14:57

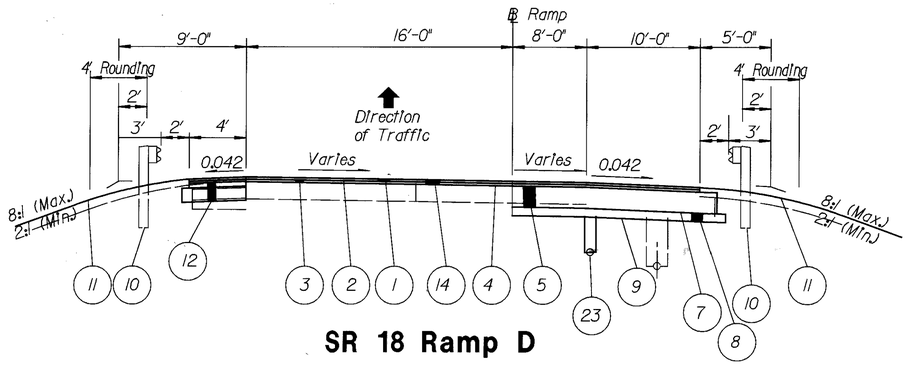

SR 18 Ramp D

Applies @:

Sta 0+00.00 to Sta 9+85.26

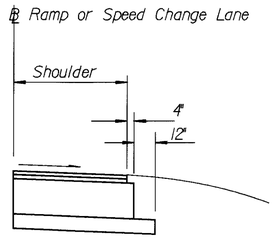

Typical Edge of Shoulder Treatment

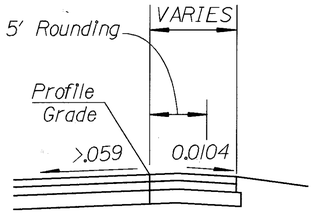

RAMP OUTSIDE SHOULDER DETAIL

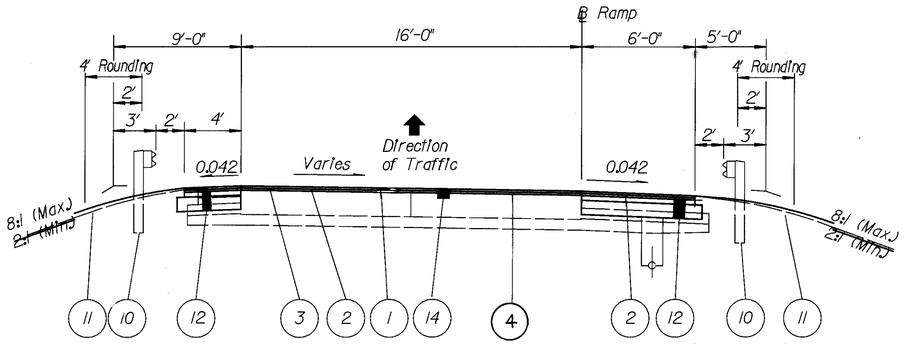

RAMPS A & C @ S.R. 18 INTERCHANGE

Applies @:

Ramp A Sta. 20+54.89 to Sta. 26+64.33

Ramp C Sta. 15+97.55 to Sta. 16+62.18

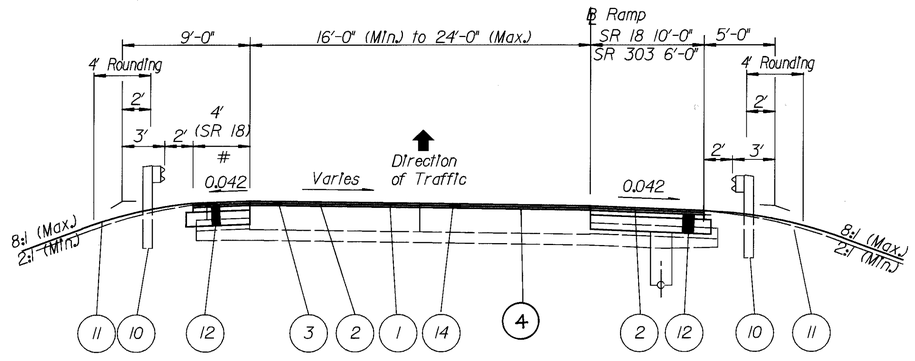

SUPERELEVATED SECTION

Applies @:

S.R. 18 Ramp B Sta. 0+25.04 to Sta. 11+13.19
S.R. 303 Ramp A Sta. 49+78.84 to Sta. 53+06.62

\# Shoulder width varies from 4' @ Sta. 52+99.94 to 8' @ Sta. 51+65.88

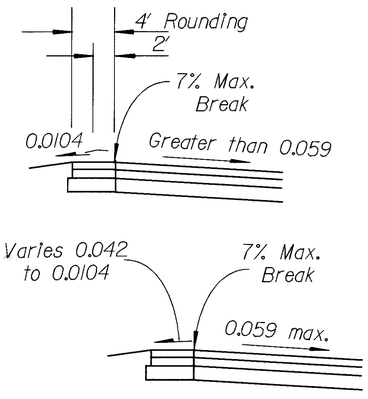

RAMP INSIDE SHOULDER DETAILS

NOTE: Superelevations on ramps shall match that of the existing concrete pavement.

For Proposed Legend, see sheet 8.

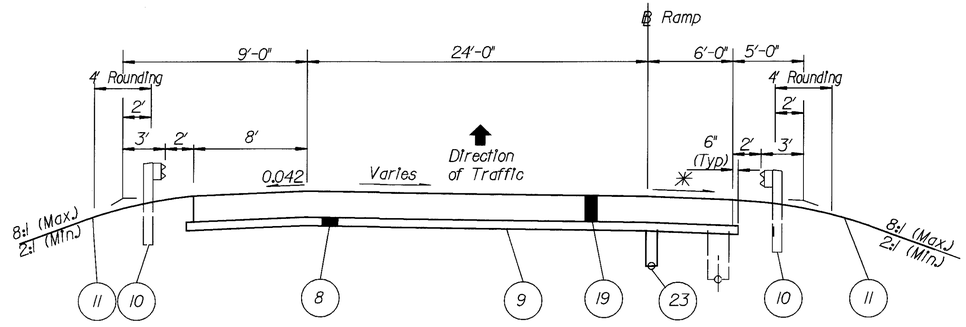

SR 303 RAMP A

Applies @:

S.R. 303 Sta. 48+36.35 to Sta. 49+78.84

✳ Varies 0.042 or rate of superelevation if greater

✳✳ see shoulder details on this sheet

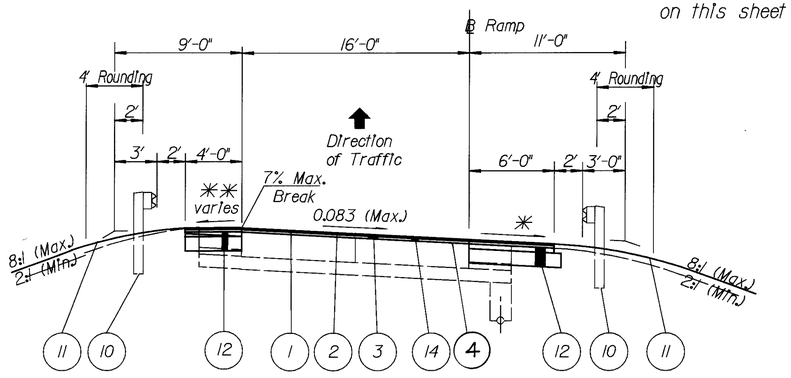

SUPERELEVATED SECTION RAMPS A & C @ S.R. 18 INTERCHANGE

Applies @:

Ramp A Sta 16+96.40 to Sta 20+54.89
Ramp C Sta. 11+86.77 to Sta. 15+97.55
Ramp C Sta. 16+62.18 to Sta. 19+85.06

PROPOSED TYPICAL SECTIONS

MED-71-15.78

18
940

DESIGN FILE : I:\pd_med_lr71\dgn\typicals\proposed\gyll.dgn
USERNAME : jrogers

DATE : 01-DEC-1999
TIME : 14:57

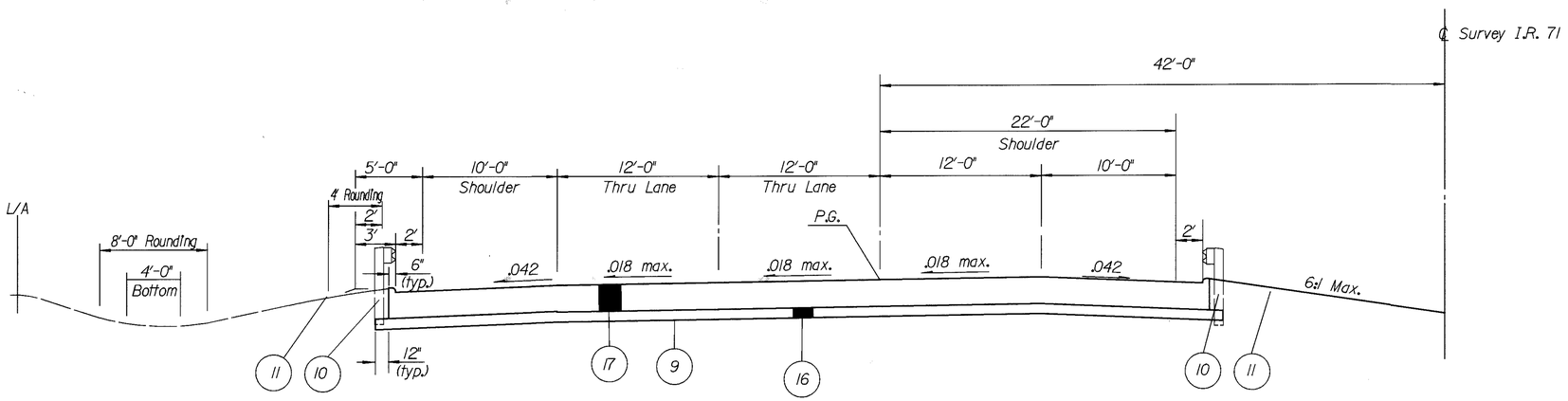

APPROACH SLABS
SOUTHBOUND LANES
Applies @: MED-71-1685

Sta. 888+95.43 to Sta. 889+20.43 = 25.00 Lin. Ft.
Sta. 890+97.11 to Sta. 891+22.11 = 25.00 Lin. Ft.
Total = 50.00 Lin. Ft.

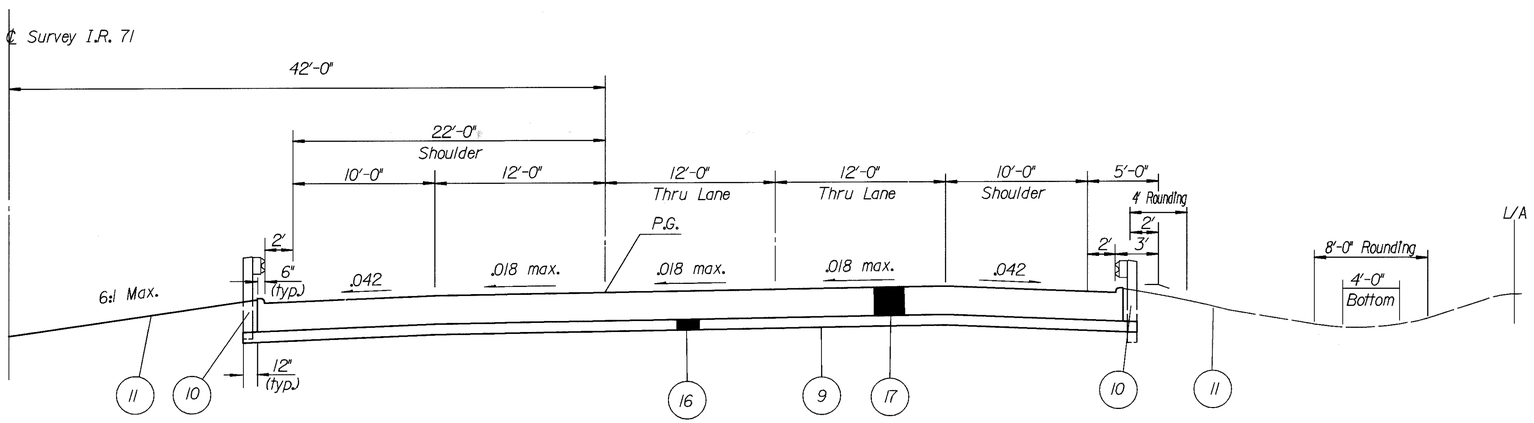

APPROACH SLABS
NORTHBOUND LANES
Applies @: MED-71-1685

Sta. 889+29.49 to Sta. 889+54.49 = 25.00 Lin. Ft.
Sta. 891+31.17 to Sta. 891+56.17 = 25.00 Lin. Ft.
Total = 50.00 Lin. Ft.

For proposed Legend, see sheet 8.

DESIGN FILE : I:\pd_MED_IR71\DGN\Typicals\proposed\typ12.dgn
USERNAME : jpuente
DATE : 30-NOV-1999
TIME : 07:47

PROPOSED TYPICAL SECTIONS

MED-71-15.78

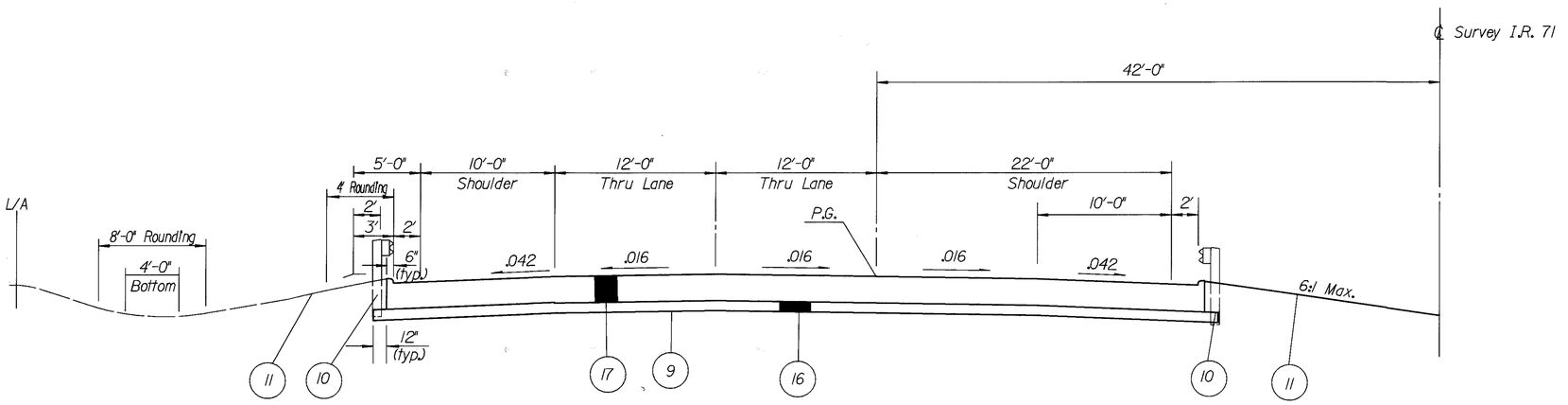

APPROACH SLABS
SOUTHBOUND LANES

Applies @:

Applies @: MED-71-1870

Sta. 985+83.60 to Sta. 986+08.60 = 25.00 Lin. Ft.
Sta. 988+18.66 to Sta. 988+43.66 = 25.00 Lin. Ft.

Applies @: MED-71-1918

Sta. 1012+40.12 to Sta. 1012+65.12 = 25.00 Lin. Ft.
Sta. 1013+57.95 to Sta. 1013+82.95 = 25.00 Lin. Ft.

Applies @: MED-71-1992

Sta. 1051+15.59 to Sta. 1051+40.59 = 25.00 Lin. Ft.
Sta. 1053+61.09 to Sta. 1053+86.09 = 25.00 Lin. Ft.
Total = 150.00 Lin. Ft.

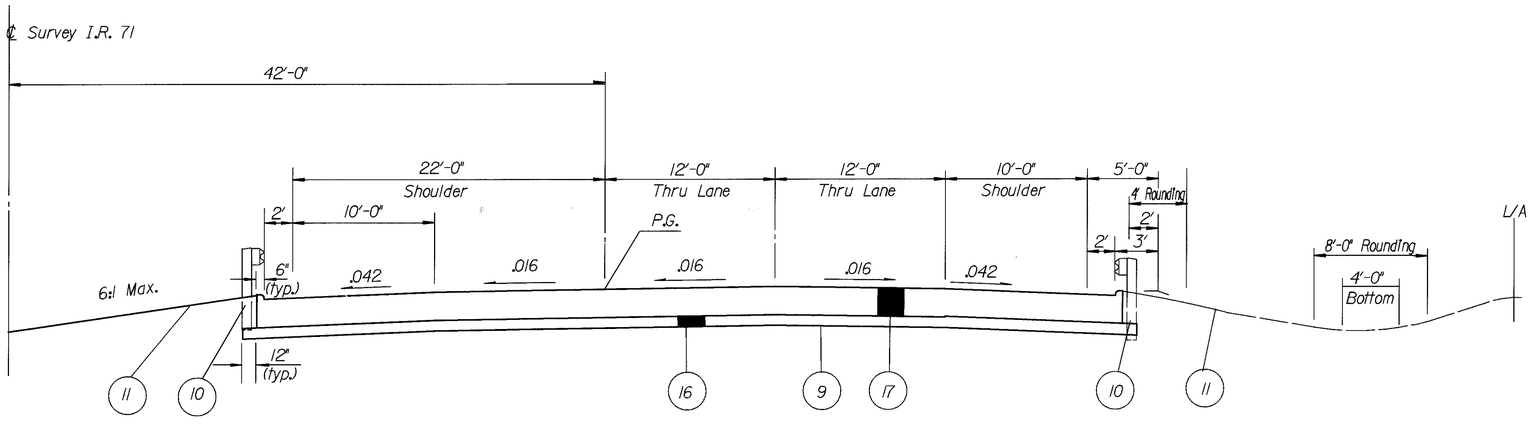

APPROACH SLABS
NORTHBOUND LANES

Applies @:

Applies @: MED-71-1870

Sta. 986+59.80 to Sta. 986+84.80 = 25.00 Lin. Ft.
Sta. 988+81.22 to Sta. 989+06.22 = 25.00 Lin. Ft.

Applies @: MED-71-1918

Sta. 1012+18.96 to Sta. 1012+43.96 = 25.00 Lin. Ft.
Sta. 1013+55.58 to Sta. 1013+80.58 = 25.00 Lin. Ft.

Applies @: MED-71-1992

Sta. 1051+15.59 to Sta. 1051+40.59 = 25.00 Lin. Ft.
Sta. 1053+61.09 to Sta. 1053+86.09 = 25.00 Lin. Ft.
Total = 150.00 Lin. Ft.

For Proposed legend see sheet 8.

DESIGN FILE : i:\pd_MED_IR71\DGN\Typicals\proposed\gyl3.dgn
USERNAME : jpuente
DATE : 30-NOV-1999
TIME : 07:50

PROPOSED TYPICAL SECTIONS

MED-71-15.78

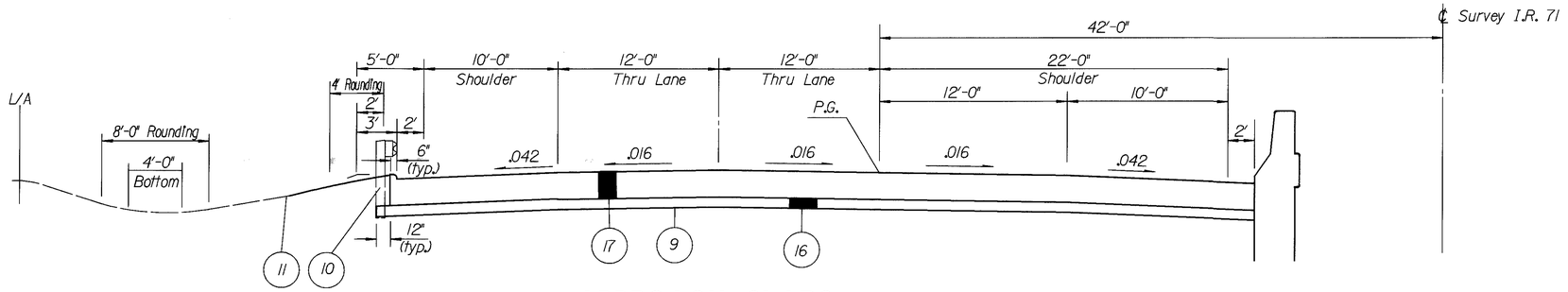

Parapet detail applies either side.

APPROACH SLABS
SOUTHBOUND LANES

Applies @: MED-71-2090

Sta. 1102+80.42 to Sta. 1103+05.42 = 25.00 Lin. Ft.
Sta. 1105+37.91 to Sta 1105+62.91 = 25.00 Lin. Ft.
Total = 50.00 Lin. Ft.

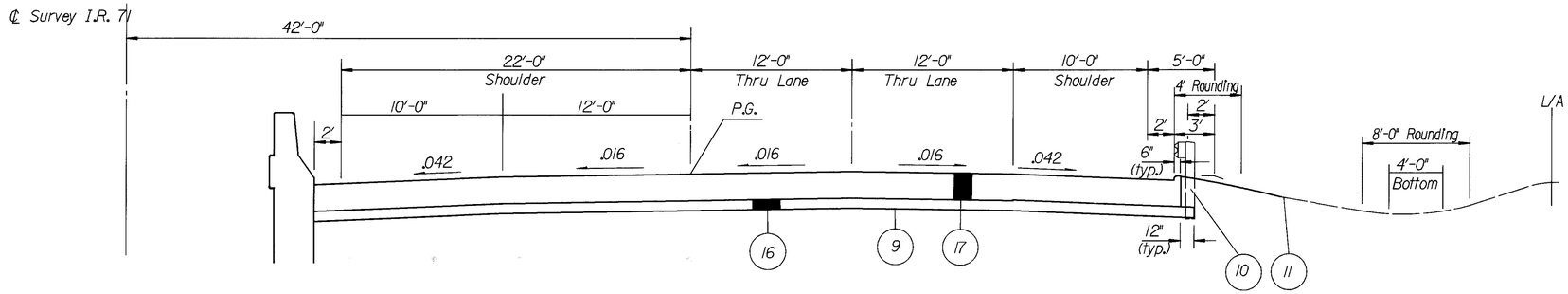

Parapet detail applies either side.

APPROACH SLABS
NORTHBOUND LANES

Applies @: MED-71-2090

Sta. 1103+05.49 to Sta. 1103+30.49 = 25.00 Lin. Ft.
Sta. 1105+62.98 to Sta 1105+87.98 = 25.00 Lin. Ft.
Total = 50.00 Lin. Ft.

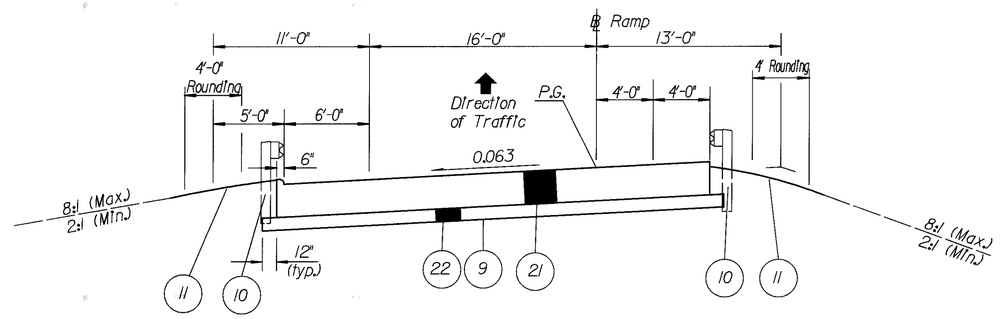

APPROACH SLAB
RAMPS B & C @ S.R. 3 INTERCHANGE

Applies @: MED-71-2088E: Ramp B - Sta. 81+41.97 to Sta. 81+56.97 = 15.00 Lin. Ft. Sta. 82+69.69 to Sta. 82+84.69 = 15.00 Lin. Ft.

Applies @: MED-71-2092W: Ramp C - Sta. 83+48.24 to Sta. 83+63.24 = 15.00 Lin. Ft. Sta. 84+36.76 to Sta. 84+51.76 = 15.00 Lin. Ft.

Total = 60.00 Lin. Ft.

For Proposed Legend see sheet 8.

PROPOSED TYPICAL SECTIONS

MED-71-15.78

DESIGN FILE : i:\pd_MED_IR71\DGN\Typicals\proposed\gyl4.dgn
USERNAME : jpuente
DATE : 30-NOV-1999
TIME : 08:05

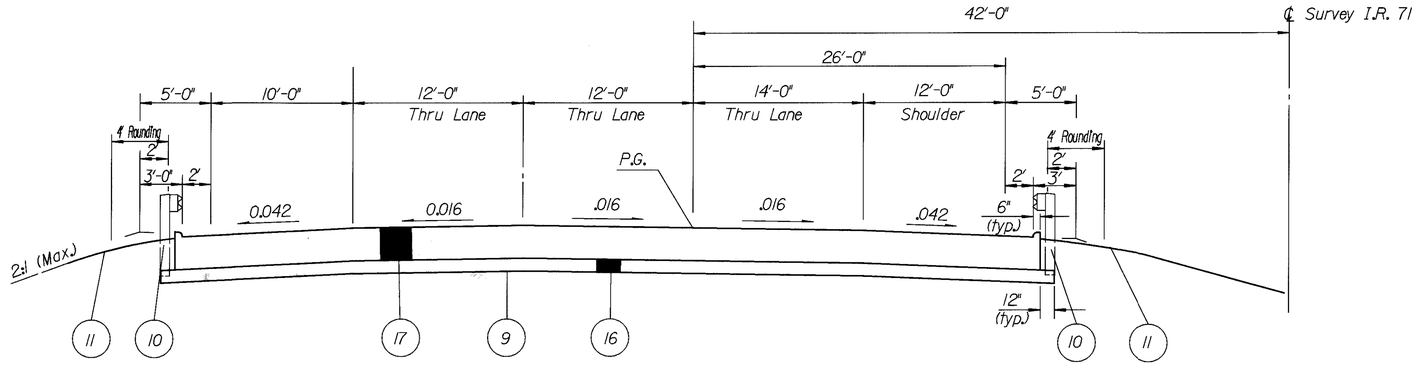

APPROACH SLAB - SOUTHBOUND LANES

Applies @: MED-71-2402

Sta. 1267+65.07 to Sta. 1267+90.07 = 25.00 Lin. Ft
Sta. 1269+81.13 to Sta. 1270+06.13 = 25.00 Lin. Ft.
Total = 50.00 Lin. Ft.

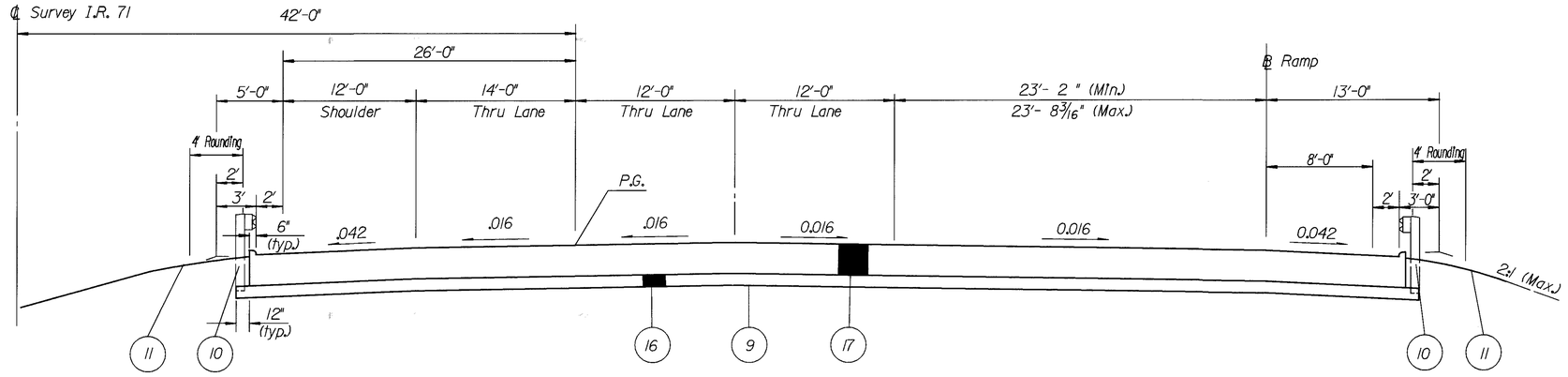

FORWARD APPROACH SLAB - NORTHBOUND LANES

Applies @: MED-71-2402

Sta. 1269+81.13 to Sta. 1270+06.13 = 25.00 Lin. Ft.

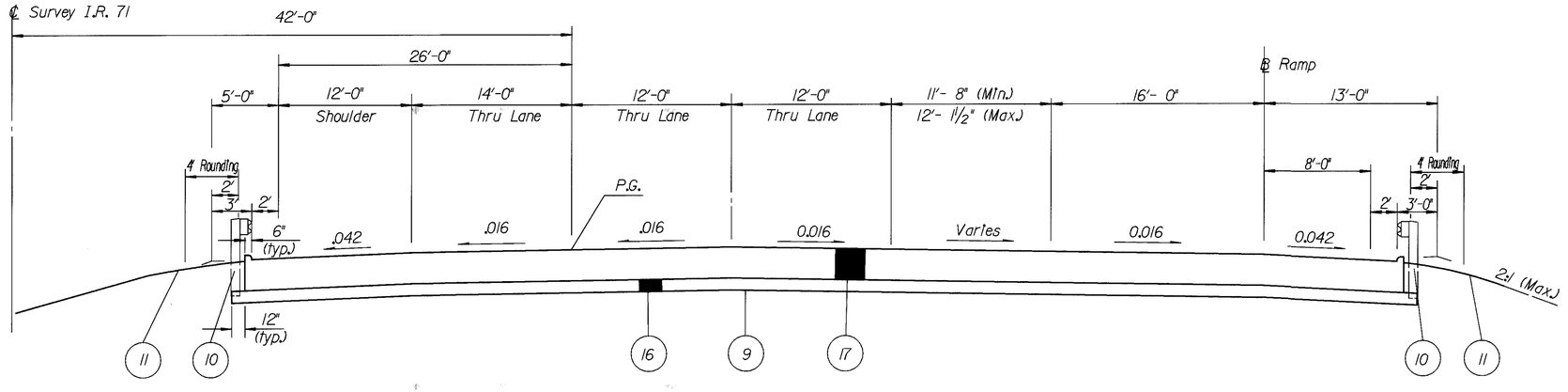

REAR APPROACH SLAB - NORTHBOUND LANES

Applies @: MED-71-2402

Sta. 1267+65.07 to Sta. 1267+90.07 = 25.00 Lin. Ft.

For Proposed Legend see sheet 8.

PROPOSED TYPICAL SECTIONS

MED-71-15.78

DESIGN FILE : i:\pd_MED_IR71\DGN\Typicals\proposed\gyl5.dgn
USERNAME : Jpuente
DATE : 30-NOV-1999
TIME : 08:07

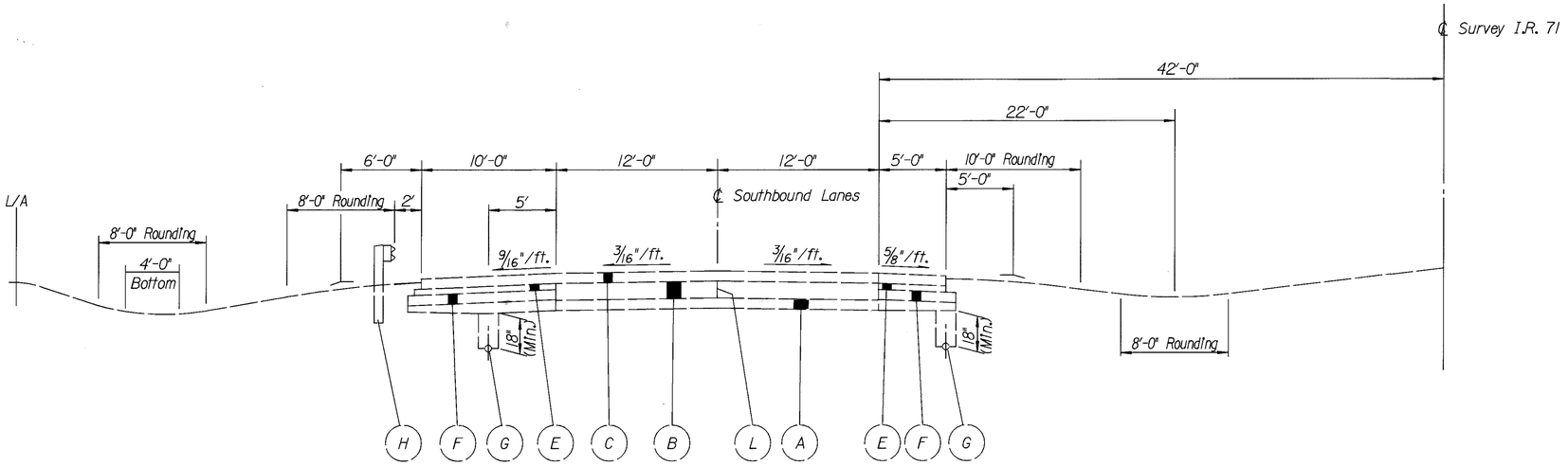

HILL SIDE SECTION SOUTHBOUND LANES

Applies @:

Sta. 831+68.07 to Sta. 859+68.07 = 2,795.00 Lin. Ft.

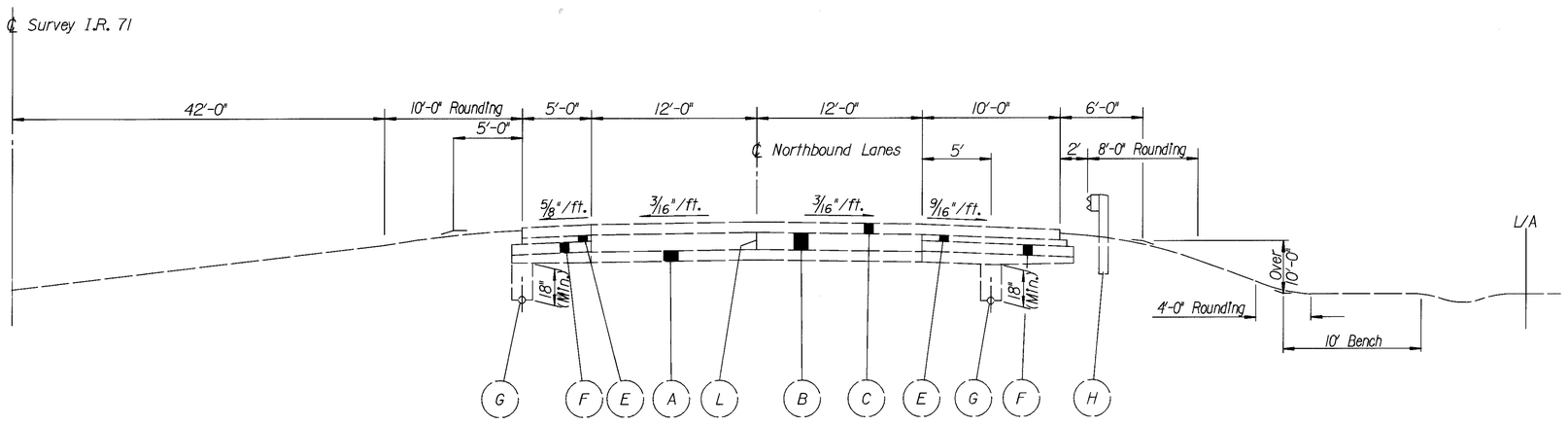

HILL SIDE SECTION NORTHBOUND LANES

Applies @:

Sta. 832+38.07 to Sta. 859+63.07 = 2,725.00 Lin. Ft.

EXISTING LEGEND

- (A) Subbase
- (B) Reinforced Concrete Pavement
- (C) Asphalt Concrete
- (D) Concrete Median, 4"
- (E) Bituminous Aggregate Base
- (F) Aggregate Base
- (G) 6" Underdrains (Shallow or Deep)
- (H) Guardrail
- (I) Concrete Curb, Type 6
- (J) Barrier Curb, Modified
- (K) Key Joint Without Tie Bars
- (L) Standard Longitudinal Joint
- (M) Topsoil
- (N) Aggregate Drains
- (O) Reinforced Concrete Approach Slab (T=13")

DESIGN FILE : i:\pd_med_lr71\dgn\typicals\existing\exstyp1.dgn
USERNAME : jrogers
DATE : 30-NOV-1999
TIME : 10:58

EXISTING TYPICAL SECTIONS

MED-71-15.78

23
940

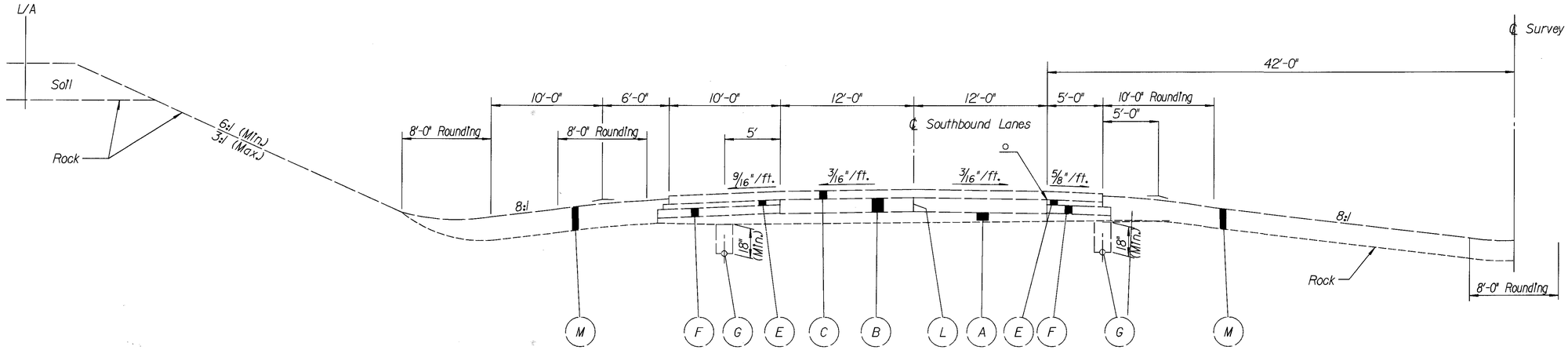

NORMAL SECTION
ROCK CUT SOUTHBOUND LANES

○ - Exist. Profile Grade Point (Mainline)

Applies @:

Sta. 859+63.07 to Sta. 865+63.07 = 600.00 Lin. Ft.

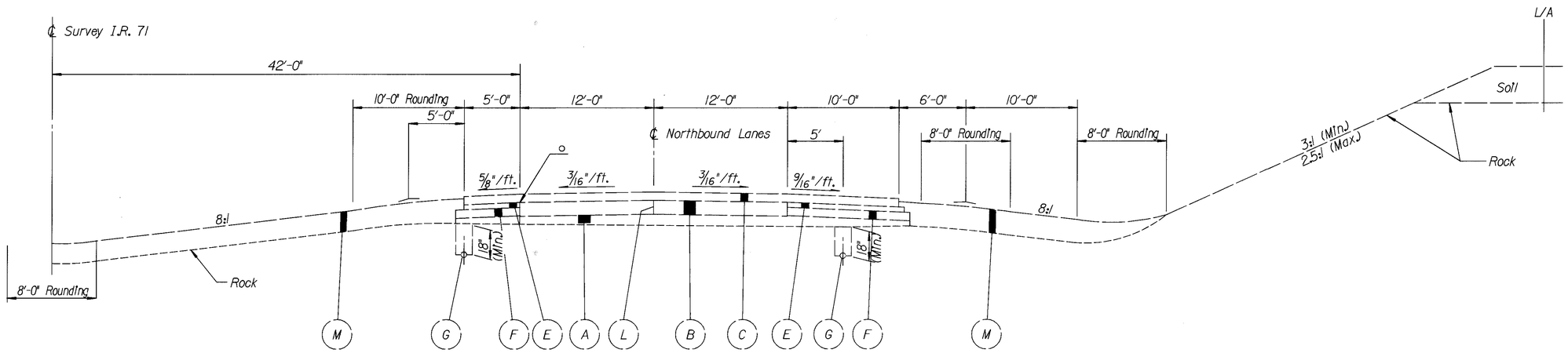

NORMAL SECTION
ROCK CUT NORTHBOUND LANES

Applies @:

Sta. 859+63.07 to Sta. 865+63.07 = 600.00 Lin. Ft.

For existing legend, see sheet 23.

DESIGN FILE : i:\pd_med_lr71\dgn\Typicals\existing\exstyp2.dgn
USERNAME : jrogers
DATE : 30-NOV-1999
TIME : 10:58

EXISTING TYPICAL SECTIONS

MED-71-15.78

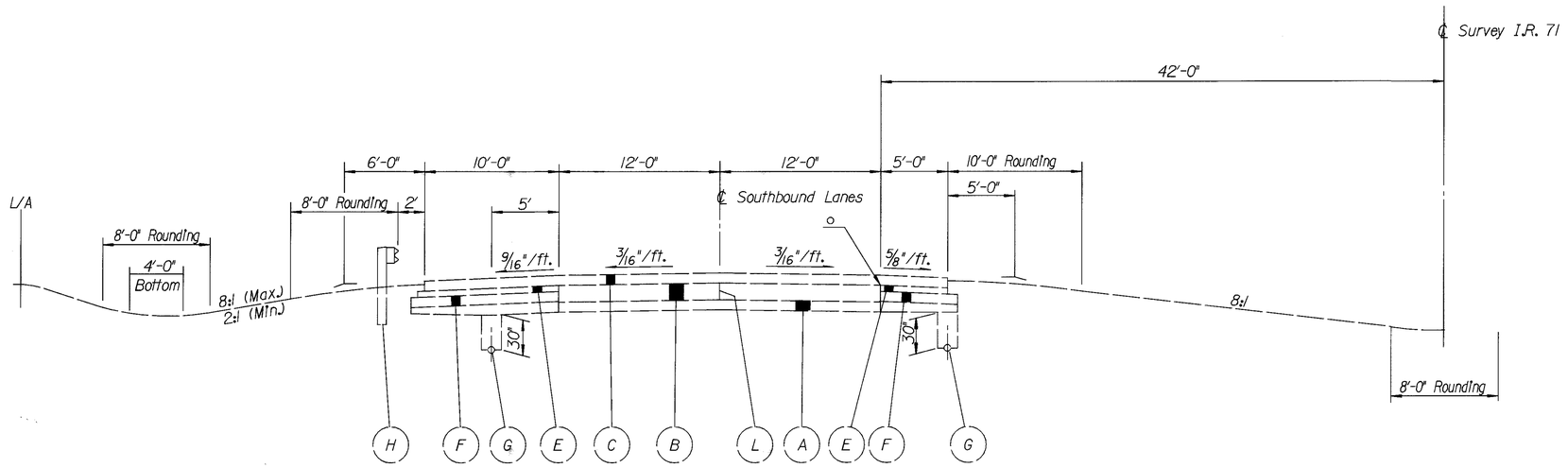

NORMAL SECTION
SOUTHBOUND LANES

Applies @:

Sta. 865+63.07 to Sta. 889+02.73 = 2,339.66 Lin. Ft.
Sta. 891+39.45 to Sta. 921+63.07 = 3,023.62 Lin. Ft.
Total = 5,363.28 Lin. Ft.

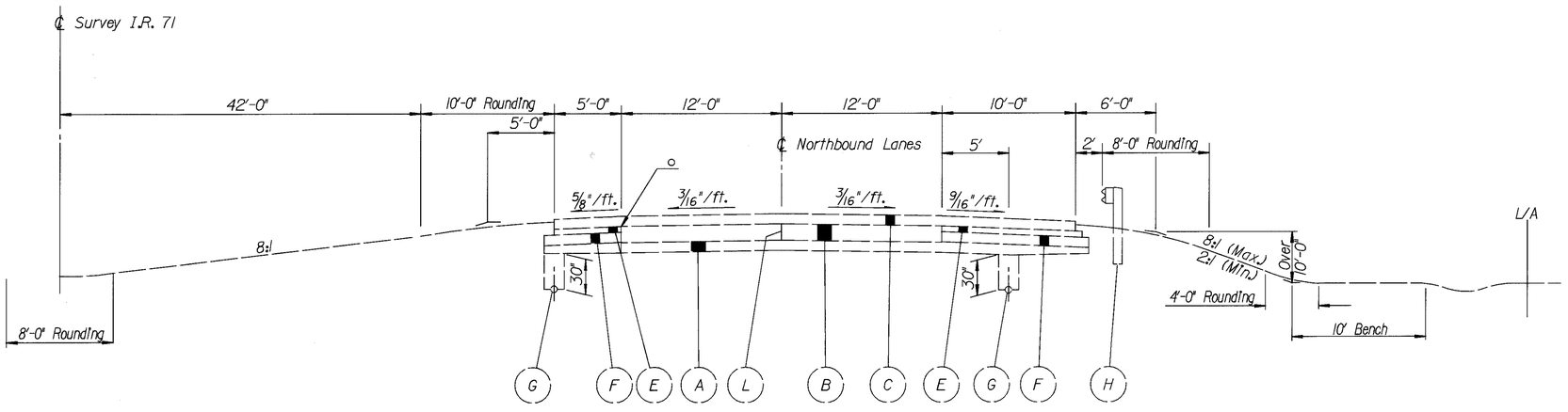

NORMAL SECTION
NORTHBOUND LANES

Applies @:

Sta. 865+63.07 to Sta. 889+02.73 = 2,339.66 Lin. Ft.
Sta. 891+39.45 to Sta. 921+63.07 = 3,023.62 Lin. Ft.
Total = 5,363.28 Lin. Ft.

o- Exist. Profile Grade Point (Mainline)

For existing legend, see sheet 23.

EXISTING TYPICAL SECTIONS

MED-71-15.78

DESIGN FILE : I:\pd_med_ir71\dgn\typicals\existing\exstyp3.dgn
USERNAME : jrogers
DATE : 30-NOV-1999
TIME : 10:59

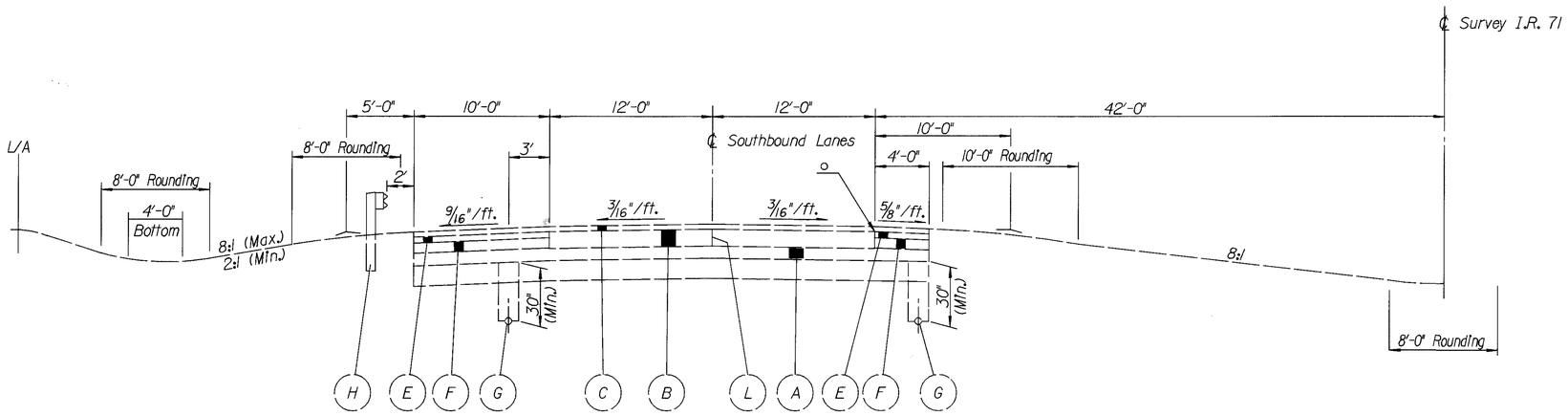

NORMAL SECTION
SOUTHBOUND LANES

Applies @:

Sta. 921+63.07 to Sta. 1416+18.19 = 49,485.00 Lin. Ft

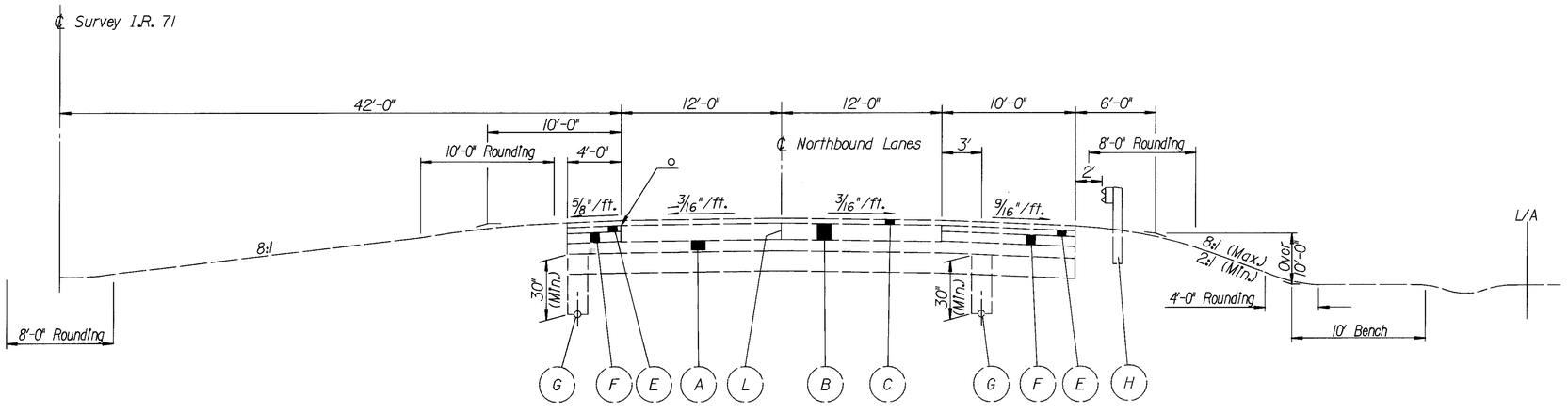

NORMAL SECTION
NORTHBOUND LANES

Applies @:

Sta. 921+63.07 to Sta. 1416+18.19 = 49,485.00 Lin. Ft

o- *Exist. Profile Grade Point (Mainline)*

For existing legend, see sheet 23.

EXISTING TYPICAL SECTIONS

MED-71-15.78

DESIGN FILE : i:\pd_med_1r71\dgn\typicals\existing\exstyp4.dgn
USERNAME : jrogers
DATE : 30-NOV-1999
TIME : 10:59

DESIGN FILE : I:\pd_med_1r71\dgn\typicals\existing\exstyp5.dgn
USERNAME : jrogers
DATE : 30-NOV-1999
TIME : 10:59

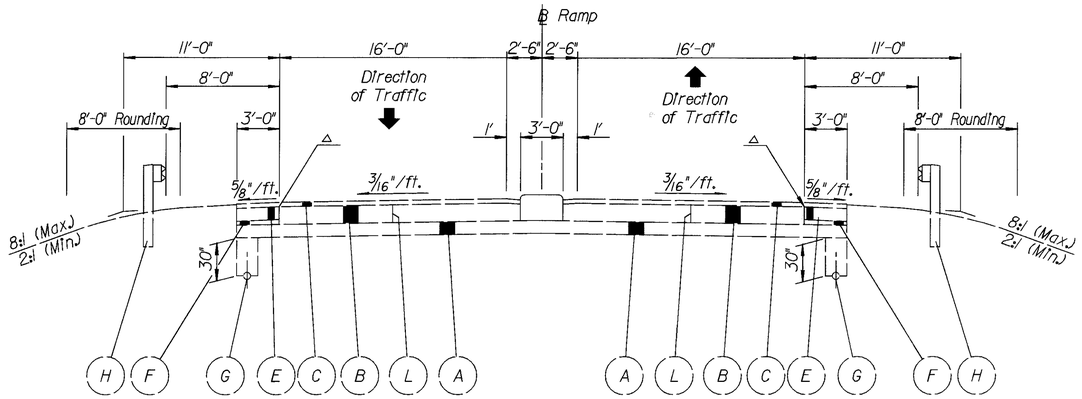

△ - Exist. Profile Grade Point (Ramp)

RAMPS A,B,C&D @ S.R. 18 INTERCHANGE

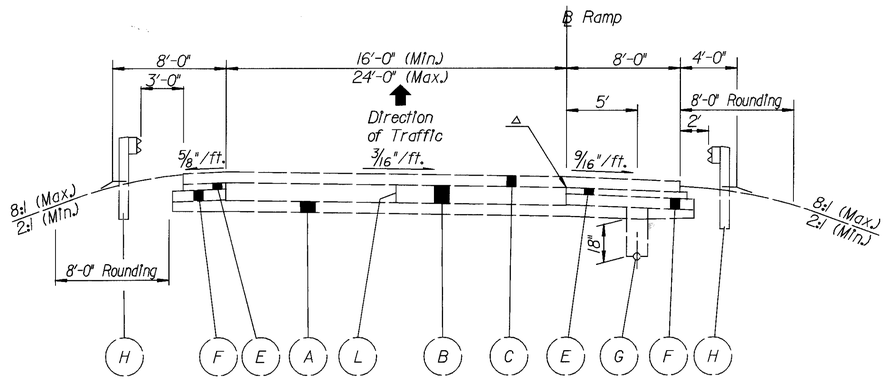

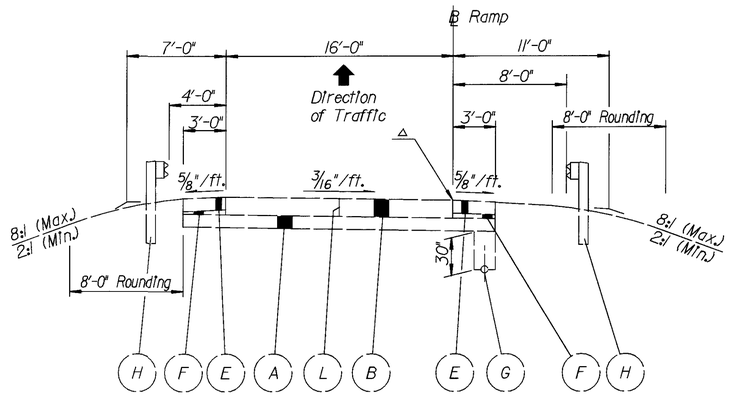

NORMAL SECTION
RAMPS @ NORTHBOUND REST AREA

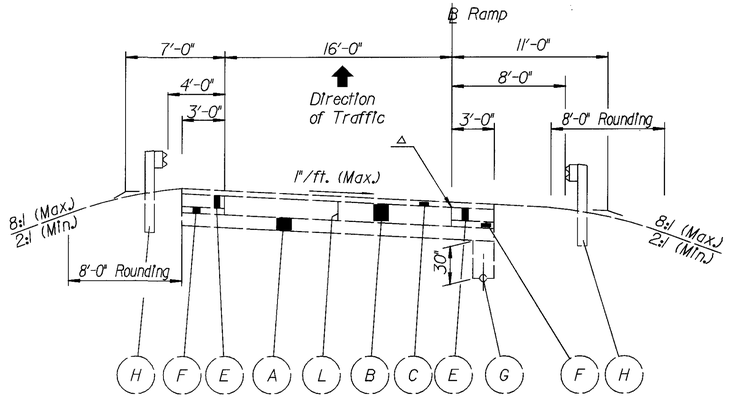

SUPERELEVATED SECTION
RAMPS @ S.R. INTERCHANGE,
S.R. 303 INTERCHANGE & SOUTHBOUND REST AREA

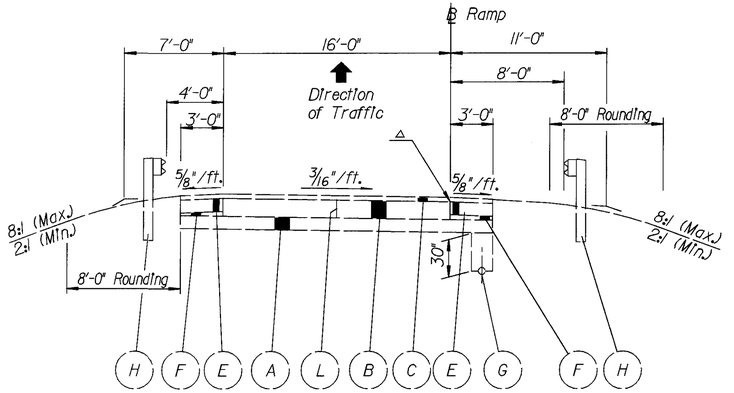

NORMAL SECTION
RAMPS @ S.R. INTERCHANGE,
S.R. 303 INTERCHANGE & SOUTHBOUND REST AREA

For existing legend, see sheet 23.

EXISTING TYPICAL SECTIONS

MED-71-15.78

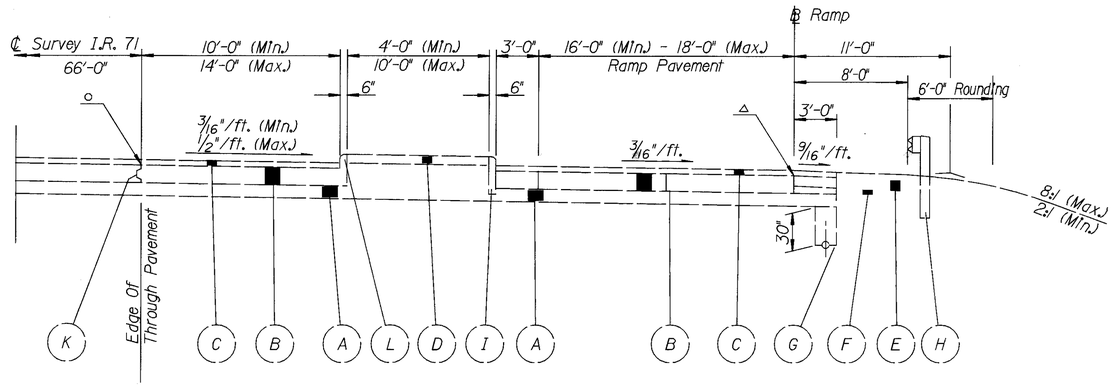

EXIT TERMINAL

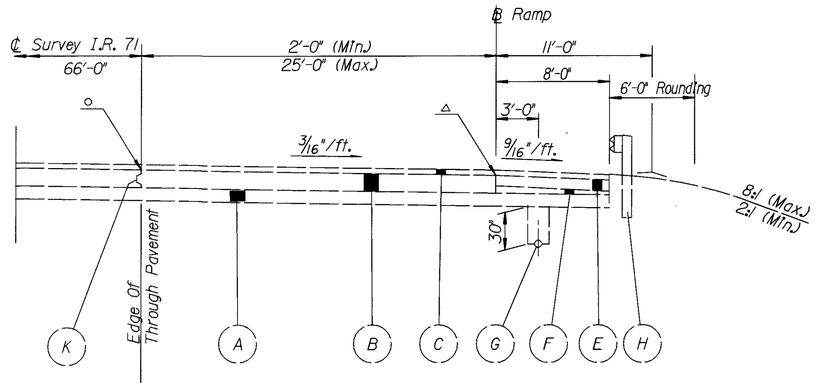

ENTRANCE TERMINAL ACCELERATION LANE

△ - Exist. Profile Grade Point (Ramp)
○ - Exist. Profile Grade Point (Mainline)

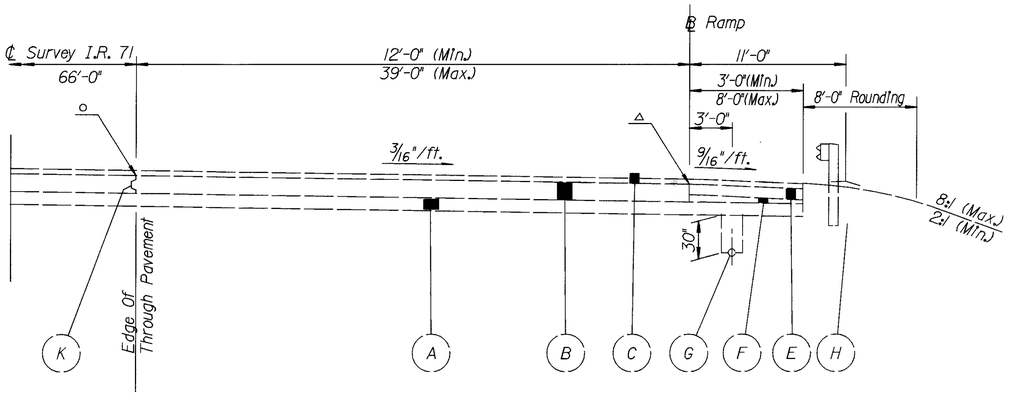

EXIT TERMINAL DECELERATION LANE

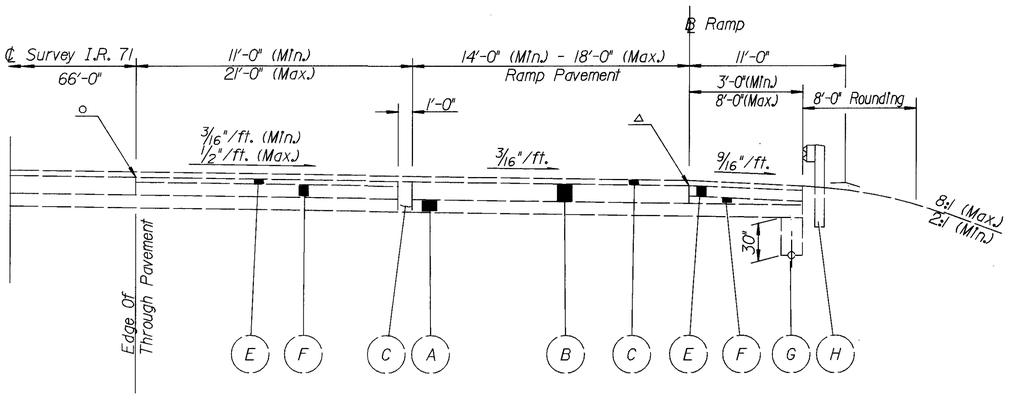

ENTRANCE TERMINAL PACING LANE

For existing legend, see sheet 23.

EXISTING TYPICAL SECTIONS

MED-71-15.78

DESIGN FILE : i:\pd_med_ir71\dgn\typicals\existing\exstyp6.dgn
USERNAME : jrogers
DATE : 30-NOV-1999
TIME : 11:00

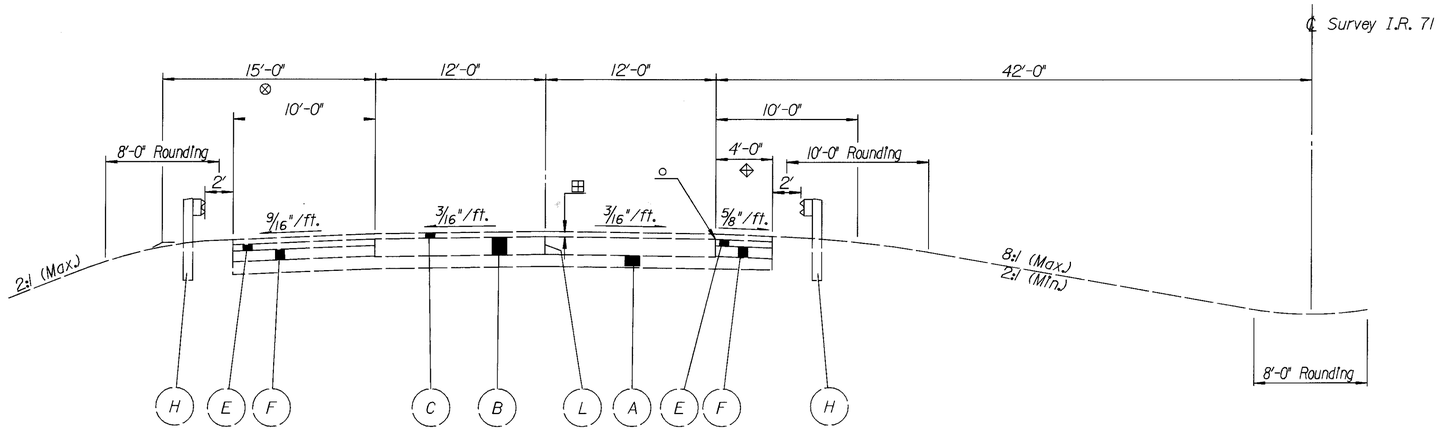

APPROACH SLABS
SOUTHBOUND LANES

Applies @:

Sta.	889+02.73 to Sta. 889+27.73	= 25.00 Lin. Ft.	Sta.	1050+73.84 to Sta. 1050+98.84	= 25.00 Lin. Ft.
Sta.	891+14.45 to Sta. 891+39.45	= 25.00 Lin. Ft.	Sta.	1053+58.79 to Sta. 1053+83.79	= 25.00 Lin. Ft.
Sta.	986+21.74 to Sta. 986+46.74	= 25.00 Lin. Ft.	Sta.	1103+01.82 to Sta. 1103+26.82	= 25.00 Lin. Ft.
Sta.	988+47.24 to Sta. 988+72.24	= 25.00 Lin. Ft.	Sta.	1105+62.09 to Sta. 1105+87.09	= 25.00 Lin. Ft.
Sta.	1012+30.19 to Sta. 1012+55.19	= 25.00 Lin. Ft.	Sta.	1267+59.43 to Sta. 1267+84.43	= 25.00 Lin. Ft.
Sta.	1013+47.69 to Sta. 1013+72.69	= 25.00 Lin. Ft.	Sta.	1269+78.07 to Sta. 1270+03.07	= 25.00 Lin. Ft.
				Total	= 300.00 Lin. Ft.

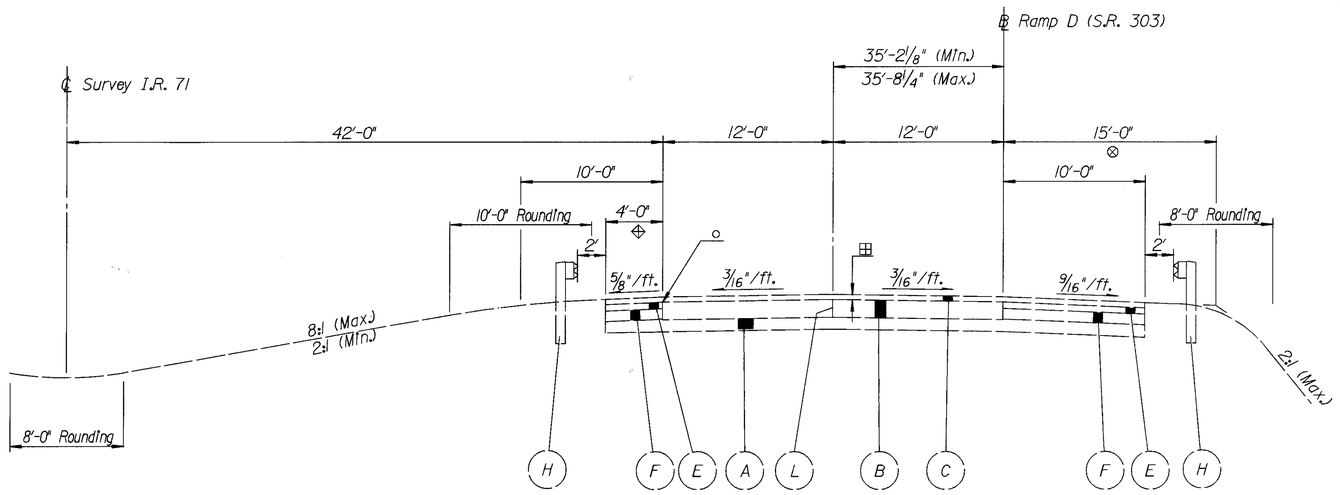

APPROACH SLABS
NORTHBOUND LANES

Applies @:

◐ Sta.	889+02.73 to Sta. 889+27.73	= 25.00 Lin. Ft.	Sta.	1050+73.84 to Sta. 1050+98.84	= 25.00 Lin. Ft.
◐ Sta.	891+14.45 to Sta. 891+39.45	= 25.00 Lin. Ft.	Sta.	1053+58.79 to Sta. 1053+83.79	= 25.00 Lin. Ft.
Sta.	986+22.04 to Sta. 986+47.04	= 25.00 Lin. Ft.	Sta.	1102+73.57 to Sta. 1102+98.57	= 25.00 Lin. Ft.
Sta.	988+47.24 to Sta. 988+72.24	= 25.00 Lin. Ft.	Sta.	1106+33.84 to Sta. 1106+58.84	= 25.00 Lin. Ft.
Sta.	1012+20.43 to Sta. 1012+45.43	= 25.00 Lin. Ft.	Sta.	1269+78.07 to Sta. 1270+03.07	= 25.00 Lin. Ft.
Sta.	1013+57.37 to Sta. 1013+82.37	= 25.00 Lin. Ft.		Total	= 300.00 Lin. Ft.

○ -Exist. Profile Grade Point (Mainline)
⊗ -16'-0" @ Structure MED 71-1685
⟡ - 5'-0" @ Structure MED 71-1685
⊞ -1¼" to 5½" @ Structure MED 71-1685
◐ -Structure MED 71-1685

For existing legend, see sheet 23.

EXISTING TYPICAL SECTIONS

MED-71-15.78

DESIGN FILE : I:\pd_med_lr71\dgn\typicals\existing\exstyp7.dgn
USERNAME : jrogers
DATE : 30-NOV-1999
TIME : 11:00

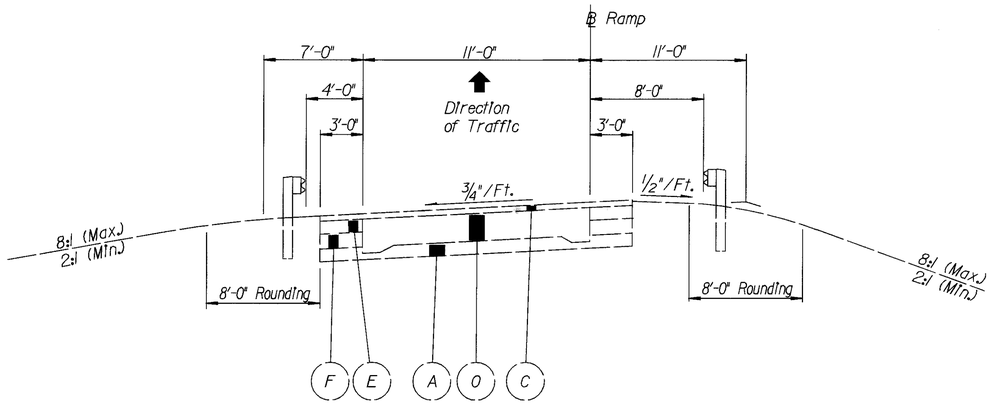

APPROACH SLAB
RAMPS B & C @ S.R. 3 INTERCHANGE

Ramp B - Sta. 81+32.23 to Sta. 81+57.23 = 25.00 Lin. Ft. Sta. 82+69.42 to Sta. 82.94.42 = 25.00 Lin. Ft.
Ramp C - Sta. 83+38.49 to Sta. 83+63.49 = 25.00 Lin. Ft. Sta. 84+36.51 to Sta. 84+61.51 = 25.00 Lin. Ft.
Total = 100.00 Lin. Ft.

△ - Exist. Profile Grade Point (Ramp)
○ - Exist. Profile Grade Point (Mainline)

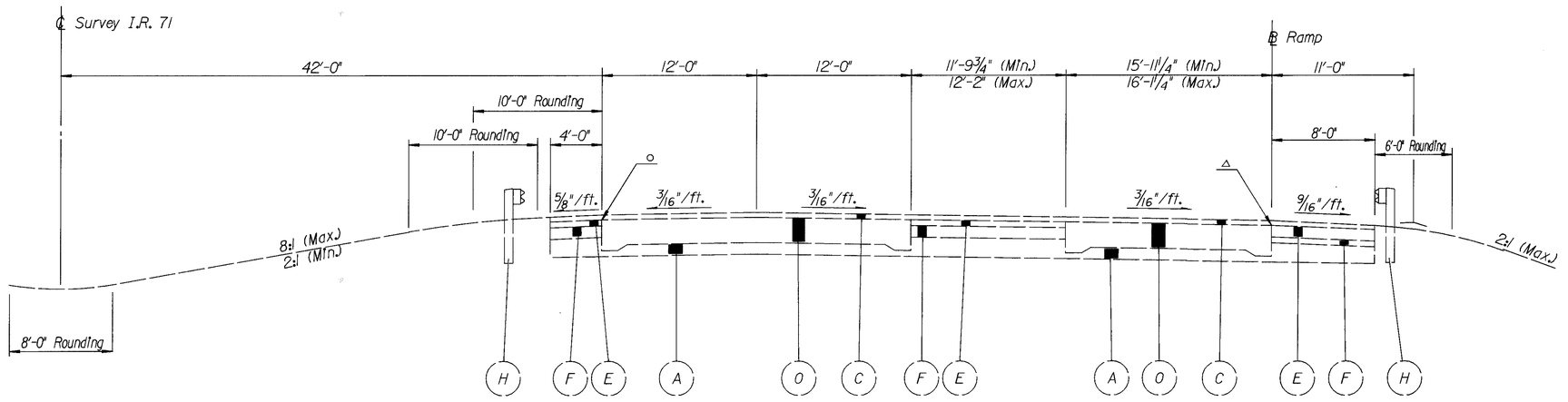

APPROACH SLAB
NORTHBOUND LANES

Applies @:

Sta. 1267+59.43 (Rt.) to Sta. 1267+84.43 (Rt.) (Str. 2402) = 25.00 Lin. Ft.

For existing legend, see sheet 23.

EXISTING TYPICAL SECTIONS

MED-71-15.78

30
940

DESIGN FILE : I:\pd_med.ir71\dgn\typicals\existing\exstyp8.dgn
USERNAME : jrogers
DATE : 30-NOV-1999
TIME : 11:01

ORIGINAL CONSTRUCTION PLANS

ORIGINAL CONSTRUCTION PLANS FOR THIS PROJECT ARE ON FILE IN THE DISTRICT 3 OFFICES OF THE OHIO DEPARTMENT OF TRANSPORTATION IN ASHLAND, OHIO. THE PROJECT PLANS ARE:

MED-I-13.63
MED-42-17.46
MED-42-21.94
MED/CUY-42-26.17/0.00
MED/CUY-71-17.46/0.00
MED-71-8.26 (1972)
MED-71-8.26 (1984)
MED-71-17.46

WORK LIMITS

THE WORK LIMITS SHOWN ON THESE PLANS ARE FOR PHYSICAL CONSTRUCTION ONLY. THE INSTALLATION AND OPERATION OF ALL TEMPORARY TRAFFIC CONTROL AND TEMPORARY TRAFFIC CONTROL DEVICES REQUIRED BY THESE PLANS SHALL BE PROVIDED BY THE CONTRACTOR WHETHER INSIDE OF OUTSIDE THESE WORK LIMITS.

ROUNDING

THE ROUNDING AT SLOPE BREAKPOINTS SHOWN ON THE TYPICAL SECTIONS APPLY TO ALL CROSS-SECTIONS EVEN THOUGH OTHERWISE SHOWN.

UTILITIES

LISTED BELOW ARE ALL UTILITIES LOCATED WITHIN THE PROJECT CONSTRUCTION LIMITS TOGETHER WITH THEIR RESPECTIVE OWNERS:

Armstrong Utilities, Inc.
1141 LaFayette Road
Medina, Ohio 44256
800-589-3536

Cablevision of Ohio
8179 Dow Circle
Strongsville, Ohio 44136
800-686-2510

City of Brunswick
4095 Center Rd.
Brunswick, Ohio 44212
330-225-9144

GTE Telephone Operations - North Area
6223 Norwalk Road
Medina, Ohio 44256
330-722-9580

Ohio Edison Company Distribution
6326 Lake Avenue
Elyria, Ohio 44035
440-324-0231

Ohio Edison Company Transmission
76 South Main Street
Akron, Ohio 44308
330-384-5180

The East Ohio Gas Company, GSO Div.
7015 Freedom Avenue, N.W.
North Canton, Ohio 44720
330-497-5136

Columbia Gas Transmission
589 North State Road P.O. Box 629
Medina, Ohio 44256
330-721-4163

Buckeye Pipe Line Company
5002 Buckeye Road
P. O. Box 368
Emmaus, PA 18049-0368
610-770-5215

City of Cleveland - Division of Water*
1201 Lakeside Ave. - 6th Floor Engineering
Cleveland, Ohio 44114
216-664-2440

Columbia Gas of Ohio, Inc.
7080 Fry Rd.
Middleburg Hts. Ohio 44130
440-891-2455

Medina County Sanitary Dept.
P. O. Box 542
Medina, Ohio 44256
330-723-9585

AT&T
229 W. 7th St. - 10th Floor
Cincinnati, Ohio 45202
513-784-3228

Sun Pipe Line Company
Ten Penn Center - 26th Floor
1801 Market Street
Philadelphia, PA 19103-1699
215-977-6297 Ref. No. SPLI9990835

MFC Drilling
P.O. Box 715
46275 U.S. Route 36
Coshocton, Ohio 43815
740-622-5600

Gatherco, Inc.
6273 Frank Avenue NW
North Canton, Ohio 44720
330-498-9553

* CONTACT 3 DAYS PRIOR TO BEGINNING CONSTRUCTION NEAR CITY OF CLEVELAND WATER LINE.

THE LOCATION OF THE UNDERGROUND UTILITIES SHOWN ON THE PLANS ARE AS OBTAINED FROM THE OWNERS AS REQUIRED BY SECTION 153.64 O.R.C.

ELEVATION DATUM

ALL ELEVATIONS ARE BASED ON U.S.G.S. DATUM.

CONTINGENCY QUANTITIES

THE CONTRACTOR SHALL NOT ORDER MATERIALS OR PERFORM WORK FOR ITEMS DESIGNATED BY PLAN NOTE TO BE USED "AS DIRECTED BY THE ENGINEER" UNLESS AUTHORIZED BY THE ENGINEER. THE ACTUAL WORK LOCATIONS AND QUANTITIES USED FOR SUCH ITEMS SHALL BE INCORPORATED INTO THE FINAL CHANGE ORDER GOVERNING COMPLETION OF THIS PROJECT.

AIRWAY-HIGHWAY CLEARANCE

THIS PROJECT HAS BEEN IDENTIFIED AS BEING WITHIN THE INFLUENCE AREA OF A PUBLIC USE AIRPORT OR HELIPORT. THE CONTRACTOR IS ADVISED THAT NO TEMPORARY STRUCTURES OR CONSTRUCTION EQUIPMENT AT MAXIMUM OPERATING HEIGHT SHALL EXCEED A HEIGHT OF 103 Ft.. IF ANY TEMPORARY STRUCTURES OR CONSTRUCTION EQUIPMENT WILL EXCEED THIS HEIGHT, THE CONTRACTOR IS ADVISED THAT COORDINATION WITH THE FEDERAL AVIATION ADMINISTRATION (FAA) WILL BE NECESSARY PRIOR TO ERECTING SUCH TEMPORARY STRUCTURES OR OPERATING SUCH EQUIPMENT ON THE PROJECT. THE CONTRACTOR WILL BE REQUIRED TO SUBMIT FORM 7460-1 TO THE FAA. A COPY OF THE SUBMISSION AND TWO COPIES OF FORM 7460-1 SHALL BE FORWARDED TO THE ODOT OFFICE OF AVIATION. THE CONTRACTOR IS ADVISED THAT NO TEMPORARY STRUCTURES OR CONSTRUCTION EQUIPMENT SHALL EXCEED THE PERMISSIBLE HEIGHT, UNTIL A COPY OF THE FAA APPROVAL AND ODOT OFFICE OF AVIATION PERMIT HAS BEEN FURNISHED TO THE PROJECT ENGINEER.

THE FEDERAL AVIATION ADMINISTRATION
GREAT LAKES REGIONAL OFFICE
AIR TRAFFIC DIVISION AGL-530
2300 EAST DEVON AVENUE
DES PLAINES, ILLINOIS 60018
(847) 294-7458

OHIO DEPARTMENT OF TRANSPORTATION
OFFICE OF AVIATION
2829 WEST DUBLIN-GRANVILLE ROAD
COLUMBUS, OHIO 43235
(614) 793-5046

CONVERSION OF METRIC STANDARD DRAWINGS

THE METRIC STANDARD DRAWINGS REFERENCED IN THIS PLAN SHALL BE CONVERTED TO ENGLISH UNITS USING SI (METRIC) TO ENGLISH CONVERSION FACTORS PROVIDED IN SECTION 109.011 OF THE 1997 CONSTRUCTION AND MATERIALS SPECIFICATIONS. THE APPENDIX OF ASTM E380 SHALL BE UTILIZED FOR ANY ADDITIONAL CONVERSION FACTORS REQUIRED. CONVERSIONS SHALL BE APPROPRIATELY PRECISE AND SHALL REFLECT STANDARD INDUSTRY ENGLISH VALUES WHERE SUITABLE.

ITEM 203, PROOF ROLLING

AN ESTIMATED QUANTITY FOR THIS ITEM OF 17 HOURS HAS BEEN PROVIDED IN THE GENERAL SUMMARY FOR USE AS DIPECTED BY THE ENGINEER.

CONNECTION BETWEEN EXISTING AND PROPOSED GUARDRAIL

WHEN IT IS NECESSARY TO SPLICE PROPOSED GUARDRAIL TO EXISTING GUARDRAIL, ONLY THE EXISTING GUARDRAIL SHALL BE CUT, DRILLED, OR PUNCHED. THE CONNECTION SHALL BE MADE USING A "W-BEAM RAIL SPLICE" AS SHOWN IN AASHTO M 180. PAYMENT SHALL BE INCLUDED IN THE UNIT PRICE BID FOR THE RESPECTIVE GUARDRAIL ITEMS.

GUARDRAIL LOCATIONS

THE CONTRACTOR SHALL STAKE ALL LOCATIONS OF GUARDRAIL FOR REVIEW BY THE PROJECT ENGINEER BEFORE THE GUARDRAIL IS ERECTED.

REMOVAL OF TOPSOIL

THE EXISTING TOPSOIL SHALL BE REMOVED FROM 1 FOOT BEYOND THE PROPOSED INSIDE SHOULDER TO THE EXISTING INSIDE SHOULDER WITH AN AVERAGE UNDERCUT DEPTH OF 4 INCHES BELOW THE EXISTING GROUND SURFACE AND REPLACED WITH SUITABLE ITEM 203, EMBANKMENT MATERIAL AT THE LOCATIONS WHERE THE PROPOSED PAVEMENT SURFACE IS MORE THAN 12 INCHES ABOVE THE EXISTING GROUND. A CONTINGENCY QUANTITY OF 400 CU. YD. OF ITEM 203, EXCAVATION NOT INCLUDING EMBANKMENT CONSTRUCTION AND 400 CU. YD. OF ITEM 203, EMBANKMENT IS INCLUDED IN THE GENERAL SUMMARY FOR USE AS DIRECTED BY THE ENGINEER AT THESE LOCATIONS.

UNSUITABLE SOIL CONDITIONS

IF UNSUITABLE FOUNDATION SOILS ARE ENCOUNTERED IN THE AREAS OF THE PROPOSED ROADBED, THEY SHALL BE REMOVED AND REPLACED WITH SUITABLE MATERIAL MEETING THE REQUIREMENTS OF 203.08. THE LOCATIONS AND DIMENSIONS SHALL BE AS DETERMINED BY THE ENGINEER.

ITEM 203, EXCAVATION NOT INCLUDING EMBANKMENT = 500 CUBIC YARDS
CONSTRUCTION

ITEM 304, AGGREGATE BASE = 500 CUBIC YARDS

(QUANTITIES CARRIED TO THE GENERAL SUMMARY)

REFERENCE MONUMENTS, AS PER PLAN

MONUMENTS SHALL BE CONSTRUCTED IN ACCORDANCE WITH DETAILS AS SHOWN ON THE STANDARD CONSTRUCTION DRAWINGS AND AT THE LOCATIONS SHOWN ON THIS SHEET.

ITEM 604, REFERENCE MONUMENT, AS PER PLAN = 29 EACH

(QUANTITIES CARRIED TO THE GENERAL SUMMARY)

REFERENCE MONUMENTS, AS PER PLAN (CONT.)

THE EXISTING CENTERLINE REFERENCE MONUMENTS SHALL BE PRESERVED AT ALL LOCATIONS. IT IS THE RESPONSIBILITY OF THE CONTRACTOR TO VERIFY THE LOCATION OF THE EXISTING MONUMENTS PRIOR TO ANY WORK IN THE MEDIAN. IN THE EVENT A CONTRACTOR DISTURBS A MONUMENT, A NEW CENTERLINE REFERENCE MONUMENT SHALL BE CONSTRUCTED IN ACCORDANCE WITH DETAILS SHOWN ON THE STANDARD CONSTRUCTION DRAWINGS AND AT THE LOCATION SHOWN ON THIS SHEET. THE CENTERLINE REFERENCE MONUMENTS SHALL BE ESTABLISHED AND SET BY AN OHIO REGISTERED SURVEYOR. THE SURVEYOR SHALL SUPPLY TO THE PROJECT ENGINEER A RECORD OF WHERE THE CENTERLINE REFERENCE MONUMENTS HAVE BEEN SET.

LOCATIONS OF THE EXISTING MONUMENTS ARE SHOWN ON THE CENTERLINE SURVEY PLATS FOR PROJECTS:

MED-I-13.60	SHEETS 286 & 287
MED-42-17.46	SHEETS 281 & 282
MED-42-21.94	SHEETS 265 & 266
MED/CUY-42-26.17/0.00	SHEET 272

EXISTING CENTERLINE REFERENCE MONUMENTS ARE LOCATED IN THE FIELD AT THE FOLLOWING LOCATIONS:

STA. 850+0.57 (0.03' RT.)
STA. 858+70.15 (℄)
STA. 865+63.77 (0.15' RT.)
STA. 873+27.01 (0.17' RT.)
STA. 882+63.66 (0.34' RT.)
STA. 887+84.60 (0.22' RT.) (TACKED HUB)
STA. 893+66.37 (0.46' RT.)
STA. 899+69.18 (0.21' RT.)
STA. 907+63.08 (0.02' LT.)
STA. 913+66.76 (0.02' RT.)
STA. 921+63.07 (BK) = STA. 921+63.16 (AHD)
STA. 926+63.07
STA. 931+55.82 (0.59' LT) (TACKED HUB)
STA. 936+62.64 (0.06' LT.)
STA. 941+62.58 (0.09' LT.)
STA. 947+22.46 (0.04' LT.)
STA. 951+62.40 (0.13' LT.)
STA. 956+59.43 (0.77' LT) (TACKED HUB)
STA. 961+66.47 (0.56' LT) (TACKED HUB)
STA. 966+74.21 (0.56' LT) (TACKED HUB)
STA. 971+62.90 (0.46' LT.)
STA. 976+62.85 (0.42' LT.)
STA. 981+62.76 (0.57' LT.)
STA. 986+23.72 (0.21' RT.) (TACKED HUB)
STA. 991+63.11 (0.82' LT.)
STA. 996+63.07
STA. 1001+63.07
STA. 1006+63.07
STA. 1011+63.07
STA. 1020+22.48 (BK) = STA. 1020+51.56 (AHD)
STA. 1026+33.99
STA. 1031+33.99
STA. 1036+33.99
STA. 1046+33.99
STA. 1061+33.99
STA. 1066+33.99
STA. 1071+33.99
STA. 1076+33.99
STA. 1081+33.99
STA. 1086+33.99
STA. 1091+33.99
STA. 1096+33.99
STA. 1101+33.99
STA. 1106+33.99
STA. 1111+33.99
STA. 1116+33.99
STA. 1121+33.99
STA. 1127+33.99
STA. 1141+33.99
STA. 1147+33.99
STA. 1151+33.99
STA. 1156+33.99
STA. 1161+33.99
STA. 1166+56.23 (P.T.)
STA. 1171+33.99
STA. 1176+33.99
STA. 1181+33.99
STA. 1186+33.99
STA. 1191+33.99
STA. 1196+33.99
STA. 1200+33.99
STA. 1203+62.81 (P.C.)
STA. 1226+33.99
STA. 1230+33.99
STA. 1233+67.27 (P.T.)
STA. 1237+33.99
STA. 1241+33.99
STA. 1246+33.99
STA. 1251+33.99
STA. 1256+33.99
STA. 1261+33.99
STA. 1271+33.99
STA. 1276+33.99
STA. 1286+33.99
STA. 1291+33.99
STA. 1296+33.99
STA. 1301+33.99
STA. 1305+33.99
STA. 1309+33.11 (P.C.)
STA. 1313+33.99
STA. 1316+33.99
STA. 1321+33.99
STA. 1326+33.99
STA. 1331+33.99
STA. 1336+33.99
STA. 1347+33.99
STA. 1352+89.89 (P.T.)
STA. 1356+33.99
STA. 1371+33.99
STA. 1377+32.63 (P.C.)
STA. 1386+33.99
STA. 1391+33.99
STA. 1395+33.99
STA. 1398+26.30 (P.T.)

IN ADDITION, THE LOCATIONS LISTED BELOW ARE APPROXIMATE FOR STATIONING (+/- 25') AND INDICATED AS LEFT OR RIGHT OF THE CENTERLINE ONLY FOR THE PURPOSE OF DEFINING A QUANTITY. THE ACTUAL LOCATIONS WILL BE STAKED BY THE DISTRICT THREE SURVEY DEPARTMENT PRIOR TO CONSTRUCTION. THE MONUMENTS WILL BE CONSTRUCTED AS CENTERLINE REFERENCE MONUMENTS PER THE STANDARD DRAWING RM-1.1.

PROPOSED REFERENCE MONUMENTS

STA. 849+50	RT.	STA. 1014+75	RT.	STA. 1229+50	LT.
STA. 865+25	LT.	STA. 1030+50	RT.	STA. 1247+25	RT.
STA. 882+00	RT.	STA. 1048+25	LT.	STA. 1267+25	RT.
STA. 900+75	RT.	STA. 1064+75	RT.	STA. 1288+25	RT.
STA. 910+50	RT.	STA. 1072+25	RT.	STA. 1297+75	RT.
STA. 929+25	LT.	STA. 1094+25	LT.	STA. 1319+25	LT.
STA. 938+75	LT.	STA. 1157+00	RT.	STA. 1333+75	RT.
STA. 950+00	RT.	STA. 1175+50	LT.	STA. 1349+25	RT.
STA. 958+75	LT.	STA. 1190+25	LT.	STA. 1367+25	RT.
STA. 986+75	RT.	STA. 1205+00	RT.		

CALCULATED JWR CHECKED DJV

GENERAL NOTES

MED-71-15.78

31
606

DESIGN FILE : i:\pd_med_ir71\dgn\gennotes\med71gn.dgn
USERNAME : nvondere
DATE : 30-NOV-1999
TIME : 09:20

ITEM 607, FENCE, TYPE 47, AS PER PLAN

THIS ITEM SHALL INCLUDE REMOVAL OF ALL RIGHT OF WAY FENCE AND ASSOCIATED HARDWARE, CLEARING OF THE NEW FENCE ALIGNMENT OF TREES AND BRUSH, FURNISHING AND APPLYING CUT STUMP HERBICIDE AND FURNISHING AND ERECTING NEW FENCE AND ASSOCIATED HARDWARE IN ACCORDANCE WITH THE PLAN AND CURRENT STANDARDS. THE CONTRACTOR IS ADVISED TO VISIT THE SITE TO DETERMINE THE CORRECT NUMBERS OF INDIVIDUAL FENCE COMPONENTS REQUIRED TO CONSTRUCT THE NEW FENCE IN ACCORDANCE WITH CURRENT STANDARDS.

THE INTENT OF THE PLAN IS TO CONSTRUCT THE NEW FENCE IN THE SAME TYPE AND LOCATION AS THE EXISTING FENCE, EXCEPT WHERE NECESSARY TO COMPLY WITH CURRENT STANDARDS (e.g. AT STRUCTURES etc.). WHERE EXISTING FENCE IS MISSING AND ITS LOCATION CANNOT BE DETERMINED FROM FIELD EVIDENCE, THE DEPARTMENT WILL STAKE THE RIGHT OF WAY LINE AND NEW FENCE SHALL BE LOCATED FROM THE RIGHT OR WAY LINE IN ACCORDANCE WITH CURRENT STANDARDS. IN ALL CASES, CURRENT STANDARD CONSTRUCTION DRAWINGS SHALL BE USED TO ESTABLISH THE CORRECT CONFIGURATION AND LOCATION OF THE NEW FENCE.

THE WORK SHALL INCLUDE REMOVAL OF ALL OF THE EXISTING RIGHT OF WAY FENCE AND ASSOCIATED HARDWARE AND DISPOSAL. CORNER, END AND ANCHOR POSTS AND THEIR ASSOCIATED CONCRETE ENCASEMENTS ARE TO COMPLETELY REMOVED. METAL POSTS SHALL BE REMOVED OR DRIVEN A MINIMUM OR 6 INCHES (150 mm) BELOW THE EXISTING GROUND SURFACE.

ALL TREES AND BRUSH WITH 2 FEET (0.6 m) EITHER SIDE OF THE FENCE AND A SUFFICIENT DISTANCE INSIDE THE FENCE ALIGNMENT TO PERMIT ITS CONSTRUCTION SHALL BE REMOVED IN ACCORDANCE WITH ITEM 201, EXCEPT THAT NO STUMP MAY EXCEED A HEIGHT OF 2 INCHES (50 mm) ABOVE THE EXISTING GROUND SURFACE. THE STUMPS OF ALL TREES AND BRUSH SHALL BE TREATED WITH AN EPA REGISTERED HERBICIDE LABELED FOR CUT STUMP TREATMENT. THE HERBICIDE SHALL BE SHIPPED IN NEW SEALED CONTAINERS BEARING THE MANUFACTURER'S LABEL. THE CONTRACTOR SHALL BE LICENSED BY THE OHIO DEPARTMENT OF AGRICULTURE AS A COMMERCIAL OR LIMITED COMMERCIAL APPLICATOR. ALL PERSONS APPLYING THE CUT STUMP HERBICIDE SHALL BE LICENSED COMMERCIAL OR LIMITED COMMERCIAL APPLICATORS OR UNDER THE DIRECT SUPERVISION OF THE SAME.

OHIO LAW REGULATES THE DISPOSAL OF LANDSCAPE WASTER THAT RESULT FROM ROADWAY CLEARING AND GRUBBING OPERATIONS. THE REGULATED WASTES INCLUDES BRUSH, TREES, STUMPS, TREE TRIMMINGS, BRANCHES, WEEDS, LEAVES, GRASS, SHRUBBERY, YARD TRIMMINGS, CROP RESIDUE, AND OTHER PLANT MATTER, EXCLUDING SOIL AND GARBAGE. THIS MATERIAL MAY BE BURIED IN NONSTRUCTURAL AREAS ON THE PROJECT SITE OR RIGHT-OF-WAY, WHERE PERMITTED BY THE ENGINEER.

ALL AREAS DISTURBED BY THE CONTRACTOR'S OPERATIONS SHALL BE REPAIRED AND SEEDED ACCORDING TO ITEM 870 AND INCLUDED IN ITEM 607 FOR PAYMENT.

THE FOLLOWING ESTIMATED QUANTITIES ARE CARRIED TO THE GENERAL SUMMARY TO BE USED AS DIRECT BY THE ENGINEER:

ITEM 607, FENCE, TYPE 47, AS PER PLAN	= 68428 LIN. FT.
ITEM 607, FENCE, TYPE 47RA, AS PER PLAN	= 1878 LIN. FT.
ITEM 607, FENCE, TYPE CLT, AS PER PLAN	= 37082 LIN. FT.
ITEM 601, ROCK CHANNEL PROTECTION, TYPE B WITH FILTER	= 50 CU. YD.

WATERING AND MOWING PERMANENT SEEDED AREAS

THE FOLLOWING ESTIMATED QUANTITIES ARE TO BE USED AS DIRECTED BY THE ENGINEER TO PROMOTE GROWTH AND TO CARE FOR THE PERMANENT SEEDED AREAS, AS PER 870 :

ITEM 870, WATER = 1599 M. GAL. (FROM SHEET 136)

ITEM 870, MOWING = 1666 M. SQ. FT. (FROM SHEET 136)

ITEM 870, SEEDING AND MULCHING

SEEDING AND MULCHING SHALL BE APPLIED TO ALL AREAS OF EXPOSED SOIL BETWEEN THE RIGHT-OF-WAY LINES, AND WITHIN THE CONSTRUCTION LIMITS FOR AREAS OUTSIDE THE RIGHT-OF-WAY LINES COVERED BY WORK AGREEMENT OR SLOPE EASEMENT. QUANTITY CALCULATIONS FOR ITEM 870, SEEDING AND MULCHING, ARE BASED ON THESE LIMITS.
THE FOLLOWING ESTIMATED QUANTITY HAS BEEN CARRIED TO THE GENERAL SUMMARY:

870, SEEDING AND MULCHING = 707,575 + 24,186 + 8,618 = 740,379 SQ. YD.

PART-WIDTH CONSTRUCTION

BECAUSE OF THE NECESSITY TO BUILD THIS PROJECT UNDER TRAFFIC AND TO CONSTRUCT THE FULL PAVEMENT WIDTH IN STAGES, EXTREME CARE SHALL BE TAKEN TO PREVENT THE CONSTRUCTION OF A BUTT JOINT IN THE BASE COURSES. LONGITUDINAL JOINTS SHALL BE LAPPED AS SHOWN ON STANDARD CONSTRUCTION DRAWING BP-3.1M.

ITEM 202, RAISED PAVEMENT MARKERS REMOVED FOR STORAGE

NUMBER AND LOCATION OF EXISTING RAISED PAVEMENT MARKERS TO BE REMOVED FOR STORAGE ON THE THE PROJECT ARE:

S.R. 18 INTERCHANGE	122
I.R. 271 CONNECTOR	91
S.R. 3 INTERCHANGE	142
S.B. REST AREA	65
N.B. REST AREA	62
S.R. 303 INTERCHANGE	118
MAINLINE	1417
TOTAL	2017

(QUANTITIES CARRIED TO THE GENERAL SUMMARY.)
THE CONTRACTOR SHALL DELIVER THESE RPM's TO THE MEDINA COUNTY GARAGE.

TEMPORARY SOIL EROSION AND SEDIMENT CONTROL

THE FOLLOWING ESTIMATED QUANTITIES ARE TO BE PLACED BY THE CONTRACTOR WITH THE ENGINEER'S CONCURRENCE FOR TEMPORARY EROSION AND SEDIMENT CONTROL MEASURES:

ITEM 877, TEMPORARY SEEDING AND MULCHING	= 148,000 SQ. YD.
ITEM 877, TEMPORARY SLOPE DRAINS	= 3,830 LIN. FT.
ITEM 877, TEMPORARY SEDIMENT BASINS AND SEDIMENT DAMS	= 40,870 CU. YD.
ITEM 877, TEMPORARY PERIMETER FILTER FABRIC FENCE	= 35,725 LIN. FT.
ITEM 877, TEMPORARY DITCH CHECK FILTER FABRIC FENCE	= 2,484 LIN. FT.
ITEM 877, TEMPORARY INLET PROTECTION FILTER FABRIC FENCE	= 1,720 LIN. FT.
ITEM 877, TEMPORARY DIKES	= 7,660 CU. YD.
ITEM 877, TEMPORARY DITCH PROTECTION	= 3500 SQ. YD.
ITEM 877, SEDIMENT REMOVAL	= 10,218 CU. YD.
ITEM 601, ROCK CHANNEL PROTECTION, TYPE C (WITHOUT FILTER)	= 12,000 CU. YD.
ITEM 870, MOWING	= 330 M. SQ. FT.
ITEM 870, COMMERCIAL FERTILIZER	= 31.60 TON
ITEM 870, REPAIR SEEDING AND MULCHING	= 37,000 SQ. YD.
ITEM 870, WATER	= 320 M. GAL.

REMOVAL OF UNSUITABLE SUBGRADE

CONTINGENCY QUANTITIES FOR ITEM 203, EXCAVATION NOT INCLUDING EMBANKMENT CONSTRUCTION AND ITEM 304, AGGREGATE BASE ARE PROVIDED FOR REMOVAL AND REPLACEMENT OF UNSUITABLE SUBGRADE MATERIALS AT THE FOLLOWING LOCATIONS:

1) STA. 1091+50 TO STA. 1092+50
STA. 1129+50 TO STA. 1130+00
STA. 1147+50 TO STA. 1148+50
STA. 1152+00 TO STA. 1164+00
STA. 1179+50 TO STA. 1180+50
STA. 1355+50 TO STA. 1356+50
STA. 1403+50 TO STA. 1404+50
(1750)(3)(56)(2)(1/27) = 21,778 CU.YD.
REMOVAL LIMITS SHALL BE FROM 1 FT. OUTSIDE OF THE LEFT SHOULDER TO 1 FT. OUTSIDE OF THE RIGHT SHOULDER WITH AN UNDERCUT DEPTH OF 36 INCHES BELOW THE PROPOSED SUBGRADE.

2) STA. 1343+50 TO STA. 1344+50
(100)(4)(56)(2)(1/27) = 1660 CU.YD.
REMOVAL LIMITS SHALL BE FROM 1 FT. OUTSIDE OF THE LEFT SHOULDER TO 1 FT. OUTSIDE OF THE RIGHT SHOULDER FOR THE SOUTHBOUND LANES WITH AN UNDERCUT DEPTH OF 48 INCHES BELOW THE PROPOSED SUBGRADE.

ITEM 203, EXCAVATION NOT INCLUDING EMBANKMENT CONSTRUCTION	= 23,438 CU.YD.
ITEM 304, AGGREGATE BASE	= 23,438 CU.YD.

QUANTITIES FOR USE AT THESE LOCATIONS ARE AS DIRECTED BY THE ENGINEER. THE PRICES BID SHALL INCLUDE ALL ASSOCIATED LABOR, MATERIAL AND EQUIPMENT COSTS.

EROSION CONTROL

ITEMS 601 AND 670 ARE PROVIDED IN THE PLANS FOR EROSION CONTROL. ROCK OF A STABLE NATURE SHALL NOT BE REMOVED IN ORDER TO PLACE ANY OF THESE ITEMS AND TURF OF A STABLE NATURE SHALL NOT BE REMOVED IN ORDER TO PLACE 670. THE ENGINEER SHALL CHECK AND NONPERFORM QUANTITIES OR ADJUST LOCATIONS AND QUANTITIES OF THESE ITEMS WHERE INDICATED BY FIELD CONDITIONS DURING CONSTRUCTION. IN ADDITION, THESE ITEMS SHALL MEET THE REQUIREMENT OF 108.04.

ITEM 605, AGGREGATE DRAINS

AGGREGATE DRAINS SHALL BE PLACED AT FIFTY (50) FOOT INTERVALS ON EACH SIDE OF NORMAL CROWNED SECTIONS, STAGGERED SO THAT EACH DRAIN IS 25 FEET FROM THE ADJACENT DRAIN ON THE OPPOSITE SIDE, AND AT TWENTY-FIVE (25) FOOT INTERVALS ON THE LOW SIDE ONLY OF SUPERELEVATED SECTIONS. AN AGGREGATE DRAIN SHALL BE PLACED AT THE LOW POINT OF EACH SAG VERTICAL CURVE.

ITEM 202, CATCH BASIN ABANDONED

ANY EXISTING CONDUIT IN CATCH BASINS TO BE ABANDONED SHALL BE CONNECTED THROUGH THE STRUCTURE.

ITEM 604, CATCH BASIN, NO. 4, 4A, 5 AND 5A, AS PER PLAN

REINFORCING BARS AS PER DETAIL ON SHEET 504 SHALL BE PROVIDED FOR CATCH BASIN NUMBERS 4, 4A, 5 AND 5A. THE TOTAL COST OF THE MATERIAL, EQUIPMENT, LABOR AND COMPLETE INSTALLATION OF THE REINFORCING BARS SHALL BE INCLUDED WITH THE UNIT PRICE BID FOR ITEM 604, CATCH BASIN, NO. 4, 4A, 5, AND 5A, AS PER PLAN.

REVIEW OF DRAINAGE FACILITIES

BEFORE ANY WORK IS STARTED ON THE PROJECT AND AGAIN BEFORE FINAL ACCEPTANCE BY THE STATE, REPRESENTATIVES OF THE STATE AND THE CONTRACTOR, ALONG WITH LOCAL REPRESENTATIVES, SHALL MAKE AN INSPECTION OF ALL EXISTING SEWERS WHICH ARE TO REMAIN IN SERVICE AND WHICH MAY BE AFFECTED BY THE WORK. THE CONDITION OF THE EXISTING CONDUITS AND THEIR APPURTENANCE SHALL BE DETERMINED FROM FIELD OBSERVATIONS. RECORDS OF THE INSPECTION SHALL BE KEPT IN WRITING BY THE STATE.

ALL NEW CONDUITS, INLETS, CATCH BASINS, AND MANHOLES CONSTRUCTED AS A PART OF THE PROJECT SHALL BE FREE OF ALL FOREIGN MATTER AND IN A CLEAN CONDITION BEFORE THE PROJECT WILL BE ACCEPTED BY THE STATE.

ALL EXISTING SEWERS INSPECTED INITIALLY BY THE ABOVE MENTIONED PARTIES SHALL BE MAINTAINED AND LEFT IN A CONDITION REASONABLY COMPARABLE TO THAT DETERMINED BY THE ORIGINAL INSPECTION. ANY CHANGE IN THE CONDITION RESULTING FROM THE CONTRACTOR'S OPERATIONS SHALL BE CORRECTED BY THE CONTRACTOR TO THE SATISFACTION OF THE ENGINEER.

PAYMENT FOR ALL OPERATIONS DESCRIBED ABOVE SHALL BE INCLUDED IN THE CONTRACT PRICE FOR THE PERTINENT 603 CONDUIT ITEMS.

ITEM SPECIAL, AIR SPEED ZONE MARKING

SPEED MEASUREMENT MARKINGS SHALL BE WHITE AND 2 FEET WIDE. THE MARKINGS SHALL BE 4 FEET IN LENGTH AND BE PLACED ON THE SHOULDER STARTING FROM THE EDGE LINE OF THE PAVED SURFACE AT 0.25 MILE INTERVALS OVER A 1 MILE LENGTH OF ROADWAY. THE ZONE SHALL START AT STA. 1110+37 NORTHBOUND AND STA. 1237+09 SOUTHBOUND ON BOTH INSIDE AND OUTSIDE SHOULDERS. THE MARKINGS SHALL BE LAID OUT BY A REGISTERED SURVEYOR. A RECORD SHALL BE KEPT AND COPIES MADE AVAILABLE TO LAW ENFORCEMENT OFFICERS. THE FOLLOWING ESTIMATED QUANTITY HAS BEEN CARRIED TO THE GENERAL SUMMARY:

ITEM SPECIAL, AIR SPEED ZONE MARKING = 2 EACH
THIS ITEM SHALL MEET THE REQUIREMENTS OF CMS 644.

CALCULATED JWR CHECKED DJV

GENERAL NOTES

MED-71-15.78

32
940

DESIGN FILE : k:\pd_med_lr71\dgn\gennotes\med71gn.dgn
USERNAME : nvondere
DATE : 09-DEC-1999
TIME : 12:05

ITEM 606, IMPACT ATTENUATOR, TYPE 1-98 (BIDIRECTIONAL)

THIS ITEM SHALL CONSIST OF FURNISHING AND INSTALLING EITHER OF THE FOLLOWING IMPACT ATTENUATORS:

1) THE C-A-T MANUFACTURED BY SYRO, INC., 1170 N. STATE STREET, GIRARD, OHIO 44420 (TELEPHONE: 330-545-4373).

THE LENGTH OF THE C-A-T SYSTEM IS CONSIDERED TO BE 31'3" [9525mm] LONG.

INSTALLATION SHALL BE AT THE LOCATIONS SPECIFIED IN THE PLANS, IN ACCORDANCE WITH THE MANUFACTURER'S SPECIFICATIONS AS DETAILED ON THE PRE-APPROVED SHOP DRAWINGS.

DWG. #	DRAWING NAME	DWG./REV. DATE	ODOT APPROVAL
SS245M	CRASH-CUSHION ATTENUATING TERMINAL PLAN, ELEVATION & SECTIONS FOR USE AS A LONGITUDINAL MEDIAN BARRIER TERMINAL OR CRASH CUSHION ATTENUATOR	4/10/97	3/6/98
SS224M	C-A-T TRANSITION TO MEDIAN BARRIER GUARDRAIL PLAN, ELEVATION & SECTIONS	4/26/96	3/6/98
SS226M	C-A-T TRANSITION TO VERTICAL WALL OR PIER PLAN, ELEVATION & SECTIONS	4/26/96	3/6/98

2) THE BRAKEMASTER MANUFACTURED BY ENERGY ABSORPTION SYSTEMS, INC., ONE EAST WICKER DRIVE, CHICAGO, IL 60601 (TELEPHONE: 312-467-6750).

THE LENGTH OF THE BRAKEMASTER SYSTEM IS CONSIDERED TO BE 32'8" [9957mm] LONG. INSTALLATION SHALL BE AT THE LOCATIONS SPECIFIED IN THE PLANS, IN ACCORDANCE WITH THE MANUFACTURER'S SPECIFICATIONS AS DETAILED ON THE FOLLOWING PRE-APPROVED SHOP DRAWINGS.

DWG. #	DRAWING NAME	DWG./REV. DATE	ODOT APPROVAL
92-00-02	BRAKEMASTER GENERAL ASSEMBLY (BIDIRECTIONAL SYSTEM)	3/10/97	3/6/98
92-00-82	BRAKEMASTER (BIDIRECTIONAL) WITH FOUNDATION TUBES	2/9/98	3/6/98
9202024	ANCHOR ASSEMBLY, FOUNDATION TUBE, 6.5 FT., BRS	6/12/97	3/6/98

THE FACE OF THE TYPE 1-98 IMPACT HEAD SHALL BE COVERED WITH A SHEET OF TYPE G REFLECTIVE SHEETING, PER CMS 730.19, APPROXIMATELY 36" W x 12" [915mm W x 305mm H]. PAYMENT FOR THE ABOVE WORK SHALL BE MADE AT THE UNIT PRICE BID FOR ITEM 606, IMPACT ATTENUATOR, TYPE 1-98 [(UNIDIRECTIONAL OR BIDIRECTIONAL)], EACH, AND SHALL INCLUDE ALL LABOR, TOOLS, EQUIPMENT AND MATERIALS NECESSARY TO CONSTRUCT A COMPLETE AND FUNCTIONAL ANCHOR ASSEMBLY SYSTEM, INCLUDING ALL RELATED TRANSITIONS, HARDWARE, REFLECTIVE SHEETING AND GRADING, NOT SEPARATELY SPECIFIED, AS REQUIRED BY THE MANUFACTURER.

ITEM 407, TACK COAT AND ITEM 407, TACK COAT FOR INTERMEDIATE COURSE

THE RATE OF APPLICATION OF THE 407 TACK COAT SHALL BE SUBJECT TO ADJUSTMENT AS DIRECTED BY THE ENGINEER. FOR ESTIMATING PURPOSES ONLY, THE PLAN QUANTITIES INDICATE AN AVERAGE APPLICATION RATE OF:

ITEM 407, TACK COAT = 0.10 GALLONS/SQ. YD.

ITEM 407, TACK COAT FOR INTERMEDIATE COURSE = 0.05 GALLONS/SQ. YD.

ROCK EXCAVATION

SECTION 203.04(b) OF THE CONSTRUCTION AND MATERIALS SPECIFICATIONS CALLS FOR EXCAVATION OF ROCK TO A DEPTH OF 18" BELOW THE SUBBASE FOR THE CROSS-SECTION WIDTH OF THE ROADWAY BETWEEN POINTS 1 FOOT BEYOND THE SHOULDERS. THE REQUIREMENT IS WAIVED UNDER THE EXISTING CONCRETE PAVEMENT AND OUTSIDE PAVED SHOULDERS. ROCK EXCAVATION DEPTH OF 18" SHALL BE PROVIDED FROM THE EDGE OF EXISTING CONCRETE PAVEMENT ON THE INSIDE TO 1 FOOT BEYOND THE INSIDE SHOULDER. AREAS OF POSSIBLE ROCK EXCAVATION ARE STA. 856+00 TO STA. 864+00 AND STA. 1019+75 TO STA. 1020+25.

ITEM 603, CONDUIT BORED AND JACKED

WHERE IT IS SPECIFIED THAT A CONDUIT BE INSTALLED BY THE METHOD OF BORING AND JACKING, NO TRENCH EXCAVATION SHALL BE CLOSER THAN 22 FEET TO THE EDGE OF PAVEMENT. TRENCHES SHALL BE ADEQUATELY SUPPORTED AND THE SPECIFICATION REQUIREMENTS FOR CLASS B BEDDING SHALL BE DISREGARDED. IF A CASING PIPE IS USED IN THE BORING AND JACKING OPERATION, THE VOID BETWEEN IT AND THE INTERIOR CARRIER PIPE SHALL BE COMPLETELY FILLED WITH ITEM 613 SAND, GROUT OR OTHER MATERIAL APPROVED BY THE ENGINEER. THE CONTRACTOR HAS THE OPTION TO USE TUNNELING TO INSTALL THE CONDUIT. REQUIREMENTS SHOWN FOR CONDUIT BORED AND JACKED SHALL APPLY TO TUNNELING.

CONSTRUCTION OF 48" CONDUIT SHALL BE DONE AFTER THE 10HP42 PILES FOR STRUCTURE MED-71-1992 L&R ARE IN PLACE. THE CONTRACTOR SHALL MAINTAIN FLOW FOR EXISTING 48" CORREGATED METAL PIPE BY METHODS APPROVED BY THE PROJECT ENGINEER. ALL COSTS SHALL BE INCLUDED IN PRICE BID FOR ITEM 603, CONDUIT BORED AND JACKED, TYPE A, 706.02, D-LOAD 3000.

ITEM 606, ANCHOR ASSEMBLY, TYPE E-98

THIS ITEM SHALL CONSIST OF FURNISHING AND INSTALLING EITHER OF THE FOLLOWING GUARDRAIL END TERMINALS:

1) THE ET-2000 (1997) MANUFACTURED BY SYRO, INC., 1170 N. STATE STREET, GIRARD, OHIO 44420 (TELEPHONE: 330-545-4373).

THE LENGTH OF THE ET-2000 (1997) SYSTEM IS CONSIDERED TO BE 50'-0", INCLUSIVE OF TWO 25'-0" LONG RAIL ELEMENTS. INSTALLATION SHALL BE AT THE LOCATIONS SPECIFIED IN THE PLANS, IN ACCORDANCE WITH THE MANUFACTURER'S SPECIFICATIONS AS DETAILED ON THE FOLLOWING PRE-APPROVED SHOP DRAWINGS.

DWG. #	DRAWING NAME	DWG./REV. DATE	ODOT APPROVAL
SS265M	ET-2000 (1997) PLAN, ELEVATION & SECTIONS	6/20/97	3/6/98

2) THE SKT-350 MANUFACTURED BY ROAD SYSTEMS, INC., 7631 NEW CASTLE DRIVE, FRANKFORT, IL 60423 (TELEPHONE: 815-464-5917).

THE LENGTH OF THE SKT-350 SYSTEM IS CONSIDERED TO BE 50'-0", INCLUSIVE OF FOUR 12'-6" LONG RAIL ELEMENTS. INSTALLATION SHALL BE AT THE LOCATIONS SPECIFIED IN THE PLANS, IN ACCORDANCE WITH THE MANUFACTURER'S SPECIFICATIONS AS DETAILED ON THE FOLLOWING PRE-APPROVED SHOP DRAWINGS.

DWG. #	DRAWING NAME	DWG./REV. DATE	ODOT APPROVAL
SKT-4M	SEQUENTIAL KINKING TERMINAL (SKT-350) ASSEMBLY WITH 4 FOUNDATION TUBES	12/11/97	3/6/98

THE FACE OF THE TYPE E-98 IMPACT HEAD SHALL BE COVERED WITH A SHEET OF TYPE G REFLECTIVE SHEETING, PER CMS 730.19, APPROXIMATELY 18" x 18".

PAYMENT FOR THE ABOVE WORK SHALL BE MADE AT THE UNIT PRICE BID ITEM 606, ANCHOR ASSEMBLY, TYPE E-98, EACH, AND SHALL INCLUDE ALL LABOR, TOOLS, EQUIPMENT AND MATERIALS NECESSARY TO CONSTRUCT A COMPLETE AND FUNCTIONAL ANCHOR ASSEMBLY SYSTEM, INCLUDING ALL RELATED TRANSITIONS, REFLECTIVE SHEETING, HARDWARE, GRADING, EMBANKMENT AND EXCAVATION NOT SEPARATELY SPECIFIED, AS REQUIRED BY THE MANUFACTURER.

ITEM 202, ANCHOR ASSEMBLY REMOVED, TYPE A

THIS ITEM SHALL INCLUDE THE COST OF REMOVAL OF THE EXISTING TYPE A, ANCHOR ASSEMBLY INCLUDING ALL POSTS, HARDWARE AND RAIL ELEMENTS AND THE CONCRETE ANCHORS. ALL ITEMS REMOVED SHALL BECOME THE PROPERTY OF THE CONTRACTOR AND SHALL BE PROPERLY DISPOSED OF.

THE EXISTING CONCRETE ANCHOR AND CONCRETE POSTS SHALL BE REMOVED ENTIRELY. ALL HOLES REMAINING AGTER REMOVAL SHALL BE FILLED WITH GRANULAR MATERIAL OR EXCESS MATERIAL RESULTING FROM GUARDRAIL CONSTRUCTION. ALL FILL MATERIAL SHALL BE THOROUGHLY COMPACTED AND LEVELED, AS DIRECTED BY THE ENGINEER.

PAYMENT FOR ALL OF THE ABOVE WORK SHALL BE INCLUDED IN THE UNIT BID PRICE FOR ITEM 202, ANCHOR ASSEMBLY REMOVED, TYPE A.

ITEM 606, ANCHOR ASSEMBLY, TYPE B-98

THIS ITEM SHALL CONSIST OF FURNISHING AND INSTALLING EITHER OF THE FOLLOWING GUARDRAIL END TERMINALS.

1) THE SRT-350, GUARDRAIL END TERMINAL AS MANUFACTURED BY SYRO INC., 1170 N. STATE STREET, GIROD, OHIO 44420 (TELEPHONE: 330-545-4373)

THE LENGTH OF THE SRT-350 SYSTEM IS CONSIDERED TO BE 37'-6" [11.43M)], INCLUSIVE OF THREE 12'-6" [(3.81M)] LONG RAIL ELEMENTS. INSTALLATION SHALL BE AT THE LOCATIONS SPECIFIED IN THE PLANS, IN ACCORDANCE WITH THE MANUFACTURER'S SPECIFICATIONS AS DETAILED ON THE FOLLOWING PRE-APPROVED SHOP DRAWINGS:

DWG. #	DRAWING NAME	DWG./REV. DATE	ODOT APPROVAL
SS444 SS444M	SLOTTED RAIL TERMINAL POST LAYOUT AND ERECTION DETAILS SRT-350 (12.5, 8 POST)	7/12/99	8/27/99
SS425M	C-A-T TRANSITION TO MEDIAN BARRIER GUARDRAIL PLAN, ELEVATION & SECTIONS	6/21/97	3/6/98

2) THE FLEAT-350, MANUFACTURED BY ROAD SYSTEMS, INC., 7634 NEW CASTLE DRIVE, FRANKFORT, IL 60423 (TELEPHONE: 815-464-5917)

THE LENGTH OF THE SRT-350 SYSTEM IS CONSIDERED TO BE 37'-6" [11.43M)], INCLUSIVE OF THREE 12'-6" [(3.81M)] LONG RAIL ELEMENTS. INSTALLATION SHALL BE AT THE LOCATIONS SPECIFIED IN THE PLANS, IN ACCORDANCE WITH THE MANUFACTURER'S SPECIFICATIONS AS DETAILED ON THE FOLLOWING PRE-APPROVED SHOP DRAWINGS:

DWG. #	DRAWING NAME	DWG./REV. DATE	ODOT APPROVAL
FLT-M	FLARED ENERGY ABSORBING TERMINAL (FLEAT-350) ASSEMBLY	4/16/98	7/31/98

GRADING SHALL BE IN ACCORDANCE WITH STANDARD CONSTRUCTION DRAWING GR-4.3 M.

THE FACE OF THE TYPE B-98 IMPACT HEAD SHALL BE COVERED WITH TYPE G REFLECTIVE SHEETING, PER CMS 730.19: APPROXIMATELY 36" W X 12" H [915mm W X 305mm H] FOR TYHE SRT-350 AND 14" W X 20" [350 mm W X 500 mm H] FOR THE FLEAT

PAYMENT FOR THE ABOVE WORK SHALL BE MADE AT THE UNIT PRICE BID FOR ITEM 606, IMPACT ATTENUATOR, TYPE 2-98 BIDIRECTIONAL, EACH, AND SHALL INCLUDE ALL LABOR, TOOLS, EQUIPMENT AND MATERIALS NECESSARY TO CONSTRUCT A COMPLETE AND FUNCTIONAL IMPACT ATTENUATOR SYSTEM, INCLUDING ALL RELATED BACKUPS, TRANSITIONS, HARDWARE AND GRADING, NOT SEPARATELY SPECIFIED, AS REQUIRED BY THE MANUFACTURER.

CROSSINGS AND CONNECTIONS TO EXISTING PIPES AND UTILITIES

WHERE PLANS PROVIDE FOR A PROPOSED CONDUIT TO BE CONNECTED TO, OR CROSS OVER OR UNDER AN EXISTING SEWER OR UNDERGROUND UTILITY, THE CONTRACTOR SHALL LOCATE THE EXISTING PIPES OR UTILITIES BOTH AS TO LINE AND GRADE BEFORE STARTING TO LAY THE PROPOSED CONDUIT.

IF IT IS DETERMINED THAT THE ELEVATION OF THE EXISTING CONDUIT, OR EXISTING APPURTENANCE TO BE CONNECTED, DIFFERS FROM THE PLAN ELEVATION OR RESULTS IN A CHANGE IN THE PLAN CONDUIT SLOPE, THE ENGINEER SHALL BE NOTIFIED BEFORE STARTING CONSTRUCTION OF ANY PORTION OF THE PROPOSED CONDUIT WHICH WILL BE AFFECTED BY THE VARIANCE IN THE EXISTING ELEVATIONS.

IF IT IS DETERMINED THAT THE PROPOSED CONDUIT WILL INTERSECT AN EXISTING SEWER OR UNDERGROUND UTILITY IF CONSTRUCTED AS SHOWN ON THE PLAN, THE ENGINEER SHALL BE NOTIFIED BEFORE STARTING CONSTRUCTION OF ANY PORTION OF THE PROPOSED CONDUIT WHICH WOULD BE AFFECTED BY THE INTERFERENCE WITH AN EXISTING FACILITY. PAYMENT FOR ALL THE OPERATIONS DESCRIBED ABOVE SHALL BE INCLUDED IN THE CONTRACT PRICE FOR THE PERTINENT 603 CONDUIT ITEM.

CALCULATED M.LOPEZ CHECKED D.J.V

GENERAL NOTES

MED-71-15.78

33
940

DATE : 30-NOV-1999
TIME : 08:28
DESIGN FILE : i:\pd_med_lr71\dgn\gennotes\med71gn.dgn
USERNAME : nvonderg

ITEM 201, CLEARING AND GRUBBING, AS PER PLAN

ALTHOUGH THERE ARE NO TREES OR STUMPS SPECIFICALLY MARKED FOR REMOVAL WITHIN THE LIMITS OF THE PROJECT, A LUMP SUM QUANTITY HAS BEEN INCLUDED IN THE GENERAL SUMMARY FOR ITEM 201, CLEARING AND GRUBBING, AS PER PLAN.

IN ADDITION TO THE REQUIREMENTS OF ITEM 201, ALL VEGETATION MECHANICALLY REMOVED BY CUTTING OR MOWING SHALL HAVE A CUT STUMP HERBICIDE TREATMENT APPLIED TO EACH INDIVIDUAL REMAINING STUMP WITHIN TWO (2) HOURS OF CUTTING CARE SHALL BE EXERCISED TO APPLY TREATMENT ONLY TO INDIVIDUAL STUMPS SO AS NOT TO HARM OTHER VEGETATION. THE CUT STUMP TREATMENT SHALL BE GARLON 4 OR PATHFINDER II RTU APPLIED IN ACCORDANCE WITH LABEL DIRECTIONS. APPLICATORS OF THE CUT STUMP TREATMENT SHALL BE CURRENTLY LICENSED OHIO COMMERCIAL APPLICATORS IN THE APPROPRIATE CATEGORY. EVIDENCE OF VALID LICENSES SHALL BE PROVIDED TO THE ENGINEER FOR VERIFICATION.

ALL PROVISIONS AS SET FORTH IN THE SPECIFICATIONS UNDER THIS ITEM SHALL BE INCLUDED IN THE LUMP SUM PRICE BID FOR ITEM 201, CLEARING AND GRUBBING, AS PER PLAN.

PRIVATE SIGNS

OHIO LOGO SIGNS (BURGER KING, McDONALDS, ..etc.) WHICH APPEAR WITHIN THE PROJECT ARE PRIVATELY OWNED SIGNS. THE LOGO SIGNS WHICH NEED TO BE REMOVED (AS AGREED BETWEEN THE CONTRACTOR AND THE ENGINEER) SHALL BE PERFORMED BY OHIO LOGO, INC.

THE CONTRACTOR SHALL NOTIFY OHIO LOGO, INC. IN WRITING A MINIMUM OF THIRTY (30) DAYS IN ADVANCE OF THE DATE THE PRIVATE SIGN(S) NEED REMOVED. THE ADDRESS IS: OHIO LOGO, INC., 4384 TULLER ROAD, DUBLIN, OHIO 43017 (TELEPHONE: 1-800-860-5646).

THE CONTRACTOR SHALL ALSO NOTIFY THE OHIO LOGO, INC. IN WRITING WHEN THEY CAN RE-ERECT THE SIGNS THAT HAVE BEEN PREVIOUSLY REMOVED.

RELATIONSHIP BAR CHART SCHEDULE

THE RELATIONSHIP BAR CHART SCHEDULE SHALL BE COMPUTER GENERATED ONLY. HAND DRAWN SCHEDULES ARE NOT ACCEPTABLE. SEE THE PROPOSAL NOTE FOR ADDITIONAL REQUIREMENTS.

PROTECTION OF RIGHT-OF-WAY LANDSCAPING

THE CONTRACTOR SHALL CONSTRICT ALL OF HIS/HER ACTIVITIES, EQUIPMENT STORAGE, AND STAGING TO WITHIN THE CONSTRUCTION LIMITS. UNLESS OTHERWISE IDENTIFIED IN THE PLANS OR PROPOSAL, THE CONSTRUCTION LIMITS ARE IDENTIFIED AS 30 FT FROM THE EDGE OF PAVEMENT. SHOULD THE CONTRACTOR WISH TO USE ANY AREA OUTSIDE THESE LIMITS, A REQUEST IN WRITING MUST BE SUBMITTED TO THE PROJECT ENGINEER. THE DOCUMENT SUBMITTED MUST CLEARLY IDENTIFY THE AREA THAT THE CONTRACTOR PLANS TO USE AND EXPLAIN THE PROPOSED USE AND RESTORATION OF THE AREA. THE ENGINEER SHALL APPROVE THE REQUEST IN WRITING BEFORE THE CONTRACTOR HAS PERMISSION TO USE THE AREA. PRIOR TO BEGINNING WORK, THE CONTRACTOR, SUPERINTENDENT OR HIS REPRESENTATIVE, THE PROJECT ENGINEER, AND A REPRESENTATIVE OF THE MAINTAINING AGENCY SHALL REVIEW AND RECORD ALL LANDSCAPING ITEMS WITHIN THE RIGHT OF WAY (BOTH WITHIN AND OUTSIDE THE CONSTRUCTION LIMITS). A RECORD OF THIS REVIEW WILL BE KEPT IN THE PROJECT ENGINEER'S FILES. PRIOR TO FINAL ACCEPTANCE, A FINAL REVIEW OF LANDSCAPING ITEMS WILL BE MADE. ANY ITEMS DAMAGED BEYOND THE CONSTRUCTION LIMITS AS DEFINED ABOVE WILL BE REPLACED IN KIND OR AS DIRECTED BY THE PROJECT ENGINEER.

STORM WATER POLLUTION PREVENTION PLAN

THE CONDITIONS OF THE NPDES CONSTRUCTION STORM WATER GENERAL PERMIT (SEE PROPOSAL) SHALL BE MET DURING ALL STAGES OF CONSTRUCTION. THE LOCATION AND TIMING OF ALL EROSION AND SEDIMENT CONTROL ITEMS SHALL BE FIELD ADJUSTED TO PREVENT SIGNIFICANT IMPACTS ON RECEIVING WATERS. IMPLEMENTATION OF THIS STORM WATER POLLUTION PREVENTION PLAN SHALL CONTINUE THROUGHOUT THE DURATION OF THE PROJECT OR UNTIL SUCH TIME THAT THE UPSLOPE DISTURBED AREAS ARE STABILIZED. INSTALLATION OF SEDIMENT BASINS/DAMS, PERIMETER FILTER FABRIC FENCE, AND DITCH CHECKS SHALL BE CONCURRENT WITH CLEARING AND GRUBBING AND/OR GRADING OPERATIONS. ALL REASONABLE ATTEMPTS SHALL BE MADE TO MINIMIZE THE TOTAL AREA OF DISTURBED LAND. AREAS TO REMAIN DORMANT FOR MORE THAN 45 DAYS SHALL BE IMMEDIATELY STABILIZED WITH TEMPORARY SEEDING AND MULCHING, EROSION CONTROL MATTING OR OTHER APPROPRIATE EROSION CONTROL MEASURES. ADDITIONAL QUANTITIES OF TEMPORARY SOIL EROSION AND SEDIMENT CONTROL ITEMS ARE GIVEN IN THE GENERAL NOTES.

ASBESTOS NOTIFICATION AND REMOVAL

An asbestos survey of the bridges scheduled for demolition or renovation was conducted by a certified asbestos hazard evaluation specialist. Approximately 320 Sq. Ft. of Regulated Asbestos Containing Materials was identified on bridge no. MED-71- 1918 L&R over Wilbur Road.
The removal and disposal of the asbestos containing material must comply with the Ohio Administrative Code, the Occupational Safety and Health Administrative (OSHA) regulations and the National Emission Standard for Hazardous Air Pollutants (NESHAP) Standard for Asbestos.

The contractor shall provide an individual trained in the provisions of the NESHAP on site, to direct the removal of the asbestos containing material.

A copy of the Ohio Environmental Protection Agency (OEPA) Notification of Demolition and Renovation Form, partially completed and signed by the bridge owner, will be provided to the successful bidder. The contractor shall complete the form and submit it to the District Construction Engineer. The form may be completed at the preconstruction meeting. The District Construction Engineer shall submit the form to the OEPA at least ten (10) working days prior to the start of the demolition of the bridge. The District Contruction Engineer shall provide a copy of the completed form to the contractor.

Information which may be required on the form will include:

- -The contractor's name and address.
- -The asbestos removal sub-contractor's name and address.
- -The scheduled dates for the start and completion of the bridge removal or renovation.
- -The dates and hours of operation for the asbestos removal.
- -A description of the planned demolition or renovation work and the method(s) to be used.
- -A description of work practices and engineering controls to be used to prevent emissions of asbestos at the site.
- -The name and addresses of waste transporters to be used on the project.
- -The name and address of the Waste Disposal Facility (licensed by the local health department and permitted by the OEPA) to be used.
- -A description of procedures to be followed in the event that unexpected asbestos is found or previously non-friable asbestos material becomes crumbled, pulverized or reduced to powder.

A copy of the OEPA form is available for inspection at the ODOT, District Three Office, 906 N. Clark Street, Ashland, Ohio, 44805.

Basis of Payment
The contractor shall furnish all fees, labor, equipment and materials necessary to complete, submit and comply with the OEPA Notification form and to remove, transport and dispose of the asbestos containing material. Payment for this work shall be made under the contract lump sum price bid for Item Special-Asbestos Abatement.

(QUANTITY CARRIED TO THE GENERAL SUMMARY)

ITEM SPECIAL - FILL AND PLUG EXISTING CONDUIT

THIS ITEM SHALL CONSIST OF THE CONSTRUCTION OF BULKHEADS IN AN EXISTING CONDUIT AND FILLING THE AREA THUS SEALED OFF WITH LEAN GROUT, ITEM 613, SAND OR OTHER MATERIAL APPROVED BY THE ENGINEER.

BULKHEADS SHALL BE LOCATED AT THE LIMITS OF THE AREA TO BE FILLED AS INDICATED ON THE PLANS. THE BULKHEADS SHALL CONSIST OF BRICK OR CONCRETE MASONRY WITH A MINIMUM THICKNESS OF 12 INCHES.

THE FILL MATERIAL SHALL BE PUMPED INTO PLACE, OR PLACED BY OTHER MEANS APPROVED BY THE ENGINEER, SO THAT, AFTER SETTLEMENT, AT LEAST 90 PERCENT OF THE CROSS-SECTIONAL AREA OF THE CONDUIT, FOR ITS ENTIRE LENGTH, SHALL BE FILLED. THE LENGTH OF FILLED AND PLUGGED CONDUIT TO BE PAID FOR SHALL BE THE ACTUAL NUMBER OF LINEAR FEET (MEASURED ALONG THE CENTERLINE OF EACH CONDUIT FROM OUTER FACE OF BULKHEADS) FILLED AND PLUGGED AS DESCRIBED ABOVE.

IN LIEU OF FILLING AND PLUGGING THE EXISTING CONDUIT, THE PIPE MAY BE CRUSHED AND BACKFILLED IN ACCORDANCE WITH THE PROVISIONS OF 203, OR IT MAY BE REMOVED.

THE LENGTH, MEASURED AS PROVIDED ABOVE, SHALL BE PAID FOR AT THE CONTRACT PRICE PER LINEAR FOOT FOR, ITEM SPECIAL, FILL AND PLUG EXISTING CONDUIT.

ASBESTOS NOTIFICATION

An asbestos survey of the bridge(s) scheduled for demolition or renovation was conducted by a certified asbestos hazard evaluation specialist. The survey determined that no asbestos is present on the bridge(s).

The bridges which were surveyed and contained no asbestos are: MED-71-1685 L & R (I-71 over sr 18), MED-71-1828 (Granger Road),MED-71-1870 L & R (I-71 over I-271), and MED-71-1992 L & R (I-71 over Rocky River), MED-71-2088E (Ramp B @ SR 3 over Plum Creek), MED-71-2090 L & R (I-71 over SR 3), MED-71-2092W (Ramp C @ SR 3 over Plum Creek), and MED-71-2402 L & R (I-71 over SR 303).

A copy of the Ohio Environmental Protection Agency (OEPA) Notification of Demolition and Renovation form, partially completed and signed by the bridge owner, will be provided to the successful bidder at the preconstruction meeting. The contractor shall complete the form and return it to the District Construction Engineer. The completion of this form may be performed at the preconstruction meeting. The District Construction Engineer shall submit it to (OEPA District Office or the Local Air Authority) at least ten (10) working days prior to the start of the demolition of the bridge. The District Construction Engineer shall provide a copy of the completed form to the contractor. The contractor shall not commence demolition of the structure until the above requirements are met.

Information required on the form will include:
- The contractors name and address
- The scheduled dates for the start and completion of the bridge removal or renovation
- A description of the planned demolition or renovation work and the method(s) to be used

A copy of the OEPA form is available for inspection at the ODOT District 3 Office, 906 N. Clark Street, Ashland, Ohio, 44805.

Basis for Payment
The contractor shall furnish all fees, labor, and material necessary to complete and submit the OEPA Notification form. Payment for this work shall be included in the bid item 202 for Structure Removal.

ITEM SPECIAL - PIPE CLEANOUT

THIS WORK SHALL CONSIST OF REMOVING SEDIMENT AND DEBRIS FROM THE EXISTING DRAINAGE CONDUITS SPECIFIED IN THE PLANS. ALL MATERIAL REMOVED SHALL BE DISPOSED OF AS PER 203.05. ALL SEWERS SHALL BE CLEANED OUT TO THE SATISFACTION OF THE ENGINEER.

CLEANOUT OF THE PIPE SHALL BE PAID FOR AT THE UNIT PRICE BID FOR ITEM SPECIAL - PIPE CLEANOUT. THIS PRICE SHALL INCLUDE THE COST FOR MATERIAL, EQUIPMENT, LABOR, AND ALL INCIDENTALS REQUIRED TO COMPLETE THE CLEANOUT.

THE FOLLOWING ESTIMATED QUANTITIES HAVE BEEN INCLUDED IN THE GENERAL SUMMARY FOR THE ABOVE NOTED WORK:

SPECIAL, PIPE CLEANOUT	1,200 LIN. FT.

(QUANTITIES CARRIED TO THE GENERAL SUMMARY)

ITEM SPECIAL - PRESSURE RELIEF JOINT, TYPE A

FOR DETAILS, SEE STANDARD DRAWING BP-2.3.

CALCULATED
CHECKED DJV

GENERAL NOTES

MED-71-15.78

DESIGN FILE : i:\pd_med_lr71\dgn\gennotes\med71gn.dgn
USERNAME : jrogers
DATE : 08-DEC-1999
TIME : 09:48

EXISTING UNDERDRAINS

ALL EXISTING UNDERDRAINS NOT REMOVED OR RECONNECTED TO PROPOSED UNDERDRAINS DURING PROPOSED CONSTRUCTION SHALL BE PROVIDED WITH A POSITIVE OUTLET. ALL MATERIALS, LABOR AND INCIDENTALS NECESSARY TO PROVIDE AN OUTLET FOR THE EXISTING UNDERDRAIN SHALL BE INCLUDED IN ITEM 605, 6" BY TYPE UNDERDRAIN WITH FABRIC WRAP, TO THE SATISFACTION OF THE ENGINEER

PIPE REPLACEMENT & EXTENSIONS

THE CONTRACTOR SHALL HAVE THE OPTION OF USING A COUPLING BAND TO JOIN THE EXISTING CORRUGATED METAL PIPE WITH THE PROPOSED SECTION OF CORRUGATED METAL OR BY PLACING A CONCRETE COLLAR AS PER STANDARD CONSTRUCTION DRAWING DM-1JM. ALL CONCRETE PIPE EXTENSIONS SHALL HAVE A CONCRETE COLLAR AS PER STANDARD CONSTRUCTION DRAWING DM-1JM PLACED AT THE JOINING OF EXISTING AND PROPOSED SECTIONS OF PIPE.

ANY EXPOSED METAL FROM THE PIPE REPLACEMENT OF A CORUGATED METAL PIPE SHALL BE GALVANIZED COATED AS PER CMS SPECIFACTION 711.02 AND INCLUDED IN THE COST OF ITEM 603.

ITEM 507 - NOISE BARRIER DRILLED SHAFTS

COORDINATION BETWEEN THE NOISE BARRIER OPERATION AND DRAINAGE INCLUDING UNDERDRAIN OPERATIONS WILL BE CRITICAL IN ORDER TO CONSTRUCT AND MAINTAIN ALL DRAINAGE ITEMS INCLUDING UNDERDRAINS. CARE SHALL BE TAKEN, AS APPROVED BY THE ENGINEER, TO MAINTAIN POSITIVE FLOW THRU DRAINAGE ITEMS PASSING BENEATH THE NOISE BARRIER.

ITEM 601 - RIPRAP USING 6" REINFORCED CONCRETE SLAB, AS PER PLAN

THE RIPRAP PAD SHALL BE CONSTRUCTED AS DETAILED ON SHEET 537-538. ALSO INCLUDED IN THE COST OF THE 601 - RIPRAP USING 6" REINFORCED CONCRETE, AS PER PLAN WILL BE 6" OF #57 STONE BEDDING PLACED AS SHOWN ON THE DETAILS. ALL LABOR, EQUIPMENT, MATERIALS AND ALL INCIDENTALS NECESSARY TO CONSTRUCT THIS ITEM AS SHOWN ON THE DETAILS SHALL BE INCLUDED IN THE CONTRACT UNIT PRICE BID FOR THIS ITEM.

ITEM 603 - 54" CONDUIT, TYPE C, AS PER PLAN

IN ADDITION TO THE NORMAL REQUIREMENT OF ITEM 603, THE COST OF THIS ITEM SHALL ALSO INCLUDE THE EXTENSION OF THE EXISTING LINER PIPE INSIDE THE EXISTING 54" CULVERT THROUGH THE PROPOSED CULVERT EXTENSIONS. ALL MATERIALS, LABOR, EQUIPMENT AND INCIDENTALS NECESSARY TO CONSTRUCT THE PROPOSED CULVERT EXTENSIONS WITH LINER EXTENSION AND PROVIDE A SUITABLE JOINT BETWEEN THE PROPOSED AND EXISTING LINER OF THE SAME MAKE, MODEL AND MANUFACTURER AS APPROVED BY THE ENGINEER. ALL THE ABOVE SHALL BE INCLUDED IN ITEM 603 - 54" CONDUIT TYPE C, AS PER PLAN.

ITEM 606 - GUARDRAIL POSTS

POSTS LOCATED OVER OR NEAR UNDERDRAIN OUTLETS SHALL BE OFFSET TO MAXIMIZE CLEARANCE. CARE SHALL BE TAKEN TO MAINTAIN POSITIVE FLOW THRU UNDERDRAIN OUTLET UNDER GUARDRAIL AS APPROVED BY THE ENGINEER.

ITEM 605 - 4" SHALLOW PIPE UNDERDRAIN WITH FABRIC WRAP, 707.31 OR 707.41, AS PER PLAN

THIS ITEM SHALL BE AS DETAILED ON SHEET NO. 538 AND ALSO SHALL INCLUDE ALL LABOR, EQUIPMENT AND MATERIALS NECESSARY TO CONSTRUCT THIS ITEM.

ITEM 605 - 4" SHALLOW PIPE UNDERDRAIN WITH FABRIC WRAP, 707.33 OR 707.41, AS PER PLAN

THIS ITEM SHALL BE AS DETAILED ON SHEET NO. 550. CONSTRUCTION AND MATERIAL SPECIFICATION 605.03 (C) IS MODIFIED TO BACKFILL THE UNDERDRAIN TRENCH WITH GRANULAR FILTER MATERIAL USING CRUSHED NO. 8 AGGREGATE ONLY.

DUAL LOOP TRAFFIC RECORDER

SEE DETAILS ON SHEET NOS. 551 FOR NOTES, DETAILS AND QUANTITES FOR CONSTRUCTING THIS ITEM.

CLASSIFICATION SITE TRAFFIC RECORDERS

SEE DETAILS ON SHEET NOS. 553 FOR NOTES, DETAILS AND QUANTITES FOR CONSTRUCTING THIS ITEM.

ITEM 203 - DITCH CLEANOUT

THIS WORK SHALL CONSIST OF REESTABLISHING THE CROSS-SECTION OF AN EXISTING DITCH. SURPLUS OR UNSUITABLE MATERIAL, AS DETERMINED BY THE ENGINEER, SHALL BE DISPOSED OF AS PER 203.05. EMBANKMENT REQUIRED FOR ERODED CONDITIONS SHALL MEET THE REQUIREMENTS OF 203.07 EXCEPT THAT THE COMPACTION REQUIREMENTS ARE AS DIRECTED BY THE ENGINEER. ALSO INCLUDED IN THIS ITEM SHALL BE ALL MATERIALS, LABOR AND INCIDENTALS INCLUDING SEEDING AND MULCHING THE CLEANED OUT DITCH AS PER CMS ITEM 670 SEEDING AND MULCHING.

THE CONTRACTOR SHALL RESTORE ANY DISTURBED AREAS TO THE SATISFACTION OF THE ENGINEER CAUSED BY CONSTRUCTION OF THIS ITEM AT NO ADDITIONAL COST TO THE STATE.

MEASUREMENT OF THE DITCH CLEANOUT SHALL BE THE ACTUAL LIN. FEET MEASURED ALONG THE CENTERLINE OF THE DITCH.

PAYMENT FOR ALL THE ABOVE SHALL BE INCLUDED IN THE UNIT PRICE BID FOR ITEM 203, DITCH CLEANOUT.

IN ADDITION TO THE ESTIMATED QUANTITIES IN THE DRAINAGE SUBSUMMARY, THE FOLLOWING ESTIMATED QUANTITY HAS BEEN INCLUDED IN THE GENERAL SUMMARY TO BE USED AS DIRECTED BY THE ENGINEER.

203 DITCH CLEANOUT 500 LIN. FT.

ALL PROPOSED DITCH CLEANOUTS SHALL BE GRADED TO PROVIDE A POSITIVE OUTLET AND CONSTRUCTED AS DIRECTED BY THE ENGINEER. SEE DETAIL ON SHEET NO. 503 FOR ADDITIONAL DETAILS.

HEADWALL REFERENCE

REFERENCE TO HEADWALL HW-1 AND/OR HW-2 AND/OR HW-2A SHALL BE CONSTRUCTED AS DETAILED ON SHEET NO. 506-508.

HEADWALL PATCHING

HEADWALLS ON THE PROJECT THAT ARE NOT BEING REPLACED MAY NEED PATCHING TO REPAIR MINOR FACIAL DETERIORATION. HEADWALL PATCHING SHALL BE AT LOCATIONS AS DETAILED ON SHEET NO. 503. AS APPROVED BY THE ENGINEER. ALL LABOR, MATERIALS, EQUIPMENT AND INCIDENTALS NECESSARY TO MAKE THESE DETAILED HEADWALLS AESTHETICALLY PLEASING SHALL ALSO BE INCLUDED IN THE CONTRACT UNIT PRICE BID FOR THIS ITEM AS APPROVED BY THE ENGINEER.

IN ADDITION, A CONTINGENCY QUANTITY OF ITEM 519 - PATCHING CONCRETE STRUCTURES HAS BEEN INCLUDED IN THE GENERAL SUMMARY TO BE USED AS DIRECTED BY THE ENGINEER.

ITEM 519 - PATCHING CONCRETE STRUCTURES 200 SQ. FT.

MISCELLANEOUS REMOVAL

EXISTING RCP, RIPRAP OR OTHERWISE UNSUITABLE MATERIALS IN THE SAME LOCATION AS THE PROPOSED DRAINAGE SHALL BE REMOVED AS DIRECTED BY THE ENGINEER SO THAT THE PROPOSED DRAINAGE ITEM CAN BE PROPERLY CONSTRUCTED. PAYMENT FOR ALL MATERIALS, LABOR AND ANY INCIDENTALS TO PERFORM THESE MISCELLANEOUS REMOVALS TO THE SATISFACTION OF THE ENGINEER SHALL BE INCLUDED WITH THE PROPOSED DRAINAGE ITEM AT THESE LOCATIONS.

CATCH BASIN NO. 2-4, AS PER PLAN

THE SIDE INLET SHALL BE PROVIDED FOR THE CB NO. 2-4. THE TOTAL COST OF THE MATERIAL, EQUIPMENT, LABOR AND COMPLETED INSTALLATION OF THE SIDE INLET SHALL BE INCLUDED WITH THE UNIT PRICE BID FOR ITEM 604 CATCH BASIN NO. 2-4, AS PER PLAN.
SEE DETAIL ON SHEET NO. 504 FOR CONSTRUCTING THIS ITEM.

ITEM 602 CONCRETE MASONRY, AS PER PLAN

VARIOUS HEADWALLS ARE TO BE EXTENDED IN ORDER TO FACILITATE UNDERDRAIN OUTLETS. THE TOTAL COST OF THE MATERIAL, EQUIPMENT, LABOR, INCIDENTALS AND COMPLETED INSTALLATION OF THE EXTENDED HEADWALL SHALL BE INCLUDED WITH THE UNIT PRICE BID FOR ITEM 602 CONCRETE MASONRY, AS PER PLAN.
SEE DETAIL ON SHEET NO. 537 FOR CONSTRUCTING THIS ITEM.

CALCULATED PRS
CHECKED SAM

DRAINAGE GENERAL NOTES

MED - 71 - 15.78

DESIGN FILE : I:\pd_MED_IR71\DGN\REL-1d\Finaldr-dinage\7885GNA.dgn
USERNAME : jrogers
DATE : 03-JAN-2000
TIME : 08:36
7885GNA.DGN

ITEM 603 - CONDUIT MISC.: INSITU LINER PIPE

THIS ITEM SHALL CONSIST OF FURNISHING AND INSTALLING THE APPROPRIATE SIZE AS PER THE MANUFACTURER OF A CURED IN THE PLACE THERMOSETTING RESIN SEWER PIPE. MATERIALS FOR THIS ITEM SHALL COMPLY WITH ASTM D 5813 SPECIFICATION. THE LINER PIPE SHALL BE INSTALLED PER THE MANUFACTURERS RECOMMENDATION AND COMPLY WITH ASTM F 1216. THE LINER PIPE AT THE INLET END OF THE CULVERT SHALL HAVE A NEAT CUT IN ORDER TO NOT RESTRICT THE DRAINAGE ENTRANCE INTO THE CULVERT. ANY DAMAGE TO THE EXISTING STRUCTURES SHALL BE REPAIRED OR REPLACED AS DETERMINED BY THE ENGINEER AND INCLUDED IN THE UNIT PRICE BID FOR THIS ITEM. ANY CONNECTIONS INTO THE EXISTING PIPE SHALL BE EXTENDED THROUGH THE LINER BY MEANS OF A SAW CUT OR AS RECOMMENDED BY THE MANUFACTURER. PAYMENT FOR THE INSITU LINER PIPE ITEM INCLUDING ALL MATERIALS, LABOR, EQUIPMENT AND INCIDENTALS NECESSARY FOR THIS ITEM COMPLETE AND IN PLACE SHALL BE AT THE CONTRACT UNIT PRICE IN ACTUAL NUMBER OF LINEAR FEET MEASURED BETWEEN THE ENDS OF THE EXISTING CONDUIT.

CHANNEL EASEMENT

THE CONTRACTOR SHALL COORDINATE THE PROPOSED DRAINAGE WORK AT STA. 932+00± LT. & RT. WITH THE PROPOSED FENCING OPERATIONS SO THAT THE DRAINAGE WORK CAN BE COMPLETED BEFORE ERECTION OF THE NEW FENCE.

PROPOSED UNDERDRAINS

UNDERDRAIN OUTLET CONNECTIONS AND TRANSVERSE UNDERDRAINS MAY EXTEND ACROSS ADJOINING CONSTRUCTION PHASES. IN THESE SITUATIONS THE CONTRACTOR SHALL PROVIDE AND INSTALL TEMPORARY PLUGS OR CAPS AT THE LIMITS OF THE UNDERDRAIN CONSTRUCTION. DURING THE CONSTRUCTION OF THE SUBSEQUENT PHASE THE TEMPORARY PLUG OR CAP SHALL BE REMOVED, THE EXISTING UNDERDRAIN OR OUTLET SHALL BE INSPECTED FOR CLEANLINESS, CLEANED IF NECESSARY, AND THE UNDERDRAIN OR OUTLET CONSTRUCTION COMPLETED OR CONTINUED TO THE NEXT STAGE LIMIT. ALL MATERIAL, LABOR, AND INCIDENTALS NECESSARY TO PROVIDE, TO THE SATISFACTION OF THE ENGINEER, THE TEMPORARY CAPPING AND PIPE CLEANOUT BETWEEN EACH PHASE SHALL BE INCLUDED IN ITEM 603, 150 mm. CONDUIT, TYPE F AND/OR ITEM 605, SHALLOW PIPE UNDERDRAIN, BY SIZE AND TYPE.

THE UNDERDRAINS MAY CROSS CONSTRUCTION STAGE LIMITS. TEMPORARY OUTLETS MAY BE NEEDED TO BE CONSTRUCTED AS DIRECTED BY THE ENGINEER TO PROVIDE POSITIVE OUTLETS FOR UNDERDRAINS AT ALL TIMES DURING CONSTRUCTION. ALL MATERIAL, LABOR, AND INCIDENTALS NECESSARY TO PROVIDE, TO THE SATISFACTION OF THE ENGINEER, THE TEMPORARY OUTLETS AND PIPE CLEANOUT BETWEEN EACH STAGE SHALL BE INCLUDED IN ITEM 605, SHALLOW PIPE UNDERDRAIN, BY SIZE AND TYPE.

REST AREA DRAINAGE

THE CONTRACTOR SHALL USE THE UTMOST CARE WHEN CONSTRUCTING THE DRAINAGE AT THE REST AREAS SO AS NOT TO DAMAGE ANY UNNECESSARY ITEMS AS PER THE PLANS AND AS DETERMINED/ APPROVED BY THE ENGINEER. A CONTINGENCY QUANTITY OF ITEM 830, CURB, TYPE 6, AS PER PLAN HAS BEEN INCLUDED IN THE PLANS TO BE USED AS DIRECTED BY THE ENGINEER TO REPLACE THE EXISTING CURB WHERE PROPOSED DRAINAGE STRUCTURES ARE BEING CONSTRUCTED IN THE REST AREAS. AN ESTIMATED QUANTITY OF 10' PER STRUCTURE HAS BEEN INCLUDED FOR THIS CONTINGENCY.

ITEM 830 CURB, TYPE 6, AS PER PLAN 50 LIN. FT.

ENVIRONMENTAL COMMITMENTS

1. BANK STABILIZATION WILL BE LIMITED TO WITHIN 45 METERS (148 FEET) UPSTREAM AND DOWNSTREAM OF THE EXISTING STRUCTURE. BANK STABILIZATION WILL BE LIMITED TO REGRADING OF THE BANKS FOR THE TOE-OF-SLOPE (IN-STREAM) TO THE TOP OF BANK AND WILL INCLUDE PLACEMENT OF ROCK CHANNEL PROTECTION WHERE REQUIRED. THIS WILL EXCLUDE WORK SUCH AS WIDENING, DEEPENING OR RELOCATION. THIS STABILIZATION WILL BE KEPT TO A MINIMUM.

2. IN-STREAM WORK WILL BE LIMITED WHERE PRACTICABLE AND ONLY CLEAN NON-ERODIBLE MATERIAL WILL BE USED FOR FORDS AND COFFERDAMS. THIS TEMPORARILY PLACED MATERIAL WILL BE REMOVED AND THE STREAM BOTTOM RESTORED TO NEAR NATURAL CONDITIONS WHEN THE WORK IS COMPLETED.

3. WRITTEN PERMISSION WILL BE OBTAINED FROM THE CHIEF OF ODNR'S DIVISION OF WILDLIFE FOR ANY NECESSARY IN-STREAM BLASTING.

4. IF THIS PROJECT IS LOCATED WITHIN FLOOD PLAINS, IT WILL COMPLY WITH NECESSARY FLOOD PLAIN CRITERIA. THOSE PROJECTS IN FEMA DESIGNATED FLOOD PLAINS WILL BE COORDINATED WITH THE APPROPRIATE AUTHORITIES.

5. WETLANDS: THE CONTRACTOR SHALL BE PROHIBITED FROM PERFORMING ANY CONSTRUCTION ACTIVITIES, SUCH AS STAGING OR STORAGE OF MATERIALS, WITHIN THE LIMITS OF ANY IDENTIFIED WETLANDS. THERE ARE NO WETLANDS ON MED-71-15.78.

6. TREE REMOVAL RESTRICTIONS
THIS PROJECT IS WITHIN THE LIMITS OF THE FEDERAL ENDANGERED INDIANA BAT (MYOTIS SODALIS) AND MAY IMPACT THAT SPECIES HABITAT. TREES OVER 230 MM (9 INCHES) IN DIAMETER WITH LOOSE OR PEELING BARK OR CAVITIES SHALL ONLY BE CUT BETWEEN SEPTEMBER 16 AND APRIL 14.

7. STREAM CHANNEL EXCAVATION
THE CONTRACTOR SHALL TAKE ALL PRECAUTIONS NECESSARY TO PREVENT ANY INCIDENTAL DISCHARGES ASSOCIATED WITH THE EXCAVATION AND HAULING OF MATERIAL FROM THE STREAM CHANNEL. THIS PERTAINS TO ANY EXCAVATION OPERATIONS SUCH AS, FOUNDATION PIER OR ABUTMENT EXCAVATION, CHANNEL CLEAN OUT, EXCAVATION FOR ROCK CHANNEL PROTECTION AND REMOVAL OF ANY TEMPORARY FILL ASSOCIATED WITH CONSTRUCTION OPERATIONS.

8. DEMOLITION DEBRIS
THE CONTRACTOR SHALL TAKE ALL PRECAUTIONS TO AVOID AND/OR LIMIT DEMOLITION DEBRIS FROM ENTERING THE STREAM. ANY MATERIAL THAT DOES FALL INTO THE STREAM SHALL BE REMOVED AS SOON AS POSSIBLE.

ITEM 606 - IMPACT ATTENUATOR, TYPE 2-98 [(MODEL NO.QS2406Y), (BIDIRECTIONAL)]

THIS ITEM SHALL CONSIST OF FURNISHING AND INSTALLING A QUADGUARD IMPACT ATTENUATOR MANUFACTURED BY ENERGY ABSORPTION SYSTEMS, INC., ONE EAST WACKER DRIVE, CHICAGO, IL 60601 (TELEPHONE: 312-467-6750).

INSTALLATION SHALL BE AT THE LOCATIONS SPECIFIED IN THE PLANS, IN ACCORDANCE WITH THE MANUFACTURER'S SPECIFICATIONS AS DETAILED ON THE FOLLOWING PRE-APPROVED SHOP DRAWINGS:

DWG. NO.	DRAWING NAME	DWG./ REV. DATE	ODOT APPROVAL DATE
35-40-08 2 SHEETS	QUADGUARD SYSTEM CONCRETE BACKUP, QG ON GRADE & ON EXISTING CONCRETE STRUCTURE	10/14/97 Rev. F 10/14/97 Rev. F	8/27/99 8/27/99
35-40-15	QUADGUARD SYSTEM END SHOE ASSSEMBLY, QG	9/11/98 Rev. F	8/27/99
3540498	QG SYSTEM NOSE ASSEMBLY, QG, 24, 30, 36, W/BELTING	12/30/98	8/27/99
3540150	QUADGUARD TRANSITION TO VERTICAL CONCRETE BARRIER	9/96	8/27/99

WHEN BI-DIRECTIONAL DESIGNS ARE SPECIFIED, THE CONTRACTOR SHALL SUPPLY APPROPRIATE TRANSITIONS.

PAYMENT FOR THE ABOVE WORK SHALL BE MADE AT THE UNIT PRICE BID FOR ITEM 606, IMPACT ATTENUATOR, TYPE 2-98 [(MODEL NO. QS2406Y), (BIDIRECTIONAL)], EACH, AND SHALL INCLUDE ALL LABOR, TOOLS, EQUIPMENT AND MATERIALS NECESSARY TO CONSTRUCT A COMPLETE AND FUNCTIONAL IMPACT ATTENUATOR SYSTEM, INCLUDING ALL RELATED BACKUPS, TRANSITIONS, HARDWARE AND GRADING, NOT SEPARATELY SPECIFIED, AS REQUIRED BY THE MANUFACTURER. THE QUADGUARD SHALL BE ATTACHED DIRECTLT TO THE CONCRETE MEDIAN BARRIER AS DETAILED IN THESE PLANS WITHOUT THE USE OF A SEPARATE BACKUP.

ITEM 202 PAVEMENT REMOVED
ALL SAWCUTTING OF THE EXISTING PAVEMENT IN ORDER TO MEET THE INTENTIONS OF THE MAINTENANCE OF TRAFFIC SEQUENCING ARE AT THE CONTRACTOR'S EXPENSE AND SHALL BE CONSIDERED INCIDENTAL IN THE COST OF ITEM 202 PAVEMENT REMOVED.

CALCULATED PRS CHECKED SAW

DRAINAGE GENERAL NOTES

MED - 71 - 15.78

DESIGN FILE : I:\pd_MED_IR71\DGN\REL+d\finaldrainage\7885GNA.dgn
USERNAME : jrogers
DATE : 03-JAN-2000
TIME : 08:56
7885GNA.DGN

REF.FILE *1 LEVELS ON:1,4,6,9,11,12,14,19,21,36,38-44,46-49,52-55,64-68,71
REF.FILE *2 LEVELS ON:1,4,6,9,11,12,14,19,21,36,38-44,46-49,52-55,64-68,71
REF.FILE *3 LEVELS ON:1,3,5,9,16,18-21,29-39,41-52,54-57,59,64,67-69,73
REF.FILE *4 LEVELS ON:1,2,6,8,19,20-52,54-59,61,62,64,66-70,72-80,82
REF.FILE *1 \\pd_med_lr71\dgn\mot\motmdwn.dgn
REF.FILE *2 \\pd_med_lr71\dgn\mot\motmdwn.dgn
REF.FILE *3 i:\pd_med_lr71\dgn\mot\motmdwn.dgn
REF.FILE *4 i:\pd_med_lr71\dgn\mot\motabdtmdwn.dgn
REF.FILE *5 i:\pd_med_lr71\dgn\mot\motabdtmdwn.dgn
DESIGN FILE : i:\pd_med_lr71\dgn\mot\motl.dgn
USERNAME : nvondere
DATE : 06-DEC-1999
TIME : 13:49
LEVELS ON:1,4,6,11,13,43
PLOT DATE:\COMPLOT\08
PEN TABLE:\MDOT\MDOTPENTABLES\Cross_OCE.pen
DATE & TIME:08-DEC-1999 13:49
USER:NVONDERE
PROJECT:NONE

TRAFFIC MAINTENANCE

THE CONTRACTOR SHALL MAINTAIN TRAFFIC AT ALL TIMES IN ACCORDANCE WITH THE REQUIREMENTS OF SPEC. 614. THESE MAINTENANCE OF TRAFFIC NOTES AND DETAILS AND THE TRAFFIC CONTROL DETAILS DESCRIBED IN THESE PLANS. THE MINIMUM LANE WIDTH FOR TRAFFIC CONTROL SHALL BE 11 FEET AT ALL TIMES ON I-71, EXCEPT WHEN SETTING THE OVERHEAD SIGN SUPPORTS (SEE SHEET 37 FOR NOTE). IT IS THE RESPONSIBILITY OF THE CONTRACTOR TO ORGANIZE HIS WORK IN SUCH A MANNER TO PROVIDE THE MOST SAFETY WITH THE LEAST INCONVENIENCE TO THE TRAVELING PUBLIC.

THE CONTRACTOR SHALL SUBMIT, IN WRITING, A SCHEDULE OF OPERATIONS TO THE ENGINEER AND RECEIVE APPROVAL BEFORE WORK IS STARTED ON THE PROJECT. PRIOR TO BEGINNING WORK, THE CONTRACTOR SHALL CO-ORDINATE THE MAINTENANCE OF TRAFFIC OPERATIONS WITH THE LOCAL STATE HIGHWAY PATROL.

NO EXTENSIONS OF TIME SHALL BE GRANTED FOR DELAYS IN MATERIAL DELIVERIES, UNLESS SUCH DELAYS ARE INDUSTRY-WIDE, OR FOR LABOR STRIKES, UNLESS SUCH STRIKES ARE AREA-WIDE.

CONSTRUCTION ACCESS POINTS IN THE PORTABLE CONCRETE BARRIER ARE REQUIRED IN ORDER TO ACCESS THE WORK ZONE IN CERTAIN AREAS OF THE PROJECT. SEE SHEET **64** FOR CONSTRUCTION ACCESS POINTS NOTES AND DETAILS.

ALL WORK AND TRAFFIC CONTROL DEVICES SHALL BE IN ACCORDANCE WITH 614 AND OTHER APPLICABLE PORTIONS OF THE SPECIFICATIONS, AS WELL AS THE OHIO MANUAL OF UNIFORM TRAFFIC CONTROL DEVICES. PAYMENT FOR ALL LABOR, EQUIPMENT AND MATERIALS SHALL BE INCLUDED IN THE LUMP SUM CONTRACT PRICE FOR ITEM 614, MAINTAINING TRAFFIC, UNLESS SEPARATELY ITEMIZED IN THE PLANS.

THE FOLLOWING ESTIMATED QUANTITIES HAVE BEEN INCLUDED IN THE GENERAL SUMMARY FOR USE AS DIRECTED BY THE ENGINEER FOR THE MAINTENANCE OF TRAFFIC.

614 BITUMINOUS CONCRETE FOR MAINTAINING TRAFFIC* 600 CU YARD

* FOR THE ENTIRE PROJECT AND NOT JUST THE PORTION UNDER CONSTRUCTION.

ITEM 614 - LAW ENFORCEMENT OFFICER (WITH PATROL CAR)

IN ADDITION TO THE REQUIREMENTS OF 614 AND THE LATEST EDITION OF THE OHIO MANUAL OF UNIFORM TRAFFIC CONTROL DEVICES (OMUTCD), A UNIFORMED LAW ENFORCEMENT OFFICER (AND OFFICIAL PATROL CAR WITH WORKING TOP MOUNTED EMERGENCY FLASHING LIGHTS) SHALL BE PROVIDED FOR CONTROLLING TRAFFIC FOR THE FOLLOWING TASK:

- FOR LANE CLOSURES: DURING INITIAL SETUP PERIODS, TEAR DOWN PERIODS, SUBSTANTIAL SHIFTS OF A CLOSURE POINT OR WHEN NEW LANE CLOSURE ARRANGEMENTS ARE INITIATED.
- DURING THE ENTIRE ADVANCE PREPARATION AND CLOSURE SEQUENCE WHERE COMPLETE BLOCKAGE OF TRAFFIC IS REQUIRED.

LAW ENFORCEMENT OFFICERS (L.E.O.'S) SHOULD NOT BE USED WHERE THE OMUTCD INTENDS THAT FLAGGERS BE USED. THE LEO'S ARE CONSIDERED TO BE EMPLOYED BY THE CONTRACTOR AND THE CONTRACTOR SHALL BE RESPONSIBLE FOR THEIR ACTIONS. ALTHOUGH THEY ARE EMPLOYED BY THE CONTRACTOR, THE PROJECT ENGINEER SHALL HAVE CONTROL OVER THEIR PLACEMENT. THE OFFICIAL PATROL CAR SHALL BE A PUBLIC SAFETY VEHICLE AS REQUIRED BY THE OHIO REVISED CODE.

THE CONTRACTOR SHALL MAKE ARRANGEMENTS FOR THESE SERVICES WITH:

OHIO STATE HIGHWAY PATROL
3149 FRANTZ ROAD
MEDINA, OH 44256
(330) 725-4921

LAW ENFORCEMENT OFFICERS (WITH PATROL CAR) REQUIRED BY THE TRAFFIC MAINTENANCE TASKS ABOVE SHALL BE PAID FOR ON A UNIT PRICE (HOURLY) BASIS UNDER ITEM 614-LAW ENFORCEMENT OFFICER (WITH PATROL CAR). THE FOLLOWING ESTIMATED QUANTITIES HAVE BEEN CARRIED TO THE GENERAL SUMMARY. THE HOURS PAID SHALL INCLUDE MINIMUM SHOW-UP REQUIRED BY THE LAW ENFORCEMENT AGENCY INVOLVED.

614 LAW ENFORCEMENT OFFICER WITH PATROL CAR = 640 HRS

IF THE CONTRACTOR WISHES TO UTILIZE LEO'S FOR FLAGGING AND TRAFFIC CONTROL OTHER THAN FOR THAT REQUIRED IN THESE PLANS, HE MAY DO SO AT HIS OWN EXPENSE.

ITEM 614 BARRIER REFLECTORS & OBJECT MARKERS

BARRIER REFLECTORS & OBJECT MARKERS SHALL BE INSTALLED ON ALL PORTABLE CONCRETE BARRIER USED FOR TRAFFIC CONTROL. BARRIER REFLECTORS, OBJECT MARKERS AND THEIR INSTALLATION SHALL CONFORM TO THE PROPOSAL NOTE AND SHALL BE SPACED AT 25 FEET. BASIS OF PAYMENT SHALL BE AT THE UNIT PRICE BID FOR THE APPROPRIATE 614 ITEMS AND SHALL INCLUDE ALL LABOR, EQUIPMENT, HARDWARE AND INCIDENTALS REQUIRED TO PERFORM THE WORK.

614 BARRIER REFLECTOR TYPE B = 9775 EACH
614 OBJECT MARKER = 9775 EACH

Item 622 Portable Concrete Barrier

Temporarily filling in the void between phases is not allowed. The material placed will become contaminated and the step construction will be lost, which is not acceptable. The contractor has only two options of setting up the portable concrete barrier between phases.

The first option is to retain the portable concrete barrier setup when traffic is on the existing pavement and provide additional portable concrete barrier on the new section of pavement prior to shifting traffic over onto the new section.

The second option is to move the existing portable concrete barrier setup over to the new section, but with restrictions. Movement of the portable concrete barrier between phases shall be accomplished in one working day and only at night per the "Work Hour Restriction" note in the plans. A lane closure of the lane adjacent to the portable concrete barrier is necessary to perform this work. The contractor shall utilize multiple crews, equipment, etc... in order to perform this task.

All costs involved in removing and reinstalling the portable concrete barrier shall be included in the contract price bid for Item 622 portable concrete barrier.

ITEM	PART I	PART II	PART III	PART III	TOTALS
PORTABLE CONCRETE BARRIER, 32"	59,980	90,210	31,830	62,210	244,230
PORTABLE CONCRETE BARRIER, 32" BRIDGE MOUNTED	0	1850	400	430	2680

PORTABLE CONCRETE BARRIER END TREATMENT

ALL TAPERED END SECTIONS SHOWN IN THESE PLANS AT THE APPROACH END OF P.C.B. RUNS SHALL BE LOCATED AT LEAST 17 FEET FROM THE EDGE OF THE TRAVELED LANE. THE CROSS SLOPE OF THE APPROACH EMBANKMENT SHALL BE A MAXIMUM OF 10:1. THE PLACEMENT AND SUBSEQUENT REMOVAL OF ANY GRADING REQUIRED SHALL BE INCLUDED IN THE LUMP SUM BID ITEM 614 MAINTAINING TRAFFIC AND SHALL INCLUDE ALL LABOR, EQUIPMENT, MATERIALS AND INCIDENTALS REQUIRED TO PERFORM THE WORK DESCRIBED. SHOULDERS AT NO EXPENSE TO THE STATE.

ALTERNATE METHODS

IF THE CONTRACTOR SO ELECTS, THEY MAY SUBMIT ALTERNATE METHODS FOR MAINTENANCE OF TRAFFIC PROVIDED THE INTENT OF THE ABOVE PROVISIONS ARE FOLLOWED AND NO ADDITIONAL INCONVENIENCE TO THE TRAVELING PUBLIC RESULTS THERE FROM. NO ALTERNATE PLAN SHALL BE PLACED INTO EFFECT UNTIL APPROVAL HAS BEEN GRANTED, IN WRITING, BY THE DISTRICT CONSTRUCTION ENGINEER.

ITEM SPECIAL - REPLACEMENT SIGNS & DRUMS

FLAT SHEET SIGNS FURNISHED BY THE CONTRACTOR IN ACCORDANCE WITH THE REQUIREMENTS OF THE PLAN, SPECIFICATIONS AND PROPOSAL WHICH BECOME DAMAGED BY TRAFFIC FOR REASONS BEYOND THE CONTROL OF THE CONTRACTOR SHALL BE REPLACED IN KIND WHEN ORDERED BY THE ENGINEER AND PAID FOR UNDER "ITEM SPECIAL - REPLACEMENT SIGNS." PAYMENT FOR THE NEW SIGNS SHALL BE MADE AT THE PRICE BID PER SQUARE FOOT FOR "ITEM SPECIAL - REPLACEMENT SIGNS," AND SHALL INCLUDE THE COST OF REMOVING AND DISPOSING OF THE DAMAGED SIGNS, HARDWARE, SUPPORTS, ETC. REPLACEMENT SIGNS SHALL BE NEW, BUT OTHER MATERIALS MAY BE USED SUBJECT TO APPROVAL OF THE ENGINEER.

ITEM SPECIAL REPLACEMENT SIGNS 500 SQ FEET

DRUMS FURNISHED BY THE CONTRACTOR IN ACCORDANCE WITH THE REQUIREMENTS OF THE PLAN, SPECIFICATIONS AND PROPOSAL WHICH BECOME DAMAGED BY TRAFFIC FOR REASONS BEYOND THE CONTROL OF THE CONTRACTOR SHALL BE REPLACED IN KIND WHEN ORDERED BY THE ENGINEER AND PAID FOR UNDER "ITEM SPECIAL - REPLACEMENT DRUMS". PAYMENT FOR THE NEW DRUM SHALL INCLUDE THE COST OF REMOVING AND DISPOSING OF THE DAMAGED DRUM AND PROVIDING AND MAINTAINING NEW DRUMS IN ACCORDANCE WITH THE CONTRACT REQUIREMENTS FOR THE ORIGINAL DRUMS.

ITEM SPECIAL REPLACEMENT DRUMS = 500 EACH

QUANTITIES

ITEM	QUANTITY	UNIT	DESCRIPTION
614	600	CU YARD	BITUMINOUS CONCRETE FOR MAINTAINING TRAFFIC
614	9775	EACH	BARRIER REFLECTOR, TYPE B
614	9775	EACH	OBJECT MARKER
614	640	HOUR	LAW ENFORCEMENT OFFICER WITH PATROL CAR
622	244,230	LIN FEET	PORTABLE CONCRETE BARRIER, 32"
622	2680	LIN FEET	PORTABLE CONCRETE BARRIER, 32" BRIDGE MOUNTED
SPECIAL	500	SQ FEET	REPLACEMENT SIGN
SPECIAL	500	EACH	REPLACEMENT DRUM

(QUANTITIES CARRIED TO GENERAL SUMMARY, SHEET 46)

CALCULATED
CHECKED

MAINTENANCE OF TRAFFIC GENERAL NOTES

MED-71-15.78

REF.FILE *1:LEVELS ON:(1-4,6-9,11,12,14-19,21-36,38-44,46-49,52-55,64-68,7
REF.FILE *2:i:\pd_med_Jr7\dgn\mot\delwl1.dgn
REF.FILE *2 LEVELS ON:(1-28)
REF.FILE *3:i:\pd_med_Jr7\dgn\altgnmnt.dgn
REF.FILE *3 LEVELS ON:(13-5,9-16,18-27,29-39,41-52,54-57,59,64,67-69,73
REF.FILE *4:i:\pd_med_Jr7\dgn\abc2cmbo.dgn
REF.FILE *4 LEVELS ON:(1-26,8-16,18,20-52,54-59,61,62,64,66-70,72-80,82
DESIGN FILE : i:\pd_med_Jr7\dgn\mot\motl.dgn
USERNAME : nvondere
DATE : 07-DEC-1999
TIME : 07:22
LEVELS ON:1-4,6-11,13-41
PLOT QUEUE:\\OOPLOT\mylar
PEN TABLE:i:\dlistd\plotcrosspen

614 WORK ZONE SPEED LIMIT SIGN

THE CONTRACTOR SHALL FURNISH, INSTALL, MAINTAIN, COVER DURING SUSPENSION OF WORK, AND REMOVE WORK ZONE SPEED LIMIT SIGNS AND SUPPORTS (R-10-48) (55 MPH) WITHIN THE WORK LIMITS IN ACCORDANCE WITH THE FOLLOWING REQUIREMENTS.

THE CONTRACTOR SHALL COVER OR REMOVE ANY EXISTING SPEED LIMIT OR MINIMUM SPEED SIGNS WITHIN THE REDUCED SPEED ZONE. THESE SIGNS SHALL BE RESTORED DURING SUSPENSION OR TERMINATION OF THE REDUCED SPEED LIMIT. THE EXPENSE OF COVERING OR REMOVAL AND RESTORATION OF EXISTING SPEED LIMIT OR MINIMUM SPEED SIGNS IS INCIDENTAL TO THE PAY ITEM FOR THE WORK ZONE SPEED LIMIT SIGNS.

THE WORK ZONE SPEED LIMIT SIGNS MAY BE ERECTED AND COVERED PRIOR TO STARTING WORK OR MAY BE ERECTED UNCOVERED NO MORE THAN 4 HOURS BEFORE THE ACTUAL START OF WORK. THE SIGNS SHALL BE REMOVED OR COVERED NO MORE THAN 4 HOURS FOLLOWING RESTORATION OF ALL LANES TO TRAFFIC WITH NO RESTRICTIONS OR SOONER AS DIRECTED BY THE ENGINEER.

THE CONTRACTOR SHALL ERECT A WORK ZONE SPEED LIMIT SIGN IN ADVANCE OF ANY LANE RESTRICTION WHICH IS ½ MILE OR MORE IN LENGTH AND WHICH IS EXPECTED TO LAST AT LEAST 30 CONSECUTIVE CALENDAR DAYS OR AS DIRECTED BY THE ENGINEER. THE SIGNS SHALL BE MOUNTED ON BOTH SIDES OF DIVIDED HIGHWAYS, 500 FEET IN ADVANCE OF THE LANE REDUCTION TAPER. THE SIGN SHALL BE MOUNTED ON THE RIGHT SIDE, 250 FEET IN ADVANCE OF THE LANE REDUCTION TAPER ON UNDIVIDED HIGHWAYS. THE SIGN SHALL BE REPEATED, ON THE SIDE NEAREST TRAFFIC, EVERY 1 MILE FOR 55 MPH ZONES AND ½ MILE FOR 45 MPH ZONES. THESE SIGNS SHALL ALSO BE ERECTED IMMEDIATELY AFTER EACH OPEN ENTRANCE RAMP WITHIN THE ZONE. A SIGN TO INDICATE THE RESUMPTION OF THE STATUTORY SPEED LIMIT SHALL BE ERECTED AT THE END OF ANY REDUCED SPEED ZONE. THIS SIGN SHALL BE AN R-10 (65MPH) AND A R-9A (55MPH).

THE CONTRACTOR MAY USE SIGNS AND SUPPORTS IN USED BUT GOOD CONDITION PROVIDED THE SIGNS MEET CURRENT ODOT SPECIFICATIONS. SIGN FACES SHALL BE REFLECTORIZED WITH TYPE G SHEETING COMPLYING WITH THE REQUIREMENTS OF 730J9 AND U.S. DEPARTMENT OF TRANSPORTATION SUPPLEMENTAL SPECIFICATION FOR TYPE III-C SHEETING, FP-85. WORK ZONE SPEED LIMIT SIGNS SHALL BE MOUNTED ON TWO (2) ITEM 630 GROUND MOUNTED SUPPORTS, NO. 3 POSTS.

WORK ZONE SPEED LIMIT SIGN AND SUPPORTS WILL BE MEASURED AS THE NUMBER OF SIGN INSTALLATIONS, INCLUDING THE SIGNS AND NECESSARY SUPPORTS. IF A SIGN AND SUPPORT COMBINATION IS REMOVED AND REERECTED AT ANOTHER LOCATION WITHIN THE PROJECT DUE TO CHANGES IN THE SPEED ZONE DIRECTED BY THE ENGINEER, IT SHALL BE CONSIDERED ANOTHER UNIT.

PAYMENT FOR ACCEPTED QUANTITIES, COMPLETE IN PLACE, WILL BE MADE AT THE CONTRACT UNIT PRICE. PAYMENT SHALL BE FULL COMPENSATION FOR ALL MATERIALS, LABOR, INCIDENTALS AND EQUIPMENT FOR FURNISHING, ERECTING, MAINTAINING, COVERING DURING SUSPENSION OF WORK, AND REMOVING OF THE SIGNS AND SUPPORTS.

614 WORK ZONE SPEED LIMIT SIGN = 60 EACH

TRENCH FOR WIDENING

TRENCH EXCAVATION FOR BASE WIDENING SHALL BE ONLY ON ONE SIDE OF THE PAVEMENT AT A TIME. THE OPEN TRENCH SHALL BE ADEQUATELY MAINTAINED AND PROTECTED WITH DRUMS OR BARRICADES AT ALL TIMES. PLACEMENT OF PROPOSED SUBBASE AND BASE MATERIAL SHALL FOLLOW AS CLOSELY AS POSSIBLE BEHIND EXCAVATION OPERATIONS. THE LENGTH OF WIDENING TRENCH WHICH IS OPEN AT ANY ONE TIME SHALL BE HELD TO A MINIMUM AND SHALL AT ALL TIMES BE SUBJECT TO APPROVAL OF THE ENGINEER.

OVERNIGHT TRENCH CLOSING

THE BASE WIDENING SHALL BE COMPLETED TO A DEPTH OF NO MORE THAN 1½" INCHES BELOW THE EXISTING PAVEMENT BY THE END OF EACH WORK DAY AND USE OW-171 AND OWP-171 SIGNS.

THIS NOTE ALSO APPLIES TO BOTH RAMP CONSTRUCTION AND RIGHT SHOULDER RECONSTRUCTION EXCEPT IN AREAS PROTECTED BY PORTABLE CONCRETE BARRIER. IN CASE WORK MUST BE SUSPENDED BECAUSE OF INCLEMENT WEATHER OR OTHER REASONS, THE TRENCH FOR THE UNCOMPLETED BASE WIDENING SHALL BE BACKFILLED AT THE DIRECTION OF THE ENGINEER **AT THE CONTRACTORS EXPENSE.**

DOUBLE FINES IN WORK ZONES SIGN

R-180-48 SIGNS SHALL BE FURNISHED, ERECTED, AND MAINTAINED IN GOOD CONDITION AND/OR REPLACED AS NECESSARY AND SUBSEQUENTLY REMOVED BY THE CONTRACTOR. SIGNS SHALL BE MOUNTED AT THE APPROPRIATE OFF-SETS AND ELEVATIONS AS PRESCRIBED BY THE OHIO MANUAL OF UNIFORM TRAFFIC CONTROL DEVICES. THEY SHALL BE MAINTAINED ON SUPPORTS MEETING CURRENT SAFETY CRITERIA.

THE SIGNS SHALL BE COVERED OR REMOVED WHEN THE CONSTRUCTION ZONE IS DISCONTINUED FOR 30 DAYS OR MORE.

THE SIGNS SHALL BE DUAL MOUNTED. THE FIRST SIGN SHALL BE PLACED BETWEEN THE "ROAD CONSTRUCTION AHEAD" (OW-128) SIGN AND THE NEXT SIGN IN THE SEQUENCE. SIGNS SHALL BE ERECTED ON EACH ENTRANCE RAMP AND EVERY TWO MILES THROUGH THE CONSTRUCTION WORK LIMITS.

THE CONTRACTOR MAY USE SIGNS AND SUPPORTS IN USED BUT GOOD CONDITION PROVIDED THE SIGNS MEET CURRENT ODOT SPECIFICATIONS. SIGN FACES SHALL BE REFLECTORIZED WITH TYPE G SHEETING COMPLYING WITH THE REQUIREMENTS OF 730J9 AND U.S. DEPARTMENT OF TRANSPORTATION SUPPLEMENTAL SPECIFICATION FOR TYPE III-C SHEETING, FP-85.

DOUBLE FINES IN WORK ZONES SIGNS AND SUPPORTS WILL BE MEASURED AS THE NUMBER OF SIGN INSTALLATIONS, INCLUDING THE SIGN AND NECESSARY SUPPORTS. IF A SIGN AND SUPPORT COMBINATION IS REMOVED AND REERECTED AT ANOTHER LOCATION AS DIRECTED BY THE ENGINEER, IT SHALL BE CONSIDERED ANOTHER UNIT.

PAYMENT FOR ACCEPTED QUANTITIES, COMPLETE, IN PLACE WILL BE MADE AT THE CONTRACT UNIT PRICE. PAYMENT SHALL BE FULL COMPENSATION FOR ALL MATERIALS, LABOR, INCIDENTALS AND EQUIPMENT FOR FURNISHING, ERECTING, MAINTAINING, COVERING DURING SUSPENSION OF WORK, AND REMOVAL OF THE SIGN AND SUPPORT.

ITEM 614 - DOUBLE FINES IN WORK ZONE SIGNS 32 EACH

CONTRACTOR'S EQUIPMENT - OPERATION AND STORAGE

IN ADDITION TO THE REQUIREMENTS OF SECTION 614.03(a) OF THE CONSTRUCTION AND MATERIAL SPECIFICATIONS THE FOLLOWING SHALL APPLY. THE CONTRACTOR'S EQUIPMENT SHALL BE OPERATED IN THE DIRECTION OF TRAFFIC WHERE PRACTICAL. A FLAGGER SHALL BE USED WHERE THE CONTRACTOR'S EQUIPMENT MUST MERGE WITH THE TRAFFIC STREAM. THE CONTRACTOR'S VEHICLES AND EQUIPMENT SHALL BE EQUIPPED WITH AT LEAST ONE AMBER FLASHING LIGHT.

EQUIPMENT MAY BE PARKED IN AREAS ALONG THE HIGHWAY, THIRTY (30') FEET FROM THE EDGE OF TRAVELED LANE OR SEVEN (7') FEET BEHIND FACE OF GUARDRAIL, WHEN VARIOUS OPERATIONS ARE SCHEDULED TO CONTINUE THE NEXT WORKDAY. ON WEEKENDS OR AT OTHER TIMES OF SUSPENSION OF WORK, **EQUIPMENT SHALL BE STORED BEHIND GUARDRAIL OR BARRIER AS DIRECTED BY THE ENGINEER.** NO EQUIPMENT SHALL BE PARKED IN THE MEDIAN OF THE HIGHWAY EXCEPT WHEN TRAFFIC IS MAINTAINED ON THE OUTSIDE LANES. ADEQUATE BARRICADES AND LIGHT SHALL BE PLACED ON THE PAVEMENT SIDE OF THE EQUIPMENT TO IDENTIFY THE LIMITS OF THE EQUIPMENT. ALL OTHER EQUIPMENT, INCLUDING PRIVATE VEHICLES, SHALL BE STORED AT THE APPROVED CONTRACTOR'S STORAGE AREA.

PAVEMENT MARKING

PRIOR TO PLACEMENT OF ANY TEMPORARY PAVEMENT MARKINGS, THE CONTRACTOR SHALL COMPLETELY OBLITERATE, AS PER SPEC. 641.10, ALL EXISTING PAVEMENT MARKINGS THAT WOULD CREATE CONFUSION OR CONFLICT WITH THE TEMPORARY PAVEMENT MARKINGS. PAYMENT FOR THIS COMPLETE REMOVAL SHALL BE INCLUDED IN THE PERTINENT 614 ITEM.

WORKING HOURS RESTRICTION

Interstate 71 throughout District Three (Richland, Ashland, Wayne and Medina counties) is a restricted work corridor due to high traffic volumes. Lane closures or other work, including installation of maintenance of traffic devices, which occupies any portion of the present travel lanes is restricted to the following hours:

Non-Holiday Weeks: Sunday 10:00 p.m. through Monday 6:00 a.m.
Monday 10:00 p.m. through Tuesday 6:00 a.m.
Tuesday 10:00 p.m. through Wednesday 6:00 a.m.
Wednesday 10:00 p.m. through Thursday 6:00 a.m.
Thursday 10:00 p.m. through Friday 6:00 a.m.

Holiday Weeks:
Holiday on Monday
Tuesday 10:00 p.m. through Wednesday 6:00 a.m.
Wednesday 10:00 p.m. through Thursday 6:00 a.m.
Thursday 10:00 p.m. through Friday 6:00 a.m.
Holiday on Tuesday
Sunday 10:00 p.m. through Monday 6:00 a.m.
Wednesday 10:00 p.m. through Thursday 6:00 a.m.
Thursday 10:00 p.m. through Friday 6:00 a.m.
Holiday on Wednesday
Sunday 10:00 p.m. through Monday 6:00 a.m.
Monday 10:00 p.m. through Tuesday 6:00 a.m.
Thursday 10:00 p.m. through Friday 6:00 a.m.
Holiday on Thursday
Sunday 10:00 p.m. through Monday 6:00 a.m.
Monday 10:00 p.m. through Tuesday 6:00 a.m.
Tuesday 10:00 p.m. through Wednesday 6:00 a.m.
Holiday on Friday, Saturday or Sunday
Sunday 10:00 p.m. through Monday 6:00 a.m.
Monday 10:00 p.m. through Tuesday 6:00 a.m.
Tuesday 10:00 p.m. through Wednesday 6:00 a.m.
Wednesday 10:00 p.m. through Thursday 6:00 a.m.

Holidays are Easter, Mother's Day, Memorial Day, July 4 and Labor Day.

No work within active travel lanes or which will slow traffic is permitted at any other times. All maintenance of traffic work, including installation of signing and lane closures shall occur within the 10:00 p.m. through 6:00 a.m. time periods. No exceptions are permitted.

All work vehicles licensed to operate on the highway, including material trucks, shall be equipped with a flashing, rotating or oscillating amber light visible to all directions of traffic a minimum of one-quarter mile in bright sunlight and shall be operated with lighted head and tail lamps. The amber light shall be in operation at all times within the work zone and while traveling to and from the work zone whenever the vehicle speed is below 40 mph. Vehicle hazard lamps do not satisfy this requirement. All other equipment shall be equipped with a flashing, rotating or oscillating amber light visible to all directions of traffic a minimum of one-quarter mile in bright sunlight. The amber light shall be in operation while the equipment is within the work zone.

Lighting used to illuminate the work area shall be aimed and shielded to prevent glare encroaching into open traffic lanes. For additional notes see the "FLOODLIGHTING" note.

Should the contractor fail to meet any of these requirements, the contractor shall be assessed liquidated damages per 108.07 of the cms.

QUANTITIES

ITEM	QUANTITY	UNIT	DESCRIPTION
614	60	EACH	WORK ZONE SPEED LIMIT SIGN
614	32	EACH	DOUBLE FINES IN WORK ZONE SIGNS

(QUANTITIES CARRIED TO GENERAL SUMMARY, SHEET 46)

CALCULATED BL CHECKED

MAINTENANCE OF TRAFFIC GENERAL NOTES

MED-71-15.78

REF.FILE : i:\pd_med_ir71\dgn\fallgmnt.dgn
REF.FILE : *1 LEVELS ON:(1-4,6-9,11,12,14-19,21-36,38-44,46-49,52-55,64-68,70
REF.FILE : *2 LEVELS ON:(1-4,6-9,11,12,14-19,21-36,38-44,46-49,52-55,64-68,70
REF.FILE : *2\dgn_med_ir71\dgn\mot\motl1.dgn
REF.FILE : *2 LEVELS ON:(1-28)
REF.FILE : *3:\dgn_med_ir71\dgn\fallgmnt.dgn
REF.FILE : *3 LEVELS ON:(3-5,9-16,18-27,29-39,41-52,54-57,59,64,67-69,73-7
REF.FILE : *4:\dgn_med_ir71\dgn\mot\motl1.dgn
REF.FILE : *4 LEVELS ON:(1-2,6-9,16,18,20-52,54-59,61,62,64,66-70,72-80,82,8
FILENAME : i:\pd_med_ir71\dgn\mot\motl1.dgn
DESIGN FILE : i:\pd_med_ir71\dgn\mot\motl1.dgn
USERNAME : nvondere
DATE & TIME : 07-DEC-1999 07:23
LEVELS ON:(1-4,6-11,13-41,43-47,49-52,54-57,59,64,67-69,73-75,77-79,81-83,85-87,89-91,93-95,97-99,101-103,105-107,109-111,113-115,117-119,121-123,125-127,129-131,133-135,137-139,141-143,145-147,149-151,153-155,157-159,161-163,165-167,169-171,173-175,177-179,181-183,185-187,189-191,193-195,197-199,201-203,205-207,209-211,213-215,217-219,221-223,225-227,229-231,233-235,237-239,241-243,245-247,249-251,253-255)
PLOT QUEUE:\QUEUE\QUEUE.QUE
PEN TABLE:\odot\odot\dot\crossgen

TRAFFIC CONTROL REVIEW

THE CONTRACTOR SHALL DESIGNATE A QUALIFIED INDIVIDUAL, OTHER THAN THE SUPERINTENDENT AND SUBJECT TO THE APPROVAL OF THE ENGINEER, TO PERIODICALLY INSPECT, DOCUMENT, REPAIR AND/OR REPLACE DAMAGED OR MISSING TRAFFIC CONTROL DEVICES WHENEVER CONSTRUCTION WORK IS BEING PERFORMED WITHIN THE WORK LIMITS OF THE PROJECT. THE DESIGNATED INDIVIDUAL SHALL INSPECT, DOCUMENT, REPAIR AND/OR REPLACE DAMAGED OR MISSING TRAFFIC CONTROL DEVICES AT LEAST ONCE EVERY TWO (2) HOURS.

THE ABOVE DESIGNATED INDIVIDUAL OR ANOTHER QUALIFIED INDIVIDUAL SUBJECT TO THE APPROVAL OF THE ENGINEER SHALL BE AVAILABLE AND ON CALL DURING THE NON-WORKING PERIODS THAT TRAFFIC IS DIVERTED FROM ITS NORMAL PATH. WHEN WORK IS NOT BEING PERFORMED ON THE PROJECT, THE DESIGNATED INDIVIDUAL SHALL INSPECT, DOCUMENT, REPAIR AND/OR REPLACE DAMAGED OR MISSING TRAFFIC CONTROL DEVICES AT LEAST ONCE EVERY TWO HOURS SEVEN DAYS A WEEK, INCLUDING HOLIDAYS. IN ADDITION, THIS INDIVIDUAL SHALL BE ABLE TO RESPOND AND BE ON THE PROJECT WITHIN TWO (2) HOURS AFTER A CALL AND HAVE SUFFICIENT INVENTORY ON HAND TO REPAIR OR REPLACE THE DAMAGED OR MISSING TRAFFIC CONTROL DEVICE.

THE CONTRACTOR SHALL PROVIDE A COPY OF THE DAILY INSPECTION REPORT DOCUMENTING THE CONDITION OF THE TRAFFIC CONTROL DEVICES IN PLACE AND REPAIRS THAT WERE MADE. THIS REPORT SHALL BE DELIVERED TO THE PROJECT ENGINEER THE FOLLOWING WORK DAY. FAILURE TO PROVIDE THIS DAILY INSPECTION AND WRITTEN REPORT SHALL CONSTITUTE CAUSE FOR THE PROJECT ENGINEER TO SUSPEND ALL WORK UNTIL ALL OF THE ABOVE PROVISIONS HAVE BEEN SATISFIED.

PAYMENT FOR THIS INDIVIDUAL OR INDIVIDUALS SHALL BE INCLUDED IN THE LUMP SUM PRICE BID FOR ITEM 614 MAINTAINING TRAFFIC.

WORKSITE TRAFFIC SUPERVISOR

*THE CONTRACTOR SHALL EMPLOY A PROFESSIONAL WORKSITE TRAFFIC SUPERVISOR (WTS) FOR THE PURPOSE OF MONITORING THE TRAFFIC CONTROL PLAN (TCP). THE WORKSITE TRAFFIC SUPERVISOR SHALL HAVE EXPERIENCE OR TRAINING IN PROJECT SUPERVISION AND TRAFFIC CONTROL COMMENSURATE WITH THE RESPONSIBILITIES OF MANAGING THE PROJECT TRAFFIC CONTROL AND COORDINATING WITH THE MOTORIST INFORMATION SYSTEM OUTSIDE THE PROJECT LIMITS. THE GOALS OF THE WORKSITE TRAFFIC SUPERVISORS POSITION ARE TO MINIMIZE TRAFFIC CONGESTION AND MAXIMIZE PROJECT SAFETY AND EFFICIENCY. THE CONTRACTOR SHALL SUBMIT TO THE **ENGINEER** (ENGINEER OF CONSTRUCTION) FOR APPROVAL A RESUME OF THE EXPERIENCE, TRAINING AND EDUCATION OF THE PERSON PROPOSED FOR WORKSITE TRAFFIC SUPERVISOR. PROJECT WORK SHALL NOT BEGIN WITHOUT AN APPROVED WORKSITE TRAFFIC SUPERVISOR. THE WTS SHALL BE PRESENT WHEN THE CONTRACTOR INSTALLS A TRAFFIC RESTRICTION, LANE CLOSURE ETC. THE WTS SHALL REVIEW THE TRAFFIC CONTROL PATTERN UPON COMPLETION OF THE INSTALLATION BOTH DURING THE DAY AND AT NIGHT FOR ASSURANCE OF CONTRACT COMPLIANCE. THE WTS SHALL MAKE RECOMMENDATIONS TO MODIFY THE TCP FOR BETTER/SAFER TRAFFIC FLOW. THESE RECOMMENDATIONS SHALL BE MADE IN WRITING TO THE **ENGINEER**. NO CHANGES TO THE TRAFFIC CONTROL PLAN SHALL BE MADE UNTIL APPROVAL IS OBTAINED FROM THE **ENGINEER** IN WRITING.*

EACH DAY, THE WORKSITE TRAFFIC SUPERVISOR SHALL REVIEW THE PROJECT'S TRAFFIC CONTROL. A MINIMUM OF TWO REVIEWS EACH WEEK SHALL BE PERFORMED AT NIGHT. THE FOLLOWING ITEMS SHALL BE INCLUDED IN EACH REVIEW: TRAFFIC CONTROL DEVICE CONDITION, PLACEMENT, VISIBILITY; TRAFFIC FLOW CONDITIONS, INCIDENTS, CONGESTION POINTS, DELAYS ADEQUACY OF ADVANCED INFORMATIONAL SIGNS BEYOND THE PROJECT LIMITS; INTERACTION OF WORK VEHICLES AND TRAFFIC; EVIDENCE OF ACCIDENTS; PROPER STORAGE OF MATERIALS AND EQUIPMENT; CONFORMANCE WITH TCP; ADEQUACY OF TCP; CONFLICTING OR NON-PERFORMING PAVEMENT MARKINGS. THE WTS SHALL NOTE ANY TRAFFIC CONTROL DEFICIENCIES. DEFICIENT OR IMPROPERLY PLACED TRAFFIC CONTROL DEVICES SHALL BE CORRECTED. THE WORKSITE TRAFFIC SUPERVISOR SHALL HAVE NECESSARY AUTHORITY TO IMMEDIATELY PERFORM THIS CORRECTIVE WORK. DAILY, A RECORD OF REVIEW SHALL BE GIVEN TO THE PROJECT ENGINEER IN WRITING AND SHALL INCLUDE A RECORD OF DEFICIENCIES AND RESOLUTION OF THE DEFICIENCIES.

FAILURE OF THE CONTRACTOR TO COMPLY WITH ANY OF THE ABOVE SHALL CONSTITUTE CAUSE FOR THE PROJECT ENGINEER TO SUSPEND ALL WORK UNTIL ALL CORRECTIONS ARE MADE.

PAYMENT FOR FURNISHING THE WORKSITE TRAFFIC SUPERVISOR SHALL BE INCLUDED IN THE LUMP SUM PRICE BID FOR THE ITEM 614 MAINTAINING TRAFFIC.

TEMPORARY CLOSURES ON I-71 and I-271

TEMPORARY CLOSURES ON I-71 AT GRANGER ROAD AND ON I-271 AT THE I-71 INTERCHANGE ARE REQUIRED TO AVOID PERFORMING WORK OVER TRAVELED LANES DURING THE REMOVAL OF THE STEEL BEAMS AND THE ERECTION OF THE PROPOSED STRUCTURAL STEEL. SUCH CLOSURES SHALL OCCUR ONLY BETWEEN THE HOURS OF 12:01 AM TO 5:00 AM MONDAY THROUGH THURSDAY. TRAFFIC NEED ONLY BE STOPPED DURING THE ACTUAL ATTACHMENT, LIFTING AND HANDLING OF THE BEAMS OVER THE TRAVELED LANES AND AT NO TIME SHALL ANY ONE CLOSURE EXCEED FIFTEEN (15) MINUTES PER EACH HOUR. IT IS THE INTENT TO MINIMIZE THE IMPACT TO THE PUBLIC.

*ADVANCE NOTICE: **ONE PORTABLE** CHANGEABLE MESSAGE SIGN (PCMS) IN EACH DIRECTION SHALL BE PROVIDED FOR SEVEN (7) DAYS IN ADVANCE OF THE CLOSURE DATE TO PROVIDE ADVANCE NOTICE OF THE TEMPORARY CLOSURE. THESE SIGNS ARE TO BE LOCATED AT AN APPROVED LOCATION NEAR THE CLOSURE SITE.*

CLOSURE NOTICE: ONE PCMS IN EACH DIRECTION SHALL BE PROVIDED THE DAY OF THE CLOSURE TO PROVIDE SPECIFIC CLOSURE INFORMATION. THE ADVANCE NOTICE PCMS MAY BE RELOCATED TO PERFORM THIS FUNCTION. THE CONTRACTOR SHALL PROVIDE ERECT AND MAINTAIN APPROVED PCMS APPROXIMATELY ONE (1) MILE, IN EACH DIRECTION, IN ADVANCE OF THE CLOSURE TO ADVISE TRAFFIC OF A POTENTIAL STOP CONDITION AND CONSTRUCTION DELAY. THE MESSAGE CONTENT SHALL BE APPROVED BY THE ENGINEER.

THE PCMS SHALL BE CONSIDERED INCIDENTAL IN THE COST OF ITEM 614 MAINTAINING TRAFFIC.

SHOULD THE CONTRACTOR FAIL TO MEET ANY OF THESE REQUIREMENTS, LIQUIDATED DAMAGES SHALL BE ASSESSED THE CONTRACTOR IN ACCORDANCE WITH CMS 108.07.

THE COST OF THE ABOVE WORK INCLUDING PROVIDING, ERECTING, MAINTAINING AND REMOVING THE PCMS SHALL BE CONSIDERED INCIDENTAL AND SHALL BE INCLUDED IN THE LUMP SUM PRICE BID FOR ITEM 614 MAINTAINING TRAFFIC.

AN ADDITIONAL ESTIMATED QUANTITY OF 96 HOURS OF ITEM 614 LAW ENFORCEMENT OFFICER WITH PATROL CAR IS PROVIDED TO BE USED AS DIRECTED BY THE ENGINEER FOR THESE CLOSURES.

TEMPORARY CLOSURES ON SR 18, SR 3, & SR 303

TEMPORARY CLOSURES ON SR 18, SR 3 AND SR 303 UNDER I-71 ARE REQUIRED TO AVOID PERFORMING WORK OVER TRAVELED LANES DURING THE REMOVAL OF THE STEEL BEAMS AND THE ERECTION OF THE PROPOSED STRUCTURAL STEEL. SUCH CLOSURES SHALL OCCUR ONLY BETWEEN THE HOURS OF 12:01 AM TO 5:00 AM MONDAY THROUGH THURSDAY. TRAFFIC NEED ONLY BE STOPPED DURING THE ACTUAL ATTACHMENT, LIFTING AND HANDLING OF THE BEAMS OVER THE TRAVELED LANES AND AT NO TIME SHALL ANY ONE CLOSURE EXCEED FIFTEEN (15) MINUTES PER EACH HOUR. IT IS THE INTENT TO MINIMIZE THE IMPACT TO THE PUBLIC.

ADVANCE NOTICE: ONE PORTABLE CHANGEABLE MESSAGE SIGN (PCMS) IN EACH DIRECTION SHALL BE PROVIDED FOR SEVEN (7) DAYS IN ADVANCE OF THE CLOSURE DATE TO PROVIDE ADVANCE NOTICE OF THE TEMPORARY CLOSURE. THESE SIGNS ARE TO BE LOCATED AT AN APPROVED LOCATION NEAR THE CLOSURE SITE.

CLOSURE NOTICE: ONE PCMS IN EACH DIRECTION SHALL BE PROVIDED THE DAY OF THE CLOSURE TO PROVIDE SPECIFIC CLOSURE INFORMATION. THE ADVANCE NOTICE PCMS MAY BE RELOCATED TO PERFORM THIS FUNCTION. THE CONTRACTOR SHALL PROVIDE, ERECT AND MAINTAIN APPROVED PCMS APPROXIMATELY 500 FEET IN ADVANCE OF THE CLOSURE, IN EACH DIRECTION, TO ADVISE TRAFFIC OF A POTENTIAL STOP CONDITION AND CONSTRUCTION DELAY. SEE THE PLAN SHEET 63A TITLED "SHORT DURATION CLOSING OF RURAL DIVIDED HIGHWAY" FOR ADDITIONAL NOTES.

A FLAGGER WITH A STOP/SLOW SIGN SHALL BE LOCATED AS PER STD. DWG. MT 97.10M. ONE PCMS SHALL BE PLACED TO THE EAST OF NORTHBOUND EXIT RAMPS. THE OTHER PCMS SHALL BE PLACED TO THE WEST OF SOUTHBOUND EXIT RAMPS. ONLY TWO LEO's WITH PATROL CARS ARE REQUIRED ONE FOR EACH DIRECTION AT THE STOP SIGNS.

THE LOCATIONS OF ALL SIGNS AND PCMS UNITS SHALL BE APPROVED BY THE ENGINEER PRIOR TO INSTALLATION. THE MESSAGE CONTENT SHALL BE APPROVED BY THE ENGINEER.

CONTINUED - TEMPORARY CLOSURES ON SR 18, SR 3, & SR 303

SHOULD THE CONTRACTOR FAIL TO MEET ANY OF THESE REQUIREMENTS, LIQUIDATED DAMAGES SHALL BE ASSESSED THE CONTRACTOR IN ACCORDANCE WITH CMS 108.07..

THE COST OF THE ABOVE WORK INCLUDING PROVIDING, ERECTING, MAINTAINING AND REMOVING THE PCMS SHALL BE CONSIDERED INCIDENTAL AND SHALL BE INCLUDED IN THE LUMP SUM PRICE BID FOR ITEM 614 MAINTAINING TRAFFIC.

AN ADDITIONAL ESTIMATED QUANTITY OF 208 HOURS OF ITEM 614 LAW ENFORCEMENT OFFICER WITH PATROL CAR IS PROVIDED TO BE USED AS DIRECTED BY THE ENGINEER FOR THESE CLOSURES.

SR 303 LOOP RAMP CLOSURE (RAMP D)

THIS RAMP SHALL REMAIN OPEN EXCEPT FOR A MAXIMUM OF SEVEN (7) CONSECUTIVE CALENDAR DAYS. FOR THE TEMPORARY ROAD CONSTRUCTION LIMITATIONS, SEE THE NOTE ON SHEET 42A. FOR DETOUR ROUTE SEE SHEET 42. THE CONTRACTOR IS ENCOURAGED TO PERFORM THE RAMP WORK BEFORE THE MAINLINE STRUCTURE WORK OVER SR 303, BUT IS NOT MANDATORY. WHEN RAMP D IS CLOSED, THE EXIT RAMP C SHALL HAVE SIGNS PLACED BY THE CONTRACTOR THAT STATE "NO DIRECT RE-ENTRY _____BOUND", N-75 SIGN.

THE CONTRACTOR SHALL NOTIFY THE DISTRICT ROADWAY SERVICES MANAGER IN WRITING A MINIMUM OF FOURTEEN (14) DAYS IN ADVANCE OF THE DATE THE DETOUR IS NEEDED. THE STATE OF OHIO WILL PROVIDE, INSTALL, MAINTAIN AND REMOVE THE DETOUR SIGNING.

LIMITATIONS:
1. ALL WORK ON THE RAMP INCLUDING THE SURFACE COURSE, FEATHER AND TEMPORARY STRIPING SHALL BE COMPLETED PRIOR TO OPENING THE RAMP TO TRAFFIC. THE ONLY EXCEPTION IS THE GUARDRAIL WORK MAY BE COMPLETED INDEPENDENT OF THE PAVEMENT WORK.
2. THE EXISTING OR PROPOSED SIGNING SHALL BE IN PLACE UNLESS OTHERWISE DIRECTED BY THE ENGINEER.
3. THE MINIMUM BOUNDRIES ARE FROM THE CONCRETE PAVEMENT PRIOR TO THE SIDE ROAD TO THE GORE AREA. THE INTENT IS TO HAVE ALL OF THE JOINT REPAIRS, SHOULDERS AND TEMPORARY PAVEMENT DONE SUCH THAT THE VARIOUS LANE CLOSURE IN THE ENTRANCE RAMP STANDARD CONSTRUCTION DRAWINGS AND THE PLANS UTILIZE THE REPAIRED AREAS. THE EXISTING SHOULDERS MAY NOT SUPPORT TRAFFIC.

THIS WORK SHALL BE PERFORMED BEFORE WORK ON THE MAINLINE NORTHBOUND BRIDGE OVER SR 303:
SEQUENCE OF CONSTRUCTION
PART III PHASE IIIA
1. CONSTRUCT THE MAINLINE PAVEMENT FROM STATION 1256+60 TO STATION 1267+65. MAINTAIN TRAFFIC FROM RAMP D ON THE OUTSIDE (RIGHT SIDE) PORTION OF THE STRUCTURE. SEE SUBPHASE 2 DETAIL ON SHEET 66.
2. CONSTRUCT THE TEMPORARY ROAD. *SEE SHEET 42B.*
3. PLACE TRAFFIC CONTROL AS PER STANDARD CONSTRUCTION DRAWING MT-98.16M. SHIFT TRAFFIC TO THE TEMPORARY ROAD AND INSIDE PORTION OF THE BRIDGE. SEE SUBPHASE 1 DETAIL ON SHEET 66.
4. CONSTRUCT THE OUTSIDE PORTION OF THE BRIDGE AND REMAINDER PORTION OF RAMP D.

SHOULD THE CONTRACTOR FAIL TO MEET ANY OF THESE REQUIREMENTS, LIQUIDATED DAMAGES SHALL BE ASSESSED THE CONTRACTOR IN ACCORDANCE WITH CMS 108.07.

ERECTING OVERHEAD SIGN SUPPORTS (I-71)

ERECTION/REMOVAL OF OVERHEAD SIGN SUPPORTS (TRUSS TYPE) WILL REQUIRE THE CLOSING OF THE NORTHBOUND OR SOUTHBOUND LANES, WHICHEVER THE SIGN LIES OVER. THE LANE CLOSURES SHALL OCCUR ONLY BETWEEN THE HOURS OF 12:01 AM TO 5:00 AM MONDAY THROUGH THURSDAY. SEE "SHORT DURATION CLOSING OF RURAL DIVIDED HIGHWAY" ON SHEET **63A**.

IF THE CONTRACTOR FAILS TO FOLLOW THESE REQUIREMENTS A STOP WORK ORDER WILL BE ISSUED AND LIQUIDATED DAMAGES ASSESSED PER 108.07 FOR EACH INCIDENT.

QUANTITIES

ITEM	QUANTITY	UNIT	DESCRIPTION
614	304	HOUR	LAW ENFORCEMENT OFFICER WITH PATROL CAR

(QUANTITIES CARRIED TO GENERAL SUMMARY , SHEET 46)

CALCULATED BC CHECKED

MAINTENANCE OF TRAFFIC GENERAL NOTES

MED-71-15.78

REF.FILE *1:\users\vonendorp\mtn\dgn
REF.FILE *1:\DELRES ON:(1-4,6-8,12,14-19,21-24,29,2-9,2+,36,38-44,46-49,52-55,64-68,71
REF.FILE *2:i:\pd_med_ir71\dgn\mot\detwil.dgn
REF.FILE *2: LF"-LS ON:(1281
REF.FILE *3:i:\pd_med_ir71\dgn\plan.dgn
REF.FILE *3:LEVELS ON:(1-3,5,9-16,18-22,29,39,41-52,54-57,59,64,67-69,73
REF.FILE *4:i:\pd_med_ir71\dgn\otc2.dgn
REF.FILE *4:LEVELS ON:(1-24,8-16,18,20-52,54-59,61,62,64,66-70,72-80,82

WILBUR RD. AND GRANGER RD. DETOURS

IN ADDITION TO THE REQUIREMENTS OF 614.03(B), THE CONTRACTOR SHALL PROVIDE, ERECT, MAINTAIN AND REMOVE DETOUR SIGNS AS DETAILED IN THE OHIO MANUAL OF UNIFORM TRAFFIC CONTROL DEVICES (OMUTCD) AND TYPE III BARRICADES AT THE LOCATIONS SHOWN ON THE MAPS ON SHEET 42 & 403.

THE CONTRACTOR SHALL FURNISH, ERECT, MAINTAIN AND REMOVE THE ADVANCE WARNING SIGNS, GATES, AND BARRICADES AS PER STANDARD CONSTRUCTION DRAWING MT-101.60M AT THE LOCATIONS SHOWN ON SHEET 42 & 403.

THE CONTRACTOR SHALL NOTIFY BOTH THE COUNTY ENGINEER & THE PROJECT ENGINEER FOURTEEN (14) DAYS IN ADVANCE OF THE CLOSURE. THE CONTRACTOR SHALL ALSO SIMILARLY NOTIFY THE SCHOOL DISTRICT OFFICIALS AND EMERGENCY RESPONSE PERSONNEL.

WHEN TEMPORARY PAVEMENT STRIPING IS REQUIRED PRIOR TO PERMANENT STRIPING FOR OPENING TO TRAFFIC, THE FOLLOWING ESTIMATED QUANTITIES HAVE BEEN INCLUDED AND CARRIED FORWARD TO THE GENERAL SUMMARY:

ITEM 614 TEMPORARY CENTER LINE, CLASS II, PAINT 0.5 MILE

THE FOLLOWING ROADS WILL REQUIRE THE CLOSING OF THE ROAD TO TRAFFIC DURING PART II. THESE ROADS ARE AS FOLLOWS:

GRANGER RD. - C.H. 21 (SHEET 403)
WILBUR RD. - C.H. 66 (SHEET 42)

THE MAXIMUM LENGTH OF CLOSURE AND LIQUDATED DAMAGES FOR ROADS CLOSED TO TRAFFIC ARE LISTED AS FOLLOWS:

ROAD	STRUCTURE	MAXIMUM LENGTH OF CLOSURE
GRANGER RD.	MED-71-1828	135 DAYS
WILBUR RD.	MED-71-30867	150 DAYS

ONCE CLOSURE OF THE LOCAL ROAD IS MADE, THE CONTRACTOR SHALL DILIGENTLY PURSUE THE WORK TO MINIMIZE THE INCONVENIENCE TO THE TRAVELING PUBLIC. THE CONTRACTOR SHALL SCHEDULE HIS WORK SO AS TO MINIMIZE ROAD CLOSURES DURING THE PERIOD OF TIME BETWEEN SEPTEMBER 1ST AND JUNE 1ST TO MITIGATE INCONVENIENCE TO SCHOOL BUS ROUTES. THESE ROADS SHALL NOT BE CLOSED CONCURRENTLYTHE DETOURS ARE SHOWN ON SHEET42 & 403.

THE NUMBER OF CONSECUTIVE CALENDAR DAYS SHOWN ABOVE SHALL BE CONSIDERED AS AN INTERIM COMPLETION DATE (SECTION 108) AND FOR EACH CALENDAR DAY BEYOND THOSE DAYS THAT THE CROSS ROAD REMAINS CLOSED TO TRAFFIC, THE CONTRACTOR SHALL BE ASSESSED LIQUIDATED DAMAGES IN THE AMOUNT PER 108.07.

GUARDRAIL REPLACEMENT

NO HAZARD SHALL BE LEFT UNPROTECTED EXCEPT FOR THE ACTUAL TIME NECESSARY TO REMOVE THE EXISTING GUARDRAIL, PREPARE THE SITE, AND INSTALL NEW GUARDRAIL IN A CONTINOUS OPERATION. THE REMOVAL OF ALL GUARDRAIL SHALL AT ALL TIMES BE AS DIRECTED BY THE ENGINEER. NO GUARDRAIL SHALL BE REMOVED UNTIL THE REPLACEMENT MATERIAL IS ON THE SITE, READY FOR INSTALLATION. FAILURE TO COMPLY WITH THIS REQUIREMENT SHALL BE DEEMED SUFFICIENT CAUSE TO ORDER WORK SUSPENDED UNTIL SUCH TIME AS THE ENGINEER IS ASSURED OF COMPLIANCE.

ITEM 615--TEMPORARY PAVEMENT, AS PER PLAN

IN LIEU OF 615.05, THE FLEXIBLE PAVEMENT BUILDUP SHALL CONSIST OF 8" OF CMS 301 BITUMINOUS AGGREGATE BASE, AND COMPACTION OF THE AREA PER 203. PAYMENT FOR THIS ITEM SHALL BE MADE PER SQUARE YARD AND SHALL INCLUDE MATERIALS, LABOR AND EQUIPMENT FOR A COMPLETE INSTALLATION PER THE ABOVE REQUIREMENTS.

THE CONTRACTOR MAY CONSTRUCT THIS ITEM FOR PARTS II AND/OR III DURING PART I CONSTRUCTION AND FOR PART III DURING PART II CONSTRUCTION.

SHOULDER MAINTENANCE ON I-71

TRAFFIC CONTROL OPERATIONS REQUIRE THE PARTIAL UTILIZATION OF THE SHOULDERS. IT SHALL BE THE RESPONSIBILITY OF THE CONTRACTOR TO ASSURE THAT THE SHOULDERS ARE MAINTAINED IN ACCEPTABLE CONDITION TO ASSURE THEIR SAFE USE AS A TRAFFIC LANE. AN ESTIMATED QUANTITY OF 600 CUBIC YARDS OF ITEM 614 BITUMINOUS CONCRETE FOR MAINTAINING TRAFFIC HAS BEEN INCLUDED IN THE GENERAL SUMMARY FOR ANY REQUIRED REPAIRS. TO BE USED AS DIRECTED BY THE ENGINEER.

NOTICE OF CLOSURE SIGNS

THESE SIGNS SHALL BE ERECTED BY THE CONTRACTOR AT LEAST ONE WEEK IN ADVANCE OF THE SCHEDULED ROAD CLOSURE. THE SIGNS SHALL BE ERECTED ON THE RIGHT HAND SIDE OF THE ROAD FACING TRAFFIC. THEY SHALL BE LOCATED IN THE FIELD SO AS NOT TO INTERFERE WITH ANY PERMANENT SIGNS. ON THIS PROJECT THEY SHOULD BE ERECTED AT THE POINT OF CLOSURE.

OC-60B SIGN SHALL BE USED ON THE FOLLOWING LOCAL ROADS:

GRANGER ROAD
WILBUR ROAD

PAYMENT FOR THIS WORK SHALL BE INCLUDED IN THE LUMP SUM BID FOR ITEM 614 MAINTAINING TRAFFIC AND SHALL INCLUDE FURNISHING, ERECTING, MAINTAINING AND REMOVING THE SIGNS INCLUDING SUPPORTS.

NOTE: THE CONTRACTOR IS TO FILL IN THE ROAD, DATE AND DURATION.

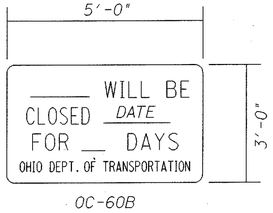

OC-60B

ITEM 614-VEHICLE ASSISTANCE

THE CONTRACTOR SHALL PROVIDE A VEHICLE WITH OPERATOR ABLE TO ASSIST OR REMOVE DISABLED VEHICLES FROM THE TRAVELED LANE TO RE-ESTABLISH FREE FLOWING TRAFFIC WHILE IR 71 IS LIMITED TO TWO LANE IN EACH DIRECTION. THE EXCEPTION IS TRAFFIC ACCIDENTS WHICH ARE NOT TO BE MOVED WITHOUT DIRECTION OF THE OHIO STATE HIGHWAY PATROL.

THE RESPONSE TIME SHOULD BE WITHIN TEN MINUTES OF THE VEHICLE BEING REPORTED AS DISABLED. THE INTENT IS TO PERFORM THIS WORK IN A VERY SHORT TIME PERIOD TO AVOID TRAFFIC FROM BACKING UP.

THE HOURS FOR THIS VEHICLE WITH OPERATOR ARE 24 HOURS PER DAY SEVEN DAYS A WEEK FROM MARCH 15 THROUGH THE FRIDAY BEFORE THANKSGIVING.

THE VEHICLE SHALL BE EQUIPPED WITH AT LEAST THE FOLLOWING: FUEL CANS OF GAS AND DIESEL, FLARES, CONES, JUMPER CABLES, AMBER LIGHTS, CELL PHONE (TO RECEIVE TROUBLE CALLS AND TO CALL TOW VEHICLES).

THE CONTRACTOR IS NOT TO REMOVE THE VEHICLE EXCEPT TO THE SHOULDER OR OFF THE TRAVELED LANE. COMMERCIAL TOW OPERATORS ARE TO BE CONTACTED TO REMOVE THE DISABLED VEHICLE FROM THE ROADWAY.

ANY DAMAGE DONE TO DISABLED VEHICLES SHALL BE BORNE BY THE CONTRACTOR (THE STATE SHALL BE HELD HARMLESS).

ALL COSTS ASSOCIATED WITH THE REQUIREMENTS MENTIONED ABOVE SHALL BE INCLUDED IN THE LUMP SUM BID FOR ITEM 614-MAINTAINING TRAFFIC, MISC.: VEHICLE ASSISTANCE.

ITEM 614 - TEMPORARY PAVEMENT MARKINGS, AS PER PLAN

THE CONTRACTOR SHALL BE REQUIRED TO INSTALL VARIOUS TYPES OF TEMPORARY MARKINGS ACCORDING TO THE FOLLOWING CRITERIA CONTINGENT UPON THE SEQUENCE OF CONSTRUCTION. TEMPORARY PAVEMENT MARKINGS SHALL BE 740.06, TYPE I PREFORMED MATERIAL OR 642 PAINT APPLIED USING THE FOLLOWING CRITERIA: ALL TEMPORARY MARKINGS INSTALLED ON A PERMANENT BRIDGE DECK OR ON PERMANENT PAVEMENT SURFACE SHALL BE 740.06, TYPE I PREFORMED MATERIAL. PAINT MAY BE USED FOR TEMPORARY MARKINGS INSTALLED ON EXISTING BRIDGE DECKS TO BE REPLACED OR OVERLAYED, OR ON EXISTING PAVEMENT THAT WILL BE RESURFACED.

PAYMENT FOR THE ABOVE WILL BE TEMPORARY PAVEMENT MARKING, BY CLASS, AS PER PLAN OF VARIOUS TYPES WHICH WILL INCLUDE EITHER PAINT OR TAPE AS REQUIRED. SEE SHEET 43-44.

TEMPORARY RAISED PAVEMENT MARKERS CANNOT BE USED TO SIMULATE (REPLACE) ANY TYPE OF TEMPORARY PAVEMENT MARKING.

QUANTITIES

ITEM	QUANTITY	UNIT	DESCRIPTION
614	0.50	MILE	TEMPORARY CENTERLINE, CLASS II, PAINT
614	600	CU.YD.	BITUMINOUS CONCRETE FOR MAINTAINING TRAFFIC
614	LUMP		MAINTAINING TRAFFIC, MISC.: VEHICLE ASSISTANCE

(QUANTITIES CARRIED TO GENERAL SUMMARY, SHEET 46)

CALCULATED BJL CHECKED

MAINTENANCE OF TRAFFIC GENERAL NOTES

MED-71-15.78

DESIGN FILE : i:\pd_med_ir71\dgn\mot\mot1.dgn
USERNAME : nvondere
DATE : 07-DEC-1999
TIME : 07:23
FILE NAME: i:\pd_med_ir71\dgn\mot\mot1.sgn
DATE & TIME: 07-DEC-1999 07:23
USERNAME: nvondere
PROJECT: NONE
LEVELS ON: (1-4,6-11,13,64)
PLOT QUEUE: \\QUEPLOT\wide
PEN TABLE: i:\dist10\pkf\crosspen

REF.FILE *1:\\user\stoddard\med\rtj.dgn
REF.FILE *1,LEVELS ON:(1-4,6-9,11,12,14-19,21-36,38-44,46-49,52-55,64-68,7
REF.FILE *2:I:\pd_med_ir71\dgn\mor\detail.dgn
REF.FILE *2 LEVELS ON:(1-13)
REF.FILE *3:I:\pd_med_ir71\dgn\all\gmmnt.dgn
REF.FILE *3 LEVELS ON:(1-5,9-16,18-27,29-39,41-52,54-57,59,64,67-69,73
REF.FILE *4:I:\pd_med_ir71\dgn\abc28cmb.dgn
REF.FILE *4 LEVELS ON:(1-26,8-16,18,20-52,54-59,61,62,64,66-70,72-80,82,
DESIGN FILE : i:\pd_med_ir71\dgn\mot\moti.dgn
USERNAME : nvondere
DATE : 07-DEC-1999
TIME : 07:24
LEVELS ON:(1-4,6-11,13-41)
PLOT QUEUE:\\OOIPLOT\taylor
PEN TABLE:I:\dot\dot\plotcross.pen
FILENAME:i:\pd_med_ir71\dgn\mor\mordgn.dgn
DATE & TIME:07-DEC-1999 07:24
USERNAME:nvondere
PROJECTZONE

REPLACEMENT OF DAMAGED GUARDRAIL

IF, DURING THE CONSTRUCTION OF THE PROJECT, THE EXISTING GUARDRAIL IS DAMAGED BY THE TRAVELING PUBLIC, THE CONTRACTOR SHALL REPAIR THE DAMAGED SECTIONS AS DIRECTED BY THE ENGINEER. THE FOLLOWING QUANTITIES ARE PROVIDED FOR SUCH OCCURRENCES:

ITEM	QUANTITY	UNIT	DESCRIPTION
606	1,000	LIN. FT.	GUARDRAIL, TYPE 5
606	20	EACH	ANCHOR ASSEMBLY, TYPE E-98 *
202	2,000	LIN. FT.	GUARDRAIL REMOVED

* OFFSET DESIGN

SALVAGEABLE GUARDRAIL MAY BE REUSED IF IT IS DETERMINED BY THE ENGINEER TO BE IN GOOD CONDITION. ANY GRADING NECESSARY TO RESTORE THE DAMAGED AREA BACK TO THE PRE-EXISTING CONDITION SHALL BE CONSIDERED INCIDENTAL IN THE COST OF ITEM 606.

THE REMOVAL AND DISPOSAL OF THE DAMAGED GUARDRAIL AND ANCHOR ASSEMBLIES SHALL BE PERFORMED BY THE LINEAL FOOT MEASUREMENT AND INCLUDED IN ITEM 202 GUARDRAIL REMOVED.

QUANTITIES NOT USED FOR THE INTENDED PURPOSE SHALL BE NONPERFORMED.

THE 606 ITEMS IN THIS NOTE ARE INTENDED TO BE USED ONLY DURING THE MAINTENANCE OF TRAFFIC PHASES OF THIS PROJECT. THEY ARE NOT TO BE CONSIDERED AS A PERMANENT INSTALLATION.

ITEM 614- PORTABLE CHANGEABLE MESSAGE SIGN, CLASS II, AS PER PLAN

THE CONTRACTOR SHALL FURNISH, INSTALL, MAINTAIN AND REMOVE, WHEN NO LONGER NEEDED, PORTABLE CHANGEABLE MESSAGE SIGN, (PCMS) AS CALLED FOR IN PLAN. THE SIGN SHALL BE OF A TYPE SHOWN ON A LIST OF APPROVED PCMS UNITS MAINTAINED BY THE DIRECTOR. THE CLASS II UNITS HAVE A MINIMUM LEGIBILITY DISTANCE OF 850 FT.

EACH SIGN SHALL BE TRAILER MOUNTED AND EQUIPPED WITH A FUNCTIONAL DIMMING MECHANISM TO DIM THE SIGN DURING DARKNESS, AND A TAMPER AND VANDAL PROOF ENCLOSURE. EACH SIGN SHALL BE PROVIDED WITH APPROPRIATE TRAINING AND OPERATION INSTRUCTIONS TO ENABLE ON-SITE PERSONNEL TO OPERATE AND TROUBLESHOOT THE UNIT. THE SIGN SHALL ALSO BE CAPABLE OF BEING POWERED BY AN ELECTRICAL SERVICE DROP FROM A LOCAL UTILITY COMPANY.

THE NUMBER, LOCATION, PLACEMENT, OPERATION, MAINTENANCE AND ALL ACTIVATION OF THE SIGNS BY THE CONTRACTOR SHALL BE AS DIRECTED BY THE ENGINEER. THE LOCATIONS OF THE PCMS MAY NOT BE WITHIN THE WORK LIMITS OF THE PROJECT BUT SHALL BE LOCATED IN A HIGHLY VISIBLE POSITION, YET PROTECTED FROM TRAFFIC. THE CONTRACTOR SHALL, AT THE DIRECTION OF THE ENGINEER, RELOCATE THE PCMS TO IMPROVE VISIBILITY OR ACCOMMODATE CHANGED CONDITIONS. WHEN NOT IN USE, THE PCMS WILL BE OFF, FACING AWAY FROM ALL TRAFFIC AND SHALL DISPLAY ONE OR MORE HIGH INTENSITY YELLOW REFLECTIVE SHEETING SURFACES OF 9-INCH BY 15-INCH MINIMUM SIZE FACING TRAFFIC.

THE ENGINEER SHALL BE PROVIDED ACCESS TO EACH SIGN UNIT AND SHALL BE PROVIDED WITH APPROPRIATE TRAINING AND OPERATION INSTRUCTIONS TO ENABLE ODOT PERSONNEL TO OPERATE AND TROUBLESHOOT THE UNIT AND TO REVISE SIGN MESSAGE, IF NECESSARY.
ALL MESSAGES TO BE DISPLAYED ON THE SIGN WILL BE PROVIDED BY THE ENGINEER. A LIST OF ALL REQUIRED PRE-PROGRAMMED MESSAGES WILL BE GIVEN TO THE CONTRACTOR AT THE PROJECT PRECONSTRUCTION CONFERENCE. THE SIGN SHALL HAVE THE CAPABILITY TO STORE UP TO 99 MESSAGES. MESSAGE MEMORY OR PRE-PROGRAMMED DISPLAYS SHALL NOT BE LOST AS A RESULT OF POWER FAILURES TO THE ON BOARD COMPUTER. THE SIGN LEGEND SHALL BE CAPABLE OF BEING CHANGED IN THE FIELD.

ITEM 614- PORTABLE CHANGEABLE MESSAGE SIGN, CLASS II, AS PER PLAN (CON'T)

THREE-LINE PRESENTATION FORMATS WITH UP TO SIX MESSAGE PHRASES SHALL BE SUPPORTED, BUT NORMALLY, NOT MORE THAN TWO MESSAGE PHRASES SHOULD BE EMPLOYED, ALTHOUGH THREE PHRASES MAY BE USED IN UNUSUAL CONDITIONS. PCMS FORMAT SHALL PERMIT THE COMPLETE MESSAGE FOR EACH PHRASE TO BE READ AT LEAST ONCE.

THE PCMS SHALL CONTAIN AN ACCURATE CLOCK AND PROGRAMMING LOGIC WHICH WILL ALLOW THE SIGN TO BE ACTIVATED, DEACTIVATED OR MESSAGES CHANGED AUTOMATICALLY AT DIFFERENT TIMES OF THE DAY FOR DIFFERENT DAYS OF THE WEEK.

THE PCMS UNIT SHALL BE MAINTAINED IN GOOD WORKING ORDER BY THE CONTRACTOR IN ACCORDANCE WITH THE PROVISIONS OF 614.06. THE CONTRACTOR SHALL, PRIOR TO ACTIVATING THE UNIT, MAKE ARRANGEMENTS WITH AN AUTHORIZED SERVICE AGENT FOR THE PCMS TO ASSURE PROMPT SERVICE IN THE EVENT OF FAILURE. ANY FAILURE SHALL NOT RESULT IN THE SIGN BEING OUT OF SERVICE MORE THAN 12 HOURS INCLUDING WEEKENDS. FAILURE TO COMPLY MAY RESULT IN AN ORDER TO STOP WORK AND OPEN ALL TRAFFIC LANES AND/OR IN THE DEPARTMENT TAKING APPROPRIATE ACTION TO SAFELY CONTROL TRAFFIC AND THE ENTIRE COST TO CONTROL TRAFFIC ACCRUED BY THE DEPARTMENT WILL BE DEDUCTED FROM MONEYS DUE, OR TO BECOME DUE THE CONTRACTOR ON HIS CONTRACT.

THE CONTRACTOR SHALL BE RESPONSIBLE FOR 24 HOURS PER DAY OPERATION AND MAINTENANCE OF THESE SIGNS ON THE PROJECT FOR THE DURATION OF THE PHASES WHEN THE PLAN REQUIRES THEIR USE.
THE REQUIREMENT TO FURNISH, INSTALL, MAINTAIN AND REMOVE A PCMS UNIT ON THIS PROJECT SHALL NOT IN ANY WAY RELIEVE THE CONTRACTOR OF HIS RESPONSIBILITIES AS OUTLINED IN 104.04.

PAYMENT FOR THE ABOVE DESCRIBED ITEM SHALL BE AT THE CONTRACT UNIT BID PER SIGN-MONTH FOR ALL SIGNS FURNISHED UNDER ITEM 614 PORTABLE CHANGEABLE MESSAGE SIGN, CLASS II, AS PER PLAN AND SHALL INCLUDE ALL LABOR, MATERIALS, EQUIPMENT, FUELS, LUBRICATING OILS, SOFTWARE, HARDWARE AND INCIDENTALS TO PERFORM THE ABOVE DESCRIBED WORK, INCLUDING RELOCATION IF NECESSARY.

A QUANTITY OF 64* SIGN-MONTHS HAVE BEEN INCLUDED IN THE GENERAL SUMMARY TO BE USED AS DIRECTED BY THE ENGINEER.

* ESTIMATED 8 LOCATIONS FOR 8 MONTHS

COORDINATION OF CONTRACTORS

DURING THE SECOND YEAR OF CONSTRUCTION, MED-71-15.78 WILL ABUT THE DESIGN BUILD PROJECT MED-271-0.00. EACH CONTRACTOR SHALL WORK TO ASSURE SMOOTH TRANSITIONAL TRAFFIC FLOW FROM ONE PROJECT TO THE OTHER.

SINCE THE MAINTENANCE OF TRAFFIC AND WORK OF THESE TWO PROJECTS OVERLAP EACH OTHER, IT IS ESSENTIAL THAT EACH CONTRACTOR CONDUCT THEIR WORK AND COOPERATE WITH EACH OTHER IN SUCH A MANNER AS NOT TO HINDER THE PROGRESS OR COMPLETION OF THE WORK BEING PERFORMED BY THE OTHER CONTRACTOR.

BRIDGE CONSTRUCTION ON S.R. 3 RAMPS

THE CONTRACTOR WILL BE GIVEN 135 CONSECUTIVE CALENDAR DAYS TO COMPLETE EACH OF THE BRIDGES CROSSING PLUM CREEK. FAILURE TO COMPLETE THE CONSTRUCTION WITHIN THE DESIGNATED TIME LIMIT THE CONTRACTOR SHALL INCUR LIQUIDATED DAMAGES IN ACCORDANCE WITH CMS 108.07.

BRIDGE CONSTRUCTION

THE CONTRACTOR SHALL COMPLETE ALL STRUCTURE WORK IN THE CONSTRUCTION SEASON OUTLINED IN "SEQUENCE OF CONSTRUCTION I-71".

ALL STRUCTURE WORK INCLUDING THE PAINTING SHALL BE PERFORMED WHILE THAT PORTION OF I-71 IS UNDER CONSTRUCTION.

ACCESS TO ADJACENT PROPERTY

ACCESS TO ADJACENT PROPERTY WITHIN THE WORK LIMITS ON THE VARIOUS LOCAL ROADS SHALL BE MAINTAINED BY THE CONTRACTOR AT ALL TIMES, AS PER 614.02(a). THE FOLLOWING ESTIMATED QUANTITIES HAVE BEEN CARRIED TO THE GENERAL SUMMARY TO BE USED AS DIRECTED BY THE ENGINEER FOR THE MAINTENANCE OF LOCAL TRAFFIC:

410 TRAFFIC COMPACTED AGGREGATE, TYPE A, 50 CU.YD.

DUST CONTROL

THE CONTRACTOR SHALL FURNISH AND APPLY WATER AND CALCIUM CHLORIDE FOR DUST CONTROL AS DIRECTED BY THE ENGINEER. THE FOLLOWING CONTINGENCY QUANTITIES HAVE BEEN INCLUDED FOR DUST CONTROL PURPOSES:

616	WATER	200 M GALLON
616	CALCIUM CHLORIDE	5 TON

CONSTRUCTION ACCESS POINTS

FOR CONSTRUCTION ACCESS POINTS SEE NOTES AND DETAILS ON SHEET **64**.

QUANTITIES

ITEM	QUANTITY	UNIT	DESCRIPTION
202	2000	LIN. FT.	GUARDRAIL REMOVED
410	50	CU YARD	TRAFFIC COMPACTED AGGREGATE, TYPE A
606	1000	LIN. FT.	GUARDRAIL, TYPE 5
606	20	EACH	ANCHOR ASSEMBLY, TYPE E-98
614	64	MONTH	PORTABLE CHANGEABLE MESSAGE SIGN, CLASS II, AS PER PLAN
616	200	M GAL.	WATER
616	5	TON	CALCIUM CHLORIDE

(QUANTITIES CARRIED TO GENERAL SUMMARY, SHEET 46)

CALCULATED BZ CHECKED

MAINTENANCE OF TRAFFIC GENERAL NOTES

MED-71-15.78

REF_FILE : 1)\npd_mod_lr7\dgn\mot\motdet.dgn
REF_FILE : 2)\npd_mod_lr7\dgn\mot\detwil.dgn
REF_FILE : 3)\npd_mod_lr7\dgn\dgnmmt.dgn
REF_FILE : 4)\npd_mod_lr7\dgn\dabc3dmb.dgn
REF_FILE : 5)\npd_mod_lr7\dgn\mot\motdet.dgn
DESIGN FILE : i:\npd_mod_lr7\dgn\mot\motl.dgn
USERNAME : nvondere
DATE : 29-DEC-1999
TIME : 10:11

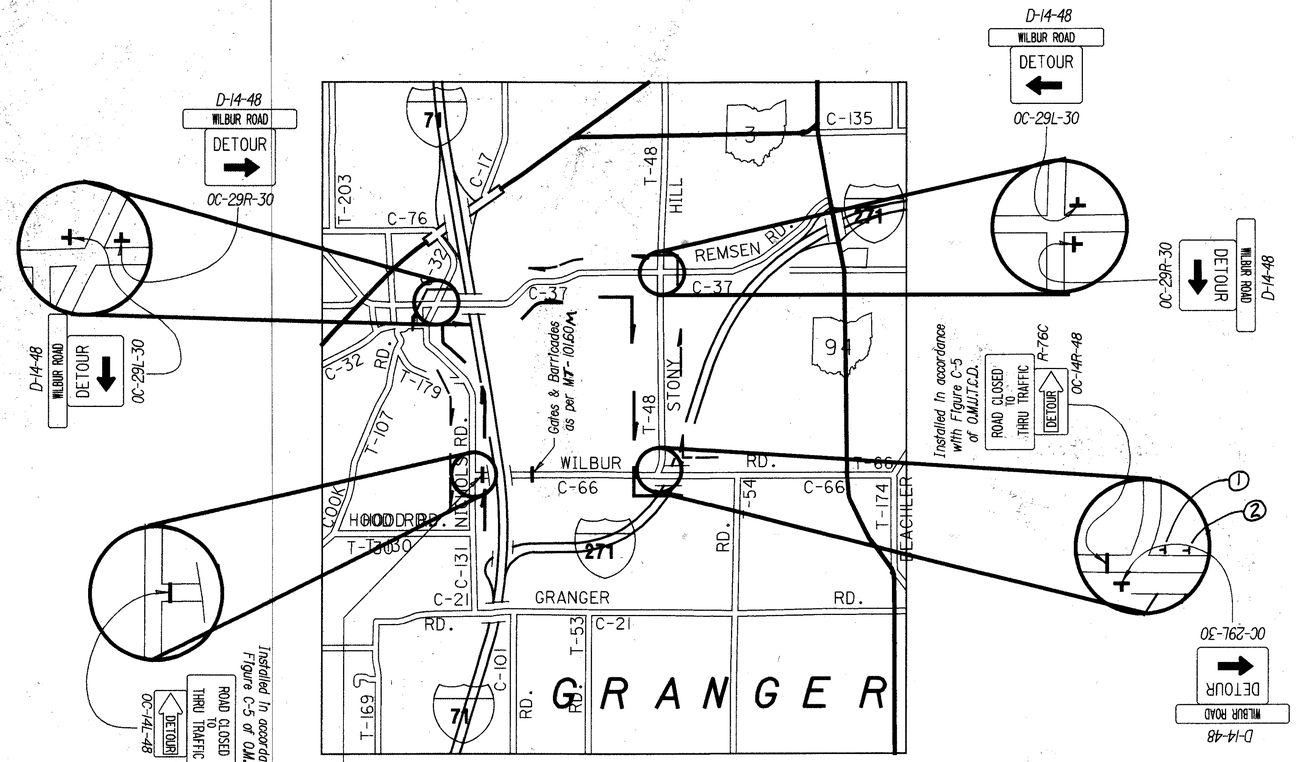

Wilbur Road DETOUR MAP

Scale In Miles

0 1 2

LEGEND

- Detour
- Interstate
- State & Federal Routes
- Other Roads

TYPE A WARNING LIGHT

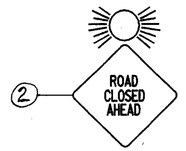

OW-120-36

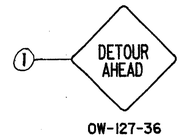

OW-127-36

NOTE: FOR ADDITIONAL NOTES AND DURATION OF THE DETOUR, SEE SHEET 40.

S.R. 303 Ramp "D" DETOUR MAP

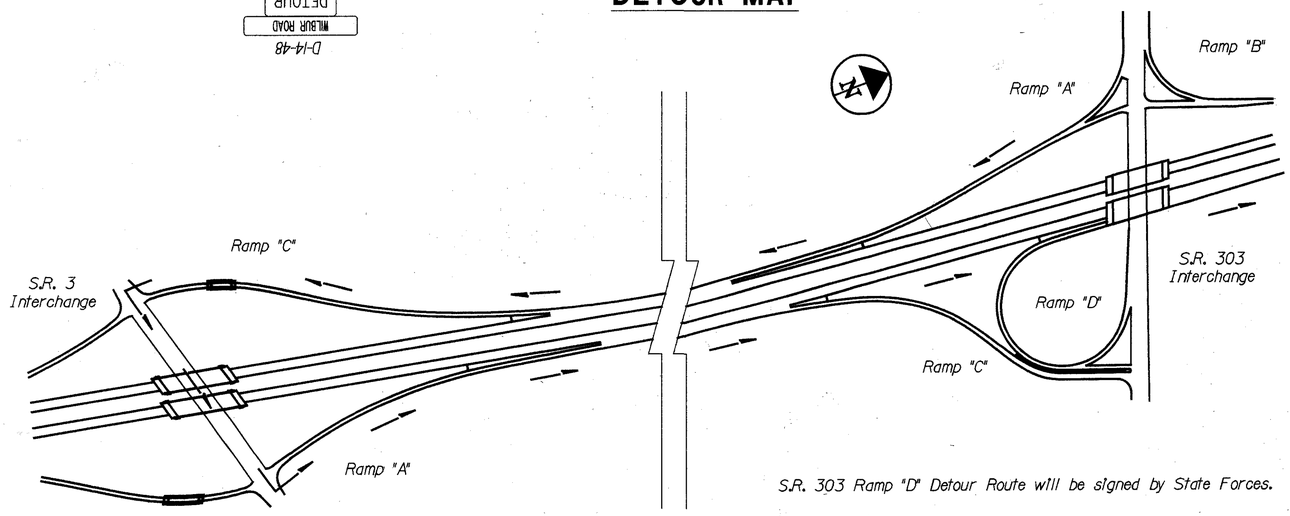

S.R. 303 Ramp "D" Detour Route will be signed by State Forces.

ITEM 614- MAINTAINING TRAFFIC, MISC.: EMERGENCY PULLOFFS

THE CONTRACTOR SHALL INSTALL EMERGENCY PULLOFFS AT THE STATIONS SPECIFIED IN THE MAINTENANCE OF TRAFFIC SEQUENCE OF CONSTRUCTION. THE PAVEMENT DESIGN SHALL CONSIST OF TEMPORARY PAVEMENT, CLASS B AS PER 615.05.

THE BID PRICE FOR EACH ITEM 614 MAINTAINING TRAFFIC, MISC.: EMERGENCY PULLOFFS SHALL INCLUDE ALL LABOR, MATERIALS AND EQUIPMENT NOT LIMITED TO GRADING, PAVEMENT, PAVEMENT MARKINGS, SIGNS AND SIGN SUPPORTS AS DETAILED ON SHEET 65 FOR A COMPLETE INSTALLATION. THIS ITEM SHALL ALSO INCLUDE THE REMOVAL OF THE SAME WHEN IT IS DETERMINED TO BE NO LONGER NEEDED AS DIRECTED BY THE ENGINEER.

AN ESTIMATED QUANTITY OF **10** EACH OF ITEM 614 MAINTAINING TRAFFIC, MISC.: EMERGENCY PULLOFFS HAS BEEN PROVIDED.

QUANTITIES

ITEM	QUANTITY	UNIT	DESCRIPTION
614	10	EACH	MAINTAINING TRAFFIC, MISC.: EMERGENCY PULLOFFS

(QUANTITIES CARRIED TO GENERAL SUMMARY, SHEET 46)

MAINTENANCE OF TRAFFIC GENERAL NOTES

CALCULATED BC
CHECKED

MED-71-15.78

LEVELS ON: 1-4,6-9,11,13-64)
PLOT QUEUE: \QUEPLOT.QUE
PEN TABLES: H:\Bentley\Projects\Cross.DGE.pen
DATE & TIME: 29-DEC-1999 10:11
USERNAME: nvondere
PROJECT: HOME

ITEM 614 - TEMPORARY IMPACT ATTENUATOR, (UNIDIRECTIONAL

THIS ITEM SHALL CONSIST OF FURNISHING AND INSTALLING EITHER OF THE FOLLOWING IMPACT ATTENUATORS:

1) THE QUADGUARD CZ, (24" [610 MM] WIDE 6-BAY) TEMPORARY IMPACT ATTENUATOR MANUFACTURED BY ENERGY ABSORPTION SYSTEMS, INC., ONE EAST WACKER DRIVE, CHICAGO, IL 60601 (TELEPHONE: 312.467.6750).

   THE LENGTH OF THE 6-BAY QUADGUARD CZ IS 20'-9" [6.33 M]. INSTALLATION SHALL BE AT THE LOCATIONS SPECIFIED IN THE PLANS, IN ACCORDANCE WITH THE MANUFACTURERS SPECIFICATIONS AS DETAILED ON THE FOLLOWING PRE-APPROVED SHOP DRAWINGS:

DWG. #	DRAWING NAME	DWG./REV. DATE	ODOT APPROVAL DATE
QSCZCVR-T4	QUADGUARD CZ SYSTEM FOR CONSTRUCTION ZONES	5/13/99 Rev. J	8/27/99
35-40-10	QUADGUARD SYSTEM CONCRETE PAD, CZ, QG	11/19/99 Rev. D	8/27/99
35-40-16	QUADGUARD SYSTEM BACKUP ASSEMBLY, CZ, QG	7/30/99 Rev. F	8/27/99
354051Z	QUADGUARD CZ SYSTEM NOSE ASSEMBLY, CZ, QG, 24,30,36	5/17/99	8/27/99
35-40-18	TRANSITION ASSEMBLY, 4 OFFSET, QG	6/25/99 Rev. F	8/27/99
3540260	QUADGUARD SYSTEM PCMB ANCHOR ASSEMBLY	11/19/97 Rev. C	8/27/99

2) THE TRACC (TRINITY ATTENUATING CRASH CUSHION) MANUFACTURED BY SYRO INC., 1170 N. STATE STREET, GIRARD, OHIO 44420 (TELEPHONE: 330.545.4373).

   THE TRACC IS 21'-0" [6.4 M] LONG AND 2'-7" [0.8 M] WIDE. INSTALLATION SHALL BE AT THE LOCATIONS SPECIFIED IN THE PLANS, IN ACCORDANCE WITH THE MANUFACTURERS SPECIFICATIONS AS DETAILED ON THE FOLLOWING PRE-APPROVED SHOP DRAWINGS:

DWG. #	DRAWING NAME	DWG./REV. DATE	ODOT APPROVAL DATE
SS450 SS450M	CRASH-CUSHION ATTENUATING TERMINAL PLAN, ELEVATION & SECTIONS	3/12/99 Rev. 1 3/12/99 Rev. 1	8/27/99 8/27/99
SS455	TRACC TRANSITION TO W-BEAM MEDIAN BARRIER PLAN, ELEVATION & SECTIONS	2/18/99	8/27/99
SS461	TRACC TRANSITION TO CONCRETE SAFETY SHAPE BARRIER PLAN, ELEVATION & SECTIONS	6/30/99 Rev. 1	8/27/99
SS462	TRACC TRANSITION TO CONCRETE BARRIER SINGLE SLOPE PLAN, ELEVATION & SECTIONS	6/30/99	8/27/99

THE CONTRACTOR SHALL PROVIDE A REPLACEMENT UNIT WHEN AN IMPACT IS SEVERE ENOUGH TO REQUIRE COMPLETE REPLACEMENT OF THE ATTENUATOR. THE CONTRACTOR SHALL HAVE A SPARE PARTS PACKAGE AVAILABLE ON THE PROJECT SITE AT ALL TIMES WHEN AN ATTENUATOR IS IN PLACE. THE CONTRACTOR SHALL PROVIDE A MINIMUM OF ONE COMPLETE SPARE PARTS PACKAGE FOR EVERY 1 TO 6 UNITS INSTALLED ON THE PROJECT SITE. FOR EXAMPLE, 5 INSTALLED UNITS REQUIRE 1 SPARE PARTS PACKAGE AND 7 INSTALLED UNITS REQUIRE 2 SPARE PARTS PACKAGES.

WHEN BI-DIRECTIONAL DESIGNS ARE SPECIFIED, THE CONTRACTOR SHALL SUPPLY APPROPRIATE TRANSITIONS. PAYMENT FOR THE ABOVE WORK SHALL BE MADE AT THE UNIT PRICE BID FOR ITEM 614, TEMPORARY IMPACT ATTENUATOR, (UNIDIRECTIONAL OR BIDIRECTIONAL), EACH, AND SHALL INCLUDE ALL LABOR, TOOLS, EQUIPMENT AND MATERIALS NECESSARY TO CONSTRUCT, MAINTAIN, REPAIR, REPLACE OR RELOCATE A COMPLETE AND FUNCTIONAL IMPACT ATTENUATOR SYSTEM, INCLUDING ALL RELATED BACKUPS, TRANSITIONS, LEVELING PADS, HARDWARE AND GRADING, NOT SEPARATELY SPECIFIED, AS REQUIRED BY THE MANUFACTURER.

ITEM 614- TEMPORARY IMPACT ATTENUATOR (REPLACEMENT), UNIDIRECTIONAL

THIS ITEM IS TO BE USED AS SPARE TEMPORARY ATTENUATORS TO REPLACE THOSE DAMAGED WHERE THE RESTORATION OF MINOR OR MAJOR REPAIRS CANNOT BE PERFORMED IN A SAFE AND TIMELY MANNER. THIS ITEM INCLUDES THE COST OF ALL LABOR, MATERIALS, AND EQUIPMENT NECESSARY TO REMOVE THE DAMAGED TEMPORARY IMPACT ATTENUATOR, ASSEMBLE A COMPLETE AND FUNCTIONAL ATTENUATOR, AND MAINTAIN THE REPLACEMENT TEMPORARY IMPACT ATTENUATOR. THE FINAL REMOVAL OF THIS TEMPORARY IMPACT ATTENUATOR WHEN NO LONGER NEEDED FOR THAT CONSTRUCTION PHASE IS INCLUDED IN THE COST OF THE ORIGINAL TEMPORARY IMPACT ATTENUATOR.

THE CONTRACTOR SHALL HAVE THE ENGINEER INSPECT THE DAMAGED TEMPORARY IMPACT ATTENUATOR PRIOR TO ANY REPAIRS BEING MADE IN ORDER TO BE JUSTIFIABLY PAID FOR THIS ITEM. PAYMENT SHALL BE MADE PER EACH FOR ITEM 614 TEMPORARY IMPACT ATTENUATOR (REPLACEMENT), UNIDIRECTIONAL .

RAMP WORK

THE CONTRACTOR IS ENCOURAGED TO PERFORM THE RAMP WORK PRIOR TO THE MAINLINE WORK, BUT IS NOT MANDATORY, UNLESS OTHERWISE NOTED. WHEN AN ENTRANCE RAMP IS CLOSED, THE EXIT RAMP IN THE SAME DIRECTION AT THE SAME INTERCHANGE SHALL HAVE SIGNS PLACED THAT STATE "NO DIRECT RE-ENTRY ____BOUND", N-75 SIGN, PRIOR TO EXITING I-71. TRAFFIC SHALL BE MAINTAINED ON ALL RAMPS EXCEPT AS NOTED BELOW.

RAMP WORK LIMITATIONS:

1. GENERAL: AFTER THE RAMP WIDENING, JOINT REPAIRS AND SHOULDER WORK ARE COMPLETED, THE CONTRACTOR MAY CLOSE THE RAMP IN ORDER TO PLACE THE APPLICABLE INTERMEDIATE AND SURFACE COURSES OF ASPHALT BUT ONLY AT NIGHT AS PER THE WORKING HOURS RESTRICTION NOTE ON SHEET **38** , UNLESS OTHERWISE NOTED. AN ENTIRE SINGLE COURSE OF ASPHALT, FEATHER AND TEMPORARY STRIPING SHALL BE COMPLETED PRIOR TO REOPENING THE RAMP TO TRAFFIC. THE MINIMUM BOUNDRIES ARE FROM THE CONCRETE PAVEMENT PRIOR TO THE SIDE ROAD TO THE GORE AREA. THE INTENT IN THE GORE AREA IS TO HAVE ALL JOINT WORK AND TEMPORARY PAVEMENT DONE SUCH THAT THE VARIOUS LANE CLOSURE IN THE ENTRANCE/EXIT RAMP STANDARD CONSTRUCTION DRAWINGS UTILIZES THE REPAIRED AREAS. THE EXISTING SHOULDERS ON THE RAMPS MAY NOT BE ADEQUATE TO HANDLE TRAFFIC LOADING.

2. SR 303 LOOP ENTRANCE RAMP D: FOR THE PROPOSED WORK, THE CONTRACTOR HAS A MAXIMUM OF SEVEN (7) CONSECUTIVE CALENDAR DAYS TO CLOSE RAMP D BUT ONLY AT NIGHT AS PER THE WORKING HOURS RESTRICTION NOTE ON SHEET **38**.

3. SR 303 LOOP ENTRANCE RAMP D: FOR THE TEMPORARY ROAD WORK CONSTRUCTION, THE CONTRACTOR HAS A MAXIMUM OF THREE (3) CONSECUTIVE CALENDAR DAYS TO CLOSE RAMP D BUT ONLY AT NIGHT AS PER THE WORKING HOURS RESTRICTION NOTE ON SHEET **38**.THE SAME LIMITATIONS APPLY WHEN REMOVING THE TEMPORARY PAVEMENT AND RECONSTRUCTION OF THE AFFECTED PAVEMENT AREAS ON THE RAMP.

4. ONLY ONE RAMP AT ANY ONE INTERCHANGE MAY BE CLOSED AT A TIME. IN OTHER WORDS, WE DON'T WANT TWO RAMPS CLOSED AT THE SAME TIME IN THE SAME INTERCHANGE.

SHOULD THE CONTRACTOR FAIL TO MEET ANY OF THESE REQUIREMENTS, LIQUIDATED DAMAGES SHALL BE ASSESSED THE CONTRACTOR IN ACCORDANCE WITH CMS 108.07.

CALCULATED | CHECKED

MAINTENANCE OF TRAFFIC NOTES

MED-71-15.78

42A
940

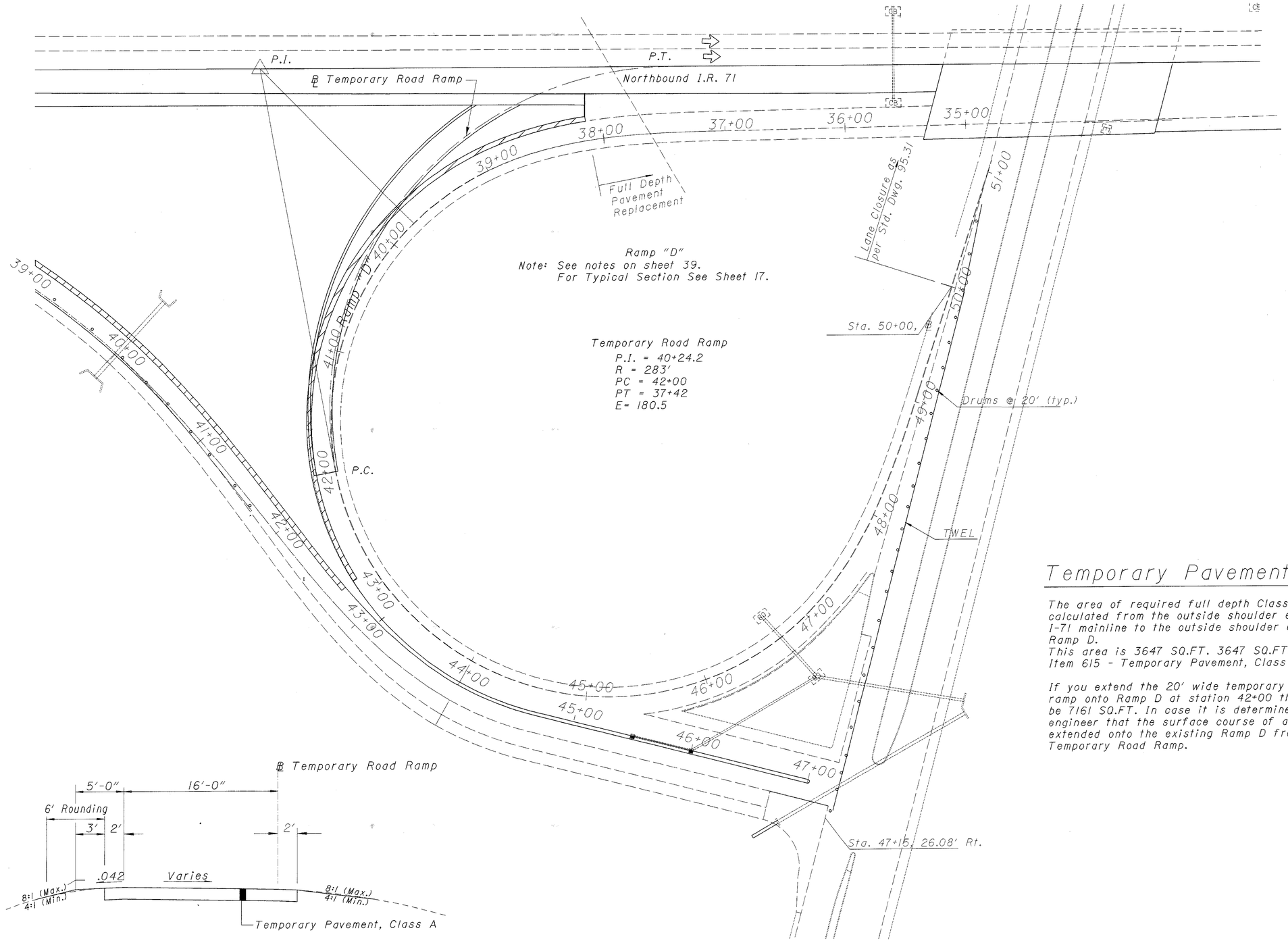

TEMPORARY ROAD TYPICAL SECTION, RAMP "D" S.R. 303 INTERCHANGE

Temporary Pavement Areas

The area of required full depth Class A is calculated from the outside shoulder edge on I-71 mainline to the outside shoulder edge on Ramp D.
This area is 3647 SQ.FT. 3647 SQ.FT. ÷ 9 = 405 SQ.YDS.
Item 615 - Temporary Pavement, Class A.

If you extend the 20' wide temporary pavement ramp onto Ramp D at station 42+00 the area would be 7161 SQ.FT. In case it is determined by the engineer that the surface course of asphalt be extended onto the existing Ramp D from the Temporary Road Ramp.

▨ - Shoulder Removal and Reconstruction
TWEL - Temporary White Edge Line
TYEL - Temporary Yellow Edge Line

PART III - Phase IIIA - S.R. 303 Ramp "D"
TEMPORARY ROAD PA
MED-71-15.78
42B
940

DESIGN FILE : $$$$$$$$$$DESIGNFILESPECIFICATION$$$$$$$$$$
USERNAME : $$$$INSTRUCTIONS$$$$
DATE : $$$$DATE$$$$
TIME : $$$$TIME$$$$

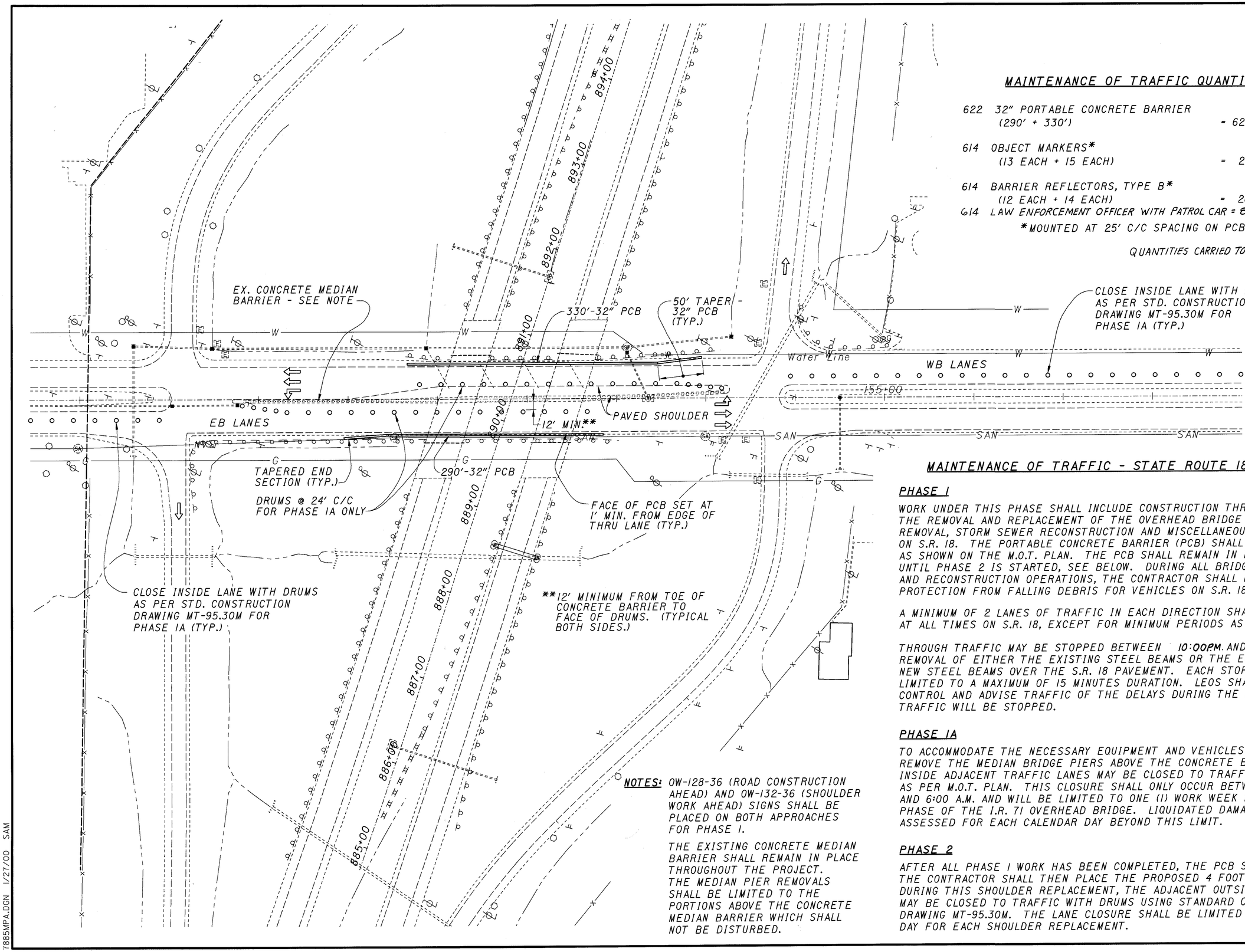

MAINTENANCE OF TRAFFIC QUANTITIES

622	32" PORTABLE CONCRETE BARRIER (290' + 330')	= 620 LIN. FT.
614	OBJECT MARKERS* (13 EACH + 15 EACH)	= 28 EACH
614	BARRIER REFLECTORS, TYPE B* (12 EACH + 14 EACH)	= 26 EACH
614	LAW ENFORCEMENT OFFICER WITH PATROL CAR	= 80 HOURS

*MOUNTED AT 25' C/C SPACING ON PCB

QUANTITIES CARRIED TO SHEET _____.

NOTES: OW-128-36 (ROAD CONSTRUCTION AHEAD) AND OW-132-36 (SHOULDER WORK AHEAD) SIGNS SHALL BE PLACED ON BOTH APPROACHES FOR PHASE 1.

THE EXISTING CONCRETE MEDIAN BARRIER SHALL REMAIN IN PLACE THROUGHOUT THE PROJECT. THE MEDIAN PIER REMOVALS SHALL BE LIMITED TO THE PORTIONS ABOVE THE CONCRETE MEDIAN BARRIER WHICH SHALL NOT BE DISTURBED.

MAINTENANCE OF TRAFFIC - STATE ROUTE 18

PHASE 1

WORK UNDER THIS PHASE SHALL INCLUDE CONSTRUCTION THROUGH THE REMOVAL AND REPLACEMENT OF THE OVERHEAD BRIDGE PLUS GUARDRAIL REMOVAL, STORM SEWER RECONSTRUCTION AND MISCELLANEOUS GRADING ON S.R. 18. THE PORTABLE CONCRETE BARRIER (PCB) SHALL BE PLACED AS SHOWN ON THE M.O.T. PLAN. THE PCB SHALL REMAIN IN PLACE AS SHOWN UNTIL PHASE 2 IS STARTED, SEE BELOW. DURING ALL BRIDGE REMOVAL AND RECONSTRUCTION OPERATIONS, THE CONTRACTOR SHALL PROVIDE PROTECTION FROM FALLING DEBRIS FOR VEHICLES ON S.R. 18.

A MINIMUM OF 2 LANES OF TRAFFIC IN EACH DIRECTION SHALL BE MAINTAINED AT ALL TIMES ON S.R. 18, EXCEPT FOR MINIMUM PERIODS AS NOTED BELOW.

THROUGH TRAFFIC MAY BE STOPPED BETWEEN 10:00 P.M. AND 6:00 A.M. FOR REMOVAL OF EITHER THE EXISTING STEEL BEAMS OR THE ERECTION OF THE NEW STEEL BEAMS OVER THE S.R. 18 PAVEMENT. EACH STOPPAGE SHALL BE LIMITED TO A MAXIMUM OF 15 MINUTES DURATION. LEOS SHALL BE USED TO CONTROL AND ADVISE TRAFFIC OF THE DELAYS DURING THE PERIODS WHEN TRAFFIC WILL BE STOPPED.

PHASE 1A

TO ACCOMMODATE THE NECESSARY EQUIPMENT AND VEHICLES REQUIRED TO REMOVE THE MEDIAN BRIDGE PIERS ABOVE THE CONCRETE BARRIER, THE INSIDE ADJACENT TRAFFIC LANES MAY BE CLOSED TO TRAFFIC WITH DRUMS AS PER M.O.T. PLAN. THIS CLOSURE SHALL ONLY OCCUR BETWEEN 10:00 P.M. AND 6:00 A.M. AND WILL BE LIMITED TO ONE (1) WORK WEEK FOR EACH REMOVAL PHASE OF THE I.R. 71 OVERHEAD BRIDGE. LIQUIDATED DAMAGES SHALL BE ASSESSED FOR EACH CALENDAR DAY BEYOND THIS LIMIT.

PHASE 2

AFTER ALL PHASE 1 WORK HAS BEEN COMPLETED, THE PCB SHALL BE REMOVED. THE CONTRACTOR SHALL THEN PLACE THE PROPOSED 4 FOOT PAVED SHOULDERS. DURING THIS SHOULDER REPLACEMENT, THE ADJACENT OUTSIDE LANE OF S.R. 18 MAY BE CLOSED TO TRAFFIC WITH DRUMS USING STANDARD CONSTRUCTION DRAWING MT-95.30M. THE LANE CLOSURE SHALL BE LIMITED TO ONE (1) WORK DAY FOR EACH SHOULDER REPLACEMENT.

HORIZONTAL SCALE IN FEET 0 25 50 100

CALCULATED

CHECKED

MAINTENANCE OF TRAFFIC PLAN
S.R. 18

MED-71-15.78

42C
940

7885MPA.DGN 1/27/00 SAM

Sequence of Construction I-71

All construction work for this project shall be completed in (3) construction seasons. The project has been split into three parts, with the first beginning at Sta. 1116+00 and ending at Sta. 1246+00; the second beginning at Sta. 912+95 and ending at Sta. 1116+00 and the third beginning at Sta. 833+00 and suspending at Sta. 912+95 and resuming at Sta. 1246+00 and ending at Sta. 1394+40.

Interim Completion Dates

This project is divided up into three (3) parts as described in the plans. Each part is to be constructed in the following years:

Part I - 2000 Construction Season
Part II - 2001 Construction Season
Part III - 2002 Construction Season

All work in Parts I & II is to be completed the Friday before Thanksgiving. The start up Date for each part is March 15. All work is defined to include not only the ramp, mainline and bridges but also the rest areas, lighting etc., work which physically falls within the limits of the parts as scheduled.

Should the Contractor fail to meet any of these requirements, the Contractor shall be assessed liquidated damages in accordance with 108.07of the CMS.

PART I - Sta. 1116+00 to 1246+00

Begin construction between Sta. 1116+00 and Sta. 1246+00, including the removal and replacement of the Rest Area parking lots. Two lanes of traffic shall be maintained in both the northbound and southbound directions during daylight hours. Traffic may be reduced to one lane as per work hour restriction note for outside shoulder and drive lane build up.

Phase I (Build up outside shoulder and drive lane)

Traffic Control

1. Maintain Traffic as per Std. Dwg. MT-95.30M.
2. Move traffic to passing lane. Lane closures...etc. are restricted as per the "Working Hours Restriction" note on sheet 38.

Work Proposed

1. Build up the existing outside shoulder and drive lane along the mainline as per Typical sections detailed on sheet 47.

Phase II (Construct proposed passing lane, inside shoulder and emergency pulloff)

Traffic Control

1. Place temporary pavement markings on the built up outside shoulder and driving lane. Place portable concrete barrier as per details on sheet 48.
2. Move traffic to the outside shoulder and driving lane, maintain two lanes of traffic in accordance with Std. Dwg. MT-102.10M. (except for temporary lighting)

Work Proposed

1. Remove the passing lane, inside shoulder and reconstruct the pavement and inside shoulder in accordance with these plans.
2. Construct inside shoulder emergency pull off at Sta. 1186+00 as detailed on Sheet 65.
3. Perform all grading, drainage, signing and erosion control measures needed in the median.
4. Place the pavement except for the surface course, connect and outlet all proposed underdrains.
5. Remove and replace existing guardrail.
6. Construct temporary pavement as shown on sht. 48

Phase III (Construct proposed driving lane, center lane and outside shoulder)

Traffic Control

1. Place temporary pavement markings on the new inside shoulder and passing lane. Place portable concrete barrier as per details on sheet 49
2. Move traffic to the inside shoulder and passing lane and maintain two lanes of traffic as per Std. Dwg. MT-102.10M.
3. Close the Rest Areas and Rest Area Ramps.

Work Proposed

1. Remove the driving lane and outside shoulder and reconstruct the pavement and outside shoulder in accordance with these plans.
2. Place pavement except for the surface course, connect and outlet all proposed underdrains.
3. Perform all grading and drainage and signing along the outside of the roadway.
4. Remove and replace existing guardrail.
5. Reconstruct Rest Area parking lot and ramps.
   A. Remove and widen the inside and outside shoulders of each ramp.
   B. Perform pavement planing and joint repair.
   C. Pave the ramp shoulders except for the surface course.
   D. Remove and replace the existing concrete parking lot.
   E. Apply pavement markings on the new concrete.

Phase IV (Place the surface course and permanent outside edge line pavement markings on the outside shoulder, driving lane and ramps)

Traffic Control

1. Maintain two lanes of traffic in the passing lane and inside shoulder, in accordance with Std. Dwg. MT-102.10M.

Work Proposed

1. Place the surface course on the outside shoulders, driving lanes and ramps with a hot joint between the lanes and the shoulder.
2. Finish all grading, permanent edge line and miscellaneous items.

Phase V (Place the surface course and permanent pavement markings on the inside shoulder and passing lanes)

Traffic Control

1. Maintain two lanes of traffic in the driving lanes and outside shoulder, in accordance with Std. Dwg. MT-102.10M and /or MT-95.30M.
2. Permanently stripe and sign the inside shoulders and passing lanes.

Work Proposed

1. Place the surface course on the inside shoulders and passing lanes with a hot joint between the lanes and the shoulder.
2. Finish all grading, striping and miscellaneous items.
3. Erect proposed lighting.

Phase VI (Place the surface course and permanent pavement markings on the center lanes)

Traffic Control

1. Maintain traffic one lane on the outside shoulder. Lane closures...etc. are restricted as per the "Working Hours Restriction" note on sheet 38.

Work Proposed

1. Place the surface course on center lane . Apply temporary markings at conclusion of paving each night prior to opening to traffic.
2. Place all remaining permanent markings.

A. The contractor may delay the placement of final pavement and markings until the spring of the following year. If the contractor elects to do this, he shall place full dimension (class I) pavement markings through out the recently completed stage for the purpose of maintaining traffic over the winter, at his expense. Furthermore if the contractor elects to place the surface course in the spring, he shall complete the placement by June 1st or shall be assessed liquidated damages in the amount as prescribed in section 108.07 for every day after June 1st that the surface course remains uncompleted from the previous stage of work.

PART II - Sta. 912+95 to Sta. 1116+00

Begin construction between Sta. 912+95 and Sta. 1116+00 , including interchanges of I.R.-71 with S.R. 3 and I.R.-271. Two lanes of traffic shall be maintained in both the northbound and southbound directions during daylight hours. Traffic may be reduced to one lane as per work hour restriction note for outside shoulder and drive lane build up and full depth replacement. All the ramps at S.R. 3 and I.R.-271 shall remain open during construction, unless otherwise noted.

Phase I (Reconstruct and build up the outside shoulder and drive lane)

Traffic Control

1. Maintain Traffic as per Std. Dwg. MT-95.30M.
2. Move traffic to passing lane. Lane closures...etc. are restricted as per the "Working Hours Restriction" note on sheet 38.

Work Proposed

1. Reconstruct and build up the existing outside shoulder with temporary pavement as per Typical sections detailed on sheet 47. Only as much shoulder shall be removed as can be reconstructed during the overnight closure time.
2. Construct outside shoulder emergency pull off at Sta. 1025+00 as detailed on Sheet 65.

Phase II (Construct proposed passing lane, inside shoulder and emergency pulloff)

Traffic Control

1. Place temporary pavement markings on the reconstructed and built up outside shoulder and driving lane. Place portable concrete barrier as per details on sheet 48.
2. Move traffic to the outside shoulder and driving lane, maintain two lanes of traffic in accordance with Std. Dwg. MT-102.10M. (Except for Temporary lighting)

Work Proposed

1. Remove the passing lane, inside shoulder and reconstruct the pavement and inside shoulder in accordance with these plans.
2. Reconstruct the inside portion of the mainline structures as detailed on sheets 48.
3. Construct inside shoulder emergency pull off at Sta. 1025+00 as detailed on Sheet 65.
4. Perform all grading, drainage, signing and erosion control measures needed in the median.
5. Place the pavement except for the surface course, connect and outlet all proposed underdrains.
6. Remove and replace existing guardrail.
7. Construct temporary pavement as shown on sht. 48

Phase III A (Construct proposed driving lane, center lane and outside shoulder)

Traffic Control

1. Place temporary pavement markings on the new inside shoulder and passing lane. Place portable concrete barrier as per details on sheet 49.
2. Move traffic to the new inside shoulder and passing lane and maintain two lanes of traffic as per Std. Dwg. MT-102.10M.
3. Keep all ramps open according to Std. Dwg. MT-98.13M, MT-98.14M and MT-98.15M and details in these plans..

Work Proposed

1. Between Sta. 976+89 - Sta. 1116+00 northbound and Sta. 973+04 - Sta. 1116+00 southbound, remove the driving lane and outside shoulder and reconstruct the pavement and outside shoulder. Between Sta. 912+95 and Sta. 969+33 northbound and Sta. 912+95 and Sta. 964+00 southbound remove the driving lane and reconstruct two drive lanes and an outside shoulder in accordance with these plans.
2. Between Sta. 969+33 and Sta. 976+89 Northbound and Sta. 964+00 and Sta. 973+04 Southbound, remove the speed change lanes and outside shoulder and reconstruct in accordance with these plans.
3. Reconstruct the outside portion of the mainline structures as detailed on sheet 49.
4. Place pavement except for the surface course, connect and outlet all proposed underdrains.
5. Perform all grading and drainage and signing along the outside of the roadway.
6. Remove and replace existing guardrail.
7. Construct noise walls.

Phase III B - (S.R. 3) (During Phase III, widen and repair joints on existing ramps. Replace the bridges on ramps "B" and "C") (May begin structure work during phase II)

Subphase 1 (Reconstruct the outside shoulder and perform joint repairs)

Traffic Control

1. On ramp "B" and "C" maintain traffic onto the inside shoulder for partwidth construction as detailed on sheet 55 and 57.

Work Proposed

1. Perform all joint repairs on all ramps using FS concrete. Complete all joint repairs prior to shoulder reconstruction.
2. Remove and widen the outside shoulders of each ramp. At no time shall the contractor allow any greater than a 5" drop at the edge of the ramp pavement for a distance of more than 60' while separating adjacent traffic from the the work zone with drums.

Subphase 2 (Reconstruct the inside shoulder and inside portion of structures)

Traffic Control

1. On ramp "B" and "C" maintain traffic at the structure for partwidth construction as detailed on sheet 55 and 57.

Work Proposed

1. Remove and widen the inside shoulders of all ramps.
2. Reconstruct and widen the inside half of the structures on Ramp "B" and "C".
3. Place temporary pavement on S.R.3 as detailed on sheet 55.
4. Reconstruct the inside half of the concrete entrance and exit sections at the intersection of S.R. 3 as detailed on sheet 55 and 57. F.S. concrete shall be used at the intersection with S.R. 3. The existing ramp pavement and inside shoulder shall be removed; replaced with F.S. concrete and finished within 3 days. At that time the PCB shall be removed back as shown in plans and the area protected with drums.
5. Remove and replace existing guardrail.

Subphase 3 (Reconstruct the outside shoulders and outside portion of structures)

Traffic Control

1. On ramp "B" and "C" maintain traffic at the structure for outside partwidth construction as detailed on sheet 56 and 58.
2. At the exit and entrance of all the Ramps from S.R. 3, maintain traffic on the Ramps partwidth as detailed on sheet 56 and 58 for outside shoulder work.

Work Proposed

1. Remove temporary outside shoulders and reconstruct permanent shoulders.
2. Reconstruct and widen the outside half of the structures on Ramp "B" & "C".
3. Perform pavement planing.
4. Reconstruct the remainder of the concrete entrance and exit sections at the intersection of S.R. 3 as detailed on sheet 56 and 58. The existing pavement and outside shoulder shall be removed; replaced with F.S. concrete and finished within 3 days. At that time the PCB shall be removed back as shown in plans and the area protected with drums.
5. Pave the ramps except for the surface course.

Phase III C - (I.R. 271) (During Phase III, widen and reconstruct existing ramps)

Subphase 1 (Reconstruct the outside shoulder & lane)

Traffic Control

1. Place temporary pavement markings on existing I.R.271 as detailed on sht. 67.
2. Maintain two lanes of traffic on the passing lane and inside shoulder on I.R.-71.
3. At the exit ramps maintain traffic as detailed on sheet 67. At the entrance ramps maintain traffic as detailed on sheet 66.
4. Maintain one lane of traffic on the inside lane of I.R. 271 under the I.R.-71 bridge as per Std. Dwg. MT-95.30M.

Work Proposed

1. Remove and reconstruct the proposed outside shoulders and drive lanes of I.R.-71 and I.R. 271 Connection "E" and Connection "W" except for the gore areas as detailed on sheet 66 & 67.
2. Pave the ramp shoulders except for the surface course.
3. Remove and replace existing guardrail.

CALCULATED
CHECKED

MAINTENANCE OF TRAFFIC SEQUENCE OF CONSTRUCTION

MED-71-15.78

Subphase 2 (Reconstruct the inside shoulder and lane on Ramps "E" and "W")

Traffic Control

1. Continue to maintain two lanes of traffic on the passing lane and inside shoulder on I-71.
2. At the exit ramps maintain traffic as detailed on sheet 65. At the entrance ramps maintain traffic as detailed on sheet 67.
3. Maintain one lane of traffic on the outside lane of I.R. 271 under the I.R.-71 bridge as per Std. Dwg. MT-95.32M.

Work Proposed

1. Remove and reconstruct the inside shoulders and lane of each connection. Remove and reconstruct gore areas and driving lanes for I.R.-71 as detailed sheet 66 & 67.
2. Pave the ramp shoulders except for the surface course.
3. Remove and replace existing guardrail.

Phase IV (Place the surface course and permanent edge line pavement markings on the outside shoulder, driving lane and ramps)

Traffic Control

1. Maintain two lanes of traffic in the passing lane and inside shoulder, in accordance with Std. Dwg. MT-102.10M.

Work Proposed

1. Place the surface course on the outside shoulders, driving lanes and ramps with a hot joint between the lanes and the shoulder.
2. Finish all grading, striping and miscellaneous items.

Phase V (Place the surface course and permanent pavement markings on the inside shoulder and passing lanes)

Traffic Control

1. Maintain two lanes of traffic in the driving lanes and outside shoulder, in accordance with Std. Dwg. MT-102.10M and /or MT-95.30M.
2. Permanently stripe and sign the inside shoulders and passing lanes.

Work Proposed

1. Place the surface course on the inside shoulders and passing lanes with a hot joint between the lanes and the shoulder.
2. Finish all grading, striping and miscellaneous items.
3. Erect proposed lighting.

Phase VI (Place the surface course and permanent pavement markings on the center lanes)

Traffic Control

1. Maintain traffic one lane on the outside shoulder. Lane closures...etc. are restricted as per the "Working Hours Restriction" note on sheet 38.

Work Proposed

1. Place the surface course on center lane . Apply temporary markings at conclusion of paving each night prior to opening to traffic.
2. Place all remaining permanent markings.
   A. The contractor may delay the placement of final pavement and markings until the spring of the following year. If the contractor elects to do this, he shall place full dimension (class 1) pavement markings through out the recently completed stage for the purpose of maintaining traffic over the winter, at his expense. Furthermore if the contractor elects to place the surface course in the spring, he shall complete the placement by June 1st or shall be assessed liquidated damages in the amount as prescribed in section 108.07 for every day after June 1st that the surface course remains uncompleted from the previous stage of work.

PART III - Sta. 833+00 to Sta. 912+95 and Sta. 1246+00 to Sta. 1394+40

Begin construction between Sta. 833+00 to Sta. 912+95 and Sta. 1246+00 to Sta. 1394+40, including interchanges of I.R.-71 with S.R. 18 and S.R. 303. Two lanes of traffic shall be maintained in both the northbound and southbound directions during daylight hours. Traffic may be reduced to one lane as per work hour restriction note for outside shoulder and drive lane build up and full depth replacement. All the ramps at S.R. 18 and S.R. 303 shall remain open during construction except for Ramp "D" on S.R. 303 which shall be closed during I.R.-71 mainline bridge construction.

Phase I (Reconstruct and build up of the outside shoulder and drive lane)

Traffic Control

1. Maintain Traffic as per Std. Dwg. MT-95.30M.
2. Move traffic to passing lane. Lane closures...etc. are restricted as per the "Working Hours Restriction" note on sheet 38.

Work Proposed

1. Reconstruct and build up the existing outside shoulder with temporary pavement as per Typical sections detailed on sheets 47-49. Only as much shoulder shall be removed as can be reconstructed during the overnight closure time.
2. Construct temporary pavement between Sta. 830+00 & Sta. 840+50 as detailed on Sheet 54.
3. Construct outside shoulder emergency pull off at Sta. 1335+00 as detailed on Sheet 65.

Phase II (Construct proposed passing lane and inside shoulder)

Traffic Control

1. Place temporary pavement markings on the reconstructed and built up outside shoulder and driving lane. Place portable concrete barrier as per details on sheet 44.
2. Move traffic to the outside shoulder and driving lane, maintain two lanes of traffic in accordance with Std. Dwg. MT-102.10M. (Except for temporary lighting)

Work Proposed

1. Remove the passing lane, inside shoulder and reconstruct the pavement and inside shoulder in accordance with these plans.
2. Reconstruct the inside portion of the mainline structures as detailed on sheets 48.
3. Construct inside shoulder emergency pull off at Sta. 1335+00 as detailed on Sheet 65.
4. Perform all grading, drainage, signing and erosion control measures needed in the median.
5. Place the pavement except for the surface course, connect and outlet all proposed underdrains.
6. Remove and replace existing guardrail.
7. Construct temporary pavement as shown on sht. 48 & 54.

Phase III A (Construct proposed driving lane, center lane and outside shoulder)

Traffic Control

1. Place temporary pavement markings on the new inside shoulder and passing lane. Place portable concrete barrier as per details on sheet 49.
2. Move traffic to the new inside shoulder and passing lane and maintain two lanes of traffic as per Std. Dwg. MT-102.10M.
3. Keep all ramps except S.R. 303 Ramp 'D' open according to Std. Dwg. MT-98.13M, MT-98.14M and MT-98.15M and details in these plans. See S.R. 303 Loop Ramp Closure (Ramp D) note on sheet 39.

Work Proposed

1. Between Sta. 833+00 - Sta. 912+95 and Sta. 1246+00 - Sta. 1394+40, remove the driving lane and outside shoulder and reconstruct the pavement and outside shoulder in accordance with these plans. See S.R. 303 Loop Ramp Closure (Ramp D) note on sheet 39.
2. Reconstruct the outside portion of the mainline structures as detailed on sheet 49.
3. Place pavement except for the surface course, connect and outlet all proposed underdrains.
4. Construct noise walls.

Phase III B - (S.R. 18) (During Phase III widen and repair joints on existing ramps)

Subphase 1 (Reconstruct the outside shoulder)

Traffic Control

1. At the exit and entrance of all the Ramps from S.R. 18, maintain traffic on the Ramps partwidth as detailed on sheet 63 for outside shoulder work. The hours of work on the ramps are per the "Work Hour Restriction" note on sheet 38.

Work Proposed

1. Perform pavement planing and joint repair using F.S. concrete.
2. Remove and widen the outside shoulders of each ramp, including work needed for the additional lane at the entrance of Ramp "B" and the exit of Ramp "D". At no time shall the contractor allow any greater than a five (5) inch drop of the edge of ramp pavement for a maximum distance of 60 feet while separating adjacent traffic from the work zone with drums.
3. Reconstruct the outside half of the concrete entrance and exit sections at the intersection of S.R. 18 as detailed on sheet 63. The existing pavement and outside shoulder shall be removed, replaced with F.S. concrete and completed within 3 days. At that time the PCB shall be removed back as shown in the plans and the area protected with drums.
4. Pave the ramps except for the surface course.
5. Remove and replace existing guardrail.
6. Construct noise walls.

Subphase 2 (Reconstruct the inside shoulder)

Traffic Control

1. At the exit and entrance of all the Ramps from S.R. 18, maintain traffic on the Ramps partwidth as detailed on sheet 63 for inside shoulder work.

Work Proposed

1. Perform pavement planing and joint repair using F.S. concrete.
2. Remove and widen the inside shoulders of each ramp. At no time shall the contractor allow any greater than a five (5) inch drop of the edge of ramp pavement for a maximum distance of 60 feet while separating adjacent traffic from the work zone with drums.
3. Reconstruct the inside half of the concrete entrance and exit sections at the intersection of S.R. 18 as detailed on sheet 63. The existing pavement and outside shoulder shall be removed, replaced with F.S. concrete and completed within 3 days. At that time the PCB shall be removed back as shown in the plans and the area protected with drums.
4. Pave the ramps except for the surface course.
5. Remove and replace the guardrail.

Phase III C - (S.R. 303) (During Phase III, widen and repair existing ramps. Realign ramp "C" to obtain the proper clearance between ramp "C" and ramp "D")

Subphase 1 (Reconstruct the outside shoulder, for ramp "C" and "D". Widen ramp "C" pavement)

Traffic Control

1. On Ramp "C" maintain traffic as detailed on sheet 61 while ramp is being relocated and the outside shoulder is being widened.
2. Close Ramp "D" while construction is underway on the outside portion of the I.R.-71 mainline structure over 303. Detour Ramp "D" traffic as shown on sheet 42. See S.R. 303 Loop Ramp Closure (Ramp D) note on sheet 39.
3. At ramps "A", "B" and "C" from S.R. 303 maintain traffic partwidth as detailed in these plans.

Work Proposed

1. Remove and widen the outside shoulders of each ramp.
2. Realign and widen Ramp "C" as detailed on sheet 61-62.
3. Perform pavement planing and pavement joint repair using F.S. concrete.
4. Reconstruct the outside half of the concrete entrance and exit sections at the intersection of S.R. 303 as detailed on sheets 59 & 61. F.S. concrete shall be used at the intersection of S.R. 303. The existing ramp pavement and inside shoulder shall be removed: replace with F.S. concrete and finished within 3 days. At that time the PCB shall be removed back as shown in the plans and the area protected with drums.
5. Pave the ramp and ramp shoulders except for the surface course.
6. Remove and replace existing guardrail.

Subphase 2 (Reconstruct the inside shoulder)

Traffic Control

1. On Ramp "C" maintain traffic as detailed on sheet 62 while the inside shoulder is being widened.
2. Keep ramp "D" open while construction is underway on the outside portion of the I.R.-71 mainline structure over 303 except as noted on sheet 39. Detour Ramp 'D' as shown on sht. 42.
3. At the ramps "A", "B" and "C" from S.R. 303 maintain traffic partwidth as detailed in these plans.

Work Proposed

1. Remove and widen the inside shoulders of each ramp. At no time shall the contractor allow any greater than a five (5) inch drop of the edge of ramp pavement for a maximum distance of 60 feet while separating adjacent traffic from the work zone with drums.
2. Perform pavement planing and joint repair using F.S. concrete.
3. Reconstruct the remainder of the concrete entrance and exit sections of S.R. 303 as detailed on sheet 60 & 62. F.S. concrete shall be used at the intersection with S.R. 303. The existing ramp pavement and outside shoulder shall be removed; replaced with F.S. concrete and finished within 3 days. At that time the PCB shall be removed back as shown in plans and the area protected by drums.
4. Pave the ramp shoulders except for the surface course.
5. Remove and replace existing guardrail.

Phase IV (Place the surface course and permanent outside edge line pavement markings on the outside shoulder, driving lane and ramps)

Traffic Control

1. Maintain two lanes of traffic in the passing lane and inside shoulder, in accordance with Std. Dwg. MT-102.10M.

Work Proposed

1. Place the surface course on the outside shoulders, driving lanes and ramps.
2. Finish all grading, permanent edge line, striping and miscellaneous items.

Phase V (Place the surface course and permanent pavement markings on the inside shoulder and passing lanes)

Traffic Control

1. Maintain two lanes of traffic in the driving lanes and outside shoulders in accordance with Std. Dwg. MT-102.10M and /or MT-95.30M.
2. Permanently stripe and sign the inside shoulders and passing lanes.

Work Proposed

1. Place the surface course on the inside shoulders and passing lanes, with a hot joint between the lanes and the shoulder
2. Finish all grading, striping and miscellaneous items.
3. Erect proposed lighting.

Phase VI (Place the surface course and permanent pavement markings on the center lanes)

Traffic Control

1. Maintain traffic one lane on the outside shoulder. Lane closures...etc. are restricted as per the "Working Hours Restriction" note on sheet 38.

Work Proposed

1. Place the surface course on center lane . Apply temporary markings at conclusion of paving each night prior to opening to traffic.
2. Place all remaining permanent markings.

CALCULATED | CHECKED

MAINTENANCE OF TRAFFIC SEQUENCE OF CONSTRUCTION

MED-71-15.78

4" EDGE LINE

LOCATION	STATION	Linear Feet	
NORTHBOUND	(Mainline Stationing)	White	Yellow
Part I			
Phase I	1116+00 to 1246+00	13000	
Phase II	1083+90 to 1277+60	19370	19370
Phase III	1094+05 to 1267+45	17340	17340
Part II			
Phase I	930+05 to 970+35	4030	
	976+90 to 1084+32	10742	
	1092+35 to 1116+00	2365	
Phase II	880+85 to 903+20	2235	
	930+05 to 977+35	4730	
	976+90 to 1084+32	10742	
	1092+35 to 1120+04	2859	
	880+85 to 1127+65		24680
Phase III	891+00 to 909+00	1800	
	916+20 to 964+80	4860	
	972+00 to 1081+20	10920	
	1086+00 to 1122+50	3650	
	1127+30 to 1137+45	1015	
	891+00 to 1137+45		24645
S.R. 3			
Ramp B			
PIIIB S1	70+00 to 85+24	1509	
PIIIB S2	68+00 to 84+80	476	1700
PIIIB S3	68+00 to 85+20	2276	
Ramp D			
PIIIB S2	67+00 to 81+00	458	1550
PIIIB S3	84+50 to 100+00 & (SR 3)905+00 to 907+00	1740	
Ramp B			
PIIIC S1	32+00 to 47+50	1475	
PIIIC S2	33+50 to 47+20		1475
Ramp D	℄ Ramp C on S.R. 303 to Sta. 51+50	375	
Part III			
Phase I	833+00 to 870+93	3793	
	882+91 to 903+20	2029	
Phase II	825+25 to 870+93	4568	
	882+91 to 903+20	2029	
	825+25 to 924+60		9935
Phase III	825+25 to 872+20	4695	
	877+00 to 909+00	3200	
	916+20 to 934+40	1800	
	825+25 to 934+40		10915
S.R. 18			
Ramp B			
PIIIB S1	0+50 TO 5+50	350	1450
PIIIB S2	0+50 TO 5+50	1900	
Ramp A			
PIIIB S1	9+00 to 27+00	2000	
PIIIB S2	10+50 to 26+60	130	1610
* Part III			
Phase I	1246+00 to 1248+59	259	
	1256+59 to 1270+46	1389	
	1280+96 to 1394+40	11344	
Phase II	1233+85 to 1248+59	1474	
	1256+59 to 1270+46	1387	
	1280+96 to 1406+05	12509	
	1233+85 to 1406+05		17220
Phase III	1224+05 to 1244+20	2015	
	1249+00 to 1406+05	15705	
	1224+05 to 1406+05		18200
	Subtotal	190543	150090

Continued on Sheet 46

4" EDGE LINE

LOCATION	STATION	Linear Feet	
SOUTHBOUND	(Mainline Stationing)	White	Yellow
Part I			
Phase I	1116+00 to 1246+00	13000	
Phase II	1084+40 to 1278+10	19370	19370
Phase III	1094+55 to 1267+95	17340	17340
Part II			
Phase I	912+95 to 937+55	2460	
	969+27 to 1077+23	10796	
	1087+73 to 1116+00	2827	
Phase II	881+35 to 899+51	1816	
	904+05 to 937+55	3350	
	969+27 to 1077+23	10796	
	1087+73 to 1116+33	2860	
	1124+36 to 1128+15	379	
	881+95 to 1128+15		24680
Phase III	891+50 to 904+00	1250	
	911+20 to 958+80	4760	
	966+00 to 1081+20	11520	
	1086+09 to 1121+00	3500	
	1125+80 to 1137+95	1215	
	891+50 to 1137+95		24645
S.R. 3			
Ramp C			
PIIIB S1	80+70 to 96+12	1524	
PIIIB S2	80+82 to 98+00	476	2689
PIIIB S3	80+40 to 98+00	1910	
Ramp A			
PIIIB S2	67+00 to 81+00	458	1550
PIIIB S3	84+50 to 100+00 & (SR 3)905+00 to 907+00	1740	
Ramp A			
PIIIC S1	52+10 to 61+00	2447	120
PIIIC S2	47+10 to 52+80	787	570
PIIIC S3	48+68 to 61+00	160	1232
Ramp C			
PIIIC S1 thru			
PIIIC S3	30+50 to 52+50	2550	110
Part III			
Phase I	833+00 to 862+23	2923	
	872+73 to 899+51	2678	
	904+05 to 912+95	890	
Phase II	825+75 to 862+23	3648	
	872+73 to 899+51	2678	
	904+05 to 925+10	2105	
	825+75 to 925+10		9935
Phase III	825+75 to 867+20	4145	
	880+00 to 906+00	2600	
	910+80 to 934+90	2410	
	825+75 to 934+90		10915
S.R. 18			
Ramp C			
PIIIB S1	8+50 to 20+30	170	1180
PIIIB S2	8+50 to 20+30	1525	1180
Ramp D			
PIIIB S1	9+00 to 27+00	2000	
PIIIB S2	10+50 to 26+60	130	1610
* Part III			
Phase I	1251+81 to 1279+61	2780	
	1287+41 to 1394+40	10699	
Phase II	1234+35 to 1241+31	696	
	1251+81 to 1279+61	2780	
	1287+41 to 1406+55	11914	
	1234+35 to 1436+15		20180
Phase III	1224+55 to 1246+20	2165	
	1259+00 to 1286+50	2750	
	1291+30 to 1436+15	14485	
	1224+55 to 1406+55		18200
	Subtotal	195462	155506

Continued on Sheet 46

4" LANE LINE

LOCATION	STATION	Linear Feet
NORTHBOUND	(Mainline Stationing)	White
Part I		
Phase II	1096+05 to 1265+95	16990
Phase III	1116+00 to 1246+00	13000
Part II		
Phase II	893+00 to 1116+00	22300
Phase III	912+95 to 1116+00	20305
Part III		
Phase II	84050 to 912+95	7245
Phase III	840+50 to 912+95	7245
* Phase II	1246+00 to 1394+40	14840
* Phase III	1246+00 to 1394+40	14840
SOUTHBOUND	(Mainline Stationing)	White
Part I		
Phase II	1096+05 to 1265+95	16990
Phase III	1116+00 to 1246+00	13000
Part II		
Phase II	893+00 to 1116+00	22300
Phase III	912+95 to 1116+00	20305
Part III		
Phase II	840+50 to 912+95	7245
Phase III	840+50 to 912+95	7245
* Phase II	1246+00 to 1394+40	14840
* Phase III	1246+00 to 1394+40	14840
Total Linear Feet		233,530
Total Miles Carried to Pavement Marking Sum, Sheet 46		44.23

* Part III quantities for construction between Sta. 1246+00 to 1394+40.

8" CHANNELIZING LINE

LOCATION	STATION	Linear Feet
NORTHBOUND	(Mainline Stationing)	White
Part I		
Phase II	1083+90 to 1096+05	1215
	1265+95 to 1277+60	1165
Phase III	1094+55 to 1116+00	2145
	1246+00 to 1267+45	2145
Part II		
Phase II	880+85 to 893+00	1215
	1116+00 to 1127+65	1165
Phase III	891+00 to 912+95	2195
	1116+00 to 1137+45	2145
Part III		
Phase II	825+25 to 840+50	1525
	912+95 to 924+60	1165
Phase III	825+25 to 840+50	1525
	912+95 to 934+40	2145
* Phase II	1233+85 to 1246+00	1215
	1394+40 to 1406+05	1165
* Phase III	1224+05 to 1246+00	2195
	1394+40 to 1406+05	1165
SOUTHBOUND	(Mainline Stationing)	White
Part I		
Phase II	1084+40 to 1096+05	1165
	1265+95 to 1278+10	1215
Phase III	1094+55 to 1116+00	2145
	1246+00 to 1267+95	2195
Part II		
Phase II	881+35 to 893+00	1165
	1116+00 to 1128+15	1215
Phase III	891+50 to 912+95	2145
	1116+00 to 1137+95	2195
Part III		
Phase II	825+75 to 840+50	1475
	912+95 to 925+10	1215
Phase III	825+75 to 840+50	1475
	912+95 to 925+10	1215
* Phase II	1234+35 to 1246+00	1165
	1394+40 to 1406+55	1215
* Phase III	1224+55 to 1246+00	2145
	1394+40 to 1406+55	1215
	Total Linear Feet	50050
Total Linear Feet Carried to Pavement Marking Sum, Sheet 46		50050

CALCULATED

CHECKED JRR

MAINTENANCE OF TRAFFIC

Temporary Pavement Markings

MED-71-15.78

45
940

DESIGN FILE : i:\pd_med_lr71\dgn\mot\pm.dgn
USERNAME : jrogers
DATE : 27-DEC-1999
TIME : 14:45

4" EDGE LINE			
LOCATION	STATION	Linear Feet	
NORTHBOUND	(Mainline Stationing)	White	Yellow
* Part III CONT.			
* Part III			
S.R. 303			
Ramp D	TOTAL CLOSURE		
Ramp C			
PIIIC S1	32+00 TO 47+20	1475	
PIIIC S2	33+50 TO 47+20		850
	Subtotal	10089	4022
	Subtotal from Sheet 45	190543	150090
	Southbound Total	365079	
	Northbound Total	354744	
	Total Linear Feet	719823	
	Total Miles Carried to Pavement Marking Sum, Sheet 46	136.3	

4" EDGE LINE			
LOCATION	STATION	Linear Feet	
SOUTHBOUND	(Mainline Stationing)	White	Yellow
* Part III CONT.			
* Part III			
S.R. 303			
Ramp B			
PIIIC S1	32+00 to 47+20	2550	110
PIIIC S2	NO CHANGE		
PIIIC S3	30+50 to 52+50	2545	1990
Ramp A			
PIIIC S1	46+13 TO 61+00	2447	120
PIIIC S2	47+10 TO 52+80	787	570
PIIIC S3	46+85 TO 61+00	1760	1232
	Subtotal	10089	4022
	Subtotal from Sheet 45	195462	155506
	Southbound Total	365079	

Temporary Pavement Calculated Graphically - 17450 SQ YD

From the Maintenance of Traffic Sequence of Construction

Temporary Impact Attenuator, Unidirectional - 14 EACH

TEMP. IMPACT ATTEN. (REPLACEMENT), UNIDIRECTIONAL - 6 EACH

* Part III quantities for construction between Sta. 1246+00 to 1394+40.

MAINTENANCE OF TRAFFIC GENERAL SUMMARY

SHEET No.										ITEM	ITEM EXT.	TOTAL	UNIT	DESCRIPTION	SEE SHEET NO.
134	37	38	39	40	41	42 ● Sheet 42C.	45	46	453						
														MAINTENANCE OF TRAFFIC	
					2,000					202	38000	2,000	LIN FT	GUARDRAIL REMOVED	
					50					410	10000	50	CU YD	TRAFFIC COMPACTED SURFACE, TYPE A	
					1,000					606	13000	1,000	LIN FT	GUARDRAIL, TYPE 5	
					20					606	22010	20	EACH	ANCHOR ASSEMBLY, TYPE E-98, OFFSET DESIGN	
	640		304			80●				614	11100	1024	HOUR	LAW ENFORCEMENT OFFICER WITH PATROL CAR	
		60								614	12470	60	EACH	WORK ZONE SPEED LIMIT SIGN	
		32								614	12480	32	EACH	DOUBLED FINES IN WORK ZONE SIGN	
	500									SPECIAL	6141 2500	500	SQ FT	REPLACEMENT SIGN	37
	500									SPECIAL	6141 2600	500	EACH	REPLACEMENT DRUM	37
	600			600						614	13000	1200	CU YD	BITUMINOUS CONCRETE FOR MAINTAINING TRAFFIC	37
	9,775					26●				614	13300	9,801	EACH	BARRIER REFLECTOR, TYPE B	
	9,775					28●				614	13350	9,803	EACH	OBJECT MARKER	
								14		614	12350	14	EACH	TEMPORARY IMPACT ATTENUATOR, UNIDIRECTIONAL	42A
								6		614	12360	6	EACH	~~TEMPORARY~~ IMPACT ATTENUATOR (REPLACEMENT), UNIDIRECTIONAL	42A
						10				614	18000	10	EACH	MAINTAINING TRAFFIC, MISC.: EMERGENCY PULLOFFS	42
										614	18002	LUMP		MAINTAINING TRAFFIC, MISC: VEHICLE ASSISTANCE	40
					64					614	18601	64	SIGN MONTH	PORTABLE CHANGEABLE MESSAGE SIGN, AS PER PLAN	41
							44.23			614	20001	44.23	MILE	TEMPORARY LANE LINE, CLASS I, AS PER PLAN	40
				0.50						614	21500	0.50	MILE	TEMPORARY CENTER LINE, CLASS II, 642 PAINT	
								136.3		614	22001	136.3	MILE	TEMPORARY EDGE LINE, CLASS I, AS PER PLAN	40
							50,050			614	23001	50,050	LIN FT	TEMPORARY CHANNELIZING LINE, CLASS I, AS PER PLAN	40
										615	20000	405	SQ. YD.	TEMPORARY PAVEMENT, CLASS A	42B
										615	10000	LUMP		TEMPORARY ROAD	
19479								17,450	84	615	35001	37,013	SQ YD	TEMPORARY PAVEMENT, AS PER PLAN	40
					200					616	10000	200	M GAL.	WATER	
					5					616	20000	5	TON	CALCIUM CHLORIDE	
	244,230					620●				622	40020	244,850	LIN FT	PORTABLE CONCRETE BARRIER, 32"	
	2,680									622	40040	2,680	LIN FT	PORTABLE CONCRETE BARRIER, 32", BRIDGE MOUNTED	

REV. 2-22-00

CALCULATED BZ CHECKED JMR

MAINTENANCE OF TRAFFIC GENERAL SUMMARY

MED-71-15.78

46 940

DESIGN FILE : N:\pd_med_lr71\dgn\mot\pm.dgn
USERNAME : jrogers

DATE : 29-DEC-1999
TIME : 09:57

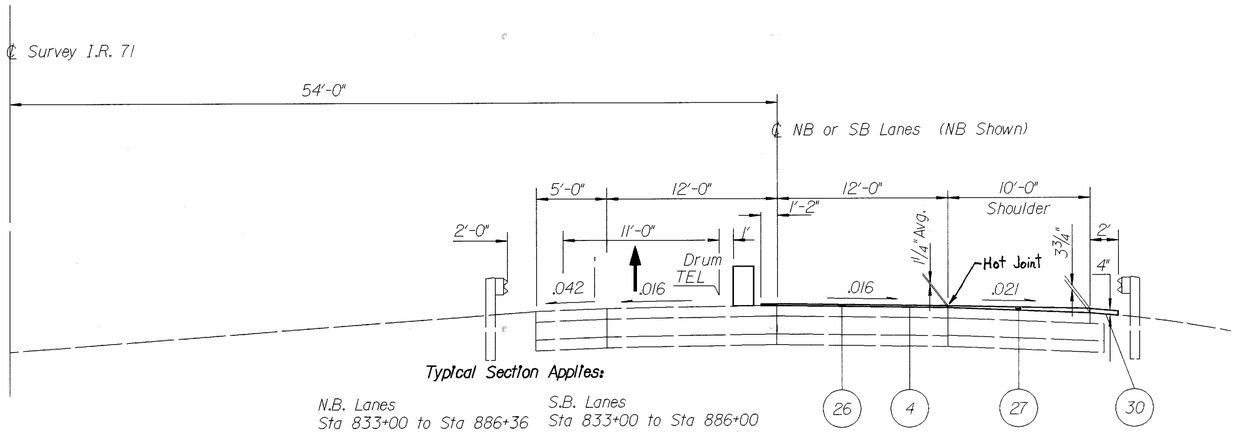

Typical Section Applies:

N.B. Lanes	S.B. Lanes
Sta 833+00 to Sta 886+36	Sta 833+00 to Sta 886+00
Sta 894+50 to Sta 925+00	Sta 894+00 to Sta 961+00
Sta 957+00 to Sta 962+ 00	Sta 967+00 to Sta 982+70
Sta 968+00 to Sta 983+65	Sta 991+29 to Sta 1009+40
Sta 992+23 to Sta 1009+ 19	Sta 1016+82 to Sta 1048+25
Sta 1016+80 to Sta 1048+06	Sta 1056+95 to Sta 1099+50
Sta 1050+75 to Sta 1100+00	Sta 1108+65 to Sta 1264+85
Sta 1109+13 to Sta 1394+00	Sta 1273+25 to Sta 1349+00

Maintain one Lane as per lane closure restriction note. Place TLL at conclusion of each night's paving and prior to opening driving lane to traffic

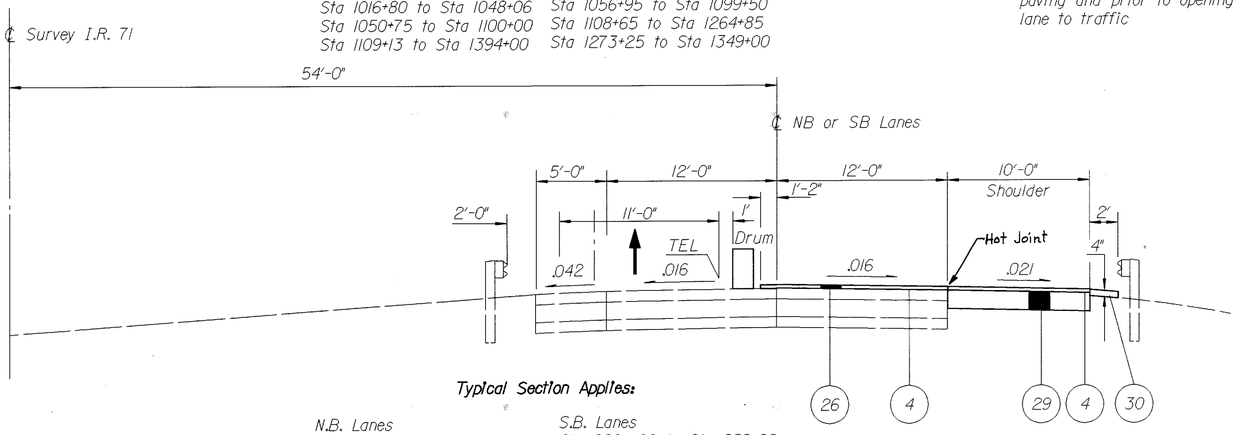

Typical Section Applies:

N.B. Lanes	S.B. Lanes
Sta 886+36 to Sta 889+36	Sta 886+ 00 to Sta 889+00
Sta 891+50 to Sta 894+50	Sta 891+00 to Sta 894+00
Sta 925+00 to Sta 957+00	Sta 961+00 to Sta 967+00
Sta 962+ 00 to Sta 968+00	Sta 982+70 to Sta 985+70
Sta 983+65 to Sta 986+65	Sta 988+29 to Sta 991+29
Sta 989+23 to Sta 992+23	Sta 1009+40 to Sta 1012+40
Sta 1009+ 19 to Sta 1012+19	Sta 1013+82 to Sta 1016+82
Sta 1013+80 to Sta 1016+80	Sta 1048+25 to Sta 1051+25
Sta 1048+06 to Sta 1051+06	Sta 1053+95 to Sta 1056+95
Sta 1053+75 to Sta 1050+75	Sta 1099+50 to Sta 1102+50
Sta 1100+00 to Sta 1103+00	Sta 1105+65 to Sta 1108+65
Sta 1106+13 to Sta 1109+13	Sta 1264+85 to Sta 1273+25
	Sta 1349+00 to Sta 1394+00

Maintain one Lane as per lane closure restriction note. Place TLL at conclusion of each night's paving and prior to opening driving lane to traffic

℄ Survey I.R. 71

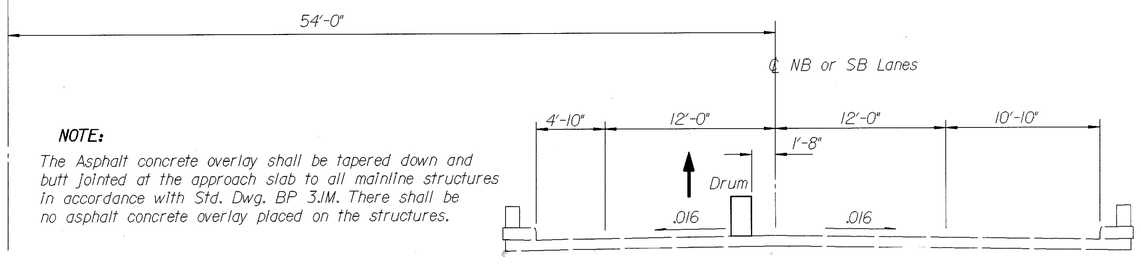

NOTE:

The Asphalt concrete overlay shall be tapered down and butt jointed at the approach slab to all mainline structures in accordance with Std. Dwg. BP 3.1M. There shall be no asphalt concrete overlay placed on the structures.

PROPOSED LEGEND

4		Item 407 Tack Coat
26	1 ¼"	Item 448 Asphalt Concrete Surface Course, Type 2, PG64-22
27	Varies	Item 448 Asphalt Concrete Surface Course, Type 2, PG64-22
29		Item 615 Temporary Pavement, As Per Plan (See Sheet 40.)
30		Item 410 Traffic Compacted Aggregate, Type A

DESIGN FILE : i:\pd_med_ir71\dgn\mot\motgy.dgn
USERNAME : nvonderle

DATE : 07-DEC-1999
TIME : 07:27

MOT - Phase I

MED-71-15.94

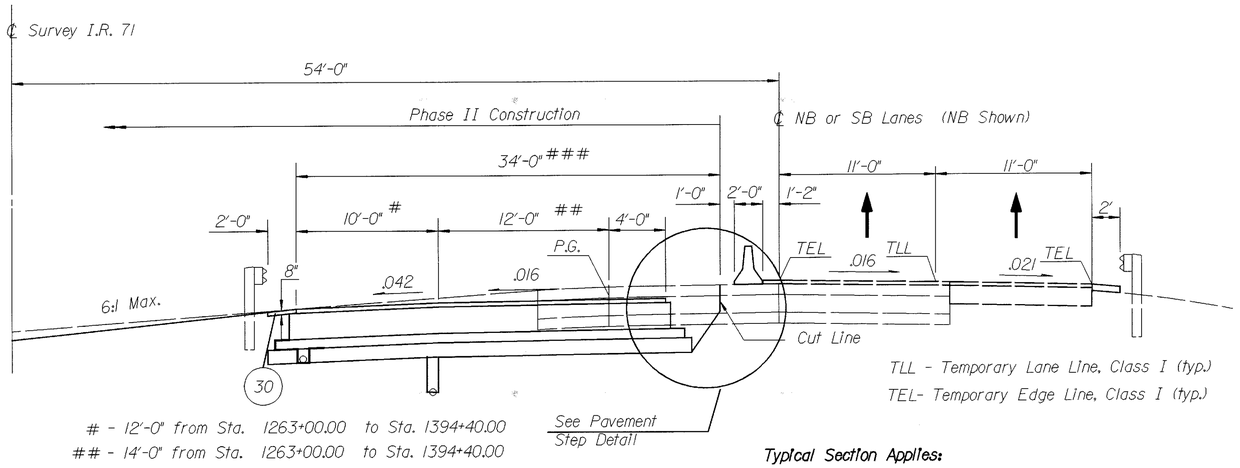

Typical Section Applies:
Sta 833+00 to Sta 1394+00

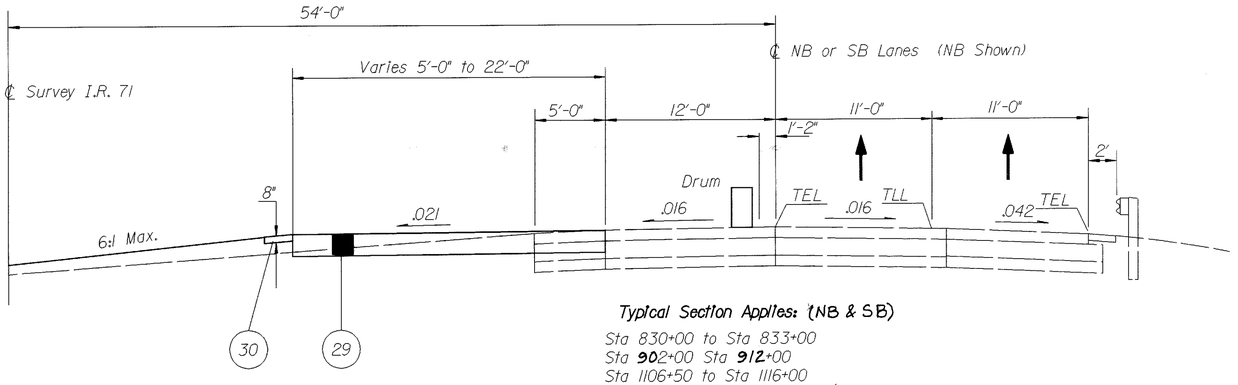

Typical Section Applies: (NB & SB)
Sta 830+00 to Sta 833+00
Sta 902+00 Sta 912+00
Sta 1106+50 to Sta 1116+00
Sta. 1246+00 to Sta. 1252+65

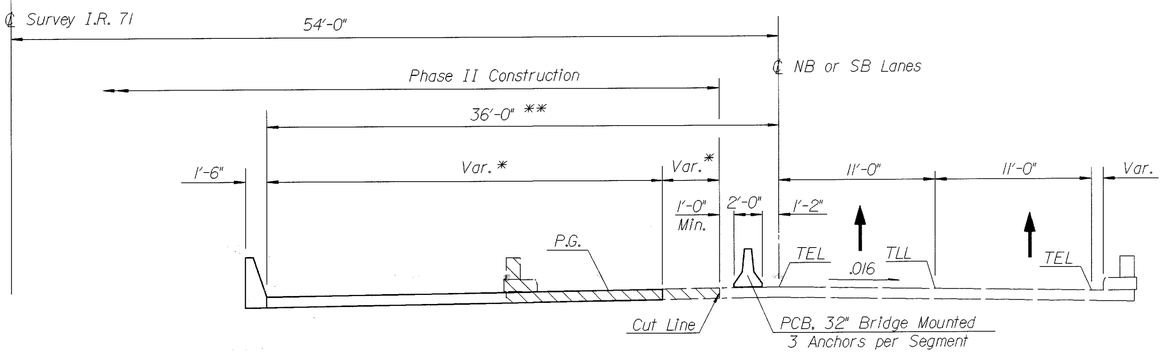

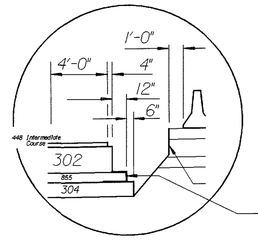

Geotextile fabric shall be placed on the vertical face of the free draining base to protect against contamination from the surrounding materials during this Phase. All costs associated with this work shall be considered incidental to the Asphalt Treated Free Draining Base.

Pavement Step Detail

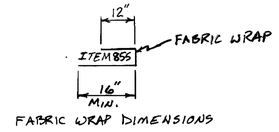

FABRIC WRAP DIMENSIONS

For proposed legend, see sheet 47.

DESIGN FILE : i:\pd_med_ir71\dgn\mot\motgy.dgn
USERNAME : nvondere
DATE : 07-DEC-1999
TIME : 07:28

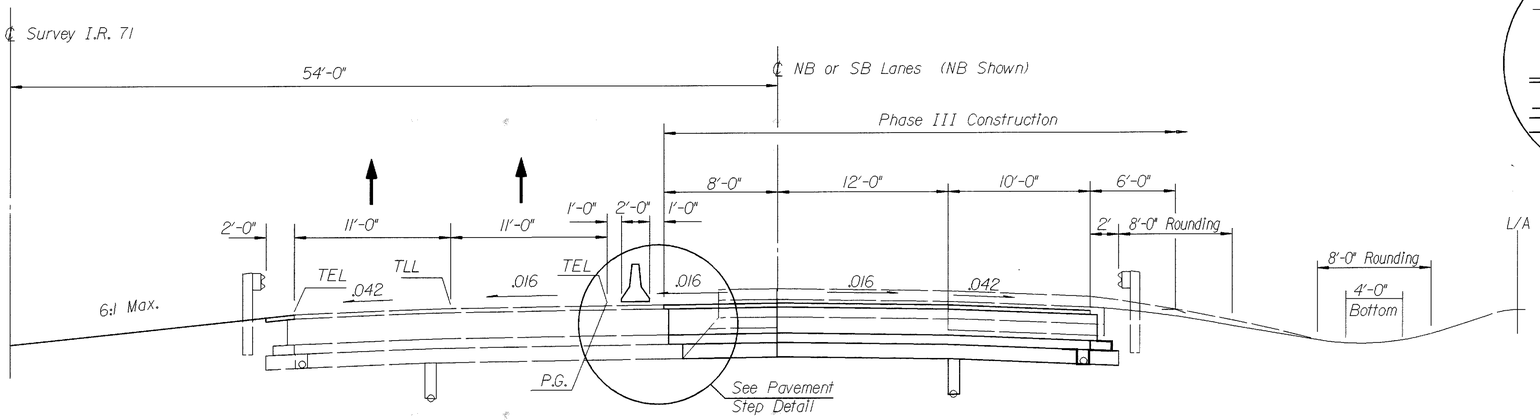

TEL- Temporary Edge Line, Class I (typ.)
TLL - Temporary Lane Line, Class I (typ.)

Typical Section Applies:
Sta 833+00 to Sta 901+00
Sta 977+00 to Sta 1394+00

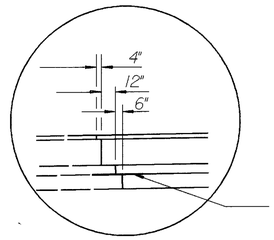

The Geotextile fabric shall be placed on the vertical face of the free draining base in Phase 2 shall be laid flat prior to placing the free draining base in this Phase. All costs associated with this work shall be considered incidental to the Asphalt Treated Free Draining Base.

Pavement Step Detail

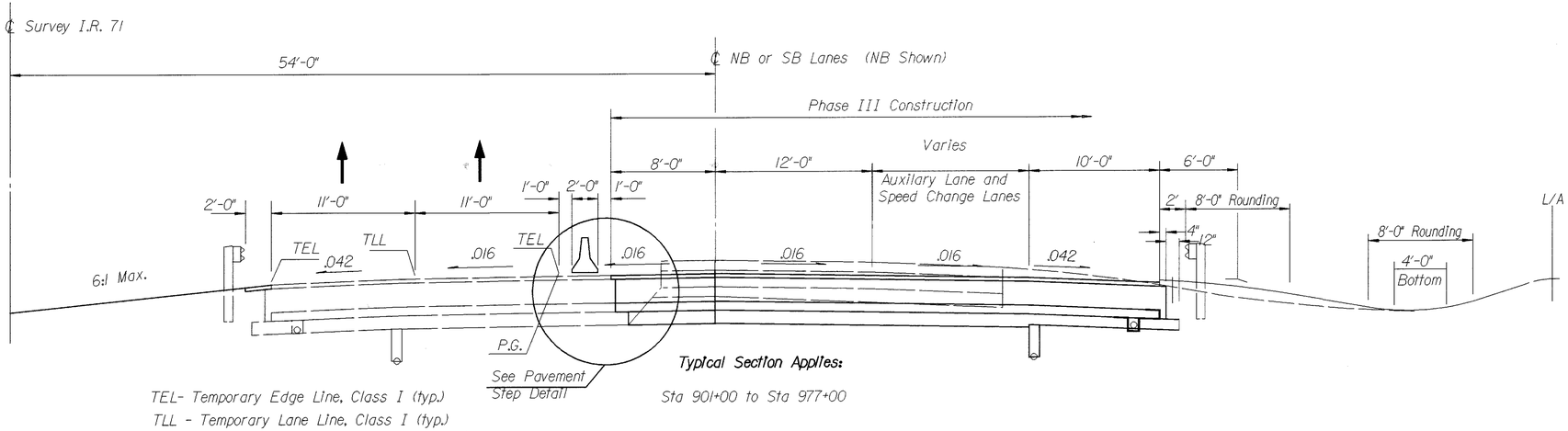

TEL- Temporary Edge Line, Class I (typ.)
TLL - Temporary Lane Line, Class I (typ.)

Typical Section Applies:
Sta 901+00 to Sta 977+00

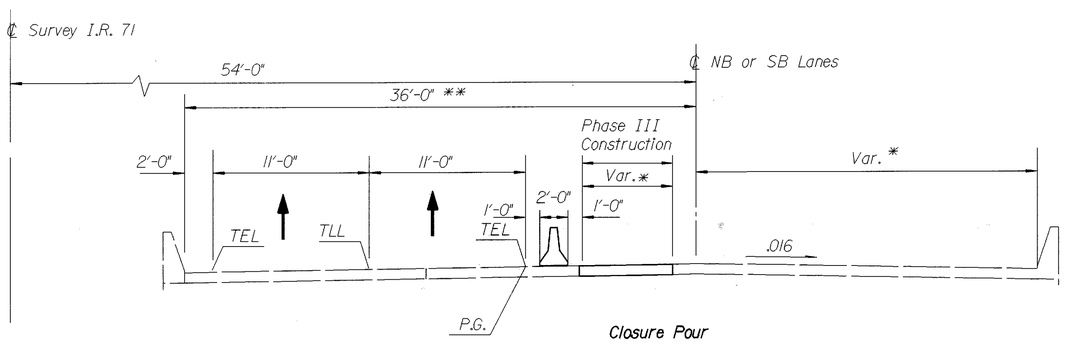

Closure Pour

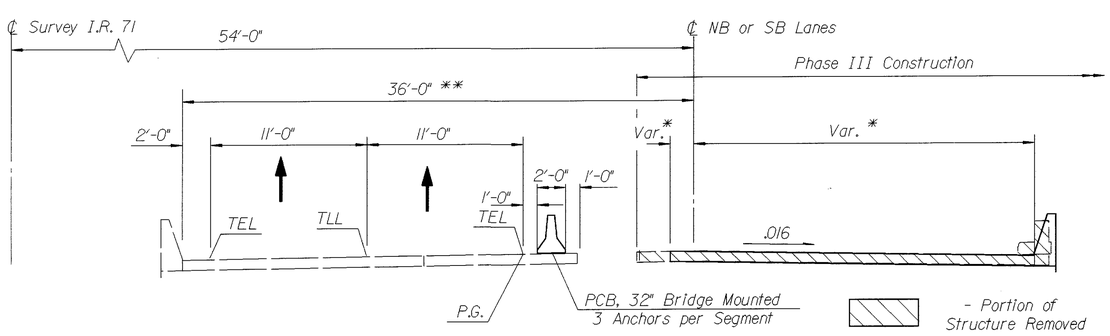

* - See Bridge Plans for Dimensions and Beam Locations
** - 40'-0" @ Str. No. Med-71-2402 L/R

For proposed legend, see sheet 47.

DESIGN FILE : i:\pd_med_lr71\dgn\mot\motgy.dgn
USERNAME : nvondere
DATE : 07-DEC-1999
TIME : 07:28

MOT - Phase III

MED-71-15.94

DESIGN FILE : i:\pd_MED_IR71\DGN\MOT\mot8e2ii.dgn
USERNAME : pfought
DATE : 07-DEC-1999
TIME : 07:35

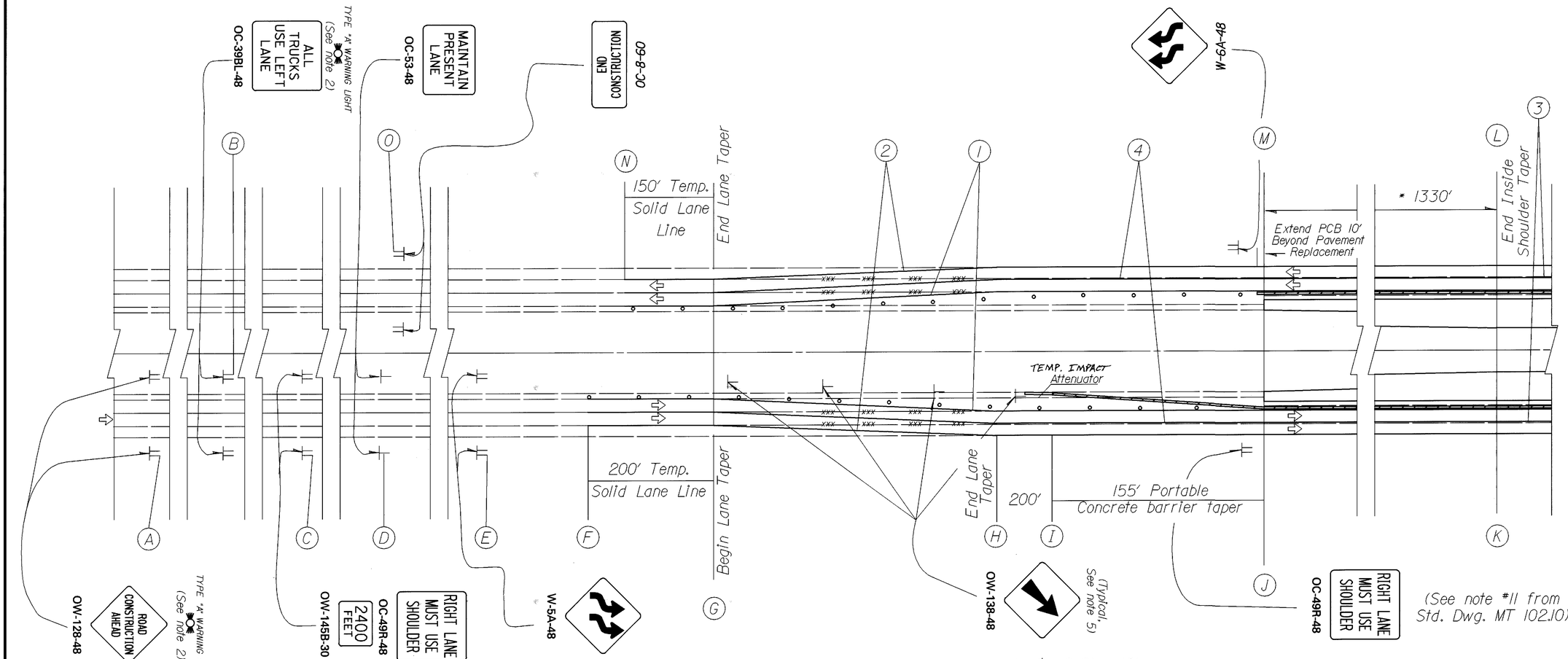

NOTES:

1. DRUM SPACING = 60'.
2. TYPE A FLASHING WARNING LIGHTS ARE REQUIRED ON THE "ROAD CONSTRUCTION AHEAD" SIGNS, (OW-128-48) AND THE "ALL TRUCKS USE LEFT LANE" SIGNS, (OC-39BL-48).
3. LANE DIRECTIONAL ARROW SHOWN FOR PLAN CLARIFICATION ONLY.
4. REMOVE EXISTING LANE LINES AND EXISTING EDGE LINES AS DETAILED ON THIS SHEET
5. ERECT OW-138-48 SIGN ADJACENT TO FIRST DRUM ON LANE TAPER, THEN EVERY 100' FOR 300' - THEN EVERY 200' THEREAFTER.
6. FOR ADDITIONAL NOTES, DETAILS AND SIGNS, SEE STD. DWG. MT-102.10M

(1) Temporary Yellow Edge Line, Class I, as per plan
(2) Temporary White Edge Line, Class I, as per plan
(3) Temporary Lane Line, Class I , as per plan
(4) Temporary Channelizing Line, Class I, As Per Plan

Locate ℄ of Sign 12' from temporary edge line.

- Portable Concrete Barrier (PCB)

* - Use this dimension where the inside shoulder has not already been built.

LEGEND:

⇨ = LANE DIRECTIONAL ARROW
xxx = LINES TO BE REMOVED
∘ = DRUMS

Part		A	B	C	D	E	F	G	H	I	J	K	L	M	N	O
I	NB	1035+90	1040+90	1061+90	1077+90	1080+90	1083+90	1085+90	1092+50	1094+50	1096+05	1109+35	1252+65	1265+95	1277+60	1281+10
	SB	1326+10	1321+10	1300+10	1284+10	1281+10	1278+10	1276+10	1269+50	1267+50	1265+95	1252+65	1109+35	1096+05	1084+40	1080+90
II	NB	832+85	837+85	858+85	874+85	877+85	880+85	882+85	889+45	891+45	893+00	906+00	1116+00	1116+00*	1127+65	1131+15
	SB	1176+15	1171+15	1150+15	1134+15	1131+15	1128+15	1126+15	1119+55	1117+55	1116+00	1116+00*	906+30	893+00	881+35	877+85
III	NB	For Stations See Sheet 54.										833+00	912+95*	912+95*	924+60	928+10
	SB	973+10	968+10	947+10	931+10	928+10	925+10	923+10	916+50	914+50	912+95*	912+95*	833+00	For Stations See Sheet 54.		
	NB	1185+85	1190+85	1211+85	1227+85	1230+85	1233+85	1235+85	1242+45	1244+45	1246+00*	1246+00*	For Stations See Sheet 52.			
	SB	For Stations See Sheet 52.											1246+00*	1246+00*	1234+35	1230+85

BEGINNING AND END OF PROJECT PHASE II

PART I, II, III

MED-71-15.78

DESIGN FILE : i:\pd_MED_IR71\DGN\MOT\mot6e2iii.dgn
USERNAME : prought
DATE : 07-DEC-1999
TIME : 07:36

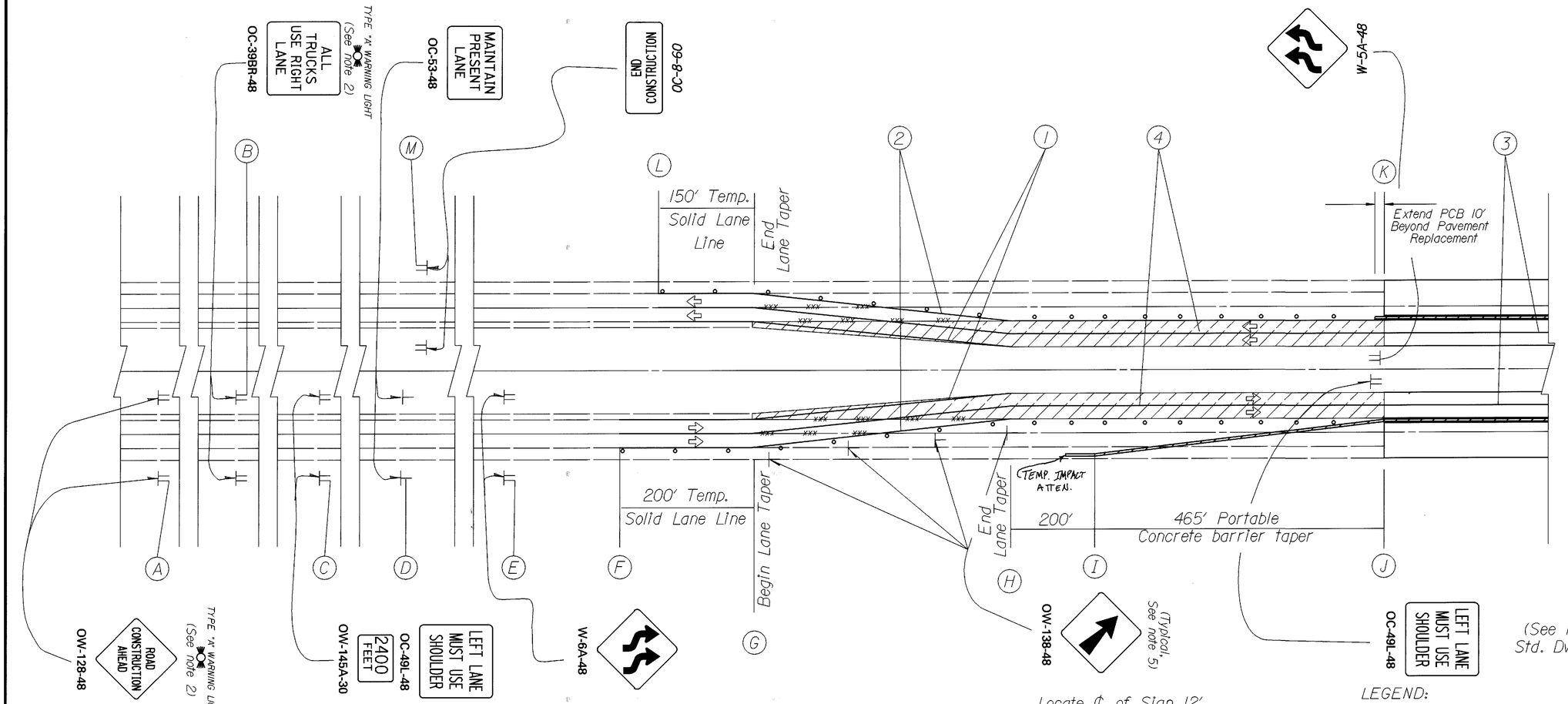

Locate ℄ of Sign 12' from temporary edge line.

NOTES:

1. DRUM SPACING = 60'.
2. TYPE A FLASHING WARNING LIGHTS ARE REQUIRED ON THE "ROAD CONSTRUCTION AHEAD" SIGNS, (OW-128-48) AND THE "ALL TRUCKS USE RIGHT LANE" SIGNS, (OC-39BR-48).
3. LANE DIRECTIONAL ARROW SHOWN FOR PLAN CLARIFICATION ONLY.
4. REMOVE EXISTING LANE LINES AND EXISTING EDGE LINES AS DETAILED ON THIS SHEET
5. ERECT OW-138-48 SIGN ADJACENT TO FIRST DRUM ON LANE TAPER, THEN EVERY 100' FOR 300' - THEN EVERY 200' THEREAFTER.
6. FOR ADDITIONAL NOTES, DETAILS AND SIGNS, SEE STANDARD DRAWING MT-102.IM

LEGEND:

⇨ = LANE DIRECTIONAL ARROW

xxx = LINES TO BE REMOVED

° = DRUMS

SEE SHEET 50 FOR TEMPORARY PAVEMENT MARKING LEGEND

▬▬ - Portable Concrete Barrier (PCB)

▨ Temporay Pavement, As Per Plan

Part		A	B	C	D	E	F	G	H	I	J	K	L	M
I	NB	1046+05	1051+05	1072+05	1088+05	1091+05	1094+05	1096+05	1109+35	1111+35	1116+00	1246+00	1267+45	1270+95
	SB	1315+95	1310+95	1289+95	1273+95	1270+95	1267+95	1265+95	1252+65	1250+65	1246+00	1116+00	1094+55	1091+05
II	NB	843+00	848+00	869+00	885+00	888+00	891+00	893+00	906+30	909+30	912+95	1116+00	1137+45	1140+95
	SB	1185+95	1180+95	1159+95	1143+95	1140+95	1137+95	1135+95	1122+65	1120+65	1116+00	912+95	891+50	888+00
III	NB	For Stations See Sheet 54.										912+95	934+40	937+90
	SB	982+90	977+90	956+90	940+90	937+90	934+90	932+90	919+60	917+60	912+95	833+00	For Stations See Sheet 54.	
	NB	1176+05	1181+05	1202+05	1218+05	1221+05	1224+05	1226+05	1239+35	1241+35	1246+00	For Stations See Sheet 53.		
	SB	For Stations See Sheet 53.										1246+00	1224+55	1221+05

BEGINNING AND END OF PROJECT PHASE III
PART I, II, III

MED-71-15.78

51
940

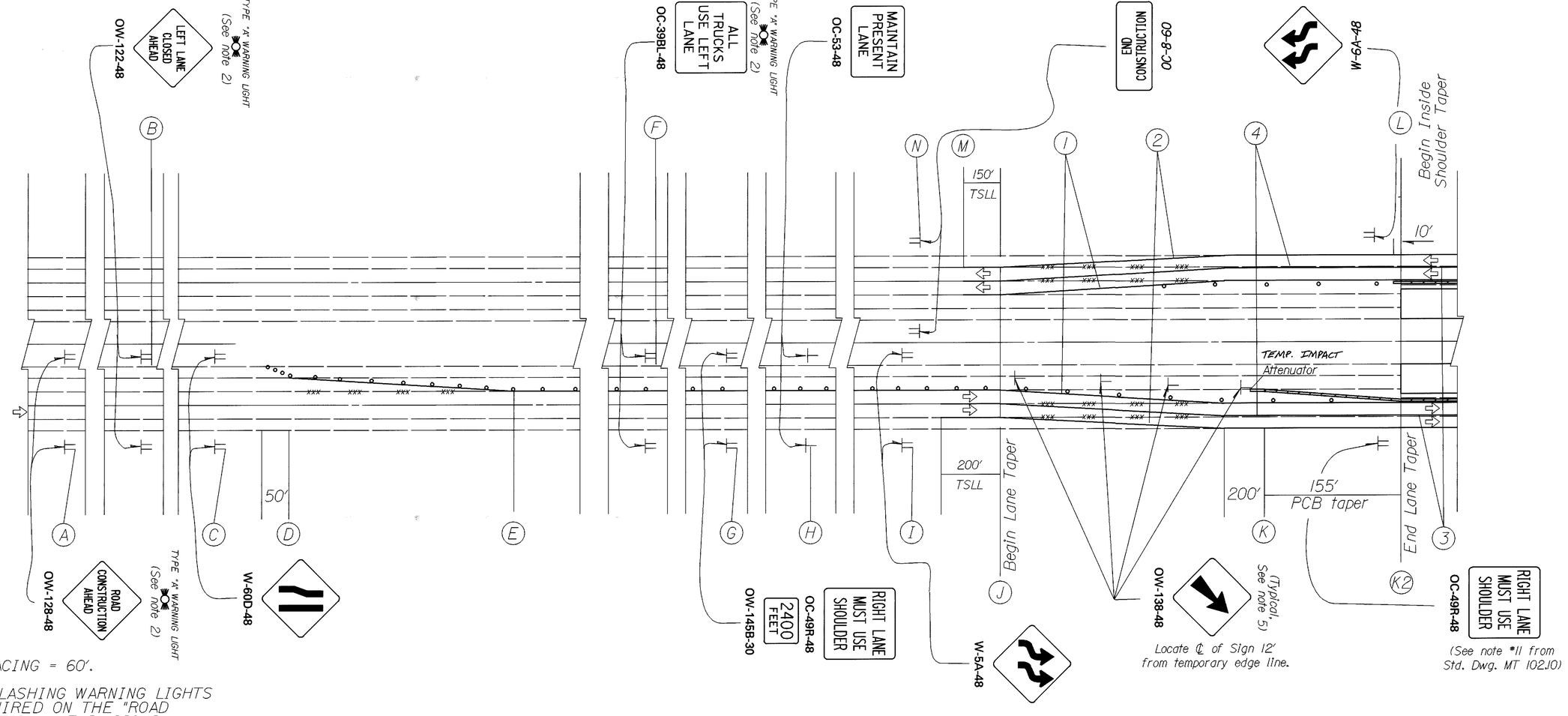

NOTES:

1. DRUM SPACING = 60'.
2. TYPE A FLASHING WARNING LIGHTS ARE REQUIRED ON THE "ROAD CONSTRUCTION AHEAD" SIGNS, (OW-128-48) AND THE "ALL TRUCKS USE LEFT LANE" SIGNS, (OC-39BL-48).
3. LANE DIRECTIONAL ARROW SHOWN FOR PLAN CLARIFICATION ONLY.
4. REMOVE EXISTING LANE LINES AND EXISTING EDGE LINES BEGINNING @ STA. 1436+15 - 1429+55, STA. 1404+55 - 1397+95 AND STA. 1397+95 - 1404+55 NB LANE & SB LANE.
5. ERECT OW-138-48 SIGN ADJACENT TO FIRST DRUM ON LANE TAPER, THEN EVERY 100' FOR 300' - THEN EVERY 200' THEREAFTER.
6. FOR ADDITIONAL NOTES, DETAILS AND SIGNS, SEE STD. DWG. MT-102.10M.

LEGEND:

⇨ = LANE DIRECTIONAL ARROW

xxx = LINES TO BE REMOVED

∘ = DRUMS

▭▭ - Portable Concrete Barrier (PCB)
SEE SHEET 50 FOR TEMPORARY PAVEMENT MARKING LEGEND

* - Use this dimension where the inside shoulder has not already been built.

Phase		A	B	C	D	E	F	G	H	I	J	K	K2	L	M	N
III	NB	For Stations See Sheet 50.												1394+40*	1406+05	1409+55
	SB	1466+65	1456+65	1446+65	1436+15	1429+55	1427+55	1422+55	1412+55	1409+55	1404+55	1395+95	1394+40	For Stations See Sheet 50.		

BEGINNING AND END OF PROJECT PHASE II
PART III

MED-71-15.78

52
940

DESIGN FILE : i:\pd_MED_IR71\DGN\MOT\mot8e4ii.dgn
USERNAME : ptought
DATE : 07-DEC-1999
TIME : 07:37

DESIGN FILE : i:\pd_MED_IR71\DGN\MOT\motbe4iii.dgn
USERNAME : pfought
DATE : 07-DEC-1999
TIME : 07:38

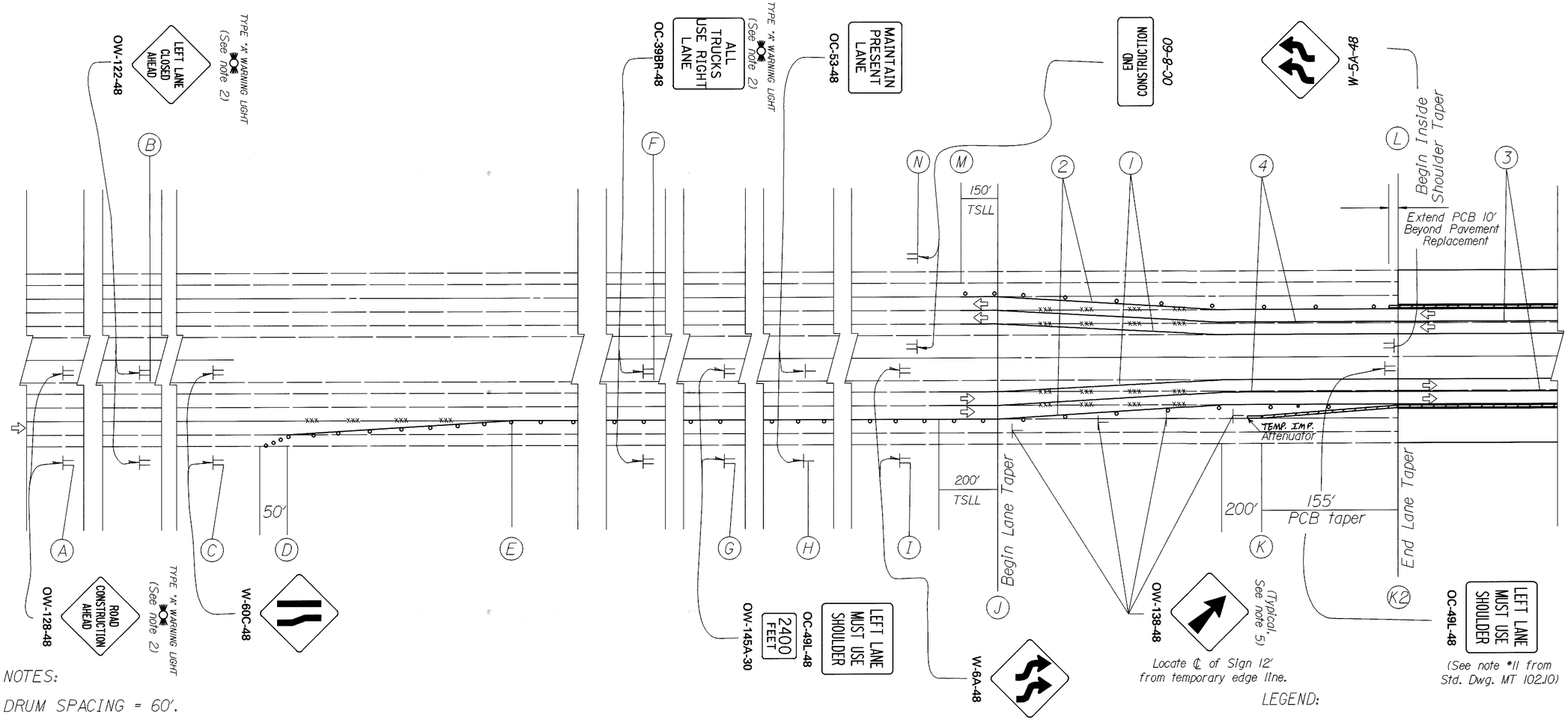

NOTES:

1. DRUM SPACING = 60'.
2. TYPE A FLASHING WARNING LIGHTS ARE REQUIRED ON THE "ROAD CONSTRUCTION AHEAD" SIGNS, (OW-128-48) AND THE "ALL TRUCKS USE RIGHT LANE" SIGNS, (OC-39BR-48).
3. LANE DIRECTIONAL ARROW SHOWN FOR PLAN CLARIFICATION ONLY.
4. REMOVE EXISTING LANE LINES AND EXISTING EDGE LINES BEGINNING @ STA. 1436+15 - 1429+55, STA. 1404+55 - 1397+95 AND STA. 1397+95 - 1404+55 NB LANE & SB LANE.
5. ERECT OW-138-48 SIGN ADJACENT TO FIRST DRUM ON LANE TAPER, THEN EVERY 100' FOR 300' - THEN EVERY 200' THEREAFTER.
6. FOR ADDITIONAL NOTES, DETAILS AND SIGNS, SEE STANDARD DRAWING MT-102.IM

- Portable Concrete Barrier (PCB)

* - Use this dimension where the inside shoulder has not already been built.

LEGEND:

⇨ = LANE DIRECTIONAL ARROW

xxx = LINES TO BE REMOVED

∘ = DRUMS

SEE SHEET 50 FOR TEMPORARY PAVEMENT MARKING LEGEND

Phase		A	B	C	D	E	F	G	H	I	J	K	K2	L	M	N
III	NB	For Stations See Sheet 51.												1394+40*	1406+05	1409+55
	SB	1466+65	1456+65	1446+65	1436+15	1429+55	1427+55	1422+55	1412+55	1409+55	1404+55	1395+95	1394+40	For Stations See Sheet 51.		

BEGINNING AND END OF PROJECT PHASE III
PART III

MED-71-15.78

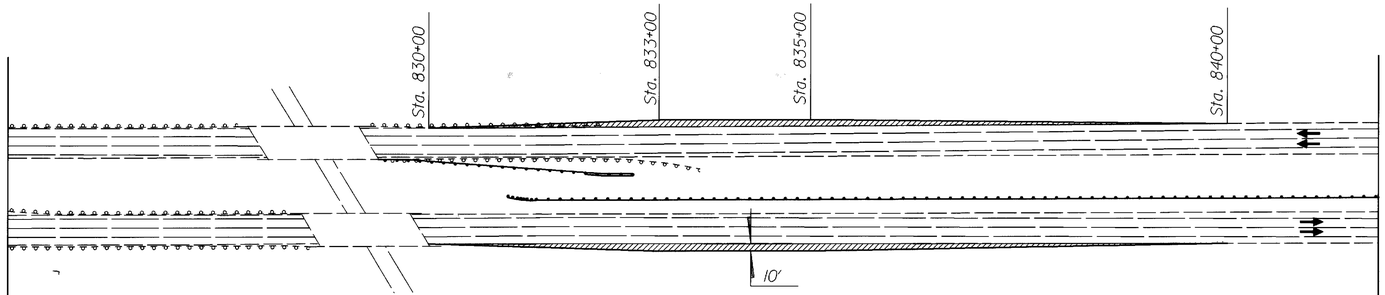

PHASE I

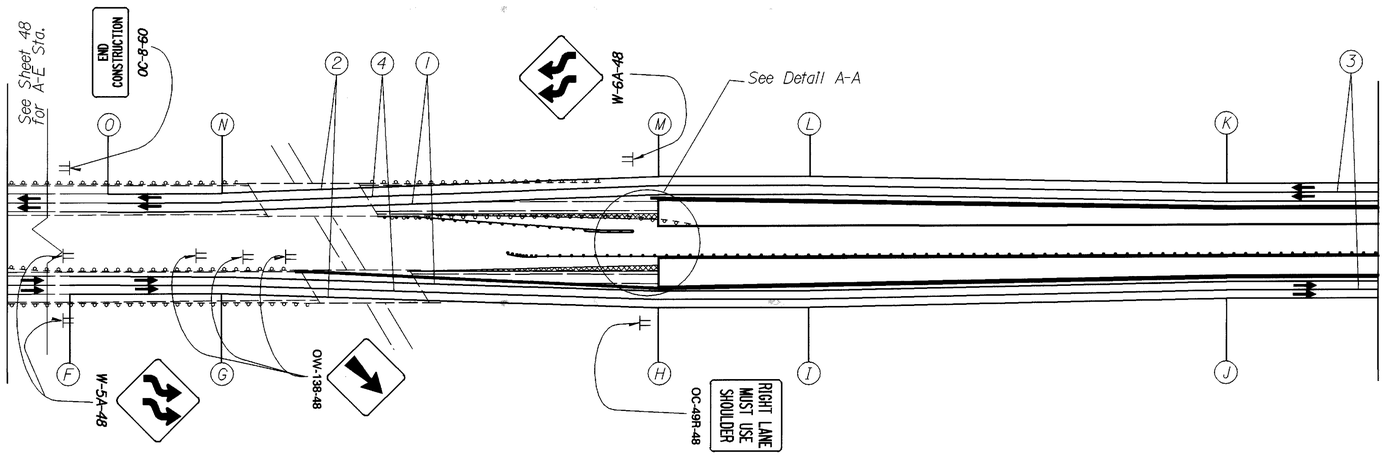

Phase		A	B	C	D	E	F	G	H	I	J	K	L	M	N	O
II	NB	777+25	782+25	803+25	819+25	822+25	825+25	827+25	833+00	835+00	840+50	840+50	See Sheet 48.			
	SB	See Sheet 48.											855+00	833+00	827+25	825+75

PHASE II

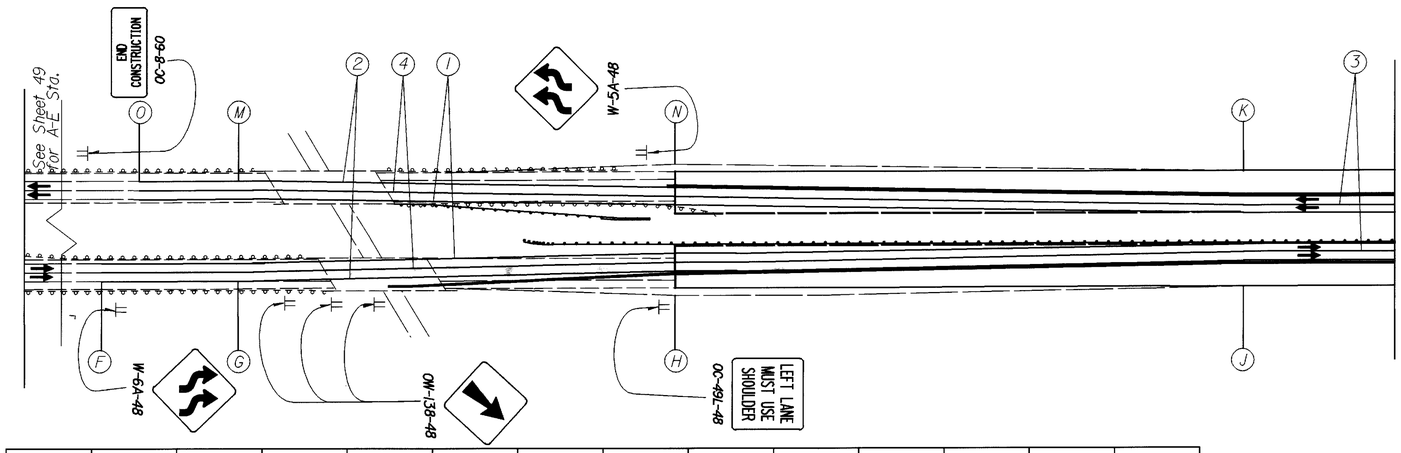

Phase		A	B	C	D	E	F	G	H	J	K	M	N	O
III	NB	777+25	782+25	803+25	819+25	822+25	825+25	827+25	833+00	840+50	840+50			
	SB											833+00	827+25	825+75

PHASE III

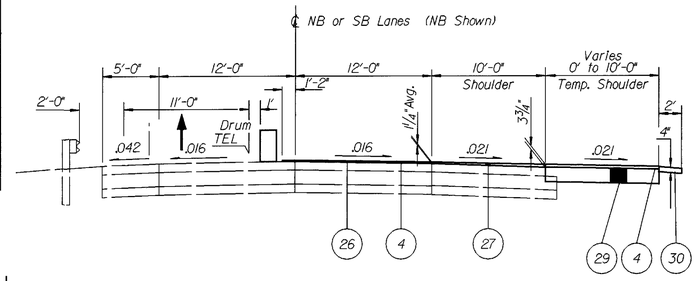

For legend see sheet 47.

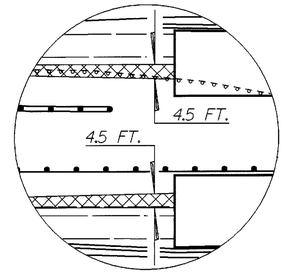

Detail A-A

- Temporary Pavement Outside Shoulder

- Temporary Pavement Inside Shoulder

See Sheet 50 for Temporary Pavement Marking Legend.

CALCULATED BC CHECKED

BEGINNING & ENDING OF PROJECT PHASE I, II, III PART III.

MED-71-15.78

DESIGN FILE : i:\pd_MED_IR71\DGN\MOT\motbe.dgn
USERNAME : pfought
DATE : 07-DEC-1999
TIME : 07:39

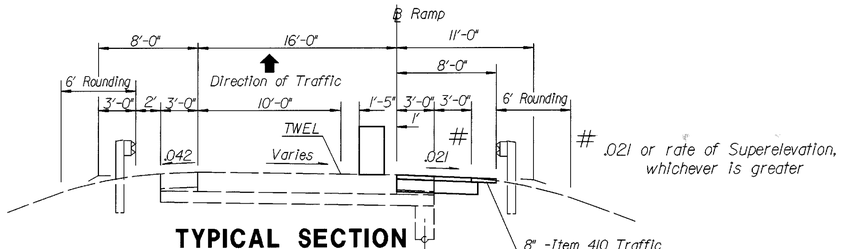

TYPICAL SECTION
RAMP B @ S.R. 3 INTERCHANGE,
OUTSIDE SHOULDER WIDENING

A - A

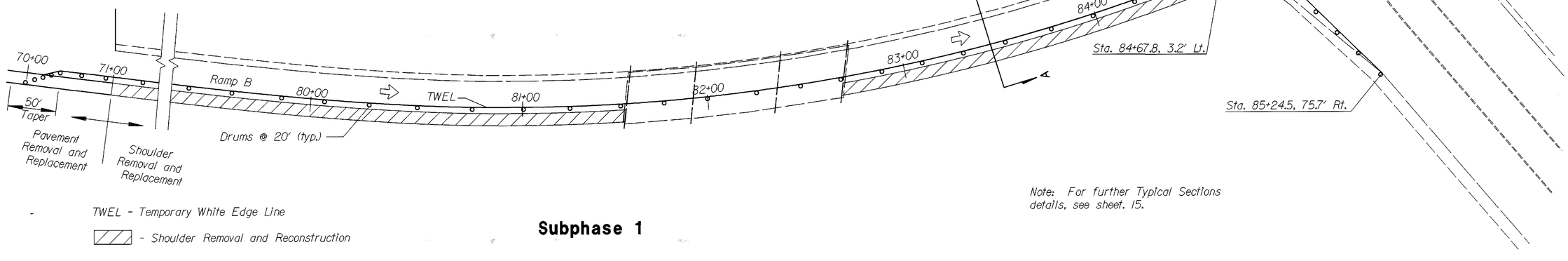

TWEL - Temporary White Edge Line

- Shoulder Removal and Reconstruction

Note: For further Typical Sections details, see sheet. 15.

Subphase 1

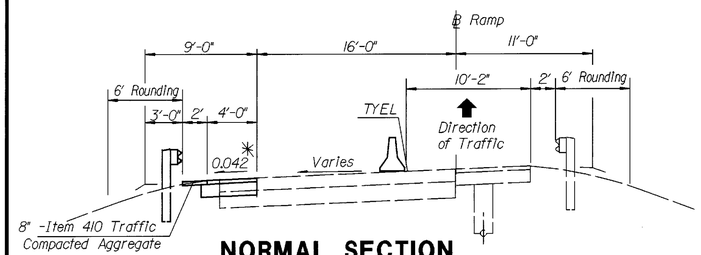

NORMAL SECTION
RAMP B @ S.R. 3 INTERCHANGE,
INSIDE SHOULDER WIDENING

* .042 or rate of Superelevation, whichever is greater

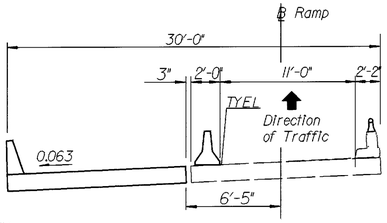

TYPICAL SECTION
RAMP B @ S.R. 3 INTERCHANGE,
INSIDE STRUCTURE REPLACEMENT

B - B

- Structure Removal and Reconstruction
- Pavement Removal and Reconstruction with Concrete
- Pavement Removal and Reconstruction with FS Concrete
- P.C.B.
- Shoulder Removal and Reconstruction

TYEL - Temporary Yellow Edge Line

A - A

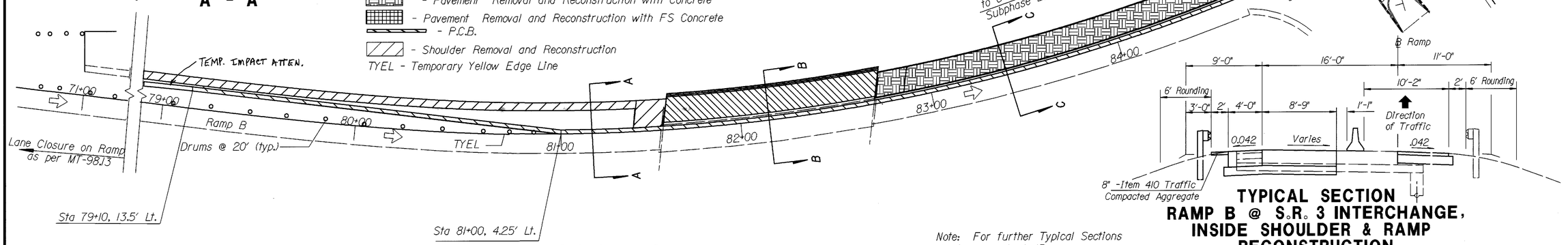

Subphase 2

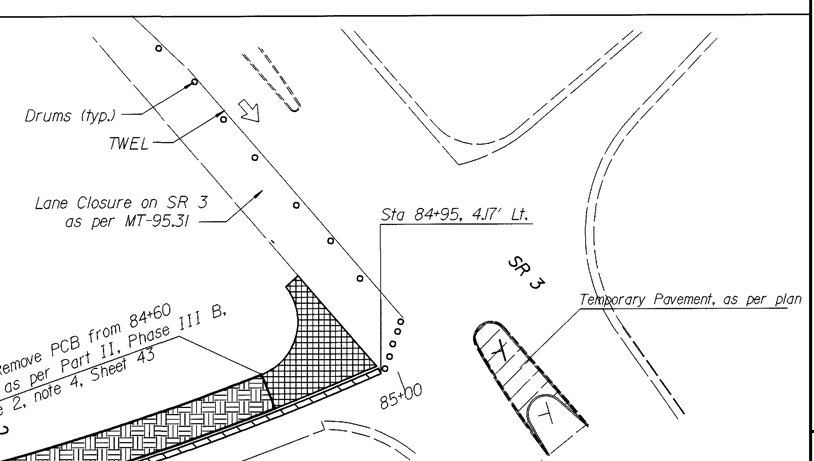

TYPICAL SECTION
RAMP B @ S.R. 3 INTERCHANGE,
INSIDE SHOULDER & RAMP RECONSTRUCTION

C - C

Note: For further Typical Sections details, see sheet. 15.

MOT - Phase IIIB - S.R. 3 Ramp "B"

MED-71-15.78

55
940

DESIGN FILE : i:\pd_MED_JR71\DGN\MOT\mot4tl.dgn
USERNAME : pFought

DATE : 07-DEC-1999
TIME : 07:40

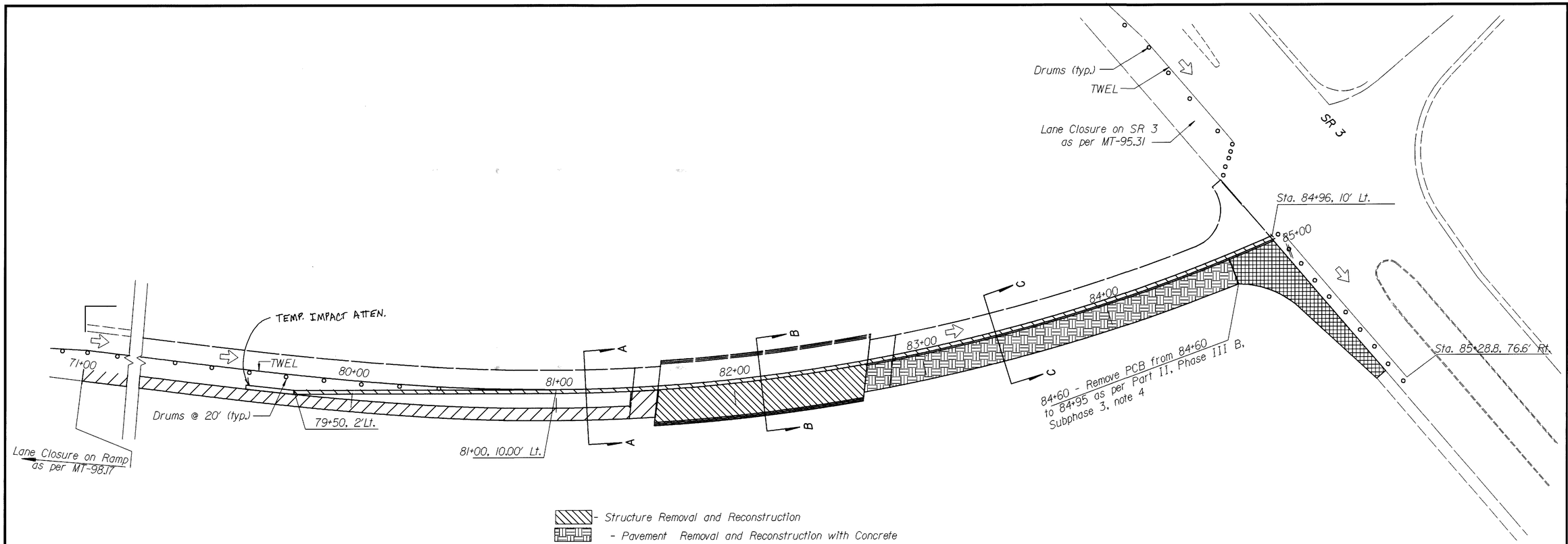

Note: For further Typical Sections details, see sheet. 15.

Subphase 3

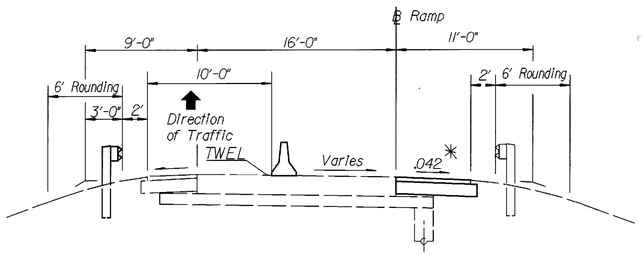

TYPICAL SECTION RAMP "B" @ S.R. 3 INTERCHANGE, OUTSIDE SHOULDER REPLACEMENT

A - A

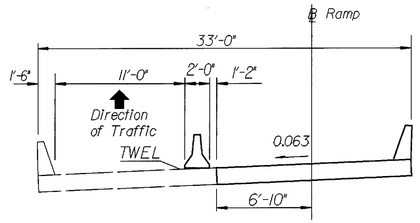

TYPICAL SECTION RAMP B @ S.R. 3 INTERCHANGE, OUTSIDE STRUCTURE REPLACEMENT

B - B

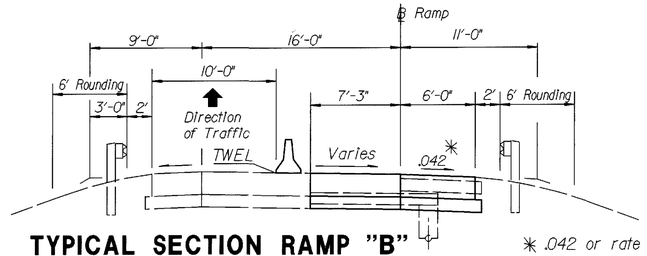

TYPICAL SECTION RAMP "B" @ S.R. 3 INTERCHANGE, PAVEMENT& OUTSIDE SHOULDERREPLACEMENT

C - C

* .042 or rate of Superelevation, whichever is greater

MOT - Phase IIIB - S.R. 3 Ramp "B"

MED-71-15.78

56
940

DESIGN FILE : i:\pd_MED_IR71\DGN\MOT\motdt12.dgn
USERNAME : pfought
DATE : 07-DEC-1999
TIME : 07:41

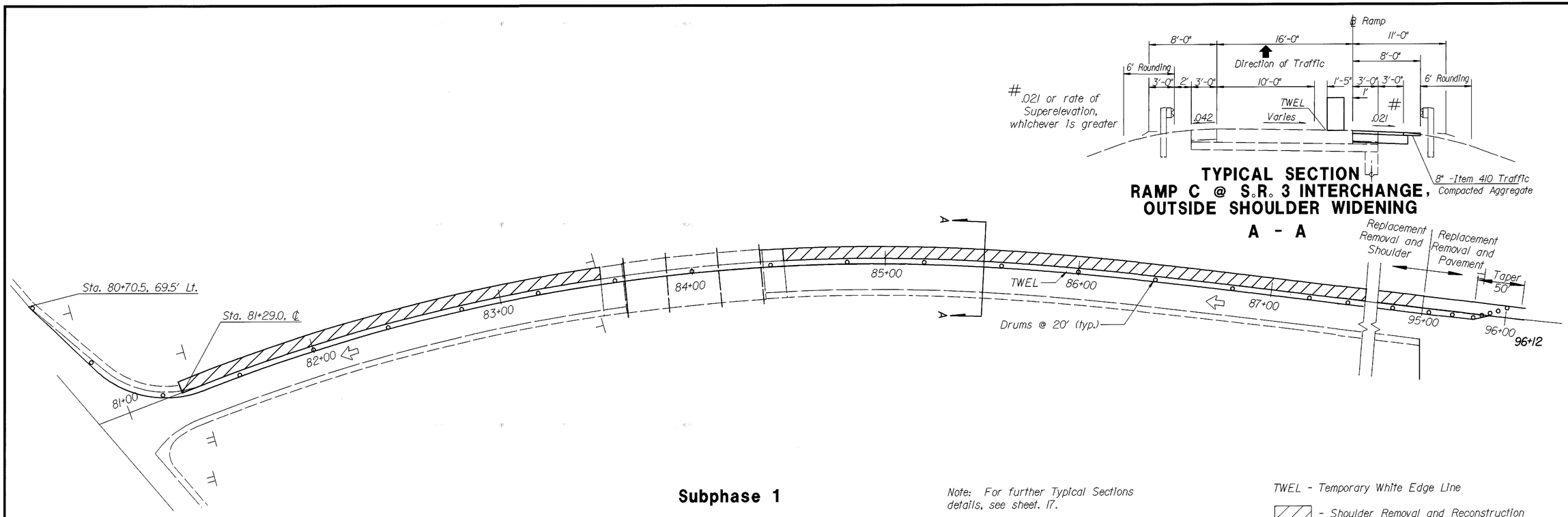

TYPICAL SECTION
RAMP C @ S.R. 3 INTERCHANGE, OUTSIDE SHOULDER WIDENING
A - A

Subphase 1

Note: For further Typical Sections details, see sheet. 17.

TWEL - Temporary White Edge Line

- Shoulder Removal and Reconstruction

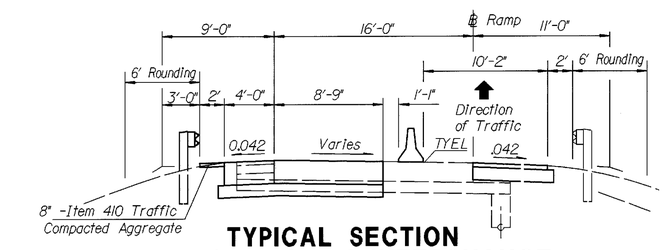

TYPICAL SECTION
RAMP C @ S.R. 3 INTERCHANGE, INSIDE SHOULDER & RAMP RECONSTRUCTION
A - A

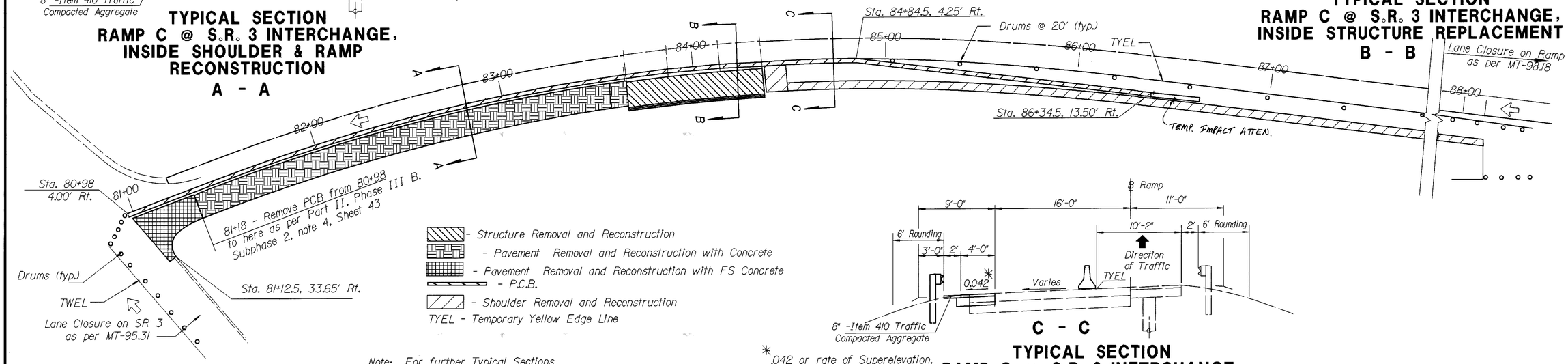

- Structure Removal and Reconstruction
- Pavement Removal and Reconstruction with Concrete
- Pavement Removal and Reconstruction with FS Concrete
- P.C.B.
- Shoulder Removal and Reconstruction

TYEL - Temporary Yellow Edge Line

Note: For further Typical Sections details, see sheet. 17.

Subphase 2

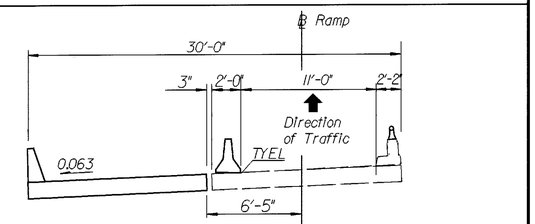

TYPICAL SECTION
RAMP C @ S.R. 3 INTERCHANGE, INSIDE STRUCTURE REPLACEMENT
B - B

C - C

TYPICAL SECTION
RAMP C @ S.R. 3 INTERCHANGE, INSIDE SHOULDER WIDENING

* .042 or rate of Superelevation, whichever is greater

MOT - Phase IIIB S.R. 3 Ramp "C"

MED-71-15.78

57
940

DESIGN FILE : i:\pd_MED_JR71\DGN\MOT\mot-dt21.dgn
USERNAME : pfought
DATE : 07-DEC-1999
TIME : 07:46

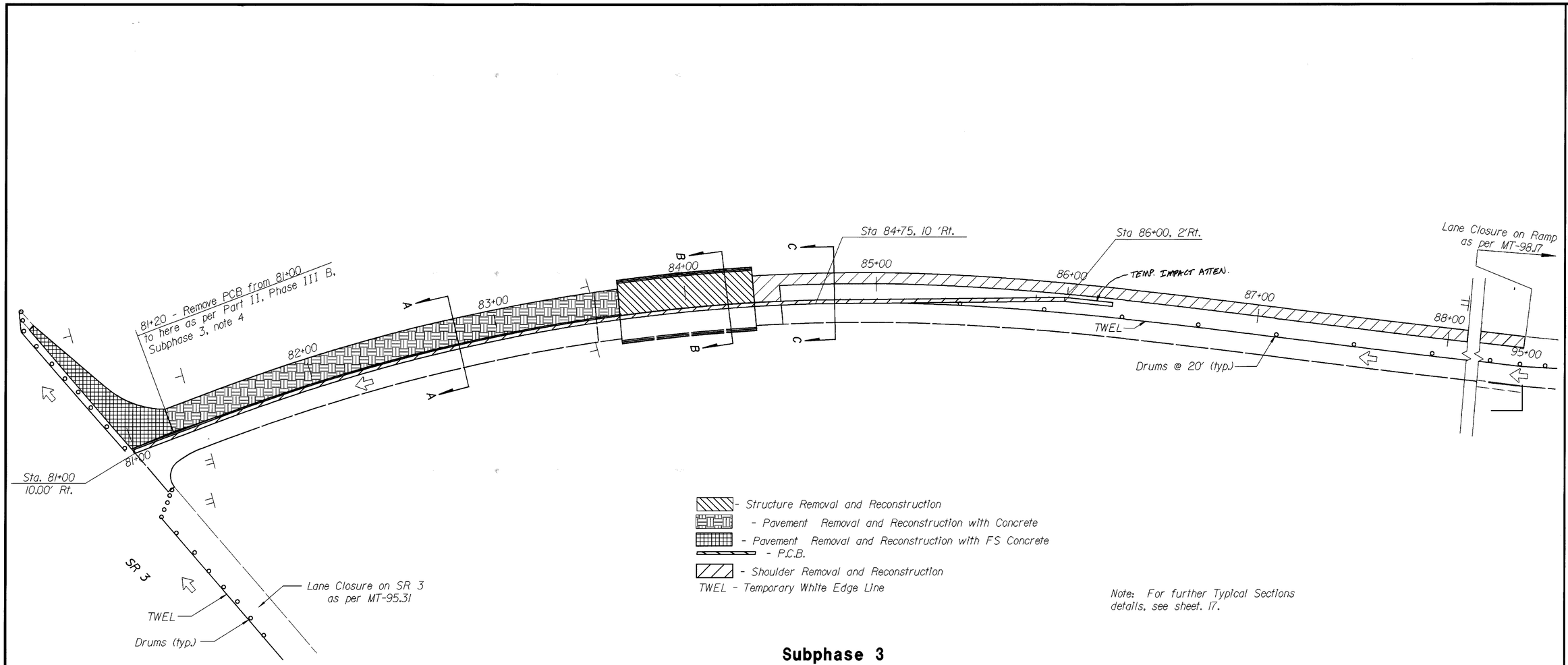

- Structure Removal and Reconstruction
- Pavement Removal and Reconstruction with Concrete
- Pavement Removal and Reconstruction with FS Concrete
- P.C.B.
- Shoulder Removal and Reconstruction

TWEL - Temporary White Edge Line

Note: For further Typical Sections details, see sheet. 17.

Subphase 3

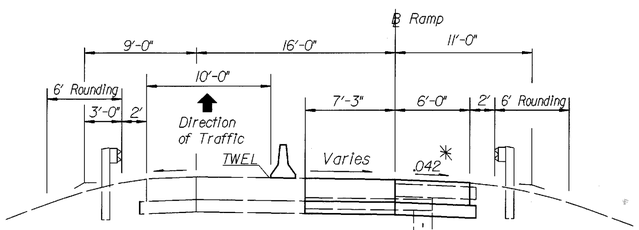

TYPICAL SECTION RAMP "C" @ S.R. 3 INTERCHANGE, PAVEMENT& OUTSIDE SHOULDERREPLACEMENT

A - A

* .042 or rate of Superelevation, whichever is greater

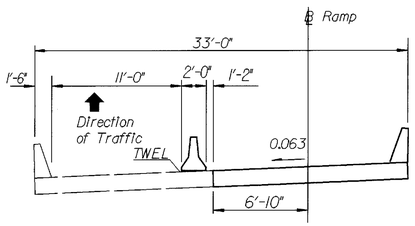

TYPICAL SECTION RAMP C @ S.R. 3 INTERCHANGE, OUTSIDE STRUCTURE REPLACEMENT

B - B

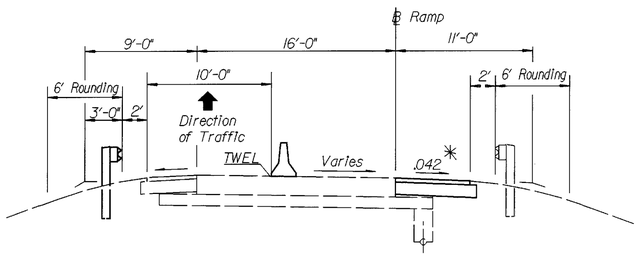

TYPICAL SECTION RAMP "C" @ S.R. 3 INTERCHANGE, OUTSIDE SHOULDER REPLACEMENT

C - C

MOT - Phase IIIB S.R. 3 Ramp 'C'

MED-71-15.78

58
940

DESIGN FILE : i:\pd_MED_IR71\DGN\MOT\motdt22.dgn
USERNAME : pfought

DATE : 07-DEC-1999
TIME : 07:55

DESIGN FILE : i:\pd_MED_IR71\DGN\MOT\d+303A.dgn
USERNAME : pfought
DATE : 07-DEC-1999
TIME : 07:59

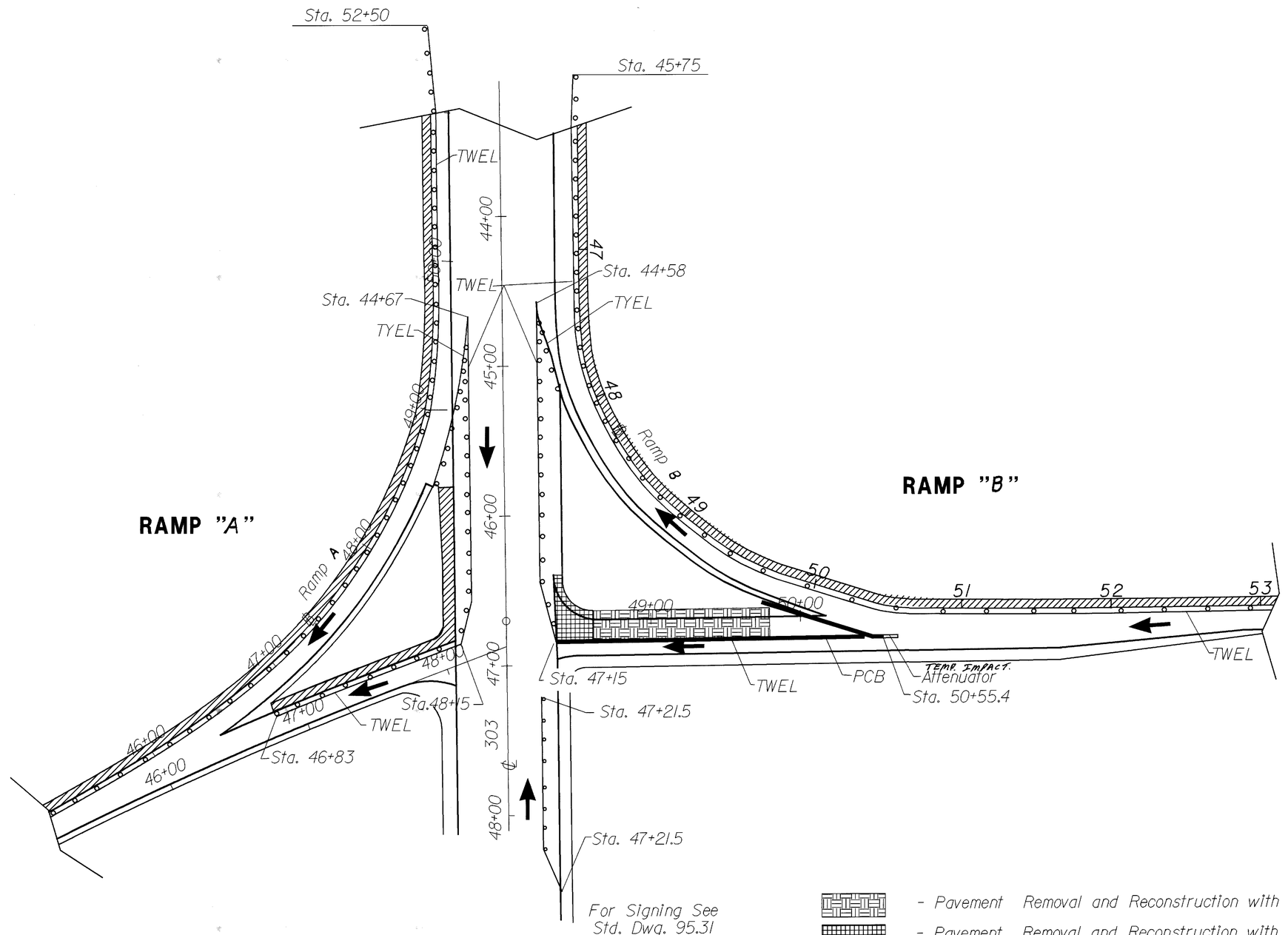

Subphase I

- Pavement Removal and Reconstruction with Concrete
- Pavement Removal and Reconstruction with FS Concrete
- P.C.B.
- Shoulder Removal and Reconstruction

TWEL - Temporary White Edge Line
TYEL - Temporary Yellow Edge Line

CALCULATED BL CHECKED

MOT - Phase IIIC - S.R. 303 Ramp "A" & "B"

MED-71-15.78

DESIGN FILE : i:\pd_MED_IR71\DGN\MOT\dt303c.dgn
USERNAME : pfought

DATE : 07-DEC-1999
TIME : 08:00

CALCULATED
CHECKED

MOT - Phase IIIC - S.R. 303 Ramp "A" & "B"

RAMP "A"

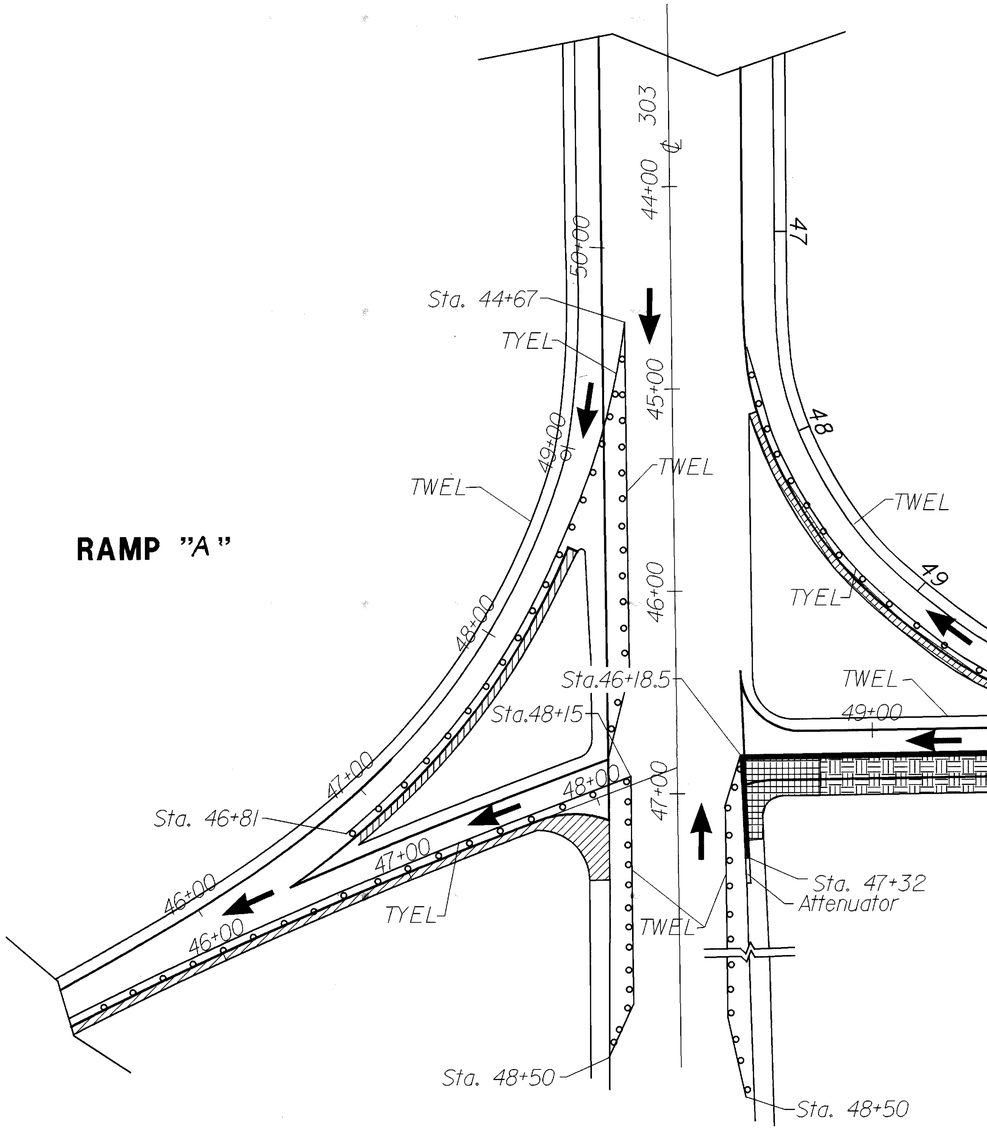

RAMP "B"

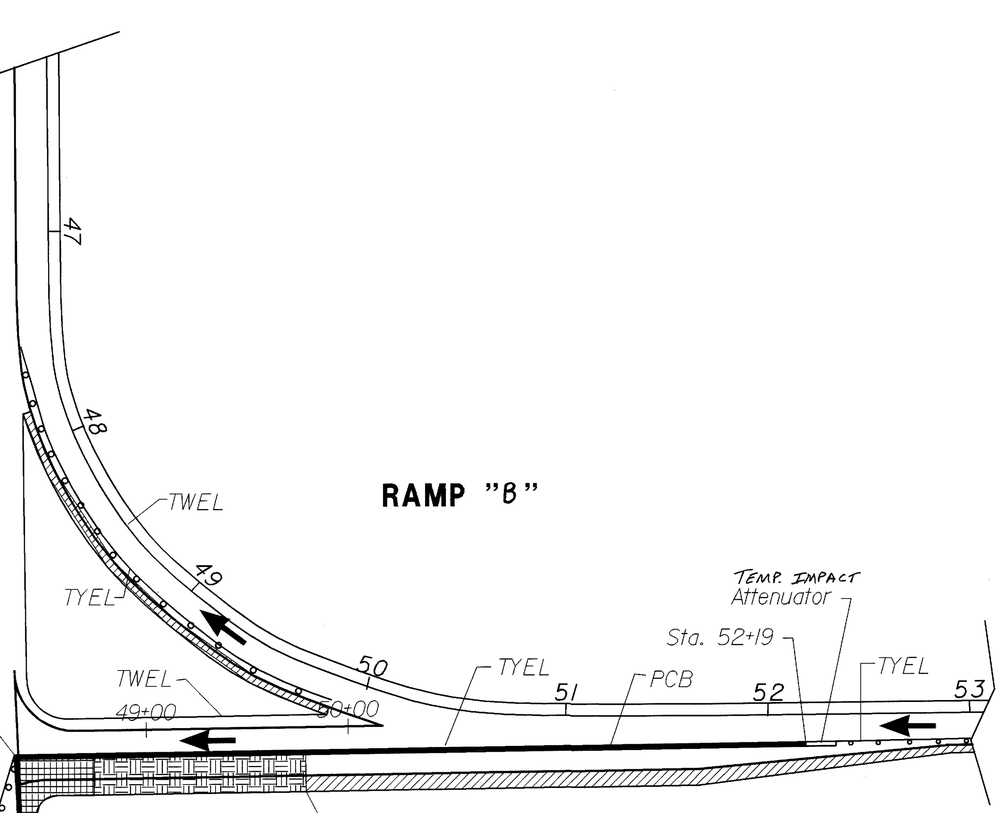

For Signing See
Std. Dwg. 95.31

Subphase III

- Pavement Removal and Reconstruction with Concrete
- Pavement Removal and Reconstruction with FS Concrete
- P.C.B.
- Shoulder Removal and Reconstruction

TWEL - Temporary White Edge Line
TYEL - Temporary Yellow Edge Line

MED-71-15.78

DESIGN FILE : i:\pd_MED_IR71\DGN\MOT\motdt3cd.dgn
USERNAME : pfought
DATE : 07-DEC-1999
TIME : 08:02

Connect to I.R. 71 M.O.T. barrels

Northbound I.R. 71

Lane Closure on Ramp as per Std. Dwg . MT-98.13

Match Line 38+00

Ramp "C" 39+00

TEMP. IMP. Attenuator

40+00

41+00

A

A

B

B

Ramp "D" 40+00

41+00

42+00

43+00

44+00

45+00

46+00

47+00

48+00

49+00

50+00

51+00

Match Line 38+00

Northbound I.R. 71

35+00

36+00

37+00

38+00

39+00

Full Depth Pavement Replacement

Lane Closure as per Std. Dwg. 95.31

Sta. 50+00, ℄

Ramp "D"
Note: Outside shoulder widening and all Ramp work shall be done when the Ramp is closed for Phase III mainline structure construction

℄ Ramp
9'-0" 16'-0" 10'-0"
6' Rounding
3' 3' 3'
Direction of Traffic
11'-6" TWEL
1'-5" 1'
.042 Varies 0.042
8:1 (Max.) 2:1 (Min.)
8" - Item 410 Traffic Compacted Aggegate

TYPICAL SECTION RAMP "C"&"D" @ S.R. 303 INTERCHANGE, OUTSIDE SHOULDER REPLACEMENT

℄ Ramp
9'-0" 16'-0" 8'-0"(max.) 0'-0"(min.) 10'-0"
6' Rounding
3' 3' 3'
Direction of Traffic
11'-6" TWEL
1'-5" 1'
.042 Varies 0.042
8:1 (Max.) 2:1 (Min.)
8" - Item 410 Traffic Compacted Aggegate

TYPICAL SECTION RAMPS "C" S.R. 303 INTERCHANGE- ASPHALT PAVEMENT & SHOULDER WIDENING
B - B

℄ Ramp
11'-0" 18'-6" 21'-6" 11'-0" 10'-0"
6' Rounding
3'-0" 2' 3'-0" 3'-0"
Direction of Ramp "D" Traffic
Direction of Ramp "C" Traffic
3'-0" 12'-6" 1'-5" 1'
Varies 4"+/-
0.042
8:1 (Max.) 2:1 (Min.)
8:1 (Max.) 2:1 (Min.)
8" - Item 410 Traffic Compacted Aggegate

TYPICAL SECTION RAMPS "C" & "D" S.R. 303 INTERCHANGE- CONCRETE PAVEMENT & SHOULDER WIDENING
C - C

46+72 - Remove PCB from 46+72 to 47+15 as per Part III, Phase III C, Subphase I, note 4

Sta. 47+15, 9.50' Rt.

Sta. 47+16.5, 72.8' Rt.

TWEL

Note: For further Typical Sections details, see sheet. 15.

Subphase 1

- Structure Removal and Reconstruction
- Pavement Removal and Reconstruction with Concrete
- Pavement Removal and Reconstruction with FS Concrete
- P.C.B.
- Shoulder Removal and Reconstruction

TWEL - Temporary White Edge Line

MOT - Phase IIIC - S.R. 303 Ramp "C" & "D"

MED-71-15.78

61
940

DESIGN FILE : i:\pd_MED_IR71\DGN\MOT\motd13cdl.dgn
USERNAME : pfought
DATE : 07-DEC-1999
TIME : 08:07

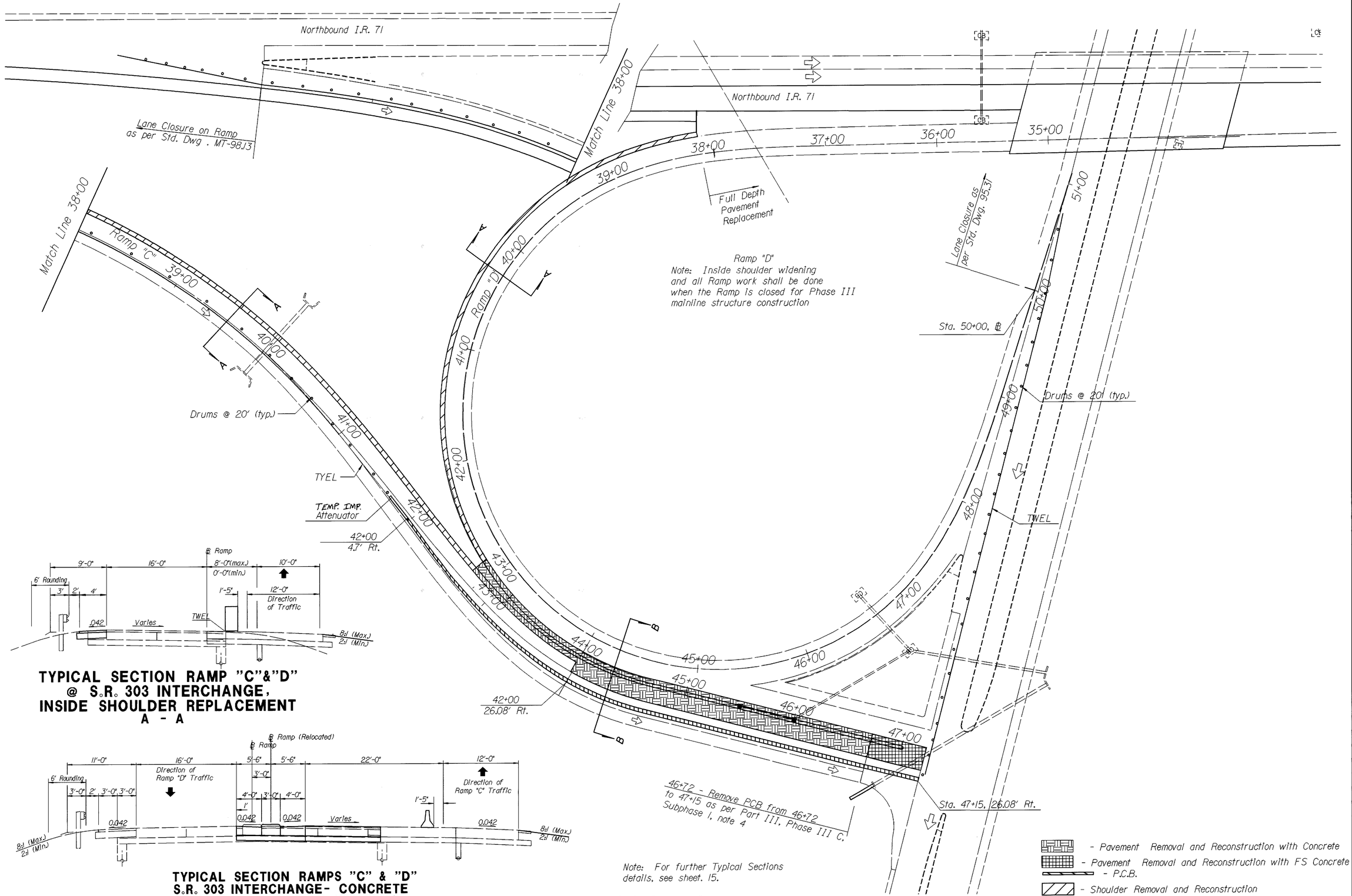

TYPICAL SECTION RAMP "C"&"D"
@ S.R. 303 INTERCHANGE,
INSIDE SHOULDER REPLACEMENT
A - A

TYPICAL SECTION RAMPS "C" & "D"
S.R. 303 INTERCHANGE- CONCRETE
PAVEMENT & MEDIAN WIDENING
B - B

Note: For further Typical Sections details, see sheet. 15.

Subphase 2

MOT - Phase IIIC - S.R. 303 Ramp "C" & "D"

MED-71-15.78

MAINTENANCE OF TRAFFIC AT RAMP EXITS

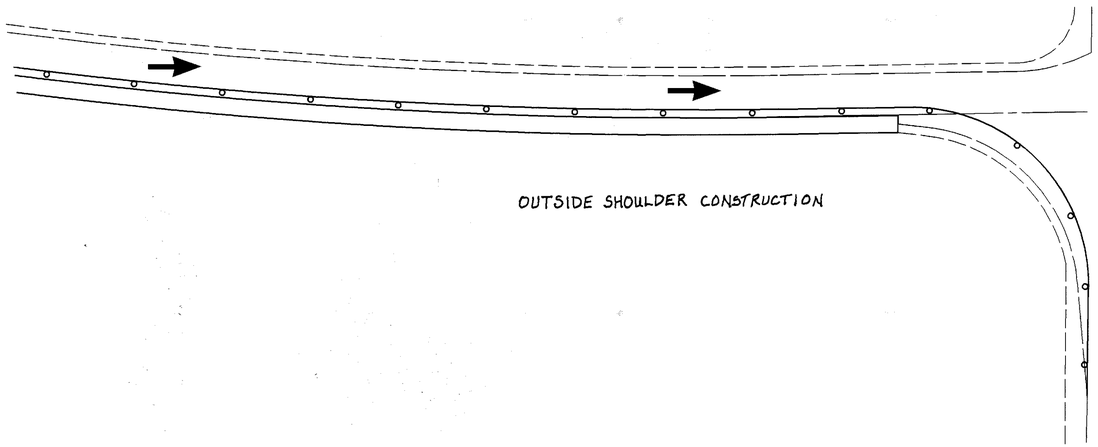

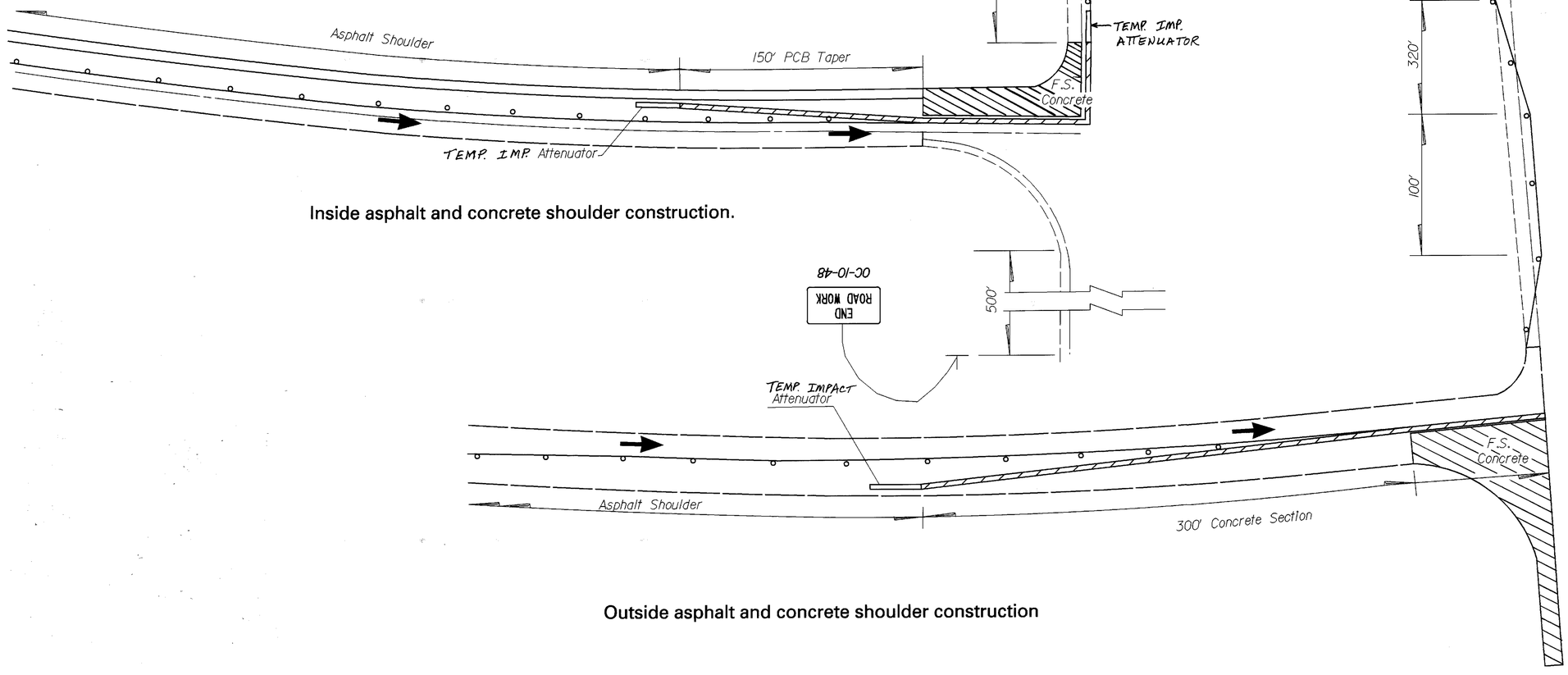

Inside asphalt and concrete shoulder construction.

Outside asphalt and concrete shoulder construction

For additional notes & details see SR 3 Ramp work.

DESIGN FILE : i:\pd_MED_JR71\DGN\MOT\mrampl.dgn
USERNAME : pfought

DATE : 07-DEC-1999
TIME : 08:10

MAINTENANCE OF TRAFFIC AT EXIT RAMPS S.R. 18

MED-71-15.94

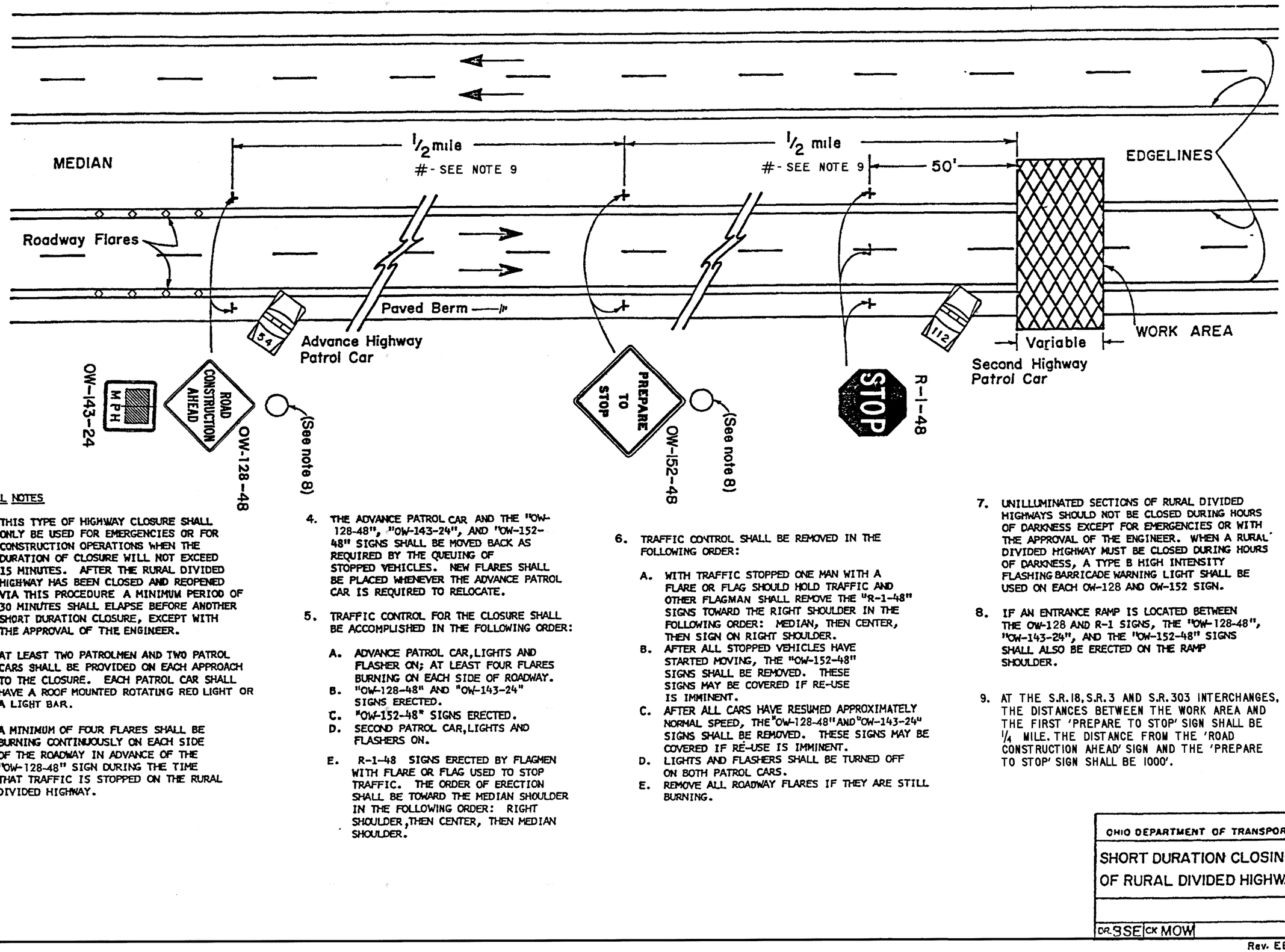

GENERAL NOTES

1. THIS TYPE OF HIGHWAY CLOSURE SHALL ONLY BE USED FOR EMERGENCIES OR FOR CONSTRUCTION OPERATIONS WHEN THE DURATION OF CLOSURE WILL NOT EXCEED 15 MINUTES. AFTER THE RURAL DIVIDED HIGHWAY HAS BEEN CLOSED AND REOPENED VIA THIS PROCEDURE A MINIMUM PERIOD OF 30 MINUTES SHALL ELAPSE BEFORE ANOTHER SHORT DURATION CLOSURE, EXCEPT WITH THE APPROVAL OF THE ENGINEER.

2. AT LEAST TWO PATROLMEN AND TWO PATROL CARS SHALL BE PROVIDED ON EACH APPROACH TO THE CLOSURE. EACH PATROL CAR SHALL HAVE A ROOF MOUNTED ROTATING RED LIGHT OR A LIGHT BAR.

3. A MINIMUM OF FOUR FLARES SHALL BE BURNING CONTINUOUSLY ON EACH SIDE OF THE ROADWAY IN ADVANCE OF THE "OW-128-48" SIGN DURING THE TIME THAT TRAFFIC IS STOPPED ON THE RURAL DIVIDED HIGHWAY.

4. THE ADVANCE PATROL CAR AND THE "OW-128-48", "OW-143-24", AND "OW-152-48" SIGNS SHALL BE MOVED BACK AS REQUIRED BY THE QUEUING OF STOPPED VEHICLES. NEW FLARES SHALL BE PLACED WHENEVER THE ADVANCE PATROL CAR IS REQUIRED TO RELOCATE.

5. TRAFFIC CONTROL FOR THE CLOSURE SHALL BE ACCOMPLISHED IN THE FOLLOWING ORDER:

   A. ADVANCE PATROL CAR, LIGHTS AND FLASHER ON; AT LEAST FOUR FLARES BURNING ON EACH SIDE OF ROADWAY.
   B. "OW-128-48" AND "OW-143-24" SIGNS ERECTED.
   C. "OW-152-48" SIGNS ERECTED.
   D. SECOND PATROL CAR, LIGHTS AND FLASHERS ON.
   E. R-1-48 SIGNS ERECTED BY FLAGMEN WITH FLARE OR FLAG USED TO STOP TRAFFIC. THE ORDER OF ERECTION SHALL BE TOWARD THE MEDIAN SHOULDER IN THE FOLLOWING ORDER: RIGHT SHOULDER, THEN CENTER, THEN MEDIAN SHOULDER.

6. TRAFFIC CONTROL SHALL BE REMOVED IN THE FOLLOWING ORDER:

   A. WITH TRAFFIC STOPPED ONE MAN WITH A FLARE OR FLAG SHOULD HOLD TRAFFIC AND OTHER FLAGMAN SHALL REMOVE THE "R-1-48" SIGNS TOWARD THE RIGHT SHOULDER IN THE FOLLOWING ORDER: MEDIAN, THEN CENTER, THEN SIGN ON RIGHT SHOULDER.
   B. AFTER ALL STOPPED VEHICLES HAVE STARTED MOVING, THE "OW-152-48" SIGNS SHALL BE REMOVED. THESE SIGNS MAY BE COVERED IF RE-USE IS IMMINENT.
   C. AFTER ALL CARS HAVE RESUMED APPROXIMATELY NORMAL SPEED, THE "OW-128-48" AND "OW-143-24" SIGNS SHALL BE REMOVED. THESE SIGNS MAY BE COVERED IF RE-USE IS IMMINENT.
   D. LIGHTS AND FLASHERS SHALL BE TURNED OFF ON BOTH PATROL CARS.
   E. REMOVE ALL ROADWAY FLARES IF THEY ARE STILL BURNING.

7. UNILLUMINATED SECTIONS OF RURAL DIVIDED HIGHWAYS SHOULD NOT BE CLOSED DURING HOURS OF DARKNESS EXCEPT FOR EMERGENCIES OR WITH THE APPROVAL OF THE ENGINEER. WHEN A RURAL DIVIDED HIGHWAY MUST BE CLOSED DURING HOURS OF DARKNESS, A TYPE B HIGH INTENSITY FLASHING BARRICADE WARNING LIGHT SHALL BE USED ON EACH OW-128 AND OW-152 SIGN.

8. IF AN ENTRANCE RAMP IS LOCATED BETWEEN THE OW-128 AND R-1 SIGNS, THE "OW-128-48", "OW-143-24", AND THE "OW-152-48" SIGNS SHALL ALSO BE ERECTED ON THE RAMP SHOULDER.

9. AT THE S.R.18, S.R.3 AND S.R.303 INTERCHANGES, THE DISTANCES BETWEEN THE WORK AREA AND THE FIRST 'PREPARE TO STOP' SIGN SHALL BE 1/4 MILE. THE DISTANCE FROM THE 'ROAD CONSTRUCTION AHEAD' SIGN AND THE 'PREPARE TO STOP' SIGN SHALL BE 1000'.

OHIO DEPARTMENT OF TRANSPORTATION

SHORT DURATION CLOSING OF RURAL DIVIDED HIGHWAY	DATE 5/77
DR SSE CK MOW	

HORIZONTAL SCALE IN FEET

CALCULATED | CHECKED

SHORT DURATION CLOSING OF RURAL DIVIDED HIGHWAY

MED-71-15.78

63A / 940

Rev. EEF 9/84

REF-FILE #1 LEVELS ON:
REF-FILE #2 LEVELS ON:
REF-FILE #3 LEVELS ON:
REF-FILE #4 LEVELS ON:

FILENAME: h:\pdf_MED_JR71\DGN\MOT\sdcdgn
DATE & TIME: 07-DEC-1999 08:28
USERNAME: pfaught
PROJECT: NONE

LEVELS ON: [1-64]
PLOT CMD/EXE: \OD\PLOT\mplotr
REM TABLE: h:\od\dat\NJplotcross.pen

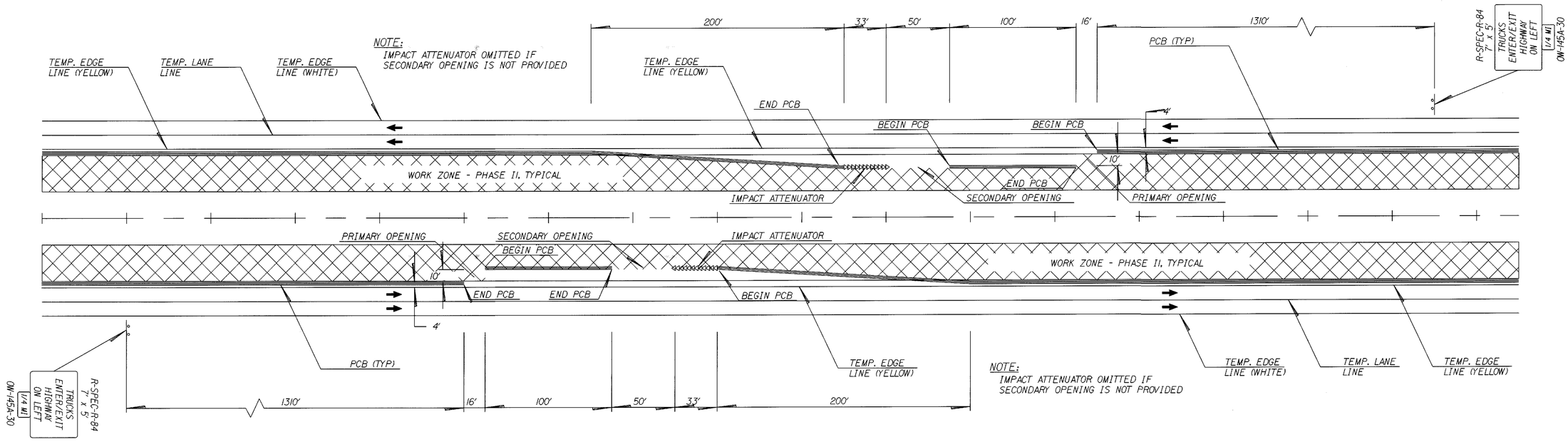

CONSTRUCTION ACCESS POINTS - PHASE II, TYPICAL

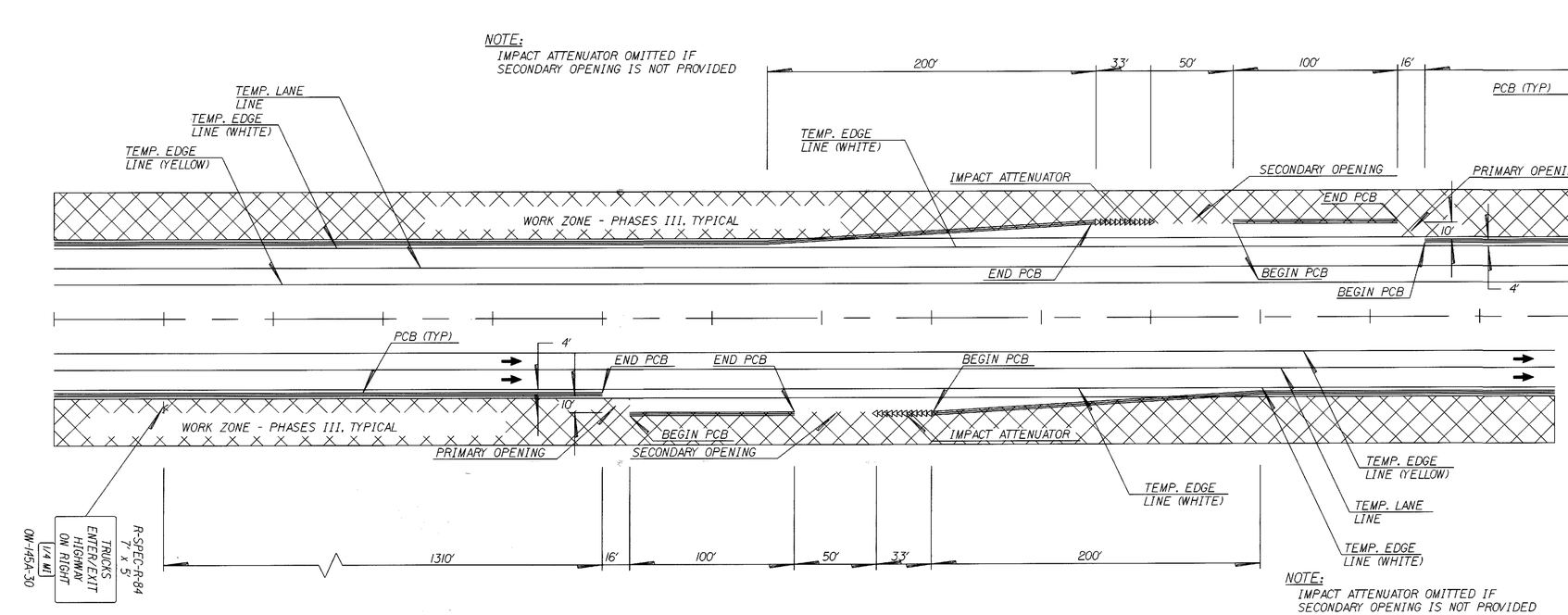

CONSTRUCTION ACCESS POINTS - PHASES III, TYPICAL

CONSTRUCTION ACCESS POINTS

CONSTRUCTION ACCESS POINT LOCATIONS MAY BE SELECTED BY THE CONTRACTOR, WITH THE APPROVAL OF THE ENGINEER. THEY SHALL BE IN ACCORDANCE WITH THE DETAILS IN THE PLANS. THE LOCATIONS SHALL BE SELECTED FOR GOOD SIGHT DISTANCE AND EASE OF ACCESS FOR ENTERING VEHICLES (AVOID LOCATIONS JUST BEYOND CREST VERTICAL CURVES, ON CURVES TO THE SIDE OF THE ROAD WITH THE BARRIER, JUST BEYOND OVERHEAD STRUCTURES, ON UPGRADES, ETC.) IN THE EVENT THAT THE ENGINEER DETERMINES THAT AN ACCESS POINT DOES NOT FUNCTION IN A SAFE MANNER, HE SHALL ORDER IT IMMEDIATELY CLOSED AT NO COST TO THE STATE. ACCESS POINTS WHICH INCLUDE THE SECONDARY OPENING SHALL ALSO INCLUDE AN OPERABLE IMPACT ATTENUATOR AS DETAILED. WHEN AN IMPACT ATTENUATOR BECOMES INOPERABLE FOR ANY REASON, THE ENGINEER SHALL ORDER THE SECONDARY OPENING TO BE IMMEDIATELY CLOSED WITH PORTABLE CONCRETE BARRIER. ACCESS POINTS MAY BE RELOCATED, SUBJECT TO THE APPROVAL OF THE ENGINEER, AS NECESSARY TO ACCOMPLISH CONSTRUCTION ACTIVITIES.

ALL COSTS FOR RELOCATION OF PORTABLE CONCRETE BARRIER, INSTALLATION, REPAIR, REPLACEMENT, AND REMOVAL OF IMPACT ATTENUATORS, GRADING FOR ACCESS DRIVES AND RELATED COSTS SHALL BE INCLUDED IN THE LUMP SUM BID FOR ITEM 614 MAINTAINING TRAFFIC.

CALCULATED | CHECKED

MAINTENANCE OF TRAFFIC
CONSTRUCTION ACCESS PLANS, TYPICAL

MED-71-15.78

DESIGN FILE : i:\pd_MED_IR71\DGN\MOT\constpulloff.dgn
USERNAME : pfought
DATE : 07-DEC-1999
TIME : 08:30

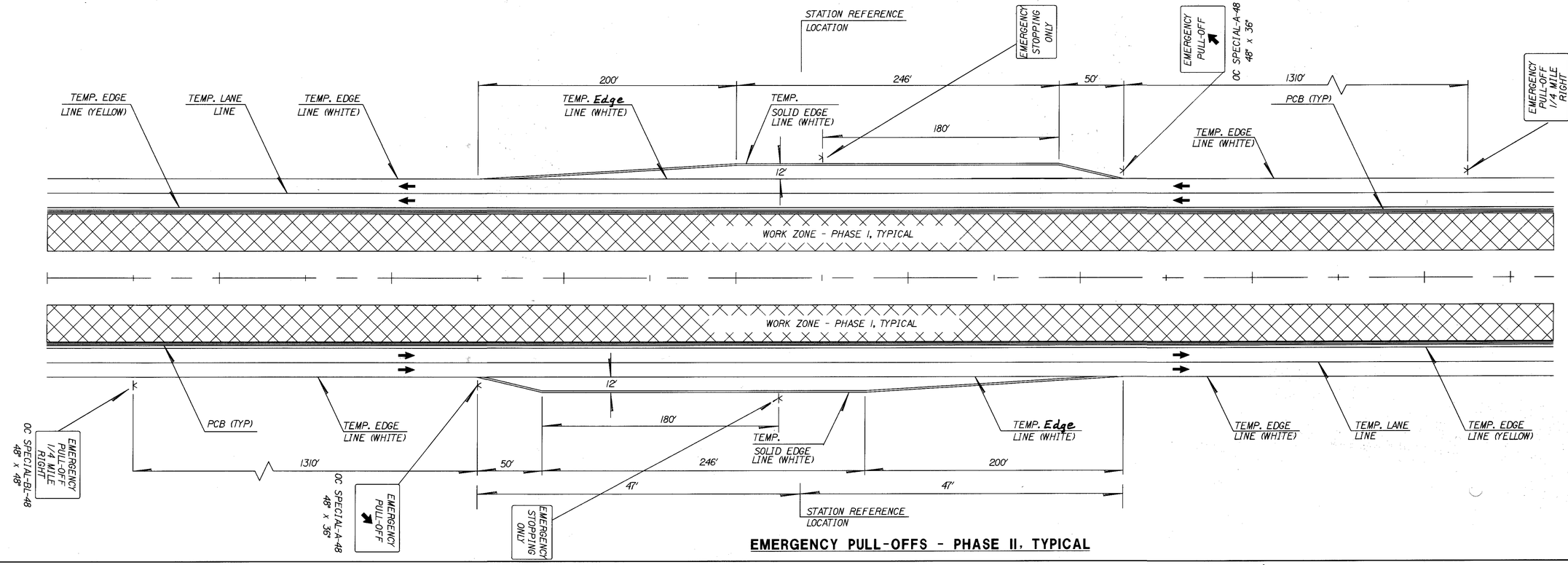

EMERGENCY PULL-OFFS - PHASE II, TYPICAL

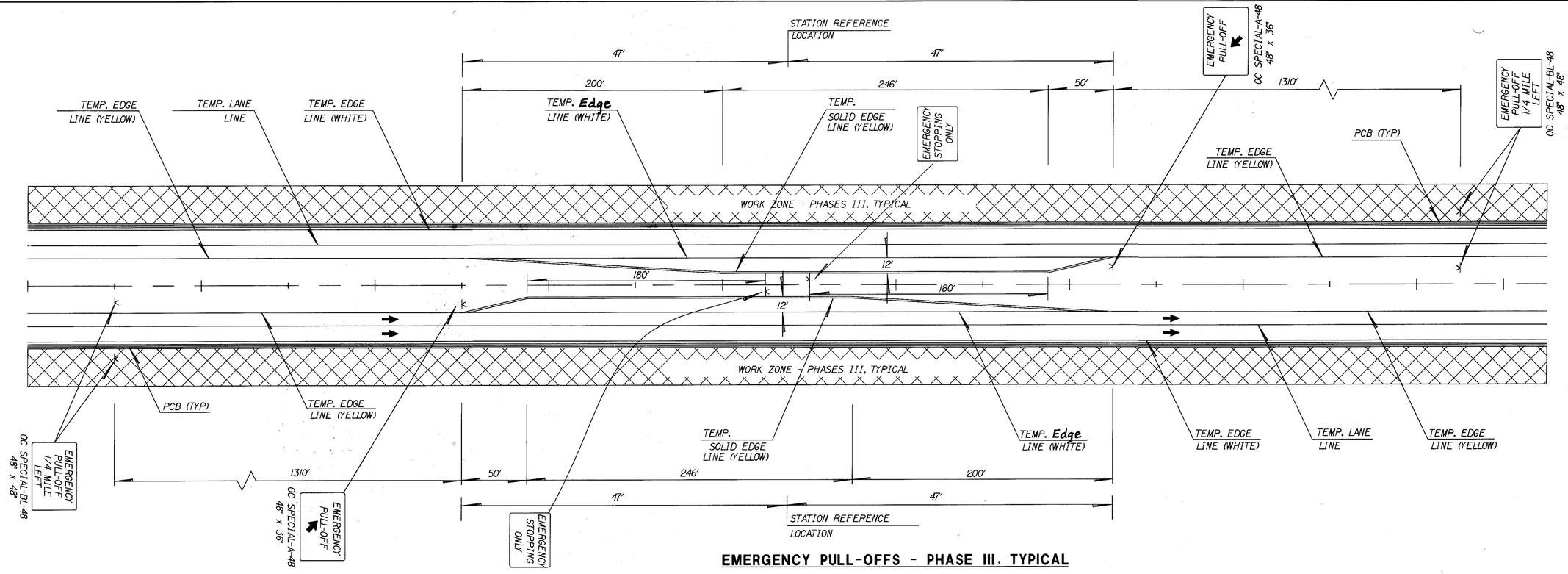

EMERGENCY PULL-OFFS - PHASE III, TYPICAL

CALCULATED | CHECKED

MAINTENANCE OF TRAFFIC

EMERGENCY PULLOFFS, TYPICAL

MED-71-15.78

DESIGN FILE : i:\pd_med_ir71\dgn\mot\empulloff.dgn
USERNAME : jrogers
DATE : 27-DEC-1999
TIME : 15:26

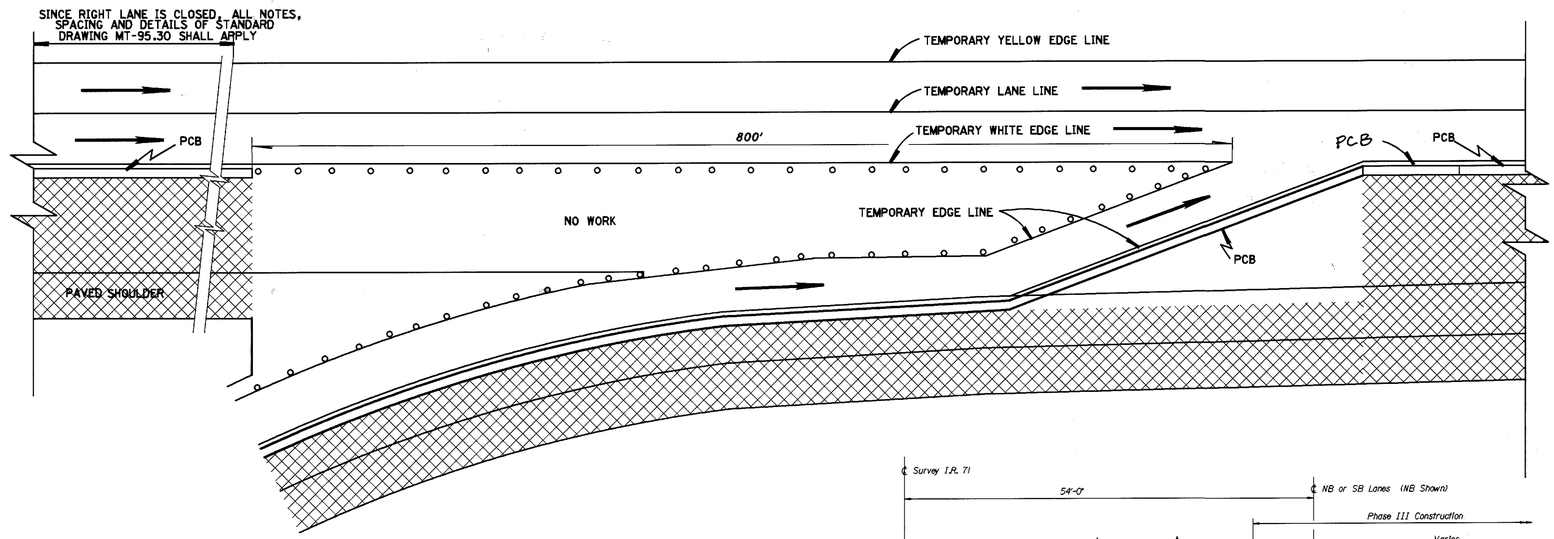

For further details see std. dwg MT98.16M

Part II
Phase IIIC
Subphase 1

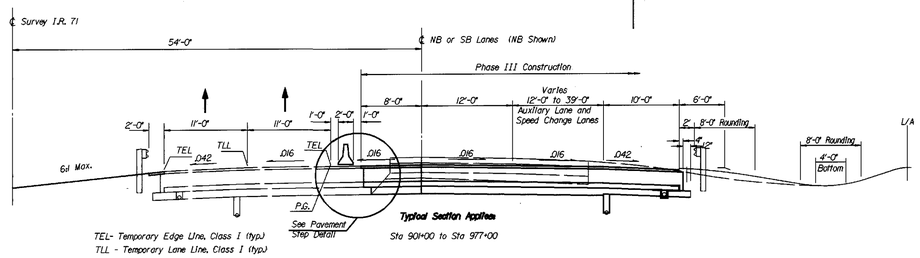

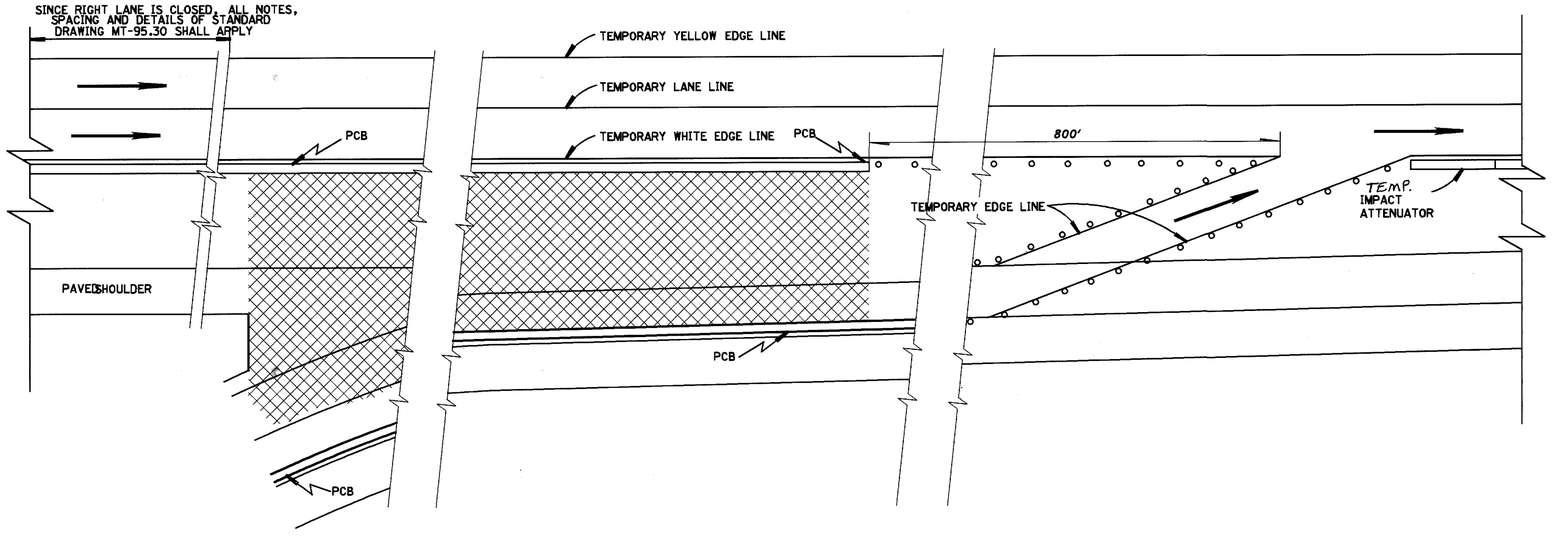

For further details see std. dwg MT98.15M

Part II
Phase IIIC
Subphase 2

CALCULATED BL CHECKED

MOT ENTRANCE RAMP DETAILS

MED-71-15.78

66
940

DESIGN FILE : i:\pd_MED_IR71\DGN\MOT\rampxover.dgn
USERNAME : pfought

DATE : 07-DEC-1999
TIME : 08:32

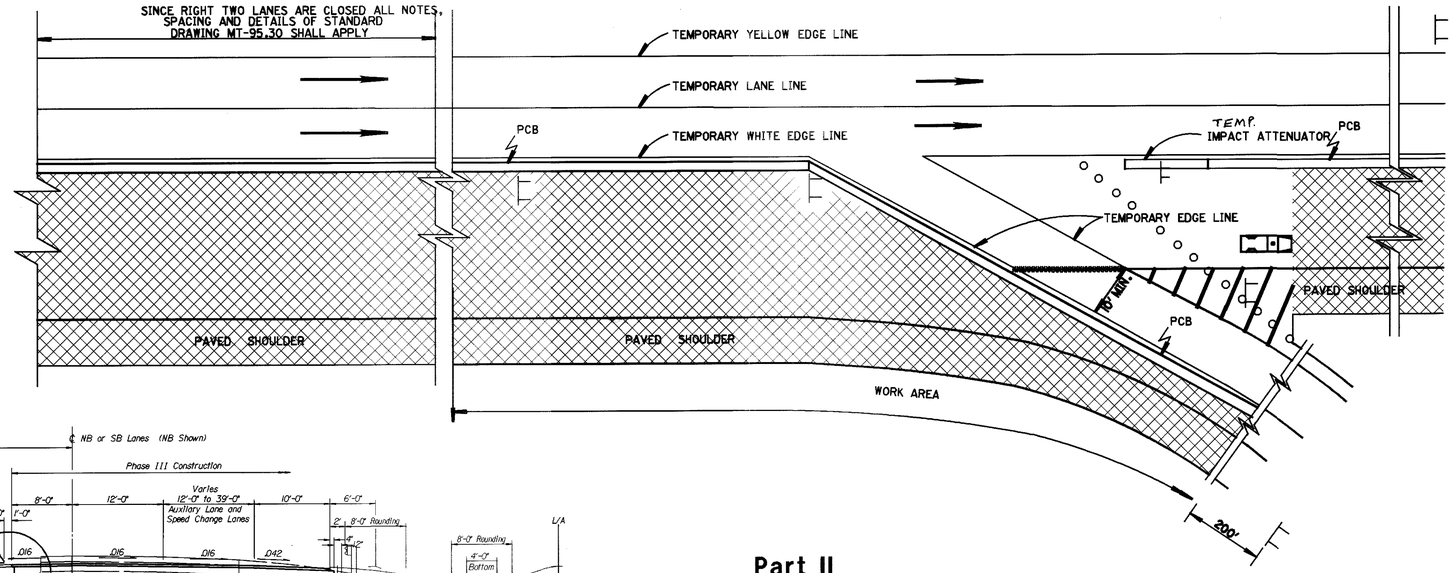

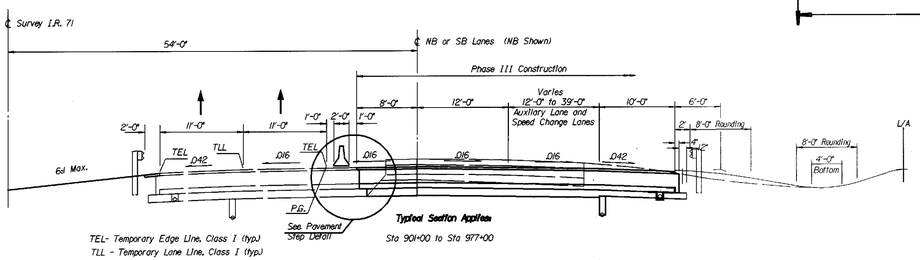

Part II
Phase IIIC
Subphase 1

For further details see std. dwg MT98.13M

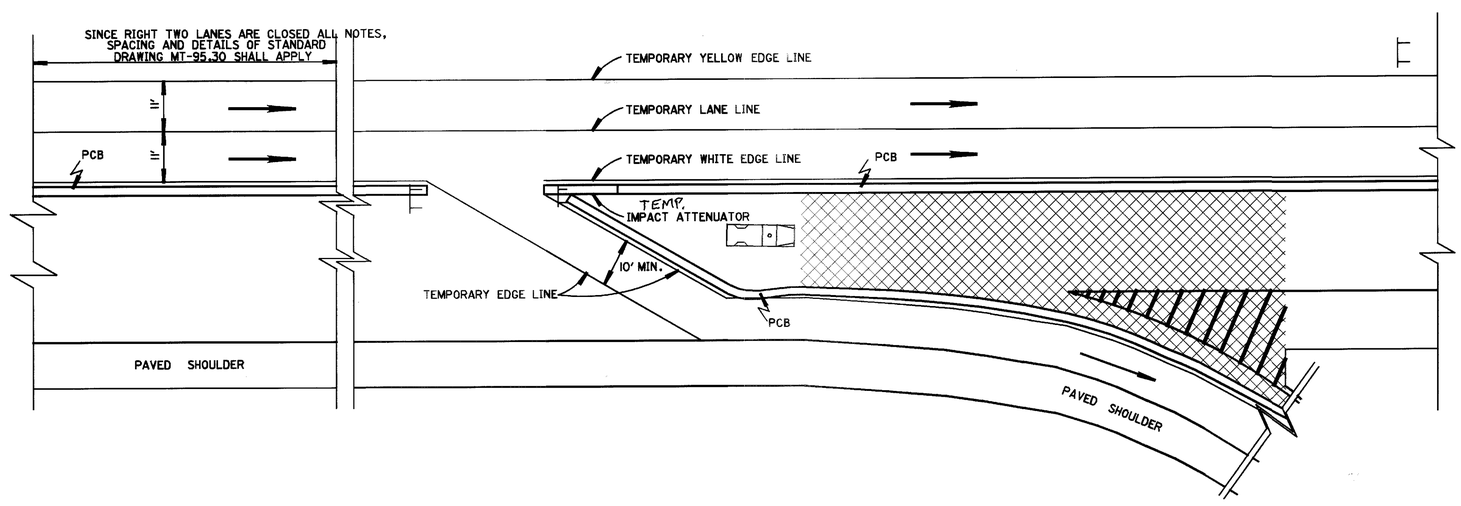

Part II
Phase IIIC
Subphase 2

For further details see std. dwg MT98.14M

CALCULATED | CHECKED

MOT EXIT RAMP DETAIL

MED-71-15.78

DATE : 07-DEC-1999
TIME : 08:35
DESIGN FILE : i:\pdn_MED_IR71\DGN\MOT\rampxover.dgn
USERNAME : ptought

SHEET NUMBER															ITEM	ITEM EXT.	GRAND TOTAL	UNIT	DESCRIPTION	SEE SHEET NO.
	31	32	34	35	76A	93	134	135	136	137	375	421	501	672	217						
																			ROADWAY	
															201	11001	LUMP		CLEARING AND GRUBBING, AS PER PLAN	34
											152				202	22900	152	SQ YD	APPROACH SLAB REMOVED	
								354,907				8,140			202	23000	363,047	SQ YD	PAVEMENT REMOVED	
										11,217					400	202	23500	11,617	SQ YD	WEARING COURSE REMOVED	
								3,019		3,150						202	32000	6,169	LIN FT	CURB REMOVED	
						2,801										202	35100	2,801	LIN FT	PIPE REMOVED, 24" AND UNDER	
					37,145						713	1,000				202	38000	38,858	LIN FT	GUARDRAIL REMOVED	
					1,056											202	38300	1,056	LIN FT	GUARDRAIL REMOVED, BARRIER DESIGN	
					130											202	42000	130	EACH	ANCHOR ASSEMBLY REMOVED, TYPE A	33
		2,017														202	54100	2,017	EACH	RAISED PAVEMENT MARKER REMOVED FOR STORAGE	
						1										202	58000	1	EACH	MANHOLE REMOVED	
						18										202	58100	18	EACH	CATCH BASIN REMOVED	
						3										202	58501	3	EACH	CATCH BASIN ABANDONED, AS PER PLAN	32
						375										SPECIAL	20270000	375	LIN FT	FILL AND PLUG EXISTING CONDUIT	34
			1,200													SPECIAL	20270100	1,200	LIN FT	PIPE CLEANOUT	34
	500	23,438						2,420	387,841	150	1,282	10,756				203	12000	426,387	CU YD	EXCAVATION NOT INCLUDING EMBANKMENT CONSTRUCTION	
									166,442		1,166	434				203	20000	168,042	CU YD	EMBANKMENT	
	17															203	45000	17	HOUR	PROOF ROLLING	31
							758,483	9,996			1,981	8,507	426			203	50000	779,393	SQ YD	SUBGRADE COMPACTION	
				500		970										203	55000	1,470	LIN FT	DITCH CLEANOUT	35
								11								203	60000	11	STATION	LINEAR GRADING	
	29															604	40501	29	EACH	REFERENCE MONUMENT, AS PER PLAN	31
														1,756		SPECIAL	60610200	1,756	SQ FT	NOISE BARRIER (REFLECTIVE), 10' HEIGHT AND UNDER	673
														12,552		SPECIAL	60610210	12,552	SQ FT	NOISE BARRIER (REFLECTIVE), OVER 10' TO 14' HEIGHT	673
														112,272		SPECIAL	60610220	112,272	SQ FT	NOISE BARRIER (REFLECTIVE), OVER 14' TO 20' HEIGHT	673
					54,909.98						875.00	562.50				606	13000	56,347.48	LIN FT	GUARDRAIL, TYPE 5	
												200.00				606	13050	200.00	LIN FT	GUARDRAIL, TYPE 5A	
					468.75											606	14000	468.75	LIN FT	GUARDRAIL, TYPE 8	
					1650.00											606	15500	1650.00	LIN FT	GUARDRAIL, BARRIER DESIGN, TYPE 5	
					45							2				606	22000	47	EACH	ANCHOR ASSEMBLY, TYPE B-98	33
					29											606	22010	29	EACH	ANCHOR ASSEMBLY, TYPE E-98	33
											2					606	25000	2	EACH	ANCHOR ASSEMBLY, TYPE A	
					69						2	2				606	26500	73	EACH	ANCHOR ASSEMBLY, TYPE T	
					64						4					606	35000	68	EACH	BRIDGE TERMINAL ASSEMBLY, TYPE 1	
					23											606	60010	23	EACH	IMPACT ATTENUATOR, TYPE 1-98 (BIDIRECTIONAL)	33
					4											606	60025	4	EACH	IMPACT ATTENUATOR, TYPE 2-98 (BIDIRECTIONAL), AS PER PLAN MODEL * QS2406Y	34
		68,428														607	15001	68,428	LIN FT	FENCE, TYPE 47, AS PER PLAN	32
		1,878														607	15101	1,878	LIN FT	FENCE, TYPE 47RA, AS PER PLAN	32
		37,082														607	23001	37,082	LIN FT	FENCE, TYPE CLT, AS PER PLAN	32
					27							24				620	10300	51	EACH	DELINEATOR, TYPE C, POST MOUNTED	
					2							3				620	15300	5	EACH	DELINEATOR, TYPE D, POST MOUNTED	
					564											622	23300	564	LIN FT	CONCRETE BARRIER, TYPE A	
					1,075 1											622	24000	1,071	LIN FT	CONCRETE BARRIER, TYPE D	
			LUMP													SPECIAL	69071000	LUMP		ASBESTOS ABATEMENT	34

CALCULATED

CHECKED

GENERAL SUMMARY

MED-71-15.78

68
940

DESIGN FILE : i:\pd_MED_IR71\DGN\GenSummary\med71gg.dgn
USERNAME : jrogers

DATE : 30-DEC-1999
TIME : 14:34

SHEET NUMBER																ITEM	ITEM EXT.	GRAND TOTAL	UNIT	DESCRIPTION	SEE SHEET NO.
				32		93	95		128		136	137		171							
																				EROSION CONTROL	
						882										601	11000	882	SQ YD	RIPRAP USING 6" REINFORCED CONCRETE SLAB	
									2,116							601	11001	2,116	SQ YD	RIPRAP USING 6" REINFORCED CONCRETE SLAB, AS PER PLAN	35
						908										601	32000	908	CU YD	ROCK CHANNEL PROTECTION, TYPE A WITH FILTER	
				50		1,091										601	32100	1,141	CU YD	ROCK CHANNEL PROTECTION, TYPE B WITH FILTER	
						208										601	32200	208	CU YD	ROCK CHANNEL PROTECTION, TYPE C WITH FILTER	
				12,000												601	34200	12,000	CU YD	ROCK CHANNEL PROTECTION, TYPE C WITHOUT FILTER	
							12,500					1,550				670	40000	14,050	SQ YD	DITCH EROSION PROTECTION	
				740,379												870	10000	740,379	SQ YD	SEEDING AND MULCHING	
				37,000												870	14000	37,000	SQ YD	REPAIR SEEDING AND MULCHING	
				31.60							66.63					870	20000	98.23	TON	COMMERCIAL FERTILIZER	
				1,919												870	35000	1,919	M GAL	WATER	
				1,996												870	40000	1,996	M SQ FT	MOWING	
				148,000												877	10000	148,000	SQ YD	TEMPORARY SEEDING AND MULCHING	
				35,725										71,450		877	30100	107,175	LIN FT	TEMPORARY PERIMETER FILTER FABRIC FENCE	
				2,484										4,968		877	30200	7,452	LIN FT	TEMPORARY DITCH CHECK FILTER FABRIC FENCE	
				1,720										3,441		877	30300	5,161	LIN FT	TEMPORARY INLET PROTECTION FILTER FABRIC FENCE	
				3,830												877	40000	3,830	LIN FT	TEMPORARY SLOPE DRAINS	
				40,870												877	50000	40,870	CU YD	TEMPORARY SEDIMENT BASINS AND DAMS	
				7,660												877	55000	7,660	CU YD	TEMPORARY DIKES	
				3,500												877	55500	3,500	SQ YD	TEMPORARY DITCH PROTECTION	
				10,218												877	60000	10,218	CU YD	SEDIMENT REMOVAL	

CALCULATED NJW CHECKED

GENERAL SUMMARY

MED-71-15.78

69
940

DESIGN FILE : h:\od_med_lr-7\dgn\gensummary\med7gga.dgn
USERNAME : nvondero
DATE : 09-DEC-1999
TIME : 12:49

SHEET NUMBER																ITEM	ITEM EXT.	GRAND TOTAL	UNIT	DESCRIPTION	SEE SHEET NO.
				35		93	94	95	128		137		551	553							
																				DRAINAGE	
				200		168										519	11100	368	SQ FT	PATCHING CONCRETE STRUCTURE	
						183.4										602	20000	183.4	CU YD	CONCRETE MASONRY	
									8.3							602	20001	8.3	CU YD	CONCRETE MASONRY, AS PER PLAN	36
									508							603	00100	508	LIN FT	4" CONDUIT, TYPE B, 707.33 OR 707.41	
													240	80		603	00400	320	LIN FT	4" CONDUIT, TYPE E	
									10,099							603	00406	10,099	LIN FT	4" CONDUIT, TYPE F, 707.33 OR 707.41	
									5,124							603	00900	5,124	LIN FT	6" CONDUIT, TYPE B, 707.33 OR 707.41	
											40					603	01500	40	LIN FT	6" CONDUIT, TYPE F	
									4,435							603	01500	4,435	LIN FT	6" CONDUIT, TYPE F, 707.33 OR 707.41	
						100										603	05100	100	LIN FT	12" CONDUIT, TYPE E	
						135										603	05900	135	LIN FT	15" CONDUIT, TYPE B	
						3,486										603	06100	3,486	LIN FT	15" CONDUIT, TYPE C	
						898										603	06700	898	LIN FT	15" CONDUIT, TYPE F, 707.05, TYPE C	
							155									603	07400	155	LIN FT	18" CONDUIT, TYPE B	
							1,708									603	07600	1,708	LIN FT	18" CONDUIT, TYPE C	
							28									603	07600	28	LIN FT	18" CONDUIT, TYPE C, 706.02	
							1,309									603	10600	1,309	LIN FT	24" CONDUIT, TYPE C	
							116									603	10600	116	LIN FT	24" CONDUIT, TYPE C, 706.02	
							140									603	11200	140	LIN FT	24" CONDUIT, TYPE F, 707.05, TYPE C	
							64									603	13600	64	LIN FT	30" CONDUIT, TYPE C	
							119									603	13600	119	LIN FT	30" CONDUIT, TYPE C, 706.02	
							8									603	13600	8	LIN FT	30" CONDUIT, TYPE C, 707.01, ALUMINUM COATED	
							192									603	14200	192	LIN FT	30" CONDUIT, TYPE F, 707.05, TYPE C	
							124									603	16600	124	LIN FT	36" CONDUIT, TYPE C	
							16									603	16600	16	LIN FT	36" CONDUIT, TYPE C, 707.01, ALUMINUM COATED	
							4									603	19600	4	LIN FT	42" CONDUIT, TYPE C	
							39									603	19600	39	LIN FT	42" CONDUIT, TYPE C, 706.02	
							20									603	19600	20	LIN FT	42" CONDUIT, TYPE C, 707.01, ALUMINUM COATED	
							48									603	22601	48	LIN FT	54" CONDUIT, TYPE C, AS PER PLAN	35
								6								603	26000	6	LIN FT	72" CONDUIT, TYPE A, 706.02	
								6								603	28000	6	LIN FT	84" CONDUIT, TYPE A, 706.02	
							128									603	96600	128	LIN FT	CONDUIT, BORED OR JACKED: 48" CONDUIT, TYPE A, 706.02, 3000 D-LOAD	
								398								603	98300	398	LIN FT	CONDUIT, MISC.: INSITU LINER	36
								2								604	00400	2	EACH	CATCH BASIN, NO. 3	
								35								604	00800	35	EACH	CATCH BASIN, NO. 3A	
								66								604	01201	66	EACH	CATCH BASIN, NO. 4, AS PER PLAN	32
								7								604	01401	7	EACH	CATCH BASIN, NO. 4A, AS PER PLAN	32
								19								604	01601	19	EACH	CATCH BASIN, NO. 5, AS PER PLAN	32
								7								604	01801	7	EACH	CATCH BASIN, NO. 5A, AS PER PLAN	32
								4								604	04500	4	EACH	CATCH BASIN, NO. 2-2B	
								1								604	05301	1	EACH	CATCH BASIN, NO. 2-4, AS PER PLAN	36
								4								604	09500	4	EACH	CATCH BASIN RECONSTRUCTED TO GRADE	
								20								604	31500	20	EACH	MANHOLE, NO. 3	
								1								604	35500	1	EACH	MANHOLE RECONSTRUCTED TO GRADE	

CALCULATED NJV
CHECKED

GENERAL SUMMARY

MED-71-15.78

70
940

DESIGN FILE : i:\pd_med_lr7i\dgn\gensummary\med7igg.dgn
USERNAME : nvonderle
DATE : 09-DEC-1999
TIME : 12:50

SHEET NUMBER																ITEM	ITEM EXT.	GRAND TOTAL	UNIT	DESCRIPTION	SEE SHEET NO.
								96		128		137		375							
																				DRAINAGE (CONTINUED)	
										214,012						605	05111	214,012	LIN FT	4" SHALLOW PIPE UNDERDRAIN WITH FABRIC WRAP,	
																				AS PER PLAN, 707.31 OR 707.41	35
										7,592						605	05111	7,592	LIN FT	4" SHALLOW PIPE UNDERDRAIN WITH FABRIC WRAP,	
																				AS PER PLAN, 707.33 OR 707.41	35
										1,506						605	05211	1,506	LIN FT	4" UNCLASSIFIED PIPE UNDERDRAIN WITH FABRIC	
																				WRAP, AS PER PLAN, 707.31 OR 707.41	538
												52				605	11100	52	LIN FT	6" SHALLOW PIPE UNDERDRAIN, 707.31 OR 707.41	
										213,151						605	11110	213,151	LIN FT	6" SHALLOW PIPE UNDERDRAIN WITH FABRIC WRAP,	
																				707.31 OR 707.41	
										2,155						605	13410	2,155	LIN FT	6" UNCLASSIFIED PIPE UNDERDRAIN WITH FABRIC	
																				WRAP, 707.31 OR 707.41	
										3,808						605	13510	3,808	LIN FT	6" ROCK CUT UNDERDRAIN WITH FABRIC WRAP,	
																				707.33 OR 707.41	
														133		605	31100	133	LIN FT	AGGREGATE DRAIN	
								286								837	10000	286	LIN FT	LINER PIPE, 24" ASTM F894 OR LINER PIPE, 24" 707.12	
																				OR LINER PIPE, 24" 707.42 OR LINER PIPE, 26.278" SS937	
								858								837	10000	858	LIN FT	LINER PIPE, 27" ASTM F894 WITH 33" (MIN.) INLET OPENING	
																				OR LINER PIPE, 30" 707.12 WITH 33" (MIN.) INLET OPENING	
																				OR LINER PIPE, 30" 707.42 WITH 33" (MIN.) INLET OPENING	
																				OR LINER PIPE, 30.03" SS937 WITH 33" (MIN.) INLET OPENING	
								206								837	10000	206	LIN FT	LINER PIPE, 27" ASTM F894 WITH 36" (MIN.) INLET OPENING	
																				OR LINER PIPE, 30" 707.12 WITH 36" (MIN.) INLET OPENING	
																				OR LINER PIPE, 30" 707.42 WITH 36" (MIN.) INLET OPENING	
																				OR LINER PIPE, 30.03" SS937 WITH 36" (MIN.) INLET OPENING	
								212								837	10000	212	LIN FT	LINER PIPE, 33" ASTM F894 WITH 36" (MIN.) INLET OPENING	
																				OR LINER PIPE, 36" 707.12 OR 36" LINER PIPE, 707.42	
																				OR LINER PIPE, 33.784" SS937 WITH 36" (MIN.) INLET OPENING	
								384								837	10000	384	LIN FT	LINER PIPE, 36" 707.12	
								296								837	10000	296	LIN FT	LINER PIPE, 36" 707.12 WITH 39" (MIN.) INLET OPENING .	
								624								837	10000	624	LIN FT	LINER PIPE, 36" ASTM F894 WITH 42" (MIN.) INLET OPENING	
																				OR LINER PIPE, 42" 707.12	
																				OR LINER PIPE, 36" 707.42 WITH 42" (MIN.) INLET OPENING	
																				OR LINER PIPE, 39.416" SS937 WITH 42" (MIN.) INLET OPENING	
								230								837	10000	230	LIN FT	LINER PIPE, 60" ASTM F894 OR LINER PIPE, 66" 707.12	
								998								837	20000	998	CU YD	BACKFILL FOR LINER PIPE	

CALCULATED NJV CHECKED 9-99

GENERAL SUMMARY

MED-71-15.78

71
940

DESIGN FILE : i:\od_med_lr7i\dgn\gensummary\med7lgg.dgn
USERNAME : nvonderge

DATE : 09-DEC-1999
TIME : 12:50

SHEET NUMBER															ITEM	ITEM EXT.	GRAND TOTAL	UNIT	DESCRIPTION	SEE SHEET NO.
	31	32	36		134	135	137	217	375	421	484	501	502	672						
																			PAVEMENT	
					29,930				772	106					254	01000	30,808	SQ YD	PAVEMENT PLANING, BITUMINOUS	
							546								255	10100	546	SQ YD	FULL DEPTH PAVEMENT REMOVAL AND RIGID	
																			REPLACEMENT, CLASS **FS**	
							1,568								255	20000	1,568	LIN FT	FULL DEPTH PAVEMENT SAWING	
						406			417						301	46000	**823**	CU YD	BITUMINOUS AGGREGATE BASE, PG64-22	
					5028							161			302	46000	**5189**	CU YD	BITUMINOUS AGGREGATE BASE, PG64-22	
	500	23,160			132,519	1,722			353	2,258		83			304	20000	160,595	CU YD	AGGREGATE BASE	
					~~7374~~	244		40	20	11		43			407	10000	**7732**	GALLON	TACK COAT	
					3737	122			97			21			407	14000	**3977**	GALLON	TACK COAT FOR INTERMEDIATE COURSE	
					302,062	974			462	4,499		171			408	10000	308,168	GALLON	BITUMINOUS PRIME COAT	
						118			94						448	46050	212	CU YD	ASPHALT CONCRETE INTERMEDIATE COURSE, TYPE 2, PG64-22	
						85			67						448	47020	152	CU YD	ASPHALT CONCRETE SURFACE COURSE, TYPE 1, PG64-22	
								17							**448**	**50000**	17	**CU YD**	**ASPHALT CONCRETE SURFACE COURSE TYPE 1H**	
						1,891									451	14000	1,891	SQ YD	9" REINFORCED CONCRETE PAVEMENT	
							52								SPECIAL	45130000	52	LIN FT	PRESSURE RELIEF JOINT, TYPE A	34
					2,817										452	14100	2,817	SQ YD	11" PLAIN CONCRETE PAVEMENT	
					887										452	14100	887	SQ YD	11" PLAIN CONCRETE PAVEMENT, TYPE FS	
					430										611	10000	430	SQ YD	REINFORCED CONCRETE APPROACH SLAB (T=12")	
					4,251				191						611	25000	4,442	SQ YD	REINFORCED CONCRETE APPROACH SLAB (T=15")	
									9						617	10100	9	CU YD	COMPACTED AGGREGATE, TYPE A	
														1,028	617	11101	1,028	TON	COMPACTED AGGREGATE, AS PER PLAN	674
														5,275	617	20001	5,275	SQ YD	SHOULDER PREPARATION, AS PER PLAN	674
									135						617	25000	135	M GAL	WATER	
													124,298		618	40100	124,298	LIN FT	RUMBLE STRIPS, TYPE 2 (ASPHALT)	
													74,618		618	40101	74,618	LIN FT	RUMBLE STRIPS, TYPE 2 (ASPHALT), AS PER PLAN	502
			50		303	3,019	398		58						830	26001	3,828	LIN FT	CURB, TYPE 6 , AS PER PLAN	506
											580				830	72000	580	SQ YD	CONCRETE MEDIAN	
					767,610					11,748					855	10000	779,358	SQ YD	4" ASPHALT TREATED FREE DRAINING BASE	
					3053							18			858	10000	**3071**	CU YD	ASPHALT CONCRETE SURFACE COURSE, 12.5MM, TYPE A (446)	
					3560							21			858	10100	**3581**	CU YD	ASPHALT CONCRETE INTERMEDIATE COURSE, 19MM, TYPE A (446)	
					278661					4992					**880**	15000	283653	CU YD	ASPHALT CONCRETE (7 YEAR WARRANTY)	
																			LIGHTING	
																			FOR LIGHTING GENERAL SUMMARY	609-610

CALCULATED MJW
CHECKED JMR

GENERAL SUMMARY

MED-71-15.78

DESIGN FILE : i:\pd_med_1r71\dgn\gensummary\med71gg.dgn
USERNAME : nvondere
DATE : 09-DEC-1999
TIME : 12:50

SHEET NUMBER 32	76A	375	421	551	553	560	ITEM	ITEM EXT.	GRAND TOTAL	UNIT	DESCRIPTION	SEE SHEET NO.
											TRAFFIC CONTROL	
						378	620	10300	378	EACH	DELINEATOR, TYPE C, POST MOUNTED	
						106	620	15300	106	EACH	DELINEATOR, TYPE D, POST MOUNTED	
		9	59			1,490	621	00100	1,558	EACH	RAISED PAVEMENT MARKER	
				3			625	29901	3	EACH	JUNCTION BOX, AS PER PLAN	551
				3	1		625	30706	4	EACH	PULL BOX, 713.08, 24"	
	651		20				626	00100	671	EACH	BARRIER REFLECTOR, TYPE A	
	59						626	00200	59	EACH	BARRIER REFLECTOR, TYPE B	
				36	16		632	26501	52	EACH	DETECTOR LOOP, AS PER PLAN	551
					1		632	63000	1	EACH	PHONE DROP	
					1		632	64020	1	EACH	PEDESTAL FOUNDATION	
				4,290	3,040		632	65200	7,330	LIN FT	LOOP DETECTOR LEAD-IN CABLE	
					1		632	89800	1	EACH	PEDESTAL, 3', TRANSFORMER BASE	
					8		632	90400	8	EACH	SIGNALIZATION, MISC.: PIEZOCABLE AXLE SENSOR CLASS 2 (11' IN LENGTH)	
					1		633	65001	1	EACH	CABINET WITHOUT CONTROLLER, AS PER PLAN	554
					12		633	70500	12	SQ FT	CONTROLLER WORK PAD	
					1		633	99000	1	EACH	CONTROLLER ITEM, MISC.: SOLAR PANEL	
2							SPECIAL	64240000	2	EACH	AIR SPEED ZONE MARKING	32
		57				199	644	00500	256	LIN FT	STOP LINE	
						361	644	00600	361	LIN FT	CROSSWALK LINE	
						3,725	644	00700	3,725	LIN FT	TRANSVERSE LINE	
						2,250	644	01200	2,250	LIN FT	PARKING LOT STALL MARKING	
						13	644	01300	13	EACH	LANE ARROW	
						7	644	01410	7	EACH	WORD ON PAVEMENT, 96"	
						4	644	01600	4	EACH	HANDICAP SYMBOL MARKING	
											FOR ADDITIONAL TRAFFIC CONTROL QUANTITIES	562-563
		0.32	0.96			51.05	887	20000	52.33	MILE	EDGE LINE (5 YEAR WARRANTY)	
			0.48			30.77	887	22000	31.25	MILE	LANE LINE (5 YEAR WARRANTY)	
		0.15				0.68	887	24000	0.83	MILE	CENTER LINE (5 YEAR WARRANTY)	
						6945	887	26000	6945	LIN.FT.	CHANNELIZING LINE (5 YEAR WARRANTY)	

CALCULATED [signature] CHECKED [signature]

GENERAL SUMMARY

MED-71-15.78

REV. 2-22-00

DATE : 09-DEC-1999
TIME : 12:51
DESIGN FILE : i:\pd_med_ir71\dgn\gensummary\med71gg.dgn
USERNAME : nvondere

SHEET NUMBER	ITEM	ITEM EXT.	GRAND TOTAL	UNIT	DESCRIPTION	SEE SHEET NO.
					LANDSCAPING	
241	661	40080	241	EACH	DECIDUOUS TREE, 2" CALIPER, FRAXINUS AMERICANA (JUNGINER) B&B 24" MIN.	
241	661	40080	241	EACH	DECIDUOUS TREE, 2" CALIPER, ACER SACCHARUM (COMMEMORATION) B&B 16" MIN.	
241	661	40080	241	EACH	DECIDUOUS TREE, 2" CALIPER, PLATANUS X ACERIFOLICA (BLOODGOOD) B&B 16" MIN.	
241	661	40080	241	EACH	DECIDUOUS TREE, 2" CALIPER, QUERCUS RUBRA B&B 20" MIN.	
241	661	40080	241	EACH	DECIDUOUS TREE, 2" CALIPER, QUERCUS PALUSTRIS B&B 20" MIN.	
670	661	50140	670	EACH	EVERGREEN TREE, 7' HEIGHT, PICEA ABIES B&B 24" MIN.	
40	662	30000	40	M GAL	LANDSCAPE WATERING	
					STRUCTURES OVER 20' SPAN	
					FOR MED-71-1685 L&R over SR 18 QUANTITIES	688
					FOR MED-71-1828 Granger Road over IR 71 QUANTITIES	722
					FOR MED-71-1870 L&R over IR 271 QUANTITIES	738
					FOR MED-71-1918 L&R over Wilbur Road QUANTITIES	779
					FOR MED-71-1992 L&R over Rocky River QUANTITIES	800
					FOR MED-71-2088E Ramp B at SR 3 over Plum Creek QUANTITIES	822
					FOR MED-71-2090 L&R over SR 3 QUANTITIES	838
					FOR MED-71-2092W Ramp C at SR 3 over Plum Creek QUANTITIES	869
					FOR MED-71-2402 L&R over SR 303 QUANTITIES LT.	888
					RT.	907
					FOR MAINTENANCE OF TRAFFIC GENERAL SUMMARY	46
614	11000	LUMP			MAINTAINING TRAFFIC	
623	10000	LUMP			CONSTRUCTION LAYOUT STAKES	
624	10000	LUMP			MOBILIZATION	
806	16020	42		MONTH	FIELD OFFICE, TYPE C	

CALCULATED AMW CHECKED

GENERAL SUMMARY

MED-71-15.78

REV. 2-22-00

REFERENCE NO.	LOCATION (Station)		SIDE	202			606														620		622		626	
				Guardrail Removed	Guardrail Removed, Barrier Design	Anchor Assembly Removed, Type A	Bridge Terminal Assembly Type 1	Guardrail, Type 5					Guardrail, Barrier Design, Type 5	Guardrail, Type 8	Anchor Assembly, Type B-98	Anchor Assembly, Type E-98	Anchor Assembly, Type T	Impact Attenuator, Type 1-98 (Bidirectional)	Impact Attenuator, Type 2-98 (Bidirectional) as per plan		Delineator Type		Concrete Barrier Type D	Concrete Barrier Type A	Barrier Reflectors, Type A	Barrier Reflectors, Type B
								STRAIGHT	24' RADIUS	25' RADIUS	30' RADIUS	50' RADIUS									C	D				
	FROM	TO		LIN. FT.	LIN. FT.	EACH	EACH	LIN. FT.	LIN. FT.	LIN. FT.	LIN. FT.	LIN. FT.	LIN. FT.	LIN. FT.	EACH	EACH	EACH	EACH	EACH	EACH			LIN. FT.	LIN. FT.	EACH	EACH
1-G	829+30.28	833+50	MEDIAN	400		1	1	282.25					75					1							3	
2-G	831+00	859+00	MEDIAN					2750.0							1		1								28	
3-G	847+75	857+50	RIGHT	437.5		1		912.5							1		1								10	
4-G	852+40	857+40	LEFT	250		2		450							1		1								5	
5-G	864+87.5	21+50	LEFT	168.75		2		1812.5								1	1				1				19	
6-G	884+53.44	888+97.19	LEFT	412.5		1	1	431.25									1								5	
7-G	886+40.23	889+27.48	MEDIAN	275	81.25	1	1	181.25					75					1							3	
8-G	885+21.31	889+46.13	RIGHT	362.5		1	1	393.75							1										5	
9-G	891+16.59	897+36.44	LEFT	375		1	1	581.25							1										7	
10-G	891+24.12	894+11.37	MEDIAN	225	75	1	1	181.25					75					1							3	
11-G	891+54.40	896+98.15	RIGHT	475		1	1	531.25									1								6	
12-G	6+29	916+50	LEFT	1262.5		1		2125								1	1				1				22	
13-G	947+39.8	948+89.8	RIGHT	337.5		2		100							1		1								2	
14-G	904+50	937+62.5	RIGHT	3311.25		2	2	3200								1	1				1		48		33	2
15-G	927+12.5	938+12.5	LEFT	462.5		2		105.0							1		1								9	
16-G	930+40.5	934+92	RIGHT	400		2																				
17-G	943+50	960+00	LEFT	1112.5		2		1600								1	1				1				17	
18-G	963+88.12	966+14.66	LEFT	175		2																				
19-G	963+16.75	965+11.6	MEDIAN	350	50	2		75					75				1	1							2	
19-G1	964+47.4	966+40.75	MEDIAN					75					75				1	1							2	
20-G	963+44.08	975+67.73	RIGHT	175		2																				
21-G	974+26.27	975+69.5	RIGHT	237.5		4																				
22-G	969+63.5	971+02.6	RIGHT					112.5							1		1								2	
23-G	988+92.98	1012+42.46	RIGHT	1845		1	2	2342.07																	24	
24-G	984+94.68	987+00.93	RIGHT	343.75		1	1	156.25								1					1				3	
25-G	983+78.34	986+65.59	MEDIAN	150	50	1	1	181.25										1							3	
26-G	988+04.9	1012+67.75	LEFT	2075		1	2	2459.66																	25	
27-G	988+39.72	991+24.87	MEDIAN	150	50	1	1	181.25					75					1							3	
28-G	1009+61.55	1012+48.80	MEDIAN	150	50	1	1	181.25					75					1							3	
29-G	1013+59.68	1016+59.68	LEFT	100		1	1	256.25							1										3	
30-G	1010+92.46	1012+42.46	RIGHT	125																						
31-G	1013+52.95	1016+90.20	MEDIAN	150	50	1	1	181.25					75					1							3	
32-G	1045+52.58	1051+33.83	RIGHT	437.5		1	1	531.25								1					1				6	
33-G	1050+20.30	1051+53.55	LEFT	75		1	1	118.75									1								3	
34-G	1048+53.36	1051+40.61	MEDIAN	150	50	1	1	181.25					75				1	1							3	
35-G	1053+61.07	1056+48.32	MEDIAN	150	50	1	1	181.25					75				1	1							3	
36-G	1053+67.85	1063+61.60	LEFT	825		1	1	943.75								1					1				10	
37-G	1053+49.90	1059+93.65	RIGHT	575		1	1	631.25									1								7	
38-G	1065+37.5	1067+00	RIGHT	300		2		112.5							1		1								3	
39-G	1072+11.23	1074+05.23	MEDIAN	350	50	2		75					75				2	2							2	
39-G1	1073+68.53	1075+62.53	MEDIAN					75					75												2	
40-G	1071+94.84	1074+90.74	RIGHT	150		2	1	100								1					1		44		2	3
41-G	1073+99.29	1075+80.19	LEFT	150		2	1	100								1					1		44		2	3
42-G	1077+62.50	1087+75	RIGHT	843.75		2		962.5							1		1								10	
43-G	1080+00	1087+00	LEFT	512.5		2		637.5								1	1				1				7	
44-G	1100+13.57	1103+00.82	MEDIAN	125	75	1	1	181.25					75					1							3	
45-G	79+11.65	81+61.65	LEFT	212.5		1	1	200								1					1				3	
46-G	77+56.58	81+56.58	RIGHT	212.5		1	1	200								1					1				3	
47-G	82+75.23	80+40.39	RT & LT	975			1	906.25	43.75		50					1					1				10	
48-G	82+65.94	84+46.15	RIGHT	181.25		1	1	256.25				50			1										3	
49-G	80+36.1	895+05.89	LEFT	150		2		62.5				75				1	1				1				3	
50-G	1098+96.23	1102+72.48	LEFT	343.75		1	1	368.75									1								4	
51-G	1096+86.7	1103+30.45	RIGHT	368.75		1	1	606.25							1										7	
52-G	1105+37.96	1108+81.71	LEFT	275		1	1	306.25							1										4	
53-G	1105+67.58	1108+54.83	MEDIAN	125	75	1	1	181.25					75					1							3	
54-G	1105+86.73	1108+67.98	RIGHT	250		1	1	268.75									1								4	
TOTALS CARRIED TO SHEET 76-A				21051.25	706.25	70	37	30026.48	43.75		50	125	1050		14	14	26	15		14		136		357	8

DESIGN FILE : i:\pd_MED_JR71\DGN\SubSummaries\gr71.dgn
USERNAME : jrogers
DATE : 30-DEC-1999
TIME : 14:37

CALCULATED
CHECKED

GUARDRAIL SUB-SUMMARY

MED-71-15.78

75
940

GUARDRAIL SUB-SUMMARY

CALCULATED | CHECKED

REFERENCE NO.	LOCATION (Station) FROM	LOCATION (Station) TO	SIDE	202 Guardrail Removed	202 Guardrail Removed, Barrier Design	202 Anchor Assembly Removed, Type A	606 Bridge Terminal Assembly Type 1	606 Guardrail, Type 5 STRAIGHT	606 Guardrail, Type 5 24' RADIUS	606 Guardrail, Type 5 25' RADIUS	606 Guardrail, Type 5 30' RADIUS	606 Guardrail, Type 5 50' RADIUS	606 Guardrail, Barrier Design, Type 5	606 Guardrail, Type 8	606 Anchor Assembly, Type B-98	606 Anchor Assembly, Type E-98	606 Anchor Assembly, Type T	606 Impact Attenuator, Type 1-98 (Bidirectional)	606 Impact Attenuator, Type 2-98 (Bidirectional) as per plan	620 Delineator Type C	620 Delineator Type D	622 Concrete Barrier Type D	622 Concrete Barrier Type A	626 Barrier Reflectors, Type A	626 Barrier Reflectors, Type B
				LIN. FT.	LIN. FT.	EACH	EACH	LIN. FT.	LIN. FT.	LIN. FT.	LIN. FT.	LIN. FT.	LIN. FT.	LIN. FT.	EACH	EACH	EACH	EACH		EACH	EACH	LIN. FT.	LIN. FT.	EACH	EACH
55-G	906+50	85+62	RIGHT	175		1		106.25				68.75				1	1			1				3	
56-G	898+65.03	85+33.29	LEFT	175		1		525		37.5						1	1			1				6	
57-G	84+35.19	1125+83.62	LEFT	1375		1	1	1968.75							1									20	
58-G	1114+10.13	1123+60.13	RIGHT	625		2		900							1		1							10	
59-G	1180+66.07	1183+82.97	RIGHT	150		2	1	281.25							1							44		3	3
60-G	1181+97	1185+99.92	MEDIAN	350	50	2		75					75				1	1						2	
60-GI	1183+39.42	1185+45.92	MEDIAN					75					75				1	1						2	
61-G	1183+60	1186+76.9	LEFT	150		2	1	281.25							1							44		3	3
62-G	1192+25	1207+68.75	LEFT	1137.5		2		1062.5						468.75			1							11	
63-G	78+00	84+25	RIGHT	562.5		2		562.5								1	1			1				6	
64-G	84+99.16	92+75	RIGHT	756.25		2		752								1	1				1			8	
65-G	1223+68.37	1225+74.87	MEDIAN	375	50	2		75					75				1	1						2	
65-GI	1225+16.5	1227+03	MEDIAN					75					75				1	1						2	
66-G	1222+04.8	1225+46.7	RIGHT	137.5		1	1	268.75							1		1					44		3	3
67-G	1225+50.4	1227+43	LEFT	225		2	1	218.75							1		1					44		3	3
68-G	1227+75	1231+50	RIGHT	106.25		1		325							1		1							4	
69-G	1236+86.2	1242+61.2	RIGHT	325		2		525							1		1							6	
70-G	1239+28.04	1245+53.04	LEFT	362.5		2		575							1		1							6	
71-G	1246+41.2	1254+91.2	RIGHT	475		2		800							1		1							9	
72-G	1251+93.96	45+52.8	LEFT	1450		2		1450							1									15	
73-G	1264+93.25	1268+08.27	LEFT	275		1	1	306.25									1							4	
74-G	1265+01.36	1267+86.45	MEDIAN	143.75	50	1	1	181.25					75					1						3	
75-G	39+15.08	1267+63.83	RIGHT	162.5		1	1	331.25								1								4	
76-G	1269+51.5	1279+91.71	RIGHT	1012.5		1	1	1025									1							11	
77-G	1269+82.60	1272+73.57	MEDIAN	143.75	50	1	1	181.25					75					1						3	
78-G	1269+98.86	1276+80.12	LEFT	637.5		1	1	643.75							1									7	
79-G	49+37.0	1315+26.7	LEFT	450		2	2	4337.5							1		1					48		45	3
80-G	1299+50	1313+00	RIGHT	1212.5		2		1300							1		1							14	
81-G	1175+85	1177+35	RIGHT					100							1		1							3	
82-G	1350+67.27	1354+16.92	RIGHT	193.75		2	1	268.75							1					1		44		3	3
83-G	1352+24	1354+30.5	MEDIAN	400	50	2		75					75				1	1						2	
83-GI	1353+69.5	1355+76	MEDIAN					75					75				1	1						2	
84-G	1353+85.84	1356+90.25	LEFT	162.5		2	1	231.5							1							44		3	3
85-G	48+20	54+48.3	RIGHT	250		1	2	350								1	1			1		220		4	4
86-G	1331+96	1333+46	LEFT					100							1		1							3	
87-G	1398+04.63	1408+35.88	LEFT				1	1018.75									1							11	
88-G	25+75	152+03	RIGHT	500		2																			
89-G	149+64	153+16.75	LEFT	300		2																			
90-G	1+55	155+31.35	LEFT	62.5		1		37.5				75				1	1			1				2	
91-G	48+10.33	51+67.21	RIGHT				2	162.5								2				2		93.5		3	3
92-G	48+05.75	51+57.55	LEFT				2	162.5								2				2		93.5		3	3
93-G	47+13	57+65	LEFT	325		2	2	737.5								2				2		216		8	4
94-G	47+11.5	57+61.05	RIGHT	150		1		112.5								1	1			1				3	
95-G	84+36.71	87+11.71	RIGHT				1	231.25								1					1			3	
96-G	869+45	871+07.5	MEDIAN					112.5							1		1							3	
97-G	869+45	871+07.5	RIGHT					112.5							1		1							3	
98-G	1065+38	1067+00	RIGHT					112.5							1		1							3	
99-G	1167+54.08	1267+91.68	LEFT				1	81.25									1							2	
100-G	1142+57	1144+07	LEFT					100							1		1							3	
101-G	1293+86	1295+48.5	LEFT					112.5							1		1							3	
102-G	1307+12.5	1308+75	LEFT					112.5							1		1							3	
103-G	989+70	902+48.8	℄SR 3	400	50	2													2				270.5	2	8
104-G	48+10	52+12.5	℄SR 303	400	50	2													2				293.5	2	8
105-G	984+98.2	985+91.95	LEFT				1	81.25									1							2	
TOTALS CARRIED TO SHEET 76-A				21156.25	350	60	27	23696		37.5		143.75	600	468.75	24	15	36	8	4	13	2	939	564	291	51

DESIGN FILE : i:\pd_MED_IR71\DGN\SubSummaries\gr71.dgn
USERNAME : jrogers
DATE : 30-DEC-1999
TIME : 14:37

MED-71-15.78

GUARDRAIL SUB-SUMMARY

CALCULATED | CHECKED

REFERENCE NO.	LOCATION (Station)		SIDE	202			606													620		622		626	
				Guardrail Removed	Guardrail Removed, Barrier Design	Anchor Assembly Removed, Type A	Bridge Terminal Assembly Type 1	Guardrail, Type 5					Guardrail, Barrier Design, Type 5	Guardrail, Type 8	Anchor Assembly, Type B-98	Anchor Assembly, Type E-98	Anchor Assembly, Type T	Impact Attenuator, Type 1-98 (Bidirectional)	Impact Attenuator, Type 2-98 (Bidirectional) as per plan	Delineator Type		Concrete Barrier Type D	Concrete Barrier Type A	Barrier Reflectors, Type A	Barrier Reflectors, Type B
								STRAIGHT	24' RADIUS	25' RADIUS	30' RADIUS	50' RADIUS								C	D				
	FROM	TO		LIN. FT.	LIN. FT.	EACH	EACH	LIN. FT.	LIN. FT.	LIN. FT.	LIN. FT.	LIN. FT.	LIN. FT.	LIN. FT.	EACH	EACH	EACH	EACH	EACH	EACH		LIN. FT.	LIN. FT.	EACH	EACH
106-G	943+66	85+62	RIGHT					112.5							1		1								
107-G	943+66	85+33.29	RIGHT					112.5							1		1								
108-G	969+63.5	1125+83.62	RIGHT					112.5							1		1								
109-G	953+55	1123+60.13	LEFT					112.5							1		1								
110-G	900+71.5	1183+82.97	LEFT					112.5							1		1								
111-G	927+14.5	1185+99.92	LEFT					112.5							1		1								
112-G	916+84	1185+45.92	RIGHT					112.5							1		1								
TOTALS THIS SHEET								787.5							7		7								
TOTALS FROM SHEET 75				21051.25	706.25	70	37	30026.48	43.75		50	125	1050		14	14	26	15		14		136		357	8
TOTALS FROM SHEET 76				21156.25	350	60	27 4	23696		37.5		143.75	600	468.75	24	15	36	8	4	13	2	939	564	291	51
SUB-TOTALS								54509.98	43.75	37.5	50	268.75													
TOTALS CARRIED TO GENERAL SUMMARY				42207.5	1056.25	130	64 4	54909.98					1650	468.75	45	29	69	23	4	27	2	1075	564	648	59

MED-71-15.78

76-A 940

DESIGN FILE : i:\pd_MED_IR71\DGN\SubSummaries\gr71.dgn
USERNAME : jrogers
DATE : 30-DEC-1999
TIME : 14:38

REFERENCE NO.	SHEET REFERENCE NO.	STATION	OFFSET	℄ REFERENCE	SIDE	STATION	OFFSET	℄ REFERENCE	SIDE	202 PIPE REMOVED 24", AND UNDER	202 CATCH BASIN REMOVED	202 CATCH BASIN ABANDONED	202 MANHOLE REMOVED	SPECIAL FILL AND PLUG EXISTING CONDUIT	203 DITCH CLEANOUT	519 PATCHING CONCRETE STRUCTURES	601 RIPRAP USING 6" REINFORCED CONCRETE SLAB	601 ROCK CHANNEL PROTECTION, TYPE A WITH FILTER	601 ROCK CHANNEL PROTECTION, TYPE B WITH FILTER	601 ROCK CHANNEL PROTECTION, TYPE C WITH FILTER	602 CONCRETE MASONRY	603 12" CONDUIT, TYPE E	603 15" CONDUIT, TYPE B	603 15" CONDUIT, TYPE C	603 15" CONDUIT, TYPE F 707.05 TYPE C			
										LIN. FT.	EACH	EACH	EACH	LIN. FT.	LIN. FT.	SQ. FT.	SQ. YD.	CU. YD.	CU. YD.	CU. YD.	CU. YD.	LIN. FT.	LIN. FT.	LIN. FT.	LIN. FT.			
1 - D	172	829 +95.00		CONST	CT.	833 +10.00		CONST	CL.																			
2 - D	172	833 +10.00		CONST	CL.	837 +20.00		CONST	CL.																			
3 - D	172	837 +20.00		CONST	CL.	839 +70.00		CONST	CL.																			
4 - D	173	839 +70.00		CONST	CL.	842 +20.00		CONST	CL.																			
5 - D	173	842 +20.00		CONST	CL.	842 +70.00		CONST	CL.															54				
6 - D	173	842 +70.00		CONST	CL.																							
7 - D	173	842 +20.00	95	CONST	RT.																			4				
8 - D	174	851 +25.00		CONST	RT.	853 +25.00		CONST	RT.							28	45.83		143.51									
9 - D	174	852 +70.00		CONST	CL.	855 +70.00		CONST	CL.		1													300				
10 - D	174	853 +65.00		CONST	LT.											120		60.09										
11 - D	174	855 +20.00		CONST	RT.											20												
12 - D	174	855 +70.00		CONST	CL.																							
13 - D	175	866 +30.00		CONST	CL.																			4				
14 - D	175	868 +50.00		CONST	RT.	869 +50.00		CONST	RT.								56.98		75.19									
1 - DR	172-173	833 +10.00		CONST	CL.	842 +20.00		CONST	LT.	930	2																	
2 - DR	174	852 +70.00		CONST	LT.	855 +70.00		CONST	LT.	300	1																	
3 - DR	175	874 +30.00		CONST	LT.					50	1																	
15 - D	175	874 +68.00		CONST	CL.																			4				
3A - DR	175	875 +90.00		CONST	LT.					50	1																	
4 - DR	176	877 +90.00		CONST	LT.					40	1																	
5 - DR	176	883 +10.00		CONST	RT.	883 +15.00		CONST	RT.	60	1																	
16 - D	176	884 +32.00		CONST	RT.												9.41				4.70							
17 - D	176	886 +18.00		CONST	LT.	889 +10.00		CONST	CL.															296				
18 - D	176	25 +30.00		SR18-RAMP A	RT.				LT.									40.00										
19 - D	176	25 +30.00		SR18-RAMP A	LT.	26+30.00		SR18-RAMP A	LT.						100													
20 - D	176-177	887 +60.00		CONST	LT.	888 +80.00		CONST	RT.						120		7.12	37.99										
21 - D	177	888 +81.49		CONST	LT.															2.00	0.27				49			
21A - D	177	889 +04.00		CONST	LT.	889 +10.00		CONST	CT.															18				
22 - D	177	888 +80.00		CONST	RT.	889 +20.00		CONST	RT.						80													
22A - D	177	889 +10.00		CONST	CL.																							
23 - D	177	889 +30.72		CONST	RT.															2.00	0.27				61			
23A - D	177	889 +11.79		CONST	RT.	889 +10.00		CONST	CL															18				
24 - D	177	19 +79.00		SR18-RAMP C	LT.				RT.								12.57	90.86										
25 - D	177	891 +70.00		CONST	CL.																			4				
26 - D	177	1 +32.00		SR18-RAMP D	RT.												78.46		11.78		25.10							
27 - D	177	896 +50.00		CONST	CL.																			4				
28 - D	177	897 +25.00		CONST	LT.	899 +68.00		CONST	RT.								41.61	26.53			6.00							
29 - D	178	902 +12.00		CONST	LT.	904 +30.00		CONST	RT.										28.76									
6 - DR	178	903 +0.00		CONST	RT.					65	1																	
30 - D	178	903 +25.00		CONST	RT.	905 +25.00		CONST	RT.								58.29			125.80								
31 - D	178	906 +65.00		CONST	CL.																			4				
32 - D	178-179	913 +00.00		CONST	LT.	915 +65.00		CONST	LT.									73.56	83.33		22.74							
33 - D	179	914 +65.00		CONST	CL.																			4				
34 - D	179	915 +65.00		CONST	RT.	917 +00.00		CONST	RT.								57.51		181.33									
35 - D	179	922 +25.00		CONST	CL.																			4				
36 - D	179	922 +00.00		CONST	LT.	922 +50.00		CONST	RT.										33.83		5.40							
37 - D	179	922 +50.00	138	CONST	RT.																							
38 - D	180	931 +68.00		CONST	CL.				LT.											2.00	0.27		22	4	68			
39 - D	180	932 +25.00		CONST	LT.	932 +60.00		CONST	RT.								93.28	62.81			8.82							
40 - D	181	944 +68.00		CONST	CL.				LT.											2.00	0.27			32				
41 - D	181	943 +45.00		CONST	RT.	944 +45.00		CONST	LT.								20.27		13.33		9.60							
41A - D	181	947 +50.00		CONST	LT.				RT.								14.44		77.78		6.60							
42 - D	182	952 +68.00		CONST	LT.				RT.								32.48	4.00			6.60							
TOTALS CARRIED TO SHEET 93										1495	9				300	168	528.25	395.84	648.84	133.80	96.64		22	754	178			

CALCULATED PS CHECKED WJC

DRAINAGE SUBSUMMARY

MED - 71 - 15.78

77
940

7885DS10.DGN 11/30/99 RB 1

DRAINAGE SUBSUMMARY

CALCULATED PS | CHECKED WJC

603

REFERENCE NO.	SHEET REFERENCE NO.	STATION	OFFSET	℄ REFERENCE	SIDE	STATION	OFFSET	℄ REFERENCE	SIDE	18" CONDUIT, TYPE B	18" CONDUIT, TYPE C	18" TYPE C, 706.02	24" CONDUIT, TYPE C	24" CONDUIT, TYPE C, 706.02	24" CONDUIT TYPE F, 707.05, TYPE C	30" CONDUIT, TYPE C	30" CONDUIT, TYPE C 706.02	30" CONDUIT, TYPE C, 707.01, ALUMINUM COATED	30" CONDUIT, TYPE F, 707.05, TYPE C	36" CONDUIT, TYPE C	36" CONDUIT, TYPE C, 707.01, ALUMINUM COATED	42" CONDUIT, TYPE C	42" CONDUIT, TYPE C, 706.02	42" CONDUIT, TYPE C, 707.01, ALUMINUM COATED	CONDUIT BORED OR JACKED 48" CONDUIT, TYPE A, 706.02, 3000 D-LOAD	54" CONDUIT, TYPE C, AS PER PLAN		
										LIN. FT.	LIN. FT.	LIN. FT.	LIN. FT.	LIN. FT.	LIN. FT.	LIN. FT.	LIN. FT.	LIN. FT.	LIN. FT.	LIN. FT.	LIN. FT.	LIN. FT.	LIN. FT.	LIN. FT.	LIN. FT.	LIN. FT.		
1 - D	172	829 +95.00		CONST	CT.	833 +10.00		CONST	CL.				315															
2 - D	172	833 +10.00		CONST	CL.	837 +20.00		CONST	CL.				410															
3 - D	172	837 +20.00		CONST	CL.	839 +70.00		CONST	CL.				250															
4 - D	173	839 +70.00		CONST	CL.	842 +20.00		CONST	CL.				250															
5 - D	173	842 +20.00		CONST	CL.	842 +70.00		CONST	CL.																			
6 - D	173	842 +70.00		CONST	CL.																							
7 - D	173	842 +20.00	95	CONST	RT.																							
8 - D	174	851 +25.00		CONST	RT.	853 +25.00		CONST	RT.																			
9 - D	174	852 +70.00		CONST	CL.	855 +70.00		CONST	CL.	12																		
10 - D	174	853 +65.00		CONST	LT.																							
11 - D	174	855 +20.00		CONST	RT.																							
12 - D	174	855 +70.00		CONST	CL.																							
13 - D	175	866 +30.00		CONST	CL.																							
14 - D	175	868 +50.00		CONST	RT.	869 +50.00		CONST	RT.																			
1 - DR	172-173	833 +10.00		CONST	CL.	842 +20.00		CONST	LT.																			
2 - DR	174	852 +70.00		CONST	LT.	855 +70.00		CONST	LT.																			
3 - DR	175	874 +30.00		CONST	LT.																							
15 - D	175	874 +68.00		CONST	CL.																							
3A - DR	175	875 +90.00		CONST	LT.																							
4 - DR	176	877 +90.00		CONST	LT.																							
5 - DR	176	883 +10.00		CONST	RT.	883 +15.00		CONST	RT.																			
16 - D	176	884 +32.00		CONST	RT.												16											
17 - D	176	886 +18.00		CONST	LT.	889 +10.00		CONST	CL.																			
18 - D	176	25 +30.00		SR18-RAMP A	RT.				LT.																			
19 - D	176	25 +30.00		SR18-RAMP A	LT.	26+30.00		SR18-RAMP A	LT.																			
20 - D	176-177	887 +60.00		CONST	LT.	888 +80.00		CONST	RT.																			
21 - D	177	888 +81.49		CONST	LT.																							
21A - D	177	889 +04.00		CONST	LT.	889 +10.00		CONST	CT.																			
22 - D	177	888 +80.00		CONST	RT.	889 +20.00		CONST	RT.																			
22A - D	177	889 +10.00		CONST	CL.																							
23 - D	177	889 +30.72		CONST	RT.																							
23A - D	177	889 +11.79		CONST	RT.	889 +10.00		CONST	CL																			
24 - D	177	19 +79.00		SR18-RAMP C	LT.				RT.																			
25 - D	177	891 +70.00		CONST	CL.																							
26 - D	177	1 +32.00		SR18-RAMP D	RT.																		15					
27 - D	177	896 +50.00		CONST	CL.																							
28 - D	177	897 +25.00		CONST	LT.	899 +68.00		CONST	RT.								16											
29 - D	178	902 +12.00		CONST	LT.	904 +30.00		CONST	RT.																			
6 - DR	178	903 +0.00		CONST	RT.																							
30 - D	178	903 +25.00		CONST	RT.	905 +25.00		CONST	RT.																			
31 - D	178	906 +65.00		CONST	CL.																							
32 - D	178-179	913 +00.00		CONST	LT.	915 +65.00		CONST	LT.																		48	
33 - D	179	914 +65.00		CONST	CL.																							
34 - D	179	915 +65.00		CONST	RT.	917 +00.00		CONST	RT.																			
35 - D	179	922 +25.00		CONST	CL.																							
36 - D	179	922 +00.00		CONST	LT.	922 +50.00		CONST	RT.											28								
37 - D	179	922 +50.00	138	CONST	RT.															24								
38 - D	180	931 +68.00		CONST	CL.				LT.																			
39 - D	180	932 +25.00		CONST	LT.	932 +60.00		CONST	RT.																20			
40 - D	181	944 +68.00		CONST	CL.				LT.																			
41 - D	181	943 +45.00		CONST	RT.	944 +45.00		CONST	LT.								44											
41A - D	181	947 +50.00		CONST	LT.				RT.					42														
42 - D	182	952 +68.00		CONST	LT.				RT.					46														
TOTALS CARRIED TO SHEET 94										12			1225	88			76			52			15	20		48		

MED - 71 - 15.78

78
940

7885DSILDGN 11/30/99 RB 2

REFERENCE NO.	SHEET REFERENCE NO.	STATION	OFFSET	℄ REFERENCE	SIDE	STATION	OFFSET	℄ REFERENCE	SIDE	603			604										670	BENDS					
										72" CONDUIT, TYPE A, 706.02	84" CONDUIT, TYPE A, 706.02	CONDUIT MISC. INSITU LINER	CATCH BASIN NO. 3	CATCH BASIN NO. 3A	CATCH BASIN NO. 4, AS PER PLAN	CATCH BASIN NO. 4A, AS PER PLAN	CATCH BASIN NO. 5, AS PER PLAN	CATCH BASIN NO. 5A, AS PER PLAN	CATCH BASIN NO. 2-2B	CATCH BASIN NO. 2-4, AS PER PLAN	CATCH BASIN RECONSTRUCTED TO GRADE	MANHOLE NO. 3	MANHOLE RECONSTRUCTED TO GRADE	DITCH EROSION PROTECTION	15" - 22.5°	15" - 30°	15" - 45°	24" - 30°		
										LIN. FT.	LIN. FT.	LIN. FT.	EACH	EACH	EACH	EACH	EACH	EACH	EACH	EACH	EACH	EACH	SQ. YD.	EACH					
1 - D	172	829 +95.00		CONST	CT.	833 +10.00		CONST	CL.																				
2 - D	172	833 +10.00		CONST	CL.	837 +20.00		CONST	CL.						1									125					
3 - D	172	837 +20.00		CONST	CL.	839 +70.00		CONST	CL.						1									125					
4 - D	173	839 +70.00		CONST	CL.	842 +20.00		CONST	CL.						1									125					
5 - D	173	842 +20.00		CONST	CL.	842 +70.00		CONST	CL.													1							
6 - D	173	842 +70.00		CONST	CL.										1									125					
7 - D	173	842 +20.00	95	CONST	RT.												1							125					
8 - D	174	851 +25.00		CONST	RT.	853 +25.00		CONST	RT.																				
9 - D	174	852 +70.00		CONST	CL.	855 +70.00		CONST	CL.						1									125					
10 - D	174	853 +65.00		CONST	LT.																								
11 - D	174	855 +20.00		CONST	RT.																								
12 - D	174	855 +70.00		CONST	CL.										1									125					
13 - D	175	866 +30.00		CONST	CL.										1									125					
14 - D	175	868 +50.00		CONST	RT.	869 +50.00		CONST	RT.																				
1 - DR	172-173	833 +10.00		CONST	CL.	842 +20.00		CONST	LT.																				
2 - DR	174	852 +70.00		CONST	LT.	855 +70.00		CONST	LT.																				
3 - DR	175	874 +30.00		CONST	LT.																								
15 - D	175	874 +68.00		CONST	CL.										1									125					
3A - DR	175	875 +90.00		CONST	LT.																								
4 - DR	176	877 +90.00		CONST	LT.																								
5 - DR	176	883 +10.00		CONST	RT.	883 +15.00		CONST	RT.																				
16 - D	176	884 +32.00		CONST	RT.																								
17 - D	176	886 +18.00		CONST	LT.	889 +10.00		CONST	CL.						1									125					
18 - D	176	25 +30.00		SR18-RAMP A	RT.				LT.																				
19 - D	176	25 +30.00		SR18-RAMP A	LT.	26+30.00		SR18-RAMP A	LT.																				
20 - D	176-177	887 +60.00		CONST	LT.	888 +80.00		CONST	RT.																				
21 - D	177	888 +81.49		CONST	LT.									1														2	
21A - D	177	889 +04.00		CONST	LT.	889 +10.00		CONST	CT.					1															
22 - D	177	888 +80.00		CONST	RT.	889 +20.00		CONST	RT.																				
22A - D	177	889 +10.00		CONST	CL.																	1							
23 - D	177	889 +30.72		CONST	RT.									1														2	
23A - D	177	889 +11.79		CONST	RT.	889 +10.00		CONST	CL					1															
24 - D	177	19 +79.00		SR18-RAMP C	LT.				RT.																				
25 - D	177	891 +70.00		CONST	CL.										1									125					
26 - D	177	1 +32.00		SR18-RAMP D	RT.																								
27 - D	177	896 +50.00		CONST	CL.										1									125					
28 - D	177	897 +25.00		CONST	LT.	899 +68.00		CONST	RT.																				
29 - D	178	902 +12.00		CONST	LT.	904 +30.00		CONST	RT.																				
6 - DR	178	903 +0.00		CONST	RT.																								
30 - D	178	903 +25.00		CONST	RT.	905 +25.00		CONST	RT.																				
31 - D	178	906 +65.00		CONST	CL.										1									125					
32 - D	178-179	913 +00.00		CONST	LT.	915 +65.00		CONST	LT.																				
33 - D	179	914 +65.00		CONST	CL.										1									125					
34 - D	179	915 +65.00		CONST	RT.	917 +00.00		CONST	RT.																				
35 - D	179	922 +25.00		CONST	CL.										1									125					
36 - D	179	922 +00.00		CONST	LT.	922 +50.00		CONST	RT.									1						125					
37 - D	179	922 +50.00	138	CONST	RT.														1								2		
38 - D	180	931 +68.00		CONST	CL.				LT.						1									125					
39 - D	180	932 +25.00		CONST	LT.	932 +60.00		CONST	RT.																				
40 - D	181	944 +68.00		CONST	CL.				LT.						1									125					
41 - D	181	943 +45.00		CONST	RT.	944 +45.00		CONST	LT.																				
41A - D	181	947 +50.00		CONST	LT.				RT.																				
42 - D	182	952 +68.00		CONST	LT.				RT.																				
TOTALS CARRIED TO SHEET 95														4	16		1	1		1		2		2250					

7885DS12.DGN 11/30/99 RB 3

CALCULATED PS CHECKED WJC

DRAINAGE SUBSUMMARY

MED - 71 - 15.78

DRAINAGE SUBSUMMARY

CALCULATED PS CHECKED WJC

MED - 71 - 15.78

80/940

REFERENCE NO.	SHEET REFERENCE NO.	STATION	OFFSET	℄ REFERENCE	SIDE	STATION	OFFSET	℄ REFERENCE	SIDE	SS837								
										24" LINER PIPE ASTM F894 OR 24" LINER PIPE, 707.12 OR 24" LINER PIPE, 707.42 OR 26.278" LINER PIPE SS937	27" LINER PIPE ASTM F894 WITH 33" (MIN.) INLET OPENING OR 30" LINER PIPE, 707.12 WITH 33" (MIN.) INLET OPENING 30" LINER PIPE, 707.42 WITH 33" (MIN.) INLET OPENING OR 30.03" LINER PIPE, SS937 WITH 33" (MIN.) INLET OPENING	27" LINER PIPE ASTM F894 WITH 36" (MIN.) INLET OPENING OR 30"LINER PIPE 707.12 WITH 36" (MIN.) INLET OPENING OR 30" LINER PIPE 707.42 WITH 36" (MIN.) INLET OPENING OR 30.03" LINER PIPE SS937 WITH 36" (MIN.) INLET OPENING	33" LINER PIPE ASTM F894 WITH 36" (MIN.) INLET OPENING OR 36" LINER PIPE, 707.12 OR 36" LINER PIPE, 707.42 OR 33.784" LINER PIPE SS937 WITH 36" (MIN.) INLET OPENING	36" LINER PIPE, 707.12	36" LINER PIPE, 707.12 WITH 39" (MIN.) INLET OPENING	36" LINER PIPE ASTM F894 WITH 42" (MIN.) INLET OPENING OR 42" LINER PIPE, 707.12 OR 36" LINER PIPE, 707.42 WITH 42" (MIN.) INLET OPENING OR 39.416" LINER PIPE, SS937 WITH 42" (MIN.) INLET OPENING	60" LINER PIPE ASTM F894 OR 66" LINER PIPE, 707.12	BACKFILL FOR LINER PIPE	
										LIN. FT.	LIN. FT.	LIN. FT.	LIN. FT.	LIN. FT.	LIN. FT.	LIN. FT.	LIN. FT.	CU. YD.	
1 - D	172	829 +95.00		CONST	CT.	833 +10.00		CONST	CL.										
2 - D	172	833 +10.00		CONST	CL.	837 +20.00		CONST	CL.										
3 - D	172	837 +20.00		CONST	CL.	839 +70.00		CONST	CL.										
4 - D	173	839 +70.00		CONST	CL.	842 +20.00		CONST	CL.										
5 - D	173	842 +20.00		CONST	CL.	842 +70.00		CONST	CL.										
6 - D	173	842 +70.00		CONST	CL.														
7 - D	173	842 +20.00	95	CONST	RT.														
8 - D	174	851 +25.00		CONST	RT.	853 +25.00		CONST	RT.										
9 - D	174	852 +70.00		CONST	CL.	855 +70.00		CONST	CL.										
10 - D	174	853 +65.00		CONST	LT.														
11 - D	174	855 +20.00		CONST	RT.														
12 - D	174	855 +70.00		CONST	CL.														
13 - D	175	866 +30.00		CONST	CL.														
14 - D	175	868 +50.00		CONST	RT.	869 +50.00		CONST	RT.										
1 - DR	172-173	833 +10.00		CONST	CL.	842 +20.00		CONST	LT.										
2 - DR	174	852 +70.00		CONST	LT.	855 +70.00		CONST	LT.										
3 - DR	175	874 +30.00		CONST	LT.														
15 - D	175	874 +68.00		CONST	CL.														
3A - DR	175	875 +90.00		CONST	LT.														
4 - DR	176	877 +90.00		CONST	LT.														
5 - DR	176	883 +10.00		CONST	RT.	883 +15.00		CONST	RT.										
16 - D	176	884 +32.00		CONST	RT.														
17 - D	176	886 +18.00		CONST	LT.	889 +10.00		CONST	CL.										
18 - D	176	25 +30.00		SR18-RAMP A	RT.				LT.								86		114
19 - D	176	25 +30.00		SR18-RAMP A	LT.	26+30.00		SR18-RAMP A	LT.										
20 - D	176-177	887 +60.00		CONST	LT.	888 +80.00		CONST	RT.								270		114
21 - D	177	888 +81.49		CONST	LT.														
21A - D	177	889 +04.00		CONST	LT.	889 +10.00		CONST	CT.										
22 - D	177	888 +80.00		CONST	RT.	889 +20.00		CONST	RT.										
22A - D	177	889 +10.00		CONST	CL.														
23 - D	177	889 +30.72		CONST	RT.														
23A - D	177	889 +11.79		CONST	RT.	889 +10.00		CONST	CL										
24 - D	177	19 +79.00		SR18-RAMP C	LT.				RT.		88								20
25 - D	177	891 +70.00		CONST	CL.														
26 - D	177	1 +32.00		SR18-RAMP D	RT.														
27 - D	177	896 +50.00		CONST	CL.														
28 - D	177	897 +25.00		CONST	LT.	899 +68.00		CONST	RT.						384				115
29 - D	178	902 +12.00		CONST	LT.	904 +30.00		CONST	RT.										
6 - DR	178	903 +0.00		CONST	RT.														
30 - D	178	903 +25.00		CONST	RT.	905 +25.00		CONST	RT.										
31 - D	178	906 +65.00		CONST	CL.														
32 - D	178-179	913 +00.00		CONST	LT.	915 +65.00		CONST	LT.										
33 - D	179	914 +65.00		CONST	CL.														
34 - D	179	915 +65.00		CONST	RT.	917 +00.00		CONST	RT.										
35 - D	179	922 +25.00		CONST	CL.														
36 - D	179	922 +00.00		CONST	LT.	922 +50.00		CONST	RT.										
37 - D	179	922 +50.00	138	CONST	RT.														
38 - D	180	931 +68.00		CONST	CL.				LT.							296			63
39 - D	180	932 +25.00		CONST	LT.	932 +60.00		CONST	RT.										
40 - D	181	944 +68.00		CONST	CL.				LT.										
41 - D	181	943 +45.00		CONST	RT.	944 +45.00		CONST	LT.										
41A - D	181	947 +50.00		CONST	LT.				RT.										
42 - D	182	952 +68.00		CONST	LT.				RT.										
TOTALS CARRIED TO SHEET 96											88				384	296	356		426

7885DS14.DGN 11/30/99 RB

REFERENCE NO.	SHEET REFERENCE NO.	STATION	OFFSET	℄ REFERENCE	SIDE	STATION	OFFSET	℄ REFERENCE	SIDE	202				SPECIAL	203	519	601				602		603					
										PIPE REMOVED 24", AND UNDER	CATCH BASIN REMOVED	CATCH BASIN ABANDONED	MANHOLE REMOVED	FILL AND PLUG EXISTING CONDUIT	DITCH CLEANOUT	PATCHING CONCRETE STRUCTURES	RIPRAP USING 6" REINFORCED CONCRETE SLAB	ROCK CHANNEL PROTECTION, TYPE A WITH FILTER	ROCK CHANNEL PROTECTION, TYPE B WITH FILTER	ROCK CHANNEL PROTECTION, TYPE C WITH FILTER	CONCRETE MASONRY	12" CONDUIT, TYPE E	15" CONDUIT, TYPE B	15" CONDUIT, TYPE C	15" CONDUIT, TYPE F 707.05 TYPE C			
										LIN. FT.	EACH	EACH	EACH	LIN. FT.	LIN. FT.	SQ. FT.	SQ. YD.	CU. YD.	CU. YD.	CU. YD.	CU. YD.	LIN. FT.	LIN. FT.	LIN. FT.	LIN. FT.			
43 - D	182	955 +30.00		CONST	LT.	956 +38.00		CONST	CL.										20.16		3.00							
44 - D	182	957 +10.00		CONST	RT.							1																
45 - D	182	957 +40.00	145	CONST	RT.																0.33							
46 - D	182	961 +68.00		CONST	CL.	962 +28.00		CONST	LT.																			
47 - D	182-183	962 +28.00		CONST	LT.	965 +70.00		CONST	LT.																			
48 - D	183	965 +70.00		CONST	LT.	967 +50.00		CONST	CL.																			
49 - D	183	967 +50.00		CONST	CL.	974 +00.00		CONST	CL.																			
49A - D	183	974 +00.00		CONST	CL.																							
7 - DR	183	965 +70.00		CONST	LT.					60	1																	
8 - DR	183	961 +68.00		CONST	CL.	965 +70.00		CONST	LT.	405			1															
8A - DR	183	965 +70.00		CONST	LT.	966 +70.00		CONST	CL.	100	1																	
9 - DR	184	977 +05.00		CONST	RT.					85	1																	
50 - D	184	982 +90.00		CONST	CL.																			4				
51 - D	184	985 +92.00		CONST	CL.																			4				
52 - D	184	988 +39.00		CONST	LT.															2.00	0.27				42			
52A - D	185	988 +78.66		CONST	LT.	989 +10.00		CONST	CL.															42				
53 - D	185	989 +10.00		CONST	CL.																			4				
54 - D	185	989 +31.03		CONST	RT.															2.00	0.27				24			
54A - D	185	988 +96.00		CONST	RT.	989 +10.00		CONST	CL.															25				
55 - D	185	991 +35.00		CONST	LT.	993 +68.00		CONST	RT.												13.20							
55A - D	185	993 +00.00		CONST	CL.	998 +65.00		CONST	CL.															565				
56 - D	185	998 +65.00		CONST	CL.																			4				
57 - D	185	999 +22.00		CONST	RT.				LT.								5.56	50.37										
58 - D	186	1007+18.00		CONST	RT.				LT.										22.22									
59 - D	186	1008+52.00		CONST	CL.																			4				
60 - D	186	1011+95.00		CONST	CL.																			4				
60A - D	187	1013+93.64		CONST	LT.	1013 +90.00		CONST	CL.															20				
61 - D	187	1014+00.50		CONST	LT.															2.00	0.27			24				
61A - D	187	1013 +94.00		CONST	RT.	1013+20.00		CONST	CL.										3.34		0.27			48	119			
62 - D	187	1022+72.00		CONST	CL.																			4				
63 - D	187	1022+72.00	110	CONST	RT.																			8				
64 - D	187	1013+88.12		CONST	RT.															2.00	0.27			22				
64A - D	187	1013+90.00		CONST	RT.	1013+90.00		CONST	CL.															20				
65 - D	188	1037+40.00		CONST	CL.																			4				
66 - D	188	1045+08.00		CONST	CL.																			4				
67 - D	188	1047+55.00		CONST	CL.							1																
68 - D	188	1048+70.00		CONST	RT.	1050+70.00		CONST	CL.								9.40											
69 - D	188	1049+30.00	125	CONST	LT.	1050+70.00		CONST	CL.								55.94		67.67	13.53								
10 - DR	188-189	1050+65.00		CONST	CL.	1052+15.00	18	CONST	RT.					145														
70 - D	188	1050+65.00		CONST	CL.	1052+20.00		CONST	CL.												1.10							
70A - D	189	1053+95.00		CONST	CL.	1053 +50.00		CONST	CL.											2.00	0.27			45				
71 - D	189	1054+08.45		CONST	LT.															2.00	0.27				85			
71A - D	189	1054+01.65		CONST	LT.	1053 +93.00		CONST	CL.															20				
72 - D	189	1053+90.88		CONST	RT.															2.00	0.27				84			
72A - D	189	1053+95.00		CONST	RT.																			20				
73 - D	189	1060+08.00		CONST	CL.																			4				
74 - D	191	1067+40.00		CONST	CL.				RT.										3.70		0.46							
75 - D	191	1067+40.00	95	CONST	LT.																							
76 - D	191	1070+92.00		CONST	CL.																							
77 - D	191	1070+92.00		CONST	LT.																							
78 - D	191	1075+85.00		CONST	CL.				RT.										27.22		0.46							
79 - D	191	1075+85.00		CONST	LT.																							
80 - D	192	1076+55.00		CONST	CL.	1075 +85.00		CONST	CL.															70				
81 - D	192	1081+95.00		CONST	RT.	1083+45.00		CONST	RT.						150													
82 - D	192	1082+95.00		CONST	RT.				LT.											3.70	4.70							
TOTALS CARRIED TO SHEET 93										650	3	2	1	145	150		70.90	50.37	144.31	31.23	25.41			969	354			

DRAINAGE SUBSUMMARY

CALCULATED PS CHECKED WJC

MED - 71 - 15.78

81/940

7885DSIO.DGN 11/30/99 RB 4

DRAINAGE SUBSUMMARY

CALCULATED PS | CHECKED WJC

603

REFERENCE NO.	SHEET REFERENCE NO.	STATION	OFFSET	℄ REFERENCE	SIDE	STATION	OFFSET	℄ REFERENCE	SIDE	18" CONDUIT, TYPE B	18" CONDUIT, TYPE C	18" TYPE C, 706.02	24" CONDUIT, TYPE C	24" CONDUIT, TYPE C, 706.02	24" CONDUIT TYPE F, 707.05, TYPE C	30" CONDUIT, TYPE C	30" CONDUIT, TYPE C 706.02	30" CONDUIT, TYPE C, 707.01, ALUMINUM COATED	30" CONDUIT, TYPE F, 707.05, TYPE C	36" CONDUIT, TYPE C	36" CONDUIT, TYPE C, 707.01, ALUMINUM COATED	42" CONDUIT, TYPE C	42" CONDUIT, TYPE C, 706.02	42" CONDUIT, TYPE C, 707.01, ALUMINUM COATED	CONDUIT BORED OR JACKED 48" CONDUIT, TYPE A, 706.02, 3000 D-LOAD	54" CONDUIT, TYPE C, AS PER PLAM		
										LIN. FT.	LIN. FT.	LIN. FT.	LIN. FT.	LIN. FT.	LIN. FT.	LIN. FT.	LIN. FT.	LIN. FT.	LIN. FT.	LIN. FT.	LIN. FT.	LIN. FT.	LIN. FT.	LIN. FT.	LIN. FT.			
43 - D	182	955 +30.00		CONST	LT.	956 +38.00		CONST	CL.		4			28														
44 - D	182	957 +10.00		CONST	RT.						4		4															
45 - D	182	957 +40.00	145	CONST	RT.						20																	
46 - D	182	961 +68.00		CONST	CL.	962 +28.00		CONST	LT.		64																	
47 - D	182-183	962 +28.00		CONST	LT.	965 +70.00		CONST	LT.		342																	
48 - D	183	965 +70.00		CONST	LT.	967 +50.00		CONST	CL.		182																	
49 - D	183	967 +50.00		CONST	CL.	974 +00.00		CONST	CL.		650																	
49A - D	183	974 +00.00		CONST	CL.																							
7 - DR	183	965 +70.00		CONST	LT.																							
8 - DR	183	961 +68.00		CONST	CL.	965 +70.00		CONST	LT.																			
8A - DR	183	965 +70.00		CONST	LT.	966 +70.00		CONST	CL.																			
9 - DR	184	977 +05.00		CONST	RT.																							
50 - D	184	982 +90.00		CONST	CL.																							
51 - D	184	985 +92.00		CONST	CL.																							
52 - D	184	988 +39.00		CONST	LT.																							
52A - D	185	988 +78.66		CONST	LT.	989 +10.00		CONST	CL.																			
53 - D	185	989 +10.00		CONST	CL.																							
54 - D	185	989 +31.03		CONST	RT.																							
54A - D	185	988 +96.00		CONST	RT.	989 +10.00		CONST	CL.																			
55 - D	185	991 +35.00		CONST	LT.	993 +68.00		CONST	RT.												16							
55A - D	185	993 +00.00		CONST	CL.	998 +65.00		CONST	CL.																			
56 - D	185	998 +65.00		CONST	CL.																							
57 - D	185	999 +22.00		CONST	RT.				LT.																			
58 - D	186	1007+18.00		CONST	RT.				LT.																			
59 - D	186	1008+52.00		CONST	CL.																							
60 - D	186	1011+95.00		CONST	CL.																							
60A - D	187	1013+93.64		CONST	LT.	1013 +90.00		CONST	CL.																			
61 - D	187	1014+00.50		CONST	LT.																							
61A - D	187	1013 +94.00		CONST	RT.	1013+20.00		CONST	CL.																			
62 - D	187	1022+72.00		CONST	CL.																							
63 - D	187	1022+72.00	110	CONST	RT.																							
64 - D	187	1013+88.12		CONST	RT.																							
64A - D	187	1013+90.00		CONST	RT.	1013+90.00		CONST	CL.																			
65 - D	188	1037+40.00		CONST	CL.																							
66 - D	188	1045+08.00		CONST	CL.															8								
67 - D	188	1047+55.00		CONST	CL.															8								
68 - D	188	1048+70.00		CONST	RT.	1050+70.00		CONST	CL.																			
69 - D	188	1049+30.00	125	CONST	LT.	1050+70.00		CONST	CL.																			
10 - DR	188-189	1050+65.00		CONST	CL.	1052+15.00	18	CONST	RT.																			
70 - D	188	1050+65.00		CONST	CL.	1052+20.00		CONST	CL.																128			
70A - D	189	1053+95.00		CONST	CL.	1053 +50.00		CONST	CL.																			
71 - D	189	1054+08.45		CONST	LT.																							
71A - D	189	1054+01.65		CONST	LT.	1053 +93.00		CONST	CL.																			
72 - D	189	1053+90.88		CONST	RT.																							
72A - D	189	1053+95.00		CONST	RT.																							
73 - D	189	1060+08.00		CONST	CL.																							
74 - D	191	1067+40.00		CONST	CL.				RT.				8		70													
75 - D	191	1067+40.00	95	CONST	LT.								4															
76 - D	191	1070+92.00		CONST	CL.								8															
77 - D	191	1070+92.00		CONST	LT.								4															
78 - D	191	1075+85.00		CONST	CL.				RT.				8															
79 - D	191	1075+85.00		CONST	LT.								4		70													
80 - D	192	1076+55.00		CONST	CL.	1075 +85.00		CONST	CL.																			
81 - D	192	1081+95.00		CONST	RT.	1083+45.00		CONST	RT.																			
82 - D	192	1082+95.00		CONST	RT.				LT.									8										
TOTALS CARRIED TO SHEET 94											1266		40	28	140			8		16	16				128			

MED - 71 - 15.78

82
940

7885DSILDGN 11/30/99 RB 5

REFERENCE NO.	SHEET REFERENCE NO.	STATION	OFFSET	℄ REFERENCE	SIDE	STATION	OFFSET	℄ REFERENCE	SIDE	603			604										670	BENDS					
										72" CONDUIT, TYPE A, 706.02	84" CONDUIT, TYPE A, 706.02	CONDUIT MISC. INSITU LINER	CATCH BASIN NO. 3	CATCH BASIN NO. 3A	CATCH BASIN NO. 4, AS PER PLAN	CATCH BASIN NO. 4A, AS PER PLAN	CATCH BASIN NO. 5, AS PER PLAN	CATCH BASIN NO. 5A, AS PER PLAN	CATCH BASIN NO. 2-2B	CATCH BASIN NO. 2-4, AS PER PLAN	CATCH BASIN RECONSTRUCTED TO GRADE	MANHOLE NO. 3	MANHOLE RECONSTRUCTED TO GRADE	DITCH EROSION PROTECTION	15" - 22.5°	15" - 30°	15" - 45°	24" - 30°		
										LIN. FT.	LIN. FT.	LIN. FT.	EACH	EACH	EACH	EACH	EACH	EACH	EACH	EACH	EACH	EACH	EACH	SQ. YD.	EACH					
43 - D	182	955 +30.00		CONST	LT.	956 +38.00		CONST	CL.						1									125						
44 - D	182	957 +10.00		CONST	RT.												1							125						
45 - D	182	957 +40.00	145	CONST	RT.												1							125						
46 - D	182	961 +68.00		CONST	CL.	962 +28.00		CONST	LT.						1									125						
47 - D	182-183	962 +28.00		CONST	LT.	965 +70.00		CONST	LT.													1								
48 - D	183	965 +70.00		CONST	LT.	967 +50.00		CONST	CL.													1								
49 - D	183	967 +50.00		CONST	CL.	974 +00.00		CONST	CL.						1									125						
49A - D	183	974 +00.00		CONST	CL.										1									125						
7 - DR	183	965 +70.00		CONST	LT.																									
8 - DR	183	961 +68.00		CONST	CL.	965 +70.00		CONST	LT.																					
8A - DR	183	965 +70.00		CONST	LT.	966 +70.00		CONST	CL.																					
9 - DR	184	977 +05.00		CONST	RT.																									
50 - D	184	982 +90.00		CONST	CL.										1									125						
51 - D	184	985 +92.00		CONST	CL.										1									125						
52 - D	184	988 +39.00		CONST	LT.									1												2				
52A - D	185	988 +78.66		CONST	LT.	989 +10.00		CONST	CL.					1																
53 - D	185	989 +10.00		CONST	CL.										1															
54 - D	185	989 +31.03		CONST	RT.									1												2				
54A - D	185	988 +96.00		CONST	RT.	989 +10.00		CONST	CL.					1																
55 - D	185	991 +35.00		CONST	LT.	993 +68.00		CONST	RT.																					
55A - D	185	993 +00.00		CONST	CL.	998 +65.00		CONST	CL.						1									125						
56 - D	185	998 +65.00		CONST	CL.										1									125						
57 - D	185	999 +22.00		CONST	RT.				LT.																					
58 - D	186	1007+18.00		CONST	RT.				LT.																					
59 - D	186	1008+52.00		CONST	CL.										1									125						
60 - D	186	1011+95.00		CONST	CL.									1																
60A - D	187	1013+93.64		CONST	LT.	1013 +90.00		CONST	CL.					1																
61 - D	187	1014+00.50		CONST	LT.										1									125						
61A - D	187	1013 +94.00		CONST	RT.	1013+20.00		CONST	CL.													1				2				
62 - D	187	1022+72.00		CONST	CL.										1									125						
63 - D	187	1022+72.00	110	CONST	RT.												1							125						
64 - D	187	1013+88.12		CONST	RT.									1																
64A - D	187	1013+90.00		CONST	RT.	1013+90.00		CONST	CL.					1																
65 - D	188	1037+40.00		CONST	CL.										1									125						
66 - D	188	1045+08.00		CONST	CL.											1								125						
67 - D	188	1047+55.00		CONST	CL.											1								125						
68 - D	188	1048+70.00		CONST	RT.	1050+70.00		CONST	CL.			250																		
69 - D	188	1049+30.00	125	CONST	LT.	1050+70.00		CONST	CL.			148																		
10 - DR	188-189	1050+65.00		CONST	CL.	1052+15.00	18	CONST	RT.																					
70 - D	188	1050+65.00		CONST	CL.	1052+20.00		CONST	CL.												1		1	125						
70A - D	189	1053+95.00		CONST	CL.	1053 +50.00		CONST	CL.													1								
71 - D	189	1054+08.45		CONST	LT.									1												2				
71A - D	189	1054+01.65		CONST	LT.	1053 +93.00		CONST	CL.					1																
72 - D	189	1053+90.88		CONST	RT.									1												2				
72A - D	189	1053+95.00		CONST	RT.									1																
73 - D	189	1060+08.00		CONST	CL.										1									250						
74 - D	191	1067+40.00		CONST	CL.				RT.						1									125				2		
75 - D	191	1067+40.00	95	CONST	LT.												1							125						
76 - D	191	1070+92.00		CONST	CL.										1									125						
77 - D	191	1070+92.00		CONST	LT.												1							125						
78 - D	191	1075+85.00		CONST	CL.				RT.													1								
79 - D	191	1075+85.00		CONST	LT.												1							125						
80 - D	192	1076+55.00		CONST	CL.	1075 +85.00		CONST	CL.						1									125						
81 - D	192	1081+95.00		CONST	RT.	1083+45.00		CONST	RT.																					
82 - D	192	1082+95.00		CONST	RT.				LT.																					
TOTALS CARRIED TO SHEET 95												398		12	17	2	6				1	5	1	3250						

DRAINAGE SUBSUMMARY

CALCULATED PS CHECKED WJC

MED - 71 - 15.78

7885DS12.DGN 11/30/99 RB 6

DRAINAGE SUBSUMMARY

CALCULATED PS CHECKED WJC

REFERENCE NO.	SHEET REFERENCE NO.	STATION	OFFSET	℄ REFERENCE	SIDE	STATION	OFFSET	℄ REFERENCE	SIDE	SS837 24" LINER PIPE ASTM F894 OR 24" LINER PIPE, 707.12 OR 24" LINER PIPE, 707.42 OR 26.278" LINER PIPE SS937	SS837 27" LINER PIPE ASTM F894 WITH 33" (MIN.) INLET OPENING OR 30" LINER PIPE, 707.12 WITH 33" (MIN.) INLET OPENING 30" LINER PIPE, 707.42 WITH 33" (MIN.) INLET OPENING OR 30.03" LINER PIPE, SS937 WITH 33" (MIN.) INLET OPENING	SS837 27" LINER PIPE ASTM F894 WITH 36" (MIN.) INLET OPENING OR 30"LINER PIPE 707.12 WITH 36" (MIN.) INLET OPENING OR 30" LINER PIPE 707.42 WITH 36" (MIN.) INLET OPENING OR 30.03" LINER PIPE SS937 WITH 36" (MIN.) INLET OPENING	SS837 33" LINER PIPE ASTM F894 WITH 36" (MIN.) INLET OPENING OR 36" LINER PIPE, 707.12 OR 36" LINER PIPE, 707.42 OR 33.784" LINER PIPE SS937 WITH 36" (MIN.) INLET OPENING	SS837 36" LINER PIPE, 707.12	SS837 36" LINER PIPE, 707.12 WITH 39" (MIN.) INLET OPENING	SS837 36" LINER PIPE ASTM F894 WITH 42" (MIN.) INLET OPENING OR 42" LINER PIPE, 707.12 OR 36" LINER PIPE, 707.42 WITH 42" (MIN.) INLET OPENING OR 39.416" LINER PIPE, SS937 WITH 42" (MIN.) INLET OPENING	SS837 60" LINER PIPE ASTM F894 OR 66" LINER PIPE, 707.12	BACKFILL FOR LINER PIPE	
										LIN. FT.	LIN. FT.	LIN. FT.	LIN. FT.	LIN. FT.	LIN. FT.	LIN. FT.	CU. YD.	
43 - D	182	955 +30.00		CONST	LT.	956 +38.00		CONST	CL.									
44 - D	182	957 +10.00		CONST	RT.													
45 - D	182	957 +40.00	145	CONST	RT.													
46 - D	182	961 +68.00		CONST	CL.	962 +28.00		CONST	LT.									
47 - D	182-183	962 +28.00		CONST	LT.	965 +70.00		CONST	LT.									
48 - D	183	965 +70.00		CONST	LT.	967 +50.00		CONST	CL.									
49 - D	183	967 +50.00		CONST	CL.	974 +00.00		CONST	CL.									
49A - D	183	974 +00.00		CONST	CL.													
7 - DR	183	965 +70.00		CONST	LT.													
8 - DR	183	961 +68.00		CONST	CL.	965 +70.00		CONST	LT.									
8A - DR	183	965 +70.00		CONST	LT.	966 +70.00		CONST	CL.									
9 - DR	184	977 +05.00		CONST	RT.													
50 - D	184	982 +90.00		CONST	CL.													
51 - D	184	985 +92.00		CONST	CL.													
52 - D	184	988 +39.00		CONST	LT.													
52A - D	185	988 +78.66		CONST	LT.	989 +10.00		CONST	CL.									
53 - D	185	989 +10.00		CONST	CL.													
54 - D	185	989 +31.03		CONST	RT.													
54A - D	185	988 +96.00		CONST	RT.	989 +10.00		CONST	CL.									
55 - D	185	991 +35.00		CONST	LT.	993 +68.00		CONST	RT.									
55A - D	185	993 +00.00		CONST	CL.	998 +65.00		CONST	CL.									
56 - D	185	998 +65.00		CONST	CL.													
57 - D	185	999 +22.00		CONST	RT.				LT.		244						54	
58 - D	186	1007+18.00		CONST	RT.				LT.				212				64	
59 - D	186	1008+52.00		CONST	CL.													
60 - D	186	1011+95.00		CONST	CL.													
60A - D	187	1013+93.64		CONST	LT.	1013 +90.00		CONST	CL.									
61 - D	187	1014+00.50		CONST	LT.													
61A - D	187	1013 +94.00		CONST	RT.	1013+20.00		CONST	CL.									
62 - D	187	1022+72.00		CONST	CL.													
63 - D	187	1022+72.00	110	CONST	RT.													
64 - D	187	1013+88.12		CONST	RT.													
64A - D	187	1013+90.00		CONST	RT.	1013+90.00		CONST	CL.									
65 - D	188	1037+40.00		CONST	CL.													
66 - D	188	1045+08.00		CONST	CL.													
67 - D	188	1047+55.00		CONST	CL.													
68 - D	188	1048+70.00		CONST	RT.	1050+70.00		CONST	CL.									
69 - D	188	1049+30.00	125	CONST	LT.	1050+70.00		CONST	CL.									
10 - DR	188-189	1050+65.00		CONST	CL.	1052+15.00	18	CONST	RT.									
70 - D	188	1050+65.00		CONST	CL.	1052+20.00		CONST	CL.									
70A - D	189	1053+95.00		CONST	CL.	1053 +50.00		CONST	CL.									
71 - D	189	1054+08.45		CONST	LT.													
71A - D	189	1054+01.65		CONST	LT.	1053 +93.00		CONST	CL.									
72 - D	189	1053+90.88		CONST	RT.													
72A - D	189	1053+95.00		CONST	RT.													
73 - D	189	1060+08.00		CONST	CL.													
74 - D	191	1067+40.00		CONST	CL.				RT.									
75 - D	191	1067+40.00	95	CONST	LT.													
76 - D	191	1070+92.00		CONST	CL.													
77 - D	191	1070+92.00		CONST	LT.													
78 - D	191	1075+85.00		CONST	CL.				RT.									
79 - D	191	1075+85.00		CONST	LT.													
80 - D	192	1076+55.00		CONST	CL.	1075 +85.00		CONST	CL.									
81 - D	192	1081+95.00		CONST	RT.	1083+45.00		CONST	RT.									
82 - D	192	1082+95.00		CONST	RT.				LT.	286							34	
TOTALS CARRIED TO SHEET 96										286	244		212				152	

MED - 71 - 15.78

7885DSI4.DGN 11/30/99 RB

DRAINAGE SUBSUMMARY

CALCULATED PS CHECKED WJC

REFERENCE NO.	SHEET REFERENCE NO.	STATION	OFFSET	℄ REFERENCE	SIDE	STATION	OFFSET	℄ REFERENCE	SIDE	202 PIPE REMOVED 24", AND UNDER	202 CATCH BASIN REMOVED	202 CATCH BASIN ABANDONED	202 MANHOLE REMOVED	SPECIAL FILL AND PLUG EXISTING CONDUIT	203 DITCH CLEANOUT	519 PATCHING CONCRETE STRUCTURES	601 RIPRAP USING 6" REINFORCED CONCRETE SLAB	601 ROCK CHANNEL PROTECTION, TYPE A WITH FILTER	601 ROCK CHANNEL PROTECTION, TYPE B WITH FILTER	601 ROCK CHANNEL PROTECTION, TYPE C WITH FILTER	602 CONCRETE MASONRY	12" CONDUIT, TYPE E	603 15" CONDUIT, TYPE B	603 15" CONDUIT, TYPE C	603 15" CONDUIT, TYPE F 707.05 TYPE C			
										LIN. FT.	EACH	EACH	EACH	LIN. FT.	LIN. FT.	SQ. FT.	SQ. YD.	CU. YD.	CU. YD.	CU. YD.	CU. YD.	LIN. FT.	LIN. FT.	LIN. FT.	LIN. FT.			
83 - D	192	1087+40.00		CONST	CL.																							
84 - D	193	1089+28.00		CONST	CL.				LT.																			
11 - DR	193	1092+30.00	80	CONST	RT.	1092+35.00	125	CONST	RT.	50	1																	
85 - D	194	1102+59.69		CONST	LT.															2.00	0.27			90				
85A - D	194	1102+89.00		CONST	LT.	1102 +70.00		CONST	CL.															25				
86 - D	194	1102+70.00		CONST	CL.																			4				
87 - D	194	1103+08.00		CONST	RT.															2.00	0.27			54				
87A - D	194	1102+77.00		CONST	RT.	1102 +70.00		CONST	CL.															18				
88 - D	194	1106+00.00		CONST	CL.																			4				
89 - D	194	1108+80.00	8	CONST	RT.					6	1													4				
90 - D	195	1116+80.00	155	CONST	LT.													106.67			23.30							
91 - D	195	1118+42.00		CONST	CL.																			4				
92 - D	196	1127+90.00		CONST	CL.	1127 +20.00		CONST	RT.										4.63		0.84							
93 - D	196	1134+38.00		CONST	CL.																							
94 - D	196	1134+38.00		CONST	RT.																							
95 - D	196	1134+38.00		CONST	LT.																							
96 - D	197	1140+30.00		CONST	CL.																							
97 - D	197	1143+90.00		CONST	CL.																							
98 - D	197	1143+90.00		CONST	RT.																	100						
99 - D	197	1143+90.00		CONST	LT.																							
100 - D	198	1152+40.00	75	CONST	LT.																							
101 - D	198	1156+64.00	82	CONST	LT.																							
102 - D	198	1156+80.00		CONST	RT.	1158 +80.00		CONST	RT.								78.13		164.89									
103 - D	198	1158+55.00	100	CONST	RT.																16.30							
104 - D	198	1158+84.00		CONST	CL.																			4				
105 - D	198	1158+84.00	92	CONST	LT.																			4				
106 - D	199	1173+04.00		CONST	CL.																			4				
107 - D		NOT USED																										
108 - D	200	1185+80.00		CONST	CL.																			57				
109 - D	200	1185+74.00	90	CONST	RT.																0.60							
110 - D	200	1184+20.00		CONST	RT.	1187+10.00		CONST	RT.						190													
111 - D	200	1186 +37.00		CONST	CL.	1187+50.00		CONST	CL.															113				
111A - D	200	1186 +37.00		CONST	CL.	1187+30.00		CONST	CL.																			
112 - D	201	1193+00.00		CONST	RT.				LT.						75		3.89	37.04										
113 - D	201	1198+41.00		CONST	CL.																			8				
114 - D	201	1198+41.00	117	CONST	LT.															2.22	0.27				42			
114A - D	201	1198 +41.00		CONST	RT.																			4				
115 - D	201	1199 +20.00	109	CONST	LT.	1198+50.00		CONST	LT.						60			98.79										
116 - D	201	1200+62.00	95	CONST	RT.																			4				
117 - D	201	1200+62.00	186	CONST	RT.												83.09				0.27			8				
118 - D	202	1201+65.00	118	CONST	LT.	1202+34.00		CONST	CL.								4.77	31.41										
119 - D	202	1202+34.00		CONST	CL.																							
120 - D	202	1205+87.00	300±	CONST	RT.	1206+32.60	219±	CONST	RT.										11.11		0.33							
121 - D	202	1209+34.00		CONST	CL.																							
122 - D	203	1216+76.00		CONST	CL.																			4				
123 - D	203	1216+76.00		CONST	RT.																0.60							
124 - D	203	1216+76.00		CONST	LT.																			4				
125 - D	203	1221+34.00		CONST	CL.																			4				
126 - D	203	1221+34.00		CONST	RT.																0.60							
12 - DR	203	1223+69.00		CONST	CL.	1227+00.00		CONST	LT.	330																		
127 - D	203	1223+69.00		CONST	LT.	1227+00.00		CONST	LT.															334				
128 - D	203	1223 +00.00		CONST	LT.																			4				
129 - D	204	1227+59.00		CONST	CL.																			4				
130 - D	204	1227 +59.00		CONST	CL.	1227+59.00		CONST	CL.															54				
131 - D	204	1230+79.00	87	CONST	RT.												78.84											
TOTALS CARRIED TO SHEET 93										386	2				325		248.72	273.91	180.63	6.22	43.65	100		673	186			

MED - 71 - 15.78

7885DSO.DGN 11/30/99 RB 7

DRAINAGE SUBSUMMARY

CALCULATED PS | CHECKED WJC

603

REFERENCE NO.	SHEET REFERENCE NO.	STATION	OFFSET	℄ REFERENCE	SIDE	STATION	OFFSET	℄ REFERENCE	SIDE	18" CONDUIT, TYPE B	18" CONDUIT, TYPE C	18" TYPE C, 706.02	24" CONDUIT, TYPE C	24" CONDUIT, TYPE C, 706.02	24" CONDUIT TYPE F, 707.05, TYPE C	30" CONDUIT, TYPE C	30" CONDUIT, TYPE C 706.02	30" CONDUIT, TYPE C, 707.01, ALUMINUM COATED	30" CONDUIT, TYPE F, 707.05, TYPE C	36" CONDUIT, TYPE C	36" CONDUIT, TYPE C, 707.01, ALUMINUM COATED	42" CONDUIT, TYPE C	42" CONDUIT, TYPE C, 706.02	42" CONDUIT, TYPE C, 707.01, ALUMINUM COATED	CONDUIT BORED OR JACKED 48" CONDUIT, TYPE A, 706.02, 3000 D-LOAD	54" CONDUIT, TYPE C, AS PER PLAN		
										LIN. FT.	LIN. FT.	LIN. FT.	LIN. FT.	LIN. FT.	LIN. FT.	LIN. FT.	LIN. FT.	LIN. FT.	LIN. FT.	LIN. FT.	LIN. FT.	LIN. FT.	LIN. FT.	LIN. FT.	LIN. FT.	LIN. FT.		
83 - D	192	1087+40.00		CONST	CL.											8												
84 - D	193	1089+28.00		CONST	CL.				LT.							8												
11 - DR	193	1092+30.00	80	CONST	RT.	1092+35.00	125	CONST	RT.																			
85 - D	194	1102+59.69		CONST	LT.																							
85A - D	194	1102+89.00		CONST	LT.	1102 +70.00		CONST	CL.																			
86 - D	194	1102+70.00		CONST	CL.																							
87 - D	194	1103+08.00		CONST	RT.																							
87A - D	194	1102+77.00		CONST	RT.	1102 +70.00		CONST	CL.																			
88 - D	194	1106+00.00		CONST	CL.																							
89 - D	194	1108+80.00	8	CONST	RT.																							
90 - D	195	1116+80.00	155	CONST	LT.																							
91 - D	195	1118+42.00		CONST	CL.																							
92 - D	196	1127+90.00		CONST	CL.	1127 +20.00		CONST	RT.														16					
93 - D	196	1134+38.00		CONST	CL.						8									4		4						
94 - D	196	1134+38.00		CONST	RT.						4																	
95 - D	196	1134+38.00		CONST	LT.						4																	
96 - D	197	1140+30.00		CONST	CL.											4				4								
97 - D	197	1143+90.00		CONST	CL.						8					4												
98 - D	197	1143+90.00		CONST	RT.						4																	
99 - D	197	1143+90.00		CONST	LT.						4																	
100 - D	198	1152+40.00	75	CONST	LT.																							
101 - D	198	1156+64.00	82	CONST	LT.																							
102 - D	198	1156+80.00		CONST	RT.	1158 +80.00		CONST	RT.																			
103 - D	198	1158+55.00	100	CONST	RT.																							
104 - D	198	1158+84.00		CONST	CL.																							
105 - D	198	1158+84.00	92	CONST	LT.								4															
106 - D	199	1173+04.00		CONST	CL.																							
107 - D		NOT USED																										
108 - D	200	1185+80.00		CONST	CL.											8												
109 - D	200	1185+74.00	90	CONST	RT.											4			48									
110 - D	200	1184+20.00		CONST	RT.	1187+10.00		CONST	RT.																			
111 - D	200	1186 +37.00		CONST	CL.	1187+50.00		CONST	CL.																			
11A - D	200	1186 +37.00		CONST	CL.	1187+30.00		CONST	CL.																			
112 - D	201	1193+00.00		CONST	RT.				LT.																			
113 - D	201	1198+41.00		CONST	CL.																							
114 - D	201	1198+41.00	117	CONST	LT.																							
114A - D	201	1198 +41.00		CONST	RT.																							
115 - D	201	1199 +20.00	109	CONST	LT.	1198+50.00		CONST	LT.																			
116 - D	201	1200+62.00	95	CONST	RT.																							
117 - D	201	1200+62.00	186	CONST	RT.																							
118 - D	202	1201+65.00	118	CONST	LT.	1202+34.00		CONST	CL.																			
119 - D	202	1202+34.00		CONST	CL.																8							
120 - D	202	1205+87.00	300±	CONST	RT.	1206+32.60	219±	CONST	RT.		70																	
121 - D	202	1209+34.00		CONST	CL.																8							
122 - D	203	1216+76.00		CONST	CL.											8					4							
123 - D	203	1216+76.00		CONST	RT.											4			76									
124 - D	203	1216+76.00		CONST	LT.																							
125 - D	203	1221+34.00		CONST	CL.											8												
126 - D	203	1221+34.00		CONST	RT.											4			68									
12 - DR	203	1223+69.00		CONST	CL.	1227+00.00		CONST	LT.																			
127 - D	203	1223+69.00		CONST	LT.	1227+00.00		CONST	LT.																			
128 - D	203	1223 +00.00		CONST	LT.																							
129 - D	204	1227+59.00		CONST	CL.																							
130 - D	204	1227 +59.00		CONST	CL.	1227+59.00		CONST	CL.																			
131 - D	204	1230+79.00	87	CONST	RT.																							
TOTALS CARRIED TO SHEET 94											102		4			60			192	28		4	16					

MED - 71 - 15.78

7885DSHLDGN 11/30/99 RB 8

REFERENCE NO.	SHEET REFERENCE NO.	STATION	OFFSET	℄ REFERENCE	SIDE	STATION	OFFSET	℄ REFERENCE	SIDE	603			604										670	BENDS					
										72" CONDUIT, TYPE A, 706.02	84" CONDUIT, TYPE A, 706.02	CONDUIT MISC. INSITU LINER	CATCH BASIN NO. 3	CATCH BASIN NO. 3A	CATCH BASIN NO. 4, AS PER PLAN	CATCH BASIN NO. 4A, AS PER PLAN	CATCH BASIN NO. 5, AS PER PLAN	CATCH BASIN NO. 5A, AS PER PLAN	CATCH BASIN NO. 2-2B	CATCH BASIN NO. 2-4, AS PER PLAN	CATCH BASIN RECONSTRUCTED TO GRADE	MANHOLE NO. 3	MANHOLE RECONSTRUCTED TO GRADE	DITCH EROSION PROTECTION	15" - 22.5°	15" - 30°	15" - 45°	24" - 30°		
										LIN. FT.	LIN. FT.	LIN. FT.	EACH	EACH	EACH	EACH	EACH	EACH	EACH	EACH	EACH	EACH	EACH	SQ. YD.	EACH					
83 - D	192	1087+40.00		CONST	CL.										1									125						
84 - D	193	1089+28.00		CONST	CL.				LT.						1									125						
11 - DR	193	1092+30.00	80	CONST	RT.	1092+35.00	125	CONST	RT.																					
85 - D	194	1102+59.69		CONST	LT.									1											2					
85A - D	194	1102+89.00		CONST	LT.	1102 +70.00		CONST	CL.					1																
86 - D	194	1102+70.00		CONST	CL.										1									125						
87 - D	194	1103+08.00		CONST	RT.									1												2				
87A - D	194	1102+77.00		CONST	RT.	1102 +70.00		CONST	CL.					1																
88 - D	194	1106+00.00		CONST	CL.										1									125						
89 - D	194	1108+80.00	8	CONST	RT.										1									125						
90 - D	195	1116+80.00	155	CONST	LT.						6																			
91 - D	195	1118+42.00		CONST	CL.										1									125						
92 - D	196	1127+90.00		CONST	CL.	1127 +20.00		CONST	RT.							1								125						
93 - D	196	1134+38.00		CONST	CL.										1									125						
94 - D	196	1134+38.00		CONST	RT.												1							125						
95 - D	196	1134+38.00		CONST	LT.												1							125						
96 - D	197	1140+30.00		CONST	CL.										1									125						
97 - D	197	1143+90.00		CONST	CL.										1									125						
98 - D	197	1143+90.00		CONST	RT.												1							125						
99 - D	197	1143+90.00		CONST	LT.												1							125						
100 - D	198	1152+40.00	75	CONST	LT.																1									
101 - D	198	1156+64.00	82	CONST	LT.																1									
102 - D	198	1156+80.00		CONST	RT.	1158 +80.00		CONST	RT.																					
103 - D	198	1158+55.00	100	CONST	RT.					6																				
104 - D	198	1158+84.00		CONST	CL.										1									125						
105 - D	198	1158+84.00	92	CONST	LT.										1									125						
106 - D	199	1173+04.00		CONST	CL.										1									125						
107 - D		NOT USED																												
108 - D	200	1185+80.00		CONST	CL.																	1								
109 - D	200	1185+74.00	90	CONST	RT.													1						125						
110 - D	200	1184+20.00		CONST	RT.	1187+10.00		CONST	RT.																					
111 - D	200	1186 +37.00		CONST	CL.	1187+50.00		CONST	CL.						1									125						
111A - D	200	1186 +37.00		CONST	CL.	1187+30.00		CONST	CL.						1									125						
112 - D	201	1193+00.00		CONST	RT.				LT.																					
113 - D	201	1198+41.00		CONST	CL.										1									125						
114 - D	201	1198+41.00	117	CONST	LT.																					2				
114A - D	201	1198 +41.00		CONST	RT.												1							125						
115 - D	201	1199 +20.00	109	CONST	LT.	1198+50.00		CONST	LT.																					
116 - D	201	1200+62.00	95	CONST	RT.												1							125						
117 - D	201	1200+62.00	186	CONST	RT.																									
118 - D	202	1201+65.00	118	CONST	LT.	1202+34.00		CONST	CL.																					
119 - D	202	1202+34.00		CONST	CL.											1								125						
120 - D	202	1205+87.00	300±	CONST	RT.	1206+32.60	219±	CONST	RT.													1								
121 - D	202	1209+34.00		CONST	CL.										1									125						
122 - D	203	1216+76.00		CONST	CL.											1								125						
123 - D	203	1216+76.00		CONST	RT.													1						125						
124 - D	203	1216+76.00		CONST	LT.												1							125						
125 - D	203	1221+34.00		CONST	CL.											1								125						
126 - D	203	1221+34.00		CONST	RT.													1						125						
12 - DR	203	1223+69.00		CONST	CL.	1227+00.00		CONST	LT.																					
127 - D	203	1223+69.00		CONST	LT.	1227+00.00		CONST	LT.																					
128 - D	203	1223 +00.00		CONST	LT.																	1								
129 - D	204	1227+59.00		CONST	CL.																	1								
130 - D	204	1227 +59.00		CONST	CL.	1227+59.00		CONST	CL.						1									125						
131 - D	204	1230+79.00	87	CONST	RT.																									
TOTALS CARRIED TO SHEET 95										6	6			4	17	4	7	3			2	5		3875						

CALCULATED PS CHECKED WJC

DRAINAGE SUBSUMMARY

MED - 71 - 15.78

7885DS12.DGN 11/30/99 RB 9

DRAINAGE SUBSUMMARY

CALCULATED PS CHECKED WJC

REFERENCE NO.	SHEET REFERENCE NO.	STATION	OFFSET	℄ REFERENCE	SIDE	STATION	OFFSET	℄ REFERENCE	SIDE	SS837 24" LINER PIPE ASTM F894 OR 24" LINER PIPE, 707.12 OR 24" LINER PIPE, 707.42 OR 26.278" LINER PIPE SS937 LIN. FT.	SS837 27" LINER PIPE ASTM F894 WITH 33" (MIN.) INLET OPENING OR 30" LINER PIPE, 707.12 WITH 33" (MIN.) INLET OPENING 30" LINER PIPE, 707.42 WITH 33" (MIN.) INLET OPENING OR 30.03" LINER PIPE, SS937 WITH 33" (MIN.) INLET OPENING LIN. FT.	SS837 27" LINER PIPE ASTM F894 WITH 36" (MIN.) INLET OPENING OR 30"LINER PIPE 707.12 WITH 36" (MIN.) INLET OPENING OR 30" LINER PIPE 707.42 WITH 36" (MIN.) INLET OPENING OR 30.03" LINER PIPE SS937 WITH 36" (MIN.) INLET OPENING LIN. FT.	SS837 33" LINER PIPE ASTM F894 WITH 36" (MIN.) INLET OPENING OR 36" LINER PIPE, 707.12 OR 36" LINER PIPE, 707.42 OR 33.784" LINER PIPE SS937 WITH 36" (MIN.) INLET OPENING LIN. FT.	SS837 36" LINER PIPE, 707.12 LIN. FT.	SS837 36" LINER PIPE, 707.12 WITH 39" (MIN.) INLET OPENING LIN. FT.	SS837 36" LINER PIPE ASTM F894 WITH 42" (MIN.) INLET OPENING OR 42" LINER PIPE, 707.12 OR 36" LINER PIPE, 707.42 WITH 42" (MIN.) INLET OPENING OR 39.416" LINER PIPE, SS937 WITH 42" (MIN.) INLET OPENING LIN. FT.	SS837 60" LINER PIPE ASTM F894 OR 66" LINER PIPE, 707.12 LIN. FT.	BACKFILL FOR LINER PIPE CU. YD.	
83 - D	192	1087+40.00		CONST	CL.														
84 - D	193	1089+28.00		CONST	CL.				LT.										
11 - DR	193	1092+30.00	80	CONST	RT.	1092+35.00	125	CONST	RT.										
85 - D	194	1102+59.69		CONST	LT.														
85A - D	194	1102+89.00		CONST	LT.	1102 +70.00		CONST	CL.										
86 - D	194	1102+70.00		CONST	CL.														
87 - D	194	1103+08.00		CONST	RT.														
87A - D	194	1102+77.00		CONST	RT.	1102 +70.00		CONST	CL.										
88 - D	194	1106+00.00		CONST	CL.														
89 - D	194	1108+80.00	8	CONST	RT.														
90 - D	195	1116+80.00	155	CONST	LT.														
91 - D	195	1118+42.00		CONST	CL.														
92 - D	196	1127+90.00		CONST	CL.	1127 +20.00		CONST	RT.										
93 - D	196	1134+38.00		CONST	CL.														
94 - D	196	1134+38.00		CONST	RT.														
95 - D	196	1134+38.00		CONST	LT.														
96 - D	197	1140+30.00		CONST	CL.														
97 - D	197	1143+90.00		CONST	CL.														
98 - D	197	1143+90.00		CONST	RT.														
99 - D	197	1143+90.00		CONST	LT.														
100 - D	198	1152+40.00	75	CONST	LT.														
101 - D	198	1156+64.00	82	CONST	LT.														
102 - D	198	1156+80.00		CONST	RT.	1158 +80.00		CONST	RT.										
103 - D	198	1158+55.00	100	CONST	RT.														
104 - D	198	1158+84.00		CONST	CL.														
105 - D	198	1158+84.00	92	CONST	LT.														
106 - D	199	1173+04.00		CONST	CL.														
107 - D		NOT USED																	
108 - D	200	1185+80.00		CONST	CL.														
109 - D	200	1185+74.00	90	CONST	RT.														
110 - D	200	1184+20.00		CONST	RT.	1187+10.00		CONST	RT.										
111 - D	200	1186 +37.00		CONST	CL.	1187+50.00		CONST	CL.										
111A - D	200	1186 +37.00		CONST	CL.	1187+30.00		CONST	CL.										
112 - D	201	1193+00.00		CONST	RT.				LT.			206						45	
113 - D	201	1198+41.00		CONST	CL.														
114 - D	201	1198+41.00	117	CONST	LT.														
114A - D	201	1198 +41.00		CONST	RT.														
115 - D	201	1199 +20.00	109	CONST	LT.	1198+50.00		CONST	LT.										
116 - D	201	1200+62.00	95	CONST	RT.														
117 - D	201	1200+62.00	186	CONST	RT.														
118 - D	202	1201+65.00	118	CONST	LT.	1202+34.00		CONST	CL.		138							30	
119 - D	202	1202+34.00		CONST	CL.														
120 - D	202	1205+87.00	300±	CONST	RT.	1206+32.60	219±	CONST	RT.										
121 - D	202	1209+34.00		CONST	CL.														
122 - D	203	1216+76.00		CONST	CL.														
123 - D	203	1216+76.00		CONST	RT.														
124 - D	203	1216+76.00		CONST	LT.														
125 - D	203	1221+34.00		CONST	CL.														
126 - D	203	1221+34.00		CONST	RT.														
12 - DR	203	1223+69.00		CONST	CL.	1227+00.00		CONST	LT.										
127 - D	203	1223+69.00		CONST	LT.	1227+00.00		CONST	LT.										
128 - D	203	1223 +00.00		CONST	LT.														
129 - D	204	1227+59.00		CONST	CL.														
130 - D	204	1227 +59.00		CONST	CL.	1227+59.00		CONST	CL.										
131 - D	204	1230+79.00	87	CONST	RT.														
TOTALS CARRIED TO SHEET 96											138	206						75	

MED - 71 - 15.78

7885DS14.DGN 11/30/99 RB

REFERENCE NO.	SHEET REFERENCE NO.	STATION	OFFSET	℄ REFERENCE	SIDE	STATION	OFFSET	℄ REFERENCE	SIDE	202				SPECIAL	203	519	601				602		603					
										PIPE REMOVED 24", AND UNDER	CATCH BASIN REMOVED	CATCH BASIN ABANDONED	MANHOLE REMOVED	FILL AND PLUG EXISTING CONDUIT	DITCH CLEANOUT	PATCHING CONCRETE STRUCTURES	RIPRAP USING 6" REINFORCED CONCRETE SLAB	ROCK CHANNEL PROTECTION, TYPE A WITH FILTER	ROCK CHANNEL PROTECTION, TYPE B WITH FILTER	ROCK CHANNEL PROTECTION, TYPE C WITH FILTER	CONCRETE MASONRY	12" CONDUIT, TYPE E	15" CONDUIT, TYPE B	15" CONDUIT, TYPE C	15" CONDUIT, TYPE F 707.05 TYPE C			
										LIN. FT.	EACH	EACH	EACH	LIN. FT.	LIN. FT.	SQ. FT.	SQ. YD.	CU. YD.	CU. YD.	CU. YD.	CU. YD.	LIN. FT.	LIN. FT.	LIN. FT.	LIN. FT.			
132 - D		NOT USED																										
133 - D	204	1231+34.00		CONST	CL.																			4				
134 - D	205	1240+15.00		CONST	RT.	1240+74.00		CONST	LT.								5.56	37.04										
135 - D	205	1242+34.00		CONST	CL.	1242+34.00		CONST	LT.											15.40	0.27			34				
136 - D		NOT USED																										
13 - DR	206	1253+39.00	75	CONST	LT.					80	1																	
137 - D	206-207	1262+35.00	137	CONST	RT.	1263+40.00		CONST	LT.						55		4.11	22.22										
138 - D	207	1263+84.00		CONST	CL.																			4				
139 - D	207	1267+34.00	75	CONST	RT.	1267+34.00		CONST	LT.	75	1				50				8.33					4				
140 - D	207	1269+93.96		CONST	RT.															2.00	0.27				42			
140A- D	207	1270+13.00		CONST	RT.	1270 +34.00		CONST	CL.															30				
141 - D	207	1270+34.00		CONST	CL.																			4				
142 - D	207	1270+40.50		CONST	LT.															2.00	0.27		4		44			
142A- D	207	1270+23.03		CONST	LT.	1270 +34.00		CONST	CL.															25				
143 - D	207	1271+68.00	141	CONST	RT.	1271+68.00		CONST	LT.									23.56										
144 - D	208	1278+34.00	159	CONST	LT.													50.00										
14 - DR	208	1279+34.00	75	CONST	LT.					65	1																	
145 - D	208	1281+34.00		CONST	CL.																			4				
146 - D	209	1293+94.00		CONST	CL.																							
147 - D	209	1300+34.00		CONST	CL.																			4				
148 - D		NOT USED																										
149 - D	210	1312+34.00		CONST	CL.																			4				
150 - D	212	1338+38.00		CONST	CL.																							
151 - D	212	1338+38.00	95	CONST	RT.																							
152 - D	213	1344+19.00	95	CONST	RT.																							
153 - D	213	1344+76.00		CONST	CL.																							
154 - D	213	1341+00.00		CONST	CL.																							
155 - D	214	1351+34.00		CONST	CL.																			4				
156 - D		NOT USED																										
157 - D	215	1366+34.00		CONST	CL.																			4				
158 - D		NOT USED																										
159 - D		NOT USED																										
160 - D	216	1381+34.00		CONST	CL.																			4				
160A- D	217	1394.35.00		CONST	CL.	1396+34.00		CONST	CL.																			
S.R. 18																												
161 - D	177	149 +95.00		S.R. 18	LT.	150 +02.00		S.R. 18	LT.																48			
161A- D	177	149 +87.00		S.R. 18	LT.	152 +15.00		S.R. 18	LT.					230										4				
162 - D	177	149 +95.00		S.R. 18	LT.	152 +00.00		S.R. 18	LT.															228				
163 - D	177	152 +00.00		S.R. 18	LT.	152 +15.00		S.R. 18	LT.															15				
164 - D	177	152 +15.00		S.R. 18	LT.																			4				
GRANGER ROAD																												
165 - D	408	47 +51.82		GRANGER RD	RT.	47 +61.19		GRANGER RD	LT.														32					
166 - D	408	47 +61.19		GRANGER RD	LT.	46 +94.00±		GRANGER RD	LT.															80				
167 - D	409	51 +10.78		GRANGER RD	RT.															2.00	0.27				24			
168 - D	409	51 +20.15		GRANGER RD	LT.															2.00	0.27			22				
S.R. 3																												
169 - D	194	899 +10.00		S.R. 3	LT.													54.81			8.03							
170 - D	194	903 +65.00		S.R. 3	LT.																2.20							
170A- D	194	81 +33.00		SR3-RAMP B	LT.															2.00	0.27				22			
170B- D	194	83 +34.91		SR3-RAMP C	RT.										40					2.00	0.27			30				
TOTALS CARRIED TO SHEET 93										220	3			230	145		9.67	187.63	8.33	27.40	12.12		36	512	180			

CALCULATED PS CHECKED WJC

DRAINAGE SUBSUMMARY

MED - 71 - 15.78

89
940

7885DS10.DGN 11/30/99 RB 10

REFERENCE NO.	SHEET REFERENCE NO.	STATION	OFFSET	℄ REFERENCE	SIDE	STATION	OFFSET	℄ REFERENCE	SIDE	603 18" CONDUIT, TYPE B LIN. FT.	18" CONDUIT, TYPE C LIN. FT.	18" TYPE C, 706.02 LIN. FT.	24" CONDUIT, TYPE C LIN. FT.	24" CONDUIT, TYPE C, 706.02 LIN. FT.	24" CONDUIT TYPE F, 707.05, TYPE C LIN. FT.	30" CONDUIT, TYPE C LIN. FT.	30" CONDUIT, TYPE C 706.02 LIN. FT.	30" CONDUIT, TYPE C, 707.01, ALUMINUM COATED LIN. FT.	30" CONDUIT, TYPE F, 707.05, TYPE C LIN. FT.	36" CONDUIT, TYPE C LIN. FT.	36" CONDUIT, TYPE C, 707.01, ALUMINUM COATED LIN. FT.	42" CONDUIT, TYPE C LIN. FT.	42" CONDUIT, TYPE C, 706.02 LIN. FT.	42" CONDUIT, TYPE C, 707.01, ALUMINUM COATED LIN. FT.	CONDUIT BORED OR JACKED 48" CONDUIT, TYPE A, 706.02, 3000 D-LOAD LIN. FT.	54" CONDUIT, TYPE C, AS PER PLAN LIN. FT.		
132 - D		NOT USED																										
133 - D	204	1231+34.00		CONST	CL.																							
134 - D	205	1240+15.00		CONST	RT.	1240+74.00		CONST	LT.																			
135 - D	205	1242+34.00		CONST	CL.	1242+34.00		CONST	LT.																			
136 - D		NOT USED																										
13 - DR	206	1253+39.00	75	CONST	LT.																							
137 - D	206-207	1262+35.00	137	CONST	RT.	1263+40.00		CONST	LT.																			
138 - D	207	1263+84.00		CONST	CL.																							
139 - D	207	1267+34.00	75	CONST	RT.	1267+34.00		CONST	LT.			20																
140 - D	207	1269+93.96		CONST	RT.																							
140A- D	207	1270+13.00		CONST	RT.	1270 +34.00		CONST	CL.																			
141 - D	207	1270+34.00		CONST	CL.																							
142 - D	207	1270+40.50		CONST	LT.																							
142A- D	207	1270+23.03		CONST	LT.	1270 +34.00		CONST	CL.																			
143 - D	207	1271+68.00	141	CONST	RT.	1271+68.00		CONST	LT.																			
144 - D	208	1278+34.00	159	CONST	LT.																							
14 - DR	208	1279+34.00	75	CONST	LT.																							
145 - D	208	1281+34.00		CONST	CL.																							
146 - D	209	1293+94.00		CONST	CL.						4																	
147 - D	209	1300+34.00		CONST	CL.																							
148 - D		NOT USED																										
149 - D	210	1312+34.00		CONST	CL.																							
150 - D	212	1338+38.00		CONST	CL.								8															
151 - D	212	1338+38.00	95	CONST	RT.								4															
152 - D	213	1344+19.00	95	CONST	RT.								4															
153 - D	213	1344+76.00		CONST	CL.								8			4												
154 - D	213	1341+00.00		CONST	CL.								8															
155 - D	214	1351+34.00		CONST	CL.																							
156 - D		NOT USED																										
157 - D	215	1366+34.00		CONST	CL.																							
158 - D		NOT USED																										
159 - D		NOT USED																										
160 - D	216	1381+34.00		CONST	CL.																							
160A- D	217	1394.35.00		CONST	CL.	1396+34.00		CONST	CL.		194																	
S.R. 18																												
161 - D	177	149 +95.00		S.R. 18	LT.	150 +02.00		S.R. 18	LT.																			
161A- D	177	149 +87.00		S.R. 18	LT.	152 +15.00		S.R. 18	LT.																			
162 - D	177	149 +95.00		S.R. 18	LT.	152 +00.00		S.R. 18	LT.																			
163 - D	177	152 +00.00		S.R. 18	LT.	152 +15.00		S.R. 18	LT.																			
164 - D	177	152 +15.00		S.R. 18	LT.																							
GRANGER ROAD																												
165 - D	408	47 +51.82		GRANGER RD	RT.	47 +61.19		GRANGER RD	LT.																			
166 - D	408	47 +61.19		GRANGER RD	LT.	46 +94.00±		GRANGER RD	LT.																			
167 - D	409	51 +10.78		GRANGER RD	RT.																							
168 - D	409	51 +20.15		GRANGER RD	LT.																							
S.R. 3																												
169 - D	194	899 +10.00		S.R. 3	LT.																							
170 - D	194	903 +65.00		S.R. 3	LT.							8																
170A- D	194	81 +33.00		SR3-RAMP B	LT.																							
170B- D	194	83 +34.91		SR3-RAMP C	RT.																							
TOTALS CARRIED TO SHEET 94											198	28	32			4								8				

CALCULATED PS CHECKED WJC

DRAINAGE SUBSUMMARY

MED - 71 - 15.78

90
940

7885DSIL.DGN 11/30/99 RB

REFERENCE NO.	SHEET REFERENCE NO.	STATION	OFFSET	℄ REFERENCE	SIDE	STATION	OFFSET	℄ REFERENCE	SIDE	603			604										670	BENDS					
										72" CONDUIT, TYPE A, 706.02	84" CONDUIT, TYPE A, 706.02	CONDUIT MISC. INSITU LINER	CATCH BASIN NO. 3	CATCH BASIN NO. 3A	CATCH BASIN NO. 4, AS PER PLAN	CATCH BASIN NO. 4A, AS PER PLAN	CATCH BASIN NO. 5, AS PER PLAN	CATCH BASIN NO. 5A, AS PER PLAN	CATCH BASIN NO. 2-2B	CATCH BASIN NO. 2-4, AS PER PLAN	CATCH BASIN RECONSTRUCTED TO GRADE	MANHOLE NO. 3	MANHOLE RECONSTRUCTED TO GRADE	DITCH EROSION PROTECTION	15" - 22.5°	15" - 30°	15" - 45°	24" - 30°		
										LIN. FT.	LIN. FT.	LIN. FT.	EACH	EACH	EACH	EACH	EACH	EACH	EACH	EACH	EACH	EACH	SQ. YD.	EACH					
132 - D		NOT USED																											
133 - D	204	1231+34.00		CONST	CL.										1								125						
134 - D	205	1240+15.00		CONST	RT.	1240+74.00		CONST	LT.																				
135 - D	205	1242+34.00		CONST	CL.	1242+34.00		CONST	LT.						1								125						
136 - D		NOT USED																											
13 - DR	206	1253+39.00	75	CONST	LT.																								
137 - D	206-207	1262+35.00	137	CONST	RT.	1263+40.00		CONST	LT.																				
138 - D	207	1263+84.00		CONST	CL.										1								125						
139 - D	207	1267+34.00	75	CONST	RT.	1267+34.00		CONST	LT.						1								125						
140 - D	207	1269+93.96		CONST	RT.									1											2				
140A- D	207	1270+13.00		CONST	RT.	1270 +34.00		CONST	CL.					1															
141 - D	207	1270+34.00		CONST	CL.										1								125						
142 - D	207	1270+40.50		CONST	LT.									1											2				
142A- D	207	1270+23.03		CONST	LT.	1270 +34.00		CONST	CL.					1															
143 - D	207	1271+68.00	141	CONST	RT.	1271+68.00		CONST	LT.																				
144 - D	208	1278+34.00	159	CONST	LT.																								
14 - DR	208	1279+34.00	75	CONST	LT.																								
145 - D	208	1281+34.00		CONST	CL.										1								125						
146 - D	209	1293+94.00		CONST	CL.										1								250						
147 - D	209	1300+34.00		CONST	CL.										1								125						
148 - D		NOT USED																											
149 - D	210	1312+34.00		CONST	CL.										1								125						
150 - D	212	1338+38.00		CONST	CL.										1								125						
151 - D	212	1338+38.00	95	CONST	RT.												1						125						
152 - D	213	1344+19.00	95	CONST	RT.												1						125						
153 - D	213	1344+76.00		CONST	CL.											1							125						
154 - D	213	1341+00.00		CONST	CL.										1								125						
155 - D	214	1351+34.00		CONST	CL.										1								125						
156 - D		NOT USED																											
157 - D	215	1366+34.00		CONST	CL.										1								125						
158 - D		NOT USED																											
159 - D		NOT USED																											
160 - D	216	1381+34.00		CONST	CL.										1								125						
160A- D	217	1394.35.00		CONST	CL.	1396+34.00		CONST	CL.						1								125						
S.R. 18																													
161 - D	177	149 +95.00		S.R. 18	LT.	150 +02.00		S.R. 18	LT.								1						125						
161A- D	177	149 +87.00		S.R. 18	LT.	152 +15.00		S.R. 18	LT.											1									
162 - D	177	149 +95.00		S.R. 18	LT.	152 +00.00		S.R. 18	LT.									1											
163 - D	177	152 +00.00		S.R. 18	LT.	152 +15.00		S.R. 18	LT.									1											
164 - D	177	152 +15.00		S.R. 18	LT.															1									
GRANGER ROAD																													
165 - D	408	47 +51.82		GRANGER RD	RT.	47 +61.19		GRANGER RD	LT.					1															
166 - D	408	47 +61.19		GRANGER RD	LT.	46 +94.00±		GRANGER RD	LT.					1															
167 - D	409	51 +10.78		GRANGER RD	RT.									1											2				
168 - D	409	51 +20.15		GRANGER RD	LT.									1															
S.R. 3																													
169 - D	194	899 +10.00		S.R. 3	LT.																								
170 - D	194	903 +65.00		S.R. 3	LT.																								
170A- D	194	81 +33.00		SR3-RAMP B	LT.									1														2	
170B- D	194	83 +34.91		SR3-RAMP C	RT.									1															
TOTALS CARRIED TO SHEET 95														10	15	1	3		2			2	2500		2		2		

CALCULATED PS CHECKED WJC

DRAINAGE SUBSUMMARY

MED - 71 - 15.78

91
940

7885DS12.DGN 11/30/99 RB 12

REFERENCE NO.	SHEET REFERENCE NO.	STATION	OFFSET	℄ REFERENCE	SIDE	STATION	OFFSET	℄ REFERENCE	SIDE	SS837 24" LINER PIPE ASTM F894 OR 24" LINER PIPE, 707.12 OR 24" LINER PIPE, 707.42 OR 26.278" LINER PIPE SS937	SS837 27" LINER PIPE ASTM F894 WITH 33" (MIN.) INLET OPENING OR 30" LINER PIPE, 707.12 WITH 33" (MIN.) INLET OPENING 30" LINER PIPE, 707.42 WITH 33" (MIN.) INLET OPENING OR 30.03" LINER PIPE, SS937 WITH 33" (MIN.) INLET OPENING	SS837 27" LINER PIPE ASTM F894 WITH 36" (MIN.) INLET OPENING OR 30" LINER PIPE 707.12 WITH 36" (MIN.) INLET OPENING OR 30" LINER PIPE 707.42 WITH 36" (MIN.) INLET OPENING OR 30.03" LINER PIPE SS937 WITH 36" (MIN.) INLET OPENING	SS837 33" LINER PIPE ASTM F894 WITH 36" (MIN.) INLET OPENING OR 36" LINER PIPE, 707.12 OR 36" LINER PIPE, 707.42 OR 33.784" LINER PIPE SS937 WITH 36" (MIN.) INLET OPENING	SS837 36" LINER PIPE, 707.12	SS837 36" LINER PIPE, 707.12 WITH 39" (MIN.) INLET OPENING	SS837 36" LINER PIPE ASTM F894 WITH 42" (MIN.) INLET OPENING OR 42" LINER PIPE, 707.12 OR 36" LINER PIPE, 707.42 WITH 42" (MIN.) INLET OPENING OR 39.416" LINER PIPE, SS937 WITH 42" (MIN.) INLET OPENING	SS837 60" LINER PIPE ASTM F894 OR 66" LINER PIPE, 707.12	SS837 BACKFILL FOR LINER PIPE	
										LIN. FT.	LIN. FT.	LIN. FT.	LIN. FT.	LIN. FT.	LIN. FT.	LIN. FT.	LIN. FT.	CU. YD.	
132 - D		NOT USED																	
133 - D	204	1231+34.00		CONST	CL.														
134 - D	205	1240+15.00		CONST	RT.	1240+74.00		CONST	LT.									230	147
135 - D	205	1242+34.00		CONST	CL.	1242+34.00		CONST	LT.										
136 - D		NOT USED																	
13 - DR	206	1253+39.00	75	CONST	LT.														
137 - D	206-207	1262+35.00	137	CONST	RT.	1263+40.00		CONST	LT.		388								85
138 - D	207	1263+84.00		CONST	CL.														
139 - D	207	1267+34.00	75	CONST	RT.	1267+34.00		CONST	LT.										
140 - D	207	1269+93.96		CONST	RT.														
140A D	207	1270+13.00		CONST	RT.	1270 +34.00		CONST	CL.										
141 - D	207	1270+34.00		CONST	CL.														
142 - D	207	1270+40.50		CONST	LT.														
142A D	207	1270+23.03		CONST	LT.	1270 +34.00		CONST	CL.										
143 - D	207	1271+68.00	141	CONST	RT.	1271+68.00		CONST	LT.								268		113
144 - D	208	1278+34.00	159	CONST	LT.														
14 - DR	208	1279+34.00	75	CONST	LT.														
145 - D	208	1281+34.00		CONST	CL.														
146 - D	209	1293+94.00		CONST	CL.														
147 - D	209	1300+34.00		CONST	CL.														
148 - D		NOT USED																	
149 - D	210	1312+34.00		CONST	CL.														
150 - D	212	1338+38.00		CONST	CL.														
151 - D	212	1338+38.00	95	CONST	RT.														
152 - D	213	1344+19.00	95	CONST	RT.														
153 - D	213	1344+76.00		CONST	CL.														
154 - D	213	1341+00.00		CONST	CL.														
155 - D	214	1351+34.00		CONST	CL.														
156 - D		NOT USED																	
157 - D	215	1366+34.00		CONST	CL.														
158 - D		NOT USED																	
159 - D		NOT USED																	
160 - D	216	1381+34.00		CONST	CL.														
160A- D	217	1394.35.00		CONST	CL.	1396+34.00		CONST	CL.										
S.R. 18																			
161 - D	177	149 +95.00		S.R. 18	LT.	150 +02.00		S.R. 18	LT.										
161A- D	177	149 +87.00		S.R. 18	LT.	152 +15.00		S.R. 18	LT.										
162 - D	177	149 +95.00		S.R. 18	LT.	152 +00.00		S.R. 18	LT.										
163 - D	177	152 +00.00		S.R. 18	LT.	152 +15.00		S.R. 18	LT.										
164 - D	177	152 +15.00		S.R. 18	LT.														
GRANGER ROAD																			
165 - D	408	47 +51.82		GRANGER RD	RT.	47 +61.19		GRANGER RD	LT.										
166 - D	408	47 +61.19		GRANGER RD	LT.	46 +94.00±		GRANGER RD	LT.										
167 - D	409	51 +10.78		GRANGER RD	RT.														
168 - D	409	51 +20.15		GRANGER RD	LT.														
S.R. 3																			
169 - D	194	899 +10.00		S.R. 3	LT.														
170 - D	194	903 +65.00		S.R. 3	LT.														
170A- D	194	81 +33.00		SR3-RAMP B	LT.														
170B- D	194	83 +34.91		SR3-RAMP C	RT.														
TOTALS CARRIED TO SHEET 96											388						268	230	345

CALCULATED PS CHECKED WJC

DRAINAGE SUBSUMMARY

MED - 71 - 15.78

92
940

7885DS14.DGN 11/30/99 RB

DRAINAGE SUBSUMMARY

CALCULATED PS CHECKED WJC

REFERENCE NO.	SHEET REFERENCE NO.	STATION	OFFSET	℄ REFERENCE	SIDE	STATION	OFFSET	℄ REFERENCE	SIDE	202 PIPE REMOVED 24", AND UNDER (LIN. FT.)	202 CATCH BASIN REMOVED (EACH)	202 CATCH BASIN ABANDONED (EACH)	202 MANHOLE REMOVED (EACH)	SPECIAL FILL AND PLUG EXISTING CONDUIT (LIN. FT.)	203 DITCH CLEANOUT (LIN. FT.)	519 PATCHING CONCRETE STRUCTURES (SQ. FT.)	601 RIPRAP USING 6" REINFORCED CONCRETE SLAB (SQ. YD.)	601 ROCK CHANNEL PROTECTION, TYPE A WITH FILTER (CU. YD.)	601 ROCK CHANNEL PROTECTION, TYPE B WITH FILTER (CU. YD.)	601 ROCK CHANNEL PROTECTION, TYPE C WITH FILTER (CU. YD.)	602 CONCRETE MASONRY (CU. YD.)	603 12" CONDUIT, TYPE E (LIN. FT.)	603 15" CONDUIT, TYPE B (LIN. FT.)	603 15" CONDUIT, TYPE C (LIN. FT.)	603 15" CONDUIT, TYPE F 707.05 TYPE C (LIN. FT.)			
SOUTHBOUND REST AREA																												
171 - D	198	1161+61.27		CONST	LT.	1162+29.92		CONST	LT.											2.00	0.33							
172 - D	198	1162+29.92		CONST	LT.	1162+39.09		CONST	LT.														30					
NORTHBOUND REST AREA																												
173 - D	202	1206+32.33		CONST	RT.	1206+32.60		CONST	RT.																			
173A- D	202	1206+32.60		CONST	RT.	1207+10.94		CONST	RT.																			
173B- D	202	1207+10.94		CONST	RT.	1207+30.09		CONST	RT.															32				
S.R. 303																												
174 - D	207	47 +55.00		S.R. 303	RT.										50													
174A - D	207	45 +80.00		S.R. 303	RT.																							
175 - D	207	48 +75.00	50	S.R. 303	LT.	49 +05.00	43.5	S.R. 303	LT.											3.33	0.27			31				
176 - D	207	49 +05.00	43.5	S.R. 303	LT.	51 +00.00	43.5	S.R. 303	LT.															195				
177 - D	207	51 +00.00	43.5	S.R. 303	LT.	51 +30.00	50	S.R. 303	LT.															31				
178 - D	207	49 +80.00	52	S.R. 303	RT.	49 +25.00	39	S.R. 303	RT.											3.33	0.27			47				
179 - D	207	49 +25.00	39	S.R. 303	RT.	51 +00.00	39	S.R. 303	RT.															175				
180 - D	207	51 +00.00	39	S.R. 303	RT.	51 +62.00	51.5	S.R. 303	RT.															63				
I.R. 271																												
181 - D	427	987 +64.00	32	I.R. 271	RT.																							
182 - D	427	987 +55.86	34	I.R. 271	LT.																							
183 - D	427	989 +15.84	30	I.R. 271	LT.																							
184 - D	427	990 +52.27	50	I.R. 271	LT.																							
185 - D	427	993 +70.40	32	I.R. 271	LT.																							
186 - D	427	986 +50.00	48	I.R. 271	RT.	987 +64.00		I.R. 271	RT.																			
187 - D	428	986 +56.44	50	I.R. 271	RT.																			4				
S.R. 303 RAMPS																												
180A - D	492	45 +50.00	1.5	S.R. 303	RT.	RAMP C-D			RT.														47					
180B - D	492	46 +00.00	1.5	S.R. 303	RT.	RAMP C-D			RT.																			
180C - D	492	46 +84.54	38.91	S.R. 303	RT.	RAMP C-D											24.04		108.80		4.70							
15-DR	492	45 +50.00		S.R. 303	RT.	RAMP C-D			LT.	50	1																	
16-DR	492	46 +00.00		S.R. 303	RT.	RAMP C-D			LT.			1																
171-D THRU 16-DR TOTALS										50	1	1			50		24.04		108.80	8.66	5.57		77	578			
TOTALS FROM SHEET NO. 77										1495	9				300	168	528.25	395.84	648.84	133.80	96.64		22	754	178		
TOTALS FROM SHEET NO. 81										650	3	2	1	145	150		70.90	50.37	144.31	31.23	25.41			969	354		
TOTALS FROM SHEET NO. 85										386	2				325		248.72	273.91	180.63	6.22	43.65	100		673	186		
TOTALS FROM SHEET NO. 89										220	3			230	145		9.67	187.63	8.33	27.40	12.12		36	512	180		
SUBTOTALS										2801	18	3	1	375	970	168	881.58	907.75	1090.91	207.31	183.39	100	135	3486	898		
TOTALS CARRIED TO GENERAL SUMMARY										**2801**	**18**	**3**	**1**	**375**	**970**	**168**	**882**	**908**	**1091**	**208**	**183.4**	**100**	**135**	**3486**	**898**		

MED - 71 - 15.78

7885DSI0.DGN 11/30/99 RB 13

DRAINAGE SUBSUMMARY

CALCULATED PS | CHECKED WJC

MED - 71 - 15.78

REFERENCE NO.	SHEET REFERENCE NO.	STATION	OFFSET	℄ REFERENCE	SIDE	STATION	OFFSET	℄ REFERENCE	SIDE	603 18" CONDUIT, TYPE B	603 18" CONDUIT, TYPE C	603 18" TYPE C, 706.02	603 24" CONDUIT, TYPE C	603 24" CONDUIT, TYPE C, 706.02	603 24" CONDUIT TYPE F, 707.05, TYPE C	603 30" CONDUIT, TYPE C	603 30" CONDUIT, TYPE C 706.02	603 30" CONDUIT, TYPE C, 707.01, ALUMINUM COATED	603 30" CONDUIT, TYPE F, 707.05, TYPE C	603 36" CONDUIT, TYPE C	603 36" CONDUIT, TYPE C, 707.01, ALUMINUM COATED	603 42" CONDUIT, TYPE C	603 42" CONDUIT, TYPE C, 706.02	603 42" CONDUIT, TYPE C, 707.01, ALUMINUM COATED	603 CONDUIT BORED OR JACKED 48" CONDUIT, TYPE A, 706.02, 3000 D-LOAD	603 54" CONDUIT, TYPE C, AS PER PLAN		
										LIN. FT.	LIN. FT.	LIN. FT.	LIN. FT.	LIN. FT.	LIN. FT.	LIN. FT.	LIN. FT.	LIN. FT.	LIN. FT.	LIN. FT.	LIN. FT.	LIN. FT.	LIN. FT.	LIN. FT.	LIN. FT.	LIN. FT.		
SOUTHBOUND REST AREA																												
171 - D	198	1161+61.27		CONST	LT.	1162+29.92		CONST	LT.	65																		
172 - D	198	1162+29.92		CONST	LT.	1162+39.09		CONST	LT.																			
NORTHBOUND REST AREA																												
173 - D	202	1206+32.33		CONST	RT.	1206+32.60		CONST	RT.		24																	
173A- D	202	1206+32.60		CONST	RT.	1207+10.94		CONST	RT.	72																		
173B- D	202	1207+10.94		CONST	RT.	1207+30.09		CONST	RT.																			
S.R. 303																												
174 - D	207	47 +55.00		S.R. 303	RT.								8															
174A - D	207	45 +80.00		S.R. 303	RT.																							
175 - D	207	48 +75.00	50	S.R. 303	LT.	49 +05.00	43.5	S.R. 303	LT.																			
176 - D	207	49 +05.00	43.5	S.R. 303	LT.	51 +00.00	43.5	S.R. 303	LT.																			
177 - D	207	51 +00.00	43.5	S.R. 303	LT.	51 +30.00	50	S.R. 303	LT.																			
178 - D	207	49 +80.00	52	S.R. 303	RT.	49 +25.00	39	S.R. 303	RT.																			
179 - D	207	49 +25.00	39	S.R. 303	RT.	51 +00.00	39	S.R. 303	RT.																			
180 - D	207	51 +00.00	39	S.R. 303	RT.	51 +62.00	51.5	S.R. 303	RT.																			
I.R. 271																												
181 - D	427	987 +64.00	32	I.R. 271	RT.						4																	
182 - D	427	987 +55.86	34	I.R. 271	LT.						4									4								
183 - D	427	989 +15.84	30	I.R. 271	LT.															8								
184 - D	427	990 +52.27	50	I.R. 271	LT.															8								
185 - D	427	993 +70.40	32	I.R. 271	LT.															8								
186 - D	427	986 +50.00	48	I.R. 271	RT.	987 +64.00		I.R. 271	RT.		110																	
187 - D	428	986 +56.44	50	I.R. 271	RT.																							
S.R. 303 RAMPS																												
180A - D	492	45 +50.00	1.5	S.R. 303	RT.	RAMP C-D			RT.																			
180B - D	492	46 +00.00	1.5	S.R. 303	RT.	RAMP C-D			RT.	6																		
180C - D	492	46 +84.54	38.91	S.R. 303	RT.	RAMP C-D											43											
15-DR	492	45 +50.00		S.R. 303	RT.	RAMP C-D			LT.																			
16-DR	492	46 +00.00		S.R. 303	RT.	RAMP C-D			LT.																			
171-D THRU 16-DR TOTALS										137	142		8				43			28						48	
TOTALS FROM SHEET NO. 78										12			1225	88			76			52			15	20			
TOTALS FROM SHEET NO. 82											1266		40	28	140			8		16	16				128		
TOTALS FROM SHEET NO. 86											102		4			60			192	28		4	16				
TOTALS FROM SHEET NO. 90											198	28	32			4							8				
SUBTOTALS										149	1708	28	1309	146	140	64	119	8	192	124	16	4	39	20	128	48		
TOTALS CARRIED TO GENERAL SUMMARY										**149**	**1708**	**28**	**1309**	**146**	**140**	**64**	**119**	**8**	**192**	**124**	**16**	**4**	**39**	**20**	**128**	**48**		

7885DSIL.DGN 11/30/99 RB 14

DRAINAGE SUBSUMMARY

CALCULATED PS | CHECKED WJC

REFERENCE NO.	SHEET REFERENCE NO.	STATION	OFFSET	℄ REFERENCE	SIDE	STATION	OFFSET	℄ REFERENCE	SIDE	603			604										670	BENDS					
										72" CONDUIT, TYPE A, 706.02	84" CONDUIT, TYPE A, 706.02	CONDUIT MISC. INSITU LINER	CATCH BASIN NO. 3	CATCH BASIN NO. 3A	CATCH BASIN NO. 4, AS PER PLAN	CATCH BASIN NO. 4A, AS PER PLAN	CATCH BASIN NO. 5, AS PER PLAN	CATCH BASIN NO. 5A, AS PER PLAN	CATCH BASIN NO. 2-2B	CATCH BASIN NO. 2-4, AS PER PLAN	CATCH BASIN RECONSTRUCTED TO GRADE	MANHOLE NO. 3	MANHOLE RECONSTRUCTED TO GRADE	DITCH EROSION PROTECTION	15" - 22.5°	15" - 30°	15" - 45°	24" - 30°
																									EACH			
										LIN. FT.	LIN. FT.	LIN. FT.	EACH	EACH	EACH	EACH	EACH	EACH	EACH	EACH	EACH	EACH	EACH	SQ. YD.				
SOUTHBOUND REST AREA																													
171 - D	198	1161+61.27		CONST	LT.	1162+29.92		CONST	LT.					1															
172 - D	198	1162+29.92		CONST	LT.	1162+39.09		CONST	LT.					1															
NORTHBOUND REST AREA																													
173 - D	202	1206+32.33		CONST	RT.	1206+32.60		CONST	RT.					1															
173A- D	202	1206+32.60		CONST	RT.	1207+10.94		CONST	RT.				1																
173B- D	202	1207+10.94		CONST	RT.	1207+30.09		CONST	RT.				1																
S.R. 303																													
174 - D	207	47 +55.00		S.R. 303	RT.										1														
174A - D	207	45 +80.00		S.R. 303	RT.																1								
175 - D	207	48 +75.00	50	S.R. 303	LT.	49 +05.00	43.5	S.R. 303	LT.													1							
176 - D	207	49 +05.00	43.5	S.R. 303	LT.	51 +00.00	43.5	S.R. 303	LT.													1							
177 - D	207	51 +00.00	43.5	S.R. 303	LT.	51 +30.00	50	S.R. 303	LT.										1										
178 - D	207	49 +80.00	52	S.R. 303	RT.	49 +25.00	39	S.R. 303	RT.													1							
179 - D	207	49 +25.00	39	S.R. 303	RT.	51 +00.00	39	S.R. 303	RT.													1							
180 - D	207	51 +00.00	39	S.R. 303	RT.	51 +62.00	51.5	S.R. 303	RT.										1										
I.R. 271																													
181 - D	427	987 +64.00	32	I.R. 271	RT.																	1							
182 - D	427	987 +55.86	34	I.R. 271	LT.													1						125					
183 - D	427	989 +15.84	30	I.R. 271	LT.													1						125					
184 - D	427	990 +52.27	50	I.R. 271	LT.																	1							
185 - D	427	993 +70.40	32	I.R. 271	LT.													1						125					
186 - D	427	986 +50.00	48	I.R. 271	RT.	987 +64.00		I.R. 271	RT.								1							125					
187 - D	428	986 +56.44	50	I.R. 271	RT.												1							125					
S.R. 303	RAMPS																												
180A - D	492	45 +50.00	1.5	S.R. 303	RT.	RAMP C-D			RT.					1															
180B - D	492	46 +00.00	1.5	S.R. 303	RT.	RAMP C-D			RT.					1															
180C - D	492	46 +84.54	38.91	S.R. 303	RT.	RAMP C-D																							
15-DR	492	45 +50.00		S.R. 303	RT.	RAMP C-D			LT.																				
16-DR	492	46 +00.00		S.R. 303	RT.	RAMP C-D			LT.																				
171-D THRU 16-DR TOTALS													2	5	1		2	3	2		1	6		625					
TOTALS FROM SHEET NO. 79														4	16		1	1		1		2		2250					
TOTALS FROM SHEET NO. 83												398		12	17	2	6				1	5	1	3250					
TOTALS FROM SHEET NO. 87										6	6			4	17	4	7	3			2	5		3875					
TOTALS FROM SHEET NO. 91														10	15	1	3		2			2		2500					
SUBTOTALS												398		35	66	7	19	7	4	1	4	20	1	12500					
TOTALS CARRIED TO GENERAL SUMMARY										6	6	398	2	35	66	7	19	7	4	1	4	20	1	12500					

MED - 71 - 15.78

95
940

7885DSI2.DGN 11/30/99 RB 15

DRAINAGE SUBSUMMARY

CALCULATED PS CHECKED WJC

MED - 71 - 15.78

96/940

REFERENCE NO.	SHEET REFERENCE NO.	STATION	OFFSET	℄ REFERENCE	SIDE	STATION	OFFSET	℄ REFERENCE	SIDE	SS837 24" LINER PIPE ASTM F894 OR 24" LINER PIPE, 707.12 OR 24" LINER PIPE, 707.42 OR 26.278" LINER PIPE SS937	SS837 27" LINER PIPE ASTM F894 WITH 33" (MIN.) INLET OPENING OR 30" LINER PIPE, 707.12 WITH 33" (MIN.) INLET OPENING 30" LINER PIPE, 707.42 WITH 33" (MIN.) INLET OPENING OR 30.03" LINER PIPE, SS937 WITH 33" (MIN.) INLET OPENING	SS837 27" LINER PIPE ASTM F894 WITH 36" (MIN.) INLET OPENING OR 30"LINER PIPE 707.12 WITH 36" (MIN.) INLET OPENING OR 30" LINER PIPE 707.42 WITH 36" (MIN.) INLET OPENING OR 30.03" LINER PIPE SS937 WITH 36" (MIN.) INLET OPENING	SS837 33" LINER PIPE ASTM F894 WITH 36" (MIN.) INLET OPENING OR 36" LINER PIPE, 707.12 OR 36" LINER PIPE, 707.42 OR 33.784" LINER PIPE SS937 WITH 36" (MIN.) INLET OPENING	SS837 36" LINER PIPE, 707.12	SS837 36" LINER PIPE, 707.12 WITH 39" (MIN.) INLET OPENING	SS837 36" LINER PIPE ASTM F894 WITH 42" (MIN.) INLET OPENING OR 42" LINER PIPE, 707.12 OR 36" LINER PIPE, 707.42 WITH 42" (MIN.) INLET OPENING OR 39.416" LINER PIPE, SS937 WITH 42" (MIN.) INLET OPENING	SS837 60" LINER PIPE ASTM F894 OR 66" LINER PIPE, 707.12	SS837 BACKFILL FOR LINER PIPE	
										LIN. FT.	LIN. FT.	LIN. FT.	LIN. FT.	LIN. FT.	LIN. FT.	LIN. FT.	LIN. FT.	CU. YD.	
SOUTHBOUND REST AREA																			
171 - D	198	1161+61.27		CONST	LT.	1162+29.92		CONST	LT.										
172 - D	198	1162+29.92		CONST	LT.	1162+39.09		CONST	LT.										
NORTHBOUND REST AREA																			
173 - D	202	1206+32.33		CONST	RT.	1206+32.60		CONST	RT.										
173A- D	202	1206+32.60		CONST	RT.	1207+10.94		CONST	RT.										
173B- D	202	1207+10.94		CONST	RT.	1207+30.09		CONST	RT.										
S.R. 303																			
174 - D	207	47 +55.00		S.R. 303	RT.														
174A - D	207	45 +80.00		S.R. 303	RT.														
175 - D	207	48 +75.00	50	S.R. 303	LT.	49 +05.00	43.5	S.R. 303	LT.										
176 - D	207	49 +05.00	43.5	S.R. 303	LT.	51 +00.00	43.5	S.R. 303	LT.										
177 - D	207	51 +00.00	43.5	S.R. 303	LT.	51 +30.00	50	S.R. 303	LT.										
178 - D	207	49 +80.00	52	S.R. 303	RT.	49 +25.00	39	S.R. 303	RT.										
179 - D	207	49 +25.00	39	S.R. 303	RT.	51 +00.00	39	S.R. 303	RT.										
180 - D	207	51 +00.00	39	S.R. 303	RT.	51 +62.00	51.5	S.R. 303	RT.										
I.R. 271																			
181 - D	427	987 +64.00	32	I.R. 271	RT.														
182 - D	427	987 +55.86	34	I.R. 271	LT.														
183 - D	427	989 +15.84	30	I.R. 271	LT.														
184 - D	427	990 +52.27	50	I.R. 271	LT.														
185 - D	427	993 +70.40	32	I.R. 271	LT.														
186 - D	427	986 +50.00	48	I.R. 271	RT.	987 +64.00		I.R. 271	RT.										
187 - D	428	986 +56.44	50	I.R. 271	RT.														
S.R. 303 RAMPS																			
180A - D	492	45 +50.00	1.5	S.R. 303	RT.	RAMP C-D			RT.										
180B - D	492	46 +00.00	1.5	S.R. 303	RT.	RAMP C-D			RT.										
180C - D	492	46 +84.54	38.91	S.R. 303	RT.	RAMP C-D													
15-DR	492	45 +50.00		S.R. 303	RT.	RAMP C-D			LT.										
16-DR	492	46 +00.00		S.R. 303	RT.	RAMP C-D			LT.										
171-D THRU 16-DR TOTALS																			
TOTALS FROM SHEET NO. 80											88			384	296	356		426	
TOTALS FROM SHEET NO. 84										286	244		212					152	
TOTALS FROM SHEET NO. 88											138	206						75	
TOTALS FROM SHEET NO. 92											388					268	230	345	
SUBTOTALS										286	858	206	212	384	296	624	230	998	
TOTALS CARRIED TO GENERAL SUMMARY										**286**	**858**	**206**	**212**	**384**	**296**	**624**	**230**	**998**	

7885DS14.DGN 11/30/99 RB

REFERENCE NO.	SHEET NO.	STATION FROM	DEPTH	STATION TO	DEPTH	601 RIPRAP USING 6" REINFORCED CONCRETE SLAB, AS PER PLAN SQ. YD.	603 4" CONDUIT, TYPE B, 707.33 OR 707.41 FEET	603 4" CONDUIT, TYPE F, 707.33 OR 707.41 FEET		605 4" SHALLOW PIPE UNDERDRAIN WITH FABRIC WRAP 707.31 OR 707.41, AS PER PLAN FEET		605 4" UNCLASSIFIED PIPE UNDERDRAIN WITH FABRIC WRAP 707.31 OR 707.41, AS PER PLAN FEET	OUTLET DETAIL	BENDS AND BRANCHES 6" x 4" x 6" TEE EACH	4" x 4" x 4" TEE EACH	4" 90° BEND EACH	4" 45° BEND EACH	4" 22.5° BEND EACH	4" PLUG EACH						
1 - SM	172	833+02.00	12	833+10.00	18							8							1							
2 - SM	172	833+10.00	18	833+20.00	12		7					10	T		1		1									
3 - SM	172	833+20.00	12	837+16.00	12					396									1							
4 - SM		NOT USED																								
5 - SM	172-173	837+20.00	12	839+66.00	12			7		246			F			1	1		1							
6 - SM	173	839+70.00	12	842+66.00	12			15		296			M			1			1							
7 - SM	173	842+70.00	12	845+16.00	12			7		246			F			1	1		1							
8 - SM	173	845+20.00	12	847+66.00	12	4		16		246			B			1			1							
9 - SM	173	847+70.00	12	850+16.00	12	4		16		246			B			1			1							
10 - SM	173-174	850+20.00	12	852+66.00	12	4		16		246			B			1			1							
11 - SM	174	852+70.00	12	855+66.00	12			7		296			D			1	1		1							
12 - SM	174	855+70.00	12	858+31.00	12		1			261			L5					1	1							
13 - SM	174	858+35.00	12	860+96.00	12	4		16		261			B			1			1							
14 - SM	174-175	861+00.00	12	863+61.00	12	4		16		261			B			1			1							
15 - SM	175	863+65.00	12	866+26.00	12	4		16		261			B			1			1							
16 - SM	175	866+30.00	12	869+06.00	12			20		276			M			1			1							
17 - SM	175	869+10.00	12	871+86.00	12	4		16		276			B			1			1							
18 - SM	175	871+90.00	12	874+64.00	12	4		16		274			B			1			1							
19 - SM	175-176	874+68.00	12	877+41.00	12			20		273			M			1			1							
20 - SM	176	877+45.00	12	880+31.00	12	4		16		286			B			1			1							
21 - SM	176	880+35.00	12	883+21.00	12	4		16		286			B			1			1							
22 - SM	176	883+25.00	12	886+14.00	12	4		16		289			B			1			1							
23 - SM	176-177	886+18.00	12	889+00.00	12			15		282			M			1			1							
24 - SM	177	891+28.00	12	891+70.00	24							42							1							
25 - SM	177	891+70.00	24	891+80.00	12			7				10	J		1		1									
26 - SM	177	891+80.00	12	894+66.00	12					286									1							
27 - SM	177	894+70.00	12	896+46.00	12	4		16		176			B			1			1							
28 - SM	177	896+50.00	12	898+96.00	12			7		246			D			1	1		1							
29 - SM	177-178	899+00.00	12	901+46.00	12	4		16		246			B			1			1							
30 - SM	178	901+50.00	12	903+96.00	12	4		16		246			B			1			1							
31 - SM	178	904+00.00	12	906+61.00	12	4		16		261			B			1			1							
32 - SM	178	906+65.00	12	909+46.00	12			7		281			D			1	1		1							
33 - SM	178	909+50.00	12	911+96.00	12	4		16		246			B			1			1							
34 - SM	178-179	912+00.00	12	914+61.00	12	4		16		261			B			1			1							
35 - SM	179	914+65.00	12	917+21.00	12			7		256			D			1	1		1							
36 - SM	179	917+25.00	12	919+71.00	12	4		16		246			B			1			1							
37 - SM	179	919+75.00	12	922+21.00	12	4		16		246			B			1			1							
38 - SM	179	922+25.00	12	924+66.00	12			7		241			D			1	1		1							
39 - SM	179-180	924+70.00	12	926+96.00	12	4		16		226			B			1			1							
40 - SM	180	927+00.00	12	929+26.00	12	4		16		226			B			1			1							
41 - SM	180	929+30.00	12	931+64.00	12	4		16		234			B			1			1							
42 - SM	180	931+68.00	12	934+16.00	12			7		248			D			1	1		1							
43 - SM	180	934+20.00	12	936+76.00	12	4		16		256			B			1			1							
44 - SM	180-181	936+80.00	12	939+36.00	12	4		16		256			B			1			1							
45 - SM	181	939+40.00	12	941+96.00	12	4		16		256			B			1			1							
46 - SM	181	942+00.00	12	944+64.00	12	4		16		264			B			1			1							
47 - SM	181	944+68.00	12	947+56.00	12			7		288			D			1	1		1							
48 - SM	181	947+60.00	12	950+46.00	12	4		16		286			B			1			1							
49 - SM	181-182	950+50.00	12	953+36.00	12	4		16		286			B			1			1							
50 - SM	182	953+40.00	12	956+34.00	12	4		16		294			B			1			1							
51 - SM	182	956+38.00	12	958+96.00	12			7		258			D			1	1		1							
52 - SM	182	959+00.00	12	961+64.00	12	4		16		264			B			1			1							
53 - SM	182-183	961+68.00	12	964+46.00	12			7		278			F			1	1		1							
TOTALS CARRIED TO SHEET 101						120	8	634		12662		70			2	45	13	1	50							

CALCULATED P.S. CHECKED B.C.

UNDERDRAIN SUBSUMMARY
SOUTHBOUND MEDIAN, FREE DRAINAGE BASE

MED-71-15.78

97
940

7885DS6.DGN 11/4/99 RB

REFERENCE NO.	SHEET NO.	STATION FROM	DEPTH	STATION TO	DEPTH	601 RIPRAP USING 6" REINFORCED CONCRETE SLAB, AS PER PLAN	603 4" CONDUIT, TYPE B, 707.33 OR 707.41	603 4" CONDUIT, TYPE F, 707.33 OR 707.41		605 4" SHALLOW PIPE UNDERDRAIN WITH FABRIC WRAP 707.31 OR 707.41, AS PER PLAN		605 4" UNCLASSIFIED PIPE UNDERDRAIN WITH FABRIC WRAP 707.31 OR 707.41, AS PER PLAN	BENDS AND BRANCHES: OUTLET DETAIL	6" x 4" x 6" TEE	4" x 4" x 4" TEE	4" 90° BEND	4" 45° BEND	4" 22.5° BEND	4" PLUG						
						SQ. YD.	FEET	FEET		FEET			FEET		EACH	EACH	EACH	EACH	EACH	EACH						
54 - SM	183	964+50.00	12	967+46.00	12		9.2			296			K	1		1			1						
55 - SM	183	967+50.00	12	969+56.00	12			7		206			D			1	1		1						
56 - SM	183	969+60.00	12	971+76.00	12	4		16		216			B			1			1						
57 - SM	183	971+80.00	12	973+96.00	12	4		16		216			B			1			1						
58 - SM	183-184	974+00.00	12	976+96.00	12			7		296			S			1		1	1						
59 - SM	184	977+00.00	12	980+50.00	12	4		16		350			B			1									
60 - SM	184	980+50.00	12	982+90.00	12			20		240			M			1									
61 - SM	184	982+94.00	12	985+82.00	12					288									1						
62 - SM	184	985+82.00	12	985+92.00	18			7				10	J		1		1								
63 - SM	184	985+92.00	18	986+03.00	12							11							1						
64 - SM		NOT USED																							
65 - SM	185	988+82.00	12	993+00.00	12			7		418			A			1	1		1						
66 - SM		NOT USED																							
67 - SM	185	993+04.00	12	995+80.00	12	4		16		276			B			1			1						
68 - SM	185	995+84.00	12	998+65.00	12			7		281			D			1	1		1						
69 - SM	185-186	998+69.00	12	1001+10.00	12	4		16		241			B			1			1						
70 - SM		NOT USED																							
71 - SM	186	1001+14.00	12	1003+60.00	12	4		16		246			B			1			1						
72 - SM	186	1003+64.00	12	1006+00.00	12	4		16		236			B			1			1						
73 - SM	186	1006+04.00	12	1008+52.00	12			7		248			D			1	1		1						
74 - SM	186	1008+56.00	12	1011+85.00	12					329									1						
75 - SM	186	1011+85.00	12	1011+95.00	22			7				10	J		1		1								
76 - SM	186	1011+95.00	22	1012+32.00	12							37							1						
77 - SM		NOT USED																							
78 - SM	187	1013+98.00	12	1017+50.00	12	4		16		352			B			1			1						
79 - SM	187	1017+54.00	12	1020+10.00	12	4		16		256			B			1			1						
80 - SM	187	1020+14.00	12	1022+72.00	12		1			258			L5					1	1						
81 - SM	187	1022+76.00	12	1025+70.00	12	4		16		294			B			1			1						
82 - SM	187-188	1025+74.00	12	1028+60.00	12	4		16		286			B			1			1						
83 - SM	188	1028+64.00	12	1031+50.00	12	4		16		286			B			1			1						
84 - SM	188	1031+54.00	12	1034+40.00	12	4		16		286			B			1			1						
85 - SM	188	1034+44.00	12	1037+40.00	12			7		296			F			1	1		1						
86 - SM	188-189	1037+44.00	12	1040+00.00	12	4		16		256			B			1			1						
87 - SM	189	1040+04.00	12	1042+50.00	12	4		16		246			B			1			1						
88 - SM	189	1042+54.00	12	1045+08.00	12			7		254			D			1	1		1						
89 - SM	189	1045+12.00	12	1047+55.00	12			20		243			M			1			1						
90 - SM	189	1047+59.00	12	1050+70.00	12					311			R			1	1		1						
91 - SM	189-190	1050+74.00	12	1051+08.00	12		9.2			34			K	1		1			1						
92 - SM		NOT USED																							
93 - SM	190	1054+06.00	12	1058+00.00	12	4		16		394			B			1			1						
94 - SM		NOT USED																							
95 - SM	190	1058+04.00	12	1060+08.00	12			7		204			J		1		1								
96 - SM	190	1060+08.00	12	1062+46.00	12					238									1						
97 - SM	190-191	1062+50.00	12	1064+96.00	12	4		16		246			B			1			1						
98 - SM	191	1065+00.00	12	1067+36.00	12	4		16		236			B			1			1						
99 - SM	191	1067+40.00	12	1070+88.00	12			7		348			D			1	1		1						
100- SM	191	1070+92.00	12	1073+51.00	12			7		259			D			1	1		1						
101- SM	191-192	1073+55.00	12	1076+51.00	12		9.2			296			K	1		1			1						
102- SM	192	1076+55.00	12	1079+26.00	12			7		271			D			1	1		1						
103- SM	192	1079+30.00	12	1081+96.00	12	4		16		266			B			1			1						
104- SM	192	1082+00.00	12	1084+66.00	12	4		16		266			B			1			1						
105- SM	192	1084+70.00	12	1087+36.00	12	4		16		266			B			1			1						
106- SM	192-193	1087+40.00	12	1089+24.00	12			7		184			D			1	1		1						
TOTALS CARRIED TO SHEET 101						84	28.6	474		11515		68		3	3	38	15	1	42						

7885D56.DGN 11/4/99 RB

CALCULATED P.S. CHECKED B.C.

UNDERDRAIN SUBSUMMARY SOUTHBOUND MEDIAN, FREE DRAINAGE BASE

MED-71-15.78

UNDERDRAIN SUBSUMMARY
SOUTHBOUND MEDIAN, FREE DRAINAGE BASE

CALCULATED P.S. CHECKED B.C.

MED-71-15.78

99/940

REFERENCE NO.	SHEET NO.	STATION FROM	DEPTH	STATION TO	DEPTH	601 RIPRAP USING 6" REINFORCED CONCRETE SLAB, AS PER PLAN (SQ. YD.)	603 4" CONDUIT, TYPE B, 707.33 OR 707.41 (FEET)	603 4" CONDUIT, TYPE F, 707.33 OR 707.41 (FEET)		605 4" SHALLOW PIPE UNDERDRAIN WITH FABRIC WRAP 707.31 OR 707.41, AS PER PLAN (FEET)		605 4" UNCLASSIFIED PIPE UNDERDRAIN WITH FABRIC WRAP 707.31 OR 707.41, AS PER PLAN (FEET)	OUTLET DETAIL	BENDS AND BRANCHES 6" x 4" x 6" TEE (EACH)	4" x 4" x 4" TEE (EACH)	4" 90° BEND (EACH)	4" 45° BEND (EACH)	4" 22.5° BEND (EACH)	4" PLUG (EACH)
107- SM	193	1089+28.00	12	1091+96.00	12			7		268			D			1	1		1
108- SM	193	1092+00.00	12	1094+61.00	12	4		16		261			B			1			1
109- SM	193	1094+65.00	12	1097+26.00	12	4		16		261			B			1			1
110- SM	193	1097+30.00	12	1099+31.00	12	4		16		201			B			1			1
111- SM	193-194	1099+35.00	12	1102+66.00	12	4		16		331			B			1			1
112- SM	194	1102+70.00	12	1102+85.00	12			7		15			D			1	1		1
113- SM	194	1105+82.00	12	1106+00.00	18							18							1
114- SM	194	1106+00.00	18	1106+10.00	12			7				10	J		1		1		
115- SM	194	1106+10.00	12	1108+76.00	12					266									1
116- SM	194	1108+80.00	12	1111+16.00	12			7		236			D			1	1		1
117- SM	194-195	1111+20.00	12	1113+56.00	12	4		16		236			B			1			1
118- SM	195	1113+60.00	12	1115+96.00	12	4		16		236			B			1			1
119- SM	195	1116+00.00	12	1118+38.00	12	4		16		238			B			1			1
120- SM	195	1118+42.00	12	1120+76.00	12			7		234			D			1	1		1
121- SM	195	1120+80.00	12	1123+16.00	12	4		16		236			B			1			1
122- SM	195	1123+20.00	12	1125+56.00	12	4		16		236			B			1			1
123- SM	195-196	1125+60.00	12	1127+86.00	12	4		16		226			B			1			1
124- SM	196	1127+90.00	12	1129+96.00	12			7		206			D			1	1		1
125- SM	196	1130+00.00	12	1132+16.00	12	4		16		216			B			1			1
126- SM	196	1132+20.00	12	1134+34.00	12	4		16		214			B			1			1
127- SM	196	1134+38.00	12	1137+30.00	12			7		292			D			1	1		1
128- SM	196-197	1137+34.00	12	1140+26.00	12	4		16		292			B			1			1
129- SM	197	1140+30.00	12	1142+06.00	12			7		176			F			1	1		1
130- SM	197	1142+10.00	12	1143+86.00	12	4		16		176			B			1			1
131- SM	197	1143+90.00	12	1146+86.00	12			7		296			D			1	1		1
132- SM	197	1146+90.00	12	1149+86.00	12	4		16		296			B			1			1
133- SM	197-198	1149+90.00	12	1152+86.00	12	4		16		296			B			1			1
134- SM	198	1152+90.00	12	1155+86.00	12	4		16		296			B			1			1
135- SM	198	1155+90.00	12	1158+80.00	12	4		16		290			B			1			1
136- SM	198	1158+84.00	12	1161+66.00	12			7		282			D			1	1		1
137- SM	198-199	1161+70.00	12	1164+46.00	12	4		16		276			B			1			1
138- SM	199	1164+50.00	12	1167+31.00	12	4		16		281			B			1			1
139- SM	199	1167+35.00	12	1170+16.00	12	4		16		281			B			1			1
140- SM	199	1170+20.00	12	1173+00.00	12	4		16		280			B			1			1
141- SM	199	1173+04.00	12	1175+96.00	12			7		292			D			1	1		1
142- SM	200	1176+00.00	12	1178+96.00	12	4		16		296			B			1			1
143- SM	200	1179+00.00	12	1181+56.00	12	4		16		256			B			1			1
144- SM	200	1181+60.00	12	1186+33.00	12	4		16		473			B			1			1
145- SM	200-201	1186+37.00	12	1189+34.00	12			7		297			D			1	1		1
146- SM	201	1189+38.00	12	1192+35.00	12	4		16		297			B			1			1
147- SM	201	1192+39.00	12	1195+36.00	12	4		16		297			B			1			1
148- SM	201	1195+40.00	12	1198+37.00	12	4		16		297			B			1			1
149- SM	201	1198+41.00	12	1200+36.00	12			7		195			D			1	1		1
150- SM	201-202	1200+40.00	12	1202+30.00	12	4		16		190			B			1			1
151- SM	202	1202+34.00	14	1203+00.00	14			20		66			M			1			
		1203+00.00	12	1204+61.00	12					161									1
152- SM	202	1204+65.00	12	1206+96.00	12	4		16		231			B			1			1
153- SM	202	1207+00.00	12	1209+30.00	12	4		16		230			B			1			1
154- SM	202	1209+34.00	12	1211+76.00	12			7		242			F			1			1
155- SM	202-203	1211+80.00	12	1214+26.00	12	4		16		246			B			1			1
156- SM	203	1214+30.00	12	1216+72.00	12	4		16		242			B			1			1
157- SM	203	1216+76.00	12	1219+01.00	12			20		225			M			1			1
158- SM	203	1219+05.00	12	1221+30.00	12	4		16		225			B			1			1
TOTALS CARRIED TO SHEET 101						136		682		12685		28			1	49	13		51

7885DS6.DGN 11/4/99 RB

REFERENCE NO.	SHEET NO.	STATION FROM	DEPTH	STATION TO	DEPTH	601 RIPRAP USING 6" REINFORCED CONCRETE SLAB, AS PER PLAN	603 4" CONDUIT, TYPE B, 707.33 OR 707.41	603 4" CONDUIT, TYPE F, 707.33 OR 707.41		605 4" SHALLOW PIPE UNDERDRAIN WITH FABRIC WRAP 707.31 OR 707.41, AS PER PLAN		605 4" UNCLASSIFIED PIPE UNDERDRAIN WITH FABRIC WRAP 707.31 OR 707.41, AS PER PLAN	OUTLET DETAIL	BENDS AND BRANCHES 6" x 4" x 6" TEE	4" x 4" x 4" TEE	4" 90° BEND	4" 45° BEND	4" 22.5° BEND	4" PLUG					
						SQ. YD.	FEET	FEET		FEET		FEET		EACH	EACH	EACH	EACH	EACH	EACH					
159- SM	203	1221+34.00	12	1223+65.00	12			7		231			F			1			1					
160- SM	203-204	1223+69.00	12	1226+95.00	12			2		326			M			1			1					
161- SM	204	NOT USED																						
162- SM	204	1226+99.00	12	1228+09.00	12			7		110			F			1			1					
163- SM	204	1228+13.00	12	1231+30.00	12			20		317			M			1			1					
164- SM	204	1231+34.00	12	1234+06.00	12			7		272			D			1	1		1					
165- SM	204	1234+10.00	12	1236+81.00	12	4		16		271			B			1			1					
166- SM	204-205	1236+85.00	12	1239+56.00	12	4		16		271			B			1			1					
167- SM	205	1239+60.00	12	1242+30.00	12	4		16		270			B			1			1					
168- SM	205	1242+34.00	12	1244+96.00	12			7		262			D			1	1		1					
169- SM	205	1245+00.00	12	1247+71.00	12	4		16		271			B			1			1					
170- SM	205	1247+75.00	12	1250+46.00	12	4		16		271			B			1			1					
171- SM	205-206	1250+50.00	12	1253+21.00	12	4		16		271			B			1			1					
172- SM	206	1253+25.00	12	1256+00.00	12	4		16		275			B			1			1					
173- SM	206	1256+00.00	12	1258+60.00	12	4		16		260			B			1								
174- SM	206	1258+64.00	12	1261+20.00	12	4		16		256			B			1								
175- SM	206-207	1261+24.00	12	1263+84.00	12			7		260			F			1	1		1					
176- SM	207	1263+88.00	12	1267+24.00	12					336									1					
177- SM	207	1267+24.00	12	1267+34.00	18			7				10	J		1		1							
178- SM	207	1267+34.00	18	1267+65.00	12							31							1					
179- SM		NOT USED																						
180- SM	207	1270+27.00	12	1273+65.00	12	2		16		338			W			1			1					
181- SM	207	1273+69.00	12	1275+85.00	12	2		16		216			W			1			1					
182- SM	207-208	1275+89.00	12	1278+60.00	12	2		16		271			W			1			1					
183- SM	208	1278+64.00	12	1281+34.00	12			7		270			Z			1	1		1					
184- SM	208	1281+38.00	12	1283+85.00	12	2		16		247			W			1			1					
185- SM	208	1283+89.00	12	1286+40.00	12	2		16		251			W			1			1					
186- SM	208-209	1286+44.00	12	1288+95.00	12	2		16		251			W			1			1					
187- SM	209	1288+99.00	12	1291+50.00	12	2		16		251			W			1			1					
188- SM	209	1291+54.00	12	1293+94.00	12			7		240			J		1		1							
189- SM	209	1293+94.00	12	1295+96.00	12					202									1					
190- SM	209	1296+00.00	12	1298+16.00	12	2		16		216			W			1			1					
191- SM	209	1298+20.00	12	1300+30.00	12	2		16		210			W			1			1					
192- SM	209-210	1300+34.00	12	1303+30.00	12			7		296			D			1	1		1					
193- SM	210	1303+34.00	12	1306+30.00	12	2		16		296			W			1			1					
194- SM	210	1306+34.00	12	1309+30.00	12	2		16		296			W			1			1					
195- SM	210	1309+34.00	12	1312+30.00	12	2		16		296			W			1			1					
196- SM	210-211	1312+34.00	12	1315+16.00	12			7		282			D			1	1		1					
197- SM	211	1315+20.00	12	1318+06.00	12	2		16		286			W			1			1					
198- SM	211	1318+10.00	12	1320+96.00	12	2		16		286			W			1			1					
199- SM	211	1321+00.00	12	1324+00.00	12	2		16		300			W			1								
200- SM	211-212	1324+00.00	12	1326+80.00	12	2		16		280			W			1								
201- SM	212	1326+84.00	12	1329+70.00	12	2		16		286			W			1			1					
202- SM	212	1329+74.00	12	1332+60.00	12	2		16		286			W			1			1					
203- SM	212	1332+64.00	12	1335+50.00	12	2		16		286			W			1			1					
204- SM	212	1335+54.00	12	1338+34.00	12			7		280			F			1	1		1					
205- SM	212-213	1338+38.00	12	1341+00.00	12			16		262			M			1			1					
206- SM	213	NOT USED																						
207- SM	213	1341+04.00	12	1344+76.00	12			7		372			D			1	1		1					
208- SM	213	1344+80.00	12	1347+05.00	12	2		16		225			W			1			1					
209- SM	213	1347+09.00	12	1349+25.00	12	2		16		216			W			1			1					
210- SM	213-214	1349+29.00	12	1351+34.00	12			7		205			D			1	1		1					
211- SM	214	1351+38.00	12	1356+00.00	12	2		16		462			W			1			1					
TOTALS CARRIED TO SHEET 101						80		625		12991		41			2	45	11		44					

UNDERDRAIN SUBSUMMARY
SOUTHBOUND MEDIAN, FREE DRAINAGE BASE

CALCULATED P.S. CHECKED B.C.

MED-71-15.78

100
940

7885DS6.DGN 11/4/99 RB

REFERENCE NO.	SHEET NO.	STATION FROM	DEPTH	STATION TO	DEPTH	601 RIPRAP USING 6" REINFORCED CONCRETE SLAB, AS PER PLAN	603 4" CONDUIT, TYPE B, 707.33 OR 707.41	603 4" CONDUIT, TYPE F, 707.33 OR 707.41		605 4" SHALLOW PIPE UNDERDRAIN WITH FABRIC WRAP, 707.31 OR 707.41, AS PER PLAN		605 4" UNCLASSIFIED PIPE UNDERDRAIN WITH FABRIC WRAP 707.31 OR 707.41, AS PER PLAN	OUTLET DETAIL	BENDS AND BRANCHES 6" x 4" x 6" TEE	4" x 4" x 4" TEE	4" 90° BEND	4" 45° BEND	4" 22.5° BEND	4" PLUG					
		FROM	DEPTH	TO	DEPTH	SQ. YD.	FEET	FEET		FEET		FEET		EACH	EACH	EACH	EACH	EACH	EACH					
212- SM	214	1356+04.00	12	1358+60.00	12	2		16		256			W			1			1					
213- SM	214	1358+64.00	12	1361+20.00	12	2		16		256			W			1			1					
214- SM	214-215	1361+24.00	12	1363+80.00	12	2		16		256			W			1			1					
215- SM	215	1363+84.00	12	1366+34.00	12			7		250			D			1	1		1					
216- SM	215	1366+38.00	12	1369+34.00	12	2		16		296			W			1			1					
217- SM	215	1369+38.00	12	1372+34.00	12	2		16		296			W			1			1					
218- SM	215	1372+38.00	12	1375+34.00	12	2		16		296			W			1			1					
219- SM	215-216	1375+38.00	12	1378+34.00	12	2		16		296			W			1			1					
220- SM	216	1378+38.00	12	1381+34.00	12			7		296			D			1	1		1					
221- SM	216	1381+38.00	12	1383+95.00	12	2		16		257			W			1			1					
222- SM	216	1383+99.00	12	1386+55.00	12	2		16		256			W			1			1					
223- SM	216-217	1386+59.00	12	1389+15.00	12	2		16		256			W			1			1					
224- SM	217	1389+19.00	12	1391+75.00	12	2		16		256			W			1			1					
225- SM	217	1391+79.00	12	1394+35.00	12			7		256			F			1			1					
TOTALS FROM SHEET 97						120	8	634		12662		70			2	45	13	1	50					
TOTALS FROM SHEET 98						84	28.6	474		11515		68		3	3	38	15	1	42					
TOTALS FROM SHEET 99						136		682		12685		28			1	49	13		51					
TOTALS FROM SHEET 100						80		625		12991		41			2	45	11		44					
TOTALS 212-SM THRU 225-SM						22		197		3779						14	2		14					
TOTALS CARRIED TO SHEET 128						442	36.6	2612		53632		207		3	8	191	54	2	201					

CALCULATED P.S. CHECKED B.C.

UNDERDRAIN SUBSUMMARY
SOUTHBOUND MEDIAN, FREE DRAINAGE BASE

MED-71-15.78

101
940

7885DS6.DGN 11/4/99 RB

REFERENCE NO.	SHEET NO.	STATION FROM	DEPTH	STATION TO	DEPTH	601 RIPRAP USING 6" REINFORCED CONCRETE SLAB, AS PER PLAN	603 4" CONDUIT, TYPE B, 707.33 OR 707.41	603 4" CONDUIT, TYPE F, 707.33 OR 707.41		605, 4" SHALLOW PIPE UNDERDRAIN WITH FABRIC WRAP, 707.31 OR 707.41, AS PER PLAN		605 4" UNCLASSIFIED PIPE UNDERDRAIN WITH FABRIC WRAP 707.31 OR 707.41, AS PER PLAN	OUTLET DETAIL	BENDS AND BRANCHES 6" x 6" x 4" TEE	4" x 4" x 4" TEE	4" 90° BEND	4" 45° BEND	4" 22.5° BEND	4" PLUG					
						SQ. YD.	FEET	FEET		FEET		FEET		EACH	EACH	EACH	EACH	EACH	EACH					
1 - SS	172	833+02.00	12	835+26.00	12	4		19		224			B			1			1					
2 - SS	172	835+30.00	12	837+16.00	12	4		19		186			B			1			1					
3 - SS	172-173	837+20.00	12	839+96.00	12		9.2			276			F			1			1					
4 - SS	173	840+00.00	12	842+66.00	12	4		19		266			B			1			1					
5 - SS	173	842+70.00	12	845+61.00	12		9.2			291			F			1			1					
6 - SS	173	845+65.00	12	848+96.00	12	4		19		331			B			1			1					
7 - SS	173-174	849+00.00	12	852+16.00	12	4		19		316			B			1			1					
8 - SS	174	852+20.00	12	854+21.00	12			7		201			L4			1	1		1					
9 - SS	174	854+25.00	12	857+26.00	12		1			301			A					1	1					
10 - SS	174	857+30.00	12	860+26.00	12	4		19		296			B			1			1					
11 - SS	174	860+30.00	12	863+26.00	12	4		19		296			B			1			1					
12 - SS	174-175	863+30.00	12	866+24.00	12	4		19		294			B			1			1					
13 - SS	175	866+28.00	12	868+96.00	12			7		268			O			1	1		1					
14 - SS	175	869+00.00	12	871+81.00	12	4		15		281			B			1			1					
15 - SS	175	871+85.00	12	874+66.00	12	4		15		281			B			1			1					
16 - SS	175-176	874+70.00	12	877+21.00	12			7		251			X			1	1		1					
17 - SS	176	877+25.00	12	879+70.00	12	4		15		245			B			1			1					
18 - SS	176	NOT USED																						
19 - SS	176	877+80.00	12	880+96.00	12		9.2			316			K	1		1			1					
20 - SS	176	881+00.00	12	883+21.00	12	4		10		221			B			1			1					
21 - SS	176	883+25.00	12	885+96.00	12			7		271			A			1	1		1					
22 - SS	176-177	886+00.00	12	888+78.00	12	4		10		278			B			1			1					
23 - SS		NOT USED																						
24 - SS	177	891+10.00	12	891+30.00	18							20							1					
25 - SS	177	891+30.00	18	891+40.00	12			7				10	C		1		1							
26 - SS	177	891+40.00	12	893+96.00	12					256									1					
27 - SS	177	894+00.00	12	896+44.00	12	4		10		244			B			1			1					
28 - SS	177	896+48.00	12	899+80.00	12			7		332			O			1	1		1					
29 - SS	177-178	899+50.00	12	903+06.00	12			7		356			A			1	1		1					
30 - SS	178	903+10.00	12	906+59.00	12	4		11		349			B			1			1					
31 - SS	178	906+63.00	12	909+46.00	12			7		283			O			1	1		1					
32 - SS	178	909+50.00	12	912+46.00	12	4		19		296			B			1			1					
33 - SS	178-179	912+50.00	12	915+56.00	12			7		306			A			1	1		1					
34 - SS	179	915+60.00	12	918+66.00	12			7		306			L2			1	1		1					
35 - SS	179	918+70.00	12	921+68.00	12	4		19		298			B			1			1					
36 - SS	179	921+72.00	12	924+71.00	12			7		299			L2			1	1		1					
37 - SS	179-180	924+75.00	12	927+66.00	12	4		19		291			B			1			1					
38 - SS	180	927+70.00	12	930+66.00	12	4		19		296			B			1			1					
39 - SS	180	930+70.00	12	934+46.00	12			7		376			A			1	1		1					
40 - SS	180	934+50.00	12	937+86.00	12			7		336			A			1	1		1					
41 - SS	180-181	937+90.00	12	940+96.00	12	4		19		306			B			1			1					
42 - SS	181	941+00.00	12	944+06.00	12	4		19		306			B			1			1					
43 - SS	181	944+10.00	12	947+01.00	12			7		291			A			1	1		1					
44 - SS	181	947+05.00	12	950+01.00	12	4		10		296			B			1			1					
45 - SS	181-182	950+05.00	12	953+01.00	12			7		296			A			1	1		1					
46 - SS	182	953+05.00	12	955+96.00	12	4		10		291			B			1			1					
47 - SS	182	956+00.00	12	958+86.00	12			7		286			A			1	1		1					
48 - SS	182-183	958+90.00	12	961+64.00	12	4		19		274			B			1			1					
49 - SS	183	961+68.00	12	964+46.00	12		9.2			278			F			1			1					
50 - SS	183	964+50.00	12	967+46.00	12		9.2			296			K	1		1			1					
51 - SS	183	967+50.00	12	970+11.00	12	4		19		261			B			1			1					
52 - SS	183	970+15.00	12	972+00.00	12	4		19		185			B			1								
53 - SS	183	973+00.00	12	974+00.00	24							100							1					
TOTALS CARRIED TO SHEET 106						104	47	541		13680		130		2	1	46	16	1	49					

CALCULATED P.S. CHECKED B.C.

UNDERDRAIN SUBSUMMARY
SOUTHBOUND OUTSIDE, FREE DRAINAGE BASE

MED-71-15.78

102/940

7885DS7.DGN 8/25/99 RB

REFERENCE NO.	SHEET NO.	STATION FROM	DEPTH	STATION TO	DEPTH	601 RIPRAP USING 6" REINFORCED CONCRETE SLAB, AS PER PLAN SQ. YD.	603 4" CONDUIT, TYPE B, 707.33 OR 707.41 FEET	603 4" CONDUIT, TYPE F, 707.33 OR 707.41 FEET		605 4" SHALLOW PIPE UNDERDRAIN WITH FABRIC WRAP 707.31 OR 707.41, AS PER PLAN FEET		605 4" UNCLASSIFIED PIPE UNDERDRAIN WITH FABRIC WRAP 707.31 OR 707.41, AS PER PLAN FEET	OUTLET DETAIL	BENDS AND BRANCHES 6" x 6" x 4" TEE EACH	4" x 4" x 4" TEE EACH	4" 90° BEND EACH	4" 45° BEND EACH	4" 22.5° BEND EACH	4" PLUG EACH
54 - SS	183	974+00.00	24	974+10.00	12		10					10	S		1				
55 - SS	183-184	974+10.00	12	977+21.00	12					311									1
56 - SS	184	977+25.00	12	980+50.00	12	4		19		325			B			1			
57 - SS	184	980+50.00	12	983+50.00	12	4		38		300			B			1			
58 - SS	184	983+54.00	12	985+50.00	12					196									1
59 - SS	184	985+50.00	12	985+60.00	18			7				10	C		1		1		
60 - SS	184	985+60.00	18	985+69.00	12							9							1
61 - SS	184	NOT USED																	
62 - SS	184-185	988+45.00	12	991+00.00	12	4		12		255			B			1			1
63 - SS	185	991+04.00	12	994+00.00	12			7		296			A			1	1		1
64 - SS	185	994+04.00	12	996+60.00	12	4		11		256			B			1			1
65 - SS	185	996+64.00	12	999+30.00	12			7		266			A			1	1		1
66 - SS	185-186	999+34.00	12	1002+50.00	12	4		9		316			B			1			1
67 - SS	186	1002+54.00	12	1005+75.00	12			7		321			A			1	1		1
68 - SS	186	1005+79.00	12	1009+00.00	12	4		10		321			B			1			1
69 - SS	186	1009+04.00	12	1011+00.00	12					196									1
70 - SS	186	1011+00.00	12	1011+10.00	30			7				10	C		1		1		
71 - SS	186	1011+10.00	30	1012+38.00	12							128							1
72 - SS		NOT USED																	
73 - SS	187	1014+04.00	12	1016+60.00	12	4		19		256			B			1			1
74 - SS		NOT USED																	
75 - SS	187	1016+64.00	12	1019+50.00	12	4		19		286			B			1			1
76 - SS	187	1019+54.00	12	1022+40.00	12		1			286			L5					1	
77 - SS	187	1022+44.00	12	1024+90.00	12	4		19		246			B			1			1
78 - SS	187-188	1024+94.00	12	1027+40.00	12	4		19		246			B			1			1
79 - SS	188	1027+44.00	12	1029+90.00	12	4		19		246			B			1			1
80 - SS	188	1029+94.00	12	1032+40.00	12	4		19		246			B			1			1
81 - SS	188	1032+44.00	12	1034+90.00	12	4		19		246			B			1			1
82 - SS	188	1034+94.00	12	1037+40.00	12		9.2			246			F			1			1
83 - SS	188-189	1037+44.00	12	1040+00.00	12	4		19		256			B			1			1
84 - SS	189	1040+04.00	12	1042+40.00	12	4		19		236			B			1			1
85 - SS	189	1042+44.00	12	1044+85.00	12			7		241			A			1	1		1
86 - SS	189	1044+89.00	12	1047+80.00	12	4		19		291			B			1			1
87 - SS	189	1047+84.00	12	1050+75.00	12			7		291			L3						1
88 - SS	189-190	1050+79.00	12	1051+13.00	12		10	10		34			K	1		1			1
89 - SS		NOT USED																	
90 - SS		NOT USED																	
91 - SS	190	1054+12.00	12	1057+00.00	12			7		288			A			1	1		1
92 - SS	190	1057+04.00	12	1060+12.00	12			7		308			C		1		1		1
93 - SS	190	1060+12.00	12	1062+56.00	12					244									1
94 - SS	190-191	1062+60.00	12	1064+96.00	12	4		19		236			B			1			1
95 - SS	191	1065+00.00	12	1067+36.00	12	4		19		236			B			1			1
96 - SS	191	1067+40.00	12	1070+88.00	12			7		348			D			1	1		1
97 - SS	191	1070+92.00	12	1073+46.00	12			7		254			D			1	1		1
98 - SS	191	1073+00.00	12	1075+81.00	12		9.2			231			K	1		1			1
99 - SS	191-192	1075+85.00	12	1078+36.00	12			7		251			D			1	1		1
100- SS	192	1078+40.00	12	1080+96.00	12	4		19		256			B			1			1
101- SS	192	1081+00.00	12	1083+96.00	12			7		296			A			1	1		1
102- SS	192	1084+00.00	12	1086+66.00	12			7		266			A			1	1		1
103- SS	192-193	1086+70.00	12	1089+31.00	12	4		19		261			B			1			1
104- SS	193	1089+35.00	12	1091+96.00	12			7		261			Y			1	1		1
105- SS	193	1092+00.00	12	1094+15.00	12	4		19		215			B			1			1
106- SS		NOT USED																	
TOTALS CARRIED TO SHEET 106						84	39.4	499		10963		167		2	4	36	15	1	42

CALCULATED P.S. CHECKED B.C.

UNDERDRAIN SUBSUMMARY SOUTHBOUND OUTSIDE, FREE DRAINAGE BASE

MED-71-15.78

7885DS7.DGN 11/4/99 RB

REFERENCE NO.	SHEET NO.	STATION FROM	DEPTH	STATION TO	DEPTH	601 RIPRAP USING 6" REINFORCED CONCRETE SLAB, AS PER PLAN	603 4" CONDUIT, TYPE B, 707.33 OR 707.41	603 4" CONDUIT, TYPE F, 707.33 OR 707.41		605 4" SHALLOW PIPE UNDERDRAIN WITH FABRIC WRAP 707.31 OR 707.41, AS PER PLAN		605 4" UNCLASSIFIED PIPE UNDERDRAIN WITH FABRIC WRAP 707.31 OR 707.41, AS PER PLAN	OUTLET DETAIL	BENDS AND BRANCHES 6" x 6" x 4" TEE	4" x 4" x 4" TEE	4" 90° BEND	4" 45° BEND	4" 22.5° BEND	4" PLUG						
						SQ. YD.	FEET	FEET		FEET		FEET		EACH	EACH	EACH	EACH	EACH	EACH						
107- SS	193	1094+00.00	12	1096+96.00	12		9.2			296			K	1		1			1					
108- SS	193	1097+00.00	12	1099+96.00	12			7		296			A			1	1		1					
109- SS	193-194	1100+00.00	12	1102+56.00	12	4		14		256			B			1			1					
110- SS		NOT USED																						
111- SS	194	1105+55.00	12	1105+65.00	18							10							1					
112- SS	194	1105+65.00	18	1105+75.00	12			7				10	C		1		1							
113- SS	194	1105+75.00	12	1108+61.00	12					286									1					
114- SS	194	1108+65.00	12	1111+61.00	12	4		19		296			B			1			1					
115- SS	194-195	1111+65.00	12	1114+31.00	12			7		266			A			1	1		1					
116- SS	195	1114+35.00	12	1116+50.00	12	4		19		215			B			1			1					
117- SS	195	1116+30.00	12	1118+40.00	12			7		210			A			1	1		1					
118- SS	195	1118+44.00	12	1121+71.00	12			7		327			O			1	1		1					
119- SS	195	1121+75.00	12	1125+06.00	12	4		19		331			B			1			1					
120- SS	195-196	1125+10.00	12	1128+16.00	12			7		306			A			1	1		1					
121- SS	196	1128+20.00	12	1131+26.00	12	4		19		306			B			1			1					
122- SS	196	1131+30.00	12	1134+34.00	12	4		19		304			B			1			1					
123- SS	196	1134+38.00	12	1137+30.00	12			7		292			D			1	1		1					
124- SS	196-197	1137+34.00	12	1140+26.00	12	4		19		292			B			1			1					
125- SS	197	1140+30.00	12	1142+06.00	12		9.2			176			F			1			1					
126- SS	197	1142+10.00	12	1143+86.00	12	4		19		176			B			1			1					
127- SS	197	1143+90.00	12	1146+96.00	12			7		306			D			1	1		1					
128- SS	197	1147+00.00	12	1149+96.00	12	4		19		296			B			1			1					
129- SS	197-198	1150+00.00	12	1152+36.00	12	4		19		236			B			1			1					
130- SS	198	1152+40.00	12	1154+96.00	12			7		256			Y			1	1		1					
131- SS	198	1155+00.00	12	1156+50.00	12	4		19		150			B			1			1					
132- SS	198	1156+00.00	12	1158+80.00	12		9.2			280			K	1		1			1					
133- SS	198	1158+84.00	12	1162+06.00	12			7		322			D			1	1		1					
134- SS	198-199	1162+10.00	12	1165+36.00	12	4		19		326			B			1			1					
135- SS	199	1165+40.00	12	1168+46.00	12	4		19		306			B			1			1					
136- SS	199	1168+50.00	12	1172+25.00	12	4		19		375			B			1			1					
137- SS	199	1172+20.00	12	1175+46.00	12			7		326			A			1	1		1					
138- SS	199-200	1175+50.00	12	1178+96.00	12	4		19		346			B			1			1					
139- SS	200	1179+00.00	12	1182+46.00	12	4		19		346			B			1			1					
140- SS	200	1182+50.00	12	1186+16.00	12	4		19		366			B			1			1					
141- SS	200-201	1186+20.00	12	1189+66.00	12			7		346			A			1	1		1					
142- SS	201	1189+70.00	12	1193+16.00	12	4		19		346			B			1			1					
143- SS	201	1193+20.00	12	1195+76.00	12			7		256			A			1	1		1					
144- SS	201	1195+80.00	12	1198+40.00	12	4		16		260			B			1			1					
145- SS	201-202	1198+44.00	12	1202+21.00	12			7		377			O			1	1		1					
146- SS	202	1202+25.00	14	1203+00.00	14			7		75			A			1	1							
		1203+00.00	12	1204+61.00	12					161									1					
147- SS	202	1204+65.00	12	1206+96.00	12	4		19		231			B			1			1					
148- SS	202	1207+00.00	12	1209+30.00	12	4		19		230			B			1			1					
149- SS	202	1209+34.00	12	1211+76.00	12		9.2			242			F			1			1					
150- SS	202-203	1211+80.00	12	1214+26.00	12	4		19		246			B			1			1					
151- SS	203	1214+30.00	12	1216+72.00	12	4		19		242			B			1			1					
152- SS	203	1216+76.00	12	1219+01.00	12			7		225			D			1	1		1					
153- SS	203	1219+05.00	12	1221+30.00	12	4		19		225			B			1			1					
154- SS	203	1221+34.00	12	1224+16.00	12		9.2			282			F			1			1					
155- SS	203-204	1224+20.00	12	1228+09.00	12	4		19		389			B			1			1					
156- SS	204	1228+13.00	12	1229+46.00	12		9.2			133			F			1			1					
157- SS	204	1229+50.00	12	1231+86.00	12	4		19		236			B			1			1					
158- SS	204	1231+90.00	12	1234+46.00	12			7		256			A			1	1		1					
TOTALS CARRIED TO SHEET 106						104	55.2	605		13626		20		2	1	48	17		50					

7885DS70GN 11/4/99 RB

CALCULATED P.S. CHECKED B.C.

UNDERDRAIN SUBSUMMARY SOUTHBOUND OUTSIDE, FREE DRAINAGE BASE

MED-71-15.78

REFERENCE NO.	SHEET NO.	STATION FROM	DEPTH	STATION TO	DEPTH	601 RIPRAP USING 6" REINFORCED CONCRETE SLAB, AS PER PLAN SQ. YD.	603 4" CONDUIT, TYPE B, 707.33 OR 707.41 FEET	603 4" CONDUIT, TYPE F, 707.33 OR 707.41 FEET		605 4" SHALLOW PIPE UNDERDRAIN WITH FABRIC WRAP 707.31 OR 707.41, AS PER PLAN FEET		605 4" UNCLASSIFIED PIPE UNDERDRAIN WITH FABRIC WRAP 707.31 OR 707.41, AS PER PLAN FEET	OUTLET DETAIL	BENDS AND BRANCHES 6" x 4" x 6" TEE EACH	4" x 4" x 4" TEE EACH	4" 90° BEND EACH	4" 45° BEND EACH	4" 22.5° BEND EACH	4" PLUG EACH					
159- SS	204	1234+50.00	12	1236+96.00	12	4		19		246			B			1			1					
160- SS	204-205	1237+00.00	12	1239+46.00	12	4		19		246			B			1			1					
161- SS	205	1239+50.00	12	1242+32.00	12			7		282			A			1	1		1					
162- SS	205	1242+36.00	12	1244+86.00	12			7		250			0			1	1		1					
163- SS	205	1244+90.00	12	1247+41.00	12	4		19		251			B			1			1					
164- SS	205	1247+45.00	12	1249+96.00	12	4		19		251			B			1			1					
165- SS	205-206	1250+00.00	12	1252+46.00	12	4		19		246			B			1			1					
166- SS	206	1252+50.00	12	1256+00.00	12			7		350			A			1	1							
167- SS	206	1256+00.00	12	1258+35.00	12			7		235			A			1	1							
168- SS	206	1258+00.00	12	1261+00.00	12	4		20		300			B			1			1					
169- SS	206-207	1261+04.00	12	1263+84.00	12		9.2			280			F			1			1					
170- SS	207	1263+88.00	12	1267+60.00	12					372									1					
171- SS	207	1267+60.00	12	1267+70.00	18			7				10	C		1		1							
172- SS	207	1267+70.00	18	1267+81.00	12							11							1					
173- SS		NOT USED																						
174- SS	207	1270+45.00	12	1273+00.00	12	4		17		255			B			1			1					
175- SS	207	1273+04.00	12	1275+50.00	12			7		246			A			1	1		1					
176- SS	207-208	1275+54.00	12	1277+00.00	12	4		19		146			B			1			1					
177- SS	208	1277+04.00	12	1280+00.00	12		9.2			296			K	1		1			1					
178- SS	208	1279+60.00	12	1281+80.00	12			7		220			A			1	1		1					
179- SS	208	1281+84.00	12	1284+90.00	12	4		15		306			B			1			1					
180- SS	208	1284+94.00	12	1288+00.00		4		15		306			B			1			1					
181- SS	208-209	1288+04.00	12	1291+00.00	12	4		15		296			B			1			1					
182- SS	209	1291+04.00	12	1293+96.00	12			7		292			P			1	1		1					
183- SS	209	1293+96.00	12	1297+56.00	12					360									1					
184- SS	209-210	1297+60.00	12	1301+16.00	12	4		15		356			B			1			1					
185- SS	210	1301+20.00	12	1303+36.00	12			7		216			A			1	1		1					
186- SS	210	1303+40.00	12	1305+56.00	12	4		19		216			B			1			1					
187- SS	210	1305+60.00	12	1308+96.00	12			7		336			A			1	1		1					
188- SS	210	1309+00.00	12	1312+32.00	12	4		10		332			B			1			1					
189- SS	210-211	1312+36.00	12	1315+26.00	12			7		290			0			1	1		1					
190- SS	211	1315+30.00	12	1318+21.00	12	4		19		291			B			1			1					
191- SS	211	1318+25.00	12	1320+96.00	12	4		19		271			B			1			1					
192- SS	211	1321+00.00	12	1324+00.00	12	4		19		300			B			1								
193- SS	211-212	1324+00.00	12	1326+80.00	12	4		19		280			B			1								
194- SS	212	1326+84.00	12	1329+70.00	12	4		19		286			B			1			1					
195- SS	212	1329+74.00	12	1332+60.00	12	4		19		286			B			1			1					
196- SS	212	1332+64.00	12	1335+50.00	12	4		19		286			B			1			1					
197- SS	212	1335+54.00	12	1338+34.00	12		9.2			280			F			1			1					
198- SS	212-213	1338+38.00	12	1340+70.00	12	4		19		232			B			1			1					
199- SS	213	1340+74.00	12	1343+00.00	12	4		19		226			B			1			1					
200- SS	213	1343+04.00	12	1345+45.00	12			7		241			A			1	1		1					
201- SS	213	1345+49.00	12	1348+40.00	12	4		19		291			B			1			1					
202- SS	213-214	1348+44.00	12	1351+36.00	12			7		292			0			1	1		1					
203- SS	214	1351+40.00	12	1355+90.00	12	4		19		450			B			1			1					
204- SS	214	1355+94.00	12	1358+50.00	12			7		256			A			1	1		1					
205- SS	214	1358+54.00	12	1361+50.00	12	4		19		296			B			1			1					
206- SS	214-215	1361+54.00	12	1364+50.00	12			7		296			A			1	1		1					
207- SS	215	1364+54.00	12	1367+50.00	12	4		19		296			B			1			1					
208- SS		NOT USED																						
209- SS	215	1367+54.00	12	1370+50.00	12			7		296			A			1	1		1					
210- SS	215	1370+54.00	12	1373+50.00	12	4		19		296			B			1			1					
211- SS	215-216	1373+54.00	12	1376+50.00	12			7		296			A			1	1		1					
TOTALS CARRIED TO SHEET 106						112	27.6	625		13827		21		1	1	47	17		46					

CALCULATED P.S. CHECKED B.C.

UNDERDRAIN SUBSUMMARY SOUTHBOUND OUTSIDE, FREE DRAINAGE BASE

MED-71-15.78

105/940

7885DS7.DGN 11/4/99 RB

REFERENCE NO.	SHEET NO.	STATION FROM	DEPTH	STATION TO	DEPTH	601 RIPRAP USING 6" REINFORCED CONCRETE SLAB, AS PER PLAN	603 4" CONDUIT, TYPE B, 707.33 OR 707.41	603 4" CONDUIT, TYPE F, 707.33 OR 707.41		605 4" SHALLOW PIPE UNDERDRAIN WITH FABRIC WRAP 707.31 OR 707.41, AS PER PLAN		605 4" UNCLASSIFIED PIPE UNDERDRAIN WITH FABRIC WRAP 707.31 OR 707.41, AS PER PLAN	OUTLET DETAIL	BENDS AND BRANCHES 6" x 6" x 4" TEE	4" x 4" x 4" TEE	4" 90° BEND	4" 45° BEND	4" 22.5° BEND	4" PLUG					
						SQ. YD.	FEET	FEET		FEET		FEET		EACH	EACH	EACH	EACH	EACH	EACH					
212- SS	216	1376+54.00	12	1379+50.00	12	4		19		296			B			1			1					
213- SS	216	1379+54.00	12	1382+50.00	12			7		296			A			1	1		1					
214- SS	216	1382+54.00	12	1385+50.00	12	4		19		296			B			1			1					
215- SS	216	1385+54.00	12	1388+50.00	12	4		19		296			B			1			1					
216- SS	217	1388+54.00	12	1391+50.00	12	4		19		296			B			1			1					
217- SS	217	1391+54.00	12	1394+35.00	12		9.2			281			F			1			1					
TOTALS FROM SHEET 102						104	47	541		13680		130		2	1	46	16	1	49					
TOTALS FROM SHEET 103						84	39.4	499		10963		167		2	4	36	15	1	42					
TOTALS FROM SHEET 104						104	55.2	605		13626		20		2	1	48	17		50					
TOTALS FROM SHEET 105						112	27.6	625		13822		21		1	1	47	17		46					
TOTALS 212-SS THRU 217-SS						16	9.2	83		1761						6	1		6					
TOTALS CARRIED TO SHEET 128						420	178.4	2353		53875		338		7	7	183	66	2	193					

CALCULATED P.S. CHECKED B.C.

UNDERDRAIN SUBSUMMARY
SOUTHBOUND OUTSIDE, FREE DRAINAGE BASE

MED-71-15.78

106
940

7885DST.DGN 11/1/99 RB

REFERENCE NO.	SHEET NO.	STATION FROM	DEPTH	STATION TO	DEPTH	603 6" CONDUIT, TYPE B, 707.33 OR 707.41 FEET	603 6" CONDUIT, TYPE F, 707.33 OR 707.41 FEET	605 6" SHALLOW PIPE UNDERDRAIN WITH FABRIC WRAP, 707.31 OR 707.41 FEET	605 6" UNCLASSIFIED PIPE UNDERDRAIN WITH FABRIC WRAP 707.31 OR 707.41 FEET	605 ROCK CUT UNDERDDRAIN WITH FABRIC WRAP FEET	OUTLET DETAIL	BENDS AND BRANCHES 6" x 6" x 6" TEE EACH	6" x 4" x 6" TEE EACH	6" 90° BEND EACH	6"x 6"x4" 45° WYE EACH	6" PLUG EACH	6"x6"x6"x6" CROSS EACH
1 - SI	172	833+02.00	24	833+10.00	30				8							1	
2 - SI	172	833+10.00	30	837+16.00	30	15	8	406			T				1	1	1
3 - SI	172-173	837+20.00	30	842+66.00	30	15	8	546			F	1			1	1	
4 - SI	173-174	842+70.00	30	852+66.00	30	15	10	996			F	1			1	1	
5 - SI	174	852+70.00	30	855+66.00	30	15	8	296			D			1	1	1	
6 - SI	174	855+70.00	12	858+80.00	12	9	41			310	L5		1	1		1	
7 - SI	177	891+67.00	29	891+70.00	30				3							1	
8 - SI	177	891+70.00	30	896+46.00	30	15	14	476			J	1			1	1	
9 - SI	177-178	896+50.00	30	906+61.00	30	15	14	1011			D			1	1	1	
10 - SI	178-179	906+65.00	30	914+61.00	30	15	14	796			D			1	1	1	
11 - SI	179	914+65.00	30	922+21.00	30	15	14	756			D			1	1	1	
12 - SI	179-180	922+25.00	30	931+64.00	30	15	14	939			D			1	1	1	
13 - SI	180-181	931+68.00	30	944+64.00	30	15	14	1296			D			1	1	1	
14 - SI	181-182	944+68.00	30	956+34.00	30	15	19	1166			D			1	1	1	
15 - SI	182	956+38.00	30	961+64.00	30	15	14	526			D			1	1	1	
16 - SI	182-183	961+68.00	30	967+46.00	30	15	14	578			F			1	1	1	
17 - SI	183	967+50.00	30	973+96.00	30	15	14	646			D			1	1	1	
18 - SI	183-184	974+00.00	30	980+50.00	30	15	14	650			S	1			1		
19 - SI	184	980+50.00	30	985+92.00	30	15	14	542			J	1			1		
20 - SI	184	985+92.00	30	986+19.00	27.25				27							1	
21 - SI	184-185	988+38.00	33.25	993+00.00	30	15	14	462			D			1	1	1	
22 - SI	185	993+04.00	30	998+65.00	30	15	14	561			D			1	1	1	
23 - SI	185-186	998+69.00	30	1008+52.00	30	15	14	983			D			1	1	1	
24 - SI	186	1008+56.00	30	1011+95.00	30	15	14	339			J	1			1	1	
25 - SI	186	1011+95.00	30	1012+55.00	23.25				60							1	
26 - SI	187	1013+60.00	21.25	1019+00.00	18			540								1	
26A- SI	187	1019+00.00	18	1020+00.00	12				100								
26B- SI	187	1020+00.00	12	1022+72.00	12	9	20			272	L5		1	1			
27 - SI	187	1022+76.00	12	1024+00.00	12					124						1	
27A- SI	187	1024+00.00	12	1024+50.00	30				50								
27B- SI	187-188	1024+50.00	30	1037+40.00	30	15	14	1290			F	1			1		
28 - SI	188-189	1037+44.00	30	1045+08.00	30	15	14	764			D			1	1	1	
29 - SI	189	1045+12.00	30	1050+70.00	30	15	14	558			R	1			1	1	
30 - SI	189-190	1050+70.00	30	1051+30.00	9.25				60							1	
31 - SI	190	1053+65.00	33.25	1060+08.00	30	15	14	643			J	1			1	1	
32 - SI	190-191	1060+08.00	30	1067+36.00	30			728								1	
33 - SI	191	1067+40.00	30	1070+88.00	30	15	14	348			D			1	1	1	
34 - SI	191-192	1070+92.00	30	1076+51.00	30	15	14	559			D			1	1	1	
35 - SI	192	1076+55.00	30	1087+36.00	30	15	14	1081			D			1	1	1	
36 - SI	192-193	1087+40.00	30	1089+24.00	30	15	14	184			D			1	1	1	
37 - SI	193-194	1089+28.00	30	1102+66.00	30	15	14	1338			D			1	1	1	
38 - SI	194	1102+70.00	30	1103+11.00	33.25	15	14	41			D			1	1	1	
39 - SI		NOT USED															
40 - SI	194	1105+55.00	27.25	1106+00.00	30				45							1	
41 - SI	194	1106+00.00	30	1108+76.00	30	15	14	276			J	1			1	1	
42 - SI	194-195	1108+80.00	30	1118+38.00	30	15	14	958			D			1	1	1	
43 - SI	195-196	1118+42.00	30	1127+86.00	30	15	14	944			D			1	1	1	
44 - SI	196	1127+90.00	30	1134+34.00	30	15	14	644			D			1	1	1	
45 - SI	196-197	1134+38.00	30	1140+26.00	30	15	14	588			D			1	1	1	
46 - SI	197	1140+30.00	30	1143+86.00	30	15	14	356			F	1			1	1	
47 - SI	197-198	1143+90.00	30	1158+80.00	30	15	14	1490			D			1	1	1	
48 - SI	198-199	1158+84.00	30	1173+00.00	30	15	14	1416			D			1	1	1	
49 - SI	199-200	1173+04.00	30	1186+33.00	30	15	14	1329			D			1	1	1	
TOTALS CARRIED TO SHEET 108						603	590	30046	353	706		11	2	29	39	46	1

CALCULATED P.S. CHECKED B.C.

UNDERDRAIN SUBSUMMARY SOUTHBOUND MEDIAN, SUBGRADE

MED-71-15.78

107
940

7885DS8.DGN 11/5/99 RB

REFERENCE NO.	SHEET NO.	STATION				603	603	605	605	605		BENDS AND BRANCHES													
						6" CONDUIT, TYPE B, 707.33 OR 707.41	6" CONDUIT, TYPE F, 707.33 OR 707.41	6" SHALLOW PIPE UNDERDRAIN WITH FABRIC WRAP, 707.31 OR 707.41	6" UNCLASSIFIED PIPE UNDERDRAIN WITH FABRIC WRAP 707.31 OR 707.41	ROCK CUT UNDERDDRAIN WITH FABRIC WRAP	OUTLET DETAIL	6" x 6" x 6" TEE	6" x 4" x 6" TEE	6" 90° BEND	6"x 6"x4" 45° WYE	6" PLUG	6"x6"x6"x6" CROSS								
		FROM	DEPTH	TO	DEPTH	FEET	FEET	FEET	FEET	FEET		EACH	EACH	EACH	EACH	EACH	EACH								
50 - SI	200-201	1186+37.00	30	1198+37.00	30	15	14	1200			D			1	1	1								
51 - SI	201-202	1198+41.00	30	1203+00.00	30	15	14	459			D			1	1	1								
52 - SI	204-205	1231+34.00	30	1242+30.00	30	15	9	1096			D			1	1	1								
53 - SI	205-206	1242+34.00	30	1256+00.00	30	15	14	1366			D			1	1									
54 - SI	206-207	1256+00.00	30	1263+84.00	30	15	14	784			F	1			1									
55 - SI	207	1263+88.00	30	1267+34.00	30	15	10	346			J			1	1	1								
56 - SI	207	1267+34.00	30	1267+89.00	23.25	15			55					1	1	1								
57 - SI		NOT USED																						
58 - SI	207-208	1269+93.00	33.25	1281+34.00	30	15	14	1141			Z	1			1	1								
59 - SI	208-209	1281+38.00	30	1293+94.00	30	15	14	1256			J			1	1	1								
60 - SI	209	1293+94.00	30	1300+30.00	30			636								1								
61 - SI	209-210	1300+34.00	30	1312+30.00	30	15	19	1196			D			1	1	1								
62 - SI	210-211	1312+34.00	30	1324+00.00	30	15	14	1166			D			1	1									
63 - SI	211-212	1324+00.00	30	1338+34.00	30	15	14	1434			F	1			1									
64 - SI	212-213	1338+38.00	30	1344+76.00	30	15	14	638			D			1	1	1								
65 - SI	213-214	1344+80.00	30	1351+34.00	30	15	14	654			D			1	1	1								
66 - SI	214-215	1351+38.00	30	1366+34.00	30	15	14	1496			D			1	1	1								
67 - SI	215-216	1366+38.00	30	1381+34.00	30	15	14	1496			D			1	1	1								
68 - SI	216-217	1381+38.00	30	1394+35.00	30	15	14	1297			F	1			1	1								
TOTALS FROM SHEET 107						603	590	30046	353	706		11	2	29	39	46	1								
50-SI THRU 68-SI TOTALS ____						255	220	17661	55			4		13	17	14									
TOTALS CARRIED TO SHEET 128						858	810	47707	408	706		15	2	42	56	60	1								

CALCULATED P.S.
CHECKED B.C.

UNDERDRAIN SUBSUMMARY
SOUTHBOUND MEDIAN, SUBGRADE

MED-71-15.78

7885DS8.DGN 11/5/99 RB

REFERENCE NO.	SHEET NO.	STATION FROM	DEPTH	STATION TO	DEPTH	601 RIPRAP USING 6" REINFORCED CONCRETE SLAB, AS PER PLAN	602 CONCRETE MASONRY, AS PER PLAN	603 6" CONDUIT, TYPE B, 707.33 OR 707.41	603 6" CONDUIT, TYPE F, 707.33 OR 707.41	605 6" SHALLOW PIPE UNDERDRAIN WITH FABRIC WRAP, 707.31 OR 707.41	605 6" UNCLASSIFIED PIPE UNDERDRAIN WITH FABRIC WRAP 707.31 OR 707.41	605 ROCK CUT UNDERDRAIN WITH FABRIC WRAP	OUTLET DETAIL	BENDS AND BRANCHES 4" x 6" x 6" x 6" CROSS	6" x 6" x 4" TEE	6" x 4" x 6" TEE	6" x 6" x 6" TEE	6" 90° BEND	6"x6"x4" 45° WYE	6" PLUG
		FROM	DEPTH	TO	DEPTH	SQ. YD.	CU. YD.	FEET	FEET	FEET	FEET	FEET		EACH	EACH	EACH	EACH	EACH	EACH	EACH
1 - SO	172	833+02.00	24	833+10.00	30						8									1
2 - SO	172	833+10.00	30	837+16.00	30			37.2		406			T				1			1
3 - SO	172-173	837+20.00	30	842+66.00	30			37.2		546			F		1					1
4 - SO	173-174	842+70.00	30	852+16.00	30			37.2		946			F		1					1
5 - SO	174	852+20.00	30	854+21.00	30	4		15	18	201			A					1	1	1
6 - SO	174-175	854+25.00	12	866+24.00	12			9.2	11	399		800	L4			1		1		1
7 - SO		NOT USED																		
8 - SO	175	866+28.00	30	874+66.00	30		0.51	15	20	838			O					1	1	1
9 - SO	175-176	874+70.00	30	879+70.00	30		0.51	13	19	500			X				1		1	1
10 - SO	175-176	874+70.00	30	883+21.00	30			27		851			X					1		1
11 - SO	176-177	883+25.00	30	889+19.00	33.25	4		15	29	594			A					1	1	1
12 - SO	177	890+91.00	23.25	891+30.00	30						39									1
13 - SO	177	891+30.00	30	896+44.00	30	4		15	9	514			C				1		1	1
14 - SO	177	896+48.00	30	901+00.00	30		0.51	15	30	452			O					1	1	1
15 - SO	177-178	899+50.00	30	906+59.00	30	4		15	9	709			A					1	1	1
16 - SO	178	906+63.00	30	912+46.00	30		0.51	15	30	583			O					1	1	1
17 - SO	178-179	912+50.00	30	915+56.00	30	4		15	9	306			A					1	1	1
18 - SO	179	915+60.00	30	921+68.00	30			15	14	608			L2					1	1	1
19 - SO	179-180	921+72.00	30	930+66.00	30			15	34	894			L2					1	1	1
20 - SO	180	930+70.00	30	934+46.00	30	4		15	9	376			A					1	1	1
21 - SO	180-181	934+50.00	30	944+06.00	30	4		15	9	956			A					1	1	1
22 - SO	181	944+10.00	30	950+01.00	30	4		15	9	591			A					1	1	1
23 - SO	181-182	950+05.00	30	955+96.00	30	4		15	9	591			A					1	1	1
24 - SO	182	956+00.00	30	961+64.00	30	4		15	13	564			A					1	1	1
25 - SO	182-183	961+68.00	27	972+00.00	27			49.2		1032			F		1					
26 - SO	183	973+00.00	18	974+00.00	30						100									1
27 - SO	183-184	974+00.00	30	980+50.00	30			37.2		650			S	1						
28 - SO		NOT USED																		
29 - SO	184	980+50.00	30	985+60.00	30	4		15	9	510			C				1		1	
30 - SO	184	985+60.00	30	985+97.00	27.25						37									1
31 - SO	184-185	988+19.00	33.25	994+00.00	30	4		15	11	581			A					1	1	1
32 - SO	185	994+04.00	30	999+30.00	30	4		15	11	526			A					1	1	1
33 - SO	185-186	999+34.00	30	1005+75.00	30	4		15	22	641			A					1	1	1
34 - SO	186	1005+79.00	30	1011+10.00	30	4		15	19	531			C				1		1	1
35 - SO	186	1011+10.00	30	1012+60.00	15.25						150									1
36 - SO	187	1013+66.00	21.25	1019+00.00	18					534										1
36A- SO	187	1019+00.00	18	1020+00.00	12						100									
36B- SO	187	1020+00.00	12	1022+40.00	12	4		9	12			240	L4			1		1		
37 - SO	187	1022+44.00	12	1024+00.00	12							156								1
37A- SO	187	1024+00.00	12	1024+50.00	30						50									
37B- SO	187-188	1024+50.00	30	1037+40.00	30			37.2		1290			F		1					
38 - SO	189	1037+44.00	30	1044+85.00	30	4		15	25	741			A					1	1	1
39 - SO	189	1044+89.00	30	1050+75.00	30			15	20	586			L3					1	1	1
40 - SO	189-190	1050+79.00	30	1051+42.00	9.25						63									1
41 - SO	190	1053+75.00	33.25	1057+00.00	30	4		15	10	325			A					1	1	1
42 - SO	190	1057+04.00	30	1060+12.00	30	4		15	12	308			C				1		1	1
43 - SO	190-191	1060+12.00	30	1067+36.00	30					724										1
44 - SO	191	1067+40.00	30	1071+88.00	30			15	19	448			D					1	1	1
45 - SO	191	1071+92.00	30	1075+81.00	30			15	19	389			D					1	1	1
46 - SO	191-192	1075+85.00	30	1080+96.00	30			15	18	511			D					1	1	1
47 - SO	192	1081+00.00	30	1083+96.00	30	4		15	10	296			A					1	1	1
48 - SO	192-193	1084+00.00	30	1089+31.00	30	4		15	8	531			A					1	1	1
49 - SO	193	1089+35.00	30	1094+15.00	30	4		13	25	480			Y				1		1	1
TOTALS CARRIED TO SHEET 111						88	2.04	741.4	531	24059	547	1196		1	4	2	7	28	31	44

CALCULATED P.S. CHECKED B.C.

UNDERDRAIN SUBSUMMARY SOUTHBOUND OUTSIDE, SUBGRADE

MED-71-15.78

7885DS9.DGN 11/5/99 RB

REFERENCE NO.	SHEET NO.	STATION				601	602	603	603	605	605	605		BENDS AND BRANCHES									
						RIPRAP USING 6" REINFORCED CONCRETE SLAB, AS PER PLAN	CONCRETE MASONRY, AS PER PLAN	6" CONDUIT, TYPE B, 707.33 OR 707.41	6" CONDUIT, TYPE F, 707.33 OR 707.41	6" SHALLOW PIPE UNDERDRAIN WITH FABRIC WRAP, 707.31 OR 707.41	6" UNCLASSIFIED PIPE UNDERDRAIN WITH FABRIC WRAP 707.31 OR 707.41,	ROCK CUT UNDERDRAIN WITH FABRIC WRAP	OUTLET DETAIL	4" x 6" x 6" x 6" CROSS	6" x 6" x 4" TEE	6" x 4" x 6" TEE	6" x 6" x 6" TEE	6" 90° BEND	6"X6"x4" 45° WYE	6" PLUG				
		FROM	DEPTH	FROM	DEPTH	SQ. YD.	CU. YD.	FEET	FEET	FEET	FEET	FEET		EACH	EACH	EACH	EACH	EACH	EACH	EACH				
50 - SO	193	1089+35.00	30	1096+96.00	30			25		761			Y					1		1				
51 - SO	193-194	1097+00.00	30	1102+93.00	33.25	4		15	19	593			A					1	1	1				
52 - SO	194	1105+80.00	27.25	1106+10.00	30						30													
53 - SO	194	1106+10.00	30	1111+61.00	30	4		15	9	551			C				1		1	1				
54 - SO	194-195	1111+65.00	30	1117+00.00	30	4		15	27	535			A					1	1	1				
55 - SO	195	1116+30.00	30	1118+40.00	30	4		15	11	210			A					1	1	1				
56 - SO	195	1118+44.00	30	1125+06.00	30		0.51	15	24	662			O					1	1	1				
57 - SO	195-196	1125+10.00	30	1134+34.00	30	4		15	21	924			A					1	1	1				
58 - SO	196-197	1134+38.00	30	1140+26.00	30			15	13	588			D					1	1	1				
59 - SO	197	1140+30.00	30	1143+86.00	30			37.2		356			F		1					1				
60 - SO	197-198	1143+90.00	30	1152+36.00	30			15	13	846			D					1	1	1				
61 - SO		NOT USED																						
62 - SO	198	1152+40.00	30	1156+50.00	30	4		13	21	410			Y				1		1	1				
63 - SO		NOT USED																						
64 - SO	198	1152+40.00	30	1158+80.00	30			25		640			Y					1		1				
65 - SO	198-199	1158+84.00	30	1172+30.00	30			15	11	1346			D					1	1	1				
66 - SO	199	NOT USED																						
67 - SO	199-200	1172+20.00	30	1186+16.00	30	4		15	24	1396			A					1	1	1				
68 - SO	200	NOT USED																						
69 - SO	200-201	1186+20.00	30	1193+16.00	30	4		15	25	696			A					1	1	1				
70 - SO	201	1193+20.00	30	1198+40.00	30	4		15	12	520			A					1	1	1				
71 - SO	201-202	1198+44.00	30	1202+21.00	30		0.51	15	30	377			O					1	1	1				
72 - SO	202	1202+25.00	30	1203+00.00	30	4		15	20	75			A					1	1					
		1203+00.00	32	1209+30.00	32					630										1				
73 - SO	202-203	1209+34.00	30	1216+72.00	30			66		738			F		1				1	1				
74 - SO		NOT USED																						
75 - SO	203	1216+76.00	30	1221+30.00	30			15	17	454			D					1	1	1				
76 - SO	203-204	1221+34.00	30	1228+09.00	30			66		675			F		1				1	1				
77 - SO	204	1228+13.00	30	1231+86.00	30			66		373			F		1				1	1				
78 - SO	204-205	1231+90.00	30	1239+46.00	30	4		15	23	756			A					1	1	1				
79 - SO	205	1239+50.00	30	1242+32.00	30	4		15	21	282			A					1	1	1				
80 - SO	205-206	1242+36.00	30	1252+46.00	30		0.51	15	27	1010			O					1	1	1				
81 - SO	206	1252+50.00	30	1256+00.00	30	4		15	15	350			A					1	1					
82 - SO	206	1256+00.00	30	1258+35.00	30	4		15	10	235			A					1	1					
83 - SO	206-207	1257+50.00	30	1263+84.00	30			37.2		634			F		1					1				
84 - SO	207	1263+88.00	30	1267+70.00	30	4		15	10	382			C				1		1	1				
85 - SO	207	1267+70.00	30	1268+01.00	27.25					0	31									1				
86 - SO	207	1270+02.00	33.25	1275+50.00	30	4		15	21	548			A					1	1	1				
87 - SO	207-208	1275+54.00	30	1281+34.00	30			37.2		580			Z					1		1				
88 - SO	208	1279+60.00	30	1281+80.00	30	4		15	27	220			A					1	1	1				
89 - SO		NOT USED																						
90 - SO	208-209	1281+84.00	30	1293+96.00	30		0.56	15	24	1212			P				1		1	1				
91 - SO	209-210	1293+96.00	30	1301+16.00	30					720										1				
92 - SO	210	1301+20.00	30	1305+56.00	30	4		15	19	436			A					1	1	1				
93 - SO	210	1305+60.00	30	1312+32.00	30	4		15	9	672			A					1	1	1				
94 - SO	210-211	1312+36.00	30	1324+00.00	30		0.51	15	19	1164			O					1	1					
95 - SO		NOT USED																						
96 - SO		NOT USED																						
97 - SO		NOT USED																						
98 - SO	211-212	1324+00.00	30	1338+34.00	30			37.2		1434			F		1									
99 - SO	212-213	1338+38.00	30	1345+45.00	30	4		15	19	707			A					1	1	1				
100- SO	213-214	1345+49.00	30	1351+36.00	30		0.51	15	37	587			O					1	1	1				
101- SO	214	1351+40.00	30	1358+50.00	30	4		15	21	710			A					1	1	1				
102- SO	214-215	1358+54.00	30	1364+50.00	30	4		15	21	596			A					1	1	1				
TOTALS CARRIED TO SHEET 111						88	3.11	874.8	620	27591	61				6		4	31	35	40				

UNDERDRAIN SUBSUMMARY
SOUTHBOUND OUTSIDE, SUBGRADE

CALCULATED P.S.
CHECKED B.C.

MED-71-15.78

7885DS9.DGN 11/8/99 RB

REFERENCE NO.	SHEET NO.	STATION FROM	DEPTH	STATION TO	DEPTH	601 RIPRAP USING 6" REINFORCED CONCRETE SLAB, AS PER PLAN	602 CONCRETE MASONRY, AS PER PLAN	603 6" CONDUIT, TYPE B, 707.33 OR 707.41	603 6" CONDUIT, TYPE F, 707.33 OR 707.41	605 6" SHALLOW PIPE UNDERDRAIN WITH FABRIC WRAP, 707.31 OR 707.41,	605 6" UNCLASSIFIED PIPE UNDERDRAIN WITH FABRIC WRAP 707.31 OR 707.41,	605 ROCK CUT UNDERDRAIN WITH FABRIC WRAP	OUTLET DETAIL	BENDS AND BRANCHES 4" x 6" x 6" CROSS	6" x 6" x 4" TEE	6" x 4" x 6" TEE	6" x 6" x 6" TEE	6" 90° BEND	6"x6"x4" 45° WYE	6" PLUG				
						SQ. YD.	CU. YD.	FEET	FEET	FEET	FEET	FEET		EACH	EACH	EACH	EACH	EACH	EACH	EACH				
103- SO	215	1364+54.00	30	1370+50.00	30	4		15	21	596			A					1	1	1				
104- SO	215-216	1370+54.00	30	1376+50.00	30	4		15	21	596			A					1	1	1				
105- SO	216	1376+54.00	30	1382+50.00	30	4		15	21	596			A					1	1	1				
106- SO	216-217	1382+54.00	30	1394+35.00	30			37.2		1181			F		1					1				
TOTALS FROM SHEET 109						88	2.04	741.4	531	24056	547	1196		1	4	2	7	28	31	44				
TOTALS FROM SHEET 110						88	3.11	874.8	620	27591	61				6		4	31	35	40				
103-SO THRU 106-SO TOTALS						12		82	63	2969					1			3	3	4				
TOTALS CARRIED TO SHEET 128						188	5.15	1698.2	1214	54619	608	1196		1	11	2	11	62	69	88				

CALCULATED P.S. CHECKED B.C.

UNDERDRAIN SUBSUMMARY SOUTHBOUND OUTSIDE, SUBGRADE

MED-71-15.78

7885DS9.DGN 11/8/99 RB

REFERENCE NO.	SHEET NO.	STATION FROM	DEPTH	STATION TO	DEPTH	601 RIPRAP USING 6" REINFORCED CONCRETE SLAB, AS PER PLAN	603 4" CONDUIT, TYPE B, 707.33 OR 707.41	603 4" CONDUIT, TYPE F, 707.33 OR 707.41		605 4" SHALLOW PIPE UNDERDRAIN WITH FABRIC WRAP, 707.31 OR 707.41, AS PER PLAN		605 4" UNCLASSIFIED PIPE UNDERDRAIN WITH FABRIC WRAP 707.31 OR 707.41, AS PER PLAN	OUTLET DETAIL	BENDS AND BRANCHES 6" x 4" x 6" TEE	4" x 4" x 4" TEE	4", 90° BEND	4", 45° BEND	4" x 22.5° BEND	4" PLUG					
						SQ. YD.	CU. YD.	FEET		FEET		FEET		EACH	EACH	EACH	EACH	EACH	EACH					
1 - NM	172	833+02.00	12	833+10.00	18							8							1					
2 - NM	172	833+10.00	18	833+20.00	12			7				10	T		1		1							
3 - NM	172	833+20.00	12	837+16.00	12					396									1					
4 - NM	172	NOT USED																						
5 - NM	172-173	837+20.00	12	839+66.00	12			7		246			F			1	1		1					
6 - NM	173	839+70.00	12	842+66.00	12			25		296			M			1			1					
7 - NM	173	842+70.00	12	845+16.00	12			7		246			D			1	1		1					
8 - NM	173	845+20.00	12	847+66.00	12	4		16		246			B			1			1					
9 - NM	173	847+70.00	12	850+16.00	12	4		16		246			B			1			1					
10 - NM	173-174	850+20.00	12	852+66.00	12	4		16		246			B			1			1					
11 - NM	174	852+70.00	12	855+66.00	12			7		296			D			1	1		1					
12 - NM	174	855+70.00	12	857+70.00	12		1			200			L5					1	1					
13 - NM	174	857+74.00	12	860+66.00	12	4		10		292			B			1			1					
14 - NM	174-175	860+70.00	12	863+61.00	12		9.2			291			K	1		1			1					
15 - NM	175	863+65.00	12	866+26.00	12		9.2			261			K	1		1			1					
16 - NM	175	866+30.00	12	869+06.00	12			7		276			D			1	1		1					
17 - NM	175	869+10.00	12	871+86.00	12		9.2			276			K	1		1			1					
18 - NM	175	871+90.00	12	874+64.00	12		9.2			274			K	1		1			1					
19 - NM	175-176	874+68.00	12	877+41.00	12			7		273			F			1	1		1					
20 - NM	176	877+45.00	12	880+31.00	12		9.2			286			K	1		1			1					
21 - NM	176	880+35.00	12	883+21.00	12		9.2			286			K	1		1			1					
22 - NM	176	883+25.00	12	886+14.00	12		9.2			289			K	1		1			1					
23 - NM	176-177	886+18.00	12	889+08.00	12			7		290			D			1	1		1					
24 - NM	177	891+40.00	12	891+70.00	22							30							1					
25 - NM	177	891+70.00	22	891+80.00	12			7				10	J		1		1							
26 - NM	177	891+80.00	12	894+66.00	12					286									1					
27 - NM	177	894+70.00	12	896+46.00	12		9.2			176			K	1		1			1					
28 - NM	177	896+50.00	12	898+96.00	12			7		246			D			1	1		1					
29 - NM	177-178	899+00.00	12	901+46.00	12	4		16		246			B			1			1					
30 - NM	178	901+50.00	12	903+96.00	12	4		16		246			B			1			1					
31 - NM	178	904+00.00	12	906+61.00	12	4		16		261			B			1			1					
32 - NM	178	906+65.00	12	909+46.00	12			7		281			D			1	1		1					
33 - NM	178	909+50.00	12	911+96.00	12	4		16		246			B			1			1					
34 - NM	178-179	912+00.00	12	914+61.00	12	4		16		261			B			1			1					
35 - NM	179	914+65.00	12	917+21.00	12			7		256			D			1	1		1					
36 - NM	179	917+25.00	12	919+71.00	12	4		16		246			B			1			1					
37 - NM	179	919+75.00	12	922+21.00	12	4		16		246			B			1			1					
38 - NM	179	922+25.00	12	924+66.00	12			7		241			D			1	1		1					
39 - NM	179-180	924+70.00	12	926+96.00	12	4		16		226			B			1			1					
40 - NM	180	927+00.00	12	929+26.00	12	4		16		226			B			1			1					
41 - NM	180	929+30.00	12	931+64.00	12	4		16		234			B			1			1					
42 - NM	180	931+68.00	12	934+16.00	12			7		248			D			1	1		1					
43 - NM	180	934+20.00	12	936+76.00	12	4		16		256			B			1			1					
44 - NM	180-181	936+80.00	12	939+36.00	12	4		16		256			B			1			1					
45 - NM	181	939+40.00	12	941+96.00	12	4		16		256			B			1			1					
46 - NM	181	942+00.00	12	944+64.00	12	4		16		264			B			1			1					
47 - NM	181	944+68.00	12	947+56.00	12			7		288			D			1	1		1					
48 - NM	181	947+60.00	12	950+46.00	12	4		16		286			B			1			1					
49 - NM	181-182	950+50.00	12	953+36.00	12	4		16		286			B			1			1					
50 - NM	182	953+40.00	12	956+34.00	12	4		16		294			B			1			1					
51 - NM	182	956+38.00	12	958+96.00	12			7		258			D			1	1		1					
52 - NM	182	959+00.00	12	961+64.00	12	4		16		264			B			1			1					
53 - NM	182-183	961+68.00	12	964+46.00	12			7		278			F			1	1		1					
TOTALS CARRIED TO SHEET 116						88	74.6	483		12670		58		8	2	45	16	1	50					

CALCULATED P.S. CHECKED B.C.

UNDERDRAIN SUBSUMMARY NORTHBOUND MEDIAN, FREE DRAINAGE BASE

MED-71-15.78

112
940

7885DSI.DGN 11/4/99 RB

REFERENCE NO.	SHEET NO.	STATION FROM	DEPTH	STATION TO	DEPTH	601 RIPRAP USING 6" REINFORCED CONCRETE SLAB, AS PER PLAN	603 4" CONDUIT, TYPE B, 707.33 OR 707.41	603 4" CONDUIT, TYPE F, 707.33 OR 707.41		605 4" SHALLOW PIPE UNDERDRAIN WITH FABRIC WRAP, 707.31 OR 707.41, AS PER PLAN		605 4" UNCLASSIFIED PIPE UNDERDRAIN WITH FABRIC WRAP 707.31 OR 707.41, AS PER PLAN	OUTLET DETAIL	BENDS AND BRANCHES 6" x 4" x 6" TEE	4" x 4" x 4" TEE	4", 90° BEND	4", 45° BEND	4" x 22.5° BEND	4" PLUG
						SQ. YD.	CU. YD.	FEET		FEET		FEET		EACH	EACH	EACH	EACH	EACH	EACH
54 - NM	183	964+50.00	12	967+46.00	12		9.2			296			K	1		1			1
55 - NM	183	967+50.00	12	969+56.00	12			7		206			D			1	1		1
56 - NM	183	969+60.00	12	971+76.00	12	4		16		216			B			1			1
57 - NM	183	971+80.00	12	973+96.00	12	4		16		216			B			1			1
58 - NM	183-184	974+00.00	12	976+96.00	12			7		296			D			1	1		1
59 - NM	184	977+00.00	12	980+50.00	12	4		16		350			B			1			
60 - NM	184	980+50.00	12	982+90.00	12			20		240			M			1			
61 - NM	184	982+94.00	12	985+82.00	12					288									1
62 - NM	184	985+82.00	12	985+92.00	22			7				10	J		1		1		
63 - NM	184	985+92.00	22	986+36.00	12							44							1
64 - NM		NOT USED																	
65 - NM	185	989+35.00	12	993+00.00	12			20		365			M			1			1
66 - NM	185	993+04.00	12	995+80.00	12	4		16		276			B			1			1
67 - NM	185	995+84.00	12	998+65.00	12			7		281			D			1	1		1
68 - NM	185-186	998+69.00	12	1001+10.00	12	4		16		241			B			1			1
69 - NM	186	1001+14.00	12	1003+60.00	12	4		16		246			B			1			1
70 - NM	186	1003+64.00	12	1006+00.00	12	4		16		236			B			1			1
71 - NM	186	1006+04.00	12	1008+52.00	12			7		248			D			1	1		1
72 - NM	186	1008+56.00	12	1011+85.00	12					329									1
73 - NM	186	1011+85.00	12	1011+95.00	20			7				10	J		1		1		
74 - NM	186	1011+95.00	20	1012+18.00	12							23							1
75 - NM		NOT USED																	
76 - NM	187	1013+98.00	12	1017+50.00	12	4		16		352			B			1			1
77 - NM	187	1017+54.00	12	1020+10.00	12	4		16		256			B			1			1
78 - NM	187	1020+14.00	12	1022+72.00	12		1			258			L5					1	1
79 - NM	187	1022+76.00	12	1025+70.00	12	4		16		294			B			1			1
80 - NM	187-188	1025+74.00	12	1028+60.00	12	4		16		286			B			1			1
81 - NM	188	1028+64.00	12	1031+50.00	12	4		16		286			B			1			1
82 - NM	188	1031+54.00	12	1034+40.00	12	4		16		286			B			1			1
83 - NM	188	1034+44.00	12	1037+40.00	12			7		296			F			1	1		1
84 - NM	188-189	1037+44.00	12	1040+00.00	12	4		16		256			B			1			1
85 - NM	189	1040+04.00	12	1042+50.00	12	4		16		246			B			1			1
86 - NM	189	1042+54.00	12	1045+08.00	12			7		254			F			1	1		1
87 - NM	189	1045+12.00	12	1047+55.00	12			20		243			M			1			1
88 - NM	189	1047+59.00	12	1050+70.00	12					311			R			1	1		1
89 - NM	189-190	1050+74.00	12	1051+03.00	12					29			K	1		1			1
90 - NM		NOT USED																	
91 - NM		NOT USED																	
92 - NM		NOT USED																	
93 - NM	190	1053+99.00	9.25	1058+00.00	12	4		16		401			B			1			1
94 - NM	190	1058+04.00	12	1060+08.00	12			7		204			J		1		1		
95 - NM	190	1060+08.00	12	1062+46.00	12					238									1
96 - NM	190-191	1062+50.00	12	1064+96.00	12	4		16		246			B			1			1
97 - NM	191	1065+00.00	12	1067+36.00	12	4		16		236			B			1			1
98 - NM	191	1067+40.00	12	1070+88.00	12			7		348			D			1	1		1
99 - NM	191	1070+92.00	12	1073+51.00	12			7		259			D			1	1		1
100 - NM	191-192	1073+55.00	12	1076+51.00	12		9.2			296			K	1		1			1
101 - NM	192	1076+55.00	12	1079+26.00	12			7		271			D			1	1		1
102 - NM	192	1079+30.00	12	1081+96.00	12	4		16		266			B			1			1
103 - NM	192	1082+00.00	12	1084+66.00	12	4		16		266			B			1			1
104 - NM	192	1084+70.00	12	1087+36.00	12	4		16		266			B			1			1
105 - NM	192-193	1087+40.00	12	1089+24.00	12			7		184			D			1	1		1
106 - NM	193	1089+28.00	12	1091+96.00	12			7		268			D			1	1		1
TOTALS CARRIED TO SHEET 116						84	19.4	494		12670		87		3	3	39	15	1	44

CALCULATED P.S. CHECKED B.C.

UNDERDRAIN SUBSUMMARY NORTHBOUND MEDIAN, FREE DRAINAGE BASE

MED-71-15.78

7885DSL.DGN 11/4/99 RB

UNDERDRAIN SUBSUMMARY
NORTHBOUND MEDIAN, FREE DRAINAGE BASE

CALCULATED P.S. CHECKED B.C.

MED-71-15.78

REFERENCE NO.	SHEET NO.	STATION FROM	DEPTH	STATION TO	DEPTH	601 RIPRAP USING 6" REINFORCED CONCRETE SLAB, AS PER PLAN (SQ. YD.)	603 4" CONDUIT, TYPE B, 707.33 OR 707.41 (CU. YD.)	603 4" CONDUIT, TYPE F, 707.33 OR 707.41 (FEET)		605 4" SHALLOW PIPE UNDERDRAIN WITH FABRIC WRAP, 707.31 OR 707.41, AS PER PLAN (FEET)		605 4" UNCLASSIFIED PIPE UNDERDRAIN WITH FABRIC WRAP 707.31 OR 707.41, AS PER PLAN (FEET)	OUTLET DETAIL	BENDS AND BRANCHES 6" x 4" x 6" TEE (EACH)	4" x 4" x 4" TEE (EACH)	4", 90° BEND (EACH)	4", 45° BEND (EACH)	4" x 22.5° BEND (EACH)	4" PLUG (EACH)					
107 - NM	193	1092+00.00	12	1094+61.00	12	4		16		261			B			1			1					
108 - NM	193	1094+65.00	12	1097+26.00	12	4		16		261			B			1			1					
109 - NM	193	1097+30.00	12	1099+96.00	12	4		16		266			B			1			1					
110 - NM	193-194	1100+00.00	12	1102+73.00	12	4		16		273			B			1			1					
111 - NM		NOT USED		.																				
112 - NM	194	1105+74.00	12	1106+00.00	18							26							1					
113 - NM	194	1106+00.00	18	1106+10.00	12			7				10	J		1		1							
114 - NM	194	1106+10.00	12	1108+76.00	12					266									1					
115 - NM	194	1108+80.00	12	1111+16.00	12			7		236			D			1	1		1					
116 - NM	194-195	1111+20.00	12	1113+56.00	12	4		16		236			B			1			1					
117 - NM	195	1113+60.00	12	1115+96.00	12	4		16		236			B			1			1					
118 - NM	195	1116+00.00	12	1118+38.00	12	4		16		238			B			1			1					
119 - NM	195	1118+42.00	12	1120+76.00	12			7		234			D			1	1		1					
120 - NM	195	1120+80.00	12	1123+16.00	12	4		16		236			B			1			1					
121 - NM	195	1123+20.00	12	1125+56.00	12	4		16		236			B			1			1					
122 - NM	195-196	1125+60.00	12	1127+86.00	12	4		16		226			B			1			1					
123 - NM	196	1127+90.00	12	1129+96.00	12			7		206			D			1	1		1					
124 - NM	196	1130+00.00	12	1132+16.00	12	4		16		216			B			1			1					
125 - NM	196	1132+20.00	12	1134+34.00	12	4		16		214			B			1			1					
126 - NM	196	1134+38.00	12	1137+30.00	12			7		292			D			1	1		1					
127 - NM	196-197	1137+34.00	12	1140+26.00	12	4		16		292			B			1			1					
128 - NM	197	1140+30.00	12	1142+06.00	12			7		176			F			1	1		1					
129 - NM	197	1142+10.00	12	1143+86.00	12	4		16		176			B			1			1					
130 - NM	197	1143+90.00	12	1146+86.00	12			7		296			D			1	1		1					
131 - NM	197	1146+90.00	12	1149+86.00	12	4		16		296			B			1			1					
132 - NM	197-198	1149+90.00	12	1152+86.00	12	4		16		296			B			1			1					
133 - NM	198	1152+90.00	12	1155+86.00	12	4		16		296			B			1			1					
134 - NM	198	1155+90.00	12	1158+80.00	12	4		16		290			B			1			1					
135 - NM	198	1158+84.00	12	1161+66.00	12			7		282			D			1	1		1					
136 - NM	198-199	1161+70.00	12	1164+46.00	12	4		16		276			B			1			1					
137 - NM	199	1164+50.00	12	1167+31.00	12	4		16		281			B			1			1					
138 - NM	199	1167+35.00	12	1170+16.00	12	4		16		281			B			1			1					
139 - NM	199	1170+20.00	12	1173+00.00	12	4		16		280			B			1			1					
140 - NM	199-200	1173+04.00	12	1175+96.00	12			7		292			D			1	1		1					
141 - NM	200	1176+00.00	12	1178+96.00	12	4		16		296			B			1			1					
142 - NM	200	1179+00.00	12	1181+96.00	12	4		16		296			B			1			1					
143 - NM	200	1182+00.00	12	1186+33.00	12	4		16		433			B			1			1					
144 - NM	200-201	1186+37.00	12	1189+34.00	12			7		297			D			1	1		1					
145 - NM	201	1189+38.00	12	1192+35.00	12	4		16		297			B			1			1					
146 - NM	201	1192+39.00	12	1195+36.00	12	4		16		297			B			1			1					
147 - NM	201	1195+40.00	12	1198+37.00	12	4		16		297			B			1			1					
148 - NM	201-202	1198+41.00	12	1200+36.00	12			7		195			F			1	1		1					
149 - NM	202	1200+40.00	12	1202+30.00	12	4		16		190			B			1			1					
150 - NM	202	1202+34.00	14	1203+00.00	14			7		66			D			1	1							
		1203+00.00	12	1204+61.00	12					161									1					
151 - NM	202	1204+65.00	12	1206+96.00	12		9.2			231			K	1		1			1					
152 - NM	202	1207+00.00	12	1209+30.00	12		9.2			230			K	1		1			1					
153 - NM	202	1209+34.00	12	1211+76.00	12			7		242			D			1	1		1					
154 - NM	202-203	1211+80.00	12	1214+26.00	12		9.2			246			K	1		1			1					
155 - NM	203	1214+30.00	12	1216+72.00	12		9.2			242			K	1		1			1					
156 - NM	203	1216+76.00	12	1219+01.00	12			7		225			D			1	1		1					
157 - NM	203	1219+05.00	12	1221+30.00	12		9.2			225			K	1		1			1					
158 - NM	203	1221+34.00	12	1223+65.00	12			7		231			D			1	1		1					
TOTALS CARRIED TO SHEET 116						116	46	569		12640		36		5	1	48	15		50					

7885DSL.DGN 11/4/99 RB

REFERENCE NO.	SHEET NO.	STATION FROM	DEPTH	STATION TO	DEPTH	601 RIPRAP USING 6" REINFORCED CONCRETE SLAB, AS PER PLAN SQ. YD.	603 4" CONDUIT, TYPE B, 707.33 OR 707.41 CU. YD.	603 4" CONDUIT, TYPE F, 707.33 OR 707.41 FEET		605 4" SHALLOW PIPE UNDERDRAIN WITH FABRIC WRAP, 707.31 OR 707.41, AS PER PLAN FEET		605 4" UNCLASSIFIED PIPE UNDERDRAIN WITH FABRIC WRAP 707.31 OR 707.41, AS PER PLAN FEET	OUTLET DETAIL	BENDS AND BRANCHES 6" x 4" x 6" TEE EACH	4" x 4" x 4" TEE EACH	4", 90° BEND EACH	4", 45° BEND EACH	4" x 22.5° BEND EACH	4" PLUG EACH					
159- NM	203-204	1223+69.00	12	1228+09.00	12			7		440			D			1	1		1					
160- NM		NOT USED																						
161- NM	204	1228+13.00	12	1231+30.00	12			7		317			D			1	1		1					
162- NM	204	1231+34.00	12	1234+06.00	12			7		272			D			1	1		1					
163- NM		NOT USED																						
164- NM	204	1234+10.00	12	1236+81.00	12		9.2			271			K	1		1			1					
165- NM	204-205	1236+85.00	12	1239+56.00	12	4		16		271			B			1			1					
166- NM	205	1239+60.00	12	1242+30.00	12	4		16		270			B			1			1					
167- NM	205	1242+34.00	12	1244+96.00	12			7		262			D			1	1		1					
168- NM	205	1245+00.00	12	1247+71.00	12	4		16		271			B			1			1					
169- NM	205	1247+75.00	12	1250+46.00	12	4		16		271			B			1			1					
170- NM	205-206	1250+50.00	12	1253+25.00	12	4		16		275			B			1			1					
171- NM	206	1253+29.00	12	1256+00.00	12	4		16		271			B			1			1					
172- NM	206	1256+00.00	12	1258+60.00	12	4		16		260			B			1			1					
173- NM	206	1258+64.00	12	1261+20.00	12	4		16		256			B			1			1					
174- NM	206-207	1261+24.00	12	1263+84.00	12			7		260			D			1	1		1					
175- NM	207	1263+88.00	12	1267+24.00	12					336									1					
176- NM	207	1267+24.00	12	1267+34.00	18			7				10	J		1		1							
177- NM	207	1267+34.00	18	1267+58.00	12							24							1					
178- NM	207	1270+17.00	12	1270+34.00	12			7		17			D			1	1		1					
179- NM	207	1270+38.00	12	1273+65.00	12	2		16		327			W			1			1					
180- NM	207	1273+69.00	12	1275+85.00	12	2		16		216			W			1			1					
181- NM	207-208	1275+89.00	12	1278+60.00	12	2		16		271			W			1			1					
182- NM	208	1278+64.00	12	1281+34.00	12			7		270			D			1	1		1					
183- NM	208	1281+38.00	12	1283+85.00	12	2		16		247			W			1			1					
184- NM	208	1283+89.00	12	1286+40.00	12	2		16		251			W			1			1					
185- NM	208-209	1286+44.00	12	1288+95.00	12	2		16		251			W			1			1					
186- NM	209	1288+99.00	12	1291+50.00	12	2		16		251			W			1			1					
187- NM	209	1291+54.00	12	1293+94.00	12			7		240			J		1		1							
188- NM	209	1293+94.00	12	1295+96.00	12					202									1					
189- NM	209	1296+00.00	12	1298+16.00	12	2		16		216			W			1			1					
190- NM	209	1298+20.00	12	1300+30.00	12	2		16		210			W			1			1					
191- NM	209-210	1300+34.00	12	1303+30.00	12			7		296			D			1	1		1					
192- NM	210	1303+34.00	12	1306+30.00	12	2		16		296			W			1			1					
193- NM	210	1306+34.00	12	1309+30.00	12	2		16		296			W			1			1					
194- NM	210	1309+34.00	12	1312+30.00	12	2		16		296			W			1			1					
195- NM	210-211	1312+34.00	12	1315+16.00	12			7		282			D			1	1		1					
196- NM	211	1315+20.00	12	1318+06.00	12	2		16		286			W			1			1					
197- NM	211	1318+10.00	12	1320+96.00	12	2		16		286			W			1			1					
198- NM	211	1321+00.00	12	1324+00.00	12	2		16		300			W			1								
199- NM	211	1324+00.00	12	1326+80.00	12	2,		16		280			W			1								
200- NM	211-212	1326+84.00	12	1329+70.00	12	2		16		286			W			1			1					
201- NM	212	1329+74.00	12	1332+60.00	12	2		16		286			W			1			1					
202- NM	212	1332+64.00	12	1335+50.00	12	2		16		286			W			1			1					
203- NM	212	1335+54.00	12	1338+34.00	12			7		280			D			1	1		1					
204- NM	212-213	1338+38.00	12	1341+00.00	12			16		262			M			1			1					
205- NM		NOT USED																						
206- NM	213	1341+04.00	12	1344+76.00	12			7		372			D			1	1		1					
207- NM	213	1344+80.00	12	1347+05.00	12	2		16		225			W			1			1					
208- NM	213	1347+09.00	12	1349+25.00	12	2		16		216			W			1			1					
209- NM	213-214	1349+29.00	12	1351+34.00	12			7		205			F			1	1		1					
210- NM	214	1351+38.00	12	1356+00.00	12	2		16		462			W			1			1					
211- NM	214	1356+04.00	12	1358+60.00	12	2		16		256			W			1			1					
TOTALS CARRIED TO SHEET 116						78	9.2	610		13026		34		1	2	45	14		46					

CALCULATED P.S. CHECKED B.C.

UNDERDRAIN SUBSUMMARY
NORTHBOUND MEDIAN, FREE DRAINAGE BASE

MED-71-15.78

7885DSL.DGN 11/4/99 RB

REFERENCE NO.	SHEET NO.	STATION FROM	DEPTH	STATION TO	DEPTH	601 RIPRAP USING 6" REINFORCED CONCRETE SLAB, AS PER PLAN SQ. YD.	603 4" CONDUIT, TYPE B, 707.33 OR 707.41 CU. YD.	603 4" CONDUIT, TYPE F, 707.33 OR 707.41 FEET		605 4" SHALLOW PIPE UNDERDRAIN WITH FABRIC WRAP, 707.31 OR 707.41, AS PER PLAN FEET		605 4" UNCLASSIFIED PIPE UNDERDRAIN WITH FABRIC WRAP 707.31 OR 707.41, AS PER PLAN FEET	OUTLET DETAIL	BENDS AND BRANCHES 6" x 4" x 6" TEE EACH	4" x 4" x 4" TEE EACH	4", 90° BEND EACH	4", 45° BEND EACH	4" x 22.5° BEND EACH	4" PLUG EACH					
212- NM	214	1358+64.00	12	1361+20.00	12	2		16		256			W			1			1					
213- NM	214-215	1361+24.00	12	1363+80.00	12	2		16		256			W			1			1					
214- NM	215	1363+84.00	12	1366+34.00	12			7		250			D			1	1		1					
215- NM	215	1366+38.00	12	1369+34.00	12	2		16		296			W			1			1					
216- NM	215	1369+38.00	12	1372+34.00	12	2		16		296			W			1			1					
217- NM	215	1372+38.00	12	1375+34.00	12	2		16		296			W			1			1					
218- NM	215-216	1375+38.00	12	1378+34.00	12	2		16		296			W			1			1					
219- NM	216	1378+38.00	12	1381+34.00	12			7		296			D			1	1		1					
220- NM	216	1381+38.00	12	1383+95.00	12	2		16		257			W			1			1					
221- NM	216	1383+99.00	12	1386+55.00	12	2		16		256			W			1			1					
222- NM	216-217	1386+59.00	12	1389+15.00	12	2		16		256			W			1			1					
223- NM	217	1389+19.00	12	1391+75.00	12	2		16		256			W			1			1					
224- NM	217	1391+79.00	12	1394+35.00	12			7		256			F			1	1		1					
TOTALS FROM SHEET 112						88	74.6	483		12670		58		8	2	45	16	1	50					
TOTALS FROM SHEET 113						84	19.4	494		11732		87		3	3	39	15	1	44					
TOTALS FROM SHEET 114						116	46	569		12640		36		5	1	48	15		50					
TOTALS FROM SHEET 115						78	9.2	610		13026		34		1	2	45	14		46					
212-NM THRU 224-NM TOTALS						20		181		3523						13	3		13					
TOTALS CARRIED TO SHEET 128						386	149.2	2337		53591		215		17	8	190	63	2	203					

CALCULATED P.S. CHECKED B.C.

UNDERDRAIN SUBSUMMARY NORTHBOUND MEDIAN, FREE DRAINAGE BASE

MED-71-15.78

7885DSL.DGN 11/4/99 RB

REFERENCE NO.	SHEET NO.	STATION FROM	DEPTH	STATION TO	DEPTH	601 RIPRAP USING 6" REINFORCED CONCRETE SLAB, AS PER PLAN	602 CONCRETE MASONRY, AS PER PLAN	603 4" CONDUIT, TYPE B, 707.33 OR 707.41	603 4" CONDUIT, TYPE F, 707.33 OR 707.41		605 4" SHALLOW PIPE UNDERDRAIN WITH FABRIC WRAP, 707.31 OR 707.41, AS PER PLAN		605 4" UNCLASSIFIED PIPE UNDERDRAIN WITH FABRIC WRAP 707.31 OR 707.41, AS PER PLAN		BENDS AND BRANCHES: OUTLET DETAIL	6" x 4" x 6" TEE	4" x 4" x 4" TEE	4" 90° BEND	4" 45° BEND	4" 22.5° BEND	4" PLUG				
		FROM	DEPTH	TO	DEPTH	SQ. YD.	CU. YD.	FEET	FEET		FEET		FEET			EACH	EACH	EACH	EACH	EACH	EACH				
1 - NS	172	833+02.00	12	835+26.00	12	4			19		224				B			1			1				
2 - NS	172	835+30.00	12	837+16.00	12	4			19		186				B			1			1				
3 - NS	172-173	837+20.00	12	839+46.00	12			9.2			226				F			1			1				
4 - NS	173	839+50.00	12	842+16.00	12	4			19		266				B			1			1				
5 - NS	173	842+20.00	12	845+16.00	12				7		296				D			1	1		1				
6 - NS	173	845+20.00	12	848+16.00	12	4			19		296				B			1			1				
7 - NS	173-174	848+20.00	12	851+26.00	12	4			19		306				B			1			1				
8 - NS	174	851+30.00	12	854+06.00	12				7		276				L2			1	1		1				
9 - NS	174	854+10.00	12	855+66.00	12	4			12		146				B			1			1				
10 - NS	174	855+70.00	12	859+56.00	12			1			386				L4					1	1				
11 - NS	174	859+60.00	12	862+06.00	12	4			19		246				B			1			1				
12 - NS	174-175	862+10.00	12	864+56.00	12	4			19		246				B			1			1				
13 - NS	175	864+60.00	12	867+06.00	12	4			19		246				B			1			1				
14 - NS	175	867+10.00	12	869+56.00	12	4			19		246				B			1			1				
15 - NS	175	869+60.00	12	872+21.00	12				40		261				L1			1		1	1				
16 - NS	175	872+25.00	12	874+64.00	12	4			19		239				B			1			1				
17 - NS	175-176	874+68.00	12	877+41.00	12			9.2			273				F			1			1				
18 - NS	176	877+45.00	12	879+96.00	12	4			19		251				B			1			1				
19 - NS	176	880+00.00	12	882+46.00	12	4			19		246				B			1			1				
20 - NS	176	882+50.00	12	882+90.00	12	4			19		40				U		1				1				
21 - NS	176	882+50.00	12	886+16.00	12			34	10		366				U			1			1				
22 - NS	176-177	886+20.00	12	889+27.00	12		0.52		39		307				Q			1			1				
23 - NS		NOT USED																							
24 - NS		NOT USED																							
25 - NS	177	891+70.00	12	893+96.00	12				7		226				A			1	1		1				
26 - NS	177	894+00.00	12	896+96.00	12	4			19		296				B			1			1				
27 - NS	177	897+00.00	12	898+46.00	12				7		146				A			1	1		1				
28 - NS	177	898+50.00	12	900+82.00	12	4			19		232				B			1			1				
29 - NS	177-178	900+82.00	12	902+86.00	12				7		204				A			1	1		1				
30 - NS	178	902+90.00	12	904+71.00	12	4			19		181				B			1			1				
31 - NS	178	904+85.00	12	907+36.00	12				7		251				A			1	1		1				
32 - NS	178	907+40.00	12	909+96.00	12	4			15		256				B			1			1				
33 - NS	178	910+00.00	12	912+61.00	12	4			15		261				B			1			1				
34 - NS	178-179	912+65.00	12	915+21.00	12	4			14		256				B			1			1				
35 - NS	179	915+25.00	12	917+21.00	12				7		196				A			1	1		1				
36 - NS	179	917+25.00	12	920+01.00	12				15		276				L1			1	1		1				
37 - NS	179	920+05.00	12	922+46.00	12	4			15		241				B			1			1				
38 - NS	179	922+50.00	12	925+71.00	12				7		321				D			1	1		1				
39 - NS	179-180	925+75.00	12	928+96.00	12	4			15		321				B			1			1				
40 - NS	180	929+00.00	12	932+21.00	12	4			15		321				B			1			1				
41 - NS	180	932+25.00	12	934+71.00	12				7		246				A			1	1		1				
42 - NS	180	934+75.00	12	937+66.00	12				7		291				A			1	1		1				
43 - NS	180-181	937+70.00	12	940+56.00	12	4			19		286				B			1			1				
44 - NS	181	940+60.00	12	943+16.00	12	4			19		156				B			1			1				
45 - NS	181	943+20.00	12	945+46.00	12				7		226				A			1	1		1				
46 - NS	181	945+50.00	12	947+56.00	12	4			19		206				B			1			1				
47 - NS	181	947+60.00	12	950+46.00	12				7		286				A			1	1		1				
48 - NS	181-182	950+50.00	12	952+73.00	12	4			19		223				B			1			1				
49 - NS	182	952+77.00	12	954+96.00	12				7		219				A			1	1		1				
50 - NS	182	955+00.00	12	957+06.00	12	4			19		206				B			1			1				
51 - NS	182	957+10.00	12	959+36.00	12				7		226				D			1	1		1				
52 - NS	182	959+40.00	12	961+64.00	12	4			19		224				B			1			1				
53 - NS	182-183	961+68.00	12	964+46.00	12			9.2			278				F			1			1				
TOTALS CARRIED TO SHEET 121						116	0.52	62.6	721		12633						1	49	16	1	51				

CALCULATED P.S. CHECKED B.C.

UNDERDRAIN SUBSUMMARY NORTHBOUND OUTSIDE, FREE DRAINAGE BASE

MED-71-15.78

117
940

7885DS2.DGN 11/4/99 RB

UNDERDRAIN SUBSUMMARY
NORTHBOUND OUTSIDE, FREE DRAINAGE BASE

CALCULATED P.S. CHECKED B.C.

MED-71-15.78

REFERENCE NO.	SHEET NO.	STATION FROM	DEPTH	STATION TO	DEPTH	601 RIPRAP USING 6" REINFORCED CONCRETE SLAB, AS PER PLAN (SQ. YD.)	602 CONCRETE MASONRY, AS PER PLAN (CU. YD.)	603 4" CONDUIT, TYPE B, 707.33 OR 707.41 (FEET)	603 4" CONDUIT, TYPE F, 707.33 OR 707.41 (FEET)		605 4" SHALLOW PIPE UNDERDRAIN WITH FABRIC WRAP, 707.31 OR 707.41, AS PER PLAN (FEET)		605 4" UNCLASSIFIED PIPE UNDERDRAIN WITH FABRIC WRAP 707.31 OR 707.41, AS PER PLAN (FEET)	OUTLET DETAIL	BENDS AND BRANCHES 6" x 4" x 6" TEE (EACH)	4" x 4" x 4" TEE (EACH)	4" 90° BEND (EACH)	4" 45° BEND (EACH)	4" 22.5° BEND (EACH)	4" PLUG (EACH)				
54 - NS	183	964+50.00	12	967+46.00	12			9.2			296			K	1		1			1					
55 - NS	183	967+50.00	12	970+46.00	12	4			19		296			B			1			1					
56 - NS	183	970+50.00	12	973+46.00	12	4			19		296			B			1			1					
57 - NS	183-184	973+50.00	12	976+90.00	12	4			19		340			B			1			1					
58 - NS	184	977+00.00	12	980+00.00	30								300							1					
59 - NS	184	980+00.00	30	980+10.00	12				7				10	C		1		1							
60 - NS	184	980+10.00	12	980+50.00	12						40									1					
61 - NS	184	980+50.00	12	983+00.00	12	4			19		250			B			1			1					
62 - NS	184	983+04.00	12	986+40.00	12						336									1					
63 - NS	184	986+40.00	12	986+50.00	18				7				10	C		1		1							
64 - NS	184	986+50.00	18	986+69.00	12								19							1					
65 - NS		NOT USED																							
66 - NS	185	989+34.00	12	992+50.00	12	4			10		316			B			1			1					
67 - NS	185	992+54.00	12	995+40.00	12				7		286			A			1	1		1					
68 - NS	185	995+44.00	12	998+30.00	12	4			19		286			B			1			1					
69 - NS	185-186	998+34.00	12	1001+20.00	12				7		286			A			1	1		1					
70 - NS	186	1001+24.00	12	1004+10.00	12	4			19		286			B			1			1					
71 - NS	186	1004+14.00	12	1006+90.00	12				7		276			A			1	1		1					
72 - NS	186	1006+94.00	12	1009+40.00	12	4			19		246			B			1			1					
73 - NS	186	1009+44.00	12	1011+87.00	12						243									1					
74 - NS		NOT USED																							
75 - NS	186	1011+87.00	12	1011+97.00	18				7				10	P			1	1							
76 - NS	186	1011+97.00	18	1012+12.00	12								15							1					
77 - NS		NOT USED																							
78 - NS	187	1013+92.00	12	1016+70.00	12	4			19		278			B			1			1					
79 - NS	187	1016+74.00	12	1019+50.00	12				7		276			A			1	1		1					
80 - NS	187	1019+54.00	12	1022+00.00	12	4			19		246			B			1			1					
81 - NS	187	1022+04.00	12	1024+40.00	12				7		236			L4					1	1					
82 - NS	187-188	1024+44.00	12	1027+00.00	12	4			19		256			B			1			1					
83 - NS	188	1027+04.00	12	1029+60.00	12	4			19		256			B			1			1					
84 - NS	188	1029+64.00	12	1032+25.00	12	4			19		261			B			1			1					
85 - NS	188	1032+29.00	12	1034+80.00	12	4			19		251			B			1			1					
86 - NS	188	1034+84.00	12	1037+40.00	12			9.2			256			F			1			1					
87 - NS	188-189	1037+44.00	12	1040+00.00	12	4			19		256			B			1			1					
88 - NS	189	1040+04.00	12	1042+50.00	12	4			19		246			B			1			1					
89 - NS	189	1042+54.00	12	1045+08.00	12			9.2			254			F			1			1					
90 - NS	189	1045+12.00	12	1048+00.00	12	4			19		288			B			1			1					
91 - NS	189	1048+04.00	12	1050+90.00	12						286									1					
92 - NS	189-190	1050+90.00	12	1051+00.00	24				7				10	C		1		1							
93 - NS	190	1051+00.00	24	1051+04.00	12								4							1					
94 - NS		NOT USED																							
95 - NS	190	1053+95.00	12	1057+00.00	12				7		305			A			1	1		1					
96 - NS	190	1057+04.00	12	1060+08.00	12				7		304			C		1		1		1					
97 - NS	190	1060+08.00	12	1063+21.00	12						313									1					
98 - NS	190-191	1063+25.00	12	1066+46.00	12	4			19		321			B			1			1					
99 - NS	191	1066+50.00	12	1068+96.00	12				7		246			A			1	1		1					
100 - NS	191	1069+00.00	12	1071+36.00	12	4			19		196			B			1			1					
101 - NS	191	1071+00.00	12	1074+46.00	12				7		346			A			1	1		1					
102 - NS	191-192	1074+50.00	12	1076+36.00	12	4			19		186			B			1			1					
103 - NS	192	1076+40.00	12	1079+91.00	12				7		351			A			1	1		1					
104 - NS	192	1079+95.00	12	1083+46.00	12				7		351			A			1	1		1					
105 - NS	192	1083+50.00	12	1086+86.00	12	4			9		336			B			1			1					
106 - NS	192-193	1086+90.00	12	1090+41.00	12				7		351			A			1	1		1					
TOTALS CARRIED TO SHEET 121						84		27.6	492		11331		378		1	4	35	15	1	45					

7885DS2.DGN 11/4/99 RB

REFERENCE NO.	SHEET NO.	STATION FROM	DEPTH	STATION TO	DEPTH	601 RIPRAP USING 6" REINFORCED CONCRETE SLAB, AS PER PLAN SQ. YD.	602 CONCRETE MASONRY, AS PER PLAN CU. YD.	603 4" CONDUIT, TYPE B, 707.33 OR 707.41 FEET	603 4" CONDUIT, TYPE F, 707.33 OR 707.41 FEET		605 4" SHALLOW PIPE UNDERDRAIN WITH FABRIC WRAP, 707.31 OR 707.41, AS PER PLAN FEET		605 4" UNCLASSIFIED PIPE UNDERDRAIN WITH FABRIC WRAP 707.31 OR 707.41, AS PER PLAN FEET		BENDS AND BRANCHES OUTLET DETAIL	6" x 4" x 6" TEE EACH	4" x 4" x 4" TEE EACH	4" 90° BEND EACH	4" 45° BEND EACH	4" 22.5° BEND EACH	4" PLUG EACH				
107 - NS	193	1090+45.00	12	1092+26.00	12	4			19		181				B			1			1				
108 - NS	193	1092+30.00	12	1092+35.00	12				7		5				H			1	1		1				
109 - NS	193	1092+30.00	12	1095+21.00	12			2			291				H			1	1		1				
110 - NS	193	1095+25.00	12	1097+96.00	12	4			19		271				B			1			1				
111 - NS	193	1098+00.00	12	1100+46.00	12				7		246				A			1	1		1				
112 - NS	193-194	1100+50.00	12	1103+02.00	12	4			12		252				B			1			1				
113 - NS		NOT USED																							
114 - NS	194	1106+02.00	12	1106+50.00	18								48								1				
115 - NS	194	1106+50.00	18	1106+60.00	12				7				10		C		1		1						
116 - NS	194	1106+60.00	12	1108+74.00	12						214										1				
117 - NS	194	1108+78.00	12	1111+46.00	12				7		268				A			1	1		1				
118 - NS	194-195	1111+50.00	12	1114+45.00	12	4			19		295				B			1			1				
119 - NS	195	1114+40.00	12	1117+71.00	12				7		331				A			1	1		1				
120 - NS	195	1117+75.00	12	1120+96.00	12	4			15		321				B			1			1				
121 - NS	195	1121+00.00	12	1123+96.00	12				7		296				A			1	1		1				
122 - NS	195-196	1124+00.00	12	1126+96.00	12	4			19		296				B			1			1				
123 - NS	196	1127+00.00	12	1130+46.00	12				7		346				A			1	1		1				
124 - NS	196	1130+50.00	12	1134+34.00	12	4			19		384				B			1			1				
125 - NS	196	1134+38.00	12	1137+30.00	12				7		292				D			1	1		1				
126 - NS	196-197	1137+34.00	12	1140+26.00	12	4			19		292				B			1			1				
127 - NS	197	1140+30.00	12	1142+06.00	12			9.2			176				F			1			1				
128 - NS	197	1142+10.00	12	1143+86.00	12	4			19		176				B			1			1				
129 - NS	197	1143+90.00	12	1146+86.00	12				7		296				D			1	1		1				
130 - NS	197	1146+90.00	12	1149+86.00	12	4			19		296				B			1			1				
131 - NS	197-198	1149+90.00	12	1152+46.00	12	4			19		256				B			1			1				
132 - NS	198	1152+50.00	12	1155+46.00	12	4			19		296				B			1			1				
133 - NS	198	1155+50.00	12	1158+16.00	12	4			19		266				B			1			1				
134 - NS	198	1158+20.00	12	1160+21.00	12				7		201				L2			1	1		1				
135 - NS	198	1160+25.00	12	1161+96.00	12	4			19		171				B			1			1				
136 - NS	198-199	1162+00.00	12	1164+96.00	12				7		296				A			1	1		1				
137 - NS	199	1165+00.00	12	1167+96.00	12	4			19		296				B			1			1				
138 - NS	199	1168+00.00	12	1170+96.00	12	4			19		296				B			1			1				
139 - NS	199	1171+00.00	12	1173+96.00	12	4			19		296				B			1			1				
140 - NS	199-200	1174+00.00	12	1176+96.00	12				7		296				A			1	1		1				
141 - NS	200	1177+00.00	12	1179+96.00	12	4			19		296				B			1			1				
142 - NS	200	1180+00.00	12	1182+71.00	12	4			19		271				B			1			1				
143 - NS	200	1182+75.00	12	1185+70.00	12	4			19		295				B			1			1				
144 - NS	200-201	1185+74.00	12	1189+21.00	12				7		347				D			1	1		1				
145 - NS	201	1189+25.00	12	1192+76.00	12			7.2			351				K	1		1			1				
146 - NS	201	1192+80.00	12	1195+46.00	12				7		266				A			1	1		1				
147 - NS	201	1195+50.00	12	1198+40.00	12			7.2			290				K	1		1			1				
148 - NS	201-202	1198+41.00	12	1201+36.00	12			9.2			295				F			1			1				
149 - NS	202	1201+40.00	14	1203+00.00	14	4			19		160				B			1							
		1203+00.00	12	1204+36.00	12						136										1				
150 - NS	202	1204+40.00	12	1207+36.00	12	4			19		296				B			1			1				
151 - NS	202	1207+40.00	12	1210+36.00	12	4			19		296				B			1			1				
152 - NS	202	1210+40.00	12	1213+36.00	12	4			19		296				B			1			1				
153 - NS	202-203	1213+40.00	12	1216+74.00	12	4			19		334				B			1			1				
154 - NS	203	1216+76.00	12	1218+96.00	12				7		220				D			1	1		1				
155 - NS	203	1219+00.00	12	1221+30.00	12	4			19		230				B			1			1				
156 - NS	203	1221+34.00	12	1224+46.00	12				7		312				D			1	1		1				
157 - NS	203-204	1224+50.00	12	1227+46.00	12	4			19		296				B			1			1				
158 - NS	204	1227+50.00	12	1230+66.00	12	4			19		316				B			1			1				
TOTALS CARRIED TO SHEET 121						112		34.8	633		13498		58			2	1	48	17		50				

CALCULATED P.S. CHECKED B.C.

UNDERDRAIN SUBSUMMARY
NORTHBOUND OUTSIDE, FREE DRAINAGE BASE

MED-71-15.78

7885DS2.DGN 8/25/99 RB

REFERENCE NO.	SHEET NO.	STATION FROM	DEPTH	STATION TO	DEPTH	601 RIPRAP USING 6" REINFORCED CONCRETE SLAB, AS PER PLAN (SQ. YD.)	602 CONCRETE MASONRY, AS PER PLAN (CU. YD.)	603 4" CONDUIT, TYPE B, 707.33 OR 707.41 (FEET)	603 4" CONDUIT, TYPE F, 707.33 OR 707.41 (FEET)		605 4" SHALLOW PIPE UNDERDRAIN WITH FABRIC WRAP, 707.31 OR 707.41, AS PER PLAN (FEET)		605 4" UNCLASSIFIED PIPE UNDERDRAIN WITH FABRIC WRAP 707.31 OR 707.41, AS PER PLAN (FEET)	OUTLET DETAIL	BENDS AND BRANCHES 6" x 4" x 6" TEE (EACH)	4" x 4" x 4" TEE (EACH)	4", 90° BEND (EACH)	4", 45° BEND (EACH)	4", 22.5° BEND (EACH)	4" PLUG (EACH)				
159- NS	204	1230+70.00	12	1233+36.00	12				7		266			A			1	1		1				
160- NS	204	1233+40.00	12	1236+21.00	12	4			19		281			B			1			1				
161- NS	204-205	1236+25.00	12	1238+71.00	12	4			19		246			B			1			1				
162- NS	205	1238+75.00	12	1242+56.00	12				7		381			A			1	1		1				
163- NS		NOT USED																						
164- NS	205	1242+60.00	12	1245+96.00	12				7		336			A			1	1		1				
165- NS	205	1246+00.00	12	1249+46.00	12	4			19		346			B			1			1				
166- NS	205-206	1249+50.00	12	1252+71.00	12				7		321			A			1	1		1				
167- NS	206	1252+75.00	12	1256+60.00	12	4			12		385			B			1			1				
168- NS	206	1256+20.00	12	1259+75.00	12	4			12		355			B			1			1				
169- NS	206	1259+79.00	12	1263+15.00	12						336									1				
170- NS	206	1263+15.00	12	1263+25.00	30				7				10	C		1		1		1				
171- NS	206-207	1263+25.00	30	1264+90.00	12								165							1				
172- NS	207	1264+85.00	12	1267+15.00	12						230									1				
173- NS	207	1267+15.00	12	1267+25.00	18				7				10	C		1		1						
174- NS	207	1267+25.00	18	1267+35.00	12				7				10							1				
175- NS		NOT USED																						
176- NS	207	1269+98.00	12	1272+75.00	12	4			9		277			B			1			1				
177- NS	207	1272+79.00	12	1275+40.00	12				7		261			A			1	1		1				
178- NS	207-208	1275+44.00	12	1278+45.00	12	4			10		301			B			1			1				
179- NS	208	1278+49.00	12	1281+36.00	12				7		287			0			1	1		1				
180- NS	208	1281+40.00	12	1284+50.00	12	4			19		310			B			1			1				
181- NS	208	1284+54.00	12	1287+75.00	12	4			19		321			B			1			1				
182- NS	208-209	1287+79.00	12	1290+85.00	12	4			19		306			B			1			1				
183- NS	209	1290+89.00	12	1293+94.00	12				7		305			C		1		1		1				
184- NS	209	1293+94.00	12	1297+06.00	12						312									1				
185- NS	209	1297+10.00	12	1300+28.00	12	4			19		318			B			1			1				
186- NS	209-210	1300+32.00	12	1303+30.00	12				7		298			0			1	1		1				
187- NS	210	1303+34.00	12	1306+30.00	12	4			10		296			B			1			1				
188- NS	210	1306+34.00	12	1309+30.00	12				7		296			A			1	1		1				
189- NS	210	1309+34.00	12	1312+30.00	12	4			10		296			B			1			1				
190- NS	210-211	1312+34.00	12	1315+16.00	12				7		282			A			1	1		1				
191- NS	211	1315+20.00	12	1318+06.00	12	4			19		286			B			1			1				
192- NS	211	1318+10.00	12	1320+96.00	12	4			19		286			B			1			1				
193- NS	211	1321+00.00	12	1324+00.00	12	4			19		300			B			1			1				
194- NS	211-212	1324+00.00	12	1326+80.00	12	4			19		280			B			1			1				
195- NS	212	1326+84.00	12	1329+70.00	12	4			19		286			B			1			1				
196- NS	212	1329+74.00	12	1332+60.00	12	4			19		286			B			1			1				
197- NS	212	1332+64.00	12	1335+50.00	12	4			19		286			B			1			1				
198- NS	212	1335+54.00	12	1338+34.00	12				7		280			D			1	1		1				
199- NS	212-213	1338+38.00	12	1341+00.00	12	4			19		262			B			1			1				
200- NS	213	1341+04.00	12	1344+19.00	12				7		315			D			1	1		1				
201- NS	213	1344+23.00	12	1347+00.00	12	4			19		277			B			1			1				
202- NS	213	1347+04.00	12	1349+25.00	12	4			19		221			B			1			1				
203- NS	213-214	1349+29.00	12	1351+34.00	12			9.2			205			F			1			1				
204- NS	214	1351+38.00	12	1355+25.00	12	4			19		387			B			1			1				
205- NS	214	1355+29.00	12	1358+00.00	12	4			19		271			B			1			1				
206- NS	214	1358+04.00	12	1360+75.00	12				7		271			A			1	1		1				
207- NS	214-215	1360+79.00	12	1363+50.00	12	4			19		271			B			1			1				
208- NS	215	1363+54.00	12	1366+36.00	12				7		282			0			1	1		1				
209- NS	215	1366+40.00	12	1369+34.00	12	4			19		294			B			1			1				
210- NS	215	1369+38.00	12	1372+34.00	12				7		296			A			1	1		1				
211- NS	215	1372+38.00	12	1375+34.00	12	4			19		296			B			1			1				
TOTALS CARRIED TO SHEET 121						112		9.2	607		13887		195			3	43	17		50				

CALCULATED P.S. CHECKED B.C.

UNDERDRAIN SUBSUMMARY NORTHBOUND OUTSIDE, FREE DRAINAGE BASE

MED-71-15.78

120
940

7885DS2.DGN 11/4/99 RB

REFERENCE NO.	SHEET NO.	STATION FROM	DEPTH	STATION TO	DEPTH	601 RIPRAP USING 6" REINFORCED CONCRETE SLAB, AS PER PLAN	602 CONCRETE MASONRY, AS PER PLAN	603 4" CONDUIT, TYPE B, 707.33 OR 707.41	603 4" CONDUIT, TYPE F, 707.33 OR 707.41		605 4" SHALLOW PIPE UNDERDRAIN WITH FABRIC WRAP, 707.31 OR 707.41, AS PER PLAN		605 4" UNCLASSIFIED PIPE UNDERDRAIN WITH FABRIC WRAP 707.31 OR 707.41, AS PER PLAN		BENDS AND BRANCHES: OUTLET DETAIL	6" x 4" x 6" TEE	4" x 4" x 4" TEE	4" 90° BEND	4" 45° BEND	4" 22.5° BEND	4" PLUG				
						SQ. YD.	CU. YD.	FEET	FEET		FEET		FEET			EACH	EACH	EACH	EACH	EACH	EACH				
212- NS	215-216	1375+38.00	12	1378+34.00	12				7		296				A			1	1		1				
213- NS	216	1378+38.00	12	1381+32.00	12				7		294				0			1	1		1				
214- NS	216	1381+36.00	12	1384+50.00	12	4			19		314				B			1			1				
215- NS	216	1384+54.00	12	1387+85.00	12	4			19		331				B			1			1				
216- NS	216-217	1387+89.00	12	1391+00.00	12	4			19		311				B			1			1				
217- NS	217	1391+04.00	12	1394+35.00	12			9.2			331				F			1			1				
TOTALS FROM SHEET 117						116	0.52	62.6	721		12633						1	49	16	1	51				
TOTALS FROM SHEET 118						84		27.6	492		11331		378			1	4	35	15	1	45				
TOTALS FROM SHEET 119						112		34.8	633		13498		58			2	1	48	17		50				
TOTALS FROM SHEET 120						112		9.2	607		13887		195				3	43	17		50				
212-NS THRU 217-NS TOTALS						12		9.2	71		1877							6	2		6				
TOTALS CARRIED TO SHEET 128						436	0.52	143.4	2524		53226		631			3	9	181	67	2	202				

CALCULATED P.S. CHECKED B.C.

UNDERDRAIN SUBSUMMARY
NORTHBOUND OUTSIDE, FREE DRAINAGE BASE

MED-71-15.78

121/940

7885DS2.DGN 11/4/99 RB

REFERENCE NO.	SHEET NO.	STATION FROM	DEPTH	STATION TO	DEPTH	601 RIPRAP USING 6" REINFORCED CONCRETE SLAB, AS PER PLAN	602 CONCRETE MASONRY, AS PER PLAN	603 6" CONDUIT, TYPE B, 707.33 OR 707.41	603 6" CONDUIT, TYPE F, 707.33 OR 707.41	605 6" SHALLOW PIPE UNDERDRAIN WITH FABRIC WRAP, 707.31 OR 707.41	605 6" UNCLASSIFIED PIPE UNDERDRAIN WITH FABRIC WRAP 707.31 OR 707.41	605 6" ROCK CUT UNDERDRAIN WITH FABRIC WRAP	BENDS AND BRANCHES: OUTLET DETAIL	6" x 6" x 4" TEE	6" x 4" x 6" TEE	6" x 6" x 6" TEE	6" 90° BEND	6"x6"x4" 45° WYE	6" PLUG
						SQ. YD.	CU. YD.	FEET	FEET	FEET	FEET	FEET		EACH	EACH	EACH	EACH	EACH	EACH
1 - NO	172	833+02.00	24	833+10.00	30						8								1
2 - NO	172	833+10.00	30	837+16.00	30			37.2		406			T			1			1
3 - NO	172-173	837+20.00	30	842+16.00	30			37.2		496			F	1					1
4 - NO	173-174	842+20.00	30	851+26.00	30			15	16	906			D				1	1	1
5 - NO	174	851+30.00	30	855+66.00	30			15	21	436			L2				1	1	1
6 - NO	174	855+70.00	12	858+80.00	12			9	13			310	L4		1		1		1
7 - NO	175-176	874+68.00	30	882+90.00	30			37.2		822			F	1					1
8 - NO	177	NOT USED																	
9 - NO	177	891+70.00	30	896+96.00	30	4		15	8	526			A				1	1	1
10 - NO	177	897+00.00	30	902+50.00	30	4		15	20	550			A				1	1	1
11 - NO	177-178	NOT USED																	
12 - NO		904+85.00	30	915+21.00	30	4		15	32	1036			A				1	1	1
13 - NO	178-179	NOT USED																	
14 - NO	179	915+25.00	30	922+21.00	30	4		15	12	696			A				1	1	1
15 - NO	179-180	922+25.00	30	932+21.00	30			15	8	996			D				1	1	1
16 - NO	180	932+25.00	30	934+71.00	30	4		15	12	246			A				1	1	1
17 - NO	180-181	934+75.00	30	943+16.00	30	4		15	9	841			A				1	1	1
18 - NO	181	943+20.00	30	947+56.00	30	4		15	19	436			A				1	1	1
19 - NO	181-182	947+60.00	30	952+73.00	30	4		15	17	513			A				1	1	1
20 - NO	182	952+77.00	30	957+06.00	30	4		15	29	429			A				1	1	1
21 - NO	182	957+10.00	30	961+64.00	30			15	9	454			D				1	1	1
22 - NO	182-183	961+68.00	30	976+90.00	30			49.2		1522			F	1					1
23 - NO	184	977+00.00	12	980+00.00	30						300								1
24 - NO	184	980+00.00	30	980+50.00	30	4		15	23	50			C			1		1	
25 - NO	184	980+50.00	30	986+50.00	30	4		15	20	600			C			1		1	
26 - NO	184	986+50.00	30	986+85.00	27.25						35								1
27 - NO	185	988+95.00	33.25	995+40.00	30	4		15	10	645			A				1	1	1
28 - NO	185	995+44.00	30	1001+20.00	30	4		15	9	576			A				1	1	1
29 - NO	186	1001+24.00	30	1006+90.00	30	4		15	10	566			A				1	1	1
30 - NO	186	1006+94.00	30	1011+97.00	30		0.51	15	30	503			P			1		1	1
31 - NO	186	1011+97.00	30	1012+38.00	25.25						41								1
32 - NO	187	1013+61.00	33.25	1019+50.00	30	4		15	20	589			A				1	1	1
33 - NO	187	1019+54.00	12	1024+40.00	12	4		15	20	86		400	L4		1		1		1
34 - NO		NOT USED																	
35 - NO	187-188	1024+44.00	27	1037+40.00	27			37.2		1296			F	1					1
36 - NO	188-189	1037+44.00	27	1045+08.00	27			37.2		764			F	1					1
37 - NO	189	1045+12.00	30	1051+00.00	30	4		15	31	588			C			1		1	1
38 - NO	189-190	1051+00.00	30	1051+28.00	21.25						28								1
39 - NO	190	1053+60.00	33.25	1057+00.00	30	4		15	8	340			A				1	1	1
40 - NO	190	1057+04.00	30	1060+08.00	30	4		15	25	304			C			1		1	1
41 - NO	190-191	1060+08.00	30	1066+46.00	30					638									1
42 - NO	191	1066+50.00	30	1070+46.00	30	4		15	53	446			A				1	1	1
43 - NO	191-192	1071+00.00	30	1076+36.00	30	4		15	27	536			A				1	1	1
44 - NO	192	1076+40.00	30	1079+91.00	30	4		15	26	351			A				1	1	1
45 - NO	192	1079+95.00	30	1086+86.00	30	4		15	13	691			A				1	1	1
46 - NO	192-193	1086+90.00	30	1092+26.00	30	4		15	18	536			A				1	1	1
47 - NO	193	1092+30.00	30	1092+35.00	30	4		15	13	5			H			1		1	1
48 - NO	193	1092+30.00	30	1097+96.00	30			35		566			H				1	1	1
49 - NO	193-194	1098+00.00	30	1103+32.00	33.25	4		15	23	532			A				1	1	1
50 - NO	194	1105+72.00	23.25	1106+50.00	30						78								1
51 - NO	194	1106+50.00	30	1108+74.00	30	4		15	10	224			C			1		1	1
52 - NO	194-195	1108+78.00	30	1115+00.00	30	4		15	20	622			A				1	1	1
53 - NO	195	1114+40.00	30	1120+96.00	30	4		15	15	656			A				1	1	1
TOTALS CARRIED TO SHEET 123						112	0.51	789.2	649	24021	490	710		5	2	8	29	34	47

CALCULATED P.S. CHECKED B.C.

UNDERDRAIN SUBSUMMARY NORTHBOUND OUTSIDE, SUBGRADE

MED-71-15.78

7885DS4.DGN 11/4/99 RB

REFERENCE NO.	SHEET NO.	STATION FROM	DEPTH	STATION TO	DEPTH	601 RIPRAP USING 6" REINFORCED CONCRETE SLAB, AS PER PLAN SQ. YD.	602 CONCRETE MASONRY, AS PER PLAN CU. YD.	603 6" CONDUIT, TYPE B, 707.33 OR 707.41 FEET	603 6" CONDUIT, TYPE F, 707.33 OR 707.41 FEET	605 6" SHALLOW PIPE UNDERDRAIN WITH FABRIC WRAP, 707.31 OR 707.41 FEET	605 6" UNCLASSIFIED PIPE UNDERDRAIN WITH FABRIC WRAP 707.31 OR 707.41, FEET	605 6" ROCK CUT UNDERDRAIN WITH FABRIC WRAP FEET	BENDS AND BRANCHES: OUTLET DETAIL	6" x 6" x 4" TEE EACH	6" x 4" x 6" TEE EACH	6" x 6" x 6" TEE EACH	6" 90° BEND EACH	6"x4"x6" 45° WYE EACH	6" PLUG EACH
54 - NO	195-196	1121+00.00	30	1126+96.00	30	4		15	9	596			A				1	1	1
55 - NO	196	1127+00.00	30	1134+34.00	30	4		15	23	734			A				1	1	1
56 - NO	196-197	1134+38.00	30	1140+26.00	30			15	13	588			D				1	1	1
57 - NO	197	1140+30.00	30	1143+86.00	30			37.2		356			F	1					1
58 - NO	197-198	1143+90.00	30	1158+16.00	30			15	13	1426			D				1	1	1
59 - NO		NOT USED																	
60 - NO	198	1158+20.00	30	1161+96.00	30			15	30	376			L2				1	1	1
61 - NO	198-199	1162+00.00	30	1173+96.00	30	4		15	27	1196			A				1	1	1
62 - NO		NOT USED																	
63 - NO	199-200	1174+00.00	30	1185+70.00	30	4		15	22	1170			A				1	1	1
64 - NO		NOT USED																	
65 - NO	200-201	1185+74.00	30	1192+76.00	30			15	12	702			D				1	1	1
66 - NO	201	1192+80.00	30	1198+40.00	30	4		15	28	560			A				1	1	1
67 - NO	201-202	1198+41.00	30	1203+00.00	30			37.2		459			F	1					1
68 - NO	202-203	1216+76.00	30	1221+30.00	30			15	10	454			D				1	1	1
69 - NO	203-204	1221+34.00	30	1230+66.00	30			15	11	932			D				1	1	1
70 - NO	204	1230+70.00	30	1238+71.00	30	4		15	16	801			A				1	1	1
71 - NO	205	1238+75.00	30	1242+56.00	30	4		15	19	381			A				1	1	1
72 - NO	205	1242+60.00	30	1249+46.00	30	4		15	19	686			A				1	1	1
73 - NO	205-206	1249+50.00	30	1256+60.00	30	4		15	19	710			A				1	1	1
74 - NO	206	1256+20.00	30	1263+25.00	30	4		15	21	705			C			1		1	1
75 - NO	206-207	1263+25.00	30	1265+40.00	30					215									1
76 - NO	207	1264+85.00	30	1267+25.00	30	4		15	36	240			C			1		1	1
77 - NO	207	1267+25.00	30	1267+60.00	25.25					0	35								1
78 - NO		NOT USED																	
79 - NO	207-208	1269+62.00	33.25	1275+40.00	30	4		15	10	578			A				1	1	1
80 - NO	208	1275+44.00	30	1281+36.00	30		0.51	15	22	592			0				1	1	1
81 - NO	208-209	1281+40.00	30	1293+94.00	30	4		15	22	1254			C			1		1	1
82 - NO	209	NOT USED																	
83 - NO	209	1293+94.00	30	1300+28.00	30					634									1
84 - NO	209-210	1300+32.00	30	1306+30.00	30		0.51	15	21	598			0				1	1	1
85 - NO	210	1306+34.00	30	1312+30.00	30	4		15	9	596			A				1	1	1
86 - NO	210-211	1312+34.00	30	1324+00.00	30	4		15	16	1166			A				1	1	1
87 - NO		NOT USED																	
88 - NO		NOT USED																	
89 - NO	211-212	1324+00.00	30	1338+34.00	30			15	18	1434			D				1	1	1
90 - NO	212-213	1338+38.00	30	1344+19.00	30			15	6	581			D				1	1	1
91 - NO	213-214	1344+23.00	30	1351+34.00	30			37.2		711			F	1					1
92 - NO	214	1351+38.00	30	1360+75.00	30	4		15	21	937			A				1	1	1
93 - NO	214-215	1360+79.00	30	1366+36.00	30		0.51	15	33	557			0				1	1	1
94 - NO	215	1366+40.00	30	1372+34.00	30	4		15	21	594			A				1	1	1
95 - NO	215-216	1372+38.00	30	1378+34.00	30	4		15	21	596			A				1	1	1
96 - NO	216	1378+38.00	30	1381+32.00	30		0.51	15	22	294			0				1	1	1
97 - NO	216-217	1381+36.00	30	1394+35.00	30			37.2		1299			F	1					1
TOTALS FROM SHEET 122						112	0.51	789.2	649	24021	490	710		5	2	8	29	34	47
54-NO THRU 97-NO TOTALS						72	2.04	598.8	570	25708	35			4		3	27	30	37
TOTALS CARRIED TO SHEET 128						184	2.55	1388	1219	49729	525	710		9	2	11	56	64	84

CALCULATED P.S. CHECKED B.C.

UNDERDRAIN SUBSUMMARY NORTHBOUND OUTSIDE, SUBGRADE

MED-71-15.78

7885DS4.DGN 11/4/99 RB

REFERENCE NO.	SHEET NO.	STATION FROM	DEPTH	STATION TO	DEPTH	603 6" CONDUIT, TYPE B, 707.33 OR 707.41	603 6" CONDUIT, TYPE F, 707.33 OR 707.41	605 6" SHALLOW PIPE UNDERDRAIN WITH FABRIC WRAP, 707.31 OR 707.41	605 6" UNCLASSIFIED PIPE UNDERDRAIN WITH FABRIC WRAP 707.31 OR 707.41	605 6" ROCK CUT UNDERDRAIN WITH FABRIC WRAP	BENDS AND BRANCHES OUTLET DETAIL	6" x 6" x 6" CROSS	6" x 6" x 6" TEE	6" x 4" x 6" TEE	6" 90° BEND	6"x6"x4" 45° WYE	6" PLUG
						CU. YD.	FEET	FEET	FEET	FEET		EACH	EACH	EACH	EACH	EACH	EACH
1 - NI	172	833+02.00	24	833+10.00	30				8								1
2 - NI	172	833+10.00	30	837+16.00	30	15	22	406			T	1				1	1
3 - NI	172-173	837+20.00	30	842+66.00	30	15	22	546			F		1			1	1
4 - NI	173-174	842+70.00	30	852+66.00	30	15	22	996			D				1	1	1
5 - NI	174	852+70.00	30	855+66.00	30	15	21	296			D				1	1	1
6 - NI	174-175	855+70.00	12	866+26.00	12	9	24	256		800	L5			1	1		1
7 - NI	175	866+30.00	30	874+64.00	30	15	14	834			D				1	1	1
8 - NI	175-176	874+68.00	30	886+14.00	30	15	14	1146			F		1			1	1
9 - NI	176-177	886+18.00	30	889+49.00	33.25	15	20	331			D				1	1	1
10 - NI	177	891+21.00	22.25	891+70.00	34				49								1
11 - NI	177	891+70.00	34	896+46.00	34	15	14	476			J		1			1	1
12 - NI	177-178	896+50.00	30	906+61.00	30	15	14	1011			D				1	1	1
13 - NI	178-179	906+65.00	30	914+61.00	30	15	14	796			D				1	1	1
14 - NI	179	914+65.00	30	922+21.00	30	15	14	756			D				1	1	1
15 - NI	179-180	922+25.00	30	931+64.00	30	15	14	939			D				1	1	1
16 - NI	180-181	931+68.00	30	944+64.00	30	15	14	1296			D				1	1	1
17 - NI	181-182	944+68.00	30	956+34.00	30	15	9	1166			D				1	1	1
18 - NI	182	956+38.00	30	961+64.00	30	15	14	526			D				1	1	1
19 - NI	182-183	961+68.00	30	967+46.00	30	15	14	578			F		1			1	1
20 - NI	183	967+50.00	30	973+96.00	30	15	14	646			D				1	1	1
21 - NI	183-184	974+00.00	30	980+50.00	30	15	14	650			D				1	1	
22 - NI	184	980+50.00	30	985+92.00	30			542			J		1			1	
23 - NI	184	985+92.00	30	986+64.00	23.25	15	14		72								1
24 - NI	185	988+74.00	33.25	998+65.00	30	15	14	991			D				1	1	1
25 - NI	185-186	998+69.00	30	1008+52.00	30	15	14	983			D				1	1	1
26 - NI	186	1008+56.00	30	1011+95.00	30			339			J		1			1	1
27 - NI	186	1011+95.00	30	1012+39.00	25.25	15	14		44								1
28 - NI	187	1013+65.00	21.25	1019+00.00	18			535									
28A - NI	187	1019+00.00	18	1020+00.00	12				100								
28B - NI	187	1020+00.00	12	1019+00.00	18	1				272	L5			1	1		
29 - NI	187	1022+76.00	12	1022+72.00	12					124							1
29A - NI	187	1024+00.00	12	1024+50.00	30				50								
29B - NI	187-188	1024+50.00	30	1037+40.00	30	15	14	1290			D				1	1	
30 - NI	188-189	1037+44.00	30	1045+08.00	30	15	14	764			F		1			1	1
31 - NI	189	1045+12.00	30	1050+70.00	30	15	14	558			R		1			1	1
32 - NI	189-190	1050+70.00	30	1051+30.00	9.25				60								1
33 - NI	190	1053+59.00	33.25	1060+08.00	30	15	14	649			J		1			1	1
34 - NI	190-191	1060+08.00	30	1067+36.00	30			728									1
35 - NI	191	1067+40.00	30	1070+88.00	30	15	14	348			D				1	1	1
36 - NI	191-192	1070+92.00	30	1076+51.00	30	15	14	559			D				1	1	1
37 - NI	192	1076+55.00	30	1087+36.00	30	15	14	1081			D				1	1	1
38 - NI	192-193	1087+40.00	30	1089+24.00	30	15	14	184			D				1	1	1
39 - NI	193-194	1089+28.00	30	1103+13.00	30	15	14	1385			D				1	1	1
40 - NI		NOT USED															
41 - NI	194	1105+52.00	27.25	1106+00.00	30				48								1
42 - NI		NOT USED															
43 - NI	194	1106+00.00	30	1108+76.00	30	15	14	276			J		1			1	1
44 - NI	194-195	1108+80.00	30	1118+38.00	30	15	6	958			D				1	1	1
45 - NI	195-196	1118+42.00	30	1127+86.00	30	15	14	944			D				1	1	1
46 - NI	196	1127+90.00	30	1134+34.00	30	15	14	644			D				1	1	1
47 - NI	196-197	1134+38.00	30	1140+26.00	30	15	14	588			D				1	1	1
48 - NI	197	1140+30.00	30	1143+86.00	30	15	14	356			F		1			1	1
49 - NI	197-198	1143+90.00	30	1158+80.00	30	15	14	1490			D				1	1	1
TOTALS CARRIED TO SHEET 125						580	580	29843	431	1196		1	11	2	28	38	45

CALCULATED P.S. CHECKED B.C.

UNDERDRAIN SUBSUMMARY NORTHBOUND MEDIAN, SUBGRADE

MED-71-15.78

124
940

7885DS3.DGN 11/4/99 RB

REFERENCE NO.	SHEET NO.	STATION FROM	DEPTH	STATION TO	DEPTH	603 6" CONDUIT, TYPE B, 707.33 OR 707.41	603 6" CONDUIT, TYPE F, 707.33 OR 707.41	605 6" SHALLOW PIPE UNDERDRAIN WITH FABRIC WRAP, 707.31 OR 707.41	605 6" UNCLASSIFIED PIPE UNDERDRAIN WITH FABRIC WRAP 707.31 OR 707.41	605 6" ROCK CUT UNDERDRAIN WITH FABRIC WRAP	BENDS AND BRANCHES OUTLET DETAIL	6" 45 DEGREE BEND	6" x 6" x 6" TEE	6" x 4" x 6" TEE	6" 90° BEND	6"x 6"x4" 45° WYE	6" PLUG
						CU. YD.	FEET	FEET	FEET	FEET		EACH	EACH	EACH	EACH	EACH	EACH
50 - NI	198-199	1158+84.00	30	1173+00.00	30	15	14	1416			D				1	1	1
51 - NI	199-200	1173+04.00	30	1186+33.00	30	15	14	1329			D				1	1	1
52 - NI	200-201	1186+37.00	30	1198+37.00	30	15	14	1200			D				1	1	1
53 - NI	201-202	1198+41.00	30	1202+30.00	30	15	14	389			F		1			1	1
54 - NI	202	1202+34.00	32	1203+00.00	32	15	14	66			D				1	1	
		1203+00.00	30	1209+30.00	30			630									1
55 - NI	202-203	1204+34.00	30	1216+72.00	30	15	14	738			D				1	1	1
56 - NI	203	1216+76.00	30	1221+30.00	30	15	14	454			D				1	1	1
57 - NI	203	1221+34.00	30	1223+65.00	30	15	14	231			D				1	1	1
58 - NI	203-204	1223+69.00	30	1228+09.00	30	15	26	440			D				1	1	1
59 - NI		NOT USED															
60 - NI	204	1228+13.00	30	1231+30.00	30	15	14	317			D				1	1	1
61 - NI	204-205	1231+34.00	30	1242+30.00	30	15	14	1096			D				1	1	1
62 - NI	205-206	1242+34.00	30	1256+00.00	30	15	14	1366			D				1	1	
63 - NI	206-207	1256+00.00	30	1263+84.00	30	15	14	784			D				1	1	
64 - NI	207	1263+88.00	30	1267+34.00	30	15	18	346			J		1			1	1
65 - NI	207	1267+34.00	30	1267+77.00	23.25				43								1
66 - NI	207	1269+80.00	33.25	1270+34.00	30	15	18	54			D				1	1	1
67 - NI	207-208	1270+38.00	30	1281+34.00	30	15	14	1096			D				1	1	1
68 - NI	208-209	1281+38.00	30	1293+94.00	30	15	14	1256			J		1			1	1
69 - NI	209	1293+94.00	30	1300+30.00	30			636									1
70 - NI	209-210	1300+34.00	30	1312+30.00	30	15	14	1196			D				1	1	1
71 - NI	210-211	1312+34.00	30	1324+00.00	30	15	14	1166			D				1	1	
72 - NI	211-212	1324+00.00	30	1338+34.00	30	15	14	1434			D				1	1	
73 - NI	212-213	1338+38.00	30	1344+76.00	30	15	14	638			D				1	1	1
74 - NI	213-214	1344+80.00	30	1351+34.00	30	15	14	654			F		1			1	1
75 - NI	214-215	1351+38.00	30	1366+34.00	30	15	14	1496			D				1	1	1
76 - NI	215-216	1366+38.00	30	1381+34.00	30	15	14	1496			D				1	1	1
77 - NI	216-217	1381+38.00	30	1394+35.00	30	15	14	1297			F		1			1	1
TOTALS FROM SHEET 124						580	580	29843	431	1196		1	11	2	28	38	45
50-NI THRU 77-NI TOTALS						375	370	23221	43				5		20	25	23
TOTALS CARRIED TO SHEET 128						955	950	53064	474	1196		1	16	2	48	63	68

CALCULATED P.S. CHECKED B.C.

UNDERDRAIN SUBSUMMARY NORTHBOUND MEDIAN, SUBGRADE

MED-71-15.78

7885DS3.DGN 11/4/99 RB

NORTHBOUND

REFERENCE NO.	SHEET NO.	STATION	605	INFORMATION ONLY	
			4" SHALLOW PIPE UNDERDRAIN WITH FABRIC WRAP, 707.33 OR 707.41, AS PER PLAN	4" x 4"x 4" 45° WYE	4" PLUG
		CONNECTION	FEET	EACH	EACH
1 - TM	174	862+00.00	62	1	1
2 - TM	175	865+00.00	62	1	1
3 - TM	175	868+00.00	62	1	1
4 - TM	175	871+00.00	62	1	1
5 - TM	175	874+00.00	62	1	1
6 - TM	176	877+00.00	62	1	1
7 - TM	176	880+00.00	62	1	1
8 - TM	176	883+00.00	62	1	1
9 - TM	187	1026+00.00	26	1	1
1 - TS	187	1026+00.00	26	1	1
10 - TM	188	1029+00.00	26	1	1
2 - TS	188	1029+00.00	26	1	1
11 - TM	188	1032+00.00	26	1	1
3 - TS	188	1032+00.00	26	1	1
12 - TM	188	1035+25.00	26	1	1
4 - TS	188	1035+25.00	26	1	1
13 - TM	188	1038+25.00	26	1	1
5 - TS	188	1038+25.00	26	1	1
14 - TM	189	1041+25.00	26	1	1
6 - TS	189	1041+25.00	26	1	1
15 - TM	189	1044+25.00	26	1	1
7 - TS	189	1044+25.00	26	1	1
16 - TM	189	1047+25.00	26	1	1
8 - TS	189	1047+25.00	26	1	1
17 - TM	189	1050+25.00	26	1	1
9 - TS	189	1050+25.00	26	1	1
1-TM THRU 9-TS TOTALS			964	26	26

SOUTHBOUND

REFERENCE NO.	SHEET NO.	STATION	605	INFORMATION ONLY	
			4" SHALLOW PIPE UNDERDRAIN WITH FABRIC WRAP, 707.33 OR 707.41, AS PER PLAN	4" x 4"x 4" 45° WYE	4" PLUG
		CONNECTION	FEET	EACH	EACH
1 - TO	174	860+00.00	38	1	1
2 - TO	174	863+00.00	40	1	1
3 - TO	174	866+25.00	48	1	1
4 - TO	174	869+25.00	54	1	1
5 - TO		NOT USED			
6 - TO		NOT USED			
7 - TO	176	878+25.00	38	1	1
8 - TO	176	881+25.00	38	1	1
9 - TO	176	884+25.00	38	1	1
10- TO	187	1026+00.00	26	1	1
1 - TI	187	1026+00.00	26	1	1
11- TO	188	1029+00.00	26	1	1
2 - TI	188	1029+00.00	26	1	1
12- TO	188	1032+00.00	26	1	1
3 - TI	188	1032+00.00	26	1	1
13- TO	188	1035+25.00	26	1	1
4 - TI	188	1035+25.00	26	1	1
14- TO	188	1038+25.00	26	1	1
5 - TI	188	1038+25.00	26	1	1
15- TO	189	1041+25.00	26	1	1
6 - TI	189	1041+25.00	26	1	1
16- TO	189	1044+25.00	26	1	1
7 - TI	189	1044+25.00	26	1	1
17- TO	189	1047+25.00	26	1	1
8 - TI	189	1047+25.00	26	1	1
18- TO	189	1050+25.00	26	1	1
9 - TI	189	1050+25.00	26	1	1
1-TM TO 9-TS			964	26	26
1-TO TO 9-TI			762	25	25
TOTAL CARRIED TO SHEET 128			1726	51	51

UNDERDRAIN SUBSUMMARY
NORTHBOUND AND SOUTHBOUND TRANSVERSE

CALCULATED P.S. CHECKED B.C.

MED-71-15.78

126
940

7885DS5.DGN 11/5/99 RB

UNDERDRAIN SUBSUMMARY
RAMP AND REST AREA UNDERDRAINS

CALCULATED P.S. CHECKED B.C.

REFERENCE NO.	SHEET NO.	STATION FROM	DEPTH	STATION TO	DEPTH	601 RIPRAP USING 6" REINFORCED CONCRETE SLAB, AS PER PLAN	603 6" CONDUIT, TYPE B, 707.33 OR 707.41	603 4" CONDUIT, TYPE F, 707.33 OR 707.41	603 6" CONDUIT, TYPE F, 707.33 OR 707.41	605 4" SHALLOW PIPE UNDERDRAIN WITH FABRIC WRAP 707.31 OR 707.41, AS PER PLAN	605 6" SHALLOW PIPE UNDERDRAIN WITH FABRIC WRAP, 707.31 OR 707.41	605 4" UNCLASSIFIED PIPE UNDERDRAIN WITH FABRIC WRAP, 707.31 OR 707.41	605 6" UNCLASSIFIED PIPE UNDERDRAIN WITH FABRIC WRAP 707.31 OR 707.41	BENDS AND BRANCHES: OUTLET DETAIL	4" x 4" x 4" TEE	6" x 6" x 6" TEE	6"x6"x4"x45° WYE	4" 90° BEND	6" 90° BEND	4" 45° BEND	6" 22.5° BEND	4" PLUG	6" PLUG
						SQ. YD.	FEET	FEET	FEET	FEET	FEET	FEET	FEET		EACH	EACH	EACH	EACH	EACH	EACH	EACH	EACH	EACH
I.R. 271 - W.B. RAMP																							
1 - UD	426-427	972+00.00	30	987+65.00	30		15		24		1565			D			1		1				
2 - UD	426-427	977+84.80	30	987+65.00	30		9		9		981			D			1		1				1
3 - UD	427	987+69.00	30	995+65.00	30		9		21		795			D			1		1				1
4 - UD	427-428	994+00.00	30	999+96.00	30	4	15		23		596			A			1		1				1
5 - UD	428	995+69.00	30	999+96.00	30	4	9		31		427			A			1		1				1
6 - UD	426	972+00.00	12	975+00.00	12	4		22		300				B				1				1	
7 - UD	426	975+04.00	12	978+00.00	12	4		22		296				B				1				1	
8 - UD	426	978+04.00	12	981+20.00	12	4		22		316				B				1				1	
9 - UD	426-427	981+24.00	12	984+40.00	12	4		22		316				B				1				1	
10 - UD	427	984+44.00	12	987+65.00	12			7		321				D				1		1		1	
11 - UD	427	987+69.00	12	995+00.00	12	4		22		731				B				1				1	
12 - UD	427-428	985+04.00	12	999+96.00	12			7		195				A				1		1		1	
13 - UD	426-427	973+70.00	12	981+00.00	12	4		22		730				B				1				1	
14 - UD	426-427	981+04.00	12	984+50.00	12	4		22		346				B				1				1	
15 - UD	427	984+54.00	12	987+65.00	12			7		311				D				1		1		1	
16 - UD	427	987+69.00	12	991+50.00	12	4		22		381				B				1				1	
17 - UD	427-428	991+54.00	12	995+65.00	12			7		411				D				1		1		1	
18 - UD	428	995+69.00	12	998+96.00	12			7		427				A				1		1		1	
S.R. 3 - RAMP B																							
19 - UD	457	83+00.00	30	84+96.15	30	4	10				195			A**					1				1
S.R. 3 - RAMP C																							
20 - UD	459-460	80+96.58	30	83+45.00	30	4	5		45		200			A**					1				1
I.R. 71 - SB REST AREA (MAINLINE STATIONS)																							
21 - UD	198-199	1162+30.00	30	1165+89.00	30		10				365			I*							1		1
22 - UD	198-199	1162+39.00	30	1165+64.00	30		10				330			I*							1		1
I.R. 71 - NB REST AREA (MAINLINE STATIONS)																							
23 - UD	202	1207+11.00	30	1210+31.00	30		10				320			I*							1		
24 - UD	202	1207+30.00	30	1210+30.00	30		10				300			I*							1		
25 - UD	202	1210+31.00	30	1210+66.00	24								35										1
26 - UD	202	1210+30.00	30	1210+60.00	24								30										1
S.R. 303 - RAMP B																							
27 - UD	487-488	48+35.76	30	48+79.00	30		7		28		55			J**		1							1
28 - UD	487-488	48+79.00	30	50+10.00	30						131												1
S.R. 303 - RAMP B SPUR																							
29 - UD	487-488	49+73.84	30	51+73.84	30						200			A***					1		1		1
S.R. 303 - RAMP C																							
30 - UD	491-192	39+99.21	30	46+94.00	30						696			J**		1	1						1
31 - UD	491-492	46+94.00	30	47+20.95	30						80						1						1
S.R. 18 - RAMP D																							
32 - UD	394	1+00.00	30	1+75.00	30								75										1
33 - UD	394	1+75.00	30	6+96.00	30		15		19		521			C****		1							1
34 - UD	394	7+00.00	24	9+78.00	30	4	15		22		278			A						1			1
35 - UD	394	0+70.00	12	1+75.00	18							105										1	
36 - UD	394	1+75.00	18	1+85.00	12			7				10		C	1					1		1	
37 - UD	394	1+85.00	12	3+96.00	12					211				B				1				1	
38 - UD	394	4+00.00	12	6+96.00	12	4		18		296				A				1		1		1	
39 - UD	394-395	7+00.00	12	9+78.00	12			7		278													
TOTALS CARRIED TO SHEET 128						56	149	243	222	5866	8035	115	140		1	3	7	15	9	7	5	17	18

* CONNECT 6" PIPES AS SHOWN FOR 4"
** USE UNDERDRAIN DETAIL WITHOUT ANY CONNECTION TO 4" PIPES
*** USE UNDERDRAIN DETAIL WITHOUT ANY CONNECTION TO 4" PIPES AND 22.5° BEND USED WITH THE 90° BEND
**** OUTLET DIRECTLY TO PROPOSED ROCK CHANNEL PROTECTION IN LIEU OF RIPPAP

NOTE:
ALL DETAILS REFERENCED FOR RAMP UNDERDRAINS MAY SHOW A SHOULDER WIDTH DIFFERENT FROM ACTUAL

MED-71-15.78

7885DS13.DGN 11/4/99 RB

TOTALS	601	602	603				605						BENDS AND BRANCHES FOR INFORMATION ONLY													
	RIPRAP, USING 6" REINFORCED CONCRETE SLAB, AS PER PLAN	CONCRETE MASONRY, AS PER PLAN	4" CONDUIT, TYPE B, 707.33 OR 707.41	6" CONDUIT, TYPE B, 707.33 OR 707.41	4" CONDUIT, TYPE F, 707.33 OR 707.41	6" CONDUIT, TYPE F, 707.33 OR 707.41	4" SHALLOW PIPE UNDERDRAIN WITH FABRIC WRAP, 707.31 OR 707.41, AS PER PLAN	4" SHALLOW PIPE UNDERDRAIN WITH FABRIC WRAP, 707.33 OR 707.41, AS PER PLAN	6" SHALLOW PIPE UNDERDRAIN WITH FABRIC WRAP, 707.31 OR 707.41,	4" UNCLASSIFIED PIPE UNDERDRAIN WITH FABRIC WRAP, 707.31 OR 707.41, AS PER PLAN	6" UNCLASSIFIED PIPE UNDERDRAIN WITH FABRIC WRAP, 707.31 OR 707.41	6" ROCK CUT UNDERDRAIN WITH FABRIC WRAP, 707.33 OR 707.41	6" X 6" X 6" X 6" CROSS	4" X 4" X 4" TEE	6" X 6" X 4" TEE	6" X 4" X 6" TEE	6" X 6" X 6" TEE	4", 90° BEND	6", 90° BEND	4", 45° BEND	6", 45° BEND	4", 22.5° BEND	6", 22.5° BEND	4" X 4" X 4", 45° WYE	6" X 6" X 4", 45° WYE	4" PLUG	6" PLUG
	SQ. YD.	CU. YD.	FEET	FEET	FEET	FEET	FEET	FEET	FEET	FEET	FEET	FEET	EACH													
TOTALS FROM SHEET 116 (NM)	386		149.2		2337		53591			215				8		17		190		63		2				203	
TOTALS FROM SHEET 121 (NS)	436	0.52	143.4		2524		53226			631				9	3			181		67		2				202	
TOTALS FROM SHEET 125 (NI)				955		950			53064		474	1196			2		16		48		1				63		68
TOTALS FROM SHEET 123 (NO)	184	2.55		1388		1219			49729		525	710			2	9	11		56						64		84
TOTALS FROM SHEET 101 (SM)	442		36.6		2612		53632			207				8	3			191		54		2				201	
TOTALS FROM SHEET 106 (SS)	420		178.4		2353		53852			338				7		7		183		66		2				193	
TOTALS FROM SHEET 108 (SI)				858		810			47707		408	706	1		2	56	15		42								60
TOTALS FROM SHEET 111 (SO)	188	5.15		1698.2		1214			54619		608	1196	1		2	11	11		62						69		88
TOTALS FROM SHEET 126 (TR)								1726																51		51	
TOTALS FROM SHEET 127 (UD)	56			149	243	222		5866	8035	115	140			1			3	15	9		7		5		7	17	18
QUANTITES FROM UNDERDRAIN DETAIL L4 & L5, SHEET 539				75	30	20																					
TOTAL FOR ALL UNDERDRAINS	2112	8.22	507.6	5123.2	10099	4435	214301	7602	213.54	1496	2155	3808	2	33	14	100	56	760	217	250	8	8	5	51	203	867	318
TOTALS CARRIED TO GENERAL SUMMARY	2112	8.3	508	5124	10031	4435	214301	7602	212355	1496	2155	3808															

UNDERDRAIN SUBSUMMARY

CALCULATED P.S.
CHECKED B.C.

MED-71-15.78

7885D0A.DGN

PAVEMENT CALCULATIONS

CALCULATED RJ-R CHECKED DJV

MED - 71 - 15.78

LOCATION		LENGTH	WIDTH	TOTAL AREA		203 SUBGRADE COMPACTION	254 PAVEMENT PLANNING	302 11" BITUMINOUS AGGREGATE BASE, P-64-22 (9" THICK)	304 6" AGGREGATE BASE	407 TACK COAT APPLIED @ 0.10 GAL/SQ. YD.	407 TACK COAT FOR INTERMEDIATE COURSE APPLIED @ 0.05 GAL/SQ. YD.	408 BITUMINOUS PRIME COAT APPLIED @ 0.40 GAL/SQ. YD.	452 11" PLAIN CONCRETE PAVEMENT	611 REINFORCED CONCRETE APPROACH SLAB (7"-12")	611 REINFORCED CONCRETE APPROACH SLAB (7"-15")	615 TEMPORARY PAVEMENT, AS PER PLAN	830 CURB, TYPE 6, As Per Plan	855 4" ASPHALT TREATED FREE DRAINING BASE	858 1¾" ASPHALT CONCRETE INTERMEDIATE COURSE 19mm, TYPE A (446)	858 1½" ASPHALT CONCRETE SURFACE COURSE 12.5mm, TYPE A (446)
MAINLINE		Lin. Ft.	Lin. Ft.	Sq. Yds.		Sq. Yds.	Sq. Yds.	Cu. Yds.	Cu. Yds.	Gals.	Gals.	Gals.	Sq. Yds.	Sq. Yds.	Sq. Yds.	Sq. Yds.	Lin. Ft.	Sq. Yds.	Cu. Yds.	Cu. Yds.
833+00.00 (NB)	889+36.74 (NB)	5,636.74																		
833+00.00 (SB)	889+02.67 (SB)	5,602.67																		
891+50.93 (NB)	977+00.00 (NB)	8,549.07																		
891+16.86 (SB)	977+00.00 (SB)	8,583.14																		
1203+00.00 (NB)	1260+00.00 (NB)	5,700.00																		
1203+00.00 (SB)	1260+00.00 (SB)	5,700.00																		
PAVEMENT - 3 LANES @ 12.0 ft.		39,771.62	36.0	159,086.48		159,086		48,610	26,514	15,909	7,954	63,635						159,806	7,733	6,628
977+00.00 (NB)	986+22.04 (NB)	922.04																		
977+00.00 (SB)	986+21.74 (SB)	921.74																		
988+72.24 (NB)	1012+24.34 (NB)	2,352.10																		
988+72.24 (SB)	1012+34.76 (SB)	2,362.52																		
1013+86.36 (NB)	1051+15.59 (NB)	3,729.23																		
1013+77.26 (SB)	1051+15.59 (SB)	3,738.33																		
1053+86.09 (NB)	1103+05.49 (NB)	4,919.40																		
1053+86.09 (SB)	1102+80.42 (SB)	4,894.33																		
1105+87.98 (NB)	1203+00.00 (NB)	9,712.02																		
1105+62.91 (SB)	1203+00.00 (SB)	9,737.09																		
PAVEMENT - 3 LANES @ 12.0 ft.		43,288.80	36.0	173,155.20		173,155		43,289 ≠	28,859	17,316	8,653	69,262						173,155	8,417	7,214
1260+00.00 (NB)	1263+00.00 (NB)	300.00																		
1260+00.00 (SB)	1263+00.00 (SB)	300.00																		
PAVEMENT - 2 @ 12.0 ft; 1 @ 13.0 ft.		600.00	37.0	2,466.67		2,467		754	411	247	123	987						2,467	120	103
1263+00.00 (NB)	1267+65.07 (NB)	465.07																		
1263+00.00 (SB)	1267+65.07 (SB)	465.07																		
1270+06.13 (NB)	1394+40.00 (NB)	12,433.87																		
1270+06.13 (SB)	1394+40.00 (SB)	12,433.87																		
PAVEMENT - 2 @ 12.0 ft; 1 @ 14.0 ft.		25,797.88	38.0	108,924.38		108,924		33,282	18,154	10,892	5,446	43,570						108,924	5,295	4,539
910+05.25 (NB)	970+35.01 (NB)	6029.76																		
904+05.30 (SB)	965+95.07 (SB)	6189.77																		
PAVEMENT - 1 @ 12.0 ft.		12,1219.53	12.0	16,292.71		16,293		4,979	2,715	1629	815	6517						16,293	792	679
930+05.25 (NB)	938+45.25 (NB)	840.00																		
937+55.07 (SB)	945+95.07 (SB)	840.00																		
TRANSITION FROM 0' TO 12'		1,680	6.01	1,120		1,120		342	187	112	56	448						1,120	54	47
910+05.25 (NB)	930+05.25 (NB)	2,000																		
945+95.07 (SB)	965+95.07 (SB)	2,000																		
PAVEMENT - 1 @ 12.0 ft.		4,000	12.0	5,333.33		5,333		1,630	889	533	267	2,133						5,333	259	222
≠ ITEM 880 ASPHALT CONCRETE (7 YEAR WARRANTY)																				
TOTALS CARRIED TO SHEET 134						459,275		130,715 ≠	76,545	45,928 ≠	22,958 ≠	183,711						466,378	22,325 ≠	19,136 ≠

DESIGN FILE : i:\pd_med_lr71\dgn\calculations\gcl.dgn
USERNAME : jrogers
DATE : 30-NOV-1999
TIME : 11:21

LOCATION		LENGTH	WIDTH	TOTAL AREA		203 SUBGRADE COMPACTION	254 PAVEMENT PLANNING	302 (* 9"THICK) 11" BITUMINOUS AGGREGATE BASE, P-64-22	304 6" AGGREGATE BASE	407 TACK COAT APPLIED @ 0.10 GAL/SQ. YD.	407 TACK COAT FOR INTERMEDIATE COURSE APPLIED @ 0.05 GAL/SQ. YD.	408 BITUMINOUS PRIME COAT APPLIED @ 0.40 GAL/SQ. YD.	452 11" PLAIN CONCRETE PAVEMENT	611 REINFORCED CONCRETE APPROACH SLAB (7"-12')	611 REINFORCED CONCRETE APPROACH SLAB (7"-15')	615 TEMPORARY PAVEMENT, AS PER PLAN	830 CURB, TYPE 6, As Per Plan	855 4" ASPHALT TREATED FREE DRAINING BASE	858 1¾" ASPHALT CONCRETE INTERMEDIATE COURSE 19mm, TYPE A (446)	858 ½" ASPHALT CONCRETE SURFACE COURSE 12.5mm, TYPE A (446)
MAINLINE		Lin. Ft.	Lin. Ft.	Sq. Yds.		Sq. Yds.	Sq. Yds.	Cu. Yds.	Cu. Yds.	Gals.	Gals.	Gals.	Sq. Yds.	Sq. Yds.	Sq. Yds.	Sq. Yds.	Lin. Ft.	Sq. Yds.	Cu. Yds.	Cu. Yds.
833+00.00 (NB)	889+36.74 (NB)	5,636.74																		
833+00.00 (SB)	889+02.67 (SB)	5,602.67																		
891+50.93 (NB)	977+00.00 (NB)	8,549.07																		
891+16.87 (SB)	977+00.00 (SB)	8,583.13																		
1203+00.00 (NB)	1260+00.00 (NB)	5,700.00																		
1203+00.00 (SB)	1260+00.00 (SB)	5,700.00																		
	SUB-TOTAL	39,771.61																		
Median Shoulders - 10 ft.		39,771.61	10.0	44,190.68		44,191		13,948		4,419	2,210								2,149	1,841
			10.33	45,648.97								18,259						45,649		
			11.33	50,068.04					8,345											
977+00.00 (NB)	986+22.04 (NB)	922.04																		
977+00.00 (SB)	986+21.74 (SB)	921.74																		
988+72.24 (NB)	1012+24.34 (NB)	2,352.10																		
988+72.24 (SB)	1012+34.76 (SB)	2,362.52																		
1013+86.36 (NB)	1051+15.59 (NB)	3,729.23																		
1013+77.26 (SB)	1051+15.59 (SB)	3,738.33																		
1053+86.09 (NB)	1103+05.49 (NB)	4,919.40																		
1053+86.09 (SB)	1102+80.42 (SB)	4,894.33																		
1105+87.98 (NB)	1203+00.00 (NB)	9,712.02																		
1105+62.91 (SB)	1203+00.00 (SB)	9,737.09																		
	SUB-TOTAL	43,288.80																		
Median Shoulders - 10 ft.		43,288.80	10.0	48,098.67		48,099		12,421 *		4,810	2,405								2,338	2,004
			10.33	49,685.92								19,874						49,686		
			11.33	54,495.79					9,083											
1260+00.00 (NB)	1263+00.00 (NB)	300.00																		
1260+00.00 (SB)	1263+00.00 (SB)	300.00																		
	SUB-TOTAL	600.00																		
Median Shoulders - 11 ft.		600.00	11.0	733.33		733		231		73	37								36	31
			11.33	755.33								302						755		
			12.33	822.00					137											
1263+00.00 (NB)	1267+65.07 (NB)	465.07																		
1263+00.00 (SB)	1267+65.07 (SB)	465.07																		
1270+06.13 (NB)	1394+40.00 (NB)	12,433.87																		
1270+06.13 (SB)	1394+40.00 (SB)	12,433.87																		
	SUB-TOTAL	25,797.88																		
Median Shoulders - 12 ft.		25,797.88	12.0	34,397.17		34,397		10,799		3,440	1,720								1,672	1,433
			12.33	35,343.10								14,137						35,343		
			13.33	38,209.53					6,368											
# ITEM 880 ASPHALT CONCRETE (7YEAR WARRANTY)										-										
TOTALS CARRIED TO SHEET 134						127,420		37,399 #	23,933	12,742 #	6,372 #	52,572						131,433	6,195 #	5,309 #

CALCULATED JLM-RC CHECKED BJV

PAVEMENT CALCULATIONS

MED - 71 - 15.78

130
940

DESIGN FILE : i:\pd_med_lr71\dgn\calculations\gc2.dgn
USERNAME : jrogers

DATE : 30-NOV-1999
TIME : 11:21

LOCATION		LENGTH	WIDTH	TOTAL AREA		203 SUBGRADE COMPACTION	254 PAVEMENT PLANNING	302 (* 9" THICK) 11" BITUMINOUS AGGREGATE BASE, PG64-22	304 6" AGGREGATE BASE	407 TACK COAT APPLIED @ 0.10 GAL/SQ. YD.	407 TACK COAT FOR INTERMEDIATE COURSE APPLIED @ 0.05 GAL/SQ. YD.	408 BITUMINOUS PRIME COAT APPLIED @ 0.40 GAL/SQ. YD.	452 11" PLAIN CONCRETE PAVEMENT	611 REINFORCED CONCRETE APPROACH SLAB (T=12")	611 REINFORCED CONCRETE APPROACH SLAB (T=15")	615 TEMPORARY PAVEMENT, AS PER PLAN	830 CURB, TYPE 6, As Per Plan	855 4" ASPHALT TREATED FREE DRAINING BASE	858 1¾" ASPHALT CONCRETE INTERMEDIATE COURSE (19mm, TYPE A (446)	858 1½" ASPHALT CONCRETE SURFACE COURSE (12.5mm, TYPE A (446)
MAINLINE																				
		Lin. Ft.	Lin. Ft.	Sq. Yds.		Sq. Yds.	Sq. Yds.	Cu. Yds.	Cu. Yds.	Gals.	Gals.	Gals.	Sq. Yds.	Sq. Yds.	Sq. Yds.	Sq. Yds.	Lin. Ft.	Sq. Yds.	Cu. Yds.	Cu. Yds.
833+00.00 (NB)	889+36.74 (NB)	5,636.74																		
833+00.00 (SB)	889+02.67 (SB)	5,602.67																		
891+50.93 (NB)	977+00.00 (NB)	8,549.07																		
891+16.86 (SB)	977+00.00 (SB)	8,583.14																		
1203+00.00 (NB)	1267+65.07 (NB)	6,465.07																		
1203+00.00 (SB)	1267+65.07 (SB)	6,465.07																		
1270+06.13 (NB)	1394+40.00 (NB)	12,433.87																		
1270+06.13 (SB)	1394+40.00 (SB)	12,433.87																		
[882+91.32 (NB)]	[871+98.87 (NB)]	[1,092.45]	S.R. 18 Ramp C																	
[879+70.85 (SB)]	[874+30.14 (SB)]	[540.71]	S.R. 18 Ramp A																	
[900+83.51 (NB)]	[910+05.25 (NB)]	[921.74]	S.R. 18 Ramp D																	
[899+50.99 (SB)]	[905+07.56 (SB)]	[556.57]	S.R. 18 Ramp B																	
[970+35.01 (NB)]	[976+89.82 (NB)]	[654.81]	N.B. IR 271																	
[965+95.07 (SB)]	[973+64.26 (SB)]	[769.19]	S.B. IR 271																	
[1216+25.41 (NB)]	[1233+73.64 (NB)]	[1,748.23]	Rest Area																	
[1241+24.26 (SB)]	[1258+38.27 (SB)]	[1,714.01]	S.R. 303 Ramp A																	
[1248+58.65 (NB)]	[1260+00.00 (NB)]	[1,141.35]	S.R. 303 Ramp C																	
[1264+82.00 (NB)]	[1267+59.43 (NB)]	[277.43]	S.R. 303 Ramp D																	
[1269+82.96 (NB)]	[1280+96.23 (NB)]	[1,113.27]	S.R. 303 Ramp D																	
[1279+61.02 (SB)]	[1287+55.14 (SB)]	[794.12]	S.R. 303 Ramp B																	
	SUB-TOTAL	54,295.58																		
Outside Shoulders - 10 ft.		54,295.58	10.0	60,328.42		60,328		19,138		6,033	3,016								2,933	2,514
			10.33	62,319.26								24,928						62,319		
			11.33	68,352.10					11,392											
977+00.00 (NB)	986+22.04 (NB)	922.04																		
977+00.00 (SB)	986+21.74 (SB)	921.74																		
988+72.24 (NB)	1012+24.34 (NB)	2,352.10																		
988+72.24 (SB)	1012+34.76 (SB)	2,362.52																		
1013+86.36 (NB)	1051+15.59 (NB)	3,729.23																		
1013+77.26 (SB)	1051+15.59 (SB)	3,738.33																		
1053+86.09 (NB)	1103+05.49 (NB)	4,919.40																		
1053+86.09 (SB)	1102+80.42 (SB)	4,894.33																		
1105+87.98 (NB)	1203+00.00 (NB)	9,712.02																		
1105+62.91 (SB)	1203+00.00 (SB)	9,737.09																		
[1077+23.10 (SB)]	[1094+15.22 (SB)]	[1,692.12]	S.R. 3																	
[1084+32.42 (NB)]	[1092+35.01 (NB)]	[802.59]	S.R. 3																	
[1116+32.92 (SB)]	[1124+35.52 (SB)]	[802.60]	S.R. 3																	
[1114+39.02 (NB)]	[1131+43.960 (NB)]	[1,704.94]	S.R. 3																	
[1140+37.00 (SB)]	[1156+53.88 (SB)]	[1,616.88]	Rest Area																	
[1172+18.51 (NB)]	[1180+18.09 (NB)]	[799.58]	Rest Area																	
[1190+46.93 (SB)]	[1198+46.46 (SB)]	[799.53]	Rest Area																	
	SUB-TOTAL	34,706.56																		
Outside Shoulders - 10 ft.		34,706.56	10.0	38,562.84		38,562		9641*		3,857	1,928								1,874	1,679
			10.33	39,835.42								14,341						39,835		
			11.33	43,691.70					7,282											
≠ ITEM 880 ASPHALT CONCRETE (7 YEAR WARRANTY)																				
TOTALS CARRIED TO SHEET 134						98,890		28779 ≠	18,674	9,890 ≠	4,844 ≠	39,269						102,154	5,807 ≠	4,121 ≠

CALCULATED
CHECKED

PAVEMENT CALCULATIONS

MED - 71 - 15.78

131
940

DESIGN FILE : I:\pd_med_lr71\dgn\calculations\gc3.dgn
USERNAME : jrogers
DATE : 30-NOV-1999
TIME : 11:21

SCL = SPEED CHANGE LANE

LOCATION		SCL AREA	RAMP AREA (ASPHALT)	RAMP AREA (CONCRETE)	TOTAL AREA	203 SUBGRADE COMPACTION	254 PAVEMENT PLANNING	302 (≠ 9" THICK) 1" BITUMINOUS AGGREGATE BASE, PG64-22	304 6" AGGREGATE BASE	407 TACK COAT APPLIED @ 0.10 GAL/SQ. YD.	407 TACK COAT FOR INTERMEDIATE COURSE APPLIED @ 0.05 GAL/SQ. YD.	408 BITUMINOUS PRIME COAT APPLIED @ 0.40 GAL/SQ. YD.	452 1" PLAIN CONCRETE PAVEMENT	611 REINFORCED CONCRETE APPROACH SLAB (T=12")	611 REINFORCED CONCRETE APPROACH SLAB (T=15")	615 TEMPORARY PAVEMENT, AS PER PLAN	830 CURB, TYPE 6, As Per Plan	855 4" ASPHALT TREATED FREE DRAINING BASE	858 1¾" ASPHALT CONCRETE INTERMEDIATE COURSE 19mm, TYPE A (446)	858 ½" ASPHALT CONCRETE SURFACE COURSE 12.5mm, TYPE A (446)
RAMPS		Sq. Yds.	Sq. Yds.	Sq. Yds.	Sq. Yds.	Sq. Yds.	Sq. Yds.	Cu. Yds.	Cu. Yds.	Gals.	Gals.	Gals.	Sq. Yds.	Sq. Yds.	Sq. Yds.	Sq. Yds.	Lin. Ft.	Sq. Yds.	Cu. Yds.	Cu. Yds.
SR 18	SCL	3437				3437		1050 ⊕	573	344 ⊕	172 ⊕	1375						3,437	167 ⊕	143 ⊕
RAMP A	RAMP AREA		1824				1824			182	91								89	76
	SHOULDERS																			
	203, 407, 452, 858, 615	1502	1300		2802	1502				280	140					1300			136	117
	302, 408, 855	1565	1534					478				626						1,565		
	304	1669	1444						278											
RAMP B	SCL	2150				2150		657 ⊕	358	215 ⊕	108 ⊕	860						2,150	105 ⊕	90 ⊕
	RAMP AREA		1595				1595			160	80								77	67
	SHOULDERS																			
	203, 407, 452, 858, 615	1340	1329		2669	1799				267	133					1329			129	111
	302, 408, 855	1396	1384					427				750						1,396		
	304	1489	1447						333											
RAMP C	SCL	1196				1196		365 ⊕	199	120 ⊕	60 ⊕	478						1,196	58 ⊕	50 ⊕
	RAMP AREA		2318				2318			232	166								112	97
	SHOULDERS																			
	203, 407, 452, 858, 615	2839	1695		4534	3303				453	227					2318			198	170
	302, 408, 855	2957	1765					903				1376						2,957		
	304	3154	1940						612											
RAMP D	SCL	3460				3460		1057 ⊕	598	346 ⊕	173 ⊕	1384						3,460	168 ⊕	144 ⊕
	RAMP AREA		2,716				2716			272	136								132	113
	SHOULDERS																			
	203, 407, 452, 858, 615	2716	1466		4182	4182				418	209					2,944			203	175
	302, 408, 855	2831	1528					863				1132						2,831		
	304	3017	1,629						502											
IR 271	SCL	1989				1989		608 ⊕	331	199 ⊕	99 ⊕	796						1,989	97 ⊕	83 ⊕
Eastbound Connector	RAMP AREA		1018				1018			102	51								50	42
	SHOULDERS																			
	203, 407, 452, 858, 615	843	564		1407	843				141	70					564			68	59
	302, 408, 855	878	587					268				351						887		
	304	937	627						156											
Westbound Connector	SCL	3,816				3,816		1,167 ⊕	635	382 ⊕	191 ⊕	1,526						3,816	185 ⊕	159 ⊕
	RAMP AREA																			
	SHOULDERS																			
	203, 407, 452, 858, 615	852				852				158	79					674			77	66
	302, 408, 855	887						271				355						887		
	304	946							156											
SR 3	SCL	3364				3364		841 ≠ ⊕	561	336 ⊕	168 ⊕	1346						3,364	164 ⊕	140 ⊕
RAMP A	RAMP AREA		1639				1639			164	82								80	68
	SHOULDERS																			
	203, 407, 452, 858, 615	1736	982		2718	1736				272	136					982			132	113
	302, 408, 855	1808	1023					452 ≠				723						1,808		
	304	1929	1091						321											
⊗ ITEM 880 ASPHALT CONCRETE (7 YEAR WARRANTY)								5745		1942	971								944	809
TOTALS CARRIED TO SHEET 134						33,629	11,110	3662	5,593	3101	1600	13,078				10,111		31,734	1483	1274

CALCULATED GCR CHECKED DJV

PAVEMENT CALCULATIONS

MED - 71 - 15.78

132
940

DESIGN FILE : i:\pd_med_lr71\dgn\calculations\gc4.dgn
USERNAME : jrogers

DATE : 30-NOV-1999
TIME : 11:20

SCL = SPEED CHANGE LANE

LOCATION		SCL AREA	RAMP AREA (ASPHALT)	RAMP AREA (CONCRETE)	TOTAL AREA	203 SUBGRADE COMPACTION	254 PAVEMENT PLANNING	302 (+9"THICK) 1" BITUMINOUS AGGREGATE BASE, P-64-22	304 6" AGGREGATE BASE	407 TACK COAT APPLIED @ 0.10 GAL/SQ. YD.	407 TACK COAT FOR INTERMEDIATE COURSE APPLIED @ 0.05 GAL/SQ. YD.	408 BITUMINOUS PRIME COAT APPLIED @ 0.40 GAL/SQ. YD.	452 1" PLAIN CONCRETE PAVEMENT	452 1" PLAIN CONCRETE PAVEMENT Type FS		615 TEMPORARY PAVEMENT, AS PER PLAN	830 CURB, TYPE 6 As Per Plan	855 4" ASPHALT TREATED FREE DRAINING BASE	858 1¾" ASPHALT CONCRETE INTERMEDIATE COURSE 19mm, TYPE A (446)	858 1½" ASPHALT CONCRETE SURFACE COURSE 12.5mm, TYPE A (446)
RAMPS		Sq. Yds.	Sq. Yds.	Sq. Yds.	Sq. Yds.	Sq. Yds.	Sq. Yds.	Cu. Yds.	Cu. Yds.	Gals.	Gals.	Gals.	Sq. Yds.	Sq. Yds.		Sq. Yds.	Lin. Ft.	Sq. Yds.	Cu. Yds.	Cu. Yds.
SR 3 (Continued)	SCL	1434				1434		359 ≠ ⊕	239	143 ⊕	72 ⊕	574						1,434	70 ⊕	60 ⊕
RAMP B	RAMP AREA		1889	493		493	1889			189	94		207	286					92	79
	SHOULDERS																			
	203, 407, 452, 858, 615	635	1180	295		930				182	91		295			1180			88	76
	302, 408, 855	661	1229	307				165 ≠ ⊕				264						661		
	304	706	1311	328					172											
RAMP C	SCL	1483				1483		371 ≠ ⊕	247	148 ⊕	74 ⊕	593						1,483	72 ⊕	62 ⊕
	RAMP AREA		1883	545		545	1883			188	94		299	246			303		92	78
	SHOULDERS																			
	203, 407, 452, 858, 615	613	1302	334		947				192	96		334			1302			93	80
	302, 408, 855	639	1356	348				160 ≠ ⊕				256						639		
	304	681	1447	371					175											
RAMP D	SCL	3350				3350		838 ≠ ⊕	558	335 ⊕	168 ⊕	1340						3,350	163 ⊕	140 ⊕
	RAMP AREA		1690				1690			169	85								82	70
	SHOULDERS																			
	203, 407, 452, 858, 615	1364	1014		2378	1364				238	119					1014			116	99
	302, 408, 855	1421	1056					355 ≠ ⊕				568						1,421		
	304	1516	1127						253											
SR 303	SCL	1435				1435		438 ⊕	239	144 ⊕	72 ⊕	574						1,435	70 ⊕	60 ⊕
RAMP A	RAMP AREA		2042	394		394	2042			205	102		344	50					100	85
	SHOULDERS																			
	203, 407, 452, 858, 615	582	1497	236		818				225	113		236			1497			109	93
	302, 408, 855	606	1559	246				240				313						606		
	304	647	1663	262					278											
RAMP B	SCL	3400				3400		1039 ⊕	567	340 ⊕	170 ⊕	1360						3,400	165 ⊕	142 ⊕
	RAMP AREA		2640				2640			264	132								128	110
	SHOULDERS																			
	203, 407, 452, 858, 615 -	1512	1781		3293	1512				329	165								160	137
	302, 408, 855	1452	1885					444				581						1,452		
	304	1680	1979						280											
RAMP C	SCL	1500				1500		458 ⊕	250	150 ⊕	75 ⊕	600						1,500	73 ⊕	62 ⊕
	RAMP AREA		1806	880		880	1806			181	90		585	295					88	75
	SHOULDERS																			
* - varies from 9" to	203, 407, 452, 858, 615*	888	1406	517		1405				229	115		517			1406			112	96
11" for inside shoulder only.	302, 408, 855	925	1465	539				283				370						925		
	304	987	1562	574					260											
RAMP D	SCL	2466				2466		753 ⊕	411	247 ⊕	123 ⊕	986						2,466	120 ⊕	103 ⊕
	RAMP AREA		2640				2640			264	132								128	110
	SHOULDERS																			
* - varies from 9" to	203, 407, 452, 858, 6158	1253	1781		3034	1253				303	152					1781			147	126
11" for inside shoulder only.	302, 408, 855	1305	1855					399				522						1,305		
	304	1392	1979						232											
⊕ ITEM 808 ASPHALT	CONCRETE (7 YEAR WARRANTY)							4936		1507	754								733	629
TOTALS CARRIED TO SHEET 134						25609	14590	1366	4161	3158	1580	8901	2817	887		8180	303	22,077	1535	1314

CALCULATED Sam2 CHECKED DJV

PAVEMENT CALCULATIONS

MED - 71 - 15.78

133
940

DESIGN FILE : i:\pd_MED_IR71\L calculations\gc5.dgn
USERNAME : p.fought
DATE : 01-DEC-1999
TIME : 11:26

SCL = SPEED CHANGE LANE

LOCATION		SCL AREA	RAMP AREA (ASPHALT)	RAMP AREA (CONCRETE)	TOTAL AREA	203 SUBGRADE COMPACTION	254 PAVEMENT PLANNING	302 (± 9" THICK) II" BITUMINOUS AGGREGATE BASE, PG64-22	304 6" AGGREGATE BASE	407 TACK COAT APPLIED @ 0.10 GAL/SQ. YD.	407 TACK COAT FOR INTERMEDIATE COURSE APPLIED @ 0.05 GAL/SQ. YD.	408 BITUMINOUS PRIME COAT APPLIED @ 0.40 GAL/SQ. YD.	452 II" PLAIN CONCRETE PAVEMENT	452 II" PLAIN CONCRETE PAVEMENT Type FS	611 REINFORCED CONCRETE APPROACH SLAB (T=12")	611 REINFORCED CONCRETE APPROACH SLAB (T=15")	615 TEMPORARY PAVEMENT, AS PER PLAN	830 CURB, TYPE 6 As Per Plan	855 4" ASPHALT TREATED FREE DRAINING BASE	858 1¾" ASPHALT CONCRETE INTERMEDIATE COURSE 19mm, TYPE A (446)	858 ½" ASPHALT CONCRETE SURFACE COURSE 12.5mm, TYPE A (446)
RAMPS		Sq. Yds.	Sq. Yds.	Sq. Yds.	Sq. Yds.	Sq. Yds.	Sq. Yds.	Cu. Yds.	Cu. Yds.	Gals.	Gals.	Gals.	Sq. Yds.	Sq. Yds.	Sq. Yds.	Sq. Yds.	Sq. Yds.	Lin. Ft.	Sq. Yds.	Cu. Yds.	Cu. Yds.
Rest Area - Southbound	SCL	1454				1454		444 ± ⊕	242	145 ⊕	73 ⊕	582							1,454	71 ⊕	61 ⊕
OFF RAMP	RAMP AREA		1005				1005			101	50									49	42
	SHOULDERS																				
	203, 407, 615, 858	638	635		1273	638				127	64						635			62	53
	302, 408, 855	665	661					203 ± ⊕											665		
	304	709	706						118			266									
ON RAMP	SCL	3094				3094		945 ± ⊕	516	309 ⊕	155 ⊕	1238							3,054	150 ⊕	129 ⊕
	RAMP AREA		906				906			91	45									44	38
	SHOULDERS																				
	203, 407, 615, 858	1515	591		2106	1515				211	105						591			102	88
	302, 408, 855	1578	616					482 ± ⊕											1,578		
	304	1683	657						280			631									
Rest Area - Northbound	SCL	1454				1454		444 ± ⊕	242	145 ⊕	73 ⊕	582							1,454	71 ⊕	61 ⊕
OFF RAMP	RAMP AREA		1412				1412			141	71									69	59
	SHOULDERS																				
	203, 407, 615, 858	619	904		1523	619				152	76						904			74	63
	302, 408, 855	645	942					197 ± ⊕											645		
	304	688	1000						115			258									
ON RAMP	SCL	3477				3477		1062 ⊕	579	348 ⊕	174 ⊕	1391							3,477	169 ⊕	145 ⊕
	RAMP AREA		907				907			91	45									44	38
	SHOULDERS																				
	203, 407, 615, 858	1409	604		2013	1409				201	101						604			98	84
	302, 408, 855	1467	629					445 ⊕											1,467		
	304	1566	671						261			583									
APPROACH SLABS																					
889+02.67	891+50.93	MED-71-1685							180							678					
986+21.74	988+72.24	MED-71-1870							180							678					
1012+24.34	1013+86.36	MED-71-1918							180							678					
1051+15.59	1053+61.09	MED-71-1992							180							678					
1102+80.42	1105+87.98	MED-71-2090							180							711					
1267+66.10	1270+06.13	MED-71-2402							210							828					
81+41.97 Ramp B	82+84.69 Ramp B	MED-71-2088E							78						222						
83+48.24 Ramp C	84+51.76 Ramp C	MED-71-2092W							72						208						
	SHEET TOTALS ⊕							4222 ⊕		947 ⊕	475 ⊕									461 ⊕	396 ⊕
SHEET TOTALS						13,660	4,230		3,613	1115	557	5,531			430	4,251	2,734		13,834	542	465
TOTALS CARRIED FORWARD FROM SHEET 129						459,275		130,715 ⊕	76,545	45,928 ⊕	22,958 ⊕	183,711							466,378	22,325 ⊕	19,136 ⊕
TOTALS CARRIED FORWARD FROM SHEET 130						127,420		37,399 ⊕	23,933	12,742 ⊕	6,372 ⊕	52,572							131,433	6,195 ⊕	5,309 ⊕
TOTALS CARRIED FORWARD FROM SHEET 131						98,890		28779 ⊕	18,674	9,980 ⊕	4,844 ⊕	39,269							102,154	5,807 ⊕	4,121 ⊕
TOTALS CARRIED FORWARD FROM SHEET 132						33,629	11,110	3662	5,593	3101	1600	13,078					10,111		31,734	1483	1274
TOTALS CARRIED FORWARD FROM SHEET 133						25,609	14,590	1366	4,161	3158	1580	8,901	2,817	887			8,180	303	22,077	1535	1314
⊕ ITEM 880 ASPHALT CONCRETE (7 YEAR WARRANTY) TOTALS (FOR INFORMATION ONLY)								211,796		73,046	36,374									36,465	30,400
TOTALS CARRIED TO GENERAL SUMMARY						758,483	29,930	5028	132,519	7374	3737	302,062	2,817	887	430	4,251	19,479	303	767,610	3560	3053

CALCULATED jmp CHECKED DJV

PAVEMENT CALCULATIONS AND SUBSUMMARY

MED - 71 - 15.78

DESIGN FILE : i:\pd_MED_IR71 calculations\gc6.dgn
USERNAME : pfought
DATE : 01-DEC-1999
TIME : 13:00

REF.FILE #1 LEVELS ON:
REF.FILE #1 LEVELS ON:
REF.FILE #2 LEVELS ON:
REF.FILE #2 LEVELS ON:
REF.FILE #3 LEVELS ON:
REF.FILE #3 LEVELS ON:
REF.FILE #4 LEVELS ON:
REF.FILE #4 LEVELS ON:
DESIGN FILE : i:\pd_med.ir71\dgn\pvmntrepr_gmudgn
USERNAME : nvondere
DATE : 29-NOV-1999
TIME : 10:30
FILENAME: i:\pd_med.ir71\dgn\pvmntrepr_gmudgn
DATE & TIME: 29-NOV-1999 10:30
USERNAME: nvondere
PROJECT: NONE
LEVELS ON: [1-64]
PLOT QUEUE: \\OOPILOT\oce
PEN TABLE: i:\data\dot\pen\OceCross_OCE.pen

REST AREA PAVEMENT CALCULATIONS

Southbound Roadside Rest Area Parking Lot
Area of Pavement = 34249 Square Feet
Length of Curb = 1508 Feet

Northbound Roadside Rest Area Parking Lot
Area of Pavement = 33811 Square Feet
Length of Curb = 1511 Feet
Total Area of Pavement = 68060 Square Feet
Total Length of Curb = 3019 Feet

451 9" Reinforced Concrete Pavement
[(9"/12)X(68060 FT²)]/27 = 1890.56 Cubic Yard

304 6" Aggregate Base
[(6"/12)X(71079 FT²)]/27 = 1316.28 Cubic Yard

203 Subgrade Compaction
[(68060 FT²)]/9 = 7562.22 Square Yard

203 Excavation
[(6"/12)X(68060 FT²)]/27 = 1260.37 Cubic Yard

202 Pavement Removed
(68060 FT²)/9 = 7562.22 Square Yard

(Quantities above carried to "Pavement Table", this sheet.)

LINEAR GRADING

Location	Station	Side	203 Linear Grading
			Station
I.R. 71	1398+00 to 1408+40	Lt.	10.4
Total (Carried to Gen Summary)			11

PAVEMENT REMOVAL

Location	Total Ln. Ft. x2 (2 Directions)	202 Pavement Removed (2 Lanes)
	Linear Feet	Square Yard
833+00.00 to 1394+40.00	112,280	299,413
Deductions for Structures		
S.R. 18	(428.38)	
I.R. 271	(500.40)	
Wilbur Rd.	(304.45)	
Rocky River	(580.45)	
S.R. 3	(567.76)	
S.R. 303	(482.12)	
Deduction Sub-Total	(2863.56)	(7636)
Add for Ramps		
S.R. 18 Ramp A		3437
Ramp B		2150
Ramp C		1196
Ramp D		3460
I.R. 271 Connector W		3816
Connector E		1989
S.R. 3 Ramp A		3364
Ramp B		4152
Ramp C		3861
Ramp D		3350
S.R. 303 Ramp A		6693
Ramp B		1435
Ramp C		4534
Ramp D		2466
Rest Area Southbound		4544
Northbound		4931
S.R. 3 897+35 to 903+85		190
Total (Carried to General Summary)		347,345

REST AREA PAVEMENT TABLE

N.B. and S.B. Rest Area Parking Lots	202 Pavement Removed	202 Curb Removed	203 Excavation Not Including Embankment Construction	203 Subgrade Compaction	304 Aggregate Base (Th.=6")	451 9" Reinforced Concrete Pavement	830 Curb, Type 6, as per plan
	Square Yard	Linear Feet	Cubic Yard	Square Yard	Cubic Yard	Cubic Yard	Linear Feet
	7562.22	3019	1260.37	7562.22	1316.28	1890.56	3019
Totals	7562	3019	1260	7562	1316	1891	3019

(Totals Carried to General Summary)

S.R. 3 & S.R. 303 PAVEMENT TABLE

Location	Side	203 Excavation Not Including Embankment Construction	203 Subgrade Compaction	301 Bituminous Aggregate Base, PG64-22 (Th.=6")	304 Aggregate Base (Th.=6")	407 Tack Coat	407 Tack Coat for Intermediate Course	408 Bituminous Prime Coat applied at 0.40 Gallon/Sq Yd	448 Asphalt Concrete Intermed. Course, Type 2, PG64-22, (Th.=3/4")	448 Asphalt Concrete Surface Course, Type 1, PG64-22, (Th.=1/4")
		Cubic Yard	Square Yard	Cubic Yard	Cubic Yard	Gallon	Gallon	Gallon	Cubic Yard	Cubic Yard
S.R. 3	℄	300	805	134	134	80	40	322	39	28
S.R. 303	℄	860	1629	272	272	164	82	652	79	57
Totals		1160	2434	406	406	244	122	974	118	85

(Totals Carried to General Summary)

CALCULATED JCL CHECKED DJV

MISCELLANEOUS PAVEMENT CALCULATIONS & TABLES

MED-71-15.78

EARTHWORK AND SEEDING

Sheet No.	Pavement Location	203 Excavation Not Including Embankment Construction Cu Yd	203 Embankment Cu Yd		870 Seeding and Mulching Lin Ft
219	Med 71	1595	66		4567
220		3519	213		4978
221		4462	153		5699
222		2751	222		4278
223		3763	259		5545
224		2397	393		3812
225		1526	744		2855
226		2474	541		4323
227		3033	667		5534
228		2579	670		4533
229		1985	614		3344
230		3095	533		4400
231		3062	538		4256
232		2668	594		3857
233		1101	1389		3401
234		19	5454		4211
235		0	3100		2300
236		15	4981		3099
237		677	2127		4156
238		2209	1015		3440
239		2258	1351		3489
240		2415	1225		3334
241		2090	2968		4489
242		2235	2274		3644
243		5084	911		5478
244		6277	555		5278
245		5074	429		3378
246		6167	999		5044
247		1907	6137		6100
248		4036	589		4056
249		7871	526		6522
250		3027	2774		4755
251		2571	4733		4789
252		2647	5867		5247
253		2600	1585		4155
254		4807	930		4589
255		5870	896		4933
256		7880	214		6733
257		5286	723		5977
258		2631	896		4088
259		2116	721		2898
260		1686	433		2978
261		2171	815		4034
262		494	424		1633
263		189	415		1423
264		681	542		1738
265		1629	600		2488
266		1148	548		1900
267		1652	767		2844
268		1030	1678		3234

Continued

Sheet No.	Pavement Location	203 Excavation Not Including Embankment Construction Cu Yd	203 Embankment Cu Yd		870 Seeding and Mulching Lin Ft
269	Med 71	285	1318		3022
270		426	800		3367
271		1322	1252		4644
272		1415	611		3089
273		2267	907		5167
274		2522	1148		5600
275		1718	811		4078
276		2745	1211		5812
277		2189	956		5211
278		2034	1203		5011
279		2265	1267		5099
280		746	348		1517
281		863	685		1589
282		1493	411		2256
283		2498	619		4134
284		2843	511		4645
285		2630	296		3933
286		4698	386		6210
287		5722	129		6932
288		3420	815		5511
289		1210	974		2545
290		2110	1293		5722
291		2474	1177		4919
292		1603	976		3619
293		274	2244		4245
294		69	2769		4028
295		150	300		700
296		48	3310		4766
297		544	1455		3855
298		2004	566		3395
299		1731	691		2983
300		2837	698		4867
301		2218	871		4934
302		2680	463		4589
303		3833	392		5194
304		3925	581		6127
305		4064	687		5777
306		3843	287		4968
307		3901	367		5022
308		3393	383		4556
309		4363	197		6000
310		2467	460		4000
311		2524	501		4179
312		3011	499		5049
313		3098	845		5249
314		2390	745		4638
315		3832	377		5856
316		4565	307		6323
317		3509	186		5149
318		2475	699		5178

Continued

Sheet No.	Pavement Location	203 Excavation Not Including Embankment Construction Cu Yd	203 Embankment Cu Yd		870 Seeding and Mulching Lin Ft
319	Med 71	1932	1025		3655
320		1712	711		2989
321		1842	737		3722
322		2848	1093		5289
323		4305	767		5867
324		4313	523		5700
325		4196	669		5611
326		2991	799		5489
327		3888	529		6633
328		5630	370		6978
329		3658	489		4967
330		3603	615		5390
331		2694	410		4701
332		1965	825		4056
333		3185	304		5044
334		2363	622		4633
335		1518	1513		3690
336		1774	1973		4272
337		792	1769		4145
338		258	1121		2821
339		145	447		1403
340		424	1334		3622
341		800	920		2622
342		1421	1916		4196
343		1829	1596		4078
344		1591	765		3055
345		1985	849		4037
346		1977	717		3666
347		2116	654		3389
348		2059	747		3089
349		1318	1257		3495
350		1294	789		1911
351		1776	735		2661
352		2520	637		4394
353		2374	535		4145
354		2030	585		3972
355		2872	867		5489
356		1769	790		3773
357		2208	961		4522
358		2724	944		5044
359		1896	685		3883
360		1993	1057		4413
361		1814	1244		4550
362		1456	829		3100
363		1813	732		3789
364		1892	2205		5340
365		1035	1544		3589
366		1393	2075		4844
367		1571	1382		4571
368		1183	1202		3494

Continued

Sheet No.	Pavement Location	203 Excavation Not Including Embankment Construction Cu Yd	203 Embankment Cu Yd		870 Seeding and Mulching Lin Ft
369	Med 71	1557	1892		5044
370		1500	1743		4800
371		1504	655		3361
372		2973	757		5150
373		2769	834		5366
374		953	308		2044
			S.R. 18		
*	Ramp A	425	20		2000
*	Ramp B	450	20		1900
*	Ramp C	550	200		2900
396	Ramp D	216	54		433
397		890	176		1644
398		475	487		1544
399		253	656		1295
*	271 Exit	175	5		800
			S.R. 3		
*	Ramp A	325	50		1800
*	Ramp B	525	100		3000
*	Ramp C	575	110		3400
*	Ramp D	300	50		1900
			Rest Area SB		
*	Exit	200	10		1200
*	Ent	200	10		1200
			Rest Area NB		
*	Exit	275	20		1700
*	Ent	200	20		1200
478	Rest Area	28	294		702
			S.R. 303		
*	Ramp A	475	25		2800
*	Ramp B	450	50		2600
494	Ramp C	324	309		1499
495		370	324		1555
496		608	96		1011
497	Ramp CD	2996	121		2344
*	Ramp D	850	400		2500
	Totals	387,841	166,442		707,575
Totals Carried to General Summary					

(Carried to "Item 870 Seeding and Mulching" General Note)

* Estimated Quantity for Shoulder Replacement along Ramp

MISCELLANEOUS CALCULATIONS

870 COMMERCIAL FERTILIZER

Net Seeding and Mulching (From Gen Notes) = 740,379 Sq Yd
(740,379)(9)(1/1000)(20)(1/2000) = 66.63 Ton
(Quantity Carried to General Summary)

870 WATER

(2)(740,379)(9)(1/1000)(120)(1/1000) = 1599 M Gal
(Carried to "Watering Permanent Seeded Areas" General Note)

870 MOWING

(740,379)(9)(0.25)(1/1000) = 1666 M Gal
(Carried to "Watering Permanent Seeded Areas" General Note)

CALCULATED NJV
CHECKED JWM

EARTHWORK AND SEEDING TABLE

MED-71-15.78

136
940

DESIGN FILE : i:\pd_med_lr71\dgn\xssum.dgn
USERNAME : nvonderre

DATE : 03-DEC-1999
TIME : 12:23

REF-FILE #1 LEVELS ON:
REF-FILE #2 LEVELS ON:
REF-FILE #3 LEVELS ON:
REF-FILE #4 LEVELS ON:
DESIGN FILE : i:\pd_med_ir71\dgn\pvmntrpr\pvmntrepr_gmdgn
USERNAME : nvonder
DATE : 29-NOV-1999
TIME : 10:32
FILENAME: i:\pd_med_ir71\dgn\pvmntrpr\pvmntrepr_gmdgn
DATE & TIME: 29-NOV-1999 10:32
USERNAME: nvonder
PROJECT: NONE
LEVELS ON: 1-64
PEN TABLE: \\OPLOT\oce
i:\pd\data\plotfiles\oce_pen

RAMP PAVEMENT REPAIR FOR JOINT QUANTITIES

Location	Width	Length	255 Full Depth Pavement Removal and Rigid Replacement, Class FS	255 Full Depth Pavement Sawing
	L.F.	L.F.	Square Yard	Linear Feet
Ramp D @ S.R. 3	16	10	18	32
Ramp SB S.B. Rest Area	16	14	24	32
Ramp B @ S.R. 303	16	8	14	32
Ramp D @ S.R. 303	16	6	10	32
Crack Repair Sub-Total			66	128

RAMP PAVEMENT REPAIR FOR JOINT QUANTITIES

Location	Estimated No. of Repairs	255 Full Depth Pavement Removal and Rigid Replacement, Class FS	255 Full Depth Pavement Sawing
		Square Yard	Linear Feet
Ramps A, B, C, D @ S.R. 3	14	149	448
S.B. Rest Area Entrance/Exit	4	43	128
N.B. Rest Area Entrance/Exit	4	43	128
Ramps A, B, C, D @ S.R. 303	14	149	448
25% Contingency ***	9	96	288
Joint Repair Sub-Total		480	1440

*** CONTINGENCY QUANTITIES TO BE USED AS DIRECTED BY THE ENGINEER.

Note: For estimating purposes, joint repairs on the ramps are to be 6' long and 16' wide.

ITEM 255 FULL DEPTH PAVEMENT AND RIGID REPLACEMENT, CLASS FS = 480 + 66 = 546 SQ. YD.

ITEM 255 FULL DEPTH PAVEMENT SAWING = 1440 + 128 = 1568 SQ. YD.

(Totals Carried to General Summary)

CURB REMOVED

Reference No.	Location	Station	202 Curb Removed
			Linear Feet
1-R	Ramp C @ S.R. 18	882+50 to 884+50	200
2-R	Ramp B @ S.R. 18	897+50 to 899+50	200
3-R	Connector E @ S.R. 271	976+47 to 978+53	206
4-R	Ramp B @ S.R. 3	1091+72 to 1092+78	206
5-R	Ramp C @ S.R. 3	1114+97 to 1117+03	206
6-R	Ramp SA S.B. Rest Area	1170+97 to 1173+03	206
7-R	Ramp NA N.B. Rest Area	1197+97 to 1200+03	206
8-R	Ramp C @ S.R. 303	1255+72 to 1257+78	206
9-R	Ramp B @ S.R. 303	1277+97 to 1280+03	206
10-R	S.R. 3	897+35 to 903+85	1308
	Total (Carried to General Summary)		3150

CURB "C"

Reference No.	Station From	Station To	Side		830 Curb, Type 6, as per Plan
					Linear Feet
1-C	888+65	888+95	Lt.		30
2-C	888+98	889+14	Lt.		16
3-C	889+09	889+25	Rt.		16
4-C	889+28	889+44	Rt.		16
5-C	988+30	988+46	Lt.		16
6-C	988+65	988+81	Lt.		16
7-C	988+86	989+00	Rt.		16
8-C	989+20	989+36	Rt.		16
9-C	1013+86	1014+02	Lt.		16
10-C	1013+80	1013+96	Lt.		16
11-C	1013+84	1014+00	Rt.		16
12-C	1013+78	1013+94	Rt.		16
13-C	1053+96	1054+12	Lt.		16
14-C	1053+89	1054+05	Lt.		16
15-C	1053+85	1054+01	Rt.		16
16-C	1053+78	1053+94	Rt.		16
17-C	1102+52	1102+68	Lt.		16
18-C	1102+83	1102+99	Lt.		16
19-C	1102+71	1102+87	Rt.		16
20-C	1102+02	1103+18	Rt.		16
21-C	1270+26	1270+42	Lt.		16
22-C	1270+10	1270+26	Lt.		16
23-C	1270+03	1270+19	Rt.		16
24-C	1269+83	1269+99	Rt.		16
		Total (Carried to General Summary)			398

PRESSURE RELIEF JOINTS "PRJ"

Reference No.	Station	Special Item Special Pressure Relief Joint, Type A	603 Conduit, Type F	605 6" Shallow Pipe Underdrain, 707.31 or 707.41
		Linear Feet	Linear Feet	Linear Feet
1-PRJ	82+84.7 Ramp B SR 3	26	20	26
2-PRJ	83+48 Ramp C SR 3	26	20	26
Total (Carried to Gen Summary)		52	40	52

WEARING COURSE REMOVED

Location	202 Wearing Course Removed
	Square Yard
Structure No. Med-71-1685 L & R @ S.R. 18	1699
Structure No. Med-71-1870 L & R @ I.R. 271	1717
Structure No. Med-71-1918 L & R @ Wilbur Rd.	888
Structure No. Med-71-1992 L & R @ Rocky River	1926
Structure No. Med-71-2088 @ S.R. 3 Ramp B	344
Structure No. Med-71-2090 L & R @ S.R. 3	2149
Structure No. Med-71-2092 @ S.R. 3 Ramp C	205
Structure No. Med-71-2402 L & R @ S.R. 303	2289
Total (Carried to General Summary)	11,217

DITCH CLEANOUT

Location	203 Excavation Not Including Embankment Construction	670 Ditch Erosion Protection
	Cubic Yard	Square Yard
Side Ditches along Wilbur Rd.	100	900
Side Ditches along Remsen Rd.	15	200
Side Ditches along Sleepy Hollow Rd.	15	200
Side Ditches along Laurel Rd.	20	250
Total (Carried to Gen Summary)	150	1550

CALCULATED DJV CHECKED

MISCELLANEOUS CALCULATIONS & TABLES

MED-71-15.78

(8-D) SEE P&P SHEET NO. 174

ROCK CHANNEL PROTECTION CALCULATION

STA. 851+25, RT. TO STA. 853+25, RT.

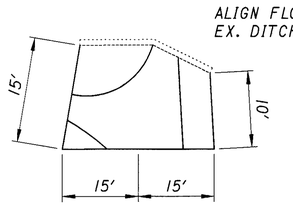

RIPRAP USING 6" REINFORCED CONCRETE PAD

15 x 15 =	225	SQ. FEET
[0.5 x (15 + 10)] x 15 =	187.5	SQ. FEET
	412.5	SQ. FEET
/	9	
	45.83	SQ. YARDS

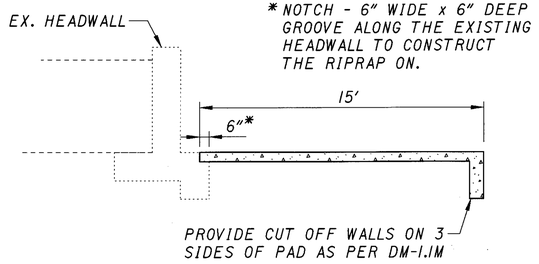

RCP TYPE B WITH FILTER

(BACK)

88 x 4 =	352	SQ. FEET
2 x 88 x 1.12 =	197.12	SQ. FEET
	549.12	SQ. FEET
x	2.5	
/	27	
	50.84	CU. YARDS

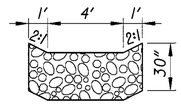

(AHEAD)

110 x 4 =	440	SQ. FEET
2 x 110 x 1.12 =	246.4	SQ. FEET
	686.4	SQ. FEET
x	2.5	
/	27	
	63.56	CU. YARDS

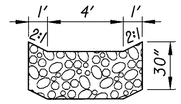

(MAIN CHANNEL)

30 x 6 =	180	SQ. FEET
2 x 30 x 2.24 =	134.4	SQ. FEET
	314.4	SQ. FEET
x	2.5	
/	27	
	29.11	CU. YARDS

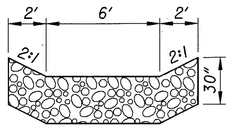

TOTAL: 143.51 CU. YARDS

(10-D) SEE P&P SHEET NO. 174

ROCK CHANNEL PROTECTION CALCULATION

STA. 853+65, LT.

RCP TYPE A WITH FILTER

26 x 10 =	260	SQ. FEET
2 x 26 x 2.8 =	145.6	SQ. FEET
	405.6	SQ. FEET
x	4	
/	27	
	60.09	CU. YARDS

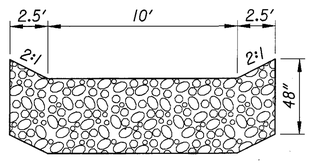

(14-D) SEE P&P SHEET NO. 175

ROCK CHANNEL PROTECTION CALCULATION

STA. 868+50, RT. TO STA. 869+70, RT.

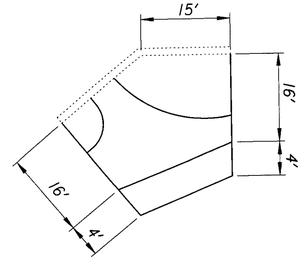

ALIGN FLOW LINE WITH EX. DITCH (TYP.)

* NOTCH - 6" WIDE x 6" DEEP GROOVE ALONG THE EXISTING HEADWALL TO CONSTRUCT THE RIPRAP ON.

RIPRAP USING 6" REINFORCED CONCRETE PAD

0.5 x 20.12 x 15 =	150.9	SQ. FEET
0.5 x (20.12 + 25.12) x 16 =	361.92	SQ. FEET
	512.82	SQ. FEET
/	9	
	56.98	SQ. YARDS

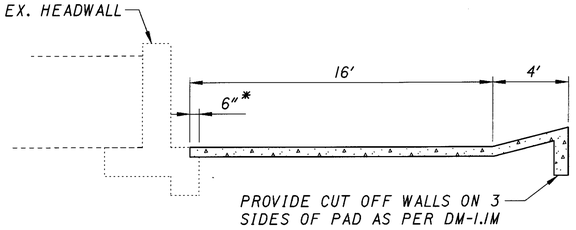

RCP TYPE B WITH FILTER

100 x 4 =	400	SQ. FEET
2 x 100 x 2.06 =	412	SQ. FEET
	812	SQ. FEET
x	2.5	
/	27	
	75.19	CU. YARDS

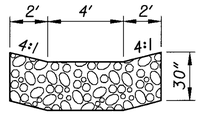

(16-D) SEE P&P SHEET NO. 176 ; DRAINAGE DETAIL SHEET NO. 509

ROCK CHANNEL PROTECTION CALCULATION

STA. 884+32, RT.

RIPRAP USING 6" REINFORCED CONCRETE PAD

5 x 2.5 =	12.5	SQ. FEET
2 x 5 x 7.22 =	72.2	SQ. FEET
	84.7	SQ. FEET
/	9	
	9.41	SQ. YARDS

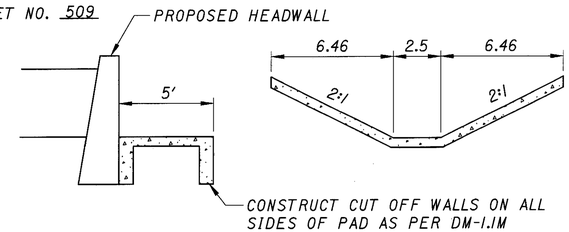

(20-D) SEE P&P SHEET NO. 176 ; DRAINAGE DETAIL SHEET NO. 517

ROCK CHANNEL PROTECTION CALCULATION

STA. 888+05, LT.

RCP TYPE A WITH FILTER

20 x 5 =	100	SQ. FEET
2 x 20 x 3.91 =	156.4	SQ. FEET
	256.4	SQ. FEET
x	4	
/	27	
	37.99	SQ. YARDS

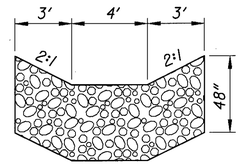

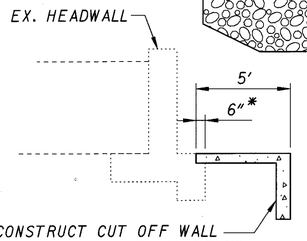

* NOTCH - 6" WIDE x 6" DEEP GROOVE ALONG THE EXISTING HEADWALL TO CONSTRUCT THE RIPRAP ON.

RIPRAP USING 6" REINFORCED CONCRETE PAD

5 x 5 =	25.0	SQ. FEET
2 x 5 x 3.91 =	39.1	SQ. FEET
	64.1	SQ. FEET
/	9	
	7.12	SQ. YARDS

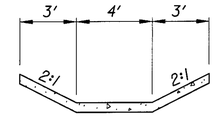

(21-D) SEE P&P SHEET NO. 177

ROCK CHANNEL PROTECTION CALCULATION

STA. 888+70, LT. OUTLET FOR STRUCTURE CATCH BASIN

RCP TYPE C WITH FILTER

6 x 6 =	36	SQ. FEET
	36	SQ. FEET
x	1.5	
/	27	
	2	CU. YARDS

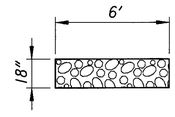

CALCULATED PS CHECKED W.JC

DRAINAGE CALCULATIONS

MED - 71 - 15.78

138
940

7885DMD.DGN 12/7/99 CAR I

(23-D) SEE P&P SHEET NO. 177

ROCK CHANNEL PROTECTION CALCULATION

STA. 889+35, RT. OUTLET FOR STRUCTURE CATCH BASIN

RCP TYPE C WITH FILTER

6 x 6 = 36 SQ. FEET
36 SQ. FEET
x 1.5
/ 27
2 CU. YARDS

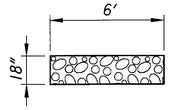

(26-D) SEE P&P SHEET NO. 177 ; DRAINAGE DETAIL SHEET NO. 516

ROCK CHANNEL PROTECTION CALCULATION

STA. 1+20 RT. TO STA 1+80 RT. RAMP D (S.R. 18)

RIPRAP USING 6" REINFORCED CONCRETE PAD

35 x 4 = 140 SQ. FEET
20 x 4 = 80 SQ. FEET
20 x 2 = 40 SQ. FEET
5 x 2 = 10 SQ. FEET
2 x 20 x 2.24 = 89.6 SQ. FEET
20 x 10 = 200 SQ. FEET
20 x 2.24 = 44.8 SQ. FEET
16 x 2.24 = 35.84 SQ. FEET
16 x 4.12 = 65.92 SQ. FEET
706.19 SQ. FEET
/ 9
78.46 SQ. YARDS

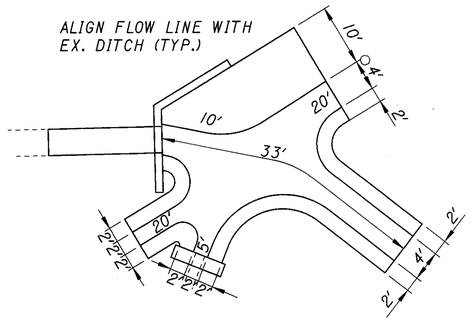

RCP TYPE B WITH FILTER

15 x 4 = 60 SQ. FEET
2 x 15 x 2.24 = 67.2 SQ. FEET
127.2 SQ. FEET
x 2.5
/ 27
11.78 CU. YARDS

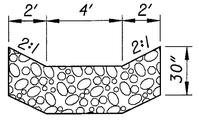

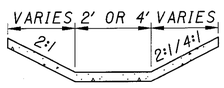

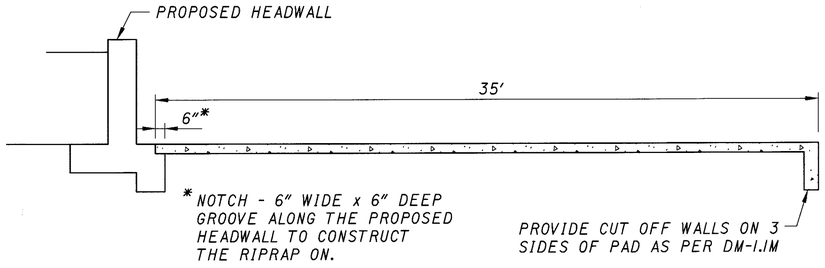

(18-D) SEE P&P SHEET NO. 176 ; DRAINAGE DETAIL SHEET NO. 530

ROCK CHANNEL PROTECTION CALCULATION

STA. 25+30, LT. RAMP A (S.R. 18)

RCP TYPE A WITH FILTER

30 x 12 = 360 SQ. FEET
360 SQ. FEET
x 3
/ 27
40 CU. YARDS

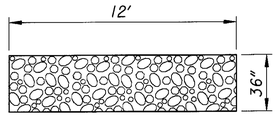

(24-D) SEE P&P SHEET NO. 176 ; DRAINAGE DETAIL SHEET NO. 529

ROCK CHANNEL PROTECTION CALCULATION

STA. 19+80, LT. RAMP C (S.R. 18)

AT 42" OUTLET

RCP TYPE A WITH FILTER

35 x 4 = 140 SQ. FEET
2 x 35 x 3.35 = 234.5 SQ. FEET
374.5 SQ. FEET
x 4
/ 27
55.48 CU. YARDS

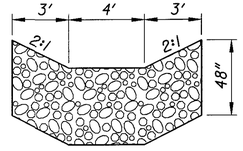

AT 36" OUTLET

RCP TYPE A WITH FILTER

20 x 3 = 60 SQ. FEET
2 x 20 x 4.47 = 178.8 SQ. FEET
238.8 SQ. FEET
x 4
/ 27
35.38 CU. YARDS

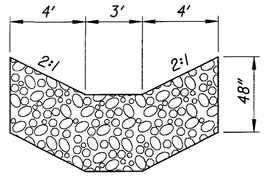

TOTAL: 90.86 CU. YARDS

* NOTCH - 6" WIDE x 6" DEEP GROOVE ALONG THE EXISTING HEADWALL TO CONSTRUCT THE RIPRAP ON.

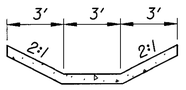

RIPRAP USING 6" REINFORCED CONCRETE PAD

5 x 4 = 20 SQ. FEET
2 x (5 X 3.35) = 33.5 SQ. FEET
53.5 SQ. FEET
/ 27
5.94 CU. YARDS

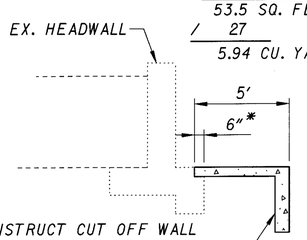

RIPRAP USING 6" REINFORCED CONCRETE PAD

5 x 3 = 15.0 SQ. FEET
2 x (5 x 4.47) = 44.7 SQ. FEET
59.7 SQ. FEET
/ 9
6.63 SQ. YARDS

(28-D) SEE P&P SHEET NO. 177 ;
DRAINAGE DETAIL SHEET NO. 576

ROCK CHANNEL PROTECTION CALCULATION

STA. 898+50, LT. TO 899+68, RT.

RIPRAP USING 6" REINFORCED CONCRETE PAD

35 x 4 = 140 SQ. FEET
2 x (35 x 3.35) = 234.5 SQ. FEET
374.5 SQ. FEET
/ 9
41.61 SQ. YARDS

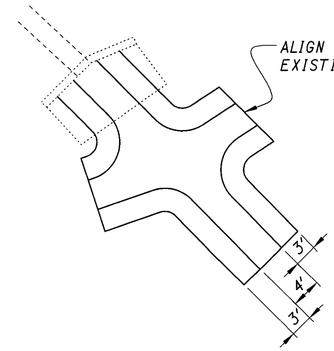

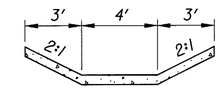

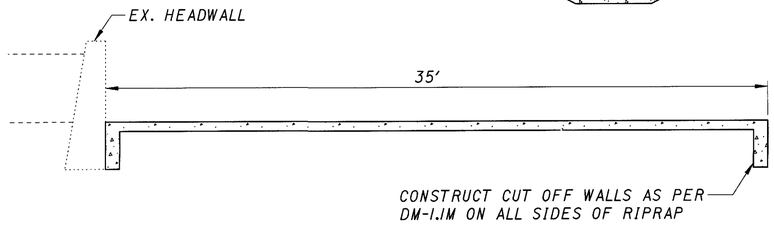

OUTLET

RCP TYPE A WITH FILTER

20 x 3 = 60 SQ. FEET
2 x 20 x 4.47 = 178.8 SQ. FEET
238.8 SQ. FEET
x 3
/ 27
26.53 CU. YARDS

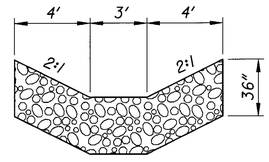

CALCULATED PS CHECKED WJC

DRAINAGE CALCULATIONS

MED - 71 - 15.78

139
940

7885DMD.DGN 12/7/99 CAR 2

(29-D) SEE P&P SHEET NO. 178 ; DRAINAGE DETAIL SHEET NO. 518

ROCK CHANNEL PROTECTION CALCULATION

STA. 902+12, LT.

RCP TYPE A WITH FILTER

20 x 4 =	80	SQ. FEET
2 x 20 x 4.47 =	178.8	SQ. FEET
	258.8	SQ. FEET
x	3	
/	27	
	28.76	CU. YARDS

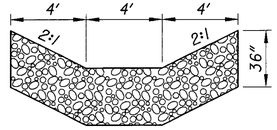

(30-D) SEE P&P SHEET NO. 178

ROCK CHANNEL PROTECTION CALCULATION

STA. 903+20, RT. TO STA. 905+20, RT.

RIPRAP USING 6" REINFORCED CONCRETE PAD

25 x 4 =	100	SQ. FEET
25 x 8.94 =	223.5	SQ. FEET
0.5 x (25 + 20) x 8.94 =	201.15	SQ. FEET
	524.65	SQ. FEET
/	9	
	58.29	SQ. YARDS

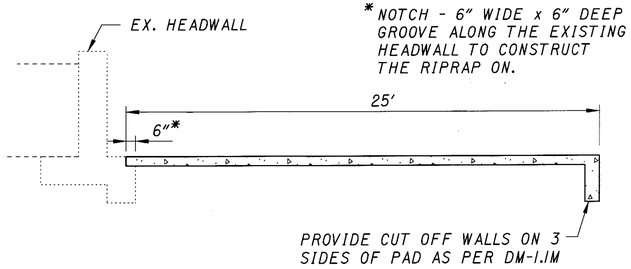

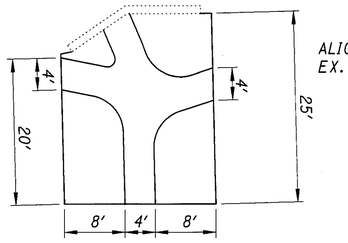

ALIGN FLOW LINE WITH EX. DITCH (TYP.)

RCP TYPE C WITH FILTER

BACK

105 x 4 =	420	SQ. FEET
2 x 105 x 4.12 =	865.2	SQ. FEET

AHEAD

80 x 4 =	320	SQ. FEET
2 x 80 x 4.12 =	659.2	SQ. FEET
	2264.4	SQ. FEET
x	1.5	
/	27	
	125.8	CU. YARDS

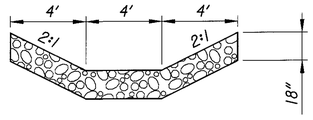

(32-D) SEE P&P SHEET NO. 178 , DRAINAGE DETAIL SHEET NO. 513

ROCK CHANNEL PROTECTION CALCULATION

STA. 913+00, LT. TO STA. 915+65, LT.

RCP TYPE B WITH FILTER - DITCH

150x 4 =	600	SQ. FEET
2 x 150 x 4.12 =	1,236	SQ. FEET
100 x 4 =	400	SQ. FEET
2 x 100 x 4.12 =	824	SQ. FEET
	3,060	SQ. FEET
x	2.5	
/	27	
	283.33	CU. YARDS

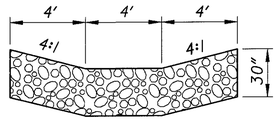

RCP TYPE A WITH FILTER - OUTLET

50 x 5 =	250	SQ. FEET
2 x 50 x 4.12 =	412	SQ. FEET
	662	SQ. FEET
x	3	
/	27	
	73.56	CU. YARDS

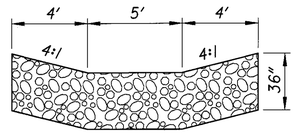

(34-D) SEE P&P SHEET NO. 179 , DRAINAGE DETAIL SHEET NO. 513

ROCK CHANNEL PROTECTION CALCULATION

STA. 915+45, RT. TO STA. 917+25, RT.

RIPRAP USING 6" REINFORCED CONCRETE PAD

40 x 4 =	160	SQ. FEET
2 x 40 x 4.47 =	357.6	SQ. FEET
	517.6	SQ. FEET
/	9	
	57.51	SQ. YARDS

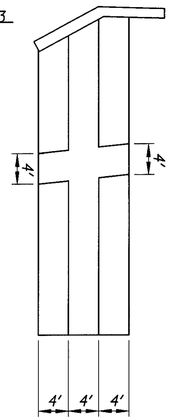

ALIGN FLOWLINES WITH EXISTING DITCH (TYP.)

* NOTCH - 6" WIDE x 6" DEEP GROOVE ALONG THE PROPOSED HEADWALL TO CONSTRUCT THE RIPRAP ON.

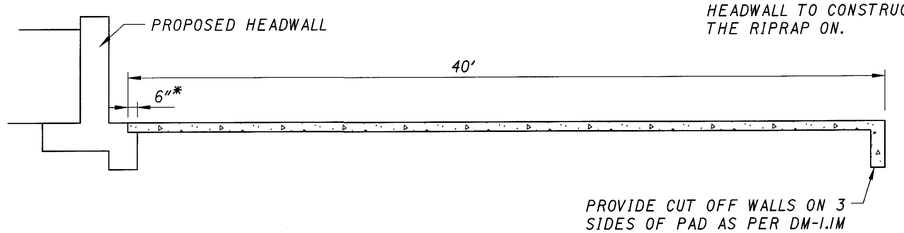

RCP TYPE B WITH FILTER

160 x 4 =	640	SQ. FEET
2 x 160 x 4.12 =	1318.4	SQ. FEET
	1958.4	SQ. FEET
x	2.5	
/	27	
	181.33	CU. YARDS

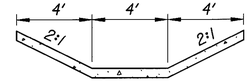

(36-D) SEE P&P SHEET NO. 179 , DRAINAGE DETAIL SHEET NO. 513

ROCK CHANNEL PROTECTION CALCULATION

STA. 921+88, LT.

RCP TYPE B WITH FILTER

OUTLET

25 x 4 =	100	SQ. FEET
2 x 25 x 2.06 =	103	SQ. FEET

DITCH

10 x 4 =	40	SQ. FEET
10 x 4 =	40	SQ. FEET
2 x 10 x 2.06 =	41.2	SQ. FEET
2 x 10 x 2.06 =	41.2	SQ. FEET
	365.4	SQ. FEET
x	2.5	
/	27	
	33.83	CU. YARDS

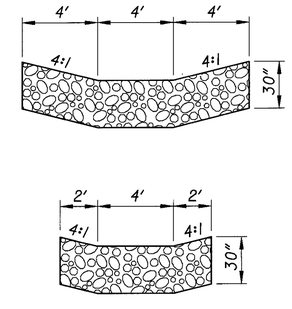

CALCULATED PS CHECKED WJC

DRAINAGE CALCULATIONS

MED - 71 - 15.78

140/940

7885DMD.DGN 12/7/99 CAR 3

(39-D) SEE P&P SHEET NO. 180 , DRAINAGE DETAIL NO. 514, 519

ROCK CHANNEL PROTECTION CALCULATION

STA. 932+25, LT. TO STA. 932+62, RT.

RIPRAP USING 6" REINFORCED CONCRETE PAD

64 x 4 =	256	SQ. FEET
2 x 64 x 2.24 =	286.72	SQ. FEET
15 x 4 =	60	SQ. FEET
2 x 15 x 2.24 =	67.2	SQ. FEET
20 x 4 =	80	SQ. FEET
2 x 20 x 2.24 =	89.6	SQ. FEET
	839.52	SQ. FEET
/	9	
	93.28	SQ. YARDS

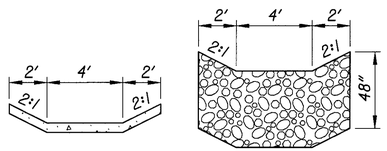

OUTLET

RCP TYPE A WITH FILTER

30 x 4 =	120	SQ. FEET
2 x 30 x 2.24 =	134.4	SQ. FEET
10 x 4 =	40	SQ. FEET
2 x 10 x 2.24 =	44.8	SQ. FEET
10 x 4 =	40	SQ. FEET
2 x 10 x 2.24 =	44.8	SQ. FEET
	424	SQ. FEET
x	4	
/	27	
	62.81	CU. YARDS

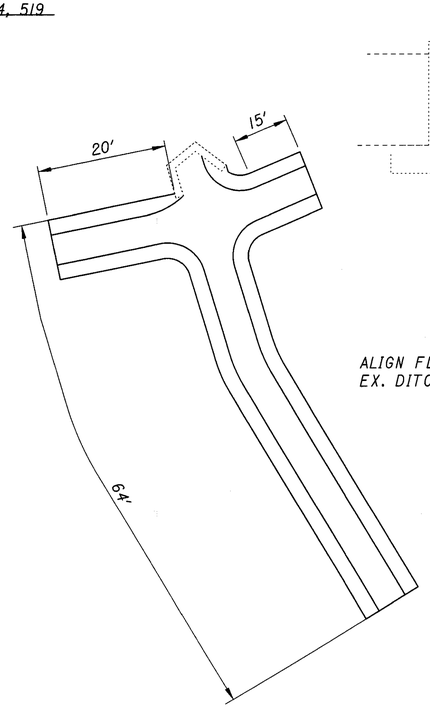

ALIGN FLOW LINE WITH EX. DITCH (TYP.)

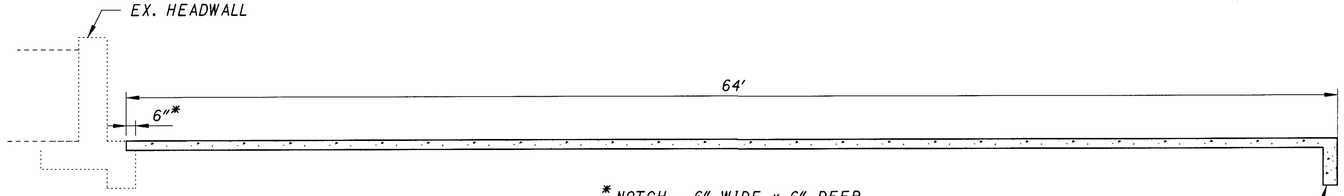

*NOTCH - 6" WIDE x 6" DEEP GROOVE ALONG THE EXISTING HEADWALL TO CONSTRUCT THE RIPRAP ON.

PROVIDE CUT OFF WALLS ON 3 SIDES OF PAD AS PER DM-1.IM

(38-D) SEE P&P SHEET NO. 180 , DRAINAGE DETAIL SHEET NO. 513

ROCK CHANNEL PROTECTION CALCULATION

STA. 931+68, LT.

RCP TYPE C WITH FILTER

6 x 6 =	36	SQ. FEET
	36	SQ. FEET
x	1.5	
/	27	
	2	CU. YARDS

(40-D) SEE P&P SHEET NO. 181

ROCK CHANNEL PROTECTION CALCULATION

STA. 944+68, LT.

RCP TYPE C WITH FILTER

6 x 6 =	36	SQ. FEET
	36	SQ. FEET
x	1.5	
/	27	
	2	CU. YARDS

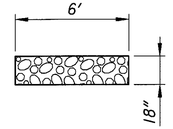

(41-D) SEE P&P SHEET NO. 181 , DRAINAGE DETAIL SHEET NO. 514

ROCK CHANNEL PROTECTION CALCULATION

STA. 943+45, RT.

RIPRAP USING 6" REINFORCED CONCRETE PAD

5 x 4 =	20	SQ. FEET
20 x 4 =	80	SQ. FEET
2 x 20 x 2.06 =	82.4	SQ. FEET
	182.4	SQ. FEET
/	9	
	20.27	SQ. YARDS

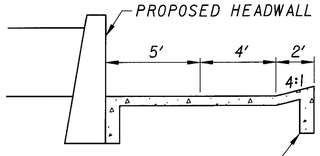

CONSTRUCT CUT OFF WALLS AS PER DM-1.IM ON ALL SIDES OF RIPRAP

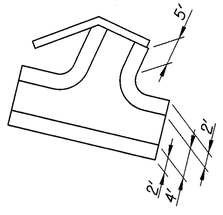

ALIGN FLOW LINE WITH EX. DITCH (TYP.)

RCP TYPE A WITH FILTER

15 x 8 =	120	SQ. FEET
	120	SQ. FEET
x	3	
/	27	
	13.33	CU. YARDS

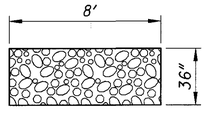

(41A-D) SEE P&P SHEET NO. 181 , DRAINAGE DETAIL SHEET NO. 515

ROCK CHANNEL PROTECTION CALCULATION

STA. 947+50, RT. TO STA. 947+50 LT.

RIPRAP USING 6" REINFORCED CONCRETE PAD

10 x 4 =	40	SQ. FEET
2 x 10 x 2.06 =	41.2	SQ. FEET
6 x 4 =	24	SQ. FEET
2 x 6 x 2.06 =	24.72	SQ. FEET
	129.97	SQ. FEET
/	9	
	14.44	SQ. YARDS

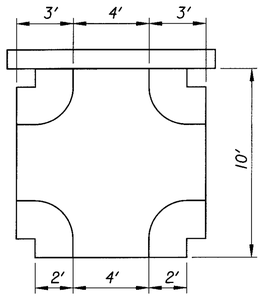

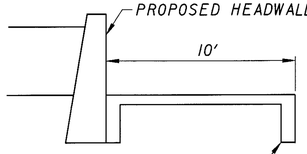

CONSTRUCT CUT OFF WALLS AS PER DM-1.IM ON ALL SIDES OF RIPRAP

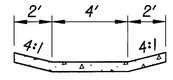

OUTLET

RCP TYPE B WITH FILTER

14 x 6 =	84	SQ. FEET
	84	SQ. FEET
x	2.5	
/	27	
	7.78	CU. YARDS

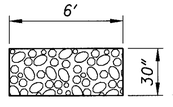

CALCULATED PS CHECKED WJC

DRAINAGE CALCULATIONS

MED - 71 - 15.78

141 / 940

7885DMD.DGN 12/7/99 CAR 4

(42-D) SEE P&P SHEET NO. 182 ; DRAINAGE DETAIL SHEET NO. 515

ROCK CHANNEL PROTECTION CALCULATION

STA. 952+68, RT. TO STA. 952+68 LT.

RIPRAP USING 6" REINFORCED CONCRETE PAD

20 x 4 =	80	SQ. FEET
2 x 20 x 2.06 =	82.4	SQ. FEET
16 x 4 =	64	SQ. FEET
2 x 16 x 2.06 =	65.92	SQ. FEET
	292.32	SQ. FEET
/	9	
	32.48	SQ. YARDS

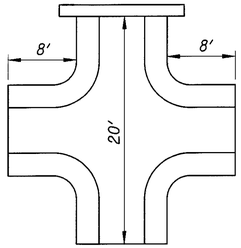

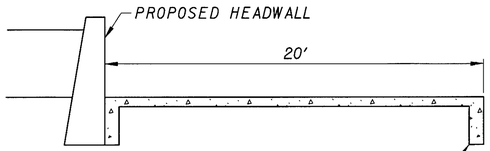

ALIGN FLOW LINE WITH EX. DITCH (TYP.)

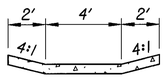

OUTLET

RCP TYPE A WITH FILTER

6 x 6 =	36	SQ. FEET
	36	SQ. FEET
x	3	
/	27	
	4	CU. YARDS

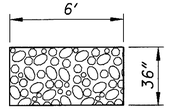

(43-D) SEE P&P SHEET NO. 182 ; DRAINAGE DETAIL SHEET NO. 516

ROCK CHANNEL PROTECTION CALCULATION

STA. 955+60, LT.

RCP TYPE B WITH FILTER

20 x 4 =	80	SQ. FEET
2 x 20 x 1.11 =	44.4	SQ. FEET
15 x 4 =	60	SQ. FEET
2 x 15 x 1.11 =	33.3	SQ. FEET
	217.7	SQ. FEET
x	2.5	
/	27	
	20.16	CU. YARDS

(52-D) SEE P&P SHEET NO. 184-185

ROCK CHANNEL PROTECTION CALCULATION

STA. 988+40, LT. OUTLET FOR STRUCTURE CATCH BASIN

RCP TYPE C WITH FILTER

6 x 6 =	36	SQ. FEET
	36	SQ. FEET
x	1.5	
/	27	
	2	CU. YARDS



(54-D) SEE P&P SHEET NO. 184-185

ROCK CHANNEL PROTECTION CALCULATION

STA. 989+30, RT. OUTLET FOR STRUCTURE CATCH BASIN

RCP TYPE C WITH FILTER

6 x 6 =	36	SQ. FEET
	36	SQ. FEET
x	1.5	
/	27	
	2	CU. YARDS

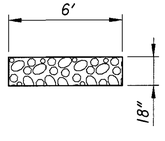

(55-D) SEE P&P SHEET NO. 185

ROCK CHANNEL PROTECTION CALCULATION

STA. 993+68, RT.

RCP TYPE B WITH FILTER

10 x 4 =	40	SQ. FEET
	40	SQ. FEET
x	2.5	
/	27	
	3.70	CU. YARDS

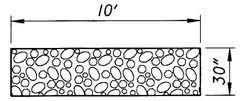

(57-D) SEE P&P SHEET NO. 185 ; DRAINAGE DETAIL SHEET NO, 520

ROCK CHANNEL PROTECTION CALCULATION

STA. 999+20, RT. TO STA. 999+35, RT.

RCP TYPE B WITH FILTER

14 x 10 =	140	SQ. FEET
20 x 10 =	200	SQ. FEET
	340	SQ. FEET
x	4	
/	27	
	50.37	CU. YARDS

RIPRAP USING 6" REINFORCED CONCRETE PAD

5 x 10 =	50.0	SQ. FEET
	50.0	SQ. FEET
/	9	
	5.56	SQ. YARDS

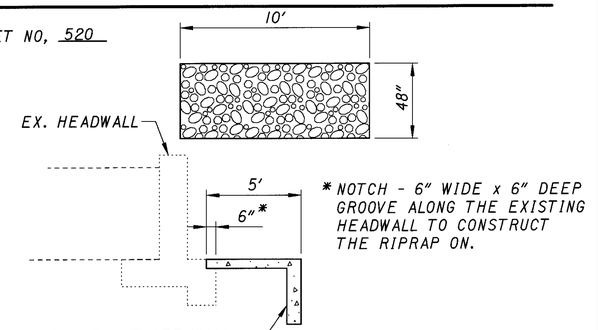

*NOTCH - 6" WIDE x 6" DEEP GROOVE ALONG THE EXISTING HEADWALL TO CONSTRUCT THE RIPRAP ON.

(58-D) SEE P&P SHEET NO. 186 ; DRAINAGE DETAIL SHEET NO. 521

ROCK CHANNEL PROTECTION CALCULATION

STA. 1007+18, RT.

RCP TYPE B WITH FILTER

30 x 6 =	180	SQ. FEET
2 x 5 x 6 =	60	SQ. FEET
	240	SQ. FEET
x	2.5	
/	27	
	22.22	CU. YARDS

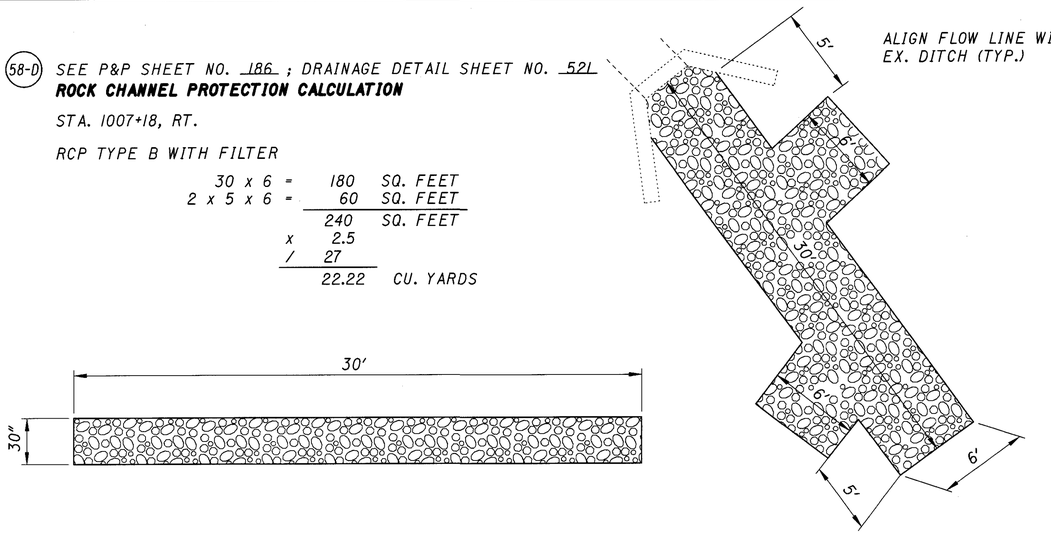

(61A-D) SEE P&P SHEET NO. 186-187

ROCK CHANNEL PROTECTION CALCULATION

STA. 1013+20, ℄ I.R. 71; STA. 49+85 WILBUR ROAD OUTLET FOR STRUCTURE CATCH BASIN

RCP TYPE B WITH FILTER

6 x 6 =	36	SQ. FEET
	36	SQ. FEET
x	2.5	
/	27	
	3.34	CU. YARDS

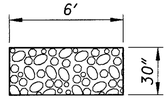

CALCULATED PS CHECKED WJC

DRAINAGE CALCULATIONS

MED - 71 - 15.78

142 / 940

7885DMD.DGN 12/1/99 CAR 5

(60-D) SEE P&P SHEET NO. 187

ROCK CHANNEL PROTECTION CALCULATION

STA. 1013+95, LT. OUTLET FOR STRUCTURE CATCH BASIN

RCP TYPE C WITH FILTER

6 x 6 =	36	SQ. FEET
	36	SQ. FEET
x	1.5	
/	27	
	2	CU. YARDS

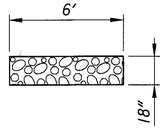

(64-D) SEE P&P SHEET NO. 187

ROCK CHANNEL PROTECTION CALCULATION

STA. 1013+90, RT. OUTLET FOR STRUCTURE CATCH BASIN

RCP TYPE C WITH FILTER

6 x 6 =	36	SQ. FEET
	36	SQ. FEET
x	1.5	
/	27	
	2	CU. YARDS

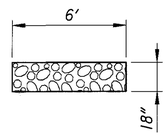

(68-D) SEE P&P SHEET NO. 189 , DRAINAGE DETAIL SHEET NO. 522

ROCK CHANNEL PROTECTION CALCULATION

STA. 1048+70, RT.

RIPRAP USING 6" REINFORCED CONCRETE PAD

10 x 4 =	40	SQ. FEET
2 x 10 x 2.23 =	44.6	SQ. FEET
	84.6	SQ. FEET
/	9	
	9.4	SQ. YARDS

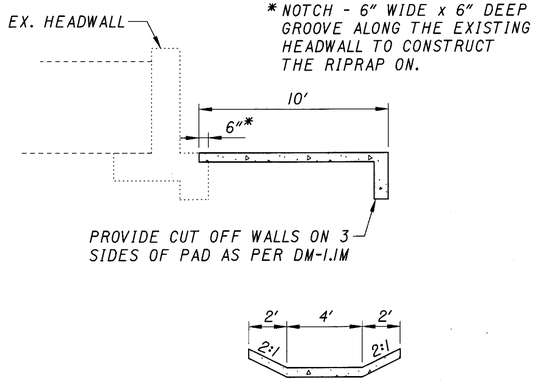

(69-D) SEE P&P SHEET NO. 189 ; DRAINAGE SHEET NO. 522

ROCK CHANNEL PROTECTION CALCULATION

STA. 1049+30, LT. TO STA. 1050+55, LT.

RIPRAP USING 6" REINFORCED CONCRETE PAD

30 x 4 =	120	SQ. FEET
2 x 30 x 2.06 =	123.6	SQ. FEET
30 x 4 =	64	SQ. FEET
2 x 16 x 2.06 =	65.92	SQ. FEET
30 x 4 =	64	SQ. FEET
2 x 16 x 2.06 =	65.92	SQ. FEET
	503.44	SQ. FEET
/	9	
	55.94	SQ. YARDS

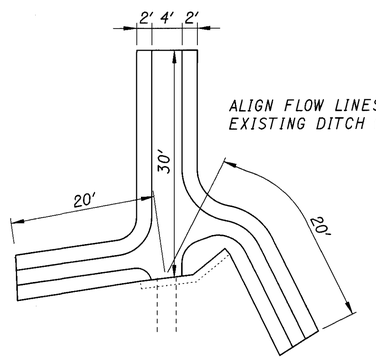

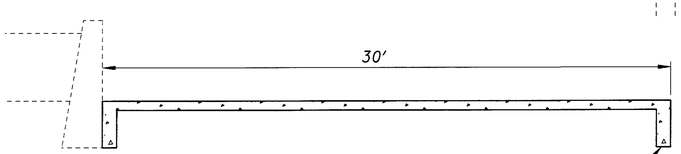

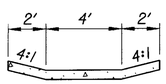

(71-D) SEE P&P SHEET NO. 190

ROCK CHANNEL PROTECTION CALCULATION

STA. 1054+05, LT. OUTLET FOR STRUCTURE CATCH BASIN

RCP TYPE C WITH FILTER

6 x 6 =	36	SQ. FEET
	36	SQ. FEET
x	1.5	
/	27	
	2	CU. YARDS

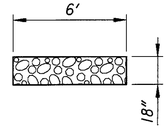

(72-D) SEE P&P SHEET NO. 190

ROCK CHANNEL PROTECTION CALCULATION

STA. 1053+90, RT. OUTLET FOR STRUCTURE CATCH BASIN

RCP TYPE C WITH FILTER

6 x 6 =	36	SQ. FEET
	36	SQ. FEET
x	1.5	
/	27	
	2	CU. YARDS

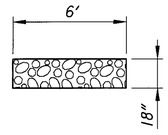

(74-D) SEE P&P SHEET NO. 191

ROCK CHANNEL PROTECTION CALCULATION

STA. 1067+40, RT.

RCP TYPE B WITH FILTER

10 x 4 =	40	SQ. FEET
	40	SQ. FEET
x	2.5	
/	27	
	3.7	CU. YARDS

DITCHES

RCP TYPE B WITH FILTER

BACK

60 x 4 =	240	SQ. FEET
2 x 60 x 2.06 =	247.2	SQ. FEET

AHEAD

30 x 4 =	120	SQ. FEET
2 x 30 x 2.06 =	123.6	SQ. FEET
	730.8	SQ. FEET
x	2.5	
/	27	
	67.67	CU. YARDS

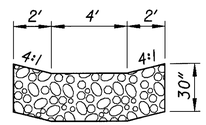

RCP TYPE C WITH FILTER

30 x 4 =	120	SQ. FEET
2 x 30 x 2.06 =	123.6	SQ. FEET
	243.6	SQ. FEET
x	1.5	
/	27	
	13.53	CU. YARDS

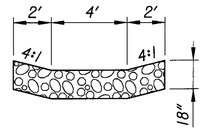

CALCULATED PS
CHECKED WJC

DRAINAGE CALCULATIONS

MED - 71 - 15.78

143
940

7885DMD.DGN 12/7/99 CAR 6

(78-D) SEE P&P SHEET NO. 191

ROCK CHANNEL PROTECTION CALCULATION

STA. 1075+85, RT.

RCP TYPE B WITH FILTER

10 x 4 =	40	SQ. FEET
30 x 4 =	120	SQ. FEET
2 x 30 x 2.24 =	134.4	SQ. FEET
	294	SQ. FEET
x	2.5	
/	27	
	27.22	CU. YARDS

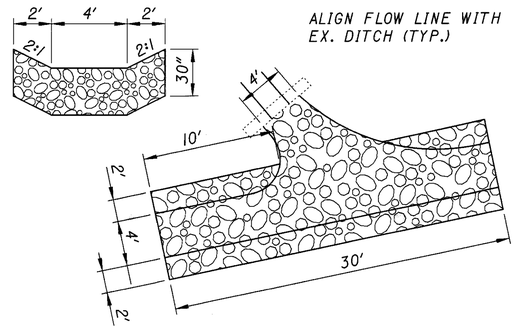

(82-D) SEE P&P SHEET NO. 192 ; DRAINAGE DETAIL SHEET NO. 523

ROCK CHANNEL PROTECTION CALCULATION

STA. 1082+95, RT.

RCP TYPE C WITH FILTER

10 x 4 =	40	SQ. FEET
	40	SQ. FEET
x	2.5	
/	27	
	3.70	CU. YARDS

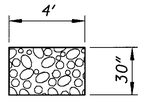

(85-D) SEE P&P SHEET NO. 194

ROCK CHANNEL PROTECTION CALCULATION

STA. 1102+60, LT. OUTLET FOR STRUCTURE CATCH BASIN

RCP TYPE C WITH FILTER

6 x 6 =	36	SQ. FEET
	36	SQ. FEET
x	1.5	
/	27	
	2	CU. YARDS

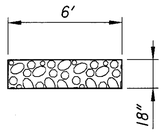

(87-D) SEE P&P SHEET NO. 194

ROCK CHANNEL PROTECTION CALCULATION

STA. 1103+10, RT. OUTLET FOR STRUCTURE CATCH BASIN

RCP TYPE C WITH FILTER

6 x 6 =	36	SQ. FEET
	36	SQ. FEET
x	1.5	
/	27	
	2	CU. YARDS

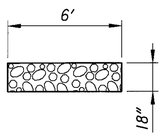

(90-D) SEE P&P SHEET NO. 195

ROCK CHANNEL PROTECTION CALCULATION

STA. 1116+00, LT. TO STA. 1116+80, LT.

RCP TYPE A WITH FILTER

MAIN DITCH		
100 x 9 =	900	SQ. FEET
SIDE DITCH		
10 x 6 =	60	SQ. FEET
	960	SQ. FEET
x	3	
/	27	
	106.67	CU. YARDS

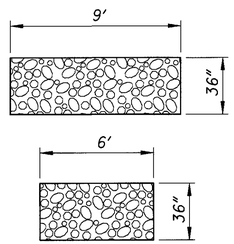

(92-D) SEE P&P SHEET NO. 196

ROCK CHANNEL PROTECTION CALCULATION

STA. 1127+30, RT.

RCP TYPE B WITH FILTER

10 x 5 =	50	SQ. FEET
	50	SQ. FEET
x	2.5	
/	27	
	4.63	CU. YARDS

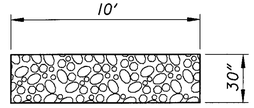

(102-D) SEE P&P SHEET NO. 198

ROCK CHANNEL PROTECTION CALCULATION

STA. 1156+85, RT. TO STA. 1158+80, RT.

RIPRAP USING 6" REINFORCED CONCRETE PAD

30 x 4 =	120	SQ. FEET
2 x 30 x 2.06 =	134.4	SQ. FEET
15 x 4 =	60	SQ. FEET
15 x 4 =	60	SQ. FEET
2 x 30 x 2.24 =	134.4	SQ. FEET
15 x 4 =	60	SQ. FEET
2 x 30 x 2.24 =	134.4	SQ. FEET
	703.2	SQ. FEET
/	9	
	78.13	SQ. YARDS

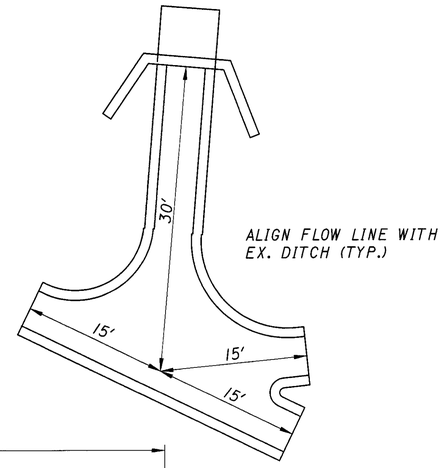

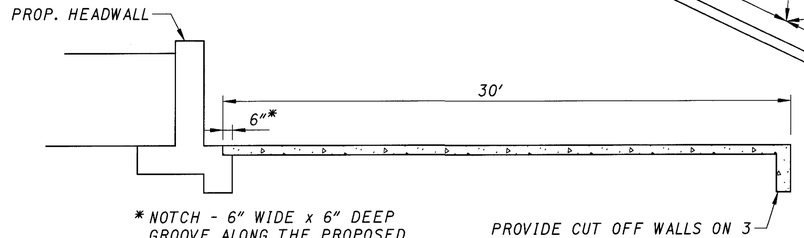

* NOTCH - 6" WIDE x 6" DEEP GROOVE ALONG THE PROPOSED HEADWALL TO CONSTRUCT THE RIPRAP ON.

PROVIDE CUT OFF WALLS ON 3 SIDES OF PAD AS PER DM-1.1M

RCP TYPE B WITH FILTER

70 x 4 =	280	SQ. FEET
2 x 70 x 2.24 =	313.6	SQ. FEET
10 x 4 =	40	SQ. FEET
2 x 10 x 2.24 =	44.8	SQ. FEET
130 x 4 =	520	SQ. FEET
2 x 130 x 2.24 =	582.4	SQ. FEET
	1780.8	SQ. FEET
x	2.5	
/	27	
	164.89	CU. YARDS

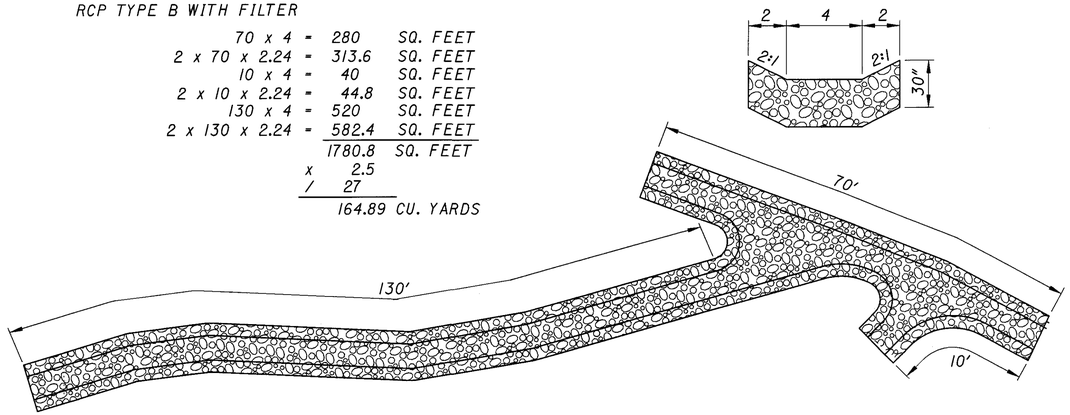

CALCULATED PS CHECKED WJC

DRAINAGE CALCULATIONS

MED - 71 - 15.78

144
940

7885DMD.DGN 12/7/99 CAR 7

(112-D) SEE P&P SHEET NO. 201 ; DRAINAGE SHEET NO. 524

ROCK CHANNEL PROTECTION CALCULATION

STA. 1193+00, LT.

RCP TYPE A WITH FILTER

OUTLET

30 x 7 = 210 SQ. FEET

SIDE DITCH

5 x 8 = 40 SQ. FEET

250 SQ. FEET

x 4

/ 27

37.04 CU. YARDS

RIPRAP USING 6" REINFORCED CONCRETE PAD

5 x 7 = 35.0 SQ. FEET

35.0 SQ. FEET

/ 9

3.89 SQ. YARDS

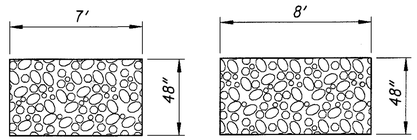

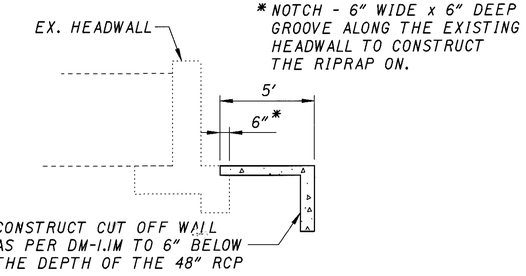

* NOTCH - 6" WIDE x 6" DEEP GROOVE ALONG THE EXISTING HEADWALL TO CONSTRUCT THE RIPRAP ON.

(114-D) SEE P&P SHEET NO. 201 , DRAINAGE DETAIL SHEET NO. 511

ROCK CHANNEL PROTECTION CALCULATION

STA. 1198+41, LT.

RCP TYPE C WITH FILTER

10 x 4 = 40 SQ. FEET

40 SQ. FEET

x 1.5

/ 27

2.22 CU. YARDS

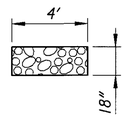

(115-D) SEE P&P SHEET NO. 201

ROCK CHANNEL PROTECTION CALCULATION

STA. 1199+20, LT.

RCP TYPE A WITH FILTER

OUTLET

10 x 11 = 275 SQ. FEET

DITCH

30 x 11 = 330 SQ. FEET

30 x 2.06 = 61.8 SQ. FEET

666.8 SQ. FEET

x 4

/ 27

98.79 CU. YARDS

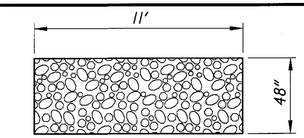

(117-D) SEE P&P SHEET NO. 201

ROCK CHANNEL PROTECTION CALCULATION

STA. 1200+48, RT.

RIPRAP USING 6" REINFORCED CONCRETE PAD

47 x 7 = 329 SQ. FEET

2 x 47 x 2.23 = 209.62 SQ. FEET

20 x 6 = 120 SQ. FEET

2 x 20 x 2.23 = 89.2 SQ. FEET

83.09 SQ. FEET

/ 9

83.09 SQ. YARDS

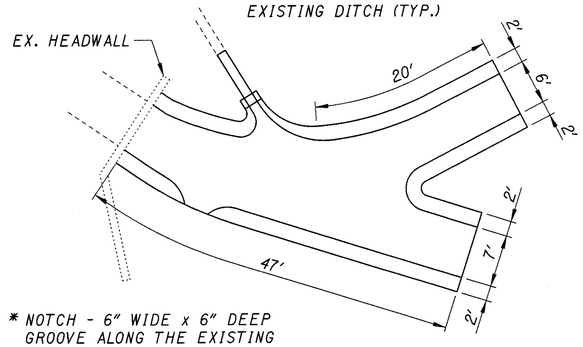

* NOTCH - 6" WIDE x 6" DEEP GROOVE ALONG THE EXISTING HEADWALL TO CONSTRUCT THE RIPRAP ON.

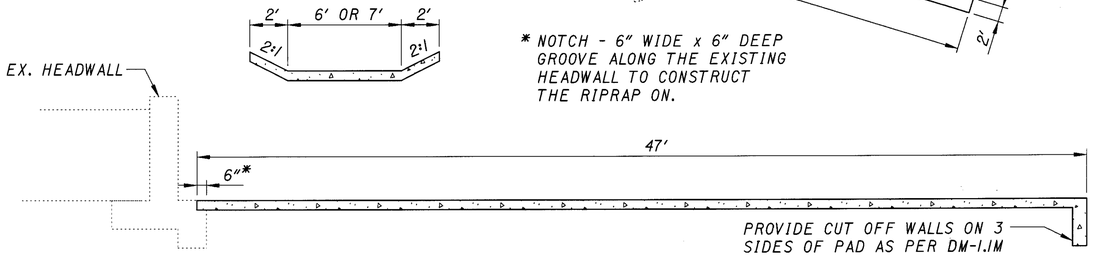

(118-D) SEE P&P SHEET NO. 202 ; DRAINAGE DETAIL SHEET NO. 525

ROCK CHANNEL PROTECTION CALCULATION

STA. 1201+65, LT.

RCP TYPE A WITH FILTER

DITCH

20 x 4 = 80 SQ. FEET

2 x 20 x 2.24 = 89.6 SQ. FEET

169.6 SQ. FEET

x 4

/ 27

25.13 CU. YARDS

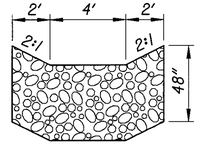

PIPE OUTLET

RIPRAP USING 6" REINFORCED CONCRETE PAD

5 x 4 = 20 SQ. FEET

2 x 5 x 2.24 = 22.4 SQ. FEET

42.4 SQ. FEET

/ 9

4.77 SQ. YARDS

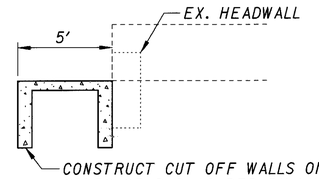

(120-D) SEE P&P SHEET NO. 202

ROCK CHANNEL PROTECTION CALCULATION

STA. 1205+75, RT. NORTHBOUND REST AREA

RCP TYPE B WITH FILTER

20 x 6 = 120 SQ. FEET

120 SQ. FEET

x 2.5

/ 27

11.11 CU. YARDS

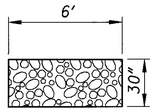

(131-D) SEE P&P SHEET NO. 204

ROCK CHANNEL PROTECTION CALCULATION

STA. 1230+79, RT.

RIPRAP USING 6" REINFORCED CONCRETE PAD

60 x 5 = 300 SQ. FEET

2 x 60 x 2.06 = 247.2 SQ. FEET

10 x 4 = 40 SQ. FEET

2 x 10 x 2.06 = 41.2 SQ. FEET

10 x 4 = 40 SQ. FEET

2 x 10 x 2.06 = 41.2 SQ. FEET

709.6 SQ. FEET

/ 9

78.84 SQ. YARDS

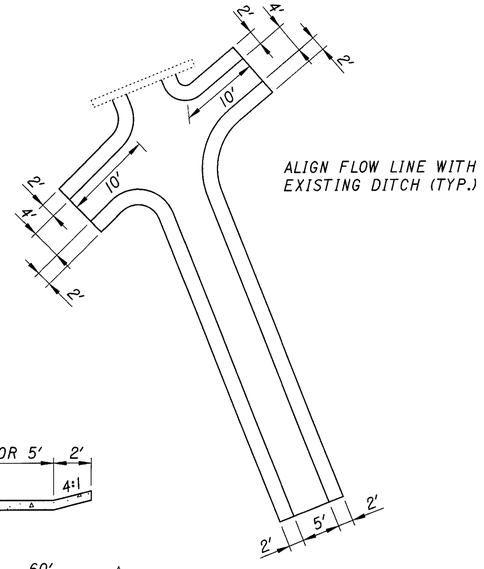

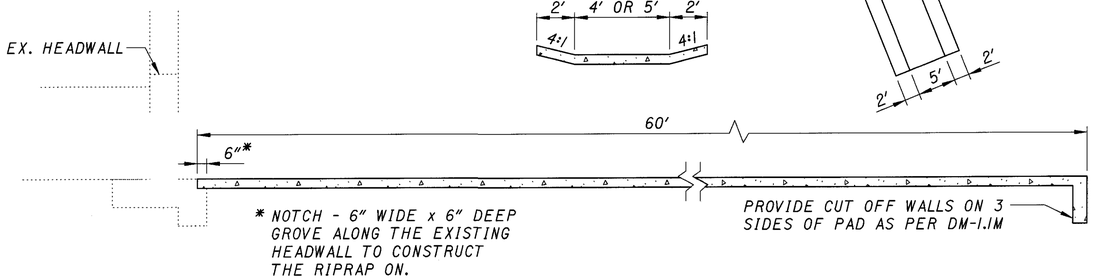

CALCULATED PS CHECKED WJC

DRAINAGE CALCULATIONS

MED - 71 - 15.78

145 940

7885DMD.DGN 12/7/99 CAR 8

(134-D) SEE P&P SHEET NO. 205 ; DRAINAGE DETAIL SHEET NO. 526

ROCK CHANNEL PROTECTION CALCULATION

STA. 1240+74, LT.

RCP TYPE A WITH FILTER

25 x 10 = 250 SQ. FEET
250 SQ. FEET
x 4
/ 27
37.04 CU. YARDS

OUTLET

RIPRAP USING 6" REINFORCED CONCRETE PAD

5 x 10 = 50.0 SQ. FEET
/ 9
5.56 SQ. YARDS

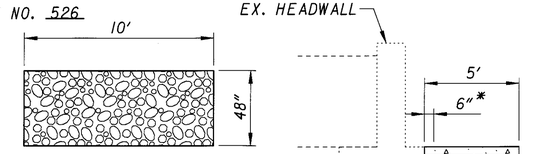

* NOTCH - 6" WIDE x 6" DEEP GROOVE ALONG THE EXISTING HEADWALL TO CONSTRUCT THE RIPRAP ON.

(135-D) SEE P&P SHEET NO. 205

ROCK CHANNEL PROTECTION CALCULATION

STA. 1242+34, LT.

RCP TYPE C WITH FILTER

OUTLET
4 x 4 = 16 SQ. FEET
2 x 4 x 2.06 = 16.48 SQ. FEET

DITCH
20 x 4 = 80 SQ. FEET
2 x 20 x 4.12 = 164.8 SQ. FEET
277.28 SQ. FEET
x 1.5
/ 27
15.4 CU. YARDS

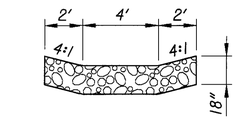

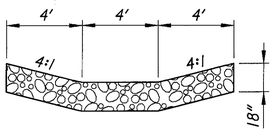

(137-D) SEE P&P SHEET NO. 206 ; DRAINAGE DETAIL SHEET NO. 527

ROCK CHANNEL PROTECTION CALCULATION

STA. 1263+40, LT.

RCP TYPE A WITH FILTER

15 x 7 = 150 SQ. FEET
150 SQ. FEET
x 4
/ 27
22.22 CU. YARDS

OUTLET

RIPRAP USING 6" REINFORCED CONCRETE PAD

5 x 7 = 35.0 SQ. FEET
/ 9
4.11 SQ. YARDS

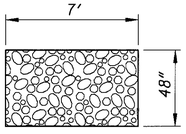

* NOTCH - 6" WIDE x 6" DEEP GROOVE ALONG THE EXISTING HEADWALL TO CONSTRUCT THE RIPRAP ON.

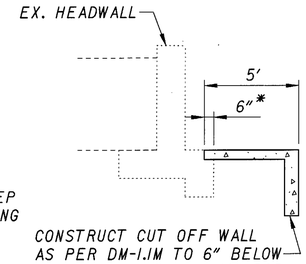

(139-D) SEE P&P SHEET NO. 207

ROCK CHANNEL PROTECTION CALCULATION

STA. 1267+34, LT.

RCP TYPE B WITH FILTER

15 x 6 = 90 SQ. FEET
90 SQ. FEET
x 2.5
/ 27
8.33 CU. YARDS

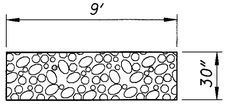

(140-D) SEE P&P SHEET NO. 207

ROCK CHANNEL PROTECTION CALCULATION

STA. 1270+00, RT.

RCP TYPE B WITH FILTER

6 x 6 = 36 SQ. FEET
36 SQ. FEET
x 1.5
/ 27
2 CU. YARDS

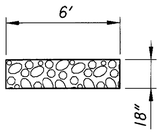

(142-D) SEE P&P SHEET NO. 207

ROCK CHANNEL PROTECTION CALCULATION

STA. 1270+00, LT.

RCP TYPE C WITH FILTER

6 x 6 = 36 SQ. FEET
36 SQ. FEET
x 1.5
/ 27
2 CU. YARDS

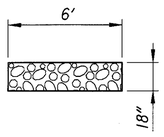

(143-D) SEE P&P SHEET NO. 207 ; DRAINAGE DETAIL SHEET NO. 528

ROCK CHANNEL PROTECTION CALCULATION

STA. 1271+68, LT.

RCP TYPE B WITH FILTER

25 x 4 = 100 SQ. FEET
2 x 25 x 2.24 = 112 SQ. FEET
212 SQ. FEET
x 3
/ 27
23.56 CU. YARDS

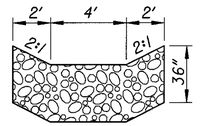

(144-D) SEE P&P SHEET NO. 208

ROCK CHANNEL PROTECTION CALCULATION

STA. 1278+34, LT.

RCP TYPE A WITH FILTER

30 x 15 = 450 SQ. FEET
450 SQ. FEET
x 3
/ 27
50 CU. YARDS

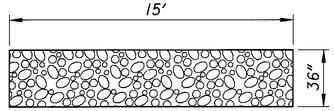

(167-D) SEE P&P SHEET NO. 183

ROCK CHANNEL PROTECTION CALCULATION

STA. 51+10, RT. GRANGER ROAD

RCP TYPE C WITH FILTER

6 x 6 = 36 SQ. FEET
36 SQ. FEET
x 1.5
/ 27
2 CU. YARDS

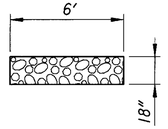

(168-D) SEE P&P SHEET NO. 183

ROCK CHANNEL PROTECTION CALCULATION

STA. 51+20.15, LT. GRANGER ROAD

RCP TYPE C WITH FILTER

6 x 6 = 36 SQ. FEET
36 SQ. FEET
x 1.5
/ 27
2 CU. YARDS

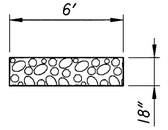

(169-D) SEE P&P SHEET NO. 194 , DRAINAGE DETAIL SHEET NO. 512

ROCK CHANNEL PROTECTION CALCULATION

STA. 899+00, 10' LT. S.R.3

RCP TYPE A WITH FILTER

37 x 10 = 370 SQ. FEET
370 SQ. FEET
x 4
/ 27
54.81 CU. YARDS

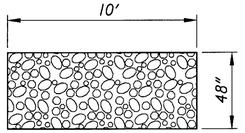

(171-D) SEE P&P SHEET NO. 198

ROCK CHANNEL PROTECTION CALCULATION

STA. 1161+61.27, LT. SOUTHBOUND REST AREA

RCP TYPE C WITH FILTER

6 x 6 = 36 SQ. FEET
36 SQ. FEET
x 1.5
/ 27
2 CU. YARDS

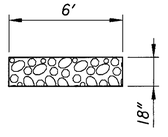

CALCULATED PS
CHECKED WJC

DRAINAGE CALCULATIONS

MED - 71 - 15.78

7885DMD.DGN 12/7/99 CAR 9

(175-D) SEE P&P SHEET NO. 207 , SEE DETAIL SHEET NO. 536

ROCK CHANNEL PROTECTION CALCULATION

STA. 48+75, LT. S.R. 303

RCP TYPE C WITH FILTER

15 x 4 =	60	SQ. FEET
	60	SQ. FEET
x	1.5	
/	27	
	3.33	CU. YARDS

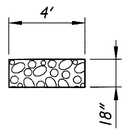

(178-D) SEE P&P SHEET NO. 207 , SEE DETAIL SHEET NO. 536

ROCK CHANNEL PROTECTION CALCULATION

STA. 48+80, RT. S.R. 303

RCP TYPE C WITH FILTER

15 x 4 =	60	SQ. FEET
	60	SQ. FEET
x	1.5	
/	27	
	3.33	CU. YARDS

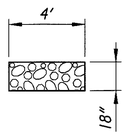

(180C-D) SEE P&P SHEET NO. 491-492 , SEE DETAIL SHEET NO. 516

ROCK CHANNEL PROTECTION CALCULATION

STA. 46+84.54, RT. S.R. 303 RAMP C-D

RIPRAP USING 6" REINFORCED CONCRETE PAD

20 x 4 =	80.0	SQ. FEET
20 x 2.24 =	44.8	SQ. FEET
11.5 x 3.16 =	36.34	SQ. FEET
6 x 2.5 =	15.0	SQ. FEET
2 x 6 x 3.35 =	40.2	SQ. FEET
	216.34	SQ. FEET
/	9	
	24.04	SQ. YARDS

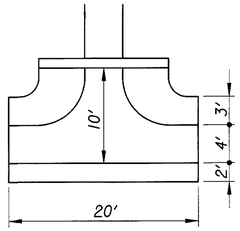

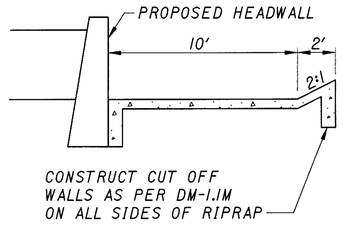

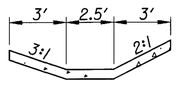

@ HEADWALL

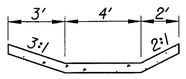

CHANNEL

BACK

RCP TYPE B WITH FILTER

50 x 4 =	200	SQ. FEET
50 x 2.24 =	112	SQ. FEET
50 x 3.16 =	158	SQ. FEET
	470	SQ. FEET
x	2.5	
/	27	
	43.52	CU. YARDS

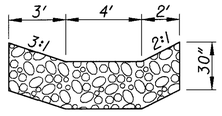

AHEAD

RCP TYPE B WITH FILTER

75 x 4 =	300	SQ. FEET
75 x 2.24 =	168	SQ. FEET
75 x 3.16 =	237	SQ. FEET
	705	SQ. FEET
x	2.5	
/	27	
	65.28	CU. YARDS

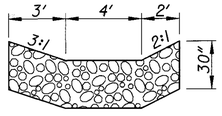

(170A-D) SEE P&P SHEET NO. 207 ; DETAIL SHEET NO, 535

ROCK CHANNEL PROTECTION CALCULATION

STA. 81+33, S.R. 3 RAMP B

RCP TYPE C WITH FILTER

6 x 6 =	36	SQ. FEET
	36	SQ. FEET
x	1.5	
/	27	
	2	CU. YARDS

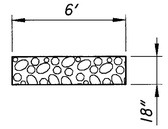

(170B-D) SEE P&P SHEET NO. 207 ; DETAIL SHEET NO. 535

ROCK CHANNEL PROTECTION CALCULATION

STA. 83+34.91, S.R. 3 RAMP C

RCP TYPE C WITH FILTER

6 x 6 =	36	SQ. FEET
	36	SQ. FEET
x	1.5	
/	27	
	2	CU. YARDS

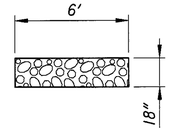

CALCULATED PS CHECKED WJC

DRAINAGE CALCULATIONS

MED - 71 - 15.78

146A
940

7885DMD.DGN 12/7/99 CAR 10

NORTHBOUND IR-71 - SUPERELEVATION TRANSITION IN - CURVE 1							
STATION	LT. E/P ELEV.	GRADE	PROFILE GRADE	GRADE	CROWN POINT	GRADE	RT. E/P ELEV.
856+74.00	1046.216	-0.016	1046.408	0.016	1046.600	-0.016	1046.408
856+84.00	1046.300	-0.016	1046.492	0.016	1046.684	-0.014	1046.511
856+94.00	1046.387	-0.016	1046.579	0.016	1046.771	-0.013	1046.617
857+04.00	1046.475	-0.016	1046.667	0.016	1046.851	-0.011	1046.725
857+14.00	1046.565	-0.016	1046.757	0.016	1046.949	-0.010	1046.834
857+24.00	1046.656	-0.016	1046.848	0.016	1047.040	-0.008	1046.944
857+34.00	1046.750	-0.016	1046.942	0.016	1047.134	-0.006	1047.057
857+44.00	1046.846	-0.016	1047.038	0.016	1047.230	-0.005	1047.172
857+54.00	1046.944	-0.016	1047.136	0.016	1047.328	-0.003	1047.290
857+64.00	1047.043	-0.016	1047.235	0.016	1047.427	-0.002	1047.408
857+74.00	1047.145	-0.016	1047.337	0.016	1047.529	0.000	1047.529
857+84.00	1047.248	-0.016	1047.440	0.016	1047.632	0.002	1047.651
857+94.00	1047.354	-0.016	1047.546	0.016	1047.738	0.003	1047.776
858+04.00	1047.461	-0.016	1047.653	0.016	1047.845	0.005	1047.903
858+14.00	1047.570	-0.016	1047.762	0.016	1047.954	0.006	1048.031
858+24.00	1047.681	-0.016	1047.873	0.016	1048.065	0.008	1048.161
858+34.00	1047.794	-0.016	1047.986	0.016	1048.178	0.010	1048.293
858+44.00	1047.909	-0.016	1048.101	0.016	1048.293	0.011	1048.427
858+54.00	1048.026	-0.016	1048.218	0.016	1048.410	0.013	1048.564
858+64.00	1048.145	-0.016	1048.337	0.016	1048.529	0.014	1048.702
858+74.00	1048.266	-0.016	1048.458	0.016	1048.650	0.016	1048.842
858+84.00	1048.370	-0.018	1048.581	0.018	1048.792	0.018	1049.004
858+86.00	1048.394	-0.018	1048.610	0.018	1048.825	0.018	1049.041

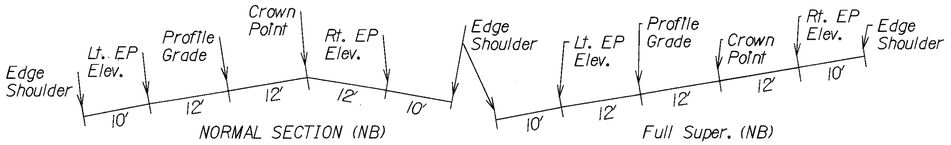

NORTHBOUND IR-71 - SUPERELEVATION TRANSITION OUT - CURVE 1							
STATION	LT. E/P ELEV.	GRADE	PROFILE GRADE	GRADE	CROWN POINT	GRADE	RT. E/P ELEV.
891+63.00	1119.034	-0.018	1119.250	0.018	1119.465	0.018	1119.681
891+65.00	1119.058	-0.018	1119.270	0.018	1119.481	0.018	1119.693
891+75.00	1119.195	-0.016	1119.387	0.016	1119.579	0.016	1119.771
891+85.00	1119.310	-0.016	1119.502	0.016	1119.694	0.014	1119.867
891+95.00	1119.422	-0.016	1119.614	0.016	1119.806	0.013	1119.960
892+05.00	1119.532	-0.016	1119.724	0.016	1119.916	0.011	1120.050
892+15.00	1119.639	-0.016	1119.831	0.016	1120.023	0.010	1120.138
892+25.00	1119.743	-0.016	1119.935	0.016	1120.127	0.008	1120.223
892+35.00	1119.854	-0.016	1120.037	0.016	1120.229	0.006	1120.306
892+45.00	1119.943	-0.016	1120.135	0.016	1120.327	0.005	1120.385
892+55.00	1120.040	-0.016	1120.232	0.016	1120.424	0.003	1120.462
892+65.00	1120.133	-0.016	1120.325	0.016	1120.517	0.002	1120.536
892+75.00	1120.224	-0.016	1120.416	0.016	1120.608	0.000	1120.608
892+85.00	1120.313	-0.016	1120.505	0.016	1120.697	-0.002	1120.678
892+95.00	1120.398	-0.016	1120.590	0.016	1120.782	-0.003	1120.744
893+05.00	1120.481	-0.016	1120.673	0.016	1120.865	-0.005	1120.807
893+15.00	1120.562	-0.016	1120.754	0.016	1120.946	-0.006	1120.869
893+25.00	1120.639	-0.016	1120.831	0.016	1121.023	-0.008	1120.927
893+35.00	1120.714	-0.016	1120.906	0.016	1121.098	-0.010	1120.983
893+45.00	1120.787	-0.016	1120.979	0.016	1121.171	-0.011	1121.037
893+55.00	1120.856	-0.016	1121.048	0.016	1121.240	-0.013	1121.086
893+65.00	1120.924	-0.016	1121.116	0.016	1121.308	-0.014	1121.135
893+75.00	1120.988	-0.016	1121.180	0.016	1121.372	-0.016	1121.180

SOUTHBOUND IR-71 - SUPERELEVATION TRANSITION IN - CURVE 1							
STATION	LT. E/P ELEV.	GRADE	CROWN POINT	GRADE	PROFILE GRADE	GRADE	RT. E/P ELEV.
856+74.00	1042.139	-0.016	1042.331	0.016	1042.139	-0.016	1041.947
856+84.00	1042.288	-0.016	1042.480	0.016	1042.307	-0.014	1042.134
856+94.00	1042.439	-0.016	1042.631	0.016	1042.477	-0.013	1042.323
857+04.00	1042.591	-0.016	1042.783	0.016	1042.649	-0.011	1042.515
857+14.00	1042.747	-0.016	1042.939	0.016	1042.824	-0.010	1042.709
857+24.00	1042.904	-0.016	1043.096	0.016	1043.000	-0.008	1042.904
857+34.00	1043.063	-0.016	1043.255	0.016	1043.187	-0.006	1043.101
857+44.00	1043.223	-0.016	1043.415	0.016	1043.357	-0.005	1043.299
857+54.00	1043.385	-0.016	1043.577	0.016	1043.539	-0.003	1043.501
857+64.00	1043.550	-0.016	1043.742	0.016	1043.723	-0.002	1043.704
857+74.00	1043.717	-0.016	1043.909	0.016	1043.909	0.000	1043.909
857+84.00	1043.885	-0.016	1044.077	0.016	1044.096	0.002	1044.115
857+94.00	1044.056	-0.016	1044.248	0.016	1044.284	0.003	1044.324
858+04.00	1044.227	-0.016	1044.419	0.016	1044.477	0.005	1044.535
858+14.00	1044.401	-0.016	1044.593	0.016	1044.670	0.006	1044.747
858+24.00	1044.578	-0.016	1044.770	0.016	1044.866	0.008	1044.962
858+34.00	1044.756	-0.016	1044.948	0.016	1045.063	0.010	1045.178
858+44.00	1044.936	-0.016	1045.128	0.016	1045.262	0.011	1043.396
858+54.00	1045.117	-0.016	1045.309	0.016	1045.463	0.013	1045.617
858+64.00	1045.301	-0.016	1045.493	0.016	1045.666	0.014	1045.836
858+74.00	1045.487	-0.016	1045.679	0.016	1045.871	0.016	1046.063
858+84.00	1045.655	-0.018	1045.867	0.018	1046.078	0.018	1046.290
858+86.00	1045.689	-0.018	1045.905	0.018	1046.120	0.018	1046.336

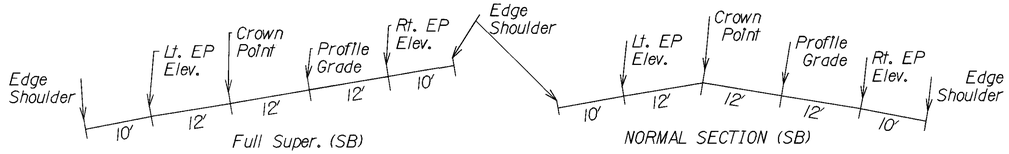

SOUTHBOUND IR-71 - SUPERELEVATION TRANSITION OUT - CURVE 1							
STATION	LT. E/P ELEV.	GRADE	CROWN POINT	GRADE	PROFILE GRADE	GRADE	RT. E/P ELEV.
891+63.00	1118.819	-0.018	1119.034	0.018	1119.250	0.018	1119.466
891+65.00	1118.847	-0.018	1119.058	0.018	1119.270	0.018	1119.482
891+75.00	1119.003	-0.016	1119.195	0.016	1119.387	0.016	1119.579
891+85.00	1119.137	-0.016	1119.329	0.016	1119.502	0.014	1119.675
891+95.00	1119.268	-0.016	1119.460	0.016	1119.614	0.013	1119.768
892+05.00	1119.398	-0.016	1119.590	0.016	1119.724	0.011	1119.858
892+15.00	1119.524	-0.016	1119.716	0.016	1119.831	0.010	1119.946
892+25.00	1119.647	-0.016	1119.839	0.016	1119.935	0.008	1120.031
892+35.00	1119.768	-0.016	1119.960	0.016	1120.037	0.006	1120.114
892+45.00	1119.885	-0.016	1120.077	0.016	1120.135	0.005	1120.193
892+55.00	1120.002	-0.016	1120.194	0.016	1120.232	0.003	1120.270
892+65.00	1120.114	-0.016	1120.306	0.016	1120.325	0.002	1120.344
892+75.00	1120.224	-0.016	1120.416	0.016	1120.416	0.000	1120.416
892+85.00	1120.332	-0.016	1120.524	0.016	1120.505	-0.002	1120.486
892+95.00	1120.436	-0.016	1120.628	0.016	1120.590	-0.003	1120.552
893+05.00	1120.539	-0.016	1120.731	0.016	1120.673	-0.005	1120.615
893+15.00	1120.639	-0.016	1120.831	0.016	1120.754	-0.006	1120.677
893+25.00	1120.735	-0.016	1120.927	0.016	1120.831	-0.008	1120.735
893+35.00	1120.829	-0.016	1121.021	0.016	1120.906	-0.010	1120.791
893+45.00	1120.921	-0.016	1121.113	0.016	1120.979	-0.011	1120.845
893+55.00	1121.010	-0.016	1121.202	0.016	1121.048	-0.013	1120.894
893+65.00	1121.097	-0.016	1121.289	0.016	1121.116	-0.014	1120.943
893+75.00	1121.180	-0.016	1121.372	0.016	1121.180	-0.016	1120.988

CALCULATED DJV CHECKED JWR

SUPERELEVATION TABLES

MED-71-15.78

147
940

DESIGN FILE : i:\pd_MED_IR71\DGN\Calculations\gel.dgn
USERNAME : pfought
DATE : 02-DEC-1999
TIME : 13:20

NORTHBOUND IR-71 - SUPERELEVATION TRANSITION IN - CURVE 4							
STATION	LT. E/P ELEV.	GRADE	PROFILE GRADE	GRADE	CROWN POINT	GRADE	RT. E/P ELEV.
1201+69.00	1140.418	-0.016	1140.610	0.016	1140.802	-0.016	1140.610
1201+79.00	1140.485	-0.016	1140.677	0.016	1140.869	-0.014	1140.696
1201+89.00	1140.551	-0.016	1140.743	0.016	1140.935	-0.013	1140.782
1201+99.00	1140.618	-0.016	1140.810	0.016	1141.002	-0.011	1140.868
1202+09.00	1140.685	-0.016	1140.877	0.016	1141.069	-0.010	1140.954
1202+19.00	1140.752	-0.016	1140.944	0.016	1141.136	-0.008	1141.040
1202+29.00	1140.818	-0.016	1141.010	0.016	1141.202	-0.006	1141.125
1202+39.00	1140.885	-0.016	1141.077	0.016	1141.269	-0.005	1141.211
1202+49.00	1140.952	-0.016	1141.144	0.016	1141.336	-0.003	1141.297
1202+59.00	1141.018	-0.016	1141.210	0.016	1141.402	-0.002	1141.383
1202+69.00	1141.085	-0.016	1141.277	0.016	1141.469	0.000	1141.469
1202+79.00	1141.152	-0.016	1141.344	0.016	1141.536	0.002	1141.555
1202+89.00	1141.218	-0.016	1141.410	0.016	1141.602	0.003	1141.641
1202+99.00	1141.285	-0.016	1141.477	0.016	1141.669	0.005	1141.727
1203+09.00	1141.352	-0.016	1141.544	0.016	1141.736	0.006	1141.813
1203+19.00	1141.419	-0.016	1141.611	0.016	1141.803	0.008	1141.899
1203+29.00	1141.485	-0.016	1141.677	0.016	1141.869	0.010	1141.984
1203+39.00	1141.552	-0.016	1141.744	0.016	1141.936	0.011	1142.070
1203+49.00	1141.619	-0.016	1141.811	0.016	1142.003	0.013	1142.156
1203+59.00	1141.685	-0.016	1141.877	0.016	1142.069	0.014	1142.242
1203+69.00	1141.752	-0.016	1141.944	0.016	1142.136	0.016	1142.328
1203+79.00	1141.799	-0.018	1142.011	0.018	1142.222	0.018	1142.434
1203+81.00	1141.808	-0.018	1142.024	0.018	1142.239	0.018	1142.455

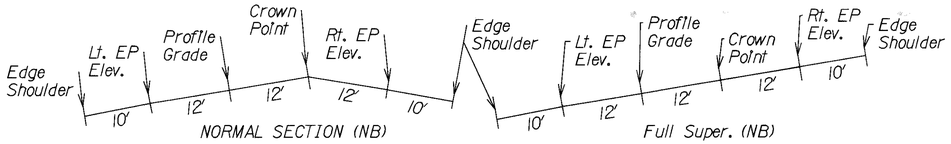

NORTHBOUND IR-71 - SUPERELEVATION TRANSITION OUT - CURVE 4							
STATION	LT. E/P ELEV.	GRADE	PROFILE GRADE	GRADE	CROWN POINT	GRADE	RT. E/P ELEV.
1233+62.00	1160.969	-0.018	1161.185	0.018	1161.400	0.018	1161.616
1233+64.00	1161.039	-0.018	1161.251	0.018	1161.463	0.018	1161.675
1233+74.00	1161.126	-0.016	1161.318	0.016	1161.510	0.016	1161.702
1233+84.00	1161.193	-0.016	1161.385	0.016	1161.577	0.014	1161.750
1233+94.00	1161.259	-0.016	1161.451	0.016	1161.643	0.013	1161.797
1234+04.00	1161.326	-0.016	1161.518	0.016	1161.710	0.011	1161.845
1234+14.00	1161.393	-0.016	1161.585	0.016	1161.777	0.010	1161.892
1234+24.00	1161.460	-0.016	1161.652	0.016	1161.844	0.008	1161.940
1234+34.00	1161.526	-0.016	1161.718	0.016	1161.910	0.006	1161.987
1234+44.00	1161.593	-0.016	1161.785	0.016	1161.977	0.005	1162.035
1234+54.00	1161.660	-0.016	1161.852	0.016	1162.044	0.003	1162.082
1234+64.00	1161.726	-0.016	1161.918	0.016	1162.110	0.002	1162.130
1202+74.00	1161.793	-0.016	1161.985	0.016	1162.177	0.000	1162.177
1234+84.00	1161.860	-0.016	1162.052	0.016	1162.244	-0.002	1162.225
1234+94.00	1161.926	-0.016	1162.118	0.016	1162.310	-0.003	1162.272
1235+04.00	1161.993	-0.016	1162.185	0.016	1162.377	-0.005	1162.320
1235+14.00	1162.060	-0.016	1162.252	0.016	1162.444	-0.006	1162.367
1235+24.00	1162.127	-0.016	1162.319	0.016	1162.511	-0.008	1162.415
1235+34.00	1162.193	-0.016	1162.385	0.016	1162.577	-0.010	1162.462
1235+44.00	1162.260	-0.016	1162.452	0.016	1162.644	-0.011	1162.510
1235+54.00	1162.327	-0.016	1162.519	0.016	1162.711	-0.013	1162.557
1235+64.00	1162.393	-0.016	1162.585	0.016	1162.777	-0.014	1162.605
1235+74.00	1162.407	-0.016	1162.599	0.016	1162.791	-0.016	1162.599

SOUTHBOUND IR-71 - SUPERELEVATION TRANSITION IN - CURVE 4							
STATION	LT. E/P ELEV.	GRADE	CROWN POINT	GRADE	PROFILE GRADE	GRADE	RT. E/P ELEV.
1201+69.00	1140.610	-0.016	1140.802	0.016	1140.610	-0.016	1140.418
1201+79.00	1140.658	-0.016	1140.850	0.016	1140.677	-0.014	1140.504
1201+89.00	1140.705	-0.016	1140.897	0.016	1140.743	-0.013	1140.590
1201+99.00	1140.753	-0.016	1140.945	0.016	1140.810	-0.011	1140.676
1202+09.00	1140.800	-0.016	1140.992	0.016	1140.877	-0.010	1140.762
1202+19.00	1140.848	-0.016	1141.040	0.016	1140.944	-0.008	1140.848
1202+29.00	1140.895	-0.016	1141.087	0.016	1141.010	-0.006	1140.933
1202+39.00	1140.943	-0.016	1141.135	0.016	1141.077	-0.005	1141.019
1202+49.00	1140.990	-0.016	1141.182	0.016	1141.144	-0.003	1141.105
1202+59.00	1141.038	-0.016	1141.230	0.016	1141.210	-0.002	1141.191
1202+69.00	1141.085	-0.016	1141.277	0.016	1141.277	0.000	1141.277
1202+79.00	1141.133	-0.016	1141.325	0.016	1141.344	0.002	1141.363
1202+89.00	1141.180	-0.016	1141.372	0.016	1141.410	0.003	1141.449
1202+99.00	1141.228	-0.016	1141.420	0.016	1141.477	0.005	1141.535
1203+09.00	1141.275	-0.016	1141.467	0.016	1141.544	0.006	1141.621
1203+19.00	1141.323	-0.016	1141.515	0.016	1141.611	0.008	1141.707
1203+29.00	1141.370	-0.016	1141.562	0.016	1141.677	0.010	1141.792
1203+39.00	1141.418	-0.016	1141.610	0.016	1141.744	0.011	1141.878
1203+49.00	1141.465	-0.016	1141.657	0.016	1141.811	0.013	1141.964
1203+59.00	1141.513	-0.016	1141.705	0.016	1141.877	0.014	1142.050
1203+69.00	1141.560	-0.016	1141.752	0.016	1141.944	0.016	1142.136
1203+79.00	1141.587	-0.018	1141.799	0.018	1142.011	0.018	1142.223
1203+81.00	1141.645	-0.018	1141.861	0.018	1142.077	0.018	1142.293

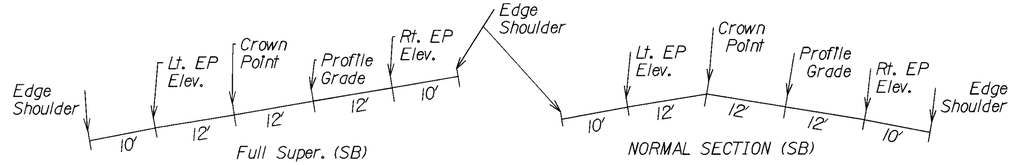

SOUTHBOUND IR-71 - SUPERELEVATION TRANSITION OUT - CURVE 4							
STATION	LT. E/P ELEV.	GRADE	CROWN POINT	GRADE	PROFILE GRADE	GRADE	RT. E/P ELEV.
1233+62.00	1160.753	-0.018	1160.969	0.018	1161.185	0.018	1161.401
1233+64.00	1160.774	-0.018	1160.986	0.018	1161.198	0.018	1161.410
1233+74.00	1160.881	-0.016	1161.073	0.016	1161.265	0.016	1161.457
1233+84.00	1160.967	-0.016	1161.159	0.016	1161.332	0.014	1161.505
1233+94.00	1161.053	-0.016	1161.245	0.016	1161.398	0.013	1161.552
1234+04.00	1161.139	-0.016	1161.331	0.016	1161.465	0.011	1161.600
1234+14.00	1161.225	-0.016	1161.417	0.016	1161.532	0.010	1161.647
1234+24.00	1161.311	-0.016	1161.503	0.016	1161.599	0.008	1161.695
1234+34.00	1161.396	-0.016	1161.588	0.016	1161.665	0.006	1161.742
1234+44.00	1161.482	-0.016	1161.674	0.016	1161.732	0.005	1161.790
1234+54.00	1161.568	-0.016	1161.760	0.016	1161.799	0.003	1161.837
1234+64.00	1161.654	-0.016	1161.846	0.016	1161.865	0.002	1161.885
1202+74.00	1161.740	-0.016	1161.932	0.016	1161.932	0.000	1161.932
1234+84.00	1161.826	-0.016	1162.018	0.016	1161.999	-0.002	1161.980
1234+94.00	1161.912	-0.016	1162.104	0.016	1162.065	-0.003	1162.027
1235+04.00	1161.998	-0.016	1162.190	0.016	1162.132	-0.005	1162.075
1235+14.00	1162.084	-0.016	1162.276	0.016	1162.199	-0.006	1162.122
1235+24.00	1162.127	-0.016	1162.362	0.016	1162.266	-0.008	1162.170
1235+34.00	1162.255	-0.016	1162.447	0.016	1162.332	-0.010	1162.217
1235+44.00	1162.341	-0.016	1162.533	0.016	1162.399	-0.011	1162.265
1235+54.00	1162.427	-0.016	1162.619	0.016	1162.466	-0.013	1162.312
1235+64.00	1162.513	-0.016	1162.705	0.016	1162.532	-0.014	1162.360
1235+74.00	1162.599	-0.016	1162.791	0.016	1162.599	-0.016	1162.407

CALCULATED DJV CHECKED JWR

SUPERELEVATION TABLES

MED-71-15.78

148
940

DATE : 02-DEC-1999
TIME : 13:30
DESIGN FILE : i:\pd_MED_IR71\DGN\Calculations\ge2.dgn
USERNAME : pfought

ESTIMATED QUANTITIES

Location	Side	877 Temporary Perimeter Filter Fabric Fence	877 Temporary Ditch Check Filter Fabric Fence	877 Temporary Inlet Protection Filter Fabric Fence	877 Temporary Dams & Sediment Basins
		Lin.Ft.	Lin.Ft.	Lin.Ft.	Cu.Yd.
At ditch checks this sheet			180		
At inlet protection this sheet				260	
Totals Carried to Sheet 171		0	180	260	0

PROJECT DATA

Total Area (Right of Way)	6.10 Acres
Area to Undergo Excavation, Filling or Grading	6.10 Acres
Runoff coefficient for Pre-Construction Site	0.3-0.6
Runoff coefficient for Post-Construction Site	0.5
Soil Data	See Soil Profile
Immediate Receiving Waters	Plum Creek, West Branch Rocky River, Healy Creek
Subsequent Receiving Waters	West Branch Rocky River, East Branch Rocky River, Rocky River, Lake Erie

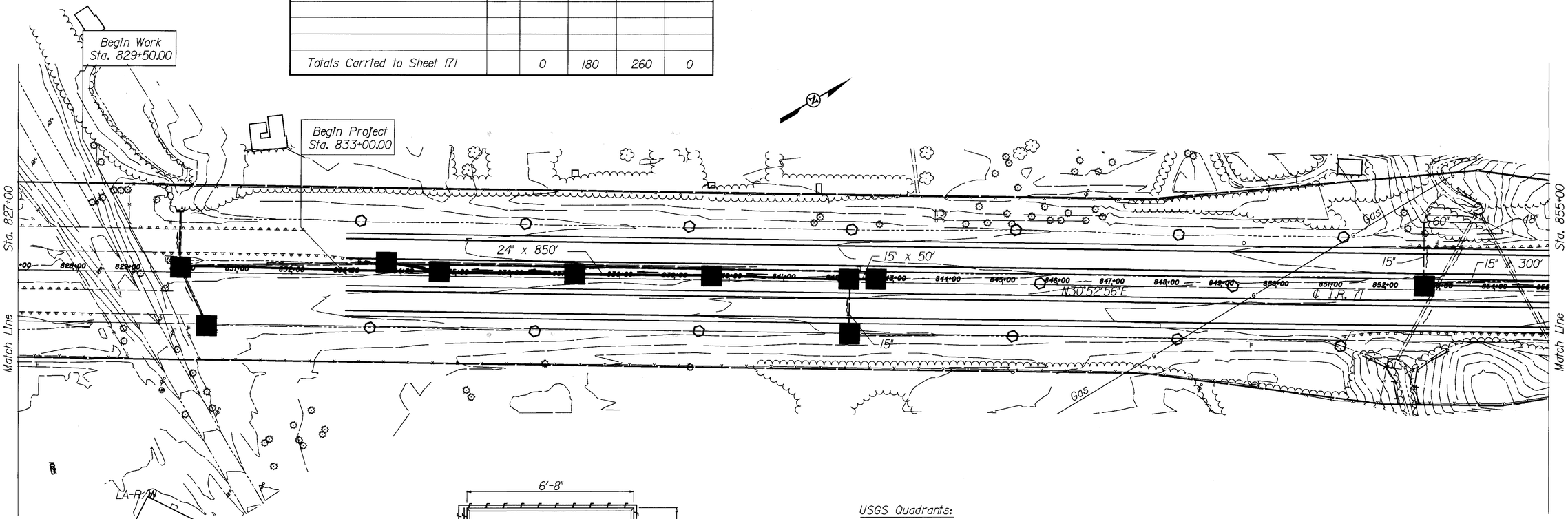

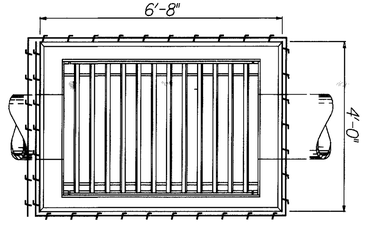

INLET FILTER FABRIC DETAIL

Note: Drawing not to scale

The Filter Fabric Fence shall overlap on the upstream (short) side of the catch basin

USGS Quadrants:

Medina NE, Medina SE, Berea SE (Beara)

Longitude: W81°47'30" *
Latitude: N41°08'38" *

* Longitude and Latitude to Approximate Center of Project

PROJECT DESCRIPTION

Reconstruction of existing lanes and construction of additional lanes, and auxiliary lanes including, but not limited to new underdrains, guardrail, fencing, signing, lighting and rehabilitation and/or replacement of existing bridges.

Legend

- Inlet Filter Barrier, 26 Lin. feet
- Ditch Check, 12 Lin. feet
- Filter Fabric Fence
- Sediment Basin
- Sediment Dam
- Drainage Ditch or Temporary Diversion

0 50 100 200 SCALE IN FEET

CALCULATED JAP CHECKED

STORM WATER POLLUTION PREVENTION PLAN
Sta. 827+00 to Sta. 855+00

MED-71-15.78

149
940

DESIGN FILE : i:\pd_med_ir71\dgn\erosion\med71swl.dgn
USERNAME : rswift
DATE : 24-NOV-1999
TIME : 15:24

ESTIMATED QUANTITIES

Location		Side	877 Temporary Peremiter Filter Fabric Fence	877 Temporary Ditch Check Filter Fabric Fence	877 Temporary Inlet Protection Filter Fabric Fence	877 Temporary Dams & Sedtment Basins
			Lin.Ft.	Lin.Ft.	Lin.Ft.	Cu.Yd.
At ditch checks this sheet				204		
At Inlet protection this sheet					130	
From	To					
Sta. 868+88	Sta. 878+25	Rt.	937			
Sta. 10+88 (A)	Sta. 17+68 (A)	Lt.	696			
Totals Carried to Sheet 171			1633	204	130	0

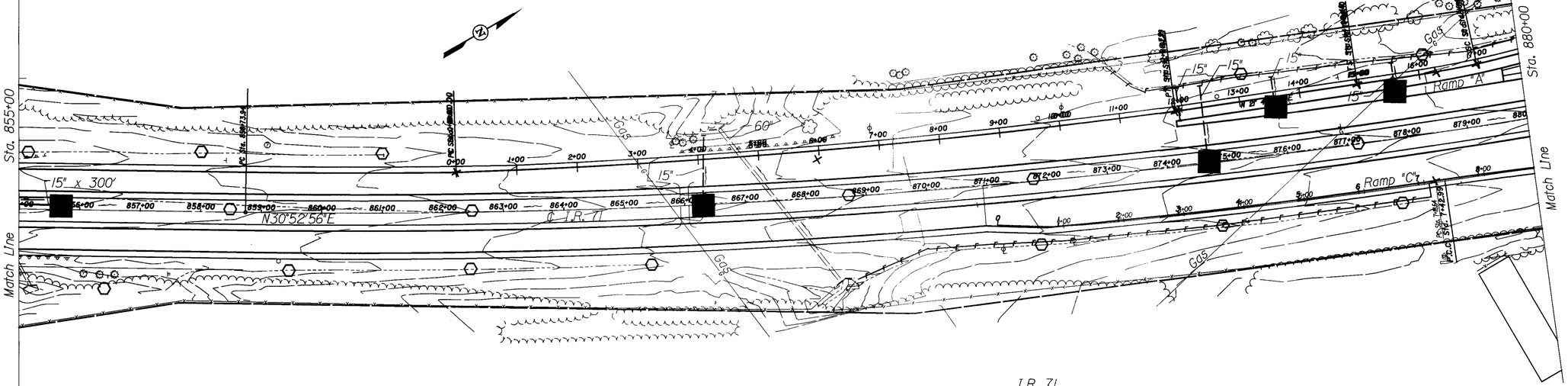

Ramp A
P.I. Sta = 5+96.87
Δ = 5° 35' 47" (LT)
Dc = 0° 28' 09"
R = 12,211.62'
T = 596.87'
L = 1,192.79'
E = 14.58'

I.R. 71
P.I. Sta. = 873+38.41
Δ = 13° 36' 15" (LT)
Dc = 00° 28' 00"
R = 12,277.67
T = 1,464.48
L = 2,915.18
E = 87.03'
Max. Super Rate = 0.018

Ramp C
P.I. Sta = 13+07.95
Δ = 12° 41' 06" (RT)
Dc = 7° 30' 00"
R = 763.94'
Δc = 7° 03' 49" (RT)
Lc = 94.18'
Es = 200.88'

Ramp C
P.I. Sta = 18+40.74
Δ = 47° 29' 36" (LT)
Dc = 24° 00' 00"
R = 238.73'
Δc = 17° 29' 36" (LT)
Lc = 72.89'
Es = 25.19'

Legend

- Inlet Filter Barrier, 26 Lin. feet
- Ditch Check, 12 Lin. feet
- Filter Fabric Fence
- Sedtment Basin
- Sedtment Dam
- Drainage Ditch or Temporary Diversion

SCALE IN FEET 0 50 100 200

CALCULATED JAP CHECKED

STORM WATER POLLUTION PREVENTION PLAN
Sta. 855+00 to Sta. 880+00

MED-71-15.78

150
940

DESIGN FILE : i:\pd_med_ir71\dgn\erosion\med71sw2.dgn
USERNAME : rswift
DATE : 24-NOV-1999
TIME : 14:27

Legend

- ■ Inlet Filter Barrier, 26 Lin. feet
- ○ Ditch Check, 12 Lin. feet
- —F— Filter Fabric Fence
- Sediment Basin
- Sediment Dam
- Drainage Ditch or Temporary Diversion

Ramp "A"
P.I. Sta = 5+96.87
Δ = 5° 35′ 47" (LT)
Dc = 0° 28′ 09"
R = 12,211.62′
T = 596.87′
L = 1,192.79′
E = 14.58′

I.R. 71
P.I. Sta. = 873+38.41
Δ = 13° 36′ 15" (LT)
Dc = 00° 28′ 00"
R = 12,277.67
T = 1,464.48
L = 2,915.18
E = 87.03′
Max. Super Rate = 0.018

Ramp "A"
P.I. Sta = 18+82.93
Δ = 22° 00′ 00" (LT)
Dc = 3° 56′ 21"
R = 1,454.52′
Ls = 200.00′
Theta = 3° 56′ 21"
LT = 133.37′
ST = 66.70′
x = 199.91′
y = 4.58′
k = 99.98′
p = 1.15′
Δc = 14° 07′ 18" (LT)
Lc = 358.49′
Ts = 382.94′
Es = 28.39′

Ramp B
P.I. Sta = 9+79.62
Δ = 5° 11′ 09" (LT)
Dc = 7° 30′ 00"
R = 763.94′
Δc = 6° 58′ 20" (LT)
Lc = 92.96′
Es = 49.15′

Ramp B
P.I. Sta = 2+52.20
Δ = 46° 30′ 57" (RT)
Dc = 20° 00′ 00"
R = 286.48′
Δc = 21° 30′ 57" (RT)
Lc = 107.58′
Es = 27.92′

Ramp B
P. I. Sta. = 13+19.97
Δ = 7° 24′ 41" (LT)
Dc = 01° 30′ 00"
R = 3,819.72′
T = 247.39′
L = 494.09′
E = 8.00′
D = 9° 00′ 00" (RT)
Ls = 200.00′
Theta = 06° 00′ 00"
LT = 122.45′
ST = 77.96′

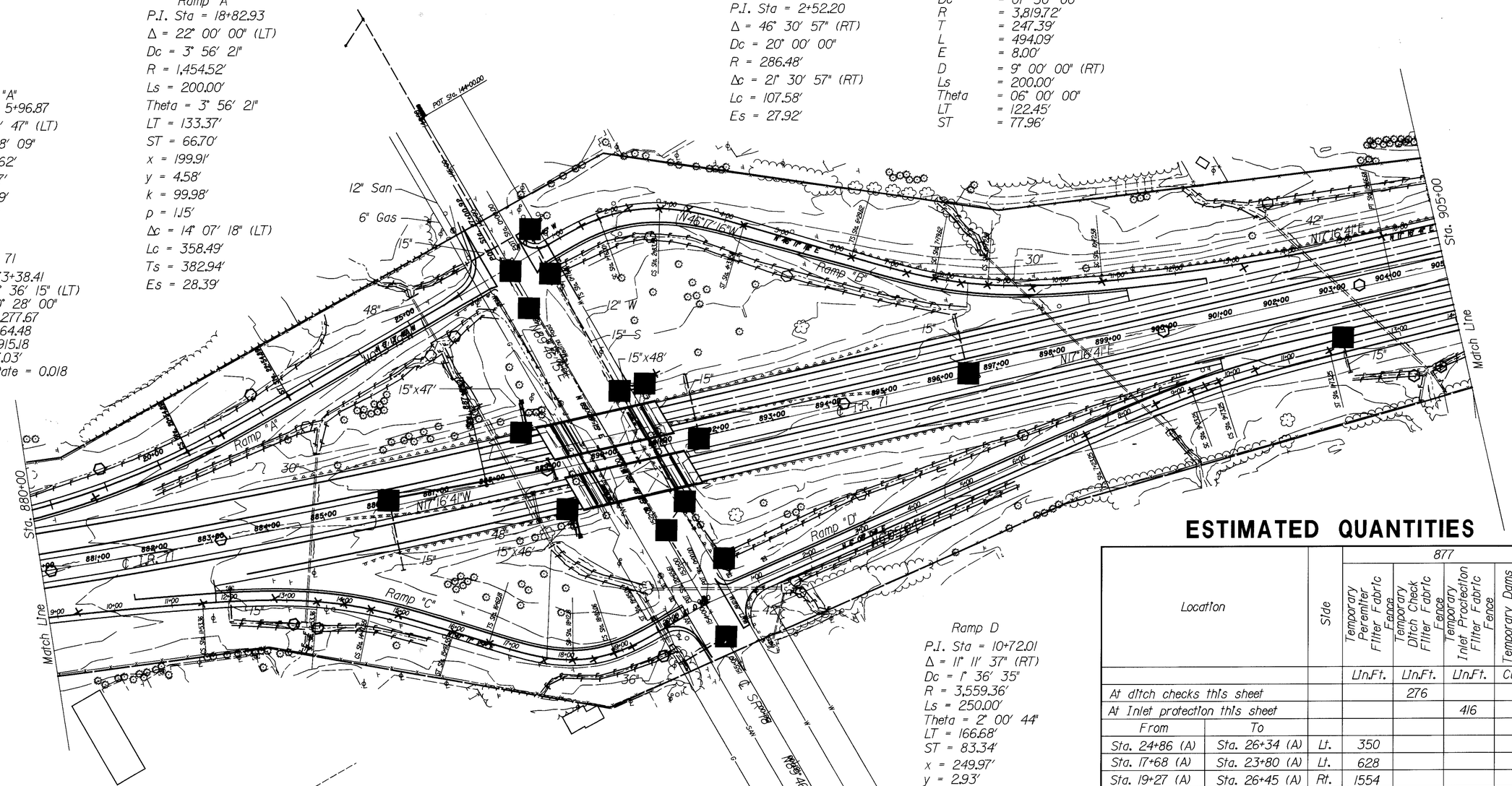

Ramp C
P.I. Sta = 13+07.95
Δ = 12° 41′ 06" (RT)
Dc = 7° 30′ 00"
R = 763.94′
Δc = 7° 03′ 49" (RT)
Lc = 94.18′
Es = 200.88′

Ramp C
P.I. Sta = 18+40.74
Δ = 47° 29′ 36" (LT)
Dc = 24° 00′ 00"
R = 238.73′
Δc = 17° 29′ 36" (LT)
Lc = 72.89′
Es = 25.19′

Ramp D
P.I. Sta = 10+72.01
Δ = 11° 11′ 37" (RT)
Dc = 1° 36′ 35"
R = 3,559.36′
Ls = 250.00′
Theta = 2° 00′ 44"
LT = 166.68′
ST = 83.34′
x = 249.97′
y = 2.93′
k = 124.99′
p = 0.73′
Δc = 7° 10′ 09" (RT)
Lc = 445.37′
Ts = 473.86′
Es = 17.78′

ESTIMATED QUANTITIES

Location		Side	877 Temporary Perimeter Filter Fabric Fence	877 Temporary Ditch Check Filter Fabric Fence	877 Temporary Inlet Proctection Filter Fabric Fence	877 Temporary Dams & Sediment Basins
			Lin.Ft.	Lin.Ft.	Lin.Ft.	Cu.Yd.
At ditch checks this sheet				276		
At Inlet protection this sheet					416	
From	To					
Sta. 24+86 (A)	Sta. 26+34 (A)	Lt.	350			
Sta. 17+68 (A)	Sta. 23+80 (A)	Lt.	628			
Sta. 19+27 (A)	Sta. 26+45 (A)	Rt.	1554			
Sta. 12+00 (C)	Sta. 15+60 (C)	Rt.	640			
Sta. 17+58 (C)	Sta. 19+87 (C)	Rt.	580			
Sta. 1+34 (D)	Sta. 5+77 (D)	Rt.	886			
Sta. 0+65 (D)	Sta. 9+30 (D)	Lt.	1740			
Sta. 900+82	Sta. 905+00	Lt.	900			
Sta. 0+24 (B)	Sta. 8+38 (B)	Rt.	745			
Sta. 12+00 (D)	Sta. 14+00 (D)	Rt.	500			
Sta. 17+77 (C)	Sta. 19+85 (C)	Lt.	360			
Totals Carried to Sheet 171			8883	276	416	0

DATE : 24-NOV-1999
TIME : 14:27
DESIGN FILE : i:\pd_med_ir71\dgn\erosion\med71sw3.dgn
USERNAME : rswift

SCALE IN FEET 0 50 100 200

CALCULATED SAP
CHECKED

STORM WATER POLLUTION PREVENTION PLAN
Sta. 880+00 to Sta. 905+00

MED-71-15.78

ESTIMATED QUANTITIES

Location		Side	877 Temporary Perimiter Fliter Fabric Fence	877 Temporary Ditch Check Fliter Fabric Fence	877 Temporary Inlet Proctection Fliter Fabric Fence	877 Temporary Dams & Sedlment Basins
			Lin.Ft.	Lin.Ft.	Lin.Ft.	Cu.Yd.
At ditch checks this sheet				156		
At Inlet protection this sheet					130	
From	To					
Sta. 905+00	Sta. 906+68	Lt.	340			
Sta. 14+00 (D)	Sta. 18+60 (D)	Rt.	920			
Sta. 910+57	Sta. 916+32	Lt.	1090			
Sta. 912+12	Sta. 924+60	Rt.	2320			
Sta. 921+65	Sta. 924+10	Lt.	340			
Totals Carried to Sheet 171			5010	156	130	0

Legend

- Inlet Fliter Barrier, 26 Lin. feet
- Ditch Check, 12 Lin. feet
- —F— Fliter Fabric Fence
- Sedlment Basin
- Sedlment Dam
- Drainage Ditch or Temporary Diversion

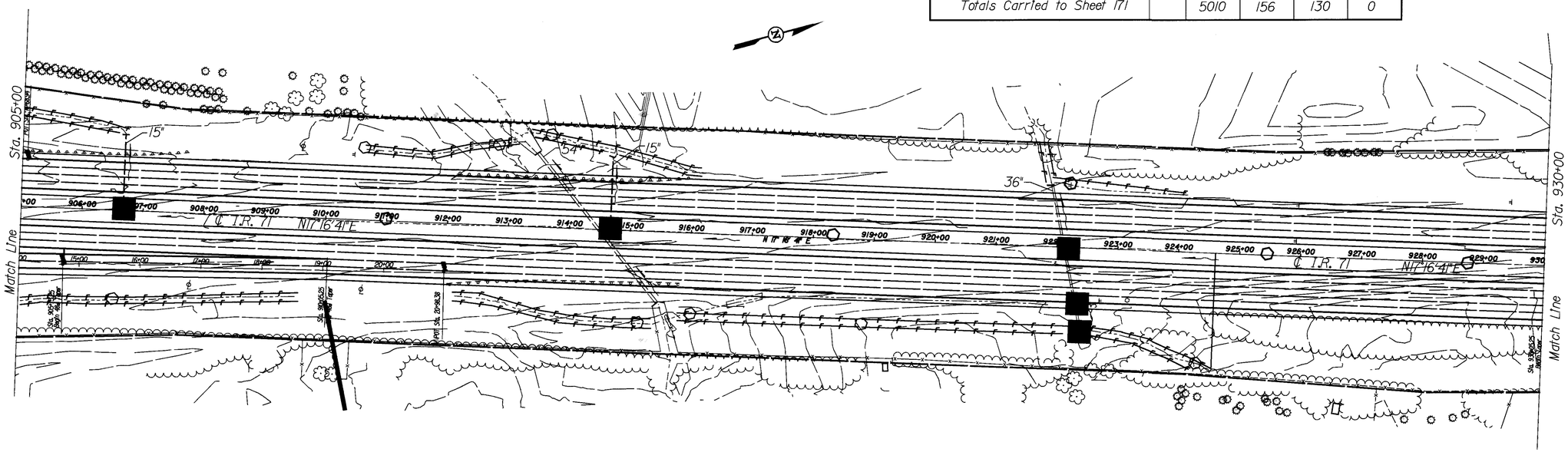

DESIGN FILE : i:\pd_med_lr71\dgn\erosion\med71lsw4.dgn
USERNAME : rswift

DATE : 24-NOV-1999
TIME : 14:28

SCALE IN FEET 0 50 100 200

CALCULATED JAP
CHECKED

STORM WATER POLLUTION PREVENTION PLAN
Sta. 905+00 to Sta. 930+00

MED-71-15.78

152
940

ESTIMATED QUANTITIES

Location		Side	877 Temporary Perimiter Filter Fabric Fence	877 Temporary Ditch Check Filter Fabric Fence	877 Temporary Inlet Protection Filter Fabric Fence	877 Temporary Dams & Sediment Basins
			Lin.Ft.	Lin.Ft.	Lin.Ft.	Cu.Yd.
At ditch checks this sheet				312		
At inlet protection this sheet					52	
From	To					
Sta. 930+47	Sta. 931+65	Lt.	230			
Sta. 932+26	Sta. 944+80	Lt.	2520			
Totals Carried to Sheet 171			2750	312	52	0

Legend

- ■ *Inlet Filter Barrier, 26 Lin. feet*
- ○ *Ditch Check, 12 Lin. feet*
- —F— *Filter Fabric Fence*
- *Sediment Basin*
- *Sediment Dam*
- *Drainage Ditch or Temporary Diversion*

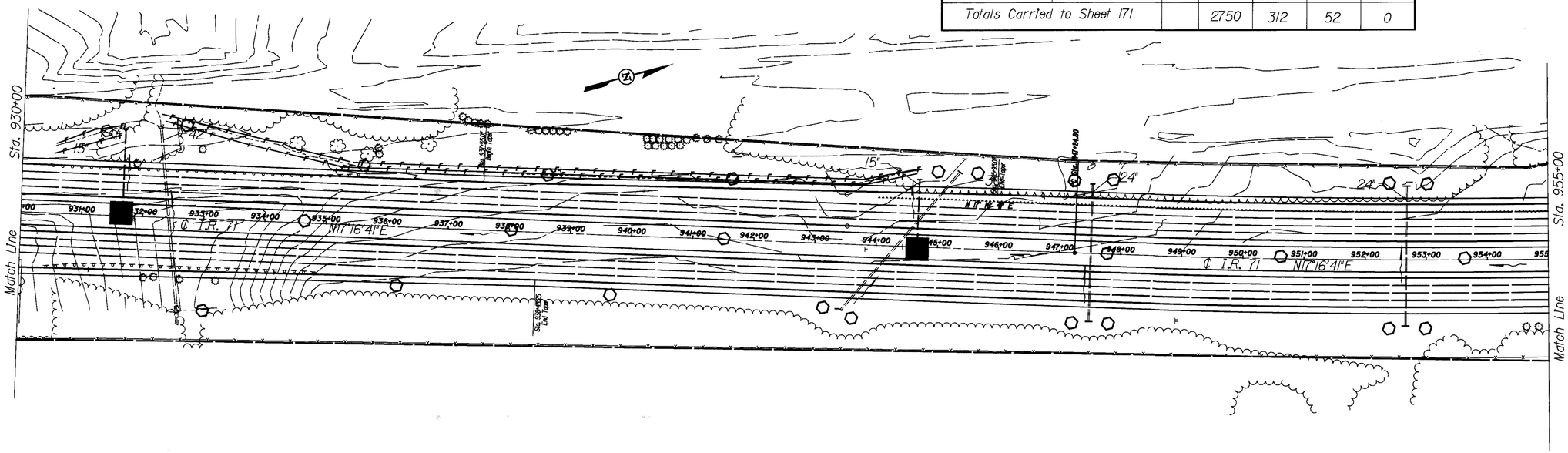

DESIGN FILE : i:\pd_med_lr71\dgn\erosion\med71sw5.dgn
USERNAME : rswift
DATE : 24-NOV-1999
TIME : 14:28

SCALE IN FEET 0 50 100 200

CALCULATED JAP CHECKED JWP

STORM WATER POLLUTION PREVENTION PLAN
Sta. 930+00 to Sta. 955+00

MED-71-15.78

153
940

DESIGN FILE : i:\pd_med_ir71\dgn\erosion\med71sw6.dgn
USERNAME : rswift
DATE : 24-NOV-1999
TIME : 14:28

Connector W
P.I. Sta = 955+61.72
Δ = 6° 11′ 21″ (LT)
Dc = 0° 22′ 08″
R = 15,536.07′
T = 839.92′
L = 1,678.20′
E = 22.69′

Connector W
P.I. Sta = 968+15.48
Δ = 4° 54′ 48″ (LT)
Dc = 0° 50′ 33″
R = 6,800.00′
T = 291.74′
L = 583.12′
E = 6.26′

Connector W
P.I. Sta = 974+65.00
Δ = 22° 53′ 43″ (LT)
Dc = 5° 12′ 31″
R = 1,100.00′
T = 222.75′
L = 439.56′
E = 22.33′

IR 71
P.I. Sta = 974+65.00
Δ = 22° 53′ 43″ (LT)
Dc = 5° 12′ 31″
R = 1,100.00′
T = 222.75′
L = 7298.08′
E = 22.33′

CH 21
P.I. Sta = 46+38.02
Δ = 2° 49′ 12″ (LT)
Dc = 2° 00′ 00″
R = 2,864.79′
T = 70.51′
L = 141.00′
E = 0.87′

℄ PROP. CONNECTION
'W' I.R. 271
P.I. Sta = 2+08.27
Δ = 9° 09′ 32″ (LT)
Dc = 8° 00′ 00″
R = 716.20′
T = 57.37′
L = 114.49′
E = 2.29′

℄ PROP. CONNECTION
'W' I.R. 271
P.I. Sta = 974+61.07
Δ = 25° 03′ 12″ (LT)
Dc = 5° 30′ 00″
R = 1,041.74′
Ls = 200.00′
Theta = 5° 30′ 00″
LT = 133.40′
ST = 66.73′
x = 199.82′
y = 6.40′
k = 99.97′
p = 1.60′
Δc = 14° 03′ 12″ (LT)
Lc = 255.51′
Ts = 331.78′
Es = 27.04′

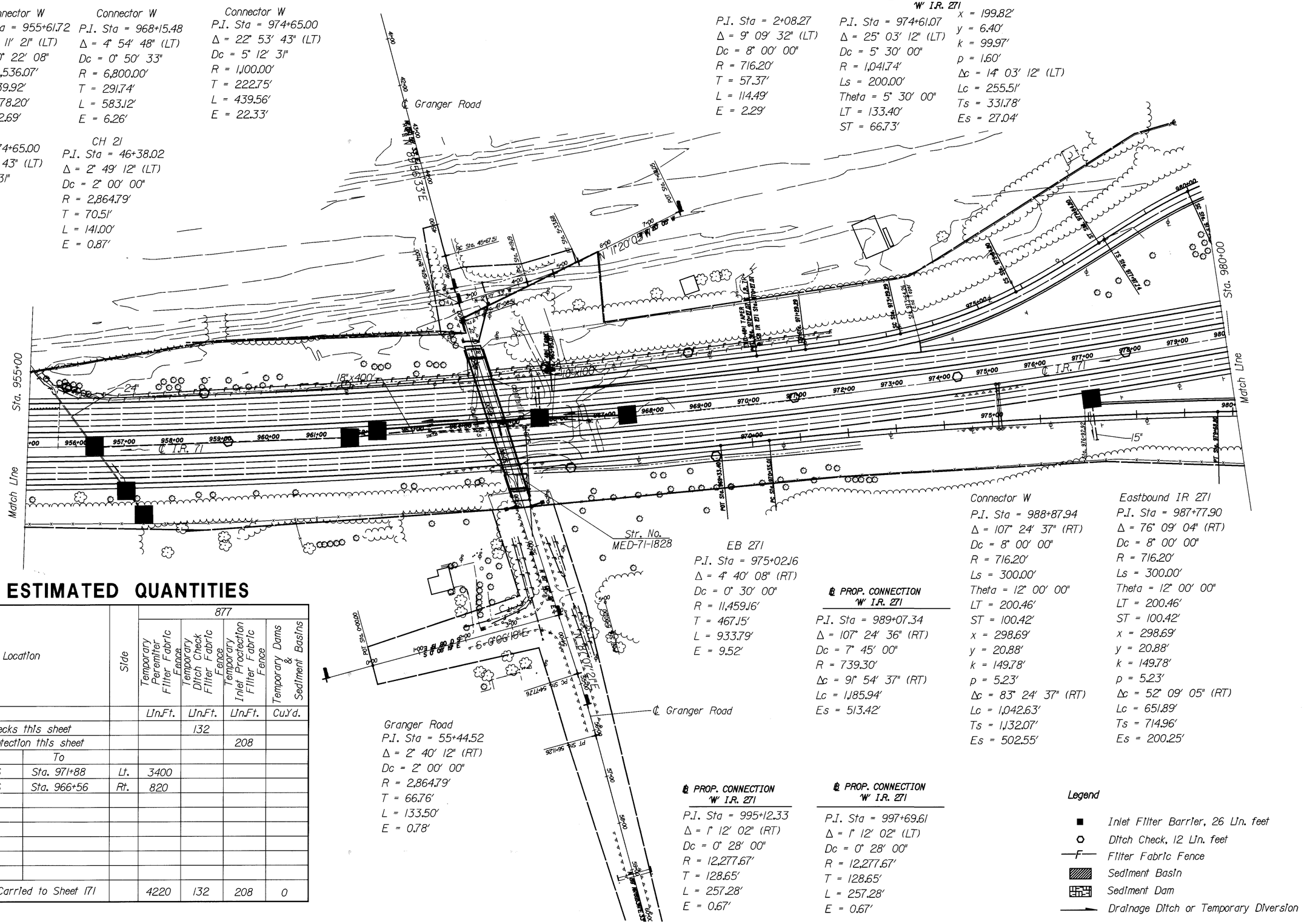

EB 271
P.I. Sta = 975+02.16
Δ = 4° 40′ 08″ (RT)
Dc = 0° 30′ 00″
R = 11,459.16′
T = 467.15′
L = 933.79′
E = 9.52′

Granger Road
P.I. Sta = 55+44.52
Δ = 2° 40′ 12″ (RT)
Dc = 2° 00′ 00″
R = 2,864.79′
T = 66.76′
L = 133.50′
E = 0.78′

℄ PROP. CONNECTION
'W' I.R. 271
P.I. Sta = 989+07.34
Δ = 107° 24′ 36″ (RT)
Dc = 7° 45′ 00″
R = 739.30′
Δc = 91° 54′ 37″ (RT)
Lc = 1,185.94′
Es = 513.42′

Connector W
P.I. Sta = 988+87.94
Δ = 107° 24′ 37″ (RT)
Dc = 8° 00′ 00″
R = 716.20′
Ls = 300.00′
Theta = 12° 00′ 00″
LT = 200.46′
ST = 100.42′
x = 298.69′
y = 20.88′
k = 149.78′
p = 5.23′
Δc = 83° 24′ 37″ (RT)
Lc = 1,042.63′
Ts = 1,132.07′
Es = 502.55′

Eastbound IR 271
P.I. Sta = 987+77.90
Δ = 76° 09′ 04″ (RT)
Dc = 8° 00′ 00″
R = 716.20′
Ls = 300.00′
Theta = 12° 00′ 00″
LT = 200.46′
ST = 100.42′
x = 298.69′
y = 20.88′
k = 149.78′
p = 5.23′
Δc = 52° 09′ 05″ (RT)
Lc = 651.89′
Ts = 714.96′
Es = 200.25′

℄ PROP. CONNECTION
'W' I.R. 271
P.I. Sta = 995+12.33
Δ = 1° 12′ 02″ (RT)
Dc = 0° 28′ 00″
R = 12,277.67′
T = 128.65′
L = 257.28′
E = 0.67′

℄ PROP. CONNECTION
'W' I.R. 271
P.I. Sta = 997+69.61
Δ = 1° 12′ 02″ (LT)
Dc = 0° 28′ 00″
R = 12,277.67′
T = 128.65′
L = 257.28′
E = 0.67′

ESTIMATED QUANTITIES

Location		Side	877 Temporary Perimiter Filter Fabric Fence	877 Temporary Ditch Check Filter Fabric Fence	877 Temporary Inlet Proctection Filter Fabric Fence	Temporary Dams & Sediment Basins
			Lin.Ft.	Lin.Ft.	Lin.Ft.	Cu.Yd.
At ditch checks this sheet				132		
At Inlet protection this sheet					208	
From	To					
Sta. 955+16	Sta. 971+88	Lt.	3400			
Sta. 964+46	Sta. 966+56	Rt.	820			
Totals Carried to Sheet 171			4220	132	208	0

Legend
- Inlet Filter Barrier, 26 Lin. feet
- Ditch Check, 12 Lin. feet
- F — Filter Fabric Fence
- Sediment Basin
- Sediment Dam
- Drainage Ditch or Temporary Diversion

STORM WATER POLLUTION PREVENTION PLAN
Sta. 955+00 to Sta. 980+00

SCALE IN FEET 0 50 100 200

CALCULATED JAP CHECKED jmr

MED-71-15.78

Connector W
P.I. Sta = 955+61.72
Δ = 6° 11' 21" (LT)
Dc = 0° 22' 08"
R = 15,536.07'
T = 839.92'
L = 1,678.20'
E = 22.69'

Connector W
P.I. Sta = 968+15.48
Δ = 4° 54' 48" (LT)
Dc = 0° 50' 33"
R = 6,800.00'
T = 291.74'
L = 583.12'
E = 6.26'

Connector W
P.I. Sta = 974+65.00
Δ = 22° 53' 43" (LT)
Dc = 5° 12' 31"
R = 1,100.00'
T = 222.75'
L = 439.56'
E = 22.33'

IR 71
P.I. Sta = 974+65.00
Δ = 22° 53' 43" (LT)
Dc = 5° 12' 31"
R = 1,100.00'
T = 222.75'
L = 7298.08'
E = 22.33'

CH 21
P.I. Sta = 46+38.02
Δ = 2° 49' 12" (LT)
Dc = 2° 00' 00"
R = 2,864.79'
T = 70.51'
L = 141.00'
E = 0.87'

℄ PROP. CONNECTION 'W' I.R. 271
P.I. Sta = 2+08.27
Δ = 9° 09' 32" (LT)
Dc = 8° 00' 00"
R = 716.20'
T = 57.37'
L = 114.49'
E = 2.29'

℄ PROP. CONNECTION 'W' I.R. 271
P.I. Sta = 974+61.07
Δ = 25° 03' 12" (LT)
Dc = 5° 30' 00"
R = 1,041.74'
Ls = 200.00'
Theta = 5° 30' 00"
LT = 133.40'
ST = 66.73'
x = 199.82'
y = 6.40'
k = 99.97'
p = 1.60'
Δc = 14° 03' 12" (LT)
Lc = 255.51'
Ts = 331.78'
Es = 27.04'

Connector W
P.I. Sta = 988+87.94
Δ = 107° 24' 37" (RT)
Dc = 8° 00' 00"
R = 716.20'
Ls = 300.00'
Theta = 12° 00' 00"
LT = 200.46'
ST = 100.42'
x = 298.69'
y = 20.88'
k = 149.78'
p = 5.23'
Δc = 83° 24' 37" (RT)
Lc = 1,042.63'
Ts = 1,132.07'
Es = 502.55'

Eastbound IR 271
P.I. Sta = 987+77.90
Δ = 76° 09' 04" (RT)
Dc = 8° 00' 00"
R = 716.20'
Ls = 300.00'
Theta = 12° 00' 00"
LT = 200.46'
ST = 100.42'
x = 298.69'
y = 20.88'
k = 149.78'
p = 5.23'
Δc = 52° 09' 05" (RT)
Lc = 651.89'
Ts = 714.96'
Es = 200.25'

Legend
- Inlet Filter Barrier, 26 Lin. feet
- Ditch Check, 12 Lin. feet
- Filter Fabric Fence
- Sediment Basin
- Sediment Dam
- Drainage Ditch or Temporary Diversion

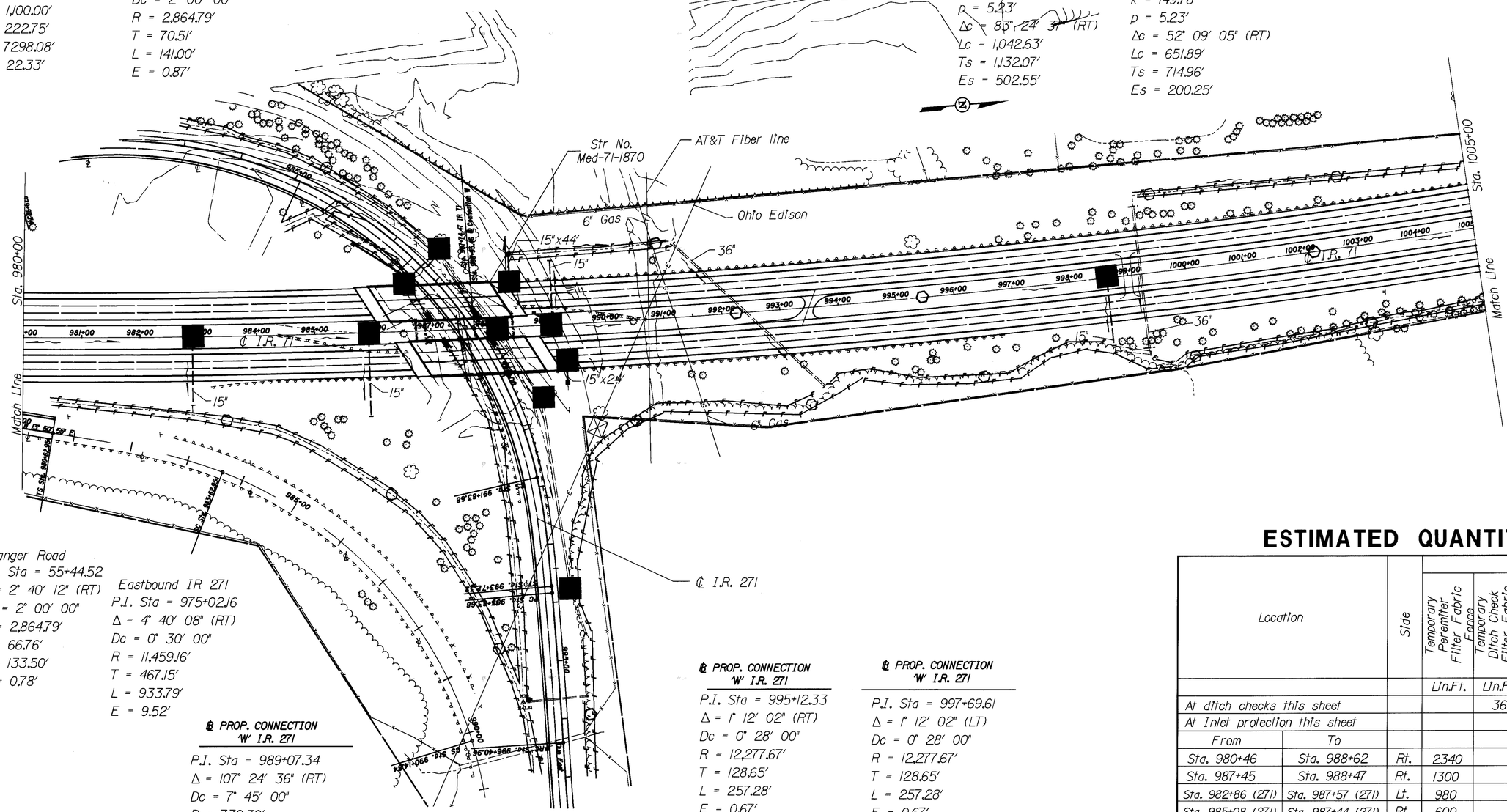

ESTIMATED QUANTITIES

Location		Side	877			
			Temporary Perimiter Filter Fabric Fence	Temporary Ditch Check Filter Fabric Fence	Temporary Inlet Protection Filter Fabric Fence	Temporary Dams & Sediment Basins
			Lin.Ft.	Lin.Ft.	Lin.Ft.	Cu.Yd.
At ditch checks this sheet				36		
At inlet protection this sheet					75	
From	To					
Sta. 980+46	Sta. 988+62	Rt.	2340			
Sta. 987+45	Sta. 988+47	Rt.	1300			
Sta. 982+86 (271)	Sta. 987+57 (271)	Lt.	980			
Sta. 985+08 (271)	Sta. 987+44 (271)	Rt.	600			
Sta. 988+44	Sta. 991+14	Lt.	540			
Sta. 989+40	Sta. 1005+00	Rt.	4103			
Sta. 999+26	Sta. 1005+00	Lt.	1140			
Totals Carried to Sheet 171			11003	36	75	0

STORM WATER POLLUTION PREVENTION PLAN
Sta. 980+00 to Sta. 1005+00

MED-71-15.78

155
940

CALCULATED JAP
CHECKED

SCALE IN FEET 0 50 100 200

DESIGN FILE : i:\pd_med_ir71\dgn\erosion\med71sw7.dgn
USERNAME : rswift

DATE : 24-NOV-1999
TIME : 14:26

DESIGN FILE : i:\pd_med_ir71\dgn\erosion\med71sw8.dgn
USERNAME : rswift

DATE : 24-NOV-1999
TIME : 12:24

Legend

- Inlet Filter Barrier, 26 Lin. feet
- Ditch Check, 12 Lin. feet
- —F— Filter Fabric Fence
- Sediment Basin
- Sediment Dam
- Drainage Ditch or Temporary Diversion

IR 71
P.I. Sta = 974+65.00
Δ = 22° 53′ 43″ (LT)
Dc = 5° 12′ 31″
R = 1,100.00′
T = 222.75′
L = 439.56′
E = 22.33′

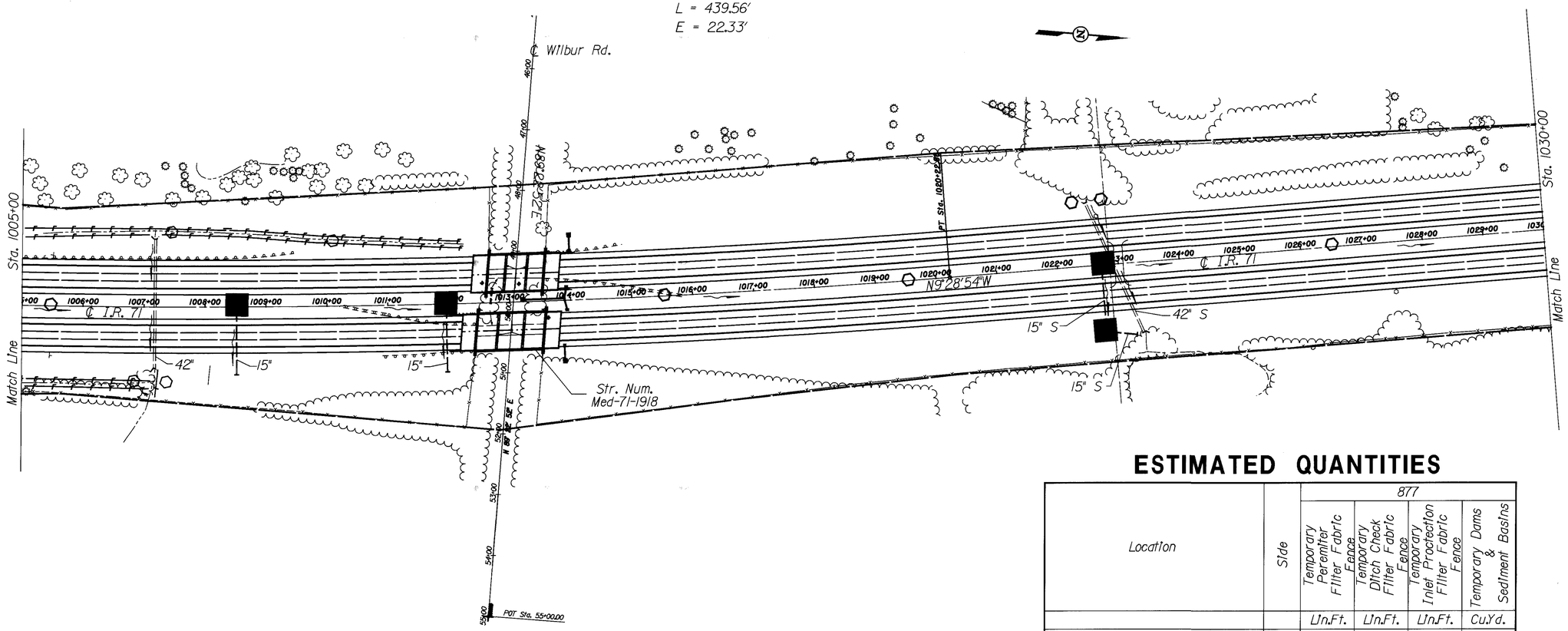

ESTIMATED QUANTITIES

Location		Side	877 Temporary Perimiter Filter Fabric Fence	877 Temporary Ditch Check Filter Fabric Fence	877 Temporary Inlet Proctection Filter Fabric Fence	877 Temporary Dams & Sediment Basins
			Lin.Ft.	Lin.Ft.	Lin.Ft.	Cu.Yd.
At ditch checks this sheet				120		
At Inlet protection this sheet					104	
From	To					
Sta. 1005+00	Sta. 1012+30	Lt.	1500			
Sta. 1005+00	Sta. 1007+21	Rt.	525			
Totals Carried to Sheet 171			2025	120	104	0

N

0 50 100 200 SCALE IN FEET

CALCULATED JAP CHECKED gwr

STORM WATER POLLUTION PREVENTION PLAN
Sta. 1005+00 to Sta. 1030+00

MED-71-15.78

156
940

DESIGN FILE : i:\pd_med_ir71\dgn\erosion\med71sw9.dgn
USERNAME : rswift

DATE : 24-NOV-1999
TIME : 12:26

Legend

- ■ *Inlet Filter Barrier, 26 Lin. feet*
- ○ *Ditch Check, 12 Lin. feet*
- —F— *Filter Fabric Fence*
- *Sediment Basin*
- *Sediment Dam*
- *Drainage Ditch or Temporary Diversion*

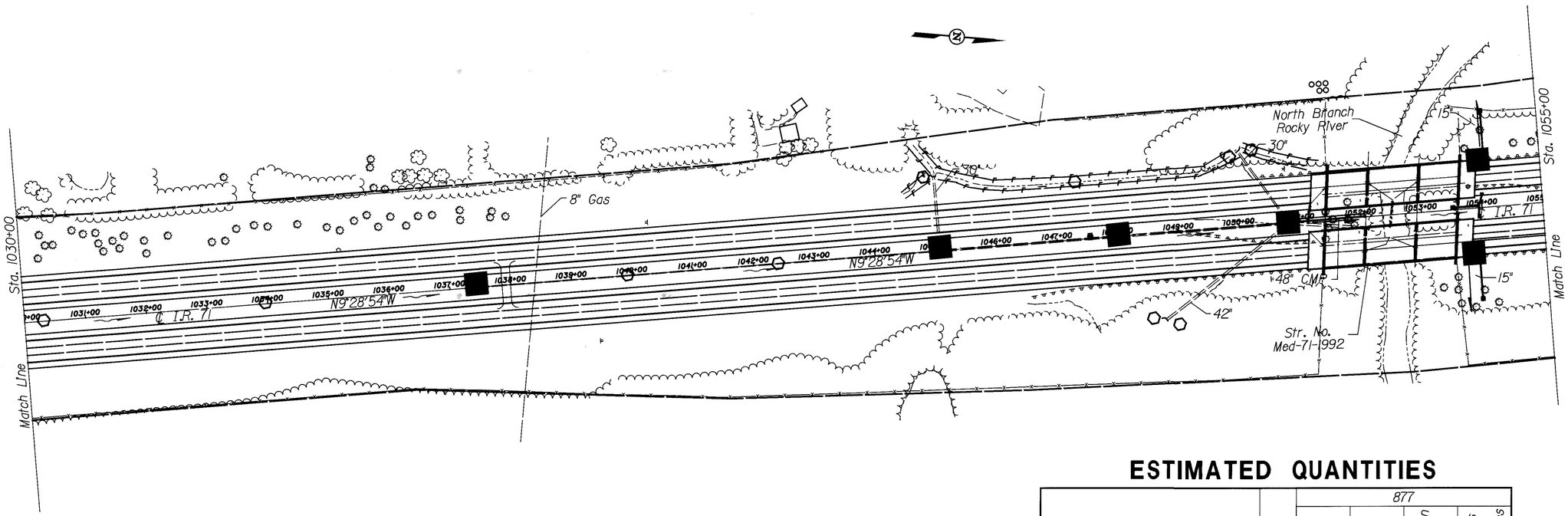

ESTIMATED QUANTITIES

Location		Side	877			
			Temporary Perimiter Filter Fabric Fence	Temporary Ditch Check Filter Fabric Fence	Temporary Inlet Proctection Filter Fabric Fence	Temporary Dams & Sediment Basins
			Lin.Ft.	Lin.Ft.	Lin.Ft.	Cu.Yd.
At ditch checks this sheet				120		
At Inlet protection this sheet					156	
From	To					
Sta. 1044+21	Sta. 1051+40	Lt.	1360			
Totals Carried to Sheet 171			1360	120	156	0

N

0 50 100 200 SCALE IN FEET

CALCULATED JAP CHECKED

STORM WATER POLLUTION PREVENTION PLAN
Sta. 1030+00 to Sta. 1055+00

MED-71-15.78

ESTIMATED QUANTITIES

Location		Side	877			
			Temporary Peremiter Filter Fabric Fence	Temporary Ditch Check Filter Fence	Temporary Inlet Proctection Filter Fence	Temporary Dams & Sediment Basins
			Lin.Ft.	Lin.Ft.	Lin.Ft.	Cu.Yd.
At ditch checks this sheet				144		
At Inlet protection this sheet					208	
From	To					
Sta. 1074+48	Sta. 1074+48	Lt.	340			
Totals Carried to Sheet 171			340	144	208	0

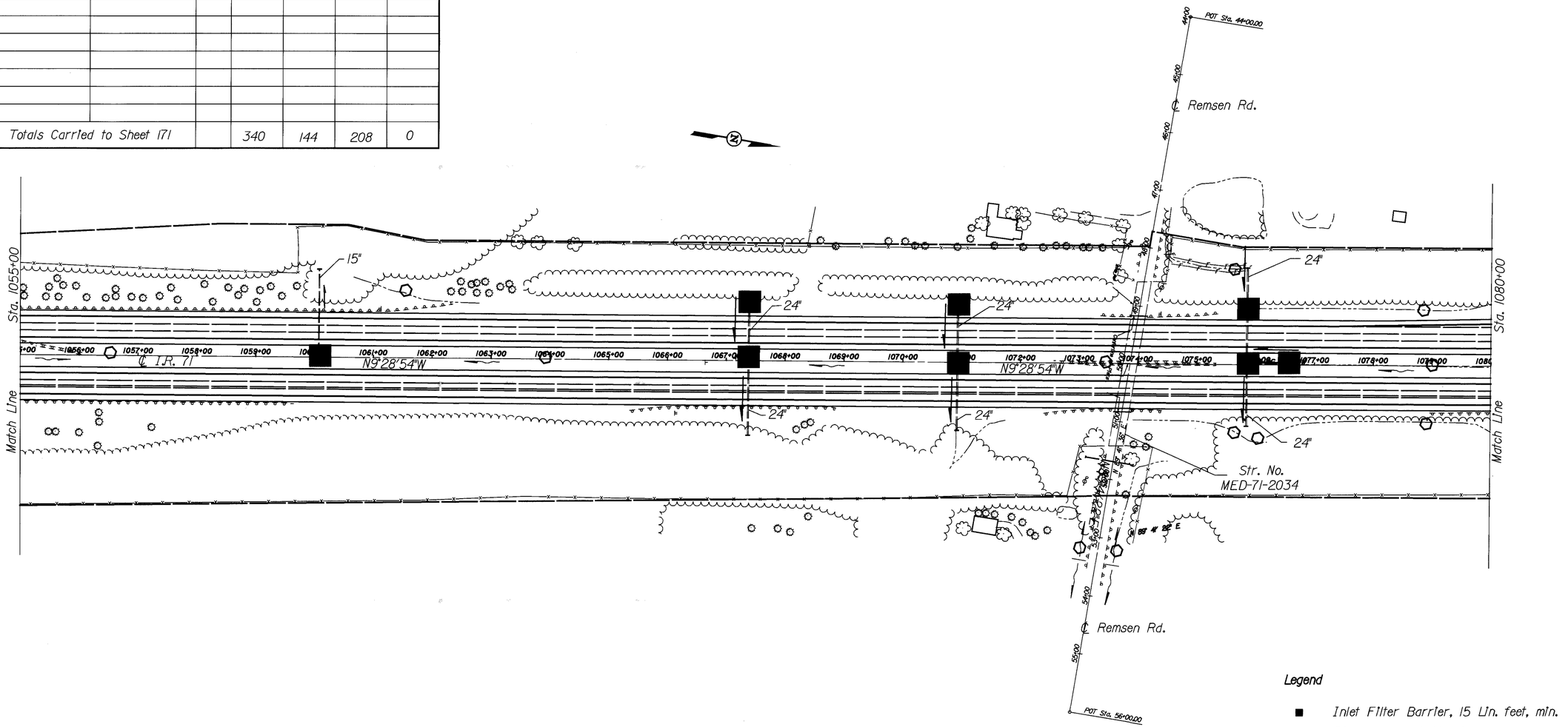

Legend

- Inlet Filter Barrier, 15 Lin. feet, min.
- Ditch Check, 12 Lin. feet
- —F— Filter Fabric Fence
- Sediment Basin
- Sediment Dam
- Drainage Ditch or Temporary Diversion

N

0 50 100 200 SCALE IN FEET

CALCULATED JAP CHECKED JWR

STORM WATER POLLUTION PREVENTION PLAN
Sta. 1055+00 to Sta. 1080+00

MED-71-15.78

158
940

DESIGN FILE : i:\pd_med_ir71\dgn\erosion\med71sw10.dgn
USERNAME : rswift

DATE : 24-NOV-1999
TIME : 12:28

ESTIMATED QUANTITIES

Location		Side	877			
			Temporary Perimiter Filter Fabric Fence	Temporary Ditch Check Filter Fabric Fence	Temporary Inlet Protection Filter Fabric Fence	Temporary Dams & Sediment Basins
			Lin.Ft.	Lin.Ft.	Lin.Ft.	Cu.Yd.
At ditch checks this sheet				324		
At inlet protection this sheet					130	
From	To					
Sta. 1102+44	Sta. 1105+00	Rt.	1105			
Sta. 1104+42	Sta. 1105+00	Lt.	131			
Totals Carried to Sheet 171			1236	324	130	0

Ramp C
P.I. Sta = 83+88.05
Δ = 27° 59' 10" (RT)
Dc = 6° 00' 00"
R = 954.93'
Δc = 21° 59' 10" (RT)
Lc = 366.44'
Es = 30.11'

Ramp C
P.I. Sta = 90+40.36
Δ = 11° 31' 05" (LT)
Dc = 2° 30' 00"
R = 2,291.83'
Δc = 9° 01' 05" (LT)
Lc = 360.72'
Es = 11.99'

Ramp C
P.I. Sta = 96+13.98
Δ = 10° 11' 13" (LT)
Dc = 1° 30' 00"
R = 3,819.72'
T = 340.46'
L = 679.13'
E = 15.14'

Ramp D
P.I. Sta = 76+08.62
Δ = 25° 00' 18" (LT)
Dc = 3° 00' 00"
R = 1,909.86'
Δc = 22° 00' 18" (LT)
Lc = 733.50'
Es = 46.84'

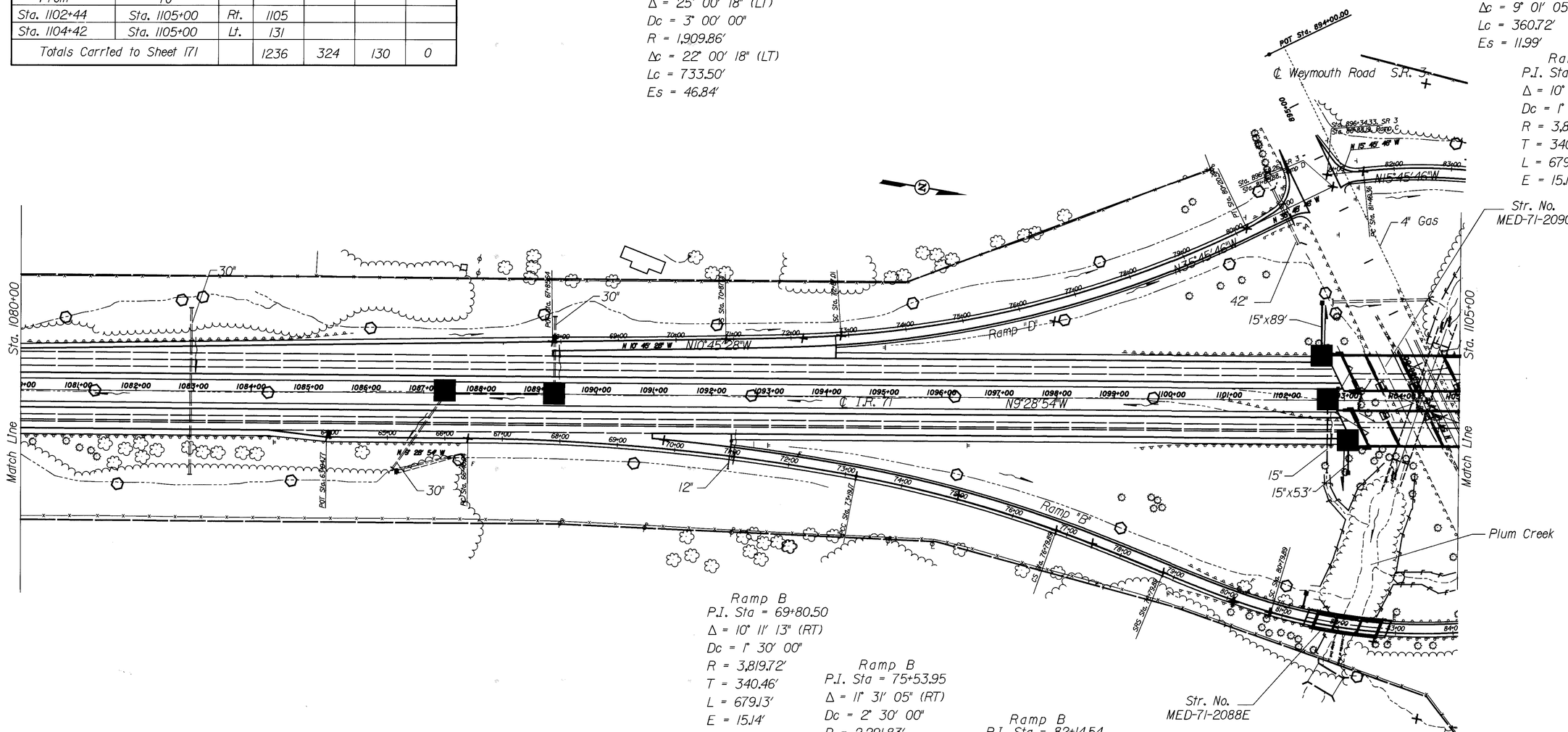

Ramp B
P.I. Sta = 69+80.50
Δ = 10° 11' 13" (RT)
Dc = 1° 30' 00"
R = 3,819.72'
T = 340.46'
L = 679.13'
E = 15.14'

Ramp B
P.I. Sta = 75+53.95
Δ = 11° 31' 05" (RT)
Dc = 2° 30' 00"
R = 2,291.83'
Δc = 9° 01' 05" (RT)
Lc = 360.72'
Es = 11.99'

Ramp B
P.I. Sta = 82+14.54
Δ = 27° 59' 10" (LT)
Dc = 6° 00' 00"
R = 954.93'
Δc = 21° 59' 10" (LT)
Lc = 366.44'
Es = 30.11'

Legend

- ■ Inlet Filter Barrier, 15 Lin. feet, min.
- ⬡ Ditch Check, 12 Lin. feet
- —F— Filter Fabric Fence
- Sediment Basin
- Sediment Dam
- Drainage Ditch or Temporary Diversion

SCALE IN FEET 0 50 100 200

CALCULATED DAP CHECKED DWP

STORM WATER POLLUTION PREVENTION PLAN
Sta. 1080+00 to Sta. 1105+00

MED-71-15.78

159
940

DESIGN FILE : i:\pd_med_lr71\dgn\erosion\med71swll.dgn
USERNAME : rswift

DATE : 24-NOV-1999
TIME : 12:30

DESIGN FILE : i:\pd_med_ir71\dgn\erosion\med71swl2.dgn
USERNAME : rswift
DATE : 24-NOV-1999
TIME : 12:32

Ramp C
P.I. Sta = 83+88.05
Δ = 27° 59′ 10″ (RT)
Dc = 6° 00′ 00″
R = 954.93′
Δc = 21° 59′ 10″ (RT)
Lc = 366.44′
Es = 30.11′

Ramp C
P.I. Sta = 90+40.36
Δ = 11° 31′ 05″ (LT)
Dc = 2° 30′ 00″
R = 2,291.83′
Δc = 9° 01′ 05″ (LT)
Lc = 360.72′
Es = 11.99′

Ramp C
P.I. Sta = 96+13.98
Δ = 10° 11′ 13″ (LT)
Dc = 1° 30′ 00″
R = 3,819.72′
T = 340.46′
L = 679.13′
E = 15.14′

ESTIMATED QUANTITIES

Location		Side	877 Temporary Perimiter Filter Fabric Fence	877 Temporary Ditch Check Filter Fabric Fence	877 Temporary Inlet Proctection Filter Fabric Fence	877 Temporary Dams & Sediment Basins
			Lin.Ft.	Lin.Ft.	Lin.Ft.	Cu.Yd.
At ditch checks this sheet				48		
At Inlet protection this sheet					60	
From	To					
Sta. 1105+43	Sta. 1106+61	Rt.	186			
Sta. 1105+00	Sta. 1106+00	Lt.	770			
Totals Carried to Sheet 171			956	48	60	0

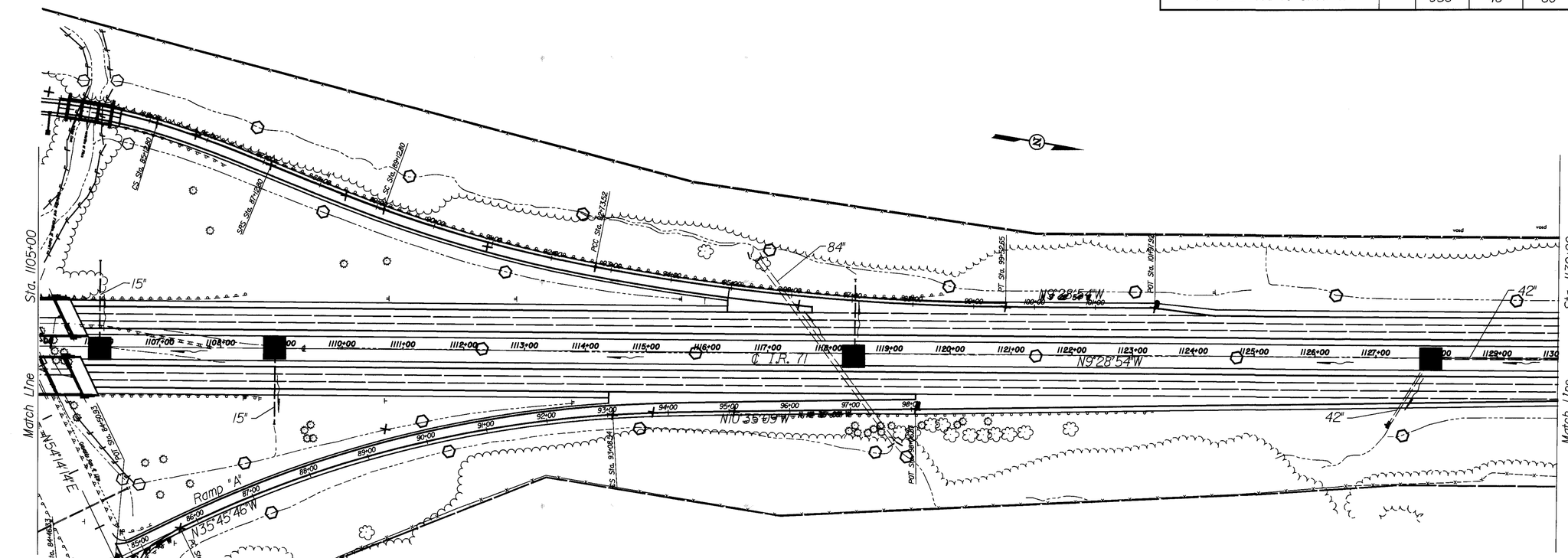

Ramp A
P.I. Sta = 89+43.61
Δ = 25° 10′ 37″ (RT)
Dc = 3° 00′ 00″
R = 1,909.86′
T = 739.23′
L = 739.23′
E = 47.49′

Ramp B
P.I. Sta = 69+80.50
Δ = 10° 11′ 13″ (RT)
Dc = 1° 30′ 00″
R = 3,819.72′
T = 340.46′
L = 679.13′
E = 15.14′

Ramp B
P.I. Sta = 75+53.95
Δ = 11° 31′ 05″ (RT)
Dc = 2° 30′ 00″
R = 2,291.83′
Δc = 9° 01′ 05″ (LT)
Lc = 360.72′
Es = 11.99′

Ramp B
P.I. Sta = 82+14.54
Δ = 27° 59′ 10″ (LT)
Dc = 6° 00′ 00″
R = 954.93′
Δc = 21° 59′ 10″ (LT)
Lc = 366.44′
Es = 30.11′

Legend

- Inlet Filter Barrier, 15 Lin. feet, min.
- Ditch Check, 12 Lin. feet
- —F— Filter Fabric Fence
- Sediment Basin
- Sediment Dam
- Drainage Ditch or Temporary Diversion

N

0 50 100 200 SCALE IN FEET

CALCULATED JAP CHECKED JWR

STORM WATER POLLUTION PREVENTION PLAN
Sta. 1105+00 to Sta. 1130+00

MED-71-15.78

160
940

ESTIMATED QUANTITIES

Location	Side	877 Temporary Peremiter Filter Fabric Fence	877 Temporary Ditch Check Filter Fabric Fence	877 Temporary Inlet Proctection Filter Fabric Fence	877 Temporary Dams & Sediment Basins
		Lin.Ft.	Lin.Ft.	Lin.Ft.	Cu.Yd.
At ditch checks this sheet			204		
At Inlet protection this sheet				208	
Totals Carried to Sheet 171		0	204	208	0

Legend

- ■ Inlet Filter Barrier, 26 Lin. feet
- ○ Ditch Check, 12 Lin. feet
- —F— Filter Fabric Fence
- Sediment Basin
- Sediment Dam
- Drainage Ditch or Temporary Diversion

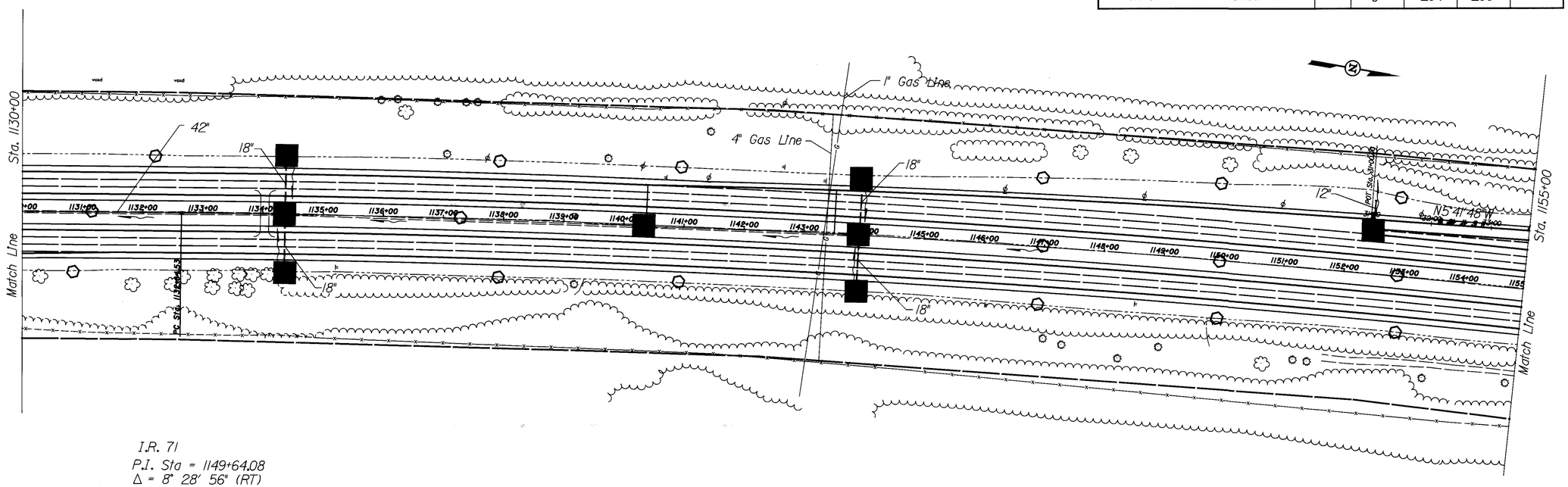

I.R. 71
P.I. Sta = 1149+64.08
Δ = 8° 28' 56" (RT)
Dc = 0° 15' 00"
R = 22,918.23'
T = 1,699.54'
L = 3,392.88'
E = 62.93'

DESIGN FILE : i:\pd_med_ir71\dgn\erosion\med71sw13.dgn
USERNAME : rswift
DATE : 24-NOV-1999
TIME : 12:34

0 50 100 200
SCALE IN FEET

CALCULATED JAP
CHECKED JWR

STORM WATER POLLUTION PREVENTION PLAN
Sta. 1130+00 to Sta. 1155+00

MED-71-15.78

I.R. 71
P.I. Sta = 1149+64.08
Δ = 8° 28′ 56″ (RT)
Dc = 0° 15′ 00″
R = 22,918.23′
T = 1,699.54′
L = 3,392.88′
E = 62.93′

S.B. Rest Area
P.I. Sta = 35+88.48
Δ = 5° 38′ 59″ (LT)
Dc = 1° 30′ 00″
R = 3,819.72′
T = 188.48′
L = 376.65′
E = 4.65′

S.B. Rest Area
P.I. Sta = 45+93.57
Δ = 13° 59′ 08″ (RT)
Dc = 9° 00′ 00″
R = 636.62′
T = 78.08′
L = 155.39′
E = 4.77′

S.B. Rest Area
P.I. Sta = 51+05.08
Δ = 12° 58′ 13″ (LT)
Dc = 1° 30′ 00″
R = 3,819.72′
T = 434.20′
L = 864.69′
E = 24.60′

ESTIMATED QUANTITIES

Location	Side	877 Temporary Perimiter Filter Fabric Fence	877 Temporary Ditch Check Filter Fabric Fence	877 Temporary Inlet Protection Filter Fence	877 Temporary Dams & Sediment Basins
		Lin.Ft.	Lin.Ft.	Lin.Ft.	Cu.Yd.
At ditch checks on this sheet			324		
At all catch basins on this sheet				130	
Totals Carried to Sheet 171		0	324	130	0

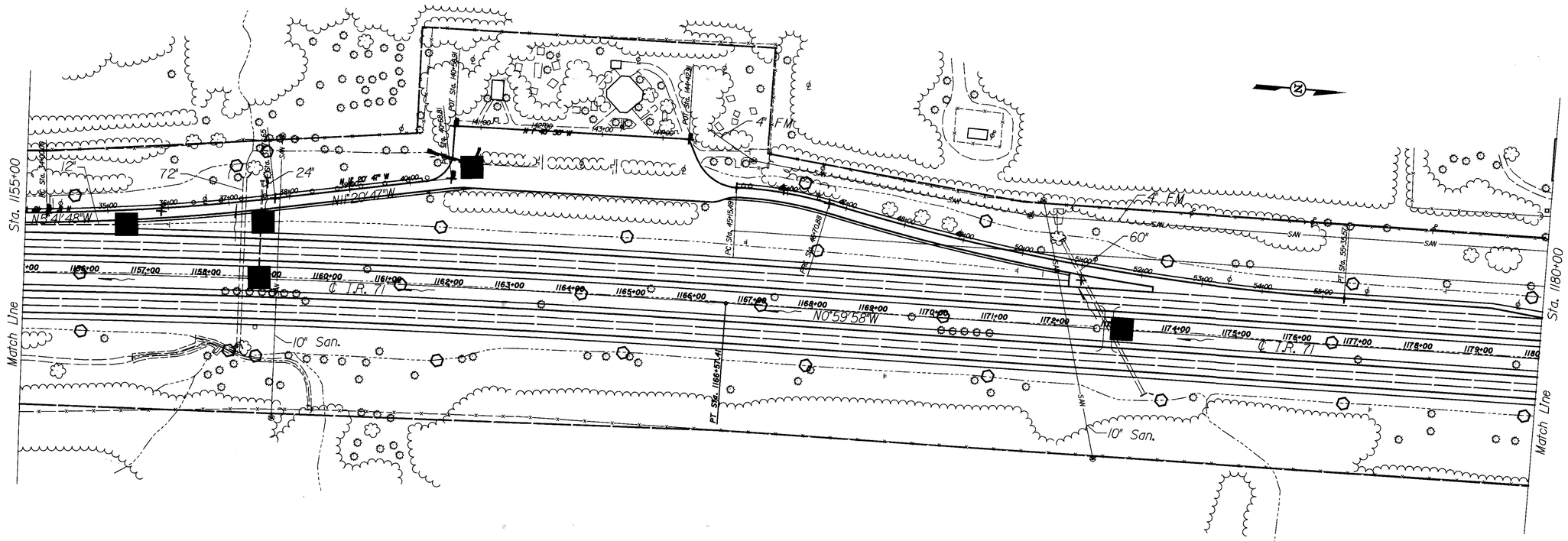

Legend

- Inlet Filter Barrier, 26 Lin. feet
- Ditch Check, 12 Lin. feet
- —F— Filter Fabric Fence
- Sediment Basin
- Sediment Dam
- Drainage Ditch or Temporary Diversion

SCALE IN FEET 0 50 100 200

CALCULATED JAP CHECKED

STORM WATER POLLUTION PREVENTION PLAN
Sta. 1155+00 to Sta. 1180+00

MED-71-15.78

162
940

DESIGN FILE : i:\pd_med_ir71\dgn\erosion\med71siw14.dgn
USERNAME : rswift
DATE : 24-NOV-1999
TIME : 12:42

ESTIMATED QUANTITIES

Location		Side	877 Temporary Peremiter Filter Fabric Fence	Temporary Ditch Check Filter Fabric Fence	Temporary Inlet Proctection Filter Fabric Fence	Temporary Dams & Sediment Basins
			Lin.Ft.	Lin.Ft.	Lin.Ft.	Cu.Yd.
At ditch checks this sheet				252		
At Inlet protection this sheet					182	
From	To					
Sta. 1185+76	Sta. 1185+96	Lt.	136			
Sta. 1192+99	Sta. 1193+27	Lt.	176			
Totals Carried to Sheet 171			312	252	182	0

Legend

- ■ Inlet Filter Barrier, 26 Lin. feet
- ○ Ditch Check, 12 Lin. feet
- —F— Filter Fabric Fence
- Sediment Basin
- Sediment Dam
- Drainage Ditch or Temporary Diversion

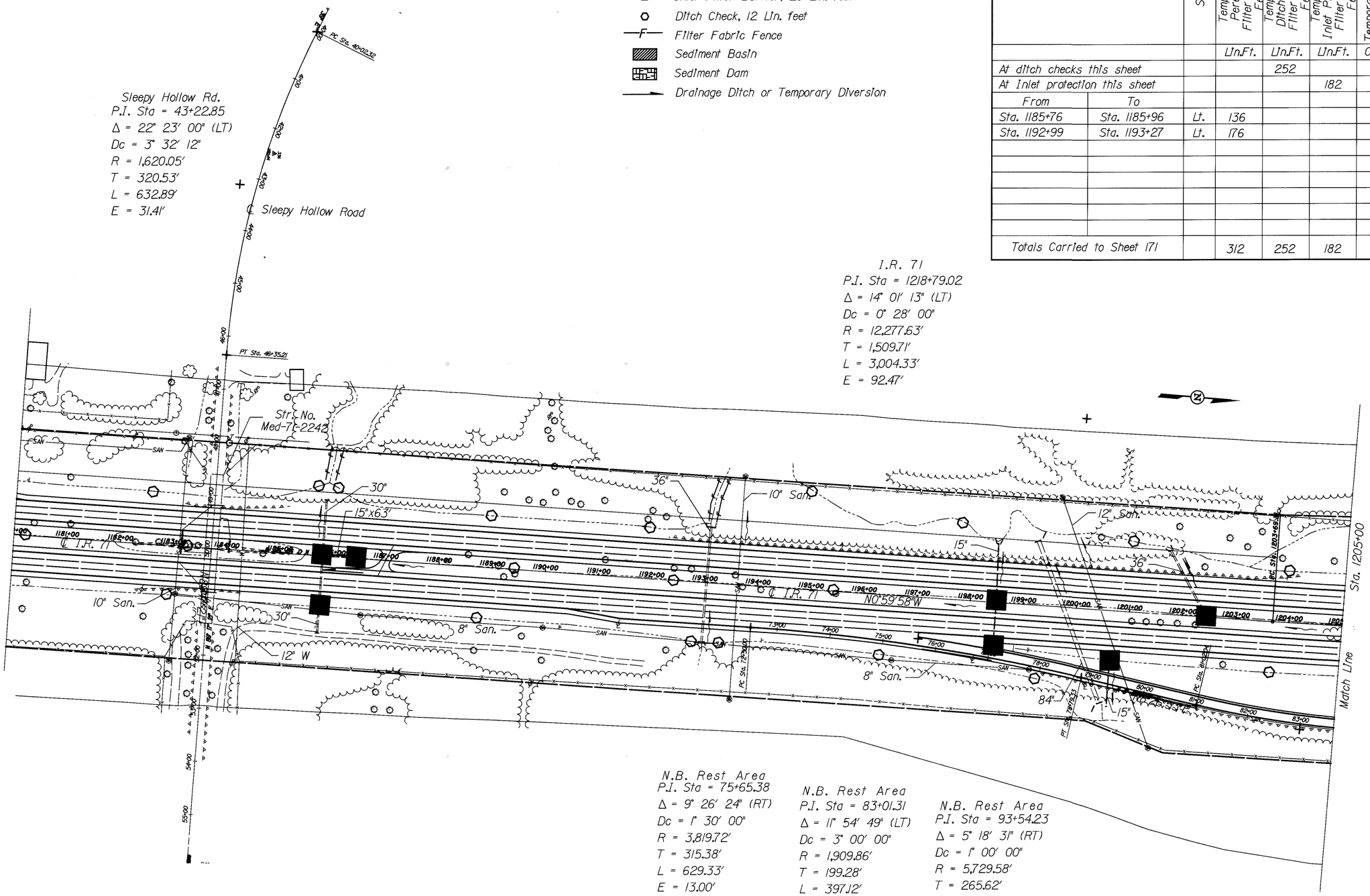

DESIGN FILE : i:\pd_med_ir71\dgn\erosion\med71sw15.dgn
USERNAME : rswift
DATE : 24-NOV-1999
TIME : 12:45

SCALE IN FEET 0 50 100 200

CALCULATED JAP
CHECKED

STORM WATER POLLUTION PREVENTION PLAN
Sta. 1180+00 to Sta. 1205+00

MED-71-15.78

DESIGN FILE : I:\pd_med_lr71\dgn\erosion\med71swl6.dgn
USERNAME : rswift

DATE : 24-NOV-1999
TIME : 15:14

I.R. 71
P.I. Sta = 1218+79.02
Δ = 14° 01′ 13" (LT)
Dc = 0° 28′ 00"
R = 12,277.63′
T = 1,509.71′
L = 3,004.33′
E = 92.47′

Legend

- Inlet Filter Barrier, 26 Lin. feet
- Ditch Check, 12 Lin. feet
- —F— Filter Fabric Fence
- Sediment Basin
- Sediment Dam
- Drainage Ditch or Temporary Diversion

ESTIMATED QUANTITIES

Location	Side	877 Temporary Perimiter Filter Fabric Fence	877 Temporary Ditch Check Filter Fabric Fence	877 Temporary Inlet Proctection Filter Fabric Fence	877 Temporary Dams & Sediment Basins
		Lin.Ft.	Lin.Ft.	Lin.Ft.	Cu.Yd.
At ditch checks this sheet			228		
At Inlet protection this sheet				286	
Totals Carried to Sheet 171		0	228	286	0

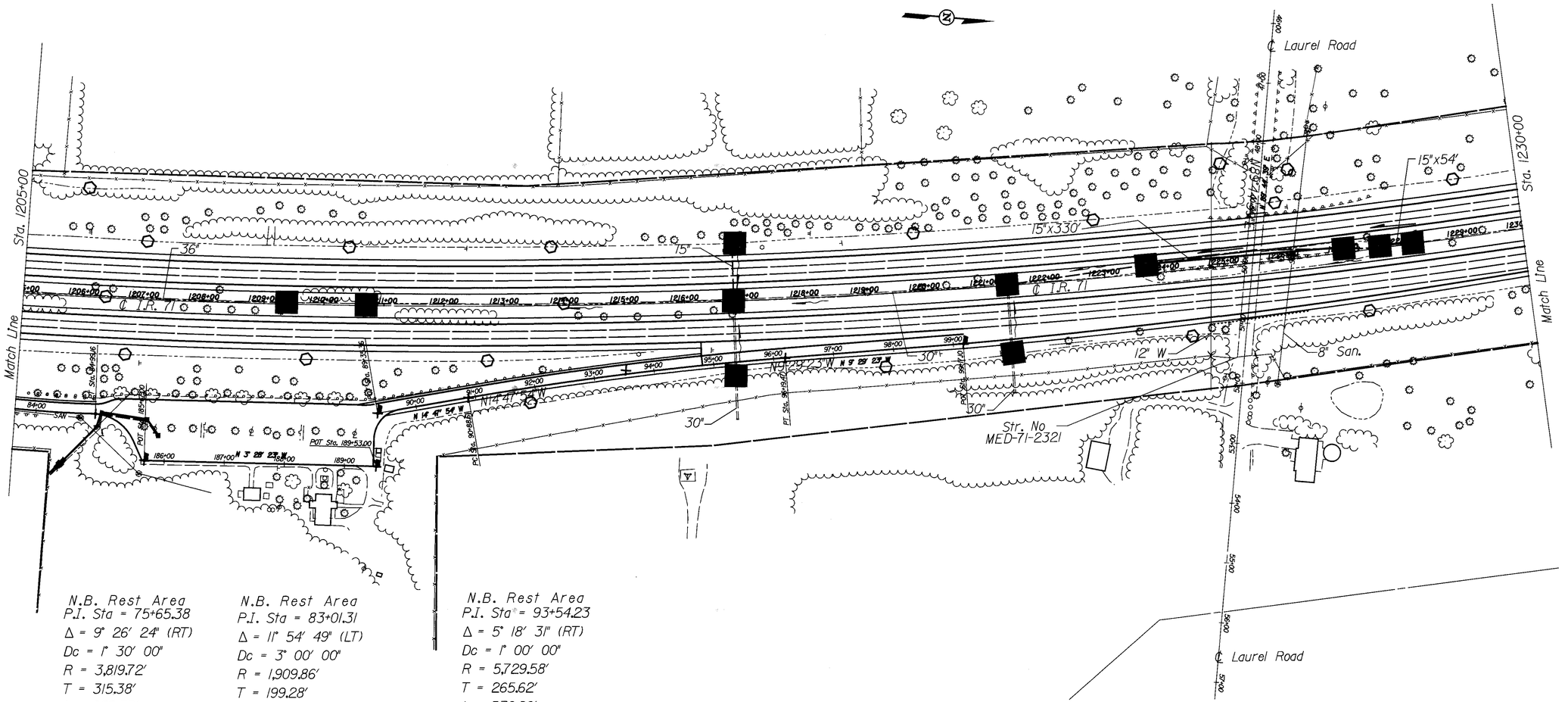

N.B. Rest Area
P.I. Sta = 75+65.38
Δ = 9° 26′ 24" (RT)
Dc = 1° 30′ 00"
R = 3,819.72′
T = 315.38′
L = 629.33′
E = 13.00′

N.B. Rest Area
P.I. Sta = 83+01.31
Δ = 11° 54′ 49" (LT)
Dc = 3° 00′ 00"
R = 1,909.86′
T = 199.28′
L = 397.12′
E = 10.37′

N.B. Rest Area
P.I. Sta = 93+54.23
Δ = 5° 18′ 31" (RT)
Dc = 1° 00′ 00"
R = 5,729.58′
T = 265.62′
L = 530.86′
E = 6.15′

0 50 100 200 SCALE IN FEET

CALCULATED JAP CHECKED Grize

STORM WATER POLLUTION PREVENTION PLAN
Sta. 1205+00 to Sta. 1230+00

MED-71-15.78

164
940

ESTIMATED QUANTITIES

Location		Side	877 Temporary Perimiter Filter Fabric Fence	877 Temporary Ditch Check Filter Fabric Fence	877 Temporary Inlet Protection Filter Fabric Fence	877 Temporary Dams & Sediment Basins
			Lin.Ft.	Lin.Ft.	Lin.Ft.	Cu.Yd.
At ditch checks this sheet				60		
At inlet protection this sheet					30	
From	To					
Sta. 1238+00	Sta. 1244+00	Lt.	1276			
Sta. 1231+58	Sta. 1231+74	Lt.	200			
Sta. 1230+58	Sta. 1230+90	Rt.	100			
Sta. 1255+02	Sta. 1255+00	Rt.	1178			
Sta. 1250+00	Sta. 1253+20	Lt.	650			
Sta. 1254+22	Sta. 1255+00	Lt.	240			
Totals Carried to Sheet 171			3644	60	30	0

Legend

- Inlet Filter Barrier, 26 Lin. feet
- Ditch Check, 12 Lin. feet
- Filter Fabric Fence
- Sediment Basin
- Sediment Dam
- Drainage Ditch or Temporary Diversion

Ramp "A"
P.I. Sta = 45+87.41
Δ = 8° 28' 44" (RT)
Dc = 2° 30' 00"
R = 2,291.83'
T = 169.89'
L = 339.16'
E = 6.29'

Ramp "A"
P.I. Sta = 48+31.13
Δ = 61° 31' 16" (LT)
Dc = 16° 22' 13"
R = 350.00'
Ls = 200.00'
Theta = 16° 22' 13"
LT = 133.91'
ST = 67.19'
x = 198.37'
y = 18.94'
k = 99.73'
p = 4.75'
Δc = 28° 46' 50" (LT)
Lc = 175.81'
Ts = 310.87'
Es = 62.83'

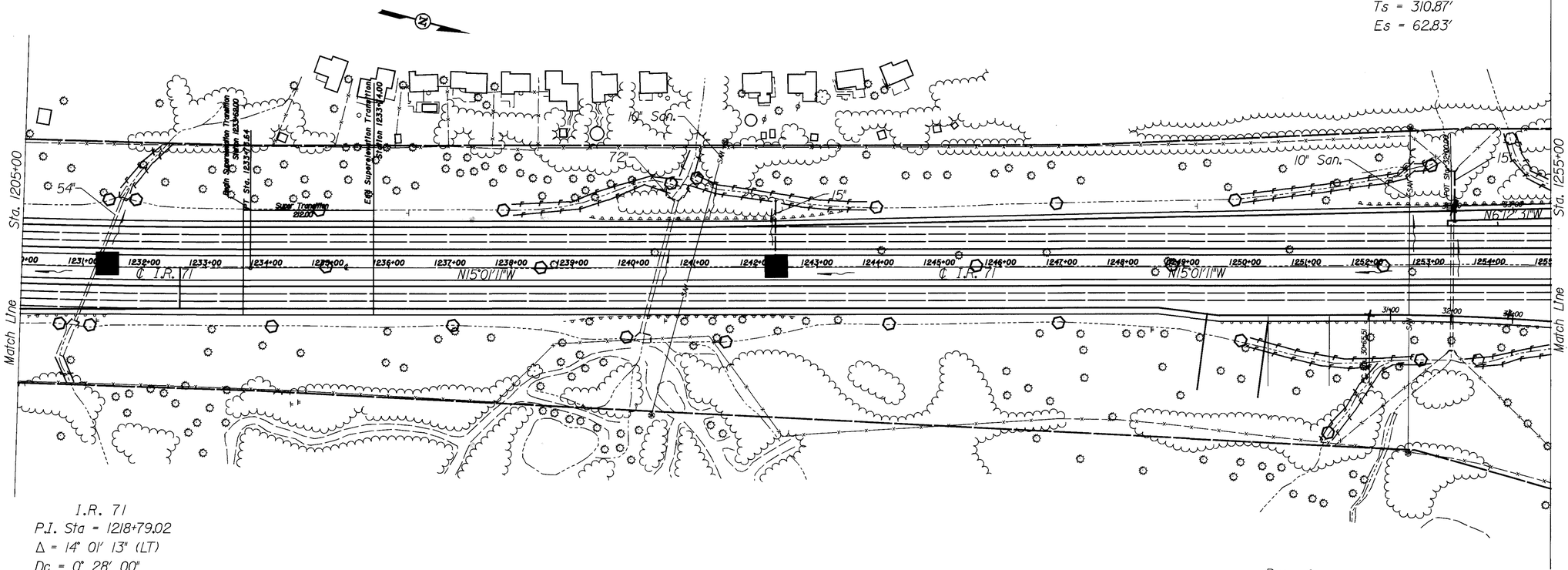

I.R. 71
P.I. Sta = 1218+79.02
Δ = 14° 01' 13" (LT)
Dc = 0° 28' 00"
R = 12,277.63'
T = 1,509.71'
L = 3,004.33'
E = 92.47'

Ramp C
P.I. Sta. = 38+62.39
Δ = 34° 01' 48" (RT)
Dc = 9° 00'
R = 636.62'
Ls = 200.00'
Theta = 9° 00'
LT = 133.51'
ST = 66.82'
x = 199.51'
y = 10.45'
k = 99.92'
p = 2.62'
Δc = 25° 01' 48" (RT)
Lc = 278.11'
Ec = 15.49'
Tc = 141.31'

DESIGN FILE : i:\pd_med_lr71\dgn\erosion\med71swl7.dgn
USERNAME : rswift

DATE : 24-NOV-1999
TIME : 15:12

SCALE IN FEET 0 50 100 200

CALCULATED SAP CHECKED

STORM WATER POLLUTION PREVENTION PLAN

MED-71-15.78

Sta. 1230+00 to Sta. 1255+00

165
940

ESTIMATED QUANTITIES

Location		Side	877 Temporary Peremiter Filter Fabric Fence	877 Temporary Ditch Check Filter Fabric Fence	877 Temporary Inlet Proctection Filter Fabric Fence	877 Temporary Dams & Sediment Basins
			Lin.Ft.	Lin.Ft.	Lin.Ft.	Cu.Yd.
At ditch checks this sheet				480		
At Inlet protection this sheet					364	
From	To					
Sta. 33+38 (C)	Sta. 47+13 (C)	Rt.	2934			
Sta. 1257+12	Sta. 1264+27	Lt.	1550			
Sta. 33+37 (A)	Sta. 50+96 (A)	Lt.	3520			
Sta. 37+14 (A)	Sta. 47+13 (A)	Rt.	2270			
Sta. 51+30 (B)	Sta. 57+62 (B)	Rt.	1290			
Sta. 47+28 (B)	Sta. 58+51 (B)	Lt.	2016			
Sta. 1269+48	Sta. 1280+00	Rt.	2598			
Sta. 44+24 (D)	Sta. 51+00 (D)	Lt.	1156			
Totals Carried to Sheet 171			17334	480	364	0

Ramp "A"
P.I. Sta = 45+87.41
Δ = 8° 28′ 44″ (RT)
Dc = 2° 30′ 00″
R = 2,291.83′
T = 169.89′
L = 339.16′
E = 6.29′

Ramp "A"
P.I. Sta = 48+31.13
Δ = 61° 31′ 16″ (LT)
Dc = 16° 22′ 13″
R = 350.00′
Ls = 200.00′
Theta = 16° 22′ 13″
LT = 133.91′
ST = 67.19′
x = 198.37′
y = 18.94′
k = 99.73′
p = 4.75′
Δc = 28° 46′ 50″ (LT)
Lc = 175.81′
Ts = 310.87′
Es = 62.83′

Ramp "B"
P.I. Sta = 49+49.13
Δ = 90° 00′ 00″ (LT)
Dc = 24° 54′ 40″
R = 230.00′
Ls = 200.00′
Theta = 24° 54′ 40″
LT = 134.68′
ST = 67.89′
x = 196.25′
y = 28.60′
k = 99.37′
p = 7.20′
Δc = 40° 10′ 40″ (LT)
Lc = 161.28′
Ts = 336.57′
Es = 105.45′

Ramp "B"
P.I. Sta = 57+84.65
Δ = 14° 16′ 00″ (LT)
Dc = 1° 30′ 00″
R = 3,819.72′
T = 478.03′
L = 951.11′
E = 29.80′

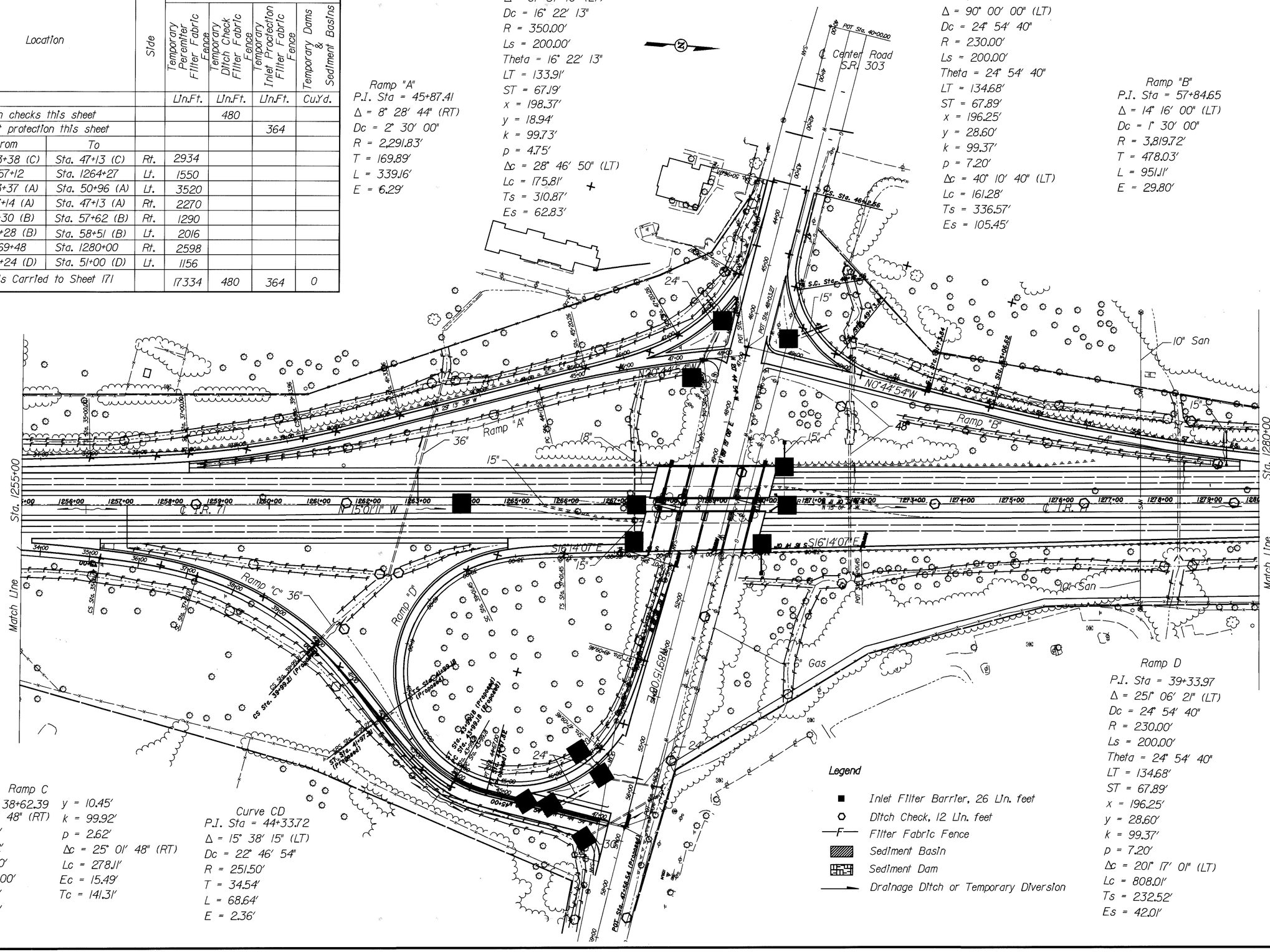

Ramp C
P.I. Sta. = 38+62.39
Δ = 34° 01′ 48″ (RT)
Dc = 9° 00′
R = 636.62′
Ls = 200.00′
Theta = 9° 00′
LT = 133.51′
ST = 66.82′
x = 199.51′
y = 10.45′
k = 99.92′
p = 2.62′
Δc = 25° 01′ 48″ (RT)
Lc = 278.11′
Ec = 15.49′
Tc = 141.31′

Curve CD
P.I. Sta = 44+33.72
Δ = 15° 38′ 15″ (LT)
Dc = 22° 46′ 54″
R = 251.50′
T = 34.54′
L = 68.64′
E = 2.36′

Legend
- Inlet Filter Barrier, 26 Lin. feet
- Ditch Check, 12 Lin. feet
- Filter Fabric Fence
- Sediment Basin
- Sediment Dam
- Drainage Ditch or Temporary Diversion

Ramp D
P.I. Sta = 39+33.97
Δ = 251° 06′ 21″ (LT)
Dc = 24° 54′ 40″
R = 230.00′
Ls = 200.00′
Theta = 24° 54′ 40″
LT = 134.68′
ST = 67.89′
x = 196.25′
y = 28.60′
k = 99.37′
p = 7.20′
Δc = 201° 17′ 01″ (LT)
Lc = 808.01′
Ts = 232.52′
Es = 42.01′

SCALE IN FEET 0 50 100 200

CALCULATED JAP
CHECKED

STORM WATER POLLUTION PREVENTION PLAN
Sta. 1255+00 to Sta. 1280+00

MED-71-15.78

DESIGN FILE : i:\pd_med_ir71\dgn\erosion\med71sw18.dgn
USERNAME : rswift
DATE : 24-NOV-1999
TIME : 13:16

DESIGN FILE : i:\pd_med_ir71\dgn\erosion\med71swl9.dgn
USERNAME : rswlft

DATE : 24-NOV-1999
TIME : 13:18

Ramp "B"
P.I. Sta = 49+49.13
Δ = 90° 00' 00" (LT)
Dc = 24° 54' 40"
R = 230.00'
Ls = 200.00'
Theta = 24° 54' 40"
LT = 134.68'
ST = 67.89'
x = 196.25'
y = 28.60'
k = 99.37'
p = 7.20'
Δc = 40° 10' 40" (LT)
Lc = 161.28'
Ts = 336.57'
Es = 105.45'

Ramp "B"
P.I. Sta = 57+84.65
Δ = 14° 16' 00" (LT)
Dc = 1° 30' 00"
R = 3,819.72'
T = 478.03'
L = 951.11'
E = 29.80'

Legend

- Inlet Filter Barrier, 26 Lin. feet
- Ditch Check, 12 Lin. feet
- —F— Filter Fabric Fence
- Sediment Basin
- Sediment Dam
- Drainage Ditch or Temporary Diversion

ESTIMATED QUANTITIES

Location		Side	877 Temporary Perimiter Filter Fabric Fence	877 Temporary Ditch Check Filter Fabric Fence	877 Temporary Inlet Protection Filter Fabric Fence	877 Temporary Dams & Sediment Basins
			Lin.Ft.	Lin.Ft.	Lin.Ft.	Cu.Yd.
At ditch checks this sheet				276		
At inlet protection this sheet					78	
From	To					
Sta. 58+51 (A)	Sta. 1293+31	Lt.	2650			
Sta. 1280+00	Sta. 1293+34	Rt.	2680			
Sta. 1299+80	Sta. 1305+00	Lt.	1048			
Sta. 1301+89	Sta. 1305+00	Rt.	640			
Totals Carried to Sheet 171			7018	276	78	0

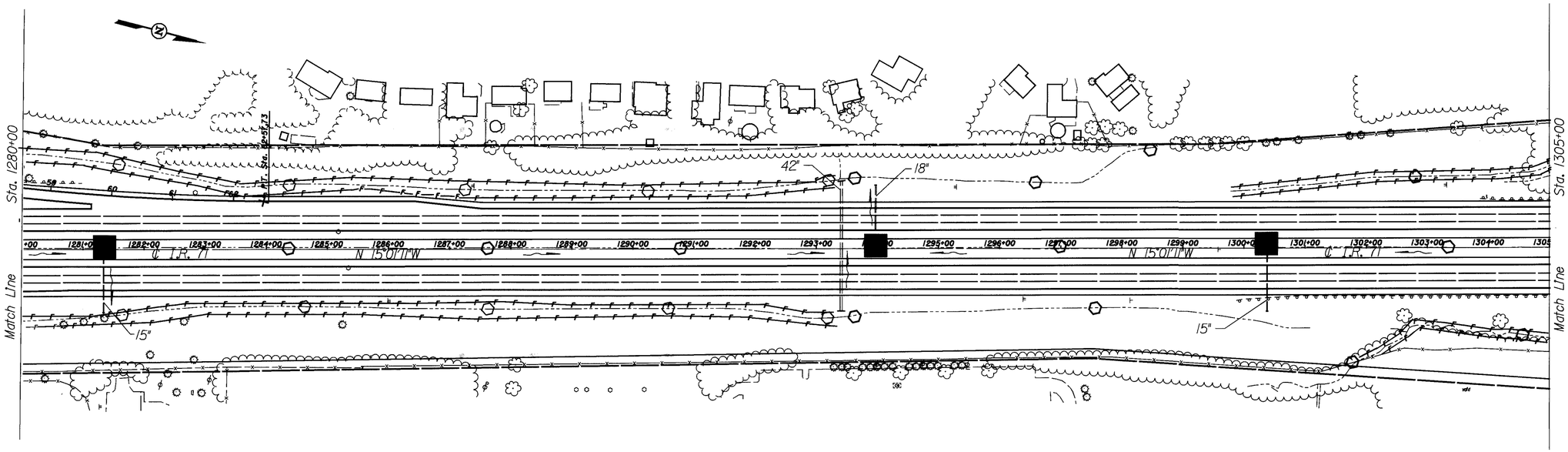

STORM WATER POLLUTION PREVENTION PLAN
Sta. 1280+00 to Sta. 1305+00

MED-71-15.78

CALCULATED JAP
CHECKED

SCALE IN FEET
0 50 100 200

ESTIMATED QUANTITIES

Location		Side	877			
			Temporary Perimiter Filter Fabric Fence	Temporary Ditch Check Filter Fabric Fence	Temporary Inlet Protection Filter Fabric Fence	Temporary Dams & Sediment Basins
			Lin.Ft.	Lin.Ft.	Lin.Ft.	Cu.Yd.
At ditch checks this sheet				300		
At Inlet protection this sheet					26	
From	To					
Sta. 1305+00	Sta. 1309+13	Lt.	630			
Sta. 1305+00	Sta. 1309+81	Rt.	810			
Totals Carried to Sheet 171			1440	300	26	0

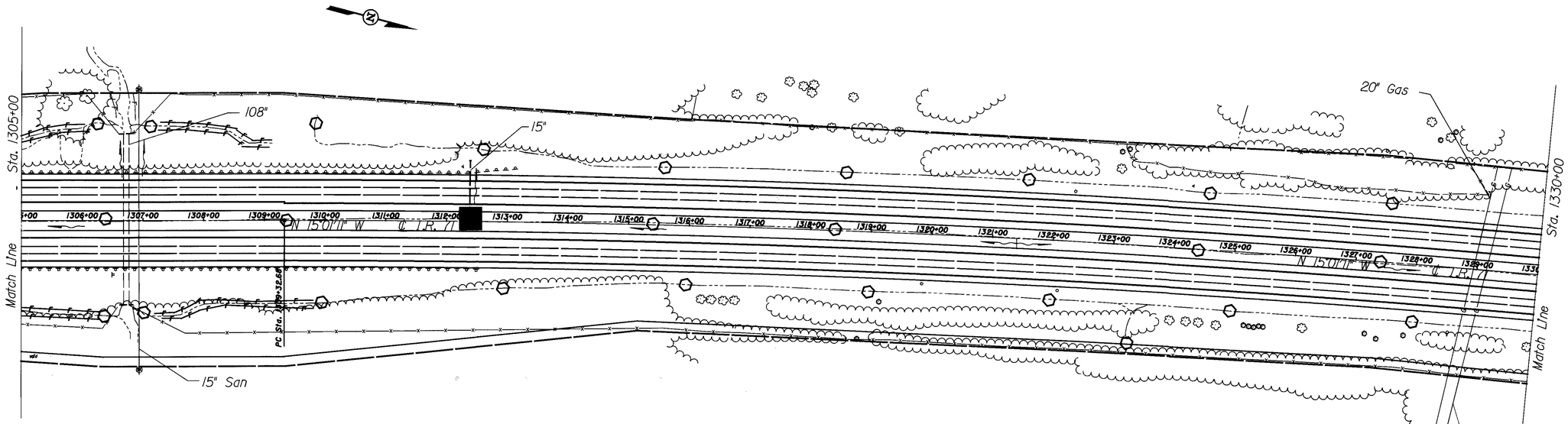

Legend

- Inlet Filter Barrier, 26 Lin. feet
- Ditch Check, 12 Lin. feet
- —F— Filter Fabric Fence
- Sediment Basin
- Sediment Dam
- Drainage Ditch or Temporary Diversion

I.R. 71
P.I. Sta = 1331+20.40
Δ = 10° 54′ 20" (RT)
Dc = 0° 15′ 00"
R = 22,918.23′
T = 2,187.71′
L = 4,362.21′
E = 104.18′

SCALE IN FEET 0 50 100 200

CALCULATED JAP CHECKED

STORM WATER POLLUTION PREVENTION PLAN
Sta. 1305+00 to Sta. 1330+00

MED-71-15.78

168
940

DESIGN FILE : i:\pd_med_ir71\dgn\erosion\med71sw20.dgn
USERNAME : rswift

DATE : 24-NOV-1999
TIME : 13:21

ESTIMATED QUANTITIES

Location	Side	877			
		Temporary Perimiter Filter Fabric Fence	Temporary Ditch Check Filter Fabric Fence	Temporary Inlet Proctection Filter Fabric Fence	Temporary Dams & Sediment Basins
		Lin.Ft.	Lin.Ft.	Lin.Ft.	Cu.Yd.
At ditch checks this sheet			288		
At Inlet protection this sheet				130	
Totals Carried to Sheet 171		0	288	130	0

Legend

- Inlet Filter Barrier, 26 Lin. feet
- Ditch Check, 12 Lin. feet
- —F— Filter Fabric Fence
- Sediment Basin
- Sediment Dam
- Drainage Ditch or Temporary Diversion

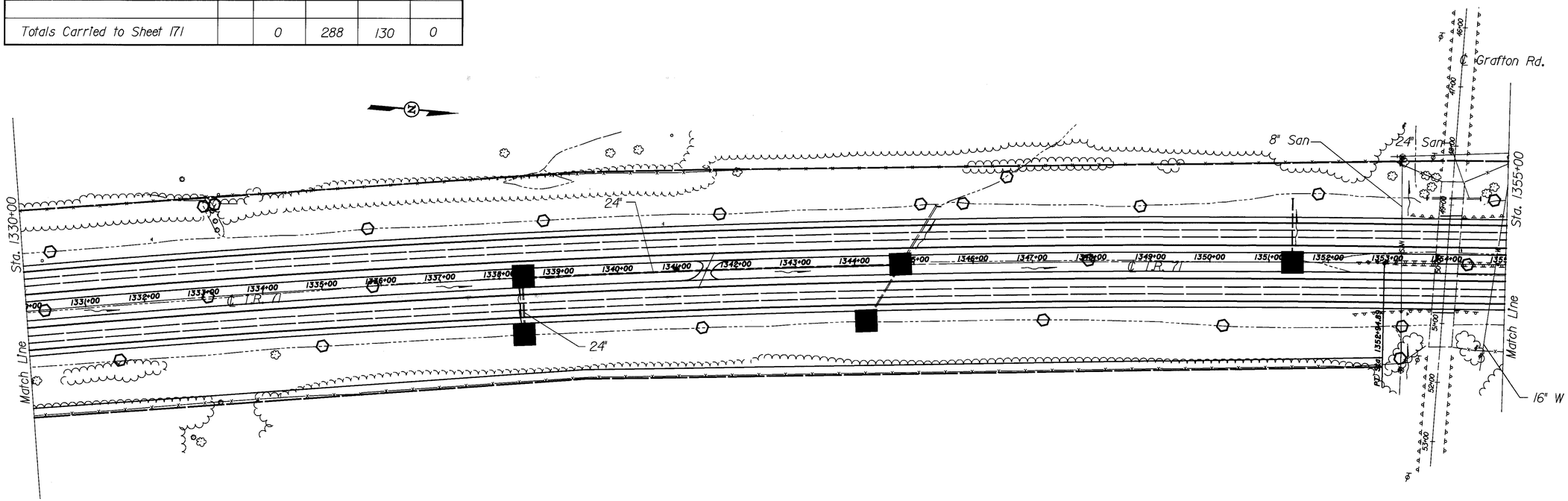

I.R. 71
P.I. Sta = 1331+20.40
Δ = 10° 54' 20" (RT)
Dc = 0° 15' 00"
R = 22,918.23'
T = 2,187.71'
L = 4,362.21'
E = 104.18'

N

0 50 100 200 SCALE IN FEET

CALCULATED JAP CHECKED DWR

STORM WATER POLLUTION PREVENTION PLAN
Sta. 1330+00 to Sta. 1355+00

MED-71-15.78

169
940

DESIGN FILE : i:\pd_med_ir71\dgn\erosion\med71sw2i.dgn
USERNAME : rswift
DATE : 24-NOV-1999
TIME : 13:22

ESTIMATED QUANTITIES

Location		Side	877			
			Temporary Perimiter Filter Fabric Fence	Temporary Ditch Check Filter Fabric Fence	Temporary Inlet Protection Filter Fabric Fence	Temporary Dams & Sediment Basins
			Lin.Ft.	Lin.Ft.	Lin.Ft.	Cu.Yd.
At ditch checks this sheet				288		
At inlet protection this sheet					26	
From	To					
Sta. 1366+24	Sta. 1366+58	Rt.	72			
Sta. 1375+20	Sta. 1380+00	Lt.	824			
Sta. 1378+61	Sta. 1380+00	Rt.	280			
Totals Carried to Sheet 171			1176	288	26	0

Legend

- Inlet Filter Barrier, 26 Lin. feet
- Ditch Check, 12 Lin. feet
- —F— Filter Fabric Fence
- Sediment Basin
- Sediment Dam
- Drainage Ditch or Temporary Diversion

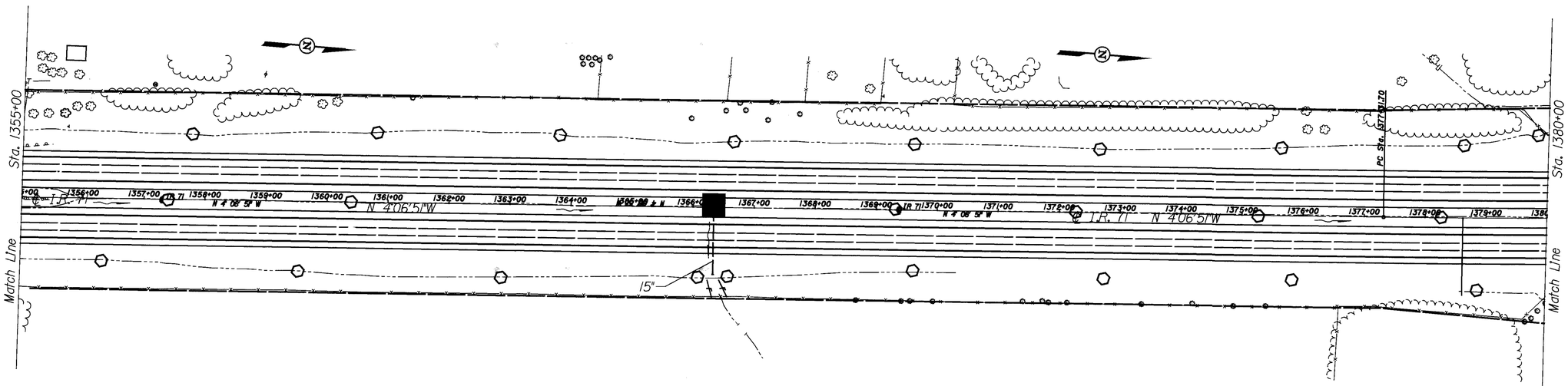

I.R. 71
P.I. Sta = 1387+79.99
Δ = 5° 14' 16" (LT)
Dc = 0° 15' 00"
T = 1,048.28'
R = 22,918.23'
L = 2,095.10'
E = 23.96'

DESIGN FILE : i:\pd_med_ir71\dgn\erosion\med71sw22.dgn
USERNAME : rswift

DATE : 24-NOV-1999
TIME : 13:24

SCALE IN FEET 0 50 100 200

CALCULATED JAP CHECKED

STORM WATER POLLUTION PREVENTION PLAN
Sta. 1355+00 to Sta. 1380+00

MED-71-15.78

170
940

ESTIMATED QUANTITIES

Location		Side	877 Temporary Perimiter Filter Fabric Fence	877 Temporary Ditch Check Filter Fabric Fence	877 Temporary Inlet Proctection Filter Fabric Fence	877 Temporary Dams & Sediment Basins
			Lin.Ft.	Lin.Ft.	Lin.Ft.	Cu.Yd.
At ditch checks this sheet				216		
At inlet protection this sheet					52	
From	To					
Sta. 1380+49	Sta. 1383+28	Lt.	560			
Sta. 1380+52	Sta. 1383+25	Rt.	550			
Totals Carried to Subsummary			1110	216	52	0

P.I. Sta = 1387+79.99
Δ = 5° 14' 16" (LT)
Dc = 0° 15' 00"
R = 22,918.23'
T = 1,048.28'
L = 2,095.10'
E = 23.96'

Legend

- Inlet Filter Barrier, 26 Lin. feet
- Ditch Check, 12 Lin. feet
- Filter Fabric Fence
- Sediment Basin
- Sediment Dam
- Drainage Ditch or Temporary Diversion

I.R. 71
P.I. Sta = 1387+79.99
Δ = 5° 14' 16" (LT)
Dc = 0° 15' 00"
T = 1,048.28'
R = 22,918.23'
L = 2,095.10'
E = 23.96'

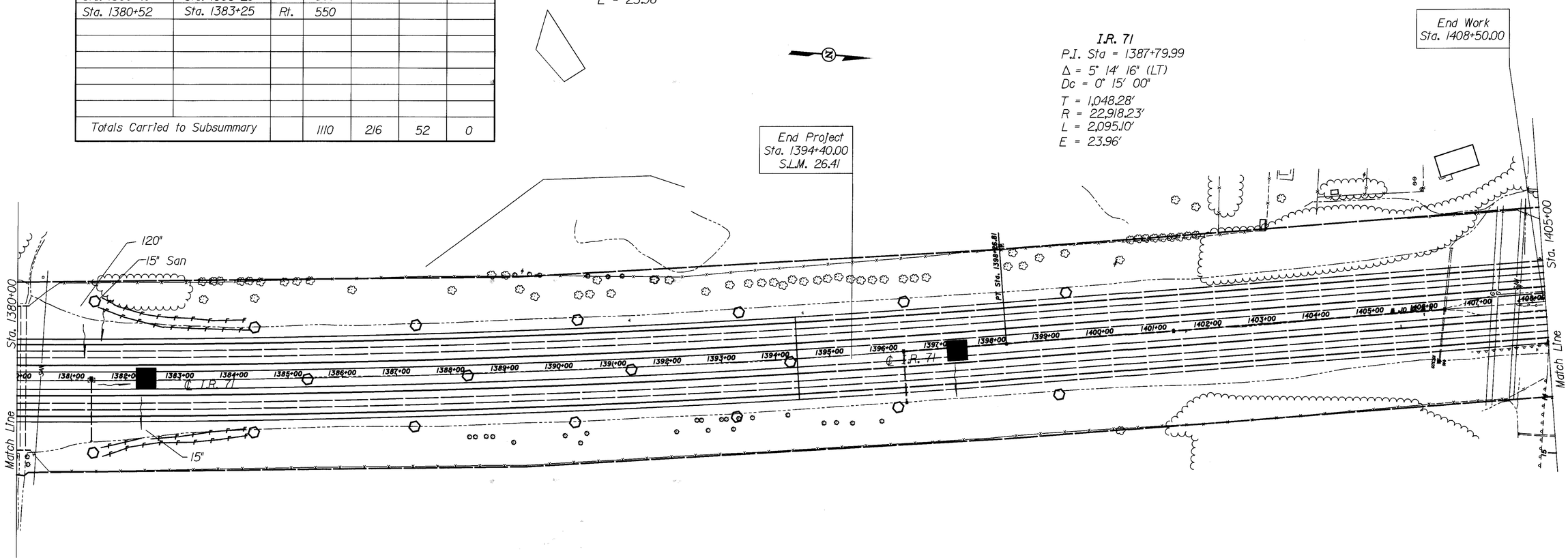

SWSPP SUB-SUMMARY

SHEET NUMBER																						ITEM	ITEM EXT.	GRAND TOTAL	UNIT	DESCRIPTION
149	150	151	152	153	154	155	156	157	158	159	160	161	162	163	164	165	166	167	168	169	170	171					
																										EROSION CONTROL
0	1633	8883	5010	2750	4220	11003	2025	1360	340	1236	956	0	0	312	0	3644	17334	7018	1440	0	1176	1110	877	30100	71450	LIN FT	TEMPORARY PERIMETER FILTER FABRIC FENCE
180	204	276	156	312	132	36	120	120	144	324	48	204	324	252	228	60	480	276	300	288	288	216	877	30200	4968	LIN FT	TEMPORARY DITCH CHECK FILTER FABRIC FENCE
260	130	416	130	52	208	75	104	156	208	130	60	208	130	182	286	30	364	78	26	130	26	52	877	30300	3441	LIN FT	TEMPORARY INLET PROTECTION FILTER FABRIC FENCE
Totals carried to General Summary																										

SCALE IN FEET 0 50 100 200

CALCULATED JAP CHECKED Jayne

STORM WATER POLLUTION PREVENTION PLAN
Sta. 1380+00 to Sta. 1405+00

MED-71-15.78

17
940

DESIGN FILE : i:\pr_med_ir71\dgn\erosion\med71sw23.dgn
USERNAME : rswift

DATE : 24-NOV-1999
TIME : 13:26

PLAN AND PROFILE
STA 826+00 TO STA 838+50

MED - 71 - 15.78

172
940

HORIZONTAL SCALE IN FEET
0 50 100

CALCULATED
CHECKED

Cross References	
Guardrail	75-76
Drainage	77-96
Underdrains	97-128
Signing	561-606
Lighting	607-643
Tree Planting	647-663
Noise Walls	664-679

Begin Work
Sta 829+30.29

Begin Project
Sta 833+00.00
S.L.M. 15.78

Begin Sheet

Sta. 826+00

Match Line

Sta. 838+50

TR 60
Ridgewood Road

LA R/W

+ 30.29
36' Lt.

+66, ℄
Type I-98

+00, 14' Rt.
Type B-98

℄ IR 71

N 30° 52' 56" E

EX. 6" GAS LINE
(COLUMBIA GAS)

OVERHEAD ELECTRIC
DISTRIBUTION LINE
(OHIO EDISON)

4-SW NOT USED

4-NW NOT USED

UNDERDRAIN KEY

SS - SOUTHBOUND OUTSIDE SHOULDER UNDERDRAIN
SO - SOUTHBOUND OUTSIDE PAVEMENT UNDERDRAIN
SI - SOUTHBOUND INSIDE PAVEMENT UNDERDRAIN
SM - SOUTHBOUND INSIDE SHOULDER UNDERDRAIN
NM - NORTHBOUND INSIDE SHOULDER UNDERDRAIN
NI - NORTHBOUND INSIDE PAVEMENT UNDERDRAIN
NO - NORTHBOUND OUTSIDE PAVEMENT UNDERDRAIN
NS - NORTHBOUND OUTSIDE SHOULDER UNDERDRAIN
TS - NORTHBOUND TRANSVERSE OUTSIDE UNDERDRAIN
TM - NORTHBOUND TRANSVERSE INSIDE UNDERDRAIN
TI - SOUTHBOUND TRANSVERSE INSIDE UNDERDRAIN
TO - SOUTHBOUND TRANSVERSE OUTSIDE UNDERDRAIN
UD - MISC. RAMP UD

STA. 829+95, 110' LT.
FL. EX. 24" (E)
OUTLET EL. 1014.9±

STA. 829+95, 10' LT.
EX. M.H.
TOP OF GRATE EL. 1021.0±
FL. EX. 15" (N.E.) EL. 1015.0±
FL. EX. 15" (S.W.) EL. 1015.0±
FL. EX. & PROP. 24" (N.) EL. 1015.0±
FL. EX. 24" (W.) EL. 1015.0±

STA. 829+80, 20' LT.
EX. C.B.
TOP OF GRATE EL. 1018.2±
FL. EX. 15" (N.E.) EL. 1015.5±

315' - 24" CONDUIT
TYPE C @ 0.70%

STA. 833+70, 20 LT.
EX. C.B. NO. 4 (TO BE REMOVED)
TOP OF GRATE EL. 1021.3±
FL. EX. 24" (N & S.) EL. 1017.6±

STA. 830+45, 98' RT.
EX. C.B.
TOP OF GRATE EL. 1023.6±
FL. EX. 15" (W.) EL. 1021.1±

Butt Joint as per Std. Dwg. BP 3.1M

STA. 833+10, 4' LT.
PROP. C.B. NO. 4, A.P.P.
TOP OF GRATE EL. 1019.87
FL. 24" (S.W. & N.E.) EL. 1017.21

410' - 24" CONDUIT
TYPE C @ 0.70%

250' - 24" CONDUIT
TYPE C @ 0.70%

STA. 837+20, 4' LT.
PROP. C.B. NO. 4, A.P.P.
TOP OF GRATE EL. 1022.70
FL. 24" (N.E. & S.W.) EL. 1020.08

N.B. +0.69 %

S.B. +0.69 %

	N. B.							S. B.								N. B.								
	1,025.15	1,025.49	1,025.84	1,026.18	1,026.53	1,026.87	1,027.22	1,027.56	1,020.55	1,027.91	1,021.07	1,028.25	1,021.48	1,028.60	1,021.85	1,028.94	1,022.23	1,029.29	1,022.58	1,029.63	1,022.91	1,029.98	1,023.25	1,030.32	1,023.59	1,030.67	1,023.94	1,031.01	1,024.28	1,031.36	1,024.63	1,031.70	1,024.97	1,032.05	1,025.32	1,032.39	1,025.66	1,032.74	1,026.01	1,033.08	1,026.35	1,033.43	1,026.70	1,033.77	1,027.04	1,033.77
1050																																													
1040																																													
1030																																													
1020																																													
1010																																													
1000																																													
990																																													
980																																													
	826+00		827+00		828+00		829+00		830+00		831+00		832+00		833+00		834+00		835+00		836+00		837+00		838+00																				

DESIGN FILE : i:\pd_med_lr71\dgn\planprofile\gpl.dgn
USERNAME : jrogers

DATE : 09-DEC-1999
TIME : 07:07

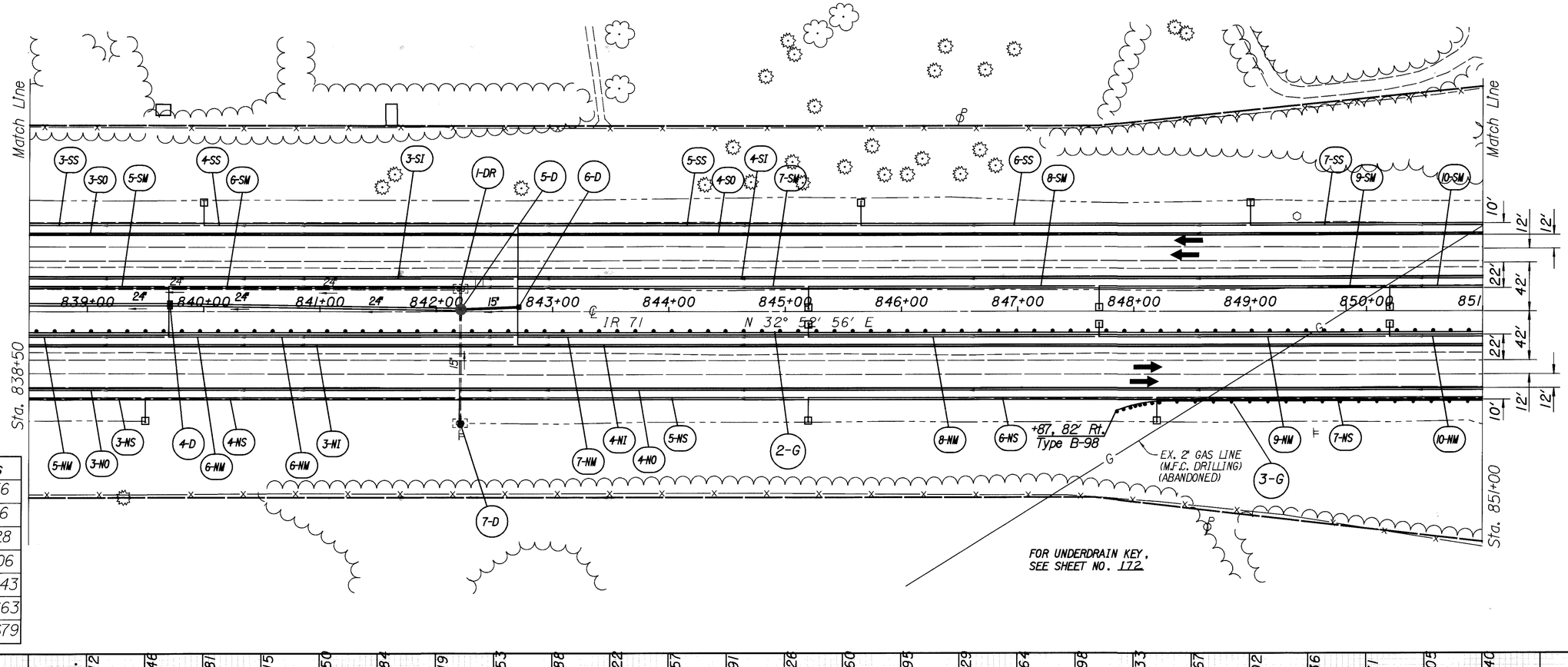

Cross References	
Guardrail	75-76
Drainage	77-96
Underdrains	97-128
Signing	561-606
Lighting	607-643
Tree Planting	647-663
Noise Walls	664-679

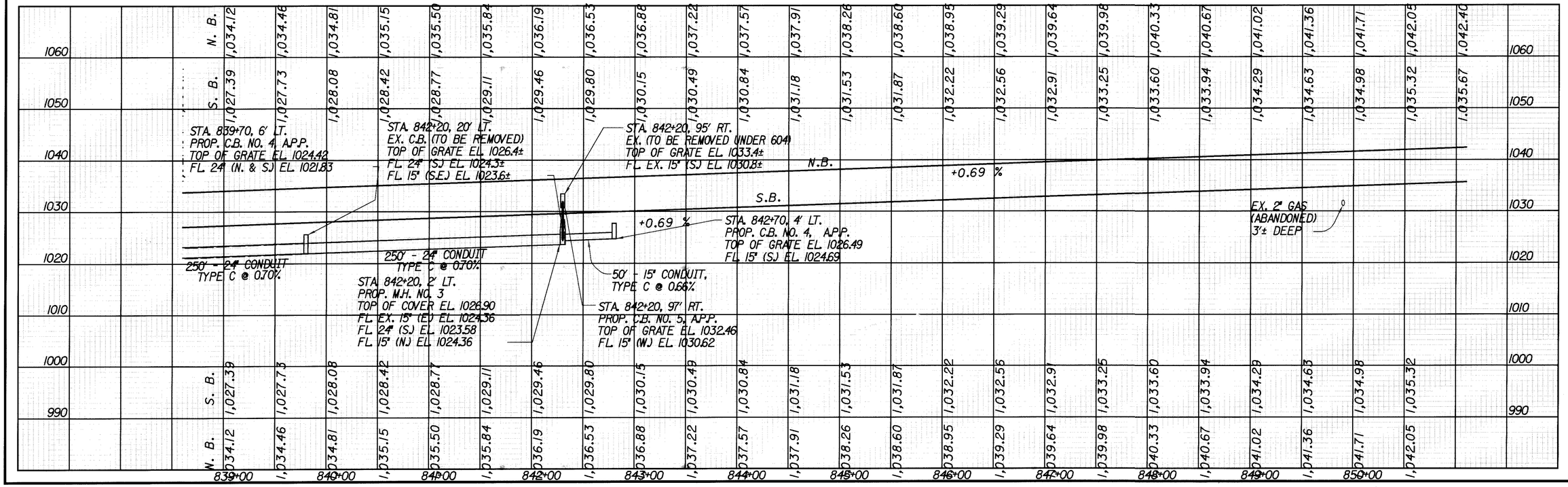

HORIZONTAL SCALE IN FEET
0 50 100

CALCULATED
CHECKED

PLAN AND PROFILE
STA 838+50 TO STA 851+00

MED - 71 - 15.78

DESIGN FILE : I:\pd_med_lr71\dgn\planprofile\gp2.dgn
USERNAME : jrogers
DATE : 09-DEC-1999
TIME : 07:12

Cross References	
Guardrail	75-76
Drainage	77-96
Underdrains	97-128
Signing	561-606
Lighting	607-643
Tree Planting	647-663
Noise Walls	664-679

Ramp "A" Curve Data

P.I. Sta = 5+96.87
Δ = 5° 35' 47" (LT)
Dc = 0° 28' 09"
R = 12,211.62'
T = 596.87'
L = 1,192.79'
E = 14.58'

Match Line

+00, 78' Lt. Type T

EX. 2" GAS LINE (M.F.C. DRILLING) (ABANDONED)

+40, 78' Lt. Type B-98

LA R/W

PC Sta. 858+73.94

PC Sta. 0+00.00 @ Ramp A

Match Line

Sta. 851+00

Sta. 863+50

852+00 853+00 854+00 855+00 856+00 857+00 IR 71 858+00 859+00 860+00 861+00 862+00 863+00

N 30° 52' 56" E

+00, 18' Rt.-Type T

+50, 78' Rt. Type T

Ground Fence

LA R/W

EX. 69 kv ELECTRIC TRANSMISSION LINE (OHIO EDISON)

10' 12' 12' 22' 42' 22' 42' 12' 12' 10'

FOR UNDERDRAIN KEY, SEE SHEET NO. 172

IR 71 Curve Data

P.I. Sta = 873+38.41
Δ = 13° 36' 15" (LT)
Dc = 0° 28' 00"
R = 12,277.62'
T = 1,464.47'
L = 2,915.17'
E = 87.03'
Emax = 0.018'

STA. 852+70, 6' LT.
EX. C.B. (TO BE REMOVED)
TOP OF GRATE EL. 1034.9±
FL. EX. 18" (W.J) EL. 1030.7±
FL. EX. 15" (N.J) EL. 1031.0±

STA. 852+70, 95' LT.
FL. EX. 18" (E.J)
OUTLET EL. 1029.00

STA. 852+70, 4' LT.
PROP. C.B. NO. 4, A.P.P.
TOP OF GRATE EL. 1033.52
FL. 18" (W.J) EL. 1030.74
FL. 15" (N.J) EL. 1030.99 S.B.

STA. 855+70, 20' LT.
EX. C.B. (TO BE REMOVED)
TOP OF GRATE EL. 1038.0±
FL. EX. 15" (S.J) EL. 1035.5±
N.B.

STA. 855+70, 35' LT.
PROP. C.B. NO. 4, A.P.P.
TOP OF GRATE EL. 1037.13
FL. 15" (S.J) EL. 1035.64

+0.69 % +2.23 %

V.P.I. Sta. 860+00.08 Elev. = 1,048.61

800' V.C.

PVC STA=856+00.08

300' - 15" CONDUIT TYPE C @ 1.5%

V.P.I. Sta. 855+63.07 Elev. = 1,038.86

800' V.C.

PVT STA=859+63.07

STA. 852+25, 130' RT.
FL. EX. 60" (N.W.J)
INLET EL. 1009.8±

PVC STA=851+63.07

STA. 853+65, 140' LT.
FL. EX. 60" (S.E.J)
OUTLET EL. 1000.3±

STA. 853+65, 140' LT.
FL. EX. 48" (S.E.J)
OUTLET EL. 1001.2±

STA. 855+20, 125' RT.
FL. EX. 48" (S.W.J)
INLET EL. 1009.8±

	N. B.	S. B.
851+00	1,042.40	1,035.67
852+00	1,042.74	1,036.01
853+00	1,043.09	1,036.37
854+00	1,043.43	1,036.77
855+00	1,043.78	1,037.23
856+00	1,044.12	1,037.73
857+00	1,044.47	1,038.28
858+00	1,044.81	1,038.87
859+00	1,045.16	1,039.52
860+00	1,045.50	1,040.21
861+00	1,045.85	1,040.95
862+00	1,046.02	1,041.34
863+00	1,046.21	1,041.74
	1,046.42	1,042.16
	1,046.63	1,042.58
	1,046.86	1,043.02
	1,047.10	1,043.47
	1,047.35	1,043.93
	1,047.61	1,044.40
	1,047.88	1,044.89
	1,048.17	1,045.38
	1,048.47	1,045.89
	1,048.78	1,046.41
	1,049.10	1,046.95
	1,049.44	1,047.49
	1,049.79	
	1,050.14	1,048.60
	1,050.52	1,049.72
	1,050.90	1,050.83
	1,051.29	
	1,051.70	1,053.06
	1,052.12	1,051.95
	1,052.55	
	1,052.99	1,053.45
	1,053.45	1,053.92
	1,053.92	1,054.40
	1,054.40	1,054.89
	1,054.89	1,055.39
	1,055.39	1,055.91
	1,055.91	1,056.41
	1,056.43	

1070 1060 1050 1040 1030 1020 1010 1000

851+00 852+00 853+00 854+00 855+00 856+00 857+00 858+00 859+00 860+00 861+00 862+00 863+00

HORIZONTAL SCALE IN FEET 0 50 100

CALCULATED CHECKED

PLAN AND PROFILE
STA 851+00 TO STA 863+50

MED - 71 - 15.78

174
940

DESIGN FILE : I:\pd_med_ir71\dgn\planprofile\gp3.dgn
USERNAME : jrogers

DATE : 09-DEC-1999
TIME : 07:18

Cross References	
Guardrail	75-76
Drainage	77-96
Underdrains	97-128
Signing	561-606
Lighting	607-643
Tree Planting	647-663
Noise Walls	664-679

RAMP A

P.I. Sta = 5+96.87
Δ = 5° 35' 47" (LT)
Dc = 0° 28' 09"
R = 12,211.62'
T = 596.87'
L = 1,192.79'
E = 14.58'

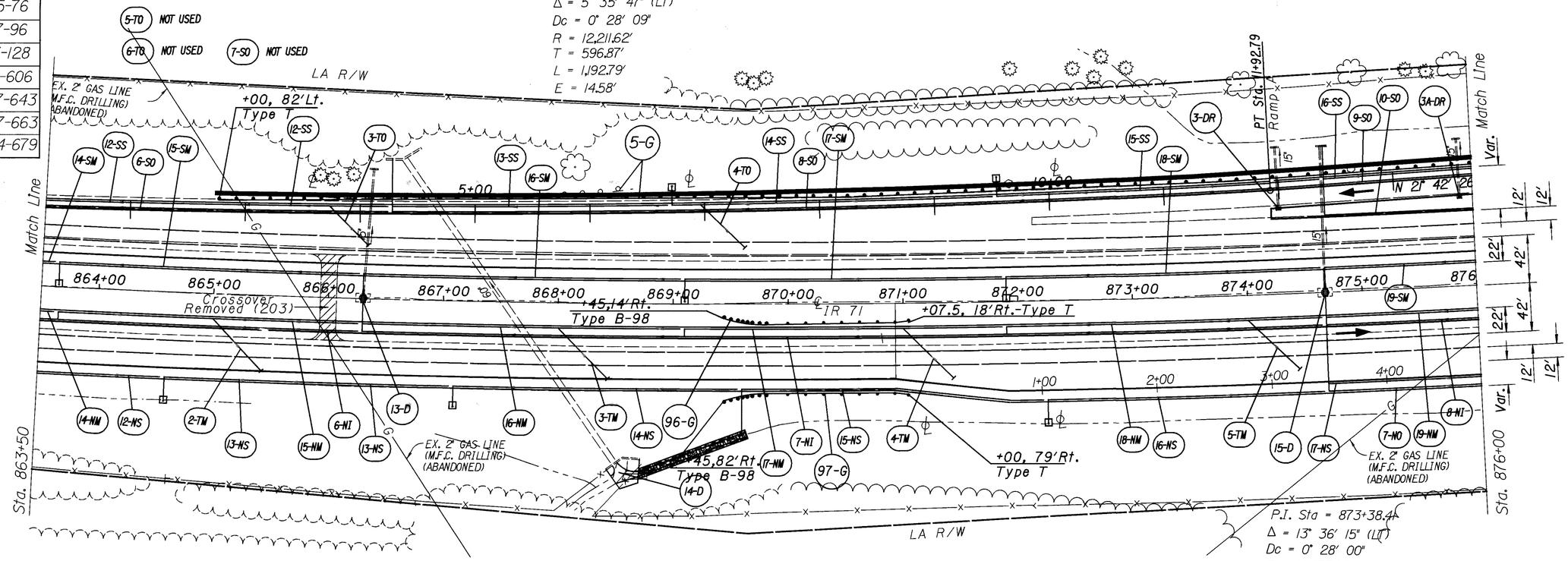

FOR UNDERDRAIN KEY, SEE SHEET NO. 172

P.I. Sta = 873+38.41
Δ = 13° 36' 15" (LT)
Dc = 0° 28' 00"
R = 12,277.62'
T = 1,464.47'
L = 2,915.17'
E = 87.03' Emax = 0.018'

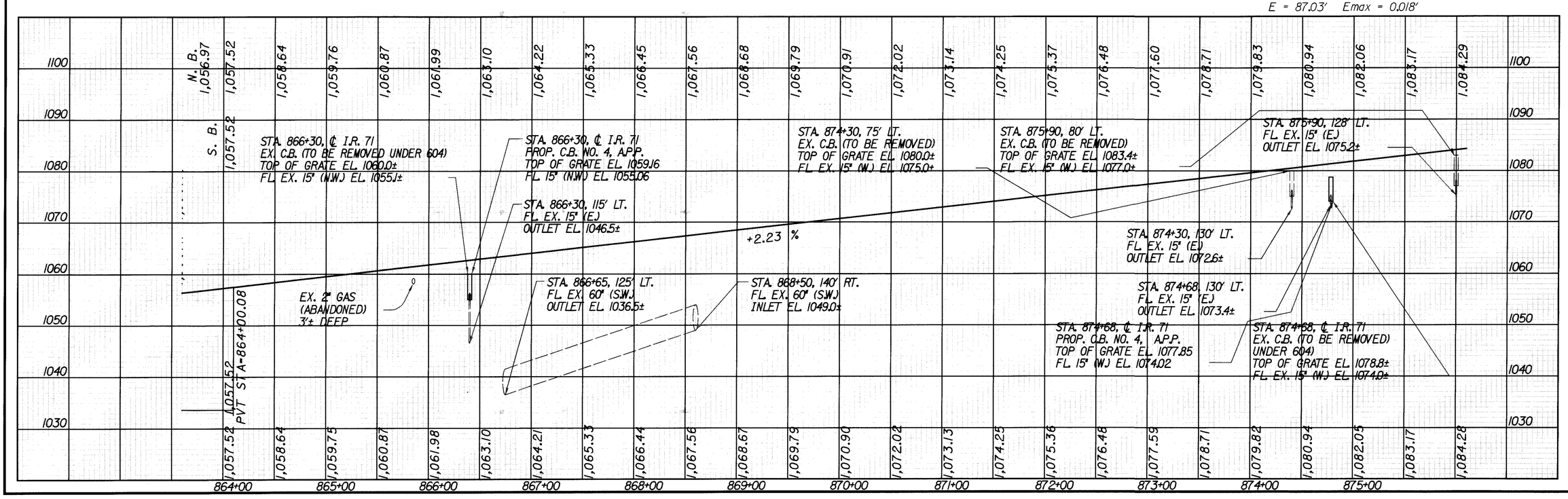

HORIZONTAL SCALE IN FEET
0 50 100
CALCULATED
CHECKED

PLAN AND PROFILE
STA 863+50 TO STA 876+00

MED - 71 - 15.78

175
940

DESIGN FILE : i:\pd_med_ir71\dgn\planprofile\pp4.dgn
USERNAME : jrogers
DATE : 09-DEC-1999
TIME : 07:20

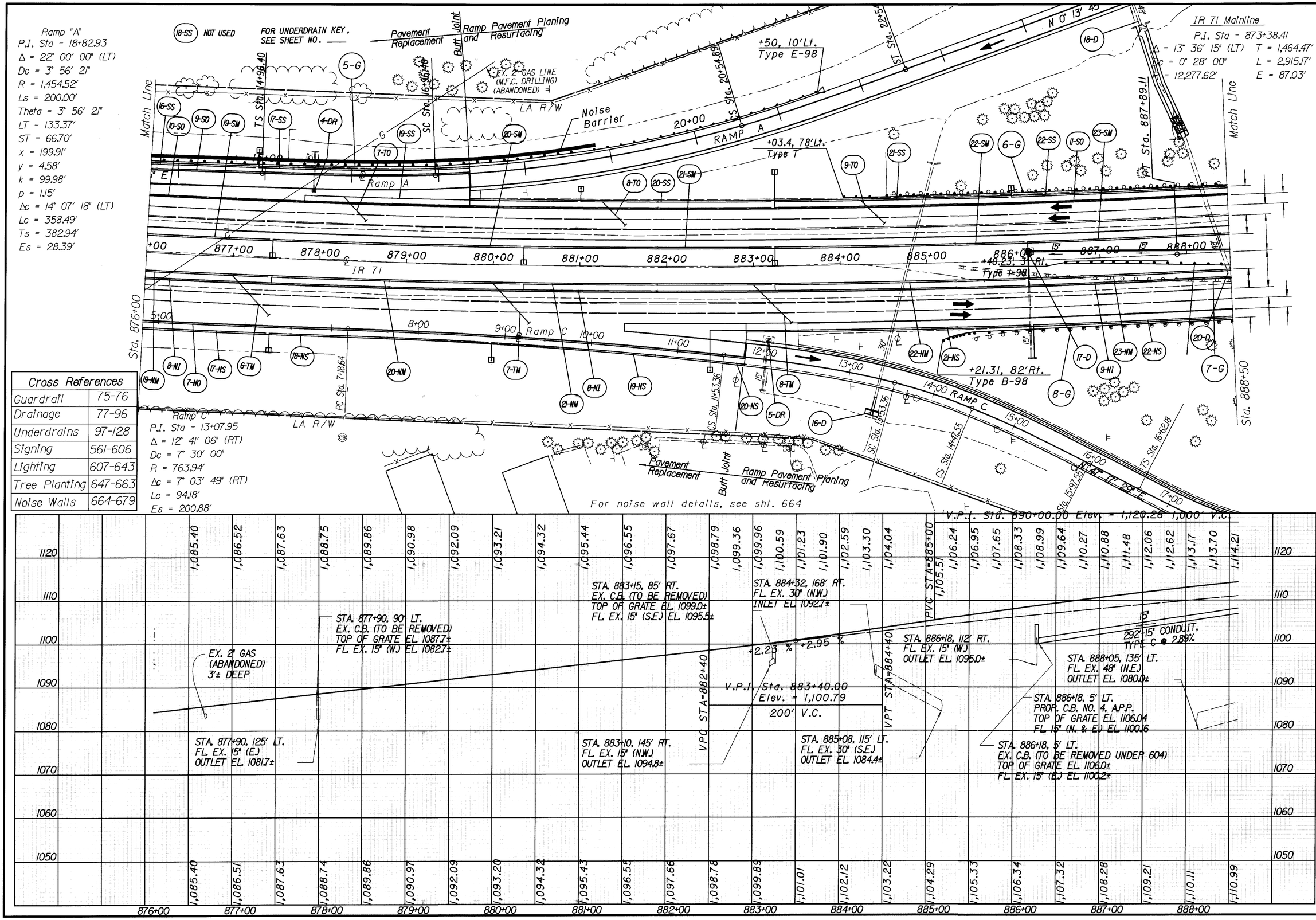

Cross References	
Guardrail	75-76
Drainage	77-96
Underdrains	97-128
Signing	561-606
Lighting	607-643
Tree Planting	647-663
Noise Walls	664-679

HORIZONTAL SCALE IN FEET 0 50 100

CALCULATED

CHECKED

PLAN AND PROFILE
STA 876+00 TO STA 888+50

MED - 71 - 15.78

DESIGN FILE : I:\pd_med_ir71\dgn\planprofile\gp5.dgn
USERNAME : jrogers

DATE : 09-DEC-1999
TIME : 07:22

Cross References	
Guardrail	75-76
Drainage	77-96
Underdrains	97-128
Signing	561-606
Lighting	607-643
Tree Planting	647-663
Noise Walls	664-679

16'-6" Required Minimum Vertical Clearance
16'-6" Actual Minimum Vertical Clearance

OVERHEAD ELECTRIC DISTRIBUTION LINES (OHIO EDISON) CATV (ARMSTRONG CABLE)
OVERHEAD TELEPHONE LINES (GTE)
EX. 6" GAS LINE IN 10" CASING (COLUMBIA GAS)

23-NS NOT USED
8-NO NOT USED
23-SS NOT USED
24-NS NOT USED

1st Post +83.71
1st Post +18.69
1st Post +37.62
1st Post +13.98
1st Post +67.89
1st Post +32.91

End Approach Slab Sta 889+20.43
End Approach Slab Sta 889+54.49
Begin Approach Slab Sta 890+97.11
Begin Approach Slab Sta 891+31.17

Match Line
Sta. 888+50
Sta. 901+00

Ramp B
P.I. Sta = 9+79.62
Δ = 5° 11' 09" (LT)
Dc = 7° 30' 00"
R = 763.94'
Δc = 6° 58' 20" (LT)
Lc = 92.96'
Es = 49.15'

Ramp D

+29, 12' Lt. Type T
+11.37, 3' Lt. Type 1-98
+36.44, 78' Lt. Type B-98
+171.5, 18' Lt. Type T
+98.15, 78' Rt. Type T

Ramp Pavement Planing and Resurfacing
Pavement Replacement
Butt Joint
SC Sta. 10+72.58

15' 889+00 890+00 891+00 892+00 893+00 894+00 895+00 896+00 897+00 898+00 899+00 900+00 901

℄ IR 71 N 17° 16' 41" W

Varies 12' 12' 22' 42' 22' 42' 12' 12' Varies

FOR UNDERDRAIN KEY, SEE SHEET NO. 172

Str. Num. MED-71-1685 L&R

For S.R. 18, see shts. 371-401.

LA R/W

EX. 6" GAS IN 10" CASING
EX. 12" SAN. EL. 1083.6±
EX. 12" WATERLINE EL. 1090.0±
16'-6" Actual Min. Vertical Clearance

V.P.I. Sta. 890+00.00 Elev. = 1,120.26
1,000' V.C.
+2.95 % +0.30 %

STA. 888+80, 130' RT.
FL. EX. 48" (S.W.) INLET EL. 1084.0±

STA. 889+10, ℄ I.R. 71
PROP. M.H. NO. 1
TOP OF COVER EL. 1111.27
FL. 15" (S.) EL. 1108.59
FL. 15" (E. & W.) EL. 1108.59

STA. 891+70, ℄ I.R. 71
PROP. C.B. NO. 4, A.P.P.
TOP OF GRATE EL. 1115.54
FL. 15" (W.) EL. 1108.53

STA. 891+70, 115' LT.
FL. EX. 15" (E.)
OUTLET EL. 1101.0±

STA. 891+70, ℄ I.R. 71
EX. C.B. (TO BE REMOVED UNDER 604)
TOP OF GRATE EL. 1140.0±
FL. EX. 15" (W.) EL. 1108.5±

PVT STA 895+00

STA. 896+50, ℄ I.R. 71
EX. C.B. (TO BE REMOVED UNDER 604)
TOP OF GRATE EL. 1118.9±
FL. EX. 15" (W.) EL. 1113.8±

STA. 896+50, 112' LT.
FL. EX. 15" (E.)
OUTLET EL. 1110.0±

STA. 896+50, ℄ I.R. 71
PROP. C.B. NO. 4, A.P.P.
TOP OF GRATE EL. 1118.15
FL. 15" (W.) EL. 1113.77

PVC STA 897+50

+0.30 % +0.75 %
V.P.I. Sta. 898+50.00
Elev. = 1,122.81
200' V.C.

PVT STA 899+50

STA. 897+25, 200' LT.
FL. EX. 30" CONC. (N.E.)
OUTET EL. 1096.8±

STA. 899+68, 110' RT.
FL. EX. 30" CONC. (S.W.)
INLET EL. 1108.6±

1140 1130 1120 1110 1100 1090 1080 1070

1,114.71 1,115.19 1,115.66 1,116.10 1,116.53 1,116.95 1,117.35 1,117.73 1,118.09 1,118.44 1,118.77 1,119.09 1,119.39 1,119.67 1,119.93 1,120.18 1,120.42 1,120.63 1,120.83 1,121.01 1,121.18 1,121.33 1,121.46 1,121.58 1,121.68 1,121.76 1,121.91 1,122.06 1,122.21 1,122.36 1,122.51 1,122.59 1,122.69 1,122.80 1,122.92 1,123.06 1,123.22 1,123.38 1,123.56 1,123.94 1,124.31 1,124.69

1,111.84 1,112.66 1,113.45 1,114.22 1,114.96 1,115.67 1,116.35 1,117.01 1,117.64 1,118.24 1,118.81 1,119.36 1,119.88 1,120.37 1,120.83 1,121.27 1,121.68 1,122.06 1,122.44 1,122.81 1,123.19 1,123.56 1,123.94 1,124.31 1,124.69

889+00 890+00 891+00 892+00 893+00 894+00 895+00 896+00 897+00 898+00 899+00 900+00

HORIZONTAL SCALE IN FEET
0 50 100
CALCULATED
CHECKED

PLAN AND PROFILE
STA 888+50 TO STA 901+00

MED - 71 - 15.78

177
940

DESIGN FILE : H:\pd_med_lr71\dgn\planprofile\pp6.dgn
USERNAME : jrogers
DATE : 28-DEC-1999
TIME : 08:44

Ramp B
P. I. Sta. = 13+19.97
Δ = 7° 24' 41" (LT)
Dc = 01° 30' 00"
R = 3,819.72'
T = 247.39'
L = 494.09'
E = 8.00'
D = 9° 00' 00" (RT)
Ls = 200.00'
Theta = 06° 00' 00"
LT = 122.45'
ST = 77.96'

Ramp D
P.I. Sta = 10+72.01
Δ = 11° 11' 37" (RT)
Dc = 1° 36' 35"
R = 3,559.36' p = 0.73'
Ls = 250.00' Lc = 445.37'
Theta = 2° 00' 44"
LT = 166.68' Ts = 473.86'
ST = 83.34' Es = 17.78'
x = 249.97'
y = 2.93'
k = 124.99'
Δ c = 7° 10' 09" (RT)

Cross References	
Guardrail	75-76
Drainage	77-96
Underdrains	97-128
Signing	561-606
Lighting	607-643
Tree Planting	647-663
Noise Walls	664-679

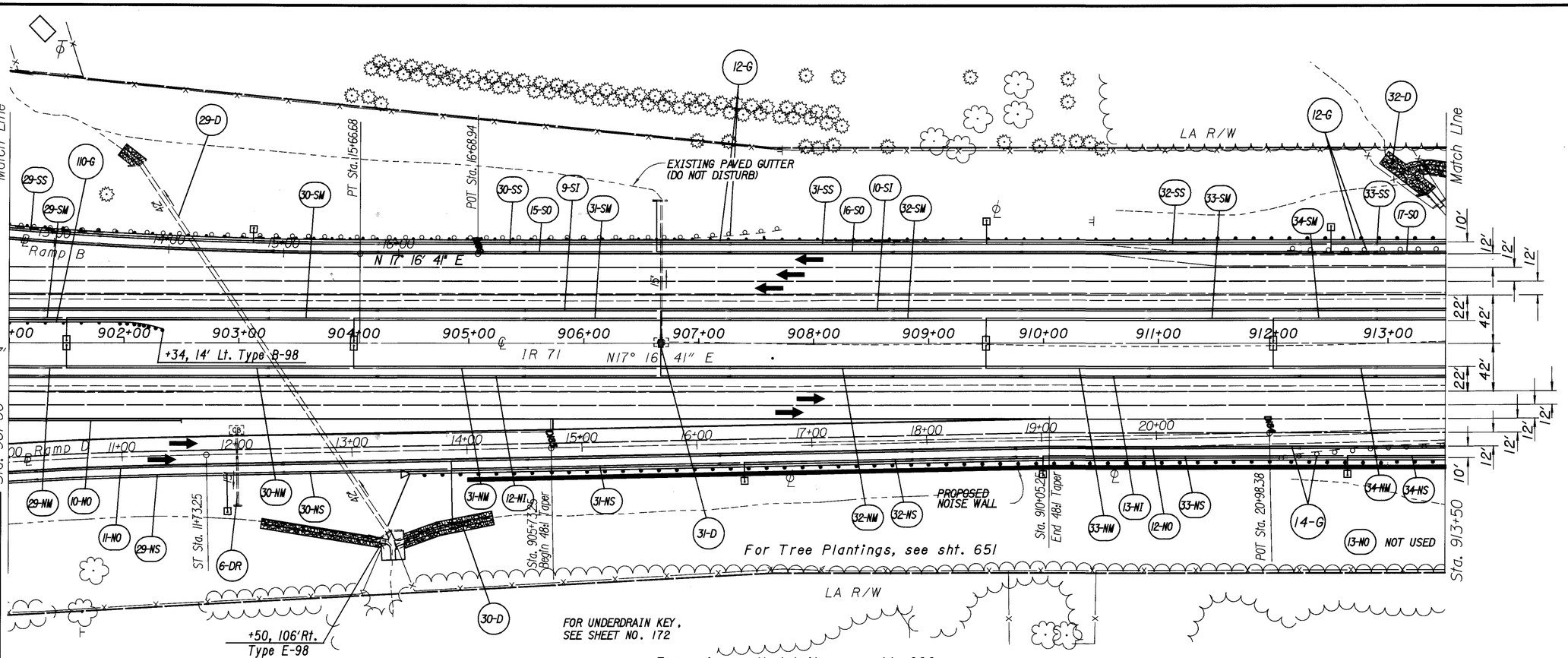

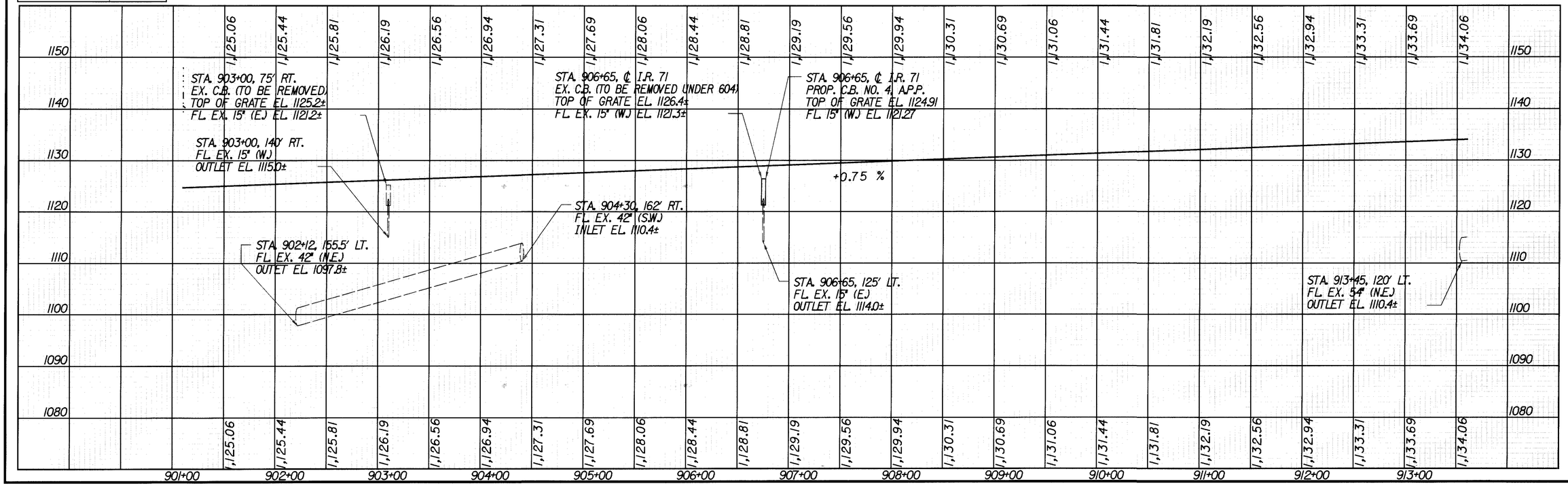

HORIZONTAL SCALE IN FEET
0 50 100
CALCULATED
CHECKED

PLAN AND PROFILE
901+00 TO STA 913+50

MED - 71 - 15.78

178
940

DESIGN FILE : i:\pd_med_ir-71\dgn\planprofile\gp1.dgn
USERNAME : jrogers
DATE : 28-DEC-1999
TIME : 08:12

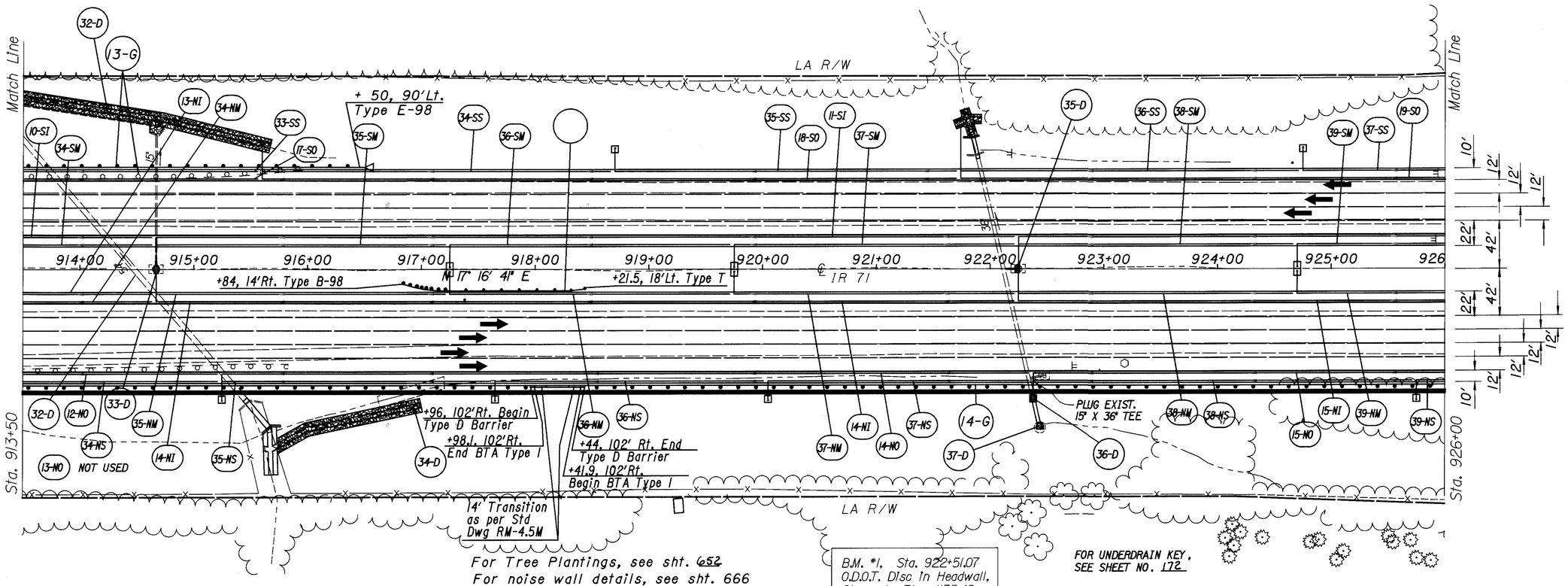

For Tree Plantings, see sht. 652
For noise wall details, see sht. 666

B.M. #1, Sta. 922+51.07
O.D.O.T. Disc In Headwall,
Stamped Elev. 1135.48

FOR UNDERDRAIN KEY,
SEE SHEET NO. 172

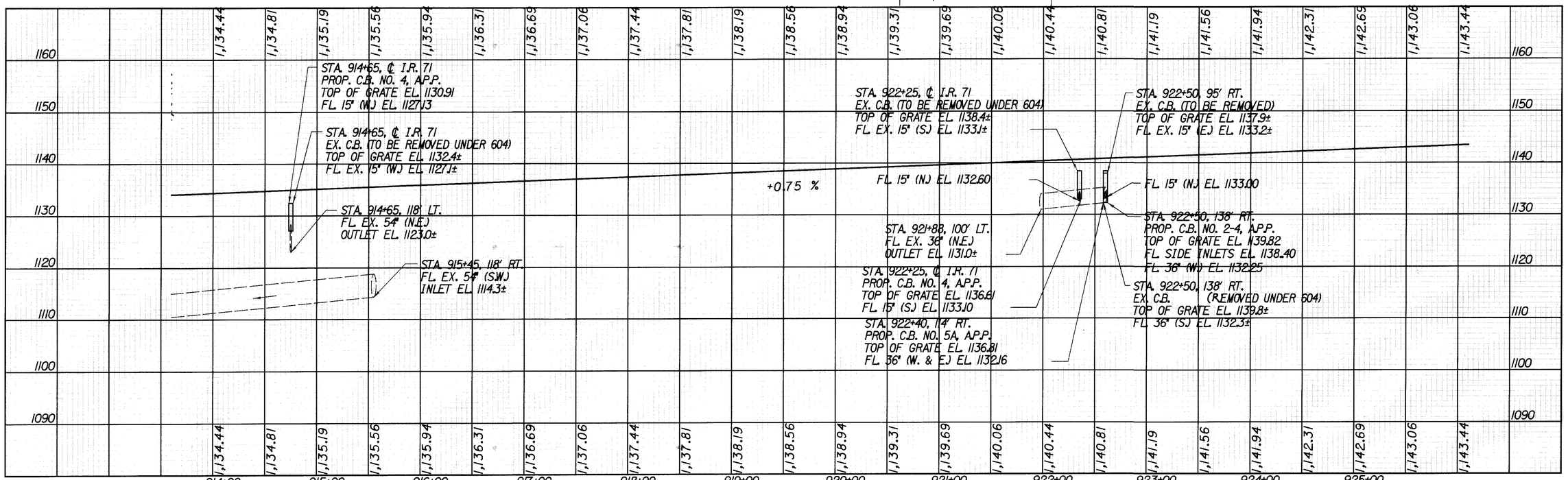

DESIGN FILE : i:\pd_med_lr71\dgn\planprofile\gp8.dgn
USERNAME : jrogers
DATE : 09-DEC-1999
TIME : 07:30

HORIZONTAL SCALE IN FEET
0 50 100
CALCULATED
CHECKED

PLAN AND PROFILE
STA 913+50 TO STA 926+00

MED - 71 - 15.78

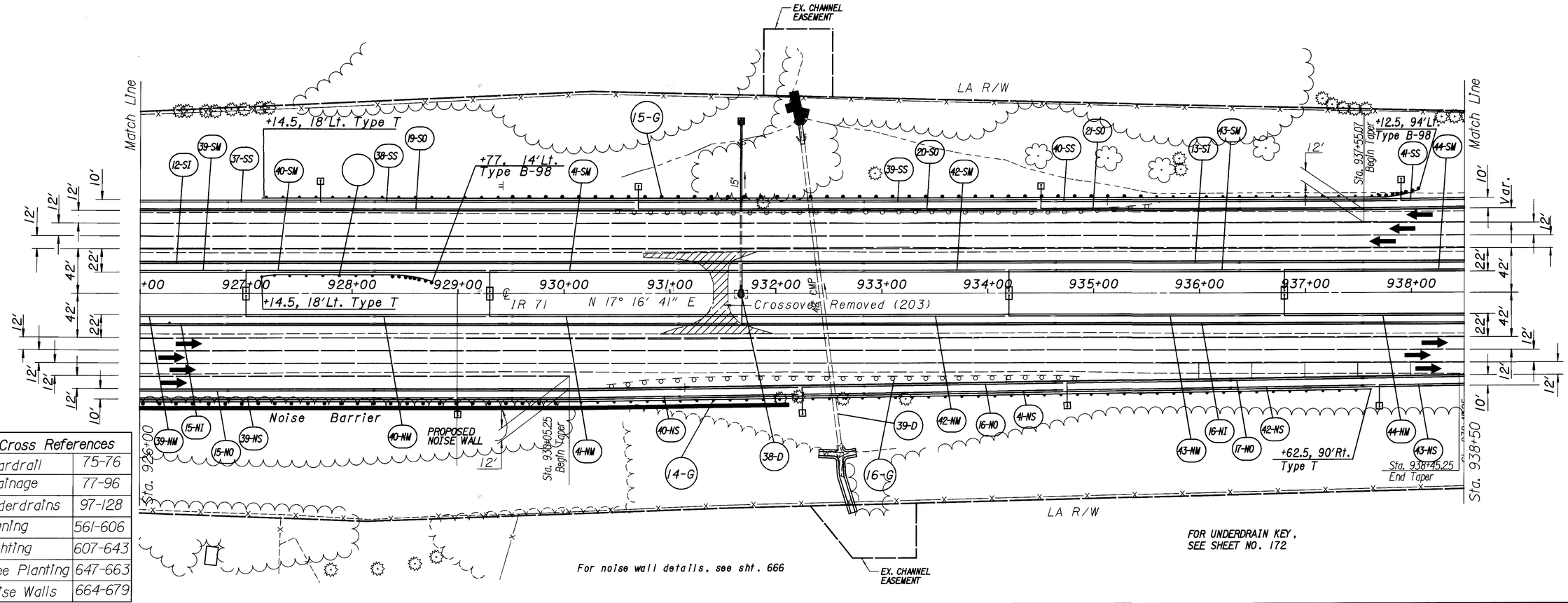

Cross References	
Guardrail	75-76
Drainage	77-96
Underdrains	97-128
Signing	561-606
Lighting	607-643
Tree Planting	647-663
Noise Walls	664-679

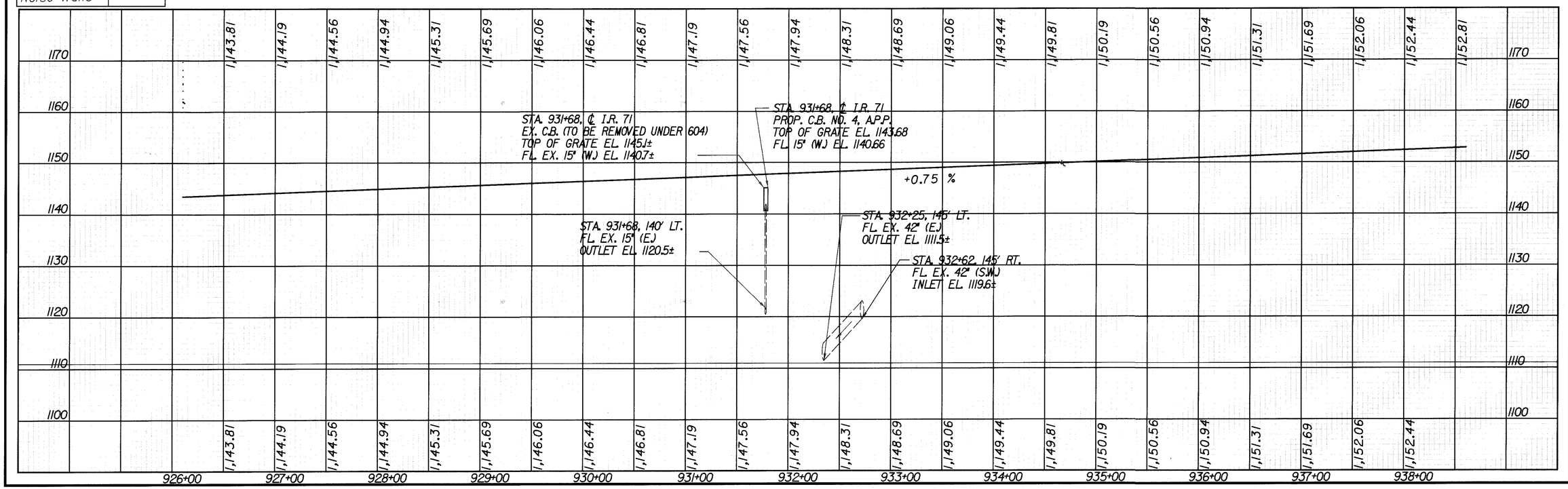

PLAN AND PROFILE
STA 926+00 TO STA 938+50

HORIZONTAL SCALE IN FEET
0 50 100

CALCULATED
CHECKED

MED - 71 - 15.78

180
940

DESIGN FILE : h:\pod_med_lr71\dgn\planprofile\gp9.dgn
USERNAME : jrogers
DATE : 28-DEC-1999
TIME : 08:08

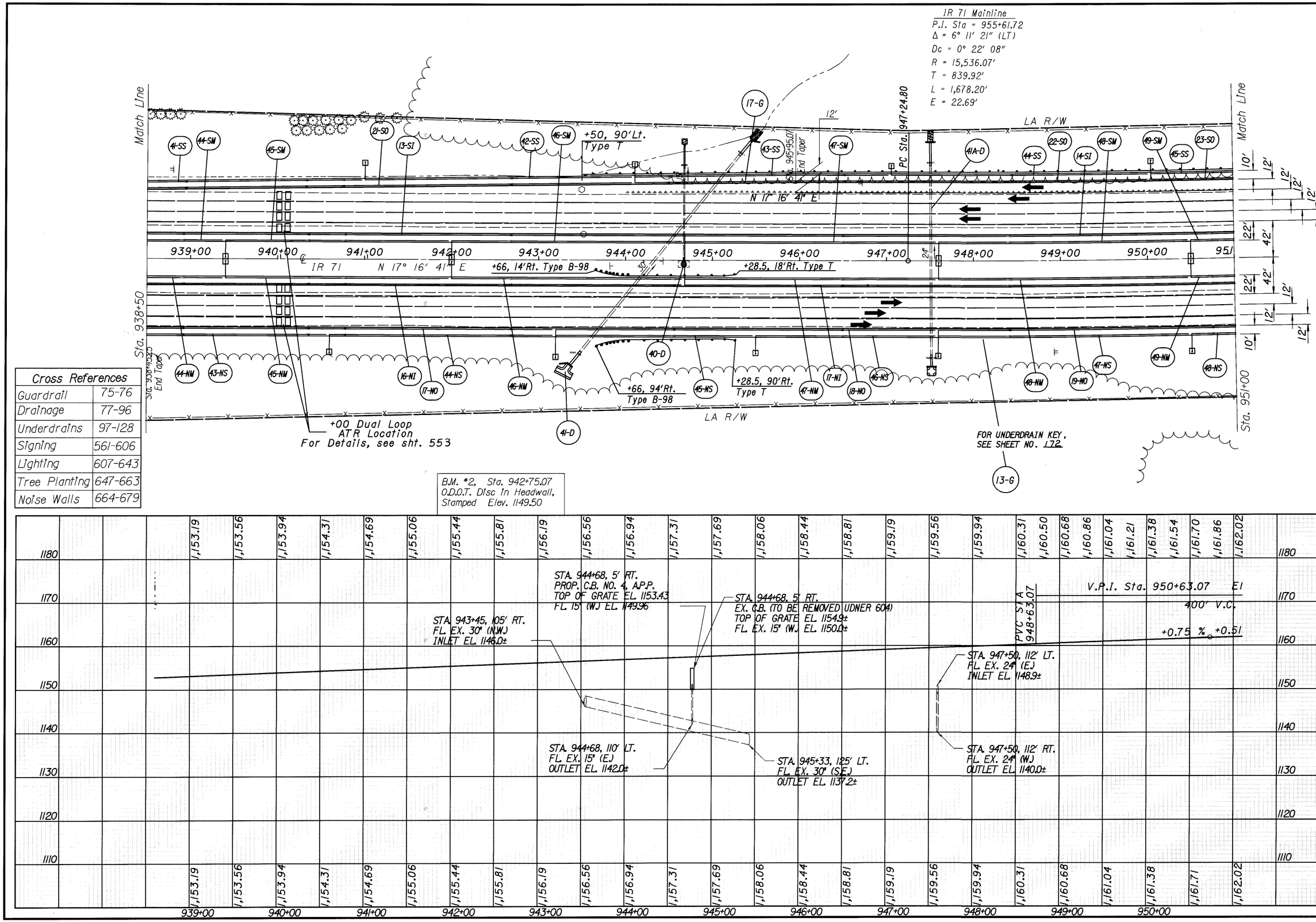

Cross References	
Guardrail	75-76
Drainage	77-96
Underdrains	97-128
Signing	561-606
Lighting	607-643
Tree Planting	647-663
Noise Walls	664-679

HORIZONTAL SCALE IN FEET
0 50 100

CALCULATED
CHECKED

PLAN AND PROFILE
STA 938+50 TO STA 951+00

MED - 71 - 15.78

DESIGN FILE : i:\pd_med_ir71\dgn\planprofile\gp10.dgn
USERNAME : jrogers
DATE : 09-DEC-1999
TIME : 07:42

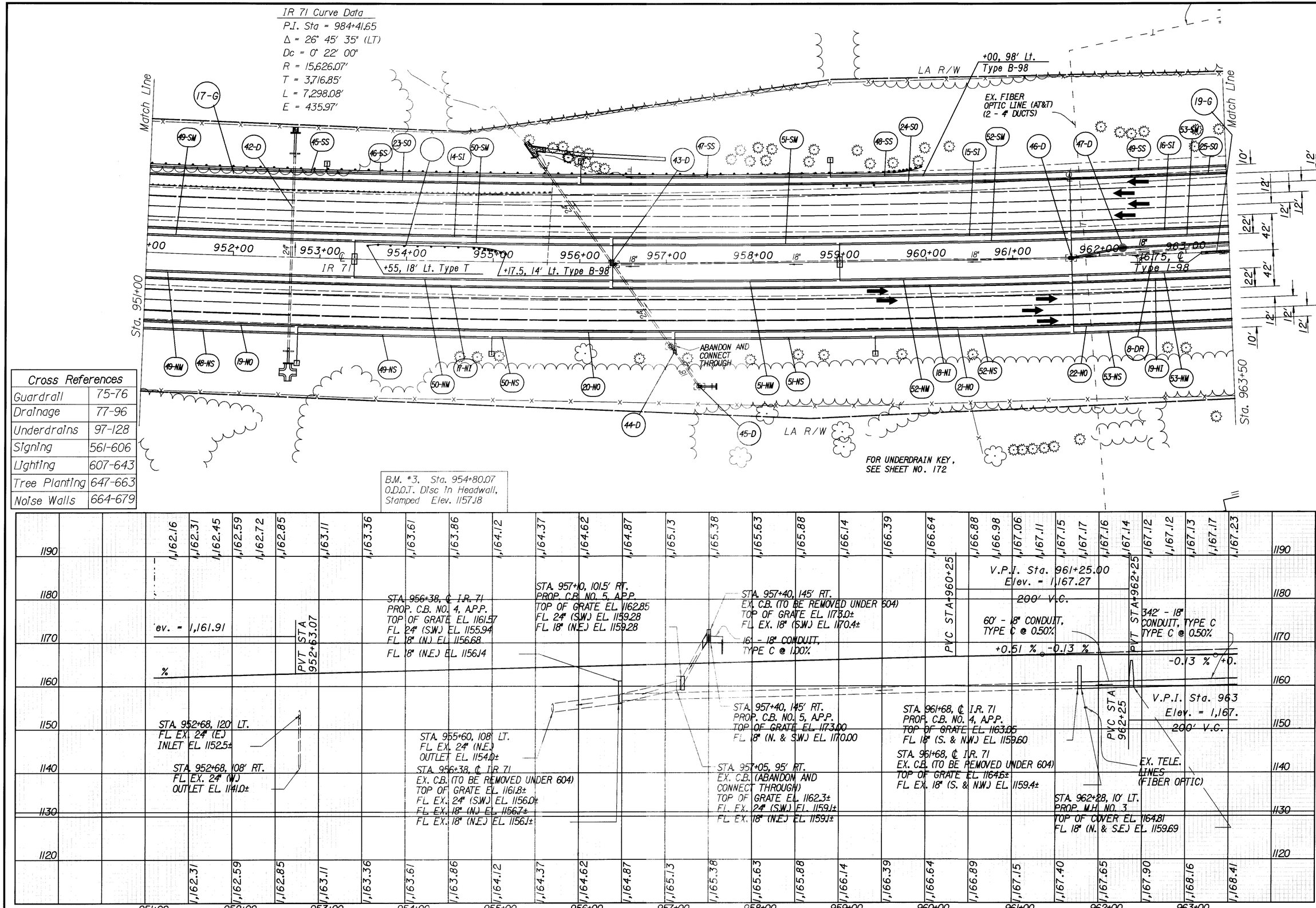

Cross References	
Guardrail	75-76
Drainage	77-96
Underdrains	97-128
Signing	561-606
Lighting	607-643
Tree Planting	647-663
Noise Walls	664-679

HORIZONTAL SCALE IN FEET 0 50 100

CALCULATED

CHECKED

PLAN AND PROFILE
STA 951+00 TO STA 963+50

MED - 71 - 15.78

DESIGN FILE : i:\pd_med_ir71\dgn\planprofile\gpll.dgn
USERNAME : jrogers

DATE : 28-DEC-1999
TIME : 08:06

Cross References	
Guardrail	75-76
Drainage	77-96
Underdrains	97-128
Signing	561-606
Lighting	607-643
Tree Planting	647-663
Noise Walls	664-679

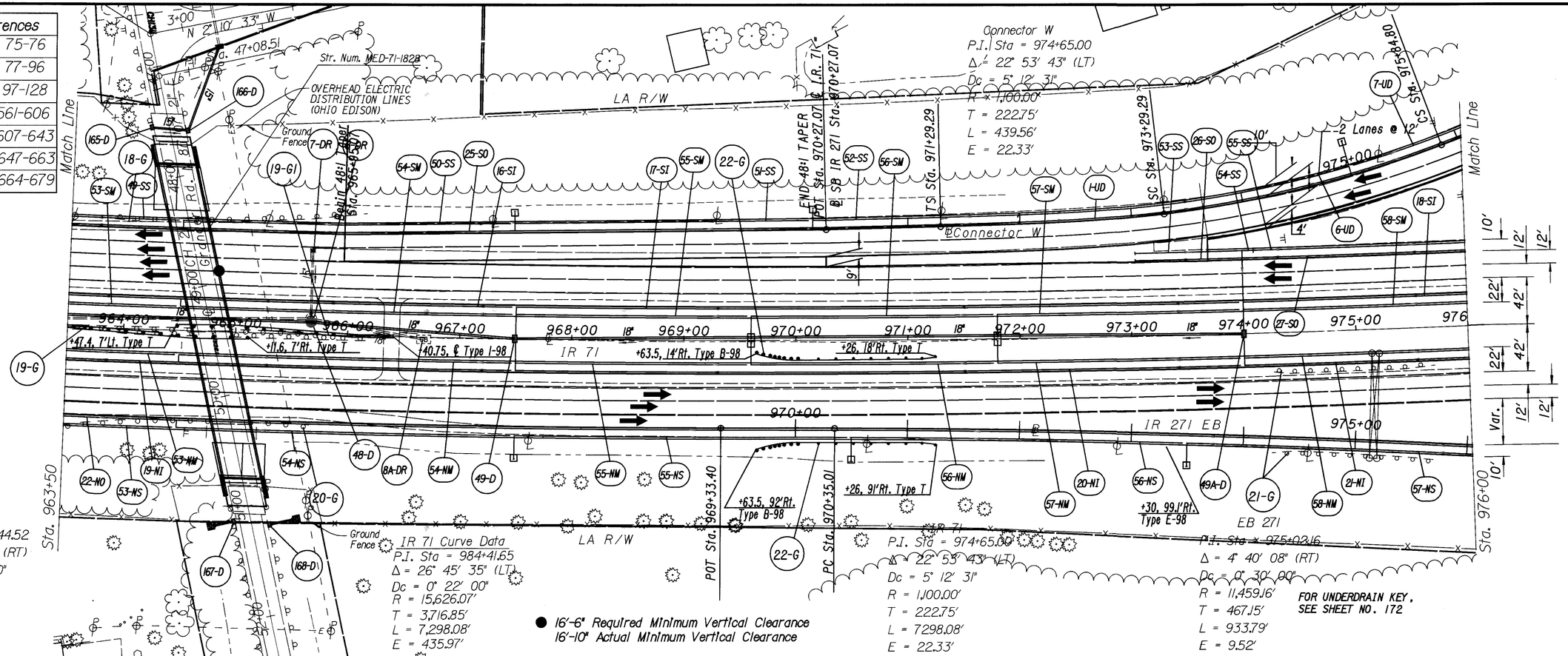

DESIGN FILE : i:\vad_med.ir71\vdgn\planprofile\gpl2.dgn
USERNAME : jrogers
DATE : 28-DEC-1999
TIME : 08:05

HORIZONTAL SCALE IN FEET
0 50 100
CALCULATED
CHECKED

PLAN AND PROFILE
STA. 963+50 TO STA. 976+00

MED - 71 - 15.78

Cross References	
Guardrail	75-76
Drainage	77-96
Underdrains	97-128
Signing	561-606
Lighting	607-643
Tree Planting	647-663
Noise Walls	664-679

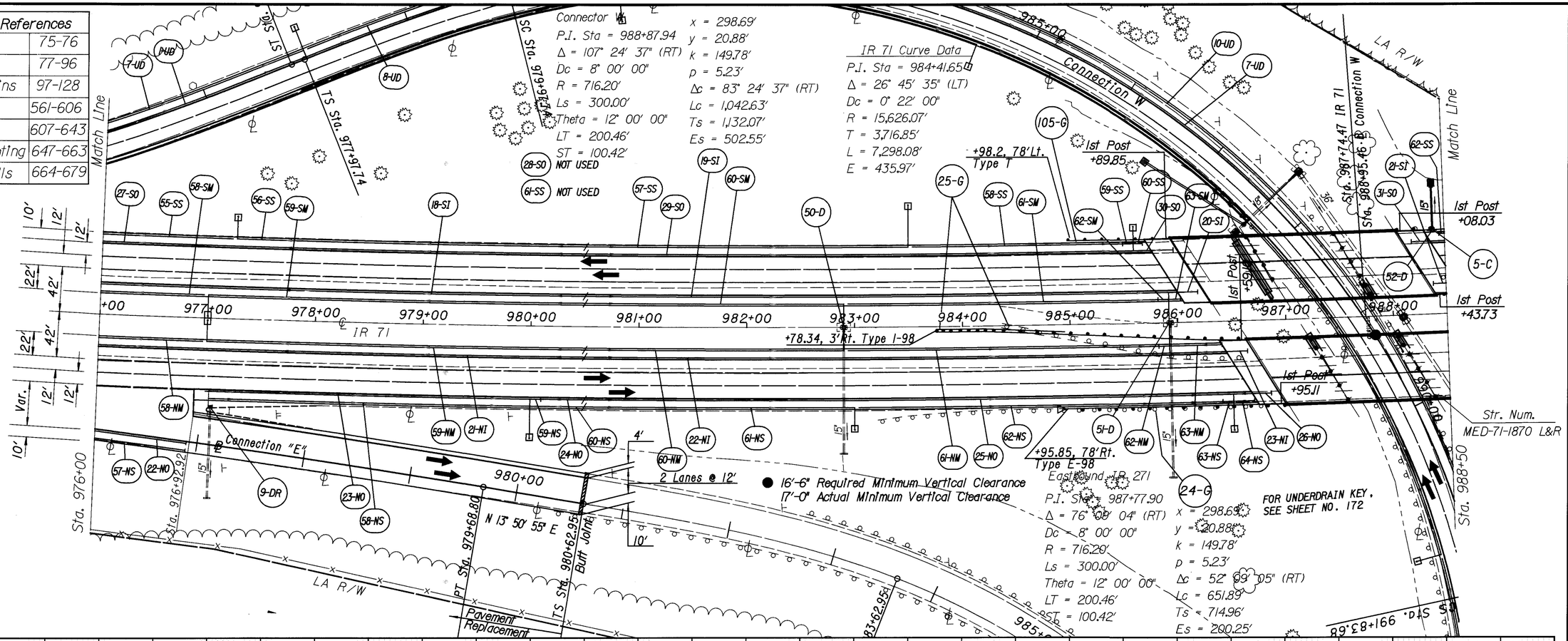

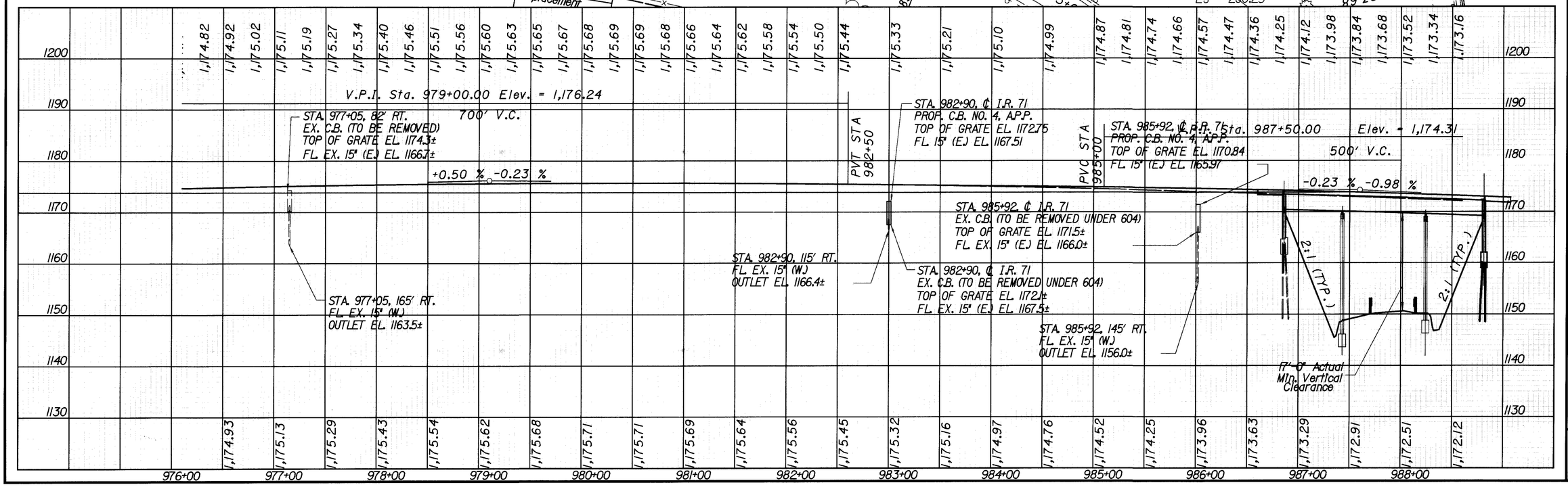

PLAN AND PROFILE
STA 976+00 TO STA 988+50

MED - 71 - 15.78

184
940

HORIZONTAL SCALE IN FEET
0 50 100

CALCULATED
CHECKED

DESIGN FILE : I:\pd_med_ir71\dgn\planprofile\gpl3.dgn
USERNAME : jrogers
DATE : 28-DEC-1999
TIME : 08:04

Eastbound IR 271
P.I. Sta = 987+77.90
Δ = 76° 09′ 04″ (RT)
Dc = 8° 00′ 00″
R = 716.20′
Ls = 300.00′
Theta = 12° 00′ 00″
LT = 200.46′
ST = 100.42′
x = 298.69′
y = 20.88′
k = 149.78′
p = 5.23′
Δc = 52° 09′ 05″ (RT)
Lc = 651.89′
Ts = 714.96′
Es = 200.25′

℄ PROP. CONNECTION 'W' I.R. 271
P.I. Sta = 995+12.33
Δ = 1° 12′ 02″ (RT)
Dc = 0° 28′ 00″
R = 12,277.67′
T = 128.65′
L = 257.28′
E = 0.67′

Cross References	
Guardrail	75-76
Drainage	77-96
Underdrains	97-128
Signing	561-606
Lighting	607-643
Tree Planting	647-663
Noise Walls	664-679

EX. 345 kv ELECTRIC TRANSMISSION LINE (OHIO EDISON)
LA R/W
Ground Fence
Match Line
64-NM 64-SM 66-SM 65-NI NOT USED
+50 Median Crossover
Remove Crossover (203)
℄ IR 71
+24.87, 3′Lt. Type 3-98
Sta. 988+50
Sta. 1001+00
1st Post +99.48
EX. TELEPHONE LINE (AT&T) (1 - 4" DUCT)
EX. 6" GAS LINE IN 10" CASING (GATHERCO INC.)
℄ PROP. CONNECTION 'W' I.R. 271
P.I. Sta = 997+69.61
Δ = 5° 42′ 02″ (LT)
Dc = 0° 28′ 00″
R = 12,277.67′
T = 128.65′
L = 257.28′
E = 0.67′
EXISTING PAVED GUTTER (DO NOT DISTURB)
FOR UNDERDRAIN KEY, SEE SHEET NO. 172

IR 71 Curve Data
P.I. Sta = 984+41.65
Δ = 26° 45′ 35″ (LT)
Dc = 0° 22′ 00″
R = 15,626.07′
T = 3,716.85′
L = 7,298.08′
E = 435.97′

B.M. *1, Sta. 990+93.07
O.D.O.T. Disc In Headwall, Stamped Elev. 1149.65

B.M. *5, Sta. 999+30.07
O.D.O.T. Disc In Headwall, Stamped Elev. 1146.28

STA. 989+10, ℄ I.R. 71
PROP. C.B. NO. 4, A.P.P.
TOP OF GRATE EL. 1169.06
FL. 15" (W) EL. 1163.18
FL. 15" (S.E. & S.W.) EL. 1163.18

PVT STA 990+00

STA. 989+10, 110′ LT.
FL. EX. 15" (W)
OUTLET EL. 1161.0±

STA. 989+10, ℄ I.R. 71
EX. C.B. (TO BE REMOVED UNDER 604)
TOP OF GRATE EL. 1169.1±
FL. EX. 15" (W) EL. 1163.2±

EX. TELE. LINE (10′± DEEP)

STA. 991+35, 125′ LT.
FL. EX. 36" (N.E.)
INLET EL. 1145.5±

EX. 6" GAS LINE IN 10" CASING (21′± DEEP)

STA. 993+00, ℄ I.R. 71
PROP. C.B. NO. 4, A.P.P.
TOP OF GRATE EL. 1164.66
FL. 15" (N.) EL. 1161.92

-0.98 % -0.79 %

PVC STA 994+00
V.P.I. Sta. 995+00.00
Elev. = 1,166.96
200′ V.C.
PVT STA 996+00

STA. 993+68, 135′ RT.
FL. EX. 36" (S.W.)
OUTLET EL. 1138.3±

565′ - 15" CONDUIT, TYPE C @ 1.00%

STA. 998+65, ℄ I.R. 71
EX. C.B. (TO BE REMOVED UNDER 604)
TOP OF GRATE EL. 1161.5±
FL. EX. 15" (S. & E.) EL. 1156.3±

STA. 998+65, 115′ RT.
FL. EX. 15" (W)
OUTLET EL. 1139.8±

STA. 998+65, ℄ I.R. 71
PROP. C.B. NO. 4, A.P.P.
TOP OF GRATE EL. 1162.36
FL. 15" (S. & E.) EL. 1156.27

STA. 999+22, 118′ LT.
FL. EX. 36" (E.)
INLET EL. 1142.0±

STA. 999+22, 128′ RT.
FL. EX. 36" (W)
OUTLET EL. 1134.9±

1190 1180 1170 1160 1150 1140 1130 1120

1,172.97 1,172.76 1,172.55 1,172.33 1,172.10 1,171.86 1,171.37 1,170.88 1,170.39 1,169.90 1,169.41 1,168.92 1,168.43 1,167.94 1,167.70 1,167.46 1,167.23 1,167.01 1,166.79 1,166.58 1,166.37 1,166.17 1,165.77 1,165.38 1,164.98 1,164.58 1,164.19 1,163.79 1,163.39 1,163.00 1,162.60 1,162.20

1,171.72 1,171.32 1,170.93 1,170.53 1,170.14 1,169.74 1,169.34 1,168.95 1,168.55 1,168.15 1,167.76 1,167.36 1,166.96 1,166.57 1,166.17 1,165.77 1,165.38 1,164.98 1,164.58 1,164.19 1,163.79 1,163.39 1,163.00 1,162.60 1,162.21

989+00 990+00 991+00 992+00 993+00 994+00 995+00 996+00 997+00 998+00 999+00 1000+00

HORIZONTAL SCALE IN FEET
0 50 100
CALCULATED
CHECKED

PLAN AND PROFILE
STA 988+50 TO STA 1001+00
MED - 71 - 15.78

185
940

DESIGN FILE : i:\pa_med_ir71\dgn\planprofile\pp14.dgn
USERNAME : jrogers
DATE : 28-DEC-1999
TIME : 08:02

Cross References	
Guardrail	75-76
Drainage	77-96
Underdrains	97-128
Signing	561-606
Lighting	607-643
Tree Planting	647-663
Noise Walls	664-679

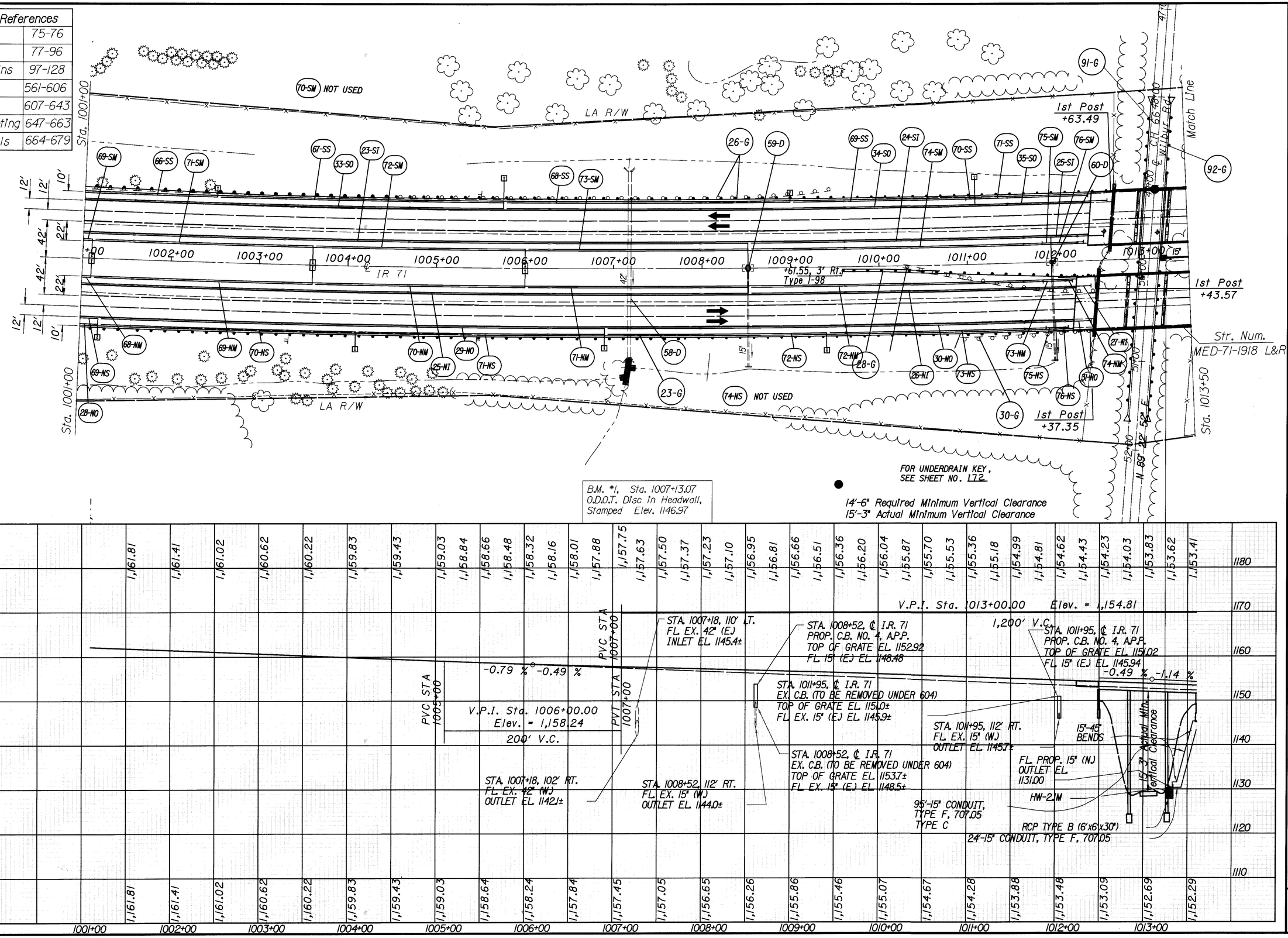

DESIGN FILE : i:\pd_MED_IR71\DGN\PlanProfile\gp15.dgn
USERNAME : pfought
DATE : 09-DEC-1999
TIME : 08:13

HORIZONTAL SCALE IN FEET
0 50 100
CALCULATED
CHECKED

PLAN AND PROFILE
STA 1001+00 TO STA 1013+50

MED - 71 - 15.78

72-SS NOT USED 77-SM NOT USED
77-NS NOT USED
74-SS NOT USED
Match Line
LA R/W
EX. TELEPHONE LINE (AT&T) (1 - 4" DUCT)
1st Post +64.77
1st Post +58.07
+59.68, 82' Lt. Type B-98
+40.2, 3' Lt. Type I-98
PT Sta. 1020+22.88
℄ IR 71 N 09° 28' 54"W
Remove Crossover (203)
Sta. 1013+50
Sta. 1026+00
9-C 61-D 60A-D 29-G 36-SO 73-SS 78-SM 26-SI 75-SS 79-SM 36A-SO 26A-SI 76-SS 36B-SO 26B-SI 80-SM 62-D 37-SO 27-SI 77-SS 37A-SO 27A-SI 81-SM 27B-SI 78-SS 82-SM 37B-SO 10-TO H1
10-C 11-C 12-C 61A-D 64-D 64A-D 31-G 28-NI 76-NW 78-NS 32-NO 77-NW 79-NS 28A-NI 78-NW 28B-NI 33-NO 80-NS 34-NO NOT USED 63-D 29-NI 81-NS 29A-NI 79-NW 35-NO 29B-NI 82-NS 80-NW 1-TS 9-TM
10' 12' 12' 22' 42' 22' 42' 12' 12' 10'
15' 24' 15'

Cross References	
Guardrail	75-76
Drainage	77-96
Underdrains	97-128
Signing	561-606
Lighting	607-643
Tree Planting	647-663
Noise Walls	664-679

IR 71 Curve Data
P.I. Sta = 984+41.65
Δ = 26° 45' 35" (LT)
Dc = 0° 22' 00"
R = 15,626.07'
T = 3,716.85'
L = 7,298.08'
E = 435.97'

FOR UNDERDRAIN KEY, SEE SHEET NO. 172

B.M. #7, Sta. 1023+61.99
O.D.O.T. Disc In Headwall, Stamped Elev. 1133.15

1,153.20 1,152.99 1,152.77 1,152.54 1,152.32 1,152.09 1,151.85 1,151.62 1,151.38 1,151.13 1,150.89 1,150.64 1,150.38 1,150.13 1,149.86 1,149.60 1,149.33 1,149.06 1,148.79 1,148.51 1,148.23 1,147.94 1,147.37 1,146.80 1,146.23 1,145.93 1,145.63 1,145.30 1,144.97 1,144.62 1,144.25 1,143.87 1,143.47 1,143.07 1,142.64 1,142.20 1,141.75 1,141.28 1,140.80 1,140.30 1,139.79 1,139.27 1,138.73 1,138.17 1,137.61 1,137.02 1,136.42

1170 1160 1150 1140 1130 1120 1110 1100

V.P.I. Sta. 1013+00.00 Elev. = 1,154.81
1,200' V.C.
PVT STA 1019+00
PVC STA 1020+50
V.P.I. Sta. 1024+50.00 Elev. = 1,141.65
800' V.C.

38"-15" CONDUIT, TYPE C @ 0.60%

STA. 1013+90, ℄ I.R. 71
PROP. M.H. NO. 1
TOP OF COVER EL. 1149.47
FL. 15" (S.) EL. 1144.60
FL. 15" (E. & W.) EL. 1144.60

STA. 1022+72, ℄ I.R. 71
EX. C.B. (TO BE REMOVED UNDER 604)
TOP OF GRATE EL. 1140.4±
FL. EX. 15" (E.) EL. 1135.2±

STA. 1022+72, ℄ I.R. 71
PROP. C.B. NO. 4, A.P.P.
TOP OF GRATE EL. 1139.17
FL. 15" (E.) EL. 1135.16

STA. 1022+72, 110' RT.
EX. C.B. (TO BE REMOVED UNDER 604)
TOP OF GRATE EL. 1134.0±
FL. EX. 15" (N. & W.) EL. 1131.5±

STA. 1022+72, 110' RT.
PROP. C.B. NO. 5, A.P.P.
TOP OF GRATE EL. 1134.00
FL. 15" (N. & W.) EL. 1131.50

STA. 1022+50, 105' LT.
FL. EX. 42" (N.E.)
INLET EL. 1135.5±
-1.14 % -3.00 %

STA. 1023+35, 115' RT.
FL. EX. 42" (S.W.)
OUTLET EL. 1128.2±

STA. 1023+25, 115' RT.
FL. EX. 15" (W.)
OUTLET EL. 1128.0±

EX. TELE. LINE (10± DEEP)

1,151.90 1,151.50 1,151.10 1,150.71 1,150.31 1,149.91 1,149.52 1,149.12 1,148.72 1,148.33 1,147.92 1,147.45 1,146.93 1,146.36 1,145.73 1,145.04 1,144.30 1,143.50 1,142.65 1,141.75 1,140.79 1,139.77 1,138.70 1,137.57 1,136.39

1014+00 1015+00 1016+00 1017+00 1018+00 1019+00 1020+00 1021+00 1022+00 1023+00 1024+00 1025+00

HORIZONTAL SCALE IN FEET
0 50 100
CALCULATED CHECKED

PLAN AND PROFILE
STA 1013+50 TO STA 1026+00
MED - 71 - 15.78

187
940

DESIGN FILE : h:\pd_med_ir71\dgn\planprofile\gpl6.dgn
USERNAME : jrogers
DATE : 09-DEC-1999
TIME : 07:59

Cross References	
Guardrail	75-76
Drainage	77-96
Underdrains	97-128
Signing	561-606
Lighting	607-643
Tree Planting	647-663
Noise Walls	664-679

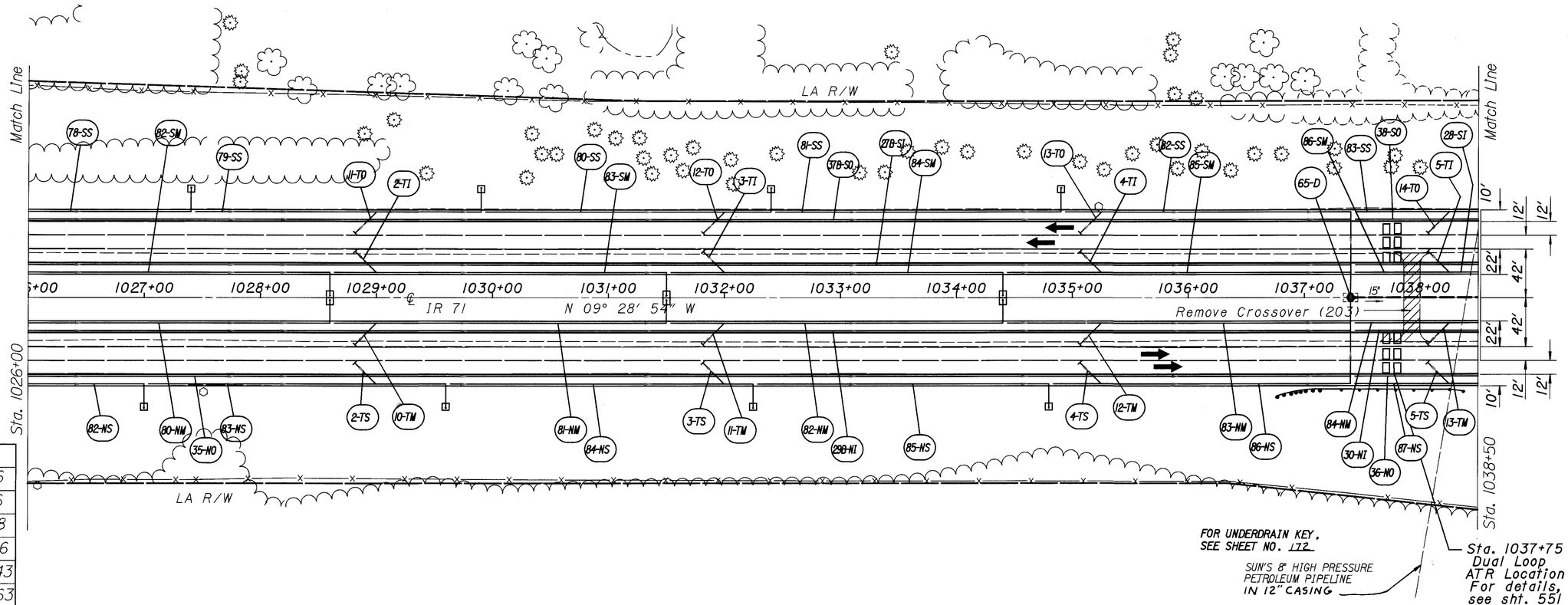

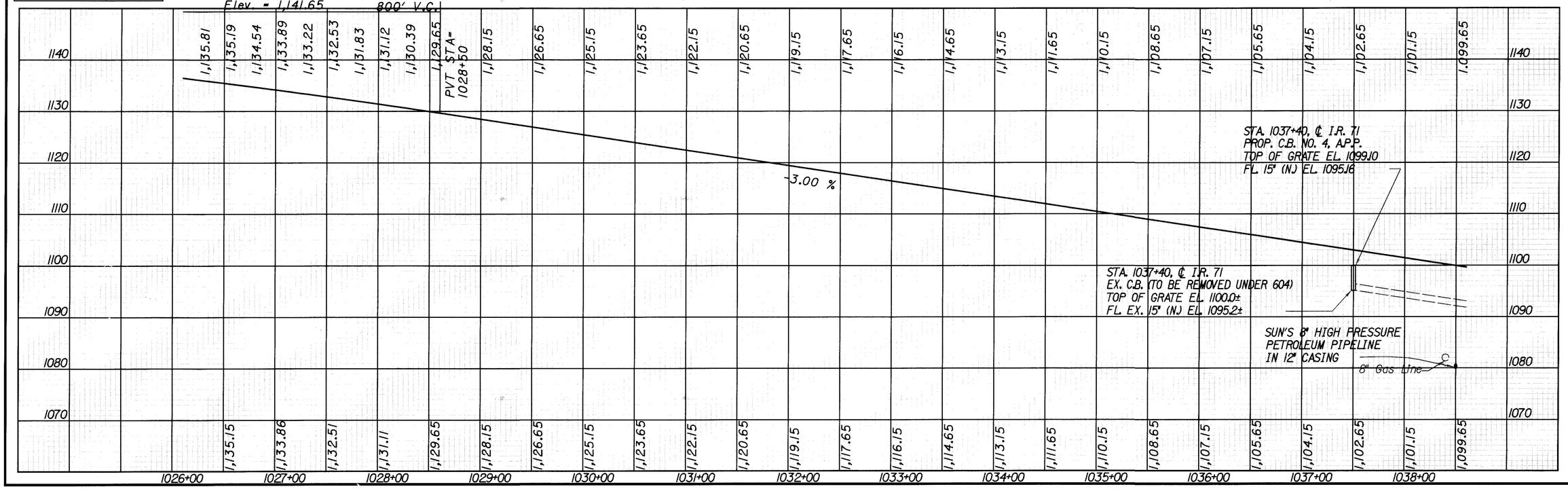

DESIGN FILE : i:\pd_MED_IR71\DGN\PlanProfile\gpi7.dgn
USERNAME : pfought
DATE : 09-DEC-1999
TIME : 08:17

HORIZONTAL SCALE IN FEET
0 50 100
CALCULATED
CHECKED

PLAN AND PROFILE
1026+00 TO STA 1038+50

MED - 71 - 15.78

SUN'S 8" HIGH PRESSURE PETROLEUM PIPELINE IN 12" CASING

LA R/W

Match Line

Sta. 1038+50

Sta. 1051+00

1039+00 | 1040+00 | 1041+00 | 1042+00 | 1043+00 | 1044+00 | 1045+00 | 1046+00 | 1047+00 | 1048+00 | 1049+00 | 1050+00 | 1051

℄ I.R. 71

N 09° 28' 54" W

+20.85, 78' Lt. Type T

+53.85, 3' Rt. Type I-98

+52.58, 78' Rt. Type E-98

83-SS, 38-SO, 28-SI, 86-SM, 84-SS, 87-SM, 15-TO, 6-TI, 85-SS, 88-SM, 16-TO, 7-TI, 86-SS, 89-SM, 17-TO, 8-TI, 67-D, 87-SS, 39-SO, 29-SI, 90-SM, 18-TO, 69-D, 33-G, 9-TI, 91-SM, 88-SS, 30-SI

84-NW, 30-NI, 87-NS, 85-NW, 88-NS, 6-TS, 14-TM, 86-NW, 36-NO, 89-NS, 7-TS, 15-TM, 66-D, 87-NW, 31-NI, 37-NO, 90-NS, 8-TS, 16-TM, 88-NW, 91-NS, 68-D, 32-G, 34-G, 9-TS, 17-TM, 70-D, 32-NI, 89-NM, 92-NS

10' 12' 12' 22' 42' 22' 42' 12' 12' 10'

FOR UNDERDRAIN KEY, SEE SHEET NO. 172

B.M. #8, Sta. 1044+03.99
O.D.O.T. Disc In Headwall,
Stamped Elev. 1052.83

Cross References	
Guardrail	75-76
Drainage	77-96
Underdrains	97-128
Signing	561-606
Lighting	607-643
Tree Planting	647-663
Noise Walls	664-679

1,098.15 | 1,096.65 | 1,095.15 | 1,093.65 | 1,092.15 | 1,090.65 | 1,089.15 | 1,087.65 | 1,086.15 | 1,084.65 | 1,083.15 | 1,081.65 | 1,080.15 | 1,078.65 | 1,077.15 | 1,075.65 | 1,074.15 | 1,072.65 | 1,071.15 | 1,069.65 | 1,068.15 | 1,066.65 | 1,065.15 | 1,063.65 | 1,062.15

1110 | 1100 | 1090 | 1080 | 1070 | 1060 | 1050 | 1040

STA. 1045+08 ℄ I.R. 71
PROP. C.B. NO. 4A, A.P.P.
TOP OF GRATE EL. 1076.06
FL. 15" (S.) EL. 1071.61
FL. 36" (W.) EL. 1066.45
FL. 36" (N.) EL. 1066.25

-3.00 %

STA. 1045+08 ℄ I.R. 71
EX. C.B. (TO BE REMOVED UNDER 604)
TOP OF GRATE EL. 1076.61
FL. EX. 15" (S.) EL. 1071.61
FL. EX. 36" (W.) EL. 1066.45
FL. EX. 36" (N.) EL. 1066.25

STA. 1045+08, 122' LT.
FL. EX. 36" (E.)
OUTLET EL. 1066.5±

STA. 1047+55, ℄ I.R. 71
PROP. C.B. NO. 4A, A.P.P.
TOP OF GRATE EL. 1068.40
FL. 36" (N. & S.) EL. 1061.43

STA. 1048+00, ℄ I.R. 71
EX. C.B. (ABANDONED & CONNECT THROUGH)
TOP OF GRATE EL. 1068.1±
FL. EX. 36" (N.) EL. 1060.5±
FL. EX. 36" (S.) EL. 1060.7±

STA. 1048+70, 145' RT.
FL. EX. 42" (N.W.)
OUTLET EL. 1034.2±

STA. 1050+05, 125' LT.
FL. EX. 30" (N.E.)
OUTLET EL. 1049.1±

STA. 1050+70, ℄ I.R. 71
EX. M.H.
TOP OF COVER EL. 1057.84
RECONSTRUCT TO EL. 1059.63
FL. EX. 48" (N.) EL. 1020.0±
FL. EX. 42" (S.E.) EL. 1020.7±
FL. EX. 30" (S.W.) EL. 1021.7±

STA. 1050+65, ℄ I.R. 71
EX. C.B. NO. 4
TOP OF GRATE EL. 1057.1±
RECONSTRUCT TO EL. 1059.76
FL. EX. 36" (S.) EL. 1052.3±

1039+00 | 1040+00 | 1041+00 | 1042+00 | 1043+00 | 1044+00 | 1045+00 | 1046+00 | 1047+00 | 1048+00 | 1049+00 | 1050+00

HORIZONTAL SCALE IN FEET
0 50 100

CALCULATED | CHECKED

PLAN AND PROFILE
STA 1038+50 TO STA 1051+00

MED - 71 - 15.78

189
940

DESIGN FILE : I:\pd_MED_IR71\DGN\PlanProfile\gpl8.dgn
USERNAME : pfought

DATE : 09-DEC-1999
TIME : 08:20

94-SM 89-SS 90-NM NOT USED
91-NM 90-SS 92-SM NOT USED
92-NM 94-NS NOT USED

NORTH BRANCH ROCKY RIVER

LA R/W

Match Line

Sta. 1051+00

Sta. 1063+50

1st Post +45.30

1st Post +74.10

1st Post +67.32

1st Post +34.36

1st Post +27.58

1st Post +56.38

1051+00 1052+00 1053+00 1054+00 1055+00 1056+00 1057+00 1058+00 1059+00 1060+00 1061+00 1062+00 1063+00

℄ IR 71

+4815, 3' Lt.
Type 1-98

N 09°28'54" W

+98.03, 78' Rt.
Type T

10' 12' 12' 22' 42' 22' 42' 12' 12' 10'

FOR UNDERDRAIN KEY, SEE SHEET NO. 172

Str. Num. MED-71-1992 L&R

B.M. #9, Sta. 1058+98.99
O.D.O.T. Disc In Headwall,
Stamped Elev. 1041.83

Cross References	
Guardrail	75-76
Drainage	77-96
Underdrains	97-128
Signing	561-606
Lighting	607-643
Tree Planting	647-663
Noise Walls	664-679

1,060.65 1,059.15 1,057.65 1,056.15 1,054.65 1,053.90 1,053.18 1,052.49 1,051.82 1,051.18 1,050.57 1,049.98 1,049.42 1,048.90 1,048.39 1,047.92 1,047.47 1,047.06 1,046.66 1,046.30 1,045.97 1,045.66 1,045.38 1,045.13 1,044.90 1,044.70 1,044.54 1,044.39 1,044.28 1,044.19 1,044.13 1,044.10 1,044.10 1,044.12 1,044.18 1,044.26 1,044.36 1,044.63 1,044.90 1,045.17 1,045.45

1070 1060 1050 1040 1030 1020 1010 1000

FL. PROP. 15" (N)
OUTLET EL. 1145.50

STA. 1053+95, ℄ I.R. 71
PROP. M.H. NO. 1
TOP OF COVER EL. 1150.01
FL. 15" (S) EL. 1145.90
FL. 15" (E. & W.) EL. 1145.90

45' - 15" CONDUIT, TYPE C @ 0.08%

HW-2.1M

PVC STA=1053+63.07

-3.00 % +0.54 %

V.P.I. Sta. 1057+63.07 Elev. = 1,042.26

PVT STA=1061+63.07

STA. 1060+08, ℄ I.R. 71
PROP. C.B. NO. 4, APP.
TOP OF GRATE EL. 1040.07
FL. 15" (E) EL. 1035.49

STA. 1060+08, ℄ I.R. 71
EX. C.B. (TO BE REMOVED UNDER 604)
TOP OF GRATE EL. 1041.8±
FL. EX. 15" (W) EL. 1035.5±

STA. 1052+15, 18' RT.
FL. EX. 48" (S)
OUTLET EL. 1018.1±

STA. 1052+15, ℄ I.R. 71
FL. 48" (S)
OUTLET EL. 1018.08

STA. 1060+08, 150' LT.
FL. EX. 15" (E)
OUTLET EL. 1015.0±

1051+00 1052+00 1053+00 1054+00 1055+00 1056+00 1057+00 1058+00 1059+00 1060+00 1061+00 1062+00 1063+00

HORIZONTAL SCALE IN FEET
0 50 100

CALCULATED CHECKED

PLAN AND PROFILE
STA 1051+00 TO STA 1063+50

MED - 71 - 15.78

190
940

DESIGN FILE : k:\pd\...MED_IR71\DGN\PlanProfile vpi9.dgn
USERNAME : pfought
DATE : 09-DEC-1999
TIME : 08:23

PLAN AND PROFILE
STA 1063+50 TO STA 1076+00
MED - 71 - 15.78

HORIZONTAL SCALE IN FEET
0 50 100
CALCULATED
CHECKED

Cross References	
Guardrail	75-76
Drainage	77-96
Underdrains	97-128
Signing	561-606
Lighting	607-643
Tree Planting	647-663
Noise Walls	664-679

Match Line
Sta. 1063+50
Sta. 1076+00
Ground Fence
OVERHEAD ELECTRIC DISTRIBUTION LINE (OHIO EDISON)
CATV (ARMSTRONG CABLE)
OVERHEAD TELEPHONE LINES (GTE)
℄ Remsen Road
49+00 CH 37
48+00
52+00
N 38° 41' 36" E
+65.75, 78' Lt. Type E-98
+36.44, 78' Lt. First Post
+80.19, 78' Lt. Type E-98
+88.29 78' Lt.
+62.53, ℄ Type I-98
+11.23, ℄ Type I-98
+68.53, 8' Lt. Type T
+05.23, 8' Rt. Type T
+37.5, 82' Rt. Type B-98
+00, 78' Rt. Type T
+98.84, 78' Rt. Type E-98
+42.59, 78' Rt. First Post
90.74, 78' Rt.
Str. No. MED-71-2034
Remove Crossover (203)
℄ IR 71
N 09° 28' 54" W
1064+00 1065+00 1066+00 1067+00 1068+00 1069+00 1070+00 1071+00 1072+00 1073+00 1074+00 1075+00 1076
24' 22' 42' 12' 10'
75-D 77-D 74-D 76-D 78-D 79-D
94-SS 95-SS 96-SS 97-SS 98-SS 99-SS 100-SS 101-SS
97-SM 98-SM 99-SM 100-SM
32-SI 33-SI 34-SI 35-SI 36-SI
43-SO 44-SO 45-SO
39-G 40-G 41-G
96-NW 97-NW 98-NW 99-NW 100-NW 101-NW 102-NW
98-NS 99-NS 100-NS 101-NS
34-NI 36-NI
41-NO 42-NO 43-NO
38-G 39-GI
FOR UNDERDRAIN KEY, SEE SHEET NO. 172
● Point of Minimum Clearance
Existing - 16'-0"
Proposed - 16'-7"
Req'd - 16'-6"

STA. 1067+40, 95' LT.
EX. C.B. (TO BE REMOVED UNDER 604)
TOP OF GRATE EL. 1043.4±
FL. EX. 24" (E) EL. 1041.0±

STA. 1067+40, 91' LT.
PROP. C.B. NO. 5, A.P.P.
TOP OF GRATE EL. 1045.21
FL. 24" (E) EL. 1040.93

STA. 1067+40, ℄ I.R. 71
PROP. C.B. NO. 4, A.P.P.
TOP OF GRATE EL. 1043.53
FL. 24" (W.) EL. 1039.27
FL. 24" (E.) EL. 1039.07

STA. 1067+40, 126' RT.
FL. EX. 24" (W.)
OUTLET EL. 1025.0±

STA. 1067+40, ℄ I.R. 71
EX. C.B. (TO BE REMOVED UNDER 604)
TOP OF GRATE EL. 1045.4±
FL. EX. 24" (W.) EL. 1039.3±
FL. EX. 24" (E.) EL. 1039.1±

STA. 1070+92, 91' LT.
PROP. C.B. NO. 5, A.P.P.
TOP OF GRATE EL. 1046.83
FL. 24" (E.) EL. 1043.72

PVC STA 1069+25
V.P.I. Sta. 1070+25.00
Elev. - 1,049.11
200' V.C.
+0.54 % +0.17 %

STA. 1071+92, ℄ I.R. 71
EX. C.B. (TO BE REMOVED UNDER 604)
TOP OF GRATE EL. 1047.5±
FL. EX. 24" (W. & E.) EL. 1041.4±

STA. 1070+92, 95' LT.
EX. C.B. (TO BE REMOVED UNDER 604)
TOP OF GRATE EL. 1047.0±
FL. EX. 24" (E.) EL. 1043.8±

STA. 1070+92, 115' RT.
FL. EX. 24" (W.)
OUTLET EL. 1039.5±

PVC ℄ STA-1071+25
PVT STA-1071+25
STA. 1070+92, ℄ I.R. 71
PROP. C.B. NO. 4, A.P.P.
TOP OF GRATE EL. 1045.16
FL. 24" (W. & E.) EL. 1041.35

STA. 1075+85, 165' LT.
FL. EX. 24" (E.)
INLET EL. 1061.0±

STA. 1075+85, 95' LT.
EX. C.B. (TO BE REMOVED UNDER 604)
TOP OF GRATE EL. 1049.7±
FL. 24" (W.) EL. 1046.5±
FL. 24" (E.) EL. 1046.3±

PVT STA-1073+25
V.P.I. Sta. 1072+25.00
Elev. - 1,049.46
200' V.C.
+0.17 % +0.54 %

STA. 1075+85, ℄ I.R. 71
EX. C.B. (TO BE REMOVED UNDER 604)
TOP OF GRATE EL. 1052.3±
FL. 24" (W. & E.) EL. 1044.0±

PVC STA 1074+50
Point of Minimum Clearance - 16'-7"

STA. 1075+85, 95' LT.
PROP. C.B. NO. 5, A.P.P.
TOP OF GRATE EL. 1049.21
FL. 24" (W.) EL. 1046.41
FL. 24" (E.) EL. 1046.21

V.P.I. Sta. 1075+
Elev. - 1,051.22 200'
70' - 15" CONDUIT, TYPE C @ 1.00%

STA. 1075+85, 115' RT.
FL. EX. 24" (W.)
OUTLET EL. 1039.0±

STA. 1075+85, ℄ I.R. 71
PROP. M.H. NO. 3
TOP OF COVER EL. 1048.80
FL. 24" (E. & W.) EL. 1044.04
FL. 15" (N.) EL. 1045.00

1,045.72 1,045.99 1,046.26 1,046.53 1,046.80 1,047.08 1,047.35 1,047.62 1,047.89 1,048.16 1,048.43 1,048.70 1,048.82 1,048.92 1,049.02 1,049.10 1,049.18 1,049.24 1,049.29 1,049.33 1,049.40 1,049.47 1,049.55 1,049.65 1,049.75 1,049.87 1,050.00 1,050.14 1,050.41 1,050.68 1,050.82 1,050.98 1,051.14 1,051.32 1,051.50 1,051.70
1,045.72 1,045.99 1,046.26 1,046.53 1,046.80 1,047.08 1,047.35 1,047.62 1,047.89 1,048.16 1,048.43 1,048.70 1,048.98 1,049.25 1,049.52 1,049.79 1,050.06 1,050.33 1,050.60 1,050.88 1,051.15 1,051.42 1,051.69 1,051.96 1,052.23
1070 1060 1050 1040 1030 1020 1010 1000
1064+00 1065+00 1066+00 1067+00 1068+00 1069+00 1070+00 1071+00 1072+00 1073+00 1074+00 1075+00

DESIGN FILE : i:\pd_MED_IR71\DGN\PlanProfile\gp20.dgn
USERNAME : pfought
DATE : 09-DEC-1999
TIME : 08:27

Cross References	
Guardrail	75-76
Drainage	77-96
Underdrains	97-128
Signing	561-606
Lighting	607-643
Tree Planting	647-663
Noise Walls	664-679

B.M. #10, Sta. 1076+03.99
O.D.O.T. Disc In Headwall,
Stamped Elev. 1039.72

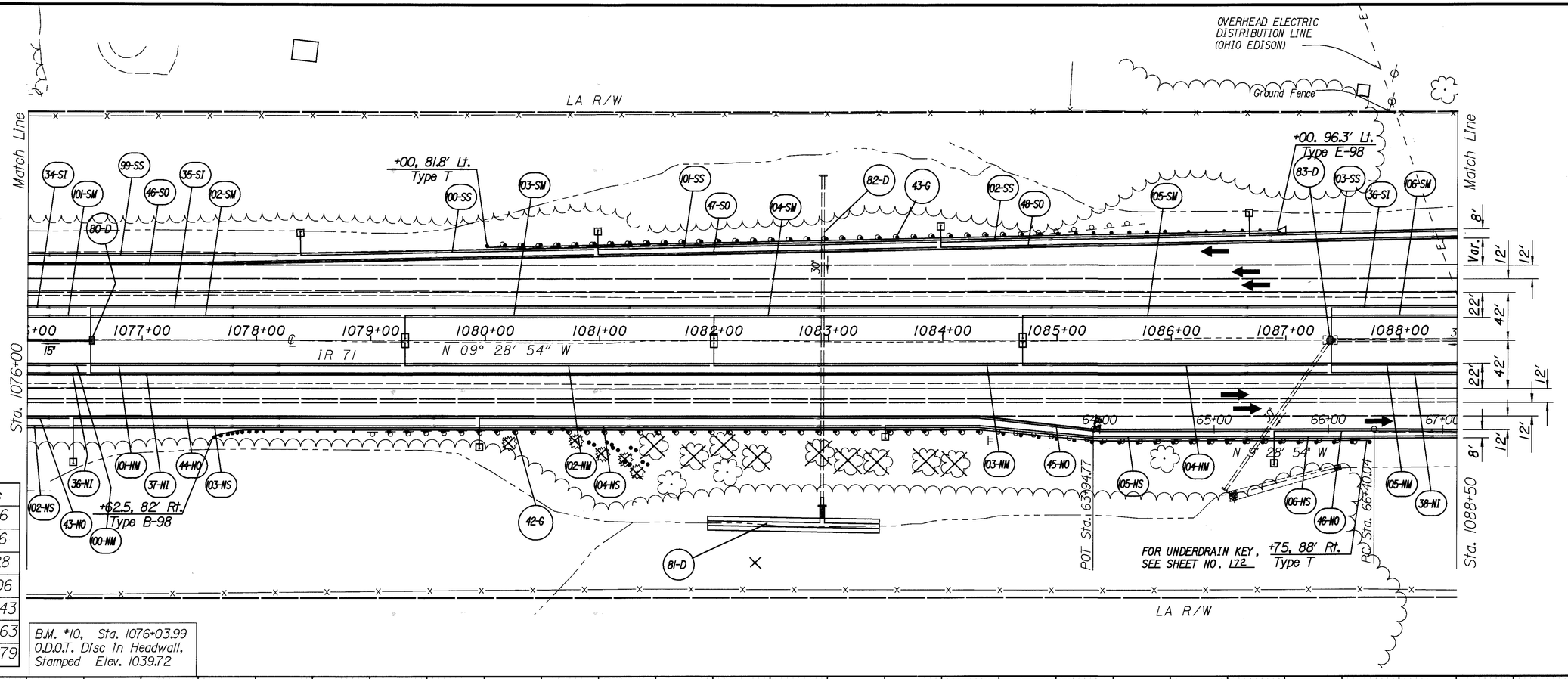

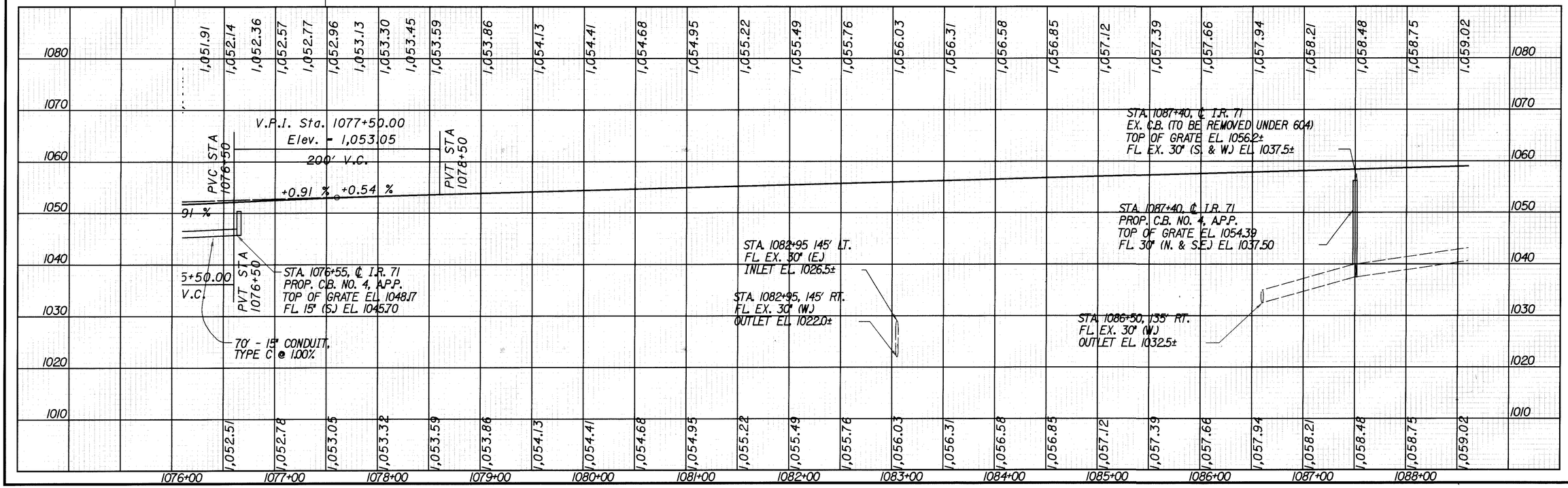

HORIZONTAL SCALE IN FEET
0 50 100
CALCULATED
CHECKED

PLAN AND PROFILE
STA 1076+00 TO STA 1088+50

MED - 71 - 15.78

192
940

DESIGN FILE : i:\pd_MED_IR71\DGN\PlanProfile\gp21.dgn
USERNAME : pfought
DATE : 09-DEC-1999
TIME : 08:31

Cross References	
Guardrail	75-76
Drainage	77-96
Underdrains	97-128
Signing	561-606
Lighting	607-643
Tree Planting	647-663
Noise Walls	664-679

UNDERGROUND TELEPHONE LINES (1 CABLE & 1 FIBER OPTIC IN 1" SUBDUCT - GTE)

Pavement Replacement — Butt Joint — Ramp Pavement Planing and Resurfacing

106-SS NOT USED

LA R/w

Match Line — Sta. 1088+50

POT Sta. 67+85.64

TS Sta. 70+87.01

SC Sta. 72+87.01

N 10° 45' 28" W — Ramp D

P.I. Sta = 75+53.95
Δ = 11° 31' 05" (RT)
Dc = 2° 30' 00"
R = 2,291.83'
Δc = 9° 01' 05" (RT)
Lc = 360.72'
Es = 11.99'

Ramp D
P.I. Sta = 76+08.62
Δ = 25° 00' 18" (LT)
Dc = 3° 00' 00"
R = 1,909.86'
Δc = 22° 00' 18" (LT)
Lc = 733.50'
Es = 46.84'

+96.23, 78' Lt. Type T

+13.57, 3' Rt. Type 1-98

+86.7, 82' Rt. Type B-98

FOR UNDERDRAIN KEY, SEE SHEET NO. 172

IR 71 — N 09° 28' 54" W

Ramp B
P.I. Sta = 69+80.50
Δ = 10° 11' 13" (RT)
Dc = 1° 30' 00"
R = 3,819.72'
T = 340.46'
L = 679.13'
E = 15.14'

Ramp B
P.I. Sta = 75+53.95
Δ = 11° 31' 05" (RT)
Dc = 2° 30' 00"
R = 2,291.83'
Δc = 9° 01' 05" (RT)
Lc = 360.72'
Es = 11.99'

Ramp B
P.I. Sta = 82+14.54
Δ = 27° 59' 10" (LT)
Dc = 6° 00' 00"
R = 954.93'
Δc = 21° 59' 10" (LT)
Lc = 366.44'
Es = 30.11'

Ramp "B" — Ramp "D"

Ground Fence

OVERHEAD ELECTRIC DISTRIBUTION LINE (OHIO EDISON)

OVERHEAD TELEPHONE LINES (GTE)

Butt Joint — Ramp Pavement Planing and Resurfacing — Pavement Replacement

LA R/w

Sta. 1101+00

B.M. #11, Sta. 1089+23.99
O.D.O.T. Disc In Headwall, Stamped Elev. 1047.95

	1089+00	1090+00	1091+00	1092+00	1093+00	1094+00	1095+00	1096+00	1097+00	1098+00	1099+00	1100+00
Existing	1,059.29	1,059.56	1,059.84	1,060.11	1,060.38	1,060.65	1,060.92	1,061.19	1,061.47	1,061.61	1,061.77	1,061.92
Proposed	1,059.29	1,059.56	1,059.84	1,060.11	1,060.38	1,060.65	1,060.92	1,061.19	1,061.46	1,061.74	1,062.01	1,062.28

	1,062.09	1,062.26	1,062.44	1,062.62	1,062.81	1,063.18	1,063.56	1,063.93	1,064.31	1,064.68	1,065.06	1,065.24	1,065.43	1,065.61	1,065.79	1,065.96	1,066.14	1,066.31	1,066.48	1,066.65	1,066.82	1,066.99	1,067.15
	1,062.55	1,062.82	1,063.09	1,063.37	1,063.64	1,063.91	1,064.18	1,064.45	1,064.72	1,064.99	1,065.27	1,065.54	1,065.81										

STA. 1089+28, ℄ I.R. 71
EX. C.B. (TO BE REMOVED UNDER 604)
TOP OF GRATE EL. 1057.2±
FL. 30" (S. & W.) EL. 1042.8±

STA. 1089+28, 78' LT.
EX. C.B. (TO BE REMOVED)
TOP OF GRATE EL. 1059.5±
FL. EX. 30" (W. & E.) EL. 1045.4±

EX. TELE. LINES (8'± DEEP)

STA. 1089+28, 135' LT.
FL. EX. 30" (E.)
OUTLET EL. 1047.1±

STA. 1089+28, ℄ I.R. 71
PROP. C.B. NO. 4, A.P.P.
TOP OF GRATE EL. 1055.40
FL. 30" (S. & W.) EL. 1042.81

STA. 1092+35, 80' RT.
EX. C.B. (TO BE REMOVED)
TOP OF GRATE EL. 1060.4±
FL. 12" (E.) EL. 1057.0±

STA. 1092+30, 125' RT.
FL. EX. 12" (W.)
OUTLET EL. 1056.6±

PVC STA=1092+75

+0.54 % +0.75 %

V.P.I. Sta. 1093+75.00
Elev. = 1,061.87
200' V.C.

PVT STA=1094+75

PVC STA 1097+75

DESIGN FILE : h:\pd_med_lr71\dgn\planprofile\gp22.dgn
USERNAME : jrogers

DATE : 09-DEC-1999
TIME : 07:55

PLAN AND PROFILE
STA 1088+50 TO STA 1101+00

MED - 71 - 15.78

193
940

Cross References	
Guardrail	75-76
Drainage	77-96
Underdrains	97-128
Signing	561-606
Lighting	607-643
Tree Planting	647-663
Noise Walls	664-679

Match Line Sta. 1101+00

Match Line Sta. 1113+50

Ramp C
P.I. Sta = 90+40.36
Δ = 11° 31' 05" (LT)
Dc = 2° 30' 00"
R = 2,291.83'
Δc = 9° 01' 05" (LT)
Lc = 360.72'
Es = 11.99'

Str. Num. MED-71-2090 L&R

SRS Sta. 87+12.80

Ramp "C"

FOR UNDERDRAIN KEY, SEE SHEET NO. 172

+81.71, 82' Lt. Type B-98

+54.83, 3' Lt. Type 1-98

+67.9, 78' Rt. Type T

Ramp "A"

P.I. Sta = 89+97.86
Δ = 25° 05' 01" (RT)
Dc = 3° 00' 00"
R = 1,909.86'
Δc = 22° 10' 37" (RT)
Lc = 739.23'
Es = 47.49'

B.M. #12, Sta. 1110+35.99
O.D.O.T. Disc In Headwall, Stamped Elev. 1069.77

LA R/W

IR 71 N 09° 28' 54" W

Plum Creek

Columbia Gas 4" Line

EX. 4" GAS LINE (COLUMBIA GAS)

15'-6" Required Minimum Vertical Clearance
16'-0" Actual Minimum Vertical Clearance

NOT USED: 40-NI, 111-NW, 113-NS, 42-NI, 39-SI

1st Post +75.43
1st Post +44.21
1st Post +94.57
1st Post +73.83
1st Post +24.20
1st Post +92.98

1,400' V.C.
V.P.I. Sta. 1104+75.00 Elev. = 1,070.12
+0.75 % +0.33 %

16'-0" Actual Min. Vertical Clearance

STA. 1102+70, ℄ I.R. 71
EX. C.B. (TO BE REMOVED UNDER 604)
TOP OF GRATE EL. 1065.4±
FL. EX. 15" (E) EL. 1059.1±

STA. 1102+70, ℄ I.R. 71
PROP. C.B. NO. 4, A.P.P.
TOP OF GRATE EL. 1064.52
FL. 15" (E) EL. 1059.05

STA. 1102+70, 125' RT.
FL. EX. 15" (W)
OUTLET EL. 1144.5±

EX. 4" GAS EL. 1044.5±

STA. 1106+00, ℄ I.R. 71
EX. C.B. (TO BE REMOVED UNDER 604)
TOP OF GRATE EL. 1066.8±
FL. EX. 15" (W) EL. 1061.6±

STA. 1106+00, ℄ I.R. 71
PROP. C.B. NO. 4, A.P.P.
TOP OF GRATE EL. 1065.99
FL. 15" (W) EL. 1061.8

STA. 1106+00, 140' LT.
FL. EX. 15" (E)
OUTLET EL. 1055.2±

STA. 1108+80, ℄ I.R. 71
EX. C.B. (TO BE REMOVED)
TOP OF GRATE EL. 1068.2±
FL. EX. 15" (E) EL. 1062.6±

PVT STA 1111+76.5

STA. 1108+80, 8' RT.
PROP. C.B. NO. 4, A.P.P.
TOP OF GRATE EL. 1068.22
FL. 15" (E) EL. 1062.64

STA. 1108+80, 125' LT.
FL. EX. 15" (W)
OUTLET EL. 1058.6±

| | | |

Ramp C
P.I. Sta = 96+13.98
Δ = 10° 11' 13" (LT)
Dc = 1° 30' 00"
R = 3,819.72'
T = 340.46'
L = 679.13'
E = 15.14'

Cross References	
Guardrail	75-76
Drainage	77-96
Underdrains	97-128
Signing	561-606
Lighting	607-643
Tree Planting	647-663
Noise Walls	664-679

Ramp A
P.I. Sta = 89+43.61
Δ = 25° 10' 37" (RT)
Dc = 3° 00' 00"
R = 1,909.86'
T = 739.23'
L = 739.23'
E = 47.49'

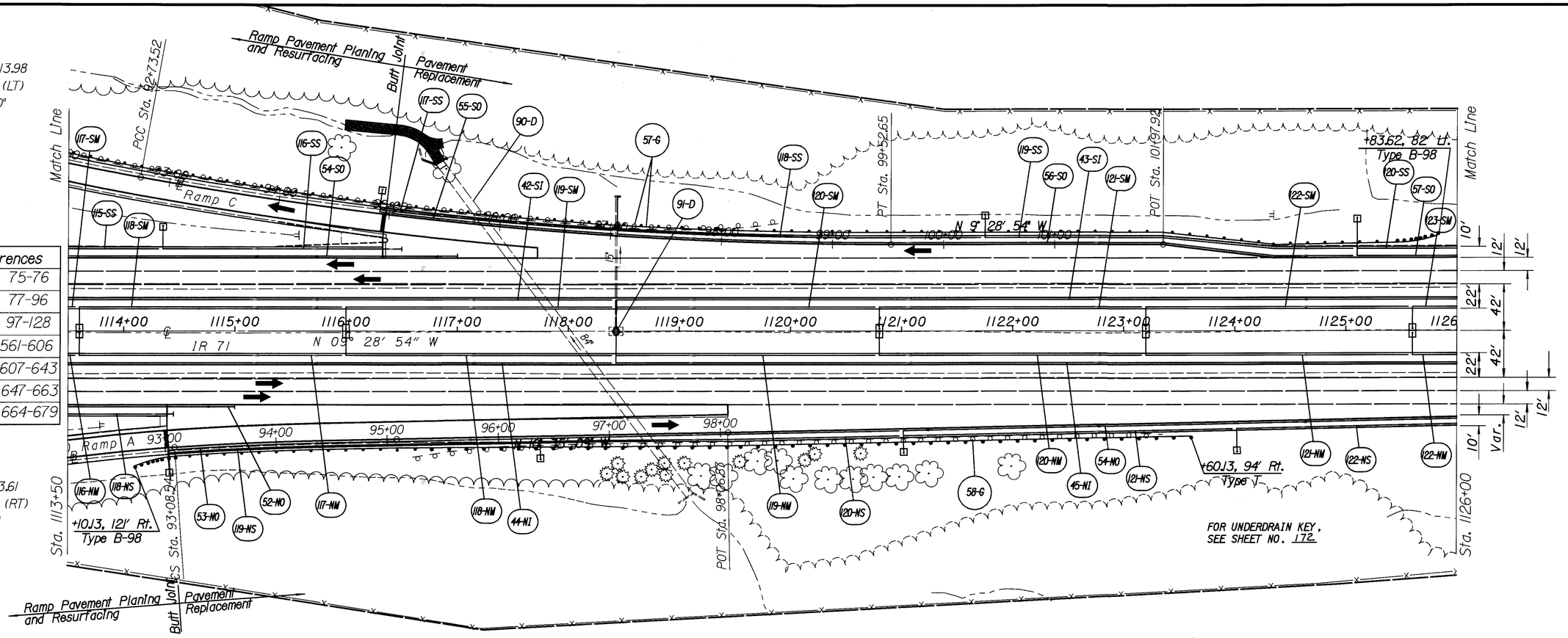

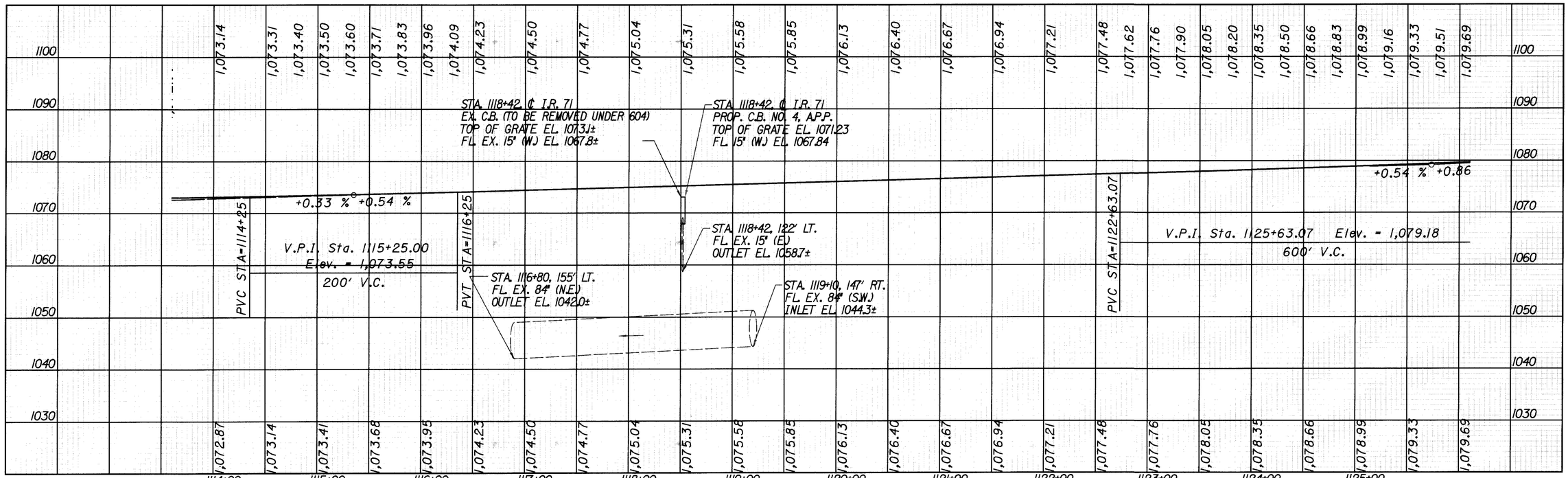

DESIGN FILE : i:\pd_MED_IR71\DGN\PlanProfile\gp24.dgn
USERNAME : pfought
DATE : 09-DEC-1999
TIME : 08:38

HORIZONTAL SCALE IN FEET
0 50 100
CALCULATED
CHECKED

PLAN AND PROFILE
STA 1113+50 TO STA 1126+00

MED - 71 - 15.78

195
940

Cross References	
Guardrail	75-76
Drainage	77-96
Underdrains	97-128
Signing	561-606
Lighting	607-643
Tree Planting	647-663
Noise Walls	664-679

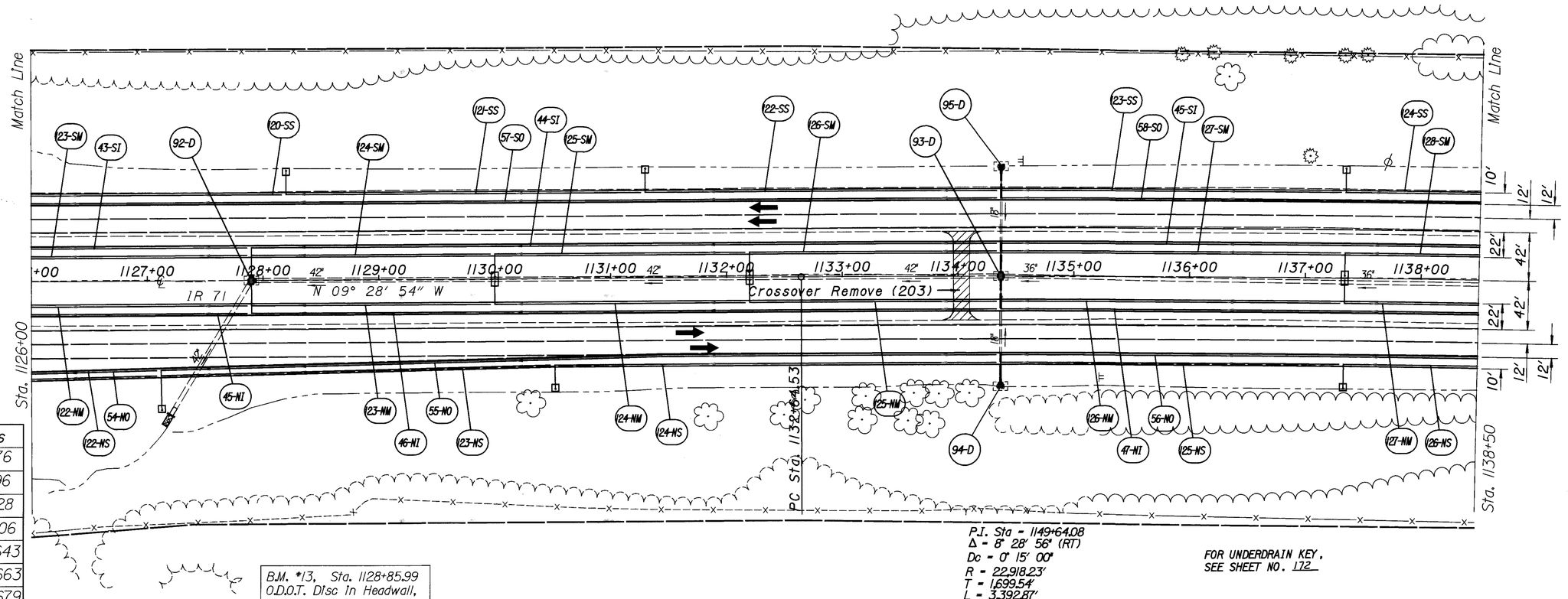

B.M. #13, Sta. 1128+85.99
O.D.O.T. Disc In Headwall,
Stamped Elev. 1081.32

P.I. Sta = 1149+64.08
Δ = 8° 28' 56" (RT)
Dc = 0° 15' 00"
R = 22,918.23'
T = 1,699.54'
L = 3,392.87'
E = 62.93'

FOR UNDERDRAIN KEY,
SEE SHEET NO. 172

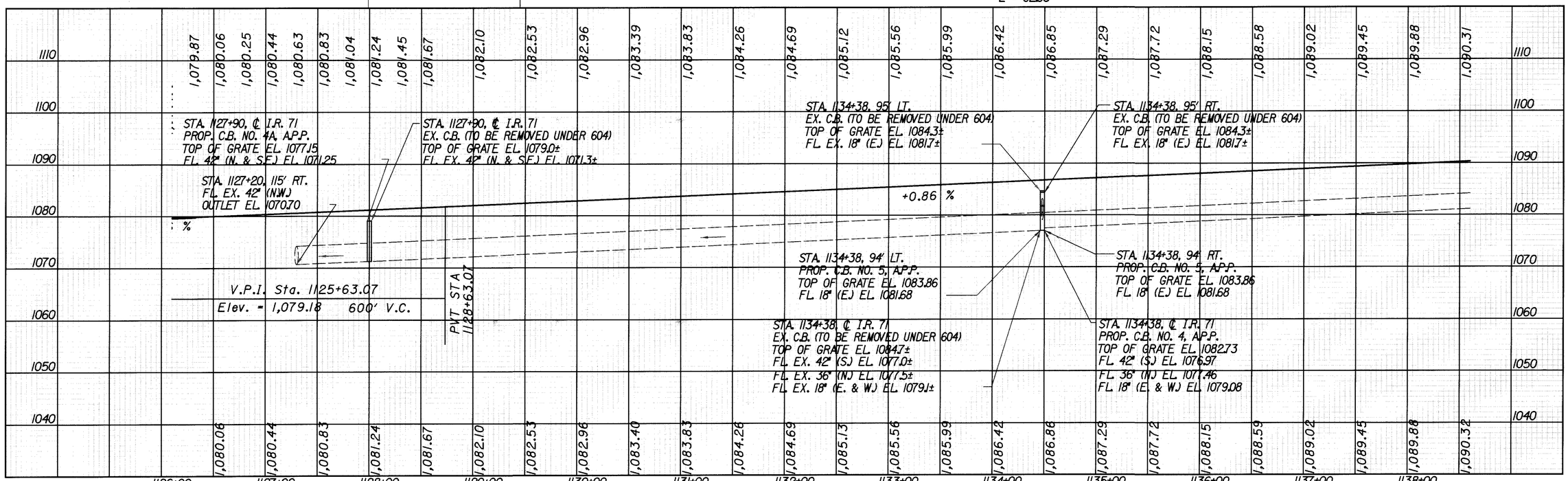

HORIZONTAL SCALE IN FEET
0 50 100
CALCULATED
CHECKED

PLAN AND PROFILE
STA 1126+00 TO STA 1138+50

MED - 71 - 15.78

196
940

DESIGN FILE : N:\pd_med_ir71\dgn\planprofile\gp25.dgn
USERNAME : jrogers
DATE : 09-DEC-1999
TIME : 08:01

I.R. 71
P.I. Sta = 1149+64.08
Δ = 8° 28' 56" (RT)
Dc = 0° 15' 00"
R = 22,918.23'
T = 1,699.54'
L = 3,392.88'
E = 62.93'

Cross References	
Guardrail	75-76
Drainage	77-96
Underdrains	97-128
Signing	561-606
Lighting	607-643
Tree Planting	647-663
Noise Walls	664-679

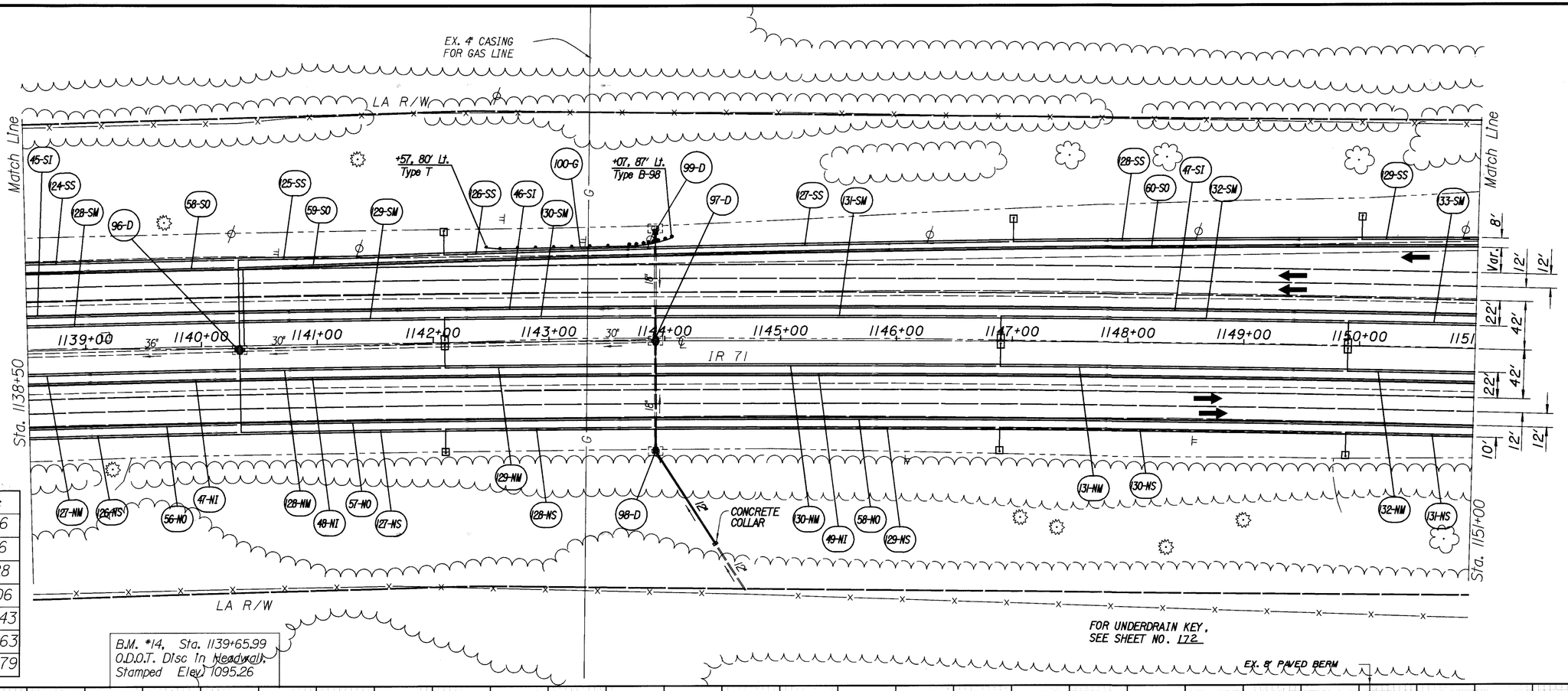

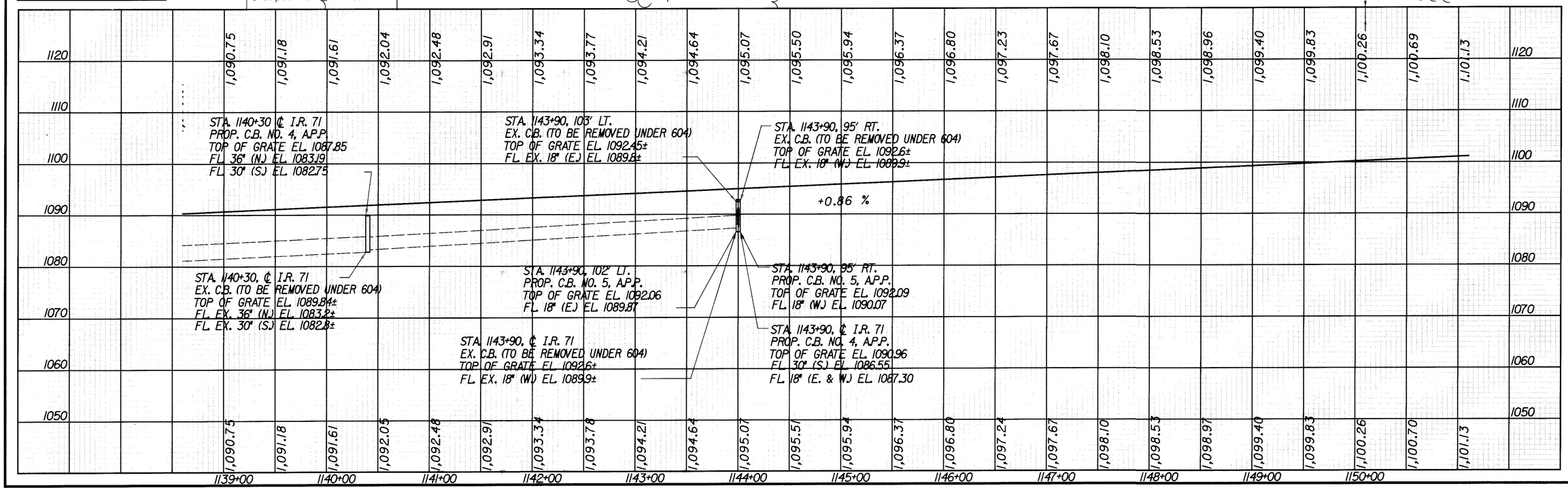

CALCULATED
CHECKED

HORIZONTAL SCALE IN FEET
0 50 100

PLAN AND PROFILE
STA 1138+50 TO STA 1151+00

MED - 71 - 15.78

197
940

DESIGN FILE : k:\pd_med_ir71\dgn\planprofile\gp26.dgn
USERNAME : jroger6
DATE : 09-DEC-1999
TIME : 08:08

I.R. 71
P.I. Sta = 1149+64.08
Δ = 8° 28' 56" (RT)
Dc = 0° 15' 00"
R = 22,918.23'
T = 1,699.54'
L = 3,392.88'
E = 62.93'

Cross References	
Guardrail	75-76
Drainage	77-96
Underdrains	97-128
Signing	561-606
Lighting	607-643
Tree Planting	647-663
Noise Walls	664-679

Match Line
Sta. 1151+00
Sta. 1163+50
1151+00 1152+00 1153+00 1154+00 1155+00 1156+00 1157+00 1158+00 1159+00 1160+00 1161+00 1162+00 1163+00
IR 71
POT Sta. 31+00.00
RC Sta. 34+00.00
Pavement Replacement
Butt Joint
Ramp Pavement Planing and Resurfacing
LA R/W
EX. 10" SAN.
EX. 8" SAW
EX. 10" SAW
EX. 24" SAW
EX. 15" SAW
EX. 18" SAW
S.B. Rest Area
P.I. Sta = 35+88.48
Δ = 5° 38' 59" (LT)
Dc = 1° 30' 00"
R = 3,819.72'
T = 188.48'
L = 376.65'
E = 4.65'
Do Not Disturb Landscaping
10' Match Line
N 1° 20' 47" W 340.00'
N 1° 40' W
FOR UNDERDRAIN KEY, SEE SHEET NO. 172
NOT USED
B.M. #15, Sta. 1158+40.99
O.D.O.T. Disc In Headwall, Stamped Elev. 1101.22

STA. 1152+40, 75' LT.
EX. C.B. NO. 2-2B
TOP OF GRATE EL. 1102.3±
RECONSTRUCTED TOP OF GRATE EL. 1102.18
FL. EX. 12" (N. & W.) EL. 1098.0±

STA. 1152+40, 122' LT.
FL. EX. 12" (E)
OUTLET EL. 1097.7±

STA. 1156+64, 82' LT.
EX. C.B. NO. 2-2B
TOP OF GRATE EL. 1105.0±
RECONST. TOP OF GRATE EL. 1105.21
FL. EX. 12" (S.) EL. 1101.8±
8' PAVED BERM

STA. 1158+84, 174' LT.
FL. EX. 24" (E)
OUTLET EL. 1097.8±

STA. 1158+55, 173' LT.
FL. EX. 72" (E)
OUTLET EL. 1093.5±

+0.86 %

STA. 1158+55, 100' RT.
FL. EX. 72" (W.)
INLET EL. 1095.1±

EX. 10" SAN.
EL. 1087.8±

STA. 1158+84, 94' LT.
PROP. C.B. NO. 4, A.P.P.
TOP OF GRATE EL. 1104.75
FL. 24" (W.) EL. 1099.81
FL. 15" (E) EL. 1100.58±

STA. 1161+61.27, 216.93 LT.
FL. PROP. 18" (N.E.)
OUTLET EL. 1106.43

STA. 1158+84, 92' LT.
EX. C.B. (TO BE REMOVED UNDER 604)
TOP OF GRATE EL. 1105.6±
FL. EX. 24" (W.) EL. 1099.8±
FL. EX. 15" (E) EL. 1100.6±

STA. 1158+84, ℄ I.R. 71
EX. C.B. (TO BE REMOVED UNDER 604)
TOP OF GRATE EL. 1105.6±
FL. EX. 15" (W.) EL. 1101.0±

STA. 1158+84, ℄ I.R. 71
PROP. C.B. NO. 4, A.P.P.
TOP OF GRATE EL. 1103.90
FL. 15" (W.) EL. 1100.96

STA. 1162+29.92, 200.70' LT.
PROP. C.B. NO. 3A
TOP OF GRATE EL. 1112.07
FL. 15" (N.W.) EL. 1107.25
FL. 18" (S.W.) EL. 1107.10
69' - 18" CONDUIT, TYPE C @ 0.09%

STA. 1162+29.92, 200.70' LT.
EX. C.B. (TO BE REMOVED UNDER 604)
TOP OF GRATE EL. 1112.1±
FL. EX. 15" (N.W.) EL. 1107.3±
FL. EX. 18" (S.W.) EL. 1107.1±

STA. 1162+39.09, 226.83' LT.
PROP. C.B. NO. 3A, A.P.P.
TOP OF GRATE EL. 1112.25
FL. 15" (S.E.) EL. 1107.93

STA. 1162+39.09, 226.83' LT.
EX. C.B. (TO BE REMOVED UNDER 604)
TOP OF GRATE EL. 1112.3±
FL. EX. 15" (S.E.) EL. 1107.9±

1130 1120 1110 1100 1090 1080 1070 1060

1,101.56 1,101.99 1,102.42 1,102.86 1,103.29 1,103.72 1,104.15 1,104.59 1,105.02 1,105.45 1,105.88 1,106.32 1,106.75 1,107.18 1,107.61 1,108.05 1,108.48 1,108.91 1,109.34 1,109.78 1,110.21 1,110.64 1,111.07 1,111.51 1,111.94

1,101.56 1,101.99 1,102.43 1,102.86 1,103.29 1,103.72 1,104.16 1,104.59 1,105.02 1,105.45 1,105.89 1,106.32 1,106.75 1,107.18 1,107.62 1,108.05 1,108.48 1,108.91 1,109.35 1,109.78 1,110.21 1,110.64 1,111.08 1,111.51 1,111.94

1151+00 1152+00 1153+00 1154+00 1155+00 1156+00 1157+00 1158+00 1159+00 1160+00 1161+00 1162+00 1163+00

HORIZONTAL SCALE IN FEET
0 50 100
CALCULATED
CHECKED

PLAN AND PROFILE
STA 1151+00 TO STA 1163+50

MED - 71 - 15.78

198
940

DESIGN FILE : I:\pd_med_ir71\dgn\planprofile\gp27.dgn
USERNAME : jrogers
DATE : 09-DEC-1999
TIME : 08:11

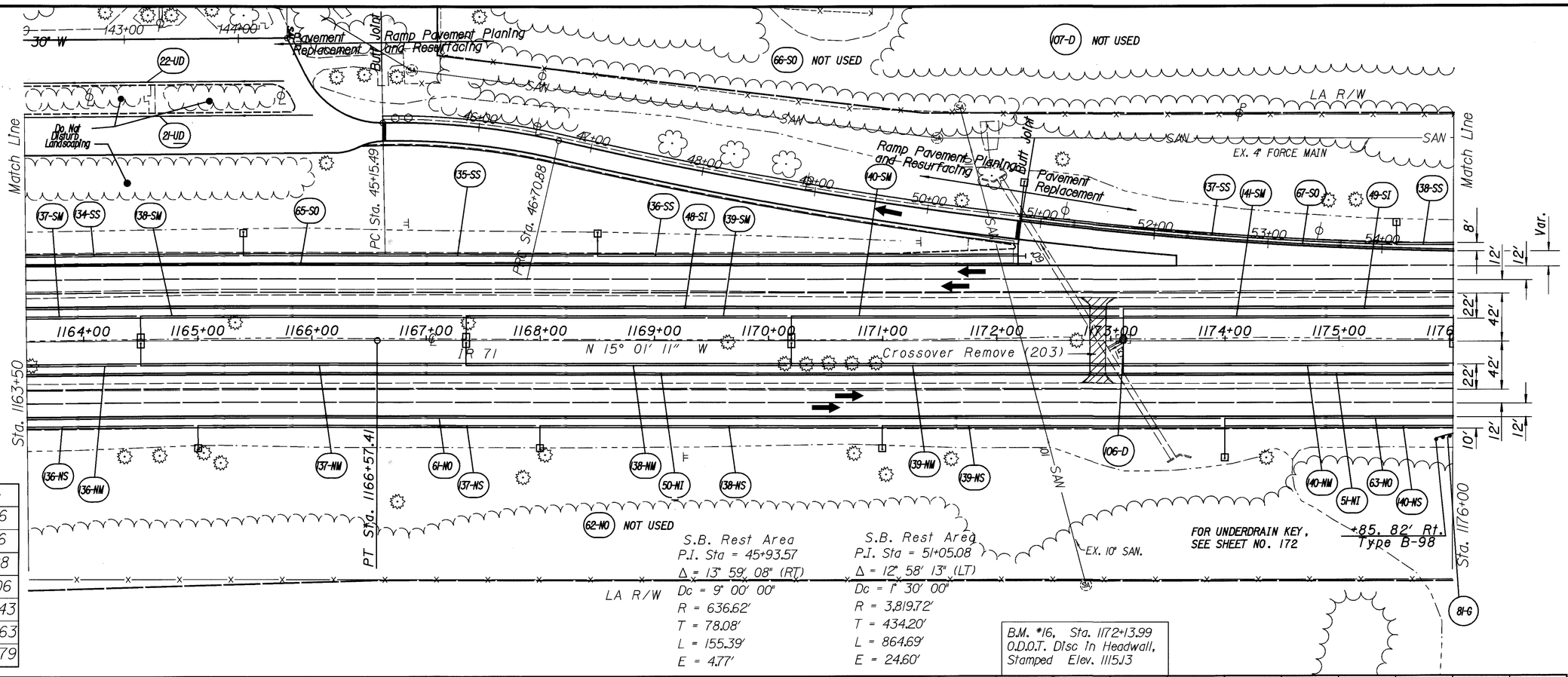

I.R. 71
P.I. Sta = 1149+64.08
Δ = 8° 28' 56" (RT)
Dc = 0° 15' 00"
R = 22,918.23'
T = 1,699.54'
L = 3,392.88'
E = 62.93'

Cross References	
Guardrail	75-76
Drainage	77-96
Underdrains	97-128
Signing	561-606
Lighting	607-643
Tree Planting	647-663
Noise Walls	664-679

S.B. Rest Area
P.I. Sta = 45+93.57
Δ = 13° 59' 08" (RT)
Dc = 9° 00' 00"
R = 636.62'
T = 78.08'
L = 155.39'
E = 4.77'

S.B. Rest Area
P.I. Sta = 51+05.08
Δ = 12° 58' 13" (LT)
Dc = 1° 30' 00"
R = 3,819.72'
T = 434.20'
L = 864.69'
E = 24.60'

B.M. #16, Sta. 1172+13.99
O.D.O.T. Disc In Headwall,
Stamped Elev. 1115.13

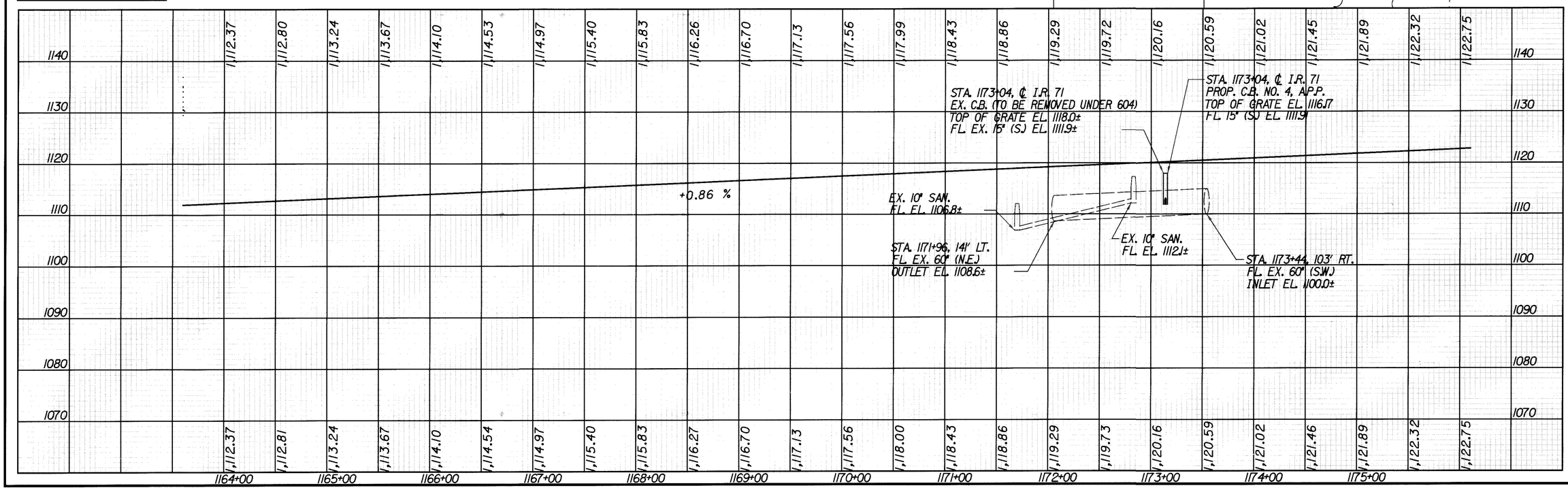

PLAN AND PROFILE
STA 1163+50 TO 1176+00

MED - 71 - 15.78

199
940

HORIZONTAL SCALE IN FEET
0 50 100

CALCULATED
CHECKED

DESIGN FILE : i:\pd_MED_IR71\DGN\PlanProfile\gp28.dgn
USERNAME : jrogers
DATE : 30-DEC-1999
TIME : 13:11

Cross References	
Guardrail	75-76
Drainage	77-96
Underdrains	97-128
Signing	561-606
Lighting	607-643
Tree Planting	647-663
Noise Walls	664-679

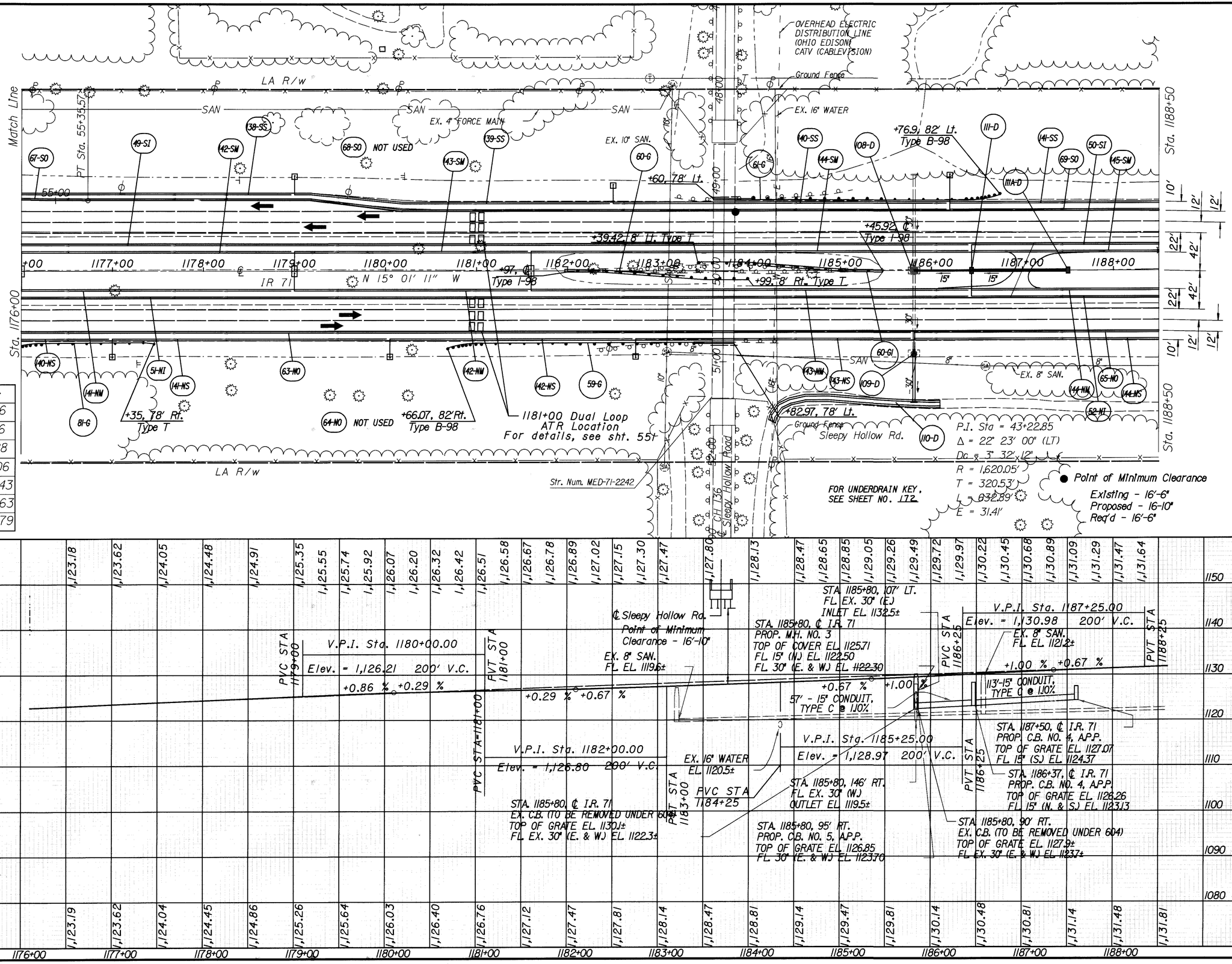

DESIGN FILE : i:\pda_med_1r71\dgn\planprofile\gp29.dgn
USERNAME : jrogers
DATE : 09-DEC-1999
TIME : 08:17

HORIZONTAL SCALE IN FEET
0 50 100
CALCULATED
CHECKED

PLAN AND PROFILE
STA 1176+00 TO STA 1188+50

MED - 71 - 15.78

200
940

Cross References	
Guardrail	75-76
Drainage	77-96
Underdrains	97-128
Signing	561-606
Lighting	607-643
Tree Planting	647-663
Noise Walls	664-679

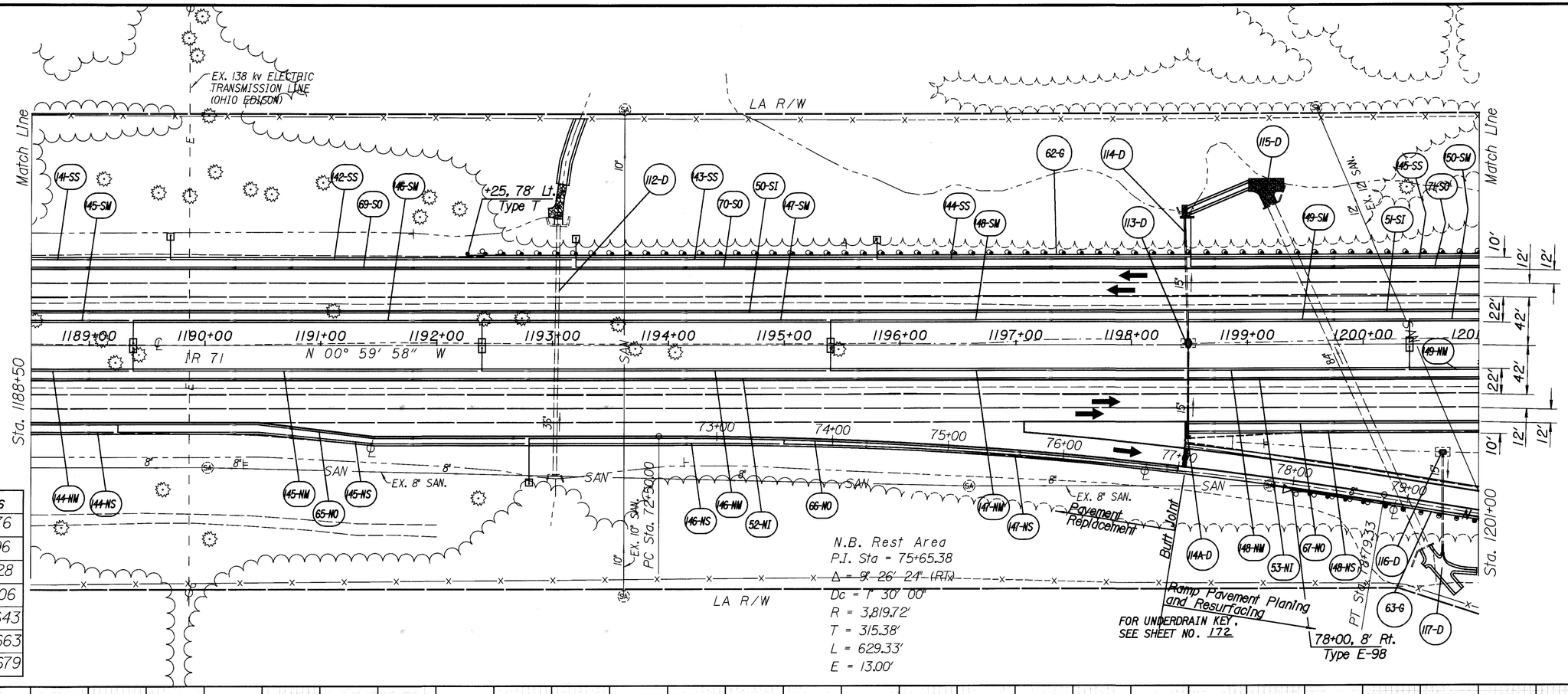

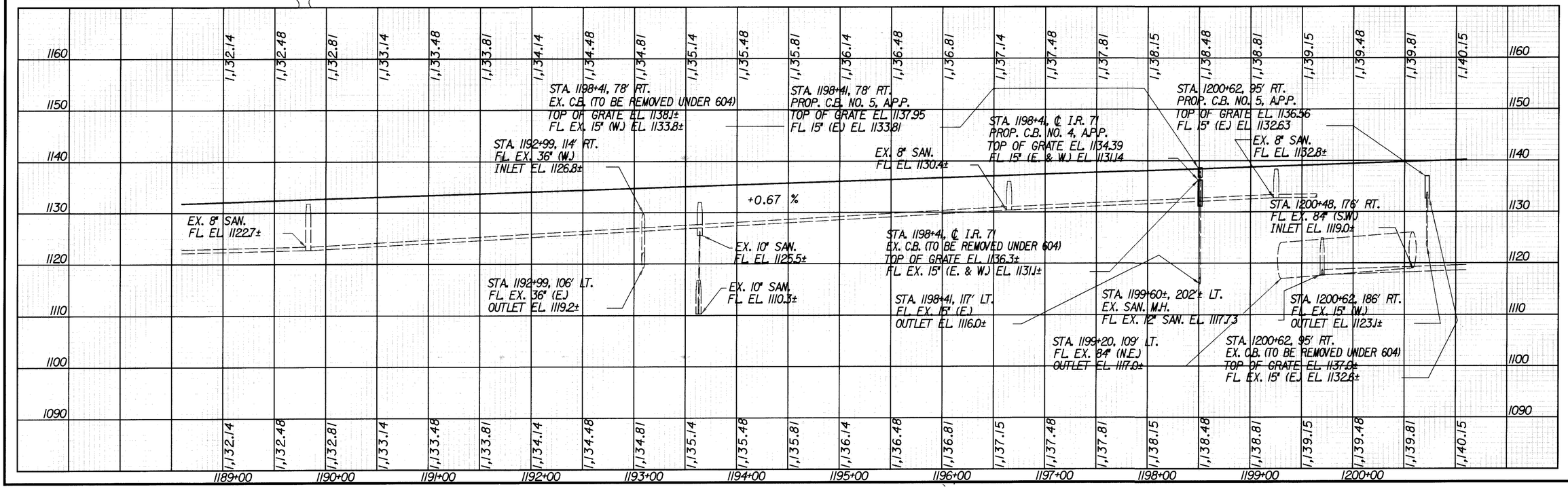

DATE : 09-DEC-1999
TIME : 08:27
DESIGN FILE : i:\pa_med_lr71\dgn\planprofile\gp30.dgn
USERNAME : jrogers

HORIZONTAL SCALE IN FEET
0 50 100
CALCULATED
CHECKED

PLAN AND PROFILE
STA 1188+50 TO STA 1201+00

MED - 71 - 15.78

201
940

I.R. 71
P.I. Sta = 1218+79.02
Δ = 14° 01' 13" (LT)
Dc = 0° 28' 00"
R = 12,277.63'
T = 1,509.71'
L = 3,004.33'
E = 92.47'

N.B. Rest Area
P.I. Sta = 83+01.31
Δ = 11° 54' 49" (LT)
Dc = 3° 00' 00"
R = 1,909.86'
T = 199.28'
L = 397.12'
E = 10.37'

Cross References	
Guardrail	75-76
Drainage	77-96
Underdrains	97-128
Signing	561-606
Lighting	607-643
Tree Planting	647-663
Noise Walls	664-679

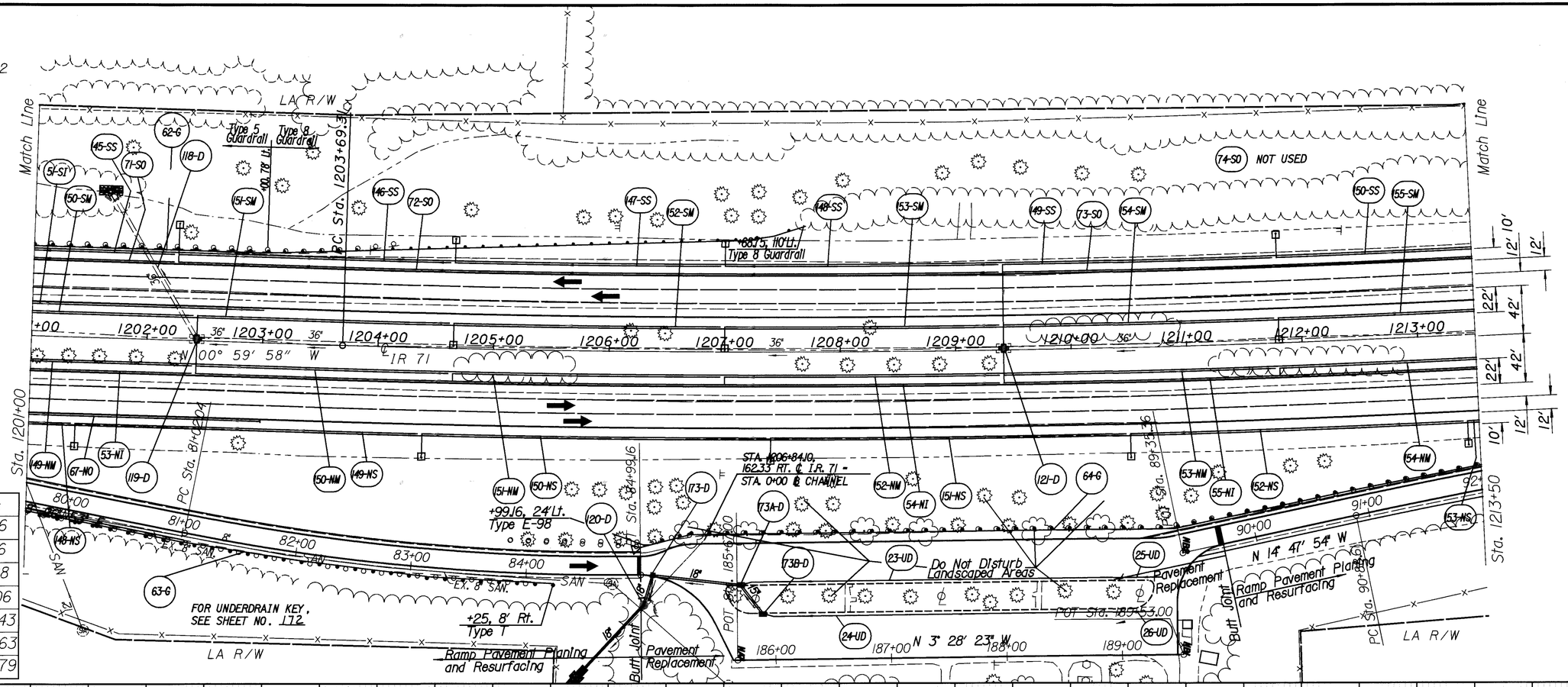

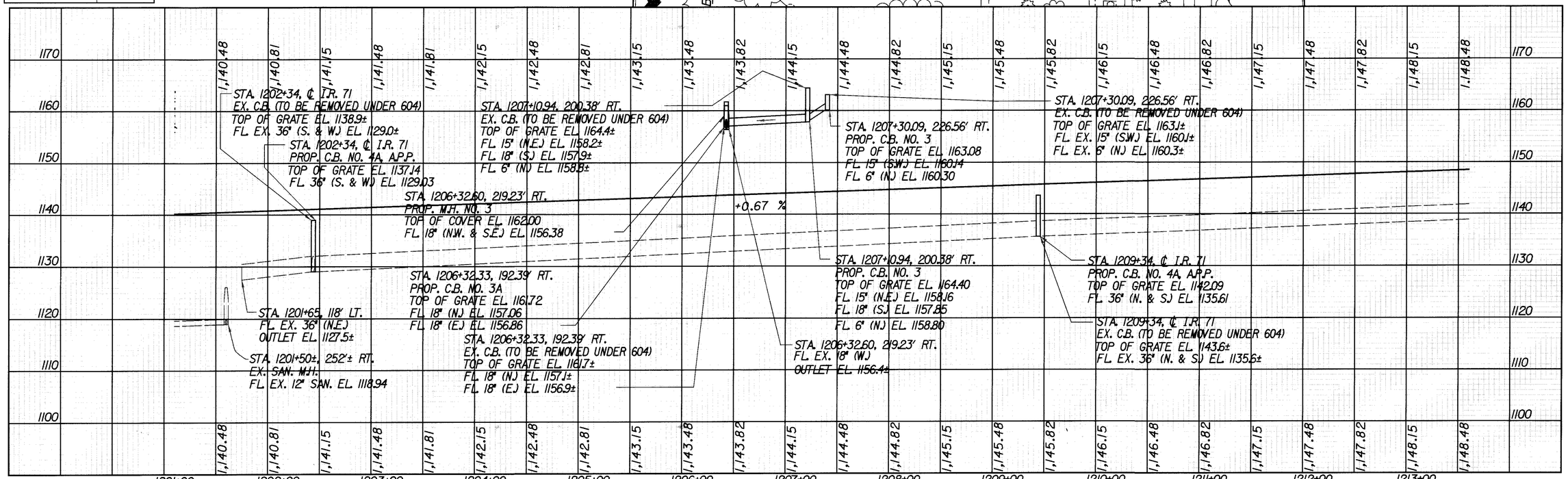

HORIZONTAL SCALE IN FEET
0 50 100
CALCULATED
CHECKED

PLAN AND PROFILE
STA 1201+00 TO STA 1213+50

MED - 71 - 15.78

202
940

DESIGN FILE : i:\pd_MED_IR71\DGN\PlanProfile\gp3ld.dgn
USERNAME : pfought
DATE : 09-DEC-1999
TIME : 08:59

N.B. Rest Area
P.I. Sta = 93+54.23
Δ = 5° 18' 31" (RT)
Dc = 1° 00' 00"
R = 5,729.58'
T = 265.62'
L = 530.86'
E = 6.15'

I.R. 71
P.I. Sta = 1218+79.02
Δ = 14° 01' 13" (LT)
Dc = 0° 28' 00"
R = 12,277.63'
T = 1,509.71'
L = 3,004.33'
E = 92.47'

Cross References	
Guardrail	75-76
Drainage	77-96
Underdrains	97-128
Signing	561-606
Lighting	607-643
Tree Planting	647-663
Noise Walls	664-679

Str. Num. MED-71-2321

74-SO NOT USED

OVERHEAD TELEPHONE LINES (GTE)

LA R/W

Match Line

Sta. 1213+50

1214+00 1215+00 1216+00 1217+00 1218+00 1219+00 1220+00 1221+00 1222+00 1223+00 1224+00 1225+00 1226+00

IR 71

N 9° 29' 23" W

POT Sta. 99+71.10

PT Sta. 96+19.47

Ramp Pavement Planing and Resurfacing

Butt Joint

Pavement Replacement

+50.4, 78' Lt.

+16.5, 8' Lt. Type T1

+68.37, ℄ Type 1-98

+74.8, 8' Rt. Type T1

+46.7, 92' Lt.

+04.8, 106' Rt. Type B-98

Ground Fence

Match Line

Sta. 1226+00

FOR UNDERDRAIN KEY, SEE SHEET NO. 172

OVERHEAD ELECTRIC DISTRIBUTION LINE (OHIO EDISON) CATV (CABLEVISION)

TR 138 - 55.00

℄ Laurel Road

● Point of Minimum Clearance
Existing - 16'-4"
Proposed - 16-8½"
Req'd - 16'-6"

STA. 1216+76, 98' LT.
PROP C.B. NO. 5, A.P.P.
TOP OF GRATE EL. 1147.52
FL. EX. 15" (E) EL. 1145.73

STA. 1216+76, 125' RT.
EX C.B. (TO BE REMOVED UNDER 604)
TOP OF GRATE EL. 1148.2±
FL. EX. 30" (E. & W.) EL. 1142.5±

STA. 1216+76, 190' RT.
FL. 30" (W.) EL. 1164.04

STA. 1216+76, 125' RT.
PROP C.B. NO. 5A
TOP OF GRATE EL. 1147.32
FL. 30" (E. & W.) EL. 1142.52

STA. 1216+76, 95' LT.
EX C.B. (TO BE REMOVED UNDER 604)
TOP OF GRATE EL. 1148.2±
FL. EX. 15" (E) EL. 1145.9±

STA. 1216+76, ℄ I.R. 71
EX C.B. (TO BE REMOVED UNDER 604)
TOP OF GRATE EL. 1148.6±
FL. 36" (S.) EL. 1141.4±
FL. 30" (N. & E.) EL. 1141.9±
FL. 15" (W.) EL. 1143.2±

STA. 1216+76, ℄ I.R. 71
PROP. C.B. NO. 4A, A.P.P.
TOP OF GRATE EL. 1147.04
FL. 36" (S.) EL. 1141.35
FL. 30" (N. & E.) EL. 1141.89
FL. 15" (W.) EL. 1143.24

STA. 1221+34, ℄ I.R. 71
PROP. C.B. NO. 4A, A.P.P.
TOP OF GRATE EL. 1150.07
FL. 30" (S.) EL. 1145.08
FL. 30" (E.) EL. 1145.28
FL. 15" (N.) EL. 1146.30

STA. 1221+34, 179' RT.
FL. 30" (W.) EL. 1167.01

STA. 1221+34, 116' RT.
PROP C.B. NO. 5A
TOP OF GRATE EL. 1150.81
FL. 30" (W.) EL. 1147.26
FL. 30" (E.) EL. 1147.46

STA. 1221+34, ℄ I.R. 71
EX C.B. (TO BE REMOVED UNDER 604)
TOP OF GRATE EL. 1151.6±
FL. EX. 30" (S.) EL. 1145.1±
FL. EX. 30" (E.) EL. 1145.3±
FL. EX. 15" (N.) EL. 1146.3±

PVC STA=1220+75
V.P.I. Sta. 1221+75.00
Elev. = 1,153.99 200' V.C.
+0.67 % +0.48 %
PVC STA 1222+75

PVT STA=1222+75
+0.48 % +0.67 %
PVT STA 1224+75

STA. 1223+69, 125' LT.
PROP. M.H. NO. 5
TOP OF COVER EL. 1153.99
FL. 15" (N.) EL. 1147.90
FL. EX. 15" (S.) EL. 1147.80

V.P.I. Sta. 1223+75.00
Elev. = 1,154.95 200' V.C.

STA. 1221+34, 114' RT.
EX C.B. (TO BE REMOVED UNDER 604)
TOP OF GRATE EL. 1150.9±
FL. 30" (W.) EL. 1147.2±
FL. 30" (E.) EL. 1147.4±

℄ Laurel Rd.

Point of Minimum Clearance - 16'-8½"

EX. 12" WATER LINE EL. 1146.7±

330' 15" CONDUIT, TYPE C @ 0.70%

1,148.82 1,149.15 1,149.48 1,149.82 1,150.15 1,150.49 1,150.82 1,151.15 1,151.49 1,151.82 1,152.15 1,152.49 1,152.82 1,153.15 1,153.48 1,153.64 1,153.79 1,153.94 1,154.08 1,154.22 1,154.35 1,154.47 1,154.59 1,154.72 1,154.86 1,155.00 1,155.14 1,155.30 1,155.45 1,155.62 1,155.78 1,156.12 1,156.45

1180 1170 1160 1150 1140 1130 1120 1110

1214+00 1215+00 1216+00 1217+00 1218+00 1219+00 1220+00 1221+00 1222+00 1223+00 1224+00 1225+00

DESIGN FILE : i:\pd_MED_IR71\DGN\PlanProfile\gp32.dgn
USERNAME : pfought
DATE : 09-DEC-1999
TIME : 09:01

HORIZONTAL SCALE IN FEET
0 50 100
CALCULATED CHECKED

PLAN AND PROFILE
STA 1213+50 TO STA 1226+00

MED - 71 - 15.78

203
940

NOTE: DO NOT DISTURB THE EXISTING R/W FENCE FROM APPROXIMATELY STA. 1237+00 LT. TO STA. 1239+00 LT

I.R. 71
P.I. Sta = 1218+79.02
Δ = 14° 01' 13" (LT)
Dc = 0° 28' 00"
R = 12,277.63'
T = 1,509.71'
L = 3,004.33'
E = 92.47'

Cross References	
Guardrail	75-76
Drainage	77-96
Underdrains	97-128
Signing	561-606
Lighting	607-643
Tree Planting	647-663
Noise Walls	664-679

160-NW NOT USED
159-NI NOT USED
161-SW NOT USED
132-D NOT USED
163-NW NOT USED

Match Line
Sta. 1226+00
Match Line
Sta. 1238+50
LA R/W
LA R/W
IR 71
PT Sta. 1233+73.64
Ex. Ground Fence
+43, 82' Lt. Type B-98
+10.5, ℄ Type I-98
+75, 95' Rt. Type B-98
+50, 79' Rt. Type T
+86.2, 82' Rt. Type B-98
1227+00
1228+00
1229+00
1230+00
1231+00
1232+00
1233+00
1234+00
1235+00
1236+00
1237+00
1238+00
10' 12' 12' 22' 42' 22' 42' 12' 12' 10'

FOR UNDERDRAIN KEY, SEE SHEET NO. 172

B.M. #17, Sta. 1230+83.99
O.D.O.T. Disc in Headwall,
Stamped Elev. 1157.86

1,156.79 1,156.96 1,157.14 1,157.33 1,157.52 1,157.72 1,157.93 1,158.14 1,158.35 1,158.55 1,158.75 1,158.94 1,159.13 1,159.31 1,159.49 1,159.66 1,159.82 1,160.16 1,160.49 1,160.82 1,161.16 1,161.49 1,161.82 1,162.16 1,162.49 1,162.82 1,163.16 1,163.49 1,163.82 1,164.16 1,164.49 1,164.83 1,165.16

1190 1180 1170 1160 1150 1140 1130 1120

STA. 1227+59, ℄ I.R. 71
EX. C.B. (TO BE REMOVED UNDER 604)
TOP OF GRATE EL. 1158.2±
FL. EX. 15" (N.) EL. 1152.0±
FL. EX. 15" (S.) EL. 1150.8±

330' - 15" CONDUIT, TYPE C @ 0.70%

+0.67 %

PVC STA 1226+25

V.P.I. Sta. 1227+25.00
Elev. = 1,157.28 200' V.C.

EX. 8" SAN. EL. 1147.0±

STA. 1227+00, 6' LT.
PROP. MH. NO. 3
TOP OF COVER EL. 1157.15
FL. EX. 15" (N.) EL. 1150.40
FL. EX. 15" (S.) EL. 1150.30

PVC STA=1228+25

+0.85 %

PVT STA=1228+25

V.P.I. Sta. 1229+25.00
Elev. = 1,158.99 200' V.C.

PVT STA=1230+25

+0.67 %

54' - 15" CONDUIT, TYPE C @ 1.00%

STA. 1228+13, ℄ I.R. 71
PROP. C.B. NO. 4 A.P.P.
TOP OF GRATE EL. 1154.42
FL. 15" (S.) EL. 1152.54

STA. 1227+59, ℄ I.R. 71
PROP. MH. NO. 3
TOP OF COVER EL. 1154.39
FL. 15" (N.) EL. 1152.00
FL. EX. 15" (S.) EL. 1150.78

STA. 1231+34, 5' LT.
PROP. C.B. NO. 4 A.P.P.
TOP OF GRATE EL. 1156.96
FL. 15" (S.) EL. 1152.62

STA. 1231+34, 5' LT.
EX. C.B. (TO BE REMOVED UNDER 604)
TOP OF GRATE EL. 1158.3±
FL. EX. 15" (S.) EL. 1152.6±

STA. 1231+54, 108' LT.
FL. EX. 54" (S.E.)
OUTET EL. 1150.8±

STA. 1230+79, 87' RT.
FL. EX. 54" (N.W.)
INLET EL. 1152.0±

1,157.16 1,157.49 1,157.82 1,158.16 1,158.49 1,158.82 1,159.16 1,159.49 1,159.82 1,160.16 1,160.49 1,160.82 1,161.16 1,161.49 1,161.82 1,162.16 1,162.49 1,162.82 1,163.16 1,163.49 1,163.83 1,164.16 1,164.49 1,164.83 1,165.16

1226+00 1227+00 1228+00 1229+00 1230+00 1231+00 1232+00 1233+00 1234+00 1235+00 1236+00 1237+00 1238+00

HORIZONTAL SCALE IN FEET
0 50 100

CALCULATED
CHECKED

PLAN AND PROFILE
STA 1226+00 TO STA 1238+50

MED - 71 - 15.78

204
940

DESIGN FILE : i:\pd_MED_IR71\DGN\PlanProfile\gp33.dgn
USERNAME : pfought
DATE : 09-DEC-1999
TIME : 09:04

Cross References	
Guardrail	75-76
Drainage	77-96
Underdrains	97-128
Signing	561-606
Lighting	607-643
Tree Planting	647-663
Noise Walls	664-679

Match Line — Sta. 1238+50

LA R/W

+28.04, 78' Lt. Type T

+53.04, 95' Lt. Type E-98

+53, 81' Lt. Type E-98

+61.2, 78' Rt. Type T

+41.2, 82' Rt. Type B-98

℄ IR 71

N 15° 01' 11" W

1239+00 1240+00 1241+00 1242+00 1243+00 1244+00 1245+00 1246+00 1247+00 1248+00 1249+00 1250+00 1251

Sta. 1251+00

8' Var. 12' 12' 22' 42' 22' 42' 12' 12' 12' 8'

60-SS 78-SO 56-SW 61-SS 79-SO 67-SW 70-G 52-SI 62-SS 68-SW 63-SS 69-SW 64-SS 80-SO 53-SI 70-SW 65-SS 171-SW

65-NW 71-WO 69-G 66-NW 61-NS 70-WO 62-NS 34-D 61-WI 35-D 67-NW 62-WI 72-WO 64-NS 65-NS 68-NW 73-WO 69-NW 71-G 70-NW 66-NS

63-NS NOT USED

Ramp C
P.I. Sta. = 38+62.39
Δ = 34° 01' 48" (RT)
Dc = 9° 00'
R = 636.62'
Ls = 200.00'
Theta = 9° 00'
LT = 133.51'
ST = 66.82'
x = 199.51'
y = 10.45'
k = 99.92'
p = 2.62'
Δc = 25° 01' 48" (RT)
Lc = 278.11'
Ec = 15.49'
Ts = 141.31'

FOR UNDERDRAIN KEY, SEE SHEET NO. 172

B.M. "B", Sta. 1240+13.99
Q.D.O.T. Disc In Headwall, Stamped Elev. 1153.44

STA. 1242+34, ℄ I.R. 71
EX. C.B. (TO BE REMOVED UNDER 604)
TOP OF GRATE EL. 1165.6±
FL. EX. 15" (W.) EL. 1160.7±

STA. 1242+34, ℄ I.R. 71
PROP. C.B. NO. 4, A.P.P.
TOP OF GRATE EL. 1163.69
FL. 15" (W.) EL. 1160.69

PVC STA 1245+00

+0.67 %

STA. 1242+34, 108' LT.
FL. EX. 15" (E.)
OUTLET EL. 1158.3±

STA. 1240+74, 116' RT.
FL. EX. 72" (S.E.)
OUTLET EL. 1144.2±

STA. 1241+50±, 202'± LT.
EX. SAN. M.H.
FL. EX. 10" SAN. EL. 1141.40

STA. 1240+15, 104' RT.
FL. EX. 72" (N.W.)
INLET EL. 1146.0±

STA. 1240+28±, 240'± RT.
EX. SAN. M.H.
FL. EX. 10" SAN. EL. 1136.30

	1239+00	1240+00	1241+00	1242+00	1243+00	1244+00	1245+00	1246+00	1247+00	1248+00	1249+00	1250+00
1190	1,165.49	1,165.83	1,166.16	1,166.49	1,166.83	1,167.16	1,167.49	1,167.83	1,168.16	1,168.49	1,168.83	1,169.16
1180												
1170												
1160												
1150												
1140												
1130												
1120												
	1,165.49	1,165.83	1,166.16	1,166.49	1,166.83	1,167.16	1,167.49	1,167.83	1,168.16	1,168.49	1,168.83	1,169.16

	1239+00	1240+00	1241+00	1242+00	1243+00	1244+00	1245+00	1246+00	1247+00	1248+00	1249+00	1250+00
1190	1,169.49	1,169.66	1,169.82	1,169.98	1,170.13	1,170.28	1,170.43	1,170.57	1,170.71	1,170.84	1,170.98	1,171.10
1180												
1170												
1160												
1150												
1140												
1130												
1120												
	1,169.49	1,169.83	1,170.16	1,170.47	1,170.76	1,171.04	1,171.30	1,171.55	1,171.78	1,171.99	1,172.18	1,172.35

	1239+00	1240+00	1241+00	1242+00	1243+00	1244+00	1245+00	1246+00	1247+00	1248+00	1249+00	1250+00
1190	1,171.23	1,171.35	1,171.46	1,171.58	1,171.69	1,171.79	1,171.89	1,171.99	1,172.09	1,172.18	1,172.26	1,172.35
1180												
1170												
1160												
1150												
1140												
1130												
1120												
	1,171.23	1,171.35	1,171.46	1,171.58	1,171.69	1,171.79	1,171.89	1,171.99	1,172.09	1,172.18	1,172.26	1,172.35

	1239+00	1240+00	1241+00	1242+00	1243+00	1244+00	1245+00	1246+00	1247+00	1248+00	1249+00	1250+00
1190	1,172.43											
1180												
1170												
1160												
1150												
1140												
1130												
1120												
	1,172.43											

	1239+00	1240+00	1241+00	1242+00	1243+00	1244+00	1245+00	1246+00	1247+00	1248+00	1249+00	1250+00
	1,172.51											

HORIZONTAL SCALE IN FEET
0 50 100

CALCULATED
CHECKED

PLAN AND PROFILE
STA 1238+50 TO STA 1251+00

MED - 71 - 15.78

205
940

DESIGN FILE : I:\pot_MED_IR71\DGN\PlanProfile\gp34.dgn
USERNAME : pfought

DATE : 09-DEC-1999
TIME : 09:08

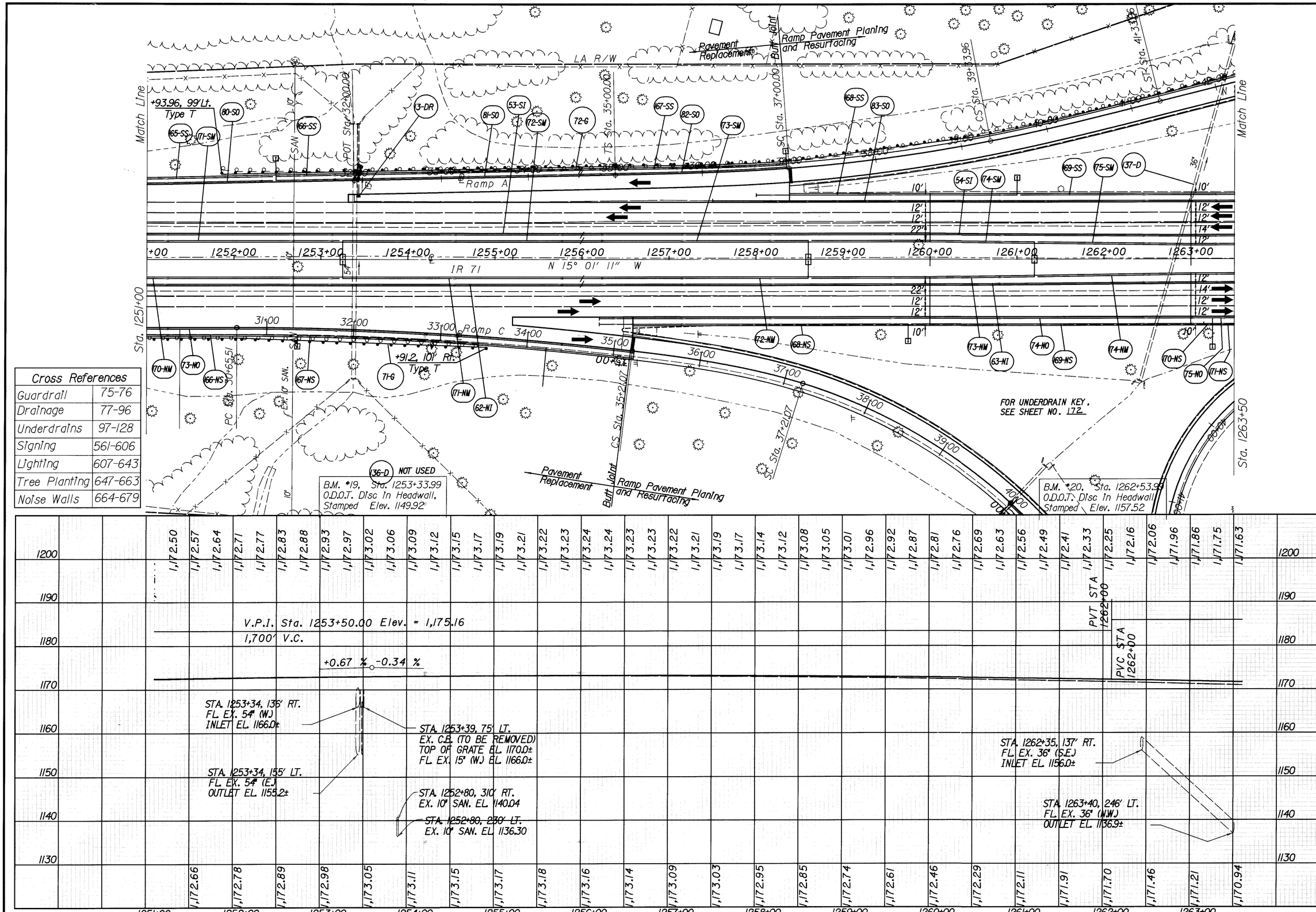

Cross References	
Guardrail	75-76
Drainage	77-96
Underdrains	97-128
Signing	561-606
Lighting	607-643
Tree Planting	647-663
Noise Walls	664-679

HORIZONTAL SCALE IN FEET 0 50 100

CALCULATED

CHECKED

PLAN AND PROFILE
STA 1251+00 TO STA 1263+50

MED - 71 - 15.78

DESIGN FILE : I:\pd_MED_IR71\DGN\PlanProfile\gp35.dgn
USERNAME : pfought

DATE : 09-DEC-1999
TIME : 09:10

Ramp "A"
P.I. Sta = 45+87.41
Δ = 8° 28' 44" (RT)
Dc = 2° 30' 00"
R = 2,291.83'
T = 169.89'
L = 339.16'
E = 6.29'

15'-6" Required Minimum Vertical Clearance
16'-0" Actual Minimum Vertical Clearance

Str. Num. MED-71-2402 L&R

+92.25, 78' Lt. Type T

+00.08, 14' Lt. Type T

1st Post +06.17

1st Post +89.48

1st Post +88.42

1st Post +49.55

1st Post +82.77

1st Post +59.50

+01.36, 3' Rt. Type 1-98

+73.57, 3' Lt. Type 1-98

+15.08, 12' Rt. Type B-98

Match Line

Ramp B

Ramp C

Ramp D

Ramp A

Center Road

Sta. 1263+50

Sta. 1276+00

P.C. Sta. 41+58.68

P.C. Sta. 44+17.52

T.S. Sta. 39+01.45

S.C. Sta. 40+90.45

S.T. Sta. 54+01.45

R.C. Sta. 54+39.97

Ramp C
P.I. Sta. = 38+62.39
Δ = 34° 01' 48" (RT)
Dc = 9° 00'
R = 636.62'
Ls = 200.00'
Theta = 9° 00'
LT = 133.51'
ST = 66.82'

FOR UNDERDRAIN KEY, SEE SHEET NO. 172
x = 99.92'
y = 10.45'
p = 2.62'
Δc = 25° 01' 48" (RT)
Lc = 278.11'
Ec = 15.49'
Tc = 141.31'
x = 199.51'

Ramp "A"
P.I. Sta 57+84.65
Δ = 14° 16' 00" (LT)
Dc 29° 30' 00"
R = 3,819.72'
T = 478.03'
L = 951.11'
E = 29.80'

Curve CD
P.I. Sta = 44+33.72
Δ = 15° 38' 15" (LT)
Dc = 22° 46' 54"
R = 251.50'
T = 34.54'
L = 68.64'
E = 2.36'

Ramp "B"
P.I. Sta = 49+49.13
Δ = 90°00'00" (LT)
Dc = 24° 54' 40"
R = 230.00'
Ls = 200.00'
Theta = 24° 54' 40"
LT = 134.68'
ST = 67.89'
x = 196.25'
y = 28.60'
k = 99.37'
p = 7.20'
Δc = 40°10'40" (LT)
Lc = 161.28'
Ts = 336.57'
Es = 105.45'

Ramp D
P.I. Sta 39+33.97
Δ= 25° 06' 21" (LT)
Dc = 24° 54' 40"
R = 230.00'
Ls = 200.00'
LT = 134.68'
ST = 67.89'
x = 196.25'
Theta = 24° 54' 40"
Lc = 808.01'

Ramp D
P.I. Sta 39+33.97
Δ= 201° 17' 01" (LT)
p = 7.20'
Ts = 232.52'
Es = 42.01'

N 89° 15' 06" E

N 75° 01' 11" W

I.R. 71

L.A. R/W

S.T. Sta. 54+01.45

R.C. Sta. 54+39.97

Cross References	
Guardrail	75-76
Drainage	77-96
Underdrains	97-128
Signing	561-606
Lighting	607-643
Tree Planting	647-663
Noise Walls	664-679

OVERHEAD ELECTRIC DISTRIBUTION LINE (OHIO EDISON) CATV (CABLEVISION)

UNDERGROUND ELECTRIC FOR LIGHTING (OHIO EDISON)

UNDERGROUND CATV (CABLEVISION)

EX. UNDERGROUND ELECTRIC FOR LIGHTING

EX. 6" GAS LINE (COLUMBIA GAS)

EX. 16" WATER LINE

OVERHEAD TELEPHONE LINES (GTE)

OVERHEAD ELECTRIC DISTRIBUTION LINE (OHIO EDISON) CATV (CABLEVISION)

EX. 10" SAN.

73-SS NOT USED
57-SI NOT USED
78-NO NOT USED y = 28.60'
75-NS NOT USED k = 99.37'
79-SM NOT USED Δc = 201° 17' 01" (LT)
p = 7.20'
Ts = 232.52'
Es = 42.01'

B.M. #21, Sta. 1271+68.99
O.D.O.T. Disc In Headwall,
Stamped Elev. 1144.04 CB

1,171.51 1,171.38 1,171.25 1,171.11 1,170.97 1,170.82 1,170.66 1,170.50 1,170.33 1,170.16 1,169.99 1,169.80 1,169.61 1,169.42 1,169.22 1,169.02 1,168.81 1,168.59 1,168.37 1,168.14 1,167.91 1,167.67 1,167.43 1,167.18 1,166.92 1,166.66 1,166.14 1,165.61 1,165.08 1,164.56 1,164.03 1,163.50 1,162.98 1,162.45 1,161.93 1,161.40 1,160.87 1,160.35

1,170.66 1,170.36 1,170.04 1,169.70 1,169.35 1,168.98 1,168.60 1,168.19 1,167.77 1,167.33 1,166.88 1,166.41 1,165.92 1,165.44 1,164.95 1,164.47 1,163.98 1,163.50 1,163.01 1,162.53 1,162.04 1,161.56 1,161.07 1,160.59 1,160.10

1264+00 1265+00 1266+00 1267+00 1268+00 1269+00 1270+00 1271+00 1272+00 1273+00 1274+00 1275+00

V.P.I. Sta. 1266+00.00 Elev. = 1,170.87
800' V.C.
-0.34 % -1.05 %
PVT STA 1270+00

STA. 1263+84, ℄ I.R. 71
PROP. C.B. NO. 4, A.P.P.
TOP OF GRATE EL. 1167.92
FL. 15" (N) EL. 1162.90

STA. 1263+84, ℄ I.R. 71
EX. C.B. (TO BE REMOVED UNDER 604)
TOP OF GRATE EL. 1168.5±
FL. EX. 15" (N) EL. 1162.9±

STA. 1267+34, 75' RT.
EX. C.B. (TO BE REMOVED)
TOP OF GRATE EL. 1167.2±
FL. EX. 15" (W.) EL. 1162.4±

STA. 1267+34, 110' LT.
FL. EX. 18" (E.)
OUTLET EL. 1151.0±

STA. 1267+34, 4.5' LT.
EX. C.B. (TO BE REMOVED UNDER 604)
TOP OF GRATE EL. 1166.1±
FL. EX. 18" (W.) EL. 1160.2±
FL. EX. 15" (S. & E.) EL. 1160.5±

16'-0" Actual Min. Vertical Clearance

EX. 10" SAN. EL. 1140±

EX. 6" GAS (2.5± DEEP)

EX. 16" WATER EL. 1140.0±

EX. CATV

STA. 1267+34, 4.5 LT.
PROP. C.B. NO. 4, A.P.P.
TOP OF GRATE EL. 1165.63
FL. 18" (W.) EL. 1160.17
FL. 15" (S. & E.) EL. 1160.47

STA. 1270+34, 4.5 LT.
PROP. C.B. NO. 4 A.P.P.
TOP OF GRATE EL. 1163.23
FL. 15" (W.) EL. 1158.40
FL. 15" (SW. & S.E.) EL. 1159.05

STA. 1270+34, 4.5 LT.
EX. C.B. (TO BE REMOVED UNDER 604)
TOP OF GRATE EL. 1163.23
FL. EX. 15" (W.) EL. 1158.4±

STA. 1271+68, 141' RT.
FL. EX. 48" (W.)
INLET EL. 1138.0±

STA. 1271+68, 128' LT.
FL. EX. 48" (E.)
OUTLET EL. 1135.3±

HORIZONTAL SCALE IN FEET
0 50 100

CALCULATED
CHECKED

PLAN AND PROFILE
STA 1263+50 TO STA 1276+00

MED - 71 - 15.78

207
940

DESIGN FILE : N:\pd_med_ir-71\dgn\planprofile\gp36.dgn
USERNAME : jrogers

DATE : 28-DEC-1999
TIME : 07:56

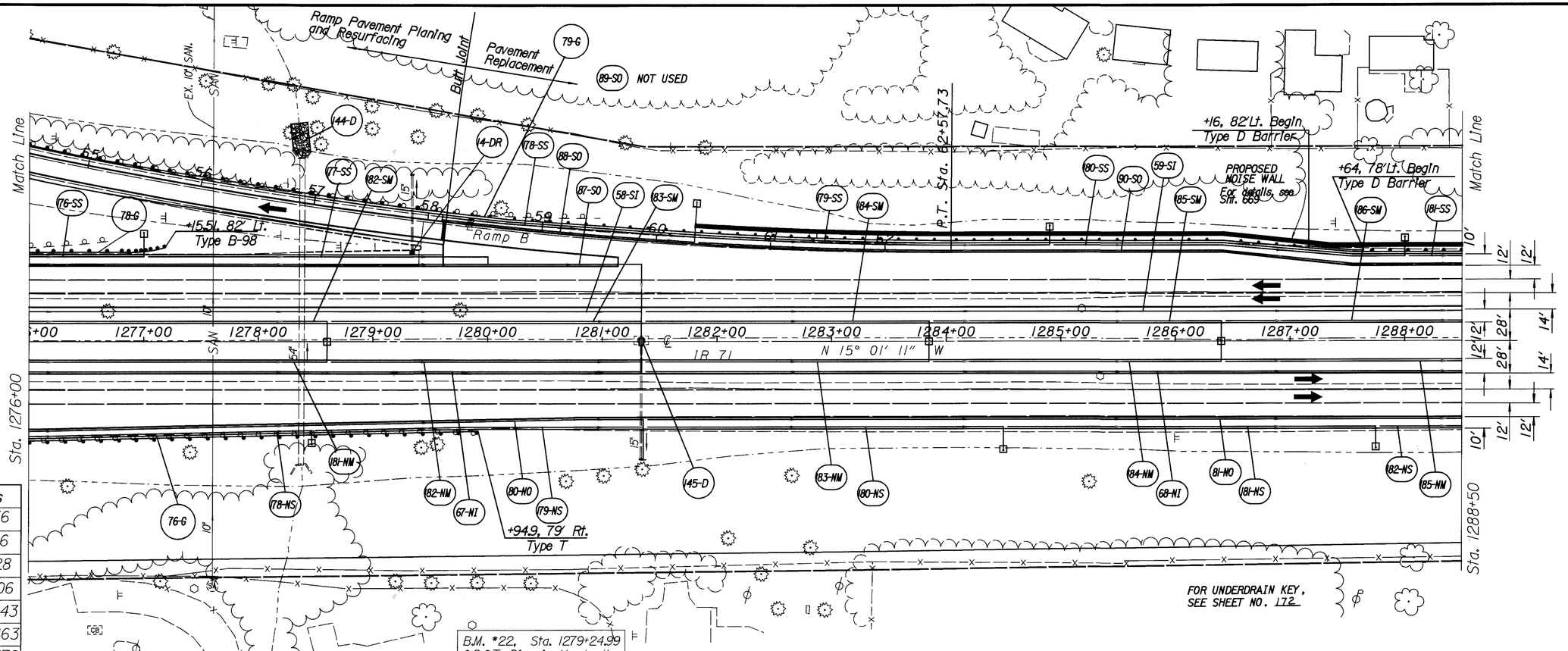

Cross References	
Guardrail	75-76
Drainage	77-96
Underdrains	97-128
Signing	561-606
Lighting	607-643
Tree Planting	647-663
Noise Walls	664-679

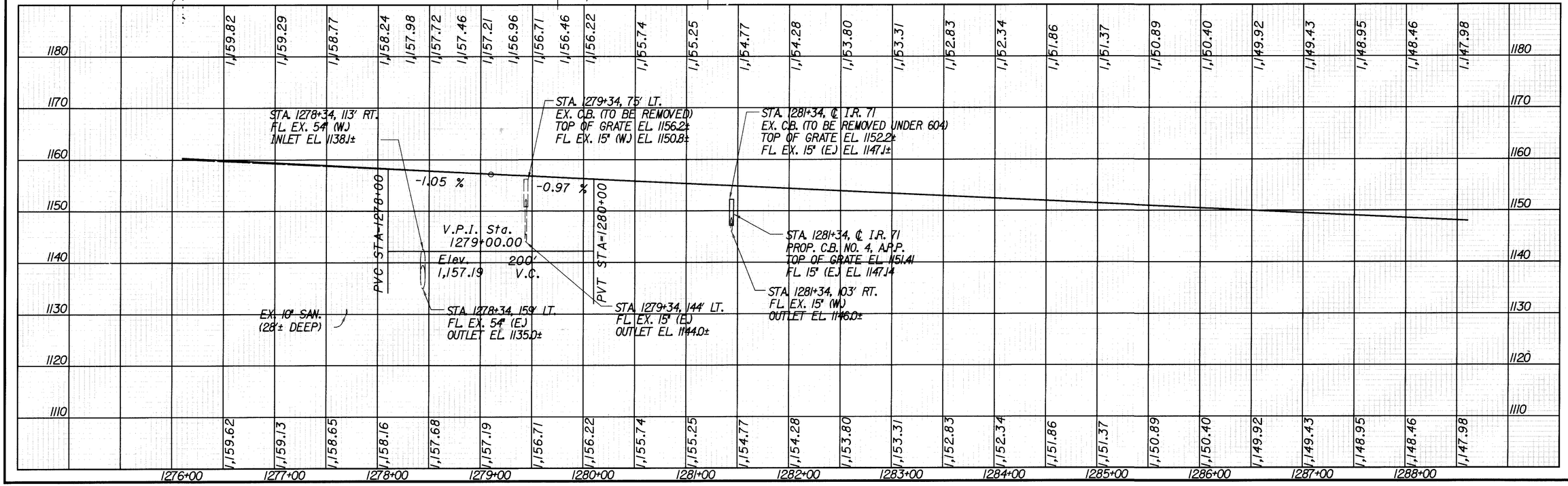

HORIZONTAL SCALE IN FEET
0 50 100
CALCULATED
CHECKED

PLAN AND PROFILE
STA 1276+00 TO STA 1288+50

MED - 71 - 15.78

208
940

DESIGN FILE : i:\pd_MED.IR71\DGN\PlanProfile\gp37.dgn
USERNAME : pfought
DATE : 09-DEC-1999
TIME : 09:17

Cross References	
Guardrail	75-76
Drainage	77-96
Underdrains	97-128
Signing	561-606
Lighting	607-643
Tree Planting	647-663
Noise Walls	664-679

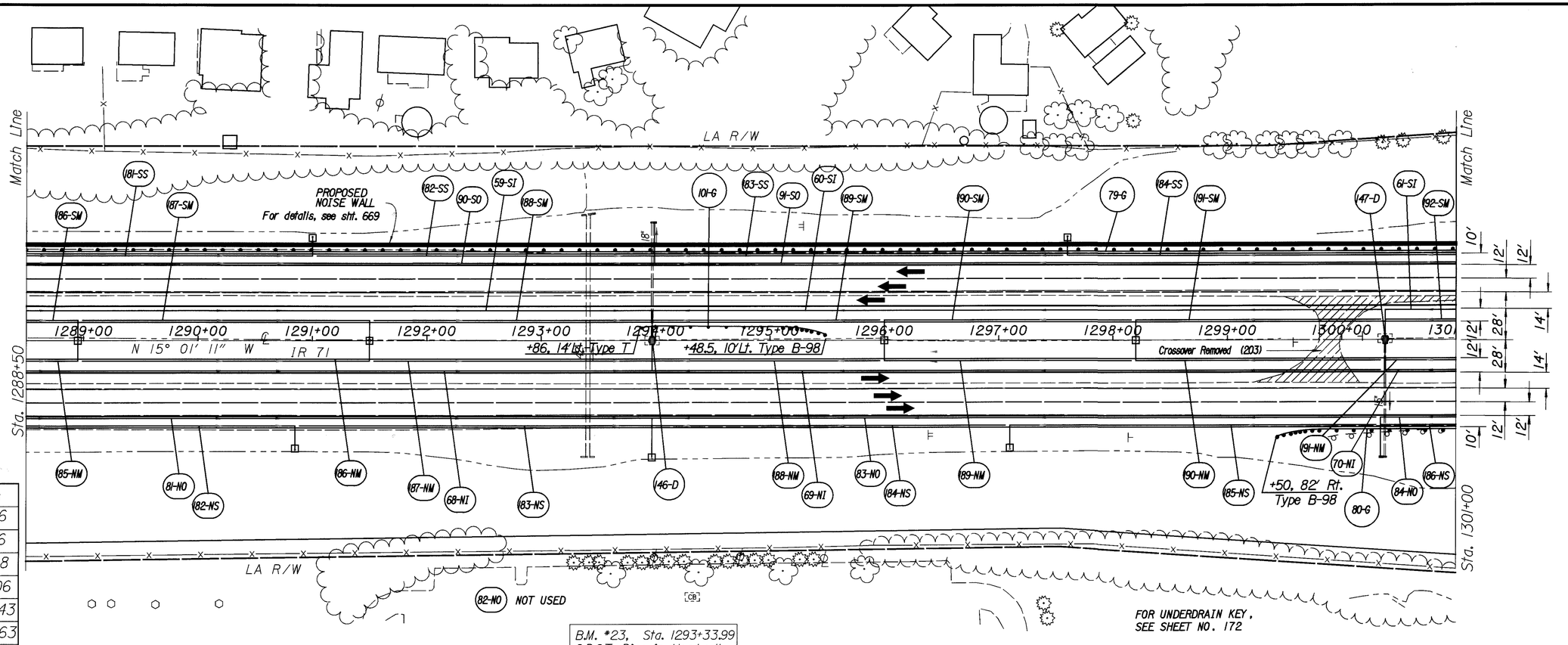

FOR UNDERDRAIN KEY, SEE SHEET NO. 172

B.M. #23, Sta. 1293+33.99
O.D.O.T. Disc In Headwall,
Stamped Elev. 1136.82

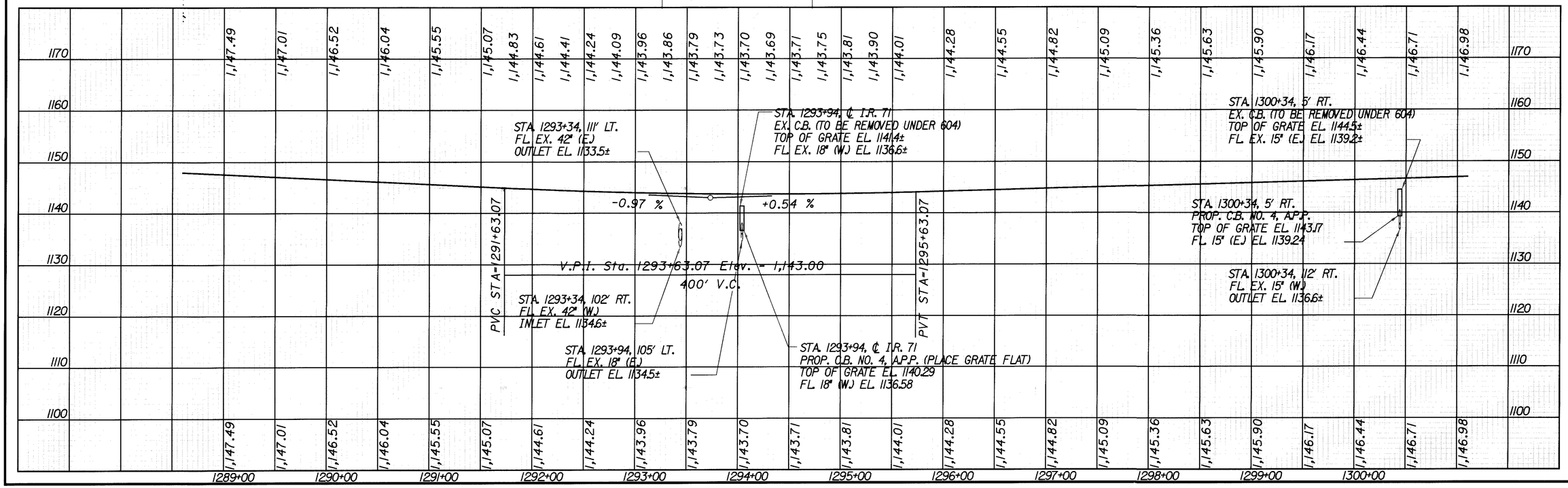

HORIZONTAL SCALE IN FEET
0 50 100

CALCULATED
CHECKED

PLAN AND PROFILE
STA 1288+50 TO STA 1301+00

MED - 71 - 15.78

209
940

DESIGN FILE : I:\pd_med_lr71\dgn\planprofile\gp38.dgn
USERNAME : jrogers

DATE : 28-DEC-1999
TIME : 07:55

Cross References	
Guardrail	75-76
Drainage	77-96
Underdrains	97-128
Signing	561-606
Lighting	607-643
Tree Planting	647-663
Noise Walls	664-679

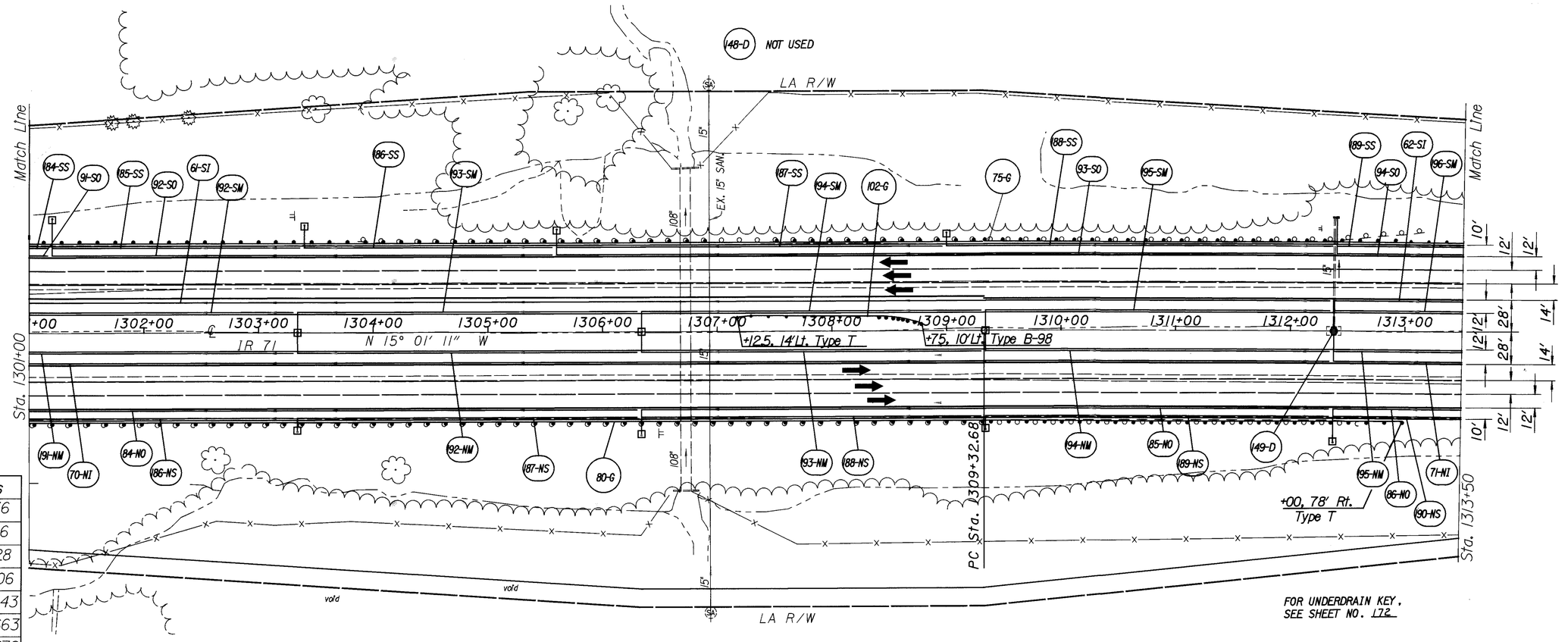

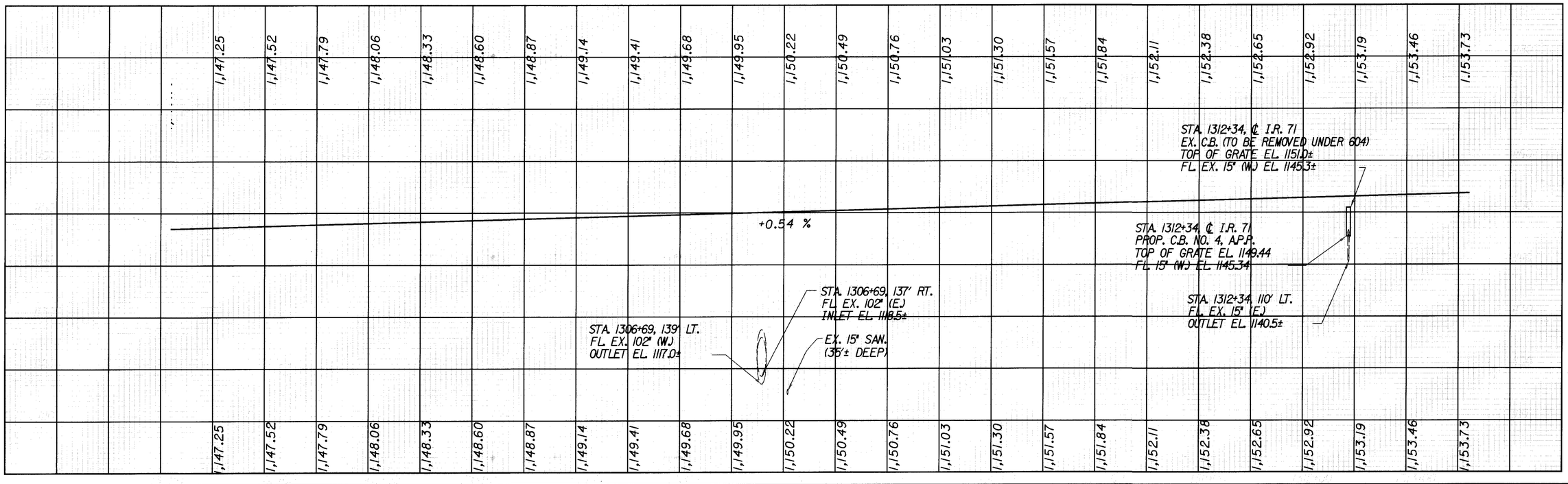

HORIZONTAL SCALE IN FEET
0 50 100
CALCULATED
CHECKED

PLAN AND PROFILE
STA 1301+00 TO STA 1313+50

MED - 71 - 15.78

210
940

DESIGN FILE : i:\pd_MED_IR71\DGN\PlanProfile\gp39.dgn
USERNAME : pfought
DATE : 09-DEC-1999
TIME : 09:19

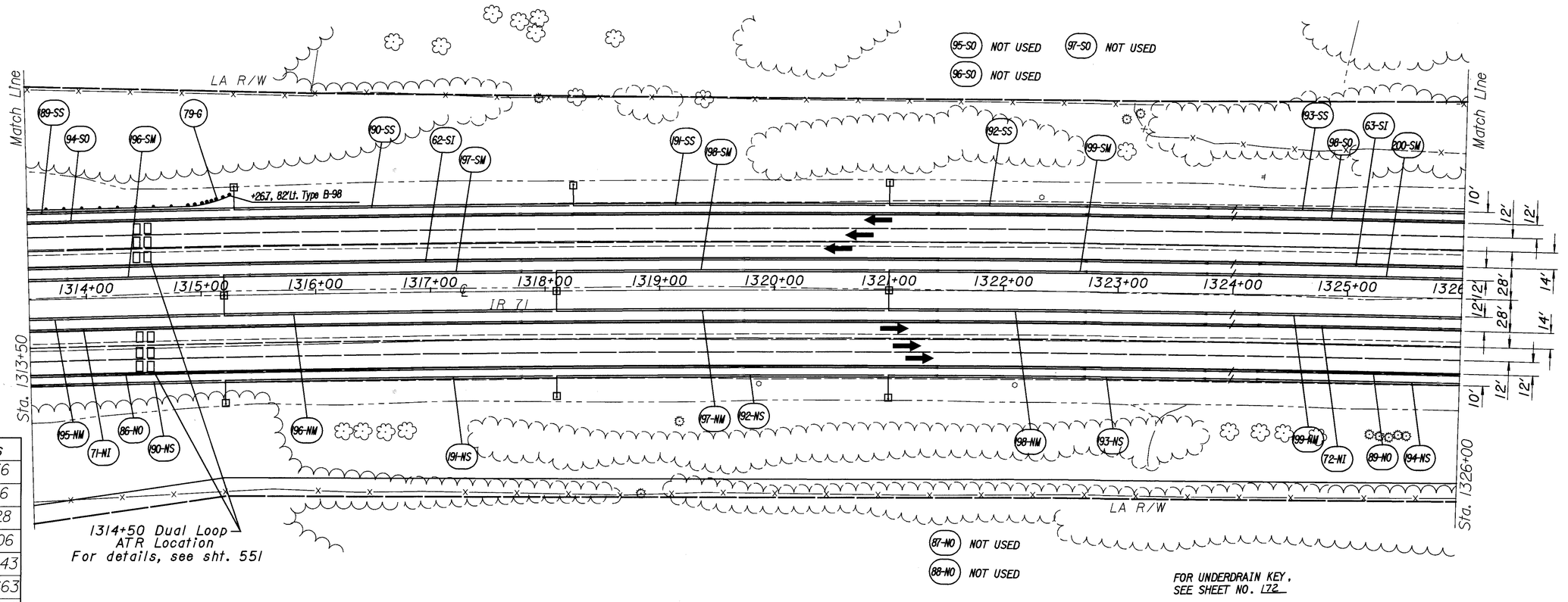

Cross References	
Guardrail	75-76
Drainage	77-96
Underdrains	97-128
Signing	561-606
Lighting	607-643
Tree Planting	647-663
Noise Walls	664-679

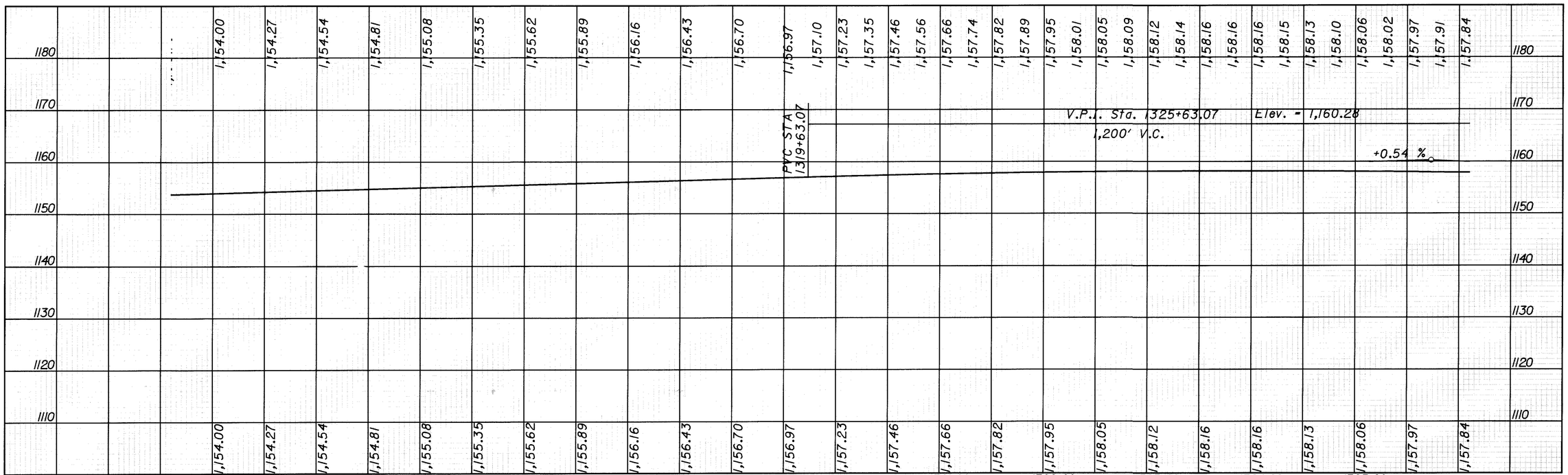

DESIGN FILE : i:\pd_MED_IR71\DGN\PlanProfile\gp40.dgn
USERNAME : prought
DATE : 09-DEC-1999
TIME : 09:24

HORIZONTAL SCALE IN FEET
0 50 100
CALCULATED
CHECKED

PLAN AND PROFILE
STA 1313+50 TO STA 1326+50

MED - 71 - 15.78

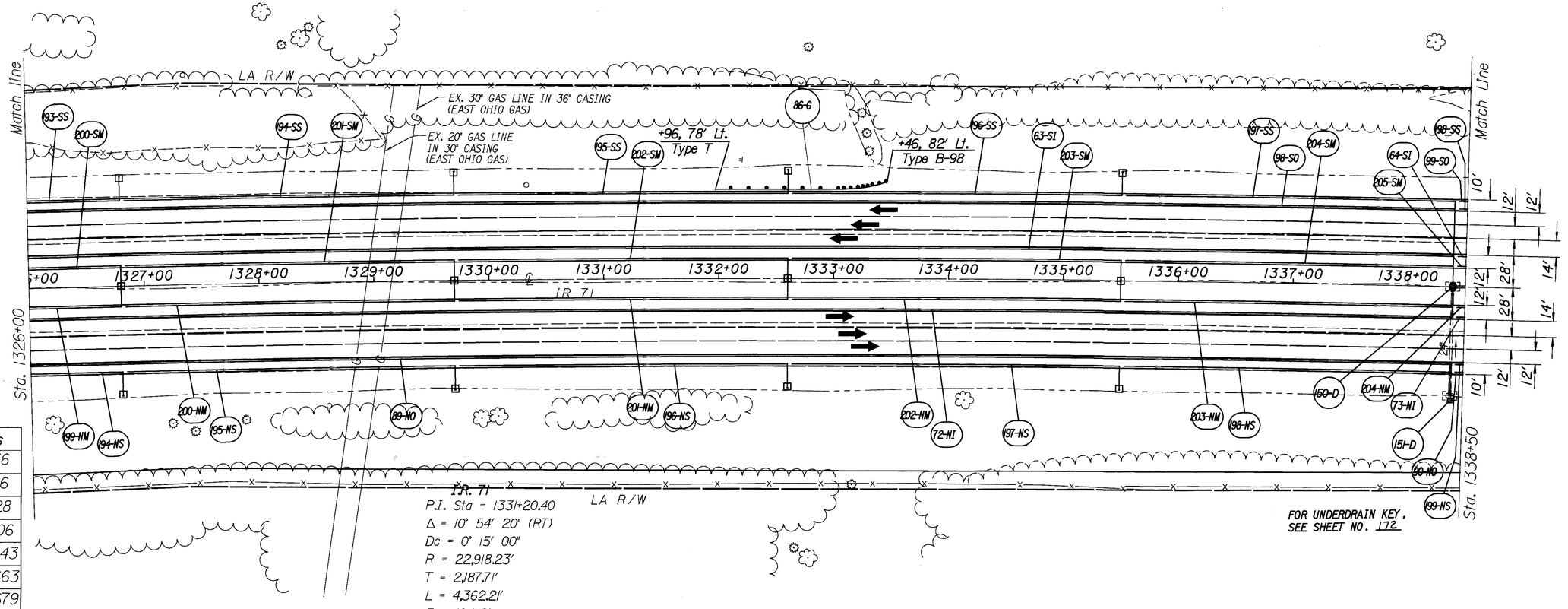

Cross References	
Guardrail	75-76
Drainage	77-96
Underdrains	97-128
Signing	561-606
Lighting	607-643
Tree Planting	647-663
Noise Walls	664-679

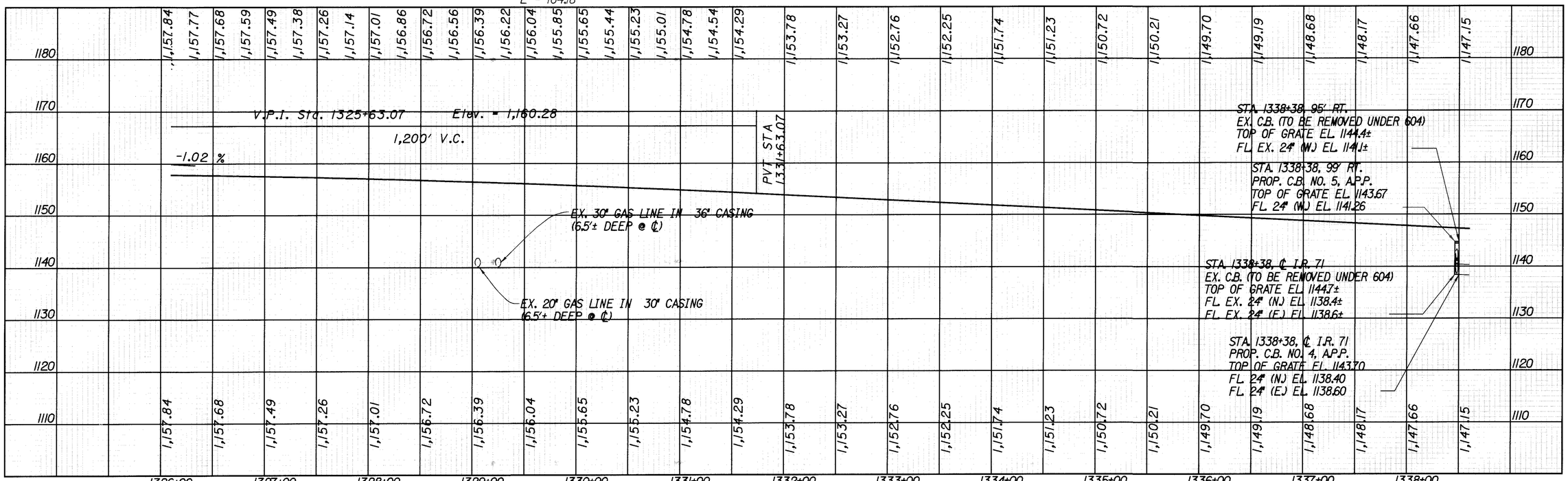

DESIGN FILE : I:\pd_MED_IR71\DGN\PlanProfile\gpdl.dgn
USERNAME : ptought
DATE : 09-DEC-1999
TIME : 09:28

HORIZONTAL SCALE IN FEET
0 50 100
CALCULATED
CHECKED

PLAN AND PROFILE
STA 1326+00 TO STA 1338+50

MED - 71 - 15.78

206-SM NOT USED
205-NM NOT USED

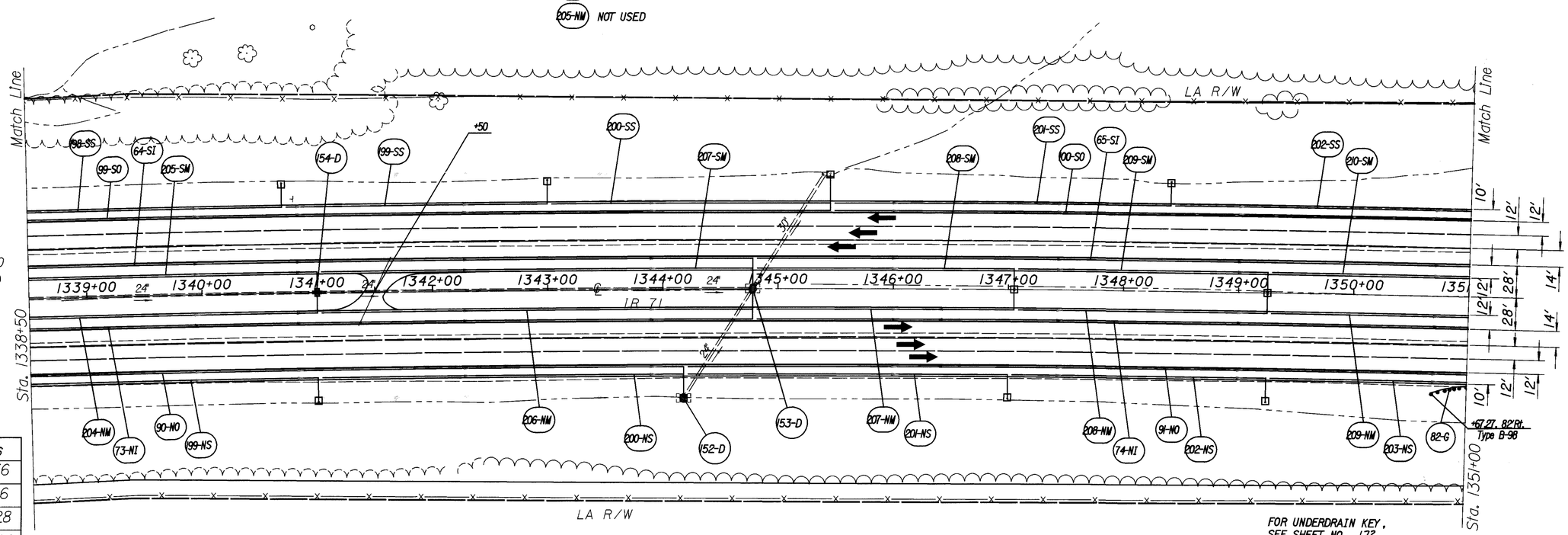

FOR UNDERDRAIN KEY, SEE SHEET NO. 172

I.R. 71
P.I. Sta = 1331+20.40
Δ = 10° 54' 20" (RT)
Dc = 0° 15' 00"
R = 22,918.23'
T = 2,187.71'
L = 4,362.21'
E = 104.18'

Cross References	
Guardrail	75-76
Drainage	77-96
Underdrains	97-128
Signing	561-606
Lighting	607-643
Tree Planting	647-663
Noise Walls	664-679

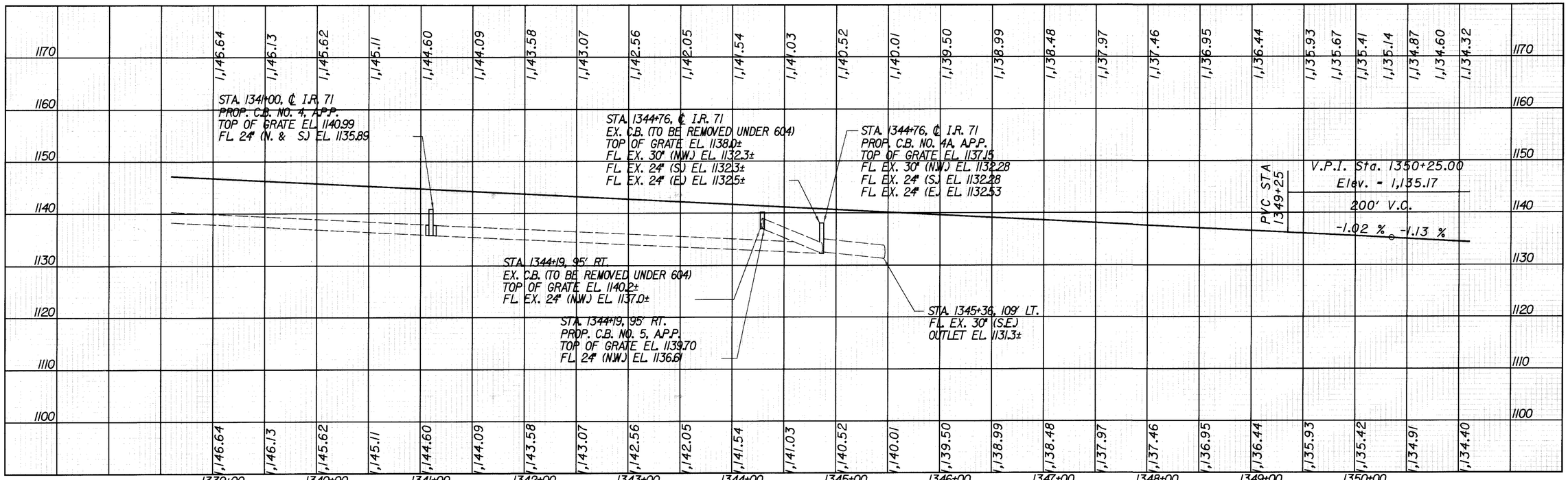

HORIZONTAL SCALE IN FEET
0 50 100
CALCULATED
CHECKED

PLAN AND PROFILE
STA 1338+50 TO STA 1351+00

MED - 71 - 15.78

213
940

DESIGN FILE : i:\pd_MED_IR71\DGN\PlanProfile\gp42.dgn
USERNAME : pfought
DATE : 09-DEC-1999
TIME : 09:48

Cross References	
Guardrail	75-76
Drainage	77-96
Underdrains	97-128
Signing	561-606
Lighting	607-643
Tree Planting	647-663
Noise Walls	664-679

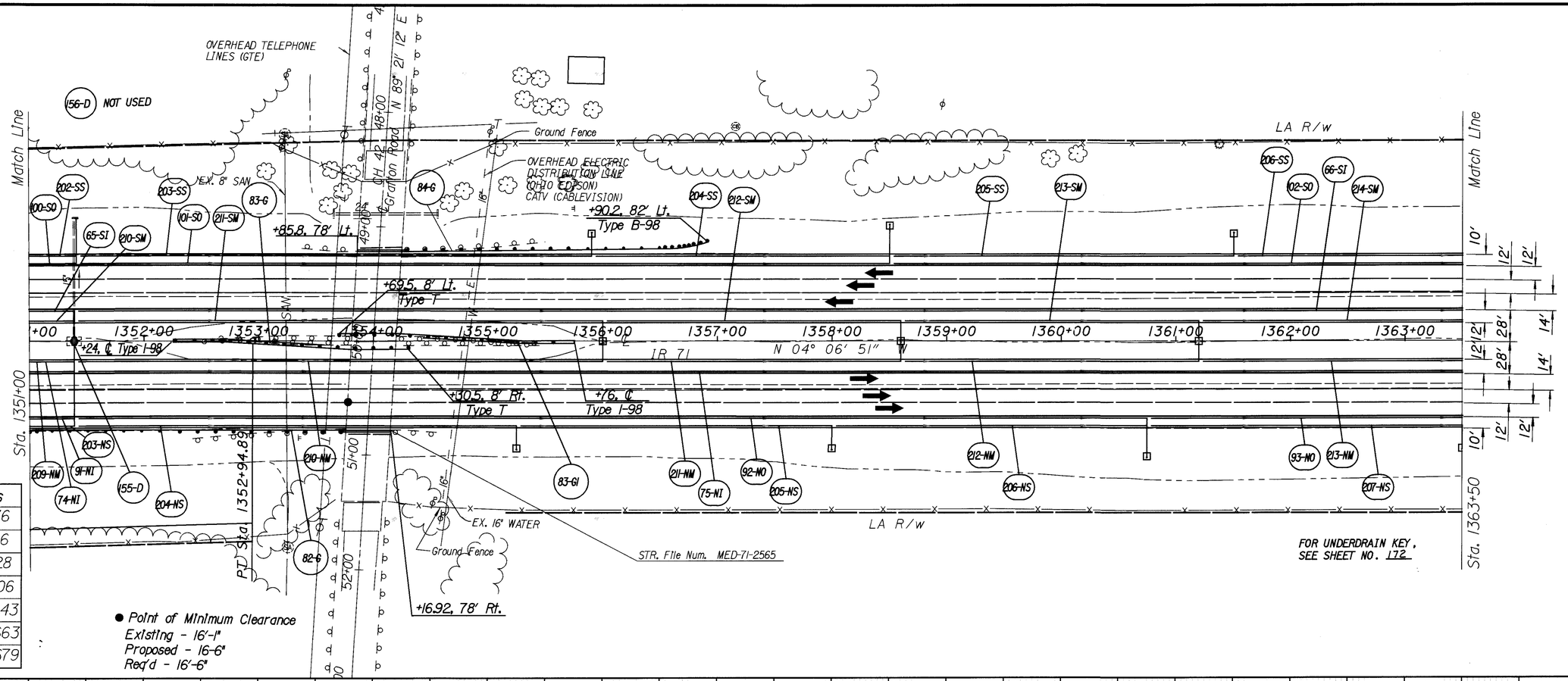

● Point of Minimum Clearance
Existing - 16'-1"
Proposed - 16-6"
Req'd - 16'-6"

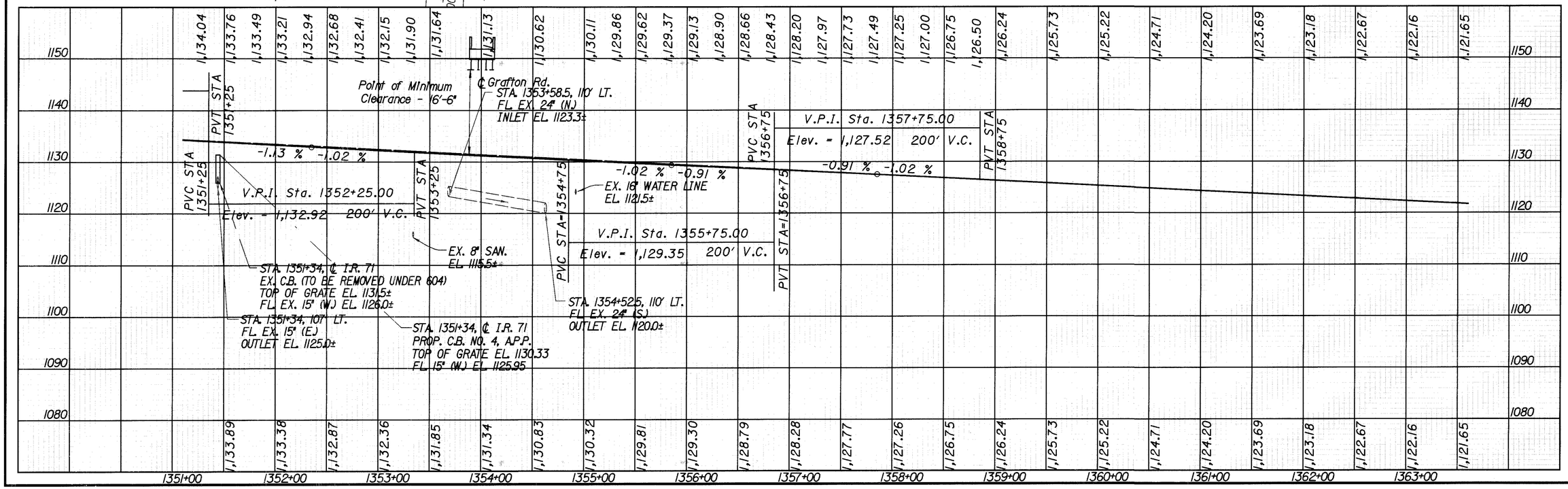

HORIZONTAL SCALE IN FEET
0 50 100
CALCULATED
CHECKED

PLAN AND PROFILE
STA 1351+00 TO STA 1363+50

MED - 71 - 15.78

214
940

DESIGN FILE : I:\pd_MED_IR71\DGN\PlanProfile\gp43.dgn
USERNAME : pfought
DATE : 09-DEC-1999
TIME : 09:52

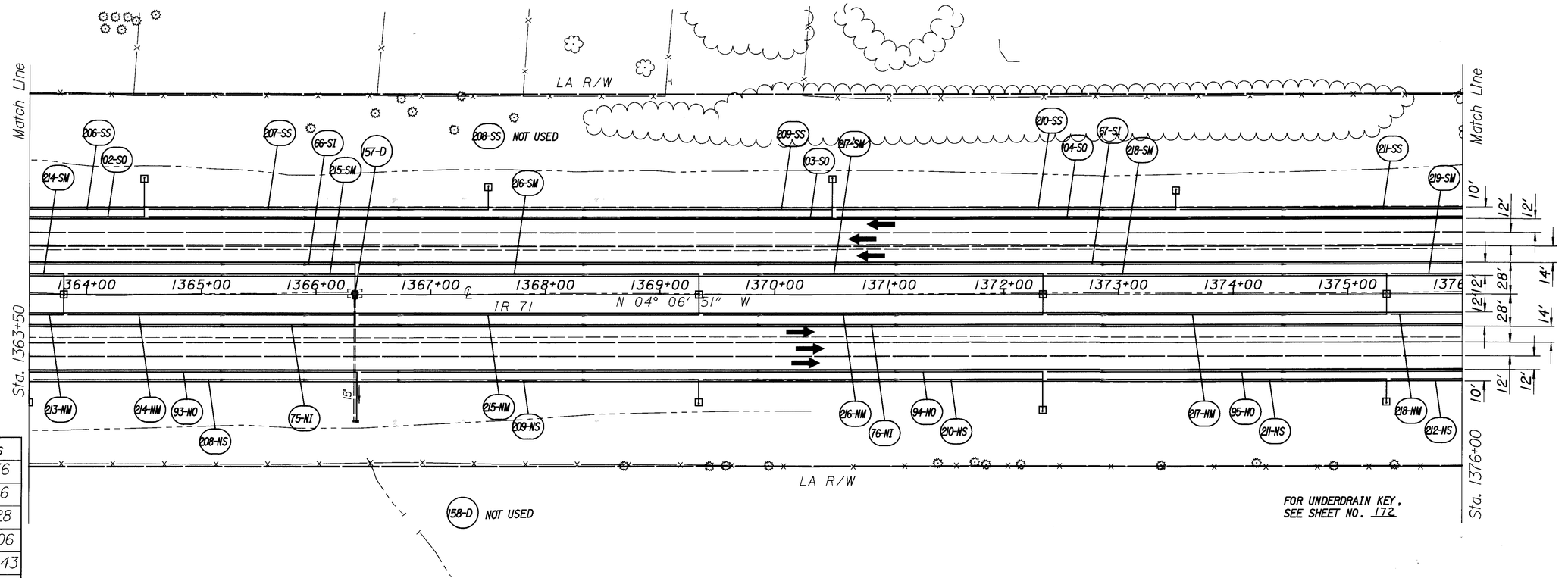

Cross References	
Guardrail	75-76
Drainage	77-96
Underdrains	97-128
Signing	561-606
Lighting	607-643
Tree Planting	647-663
Noise Walls	664-679

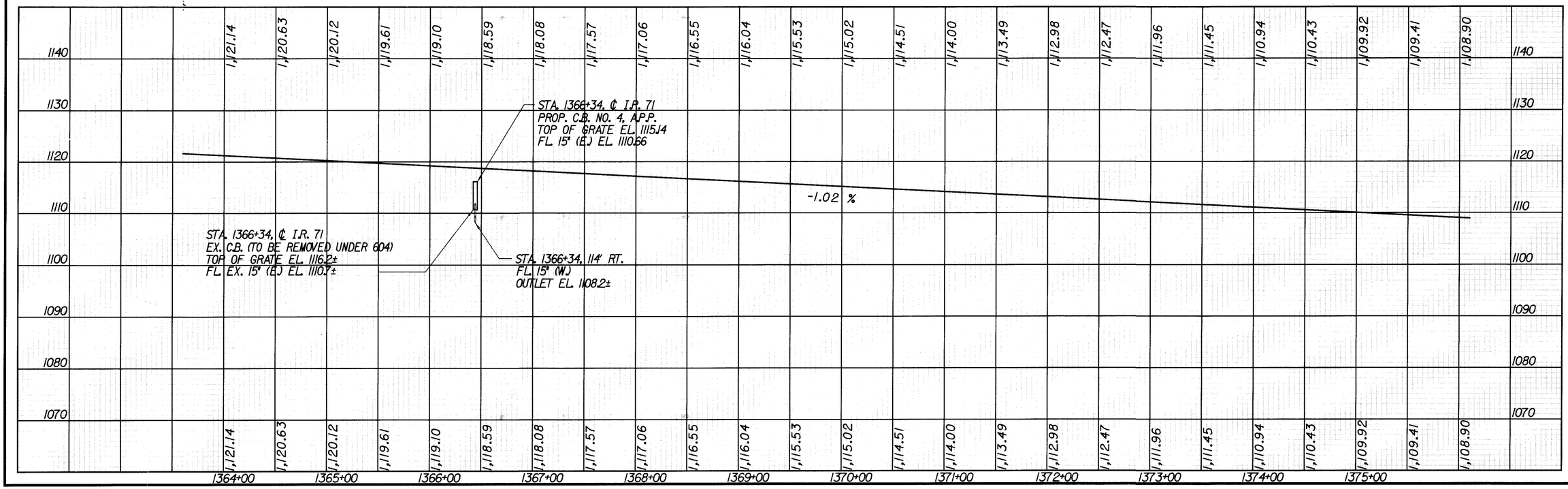

HORIZONTAL SCALE IN FEET
0 50 100

CALCULATED
CHECKED

PLAN AND PROFILE
STA 1363+50 TO STA 1376+00

MED - 71 - 15.78

215
940

DESIGN FILE : I:\pd_MED.IR71\DGN\PlanProfile\gp44.dgn
USERNAME : pfought
DATE : 09-DEC-1999
TIME : 09:56

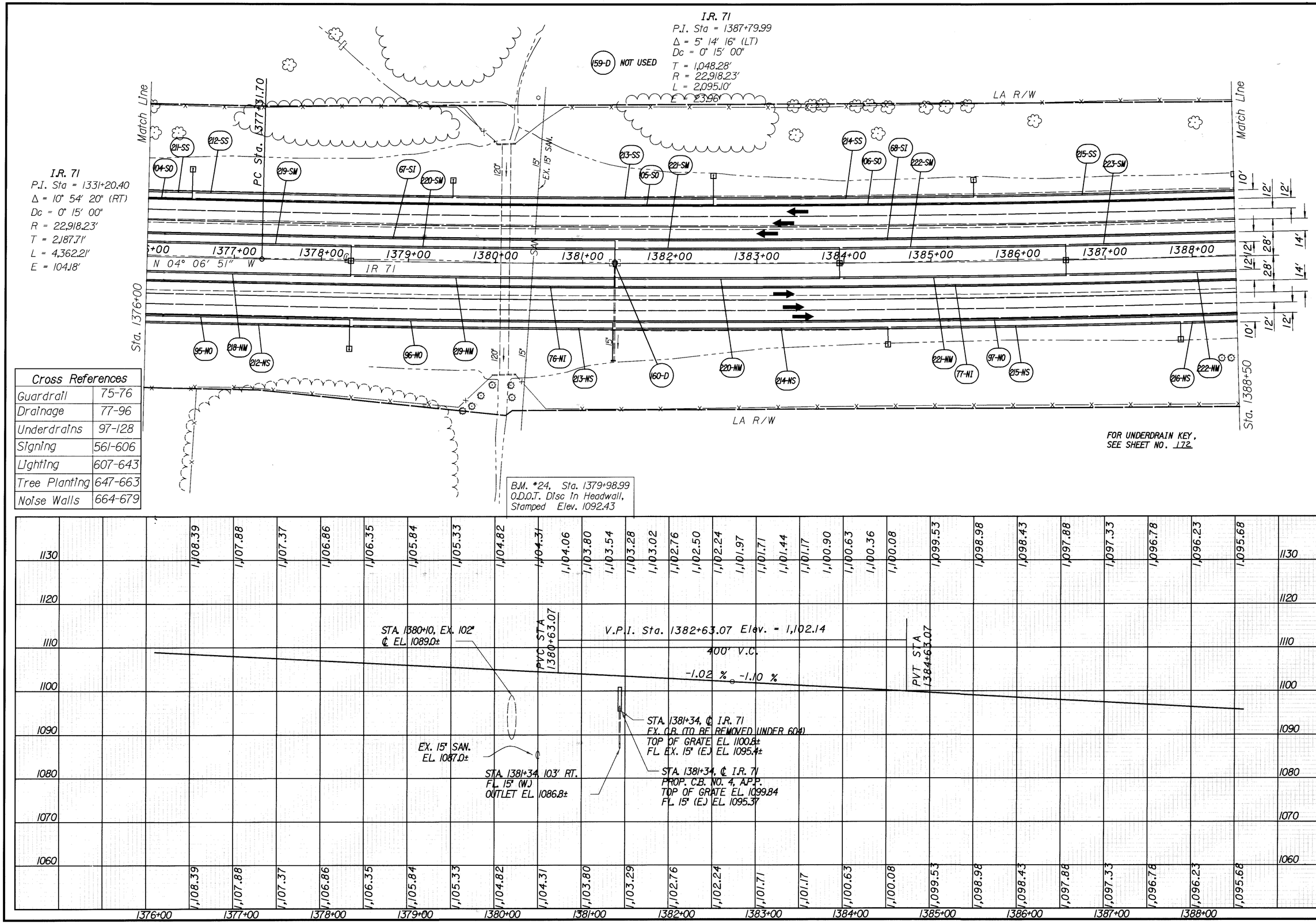

Cross References	
Guardrail	75-76
Drainage	77-96
Underdrains	97-128
Signing	561-606
Lighting	607-643
Tree Planting	647-663
Noise Walls	664-679

HORIZONTAL SCALE IN FEET 0 50 100

CALCULATED

CHECKED

PLAN AND PROFILE
STA 1376+00 TO STA 1388+50

MED - 71 - 15.78

DESIGN FILE : i:\pd_MED_IR71\DGN\PlanProfile\gp45.dgn
USERNAME : pfought
DATE : 09-DEC-1999
TIME : 10:00

I.R. 71
P.I. Sta = 1387+79.99
Δ = 5° 14′ 16″ (LT)
Dc = 0° 15′ 00″
T = 1,048.28′
R = 22,918.23′
L = 2,095.10′
E = 23.96′

End Project
Sta. 1394+40.00
S.L.M. 26.41

Match Line

LA R/W

216-SS 223-SM 106-SD 224-SM 217-SS 68-SI 225-SM 60A-D

+04.63, 78′ Lt.
Type T

Sta. 1398+26.81

PROPOSED NOISE WALL
For details, see sht. 671

87-G

1389+00 1390+00 1391+00 1392+00 1393+00 1394+00 1395+00 1396+00 1397+00 1398+00 1399+00 1400+00 1401

IR 71

N 09° 21′ 07″ W

Sta. 1388+50

222-NM 223-NM 216-NS 224-NM 77-NI 97-NO 217-NS

Butt Joint
+34.994

Sta. 1401+00

10′ 12′ 12′ 28′ 14′ 12′ 12′ 28′ 14′ 10′ 12′ 12′

30″ 18″ 2″

FOR UNDERDRAIN KEY,
SEE SHEET NO. 172

Wearing Course Removed

Quantities
202 Wearing Course Removed (1½″) = 400 Sq. Yds.
407 Tack Coat = 40 Gals.
448 Asphalt Concrete Surface Course, Type IH = 167 Cu. Yds.

NOTE: Quantities Carried to General Summary

Cross References	
Guardrail	75-76
Drainage	77-96
Underdrains	97-128
Signing	561-606
Lighting	607-643
Tree Planting	647-663
Noise Walls	664-679

1,095.13 1,094.58 1,094.03 1,093.48 1,092.93 1,092.38 1,091.83 1,091.28 1,090.73 1,090.18 1,089.63 1,089.08 1,088.53 1,087.98 1,087.43 1,086.88 1,086.33 1,085.78 1,085.23 1,084.68 1,084.13 1,083.58 1,083.03 1,082.48 1,081.93

1110 1100 1090 1080 1070 1060 1050 1040

STA. 1394+35, ℄ I.R. 71
PROP. C.B. NO. 4, A.P.P.
TOP OF GRATE EL. 1085.64
FL. 18″ (N.) EL. 1080.71

-1.10 %

Existing

199′ - 18″ CONDUIT
TYPE C @ 150%

STA. 1396+34, ℄ I.R. 71
EX. C.B.
TOP OF GRATE EL. 1084.4±
FL. EX. 21″ (N.) EL. 1077.5±
FL. EX. 18″ (E.) EL. 1077.72±

STA. 1396+34, 95′ RT.
EX. C.B.
TOP OF GRATE EL. 1084.1±
FL. EX. 18″ (W.) EL. 1079.0±

1389+00 1390+00 1391+00 1392+00 1393+00 1394+00 1395+00 1396+00 1397+00 1398+00 1399+00 1400+00

HORIZONTAL SCALE IN FEET
0 50 100

CALCULATED gwr CHECKED RLS

PLAN AND PROFILE
STA 1388+50 TO STA 1401+00

MED - 71 - 15.78

217
940

DESIGN FILE : h:\pdh_med_ir71\dgn\planprofile\gp46.dgn
USERNAME : jrogers

DATE : 29-DEC-1999
TIME : 09:36

I.R. 71
P.I. Sta = 1387+79.99
Δ = 5° 14' 16" (LT)
Dc = 0° 15' 00"
T = 1,048.28'
R = 22,918.23'
L = 2,095.10'
E = 23.96'

Cross References	
Guardrail	75-76
Drainage	77-96
Underdrains	97-128
Signing	561-606
Lighting	607-643
Tree Planting	647-663
Noise Walls	664-679

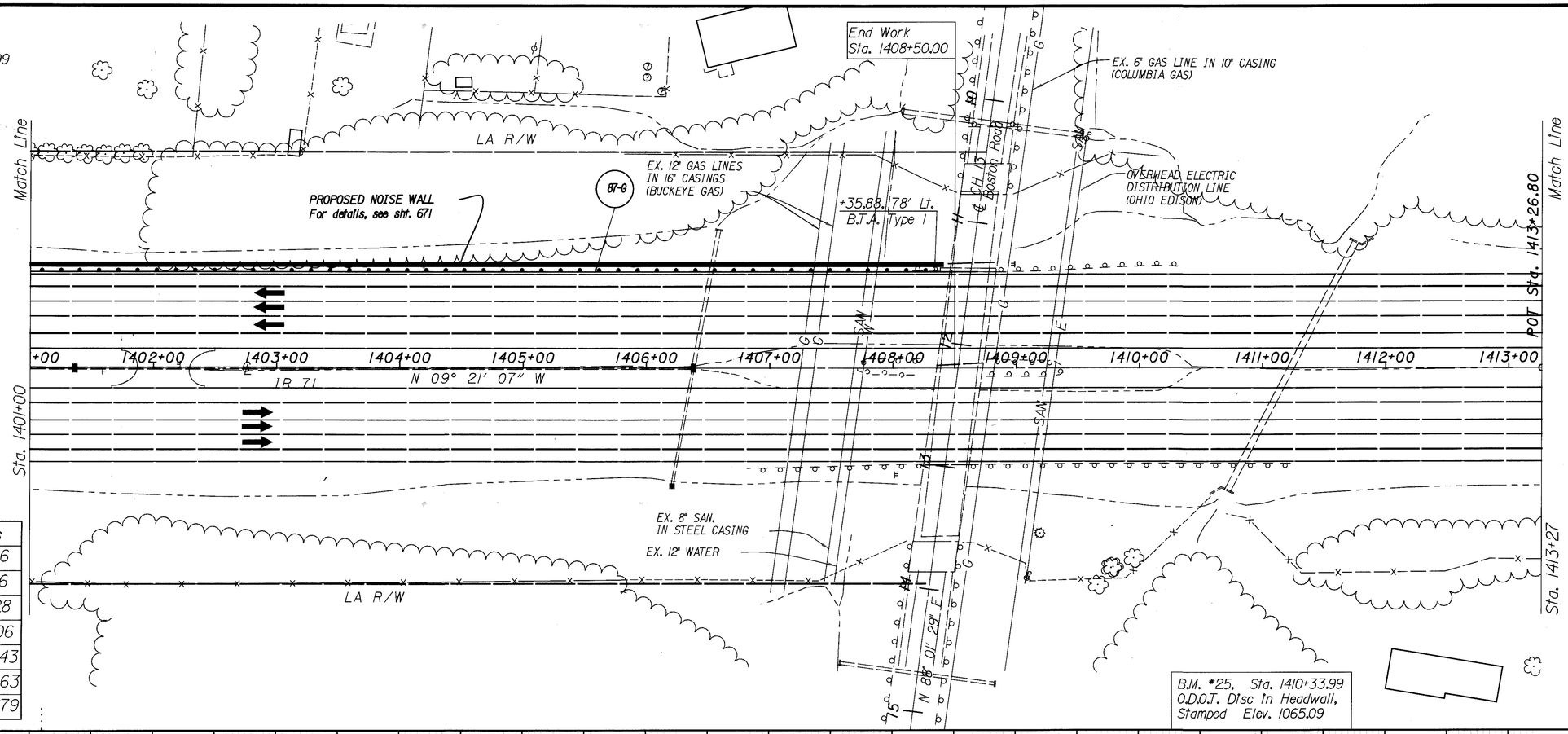

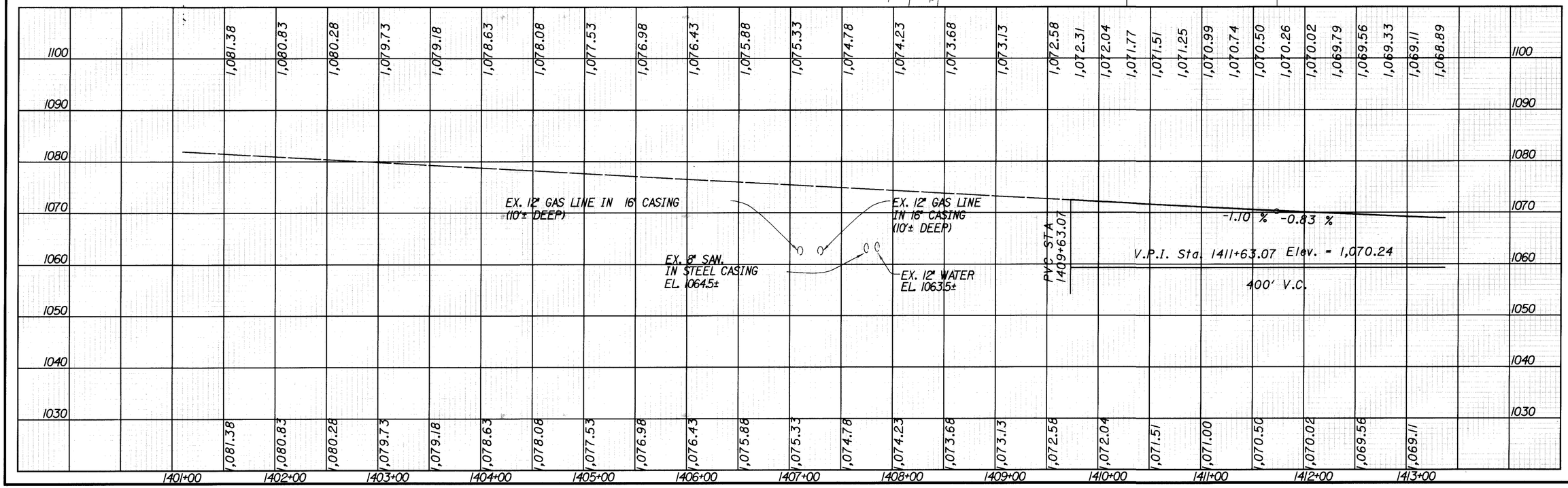

HORIZONTAL SCALE IN FEET
0 50 100
CALCULATED
CHECKED

PLAN AND PROFILE
STA 1401+00 TO STA 1413+27

MED - 71 - 15.78

218
940

DESIGN FILE : h:\pd_MED_IR71\DGN\PlanProfile\gp47.dgn
USERNAME : pfought
DATE : 09-DEC-1999
TIME : 10:07

DESIGN FILE : $$$$$$$$$$DESIGNFILESPECIFICATION$$$$$$$$$$
USERNAME : $$$$INSTRUCTIONS$$$$
DATE : $$$$DATE$$$$
TIME : $$$$TIME$$$$

SEEDING END WIDTH	SEEDING SQ. YDS.
	106
	1189
	108
	1244
	116
	1200
	100
	556
100	+50
	378
36	Abd.
	4567 SHEET TOTAL

END AREA CUT	END AREA FILL	VOLUME CUT	VOLUME FILL
220	12		
		874	44
Abd.	252	12	
Bk.	122	12	
		389	22
88	0		
		241	0
42	0		
		65	0
50	28	0	
		26	0
Abd.	0	0	
SHEET TOTAL		1595	66

105 100 95 90 85 80 75 70 65 60 55 50 45 40 35 30 25 20 15 10 5 0 5 10 15 20 25 30 35 40 45 50 55 60 65 70 75 80 85 90 95 100 105 110 115

CALCULATED N.J.V.
CHECKED J.W.R.

CROSS SECTIONS
STA. 830+00 TO STA. 834+00

MED-71-15.78

SEEDING		END AREA		VOLUME	
END WIDTH	SQ. YDS.	CUT	FILL	CUT	FILL
122		300	5		
	1311			1046	22
114		265	7		
				880	46
112	1256	210	18		
				787	78
108	1222	215	24		
				806	67
106	1189	220	12		
SHEET TOTAL	4978			3519	213

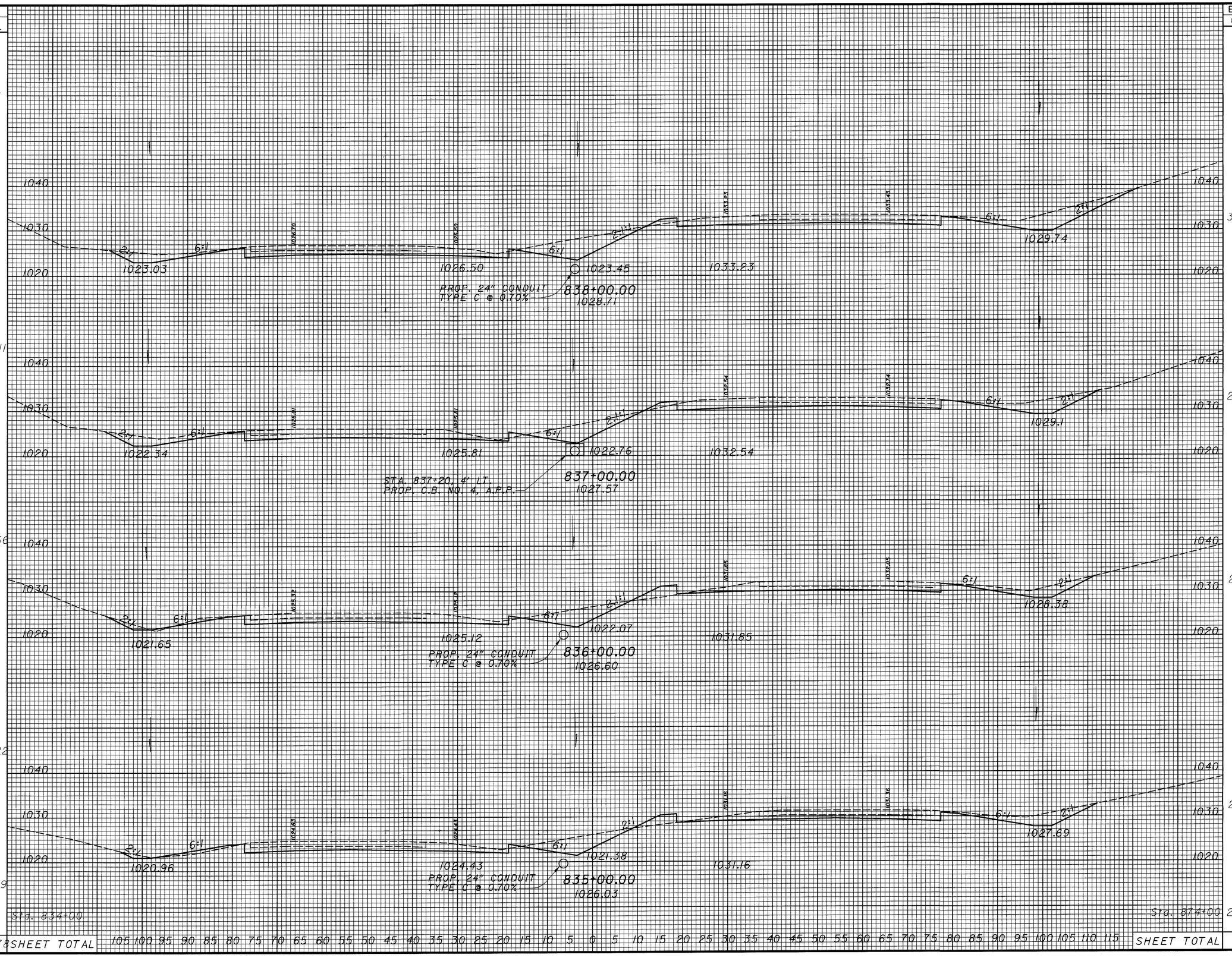

CALCULATED N.J.V.
CHECKED J.W.R.

CROSS SECTIONS
STA. 835+00 TO STA. 838+00

MED-71-15.78

220
940

DESIGN FILE : $$$$$$$$$$DESIGNFILESPECIFICATION$$$$$$$$$$
USERNAME : $$$$INSTRUCTIONS$$$$
DATE : $$$$DATE$$$$
TIME : $$$$TIME$$$$

SEEDING	
END WIDTH	SQ. YDS.
124	1411
130	1444
130	1400
122	
	5699

END AREA		VOLUME	
CUT	FILL	CUT	FILL
	294	14	
			1085 44
	222	0	
			1078 37
	293	10	
			1143 41
	324	10	
			1156 31
	300	5	
SHEET TOTAL			4462 153

CALCULATED N.J.V
CHECKED J.W.R

CROSS SECTIONS
STA. 839+00 TO STA. 842+00

MED-71-15.78

221
940

SEEDING	
END WIDTH	SQ. YDS.
126	
1456	
136	
1444	
136	
1378	
124	
	4278

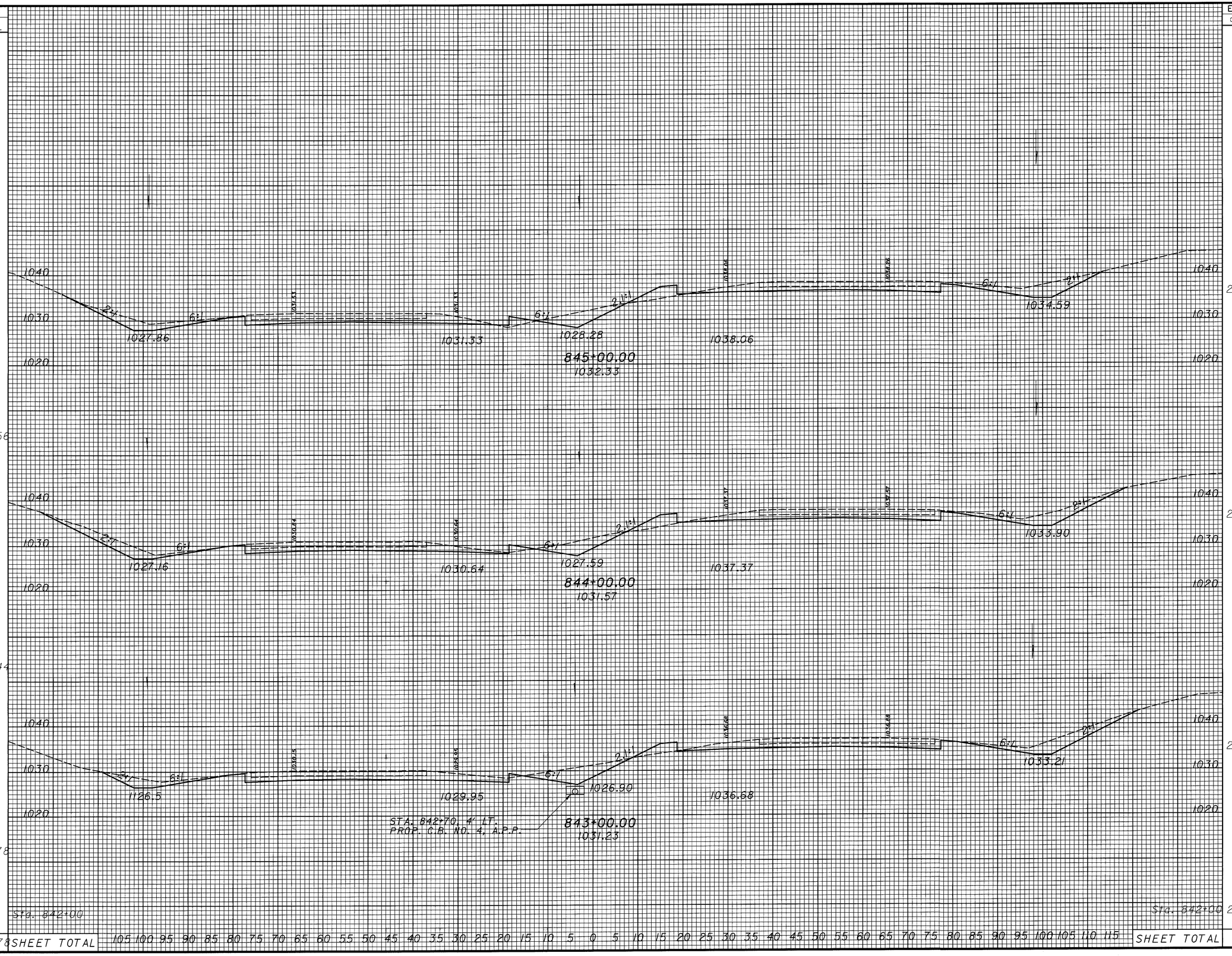

END AREA		VOLUME	
CUT	FILL	CUT	FILL
234	28		
		870	94
236	23		
		887	72
243	16		
		994	56
294	14		
SHEET TOTAL		2751	222

CALCULATED N.J.V.
CHECKED J.W.R.

CROSS SECTIONS
STA. 843+00 TO STA. 845+00

MED-71-15.78

222
940

SEEDING	
END WIDTH	SQ. YDS.
124	
	1400
128	
124	
	1400
122	
	1378
126	
	5545

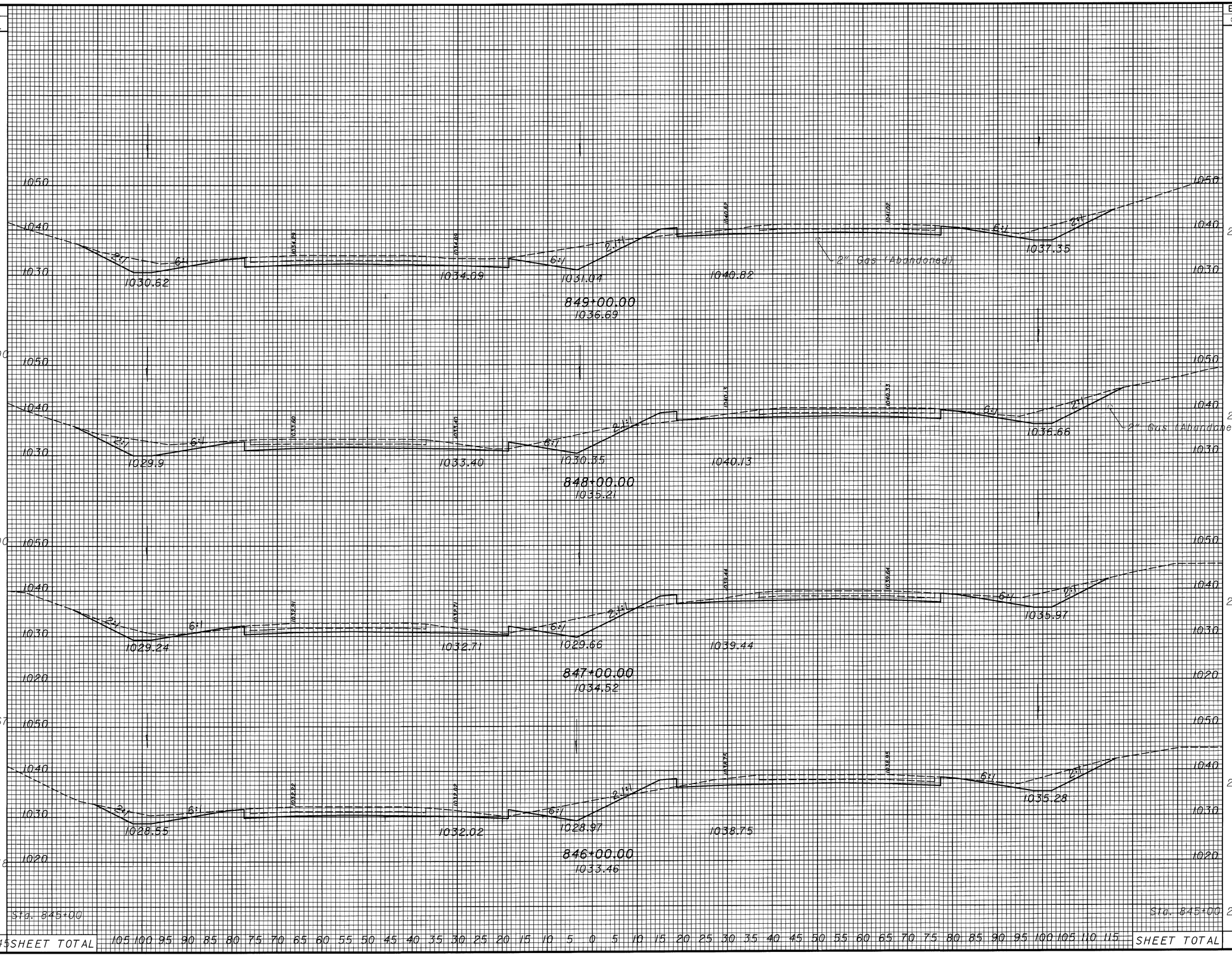

END AREA		VOLUME	
CUT	FILL	CUT	FILL
290	8		
		1044	46
274	17		
		937	63
232	17		
		889	65
248	18		
		893	85
234	28		
		3763	259

CALCULATED N.J.V
CHECKED J.W.R

CROSS SECTIONS
STA. 846+00 TO STA. 849+00

MED-71-15.78

223
940

SEEDING	
END WIDTH	SQ. YDS.
102	
1178	
110	
1278	
120	
1356	
124	
Sta. 849+00	
	3812

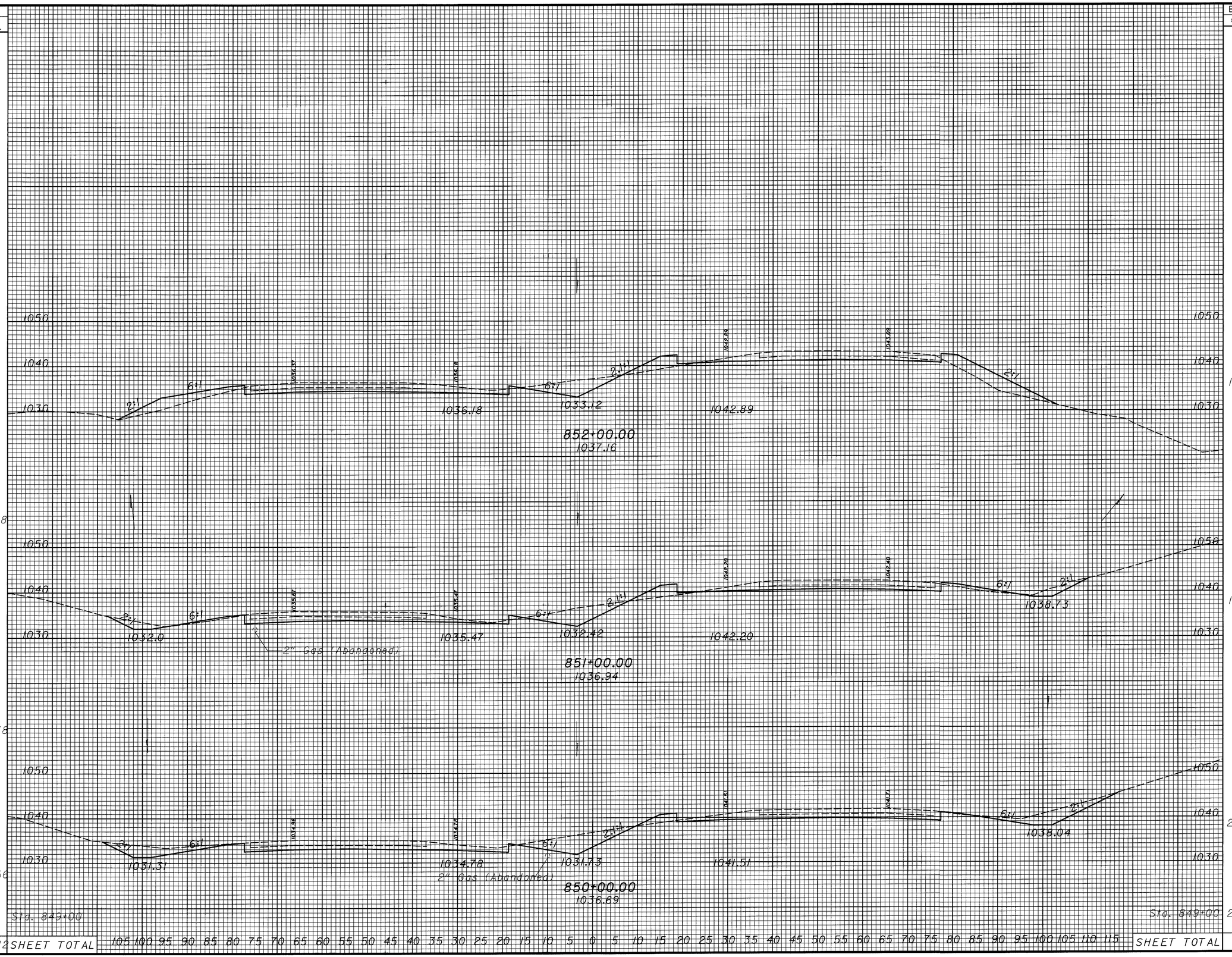

END AREA		VOLUME	
CUT	FILL	CUT	FILL
140	120		
		578	278
172	30		
		800	78
260	12		
		1019	37
290	8		
SHEET TOTAL		2397	393

105 100 95 90 85 80 75 70 65 60 55 50 45 40 35 30 25 20 15 10 5 0 5 10 15 20 25 30 35 40 45 50 55 60 65 70 75 80 85 90 95 100 105 110 115

CALCULATED N.J.V.
CHECKED J.W.R.

CROSS SECTIONS
STA. 850+00 TO STA. 852+00

MED-71-15.78

224
940

SEEDING	
END WIDTH	SQ. YDS.
88	
811	
58	
900	
104	
1144	
102	
2855	SHEET TOTAL

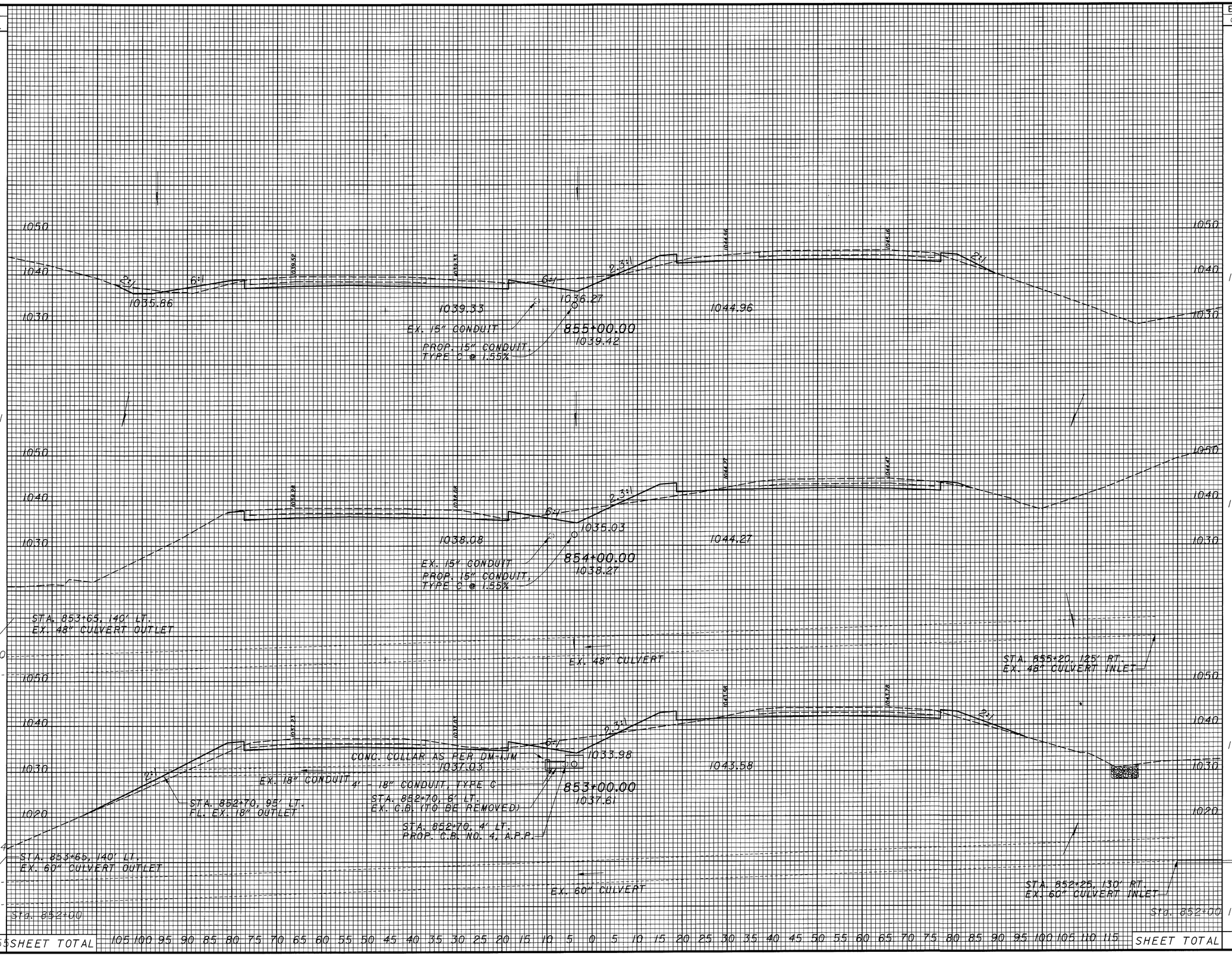

END AREA		VOLUME	
CUT	FILL	CUT	FILL
164	42		
		552	148
134	38		
		481	222
126	82		
		493	374
140	120		
		1526	744

SHEET TOTAL

CALCULATED N.J.V.
CHECKED J.W.R.

CROSS SECTIONS
STA. 853+00 TO STA. 855+00

MED-71-15.78

225
940

SEEDING	
END WIDTH	SQ. YDS.
118	1278
112	
86	967
88	978
88	
	4323

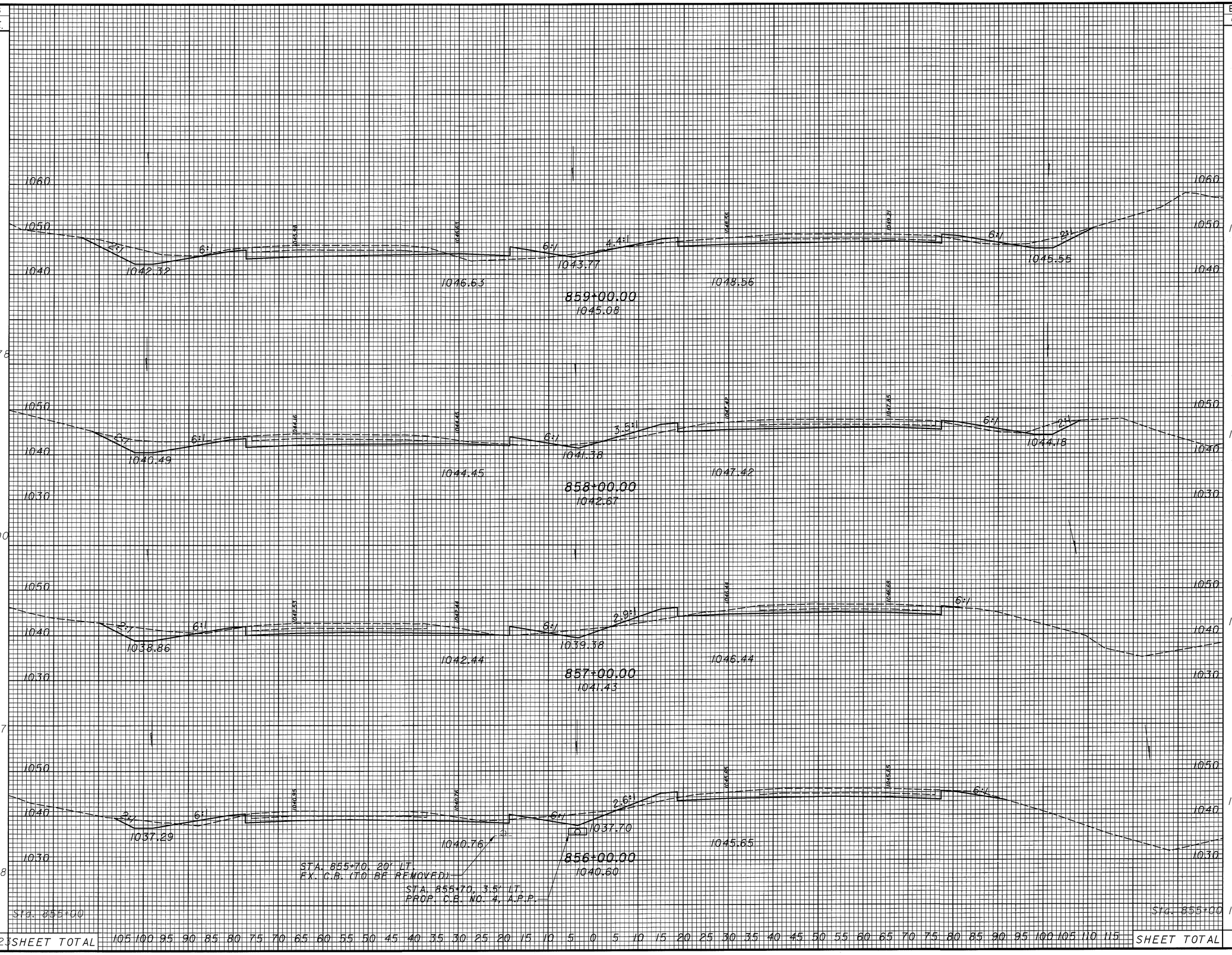

END AREA		VOLUME	
CUT	FILL	CUT	FILL
180	50		
		685	167
190	40		
		626	130
148	30		
		567	111
158	30		
		596	133
164	42		
SHEET TOTAL		2474	541

CALCULATED N.J.V.
CHECKED J.W.R.

CROSS SECTIONS
STA. 856+00 TO STA. 859+00

MED-71-15.78

226
940

SEEDING	
END WIDTH	SQ. YDS.
122	
	1356
122	
	1378
126	
	1422
130	
	1378
118	
	5534

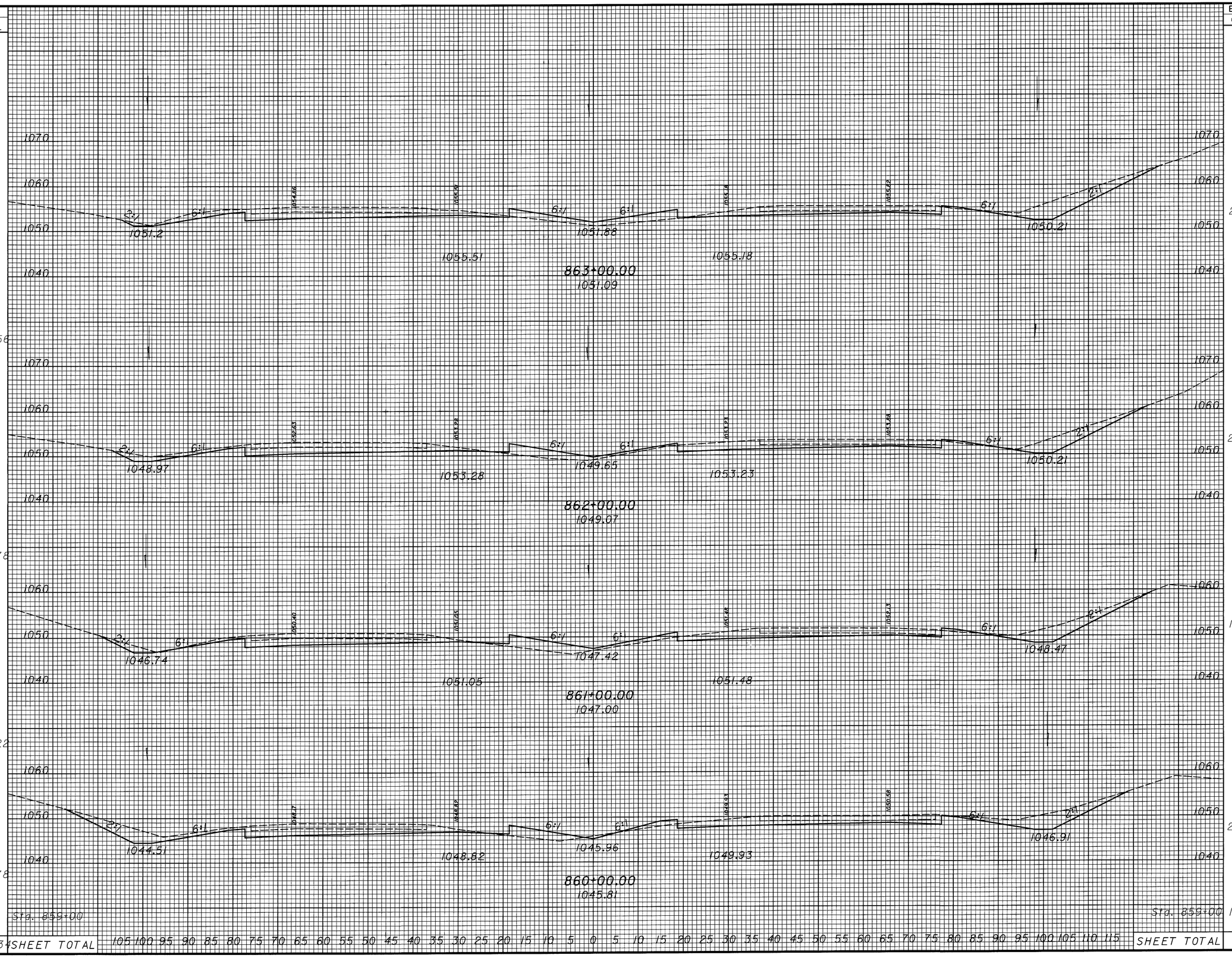

END AREA		VOLUME	
CUT	FILL	CUT	FILL
210	50		
		759	167
200	40		
		715	174
186	54		
		785	167
238	36		
		774	159
180	50		
SHEET TOTAL		3033	667

CALCULATED NJV
CHECKED JWR

CROSS SECTIONS
STA. 860+00 TO STA. 863+00

MED-71-15.78

227
940

SEEDING END WIDTH	SEEDING SQ. YDS.
	74
	900
	88
	1078
	106
	1233
	116
	1322
	122
SHEET TOTAL	4533

STA. 866+65, 125' LT.
EX. 60" CULVERT OUTLET

EX. 60" CULVERT

STA. 868+50, 140' RT.
EX. 60" CULVERT INLET

CONC. COLLAR AS PER DM-1.IM

EX. 15" CONDUIT

4' - 15" CONDUIT, TYPE C
STA. 866+30, 0 I.R. 11
PROP. C.B. NO. 4, A.P.P.

STA. 866+30, 0 I.R. 11
EX. C.B. (TO BE REMOVED UNDER 604)

2" Gas (Abandoned)
(3'± Deep)

STA. 866+30, 115' LT.
FL. EX. 15" OUTLET

2" Gas (Abandoned)
(3'± Deep)

END AREA CUT	END AREA FILL	VOLUME CUT	VOLUME FILL
115	68		
		520	169
166	23		
		656	124
188	44		
		681	183
180	55		
		722	194
210	50		
SHEET TOTAL		2579	670

CALCULATED N.J.V
CHECKED J.W.R

CROSS SECTIONS
STA. 864+00 TO STA. 867+00

MED-71-15.78

228
940

SEEDING		END AREA		VOLUME	
END WIDTH	SQ. YDS.	CUT	FILL	CUT	FILL
96		235	12		
1122				870	85
106		235	34		
1200				669	233
110		126	92		
1022				446	296
74		115	68		
3344	SHEET TOTAL			1985	614

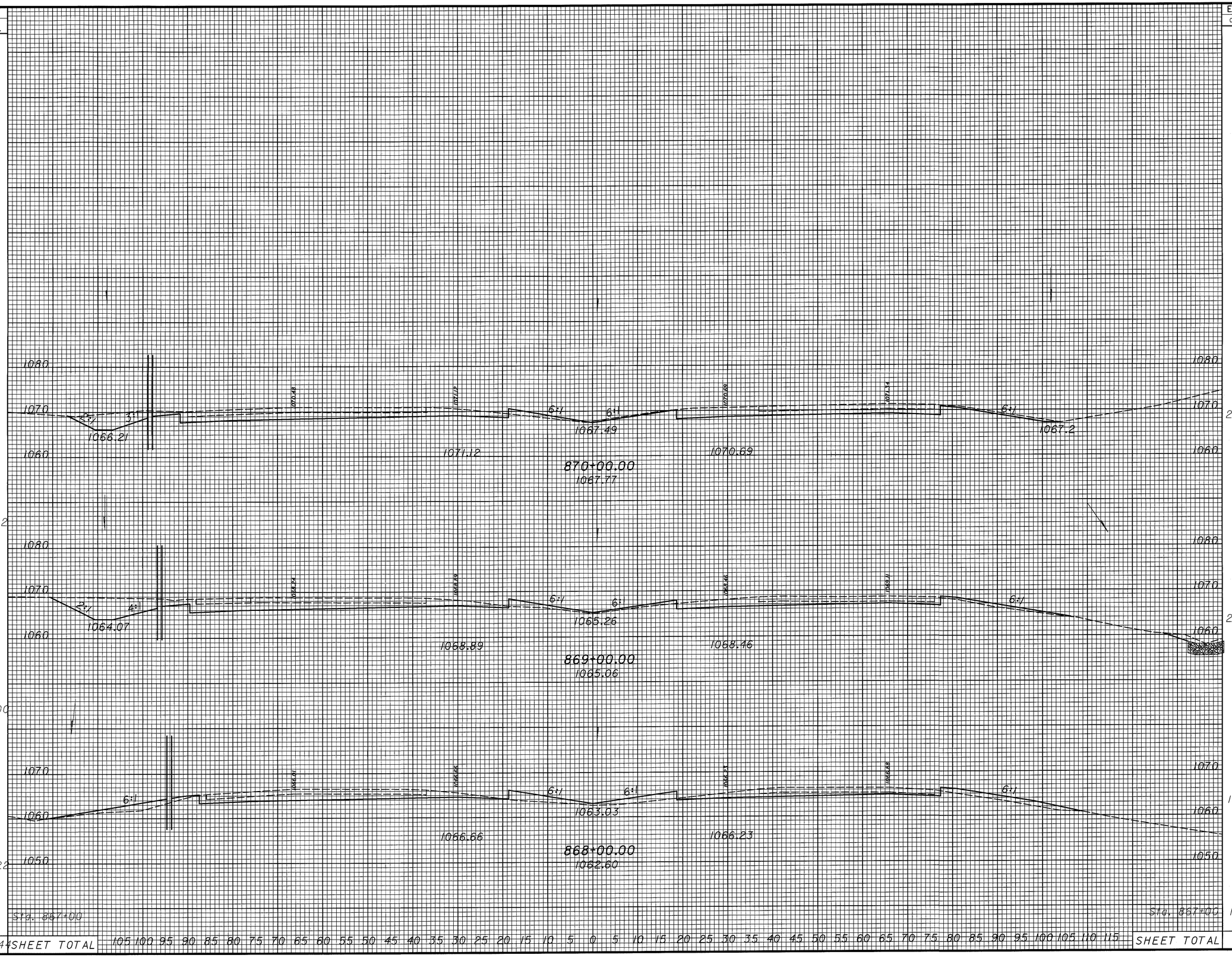

CALCULATED NJV

CHECKED JWR

CROSS SECTIONS
STA. 868+00 TO STA. 870+00

MED-71-15.78

229
940

DESIGN FILE : $$$$$$$$$$DESIGNFILESPECIFICATION$$$$$$$$$$
USERNAME : $$$$INSTRUCTIONS$$$$

DATE : $$$$DATE$$$$
TIME : $$$$TIME$$$$

SEEDING END WIDTH	SEEDING SQ. YDS.
96	
102	
102	
96	
96	
	4400

END AREA CUT	END AREA FILL	VOLUME CUT	VOLUME FILL
200	20		
		760	170
210	72		
		731	200
185	36		
		756	104
223	20		
		848	59
235	12		
		3095	533

CALCULATED N.J.V
CHECKED J.W.R

CROSS SECTIONS
STA. 871+00 TO STA. 874+00

MED-71-15.78

230
940

DESIGN FILE : $$$$$$$$$$DESIGNFILESPECIFICATION$$$$$$$$$$
USERNAME : $$$$INSTRUCTIONS$$$$
DATE : $$$$DATE$$$$
TIME : $$$$TIME$$$$

CROSS SECTIONS
STA. 875+00 TO 878+00

CALCULATED N.J.V. CHECKED J.W.R.

MED-71-15.78

231/940

SEEDING END WIDTH	SEEDING SQ. YDS.	END AREA CUT	END AREA FILL	VOLUME CUT	VOLUME FILL
98		226	22	822	130
96		218	48	744	163
92		184	40	733	141
98		212	36	763	104
96		200	20		
SHEET TOTAL	4256			3062	538

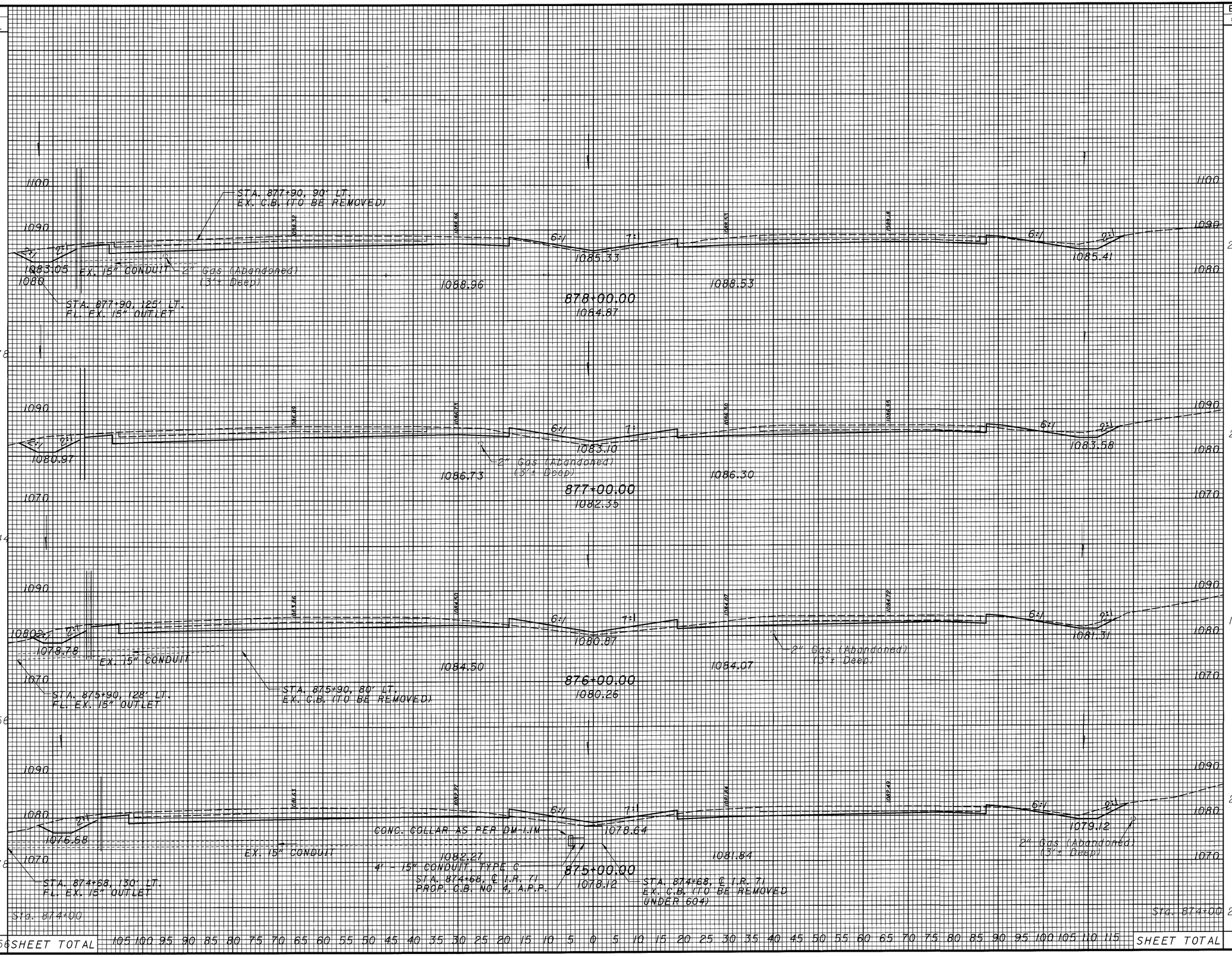

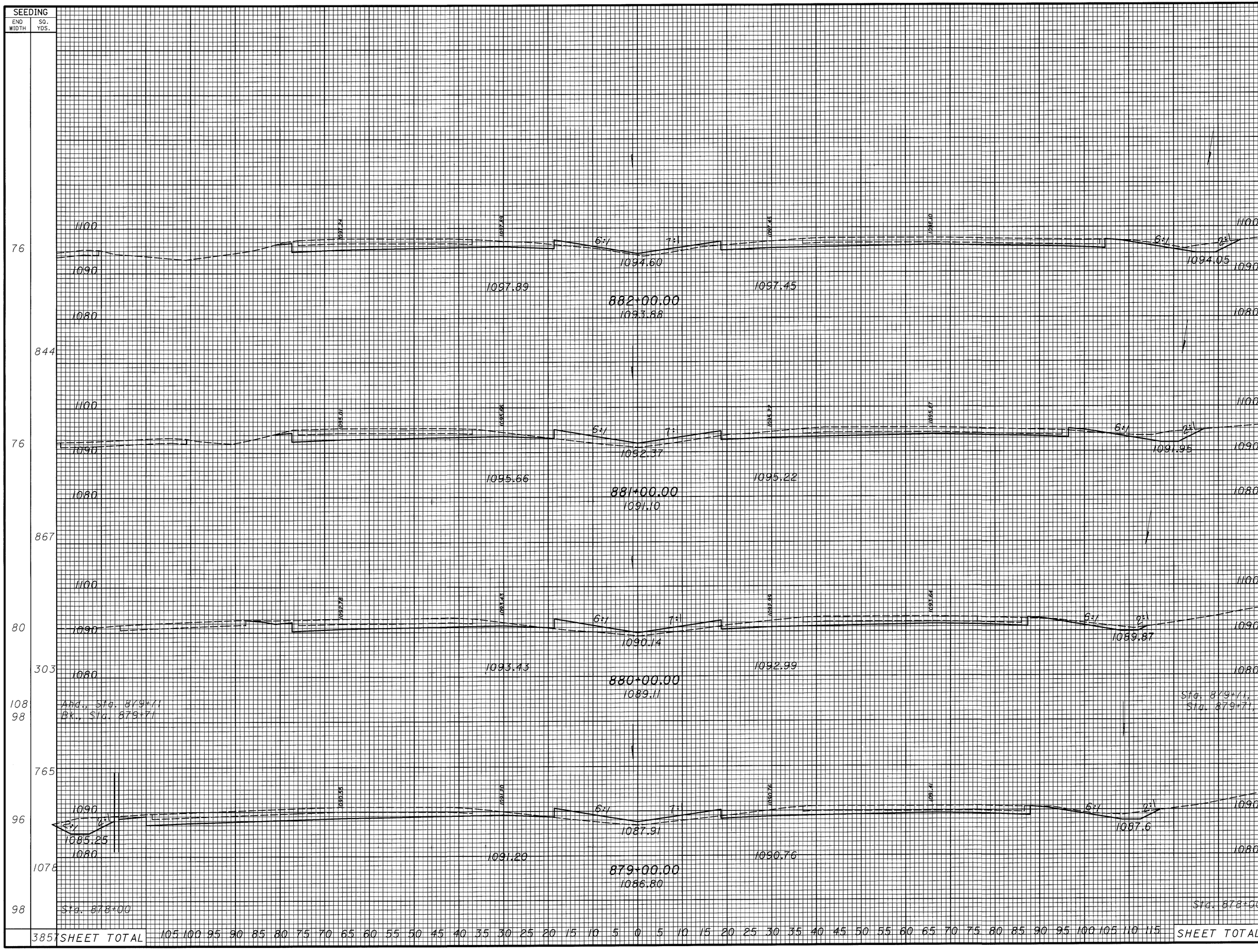

END AREA CUT	END AREA FILL	VOLUME CUT	VOLUME FILL
170	24		
		593	130
150	46		
		519	163
130	42		
		145	47
140	46		
225	46		
		585	124
220	48		
		826	130
226	22		
		2668	594

CALCULATED NJV
CHECKED JWR

CROSS SECTIONS
STA. 879+00 TO STA. 882+00

MED-71-15.78

DATE : $$$$DATE$$$$ DESIGN FILE : $$$$$$$$$$DESIGNFILESPECIFICATION$$$$$$$$$$
TIME : $$$$TIME$$$$ USERNAME : $$$$INSTRUCTIONS$$$$

DESIGN FILE : $$$$$$$$DESIGNFILESPECIFICATION$$$$$$$$$$
USERNAME : $$$$INSTRUCTIONS$$$$
DATE : $$$$DATE$$$$
TIME : $$$$TIME$$$$

SEEDING	
END WIDTH	SQ. YDS.
80	833
70	778
70	981
92	809
84	
76	
	340

END AREA		VOLUME	
CUT	FILL	CUT	FILL
10	270		
		37	722
10	120		
		170	352
82	70		
		388	214
110	36		
130	36		
		506	101
170	24		
		1101	1389

CALCULATED N.J.V
CHECKED J.W.R

CROSS SECTIONS STA. 883+00 TO STA. 886+00

MED-71-15.78

233
940

DESIGN FILE : $$$$$$$$$$DESIGNFILESPECIFICATION$$$$$$$$$$
USERNAME : $$$$INSTRUCTIONS$$$$
DATE : $$$$DATE$$$$
TIME : $$$$TIME$$$$

SEEDING END WIDTH	SEEDING SQ. YDS.
154	
	1711
154	
145	
108	
80	
	4211

FOR STRUCTURE END DRAINAGE PROFILES SEE SHEET 531

STA. 889+10, ℄ I.R. 71
PROP. M.H. NO. 1
1115.41

889+00.00
1109.26

1114.98

STA. 888+05, 135' LT.
FL. EX. 48" OUTLET

PROP. 15" CONDUIT, TYPE C @ 2.89%

1113.39

888+00.00
1105.08

1112.95

EX. 48" CONDUIT

STA. 888+80, 130' RT.
FL. EX. 48" INLET

1111.10

PROP. 15" CONDUIT, TYPE C @ 2.89%

887+00.00
1104.91

1110.67

Sta. 886+00

SHEET TOTAL

105 100 95 90 85 80 75 70 65 60 55 50 45 40 35 30 25 20 15 10 5 0 5 10 15 20 25 30 35 40 45 50 55 60 65 70 75 80 85 90 95 100 105 110 115

SHEET TOTAL

END AREA CUT	END AREA FILL	VOLUME CUT	VOLUME FILL
BK.	0	675	
			0 234
	0	590	
	0		1852
	0	410	
		19	1259
	10	270	
		19	5454

CALCULATED N.J.V.
CHECKED J.W.R.

CROSS SECTIONS
STA. 887+00 TO STA. 889+00

MED-71-15.78

DESIGN FILE : $$$$$$$$$DESIGNFILE$SPECIFICATION$$$$$$$$$$
USERNAME : $$$$INSTRUCTIONS$$$$
DATE : $$$$DATE$$$$
TIME : $$$$TIME$$$$

SEEDING	
END WIDTH	SQ. YDS.
80	Ahd.
2300	Seeding For Bridge between Sta. 889+00 to Sta. 892+00
	SHEET TOTAL

END AREA		VOLUME	
CUT	FILL	CUT	FILL
0	525		
		0	3100
		0	3100

CALCULATED NJV
CHECKED JWR

CROSS SECTIONS
STA. 890+00 TO STA. 892+00

MED-71-15.78

235
940

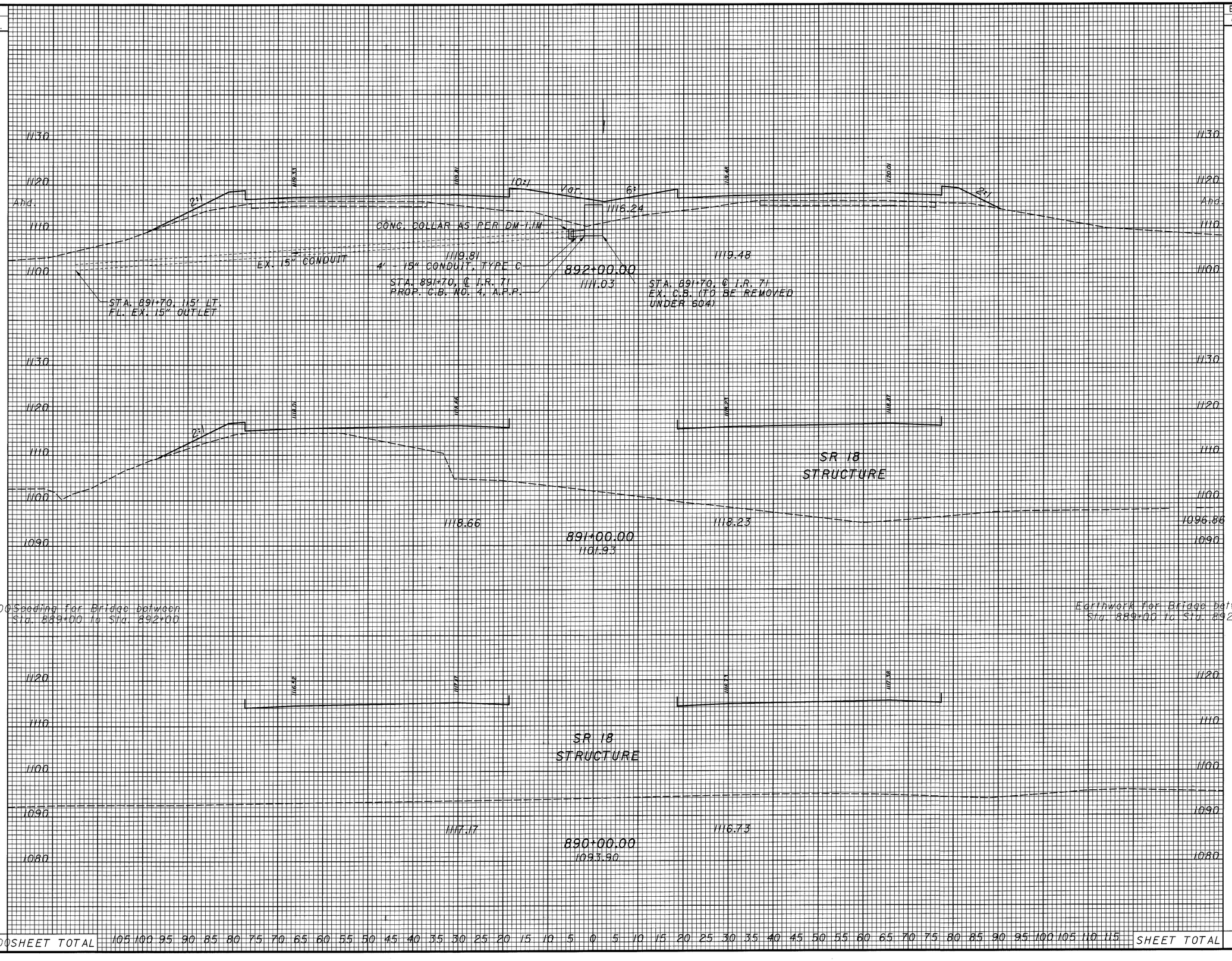

DATE : $$$$DATE$$$$ DESIGN FILE : $$$$$$$$$$DESIGNFILESPECIFICATION$$$$$$$$$$
TIME : $$$$TIME$$$$ USERNAME : $$$$INSTRUCTIONS$$$$

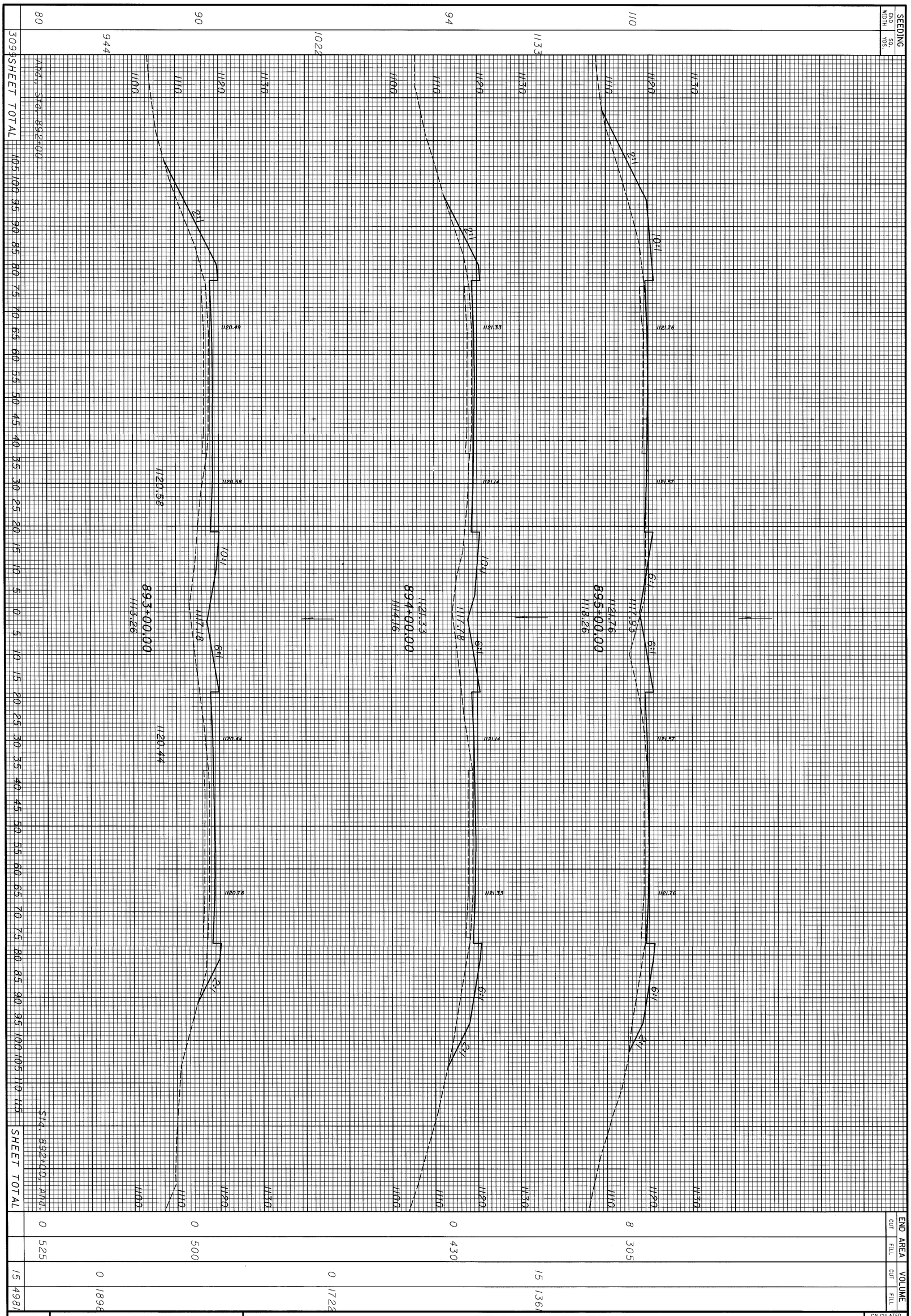

236
940

MED-71-15.78

CROSS SECTIONS
STA. 893+00 TO STA. 895+00

CALCULATED NJV
CHECKED JWR

DESIGN FILE : $$$$$$$$$DESIGNFILESPECIFICATION$$$$$$$$$
USERNAME : $$$$INSTRUCTIONS$$$$

DATE : $$$$DATE$$$$
TIME : $$$$TIME$$$$

SEEDING	
END WIDTH	SQ. YDS.
90	933
78	956
94	1089
102	1178
110	4156

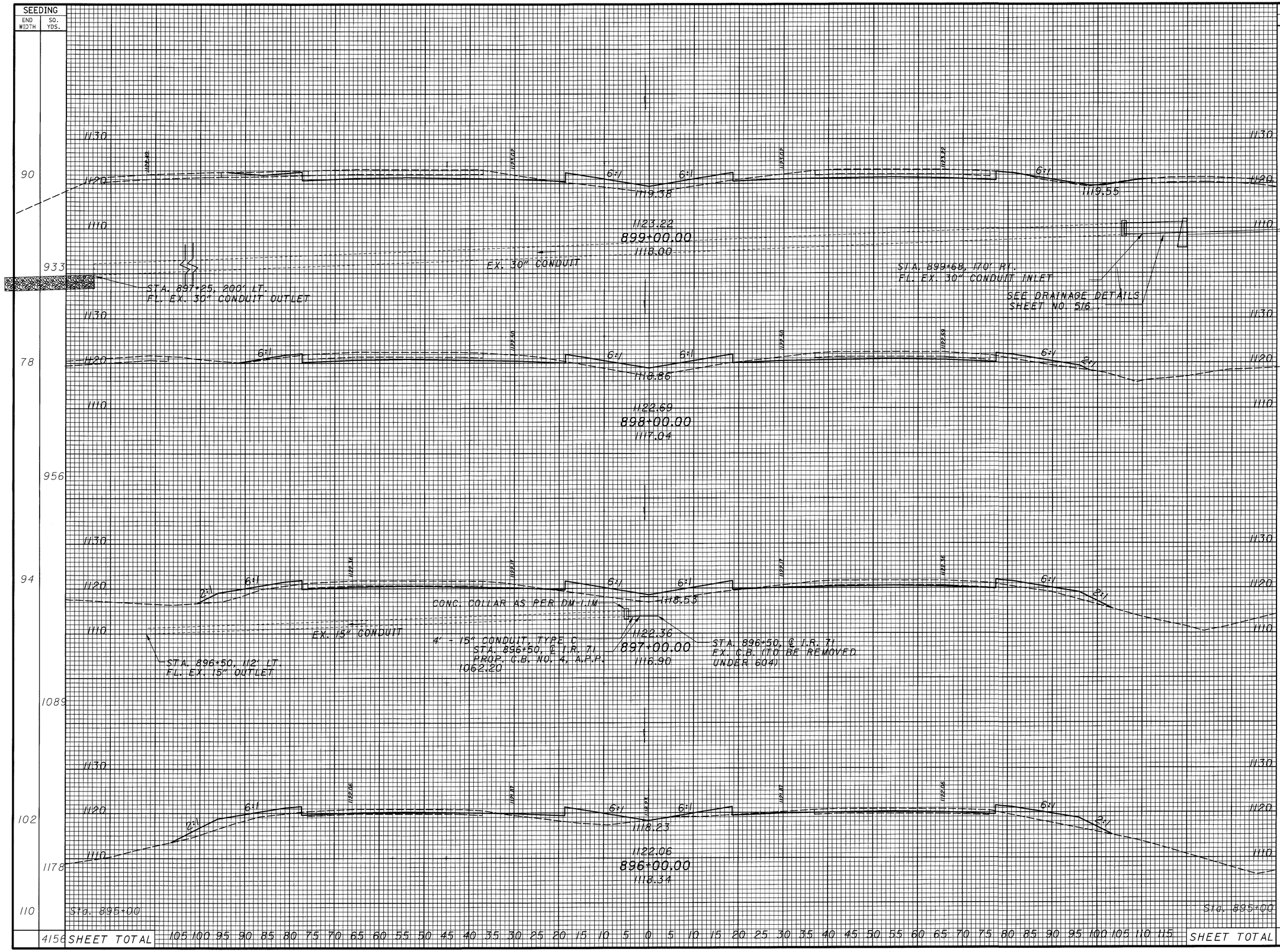

END AREA		VOLUME	
CUT	FILL	CUT	FILL
102	78		
		344	307
84	88		
36	125	222	394
8	170	81	546
		30	880
8	305	677	2127

CALCULATED NJV
CHECKED JWR

CROSS SECTIONS
STA. 896+00 TO STA. 899+00

MED-71-15.78

237
940

DESIGN FILE : $$$$$$$$$$DESIGNFILLSPECIFICATION$$$$$$$$$$
USERNAME : $$$$INSTRUCTIONS$$$$
DATE : $$$$DATE$$$$
TIME : $$$$TIME$$$$

SEEDING END WIDTH	SEEDING SQ. YDS.	END AREA CUT	END AREA FILL	VOLUME CUT	VOLUME FILL
74		160	60		
	822			630	222
74		180	60		
	1025			752	322
85		135	90		
80		105	50		
	719			381	186
74		140	70		
	392			250	136
70		135	80		
80		105	80		
	482			196	149
90		102	78		
	3440 SHEET TOTAL		SHEET TOTAL	2209	1015

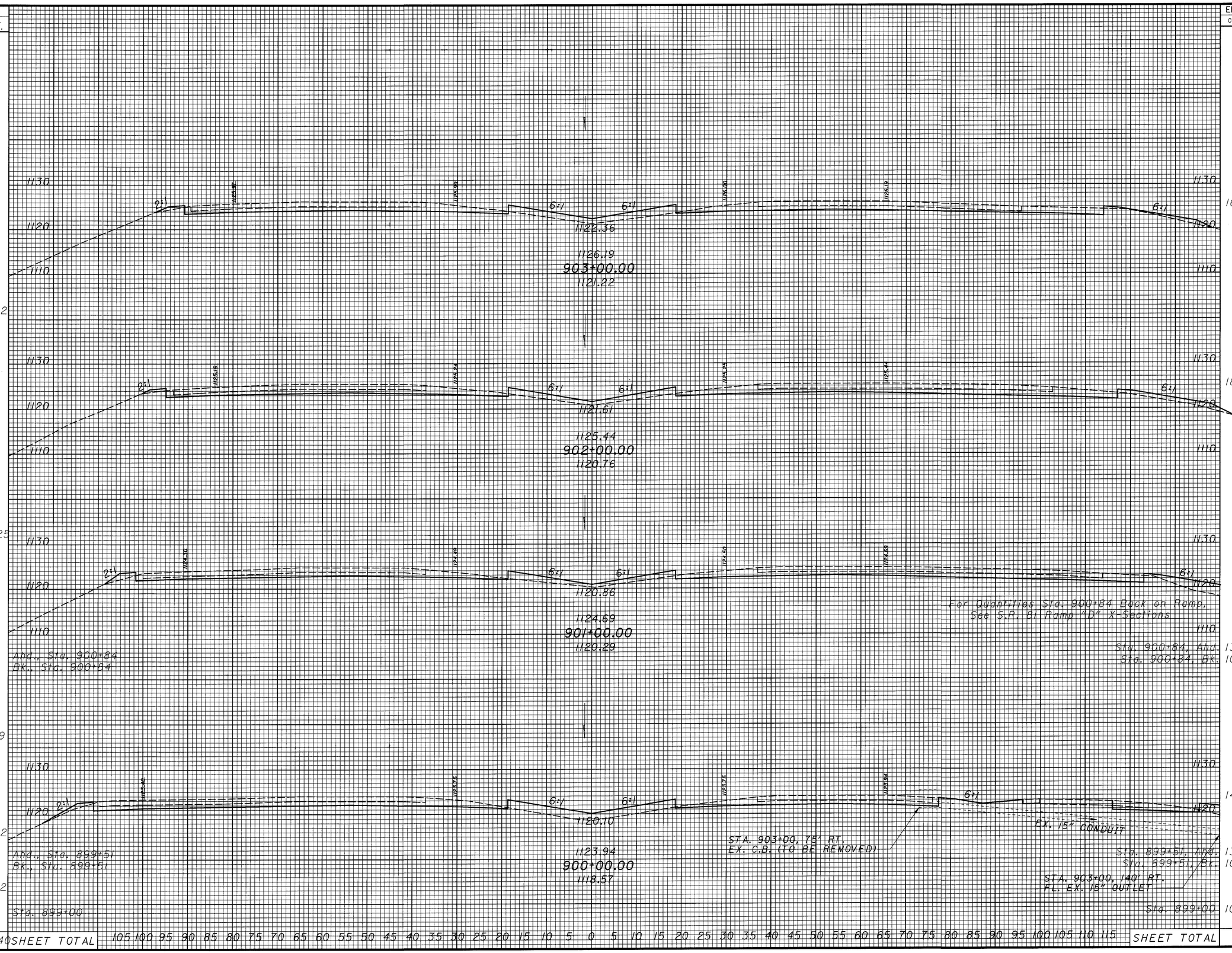

105 100 95 90 85 80 75 70 65 60 55 50 45 40 35 30 25 20 15 10 5 0 5 10 15 20 25 30 35 40 45 50 55 60 65 70 75 80 85 90 95 100 105 110 115

CALCULATED NJV
CHECKED JWR

CROSS SECTIONS
STA. 900+00 TO STA. 903+00

MED-71-15.78

238
940

DATE : $$$$DATE$$$$ DESIGN FILE : $$$$$$$$$$DESIGNFILESPECIFICATION$$$$$$$$$$
TIME : $$$$TIME$$$$ USERNAME : $$$$INSTRUCTIONS$$$$

SEEDING	
END WIDTH	SQ. YDS.
66	744
68	778
72	978
104	989
74	
	3489

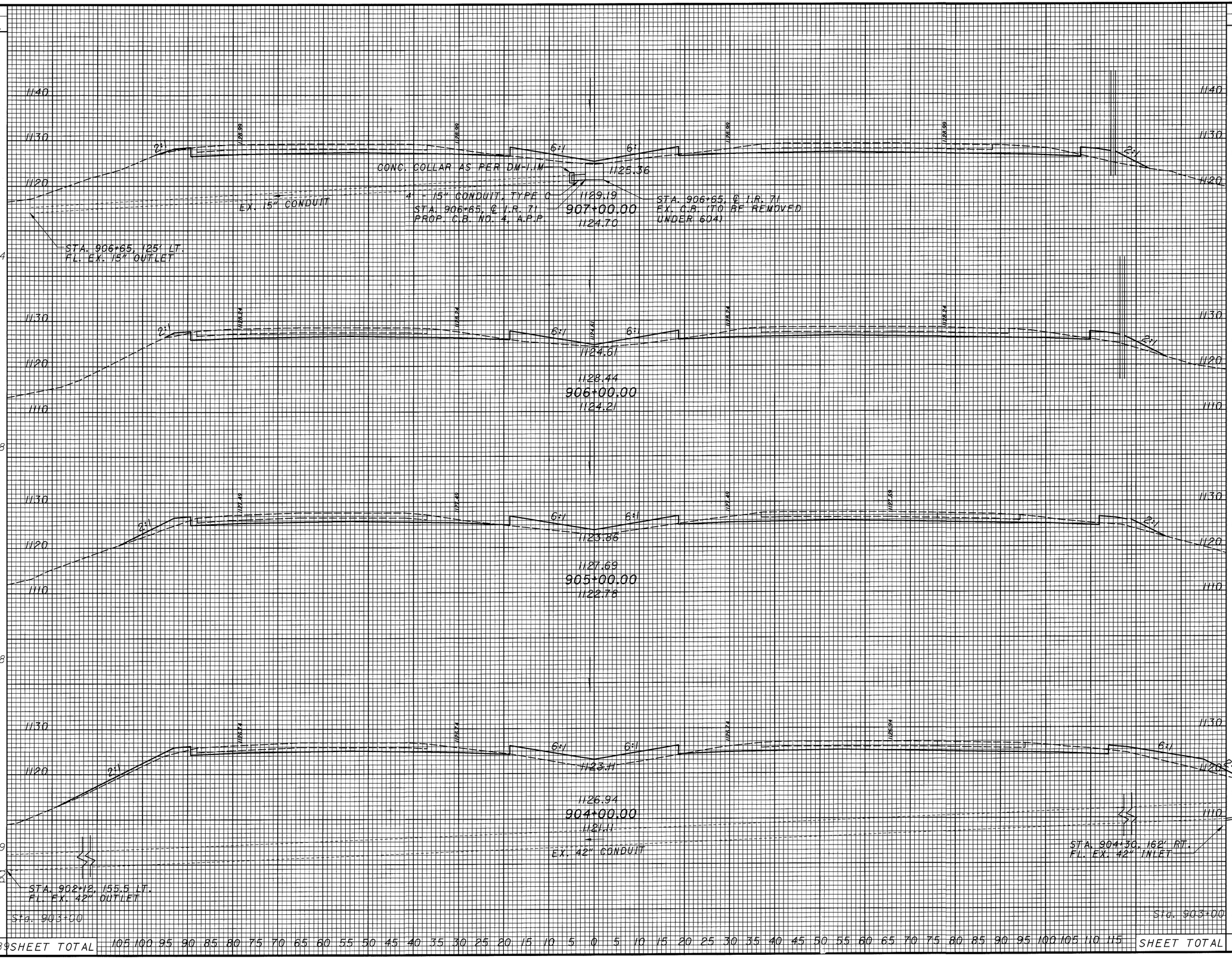

END AREA		VOLUME	
CUT	FILL	CUT	FILL
158	70		
		581	259
156	70		
		548	296
140	90		
		546	426
155	140		
		583	370
160	60		
SHEET TOTAL		2258	1351

CALCULATED NJV
CHECKED JWR

CROSS SECTIONS
STA. 904+00 TO STA. 907+00

MED-71-15.78

239
940

DESIGN FILE : $$$$$$$$$$DESIGNFILESPECIFICATION$$$$$$$$$$
USERNAME : $$$$INSTRUCTIONS$$$$
DATE : $$$$DATE$$$$
TIME : $$$$TIME$$$$

SEEDING END WIDTH	SEEDING SQ. YDS.	END AREA CUT	END AREA FILL	VOLUME CUT	VOLUME FILL
94		150	120		
	978			556	374
82		150	82		
	833			611	285
68		180	72		
	767			644	285
70		168	82		
	756			604	281
66		158	70		
	3334 SHEET TOTAL			2415	1225

CALCULATED NJV
CHECKED JWR

CROSS SECTIONS STA. 908+00 TO STA. 911+00

MED-71-15.78

240
940

DESIGN FILE : $$$$$$$$$$DESIGNFILESPECIFICATION$$$$$$$$$$
USERNAME : $$$$INSTRUCTIONS$$$$
DATE : $$$$DATE$$$$
TIME : $$$$TIME$$$$

SEEDING END WIDTH	SEEDING SQ. YDS.
98	1189
116	1222
104	1067
88	1011
94	448

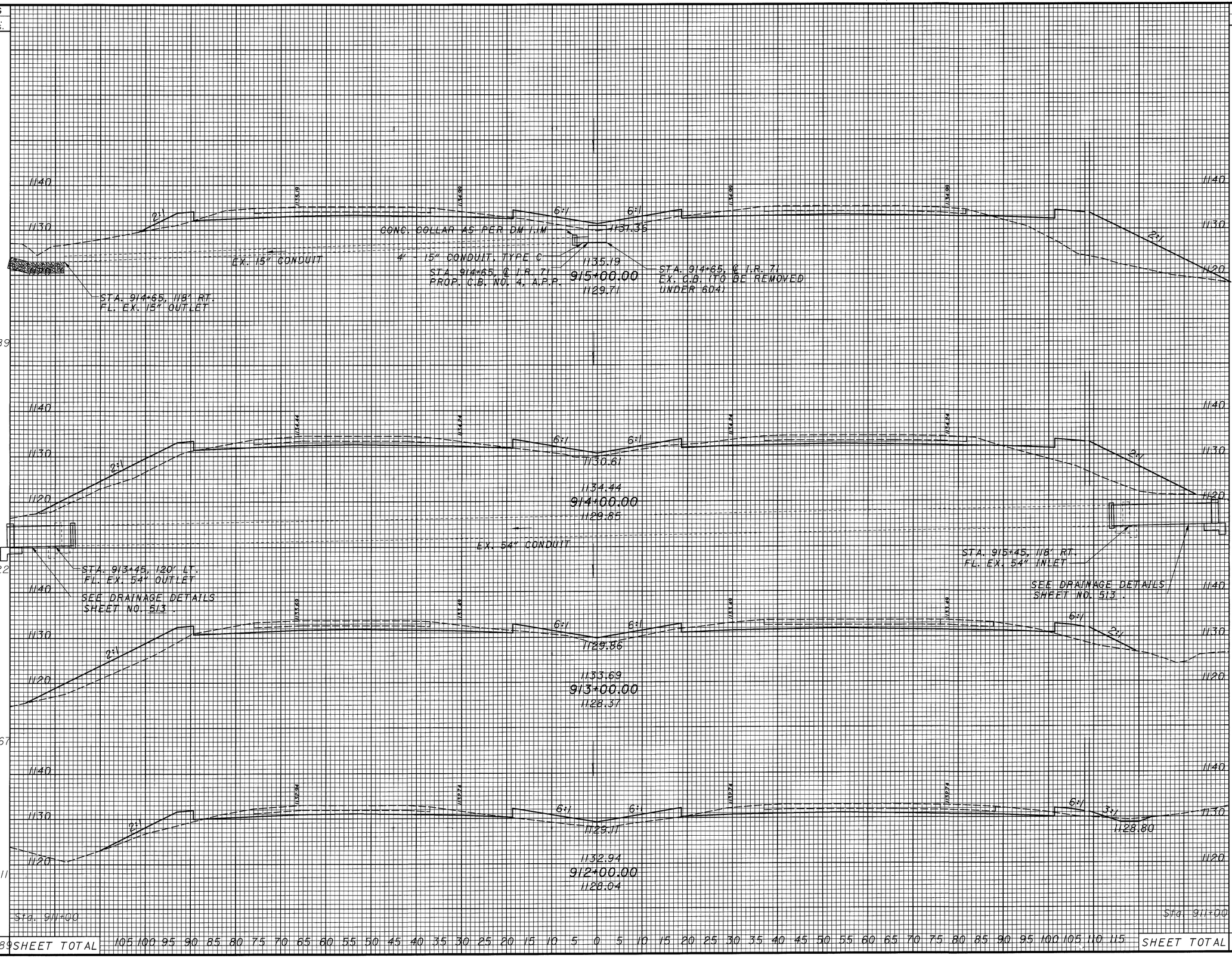

END AREA CUT	END AREA FILL	VOLUME CUT	VOLUME FILL
134	350		
		489	1167
130	280		
530	852		
156	180		
541	530		
136	106		
530	419		
150	120		
		2090	2968

4489 SHEET TOTAL — 105 100 95 90 85 80 75 70 65 60 55 50 45 40 35 30 25 20 15 10 5 0 5 10 15 20 25 30 35 40 45 50 55 60 65 70 75 80 85 90 95 100 105 110 115 — SHEET TOTAL

CALCULATED NJV
CHECKED JWR

CROSS SECTIONS
STA. 912+00 TO STA. 915+00

MED-71-15.78

241
940

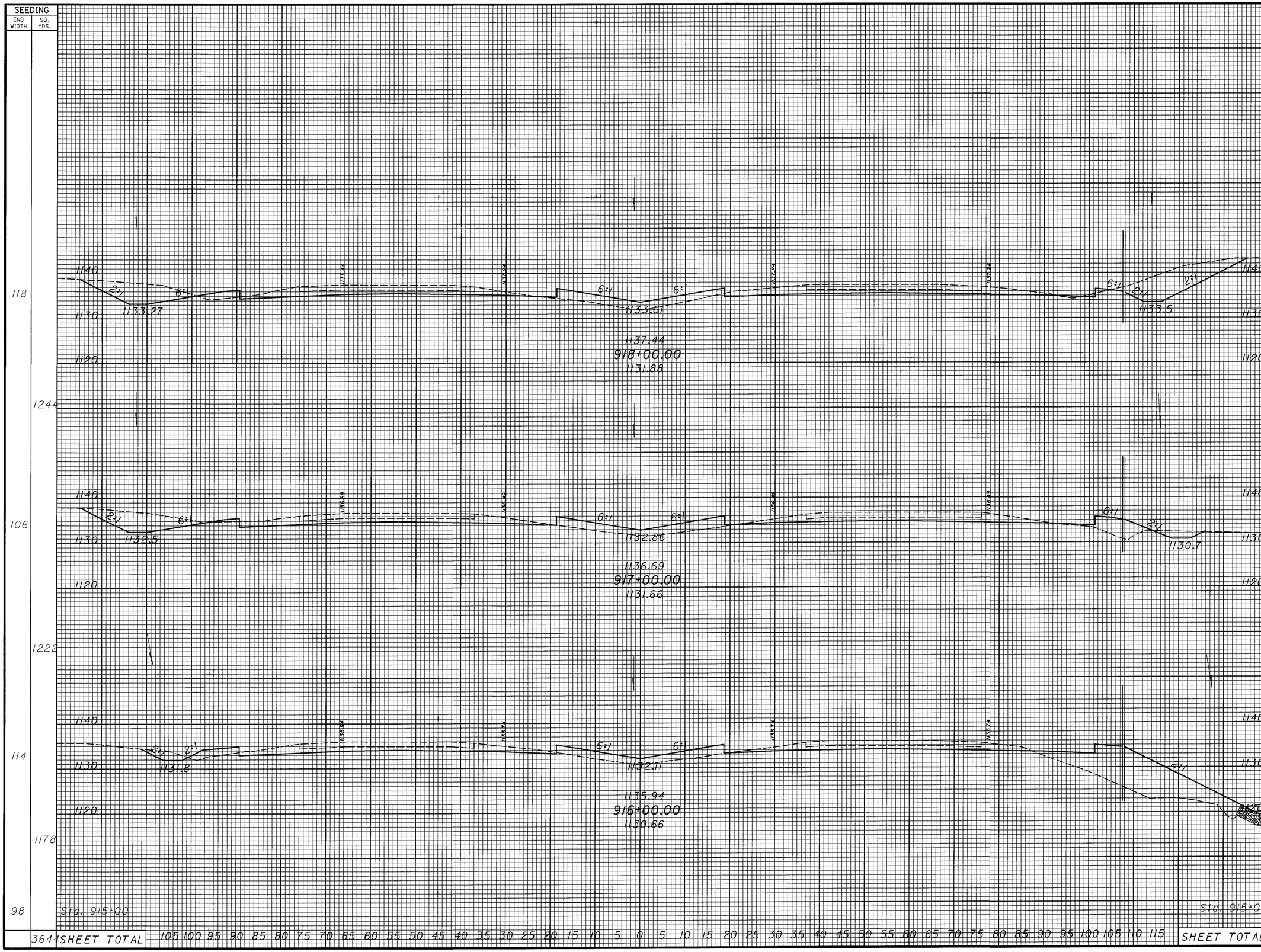

CALCULATED NJV
CHECKED JWR

CROSS SECTIONS
STA. 916+00 TO STA. 918+00

MED-71-15.78

DATE : $$$$DATE$$$$ DESIGN FILE : $$$$$$$$$$DESIGNFILESPECIFICATION$$$$$$$$$$
TIME : $$$$TIME$$$$ USERNAME : $$$$INSTRUCTIONS$$$$

DESIGN FILE : $$$$$$$$$$DESIGNFILESPECIFICATION$$$$$$$$$$
USERNAME : $$$$INSTRUCTIONS$$$$
DATE : $$$$DATE$$$$
TIME : $$$$TIME$$$$

SEEDING	
END WIDTH	SQ. YDS.
100	1222
120	1389
130	1467
134	1400
118	Sta. 918+00
	5478

STA. 922+88, 100' LT.
FL. EX. 36" OUTLET
SEE DRAINAGE DETAILS
SHEET NO. 513.

EX. 36" CONDUIT

STA. 922+25, ℄ I.R. 71
PROP. C.B. NO. 4, A.P.P.

STA. 922+25, ℄ I.R. 71
EX. C.B. (TO BE REMOVED
UNDER 604)

STA. 922+40, 114' RT.
PROP. C.B. NO. 5A, A.P.P.

STA. 922+50, 95' RT.
EX. C.B. (TO BE REMOVED)

STA. 922+50, 138' RT.
EX. C.B. (TO BE REMOVED
UNDER 604)

EX. 36" CONDUIT
CONC. COLLAR AS PER DW-LIN
1" - 36" CONDUIT, TYPE C

STA. 922+50, 138' RT.
PROP. C.B. NO. 2-4, A.P.P.

END AREA		VOLUME	
CUT	FILL	CUT	FILL
240	82		
		1037	226
320	40		
		1306	185
385	60		
		1435	241
390	70		
		1306	259
315	70		
SHEET TOTAL		5084	911

CALCULATED NJV
CHECKED JWR

CROSS SECTIONS
STA. 919+00 TO STA. 922+00

MED-71-15.78

243
940

DESIGN FILE : $$$$$$$$$$DESIGNFILESPECIFICATION$$$$$$$$$$
USERNAME : $$$$INSTRUCTIONS$$$$
DATE : $$$$DATE$$$$
TIME : $$$$TIME$$$$

CROSS SECTIONS
STA. 923+00 TO STA. 926+00

CALCULATED NJV
CHECKED JWR

MED-71-15.78

244
940

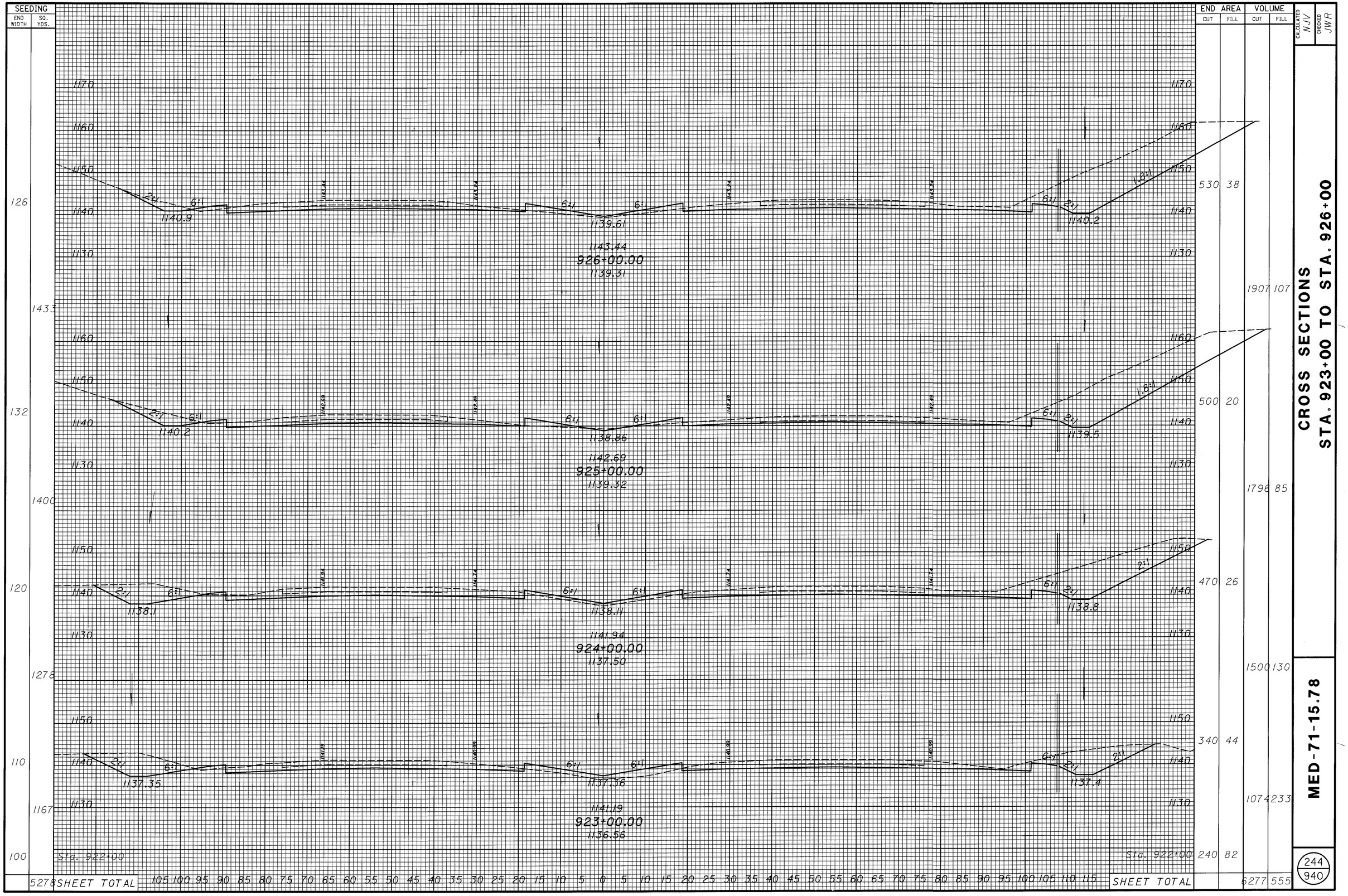

DATE : $$$$DATE$$$$ DESIGN FILE : $$$$$$$$$$DESIGNFILESPECIFICATION$$$$$$$$$$
TIME : $$$$TIME$$$$ USERNAME : $$$$INSTRUCTIONS$$$$

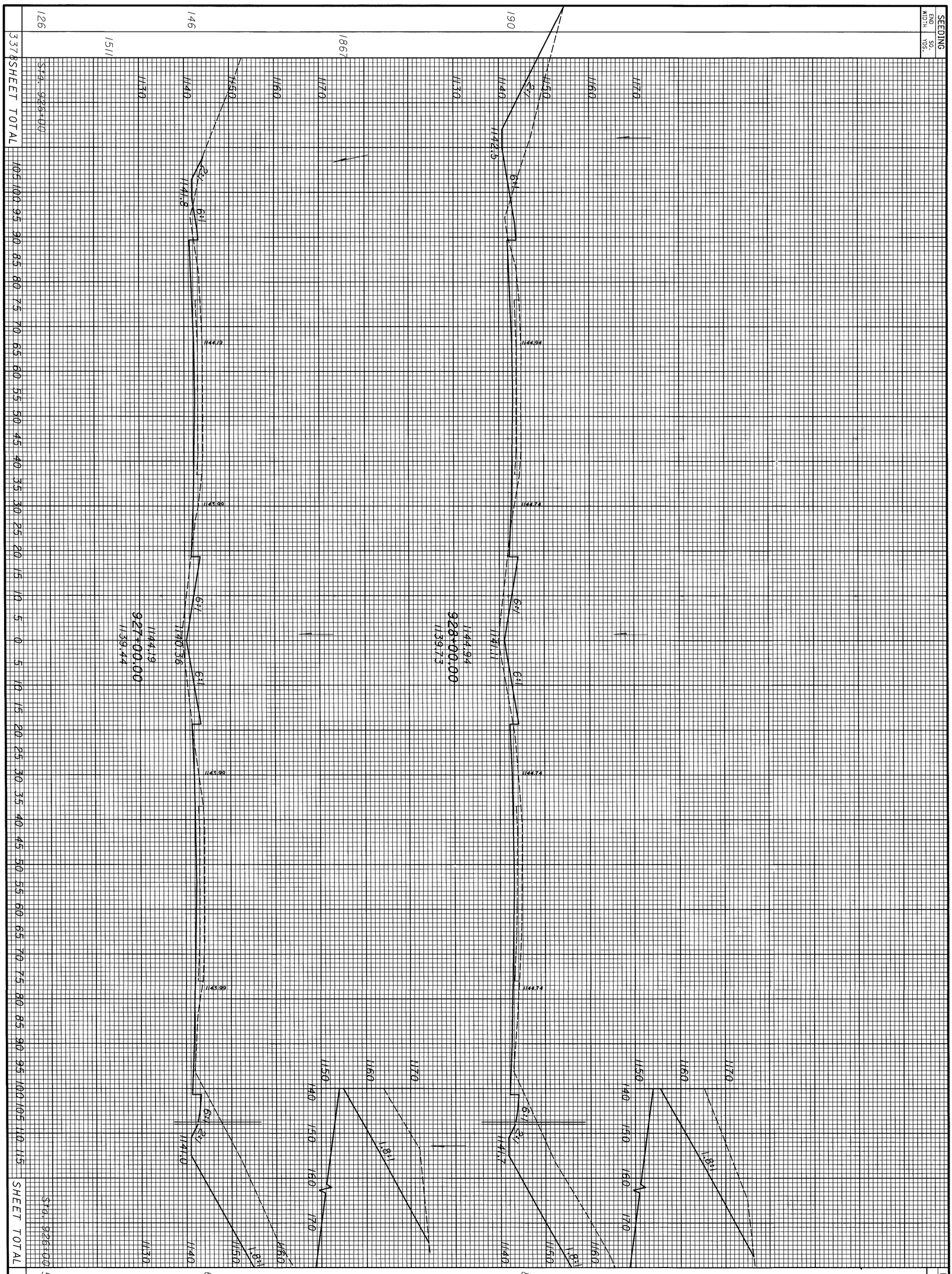

245
940

MED-71-15.78

CROSS SECTIONS
STA. 927+00 TO STA. 928+00

CALCULATED NJV
CHECKED JWR

DATE : $$$$DATE$$$$ DESIGN FILE : $$$$$$$$$$DESIGNFILESPECIFICATION$$$$$$$$$$
TIME : $$$$TIME$$$$ USERNAME : $$$$INSTRUCTIONS$$$$

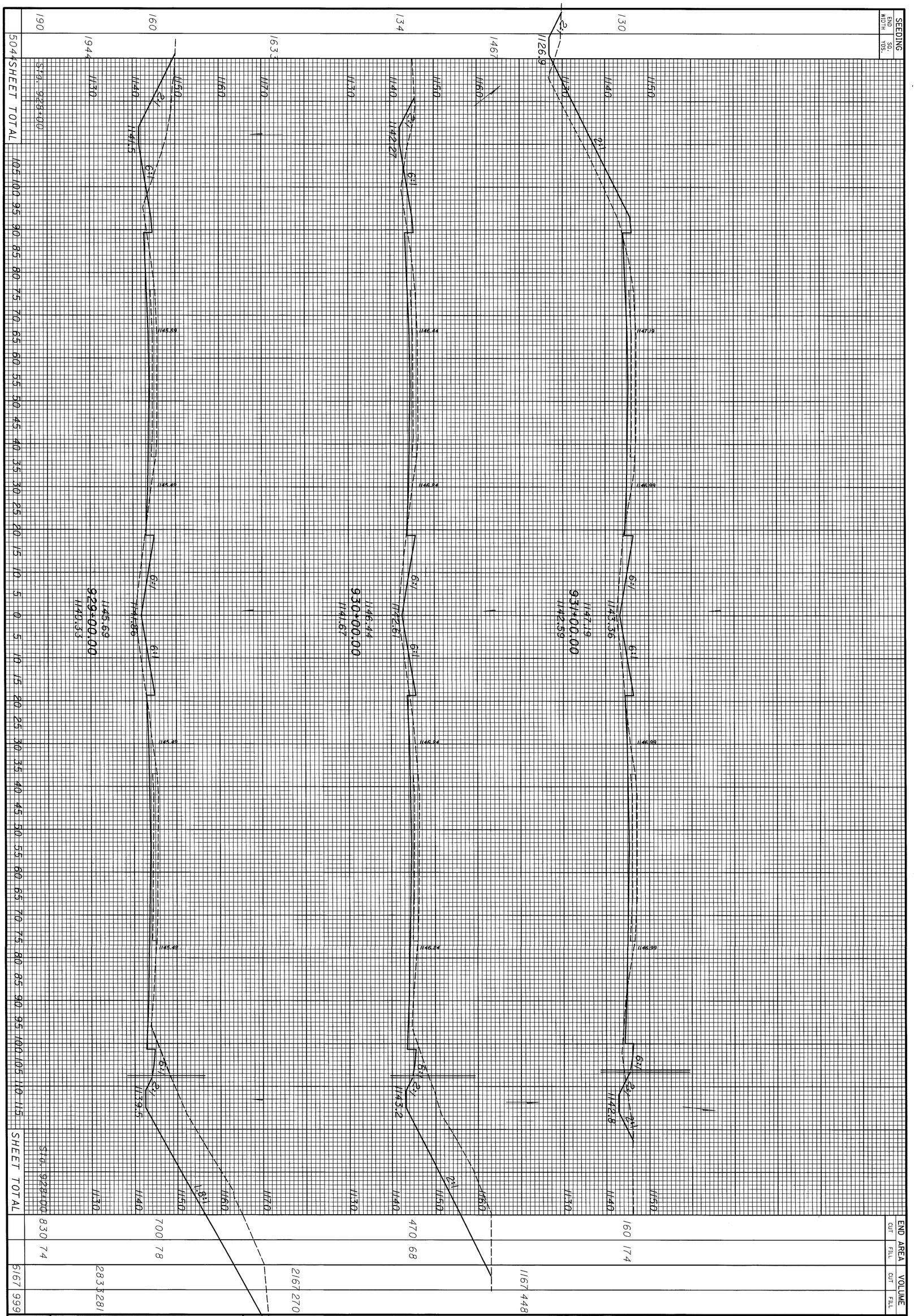

246/940

MED-71-15.78

CROSS SECTIONS
STA. 929+00 TO STA. 931+00

CALCULATED NJV
CHECKED JWR

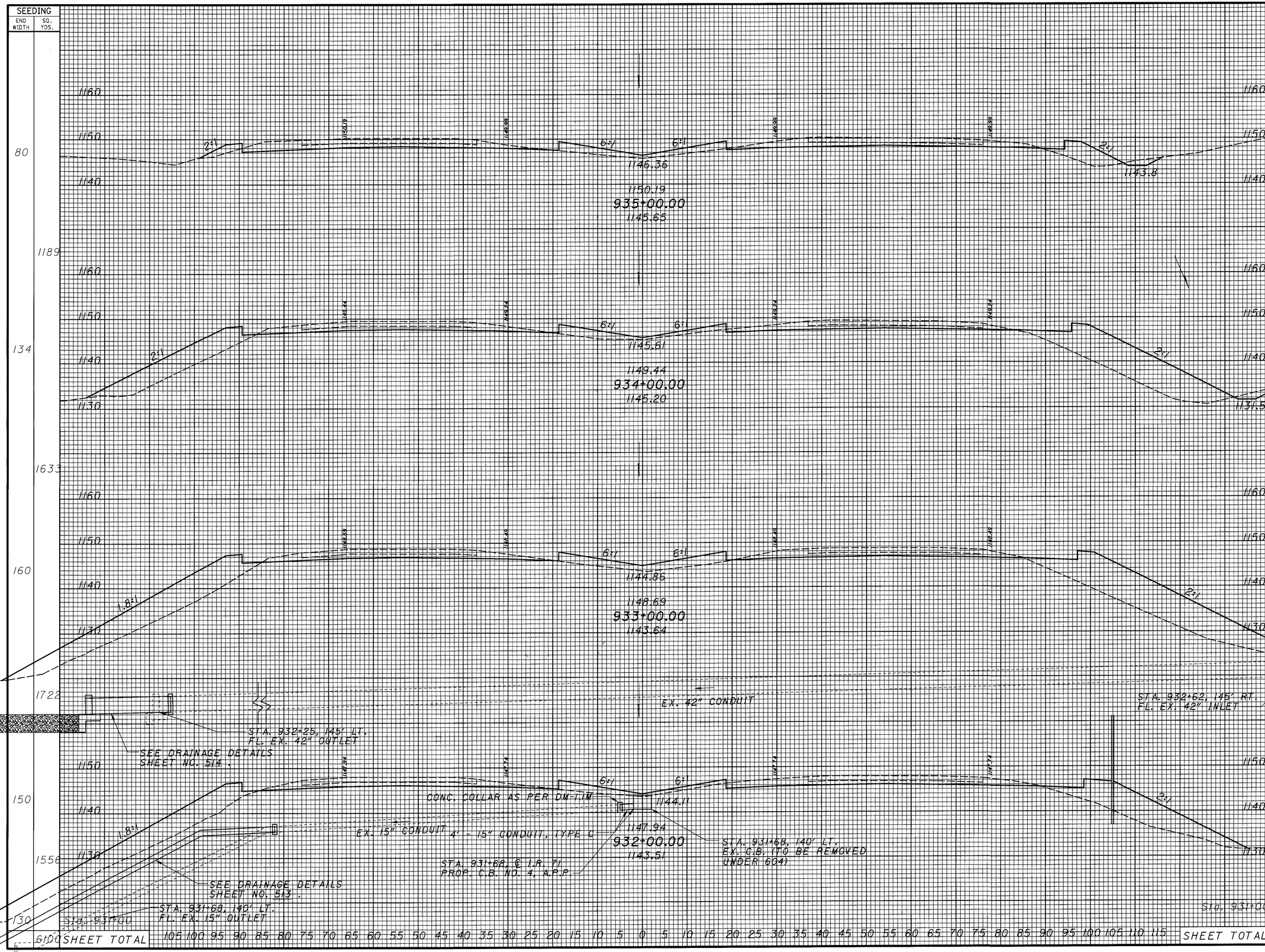

END AREA CUT	END AREA FILL	VOLUME CUT	VOLUME FILL
130	100		
		463	981
120	430		
		444	1981
120	640		
		0	0
130	450		
		537	1156
160	174		
SHEET TOTAL		1907	6137

CALCULATED NJV
CHECKED JWR

CROSS SECTIONS
STA. 932+00 TO STA. 935+00

MED-71-15.78

DATE : $$$$DATE$$$$ DESIGN FILE : $$$$$$$$$$DESIGNFILESPECIFICATION$$$$$$$$$$
TIME : $$$$TIME$$$$ USERNAME : $$$$INSTRUCTIONS$$$$

DESIGN FILE : $$$$$$$$$$DESIGNFILLSPECIFICATION$$$$$$$$$$
USERNAME : $$$$INSTRUCTIONS$$$$
DATE : $$$$DATE$$$$
TIME : $$$$TIME$$$$

SEEDING	
END WIDTH	SQ. YDS.
146	1556
134	1400
118	1100
80	4056

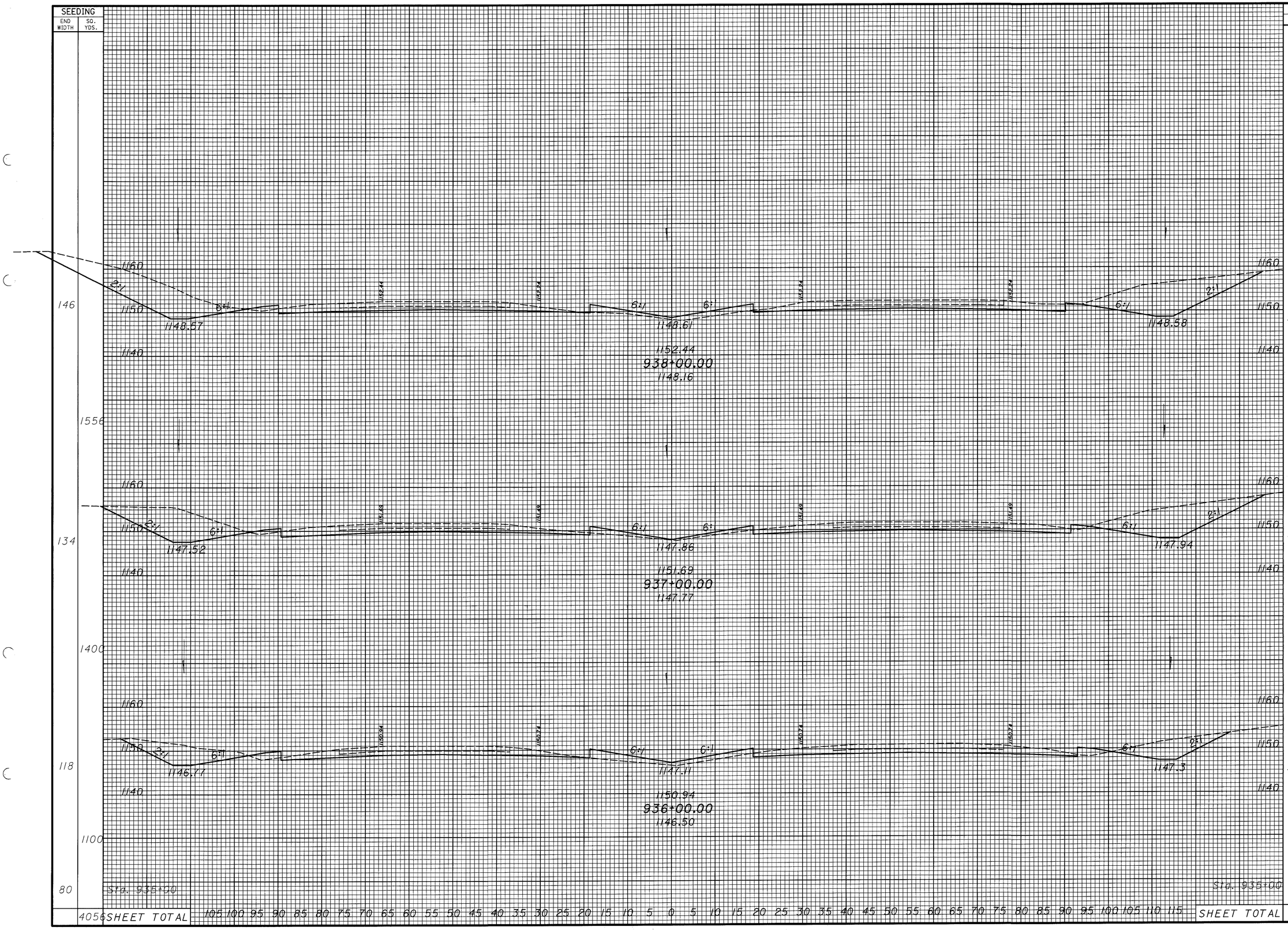

END AREA		VOLUME	
CUT	FILL	CUT	FILL
530	42	1833	130
460	28	1407	163
300	60	796	296
130	100	4036	589

SHEET TOTAL

105 100 95 90 85 80 75 70 65 60 55 50 45 40 35 30 25 20 15 10 5 0 5 10 15 20 25 30 35 40 45 50 55 60 65 70 75 80 85 90 95 100 105 110 115

SHEET TOTAL

CALCULATED NJV
CHECKED JWR

CROSS SECTIONS
STA. 936+00 TO STA. 938+00

MED-71-15.78

DESIGN FILE : $$$$$$$$$$DESIGNFILESPECIFICATION$$$$$$$$$$
USERNAME : $$$$INSTRUCTIONS$$$$
DATE : $$$$DATE$$$$
TIME : $$$$TIME$$$$

SEEDING END WIDTH	SEEDING SQ. YDS.	END AREA CUT	END AREA FILL	VOLUME CUT	VOLUME FILL
128	1489	380	54	1630	163
140	1633	500	34	2037	93
154	1722	600	16	2167	111
156	1678	570	44	2037	159
146		530	42		
6522 SHEET TOTAL		SHEET TOTAL		7871	526



CALCULATED NJV
CHECKED JWR

CROSS SECTIONS
STA. 939+00 TO STA. 942+00

MED-71-15.78

249
940

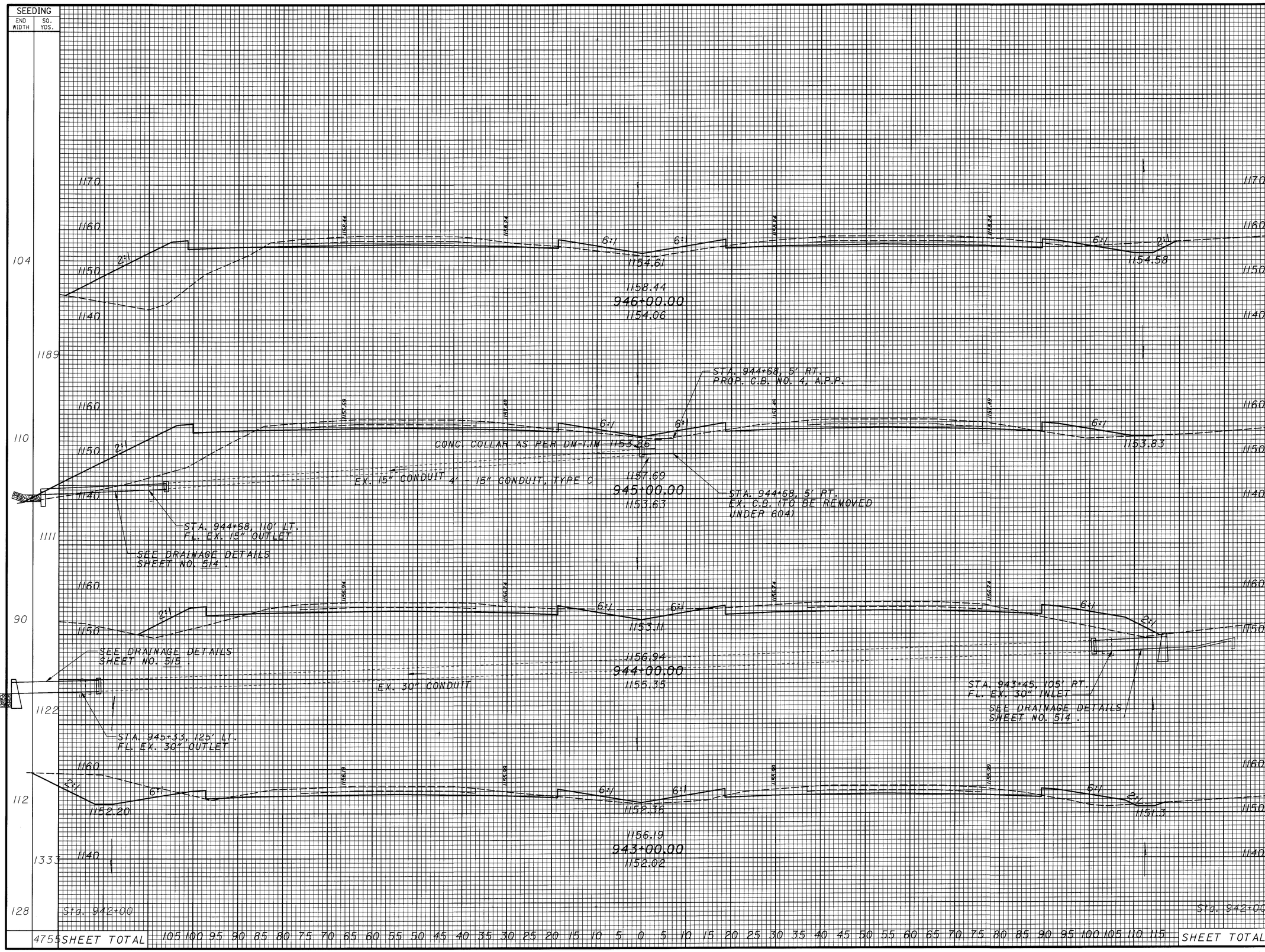

END AREA CUT	END AREA FILL	VOLUME CUT	VOLUME FILL
154	340		
		526	1259
130	340		
		556	874
170	132		
		778	393
250	80		
		1167	248
380	54		
SHEET TOTAL		3027	2774

CALCULATED NJV
CHECKED JWR

CROSS SECTIONS
STA. 943+00 TO STA. 946+00

MED-71-15.78

DATE : $$$$DATE$$$$ TIME : $$$$TIME$$$$ DESIGN FILE : $$$$$$$$$$DESIGNFILESPECIFICATION$$$$$$$$$$ USERNAME : $$$$INSTRUCTIONS$$$$

DESIGN FILE : $$$$$$$$$$DESIGNFILESPECIFICATION$$$$$$$$$$
USERNAME : $$$$INSTRUCTIONS$$$$
DATE : $$$$DATE$$$$
TIME : $$$$TIME$$$$

SEEDING	
END WIDTH	SQ. YDS.
118	1233
104	1200
112	1200
104	1156
104	
4789	SHEET TOTAL

END AREA		VOLUME	
CUT	FILL	CUT	FILL
280	236		
		896	900
204	250		
		619	1241
130	420		
		506	1370
143	320		
		550	1222
154	340		
		257	4733

CALCULATED NJV
CHECKED JWR

CROSS SECTIONS
STA. 947+00 TO STA. 950+00

MED-71-15.78

251
940

Sta. 1099+00

105 100 95 90 85 80 75 70 65 60 55 50 45 40 35 30 25 20 15 10 5 0 5 10 15 20 25 30 35 40 45 50 55 60 65 70 75 80 85 90 95 100 105 110 115

Sta. 946+00

SHEET TOTAL

1170 1160 1150

2:1 6:1 6:1 2:1

1161.38 1161.18 1161.18 1160.78

1158.53

1161.38
950+00.00
1156.70

1157.52

1160.58 1160.38 1160.38 1160.18

1157.63

1160.68
949+00.00
1156.59

1156.82

1159.94 1159.74 1159.74 1159.54

1156.89

1159.94
948+00.00
1155.83

1153.9

FX. 24" CONDUIT

STA. 947+50, 112' LT.
FL. EX. 24" OUTLET

SEE DRAINAGE DETAILS
SHEET NO. 514.

STA. 947+50, 112' RT.
FL. EX. 24" INLET

SEE DRAINAGE DETAILS
SHEET NO. 515.

1159.19 1158.99 1158.99 1158.79

1156.14

1159.19
947+00.00
1155.16

1153.6

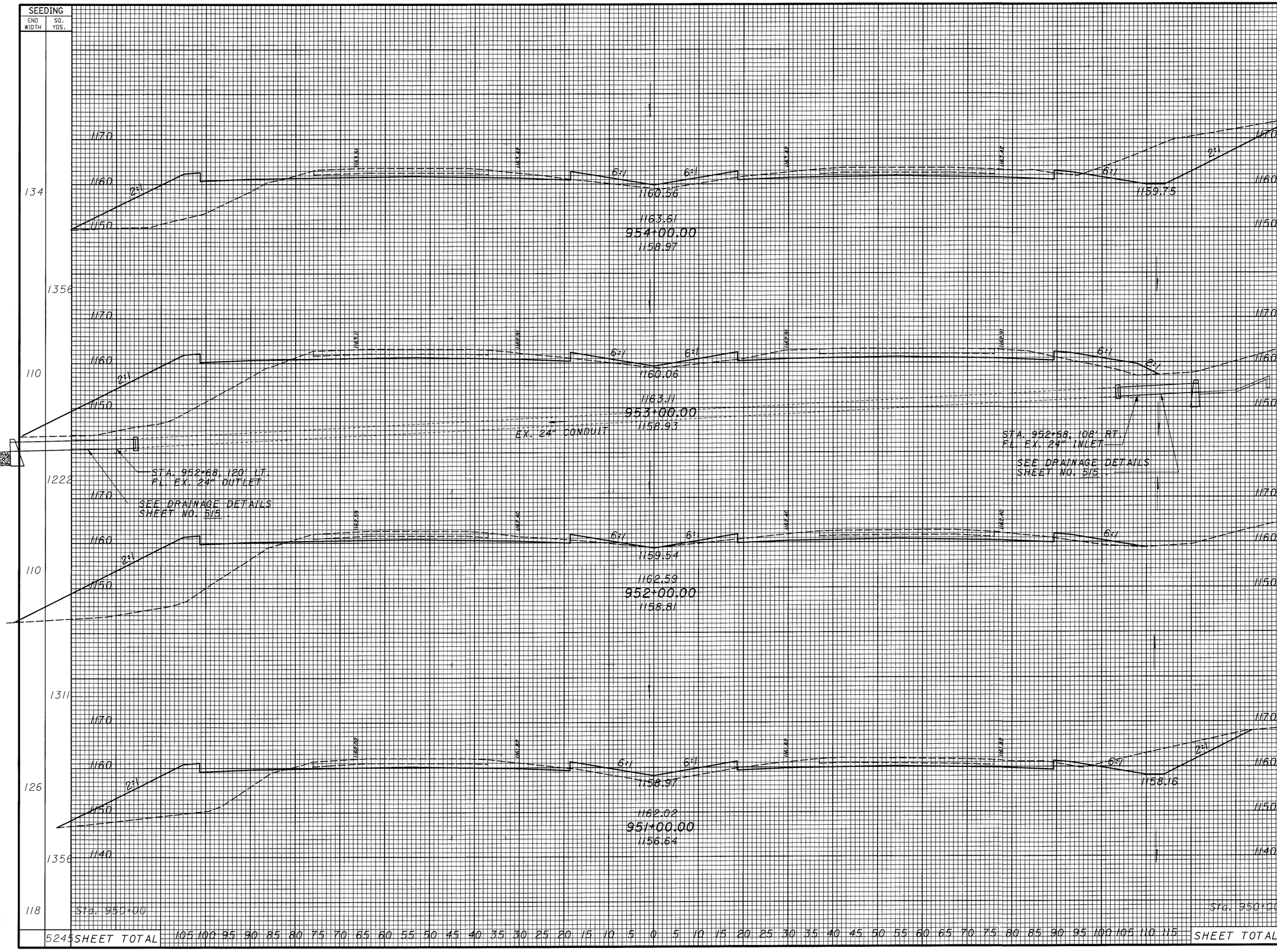

END AREA CUT	END AREA FILL	VOLUME CUT	VOLUME FILL
134	300		
		507	1463
140	490		
		507	1796
134	480		
		681	1530
234	346		
		952	1078
280	236		
		2647	5867

CALCULATED NJV
CHECKED JWR

CROSS SECTIONS
STA. 951+00 TO STA. 954+00

MED-71-15.78

DESIGN FILE : $$$$$$$$$$DESIGNFILESPECIFICATION$$$$$$$$$$
USERNAME : $$$$INSTRUCTIONS$$$$
DATE : $$$$DATE$$$$
TIME : $$$$TIME$$$$

DESIGN FILE : $$$$$$$$$$DESIGNFILESPECIFICATION$$$$$$$$$$
USERNAME : $$$$INSTRUCTIONS$$$$
DATE : $$$$DATE$$$$
TIME : $$$$TIME$$$$

SEEDING	
END WIDTH	SQ. YDS.
134	1433
124	1333
116	1389
134	
SHEET TOTAL	4155

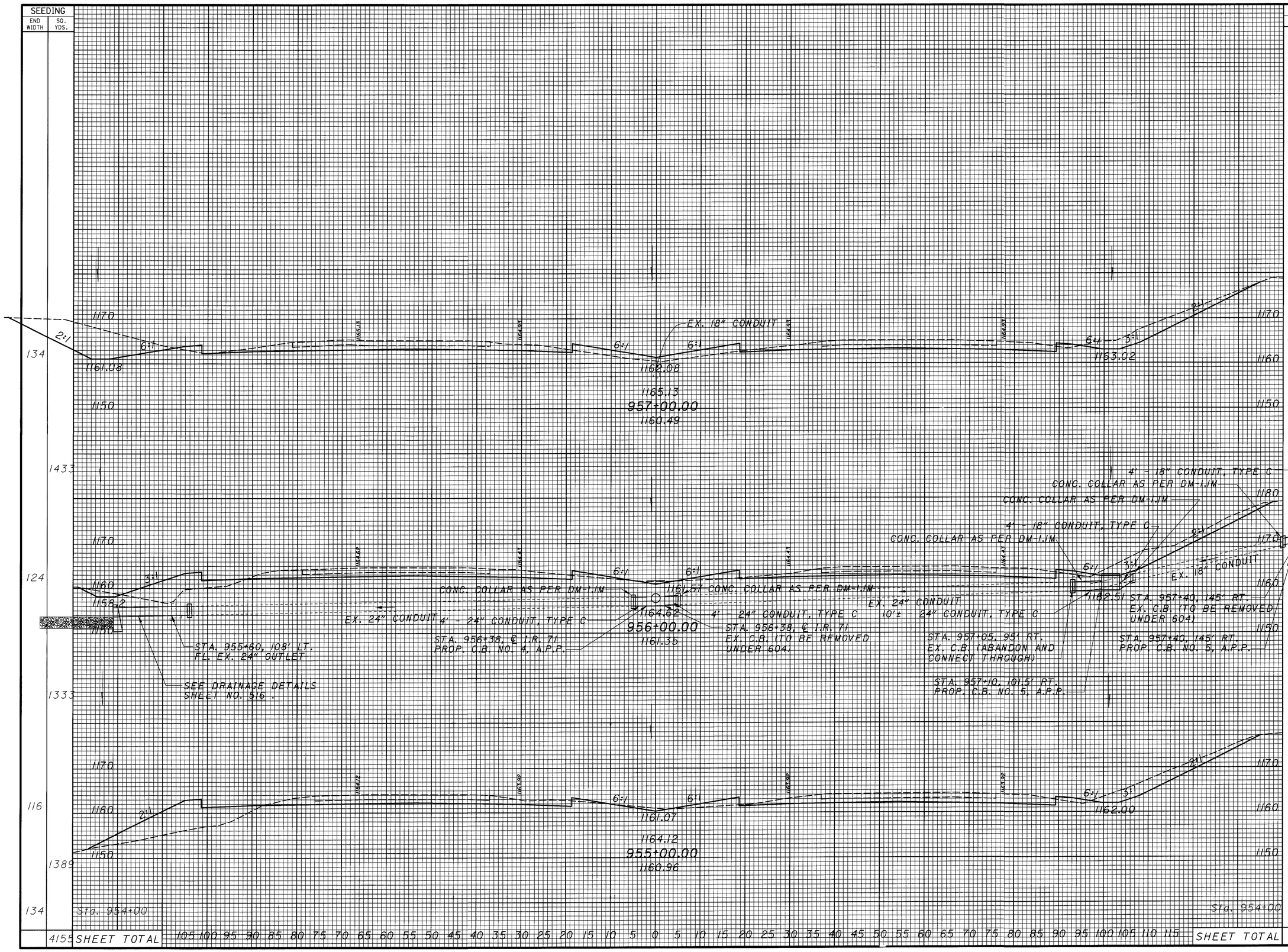

END AREA		VOLUME	
CUT	FILL	CUT	FILL
366	56		
		1115	270
236	90		
		837	463
216	160		
		648	852
134	300		
SHEET TOTAL		2600	1585

105 100 95 90 85 80 75 70 65 60 55 50 45 40 35 30 25 20 15 10 5 0 5 10 15 20 25 30 35 40 45 50 55 60 65 70 75 80 85 90 95 100 105 110 115

CALCULATED N.J.V.
CHECKED J.W.R.

CROSS SECTIONS
STA. 955+00 TO STA. 957+00

MED-71-15.78

253
940

DESIGN FILE : $$$$$$$$$$DESIGNFILESPECIFICATION$$$$$$$$$$
USERNAME : $$$$INSTRUCTIONS$$$$
DATE : $$$$DATE$$$$
TIME : $$$$TIME$$$$

SEEDING END WIDTH	SEEDING SQ. YDS.	END AREA CUT	END AREA FILL	VOLUME CUT	VOLUME FILL
136		450	106		
				1759	367
156					
144		500	92		
				1648	315
154					
134		390	78		
				1400	248
148					
134		366	56		
	4589 SHEET TOTAL			4807	930

CALCULATED NJV
CHECKED JWR

CROSS SECTIONS
STA. 958+00 TO STA. 960+00

MED-71-15.78

254
940

DESIGN FILE : $$$$$$$$$$DESIGNFILESPECIFICATION$$$$$$$$$$
USERNAME : $$$$INSTRUCTIONS$$$$
DATE : $$$$DATE$$$$
TIME : $$$$TIME$$$$

SEEDING		END AREA		VOLUME		CALCULATED	CHECKED
END WIDTH	SQ. YDS.	CUT	FILL	CUT	FILL	NJV	JWR

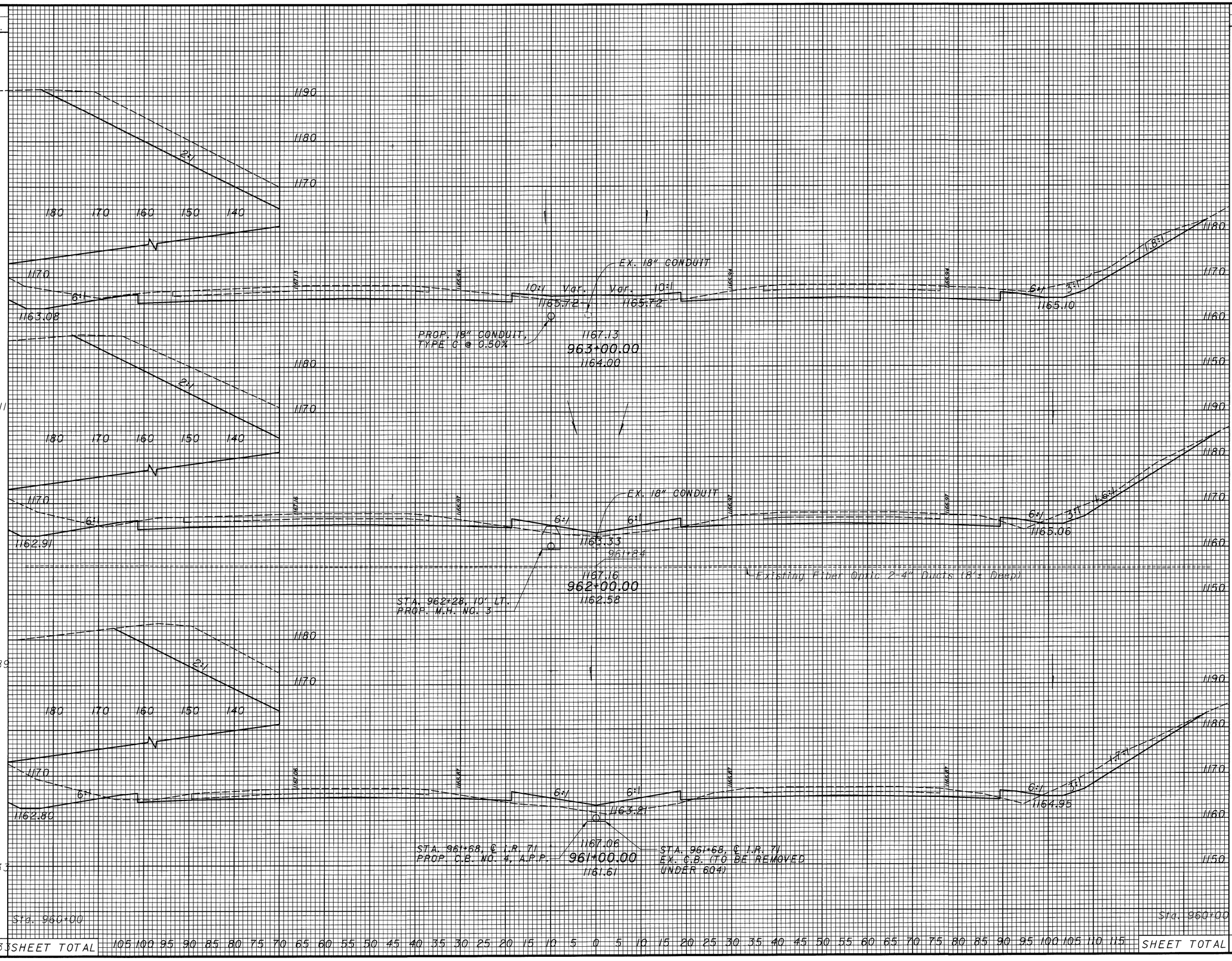

| | | |

DESIGN FILE : $$$$$$$$$$DESIGNFILESPECIFICATION$$$$$$$$$$
USERNAME : $$$$INSTRUCTIONS$$$$
DATE : $$$$DATE$$$$
TIME : $$$$TIME$$$$

SEEDING	
END WIDTH	SQ. YDS.
160	1889
180	1700
126	1422
130	1722
180	
SHEET TOTAL	6733

END AREA		VOLUME	
CUT	FILL	CUT	FILL
575	50		
		2213	96
620	2		
		1944	11
430	4		
		1667	11
470	2		
		2056	96
640	50		
SHEET TOTAL		7880	214

CALCULATED NJV
CHECKED JWR

CROSS SECTIONS
STA. 964+00 TO STA. 967+00

MED-71-15.78

256
940

DESIGN FILE : $$$$$$$$$$DESIGNFILE$SPECIFICATION$$$$$$$$$$
USERNAME : $$$$INSTRUCTIONS$$$$

DATE : $$$$DATE$$$$$
TIME : $$$$TIME$$$$

SEEDING	
END WIDTH	SQ. YDS.

END AREA		VOLUME	
CUT	FILL	CUT	FILL

CALCULATED NJV
CHECKED JWR

CROSS SECTIONS
STA. 968+00 TO STA. 970+00

MED-71-15.78

257
940

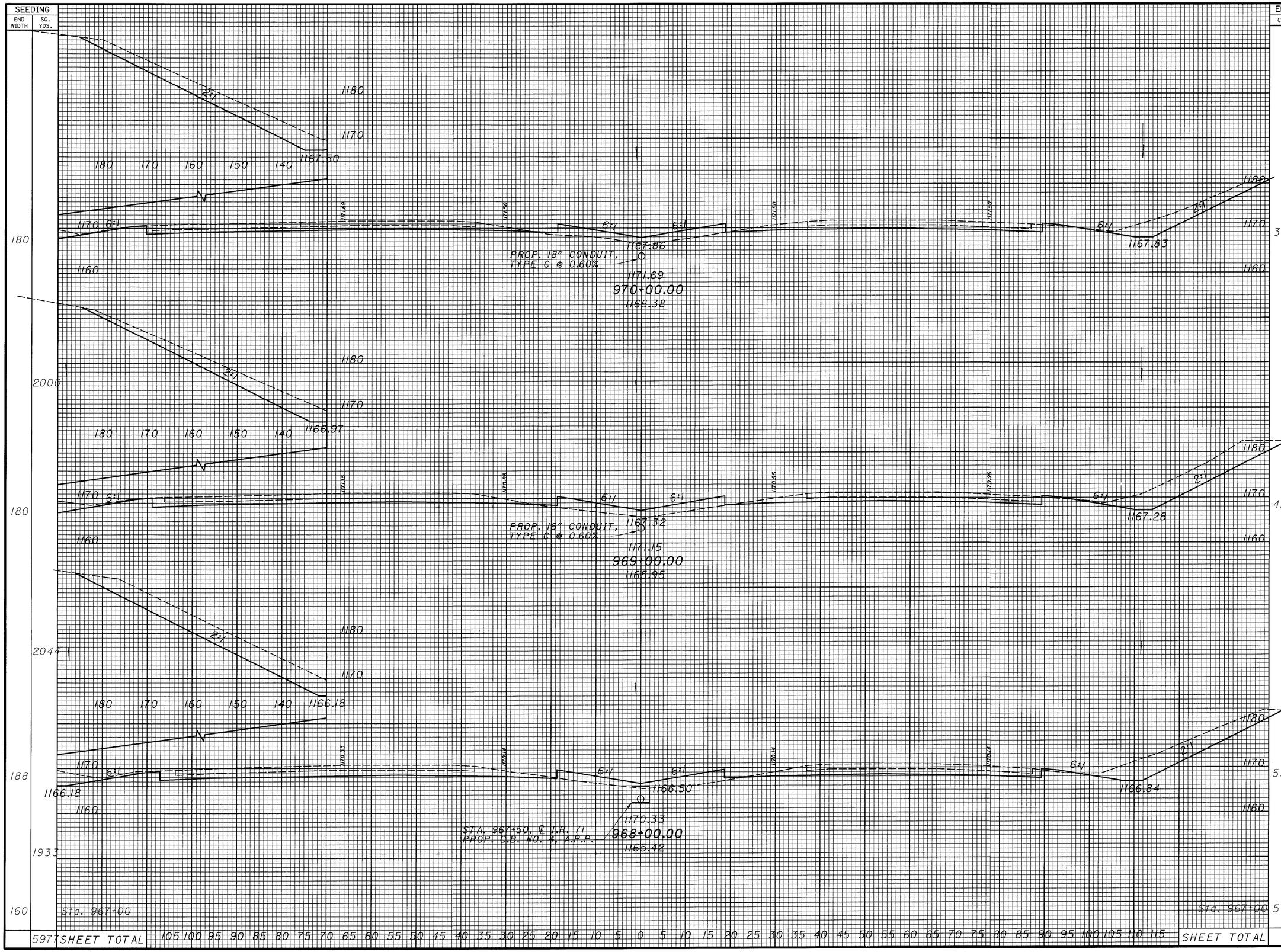

DESIGN FILE : $$$$$$$$$DESIGNFILESPECIFICATION$$$$$$$$$
USERNAME : $$$$INSTRUCTIONS$$$$
DATE : $$$$DATE$$$$
TIME : $$$$TIME$$$$

SEEDING END WIDTH	SEEDING SQ. YDS.	END AREA CUT	END AREA FILL	VOLUME CUT	VOLUME FILL
74		140	44		
				166	55
	856	150	52		
		140	52		
				390	141
80		165	58		
				676	215
95		200	58		
				630	233
84		140	68		
				399	184
95		155	68		
180		360	68		
				370	68
180		380	68		
	4088 SHEET TOTAL	SHEET TOTAL		2631	896

CALCULATED NJV
CHECKED JWR

CROSS SECTIONS
STA. 971+00 TO STA. 974+00

MED-71-15.78

258
940

DESIGN FILE : $$$$$$$$$$DESIGNFILESPECIFICATION$$$$$$$$$$
USERNAME : $$$$INSTRUCTIONS$$$$
DATE : $$$$DATE$$$$
TIME : $$$$TIME$$$$

SEEDING END WIDTH	SEEDING SQ. YDS.	END AREA CUT	END AREA FILL	VOLUME CUT	VOLUME FILL
92					
		158	48		
	956			556	163
80		142	40		
92				52	15
86		140	42		
78		165	42		
	650			508	143
52		140	44		
	539			500	200
45		130	64		
	661			500	200
74		140	44		
	2898 SHEET TOTAL			2116	721

CALCULATED NJV
CHECKED JWR

CROSS SECTIONS
STA. 975+00 TO STA. 978+00

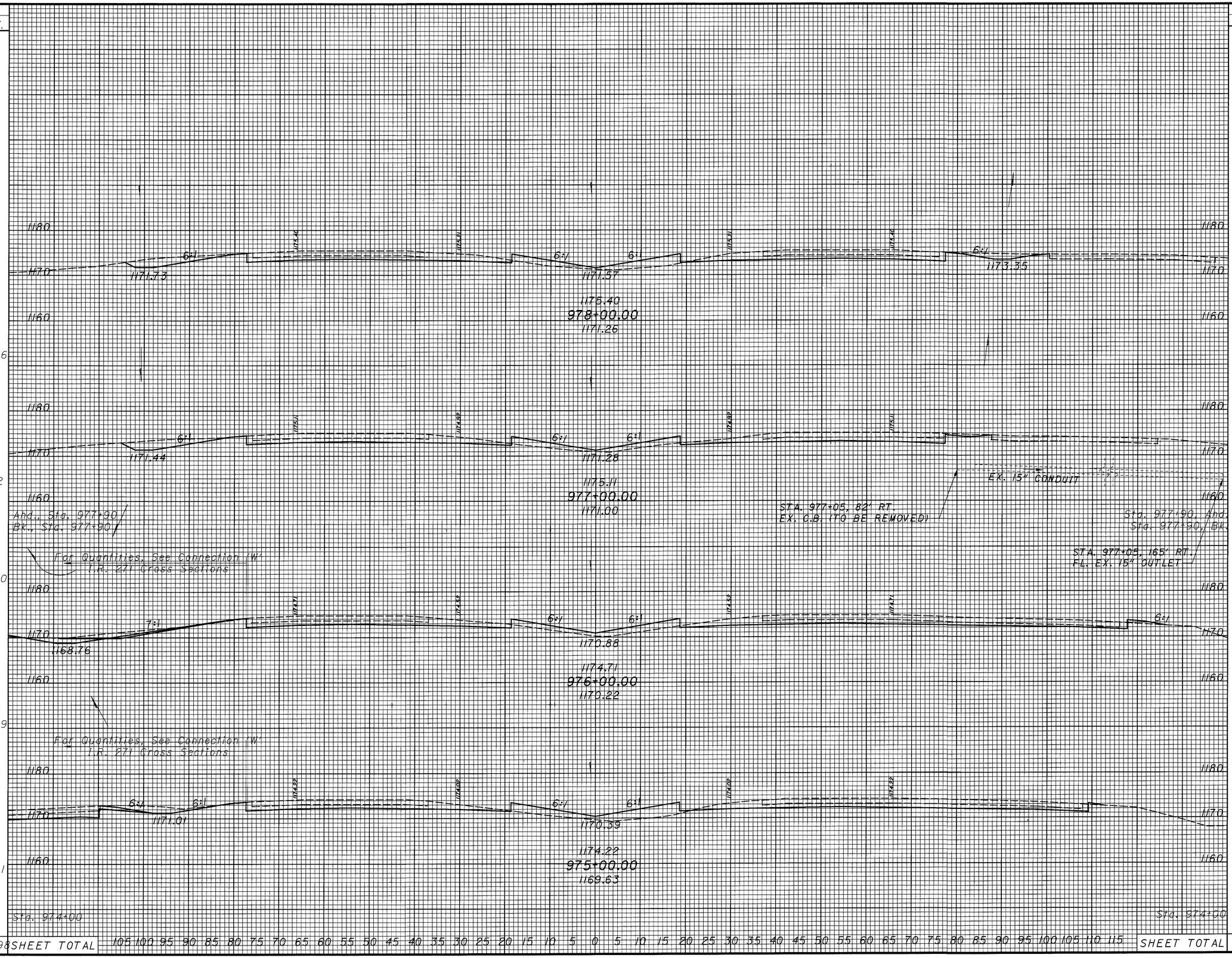

MED-71-15.78

259
940

DATE : $$$$DATE$$$$ DESIGN FILE : $$$$$$$$$$DESIGNFILESPECIFICATION$$$$$$$$$$
TIME : $$$$TIME$$$$ USERNAME : $$$$INSTRUCTIONS$$$$

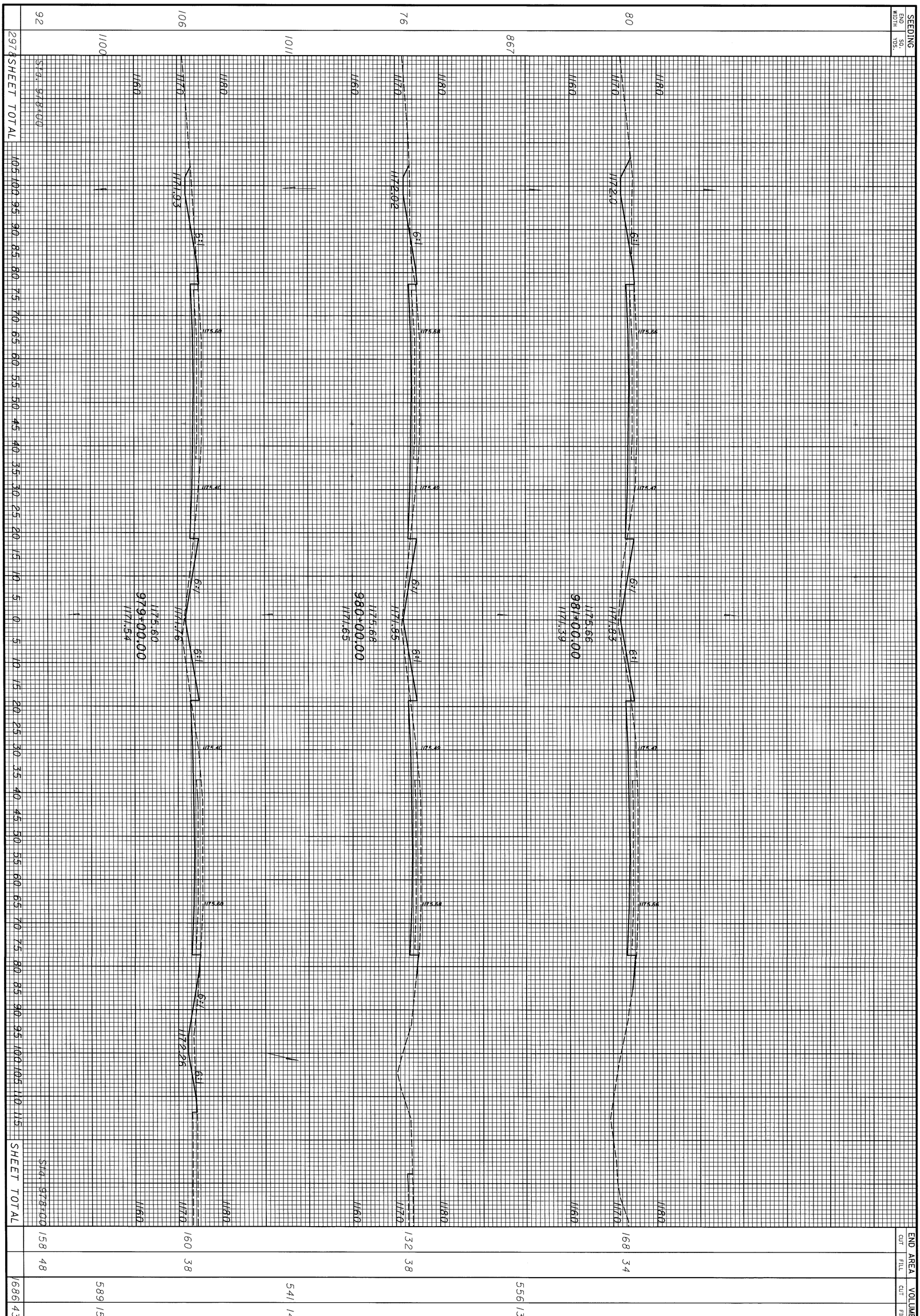

260/940

MED-71-15.78

CROSS SECTIONS
STA. 979+00 TO STA. 981+00

CALCULATED NJV
CHECKED JWR

DESIGN FILE : $$$$$$$$$DESIGNFILESPECIFICATION$$$$$$$$$
USERNAME : $$$$INSTRUCTIONS$$$$
DATE : $$$$DATE$$$$
TIME : $$$$TIME$$$$

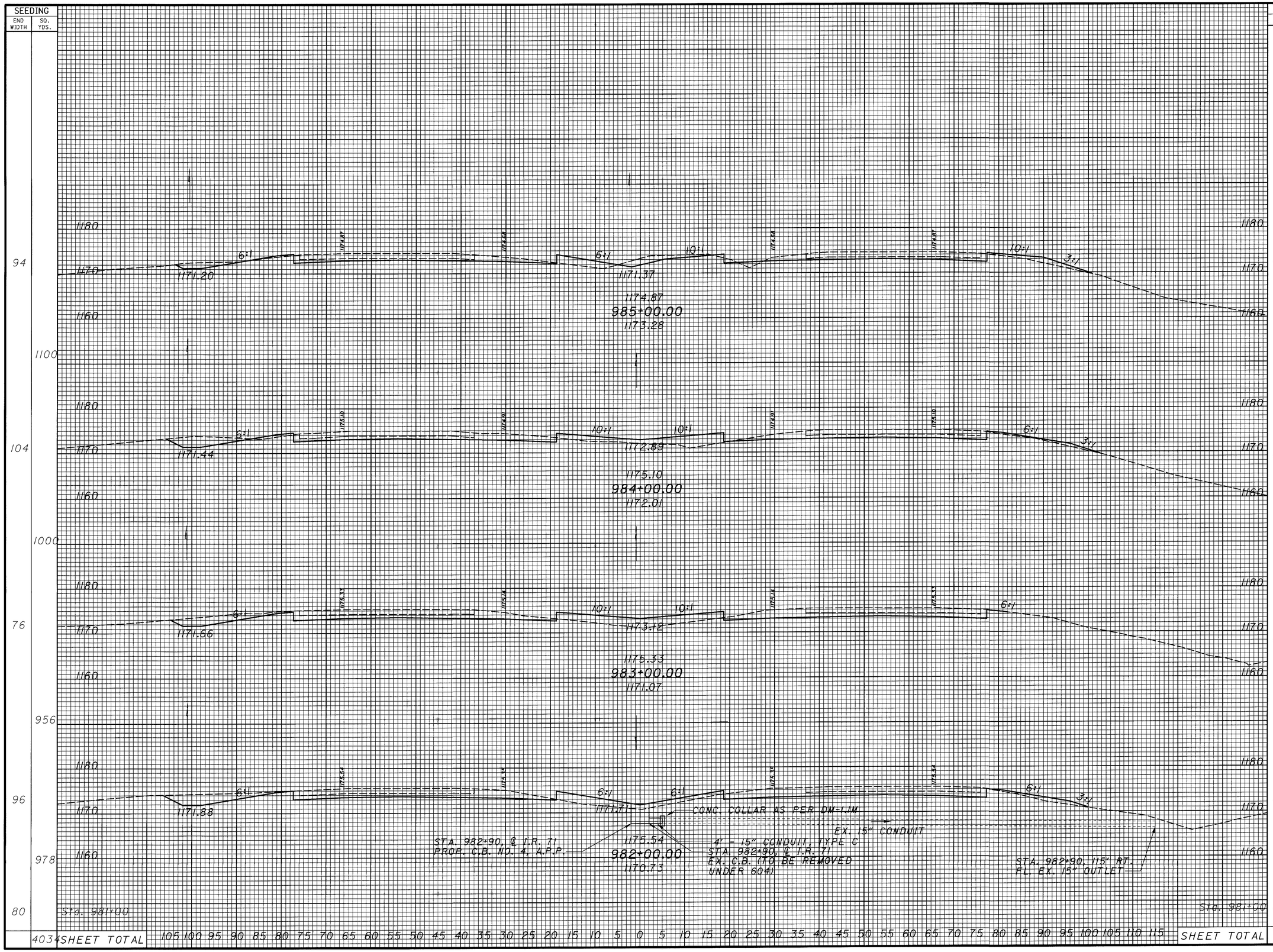

END AREA		VOLUME	
CUT	FILL	CUT	FILL
100	38		
		419	189
126	64		
		526	241
158	66		
		604	222
168	54		
		622	163
168	34		
		2171	815

CALCULATED NJV
CHECKED JWR

CROSS SECTIONS
STA. 982+00 TO STA. 985+00

MED-71-15.78

261
940

DESIGN FILE : $$$$$$$$$$DESIGNFILESPECIFICATION$$$$$$$$$$
USERNAME : $$$$INSTRUCTIONS$$$$
DATE : $$$$DATE$$$$$
TIME : $$$$TIME$$$$

SEEDING	
END WIDTH	SQ. YDS.

DESIGN FILE : $$$$$$$$$$DESIGNFILESPECIFICATION$$$$$$$$$$
USERNAME : $$$$INSTRUCTIONS$$$$
DATE : $$$$DATE$$$$
TIME : $$$$TIME$$$$

SEEDING	
END WIDTH	SQ. YDS.
60	
	667
60	
	756
76	
	1423

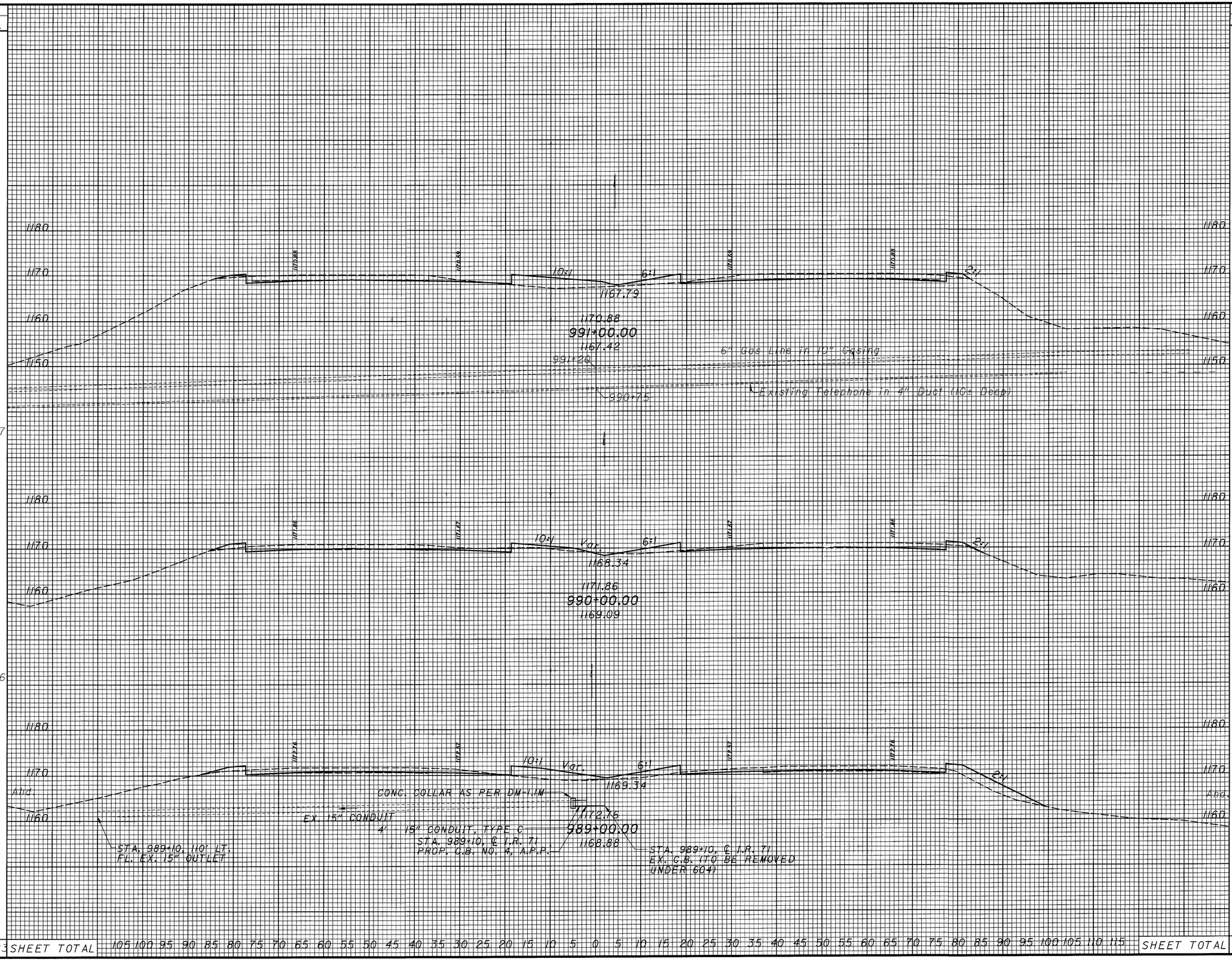

END AREA		VOLUME	
CUT	FILL	CUT	FILL
30	60		
		104	167
26	30		
		85	248
Add.	20	104	
SHEET TOTAL		189	415

105 100 95 90 85 80 75 70 65 60 55 50 45 40 35 30 25 20 15 10 5 0 5 10 15 20 25 30 35 40 45 50 55 60 65 70 75 80 85 90 95 100 105 110 115 SHEET TOTAL

CALCULATED NJV
CHECKED JWR

CROSS SECTIONS
STA. 989+00 TO STA. 991+00

MED-71-15.78

263
940

DESIGN FILE : $$$$$$$$$$DESIGNFILESPECIFICATION$$$$$$$$$$
USERNAME : $$$$INSTRUCTIONS$$$$

DATE : $$$$DATE$$$$$
TIME : $$$$TIME$$$$

SEEDING	
END WIDTH	SQ. YDS.
56	622
56	622
56	644
60	1738

END AREA		VOLUME	
CUT	FILL	CUT	FILL
98	36		
		0	-50
		311	185
70	64		
		222	207
50	48		
		148	200
		30	60
		681	542

CALCULATED NJV
CHECKED JWR

CROSS SECTIONS
STA. 992+00 TO STA. 994+00

MED-71-15.78

264
940

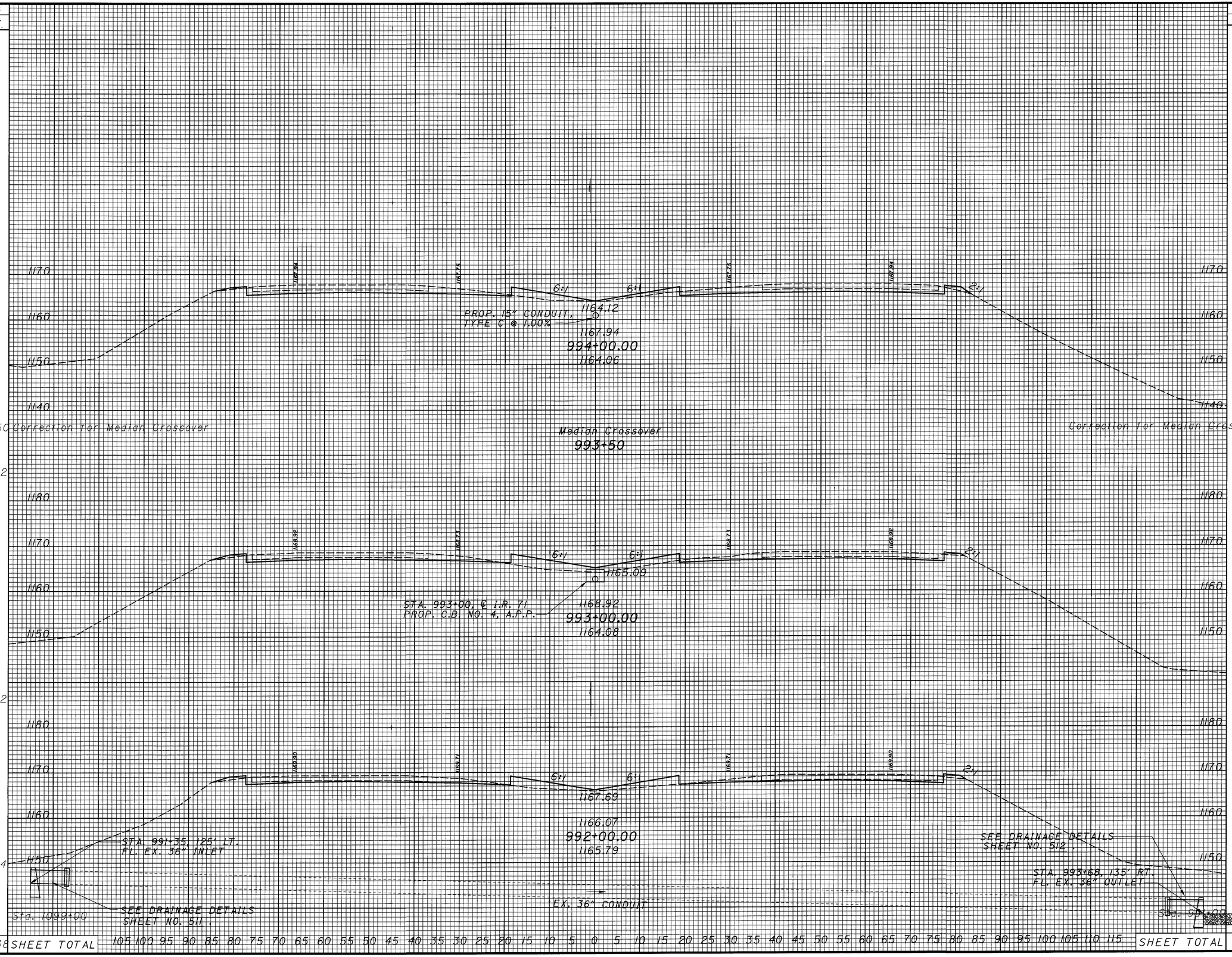

DESIGN FILE : $$$$$$$$$$DESIGNFILLESPECIFICATION$$$$$$$$$$
USERNAME : $$$$INSTRUCTIONS$$$$
DATE : $$$$DATE$$$$
TIME : $$$$TIME$$$$

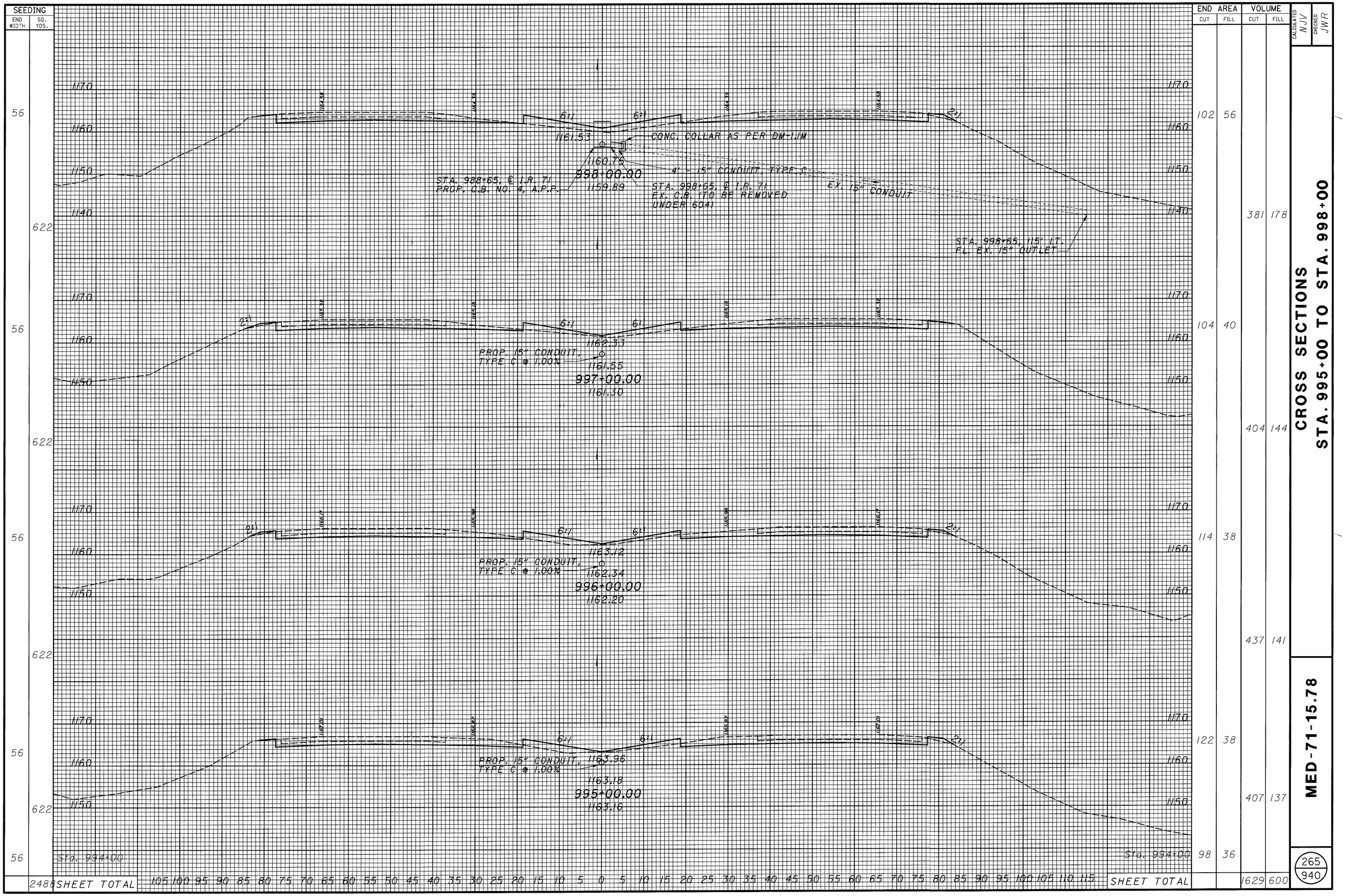

DATE : $$$$DATE$$$$ DESIGN FILE : $$$$$$$$$$DESIGNFILESPECIFICATION$$$$$$$$$$
TIME : $$$$TIME$$$$ USERNAME : $$$$INSTRUCTIONS$$$$

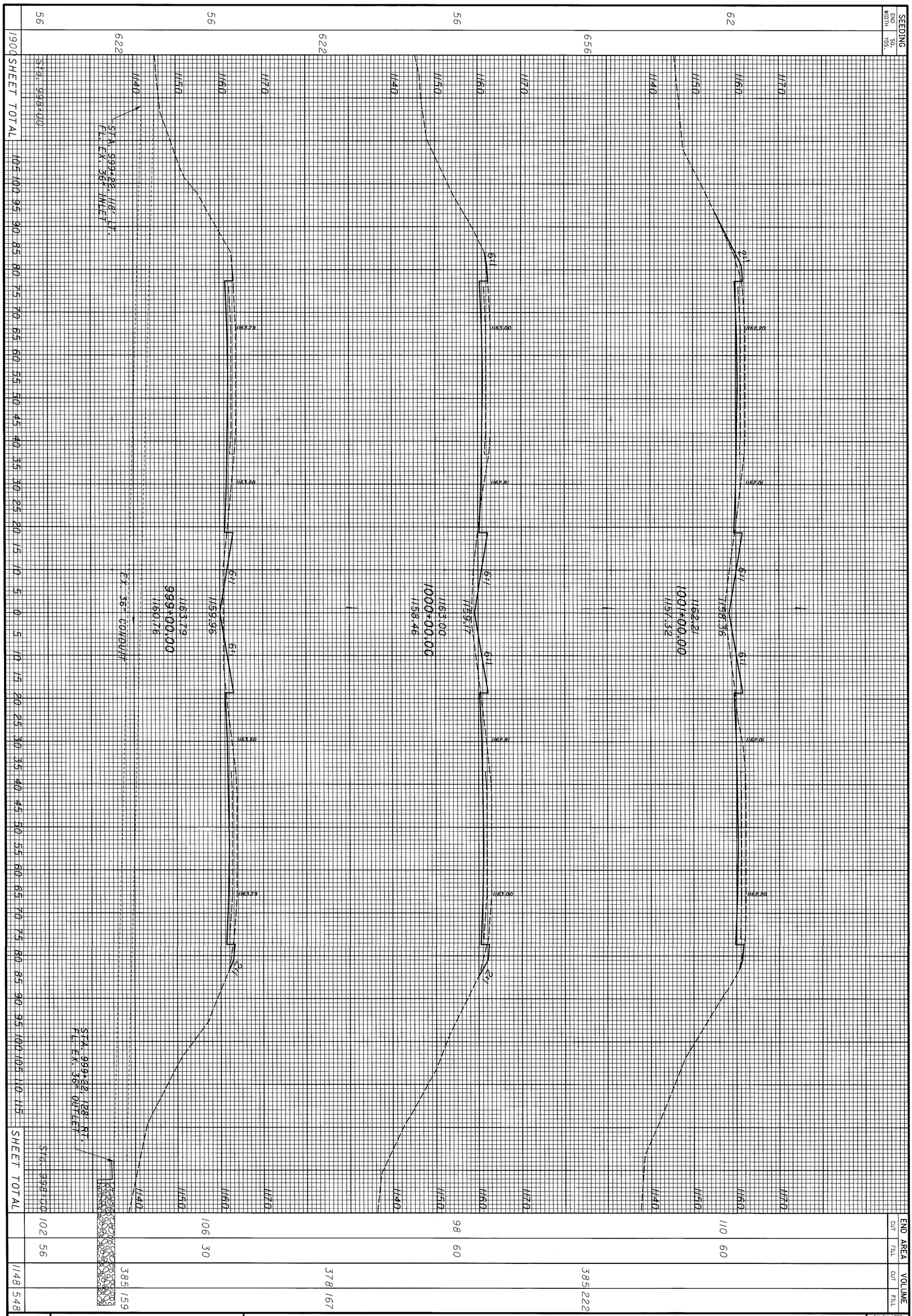

266
940

MED-71-15.78

CROSS SECTIONS
STA. 999+00 TO STA. 1001+00

CALCULATED NJV
CHECKED JWR

DATE : $$$$DATE$$$$ DESIGN FILE : $$$$$$$$$$DESIGNFILESPECIFICATION$$$$$$$$$$
TIME : $$$$TIME$$$$ USERNAME : $$$$INSTRUCTIONS$$$$

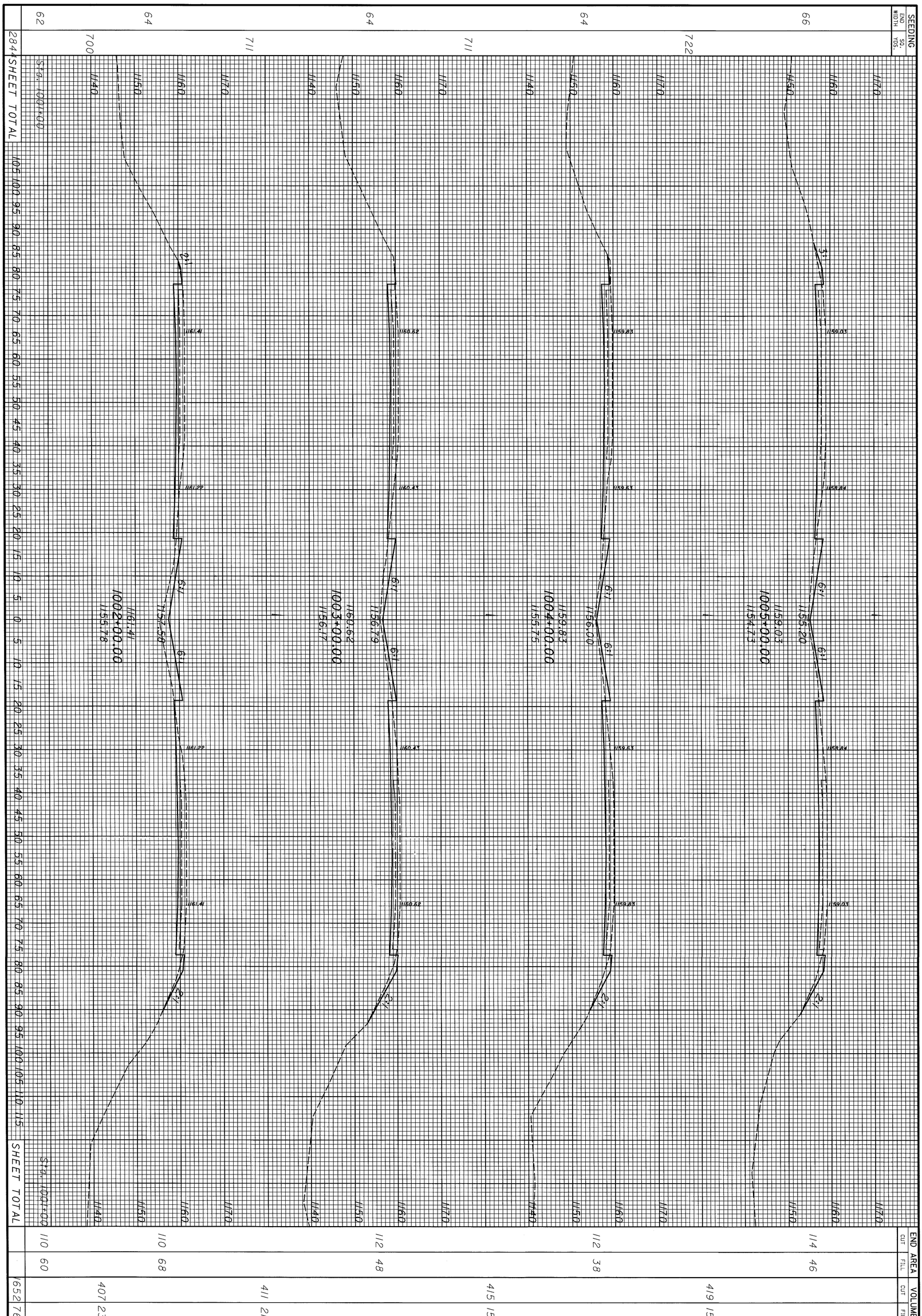

267 / 940	MED-71-15.78	CROSS SECTIONS STA. 1002+00 TO STA. 1005+00	CALCULATED NJV CHECKED JWR

DESIGN FILE : $$$$$$$$$$DESIGNFILESPECIFICATION$$$$$$$$$$
USERNAME : $$$$INSTRUCTIONS$$$$
DATE : $$$$DATE$$$$
TIME : $$$$TIME$$$$

SEEDING END WIDTH	SEEDING SQ. YDS.
	88
	1011
	94
	856
	60
	667
	60
	700
	66
SHEET TOTAL	3234

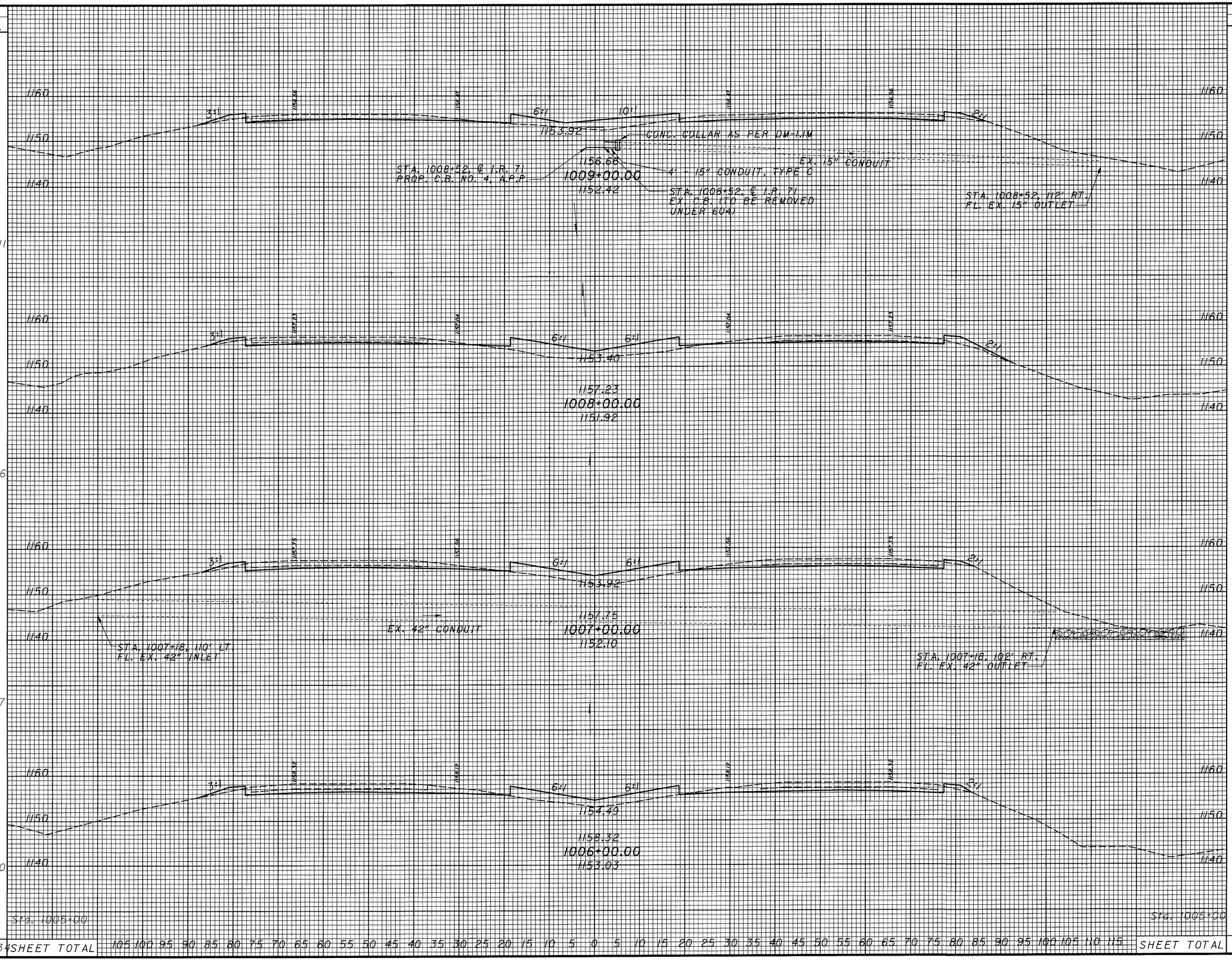

END AREA CUT	END AREA FILL	VOLUME CUT	VOLUME FILL
34	120		
		137	600
40	204		
		200	541
68	88		
		304	307
96	78		
		389	230
114	46		
SHEET TOTAL		1030	1678

CALCULATED NJV
CHECKED JWR

CROSS SECTIONS
STA. 1006+00 TO STA. 1009+00

MED-71-15.78

DESIGN FILE : $$$$$$$$$$DESIGNFILESPECIFICATION$$$$$$$$$$
USERNAME : $$$$INSTRUCTIONS$$$$
DATE : $$$$DATE$$$$
TIME : $$$$TIME$$$$

SEEDING		END AREA		VOLUME	
END WIDTH	SQ. YDS.	CUT	FILL	CUT	FILL
64		16	104		
	900			74	422
98		24	124		
	1089			96	452
98		28	120		
	1033			115	444
88		34	120		
	3022 SHEET TOTAL			285	1318

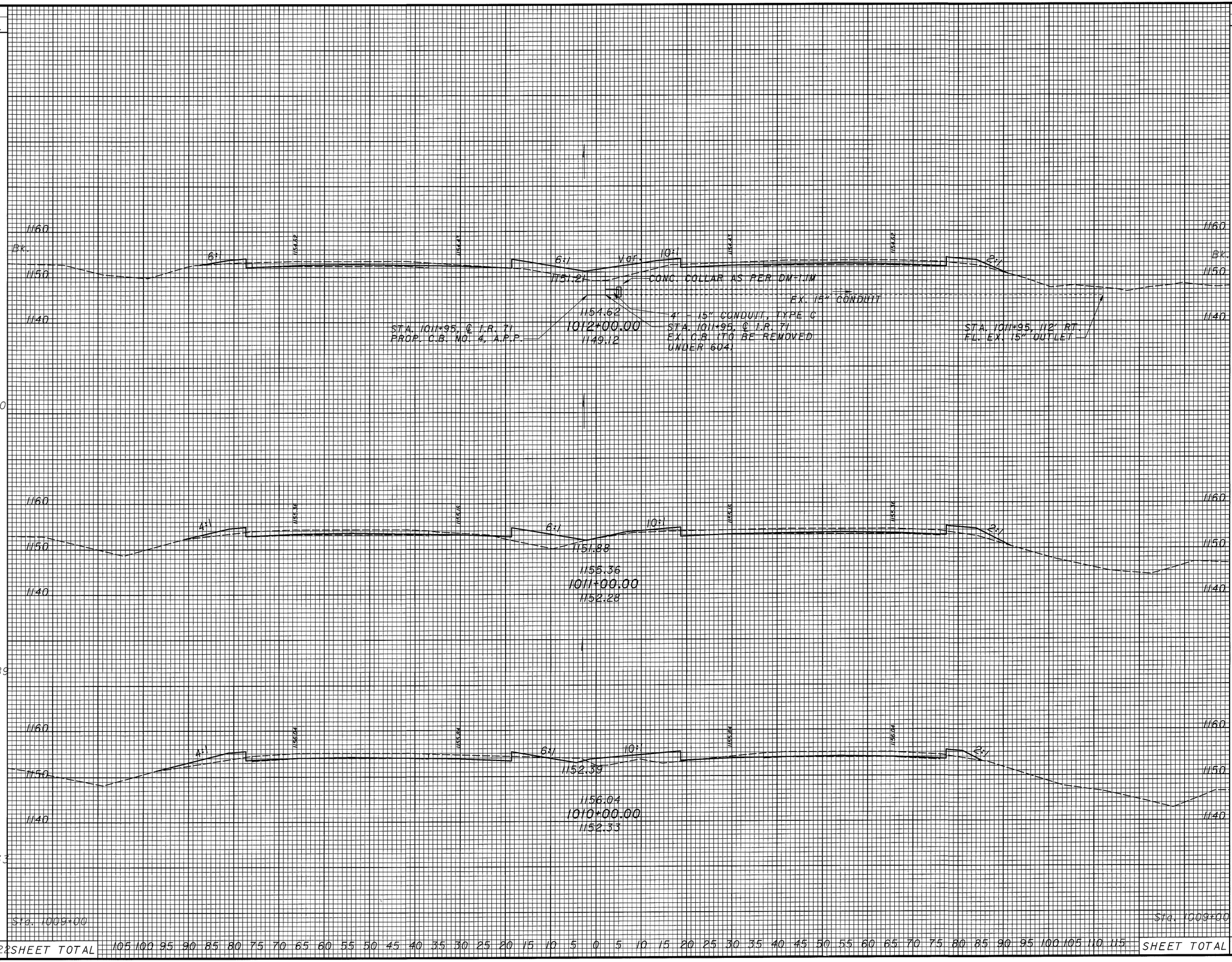

CALCULATED NJV
CHECKED JWR

CROSS SECTIONS
STA. 1010+00 TO STA. 1012+00

MED-71-15.78

269
940

DESIGN FILE : $$$$$$$$$$DESIGNFILESPECIFICATION$$$$$$$$$$
USERNAME : $$$$INSTRUCTIONS$$$$
DATE : $$$$DATE$$$$
TIME : $$$$TIME$$$$

SEEDING	
END WIDTH	SQ. YDS.
102	
108	
1167	
108	
1200	
108	
1000	Seeding for Bridge between Sta. 1012+00 to Sta. 1014+00
3367	SHEET TOTAL

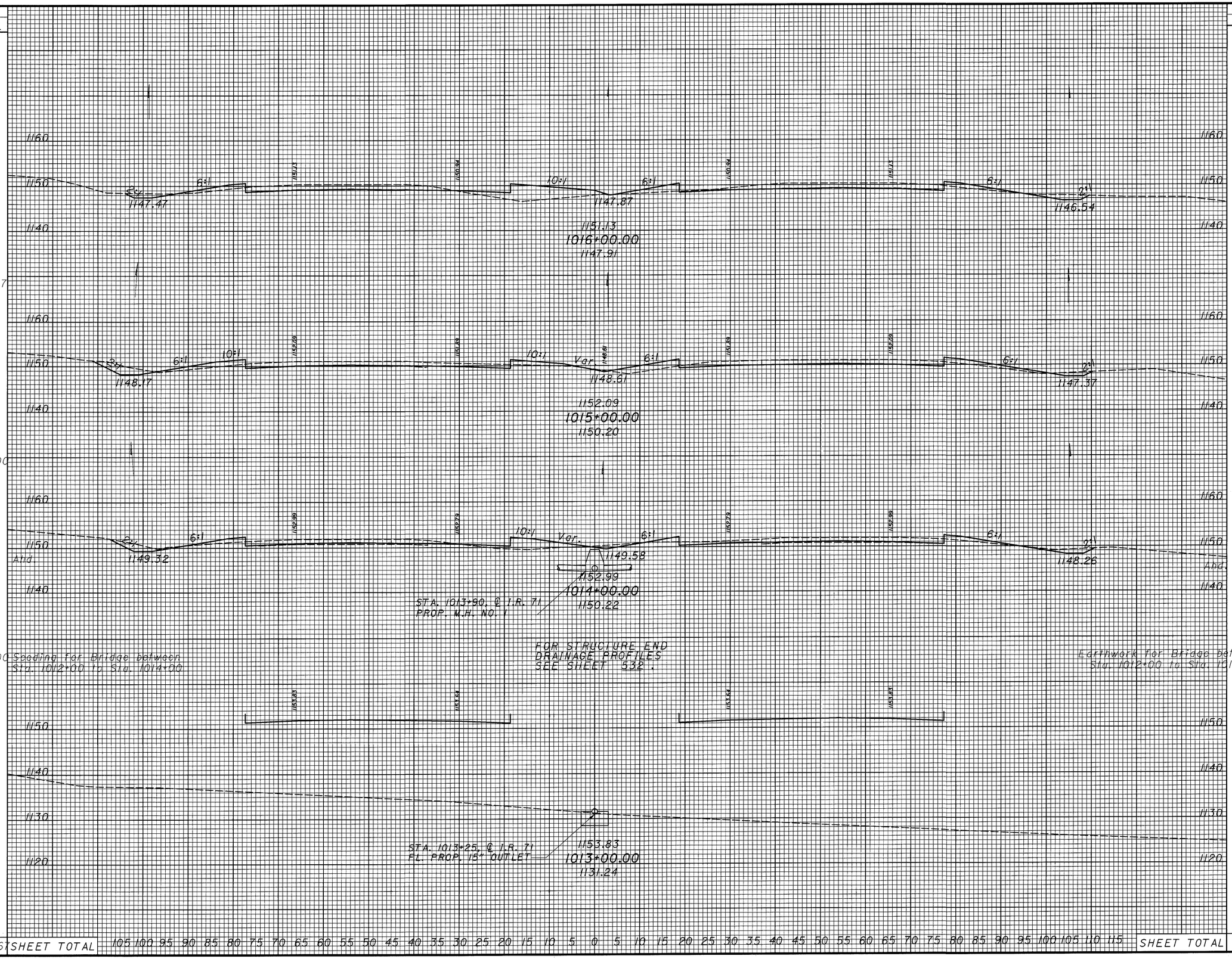

END AREA		VOLUME	
CUT	FILL	CUT	FILL
34	84		
		159	267
52	60		
		167	233
And.	38	66	
		100	300
SHEET TOTAL		426	800

105 100 95 90 85 80 75 70 65 60 55 50 45 40 35 30 25 20 15 10 5 0 5 10 15 20 25 30 35 40 45 50 55 60 65 70 75 80 85 90 95 100 105 110 115

CALCULATED NJV
CHECKED JWR

CROSS SECTIONS STA. 1013+00 TO STA. 1016+00

MED-71-15.78

270
940

DATE : $$$$DATE$$$$ DESIGN FILE : $$$$$$$$$$DESIGNFILESPECIFICATION$$$$$$$$$$
TIME : $$$$TIME$$$$ USERNAME : $$$$INSTRUCTIONS$$$$

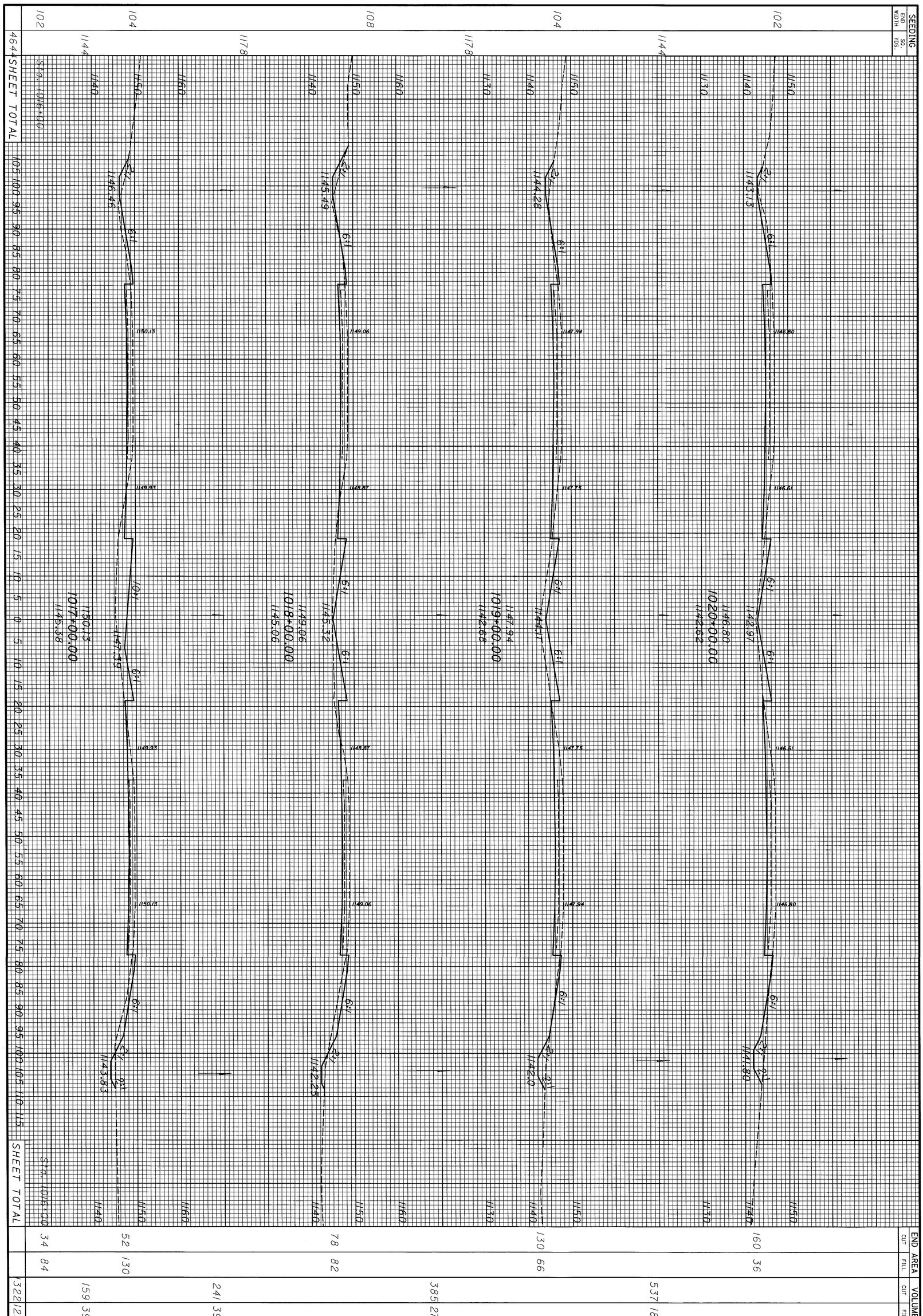

271
940

MED-71-15.78

CROSS SECTIONS
STA. 1017+00 TO STA. 1020+00

CALCULATED NJV
CHECKED JWR

DESIGN FILE : $$$$$$$$$$DESIGNFILESPECIFICATION$$$$$$$$$$
USERNAME : $$$$INSTRUCTIONS$$$$
DATE : $$$$DATE$$$$
TIME : $$$$TIME$$$$

SEEDING END WIDTH	SEEDING SQ. YDS.
	94
	956
	78
	1000
	102
	1133
	102
SHEET TOTAL	3089

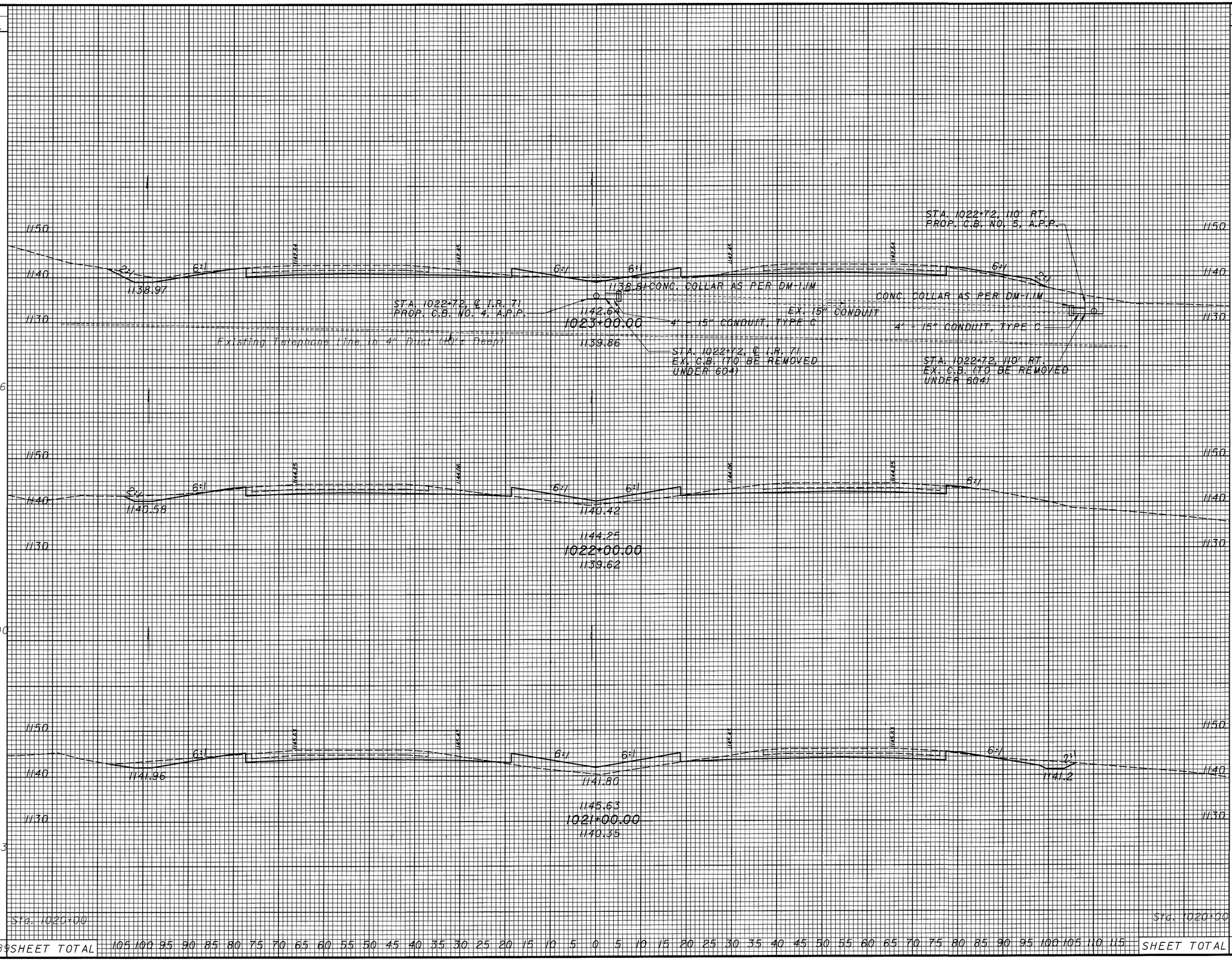

END AREA CUT	END AREA FILL	VOLUME CUT	VOLUME FILL
128	30		
		452	167
116	60		
		441	244
122	72		
		522	200
160	36		
	SHEET TOTAL	1415	611

105 100 95 90 85 80 75 70 65 60 55 50 45 40 35 30 25 20 15 10 5 0 5 10 15 20 25 30 35 40 45 50 55 60 65 70 75 80 85 90 95 100 105 110 115

Sta. 1020+00 — Sta. 1020+00

CALCULATED NJV
CHECKED JWR

CROSS SECTIONS
STA. 1021+00 TO STA. 1023+00

MED-71-15.78

272
940

DATE : $$$$DATE$$$$ DESIGN FILE : $$$$$$$$$$DESIGNFILESPECIFICATION$$$$$$$$$$
TIME : $$$$TIME$$$$ USERNAME : $$$$INSTRUCTIONS$$$$

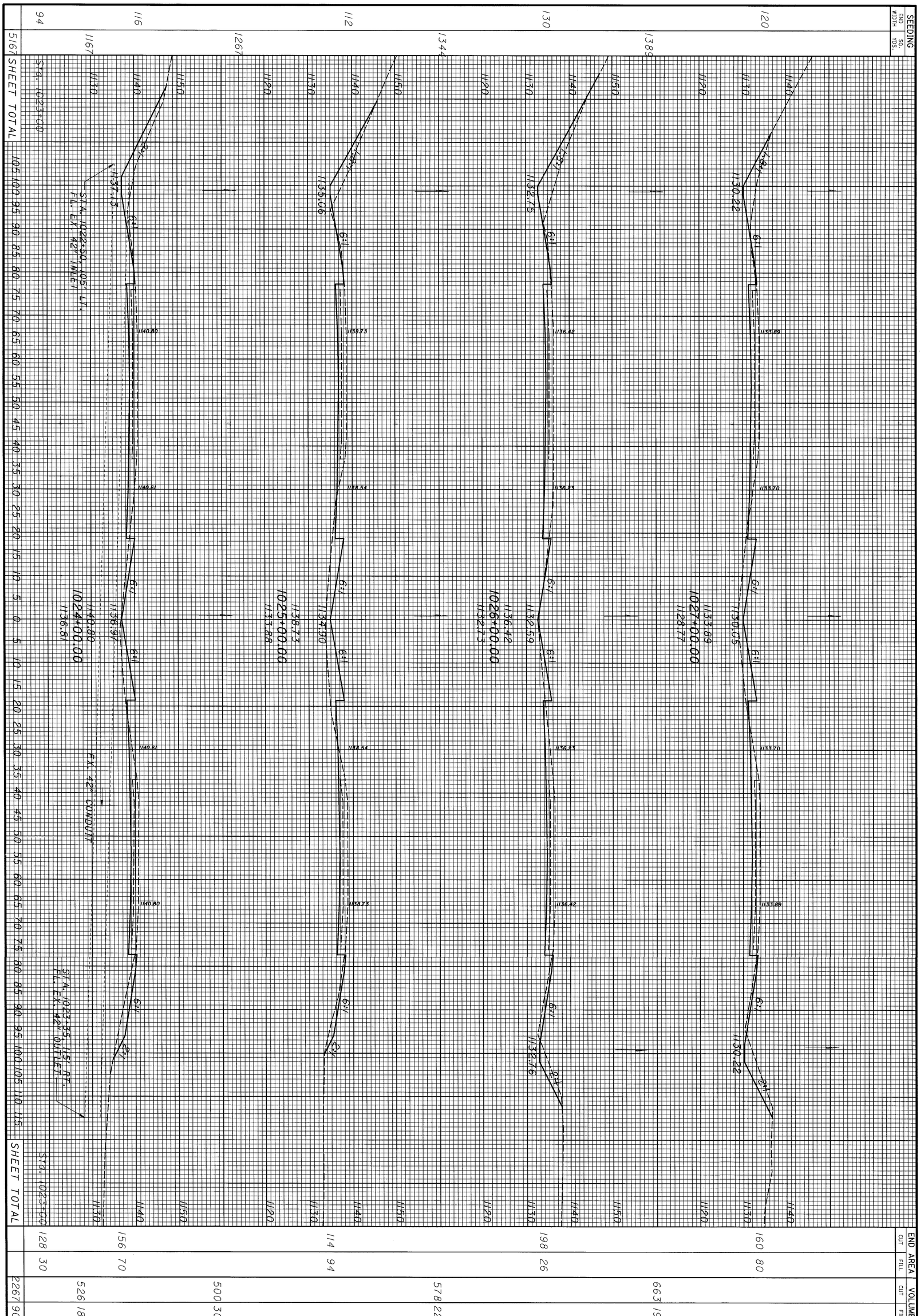

273
940

MED-71-15.78

CROSS SECTIONS
STA. 1024+00 TO STA. 1027+00

CALCULATED NJV
CHECKED JWR

DATE : $$$$DATE$$$$ DESIGN FILE : $$$$$$$$$$DESIGNFILESPECIFICATION$$$$$$$$$$
TIME : $$$$TIME$$$$ USERNAME : $$$$INSTRUCTIONS$$$$

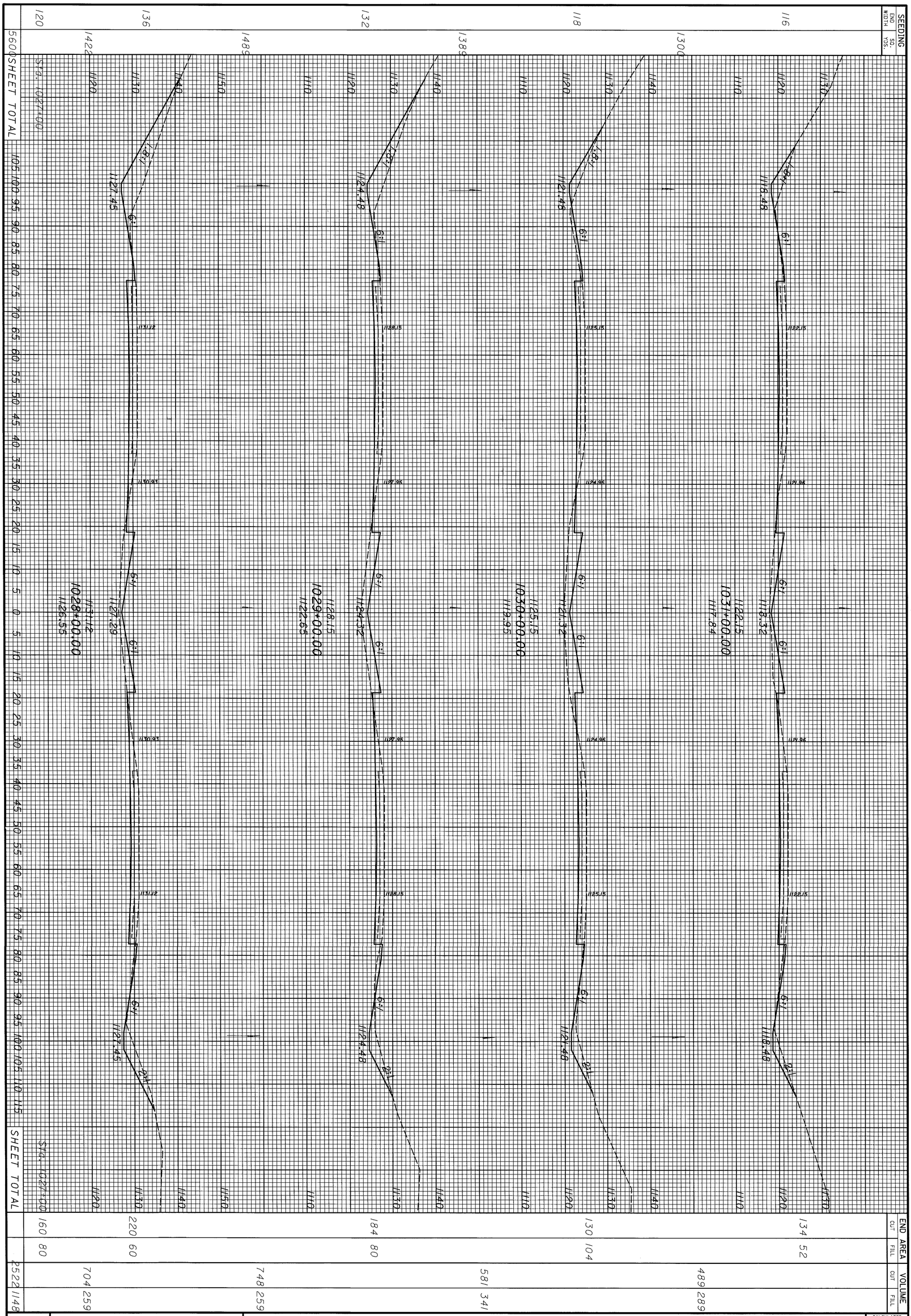

274/940	MED-71-15.78	CROSS SECTIONS STA. 1028+00 TO STA. 1031+00

CALCULATED NJV
CHECKED JWR

DATE : $$$$DATE$$$$ DESIGN FILE : $$$$$$$$$$DESIGNFILESPECIFICATION$$$$$$$$$$
TIME : $$$$TIME$$$$ USERNAME : $$$$INSTRUCTIONS$$$$

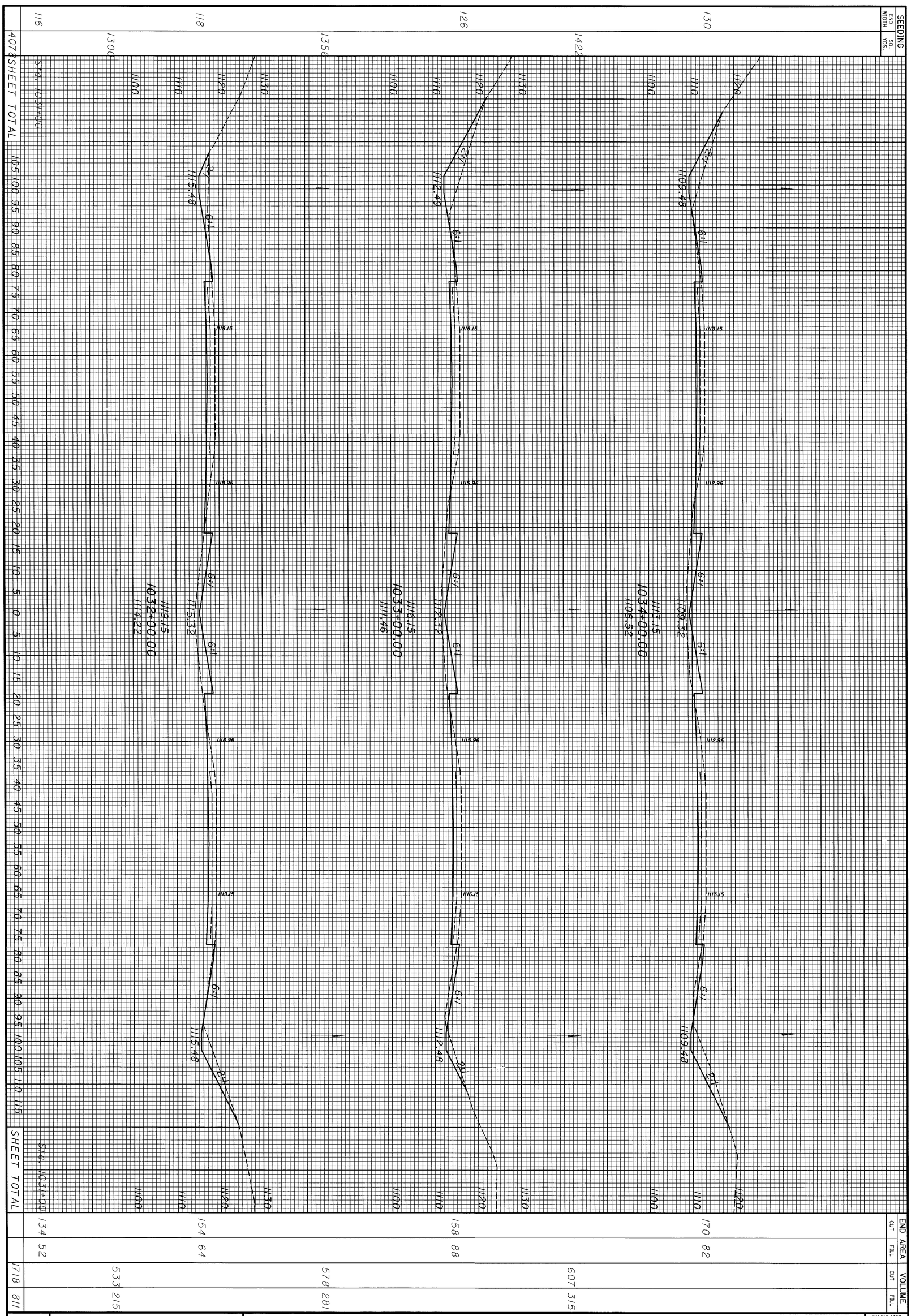

275/940	MED-71-15.78	CROSS SECTIONS STA. 1032+00 TO STA. 1034+00	CALCULATED NJV CHECKED JWR

DATE : $$$$DATE$$$$ DESIGN FILE : $$$$$$$$$$DESIGNFILESPECIFICATION$$$$$$$$$$
TIME : $$$$TIME$$$$ USERNAME : $$$$INSTRUCTIONS$$$$

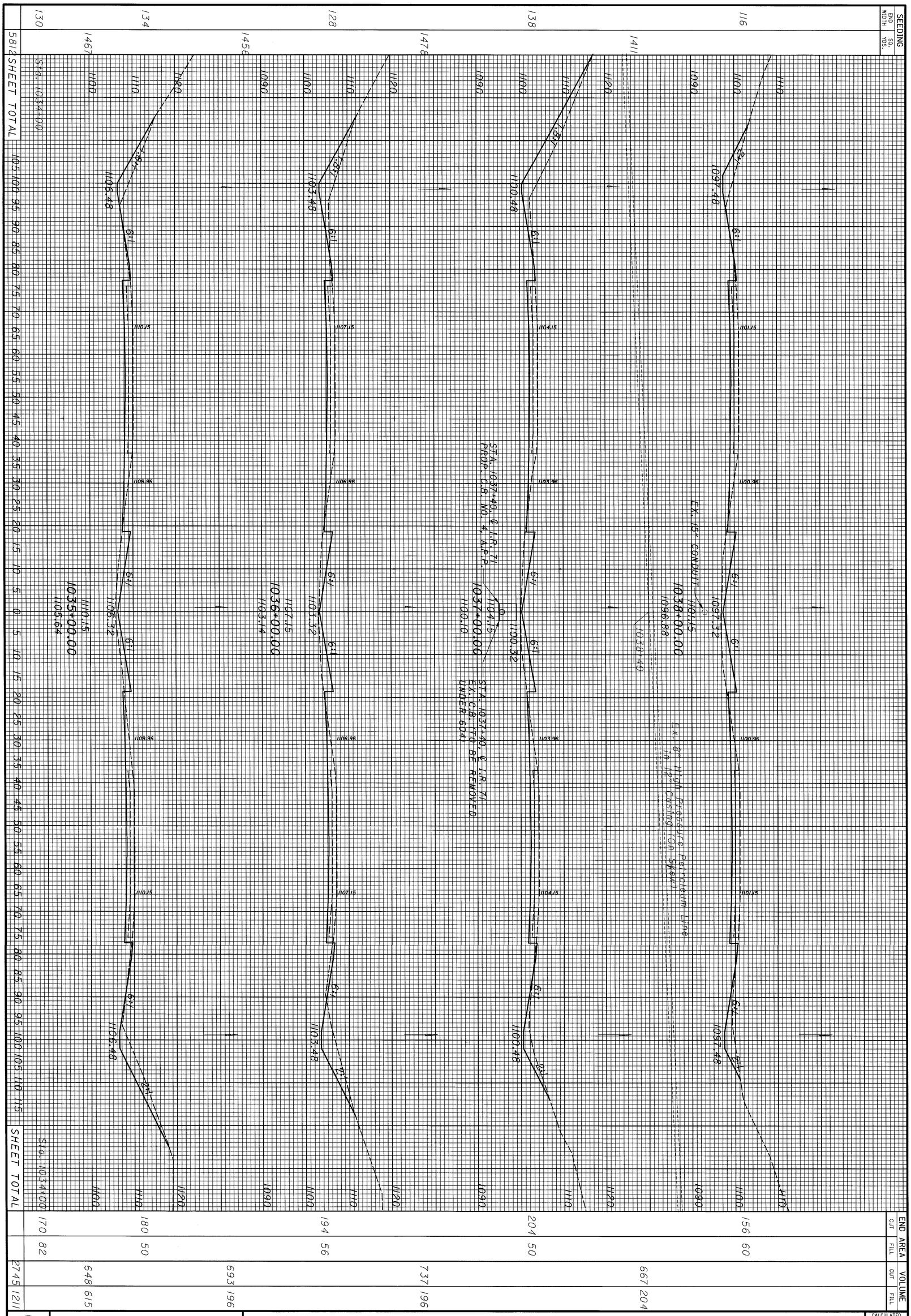

276
940

MED-71-15.78

CROSS SECTIONS
STA. 1035+00 TO STA. 1038+00

CALCULATED NJV
CHECKED JWR

DESIGN FILE : $$$$$$$$$$DESIGNFILESPECIFICATION$$$$$$$$$$
USERNAME : $$$$INSTRUCTIONS$$$$

DATE : $$$$DATE$$$$
TIME : $$$$TIME$$$$

SEEDING	
END WIDTH	SQ. YDS.
110	1200
106	1300
128	1389
122	1322
116	521

END AREA		VOLUME	
CUT	FILL	CUT	FILL
146	72		
		496	237
122	56		
		541	226
170	66		
		589	252
148	70		
		563	241
156	60		
		2189	956

CALCULATED NJV
CHECKED JWR

CROSS SECTIONS
STA. 1039+00 TO STA. 1042+00

MED-71-15.78

277
940

DESIGN FILE : $$$$$$$$$DESIGNFILESPECIFICATION$$$$$$$$$$
USERNAME : $$$$INSTRUCTIONS$$$$
DATE : $$$$DATE$$$$
TIME : $$$$TIME$$$$

SEEDING	
END WIDTH	SQ. YDS.
116	1233
106	1211
112	1289
120	1278
110	
501	SHEET TOTAL

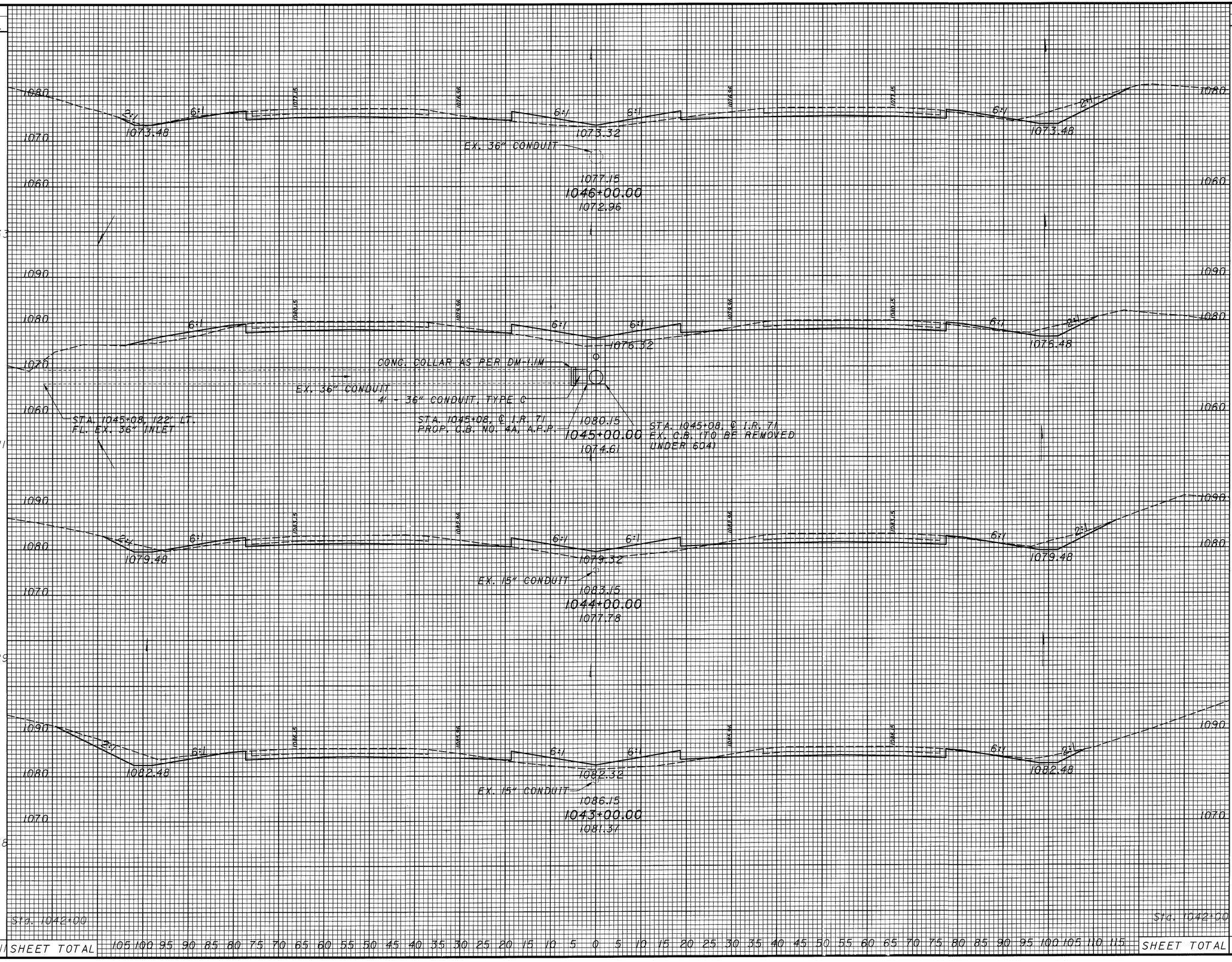

END AREA		VOLUME	
CUT	FILL	CUT	FILL
145	50		
		483	296
116	110		
		448	363
126	86		
		533	285
162	68		
		570	259
146	72		
	SHEET TOTAL	2034	1203

CALCULATED NJV
CHECKED JWR

CROSS SECTIONS
STA. 1043+00 TO STA. 1046+00

MED-71-15.78

278
940

DESIGN FILE : $$$$$$$$$$DESIGNFILESPECIFICATION$$$$$$$$$$
USERNAME : $$$$INSTRUCTIONS$$$$
DATE : $$$$DATE$$$$
TIME : $$$$TIME$$$$

SEEDING END WIDTH	SEEDING SQ. YDS.	END AREA CUT	END AREA FILL	VOLUME CUT	VOLUME FILL
	76				
		98	94		
	1244			515	396
	148			180	120
	1444			633	374
	112	162	82		
	1200			574	278
	102	148	68		
	1211			543	219
	116	145	50		
5099 SHEET TOTAL				2265	1267

STA. 1050+65, ℄ I.R. 71
EX. C.B. NO. 4
RECONSTRUCTED TO GRADE
1050+00.00
1060.61
1065.15

STA. 1050+05, 125' LT.
FL. EX. 30" INLET

EX. 30" CONDUIT

STA. 1050+70, ℄ I.R. 71
EX. M.H.
RECONSTRUCTED TO GRADE

EX. 42" CONDUIT

STA. 1048+75, 145' RT.
FL. EX. 42" INLET

EX. 36" CONDUIT

1049+00.00
1066.44
1068.15

STA. 1048+00, ℄ I.R. 71
EX. C.B. (ABANDON AND CONNECT THROUGH)
1048+00.00
1066.68
1071.15

STA. 1047+55, ℄ I.R. 71
PROP. C.B. NO. 4A, A.P.R.
1047+00.00
1069.59
1074.15

Sta. 1046+00

Sta. 1046+00

SHEET TOTAL

CALCULATED NJV
CHECKED JWR

CROSS SECTIONS
STA. 1047+00 TO STA. 1050+00

MED-71-15.78

279
940

DESIGN FILE : $$$$$$$$$$DESIGNFILESPECIFICATION$$$$$$$$$$
USERNAME : $$$$INSTRUCTIONS$$$$
DATE : $$$$DATE$$$$
TIME : $$$$TIME$$$$

SEEDING		END AREA		VOLUME		CALCULATED	CHECKED
END WIDTH	SQ. YDS.	CUT	FILL	CUT	FILL	NJV	JWR

650 Seeding for Bridge between Sta. 1051+00 to Sta. 1054+00

Earthwork for Bridge between Sta. 1051+00 to Sta. 1054+00 — 350 100

STA. 1053+55, ℄ I.R. 71
FL. PROP. 15" OUTLET

1056.15
1053+00.00
1018.38

STA. 1052+15, ℄ I.R. 71
FL. PROP. 48" OUTLET
SEE DRAINAGE DETAILS SHEET NO. 522.

1059.15
1052+00.00
1027.76

STA. 1052+15, 18" RT.
FL. EX. 48" OUTLET

80 Bk. — 116 40

2:1 — 1056.48 — 6:1 — 6:1 Var. 10:1 — 1058.75

1062.15
1051+00.00
1058.89

867 — 396 248

76 Sta. 1050+00 — Sta. 1050+00 — 98 94

1517 SHEET TOTAL 105 100 95 90 85 80 75 70 65 60 55 50 45 40 35 30 25 20 15 10 5 0 5 10 15 20 25 30 35 40 45 50 55 60 65 70 75 80 85 90 95 100 105 110 115 SHEET TOTAL — 746 348

CROSS SECTIONS
STA. 1051+00 TO STA. 1053+00

MED-71-15.78

280
940

DESIGN FILE : $$$$$$$$$$DESIGNFILESPECIFICATION$$$$$$$$$$
USERNAME : $$$$INSTRUCTIONS$$$$

DATE : $$$$DATE$$$$
TIME : $$$$TIME$$$$

SEEDING END WIDTH	SEEDING SQ. YDS.	END AREA CUT	END AREA FILL	VOLUME CUT	VOLUME FILL
54		134	18		
	711			470	244
74		120	114		
	878			393	441
84	Abd.	Abd.	92	124	
1589	SHEET TOTAL			863	685

105 100 95 90 85 80 75 70 65 60 55 50 45 40 35 30 25 20 15 10 5 0 5 10 15 20 25 30 35 40 45 50 55 60 65 70 75 80 85 90 95 100 105 110 115

CALCULATED NJV
CHECKED JWR

CROSS SECTIONS
STA. 1054+00 TO STA. 1056+00

MED-71-15.78

DESIGN FILE : $$$$$$$$$$DESIGNFILESPECIFICATION$$$$$$$$$$
USERNAME : $$$$INSTRUCTIONS$$$$
DATE : $$$$DATE$$$$
TIME : $$$$TIME$$$$

SEEDING	
END WIDTH	SQ. YDS.
76	
	778
64	
74	
	711
54	
	2256

END AREA		VOLUME	
CUT	FILL	CUT	FILL
136	40		
		504	115
136	22		
		496	152
132	60		
		493	144
134	18		
SHEET TOTAL		1493	411

CALCULATED NJV
CHECKED JWR

CROSS SECTIONS
STA. 1057+00 TO STA. 1059+00

MED-71-15.78

DESIGN FILE : $$$$$$$$$$DESIGNFILESPECIFICATION$$$$$$$$$$
USERNAME : $$$$INSTRUCTIONS$$$$
DATE : $$$$DATE$$$$
TIME : $$$$TIME$$$$

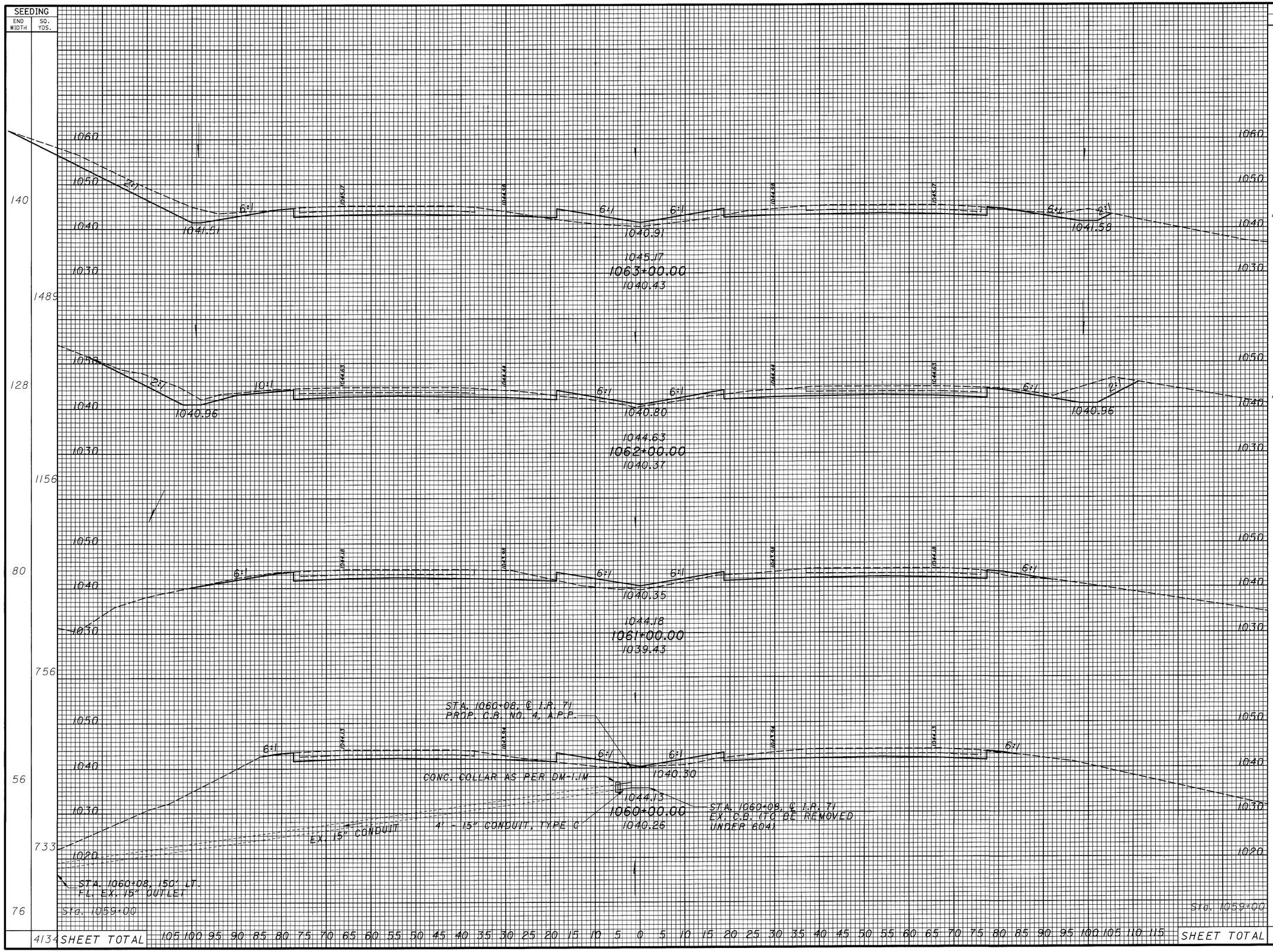

SEEDING END WIDTH	SEEDING SQ. YDS.
140	1489
128	1156
80	756
56	733
76	4134

END AREA CUT	END AREA FILL	VOLUME CUT	VOLUME FILL
245	58	898	156
240	26	689	141
132	50	452	170
112	42	459	152
136	40	2498	619

SHEET TOTAL 105 100 95 90 85 80 75 70 65 60 55 50 45 40 35 30 25 20 15 10 5 0 5 10 15 20 25 30 35 40 45 50 55 60 65 70 75 80 85 90 95 100 105 110 115 SHEET TOTAL

CALCULATED NJV
CHECKED JWR

CROSS SECTIONS
STA. 1060+00 TO STA. 1063+00

MED-71-15.78

283
940

DESIGN FILE : $$$$$$$$$$DESIGNFILESPECIFICATION$$$$$$$$$$
USERNAME : $$$$INSTRUCTIONS$$$$
DATE : $$$$DATE$$$$
TIME : $$$$TIME$$$$

SEEDING		END AREA		VOLUME	
END WIDTH	SQ. YDS.	CUT	FILL	CUT	FILL
132	1467	210	42	778	148
132	1567	210	38	1000	163
150	1611	330	50	1065	200
140	4645	245	58	2843	511

CALCULATED NJV
CHECKED JWR

CROSS SECTIONS
STA. 1064+00 TO STA. 1066+00

MED-71-15.78

284
940

DESIGN FILE : $$$$$$$$$$DESIGNFILESPECIFICATION$$$$$$$$$$
USERNAME : $$$$INSTRUCTIONS$$$$
DATE : $$$$DATE$$$$
TIME : $$$$TIME$$$$

CROSS SECTIONS STA. 1067+00 TO STA. 1069+00

CALCULATED NJV
CHECKED JWR

SEEDING END WIDTH	SEEDING SQ. YDS.	END AREA CUT	END AREA FILL	VOLUME CUT	VOLUME FILL
132		222	46		
				826	144
110		224	32		
				915	67
112		363	4		
				1061	85
132		210	42		
393	SHEET TOTAL			2802	296

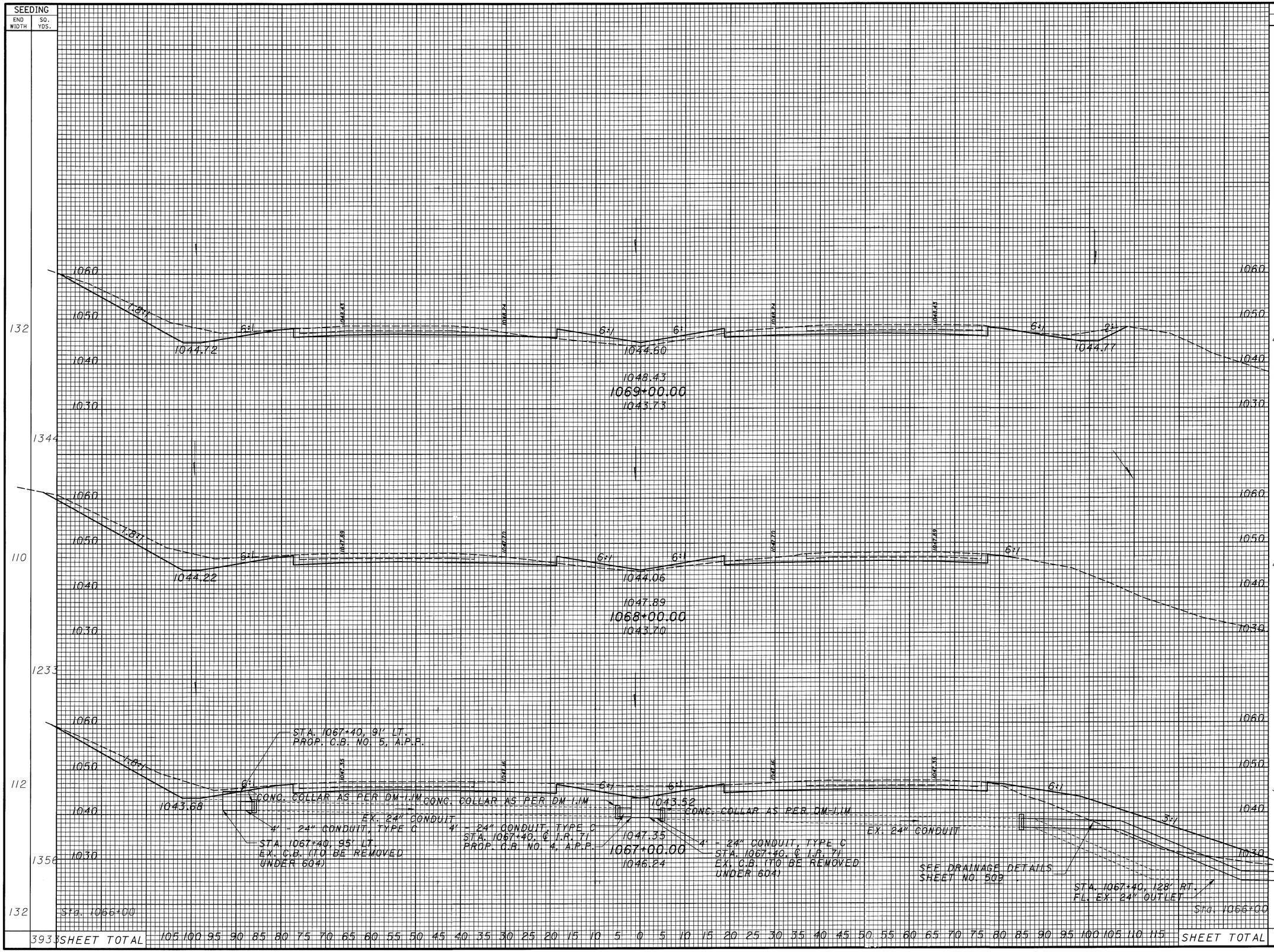

MED-71-15.78

285
940

DESIGN FILE : $$$$$$$$$$DESIGNFILES\SPECIFICATION$$$$$$$$$$
USERNAME : $$$$INSTRUCTIONS$$$$$
DATE : $$$$DATE$$$$
TIME : $$$$TIME$$$$

CROSS SECTIONS
STA. 1070+00 TO STA. 1073+00

CALCULATED NJV
CHECKED JWR

MED-71-15.78

286
940

SEEDING END WIDTH	SEEDING SQ. YDS.	END AREA CUT	END AREA FILL	VOLUME CUT	VOLUME FILL
150	1633	475	2	1546	6
144	1522	360	1	1185	17
130	1522	280	8	1037	74
144	1533	280	32	930	289
132	621	222	46	4698	386
SHEET TOTAL					

1073+00.00
1049.87
1050.48

1072+00.00
1049.47
1046.16

1071+00.00
1049.24
1045.75

1070+00.00
1048.92
1044.94

STA. 1070+92, 91' LT.
PROP. C.B. NO. 5, A.P.P.

CONC. COLLAR AS PER DM-1.1M

EX. 24" CONDUIT

4' - 24" CONDUIT, TYPE C
STA. 1070+92, 95' LT.
EX. C.B. (TO BE REMOVED UNDER 604)

4' - 24" CONDUIT, TYPE C
STA. 1070+92, ℄ I.R. 71
PROP. C.B. NO. 4, A.P.P.

CONC. COLLAR AS PER DM-1.1M

4' - 24" CONDUIT, TYPE C
STA. 1070+92, ℄ I.R. 71
EX. C.B. (TO BE REMOVED UNDER 604)

EX. 24" CONDUIT

STA. 1070+92, 115' RT.
FL. EX. 24" OUTLET

Sta. 1069+00

SHEET TOTAL 105 100 95 90 85 80 75 70 65 60 55 50 45 40 35 30 25 20 15 10 5 0 5 10 15 20 25 30 35 40 45 50 55 60 65 70 75 80 85 90 95 100 105 110 115 SHEET TOTAL

DESIGN FILE : $$$$$$$$$$DESIGNFILESPECIFICATION$$$$$$$$$$
USERNAME : $$$$INSTRUCTIONS$$$$
DATE : $$$$DATE$$$$
TIME : $$$$TIME$$$$

SEEDING	
END WIDTH	SQ. YDS.
150	1633
144	1722
166	1833
164	1744
150	
6932	SHEET TOTAL

END AREA		VOLUME	
CUT	FILL	CUT	FILL
275	32		
		1102	85
320	14		
		1370	30
420	2		
		1574	7
430	2		
		1676	7
475	2		
	SHEET TOTAL	5722	129

CALCULATED NJV
CHECKED JWR

CROSS SECTIONS STA. 1074+00 TO STA. 1077+00

MED-71-15.78

287
940

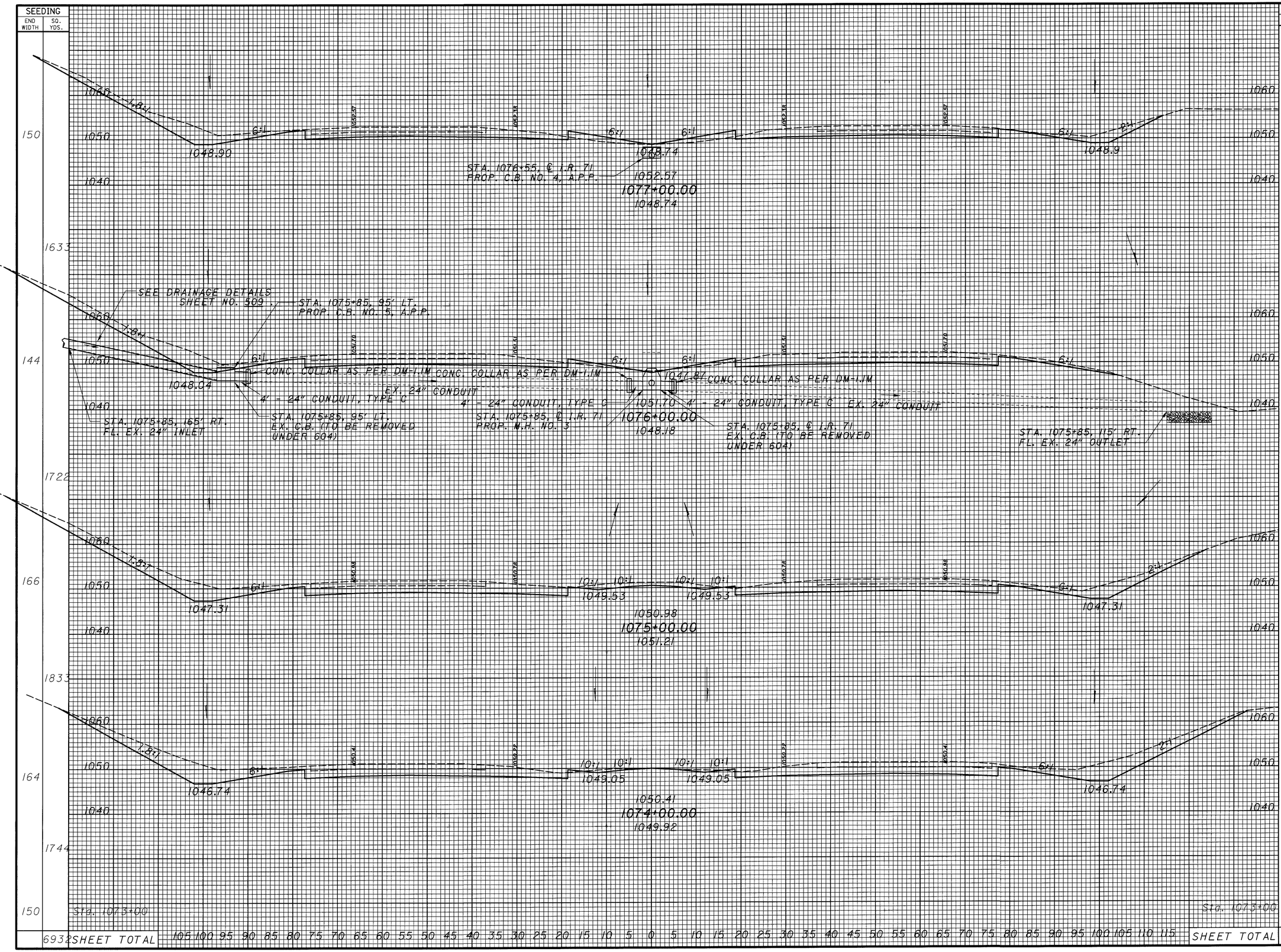

DESIGN FILE : $$$$$$$$$$DESIGNFILESPECIFICATION$$$$$$$$$$
USERNAME : $$$$INSTRUCTIONS$$$$
DATE : $$$$DATE$$$$$
TIME : $$$$TIME$$$$

SEEDING END WIDTH	SEEDING SQ. YDS.	END AREA CUT	END AREA FILL	VOLUME CUT	VOLUME FILL
58		108	68		
	767			426	222
80		122	52		
	1178			707	222
132		260	68		
	1733			1130	219
180		350	50		
	1833			1157	152
150		275	32		
551	SHEET TOTAL			3420	815

CALCULATED NJV
CHECKED JWR

CROSS SECTIONS
STA. 1078+00 TO STA. 1081+00

MED-71-15.78

288
940

DESIGN FILE : $$$$$$$$$$DESIGNFILES\SPECIFICATION$$$$$$$$$$
USERNAME : $$$$INSTRUCTIONS$$$$
DATE : $$$$DATE$$$$
TIME : $$$$TIME$$$$

SEEDING	
END WIDTH	SQ. YDS.
84	
	956
88	
	878
70	
	711
58	
2545	SHEET TOTAL

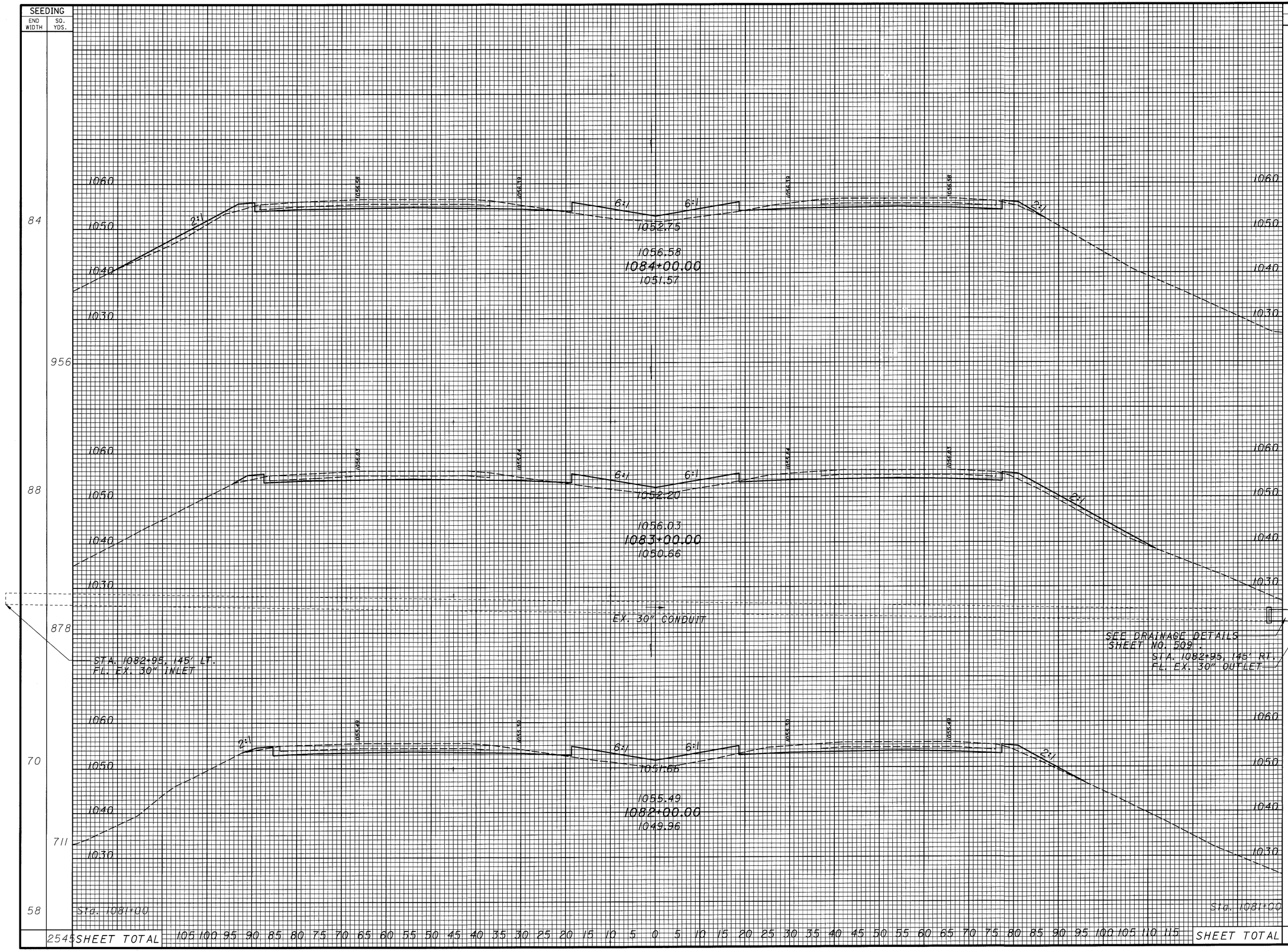

END AREA		VOLUME	
CUT	FILL	CUT	FILL
106	98		
		396	367
108	100		
		407	333
112	80		
		407	274
108	68		
		1210	974

CALCULATED NJV
CHECKED JWR

CROSS SECTIONS
STA. 1082+00 TO STA. 1084+00

MED-71-15.78

289
940

DESIGN FILE : $$$$$$$$$$DESIGNFILES\PECIFICATION$$$$$$$$$$
USERNAME : $$$$INSTRUCTIONS$$$$

DATE : $$$$DATE$$$$
TIME : $$$$TIME$$$$

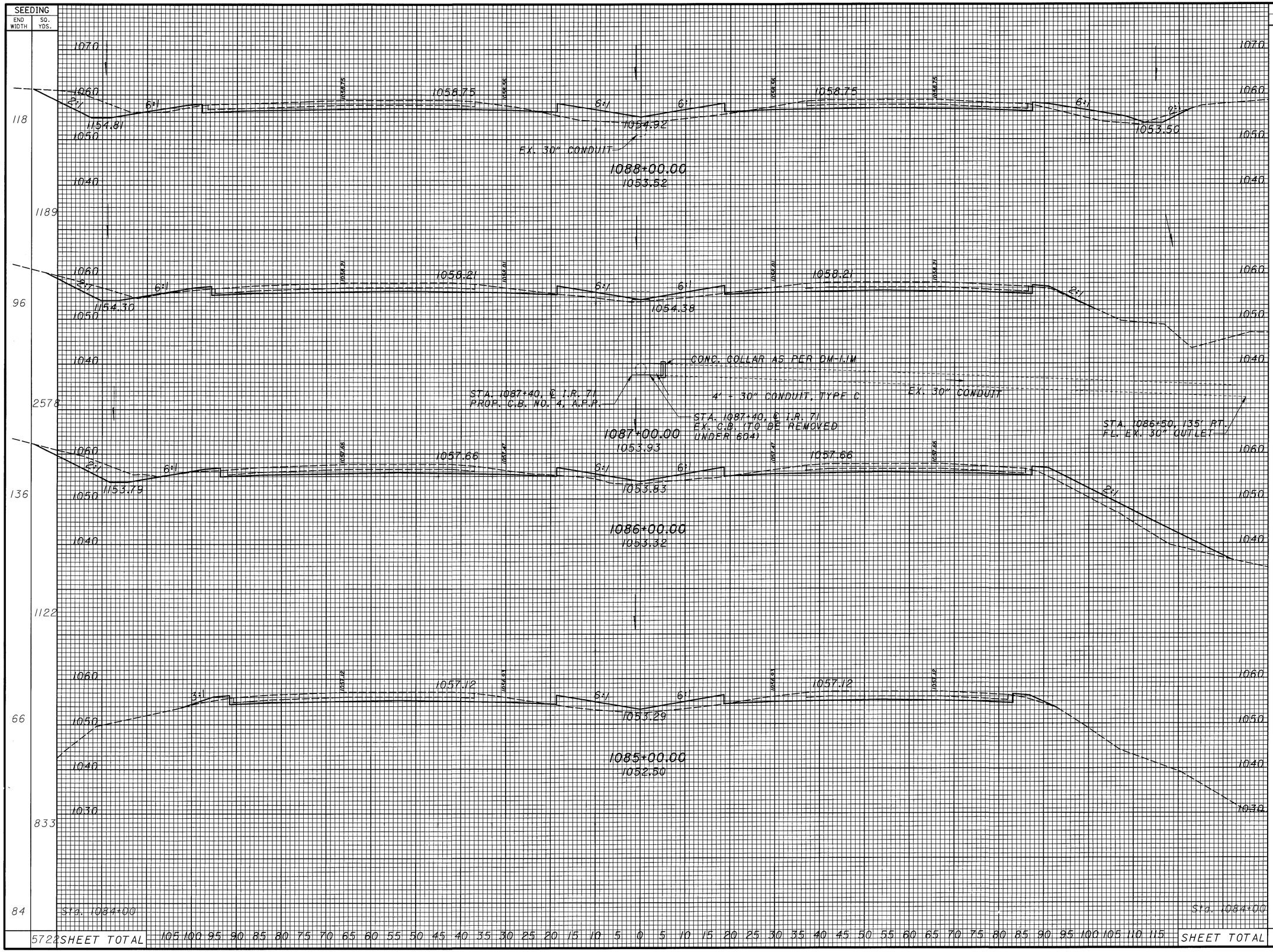

SEEDING END WIDTH	SEEDING SQ. YDS.	END AREA CUT	END AREA FILL	VOLUME CUT	VOLUME FILL
118	1189	180	120	615	315
96	2578	152	50	581	352
136	1122	162	140	507	380
66	833	112	65	407	246
84	5722	108	68	2110	1293
	SHEET TOTAL				

105 100 95 90 85 80 75 70 65 60 55 50 45 40 35 30 25 20 15 10 5 0 5 10 15 20 25 30 35 40 45 50 55 60 65 70 75 80 85 90 95 100 105 110 115

CALCULATED NJV
CHECKED JWR

CROSS SECTIONS
STA. 1085+00 TO STA. 1088+00

MED-71-15.78

290
940

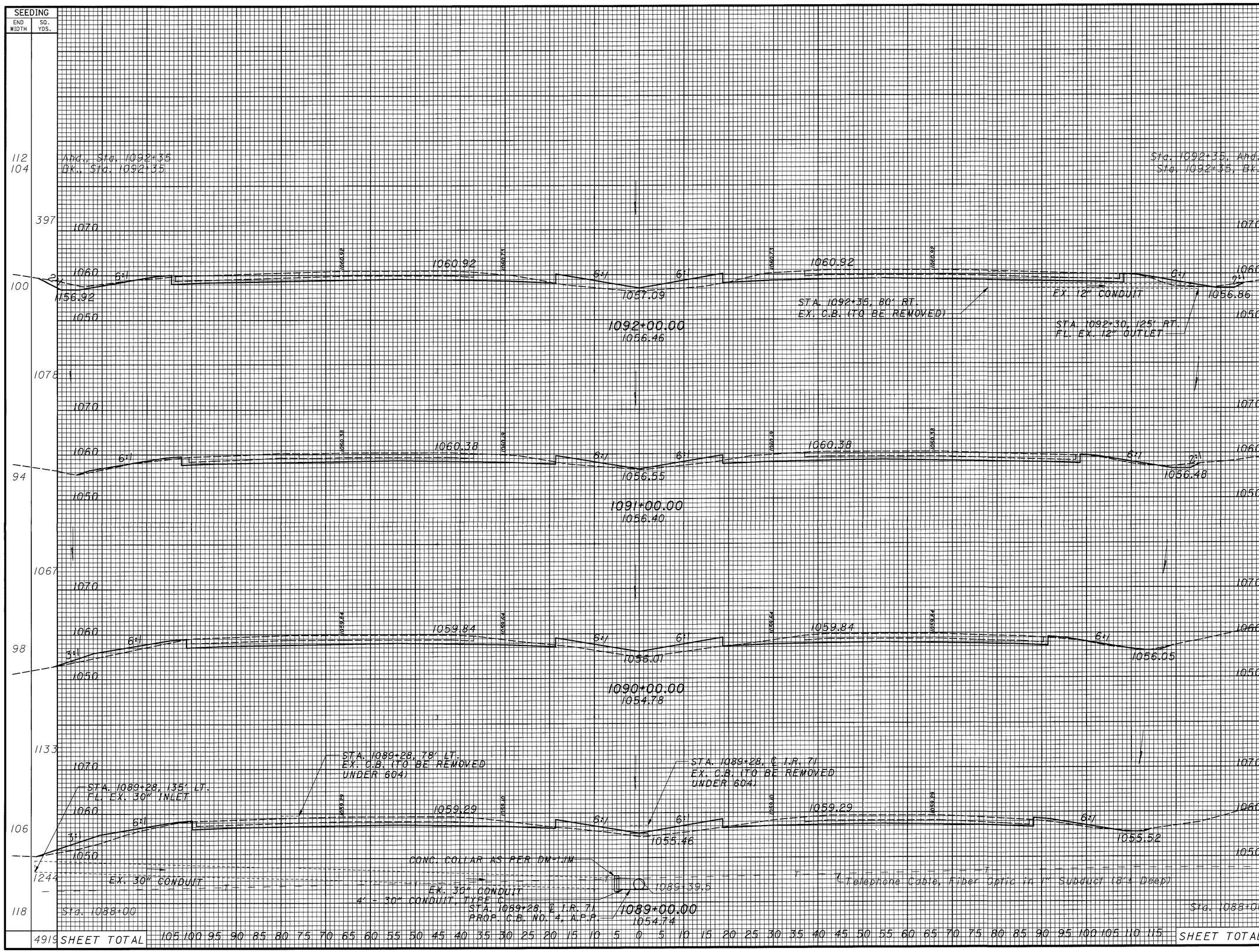

CALCULATED NJV
CHECKED JWR

CROSS SECTIONS
STA. 1089+00 TO STA. 1092+00

MED-71-15.78

DATE : $$$$DATE$$$$ TIME : $$$$TIME$$$$
DESIGN FILE : $$$$$$$$$$DESIGNFILESPECIFICATION$$$$$$$$$$
USERNAME : $$$$INSTRUCTIONS$$$$

DATE : $$$$DATE$$$$
TIME : $$$$TIME$$$$
DESIGN FILE : $$$$$$$$$$DESIGNFILESPECIFICATION$$$$$$$$$$
USERNAME : $$$$INSTRUCTIONS$$$$

SEEDING		END AREA		VOLUME		CALCULATED	
END WIDTH	SQ. YDS.	CUT	FILL	CUT	FILL	NJV	JWR

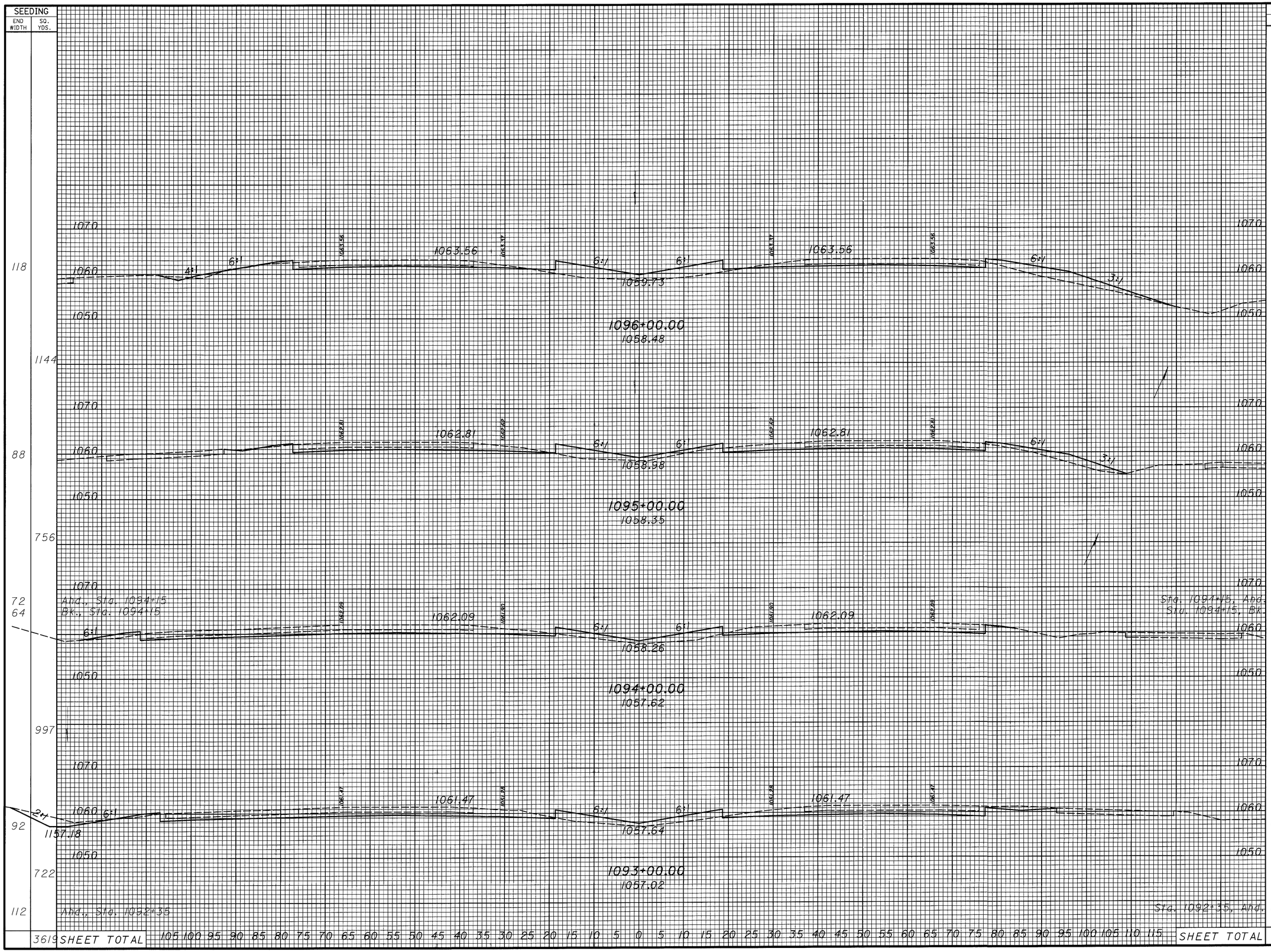

						56	138	
118								
	1144							270 404
88								
						90	80	
756								315 211
72		Ahd., Sta. 1094+15				Sta. 1094+15, Ahd.	110	54
64		Bk., Sta. 1094+15				Sta. 1094+15, Bk.	135	54
	997							639 226
92		1157.18					165	52
	722							379 135
112		Ahd., Sta. 1092+35				Sta. 1092+35, Ahd.	150	60
	3619	SHEET TOTAL				SHEET TOTAL		1603 976

105 100 95 90 85 80 75 70 65 60 55 50 45 40 35 30 25 20 15 10 5 0 5 10 15 20 25 30 35 40 45 50 55 60 65 70 75 80 85 90 95 100 105 110 115

CROSS SECTIONS
STA. 1093+00 TO STA. 1096+00

MED-71-15.78

292
940

DATE : $$$$DATE$$$$ DESIGN FILE : $$$$$$$$$$DESIGNFILESPECIFICATION$$$$$$$$$$
TIME : $$$$TIME$$$$ USERNAME : $$$$INSTRUCTIONS$$$$

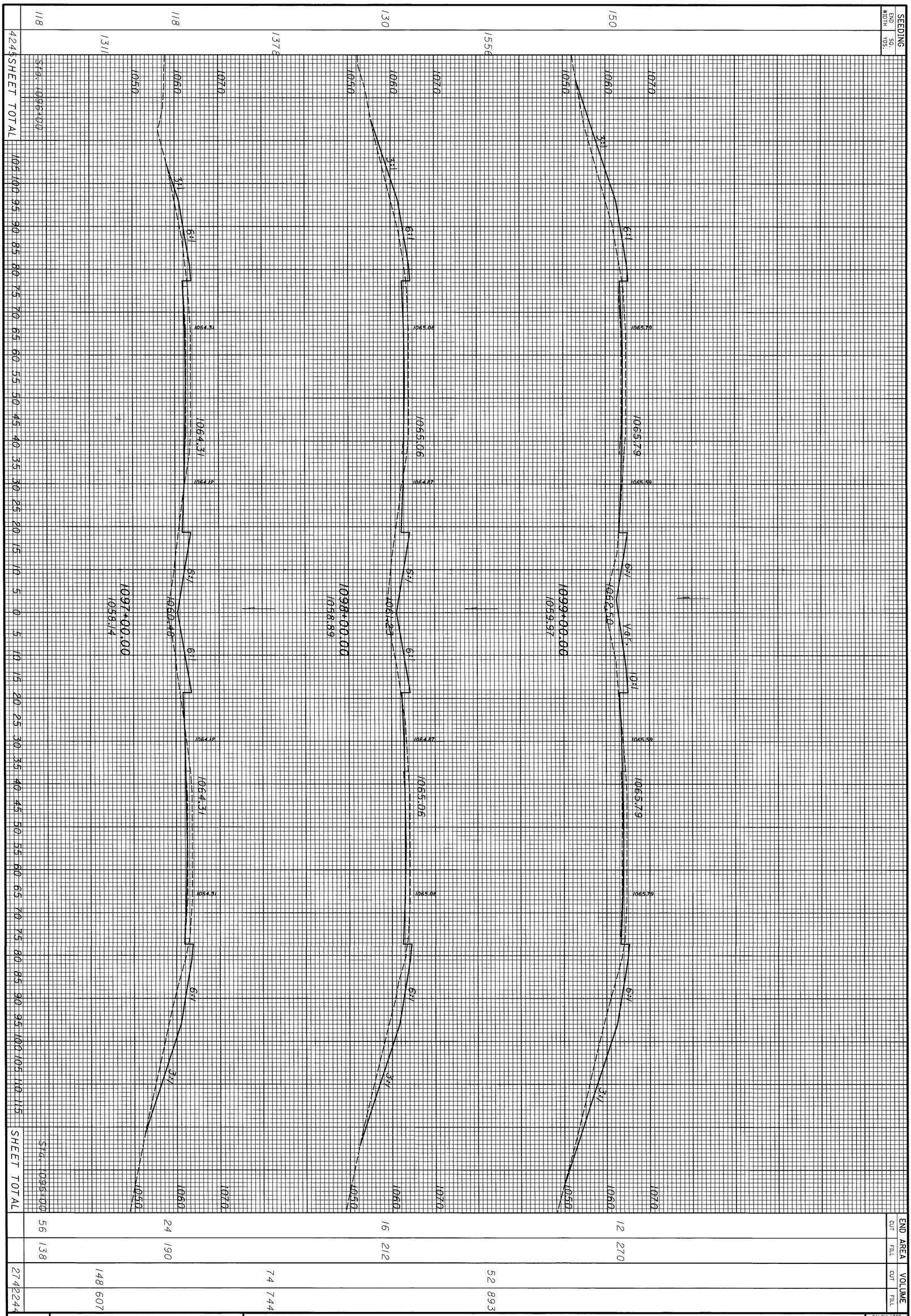

293
940

MED-71-15.78

CROSS SECTIONS
STA. 1097+00 TO STA. 1099+00

CALCULATED NJV
CHECKED JWR

DESIGN FILE : $$$$$$$$$$DESIGNFILESPECIFICATION$$$$$$$$$$
USERNAME : $$$$INSTRUCTIONS$$$$
DATE : $$$$DATE$$$$
TIME : $$$$TIME$$$$

SEEDING		END AREA		VOLUME	
END WIDTH	SQ. YDS.	CUT	FILL	CUT	FILL
95	Bk.	3	200		
				11	902
92		3	172		
				13	567
75		4	134		
				15	524
73		4	149		
				30	776
150	Sta. 1099+00	12	270		
	4028 SHEET TOTAL			69	2769

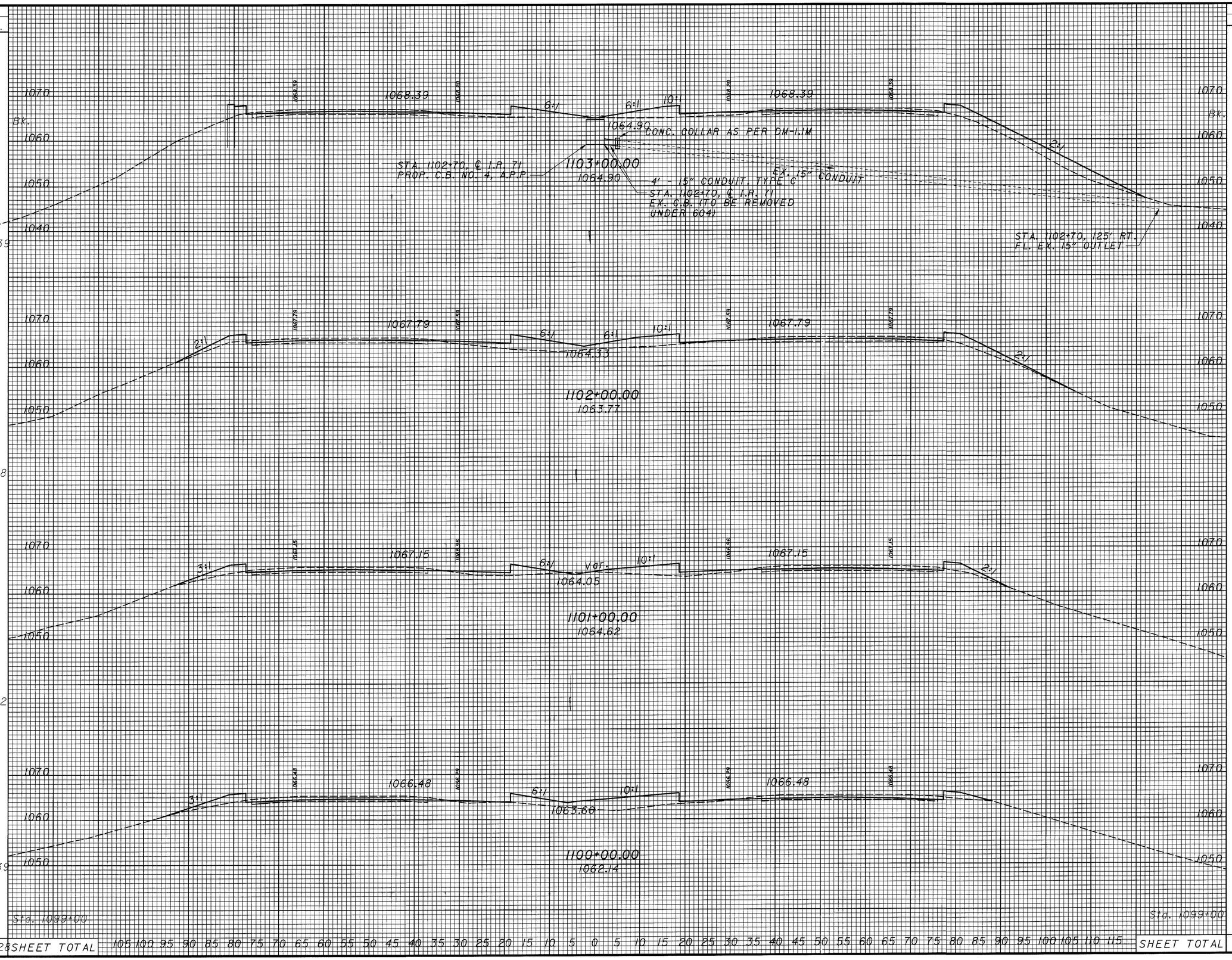

CALCULATED NJV
CHECKED JWR

CROSS SECTIONS
STA. 1100+00 TO STA. 1103+00

MED-71-15.78

294
940

DESIGN FILE : $$$$$$$$$$DESIGNFILE$SPECIFICATION$$$$$$$$$$
USERNAME : $$$$INSTRUCTIONS$$$$
DATE : $$$$DATE$$$$
TIME : $$$$TIME$$$$

SEEDING	
END WIDTH	SQ. YDS.
106	Ahd.
700	Seeding for Bridge 1103+00 to 1106+00
700	SHEET TOTAL

END AREA		VOLUME	
CUT	FILL	CUT	FILL
Bk. 3	200		
		150	300
SHEET TOTAL		150	300

CALCULATED NJV
CHECKED JWR

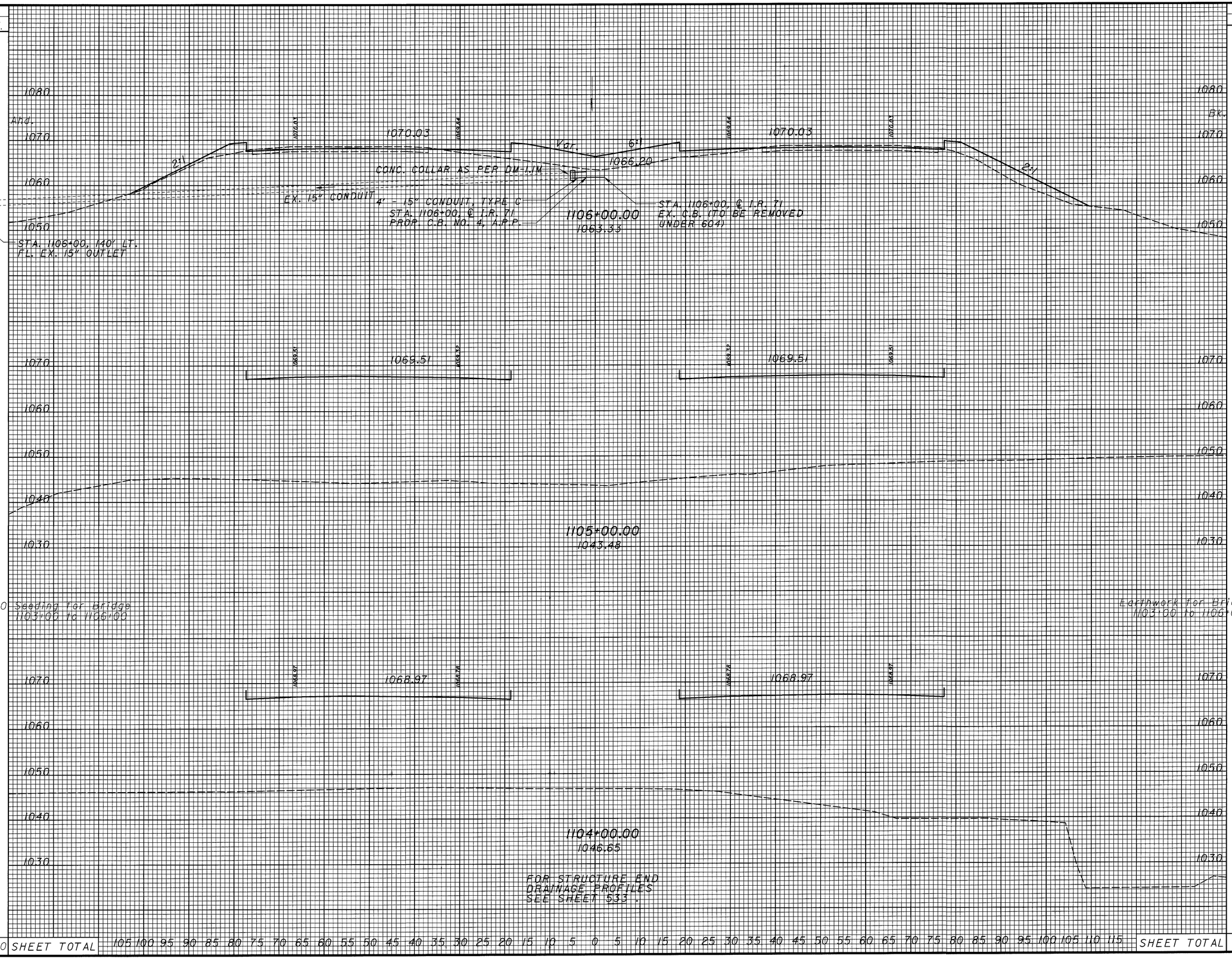

105 100 95 90 85 80 75 70 65 60 55 50 45 40 35 30 25 20 15 10 5 0 5 10 15 20 25 30 35 40 45 50 55 60 65 70 75 80 85 90 95 100 105 110 115

CROSS SECTIONS STA. 1104+00 TO STA. 1106+00

MED-71-15.78

295
940

DESIGN FILE : $$$$$$$$$$DESIGNFILESPECIFICATION$$$$$$$$$$
USERNAME : $$$$INSTRUCTIONS$$$$
DATE : $$$$DATE$$$$
TIME : $$$$TIME$$$$

SEEDING	
END WIDTH	SQ. YDS.
100	1194
115	1283
116	1172
95	1117
106	
SHEET TOTAL	4766

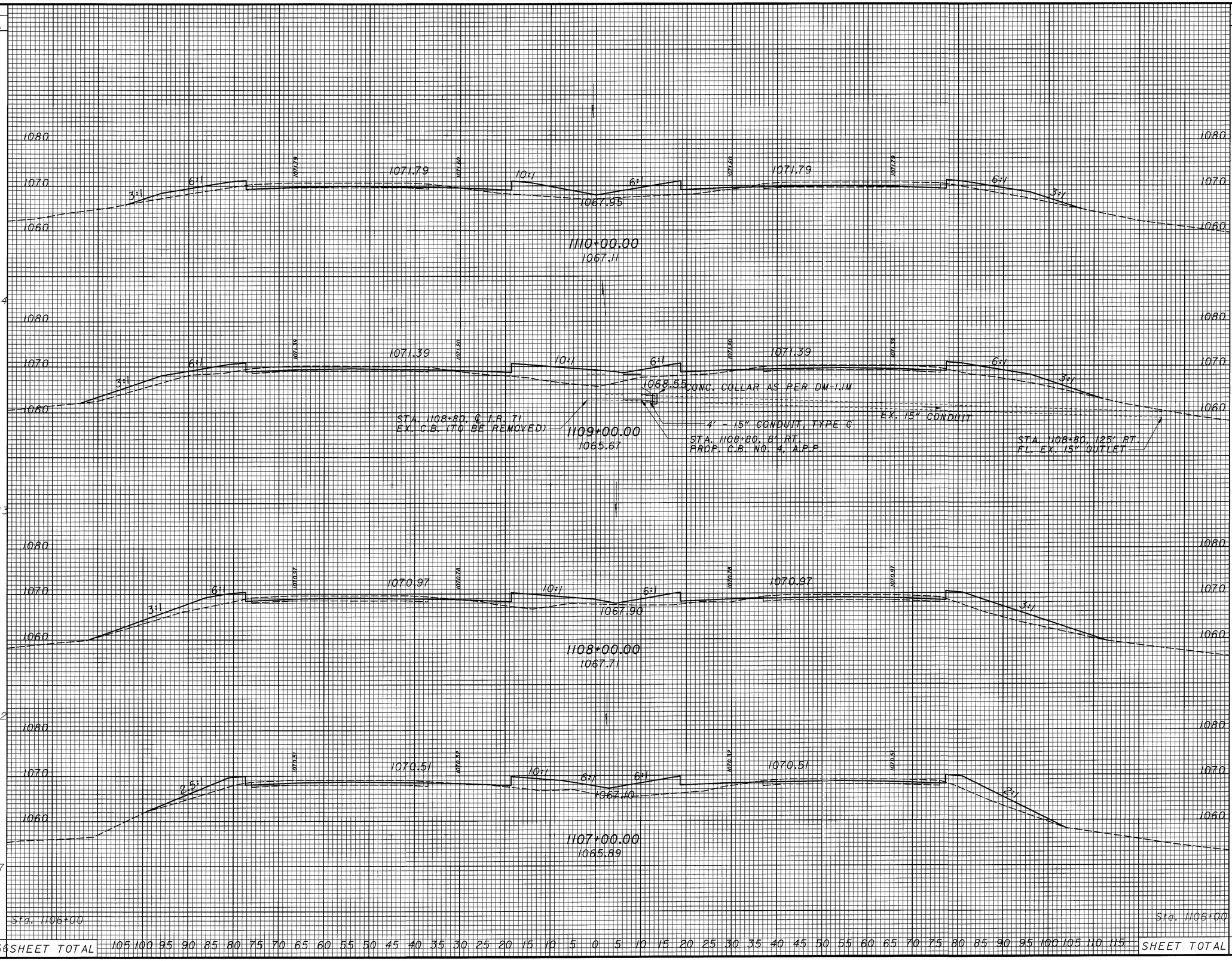

END AREA		VOLUME	
CUT	FILL	CUT	FILL
4	170		
		15	748
4	234		
		15	822
4	210		
		11	796
2	220		
		7	944
2	290		
		48	3310
SHEET TOTAL			

105 100 95 90 85 80 75 70 65 60 55 50 45 40 35 30 25 20 15 10 5 0 5 10 15 20 25 30 35 40 45 50 55 60 65 70 75 80 85 90 95 100 105 110 115

CALCULATED NJV
CHECKED JWR

CROSS SECTIONS
STA. 1107+00 TO STA. 1110+00

MED-71-15.78

DESIGN FILE : $$$$$$$$$$DESIGNFILESPECIFICATION$$$$$$$$$$
USERNAME : $$$$INSTRUCTIONS$$$$

DATE : $$$$DATE$$$$
TIME : $$$$TIME$$$$

SEEDING END WIDTH	SEEDING SQ. YDS.	END AREA CUT	END AREA FILL	VOLUME CUT	VOLUME FILL
68		86	38		
	794			272	198
75		61	69		
	917			174	304
90		33	95		
	1044			76	407
98		8	125		
	1100			22	546
100		4	170		
	3855			544	1455

Sta. 1100+00

SHEET TOTAL 105 100 95 90 85 80 75 70 65 60 55 50 45 40 35 30 25 20 15 10 5 0 5 10 15 20 25 30 35 40 45 50 55 60 65 70 75 80 85 90 95 100 105 110 115 SHEET TOTAL

Sta. 1110+00

CALCULATED N.J.V.

CHECKED J.W.R.

CROSS SECTIONS STA. 1111+00 TO STA. 1114+00

MED-71-15.78

297
940

DESIGN FILE : $$$$$$$$$$DESIGNFILESPECIFICATION$$$$$$$$$$
USERNAME : $$$$INSTRUCTIONS$$$$
DATE : $$$$DATE$$$$$
TIME : $$$$TIME$$$$$

CROSS SECTIONS
STA. 1115+00 TO STA. 1118+00

CALCULATED NJV
CHECKED JWR

SEEDING END WIDTH	SEEDING SQ. YDS.		END AREA CUT	END AREA FILL	VOLUME CUT	VOLUME FILL
55	761	STA. 1118+00	143	28	561	107
82	622	STA. 1117+00	160	30	378	77
85	255	Ahd., Sta. 1116+33	145	32	163	46
65		Bk., Sta. 1116+33	135	32		
74	900	STA. 1116+00	132	43	491	176
88	569	STA. 1115+00	133	52	280	104
80	288	Ahd., Sta. 1114+39	115	40	131	56
65		Bk., Sta. 1114+39	95	40		
68		Sta. 1114+00	86	38		
	3395	SHEET TOTAL			2004	566

MED-71-15.78

DATE : $$$$DATE$$$$ DESIGN FILE : $$$$$$$$$$DESIGNFILESPECIFICATION$$$$$$$$$$
TIME : $$$$TIME$$$$ USERNAME : $$$$INSTRUCTIONS$$$$

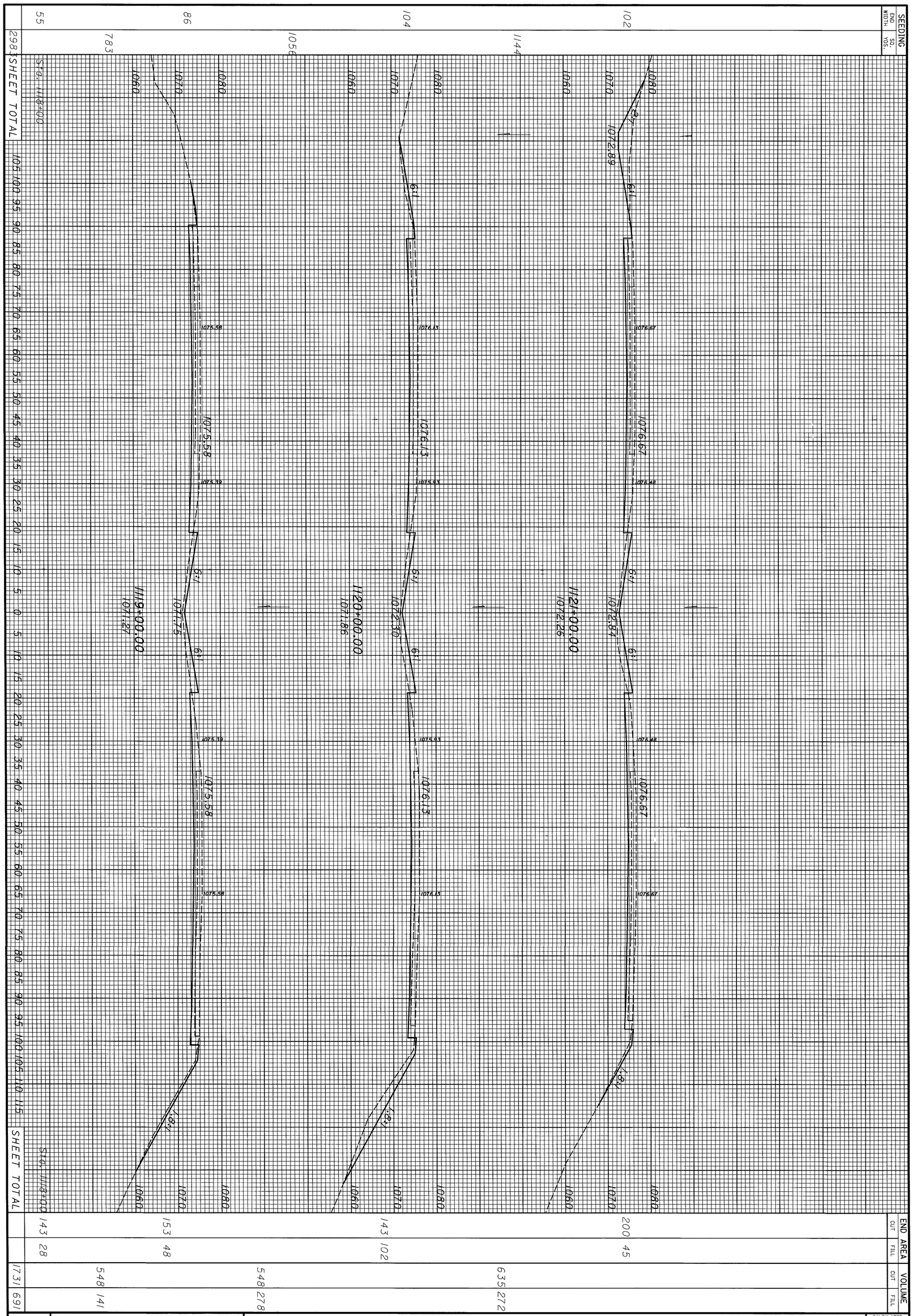

MED-71-15.78

CROSS SECTIONS
STA. 1119+00 TO STA. 1121+00

CALCULATED NJV
CHECKED JWR

299
940

DESIGN FILE : $$$$$$$$$$DESIGNFILESPECIFICATION$$$$$$$$$$
USERNAME : $$$$INSTRUCTIONS$$$$
DATE : $$$$DATE$$$$
TIME : $$$$TIME$$$$

SEEDING	
END WIDTH	SQ. YDS.
110	1167
100	
105	1289
127	
102	1272
	4867

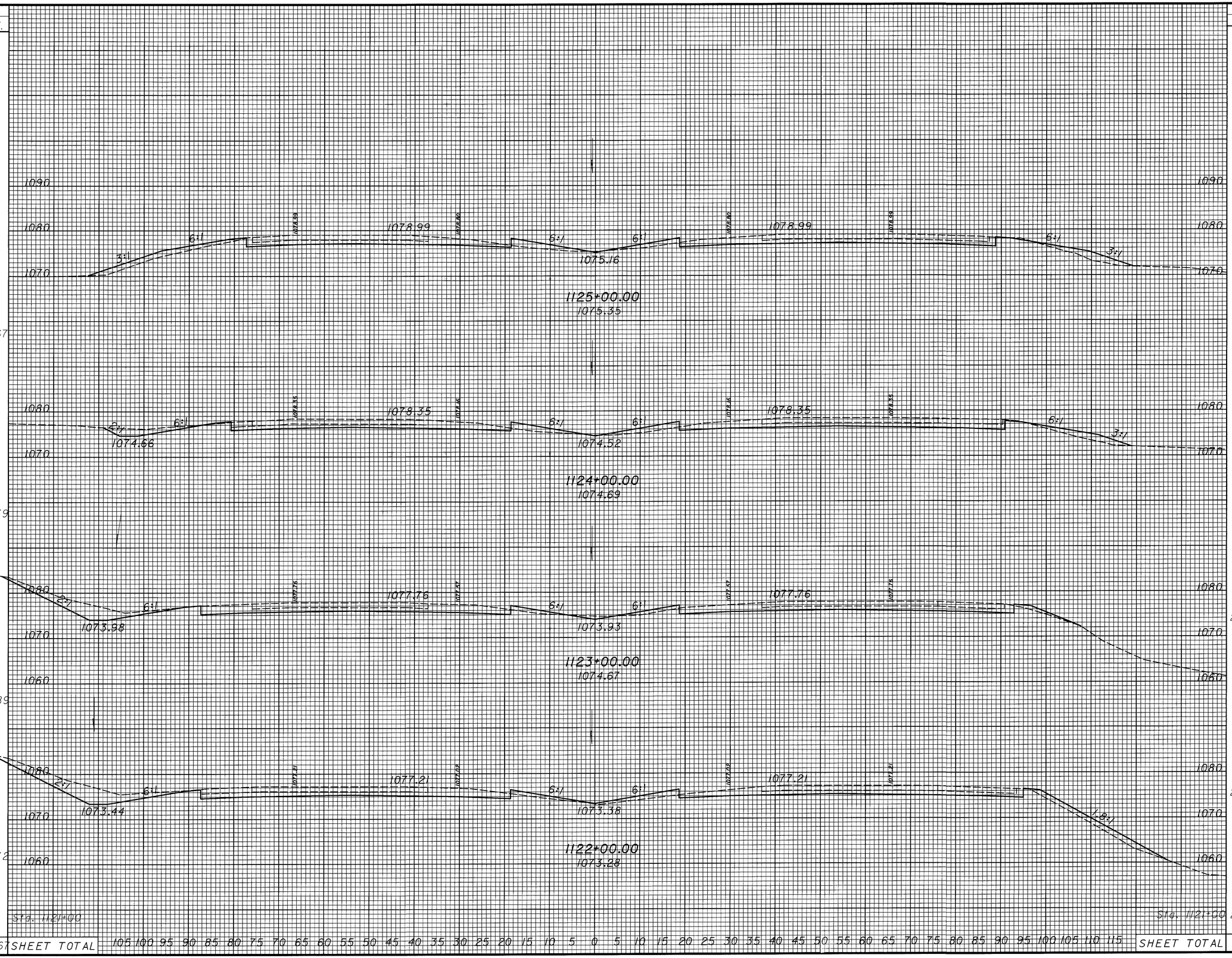

END AREA		VOLUME	
CUT	FILL	CUT	FILL
132	80		
		526	237
152	48		
694	130		
223	22		
830	144		
225	56		
787	187		
200	45		
		2837	698

CALCULATED NJV
CHECKED JWR

CROSS SECTIONS
STA. 1122+00 TO STA. 1125+00

MED-71-15.78

300
940

DESIGN FILE : $$$$$$$$$$DESIGNFILESPECIFICATION$$$$$$$$$$
USERNAME : $$$$INSTRUCTIONS$$$$
DATE : $$$$DATE$$$$$
TIME : $$$$TIME$$$$

SEEDING	
END WIDTH	SQ. YDS.
122	
	1244
102	
1178	
110	
1256	
116	
1256	
110	
4934	SHEET TOTAL

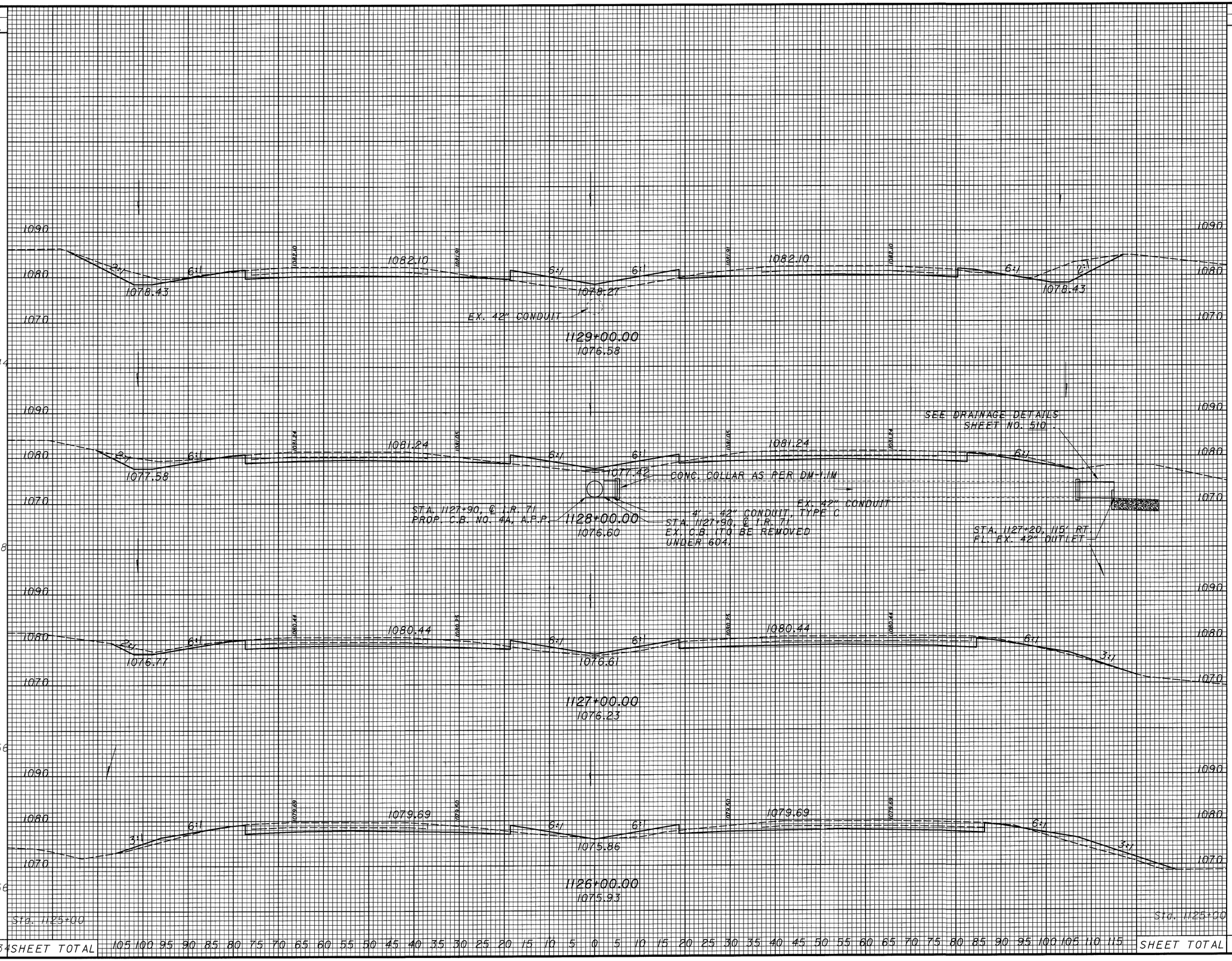

END AREA		VOLUME	
CUT	FILL	CUT	FILL
184	72		
		635	230
159	52		
		587	165
158	37		
		522	198
124	70		
		474	278
132	80		
SHEET TOTAL		2218	871

CALCULATED NJV
CHECKED JWR

CROSS SECTIONS
STA. 1126+00 TO STA. 1129+00

MED-71-15.78

301
940

DATE : $$$$DATE$$$$ DESIGN FILE : $$$$$$$$$$DESIGNFILESPECIFICATION$$$$$$$$$$
TIME : $$$$TIME$$$$ USERNAME : $$$$INSTRUCTIONS$$$$

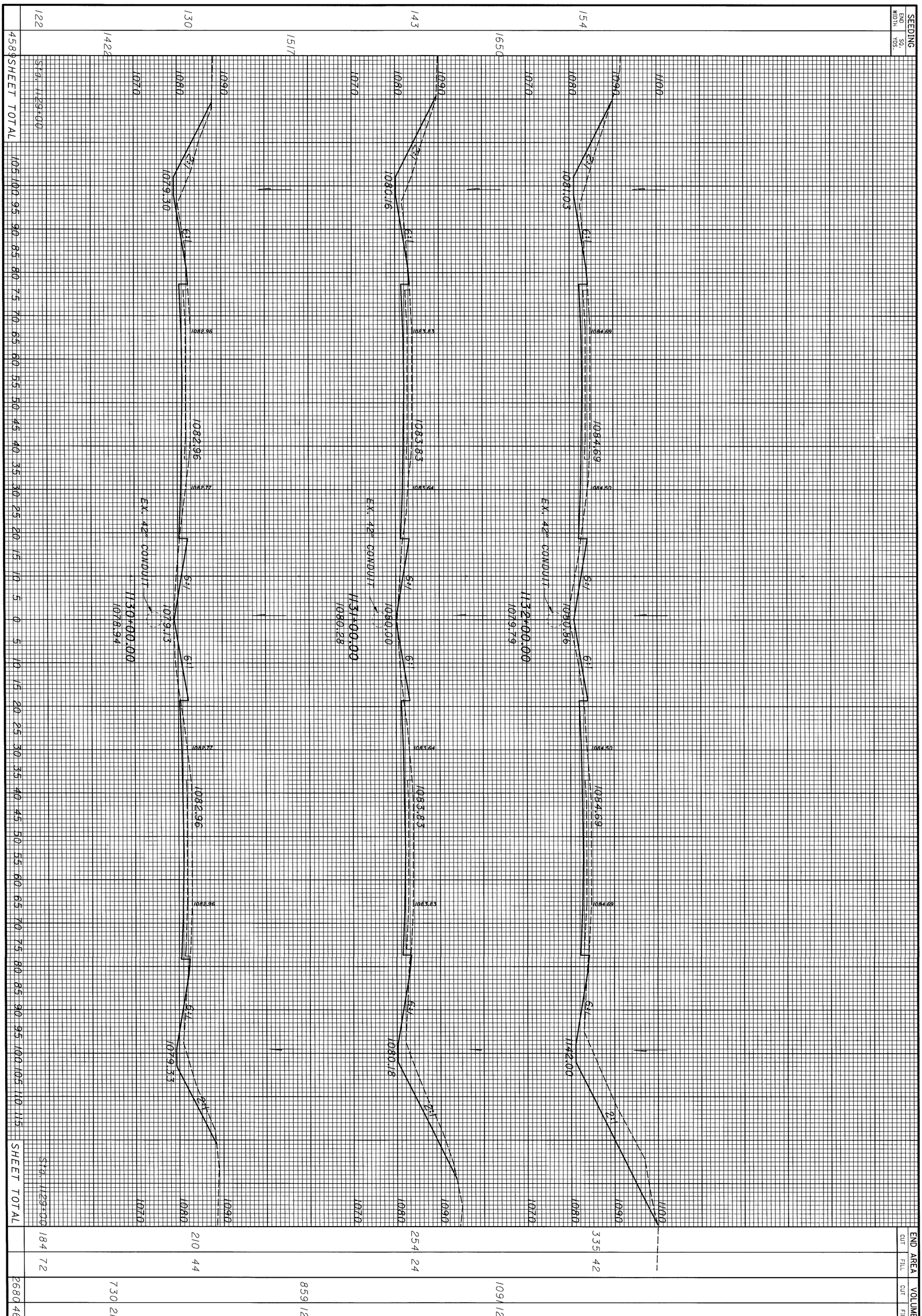

302 940	MED-71-15.78	CROSS SECTIONS STA. 1130+00 TO STA. 1132+00	CALCULATED NJV CHECKED JWR

DESIGN FILE : $$$$$$$$$$DESIGNFILES\SPECIFICATION$$$$$$$$$$
USERNAME : $$$$INSTRUCTIONS$$$$
DATE : $$$$DATE$$$$
TIME : $$$$TIME$$$$

SEEDING	
END WIDTH	SQ. YDS.
157	1744
	1733
157	1717
155	
154	
	5194

END AREA		VOLUME	
CUT	FILL	CUT	FILL
305	48		
		1213	144
350	30		
		1324	113
365	31		
		1296	135
335	42		
SHEET TOTAL		3833	392

CALCULATED N.J.V
CHECKED J.W.R

CROSS SECTIONS
STA. 1133+00 TO STA. 1135+00

MED-71-15.78

303
940

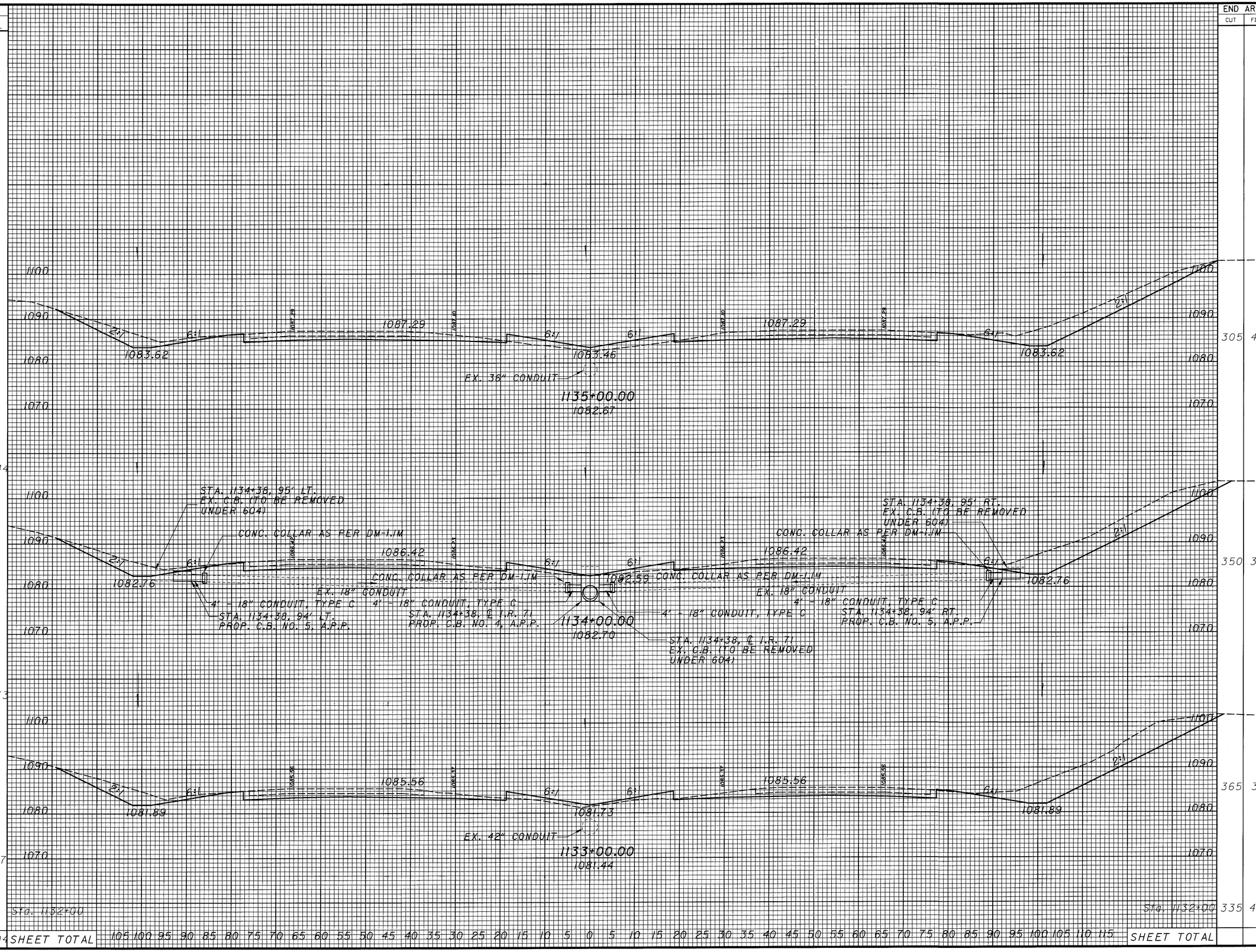

DESIGN FILE : $$$$$$$$$$DESIGNFILESPECIFICATION$$$$$$$$$$
USERNAME : $$$$$INSTRUCTIONS$$$$$

DATE : $$$$$DATE$$$$$
TIME : $$$$$TIME$$$$$

CROSS SECTIONS
STA. 1136+00 TO STA. 1139+00

CALCULATED NJV
CHECKED JWR

MED-71-15.78

304
940

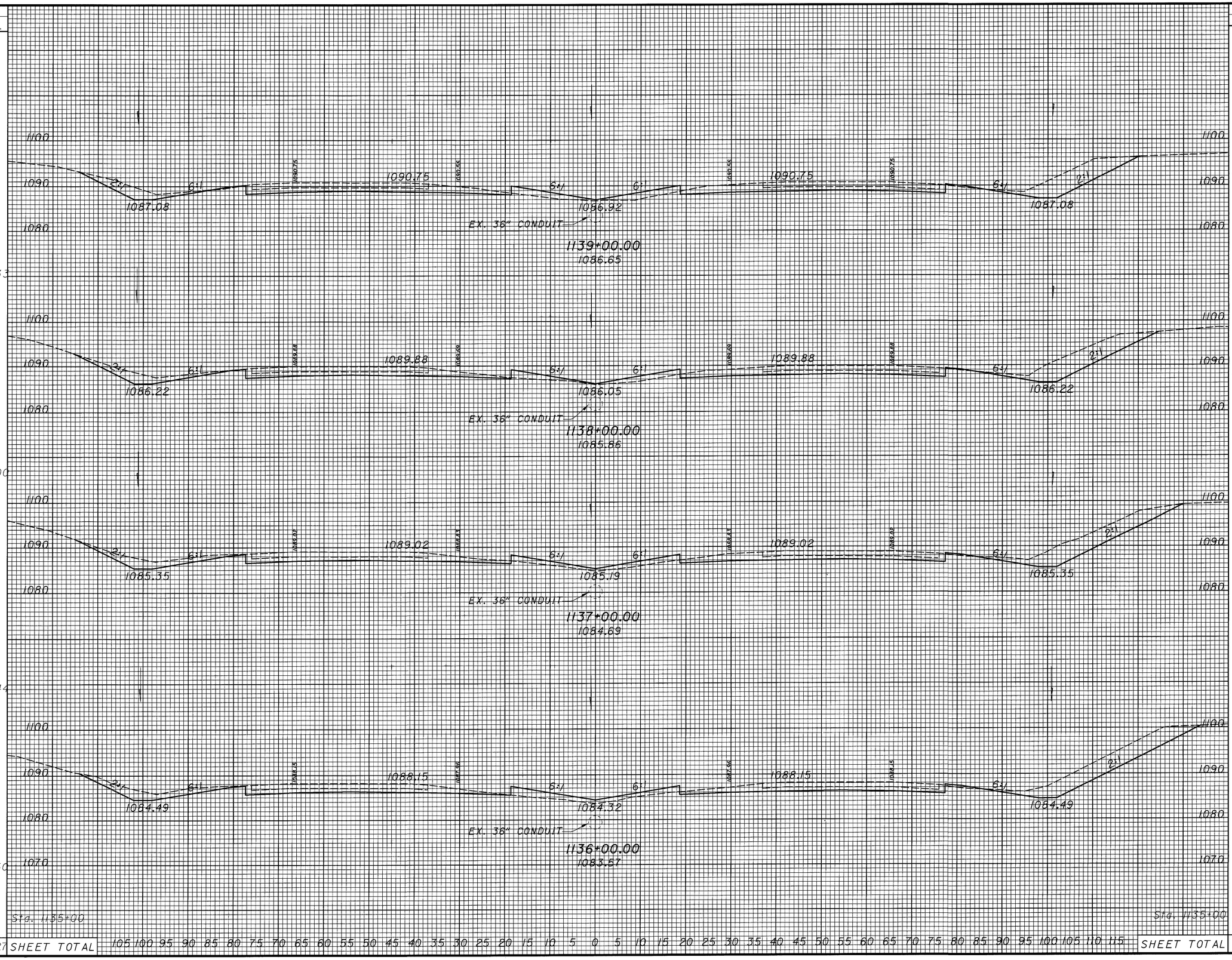

SEEDING END WIDTH	SEEDING SQ. YDS.	END AREA CUT	END AREA FILL	VOLUME CUT	VOLUME FILL
126		242	42		
	1433			911	139
132		250	33		
	1500			952	126
138		264	35		
	1544			993	146
140		272	44		
157	1650	305	48	1069	170
Sta. 1135+00		Sta. 1135+00			
105 100 95 90 85 80 75 70 65 60 55 50 45 40 35 30 25 20 15 10 5 0 5 10 15 20 25 30 35 40 45 50 55 60 65 70 75 80 85 90 95 100 105 110 115	6127 SHEET TOTAL	SHEET TOTAL		3925	581

DESIGN FILE : $$$$$$$$$$DESIGNFILESPECIFICATION$$$$$$$$$$
USERNAME : $$$$$INSTRUCTIONS$$$$$
DATE : $$$$DATE$$$$
TIME : $$$$TIME$$$$

CROSS SECTIONS
STA. 1140+00 TO STA. 1143+00

CALCULATED NJV
CHECKED JWR

MED-71-15.78

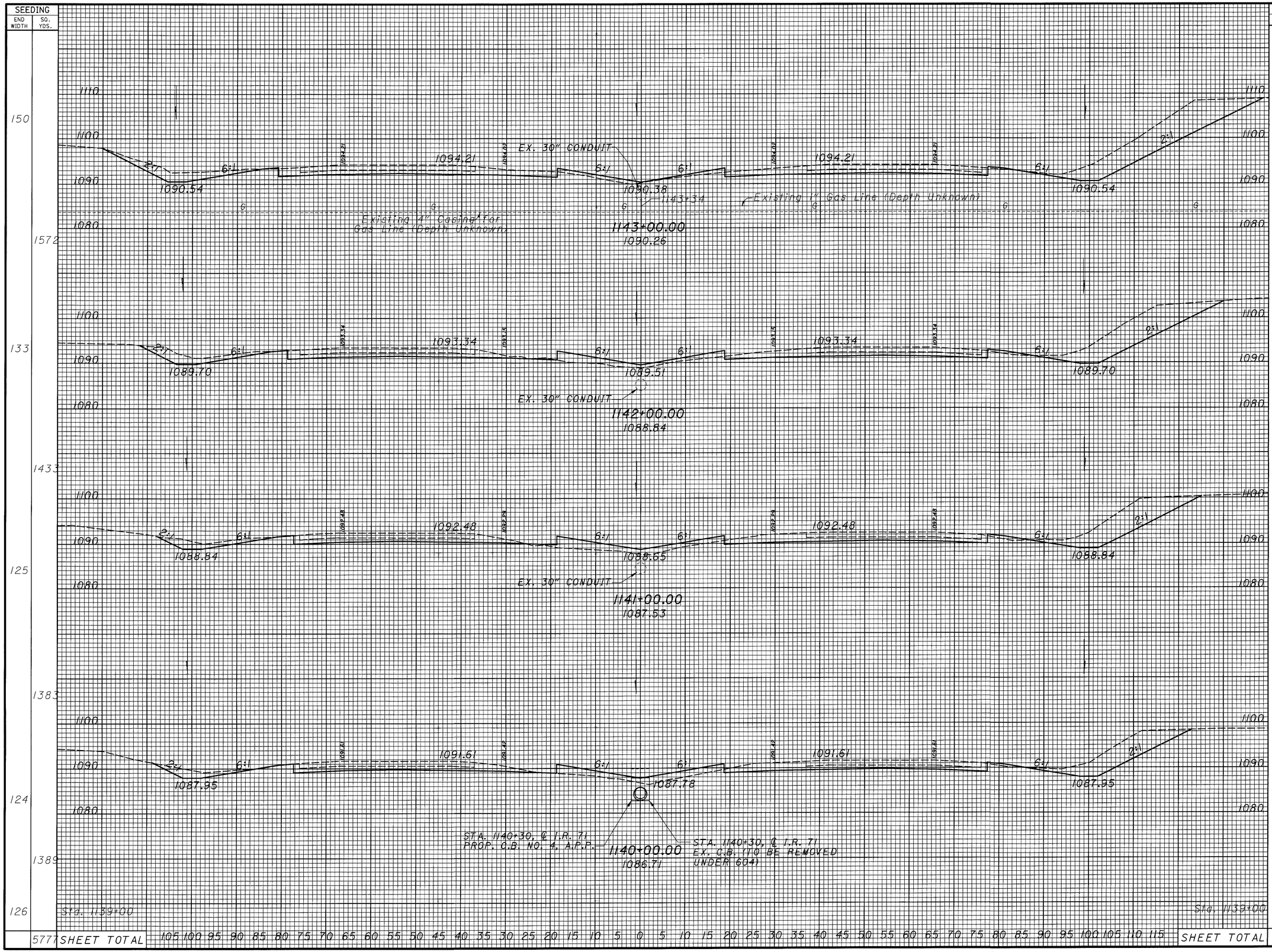

SEEDING END WIDTH	SEEDING SQ. YDS.	END AREA CUT	END AREA FILL	VOLUME CUT	VOLUME FILL
150	1572	365	23	1220	128
133	1433	294	46	1035	185
125	1383	265	54	926	198
124	1389	235	53	883	176
126	Sta. 1139+00	242	42		
	5777 SHEET TOTAL			4064	687

105 100 95 90 85 80 75 70 65 60 55 50 45 40 35 30 25 20 15 10 5 0 5 10 15 20 25 30 35 40 45 50 55 60 65 70 75 80 85 90 95 100 105 110 115

SHEET TOTAL

DESIGN FILE : $$$$$$$$$$DESIGNFILESPECIFICATION$$$$$$$$$$
USERNAME : $$$$INSTRUCTIONS$$$$
DATE : $$$$DATE$$$$
TIME : $$$$TIME$$$$

SEEDING	
END WIDTH	SQ. YDS.
148	
1656	
150	
1656	
148	
1656	
150	
4968	SHEET TOTAL

END AREA		VOLUME	
CUT	FILL	CUT	FILL
		360	20
		1287	96
		335	32
		1250	104
		340	24
		1306	87
		365	23
		3843	287

CALCULATED NJV
CHECKED JWR

CROSS SECTIONS
STA. 1144+00 TO STA. 1146+00

MED-71-15.78

306
940

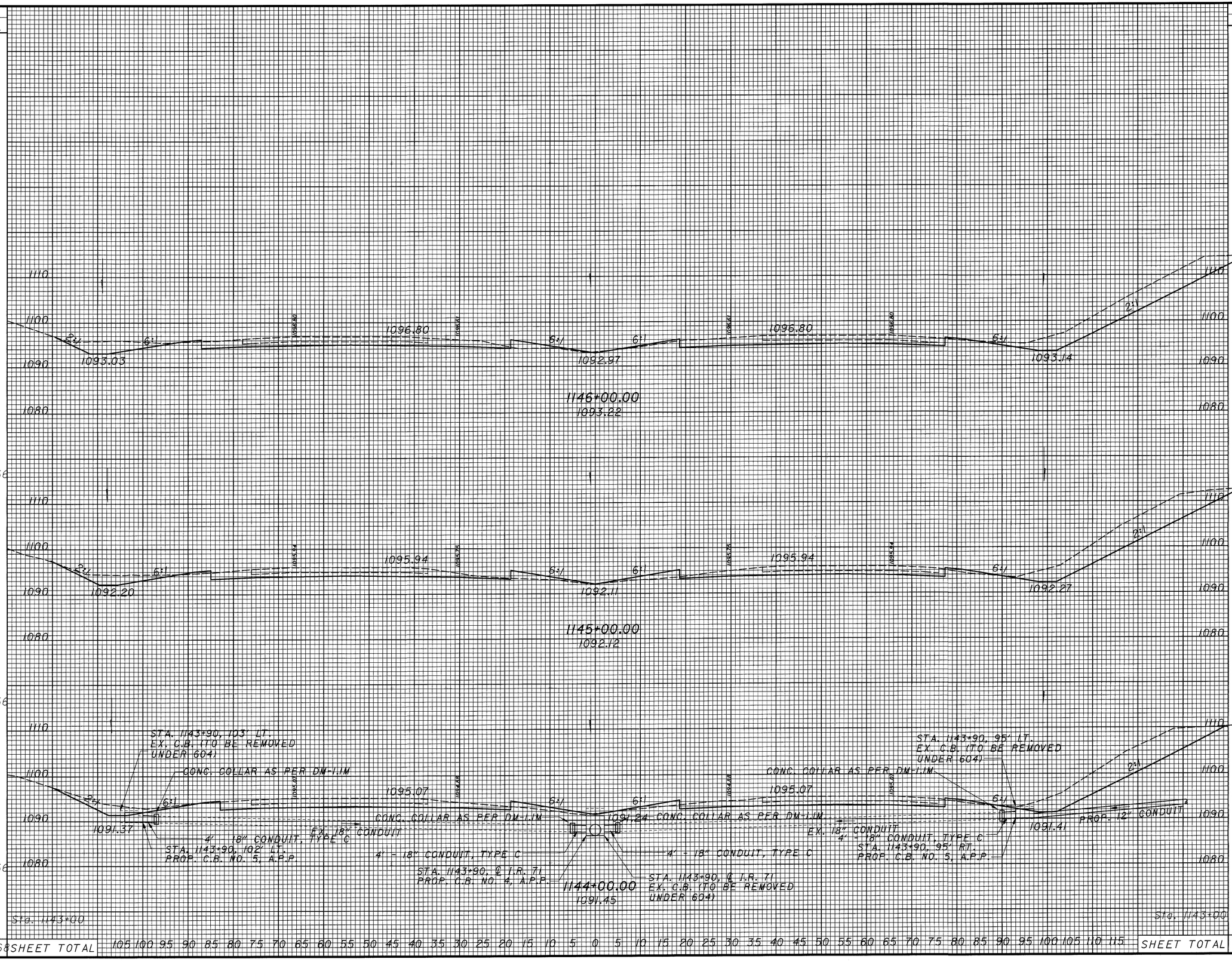

DESIGN FILE : $$$$$$$$$$DESIGNFILESPECIFICATION$$$$$$$$$$
USERNAME : $$$$INSTRUCTIONS$$$$
DATE : $$$$DATE$$$$
TIME : $$$$TIME$$$$

SEEDING	
END WIDTH	SQ. YDS.
140	1622
152	1711
156	1689
148	
	5022 SHEET TOTAL

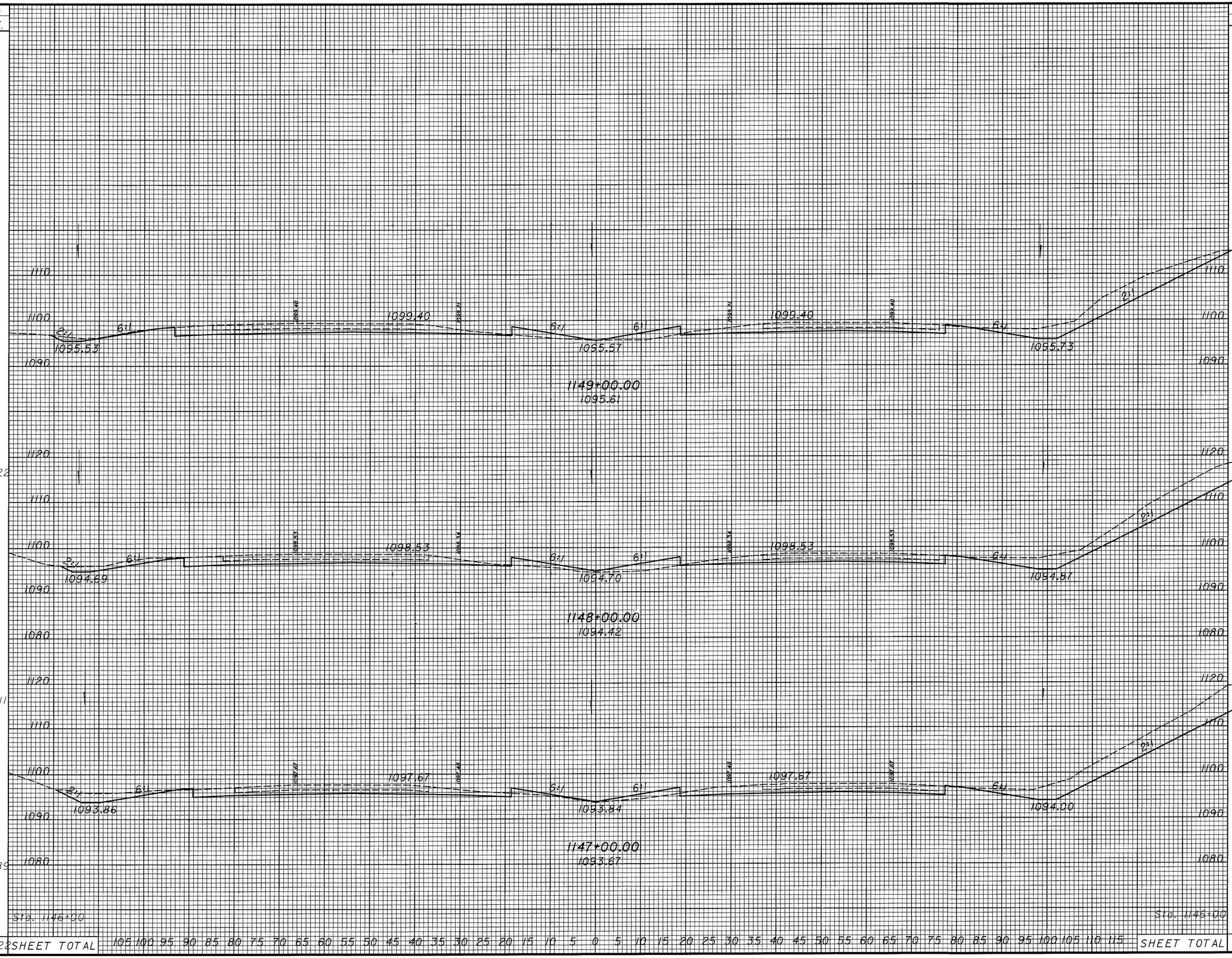

END AREA		VOLUME	
CUT	FILL	CUT	FILL
267	40		
1124	154		
340	43		
1370	128		
400	26		
1407	85		
360	20		
SHEET TOTAL		3901	367

CALCULATED N.V.
CHECKED J.W.R.

CROSS SECTIONS
STA. 1147+00 TO STA. 1149+00

MED-71-15.78

307
940

DESIGN FILE : $$$$$$$$$$DESIGNFILESPECIFICATION$$$$$$$$$$
USERNAME : $$$$INSTRUCTIONS$$$$

DATE : $$$$DATE$$$$
TIME : $$$$TIME$$$$

SEEDING	
END WIDTH	SQ. YDS.
140	1556
140	1500
130	1500
140	
	4556

END AREA		VOLUME	
CUT	FILL	CUT	FILL
375	15		
		1306	94
330	36		
		1102	141
265	40		
		985	148
267	40		
		3393	383

CALCULATED NJV
CHECKED JWR

CROSS SECTIONS
STA. 1150+00 TO STA. 1152+00

MED-71-15.78

308
940

DESIGN FILE : $$$$$$$$$$DESIGNFILESPECIFICATION$$$$$$$$$$
USERNAME : $$$$$INSTRUCTIONS$$$$$
DATE : $$$$DATE$$$$
TIME : $$$$TIME$$$$

SEEDING		END AREA		VOLUME	
END WIDTH	SQ. YDS.	CUT	FILL	CUT	FILL
118		275	15		
				1102	43
134		320	8		
				931	37
142		183	12		
				987	56
135		350	18		
				1343	61
140	Sta. 1152+00	375	15		
6000	SHEET TOTAL			4363	197

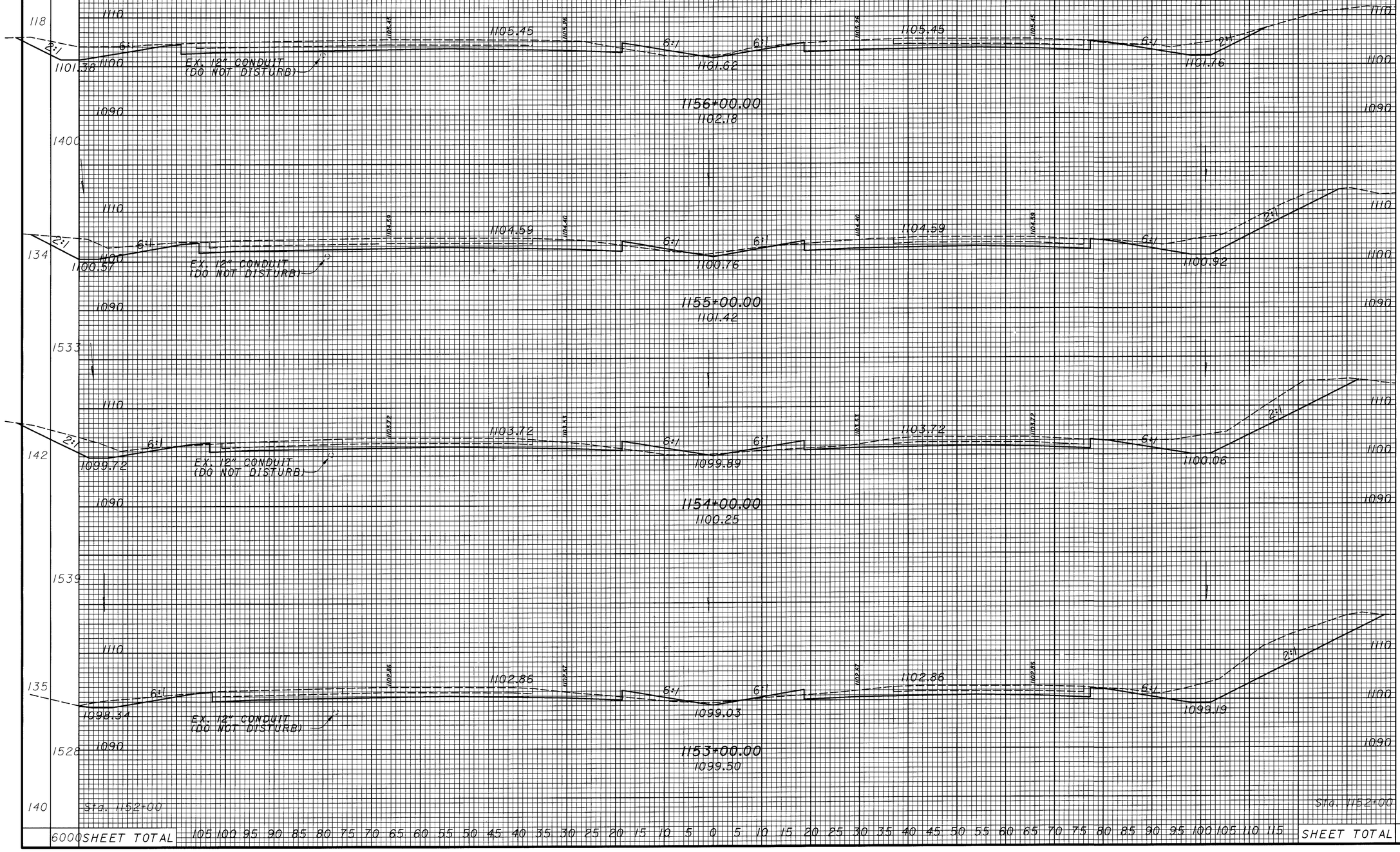

105 100 95 90 85 80 75 70 65 60 55 50 45 40 35 30 25 20 15 10 5 0 5 10 15 20 25 30 35 40 45 50 55 60 65 70 75 80 85 90 95 100 105 110 115

CALCULATED NJV
CHECKED JWR

CROSS SECTIONS
STA. 1153+00 TO STA. 1156+00

MED-71-15.78

309
940

DESIGN FILE : $$$$$$$$$$DESIGNFILESPECIFICATION$$$$$$$$$$
USERNAME : $$$$$INSTRUCTIONS$$$$$
DATE : $$$$DATE$$$$
TIME : $$$$TIME$$$$

SEEDING	
END WIDTH	SQ. YDS.
88	
	911
76	
889	
84	
922	
82	
112	
1278	
118	
4000	SHEET TOTAL

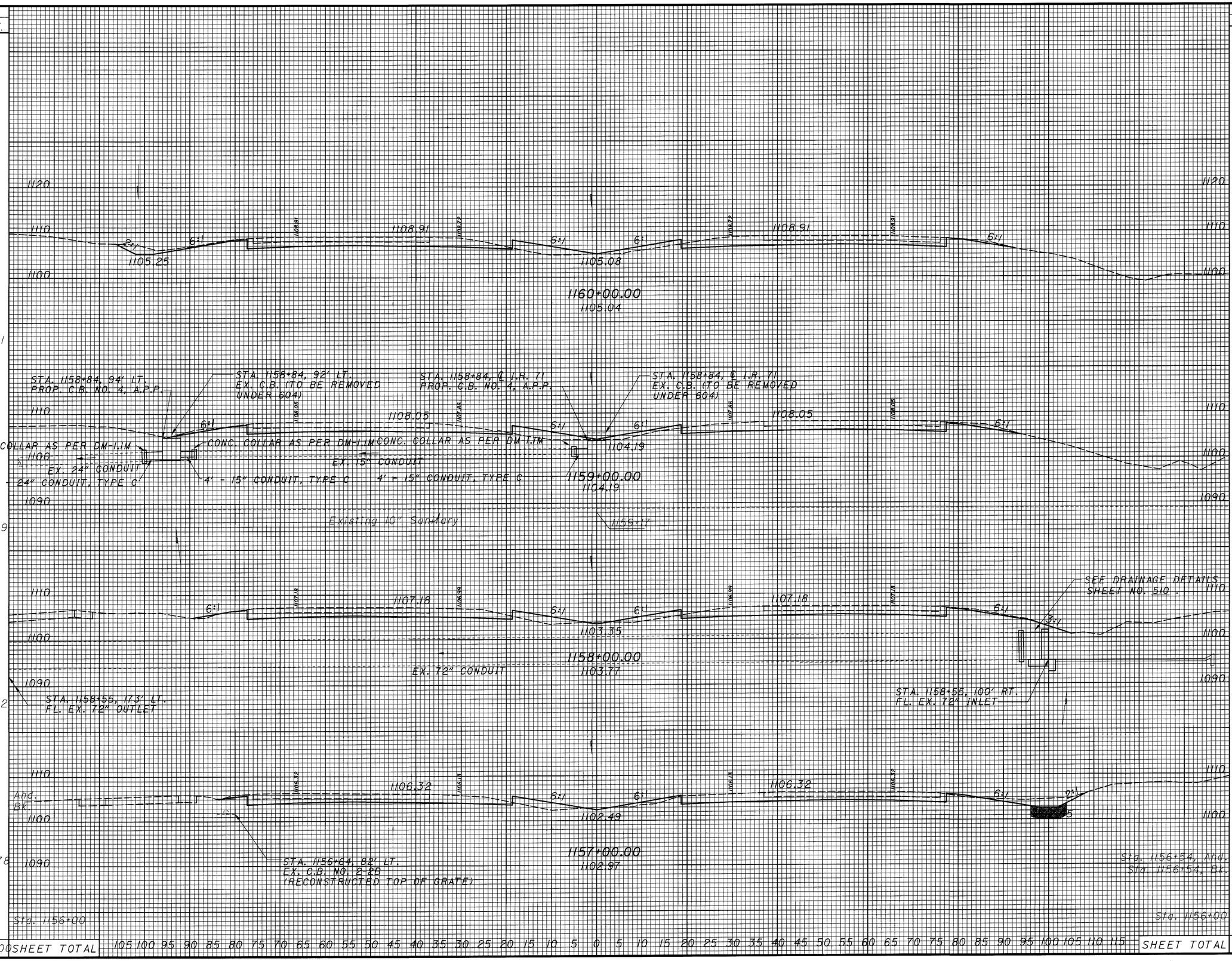

END AREA		VOLUME	
CUT	FILL	CUT	FILL
152	41		
		541	144
140	37		
509	130		
135	33		
		541	111
157	27		
		321	40
Sta. 1156+54, Ahd. 280	20		
Sta. 1156+54, Bk. 280	20		
		555	35
Sta. 1156+00 275	15		
SHEET TOTAL		2467	460

CALCULATED NJV
CHECKED JWR

CROSS SECTIONS
STA. 1157+00 TO STA. 1160+00

MED-71-15.78

310
940

DATE : $$$$DATE$$$$ DESIGN FILE : $$$$$$$$$$DESIGNFILESPECIFICATION$$$$$$$$$$
TIME : $$$$TIME$$$$ USERNAME : $$$$INSTRUCTIONS$$$$

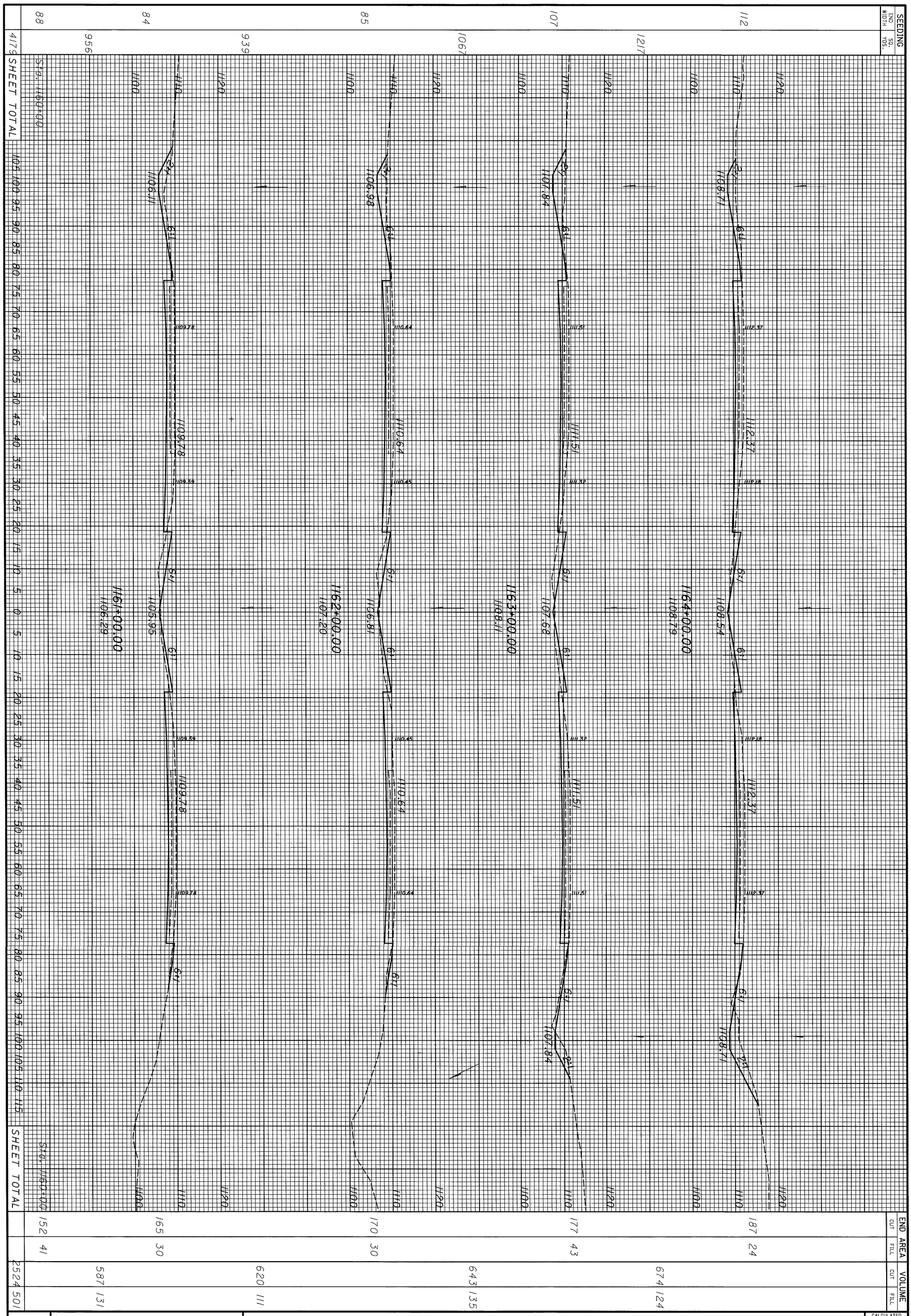

311 / 940	MED-71-15.78	CROSS SECTIONS STA. 1161+00 TO STA. 1164+00

CALCULATED NJV
CHECKED JWR

DESIGN FILE : $$$$$$$$$$DESIGNFILESPECIFICATION$$$$$$$$$$
USERNAME : $$$$$INSTRUCTIONS$$$$$
DATE : $$$$DATE$$$$$
TIME : $$$$TIME$$$$

SEEDING	
END WIDTH	SQ. YDS.
123	1322
115	1261
112	1233
110	1233
112	
SHEET TOTAL	5049



END AREA		VOLUME	
CUT	FILL	CUT	FILL
205	50		
		759	178
205	46		
		772	144
212	32		
		763	96
200	20		
		717	81
187	24		
		3011	499

CALCULATED NJV
CHECKED JWR

CROSS SECTIONS
STA. 1165+00 TO STA. 1168+00

MED-71-15.78

312
940

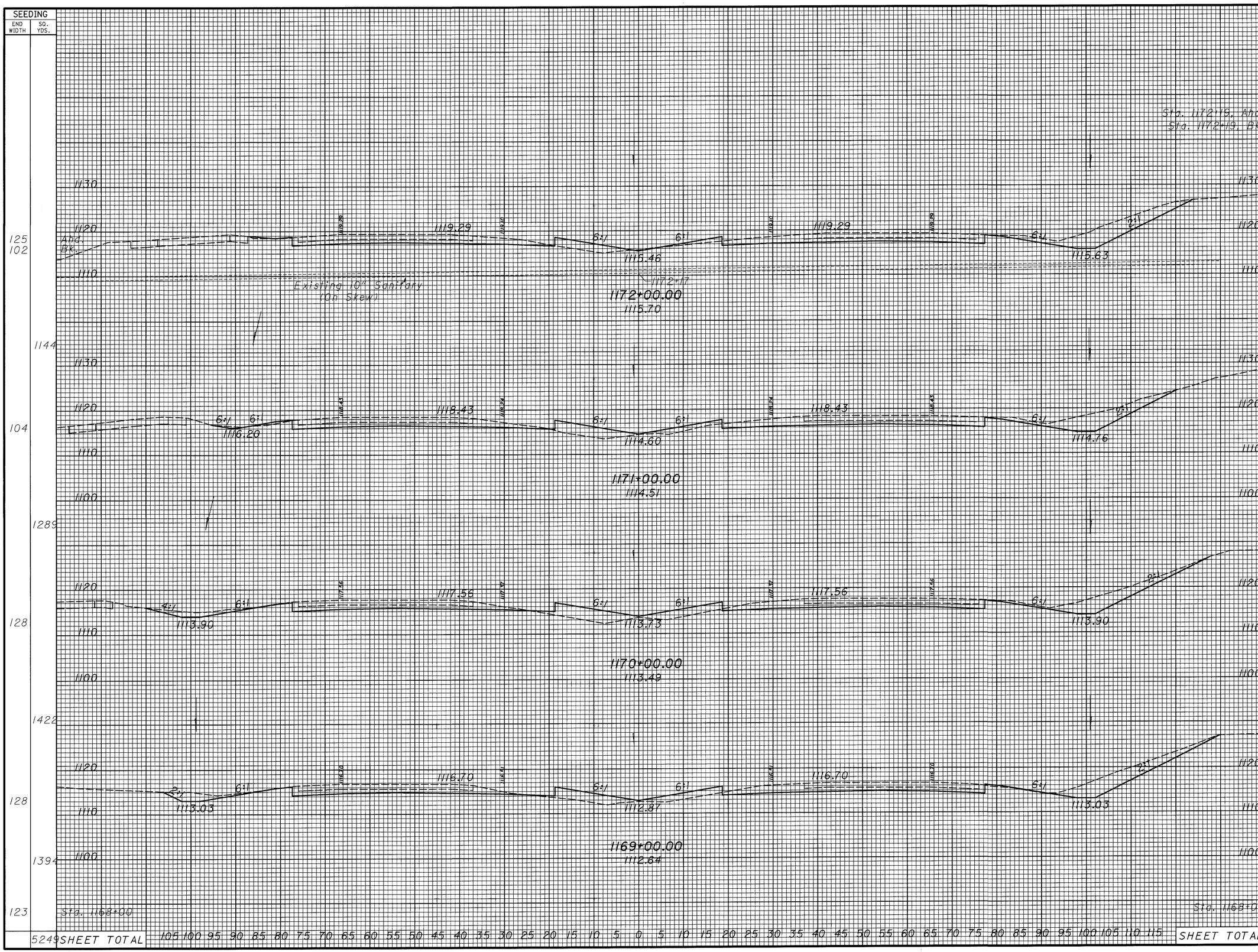

END AREA CUT	END AREA FILL	VOLUME CUT	VOLUME FILL
240	45		
210	32		
		144	23
210	32		
		741	161
190	55		
		715	228
196	68		
		741	233
204	58		
		757	200
205	50		
SHEET TOTAL		3098	845

CALCULATED NJV
CHECKED JWR

CROSS SECTIONS
STA. 1169+00 TO STA. 1172+00

MED-71-15.78

DESIGN FILE : $$$$$$$$$$DESIGNFILESPECIFICATION$$$$$$$$$$
USERNAME : $$$$INSTRUCTIONS$$$$
DATE : $$$$DATE$$$$
TIME : $$$$TIME$$$$

DESIGN FILE : $$$$$$$$$$DESIGNFILESPECIFICATION$$$$$$$$$$
USERNAME : $$$$$INSTRUCTIONS$$$$$
DATE : $$$$DATE$$$$$
TIME : $$$$TIME$$$$$

SEEDING	
END WIDTH	SQ. YDS.
118	1267
110	1144
96	1033
90	1194
125	
4638	SHEET TOTAL

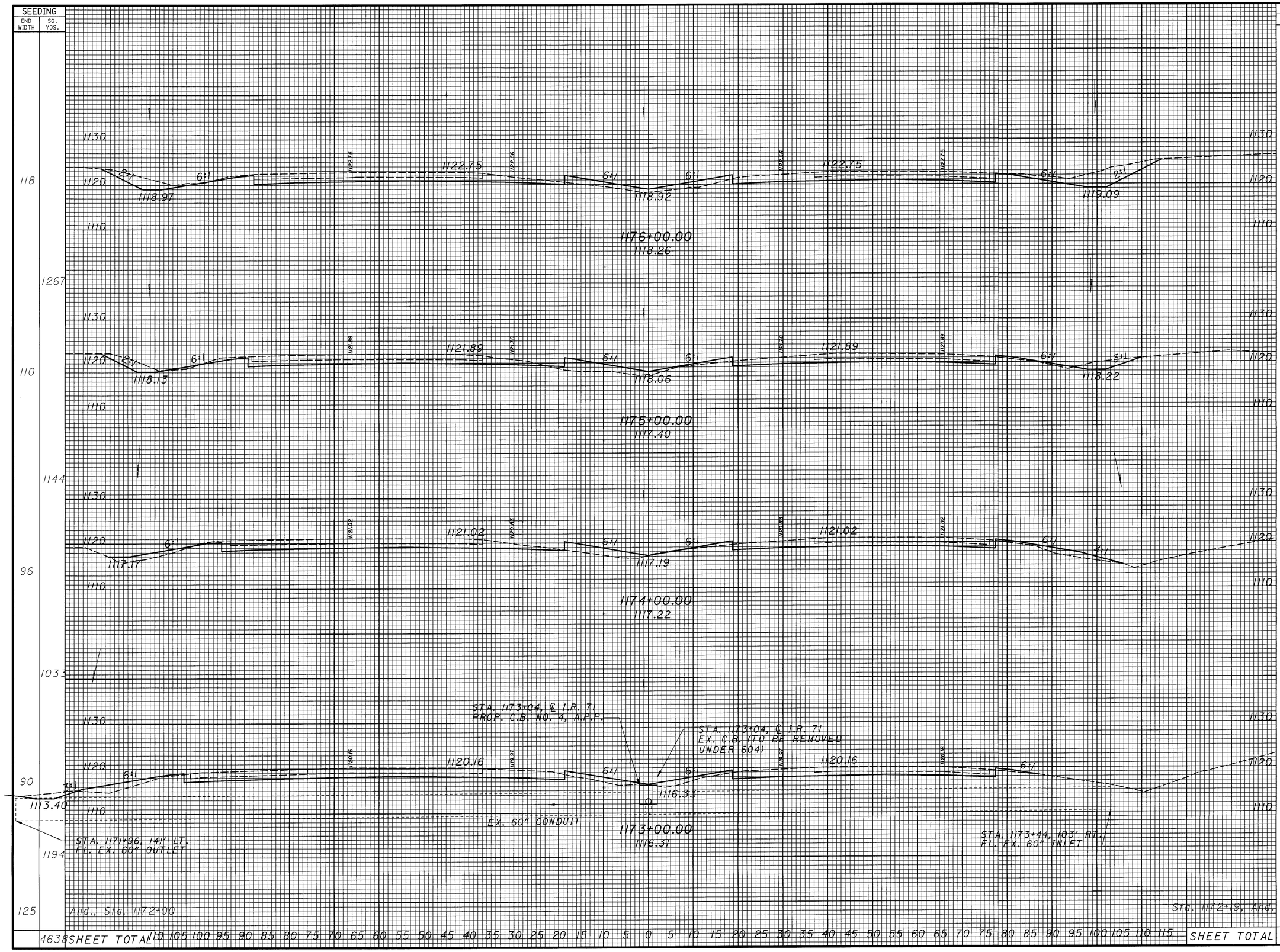

END AREA		VOLUME	
CUT	FILL	CUT	FILL
225	42		
		704	167
155	48		
		535	209
134	65		
		548	220
162	54		
		603	149
240	45		
		2390	745

Sta. 1172+00, Ahd. | Sta. 1172+19, Ahd. | SHEET TOTAL

10 105 100 95 90 85 80 75 70 65 60 55 50 45 40 35 30 25 20 15 10 5 0 5 10 15 20 25 30 35 40 45 50 55 60 65 70 75 80 85 90 95 100 105 110 115

CALCULATED N.J.V.
CHECKED J.W.R.

CROSS SECTIONS
STA. 1173+00 TO STA. 1176+00

MED-71-15.78

314
940

DESIGN FILE : $$$$$$$$$$DESIGNFILE$SPECIFICATION$$$$$$$$$$
USERNAME : $$$$$INSTRUCTIONS$$$$$
DATE : $$$$$DATE$$$$$
TIME : $$$$TIME$$$$$

SEEDING	
END WIDTH	SQ. YDS.
132	
	1500
138	
	1500
132	
	1467
132	
	1389
118	
	5856

END AREA		VOLUME	
CUT	FILL	CUT	FILL
245	20		
		972	81
280	24		
		981	81
250	20		
		981	87
280	27		
		898	128
205	42		
		3832	377

CALCULATED NJV
CHECKED JWR

CROSS SECTIONS
STA. 1177+00 TO STA. 1180+00

MED-71-15.78

315
940

Sta. 1176+00

SHEET TOTAL

105 100 95 90 85 80 75 70 65 60 55 50 45 40 35 30 25 20 15 10 5 0 5 10 15 20 25 30 35 40 45 50 55 60 65 70 75 80 85 90 95 100 105 110 115

SHEET TOTAL

Sta. 1176+00

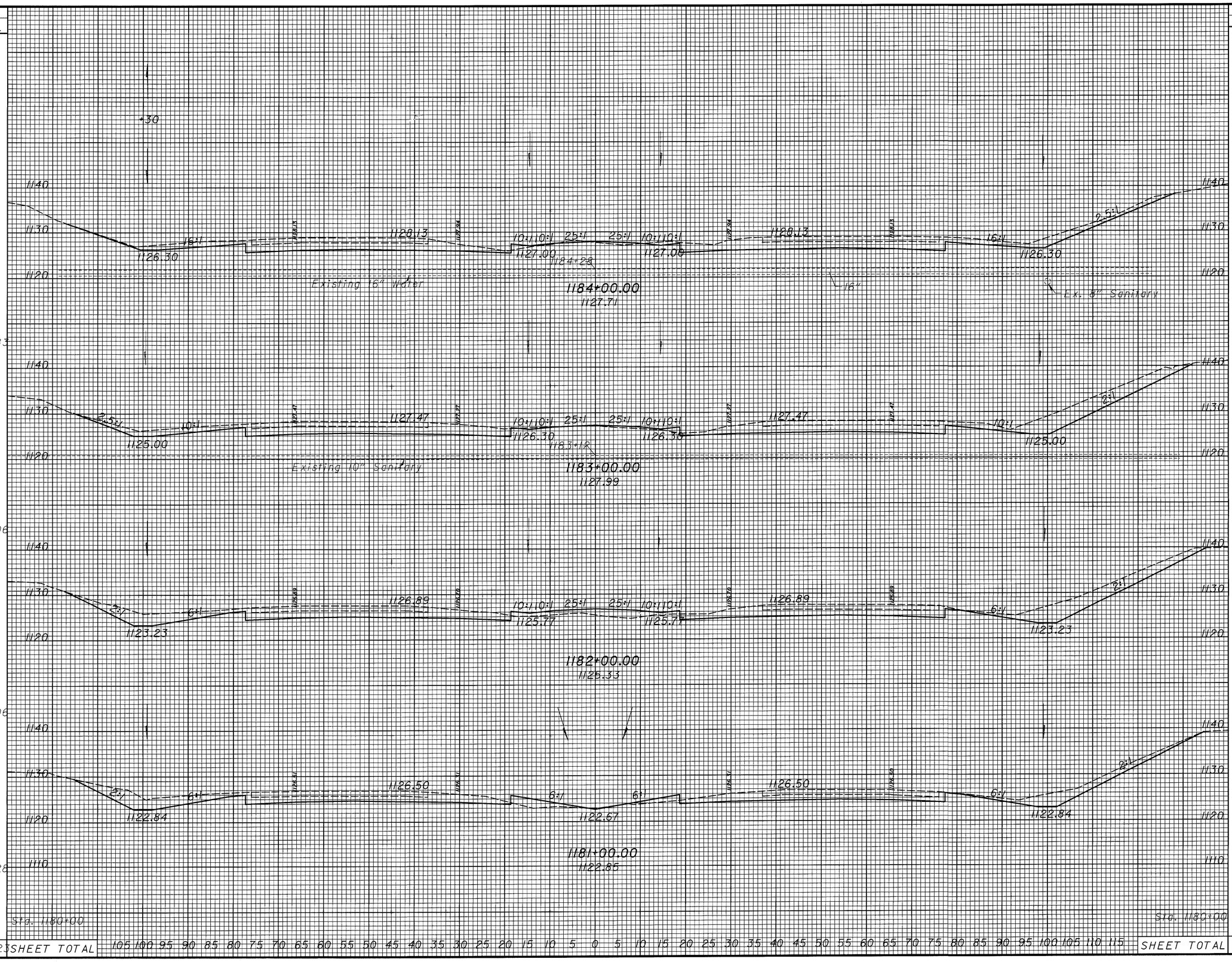

END AREA CUT	END AREA FILL	VOLUME CUT	VOLUME FILL
270	8		
		1148	30
350	8		
		1306	83
355	37		
		1157	113
270	24		
		954	81
245	20		
		4565	307

CALCULATED NJV
CHECKED JWR

CROSS SECTIONS
STA. 1181+00 TO STA. 1184+00

MED-71-15.78

DATE : $$$$DATE$$$$ DESIGN FILE : $$$$$$$$$$DESIGNFILESPECIFICATION$$$$$$$$$$
TIME : $$$$TIME$$$$ USERNAME : $$$$INSTRUCTIONS$$$$

DESIGN FILE : $$$$$$$$$$DESIGNFILESPECIFICATION$$$$$$$$$$
USERNAME : $$$$INSTRUCTIONS$$$$
DATE : $$$$DATE$$$$
TIME : $$$$TIME$$$$

SEEDING	
END WIDTH	SQ. YDS.
122	1344
120	1211
-150 Correction for Median Crossover	
102	1261
125	1483
142	5149

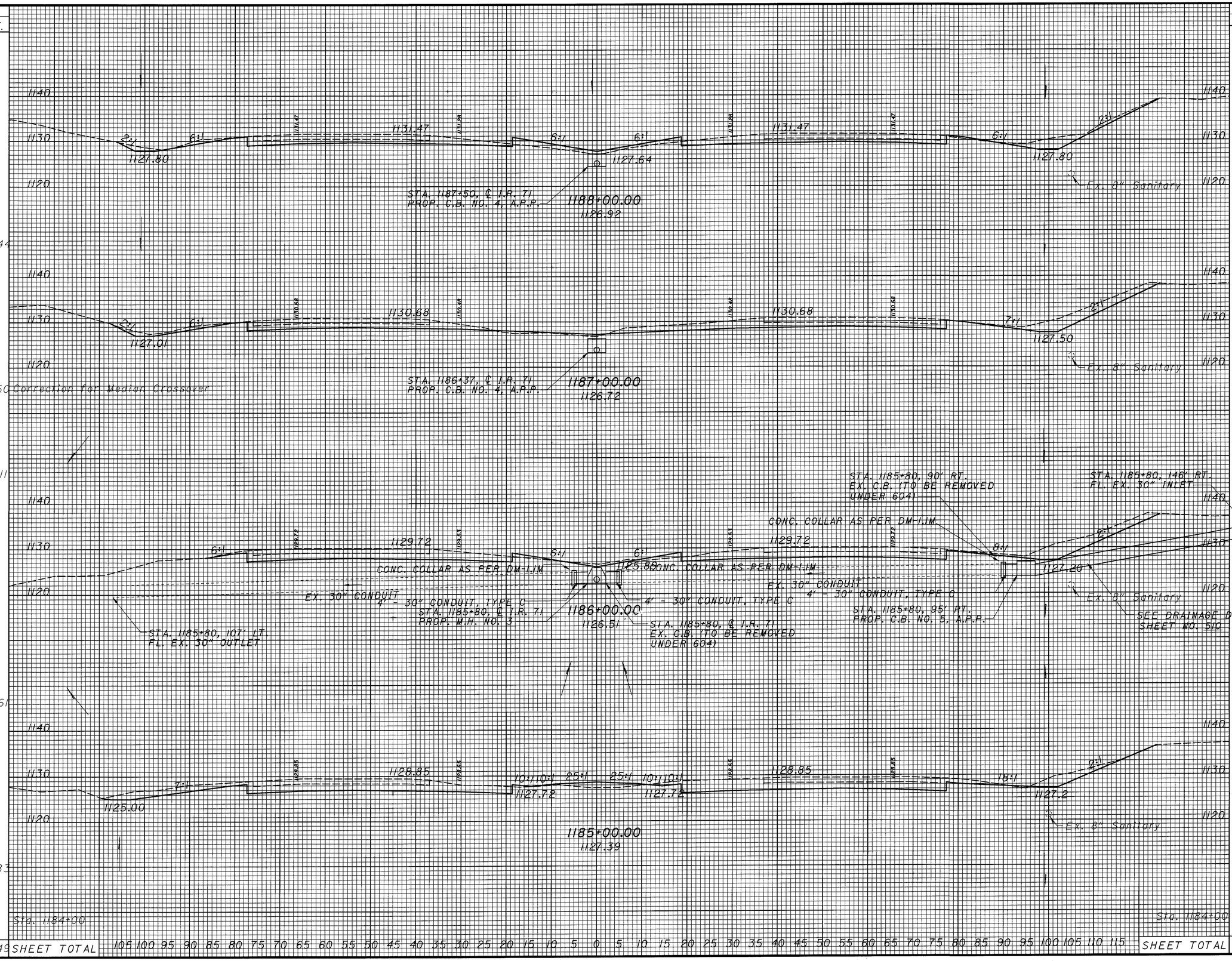

END AREA		VOLUME	
CUT	FILL	CUT	FILL
165	30		
		713	67
220	6		
		843	30
235	10		
		944	46
275	15		
		1009	43
270	8		
SHEET TOTAL		3509	186

105 100 95 90 85 80 75 70 65 60 55 50 45 40 35 30 25 20 15 10 5 0 5 10 15 20 25 30 35 40 45 50 55 60 65 70 75 80 85 90 95 100 105 110 115

SHEET TOTAL

CALCULATED NJV
CHECKED JWR

CROSS SECTIONS
STA. 1185+00 TO STA. 1188+00

MED-71-15.78

DESIGN FILE : $$$$$$$$$$DESIGNFILESPECIFICATION$$$$$$$$$$
USERNAME : $$$$INSTRUCTIONS$$$$
DATE : $$$$DATE$$$$
TIME : $$$$TIME$$$$

SEEDING	
END WIDTH	SQ. YDS.
122	1322
116	
1256	
110	1267
118	
1333	
122	
5178	SHEET TOTAL

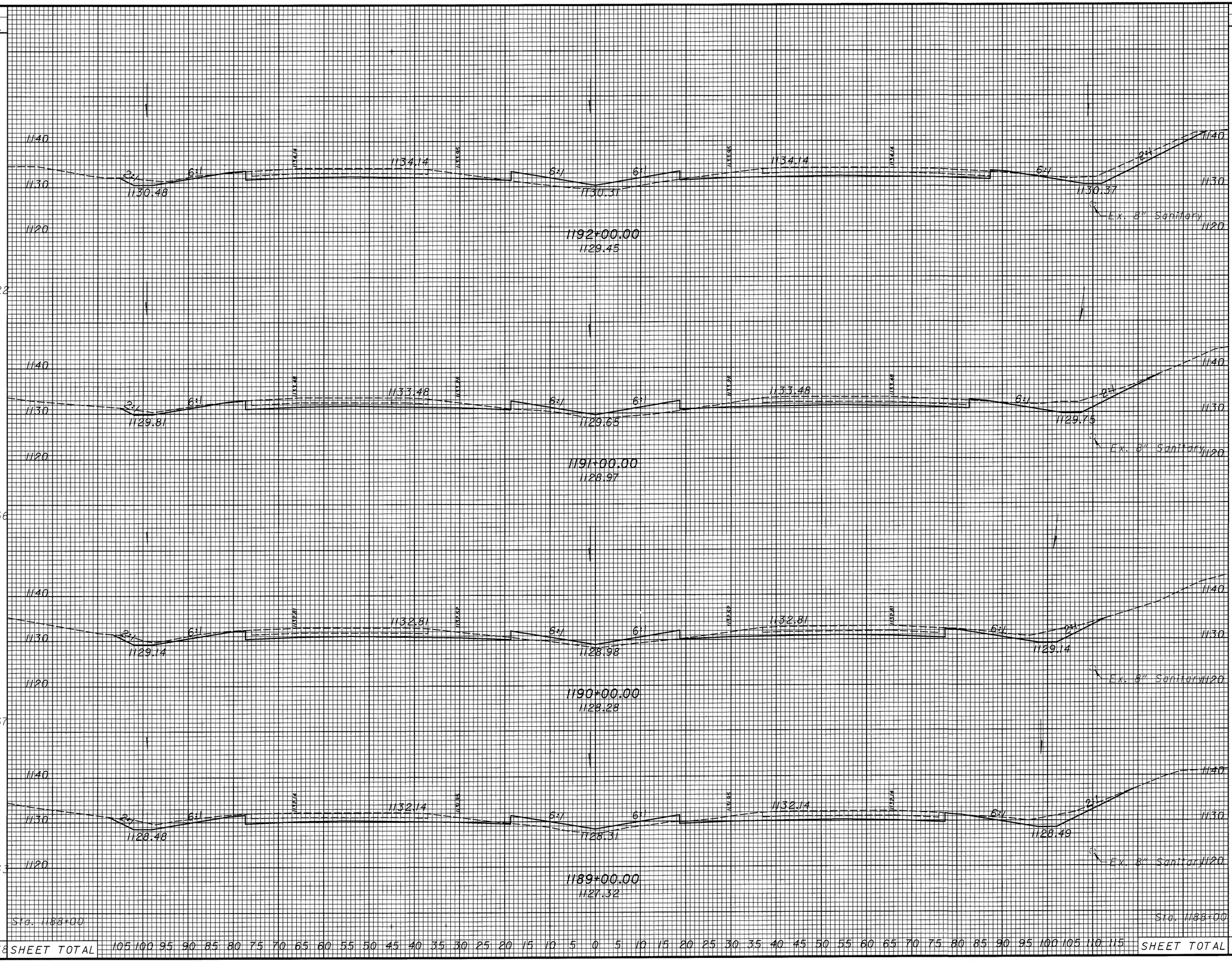

END AREA		VOLUME	
CUT	FILL	CUT	FILL
170	60		
		611	207
160	52		
		611	178
170	44		
		631	170
177	48		
		622	144
165	30		
SHEET TOTAL		2475	699

CALCULATED NJV
CHECKED JWR

CROSS SECTIONS
STA. 1189+00 TO STA. 1192+00

MED-71-15.78

318
940

DATE : $$$$DATE$$$$ DESIGN FILE : $$$$$$$$$$DESIGNFILESPECIFICATION$$$$$$$$$$
TIME : $$$$TIME$$$$ USERNAME : $$$$INSTRUCTIONS$$$$

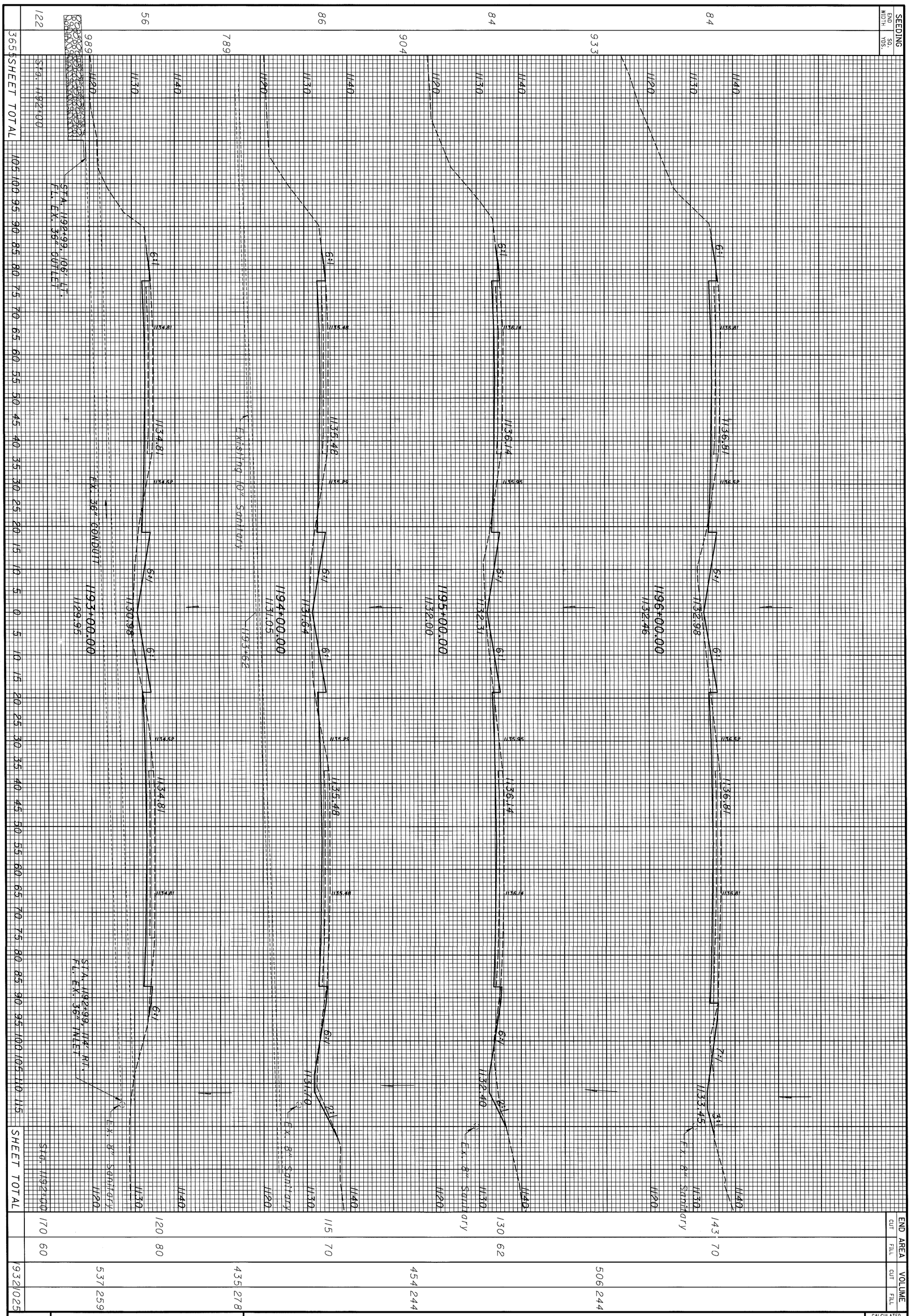

319
940

MED-71-15.78

CROSS SECTIONS
STA. 1193+00 TO STA. 1196+00

CALCULATED NJV
CHECKED JWR

DESIGN FILE : $$$$$$$$$$DESIGNFILESPECIFICATION$$$$$$$$$$
USERNAME : $$$$$INSTRUCTIONS$$$$
DATE : $$$$DATE$$$$
TIME : $$$$TIME$$$$

SEEDING	
END WIDTH	SQ. YDS.
	64
	90
	1022
	94
	1011
	88
	956
	84
	2989

END AREA		VOLUME	
CUT	FILL	CUT	FILL
115	62		
		285	132
170	70		
180	70		
		304	124
177	76		
		593	233
143	50		
		530	222
143	70		
SHEET TOTAL		1712	711

CALCULATED N.J.V.
CHECKED J.W.R.

CROSS SECTIONS
STA. 1197+00 TO STA. 1199+00

MED-71-15.78

320
940

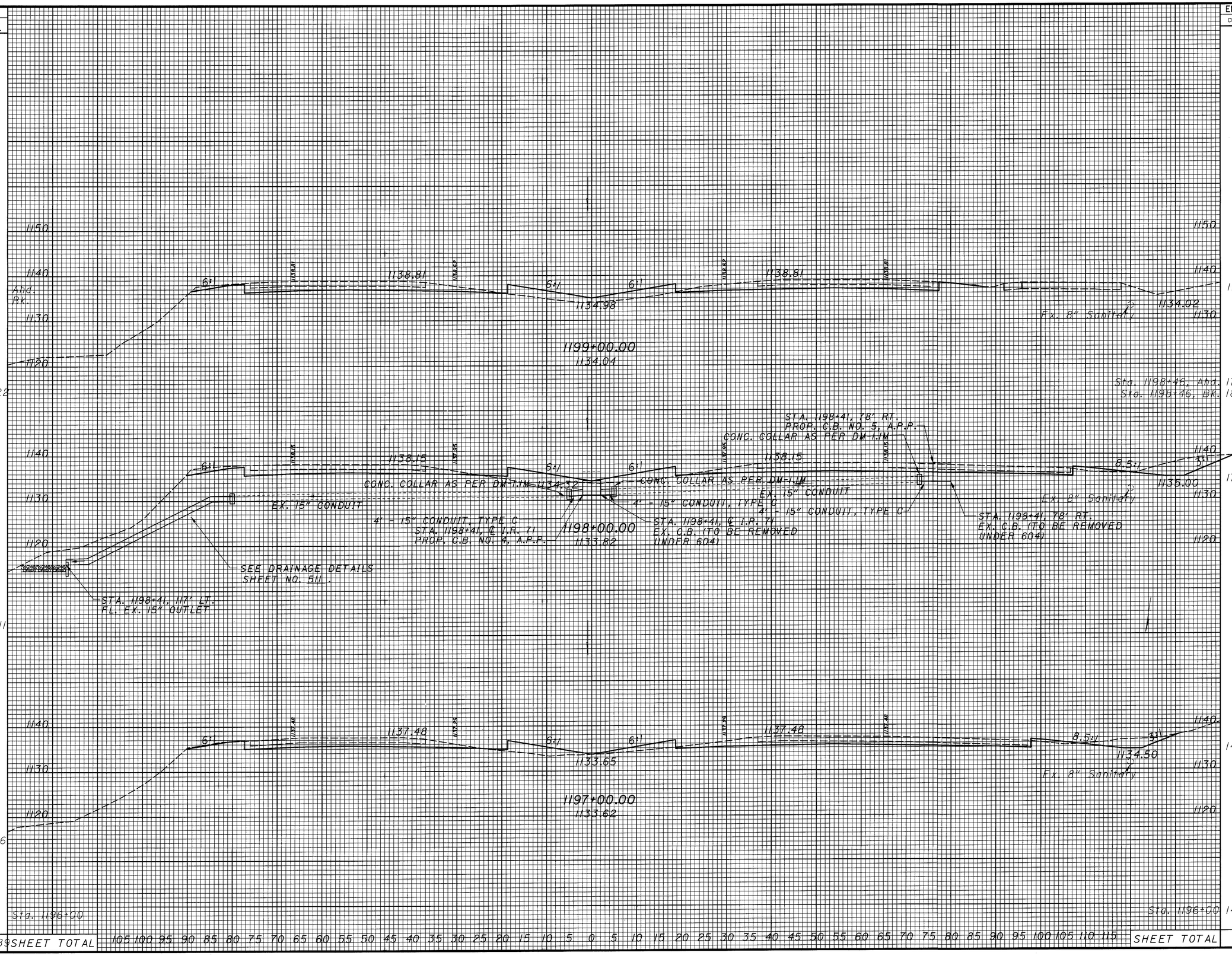

DESIGN FILE : $$$$$$$$$$DESIGNFILESPECIFICATION$$$$$$$$$$
USERNAME : $$$$INSTRUCTIONS$$$$
DATE : $$$$DATE$$$$
TIME : $$$$TIME$$$$

SEEDING END WIDTH	SEEDING SQ. YDS.	END AREA CUT	END AREA FILL	VOLUME CUT	VOLUME FILL
98	1111	144	62	522	193
102		138	42		
106	7			496	148
90		130	38		
84	4			426	176
62		100	57		
70	0	115	62	398	220
372	SHEET TOTAL			1842	737

CALCULATED NJV
CHECKED JWR

CROSS SECTIONS
STA. 1200+00 TO STA. 1203+00

MED-71-15.78

321
940

1203+00.00
1137.02
1141.54
1141.29
EX. 36" CONDUIT
1202+00.00
1137.52
1137.90
1138.07
1137.04
1137.21
1140.68
1140.62
CONC. COLLAR AS PER DM-1.1M
EX. 36" CONDUIT
4' - 36" CONDUIT, TYPE C
STA. 1202+34, ℄ I.R. 71
PROP. C.B. NO. 4A, A.P.P.
STA. 1201+65, 118' LT.
FL. EX. 36" OUTLET
STA. 1202+34, ℄ I.R. 71
EX. C.B. (TO BE REMOVED
UNDER 604)
STA. 1200+62, 95' RT.
PROP. C.B. NO. 5, A.P.P.
1201+00.00
1136.89
1140.15
1140.15
1136.32
1140.15
1136.48
CONC. COLLAR AS PER DM-1.1M
EX. 15" CONDUIT
4' - 15" CONDUIT, TYPE C
STA. 1200+62, 95' RT.
EX. C.B. (TO BE REMOVED
UNDER 604)
Existing 12" Sanitary
(On Skew)
1200+45
1200+00.00
1135.61
1139.48
1139.48
1135.63
1139.48
1134.02
EX. 8" Sanitary
STA. 1200+48, 176' RT.
FL. EX. 84" INLET
STA. 1199+20, 109' LT.
FL. EX. 84" OUTLET
Sta. 1199+00
EX. 84" CONDUIT
Sta. 1199+00
6:1
3:1
105 100 95 90 85 80 75 70 65 60 55 50 45 40 35 30 25 20 15 10 5 0 5 10 15 20 25 30 35 40 45 50 55 60 65 70 75 80 85 90 95 100 105 110 115
SHEET TOTAL

DESIGN FILE : $$$$$$$$$$DESIGNFILESPECIFICATION$$$$$$$$$$
USERNAME : $$$$$INSTRUCTIONS$$$$
DATE : $$$$DATE$$$$
TIME : $$$$TIME$$$$

SEEDING	
END WIDTH	SQ. YDS.
154	1567
128	1378
120	1233
102	1111
98	
5289	SHEET TOTAL

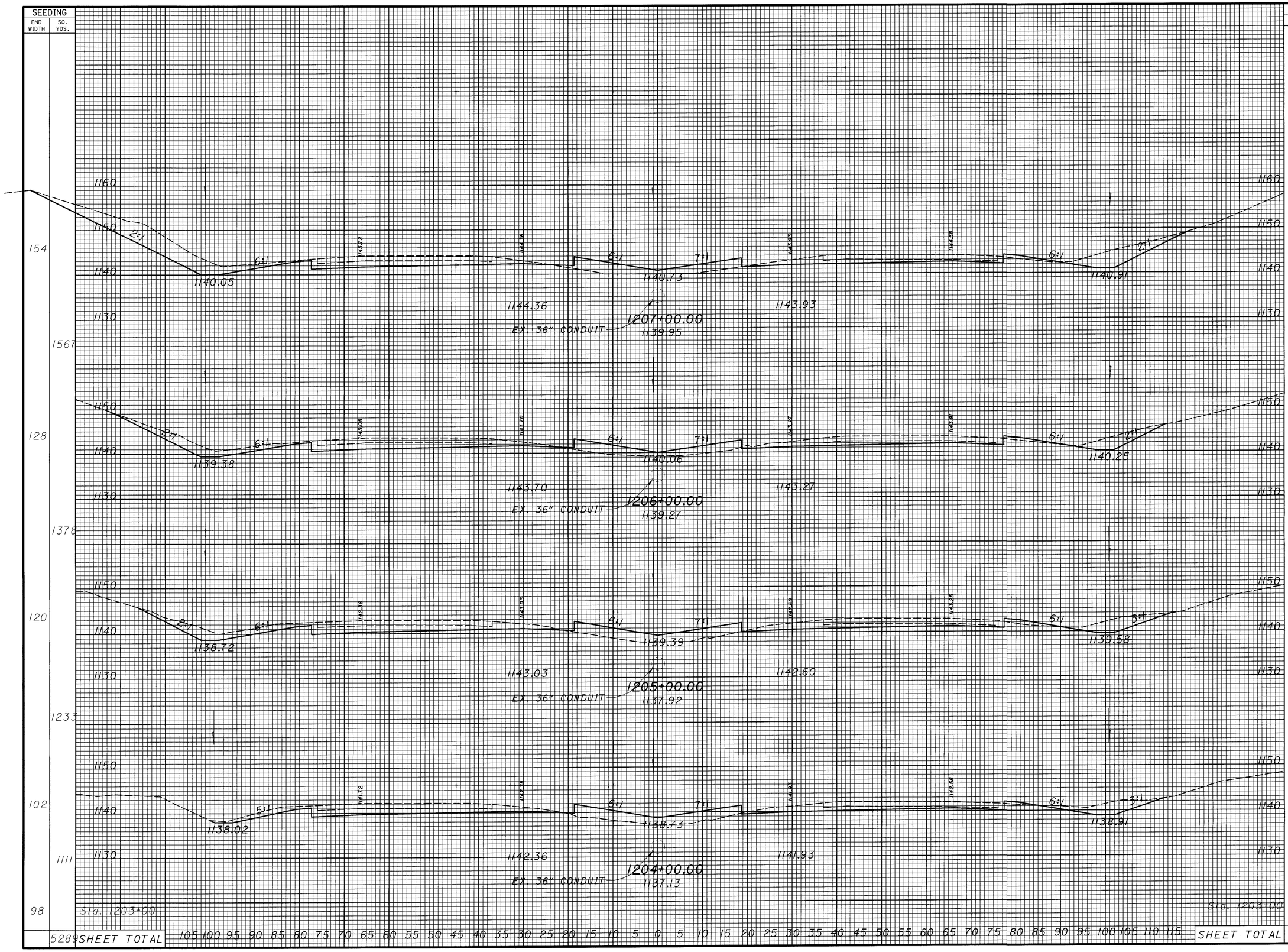

END AREA		VOLUME	
CUT	FILL	CUT	FILL
300	70		
		907	254
190	67		
		717	285
197	87		
		661	300
160	75		
		563	254
144	62		
	SHEET TOTAL	2848	1093

105 100 95 90 85 80 75 70 65 60 55 50 45 40 35 30 25 20 15 10 5 0 5 10 15 20 25 30 35 40 45 50 55 60 65 70 75 80 85 90 95 100 105 110 115

CALCULATED NJV
CHECKED JWR

CROSS SECTIONS
STA. 1204+00 TO STA. 1207+00

MED-71-15.78

322
940

: $$$$$$$$$$DESIGNFILE$PECIFICATION$$$$$$$$$$
DESIGN FILE : $$$$$$$$$$
USERNAME : $$$$INSTRUCTIONS$$$$
DATE : $$$$DATE$$$$$
TIME : $$$$TIME$$$$$

SEEDING	
END WIDTH	SQ. YDS.
194	
	2100
184	
	1967
170	
	1800
154	
	5867

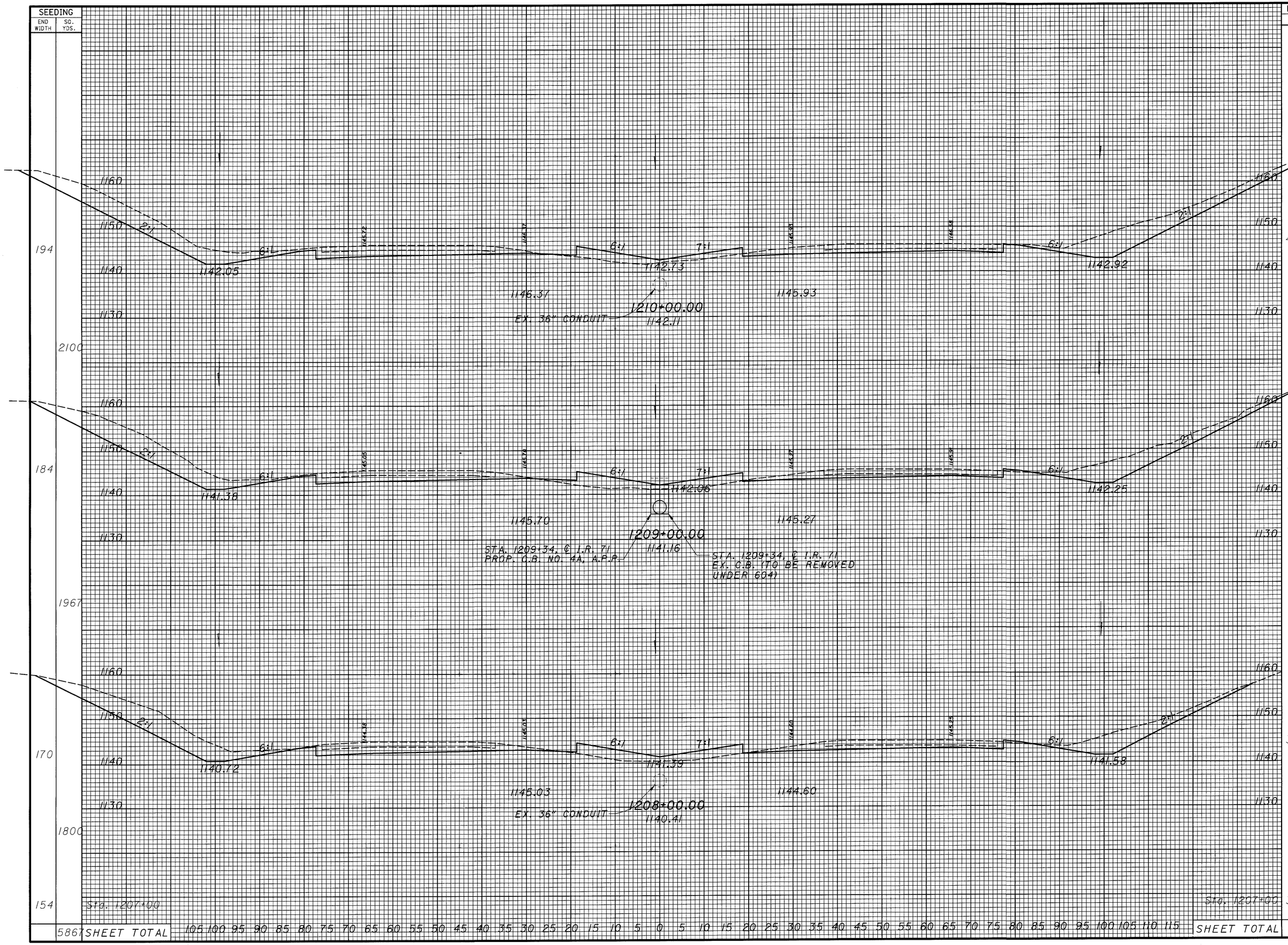

END AREA		VOLUME	
CUT	FILL	CUT	FILL
455	56		
		1602	244
410	76		
		1453	267
375	68		
		1250	256
300	70		
		4305	767

CALCULATED N.J.V.
CHECKED J.W.R.

CROSS SECTIONS
STA. 1208+00 TO STA. 1210+00

MED-71-15.78

323
940

DESIGN FILE : $$$$$$$$$$DESIGNFILE$SPECIFICATION$$$$$$$$$$
USERNAME : $$$$INSTRUCTIONS$$$$
DATE : $$$$DATE$$$$
TIME : $$$$TIME$$$$

SEEDING	
END WIDTH	SQ. YDS.
128	
1600	
160	
1956	
192	
2144	
194	
5700	SHEET TOTAL

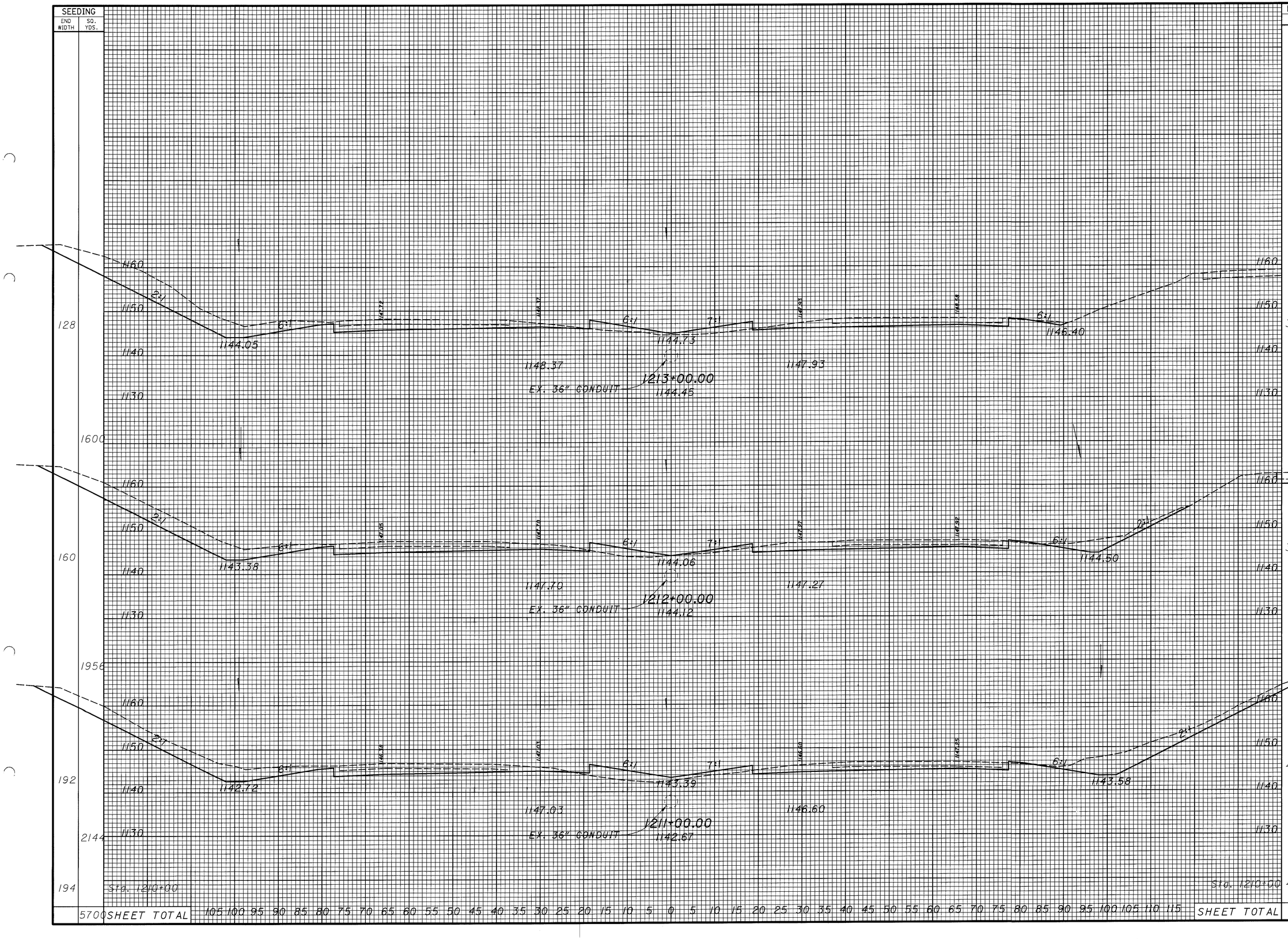

105	100	95	90	85	80	75	70	65	60	55	50	45	40	35	30	25	20	15	10	5	0	5	10	15	20	25	30	35	40	45	50	55	60	65	70	75	80	85	90	95	100	105	110	115

SHEET TOTAL

END AREA		VOLUME	
CUT	FILL	CUT	FILL
330	44		
352	36		
		1263	148
		1430	169
420	55		
		1620	206
455	56		
SHEET TOTAL		4313	523

CALCULATED NJV
CHECKED JWR

CROSS SECTIONS
STA. 1211+00 TO STA. 1213+00

MED-71-15.78

324
940

DESIGN FILE : $$$$$$$$$$DESIGNFILESPECIFICATION$$$$$$$$$$
USERNAME : $$$$INSTRUCTIONS$$$$
DATE : $$$$DATE$$$$
TIME : $$$$TIME$$$$

CROSS SECTIONS STA. 1214+00 TO STA. 1217+00

CALCULATED NJV
CHECKED JWR

MED-71-15.78

325
940

SEEDING END WIDTH	SEEDING SQ. YDS.	END AREA CUT	END AREA FILL	VOLUME CUT	VOLUME FILL
162		335	72		
				870	181
173		300	60		
		290	60		
				251	55
150		232	54		
102					
				915	161
114		262	33		
				1017	126
130		287	35		
				1143	146
120		330	44		
137					
128					
	561 SHEET TOTAL			4196	669

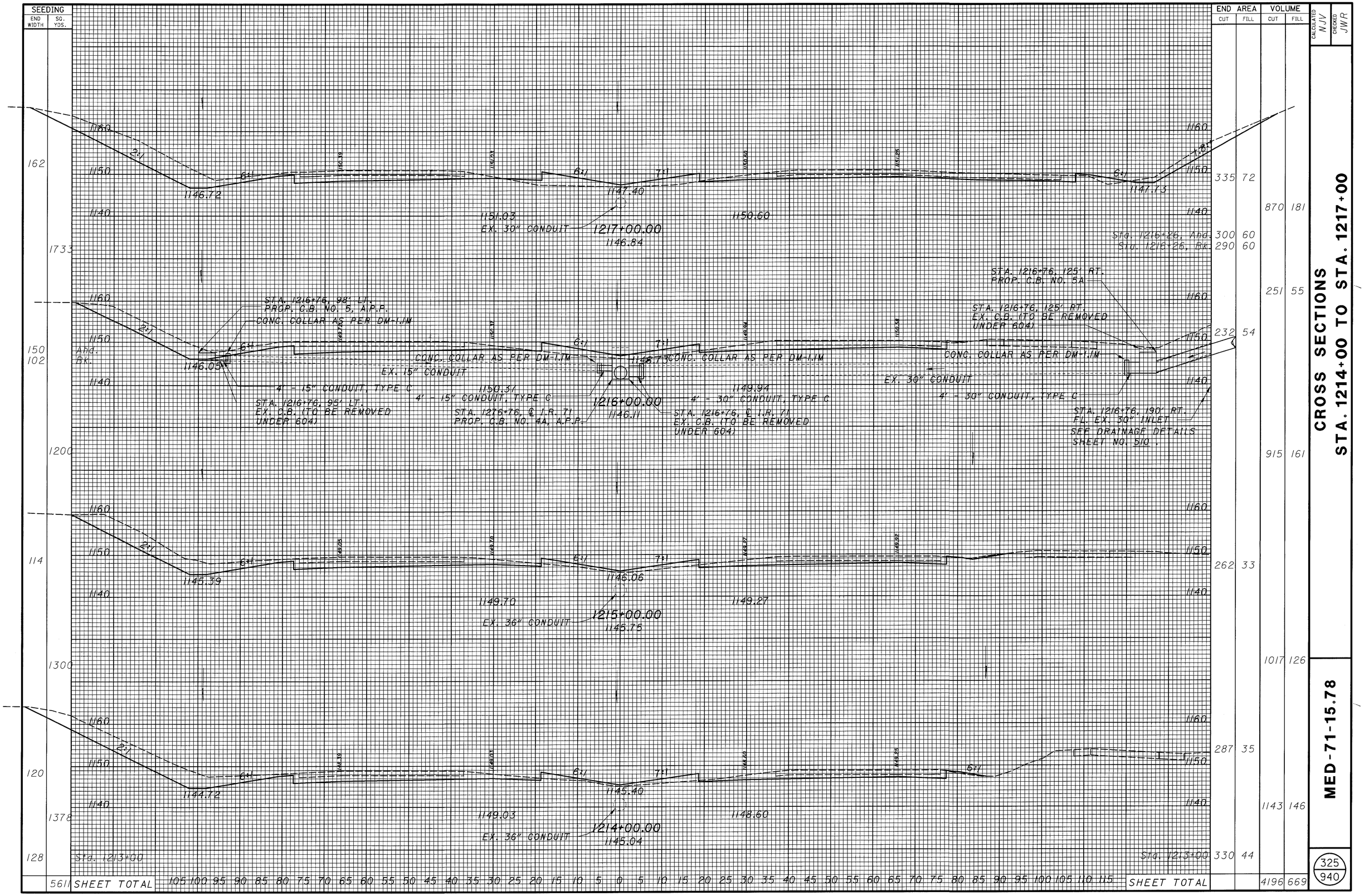

DESIGN FILE : $$$$$$$$$$DESIGNFILESPECIFICATION$$$$$$$$$$
USERNAME : $$$$INSTRUCTIONS$$$$
DATE : $$$$DATE$$$$
TIME : $$$$TIME$$$$

SEEDING	
END WIDTH	SQ. YDS.
170	1789
152	1822
176	1878
162	
	5489

END AREA		VOLUME	
CUT	FILL	CUT	FILL
200	120	852	333
260	60	991	222
285	60	1148	244
335	72	1299	799

CALCULATED NJV
CHECKED JWR

CROSS SECTIONS
STA. 1218+00 TO STA. 1220+00

MED-71-15.78

326
940

DATE : $$$$DATE$$$$ DESIGN FILE : $$$$$$$$$$DESIGNFILESPECIFICATION$$$$$$$$$$
TIME : $$$$TIME$$$$ USERNAME : $$$$INSTRUCTIONS$$$$

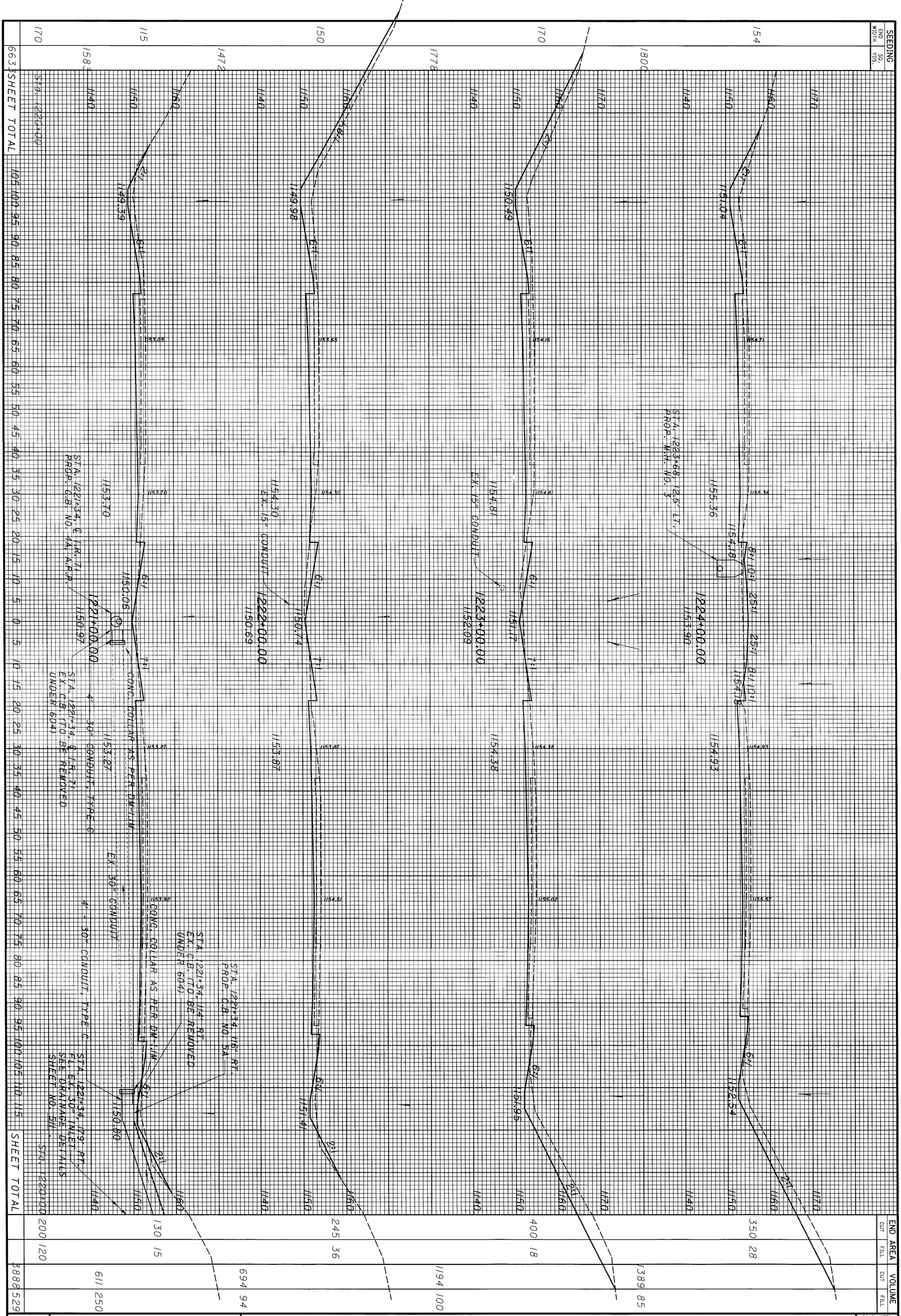

327
940

MED-71-15.78

CROSS SECTIONS
STA. 1221+00 TO STA. 1224+00

CALCULATED NJV
CHECKED JWR

DESIGN FILE : $$$$$$$$$$DESIGNFILESPECIFICATION$$$$$$$$$$
USERNAME : $$$$INSTRUCTIONS$$$$
DATE : $$$$DATE$$$$
TIME : $$$$TIME$$$$

CROSS SECTIONS
STA. 1225+00 TO STA. 1228+00

CALCULATED NJV
CHECKED JWR

SEEDING		END AREA		VOLUME	
END WIDTH	SQ. YDS.	CUT	FILL	CUT	FILL
146					
	1711	380	18	1519	78
162		440	24		
162		435	30		
154		280	23		
	1711			1167	94
154		350	28		
	6978 SHEET TOTAL	SHEET TOTAL		5630	370
				1620	100
				1324	98

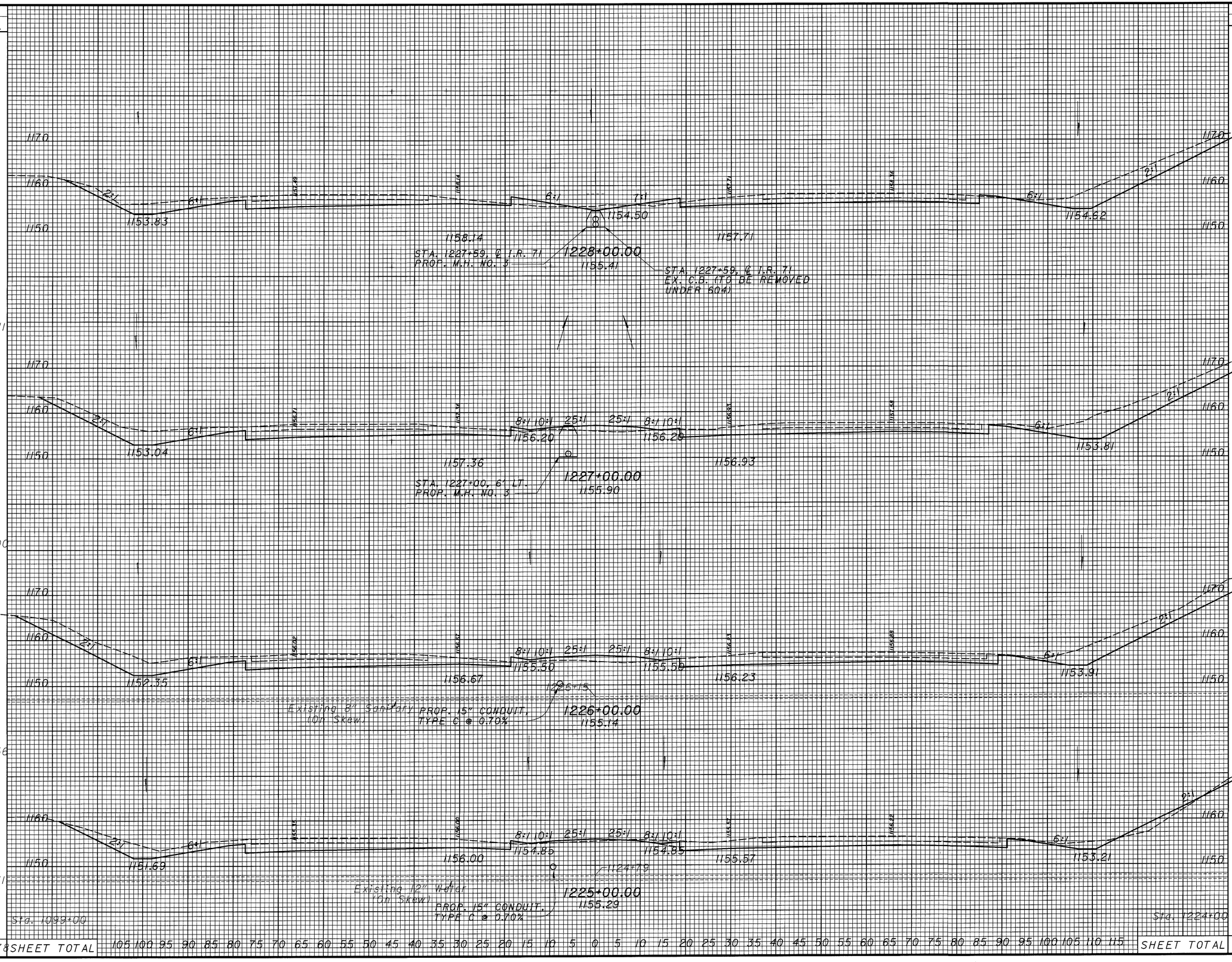

MED-71-15.78

DESIGN FILE : $$$$$$$$$$DESIGNFILESPECIFICATION$$$$$$$$$$
USERNAME : $$$$INSTRUCTIONS$$$$

DATE : $$$$DATE$$$$
TIME : $$$$TIME$$$$

SEEDING END WIDTH	SEEDING SQ. YDS.
112	1100
86	1056
104	1289
128	1522
146	
SHEET TOTAL	4967

	END AREA CUT	END AREA FILL	VOLUME CUT	VOLUME FILL
	225	26		
			713	104
	160	30		
			667	152
	200	52		
			972	148
	325	28		
			1306	85
	380	18		
SHEET TOTAL			3658	489

105 100 95 90 85 80 75 70 65 60 55 50 45 40 35 30 25 20 15 10 5 0 5 10 15 20 25 30 35 40 45 50 55 60 65 70 75 80 85 90 95 100 105 110 115

CALCULATED NJV
CHECKED JWR

CROSS SECTIONS STA. 1229+00 TO STA. 1232+00

MED-71-15.78

329
940

DATE : $$$$DATE$$$$ DESIGN FILE : $$$$$$$$$$DESIGNFILESPECIFICATION$$$$$$$$$$
TIME : $$$$TIME$$$$ USERNAME : $$$$INSTRUCTIONS$$$$

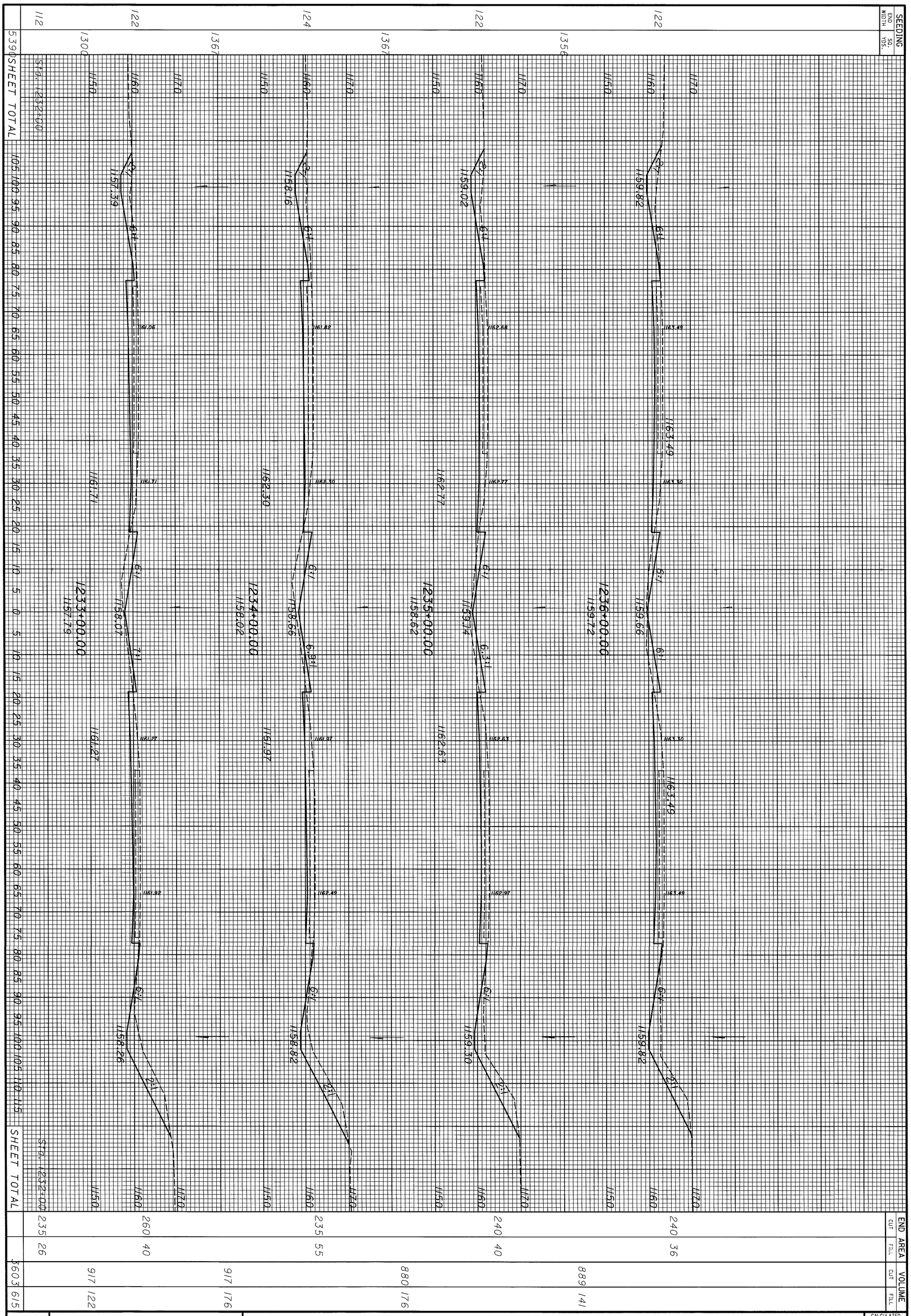

330
940

MED-71-15.78

CROSS SECTIONS
STA. 1233+00 TO STA. 1236+00

CALCULATED NJV
CHECKED JWR

DESIGN FILE : $$$$$$$$$$DESIGNFILESPECIFICATION$$$$$$$$$$
USERNAME : $$$$$INSTRUCTIONS$$$$$
DATE : $$$$DATE$$$$
TIME : $$$$TIME$$$$

SEEDING	
END WIDTH	SQ. YDS.
88	
989	
90	
1089	
106	
1267	
122	
1356	
122	
470	SHEET TOTAL

END AREA		VOLUME	
CUT	FILL	CUT	FILL
115	50		
		457	137
132	24		
		578	70
180	14		
		774	81
238	30		
		885	122
240	36		
		2694	410

CALCULATED NJV
CHECKED JWR

CROSS SECTIONS
STA. 1237+00 TO STA. 1240+00

MED-71-15.78

331
940

DESIGN FILE : $$$$$$$$$$DESIGNFILESPECIFICATION$$$$$$$$$$
USERNAME : $$$$INSTRUCTIONS$$$$
DATE : $$$$DATE$$$$
TIME : $$$$TIME$$$$

SEEDING	
END WIDTH	SQ. YDS.
118	1278
112	989
66	833
84	956
88	406

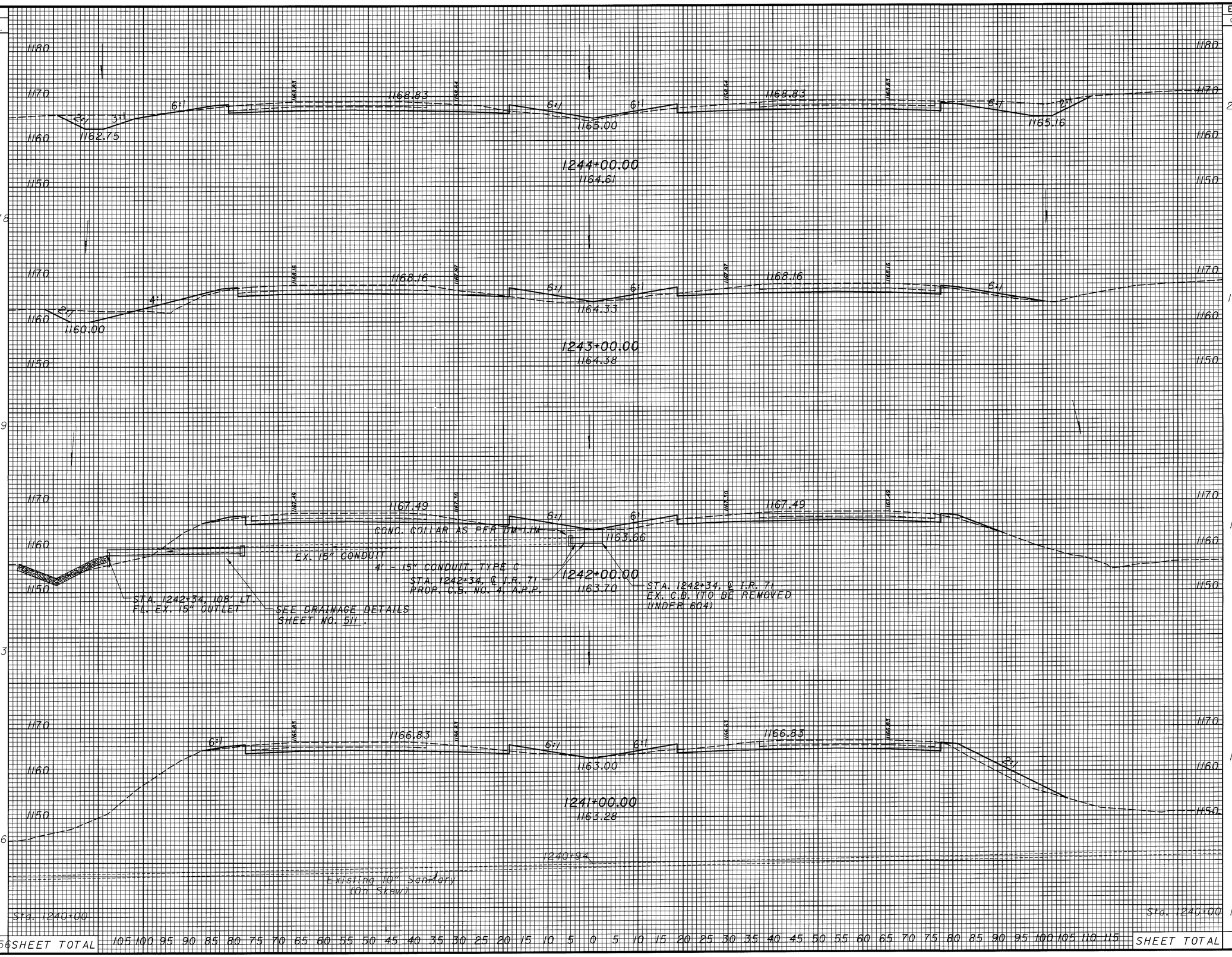

END AREA		VOLUME	
CUT	FILL	CUT	FILL
220	32		
		663	189
138	70		
		459	222
110	50		
		417	207
115	62		
		426	207
115	50		
		1965	825

CALCULATED N.J.V.
CHECKED J.W.R.

CROSS SECTIONS
STA. 1241+00 TO STA. 1244+00

MED-71-15.78

332
940

DATE : $$$$DATE$$$$ DESIGN FILE : $$$$$$$$$$DESIGNFILESPECIFICATION$$$$$$$$$$
TIME : $$$$TIME$$$$ USERNAME : $$$$INSTRUCTIONS$$$$

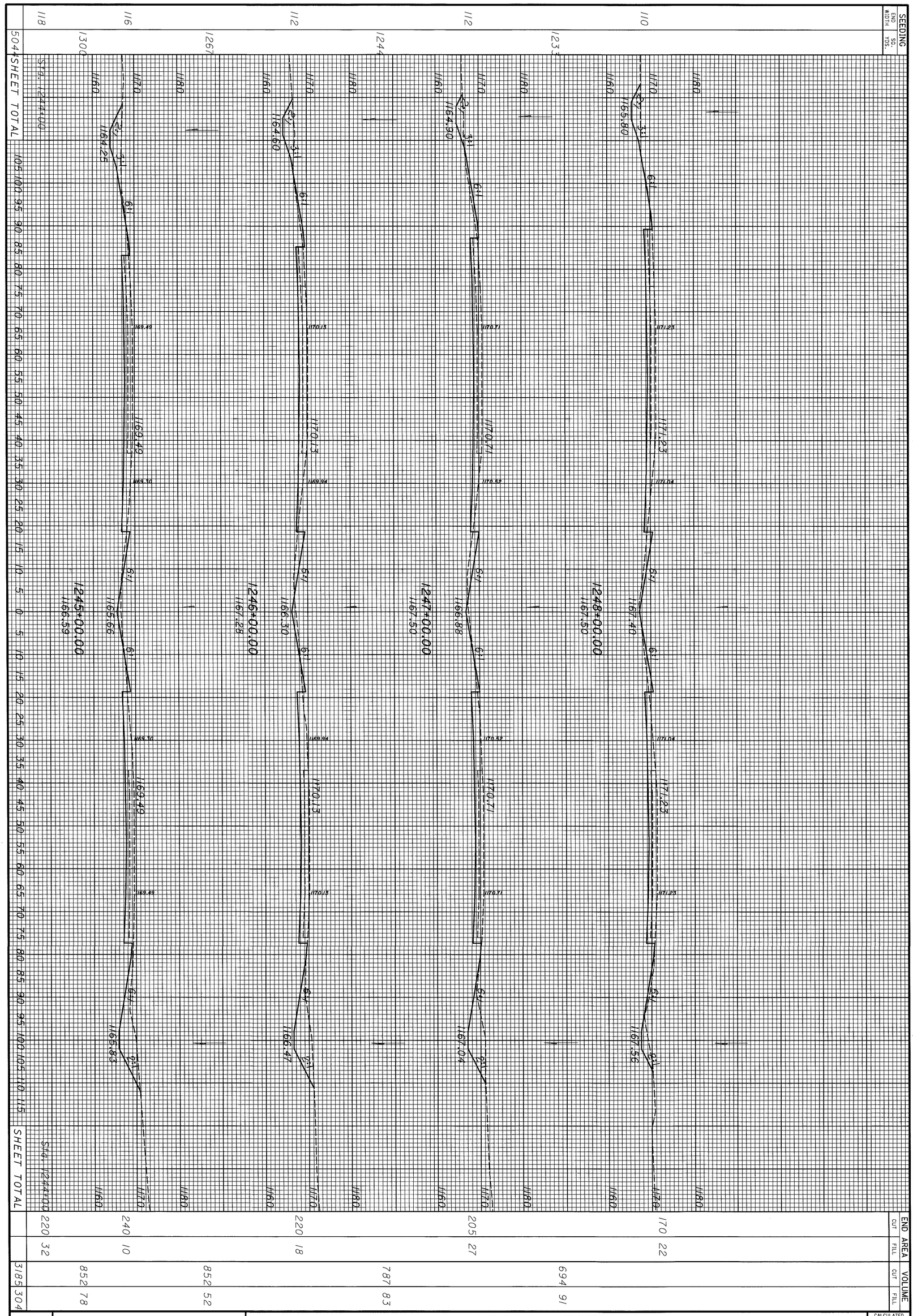

333
940

MED-71-15.78

CROSS SECTIONS
STA. 1245+00 TO STA. 1248+00

CALCULATED NJV
CHECKED JWR

DESIGN FILE : $$$$$$$$$$DESIGNFILESPECIFICATION$$$$$$$$$$
USERNAME : $$$$INSTRUCTIONS$$$$
DATE : $$$$DATE$$$$
TIME : $$$$TIME$$$$

SEEDING	
END WIDTH	SQ. YDS.
108	
	1133
96	
	1100
102	
	1178
110	
	1222
110	
	4633

SHEET TOTAL

END AREA		VOLUME	
CUT	FILL	CUT	FILL
146	66		
		585	196
170	40		
		602	144
155	38		
		574	156
155	46		
		602	126
170	22		
SHEET TOTAL		2363	622

CALCULATED NJV
CHECKED JWR

CROSS SECTIONS
STA. 1249+00 TO STA. 1252+00

MED-71-15.78

334
940

DESIGN FILE : $$$$$$$$$$DESIGNFILESPECIFICATION$$$$$$$$$$
USERNAME : $$$$INSTRUCTIONS$$$$
DATE : $$$$DATE$$$$
TIME : $$$$TIME$$$$

SEEDING		END AREA		VOLUME	
END WIDTH	SQ. YDS.	CUT	FILL	CUT	FILL
100	1267	134	142	507	599
128	1267	140	160	500	544
100	1156	130	134	511	370
108	1252	146	66		
	3690 SHEET TOTAL			1518	1513

CALCULATED NJV
CHECKED JWR

CROSS SECTIONS
STA. 1253+00 TO STA. 1255+00

MED-71-15.78

335
940

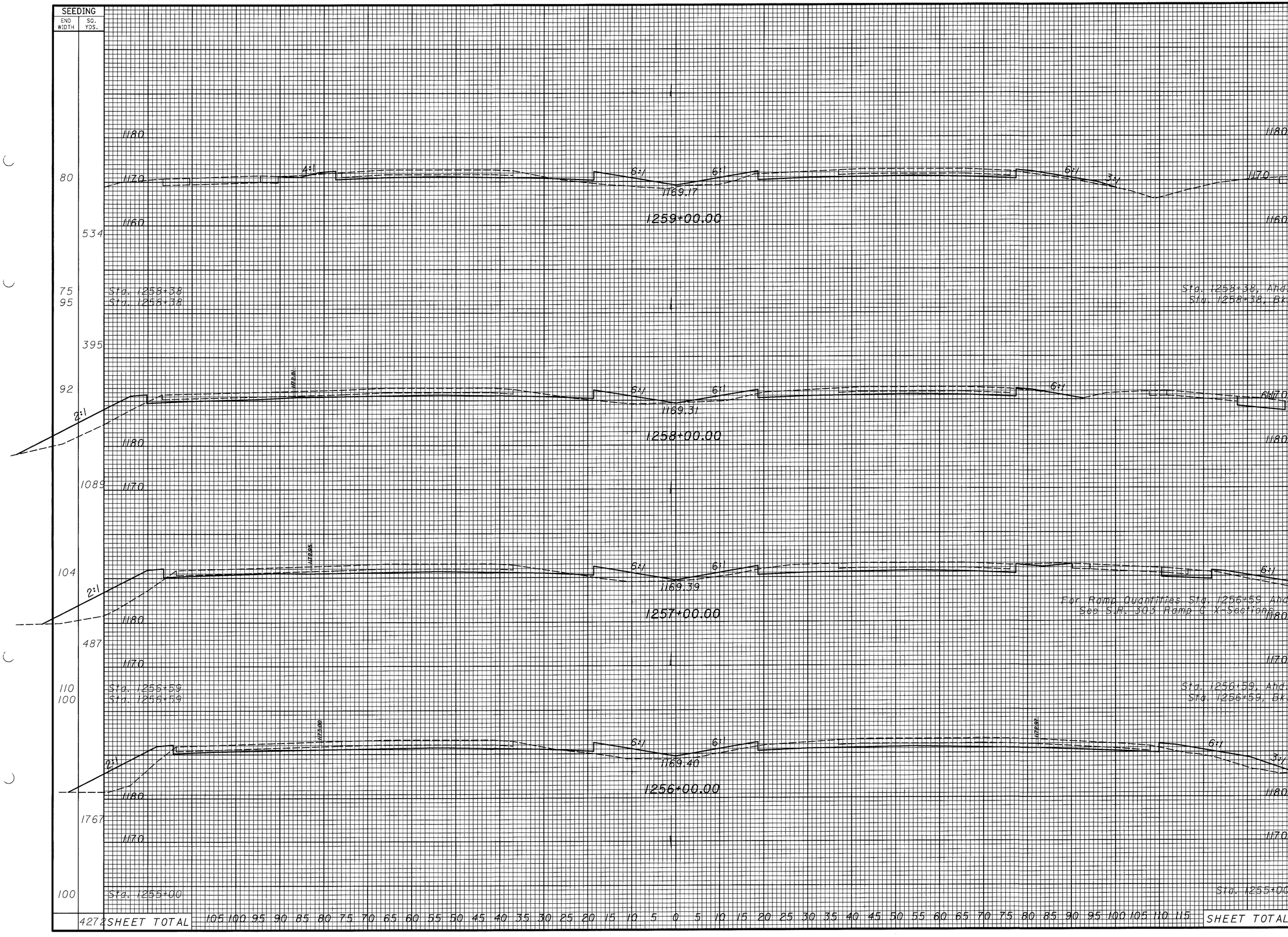

SEEDING END WIDTH	SEEDING SQ. YDS.	END AREA CUT	END AREA FILL	VOLUME CUT	VOLUME FILL
80		85	65		
	534			201	212
75		90	120		
95		115	120		
	395			158	165
92		110	115		
	1089			426	481
104		120	145		
	487			182	220
110		120	145		
100		140	162		
	1767			807	895
100		134	142		
	4272 SHEET TOTAL			1774	1973

CALCULATED NJV
CHECKED JWR

CROSS SECTIONS
STA. 1256+00 TO STA. 1259+00

MED-71-15.78

DESIGN FILE : $$$$$$$$$$DESIGNFILESPECIFICATION$$$$$$$$$$
USERNAME : $$$$INSTRUCTIONS$$$$
DATE : $$$$DATE$$$$
TIME : $$$$TIME$$$$

DESIGN FILE : $$$$$$$$$$DESIGNFILESPECIFICATION$$$$$$$$$$
USERNAME : $$$$INSTRUCTIONS$$$$
DATE : $$$$DATE$$$$$
TIME : $$$$TIME$$$$

SEEDING	
END WIDTH	SQ. YDS.
106	1078
88	1078
106	1067
86	922
80	4145

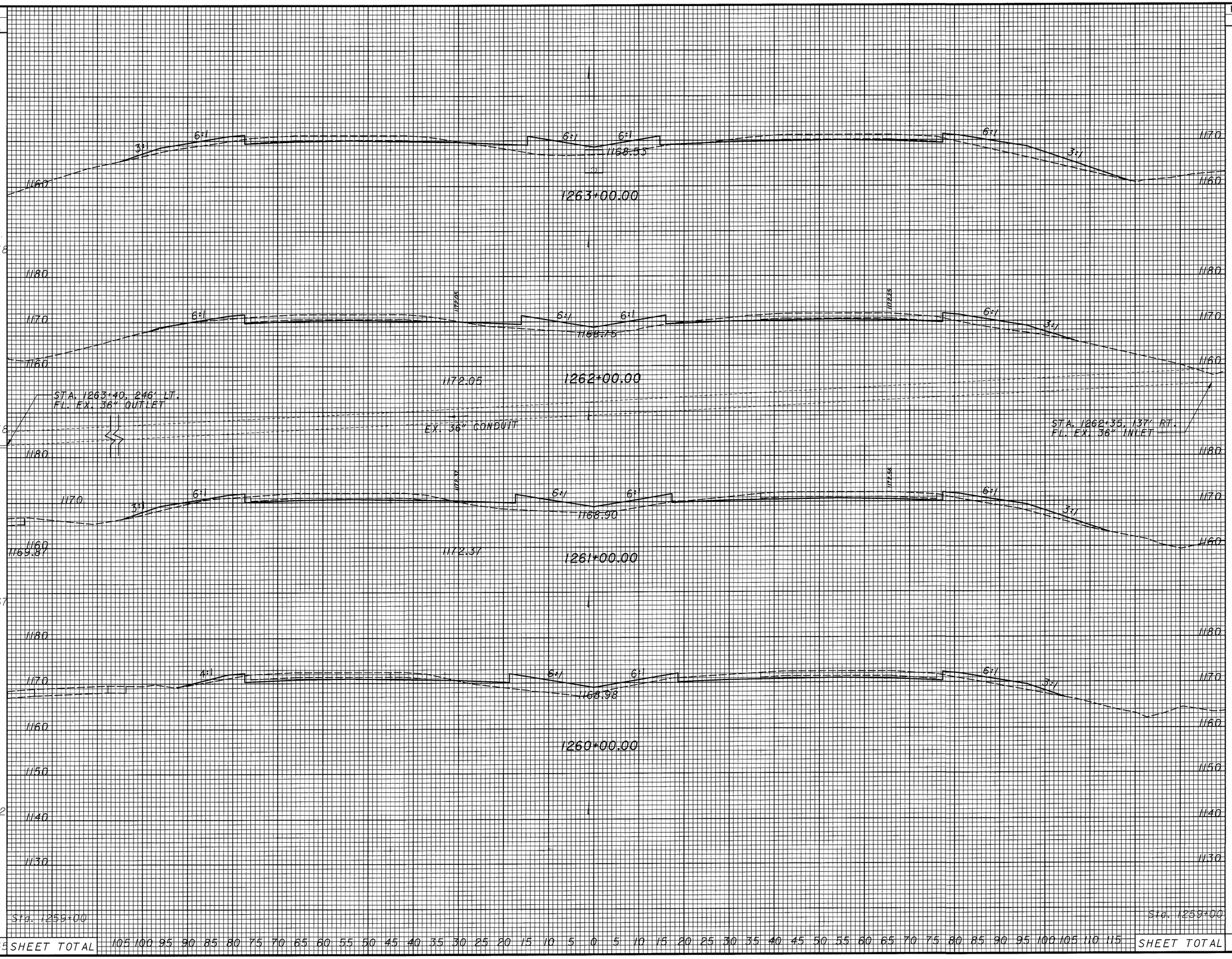

END AREA		VOLUME	
CUT	FILL	CUT	FILL
30	170		
40	115	130	528
50	135	167	463
66	110	215	454
85	65	280	324
		792	1769

CALCULATED NJV
CHECKED JWR

CROSS SECTIONS STA. 1260+00 TO STA. 1263+00

MED-71-15.78

337
940

DESIGN FILE : $$$$$$$$$$DESIGNFILESPECIFICATION$$$$$$$$$$
USERNAME : $$$$$INSTRUCTIONS$$$$$
DATE : $$$$DATE$$$$$
TIME : $$$$TIME$$$$

SEEDING		END AREA		VOLUME	
END WIDTH	SQ. YDS.	CUT	FILL	CUT	FILL
64		10	50		
	811			56	269
82		20	95		
167				15	63
85		25	95		
80		20	90		
	765			76	289
88		30	100		
	1078			111	500
106		30	170		
282	SHEET TOTAL			258	1121

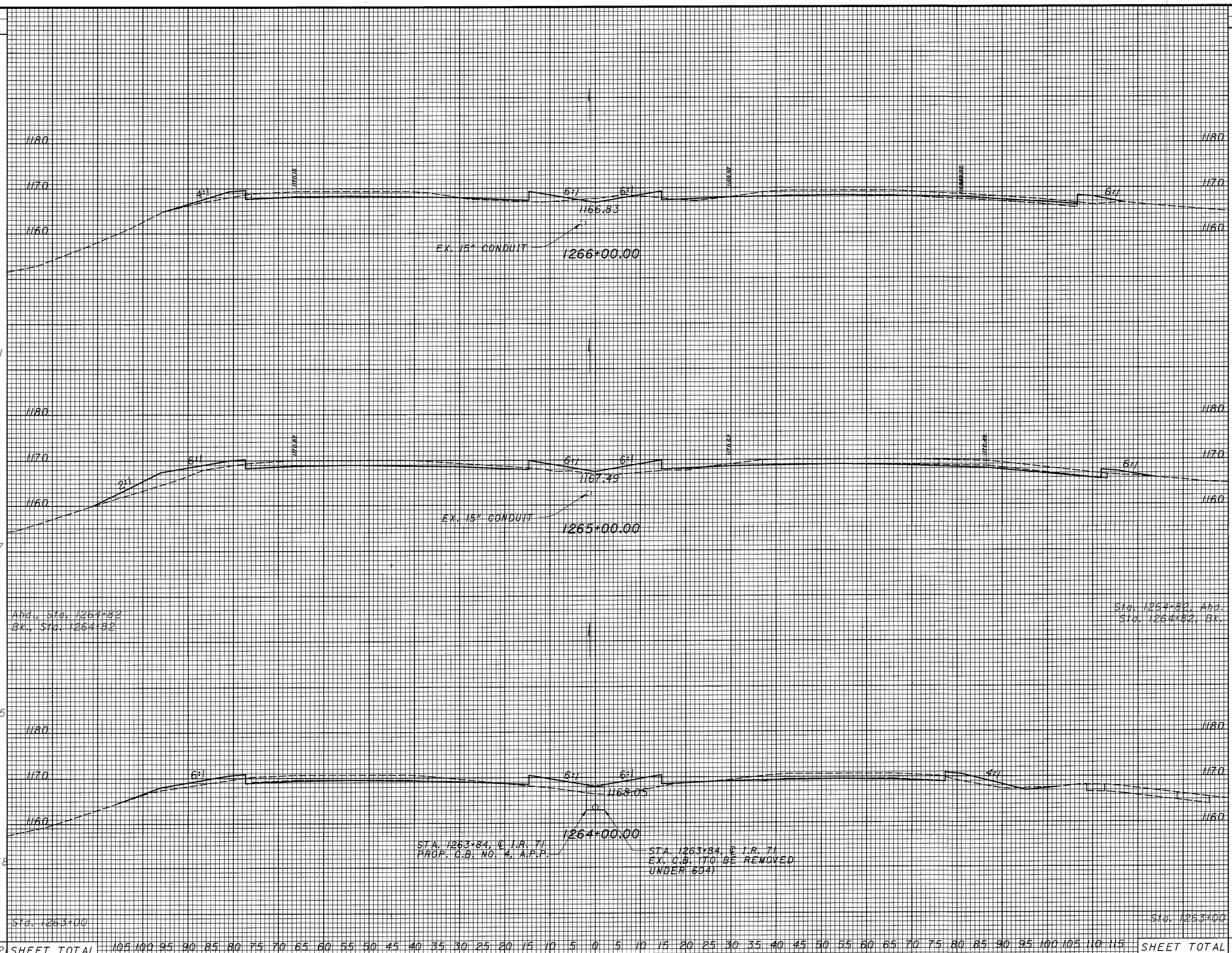

CALCULATED NJV
CHECKED JWR

CROSS SECTIONS
STA. 1264+00 TO STA. 1266+00

MED-71-15.78

338
940

DESIGN FILE : $$$$$$$$$$DESIGNFILESPECIFICATION$$$$$$$$$$
USERNAME : $$$$INSTRUCTIONS$$$$
DATE : $$$$DATE$$$$
TIME : $$$$TIME$$$$

SEEDING	
END WIDTH	SQ. YDS.

DESIGN FILE : $$$$$$$$$$DESIGNFILESPECIFICATION$$$$$$$$$$
USERNAME : $$$$INSTRUCTIONS$$$$
DATE : $$$$DATE$$$$
TIME : $$$$TIME$$$$

SEEDING	
END WIDTH	SQ. YDS.
84	1244
140	1278
92	1100
106	Abd.
3622	SHEET TOTAL

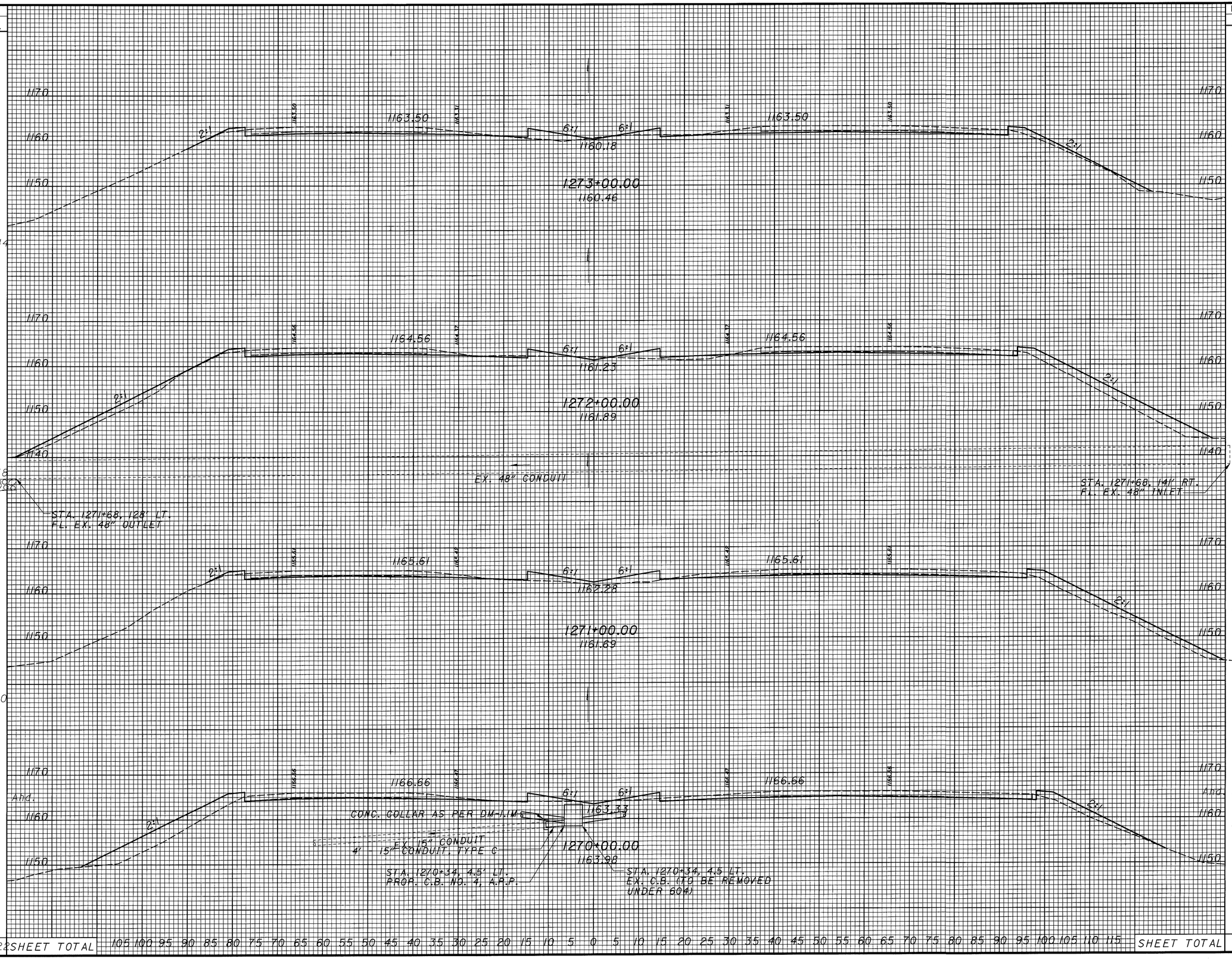

END AREA		VOLUME	
CUT	FILL	CUT	FILL
52	50		
		170	380
40	155		
		139	491
35	110		
		115	463
Abd.	27	140	
	SHEET TOTAL	424	1334

CALCULATED NJV
CHECKED JWR

CROSS SECTIONS
STA. 1270+00 TO STA. 1273+00

MED-71-15.78

340
940

DATE : $$$$DATE$$$$
TIME : $$$$TIME$$$$
DESIGN FILE : $$$$$$$$DESIGNFILESPECIFICATION$$$$$$$$$$
USERNAME : $$$$INSTRUCTIONS$$$$

CROSS SECTIONS
STA. 1274+00 TO STA. 1276+00

CALCULATED NJV
CHECKED JWR

MED-71-15.78

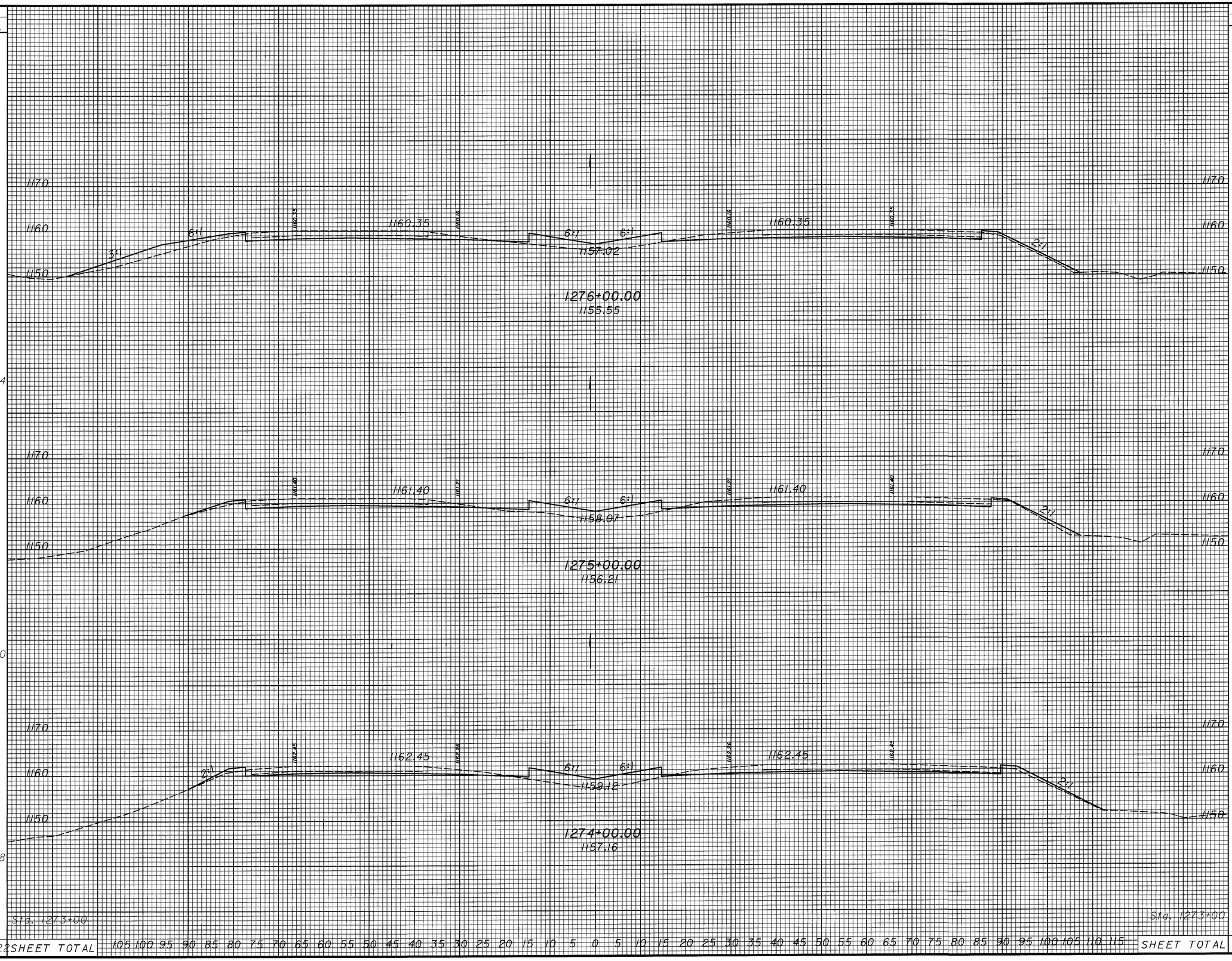

SEEDING END WIDTH	SEEDING SQ. YDS.	END AREA CUT	END AREA FILL	VOLUME CUT	VOLUME FILL
100		84	115		
	944			300	369
70		78	84		
	800			274	307
74		70	82		
	878			226	244
84		52	50		
	2622 SHEET TOTAL			800	920

105 100 95 90 85 80 75 70 65 60 55 50 45 40 35 30 25 20 15 10 5 0 5 10 15 20 25 30 35 40 45 50 55 60 65 70 75 80 85 90 95 100 105 110 115

SHEET TOTAL

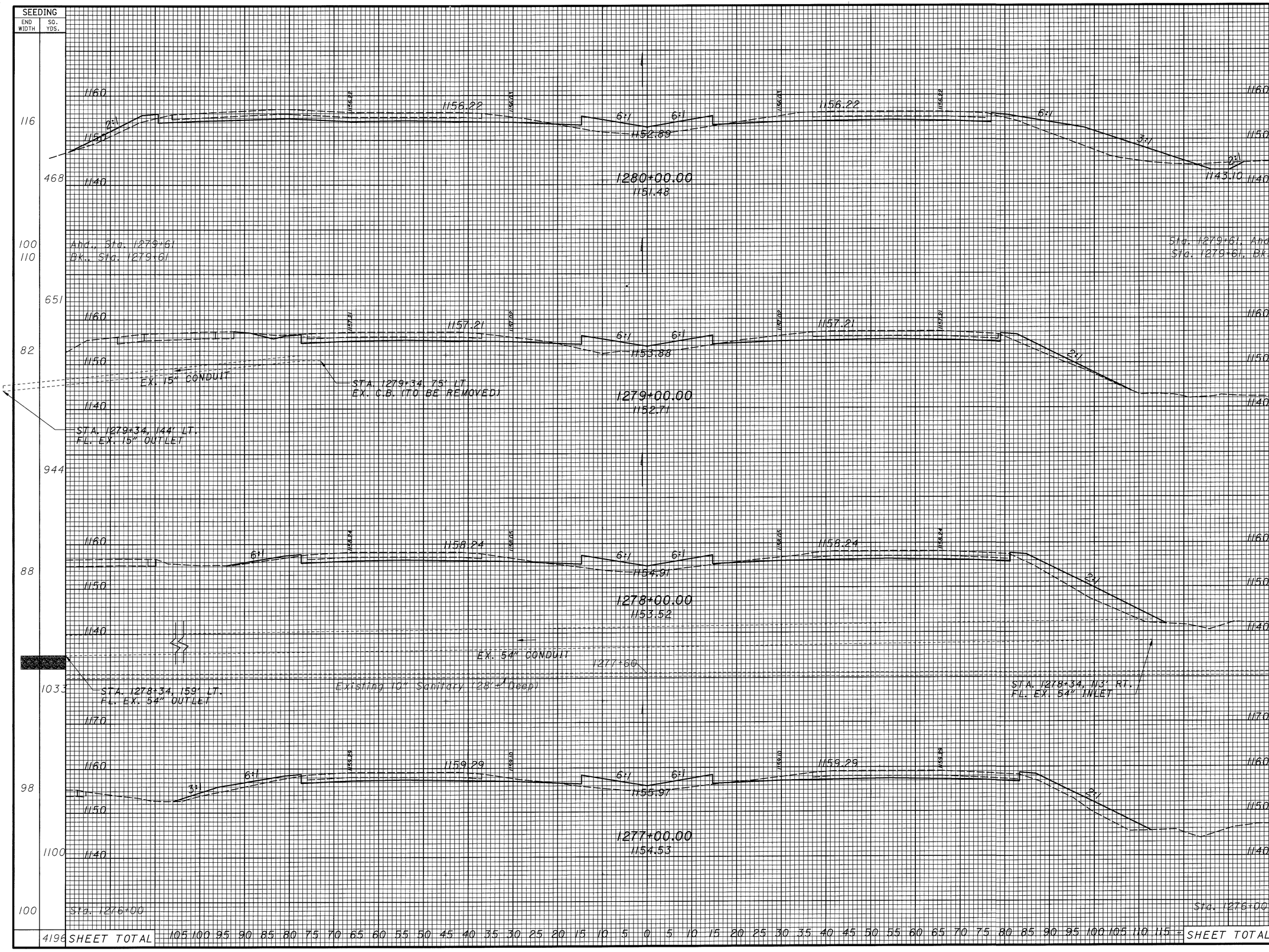

END AREA CUT	END AREA FILL	VOLUME CUT	VOLUME FILL
145	200		
		202	264
135	165		
105	145		
		241	261
108	86		
		363	419
88	140		
		311	509
80	135		
		304	463
84	115		
		1421	1916

CALCULATED NJV
CHECKED JWR

CROSS SECTIONS
STA. 1277+00 TO STA. 1280+00

MED-71-15.78

DESIGN FILE : $$$$$$$$$$DESIGNFILESPECIFICATION$$$$$$$$$$
USERNAME : $$$$INSTRUCTIONS$$$$
DATE : $$$$DATE$$$$
TIME : $$$$TIME$$$$

DATE : $$$$DATE$$$$ DESIGN FILE : $$$$$$$$$$DESIGNFILESPECIFICATION$$$$$$$$$$
TIME : $$$$TIME$$$$ USERNAME : $$$$INSTRUCTIONS$$$$

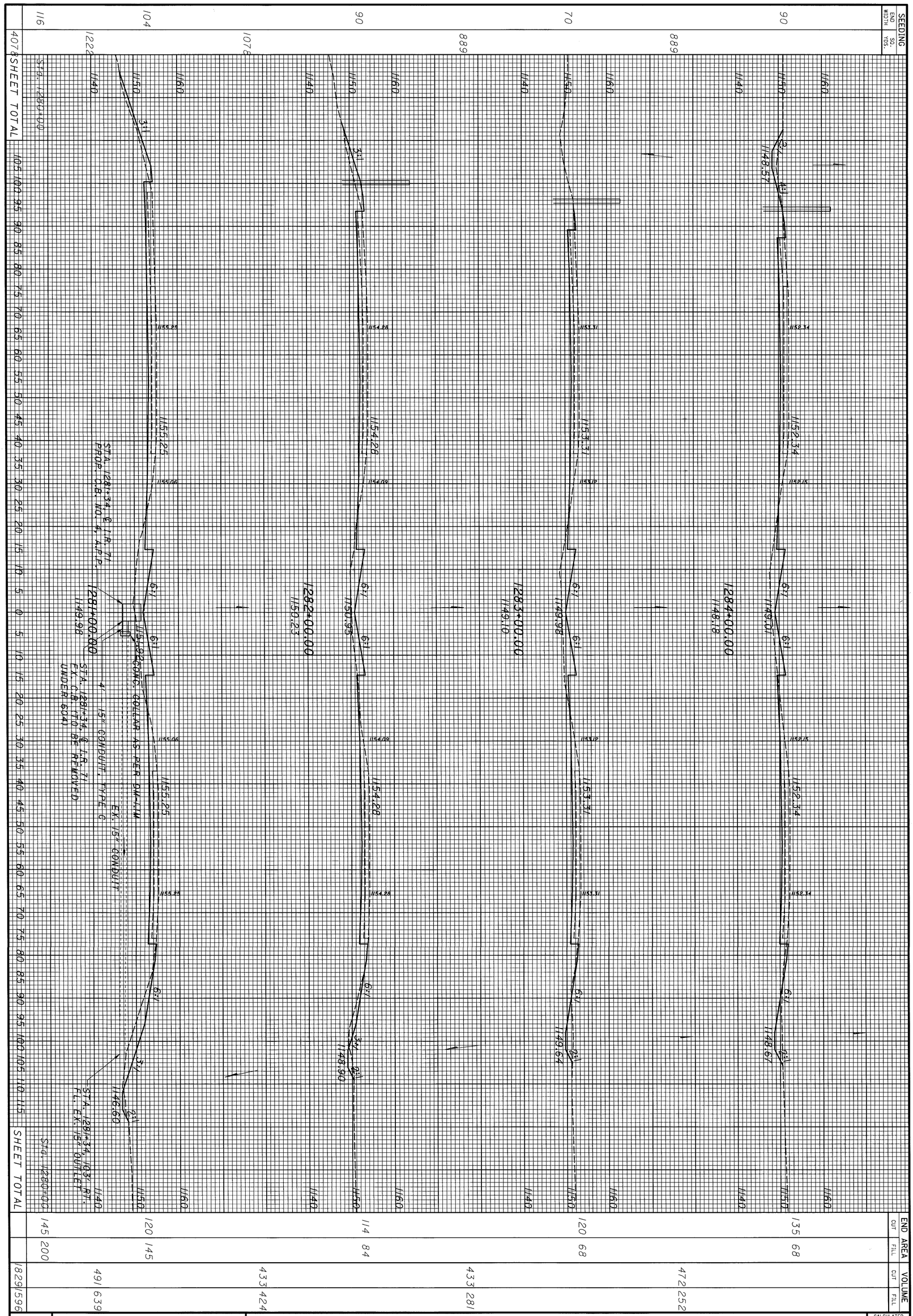

END AREA CUT	145	120		114	120		135		
END AREA FILL	200	145		84	68		68		
VOLUME CUT	1829	491	433		433	472			
VOLUME FILL	1596	639	424		281	252			

343
940

MED-71-15.78

CROSS SECTIONS
STA. 1281+00 TO STA. 1284+00

CALCULATED NJV
CHECKED JWR

DESIGN FILE : $$$$$$$$$$DESIGNFILESPECIFICATION$$$$$$$$$$
USERNAME : $$$$INSTRUCTIONS$$$$
DATE : $$$$DATE$$$$
TIME : $$$$TIME$$$$

SEEDING END WIDTH	SEEDING SQ. YDS.	END AREA CUT	END AREA FILL	VOLUME CUT	VOLUME FILL
92		140	55		
	1022			513	222
92		137	65		
	1022			541	269
92		155	80		
	1011			537	274
90		135	68		
305	SHEET TOTAL			1591	765

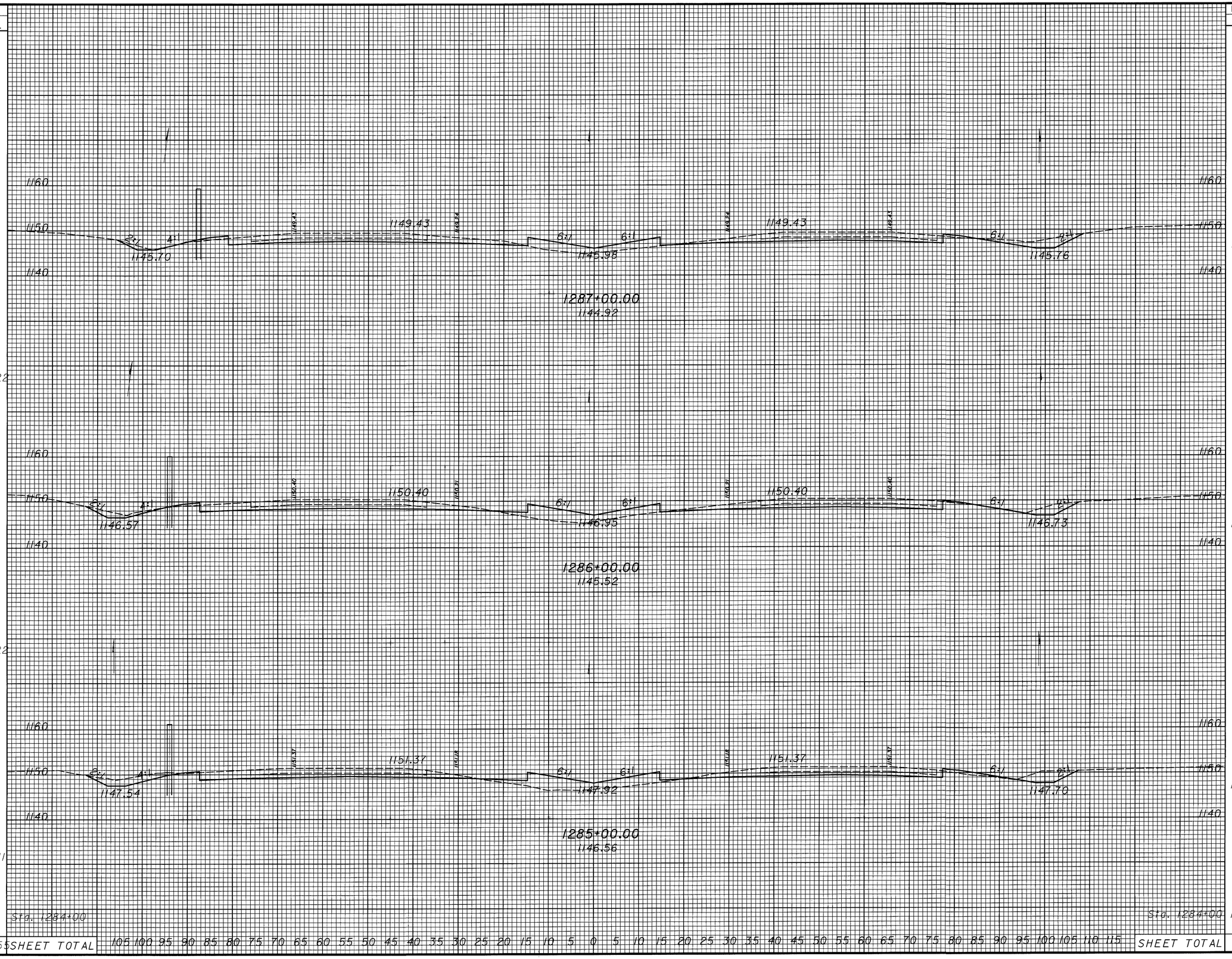

CALCULATED NJV
CHECKED JWR

CROSS SECTIONS STA. 1285+00 TO STA. 1287+00

MED-71-15.78

344
940

DESIGN FILE : $$$$$$$$$DESIGNFILESPECIFICATION$$$$$$$$$
USERNAME : $$$$INSTRUCTIONS$$$$

DATE : $$$$DATE$$$$
TIME : $$$$TIME$$$$

SEEDING END WIDTH	SEEDING SQ. YDS.
89	
	1017
94	
	1028
91	
	1011
91	
	1017
92	
	4073

END AREA CUT	END AREA FILL	VOLUME CUT	VOLUME FILL
134	49		
		507	189
140	53		
		500	215
130	63		
		480	230
129	61		
		498	215
140	55		
		1985	849

CALCULATED NJV
CHECKED JWR

CROSS SECTIONS STA. 1288+00 TO STA. 1291+00

MED-71-15.78

345
940

DESIGN FILE : $$$$$$$$$$DESIGNFILESPECIFICATION$$$$$$$$$$
USERNAME : $$$$INSTRUCTIONS$$$$
DATE : $$$$DATE$$$$$
TIME : $$$$TIME$$$$

CROSS SECTIONS
STA. 1292+00 TO STA. 1295+00

CALCULATED NJV
CHECKED JWR

MED-71-15.78

346
940

SEEDING END WIDTH	SEEDING SQ. YDS.	END AREA CUT	END AREA FILL	VOLUME CUT	VOLUME FILL
83	944	144	42	515	180
87	967	134	55	494	191
87	872	133	48	483	170
70	883	128	44	485	176
89		134	49		
3666 SHEET TOTAL				1977	717

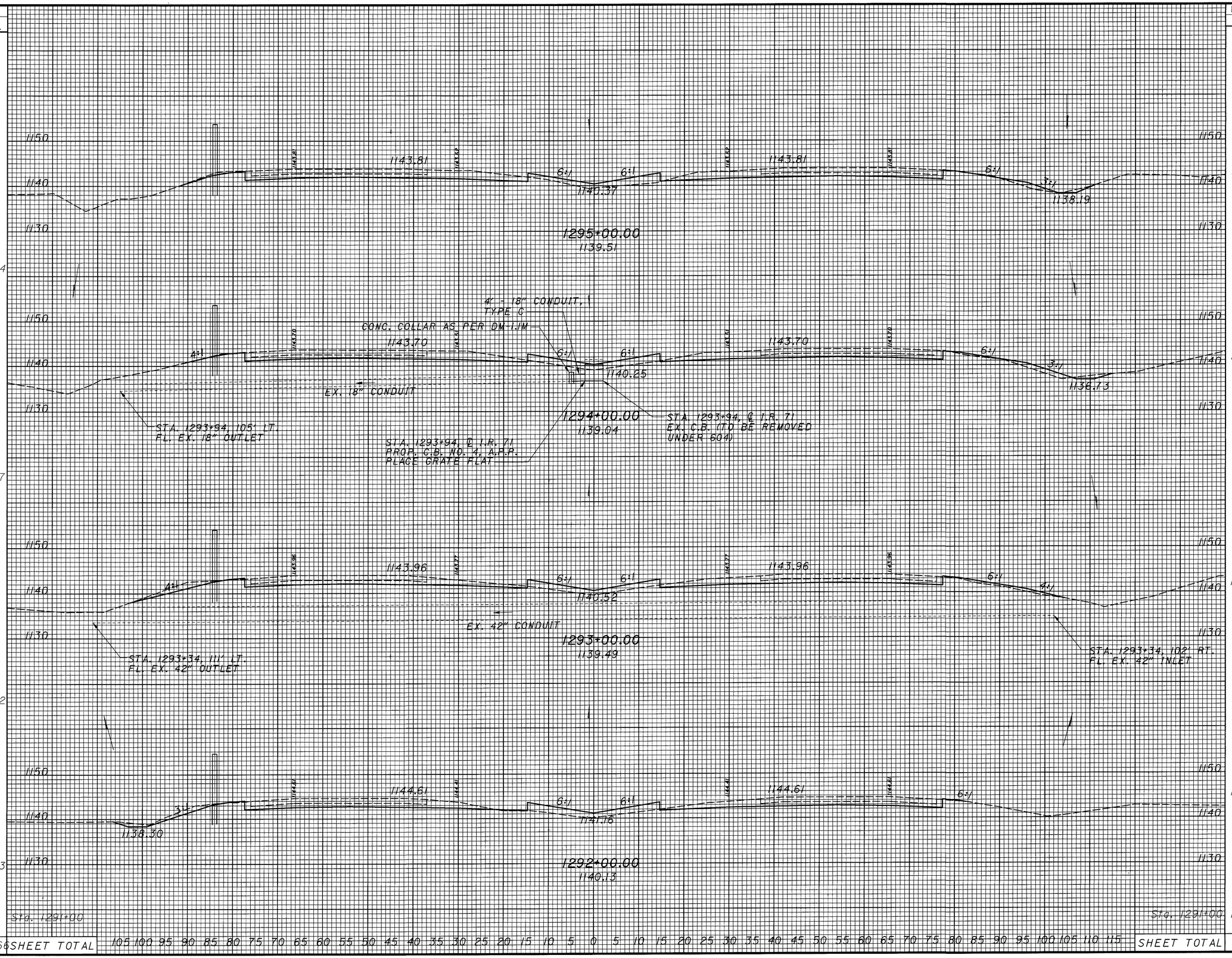

$$$$$$$$$$DESIGNFILESPECIFICATION$$$$$$$$$$
$$$$INSTRUCTIONS$$$$$

DESIGN FILE : $$$$$$$$$$
USERNAME : $$$$INSTRUCTIONS$$$$$

DATE : $$$$DATE$$$$
TIME : $$$$TIME$$$$

SEEDING	
END WIDTH	SQ. YDS.
73	828
76	839
75	839
76	883
83	
	3389

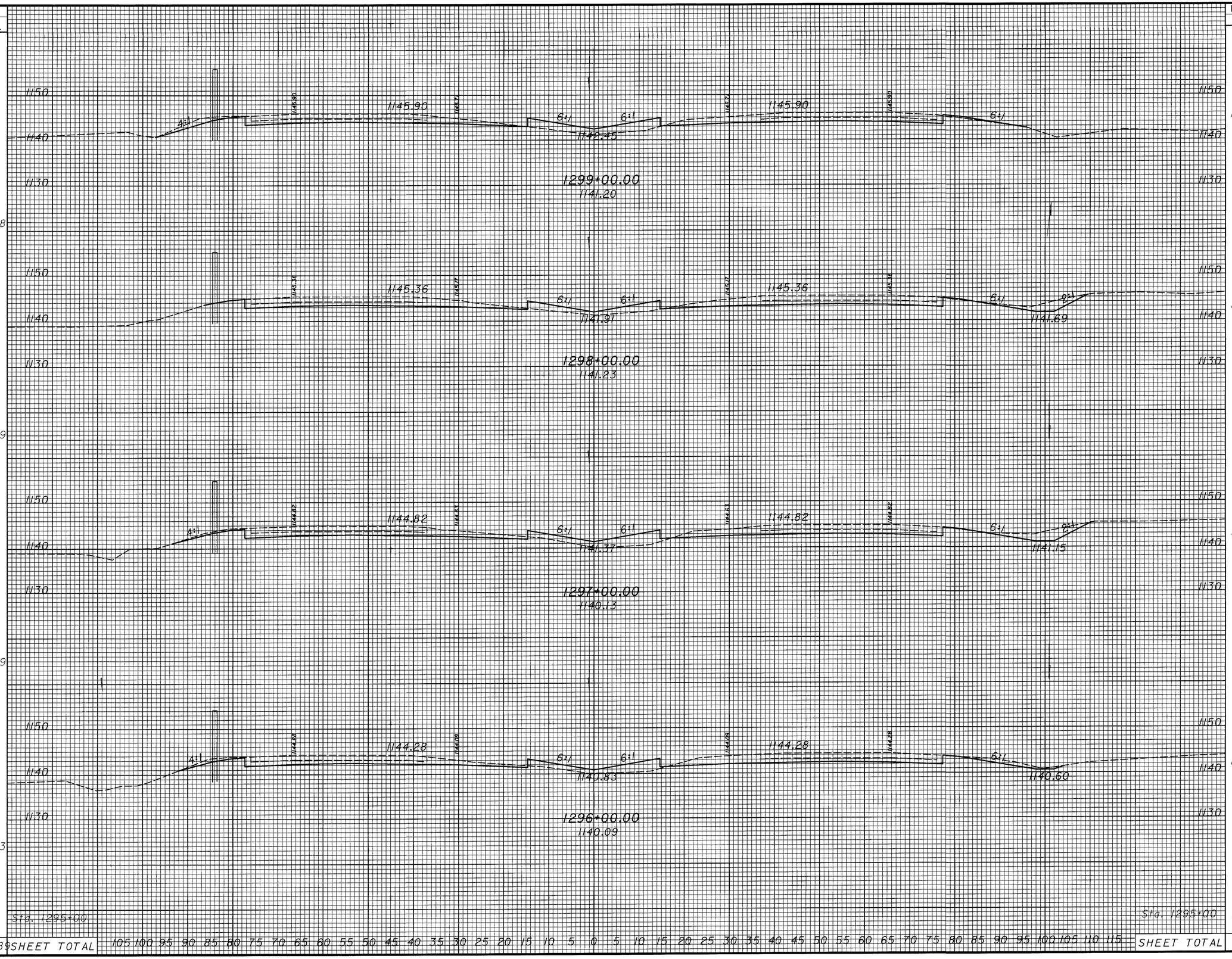

END AREA		VOLUME	
CUT	FILL	CUT	FILL
125	53		
		494	167
142	37		
		554	161
157	50		
		546	170
138	42		
		522	156
144	42		
		2116	654

CALCULATED NJV
CHECKED JWR

CROSS SECTIONS
STA. 1296+00 TO STA. 1299+00

MED-71-15.78

347
940

DESIGN FILE : $$$$$$$$$$DESIGNFILE\SPECIFICATION$$$$$$$$$$
USERNAME : $$$$\INSTRUCTIONS$$$$
DATE : $$$$DATE$$$$
TIME : $$$$TIME$$$$

SEEDING END WIDTH	SEEDING SQ. YDS.
113	1033
73	728
58	622
54	706
73	
SHEET TOTAL	3089

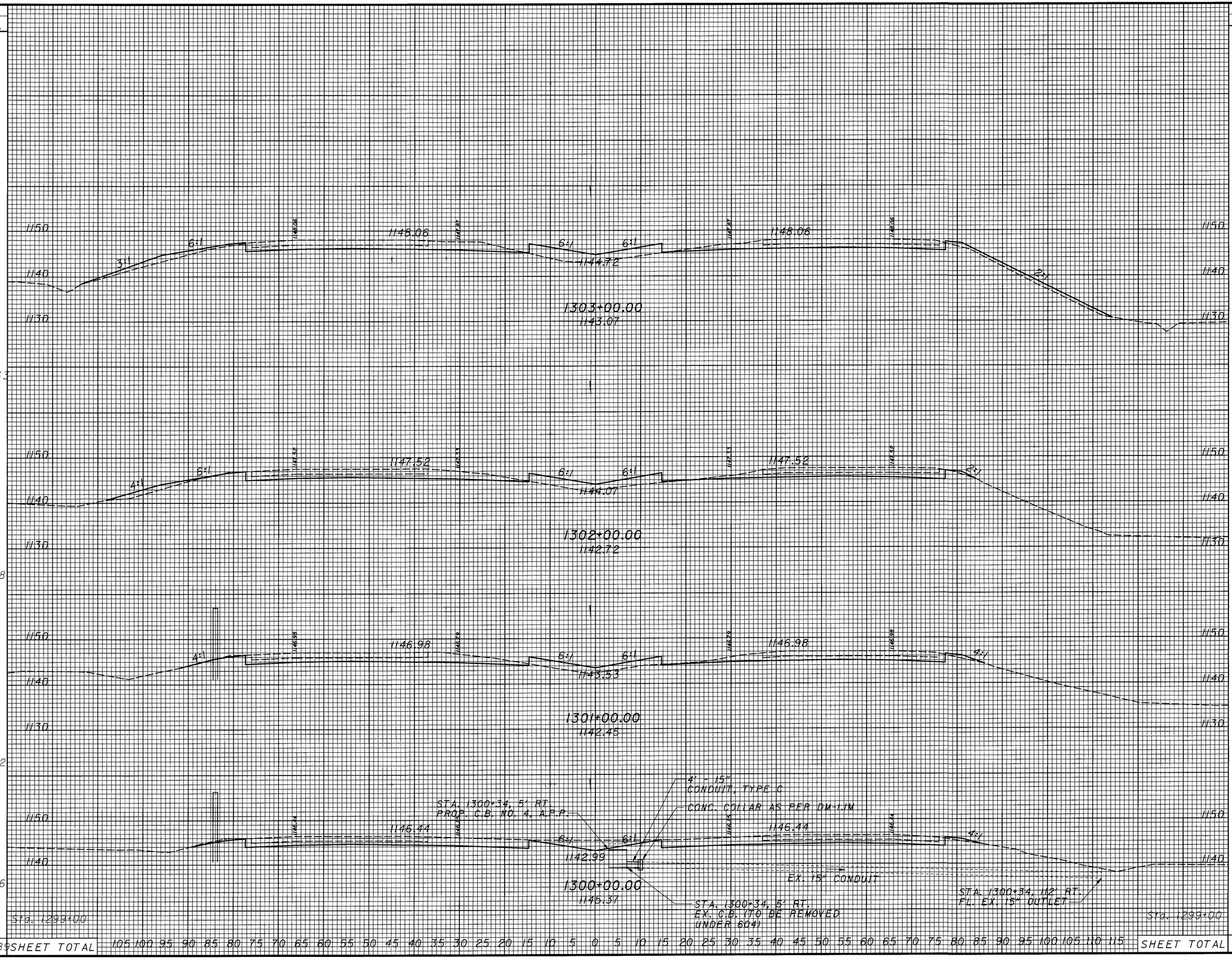

END AREA CUT	END AREA FILL	VOLUME CUT	VOLUME FILL
123	112		
		441	337
115	70		
		444	213
125	45		
		587	91
192	4		
		587	106
125	53		
SHEET TOTAL		2059	747

105 100 95 90 85 80 75 70 65 60 55 50 45 40 35 30 25 20 15 10 5 0 5 10 15 20 25 30 35 40 45 50 55 60 65 70 75 80 85 90 95 100 105 110 115

CALCULATED NJV
CHECKED JWR

CROSS SECTIONS
STA. 1300+00 TO STA. 1303+00

MED-71-15.78

348
940

DATE : $$$$DATE$$$$ DESIGN FILE : $$$$$$$$$$DESIGNFILESPECIFICATION$$$$$$$$$$
TIME : $$$$TIME$$$$ USERNAME : $$$$INSTRUCTIONS$$$$

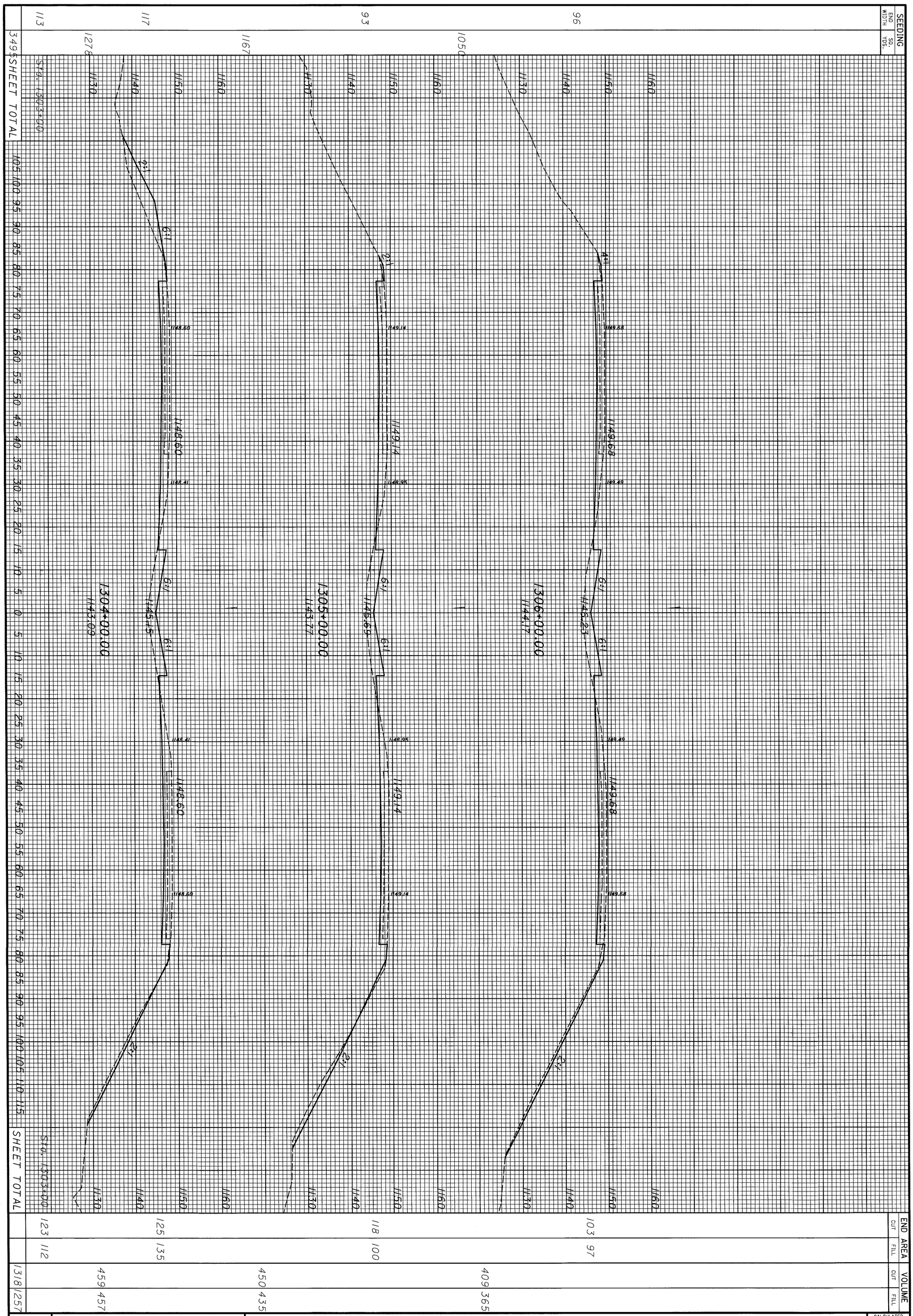

349/940	
MED-71-15.78	CROSS SECTIONS STA. 1304+00 TO STA. 1306+00
	CALCULATED NJV CHECKED JWR

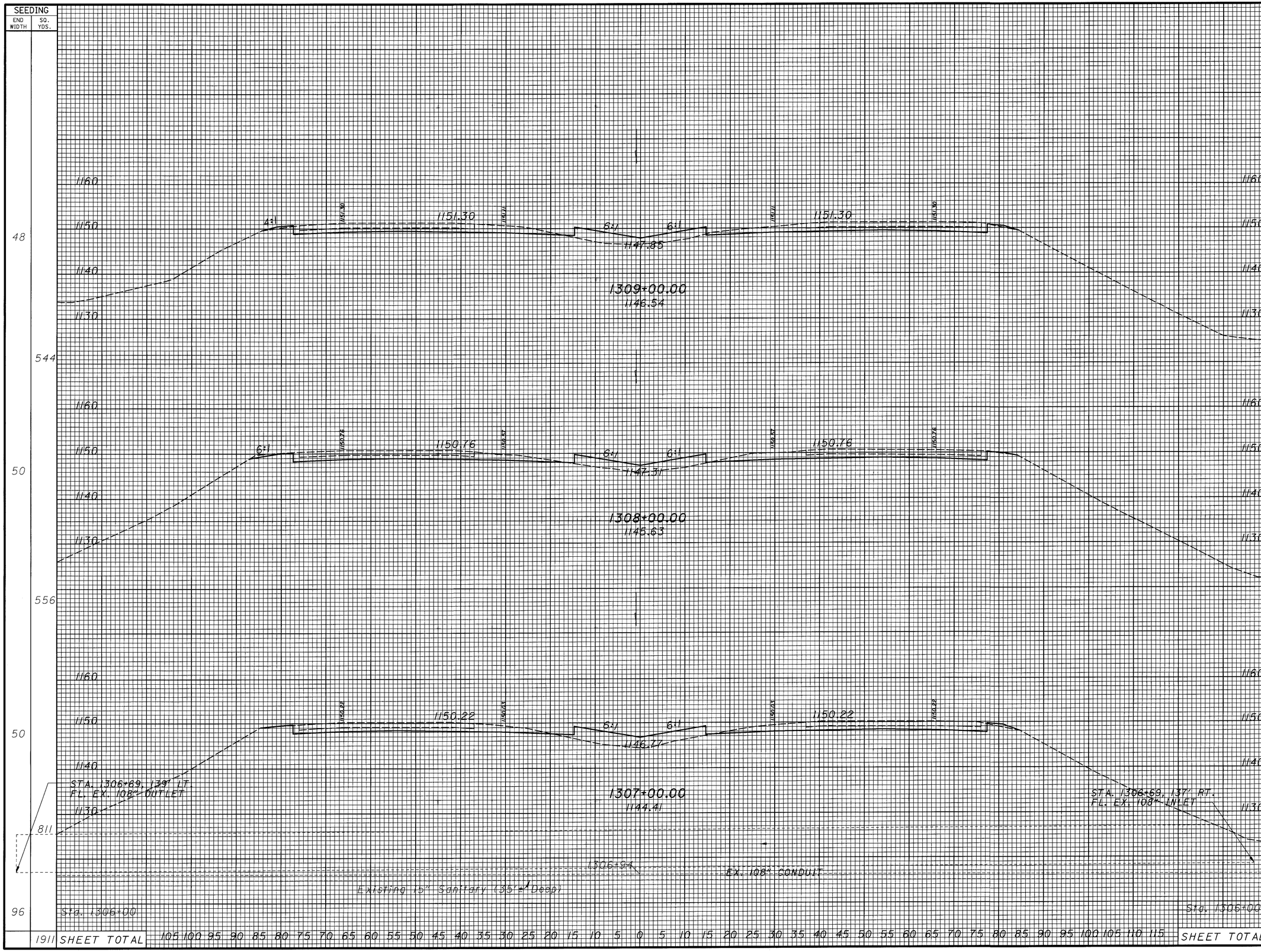

END AREA CUT	END AREA FILL	VOLUME CUT	VOLUME FILL
118	59		
		444	215
122	57		
		443	250
117	78		
		407	324
103	97		
		1294	789

CALCULATED NJV
CHECKED JWR

CROSS SECTIONS
STA. 1307+00 TO STA. 1309+00

MED-71-15.78

350/940

DATE : $$$$DATE$$$$ DESIGN FILE : $$$$$$$$$$DESIGNFILESPECIFICATION$$$$$$$$$$
TIME : $$$$TIME$$$$ USERNAME : $$$$INSTRUCTIONS$$$$

DESIGN FILE : $$$$$$$$$$DESIGNFILE\SPECIFICATION$$$$$$$$$$
USERNAME : $$$$$INSTRUCTIONS$$$$$
DATE : $$$$$DATE$$$$$
TIME : $$$$$TIME$$$$$

SEEDING END WIDTH	SEEDING SQ. YDS.	END AREA CUT	END AREA FILL	VOLUME CUT	VOLUME FILL
55	594	115	40	444	120
52	589	125	25	454	133
54	756	120	47	441	230
82	722	118	77	437	252
48	266	118	59	1776	735
	SHEET TOTAL				SHEET TOTAL

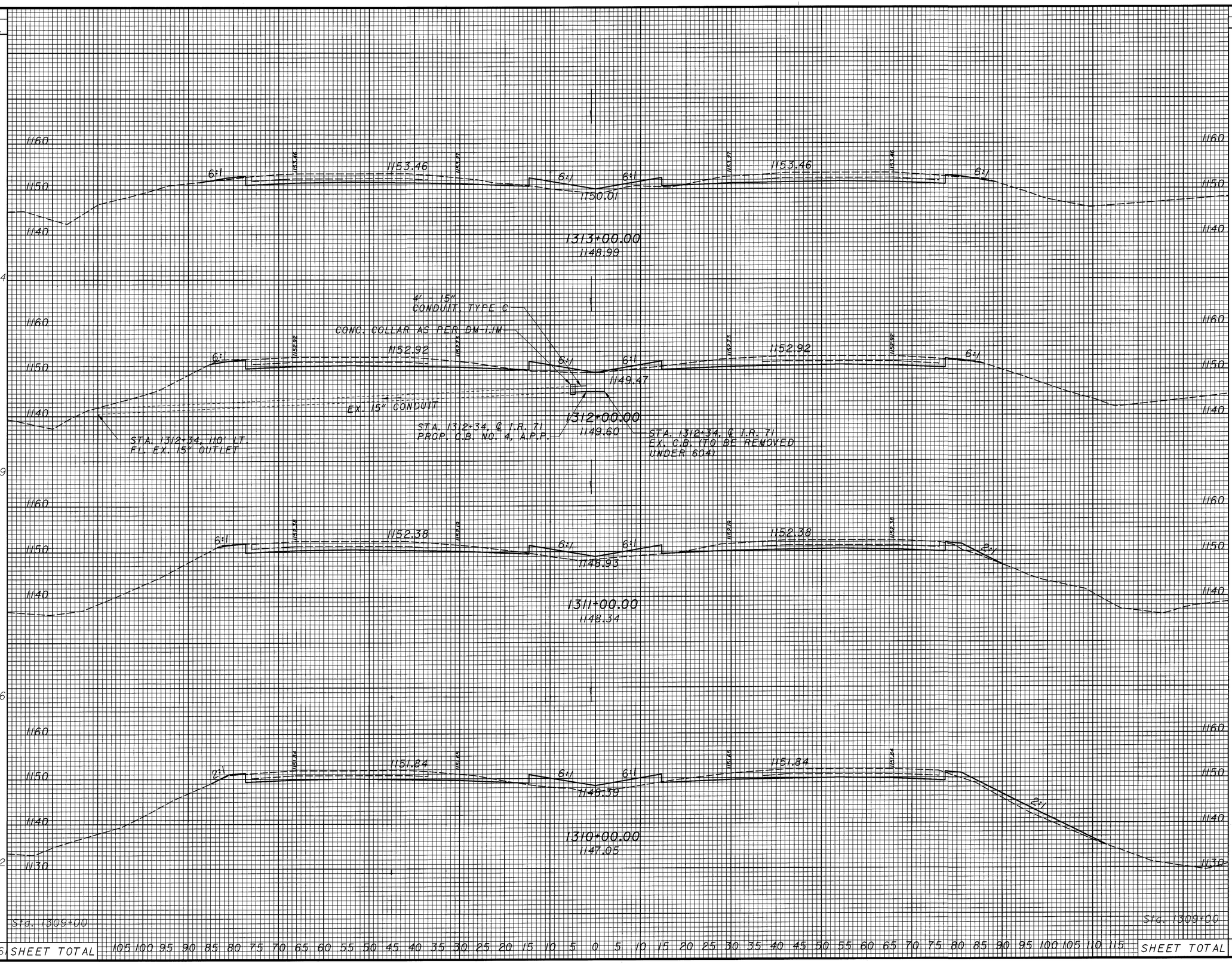

CALCULATED NJV
CHECKED JWR

CROSS SECTIONS STA. 1310+00 TO STA. 1313+00

MED-71-15.78

351
940

DESIGN FILE : $$$$$$$$$$DESIGNFILESPECIFICATION$$$$$$$$$$
USERNAME : $$$$INSTRUCTIONS$$$$$
DATE : $$$$DATE$$$$$
TIME : $$$$TIME$$$$

SEEDING		END AREA		VOLUME	
END WIDTH	SQ. YDS.	CUT	FILL	CUT	FILL
132		230	42		
	1389			828	150
118		217	39		
	1222			731	139
102		178	36		
	1022			539	170
82		113	56		
	761			422	178
55		115	40		
	4394 SHEET TOTAL			2520	637

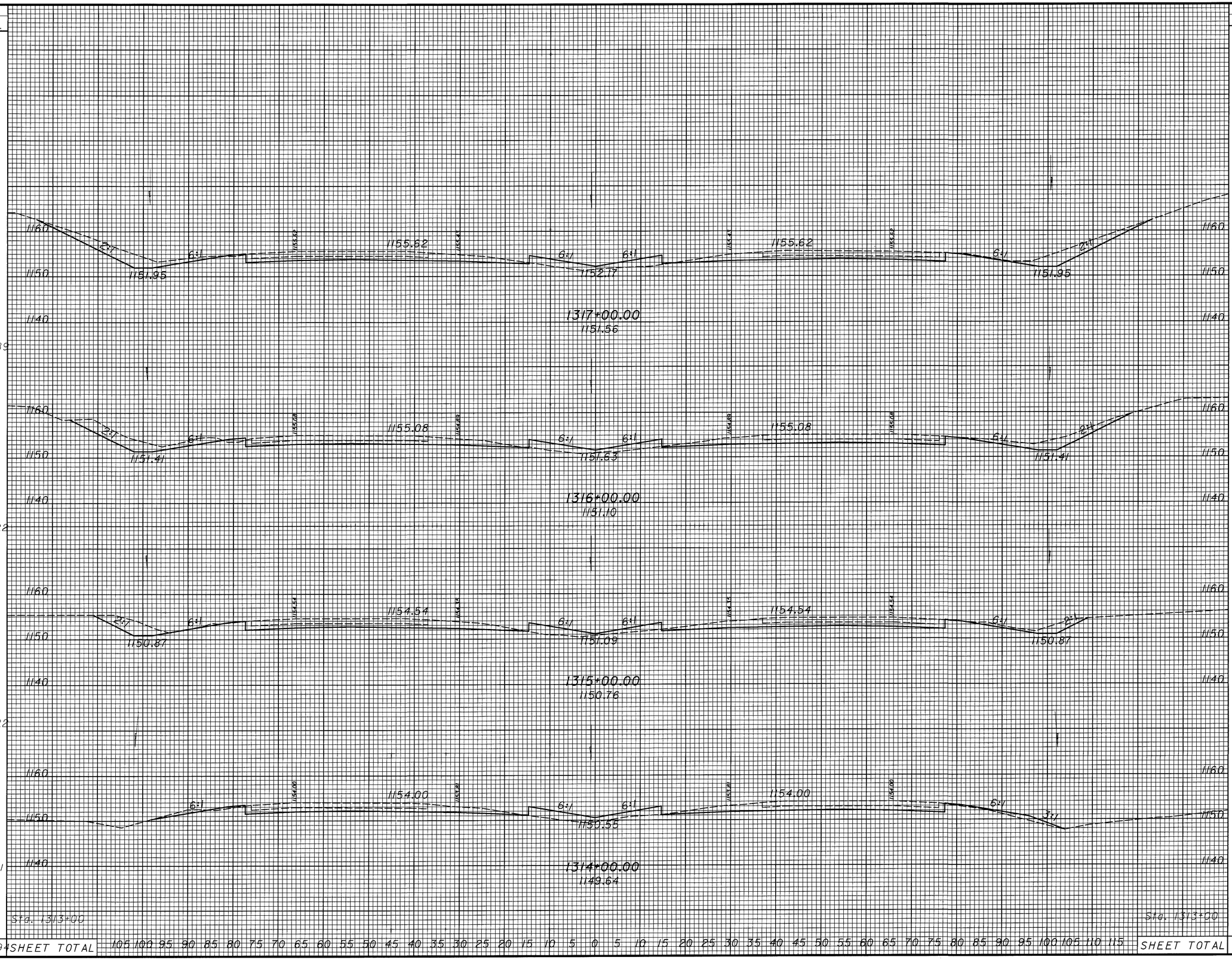

CALCULATED NJV
CHECKED JWR

CROSS SECTIONS
STA. 1314+00 TO STA. 1317+00

MED-71-15.78

352
940

DESIGN FILE : $$$$$$$$$DESIGNFILESPECIFICATION$$$$$$$$$$
USERNAME : $$$$INSTRUCTIONS$$$$
DATE : $$$$DATE$$$$
TIME : $$$$TIME$$$$

CROSS SECTIONS
STA. 1318+00 TO STA. 1320+00

CALCULATED NJV
CHECKED JWR

MED-71-15.78

353
940

SEEDING		END AREA		VOLUME	
END WIDTH	SQ. YDS.	CUT	FILL	CUT	FILL
				1	
126		220	49		
	1389			826	178
124		226	47		
	1356			770	183
120		190	52		
0				778	174
132		230	42		
	4145 SHEET TOTAL			2374	535

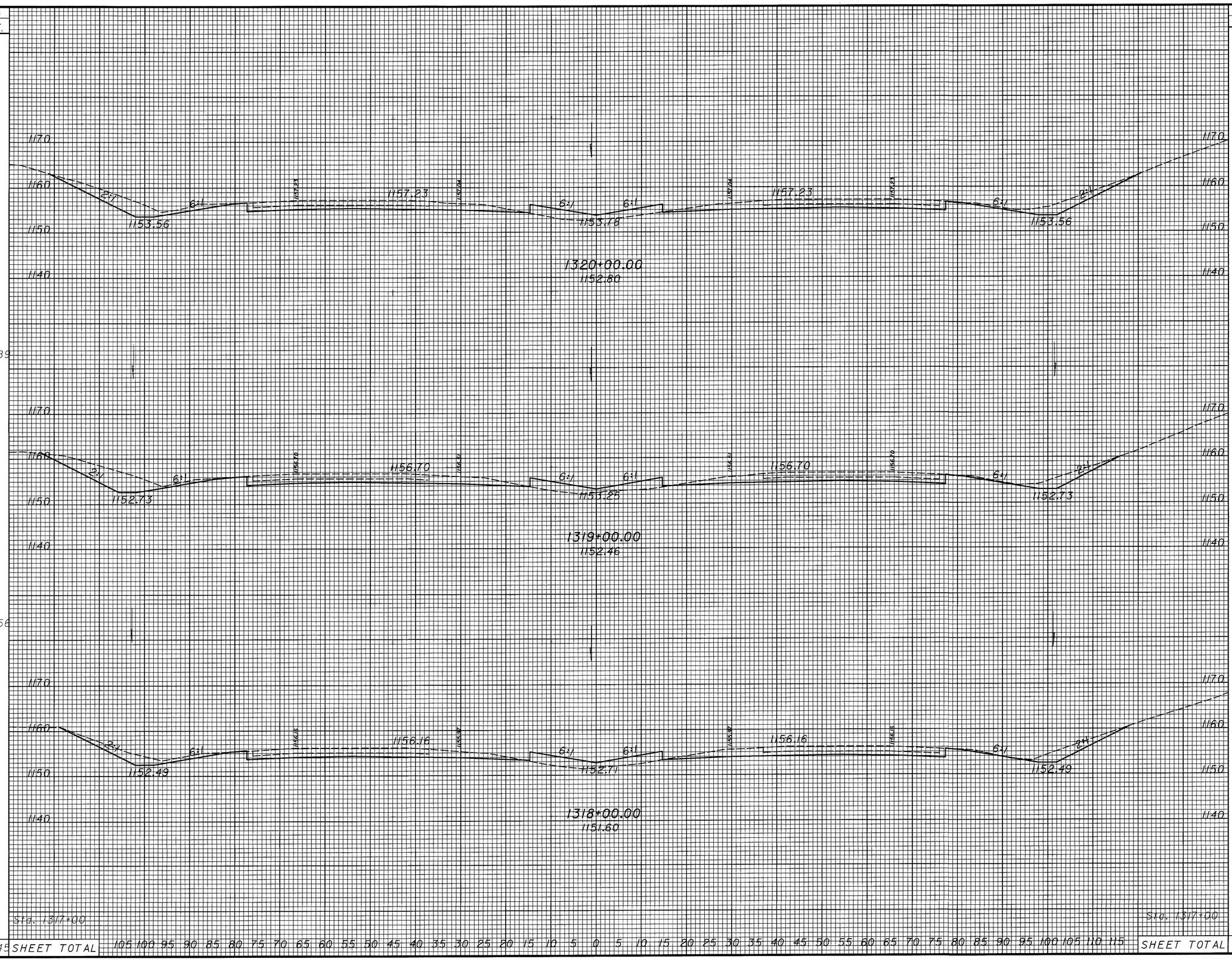

DESIGN FILE : $$$$$$$$$$DESIGNFILESPECIFICATION$$$$$$$$$$
USERNAME : $$$$INSTRUCTIONS$$$$
DATE : $$$$DATE$$$$
TIME : $$$$TIME$$$$

SEEDING			END AREA		VOLUME	
	END WIDTH	SQ. YDS.	CUT	FILL	CUT	FILL
123			190	57		
1322					667	211
115			170	57		
1294					635	194
118			173	48		
1356					728	180
126	Sta. 1320+00		220	49		
3972	SHEET TOTAL				2030	585

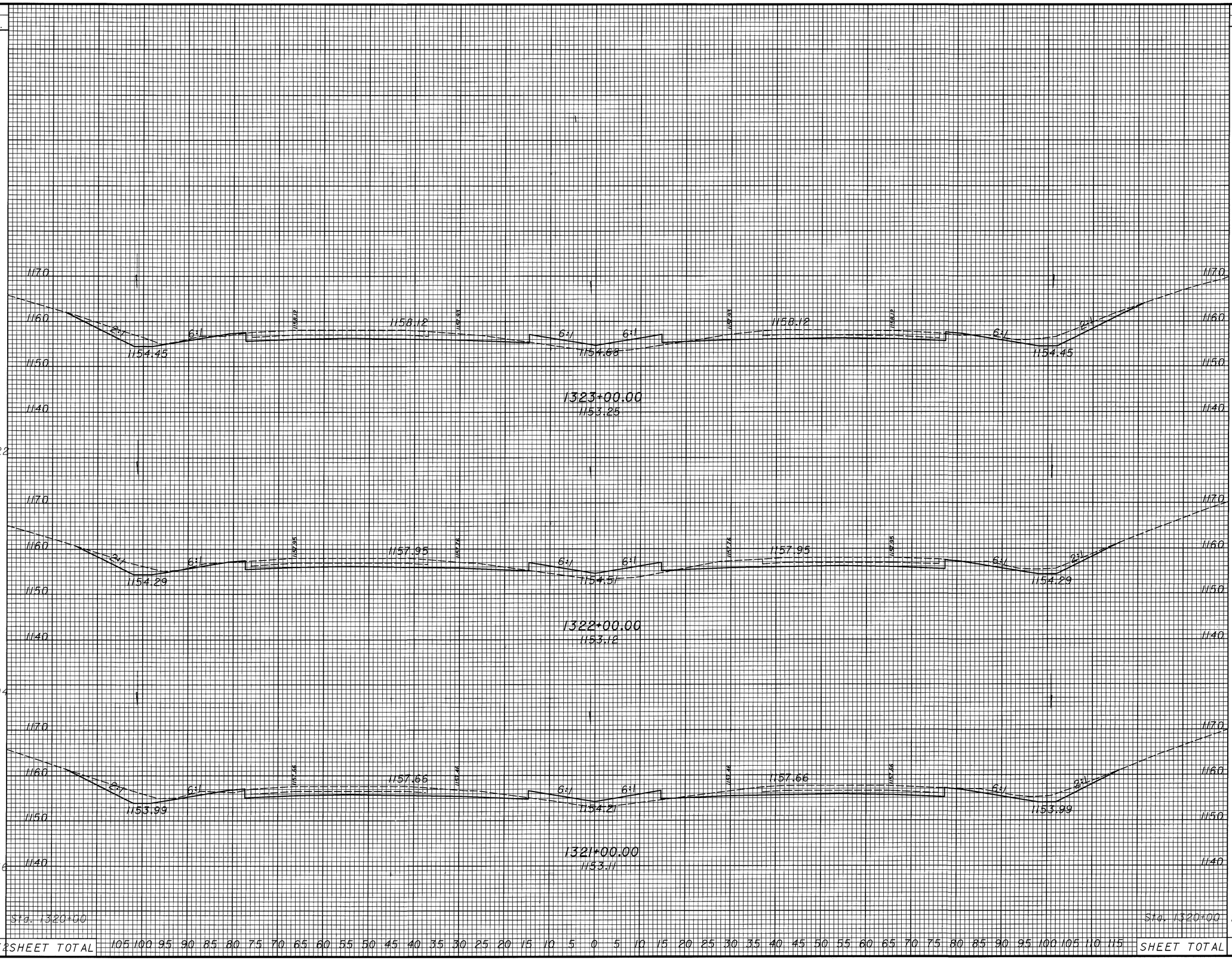

CALCULATED N.J.V
CHECKED J.W.R

CROSS SECTIONS
STA. 1321+00 TO STA. 1323+00

MED-71-15.78

354
940

DESIGN FILE : $$$$$$$$$$DESIGNFILESPECIFICATION$$$$$$$$$$
USERNAME : $$$$INSTRUCTIONS$$$$
DATE : $$$$DATE$$$$
TIME : $$$$TIME$$$$

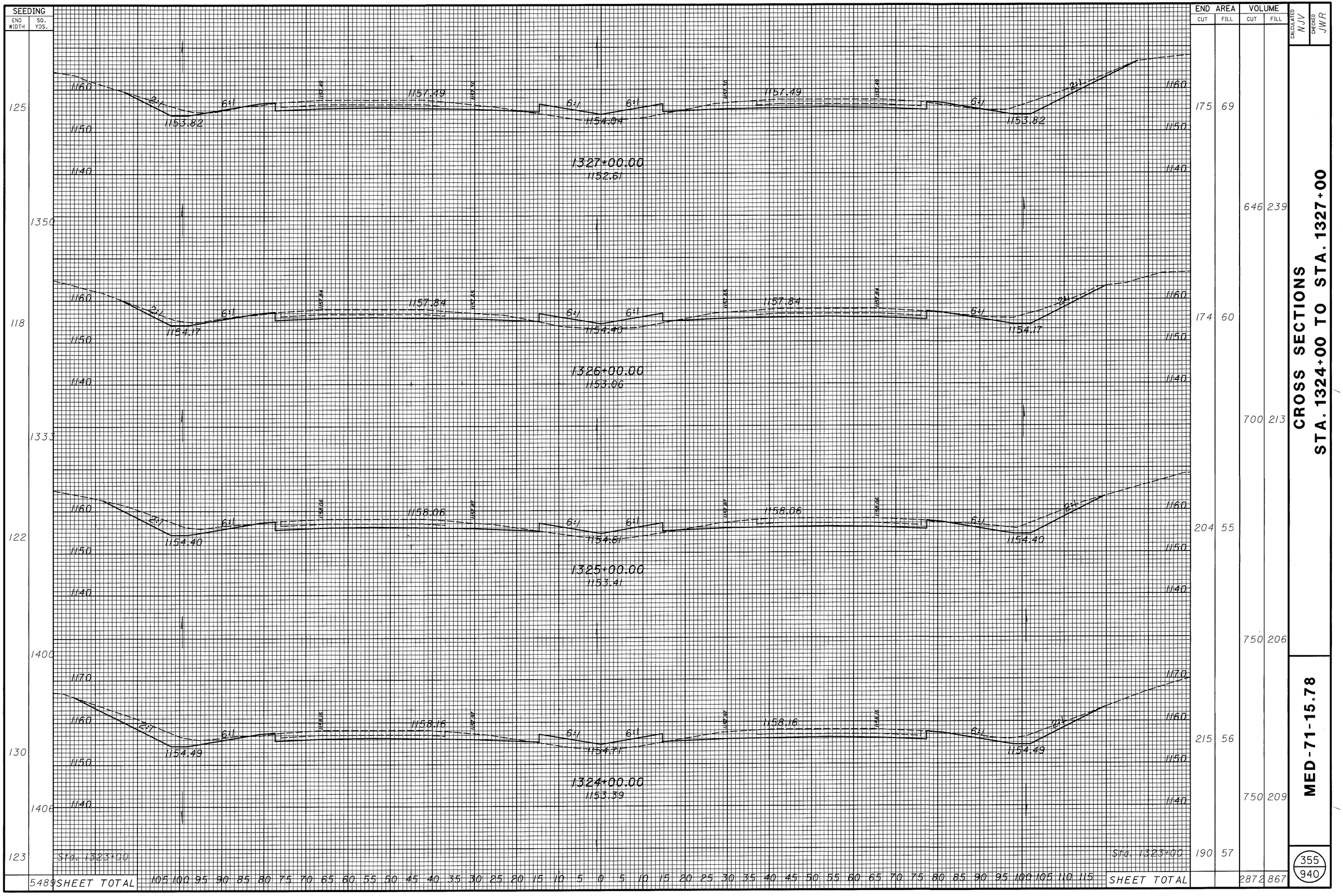

DESIGN FILE : $$$$$$$$$$DESIGNFILE$SPECIFICATION$$$$$$$$$$
USERNAME : $$$$INSTRUCTIONS$$$$
DATE : $$$$DATE$$$$
TIME : $$$$TIME$$$$

SEEDING		END AREA		VOLUME	
END WIDTH	SQ. YDS.	CUT	FILL	CUT	FILL
102	1189	140	81	565	269
112	1256	165	64	593	256
114	1328	155	74	611	265
125		175	69		
	3773 SHEET TOTAL			1769	790

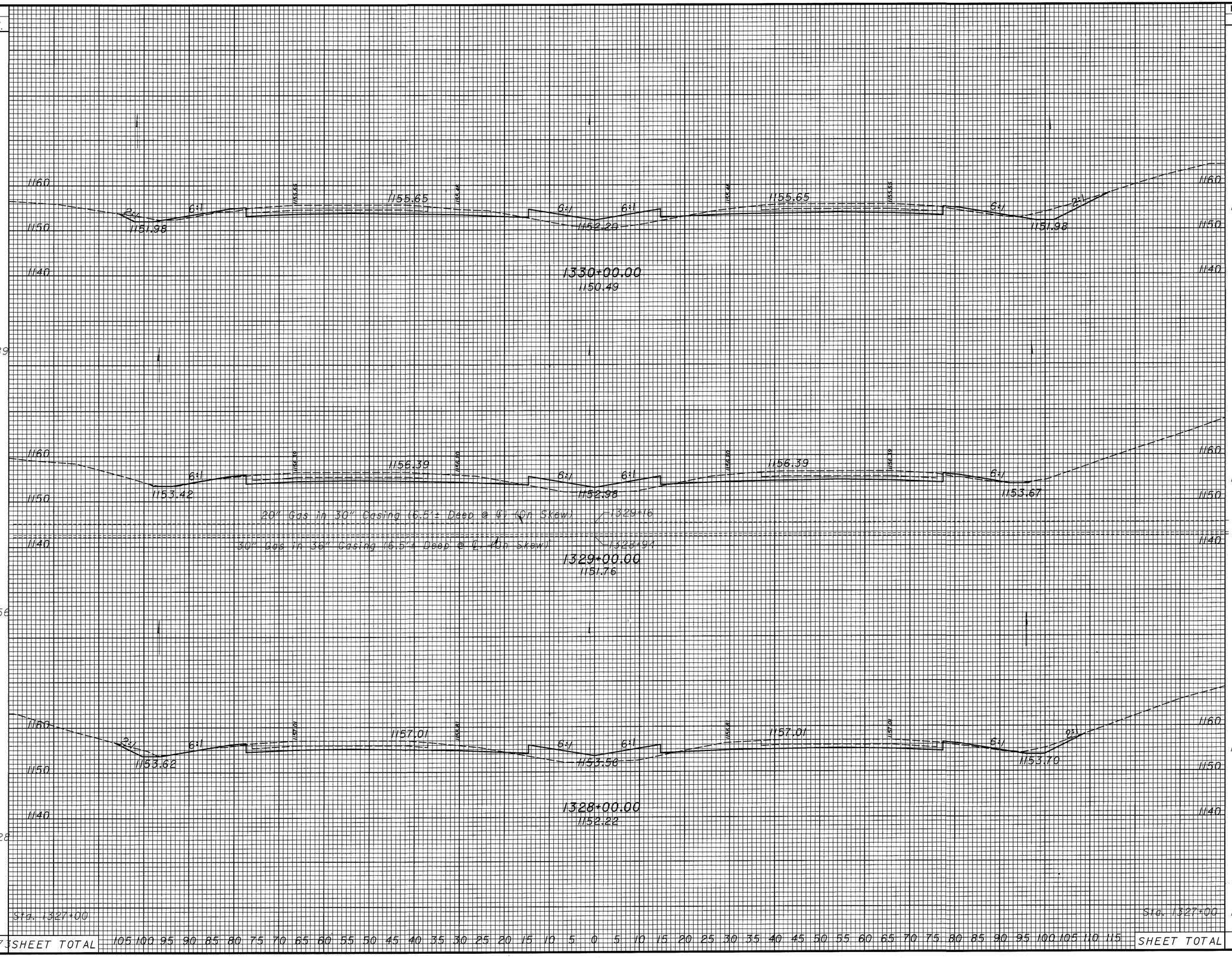

CALCULATED NJV
CHECKED JWR

CROSS SECTIONS
STA. 1328+00 TO STA. 1330+00

MED-71-15.78

356
940

DESIGN FILE : $$$$$$$$$$DESIGNFILESPECIFICATION$$$$$$$$$$
USERNAME : $$$$INSTRUCTIONS$$$$

DATE : $$$$DATE$$$$
TIME : $$$$TIME$$$$

SEEDING	
END WIDTH	SQ. YDS.
102	1089
94	
104	1172
107	1161
102	
4522	SHEET TOTAL

105 100 95 90 85 80 75 70 65 60 55 50 45 40 35 30 25 20 15 10 5 0 5 10 15 20 25 30 35 40 45 50 55 60 65 70 75 80 85 90 95 100 105 110 115 SHEET TOTAL

END AREA		VOLUME	
CUT	FILL	CUT	FILL
155	62		
		546	237
140	66		
		546	226
155	56		
		572	226
154	66		
		544	272
140	81		
		2208	961

CALCULATED NJV
CHECKED JWR

CROSS SECTIONS
STA. 1331+00 TO STA. 1334+00

MED-71-15.78

DESIGN FILE : $$$$$$$$$$DESIGNFILES\SPECIFICATION$$$$$$$$$$
USERNAME : $$$$$INSTRUCTIONS$$$$$
DATE : $$$$$DATE$$$$$
TIME : $$$$$TIME$$$$$

SEEDING	
END WIDTH	SQ. YDS.
120	1311
116	1283
115	1261
112	1189
102	5044

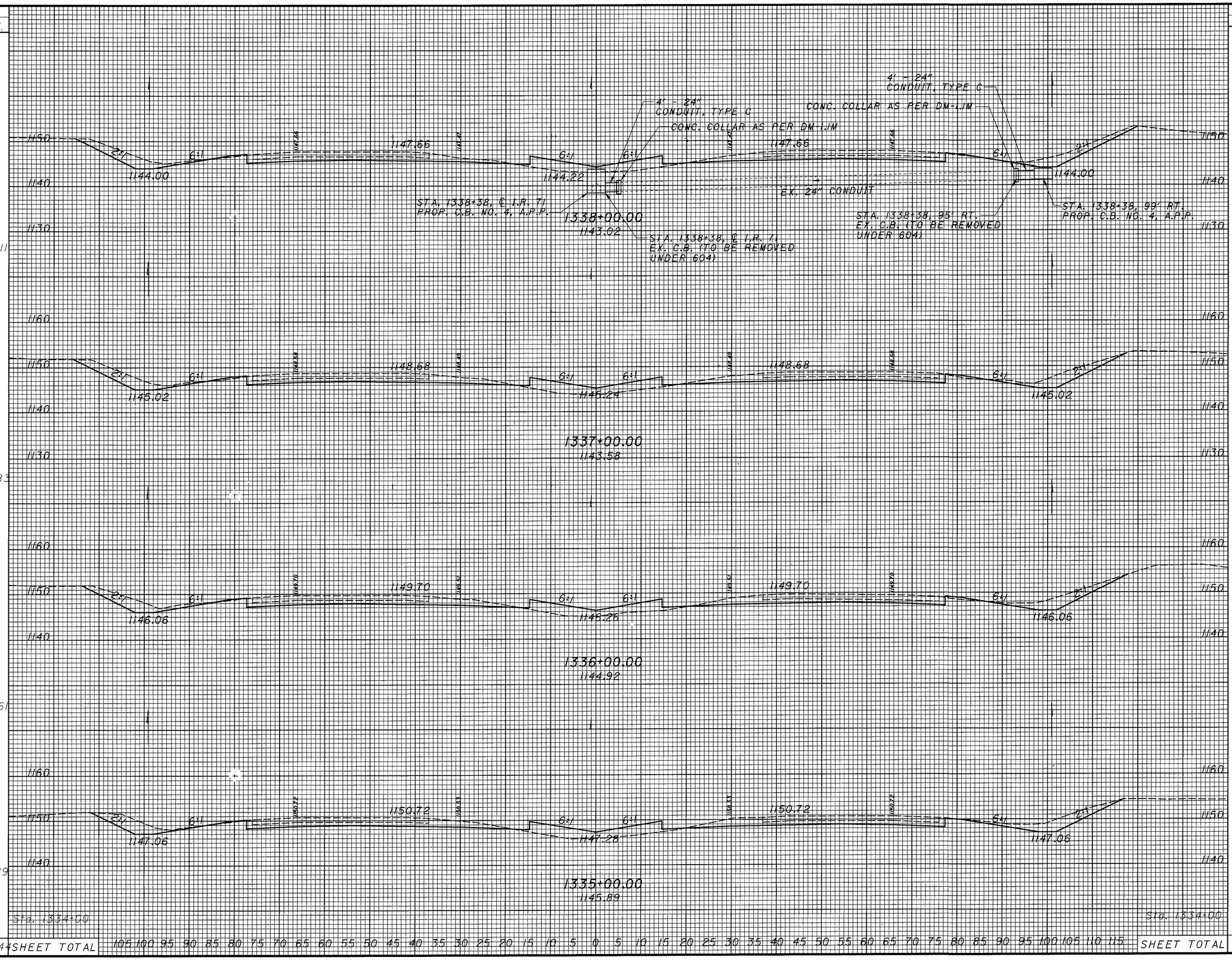

END AREA		VOLUME	
CUT	FILL	CUT	FILL
176	62		
		674	239
188	67		
		691	239
185	62		
		707	233
197	64		
		652	233
155	62		
SHEET TOTAL		2724	944

105 100 95 90 85 80 75 70 65 60 55 50 45 40 35 30 25 20 15 10 5 0 5 10 15 20 25 30 35 40 45 50 55 60 65 70 75 80 85 90 95 100 105 110 115

SHEET TOTAL

CALCULATED NJV
CHECKED JWR

CROSS SECTIONS
STA. 1335+00 TO STA. 1338+00

MED-71-15.78

358
940

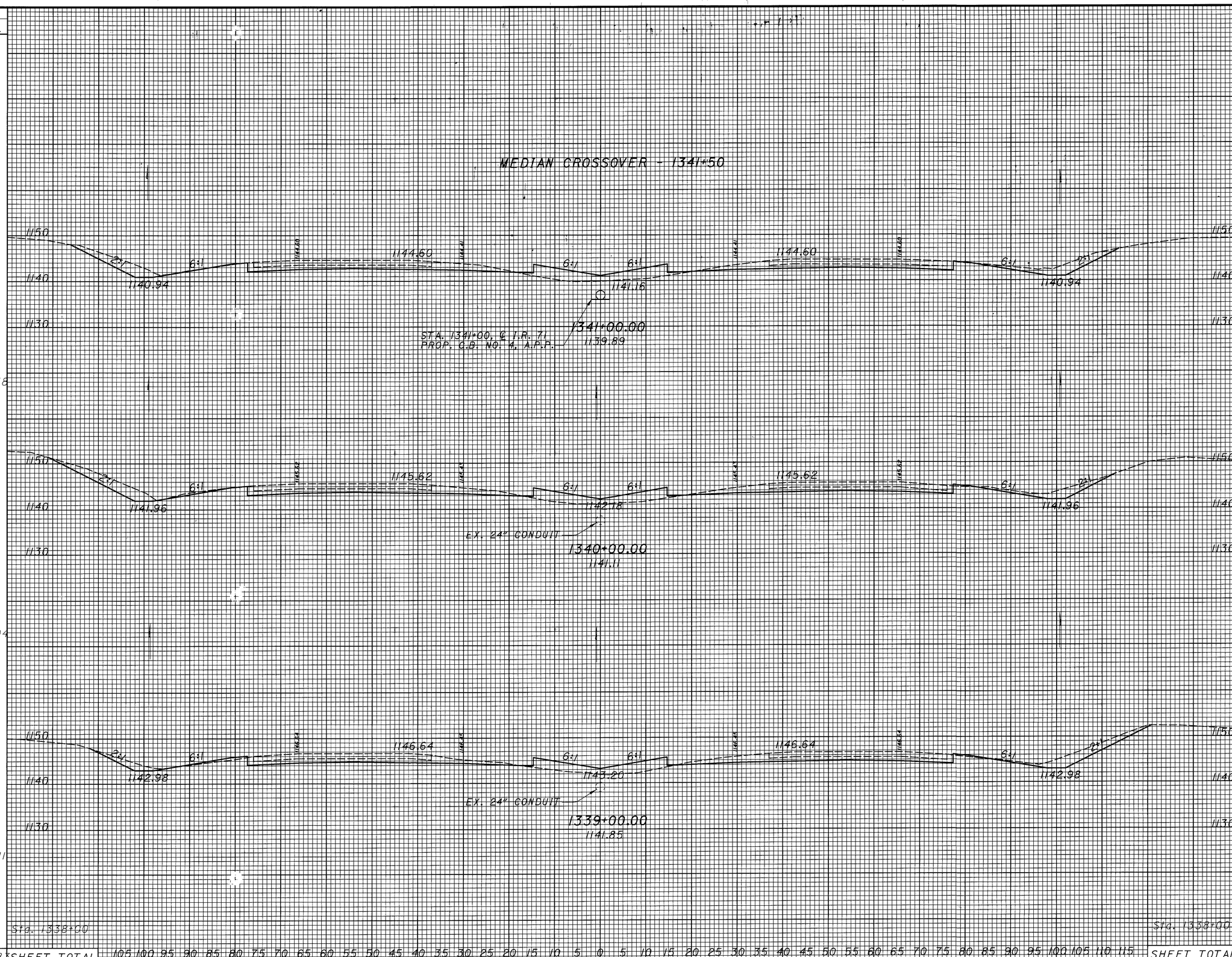

SEEDING END WIDTH	SEEDING SQ. YDS.	END AREA CUT	END AREA FILL	VOLUME CUT	VOLUME FILL
113		172	64		
	1278			644	224
117		176	57		
	1294			626	226
116		162	65		
	1311			626	235
120		176	62		
	3883 SHEET TOTAL			1896	685

CALCULATED NJV
CHECKED JWR

CROSS SECTIONS
STA. 1339+00 TO STA. 1341+00

MED-71-15.78

359/940

DATE : $$$$DATE$$$$ DESIGN FILE : $$$$$$$$$$DESIGNFILESPECIFICATION$$$$$$$$$$
TIME : $$$$TIME$$$$ USERNAME : $$$$INSTRUCTIONS$$$$

DESIGN FILE : $$$$$$$$$$DESIGNFILESPECIFICATION$$$$$$$$$$
USERNAME : $$$$INSTRUCTIONS$$$$
DATE : $$$$DATE$$$$
TIME : $$$$TIME$$$$

SEEDING	
END WIDTH	SQ. YDS.
100	1085
95	1078
99	1161
110	1239
-150	Correction for Median Crossover
113	Sta. 1341+00
	4413 SHEET TOTAL

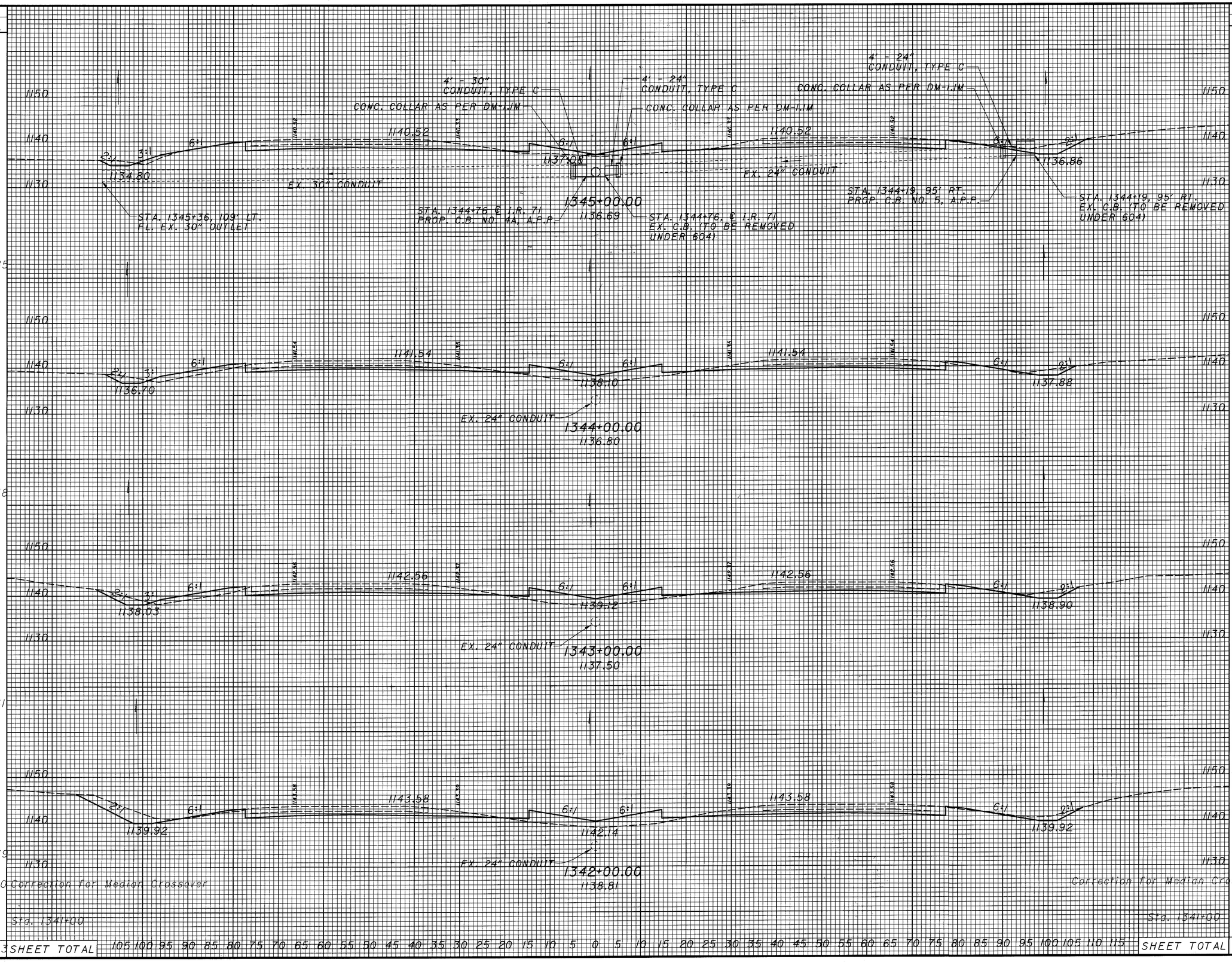

END AREA		VOLUME	
CUT	FILL	CUT	FILL
130	42		
		454	239
115	87		
		441	330
123	91		
		504	294
149	68		
		594	244
Correction for Median Crossover		0	-50
172	64		
SHEET TOTAL		1993	1057

105 100 95 90 85 80 75 70 65 60 55 50 45 40 35 30 25 20 15 10 5 0 5 10 15 20 25 30 35 40 45 50 55 60 65 70 75 80 85 90 95 100 105 110 115

CALCULATED NJV
CHECKED JWR

CROSS SECTIONS
STA. 1342+00 TO STA. 1345+00

MED-71-15.78

360
940

DESIGN FILE : $$$$$$$$$$DESIGNFILESPECIFICATION$$$$$$$$$$
USERNAME : $$$$INSTRUCTIONS$$$$
DATE : $$$$DATE$$$$
TIME : $$$$TIME$$$$

SEEDING	
END WIDTH	SQ. YDS.
95	1050
94	1078
100	1211
108	1211
100	
	4550

END AREA		VOLUME	
CUT	FILL	CUT	FILL
120	76		
		444	289
120	80		
		435	333
115	100		
		454	365
130	97		
		481	257
130	42		
	SHEET TOTAL	1814	1244

CALCULATED N.J.V.
CHECKED J.W.R.

CROSS SECTIONS
STA. 1346+00 TO STA. 1349+00

MED-71-15.78

361
940

DESIGN FILE : $$$$$$$$$$DESIGNFILE$$SPECIFICATION$$$$$$$$$$
USERNAME : $$$$INSTRUCTIONS$$$$
DATE : $$$$DATE$$$$
TIME : $$$$TIME$$$$

SEEDING		END AREA		VOLUME	
END WIDTH	SQ. YDS.	CUT	FILL	CUT	FILL
73					
	950			474	285
98		120	76		
	1083			506	274
97		136	78		
		137	70		
	1067			476	270
95		120	76		
	3100 SHEET TOTAL			1456	829

CALCULATED NJV
CHECKED JWR

CROSS SECTIONS
STA. 1350+00 TO STA. 1352+00

MED-71-15.78

362
940

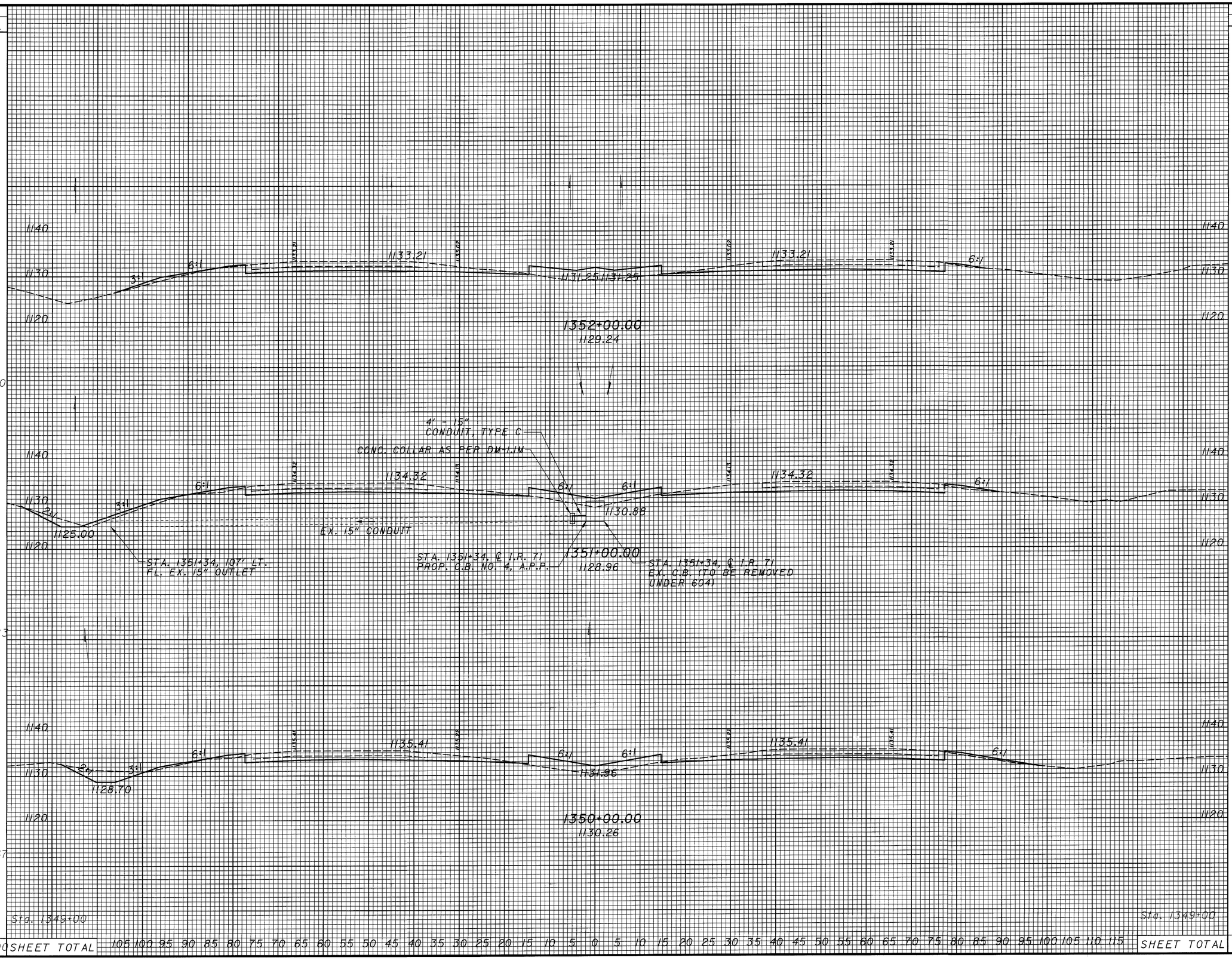

DESIGN FILE : $$$$$$$$$$DESIGNFILESPECIFICATION$$$$$$$$$$
USERNAME : $$$$INSTRUCTIONS$$$$
DATE : $$$$DATE$$$$
TIME : $$$$TIME$$$$

SEEDING END WIDTH	SEEDING SQ. YDS.
117	1161
92	
900	
70	
856	
84	
872	
73	
	3789

END AREA CUT	END AREA FILL	VOLUME CUT	VOLUME FILL
147	109		
		491	289
118	47		
		437	130
118	23		
		441	107
120	35		
		444	206
120	76		
		1813	732

CALCULATED NJV
CHECKED JWR

CROSS SECTIONS
STA. 1353+00 TO STA. 1356+00

MED-71-15.78

363
940

Sta. 1352+00

1356+00.00
1124.90

1355+00.00
1128.95

1354+00.00
1130.43

1353+00.00
1131.37

EX. 24" CULVERT

Existing 16" Water
(On Skew)

Existing 8" Sanitary

1353+24

8"

SHEET TOTAL

105 100 95 90 85 80 75 70 65 60 55 50 45 40 35 30 25 20 15 10 5 0 5 10 15 20 25 30 35 40 45 50 55 60 65 70 75 80 85 90 95 100 105 110 115

SHEET TOTAL

DESIGN FILE : $$$$$$$$$$DESIGNFILES\SPECIFICATION$$$$$$$$$$
USERNAME : $$$$INSTRUCTIONS$$$$
DATE : $$$$DATE$$$$
TIME : $$$$TIME$$$$

SEEDING END WIDTH	SEEDING SQ. YDS.	END AREA CUT	END AREA FILL	VOLUME CUT	VOLUME FILL
118		95	162		
	1317			376	622
119		108	174		
	1306			422	622
116		120	162		
	1356			522	530
128		162	124		
	1361			572	431
117		147	109		
	5340 SHEET TOTAL		SHEET TOTAL	1892	2205

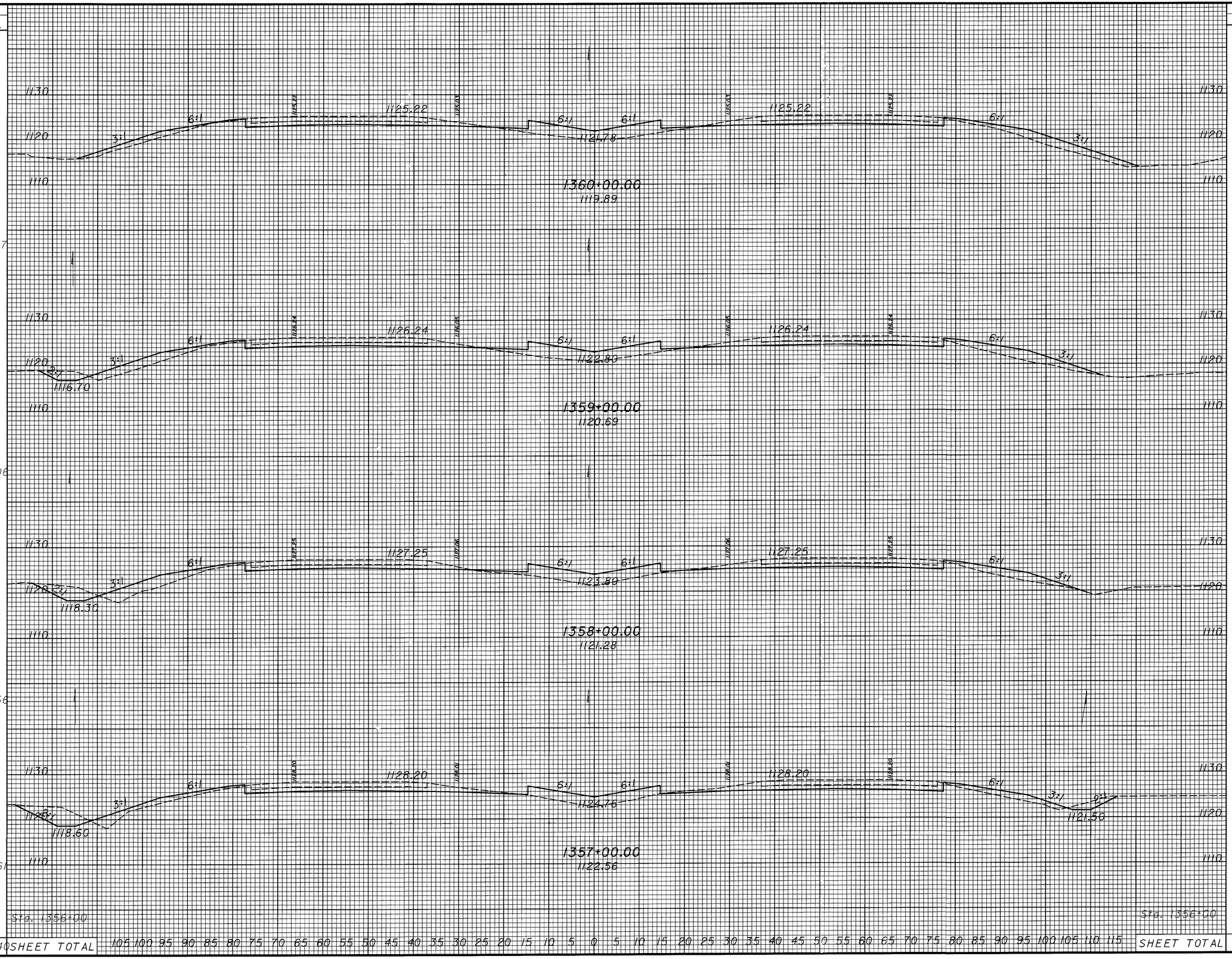

CALCULATED NJV
CHECKED JWR

CROSS SECTIONS
STA. 1357+00 TO STA. 1360+00

MED-71-15.78

364
940

DESIGN FILE : $$$$$$$$$$DESIGNFILESPECIFICATION$$$$$$$$$$
USERNAME : $$$$INSTRUCTIONS$$$$
DATE : $$$$DATE$$$$$
TIME : $$$$TIME$$$$$

SEEDING	
END WIDTH	SQ. YDS.
112	
	1200
102	
	1150
105	
	1239
118	
	3589

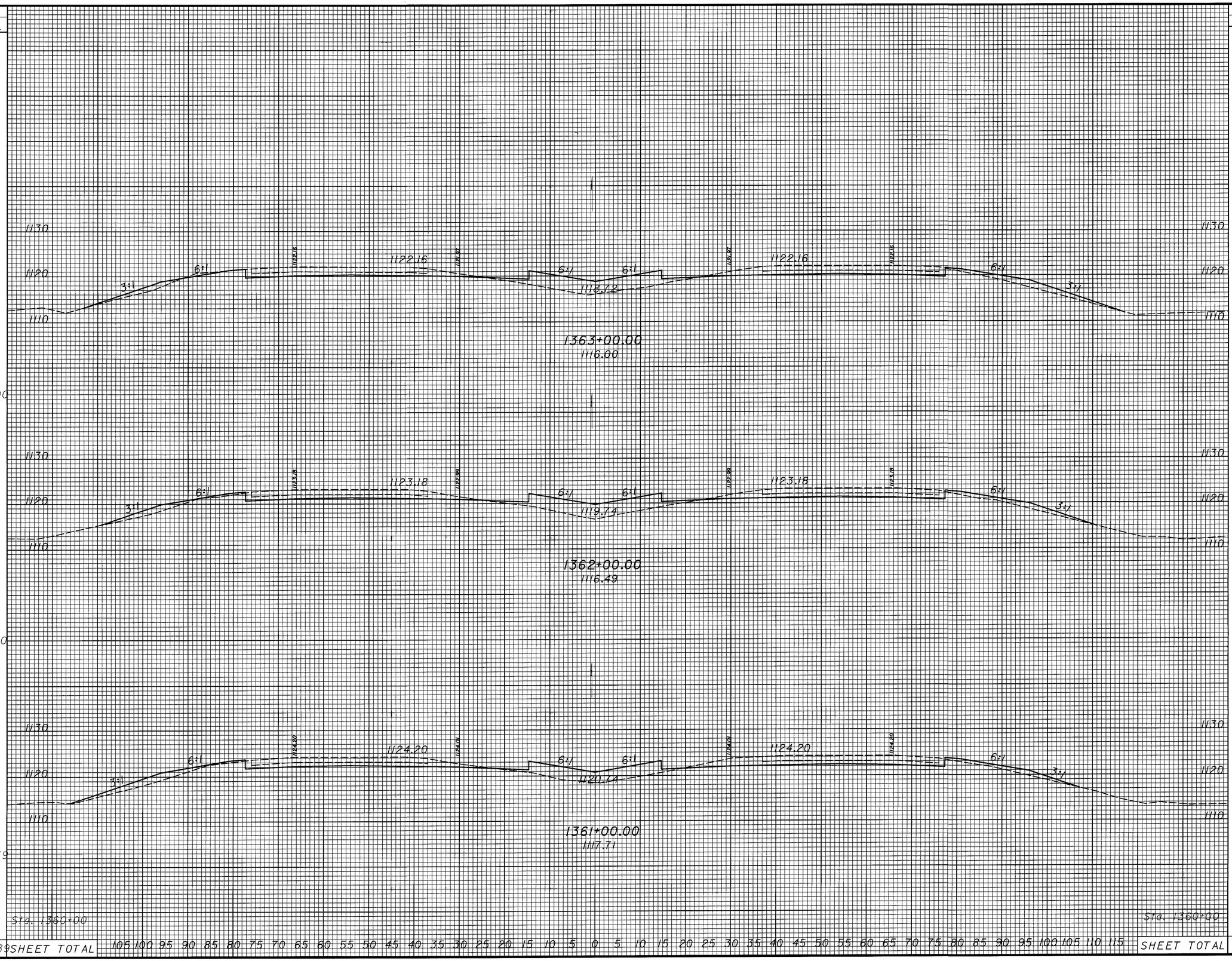

END AREA		VOLUME	
CUT	FILL	CUT	FILL
90	142		
		333	522
90	140		
		346	491
97	125		
		356	531
95	162		
		1035	1544

CALCULATED NJV
CHECKED JWR

CROSS SECTIONS
STA. 1361+00 TO STA. 1363+00

MED-71-15.78

365
940

DESIGN FILE : $$$$$$$$$$DESIGNFILESPECIFICATION$$$$$$$$$$
USERNAME : $$$$INSTRUCTIONS$$$$$

DATE : $$$$DATE$$$$
TIME : $$$$TIME$$$$

SEEDING	
END WIDTH	SQ. YDS.
106	1211
112	1217
107	1194
108	1222
112	
	4844

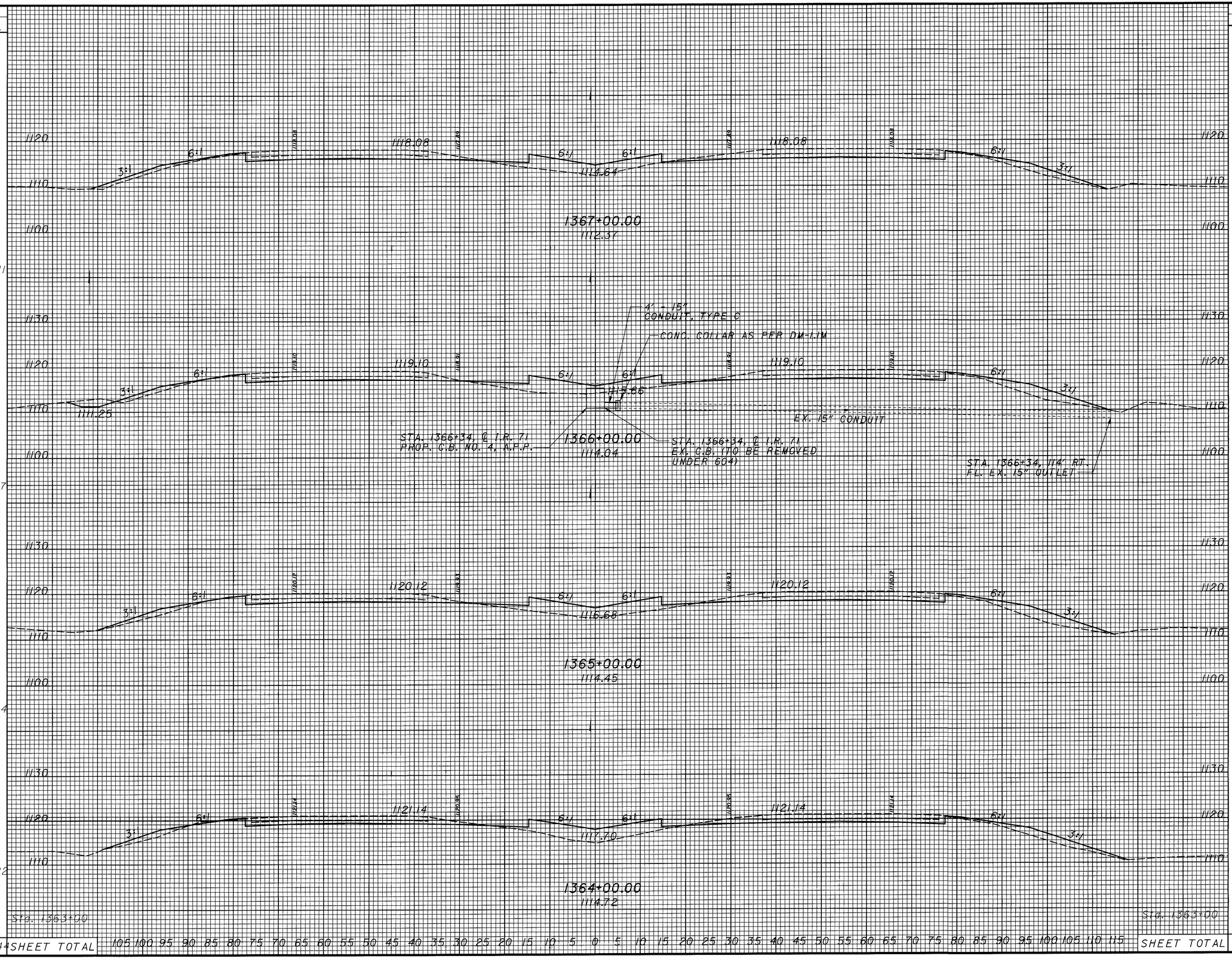

END AREA		VOLUME	
CUT	FILL	CUT	FILL
102	123		
		356	496
90	145		
		333	533
90	143		
		352	524
100	140		
		352	522
90	142		
		1393	2075

Sta. 1363+00

105 100 95 90 85 80 75 70 65 60 55 50 45 40 35 30 25 20 15 10 5 0 5 10 15 20 25 30 35 40 45 50 55 60 65 70 75 80 85 90 95 100 105 110 115

SHEET TOTAL

Sta. 1363+00

SHEET TOTAL

CALCULATED NJV
CHECKED JWR

CROSS SECTIONS
STA. 1364+00 TO STA. 1367+00

MED-71-15.78

366
940

DESIGN FILE : $$$$$$$$$$DESIGNFILESPECIFICATION$$$$$$$$$$
USERNAME : $$$$INSTRUCTIONS$$$$
DATE : $$$$DATE$$$$$
TIME : $$$$TIME$$$$

SEEDING	
END WIDTH	SQ. YDS.
	95
	1050
	94
	1144
	112
	1233
	100
	1144
	106
	457

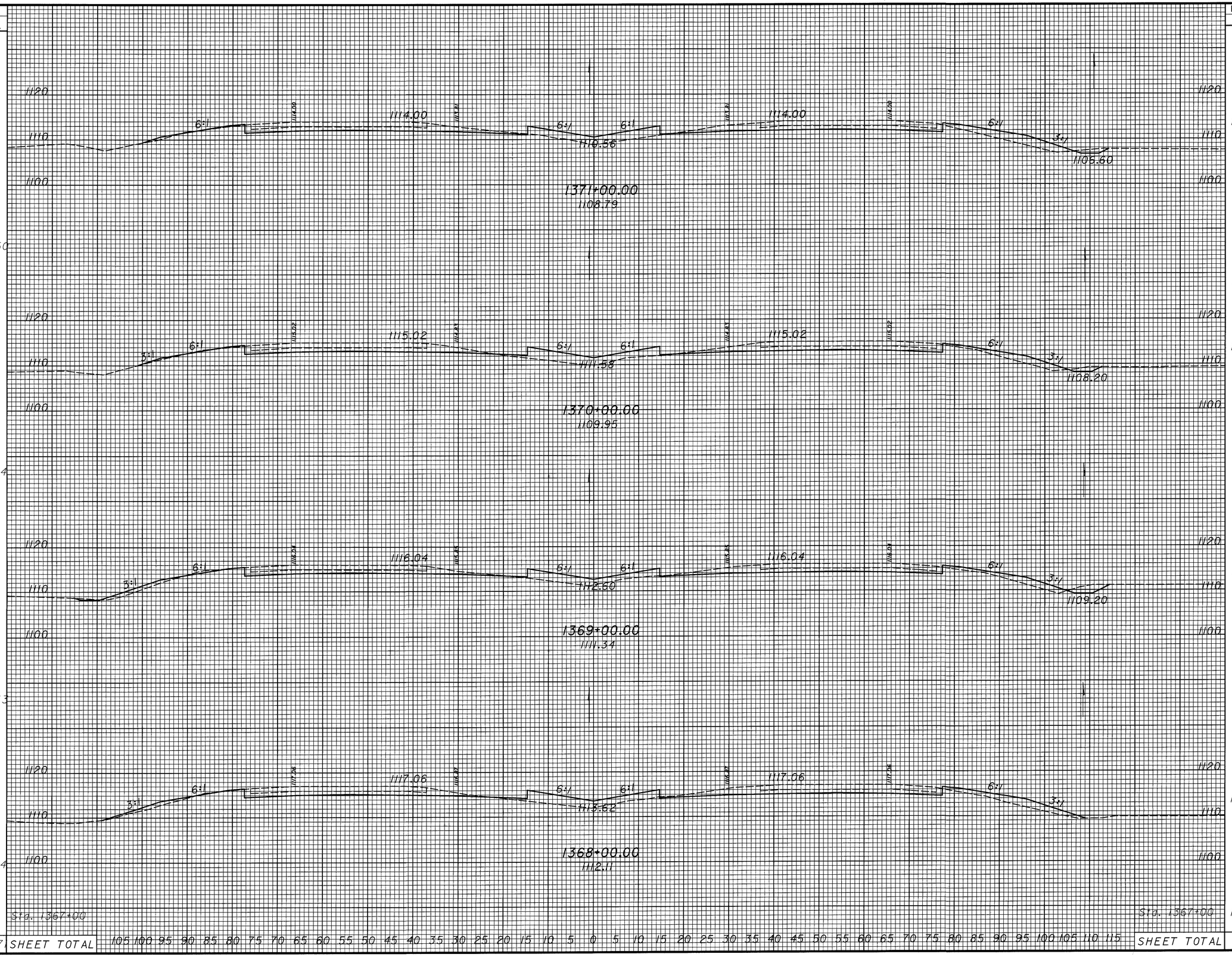

END AREA		VOLUME	
CUT	FILL	CUT	FILL
106	94		
		393	331
106	85		
		404	309
112	82		
		396	333
102	98		
		378	409
102	123		
		1571	1382

CALCULATED NJV
CHECKED JWR

CROSS SECTIONS
STA. 1368+00 TO STA. 1371+00

MED-71-15.78

DESIGN FILE : $$$$$$$$$$DESIGNFILESPECIFICATION$$$$$$$$$$
USERNAME : $$$$$INSTRUCTIONS$$$$$
DATE : $$$$DATE$$$$$
TIME : $$$$TIME$$$$$

SEEDING	
END WIDTH	SQ. YDS.
112	1222
108	1172
103	1100
95	
	3494

Sta. 1371+00

SHEET TOTAL

105 100 95 90 85 80 75 70 65 60 55 50 45 40 35 30 25 20 15 10 5 0 5 10 15 20 25 30 35 40 45 50 55 60 65 70 75 80 85 90 95 100 105 110 115

Sta. 1371+00

SHEET TOTAL

END AREA		VOLUME	
CUT	FILL	CUT	FILL
103	125		
		394	426
110	105		
		398	398
105	110		
		391	378
106	94		
		1183	1202

CALCULATED NJV
CHECKED JWR

CROSS SECTIONS
STA. 1372+00 TO STA. 1374+00

MED-71-15.78

368
940

DESIGN FILE : $$$$$$$$$$DESIGNFILESPECIFICATION$$$$$$$$$$
DATE : $$$$DATE$$$$ USERNAME : $$$$INSTRUCTIONS$$$$
TIME : $$$$TIME$$$$

SEEDING	
END WIDTH	SQ. YDS.
104	1200
112	1283
119	1300
115	1261
112	
SHEET TOTAL	5044

END AREA		VOLUME	
CUT	FILL	CUT	FILL
102	117		
		383	452
105	127		
		383	494
102	140		
		393	487
110	123		
		398	459
103	125		
SHEET TOTAL		1557	1892

CALCULATED NJV
CHECKED JWR

CROSS SECTIONS
STA. 1375+00 TO STA. 1378+00

MED-71-15.78

369
940

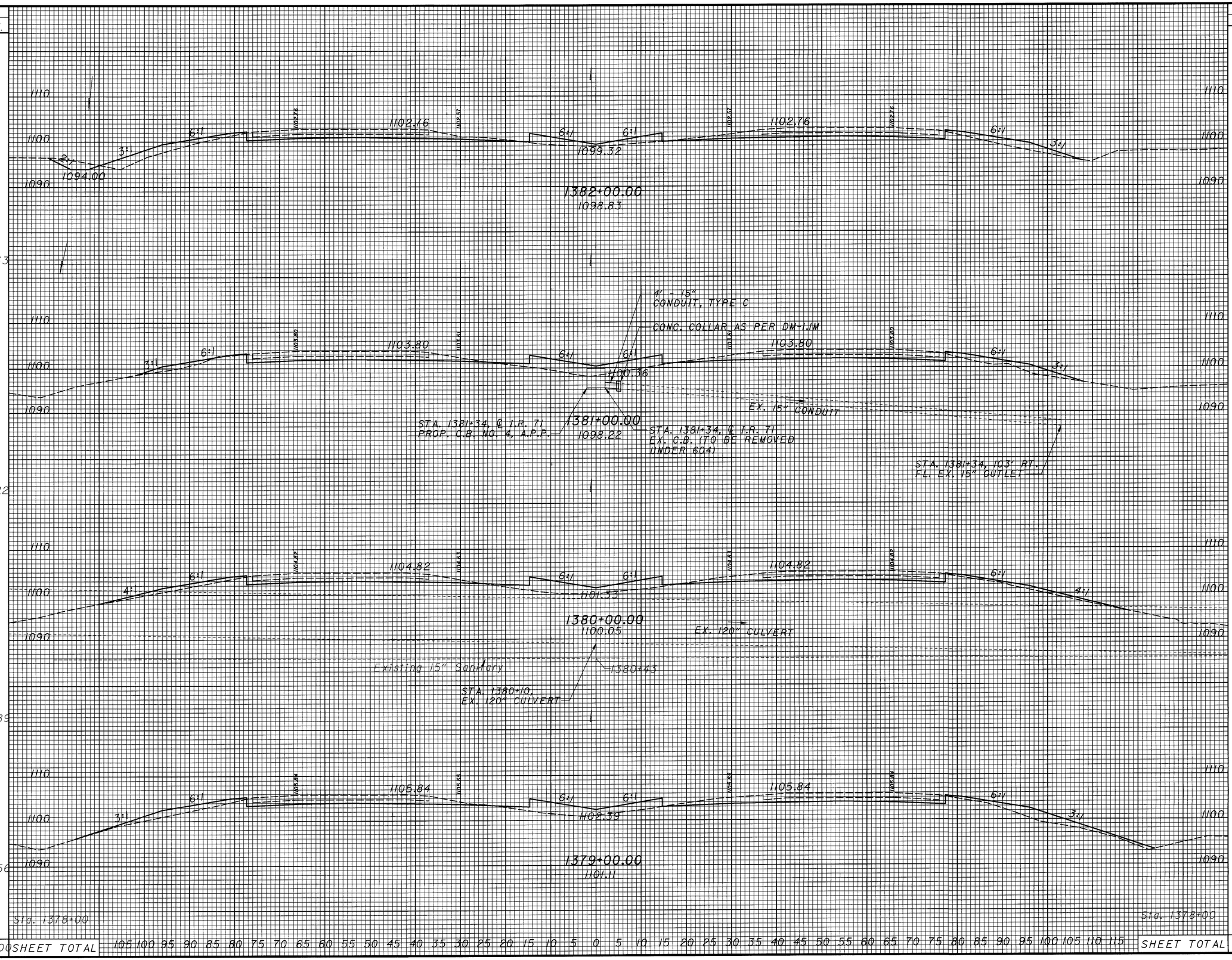

END AREA CUT	END AREA FILL	VOLUME CUT	VOLUME FILL
112	114		
		387	426
97	116		
		361	407
98	104		
		372	443
103	135		
		380	467
102	117		
SHEET TOTAL		1500	1743

CALCULATED NJV
CHECKED JWR

CROSS SECTIONS
STA. 1379+00 TO STA. 1382+00

MED-71-15.78

370/940

DESIGN FILE : $$$$$$$$$$DESIGNFILESPECIFICATION$$$$$$$$$$
USERNAME : $$$$INSTRUCTIONS$$$$
DATE : $$$$DATE$$$$
TIME : $$$$TIME$$$$

DESIGN FILE : $$$$$$$$$$DESIGNFILESPECIFICATION$$$$$$$$$$
USERNAME : $$$$INSTRUCTIONS$$$$
DATE : $$$$DATE$$$$$
TIME : $$$$TIME$$$$$

SEEDING		END AREA		VOLUME	
END WIDTH	SQ. YDS.	CUT	FILL	CUT	FILL
103		136	40		
				567	157
98		170	45		
				522	185
97		112	55		
				415	313
112		112	114		
	336 SHEET TOTAL			1504	655

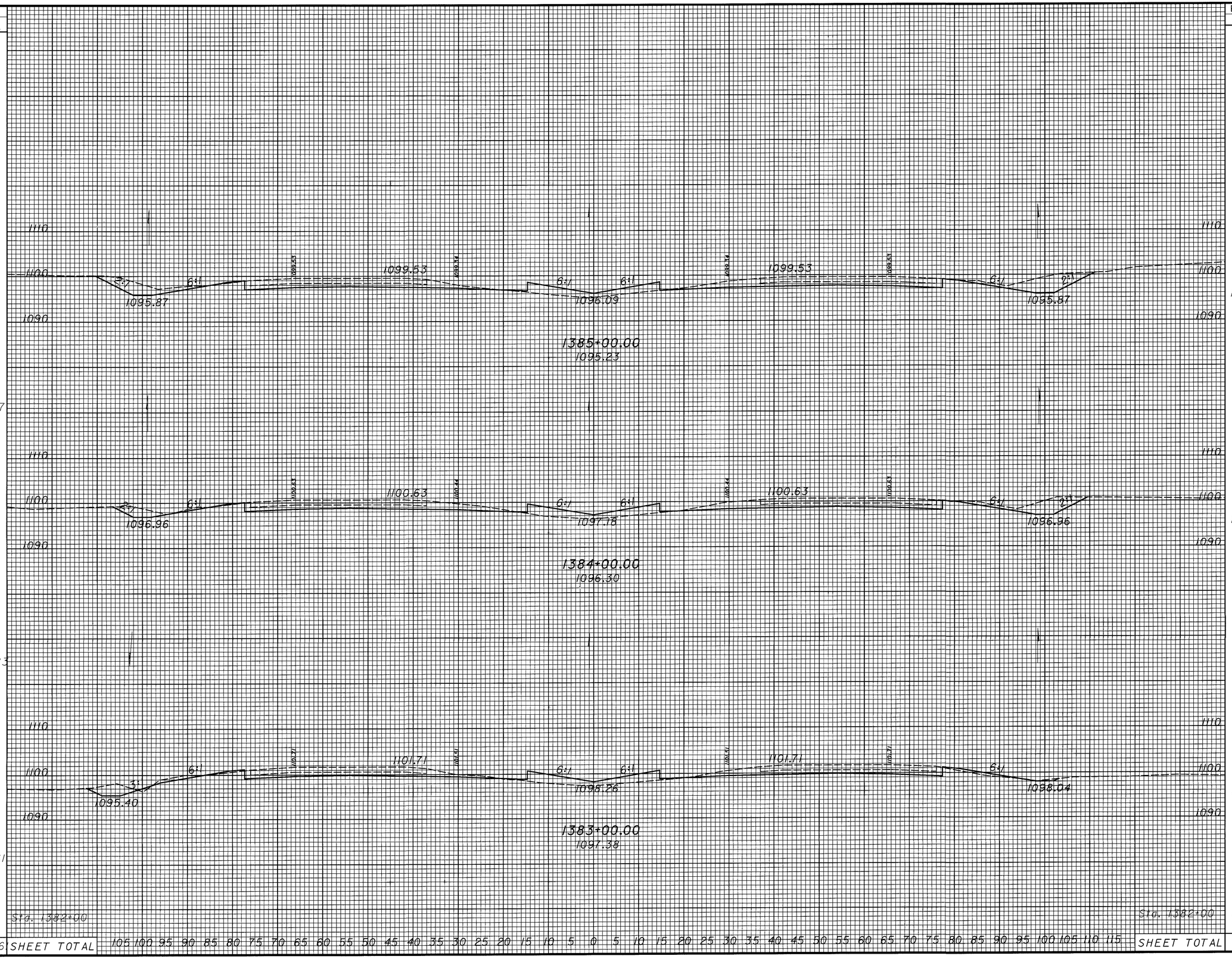

CALCULATED NJV
CHECKED JWR

CROSS SECTIONS
STA. 1383+00 TO STA. 1385+00

MED-71-15.78

371
940

DESIGN FILE : $$$$$$$$$$DESIGNFILESPECIFICATION$$$$$$$$$$
USERNAME : $$$$INSTRUCTIONS$$$$
DATE : $$$$DATE$$$$
TIME : $$$$TIME$$$$

SEEDING		END AREA		VOLUME	
END WIDTH	SQ. YDS.	CUT	FILL	CUT	FILL
118	1328	195	57	756	207
121	1339	213	55	813	204
120	1289	226	55	785	187
112	1194	198	46	619	159
103		136	40		
5150	SHEET TOTAL			2973	757

CALCULATED NJV
CHECKED JWR

CROSS SECTIONS
STA. 1386+00 TO STA. 1389+00

MED-71-15.78

372/940

DESIGN FILE : $$$$$$$$$$DESIGNFILESPECIFICATION$$$$$$$$$$
USERNAME : $$$$INSTRUCTIONS$$$$$

DATE : $$$$DATE$$$$
TIME : $$$$TIME$$$$

SEEDING	
END WIDTH	SQ. YDS.
116	
	1311
120	
	1344
122	
	1367
124	
	1344
118	
SHEET TOTAL	5366

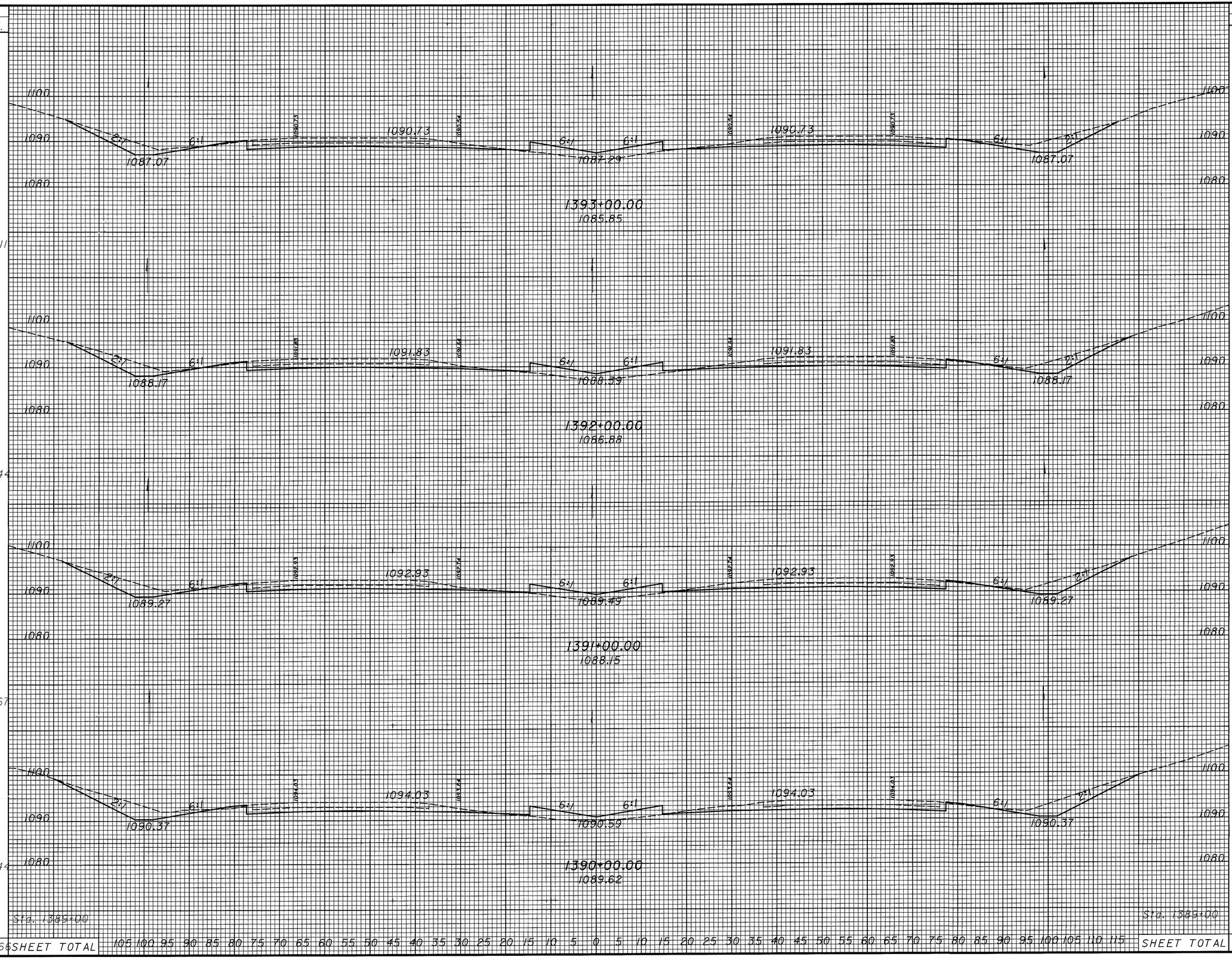

END AREA		VOLUME	
CUT	FILL	CUT	FILL
180	57		
		656	213
174	58		
		661	213
183	57		
		715	204
203	53		
		737	204
195	57		
SHEET TOTAL		2769	834

CALCULATED NJV
CHECKED JWR

CROSS SECTIONS
STA. 1390+00 TO STA. 1393+00

MED-71-15.78

DESIGN FILE : $$$$$$$$$$DESIGNFILESPECIFICATION$$$$$$$$$$
USERNAME : $$$$$INSTRUCTIONS$$$$$

DATE : $$$$DATE$$$$
TIME : $$$$TIME$$$$

SEEDING	
END WIDTH	SQ. YDS.

END AREA		VOLUME	
CUT	FILL	CUT	FILL

CALCULATED NJV
CHECKED JWR

CROSS SECTIONS
STA. 1394+00

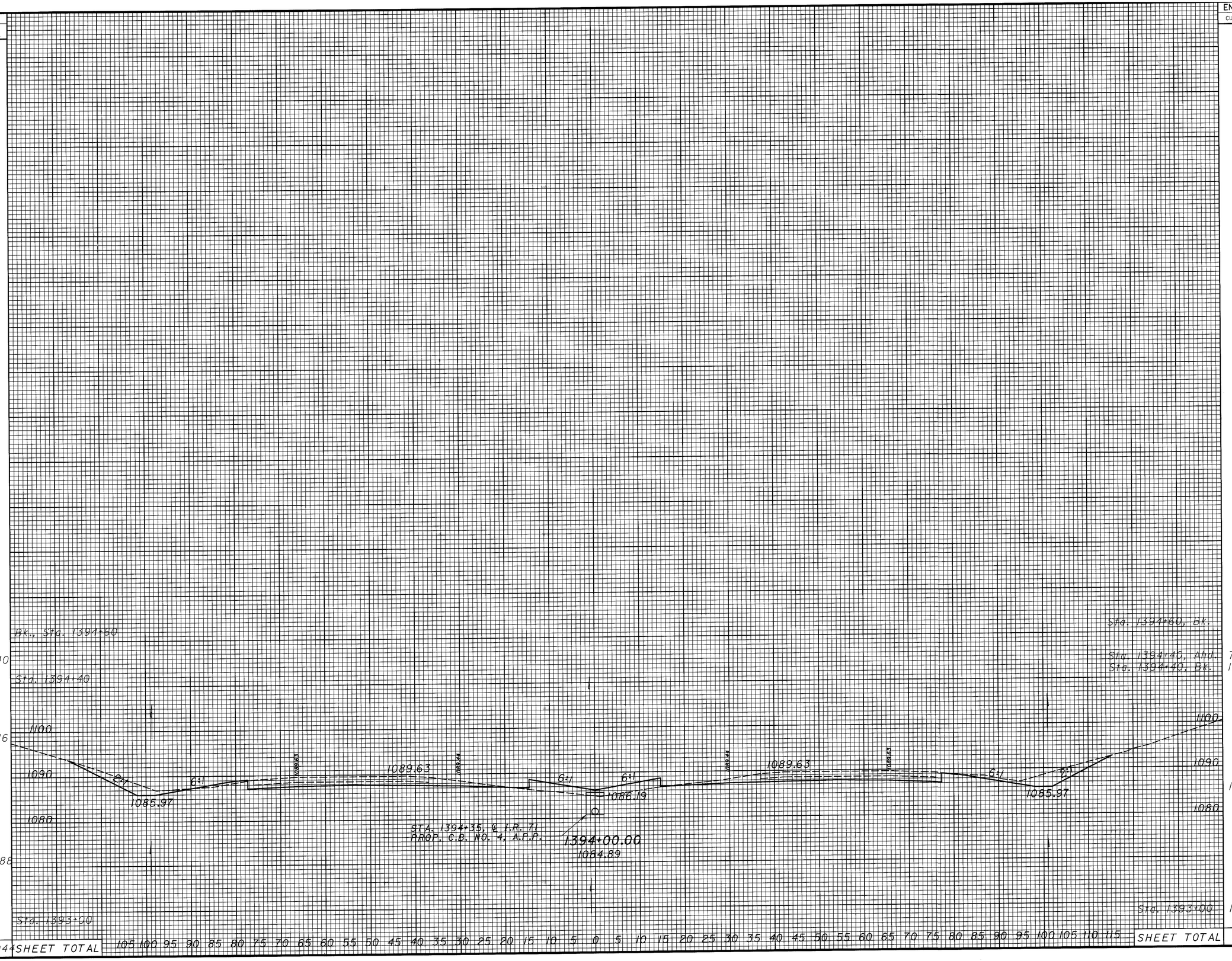

Sta. 1394+60, Bk.	0	0		
			26	19
Sta. 1394+40, Ahd.	70	52		
Sta. 1394+40, Bk.	178	52		
			264	80
	178	56		
			663	209
Sta. 1393+00	180	57		
SHEET TOTAL			953	308

MED-71-15.78

374
940

S.R. 18		GRANGER ROAD					ITEM	ITEM EXT.	GRAND TOTAL	UNIT	DESCRIPTION	AS PER PLAN SHEET REFERENCE
376		404	406	407	408	409						
		152					202	22900	152	SQ. YDS.	APPROACH SLAB REMOVED	
		713					202	38000	713	LIN. FT.	GUARDRAIL REMOVED	
196					467	619	203	12000	1,282	CU. YDS	EXCAVATION NOT INCLUDING EMBANKMENT CONSTRUCTION	
414					414	414	203	20000	1,166	CU. YDS.	EMBANKMENT	
546			1,435				203	50000	1,981	SQ. YDS.	SUBGRADE COMPACTION	
			772				254	01000	772	SQ. YDS.	PAVEMENT PLANING, BITUMINOUS	
122			295				301	46000	417	CU. YDS.	BITUMINOUS AGGREGATE BASE, PG64-22	
103			250				304	20000	353	CU. YDS.	AGGREGATE BASE	
			20				407	10000	20	GALLON	TACK COAT	
			97				407	14000	97	GALLON	TACK COAT FOR INTERMEDIATE COARSE	
			462				408	10000	462	GALLON	BITUMINOUS PRIME COAT	
			94				448	46020	94	CU. YDS.	ASPHALT CONCRETE INTERMEDIATE COURSE, TYPE 1, PG64-22	
			67				448	47020	67	CU. YDS.	ASPHALT CONCRETE SURFACE COURSE, TYPE 1, PG64-22	
		133					605	31100	133	LIN. FT.	AGGREGATE DRAIN	
		875.00					606	13000	875.00	LIN. FT.	GUARDRAIL, TYPE 5	
		2					606	25000	2	EACH	ANCHOR ASSEMBLY, TYPE A	
		2					606	26500	2	EACH	ANCHOR ASSEMBLY, TYPE T	
		4					606	35000	4	EACH	BRIDGE TERMINAL ASSEMBLY, TYPE 1	
			191				611	25000	191	SQ. YDS.	REINFORCED CONCRETE APPROACH SLAB (T=15")	
			9				617	10100	9	CU. YDS.	COMPACTED AGGREGATE, TYPE A	
			135				617	25000	135	M. GAL.	WATER	
				9			621	00100	9	EACH	RAISED PAVEMENT MARKER	
				0.32			887		0.32	MILE	EDGE LINE (5 YEAR WARRANTY)	
				0.15			887		0.15	MILE	CENTER LINE (5 YEAR WARRANTY)	
				57			644	00500	57	LIN. FT.	STOP LINE	
4,176					1,809	2,633	870	10000	8,618	SQ. YDS.	SEEDING AND MULCHING (CARRIED TO "ITEM 870 SEEDING AND MULCHING" GENERAL NOTE)	
		58					830	26001	58	LIN. FT.	CURB, TYPE 6, AS PER PLAN	506

(QUANTITIES CARRIED TO GENERAL SUMMARY UNLESS OTHERWISE NOTED)

CALCULATED PS
CHECKED PG

ROADWAY SUBSUMMARY OF QUANTITIES
GRANGER ROAD AND S.R. 18

MED-71-15.78

375
940

DESIGN FILE : i:\pd_med_lr71\dgn\relte\finaldrainage\27lrsum.dgn
USERNAME : nvondere

DATE : 06-DEC-1999
TIME : 10:15
27IRSUM

DITCH REGRADING SECTION

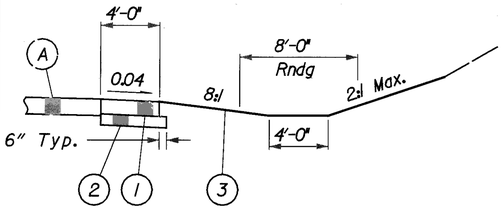

(1) 8" Item 301 Bituminous Aggregate Base

(2) 6" Item 304 Aggregate Base

(3) Item 659 Seeding and Mulching

(A) Existing Pavement (Thickness Unknown)

Note: Subgrade shall be compacted as per 203J3.

S.R. 18 PAVEMENT CALCULATIONS

LOCATION	STATION FROM	STATION TO	LENGTH, L FEET	BEGIN WIDTH, W1 FEET	END WIDTH, W2 FEET	SURFACE AREA, A A=L x[(W1+W2)/2] SQ. FT.	301 8" BITUMINOUS AGGREGATE BASE, P664-22 CU. YDS.	304 6" AGGREGATE BASE CU. YDS.
Shoulder Lt	147+50	153+45	595	4	4	2380	58.77	49.58
Shoulder Rt	147+27	153+62	635	4	4	2540	62.72	52.92
TOTALS CARRIED TO SHEET 375							121.49	102.50

EARTHWORK QUANTITIES CARRIED TO GENERAL SUMMARY

EXCAVATION	196 CU. YDS.
EMBANKMENT	414 CU. YDS.
SEEDING & MULCHING	4176 SQ. YDS.

Cross References	
Sheet	Description
77-96	Drainage Quantities

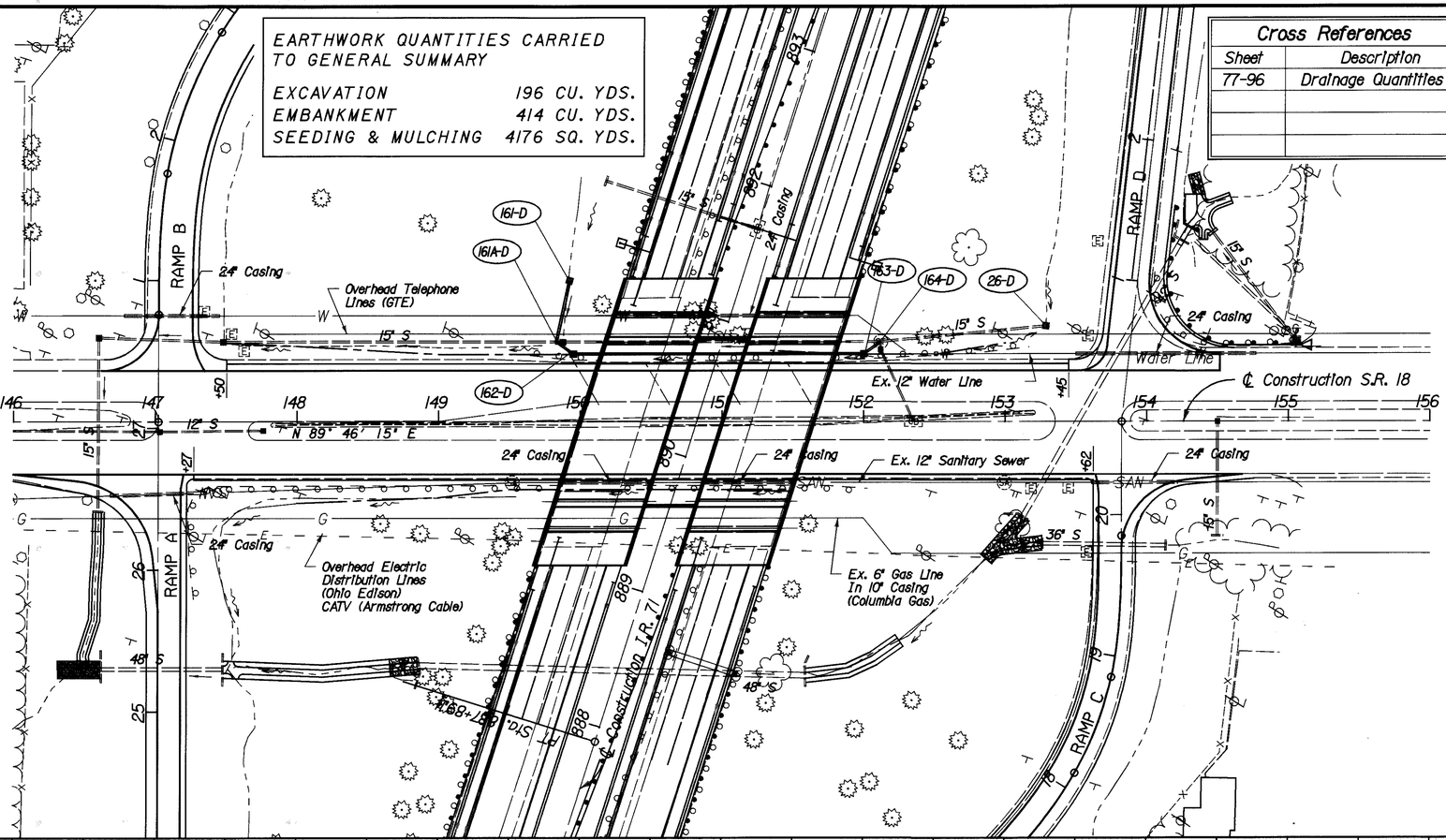

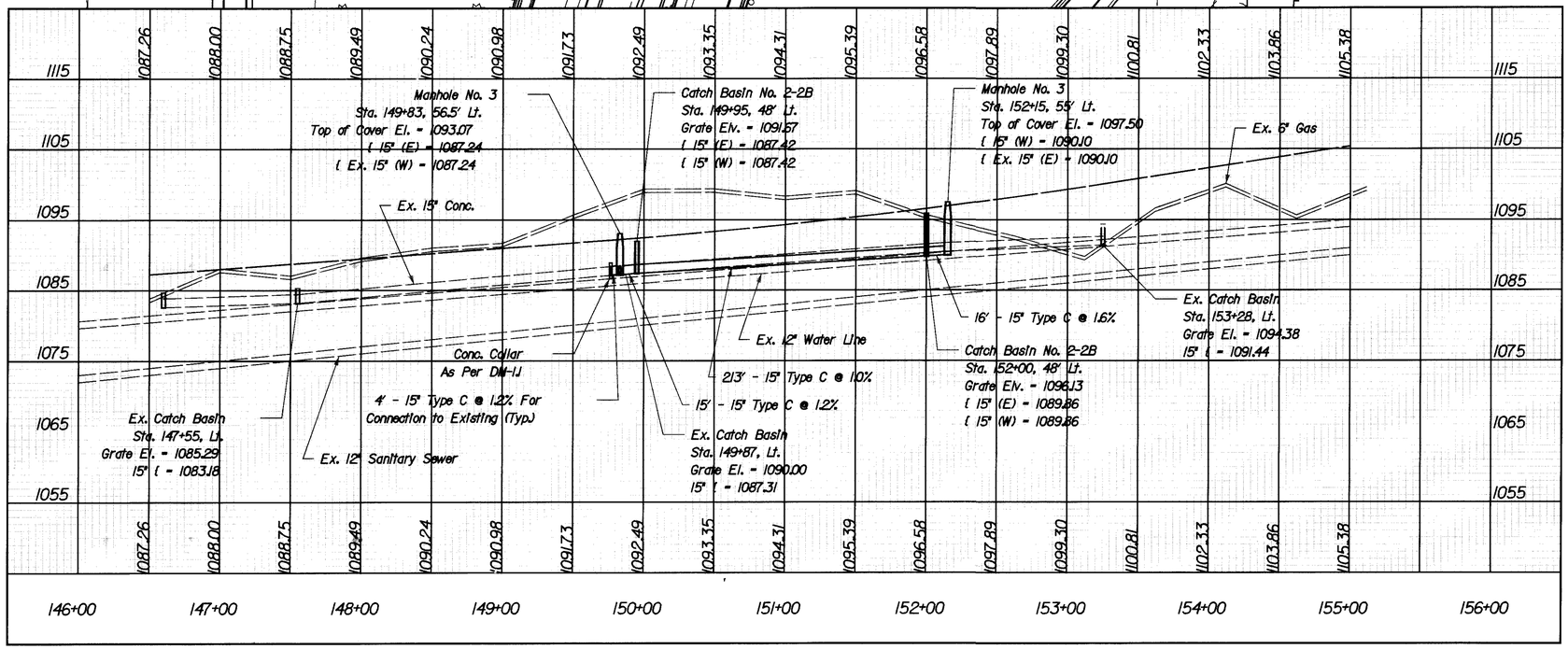

HORIZONTAL SCALE IN FEET: 0, 25, 50, 100

CALCULATED DLW CHECKED

PLAN AND PROFILE S.R. 18

MED-71-15.94

376 940

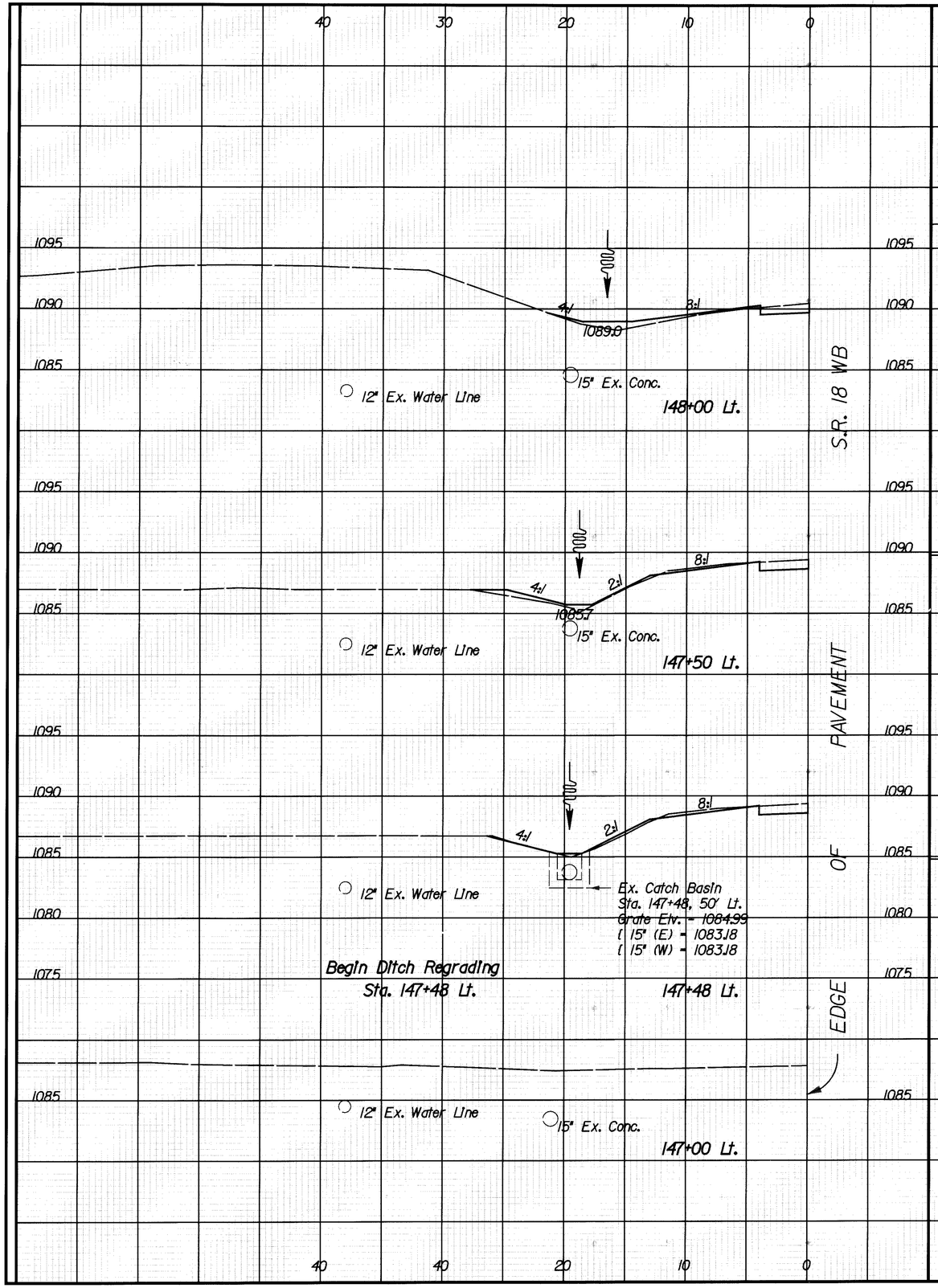

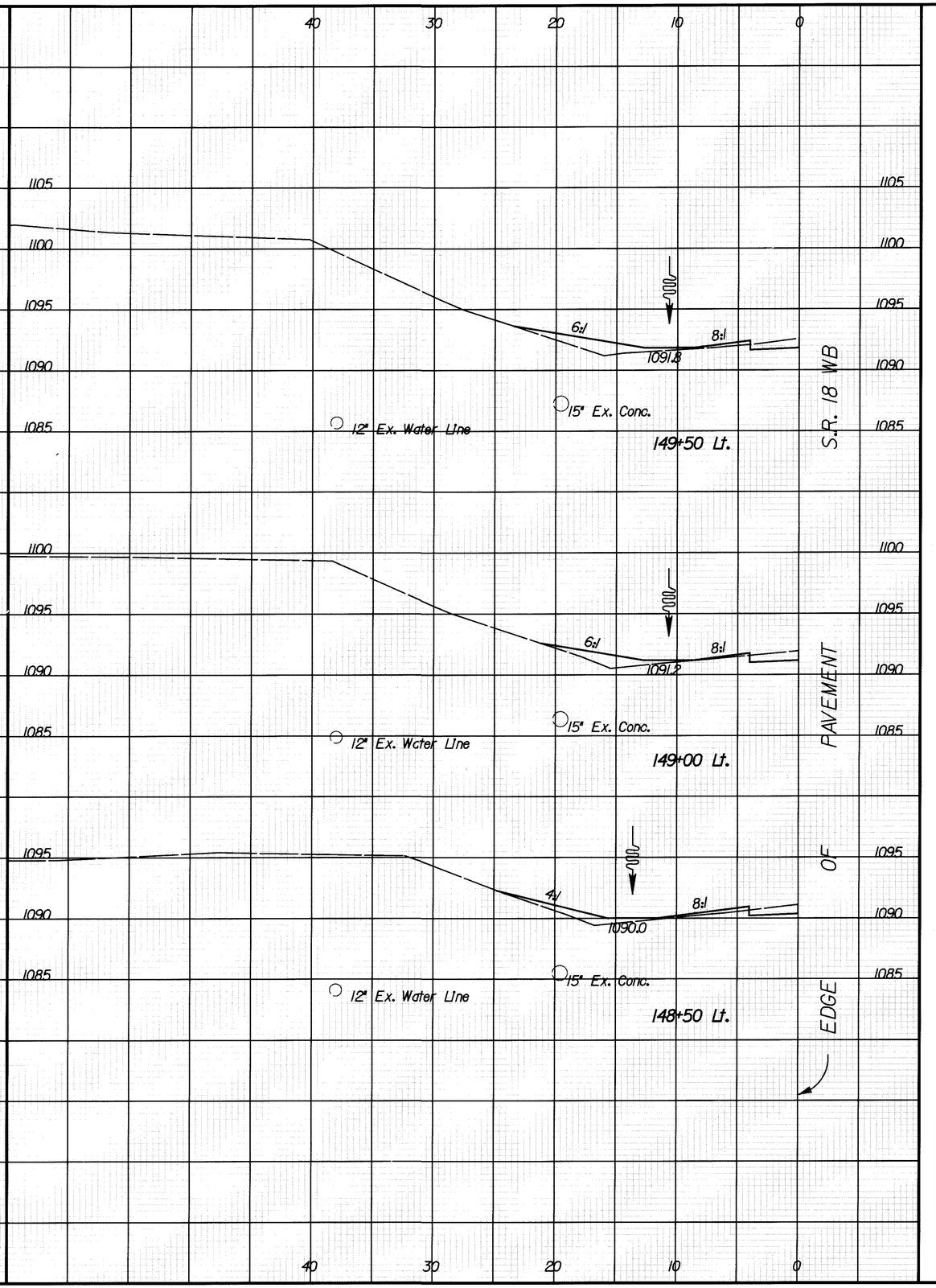

CROSS SECTIONS
DITCH REGRADING S.R. 18 LT

MED-71-15.94

377
940

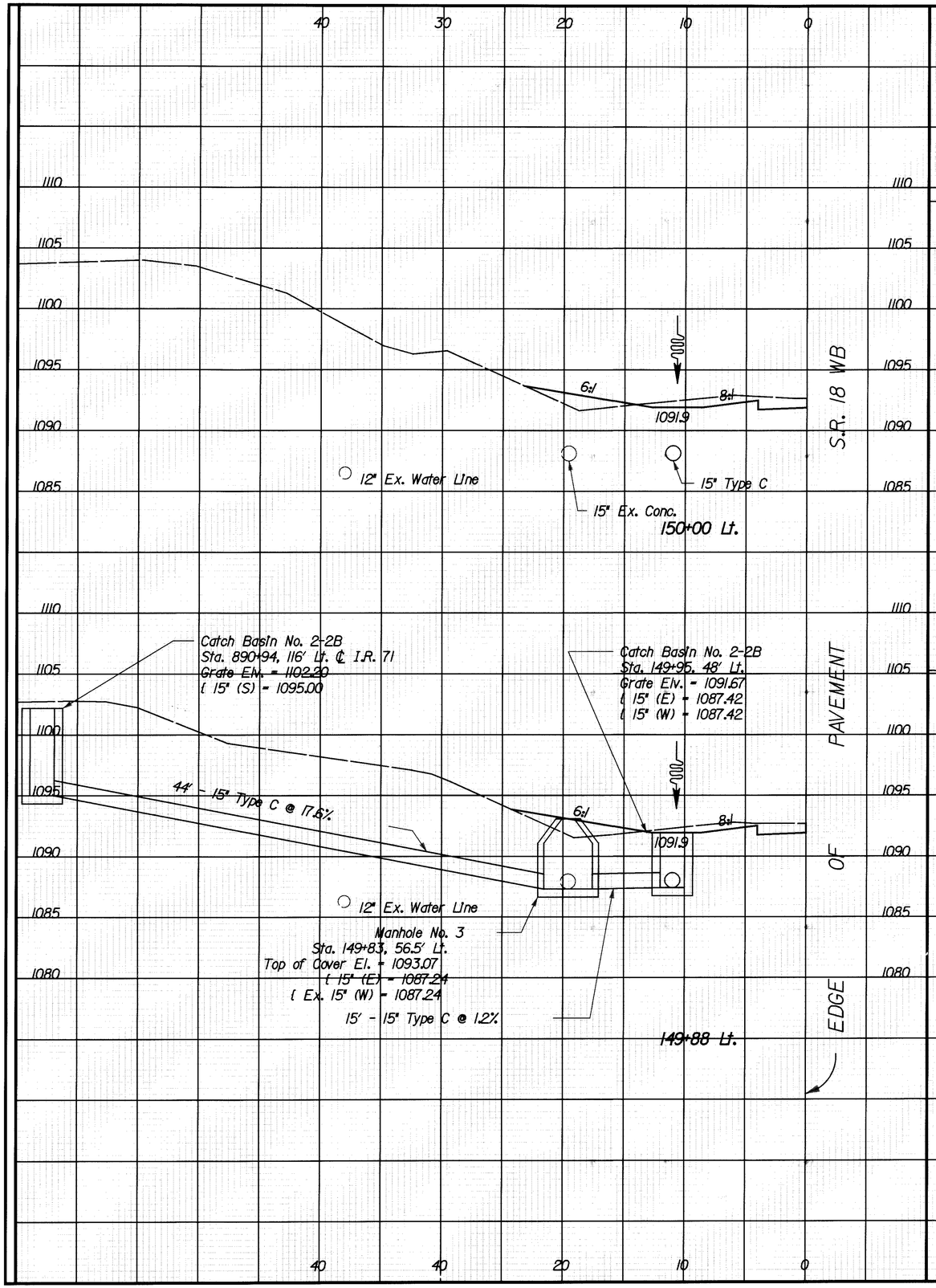

CROSS SECTIONS
DITCH REGRADING S.R. 18 LT

MED-71-15.94

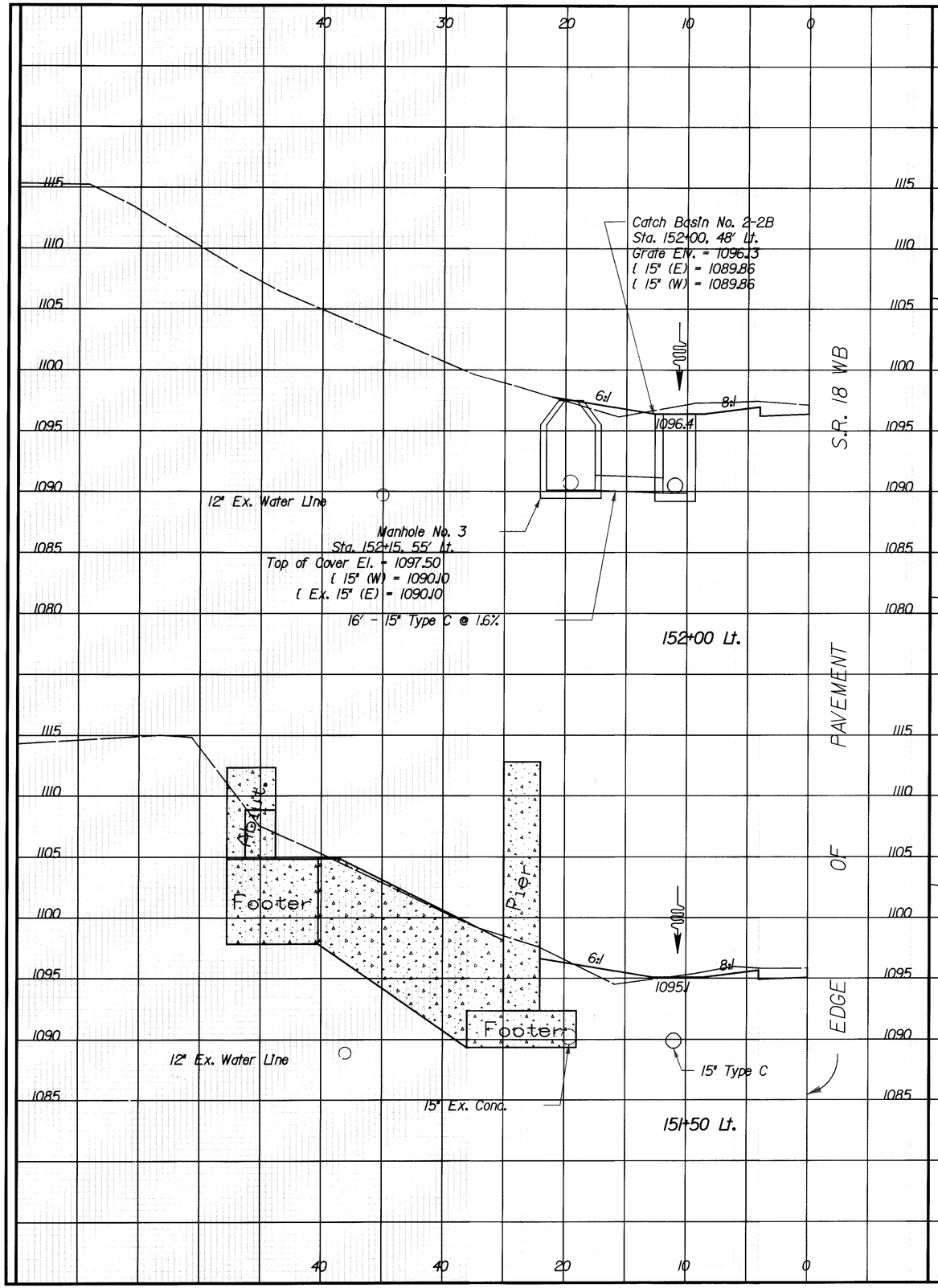

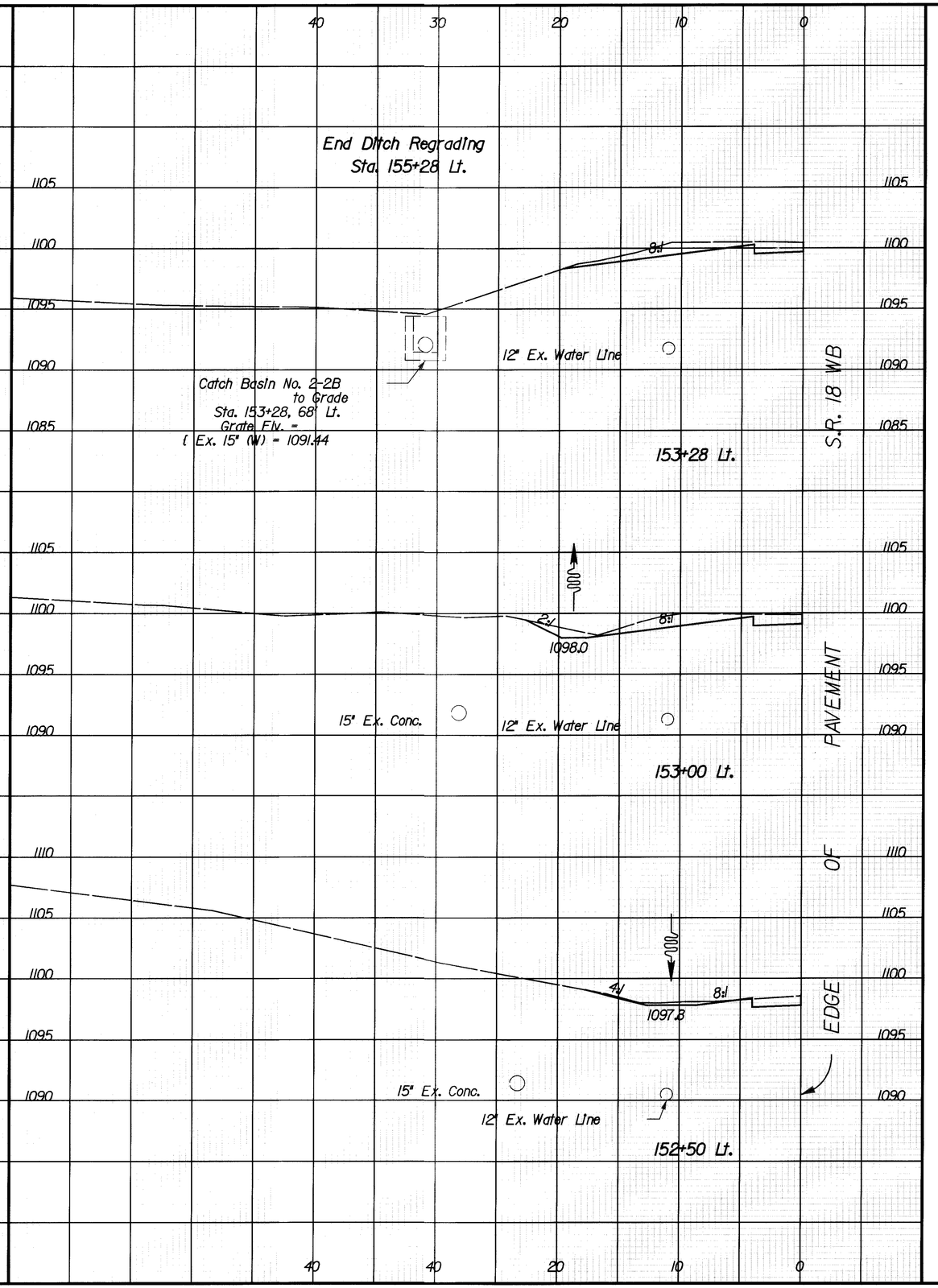

CROSS SECTIONS
DITCH REGRADING S.R. 18 LT

MED-71-15.94

379
940

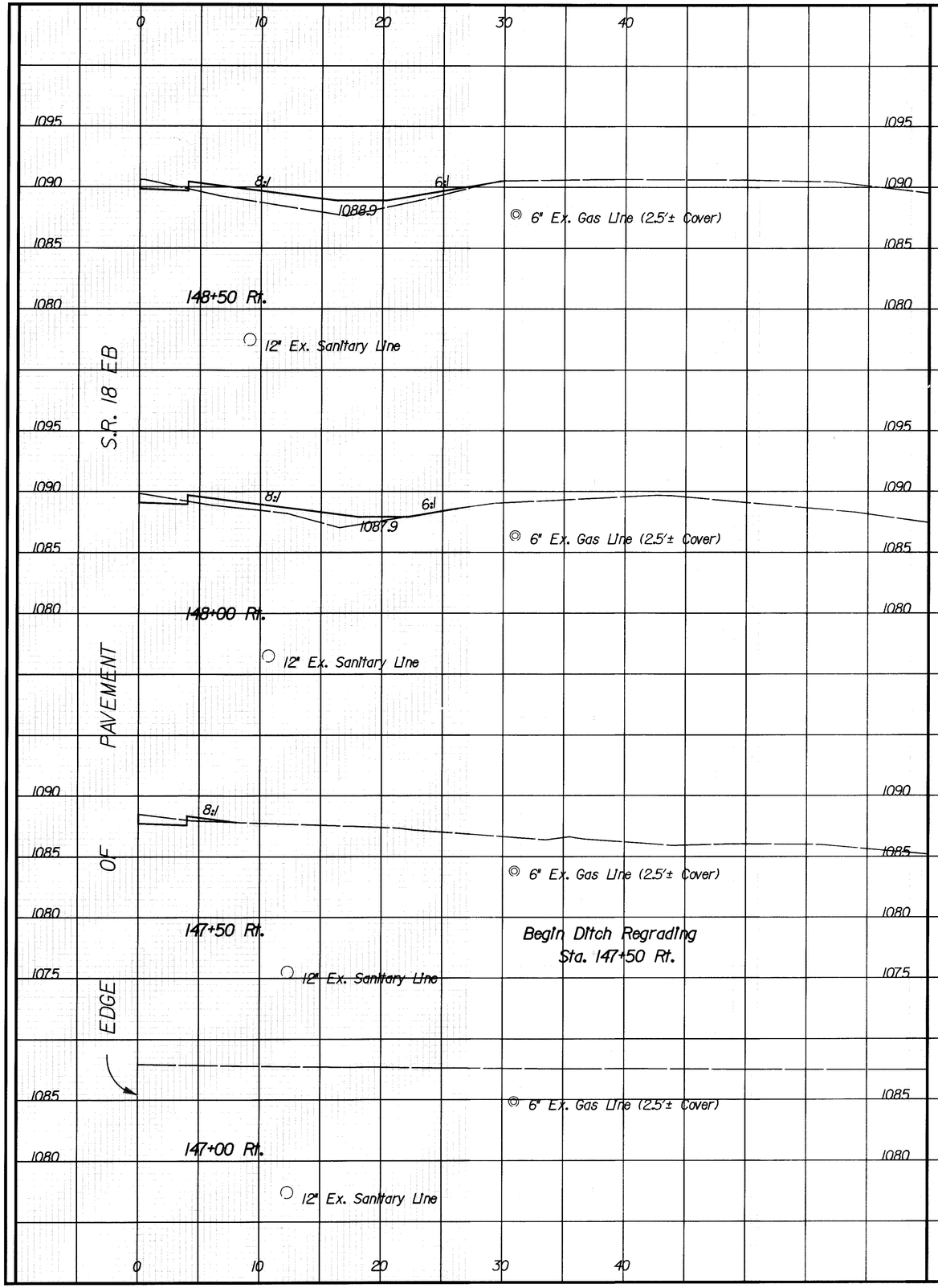

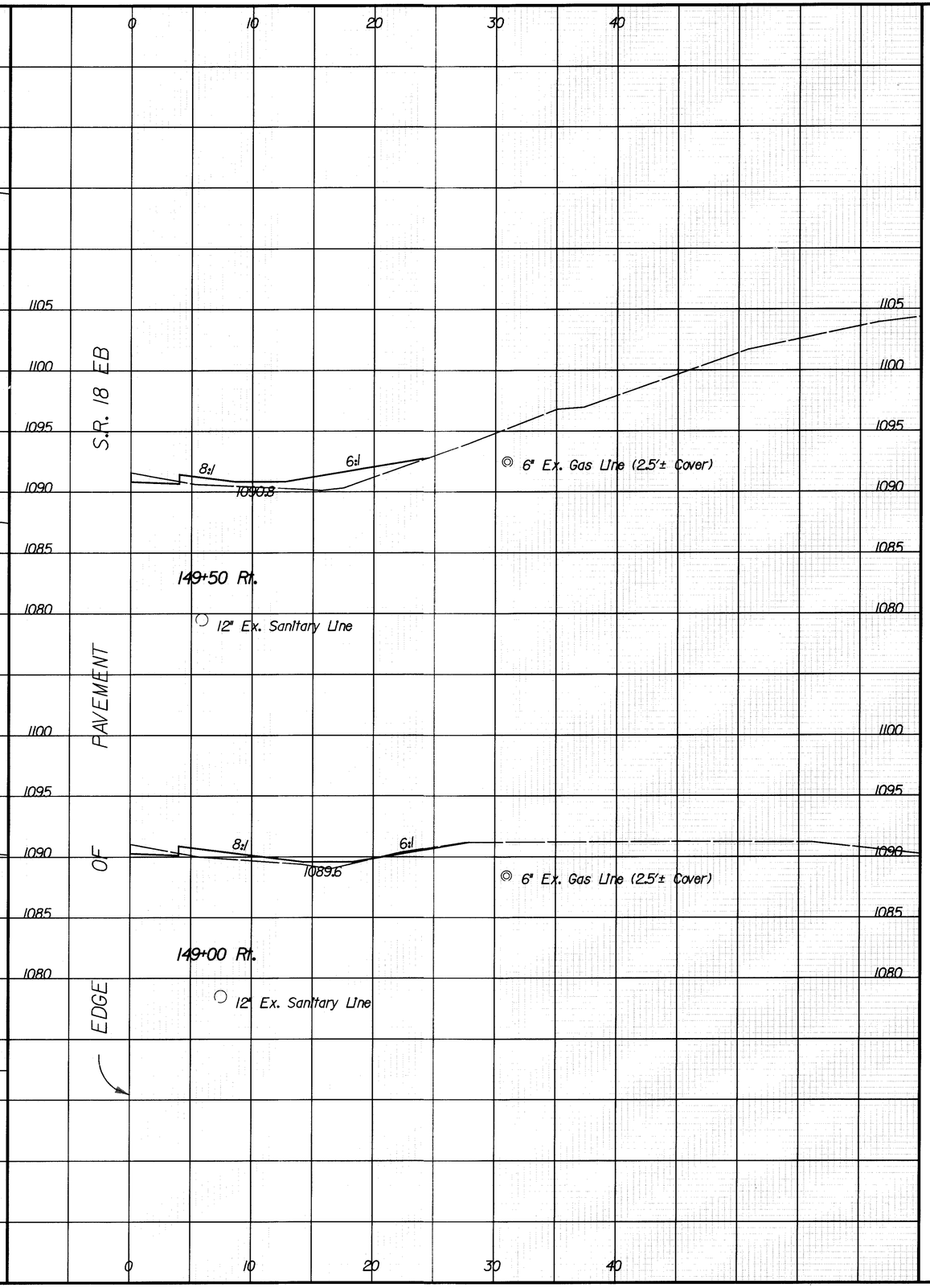

CROSS SECTIONS
DITCH REGRADING S.R. 18 RT

MED-71-15.94

380
940

CROSS SECTIONS
DITCH REGRADING S.R. 18 RT

MED-71-15.94

381
940

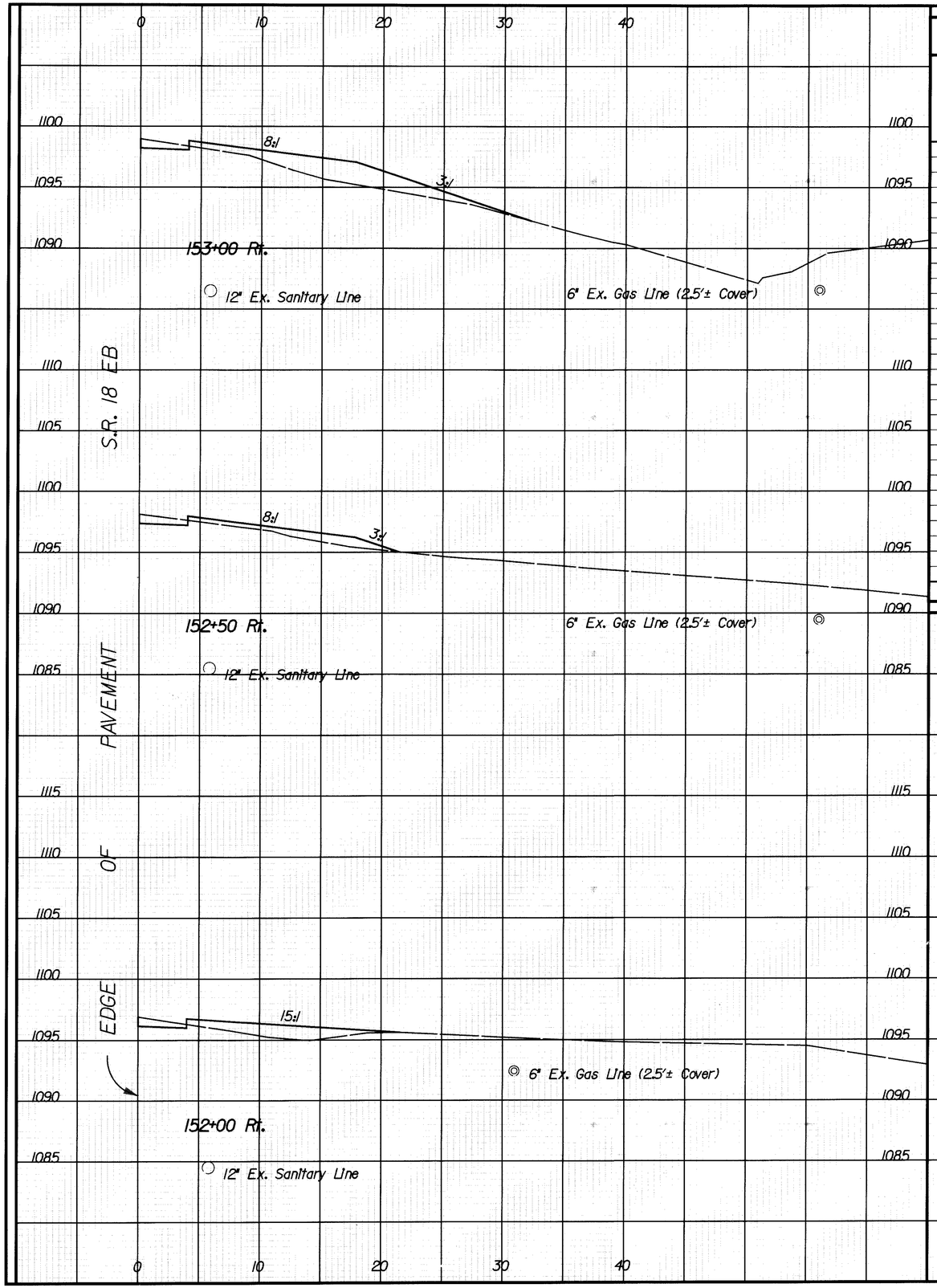

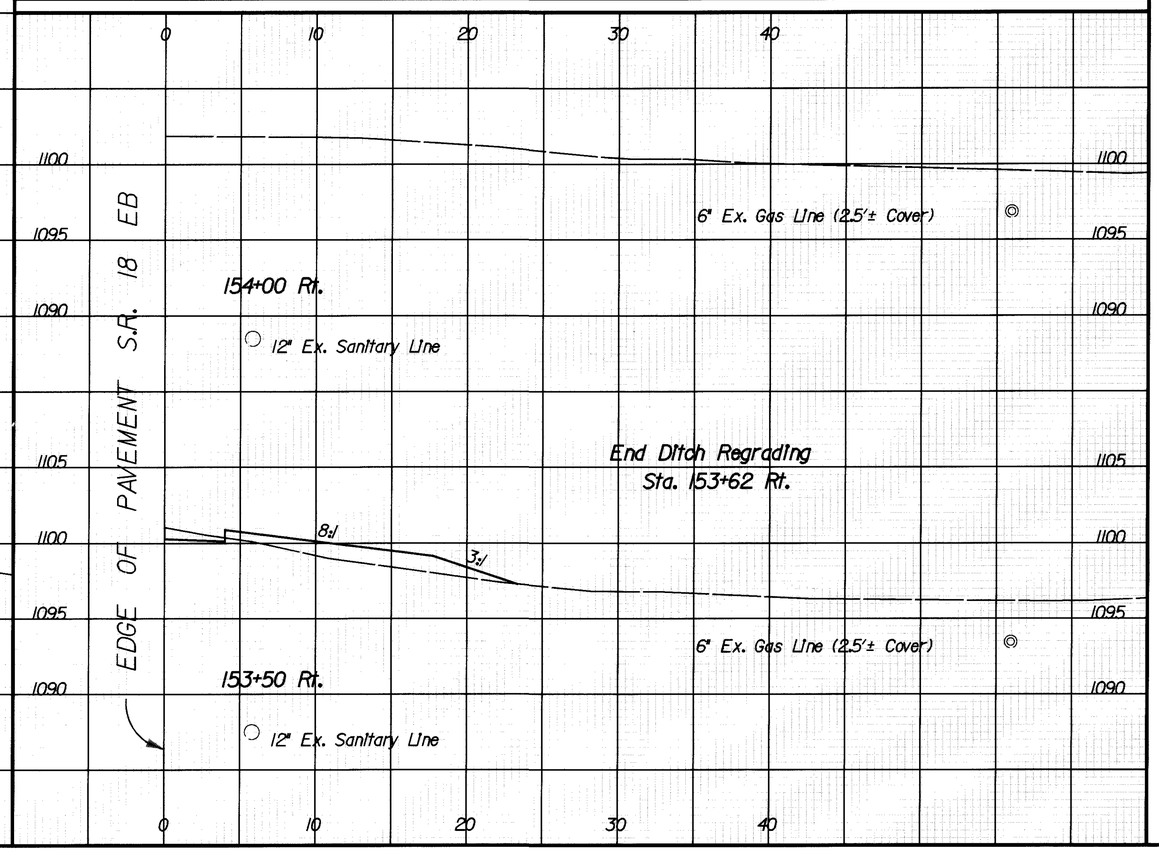

S.R. 18 EARTHWORK AND SEEDING QUANTITIES

STATION	SIDE	END AREA		VOLUME		SEEDING	
		Cut	Fill	Cut	Fill	End Width	SQ. YDS.
147+48	Lt.	5	1			33	
				1	1		8
147+50	Lt.	4	4			35	
				6	8		175
148+00	Lt.	3	5			28	
				5	11		164
148+50	Lt.	2	7			31	
				5	12		161
149+00	Lt.	3	6			27	
				5	14		158
149+50	Lt.	2	9			30	
				6	12		127
149+88	Lt.	7	8			30	
				4	3		39
150+00	Lt.	9	6			29	
				15	7		161
150+50	Lt.	7	2			29	
				13	5		156
151+00	Lt.	7	3			27	
				13	6		153
151+50	Lt.	7	4			28	
				16	6		153
152+00	Lt.	10	3			27	
				14	7		142
152+50	Lt.	5	5			24	
				18	5		147
153+00	Lt.	14	0			29	
				13	0		86
153+28	Lt.	12	0			26	
TOTALS LEFT SIDE				134	97	XXXX	1830

STATION	SIDE	END AREA		VOLUME		SEEDING	
		Cut	Fill	Cut	Fill	End Width	SQ. YDS.
147+50	Rt.	2	1			14	
				4	10		128
148+00	Rt.	2	10			32	
				4	26		189
148+50	Rt.	2	18			36	
				5	23		194
149+00	Rt.	3	7			34	
				5	19		181
149+50	Rt.	2	14			31	
				4	26		164
150+00	Rt.	2	14			28	
				9	22		153
150+50	Rt.	3	10			27	
				6	23		156
151+00	Rt.	3	15			29	
				6	33		283
151+50	Rt.	3	21			73	
				5	31		281
152+00	Rt.	2	12			28	
				4	19		156
152+50	Rt.	2	8			28	
				4	31		186
153+00	Rt.	2	26			39	
				4	39		192
153+50	Rt.	2	16			30	
				2	15		83
154+00	Rt.	0	0			0	
TOTALS RIGHT SIDE				62	317	XXXX	2346
TOTALS LEFT SIDE				134	97	XXXX	1830
TOTALS CARRIED TO 376				196	414	XXXX	4176

CROSS SECTIONS
DITCH REGRADING S.R. 18 RT

MED-71-15.94

382
940

I.R.71
P. I. Sta. = 873+38.41
Δ = 13° 36′ 15" (LT)
Dc = 00° 28′ 00"
R = 12,277.67
T = 1,464.48
E = 87.03′
Max. Super Rate = 0.018

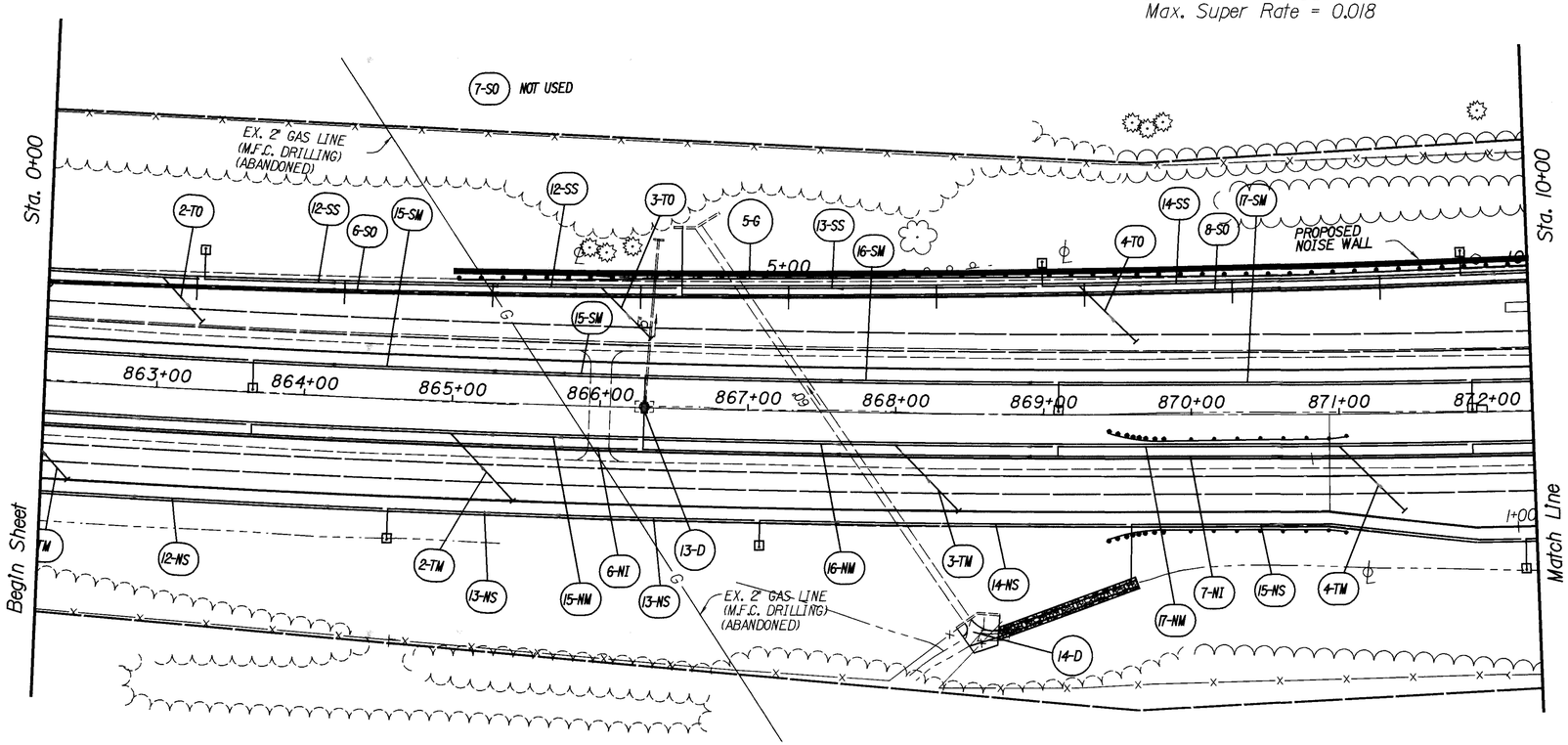

FOR UNDERDRAIN KEY, SEE SHEET NO. 172

Cross References	
Guardrail	75-76
Drainage	77-96
Underdrains	97-128
Signing	561-606
Lighting	607-643
Tree Planting	647-663
Noise Walls	664-679

HORIZONTAL SCALE IN FEET
0 50 100

CALCULATED | CHECKED

SR 18 Ramp A
STA. 0+00 TO STA. 10+00

MED - 71 - 15.78

384
940

DESIGN FILE : i:\dot_MED_IR71\DGN\PlanProfile\sr18rmpal.dgn
USERNAME : pfought
DATE : 02-DEC-1999
TIME : 14:19

Ramp "A"
P. I. Sta. = 18+82.93
△ = 22° 00′ 00" (LT)
Dc = 3° 56′ 21"
R = 1454.52′
LS = 200.00′
Theta = 3° 56′ 21"
LT = 133.37′
ST = 66.70′
x = 199.91′
y = 4.58′
k = 99.98′
p = 1.15′
△c = 14° 07′ 18" (LT)
Lc = 358.49′
Ts = 382.94′
Es = 28.39′

(18-SS) NOT USED FOR UNDERDRAIN KEY, SEE SHEET NO. 172

Sta. 10+00
PT Sta. 11+92.79
TS Sta. 14+98.40
SC Sta. 16+46.19
Sta. 20+00
EX. 2" GAS LINE (M.F.C. DRILLING) (ABANDONED)
PROPOSED NOISE WALL
Ramp A
Ramp C
Match Line
Match Line
EX. 2" GAS LINE (M.F.C. DRILLING) (ABANDONED)
PC Sta. 7+18.64
CS Sta. 11+53.36

Cross References	
Guardrail	75-76
Drainage	77-96
Underdrains	97-128
Signing	561-606
Lighting	607-643
Tree Planting	647-663
Noise Walls	664-679

DESIGN FILE : h:\cd_MED_IR71\DGN\PlanProfile\sr18rmpa1.dgn
USERNAME : pfought
DATE : 02-DEC-1999
TIME : 14:21

HORIZONTAL SCALE IN FEET
0 50 100
CALCULATED
CHECKED

SR 18 RAMP A
STA. 10+00 TO 20+00

MED - 71 - 15.78

385
940

DATE : 02-DEC-1999
TIME : 14:24

DESIGN FILE : I:\pd_MED_IR71\DGN\PlanProfile\sr18rmpal.dgn
USERNAME : pfought

Cross References	
Guardrail	75-76
Drainage	77-96
Underdrains	97-128
Signing	561-606
Lighting	607-643
Tree Planting	647-663
Noise Walls	664-679

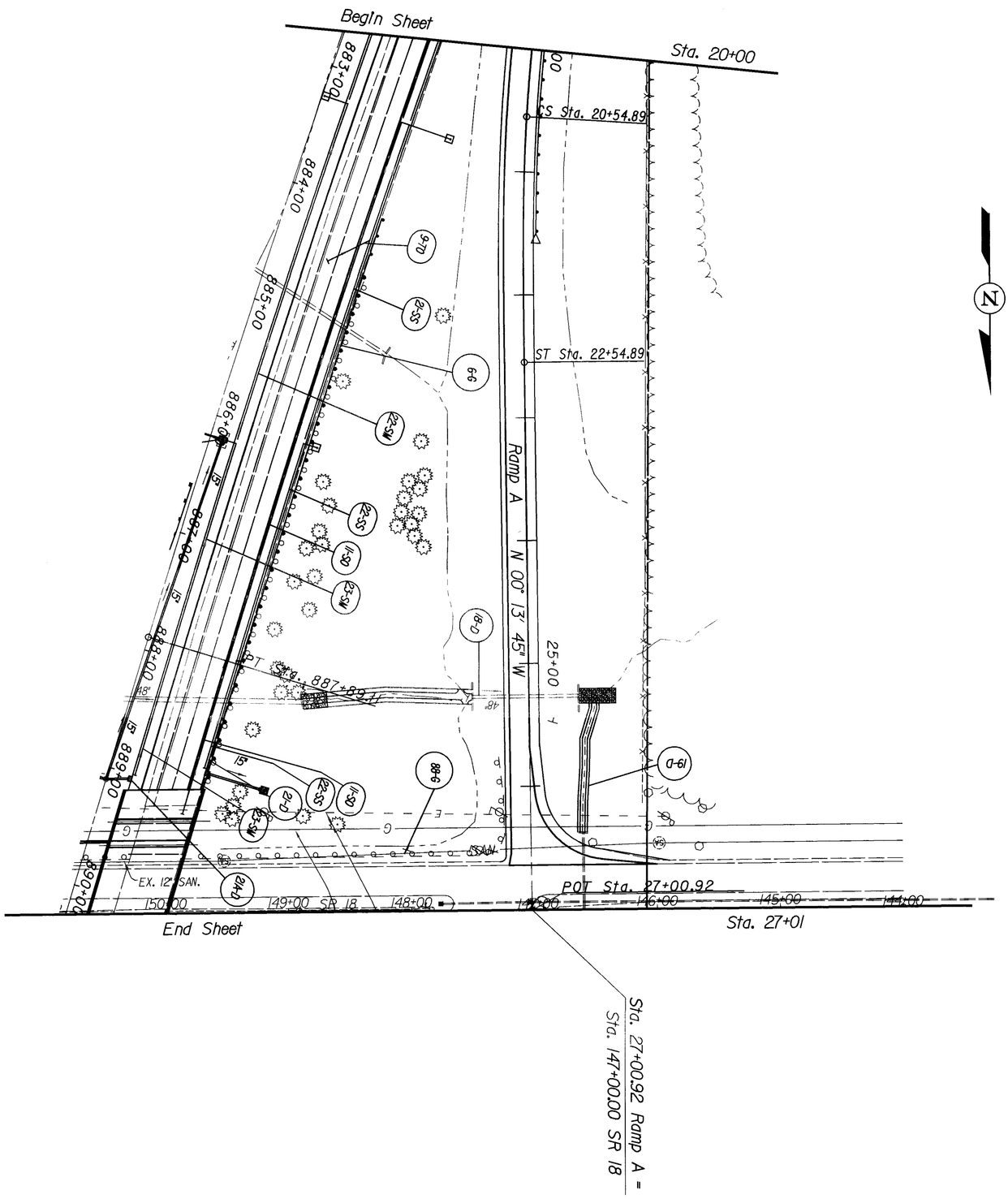

386/940	MED - 71 - 15.78	SR 18 RAMP A STA. 20+00 TO STA 27+01	CALCULATED CHECKED	0 50 100 HORIZONTAL SCALE IN FEET

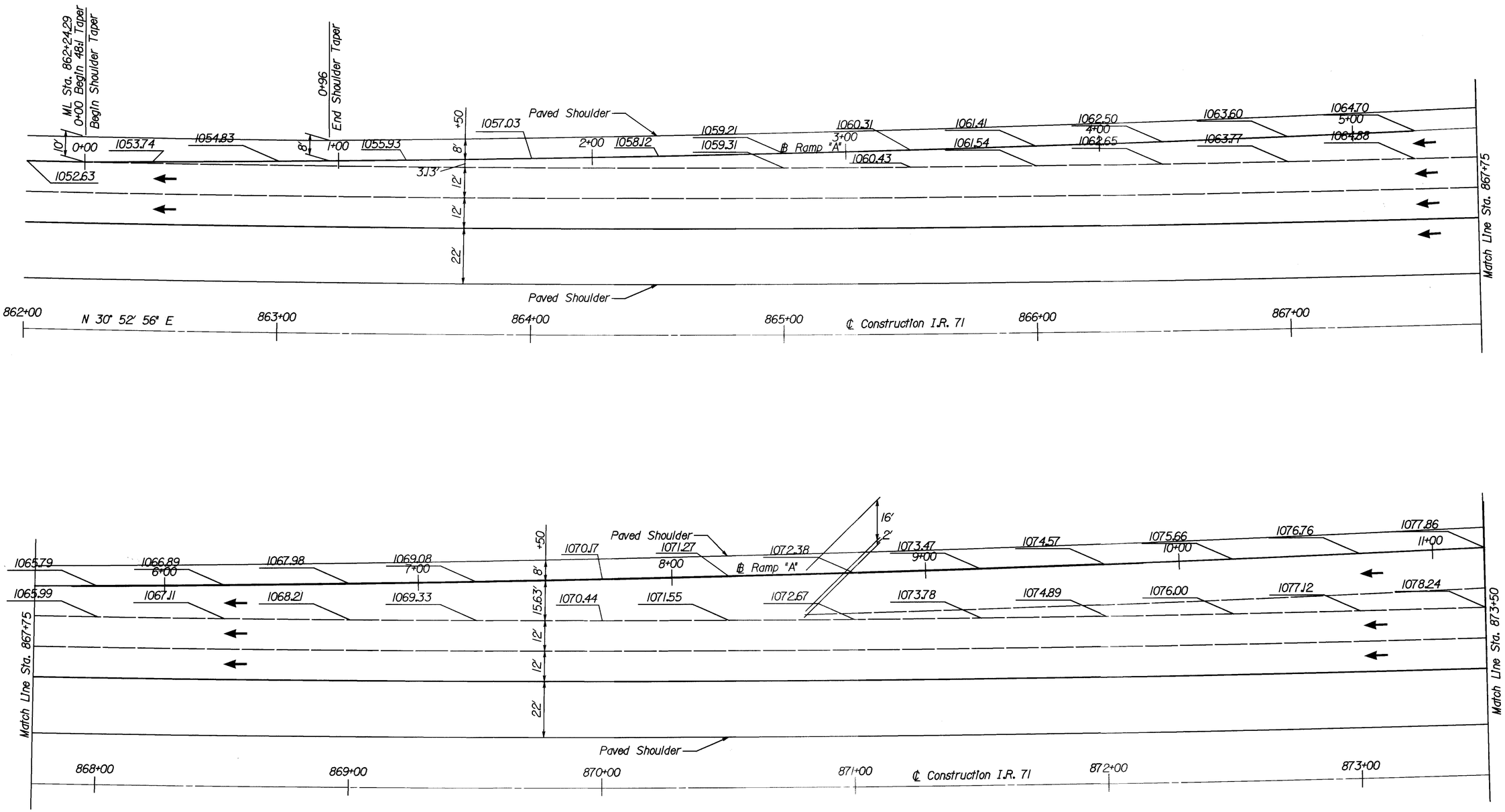

DESIGN FILE : i:\pd_med_ir71\dgn\pavement details\sr18.dgn
USERNAME : jrogers

DATE : 02-DEC-1999
TIME : 10:54

HORIZONTAL SCALE IN FEET
0 10 20 40

CALCULATED DJV
CHECKED JWR

PAVEMENT DETAIL - S. R. 18 RAMP "A"
Sta. 862+00 to Sta. 873+50

MED-71-15.78

387
940

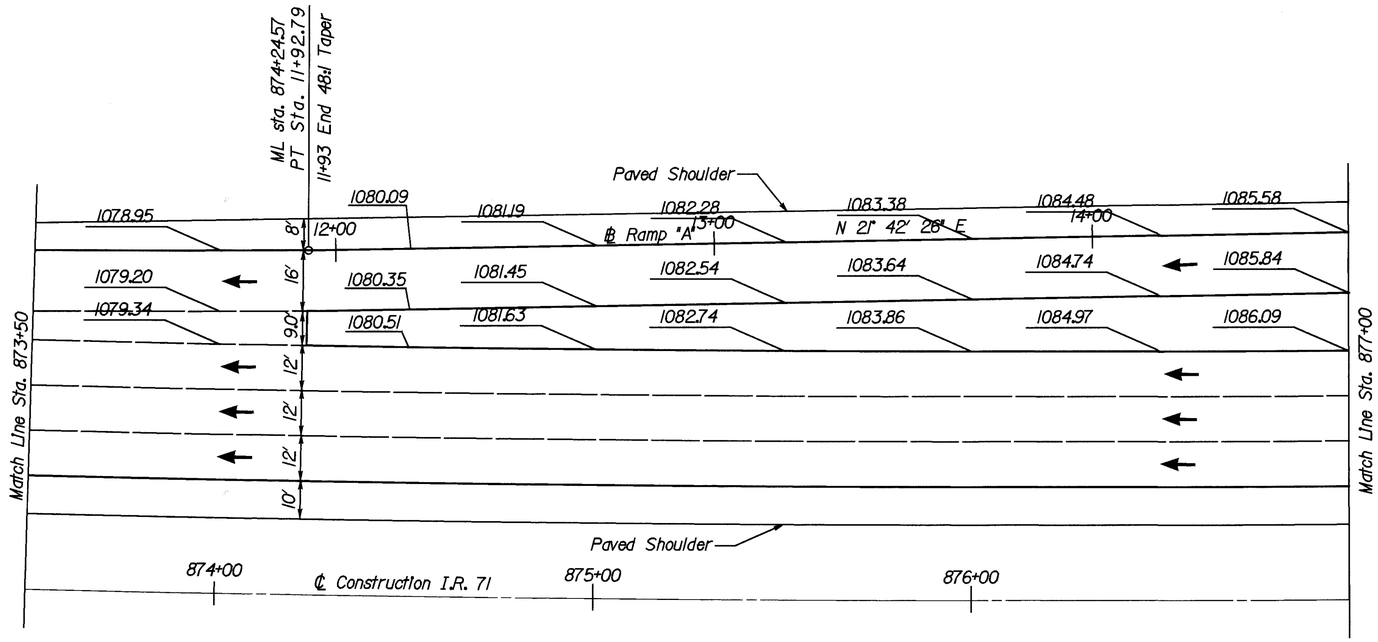

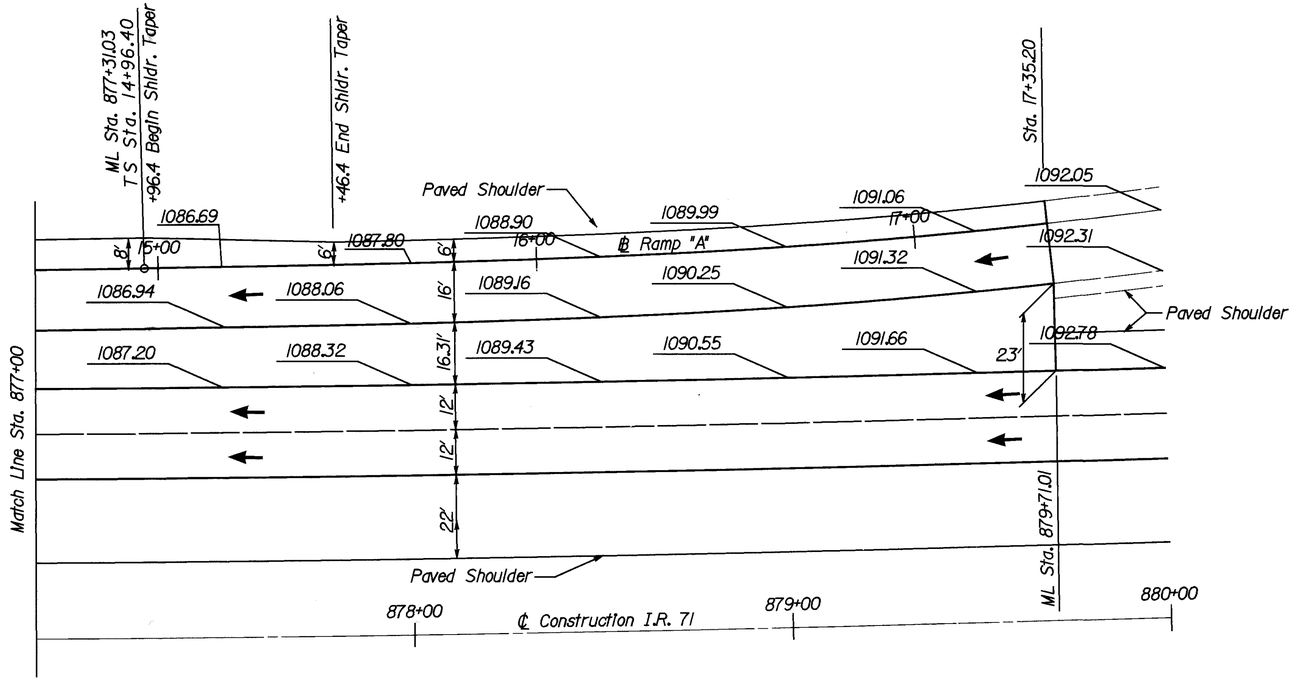

DATE : 01-DEC-1999
TIME : 09:03
DESIGN FILE : i:\pd_med_ir71\dgn\pavement details\sr18.dgn
USERNAME : jrogers

HORIZONTAL SCALE IN FEET
0 10 20 40
CALCULATED DJV
CHECKED JWR

PAVEMENT DETAIL - S. R. 18 RAMP "A"
Sta. 873+50 to Sta 880+00

MED-71-15.78

388
940

DATE : 03-DEC-1999
TIME : 08:48

DESIGN FILE : I:\pd\...MED_IR71\DGN\PlanProfile\sr18rmpbl.dgn
USERNAME : pfought

Cross References	
Guardrail	75-76
Drainage	77-96
Underdrains	97-128
Signing	561-606
Lighting	607-643
Tree Planting	647-663
Noise Walls	664-679

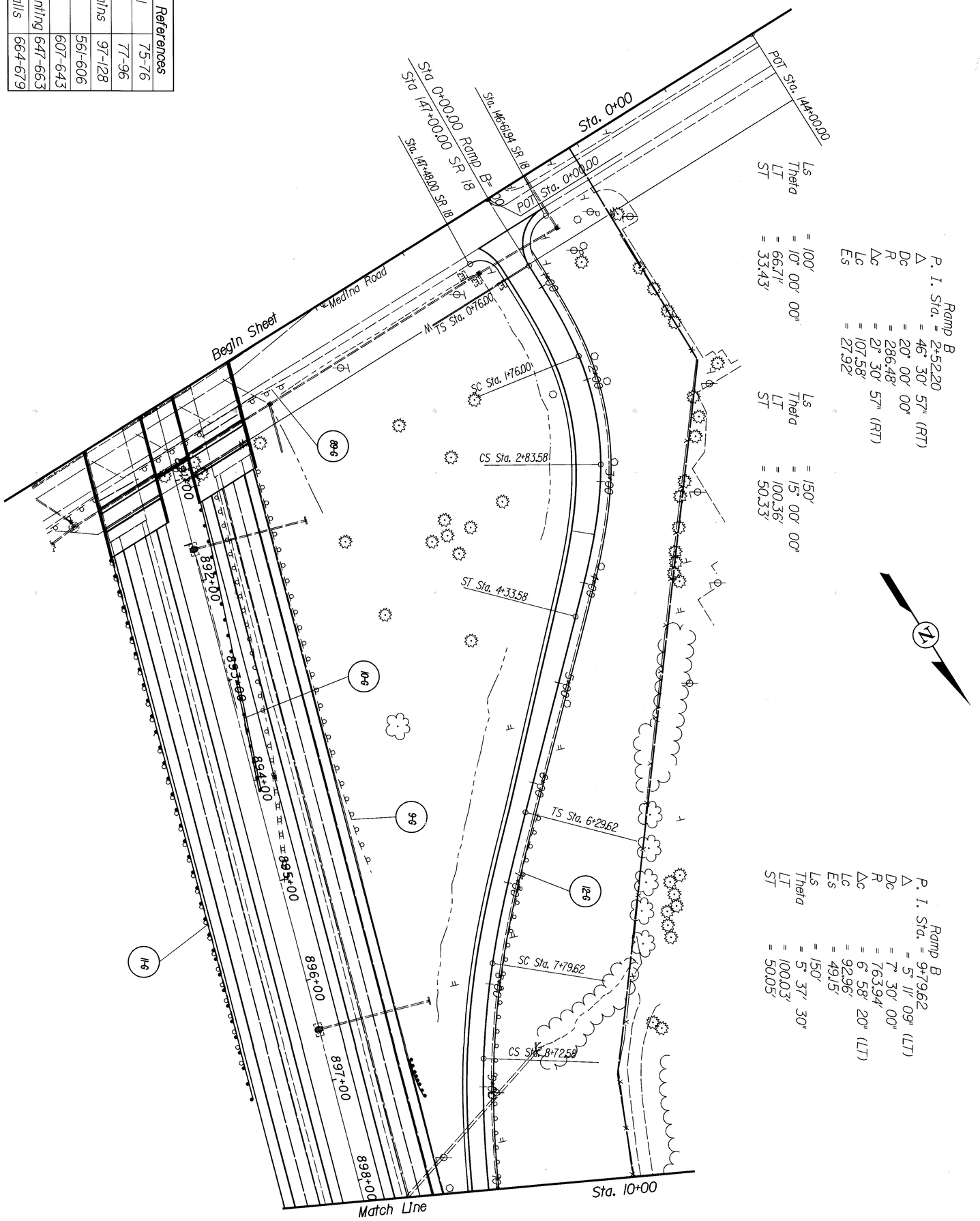

389 / 940	MED - 71 - 15.78	SR 18 RAMP B STA. 0+00 TO STA 10+00	CALCULATED CHECKED	0 50 100 HORIZONTAL SCALE IN FEET

Ramp B
P. I. Sta. = 13+19.97
△ = 7° 24' 41" (LT)
Dc = 01° 30' 00"
R = 3,819.72'
T = 247.39'
L = 494.09'
E = 8.00'
D = 9° 00'00" (RT)
LS = 200.00'
Theta = 06° 00' 00"
LT = 122.45'
ST = 77.96'

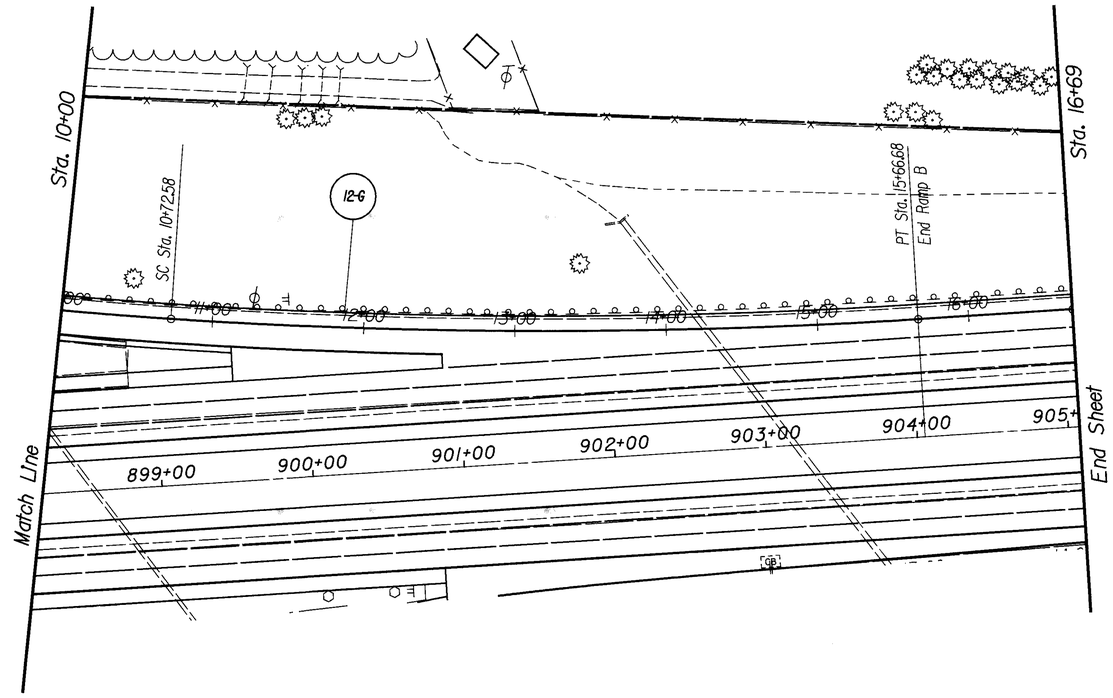

Cross References	
Guardrail	75-76
Drainage	77-96
Underdrains	97-128
Signing	561-606
Lighting	607-643
Tree Planting	647-663
Noise Walls	664-679

DESIGN FILE : i:\pd_MED_IR71\DGN\PlanProfile\sr18rmpbl.dgn
USERNAME : pfought
DATE : 03-DEC-1999
TIME : 08:49

HORIZONTAL SCALE IN FEET
0 50 100
CALCULATED
CHECKED

SR 18 RAMP B
STA. 10+00 TO STA. 16+69

MED - 71 - 15.78

390
940

HORIZONTAL SCALE IN FEET
0 10 20 40

CALCULATED DJV
CHECKED JWR

PAVEMENT DETAIL - S. R. 18 RAMP "B"
Sta. 899+00 to Sta. 906+00

MED-71-15.78

391
940

DESIGN FILE : i:\pd_med_ir71\dgn\pavement details\sr18.dgn
USERNAME : jrogers
DATE : 01-DEC-1999
TIME : 09:02

Ramp C
P. I. Sta. = 13+07.95
Δ = 12° 41′ 06" (RT)
Dc = 7° 30′ 00"
R = 763.94′
Δc = 7° 03′ 49" (RT)
Lc = 94.18′
Es = 200.88′

Ls = 200′
Theta = 6° 00′ 00"
LT = 122.45′
ST = 77.96′

Ls = 150′
Theta = 5° 37′ 30"
LT = 100.05′
ST = 50.05′

Ramp C
P. I. Sta. = 18+40.74
Δ = 47° 29′ 36" (LT)
Dc = 24° 00′ 00"
R = 238.73′
Δc = 17° 29′ 36" (LT)
Lc = 72.89′
Es = 25.19′

Ls = 150′
Theta = 18° 00′ 00"
LT = 100.52′
ST = 50.48′

Ls = 100′
Theta = 12° 00′ 00"
LT = 66.82′
ST = 33.47′

Cross References	
Guardrail	75-76
Drainage	77-96
Underdrains	97-128
Signing	561-606
Lighting	607-643
Tree Planting	647-663
Noise Walls	664-679

DESIGN FILE : I:\pd_MED_IR71\DGN\PlanProfile\sr18rmpcl.dgn
USERNAME : prought
DATE : 03-DEC-1999
TIME : 08:46

HORIZONTAL SCALE IN FEET
0 50 100
CALCULATED
CHECKED

SR 18 RAMP C
STA. 7+00 TO STA. 20+66

MED - 71 - 15.78

392
940

DESIGN FILE : i:\pd_med_ir71\dgn\pavement details\sr18.dgn
USERNAME : jrogers
DATE : 01-DEC-1999
TIME : 09:02

HORIZONTAL SCALE IN FEET
0 10 20 40

CALCULATED DJV
CHECKED JWR

PAVEMENT DETAIL - S. R. 18 RAMP "C"
Sta. 870+00 to Sta. 883+00

MED-71-15.78

393
940

Cross References	
Guardrail	75-76
Drainage	77-96
Underdrains	97-128
Signing	561-606
Lighting	607-643
Tree Planting	647-663
Noise Walls	664-679

DESIGN FILE : I:\pd_MED_JR71\DGN\PlanProfile\sr18rmpdl.dgn
USERNAME : pfought
DATE : 03-DEC-1999
TIME : 08:51

HORIZONTAL SCALE IN FEET
0 50 100
CALCULATED
CHECKED

SR 18 RAMP D
STA. 0+00 TO STA. 10+00

MED - 71 - 15.78

394
940

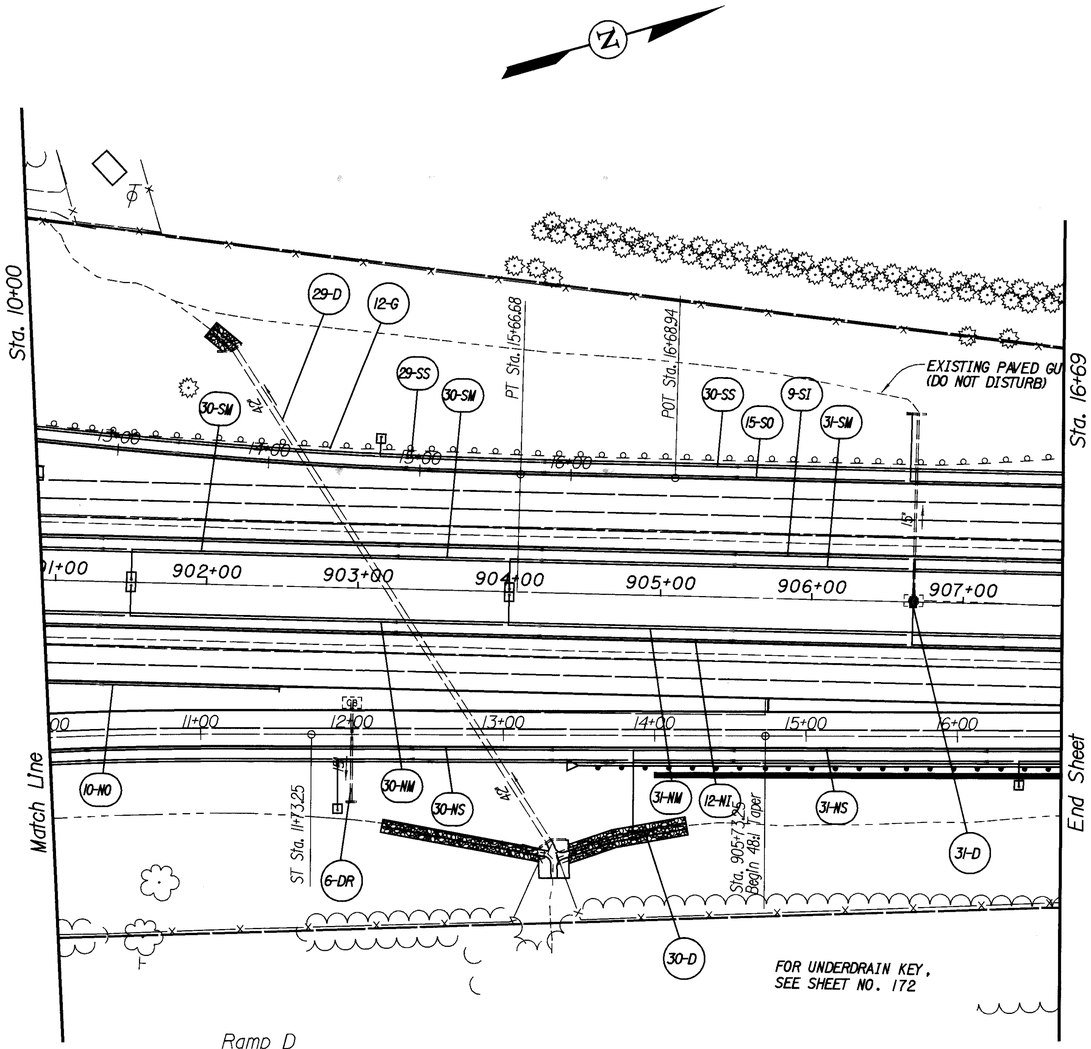

Ramp D

P. I. Sta.	=	10+72.01
△	=	11° 11′ 37″ (RT)
Dc	=	1° 36′ 35″
R	=	3,559.36′
LS	=	200.00′
Theta	=	2° 00′ 44″
LT	=	166.68′
ST	=	83.34′
x	=	249.97′
y	=	2.93′
k	=	124.99′
p	=	0.73′
△c	=	7° 10′ 09″ (RT)
Lc	=	445.37′
Ts	=	473.86′
Es	=	17.78′

Cross References	
Guardrail	75-76
Drainage	77-96
Underdrains	97-128
Signing	561-606
Lighting	607-643
Tree Planting	647-663
Noise Walls	664-679

HORIZONTAL SCALE IN FEET
0 50 100

CALCULATED | CHECKED

SR 18 RAMP D
STA. 10+00 TO STA 16+69

MED - 71 - 15.78

395
940

DESIGN FILE : I:\pd_MED_IR71\DGN\PlanProfile\sr18rmpd1.dgn
USERNAME : pfought
DATE : 03-DEC-1999
TIME : 08:52

SEEDING		END AREA		VOLUME	
END WIDTH	SQ. YDS.	CUT	FILL	CUT	FILL
38		45	14		
	211			77	30
38		38	18		
	147			69	19
15		36	3		
75	Seeding Bk. to S.R. 18			70	5
	433 SHEET TOTAL			216	54

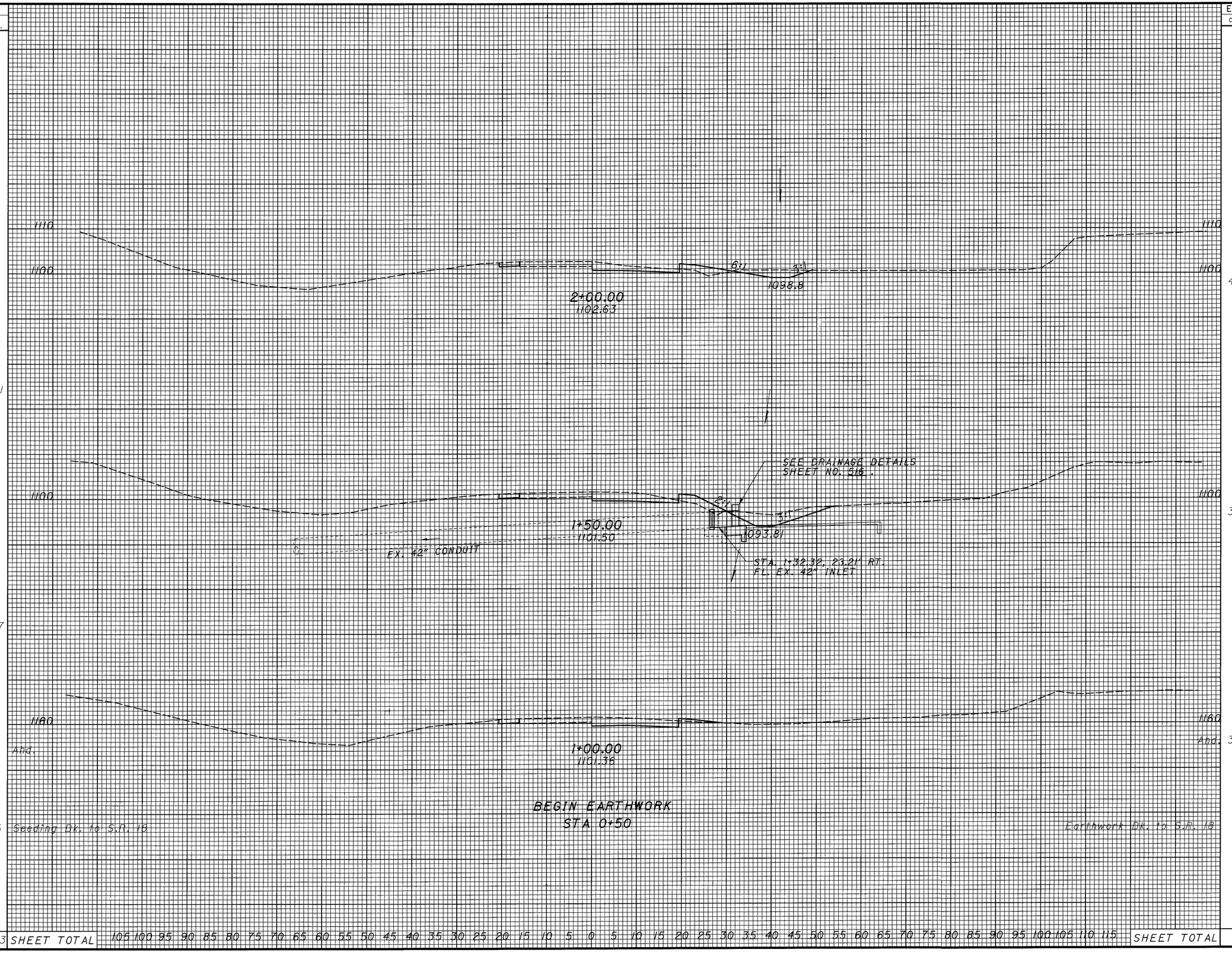

CALCULATED NJV
CHECKED JWR

CROSS SECTIONS - S.R. 18 RAMP D
STA. 1+00 TO STA. 2+00

MED-71-15.78

396
940

DESIGN FILE : $$$$$$$$$$$DESIGNFILESPECIFICATION$$$$$$$$$$
USERNAME : $$$$INSTRUCTIONS$$$$
DATE : $$$$DATE$$$$
TIME : $$$$TIME$$$$

SEEDING	
END WIDTH	SQ. YDS.
48	572
55	583
50	489
38	Sta. 2+00
	1644 SHEET TOTAL

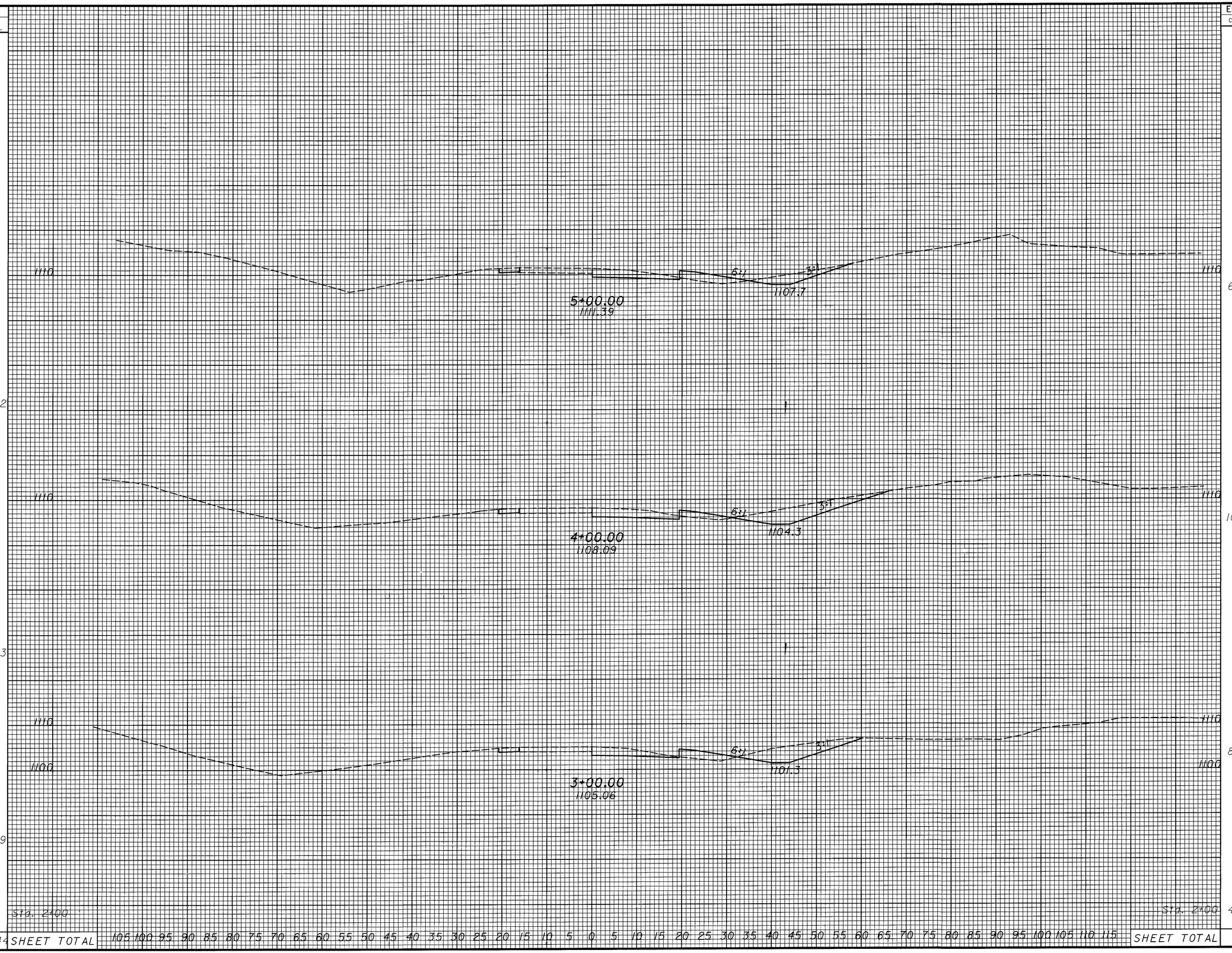

END AREA		VOLUME	
CUT	FILL	CUT	FILL
60	21		
100	12	296	61
88	18	348	56
45	14	246	59
		890	176

SHEET TOTAL

CALCULATED N.J.V.
CHECKED J.W.R.

CROSS SECTIONS - S.R. 18 RAMP D
STA. 3+00 TO STA. 5+00

MED-71-15.78

397
940

DESIGN FILE : $$$$$$$$$$DESIGNFILESPECIFICATION$$$$$$$$$$
USERNAME : $$$$INSTRUCTIONS$$$$
DATE : $$$$DATE$$$$
TIME : $$$$TIME$$$$

DATE : $$$$DATE$$$$ DESIGN FILE : $$$$$$$$$$DESIGNFILESPECIFICATION$$$$$$$$$$
TIME : $$$$TIME$$$$ USERNAME : $$$$INSTRUCTIONS$$$$

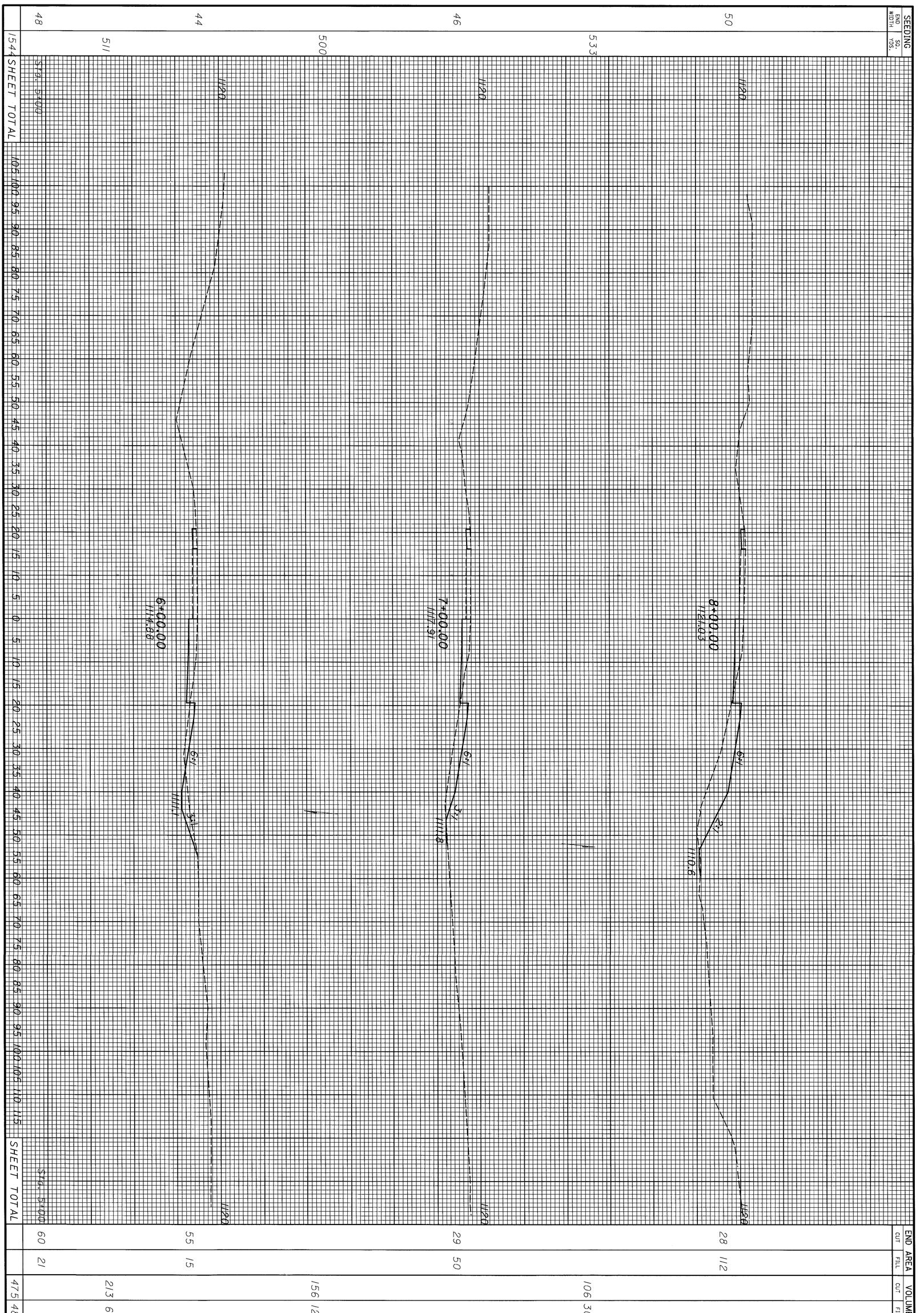

MED-71-15.78

CROSS SECTIONS - S.R. 18 RAMP D
STA. 6+00 TO STA. 8+00

398
940

CALCULATED NJV
CHECKED JWR

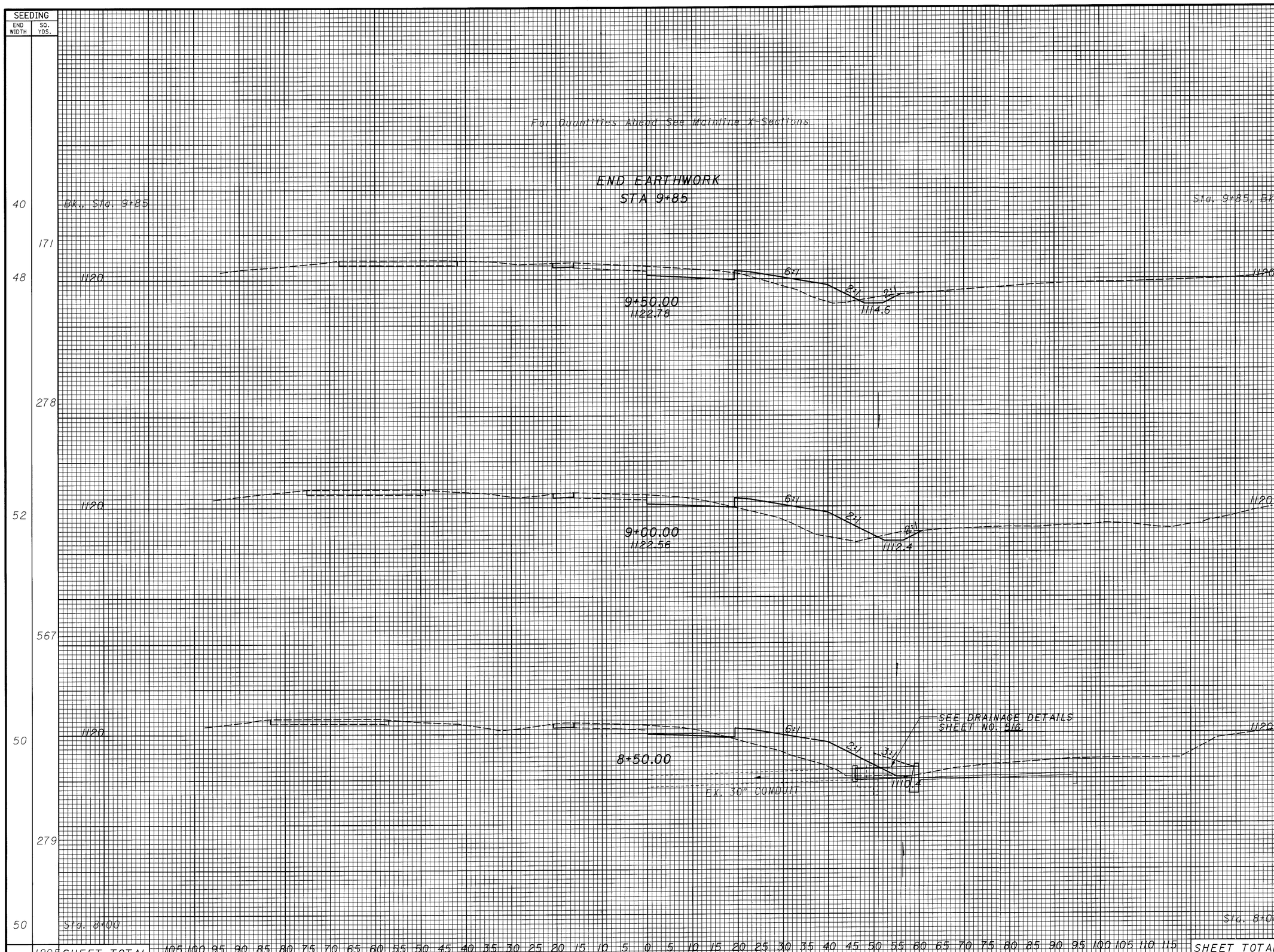

SEEDING END WIDTH	SEEDING SQ. YDS.	END AREA CUT	END AREA FILL	VOLUME CUT	VOLUME FILL
40		40	40		
	171			57	60
48		48	52		
	278			81	150
52		40	110		
	567			63	222
50		28	130		
	279			52	224
50		0	0		
	1295 SHEET TOTAL			253	656

CALCULATED NJV
CHECKED JWR

CROSS SECTIONS - S.R. 18 RAMP D
STA. 8+50 TO STA. 9+50

MED-71-15.78

DATE : $$$$DATE$$$$ DESIGN FILE : $$$$$$$$$$DESIGNFILESPECIFICATION$$$$$$$$$$
TIME : $$$$TIME$$$$ USERNAME : $$$$INSTRUCTIONS$$$$

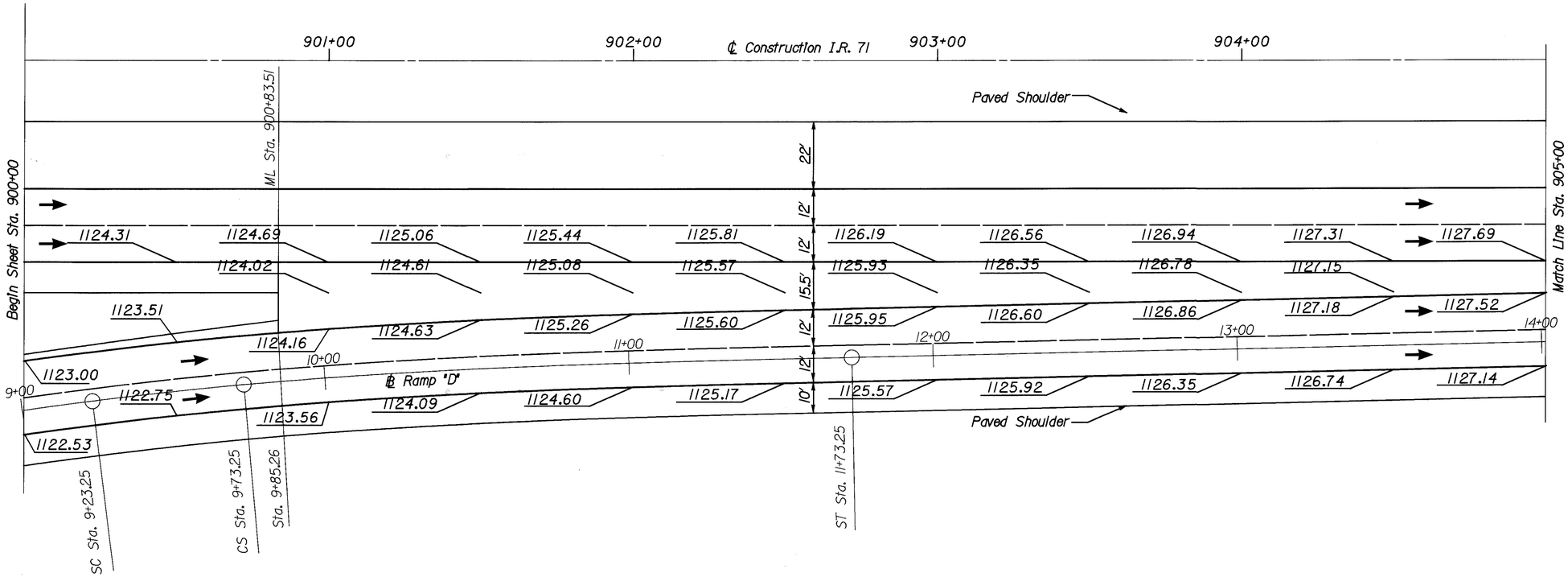

HORIZONTAL SCALE IN FEET
0 10 20 40

CALCULATED DJV
CHECKED

PAVEMENT DETAIL S.R. 18 RAMP "D"
STA. 900+00 TO 910+00

MED-71-15.78

400/940

DATE : 01-DEC-1999
TIME : 09:02
DESIGN FILE : i:\pd_med_lr71\dgn\pavement details\sr18.dgn
USERNAME : jrogers

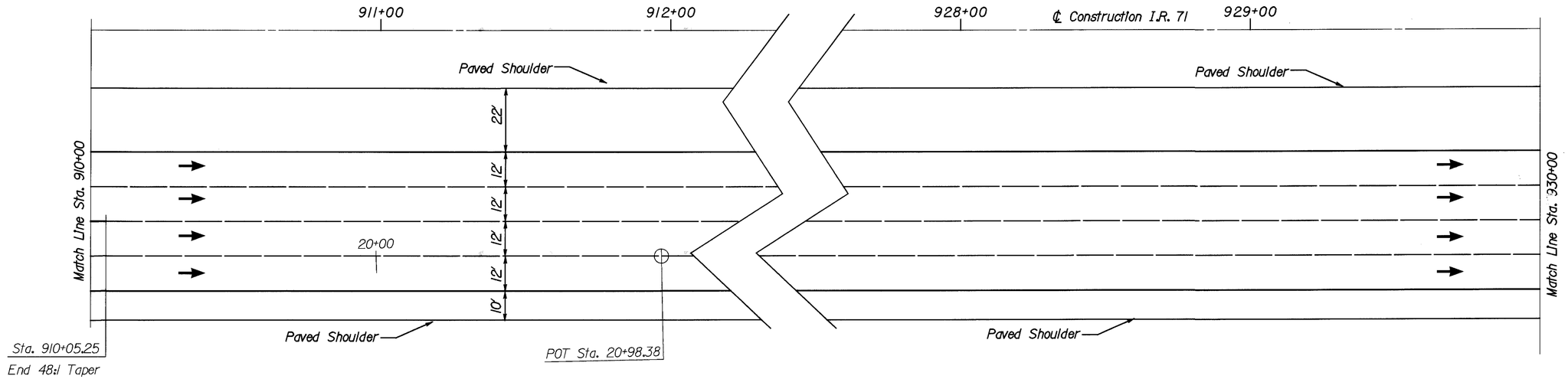

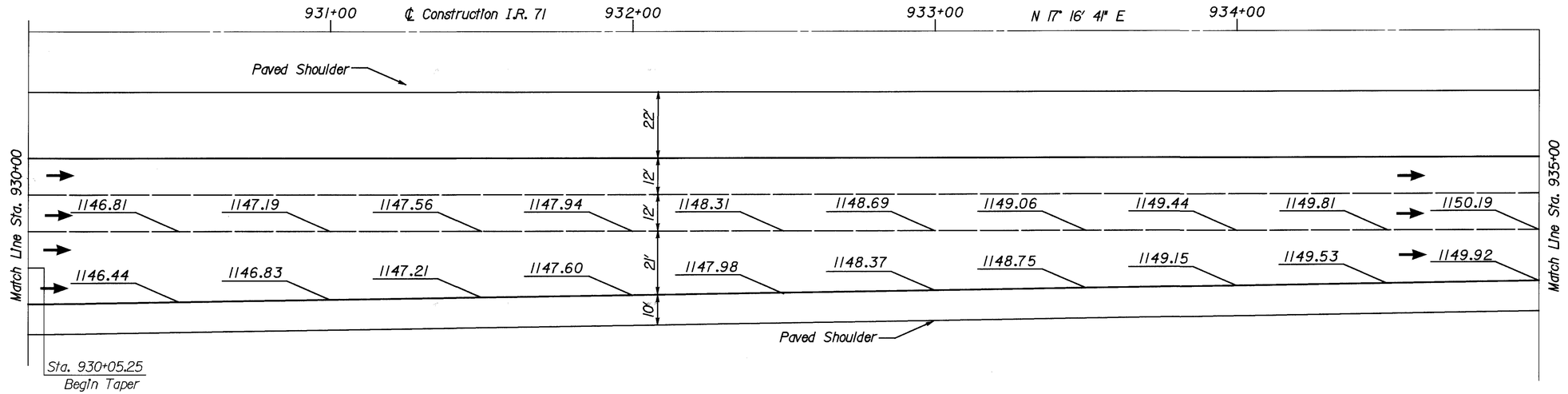

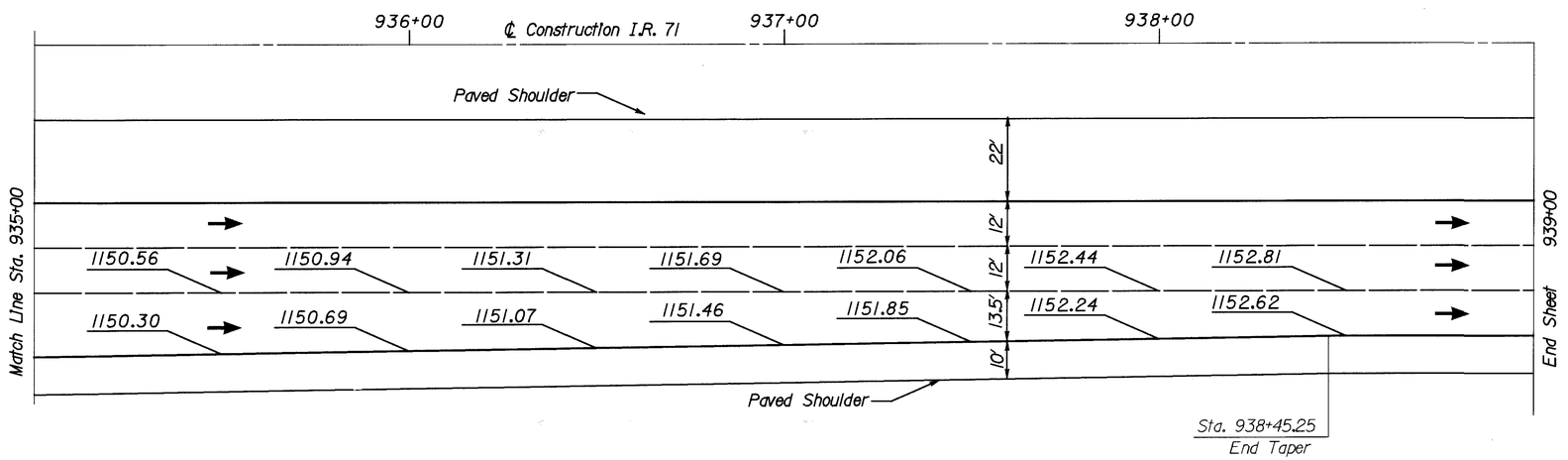

DESIGN FILE : I:\pd_med_lr71\dgn\pavement details\sr18.dgn
USERNAME : jrogers
DATE : 01-DEC-1999
TIME : 09:03

HORIZONTAL SCALE IN FEET
0 10 20 40

CALCULATED DJV
CHECKED

PAVEMENT DETAIL S.R. 18 RAMP "D"
STA. 910+00 TO 939+00

MED-71-15.78

401
940

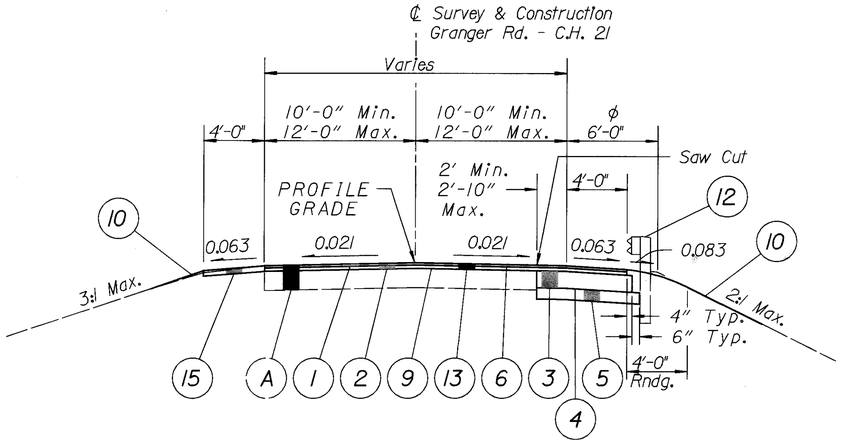

NORMAL SECTION GRANGER RD. - C.H. 21

Applies:

Sta. 45+60 to Sta. 46+78 = 118.00 Lin. Ft.
Sta. 53+06.5 to Sta. 53+75 = 68.50 Lin. Ft.

ϕ Paved Shoulder Stations and Full Depth Pavement Replacement:
Sta. 45+60 Rt to Sta. 46+78 Rt

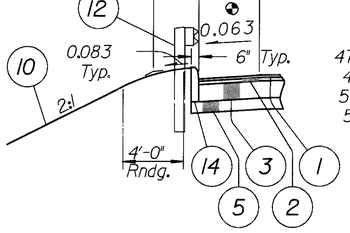

CURB DETAIL

47+48.70 Rt to 47+63.79 Rt
47+58.06 Lt to 47+71.61 Lt
51+00.35 Rt to 51+13.90 Rt
51+08.17 Lt to 51+23.26 Lt

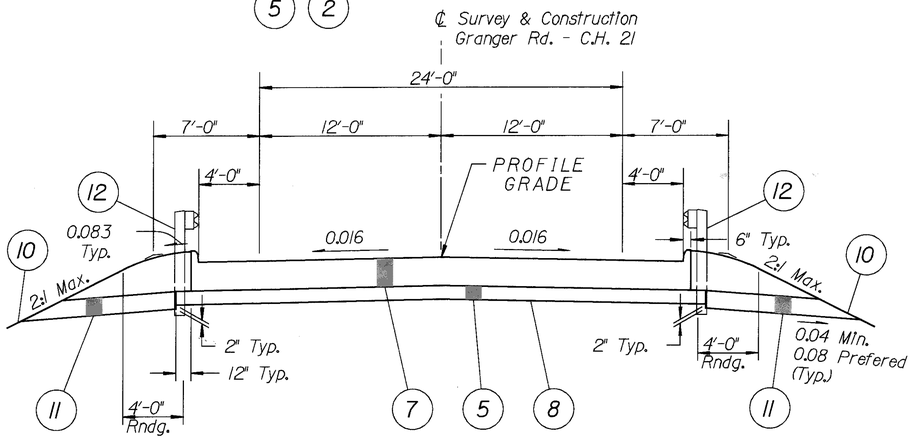

APPROACH SLAB GRANGER RD. - C.H. 21

Applies:

Sta. 47+67.70 to Sta. 47+92.70 = 25.0 Lin. Ft.
Sta. 50+79.26 to Sta. 51+04.26 = 25.0 Lin. Ft.

GUARDRAIL DETAIL

44+78.5 Rt C.H. 21 to 45+60 Rt C.H. 21
53+06.5 Rt C.H. 21 to 1+60 Rt C.H. 101

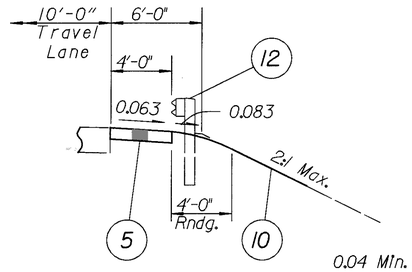

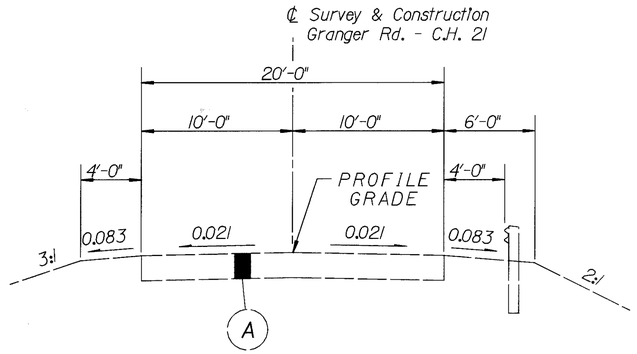

ADJOINING SECTION GRANGER RD. - C.H. 21

Applies:

Sta. 45+60 C.H. 21
Sta. 53+75 C.H. 21

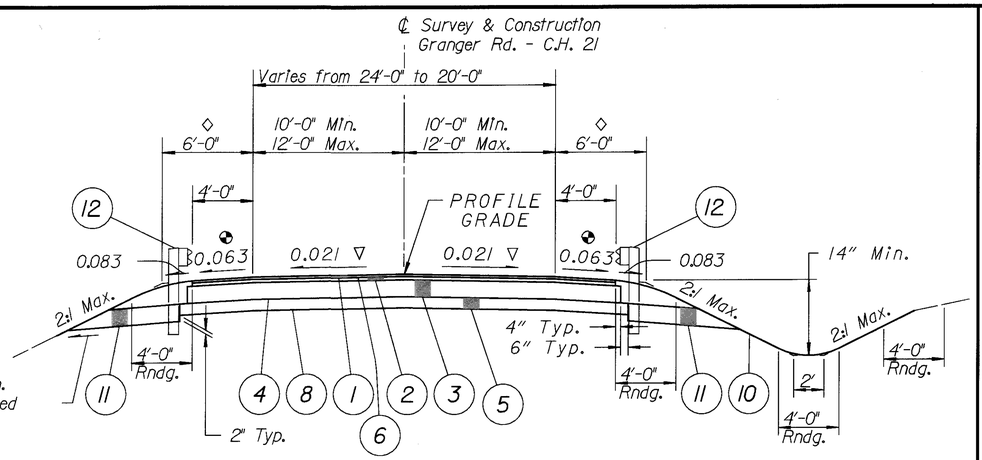

Typical Ditch Section

NORMAL SECTION GRANGER RD. - C.H. 21

Applies:

Sta. 46+78 to Sta. 47+67.70 = 89.70 Lin. Ft.
Sta. 51+04.26 to Sta. 53+06.5 = 202.24 Lin. Ft.

◇ Shoulder Stations: 0+65 Rt C.H. 131 to 47+70.63 Lt C.H. 21
46+78 Rt C.H. 21 to 47+64.77 Rt C.H. 21
51+01.33 Rt C.H. 21 to 53+06.5 Rt C.H. 21
51+07.19 Lt C.H. 21 to 53+06.5 Lt C.H. 21

Lane Width Table		
Station	Lt (ft)	Rt (ft)
45+60	10	10
46+20	10	10
47+30.76	12	12
51+40	12	12
52+50	10	10
53+75	10	10

▽ Pavement Cross Slope Table	
Station	Cross Slope
45+60	Match Existing
45+85	0.021
47+53.77	0.021
47+64.77	0.016
51+07.19	0.016
51+18.19	0.021
53+50	0.021
53+75	Match Existing

◈ Shoulder Cross Slope Table	
Station	Cross Slope
45+60	Match Existing
45+85	0.063
47+29.77	0.063
47+64.77	0.016
51+07.19	0.016
51+42.19	0.063
53+50	0.063
53+75	Match Existing

GRADED SHOULDER
NDC = 12'

LEGEND

(1) 1¼" Item 448 Asphalt Concrete Surface Course, Type 1, PG 64-22
(2) 1¾" Item 448 Asphalt Concrete Intermediate Course, Type 2, PG 64-22
(3) 9" Item 301 Bituminous Aggregate Base, PG64-22
(4) Item 408 Bituminous Prime Coat (Applied at a Rate of 0.40 gal./sq. yd.)
(5) 6" Item 304 Aggregate Base
(6) Item 407 Tack Coat for Intermediate Course (See General Notes)
(7) Item 611 Reinforced Concrete Approach Slab (T=15")
(8) Item 203 Subgrade Compaction
(9) Item 407 Tack Coat (See General Notes)
(10) Item 870 Seeding and Mulching
(11) Item 605 Aggregate Drain
(12) Item 606 Guardrail, Type 5
(13) Item 254 Pavement Planing, Bituminous (Avg. Depth = 3")
(14) Item 830 Curb, Type 6, As Per Plan
(15) Item 617 Compacted Aggregate, Type A, to be used as directed by the Engineer
(A) Existing Asphalt Pavement (±10")

TYPICAL SECTIONS
GRANGER ROAD (C.H. 21)

MED-71-15.78

402
940

DESIGN FILE : i:\pd_med_lr71\dgn\centraloffice\granger rd\ch21gly.dgn
USERNAME : jrogers
DATE : 06-DEC-1999
TIME : 08:55

PAYMENT FOR ALL OF THE WORK REQUIRED BY THE CONTRACTOR FOR TRAFFIC CONTROL NOTED ON THIS SHEET INCLUDING PROVIDING, ERECTING, MAINTAINIING, AND REMOVING ALL FLASHERS, SIGNS, BARRICADES, SUPPORTS AND ALL OTHER TRAFFIC CONTROL DEVICES SHALL BE INCLUDED IN THE LUMP SUM BID FOR ITEM 614 MAINTAINING TRAFFIC UNLESS SEPARATELY ITEMIZED ON THIS PLAN.

PAVEMENT PLANING

TWO-WAY TRAFFIC SHALL BE MAINTAINED AT THE INTERSECTIONS OF GRANGER ROAD WITH NICHOLS ROAD AND WINDFALL ROAD AT ALL TIMES EXCEPT THAT ALTERNATING ONE-WAY TRAFFIC WILL BE PERMITTED FOR MINIMUM PERIODS OF TIME TO COMPLETE THE GRINDING OF THE EXISTING PAVEMENT AT THE LOCATIONS SHOWN ON SHEET 408 AND 409.

PLACEMENT OF ASPHALT CONCRETE

TWO-WAY TRAFFIC SHALL BE MAINTAINED AT THE INTERSECTIONS OF GRANGER ROAD WITH NICHOLS ROAD AND WINDFALL ROAD AT ALL TIMES EXCEPT THAT ALTERNATING ONE-WAY TRAFFIC WILL BE PERMITTED FOR MINIMUM PERIODS OF TIME CONSISTENT WITH THE REQUIREMENTS OF THE SPECIFICATIONS FOR PROTECTION OF COMPLETED ASPHALT CONCRETE COURSES.

TEMPORARY WORK ZONE MARKINGS AND SIGNS

THE FOLLOWING ESTIMATED QUANTITIES HAVE BEEN CARRIED TO SHEET 375 FOR USE AS DIRECTED BY THE ENGINEER FOR TEMPORARY WORK ZONE PAVEMENT MARKINGS AND SIGNS PER THE REQUIREMENTS OF THE STANDARD CONSTRUCTION DRAWINGS:

ITEM	DESCRIPTION	QTY.	UNIT
614	TEMPORARY CENTER LINE, CLASS I (SOLID, DOUBLE)	0.30	MILES
614	TEMPORARY EDGE LINE, CLASS I	0.64	MILES
614	TEMPORARY STOP LINES, CLASS I	114	LIN. FT.

THE ABOVE ITEMS ARE TO BE INSTALLED AFTER PLACEMENT OF THE ASPHALT CONCRETE.

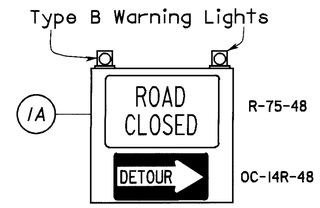

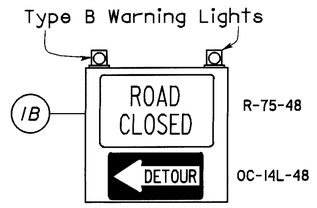

A Gates and Barricades as shown on Standard Drawing MT-101.60M.

Install in accordance with Figure C-5 of O.M.U.T.C.D.

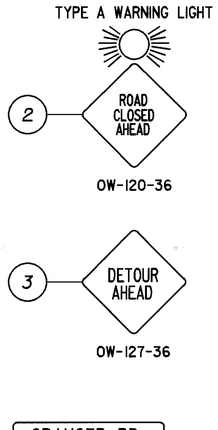

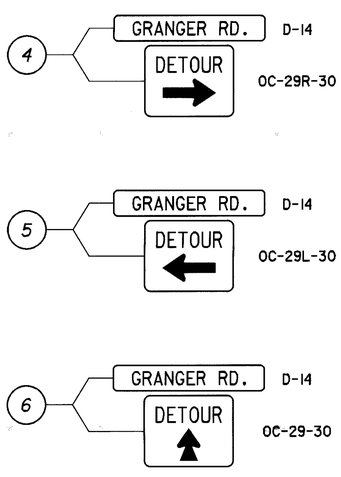

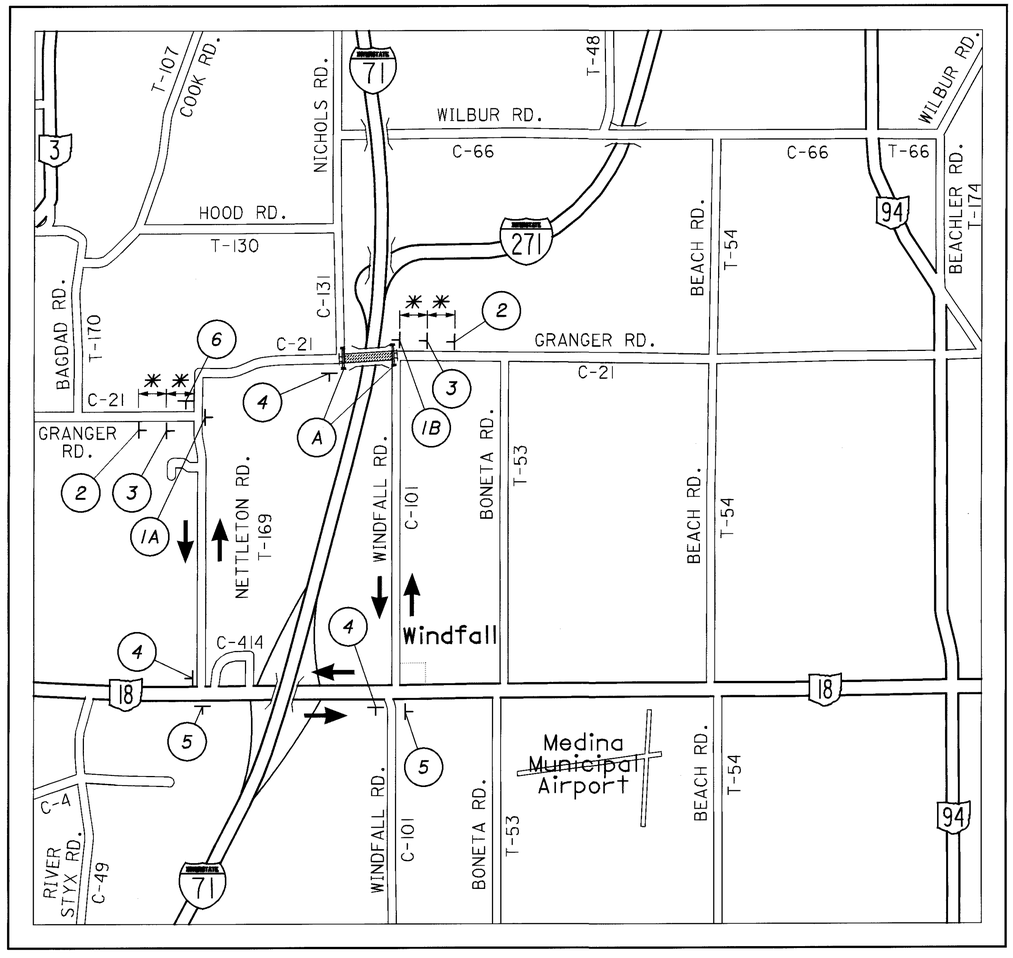

DETOUR

* 500′

AREA TO BE CONSTRUCTED

MAINTENANCE OF TRAFFIC
GRANGER ROAD (C.H. 21) DETOUR

HORIZONTAL SCALE IN MILES 0 0.25 0.5

CALCULATED DLW CHECKED

MED-71-15.78

403
940

i:\pr\project\med71\dgn\ch2lmot.dgn 30-DEC-1999 10:47AM dwalbom

REF NO.	SHEET NO.	STATION FROM	STATION TO	SIDE	202 APPROACH SLAB REMOVED SQ. YDS.	202 GUARDRAIL REMOVED LIN. FT.			605 AGGREGATE DRAINS LIN. FT.		606 GUARDRAIL, TYPE 5 LIN. FT.	606 ANCHOR ASSEMBLY, TYPE A EACH	606 ANCHOR ASSEMBLY, TYPE T EACH	606 BRIDGE TERMINAL ASSEMBLY, TYPE I EACH		830 CURB, TYPE 6 LIN. FT.					
R-1	408	46+50	47+50	RT.		100															
R-2	408	47+10	47+60	LT.		50															
R-3	408	47+43	47+68		76																
GR-1	408	44+78.5	47+71.59	RT.							243.75	1		1							
GR-2	408	0+91.5± Nichols	47+80.96	LT.,RT.							106.25✣	1		1						✣ 75 L.F. ON 50′ RADIUS	
C-1	408	47+48.70	47+63.79	RT.												15.09					
C-2	408	47+58.06	47+71.61	LT.												13.55					
AD-1	408	46+78		RT.					4.7												
AD-2	408	47+15		RT.					4.7												
AD-3	408	47+67.70		RT.					16.7												
AD-4	408	47+67.70		LT.					16.7												
R-1	409	50+82	51+07		76																
R-2	409	51+00	53+00	LT.		200															
R-3	409	50+95	0+26 Windfall Rd.	RT.,RT.		362.5															
GR-1	409	51+00.37	53+00±	LT.							181.25		1	1							
GR-2	409	50+91.01	1+59± Windfall Rd.	RT.,RT.							343.75⊗		1	1						⊗ 75 L.F. ON 50′ RADIUS	
C-1	409	51+00.35	51+13.90	RT.												13.55					
C-2	409	51+08.17	51+23.26	LT.												15.09					
AD-1	409	51+04.26		RT.					15.2												
AD-2	409	51+04.26		LT.					15.2												
AD-3	409	51+25		LT.					7.7												
AD-4	409	51+50		RT.					5.1												
AD-5	409	51+75		LT.					7.7												
AD-6	409	52+00		RT.					5.1												
AD-7	409	52+25		LT.					6.4												
AD-8	409	52+50		RT.					5.1												
AD-9	409	52+65		LT.					12.0												
AD-10	409	53+00		RT.					10.0												
TOTALS CARRIED TO 375					152	712.5			132.3		875.00	2	2	4		57.28					

CALCULATED DLW CHECKED

SUBSUMMARY

GRANGER ROAD (C.H. 21)

MED-71-15.78

404
940

LOCATION	STATION FROM	STATION TO	LENGTH, L FEET	BEGIN WIDTH, W1 FEET	END WIDTH, W2 FEET	SURFACE AREA, A A=Lx[(W1+W2)/2] SQ. FT.	CADD MEASURED AREAS SQ. FT.	203 SUBGRADE COMPACTION SQ. YDS.	254 PAVEMENT PLANING (AVG. THICKNESS 3") SQ. YDS.		301 9" BITUMINOUS AGGREGATE BASE, PG64-22 CU. YDS.	304 6" AGGREGATE BASE CU. YDS.	407 TACK COAT (Applied at a Rate of 0.01 gal/sy.) GALLON	407 TACK COAT FOR INTERMEDIATE COURSE (Applied at a Rate of 0.05 gal/sy.) GALLON	408 BITUMINOUS PRIME COAT (Applied at a Rate of 0.04 gal/sy.) GALLON	448 1¼" ASPHALT CONCRETE SURFACE COURSE, TYPE I, PG64-22 CU. YDS.	448 1¾" ASPHALT CONCRETE INTERMEDIATE COURSE TYPE I, PG64-22 CU. YDS.	611 REINFORCED CONCRETE APPROACH SLAB (T=15") SQ. YDS.	617 COMPACTED AGGREGATE, TYPE A CU. YDS.	617 WATER M. GAL
Berm: C.H. 21 Lt to C.H. 131 Lt (3" Thick)	45+60.00	0+65.00	130.00	4	4	520.00													4.81	72
Shoulder Rt	44+78.50	45+60.00	81.50	2	2	163.00						3.02								
Mainline Rt *	45+60.00	46+20.00	60.00	2	2	120.00		13.33			3.33	2.22			5.33					
Shoulder Rt **	45+60.00	46+20.00	60.00	4	4	240.00		26.67			7.22	5.37			10.67					
Mainline Rt	45+60.00	46+20.00	60.00	10	10	600.00			53.33				0.67	3.33		2.31	3.24			
Shoulder Rt	45+60.00	46+20.00	60.00	4	4	240.00							0.27	1.33		0.93	1.30			
Mainline Lt	45+60.00	46+20.00	60.00	10	10	600.00			66.67				0.67	3.33		2.31	3.24			
Mainline Rt *	46+20.00	46+78.00	58.00	2	3	145.00		16.11			4.03	2.69			6.44					
Shoulder Rt **	46+20.00	46+78.00	58.00	4	4	232.00		25.78			6.98	5.19			10.31					
Mainline Rt	46+20.00	46+78.00	58.00	10	11	609.00			51.56				0.68	3.38		2.35	3.29			
Shoulder Rt	46+20.00	46+78.00	58.00	4	4	232.00							0.26	1.29		0.90	1.25			
Mainline Lt	46+20.00	46+78.00	58.00	10	11	609.00			67.67				0.68	3.38		2.35	3.29			
Mainline Rt *	46+78.00	47+30.76	52.76	11	12	606.74		67.42			16.85	11.24	0.67	3.37	26.97	2.34	3.28			
Shoulder Rt **	46+78.00	47+30.76	52.76	4	4	211.04		23.45			6.35	4.72	0.23	1.17	9.38	0.81	1.14			
Mainline Lt *	46+78.00	47+30.76	52.76	11	12	606.74		67.42			16.85	11.24	0.67	3.37	26.97	2.34	3.28			
C.H. 131 Mainline Lt	0+13.50	0+65.00	51.50	10	10	515.00			57.22				0.57	2.86		1.99	2.78			
C.H. 131 CADD Measured Area Lt	0+13.50	0+65.00					546.75		60.75				0.61	3.04		2.11	2.95			
C.H. 131 Mainline Rt	0+13.50	0+65.00	51.50	8	8	412.00			45.78				0.46	2.29		1.59	2.23			
C.H. 131 Mainline Rt *	0+13.50	0+65.00	51.50	2	2	103.00		11.44			2.86	1.91	0.11	0.57	4.58	0.40	0.56			
C.H. 131 Mainline Rt CADD Area	0+13.50	0+65.00					573.00	63.67			15.92	10.61	0.64	3.18	25.47	2.21	3.09			
Shoulder along Radius **	0+65.00	47+30.76	78.50	4	4	314.00		34.89			9.45	7.03	0.35	1.74	13.96	1.21	1.70			
Mainline Rt *	47+30.76	47+67.70	36.94	12	12	443.28		49.25			12.31	8.21	0.49	2.46	19.70	1.71	2.39			
Mainline Lt *	47+30.76	47+67.70	36.94	12	12	443.28		49.25			12.31	8.21	0.49	2.46	19.70	1.71	2.39			
Shoulder Lt **	47+30.76	47+58.06	27.30	4	4	109.20		12.13			3.29	2.44	0.12	0.61	4.85	0.42	0.59			
Shoulder Rt **	47+30.76	47+48.70	17.94	4	4	71.76		7.97			2.16	1.61	0.08	0.40	3.19	0.28	0.39			
Shoulder Lt (Curb)	47+58.06	47+67.70	9.64	4	4	38.56		4.82			1.07	0.80	0.04	0.21	1.71	0.15	0.21			
Shoulder Rt (Curb)	47+48.70	47+67.70	19.00	4	4	76.00		9.50			2.11	1.58	0.08	0.42	3.38	0.29	0.41			
Approach Slab Lt	47+67.70	47+92.70	25.00	16	16	400.00		44.44				7.41						44.44		
Approach Slab Lt (under curb)	47+71.60	47+80.96	9.36	0.5	0.5	4.68		0.52				0.26						0.52		
Approach Slab Lt (under parapet)	47+80.96	47+96.61	15.65	1.5	1.5	23.47		2.61				0.43						2.61		
Approach Slab Rt	47+67.70	47+92.70	25.00	16	16	400.00		44.44				7.41						44.44		
Approach Slab Rt (under curb)	47+63.79	47+71.59	7.80	0.5	0.5	3.90		0.43				0.22						0.43		
Approach Slab Rt (under parapet)	47+71.59	47+88.79	17.20	1.5	1.5	25.80		2.87				0.48						2.87		
Approach Slab Lt	50+79.26	51+04.26	25.00	16	16	400.00		44.44				7.41						44.44		
Approach Slab Lt (under parapet)	50+83.17	51+00.37	17.20	1.5	1.5	25.80		2.87				0.48						2.87		
Approach Slab Lt (under curb)	51+00.37	51+08.17	7.80	0.5	0.5	3.90		0.43				0.22						0.43		
Approach Slab Rt	50+79.26	51+04.26	25.00	16	16	400.00		44.44				7.41						44.44		
Approach Slab Rt (under parapet)	50+75.35	50+91.01	15.66	1.5	1.5	23.49		2.61				0.43						2.61		
Approach Slab Rt (under curb)	50+91.01	51+00.35	9.34	0.5	0.5	4.67		0.52				0.26						0.52		
TOTALS CARRIED TO SHEET 406								691.83	402.98		123.09	120.51	8.84	44.19	192.61	30.71	43.00	190.62	4.81	72

Step Notes:
*301 Step = 0 and 304 Step = 0 (SEE SHEET 406)
**301 Step = 4" and 304 Step = 4" + 6" = 10" (SEE SHEET 406)

CALCULATED DLW
CHECKED

PAVEMENT CALCULATIONS
GRANGER ROAD (C.H. 21)

MED-71-15.78

405
940

LOCATION	STATION FROM	STATION TO	LENGTH, L FEET	BEGIN WIDTH, W1 FEET	END WIDTH, W2 FEET	SURFACE AREA, A A=Lx[(W1+W2)/2] SQ. FT.	CADD MEASURED AREAS SQ. FT.	203 SUBGRADE COMPACTION SQ. YDS.	254 PAVEMENT PLANING (AVG. THICKNESS 3") SQ. YDS.		301 9" BITUMINOUS AGGREGATE BASE, PG64-22 CU. YDS.	304 6" AGGREGATE BASE CU. YDS.	407 TACK COAT (Applied at a Rate of 0.10 gal/sy.) GALLON	407 TACK COAT FOR INTERMEDIATE COURSE (Applied at a Rate of 0.05 gal/sy.) GALLON	408 BITUMINOUS PRIME COAT (Applied at a Rate of 0.40 gal/sy.) GALLON	448 1¼" ASPHALT CONCRETE SURFACE COURSE, TYPE I, PG64-22 CU. YDS.	448 1¾" ASPHALT CONCRETE INTERMEDIATE COURSE TYPE I, PG64-22 CU. YDS.	611 REINFORCED CONCRETE APPROACH SLAB (T=15") SQ. YDS.	617 COMPACTED AGGREGATE, TYPE A CU. YDS.	617 WATER M. GAL
Mainline Rt *	51+04.26	51+40.00	35.74	12	12	428.88		47.65			11.91	7.94	0.48	2.38	19.06	1.65	2.32			
Mainline Lt *	51+04.26	51+40.00	35.74	12	12	428.88		47.65			11.91	7.94	0.48	2.38	19.06	1.65	2.32			
Shoulder Lt (Curb)	51+04.26	51+23.26	19.00	4	4	76.00		9.50			2.11	1.58	0.08	0.42	3.38	0.29	0.41			
Shoulder Rt (Curb)	51+04.26	51+13.90	9.64	4	4	38.56		4.82			1.07	0.80	0.04	0.21	1.71	0.15	0.21			
Shoulder Lt *	51+23.26	51+40.00	16.74	4	4	66.96		7.44			2.01	1.50	0.07	0.37	2.98	0.26	0.36			
Shoulder Rt *	51+13.90	51+40.00	26.10	4	4	104.40		11.60			3.14	2.34	0.12	0.58	4.64	0.40	0.56			
Mainline Rt *	51+40.00	52+50.00	110.00	12	10	1210.00		134.44			33.61	22.41	1.34	6.72	53.78	4.67	6.54			
Mainline Lt *	51+40.00	52+50.00	110.00	12	10	1210.00		134.44			33.61	22.41	1.34	6.72	53.78	4.67	6.54			
Shoulder Lt *	51+40.00	52+50.00	110.00	4	4	440.00		48.89			13.24	9.85	0.49	2.44	19.56	1.70	2.38			
Shoulder Rt *	51+40.00	52+50.00	110.00	4	4	440.00		48.89			13.24	9.85	0.49	2.44	19.56	1.70	2.38			
Mainline Rt *	52+50.00	53+06.50	56.50	10	10	565.00		62.78			15.69	10.46	0.63	3.14	25.11	2.18	3.05			
Mainline Lt *	52+50.00	53+06.50	56.50	10	10	565.00		62.78			15.69	10.46	0.63	3.14	25.11	2.18	3.05			
Shoulder Lt *	52+50.00	53+06.50	56.50	4	4	226.00		25.11			6.80	5.06	0.25	1.26	10.04	0.87	1.22			
Shoulder Rt *	52+50.00	52+86.88	36.88	4	4	147.52		16.39			4.44	3.30	0.16	0.82	6.56	0.57	0.80			
Shoulder along Radius Rt	52+86.88	53+06.50	19.62	4	4	78.48		8.72			2.36	1.76	0.09	0.44	3.49	0.30	0.42			
CADD Measured Area Rt	52+86.88	53+06.50					25.77	2.86			0.72	0.48	0.03	0.14	1.15	0.10	0.14			
Mainline Rt	53+06.50	53+75.00	68.50	14	14	959.00			106.56				1.07	5.33		3.70	5.18			
Mainline Lt	53+06.50	53+75.00	68.50	10	10	685.00			76.11				0.76	3.81		2.64	3.70			
C.H. 101 Mainline Lt	0+14.00	0+60.50	46.50	10	10	465.00			51.67				0.52	2.58		1.79	2.51			
C.H. 101 Mainline Rt	0+14.00	0+60.50	46.50	10	10	465.00			51.67				0.52	2.58		1.79	2.51			
Cadd Measured Area Rt C.H. 101	0+14.00	0+60.50					443.00		49.22				0.49	2.46		1.71	2.39			
Cadd Measured Area Lt C.H. 101	0+14.00	0+60.50					296.70		32.97				0.33	1.65		1.14	1.60			
C.H. 101 Shoulder along Radius Rt	53+06.50	0+60.50	58.40	4	4	233.60		25.96				4.33								
C.H. 101 Shoulder Rt	0+60.50	1+56.00	95.50	4	4	382.00		42.44				7.07								
Berm Lt (3" Thick)	53+06.50	53+75.00	69.00	4	4	276.00													2.56	38
Berm: C.H. 101 Lt to C.H. 21 Rt (3" Thick)	0+60.50	53+75.00	45.00	4	4	180.00													1.67	25

STEPS USED IN PAVEMENT CALCULATIONS

* EOP

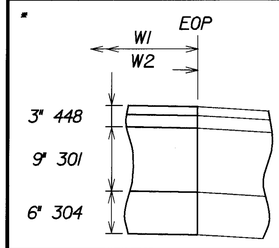

** EOS

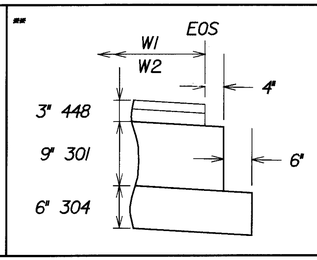

TOTALS (THIS SHEET)	742.36	368.20		171.55	129.54	10.41	52.01	268.97	36.11	50.59		4.23	63
TOTALS (SHEET 405)	691.83	402.98		123.09	120.51	8.84	44.19	192.61	30.71	43.00	190.62	4.81	72
TOTALS CARRIED TO SHEET 375	1434.19	771.18		294.64	250.05	19.25	96.20	461.58	66.82	93.59	190.62	9.04	135

CALCULATED DLW CHECKED

PAVEMENT CALCULATIONS
GRANGER ROAD (C.H. 21)

MED-71-15.78

406
940

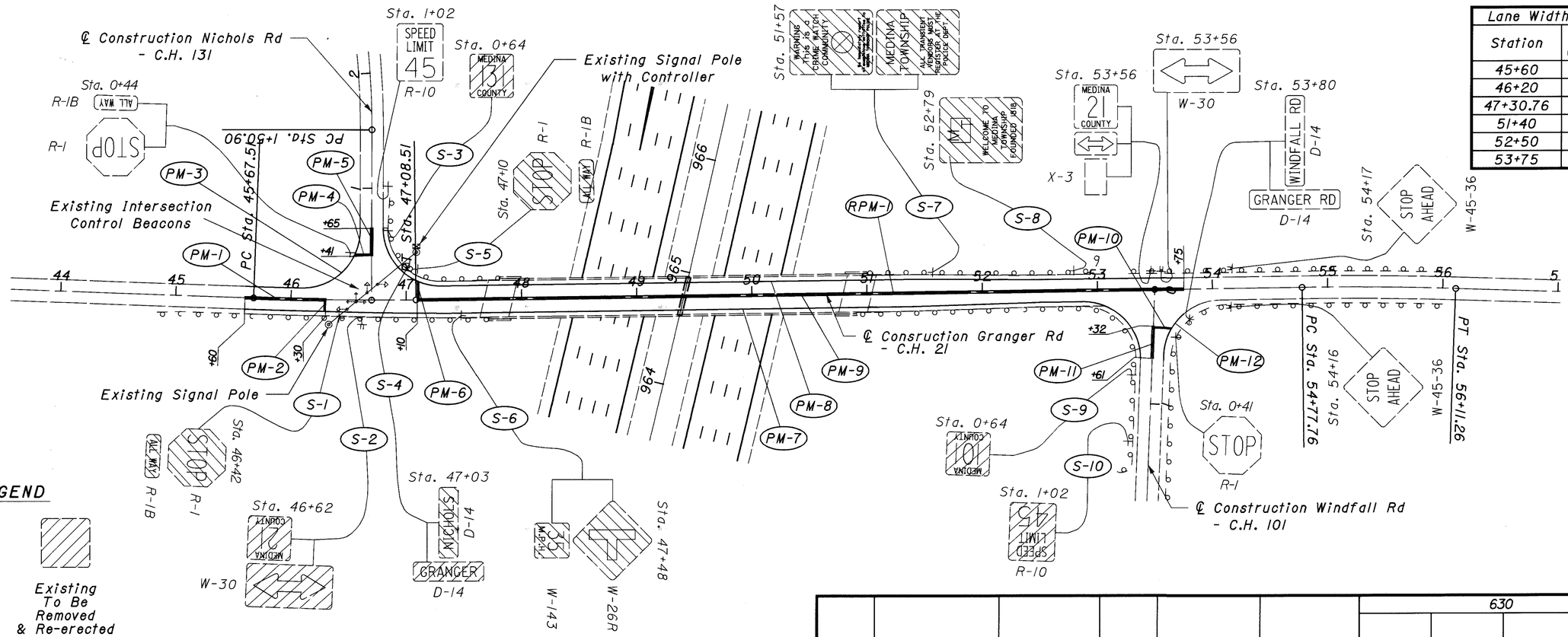

LEGEND

Existing To Remain

Existing To Be Removed & Re-erected

Lane Width Table		
Station	Lt (ft)	Rt (ft)
45+60	10	10
46+20	10	10
47+30.76	12	12
51+40	12	12
52+50	10	10
53+75	10	10

HORIZONTAL SCALE IN FEET
0 25 50 100

CALCULATED DLW
CHECKED JWK

TRAFFIC CONTROL PLAN
GRANGER ROAD (C.H. 21)

MED-71-15.78

407
940

REFERENCE NO.	LOCATION	STATION FROM	STATION TO	SIDE	621 RAISED PAVEMENT MARKER, 2-WAY (YELLOW/YELLOW)		642 EDGE LINE, TYPE 2, WHITE	642 CENTER LINE, TYPE 2, DOUBLE, SOLID	644 STOP LINE
					EACH		LIN. FT.	LIN. FT.	LIN. FT.
PM-1	Granger Road	45+60	46+30					70	
PM-2	Granger Road	46+30		RT.					10
PM-3	Granger Rd to Nichols Rd	45+60	0+65	LT.			128		
PM-4	Nichols Road	0+41		LT.					15
PM-5	Nichols Road	0+41	0+65					24	
PM-6	Granger Road	47+10		LT.					16
PM-7	Granger Rd to Windfall Rd	45+60	0+61	RT.			806		
PM-8	Nichols Rd to Granger Rd	0+65	53+75	LT.			723		
PM-9	Windfall Road	47+10	53+75					665	
PM-10	Windfall Road	0+32		LT.					16
PM-11	Windfall Road	0+32	0+61					29	
PM-12	Windfall Road	0+20	0+61	LT.			45		
RPM-1	Granger Road	47+10	53+50		9				
TOTALS CARRIED TO SHEET 375					9		1702	788	57

REFERENCE NO.	LOCATION	STATION	SIDE	CODE	SIZE	630 GROUND MOUNTED SUPPORT, NO. 3		REMOVAL OF GROUND MOUNTED SIGN AND REERECTION	REMOVAL OF GROUND MOUNTED SUPPORT AND DISPOSAL
						LIN. FT.		EACH	EACH
S-1	Granger Road	46+42	RT.	R-1	36"x36"	13.5		2	1
				R-1B	18"x6"				
S-2	Granger Road	46+62	RT.	W-30	48"x24"	12.5-12.5		2	2
					15"x15"				
S-3	Nichols Road	0+64	RT.		18"x18"	11.0		1	1
S-4	Granger Road	47+03	LT.	D-14	24"x8"	12.5		2	1
				D-14	24"x8"				
S-5	Granger Road	47+10	LT.	R-1	36"x36"	13.0		2	1
				R-1B	18"x6"				
S-6	Granger Road	47+48	RT.	W-26R	30"x30"	14.0		2	1
				W-143	18"x18"				
S-7	Granger Road	51+57	LT.		18"x24"	14.0		2	1
					18"x24"				
S-8	Granger Road	52+79	LT.		24"x30"	12.5		1	1
S-9	Windfall Road	0+64	RT.		18"x18"	12.0		1	1
S-10	Windfall Road	1+02	RT.	R-10	24"x30"	13.0		1	1
TOTALS CARRIED TO SIGNING GENERAL SUMMARY						140.5		16	11

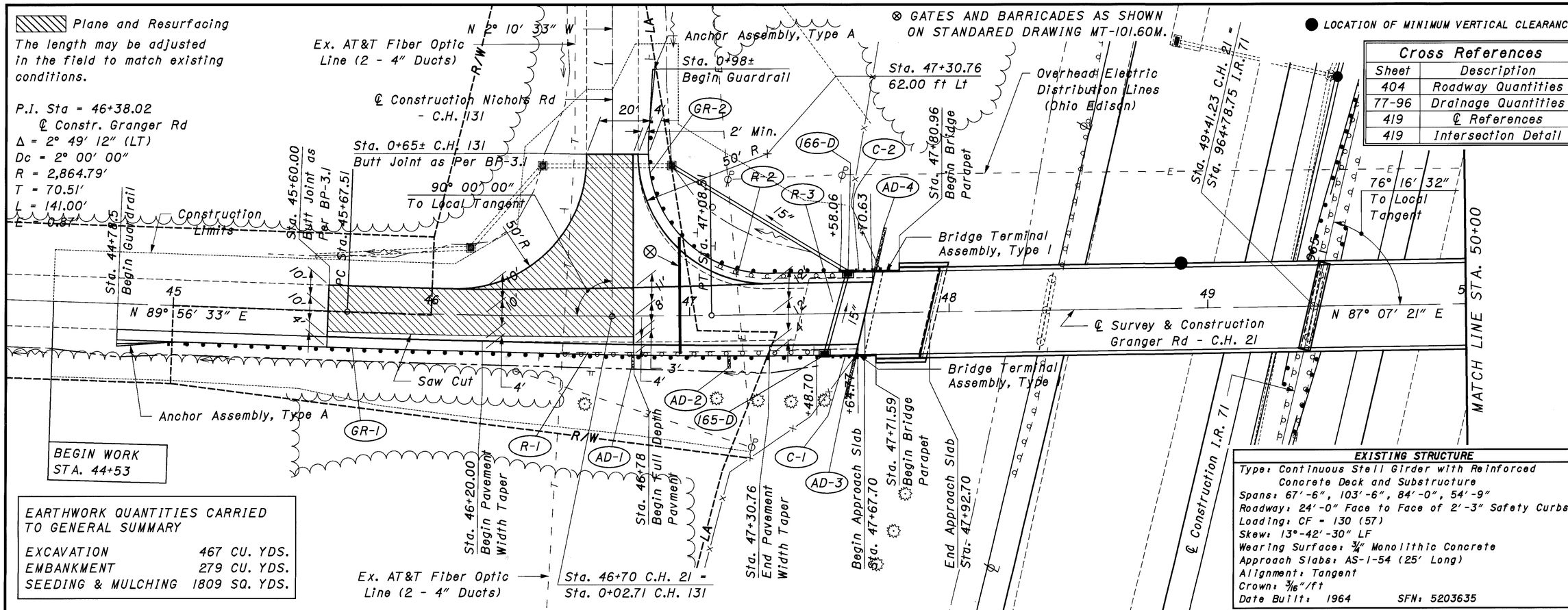

Cross References	
Sheet	Description
404	Roadway Quantities
77-96	Drainage Quantities
419	℄ References
419	Intersection Detail

EARTHWORK QUANTITIES CARRIED TO GENERAL SUMMARY

EXCAVATION	467 CU. YDS.
EMBANKMENT	279 CU. YDS.
SEEDING & MULCHING	1809 SQ. YDS.

EXISTING STRUCTURE

Type: Continuous Stell Girder with Reinforced Concrete Deck and Substructure
Spans: 67′-6″, 103′-6″, 84′-0″, 54′-9″
Roadway: 24′-0″ Face to Face of 2′-3″ Safety Curbs
Loading: CF = 130 (57)
Skew: 13°-42′-30″ LF
Wearing Surface: ¾″ Monolithic Concrete
Approach Slabs: AS-1-54 (25′ Long)
Alignment: Tangent
Crown: 3/16″/ft
Date Built: 1964 SFN: 5203635

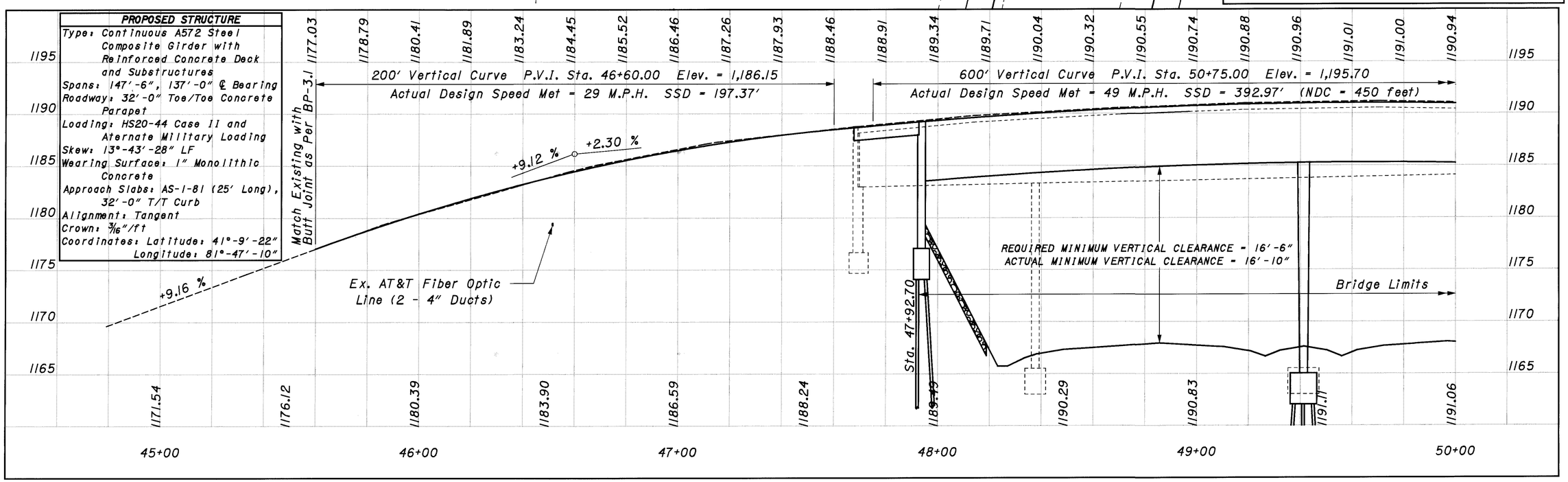

PROPOSED STRUCTURE

Type: Continuous A572 Steel Composite Girder with Reinforced Concrete Deck and Substructures
Spans: 147′-6″, 137′-0″ ℄ Bearing
Roadway: 32′-0″ Toe/Toe Concrete Parapet
Loading: HS20-44 Case II and Aternate Military Loading
Skew: 13°-43′-28″ LF
Wearing Surface: 1″ Monolithic Concrete
Approach Slabs: AS-1-81 (25′ Long), 32′-0″ T/T Curb
Alignment: Tangent
Crown: 3/16″/ft
Coordinates: Latitude: 41°-9′-22″ Longitude: 81°-47′-10″

GRANGER RD (C.H. 21) PLAN AND PROFILE
STA. 45+00 TO STA. 50+00

MED-71-15.78

i:\pr\project\med71\dgn\ch21ppl.dgn 30-DEC-1999 12:33PM dwalbom

Plane and Resurfacing
The length may be adjusted in the field to match existing conditions.

Overhead Electric Distribution Lines (Ohio Edison)

EARTHWORK QUANTITIES CARRIED TO GENERAL SUMMARY	
EXCAVATION	619 CU. YDS.
EMBANKMENT	473 CU. YDS.
SEEDING & MULCHING	2633 SQ. YDS.

⊗ GATES AND BARRICADES AS SHOWN ON STANDARED DRAWING MT-101.60M.

Sta. 53+49.85 C.H. 21 = Sta. 0+00.00 C.H. 101

P.I. Sta = 55+44.52
℄ Constr. Granger Rd
Δ = 2° 40′ 12″ (RT)
Dc = 2° 00′ 00″
R = 2,864.79′
T = 66.76′
L = 133.50′
E = 0.78′

END WORK STA. 54+00.00

Cross References	
Sheet	Description
404	Roadway Quantities
77-96	Drainage Quantities
419	℄ References

MATCH LINE STA. 50+00

℄ Survey & Construction Granger Rd - C.H. 21
N 87° 07′ 21″ E

Begin Approach Slab Sta. 50+79.26

Sta. 51+00.37 End Bridge Parapet

End Approach Slab Sta. 51+04.26

Construction Limits

Flared End

Anchor Assembly, Type T

Sta. 53+02± End Guardrail

Sta. 53+06.5± End Full Depth Pavment

+10.9 Existing Field Drive

Sta. 53+75.00 Butt Joint as Per BP-3.1

Sta. 54+77.76

Bridge Terminal Assembly, Type

Sta. 50+91.01 End Bridge Parapet

Sta. 51+40.00 Begin Pavement Width Taper

Sta. 52+50 End Pavement Width Taper

Sta. 52+86.88
60.00 ft RT

92° 46′ 20″

S0° 06′ 19″ E

Sta. 0+60.5 C.H. 101 Butt Joint as Per BP-3.1

℄ Windfall Rd. C.H. 101

MATCH LINE STA. 1+00

MATCH LINE STA. 1+00

℄ Windfall Rd. C.H. 101

Anchor Assembly, Type T

Flared End

Sta. 1+59± End Guardrail

Res. Drive

Construction Limits

EXISTING STRUCTURE
Type: Continuous Steel Girder with Reinforced Concrete Deck and Substructure
Spans: 67′-6″, 103′-6″, 84′-0″, 54′-9″
Roadway: 24′-0″ Face to Face of 2′-3″ Safety Curbs
Loading: CF - 130 (57)
Skew: 13°-42′-30″ LF
Wearing Surface: ¾″ Monolithic Concrete
Approach Slabs: AS-1-54 (25′ Long)
Alignment: Tangent
Crown: 3/16″/ft
Date Built: 1964 SFN: 5203635

PROPOSED STRUCTURE
Type: Continuous A572 Steel Composite Girder with Reinforced Concrete Deck and Substructures
Spans: 147′-6″, 137′-0″ ℄ Bearing
Roadway: 32′-0″ Toe/Toe Concrete Parapet
Loading: HS20-44 Case II and Alternate Military Loading
Skew: 13°-43′-28″ LF
Wearing Surface: 1″ Monolithic Concrete
Approach Slabs: AS-1-81 (25′ Long), 32′-0″ T/T Curb
Alignment: Tangent
Crown: 3/16″/ft
Coordinates: Latitude: 41°-9′-22″ Longitude: 81°-47′-10″

+2.30 % -4.89 %

600′ Vertical Curve P.V.I. Sta. 50+75.00 Elev. = 1,195.70

Actual Design Speed Met = 49 M.P.H. SSD = 392.97′ (NDC = 450 feet)

Match Existing with Butt Joint as Per BP-3.1

-4.89 %

Bridge Limits

Sta. 50+79.26

1190.94 1190.84 1190.69 1190.49 1190.24 1189.95 1189.61 1189.22 1188.78 1188.29 1187.76 1187.18 1186.55 1185.87 1185.14 1184.37 1183.55 1182.68 1181.76 1181.04

1191.06 1189.57 1189.99 1189.29 1187.98 1186.38 1184.40 1182.22 1179.85 1177.41

1195 1190 1185 1180 1175 1170 1165

50+00 51+00 52+00 53+00 54+00 55+00

HORIZONTAL SCALE IN FEET 0 10 20 40

CALCULATED DLW CHECKED

GRANGER RD (C.H. 21) PLAN AND PROFILE
STA. 50+00 TO STA. 55+00

MED-71-15.78

409
940

i:\pr\project\med71\dgn\ch2lpp2.dgn 30-DEC-1999 12:38PM dwalbom

SEEDING		END AREA		VOLUME		CALCULATED DL W	CHECKED
END WIDTH	SO. YDS.	CUT	FILL	CUT	FILL		
22	117	0	6	2	8		
20	48	1	3	1	1		
20 0		0	0				
	165			3	9		

℄ Survey & Construction

60 50 40 30 20 10 0 10 20 30 40 50 60

1180 1175 1170 1165 1160

R/W

100

2:1 3:1

1174.5

1176.11
45+50.00
1176.11

1169.9

1171.54
45+00.00
1171.54

AHD. BK. BEGIN SEEDING STA. 44+78.5

BEGIN EARTHWORK STA. 44+78.5 AHD.

BEGIN WORK
STA. 44+53

℄ Survey & Construction

SHEET TOTAL

CROSS SECTIONS
GRANGER ROAD (C.H. 21)

MED-71-15.78

410
940

SEEDING		END AREA		VOLUME	
END WIDTH	SQ. YDS.	CUT	FILL	CUT	FILL
44	43	15	3	4	1
45	186	10	5	10	10
	229 SHEET TOTAL			14	11

℄ Survey & Construction

60 50 40 30 20 10 0 10 20 30 40 50 60 70

1195 1190 1185 1180 1175 1170

R/W

100

4:1

2:1

1179.5

1181.06
46+08.61
1180.99

R/W

3:1

2:1

1178.8

1180.41
46+00.00
1180.39

℄ Survey & Construction

60 50 40 30 20 10 0 10 20 30 40 50

SHEET TOTAL

CALCULATED DLW

CHECKED

CROSS SECTIONS
GRANGER ROAD (C.H. 21)

MED-71-15.78

411
940

SEEDING END WIDTH	SEEDING SQ. YDS.
	295
	-67
38	
	267
45	
56	
	551

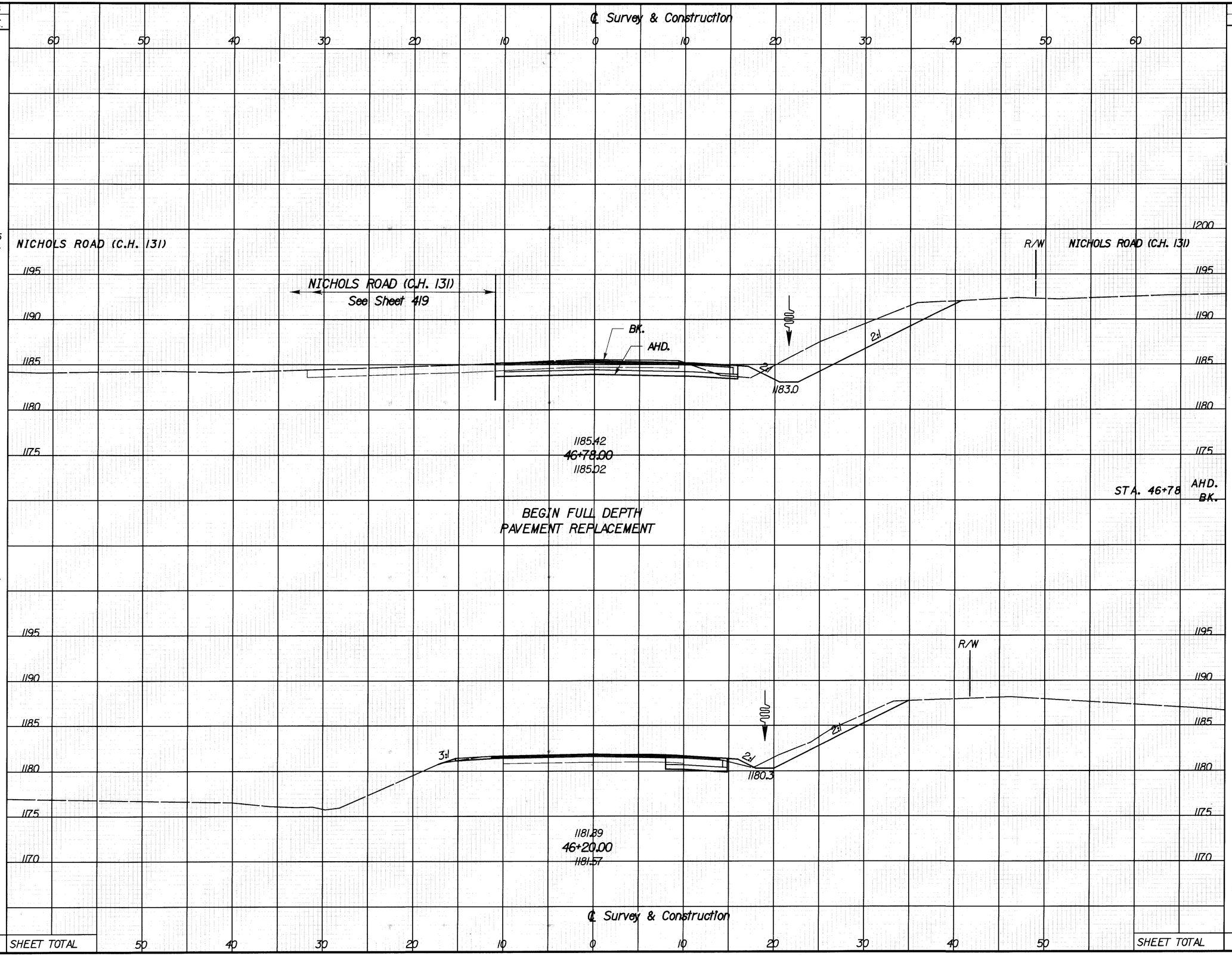

END AREA CUT	END AREA FILL	VOLUME CUT	VOLUME FILL
		60	7
		-8	-3
89	2		
56	2		
		88	3
26	1		
		9	1
		149	8

CALCULATED DL W
CHECKED

CROSS SECTIONS GRANGER ROAD (C.H. 21)

MED-71-15.78

412
940

SEEDING		END AREA		VOLUME	
END WIDTH	SQ. YDS.	CUT	FILL	CUT	FILL
39	107	47	8	50	4
61	290	92	4	176	6
	397 SHEET TOTAL		SHEET TOTAL	226	10

CALCULATED DLW CHECKED

℄ Survey & Construction

60 50 40 30 20 10 0 10 20 30 40 50 60

1190 1185 1180 1175

8:1 0.04 4:1

1188.21
47+50.00
1188.24

1195 1190 1185 1180 1175

8:1 2 2:1

1185.2

1187.64
47+30.73
1187.71

℄ Survey & Construction

60 50 40 30 20 10 0 10 20 30 40 50 60

CROSS SECTIONS
GRANGER ROAD (C.H. 21)

MED-71-15.78

413
940

SEEDING END WIDTH	SEEDING SQ. YDS.	STATION	END AREA CUT	END AREA FILL	VOLUME CUT	VOLUME FILL
		℄ Survey & Construction				
		60 50 40 30 20 10 0 10 20 30 40 50 60				
		(BRIDGE LIMITS STA. 47+92.70 TO STA. 50+79.26)				
		1195 1190 1185 1180 1175 1170 1165				
		BK. 0.08 4J:1 2:1 1175.8				
		BK. 0.08 4J:1 2:1 1175.1				
		1189.9 47+92.70 1175.55 SECTION ALONG 13°45'28" SKEW END APPROACH SLAB				
65		STA. 47+92.70 BK.				
		BK. STA. 47+92.70 BK.	11	521		
		DEDUCT FOR STRUCTURE RELATED ITEMS (WINGWALL, POROUS BACKFILL, ETC.)				-45
	364				37	266
		1195 1190 1185 1180 1175				
		0.04 4J:1 2:1 1185.9				
		0.04 4J:1 2:1 1185.7				
		32' - 15" Type B @ 1.50%				
		80' - 15" Type C @ 0.80%				
		Catch Basin No. 3A Sta. 47+61, 16' Lt. Grate Elv. = 1188.02 ℄ 15" (N) = 1181.49 ℄ 15" (S) = 1181.49				
		1188.63 47+67.70 AHD. & BK. 1187.83 SECTION ALONG 13°45'28" SKEW BEGIN APPROACH SLAB				
		Catch Basin No. 3A Sta. 47+52, 16' Rt. Grate Elv. = 1187.71 ℄ 15" (N) = 1181.97				
66			69	54		
	103				38	20
		℄ Survey & Construction				
		50 40 30 20 10 0 10 20 30 40 50				
	467	SHEET TOTAL			75	241

CALCULATED DLW

CHECKED

CROSS SECTIONS
GRANGER ROAD (C.H. 21)

MED-71-15.78

414
940

SEEDING	
END WIDTH	SQ. YDS.
82	
	203
64	
	203

℄ Survey & Construction

60 50 40 30 20 10 0 10 20 30 40 50 60

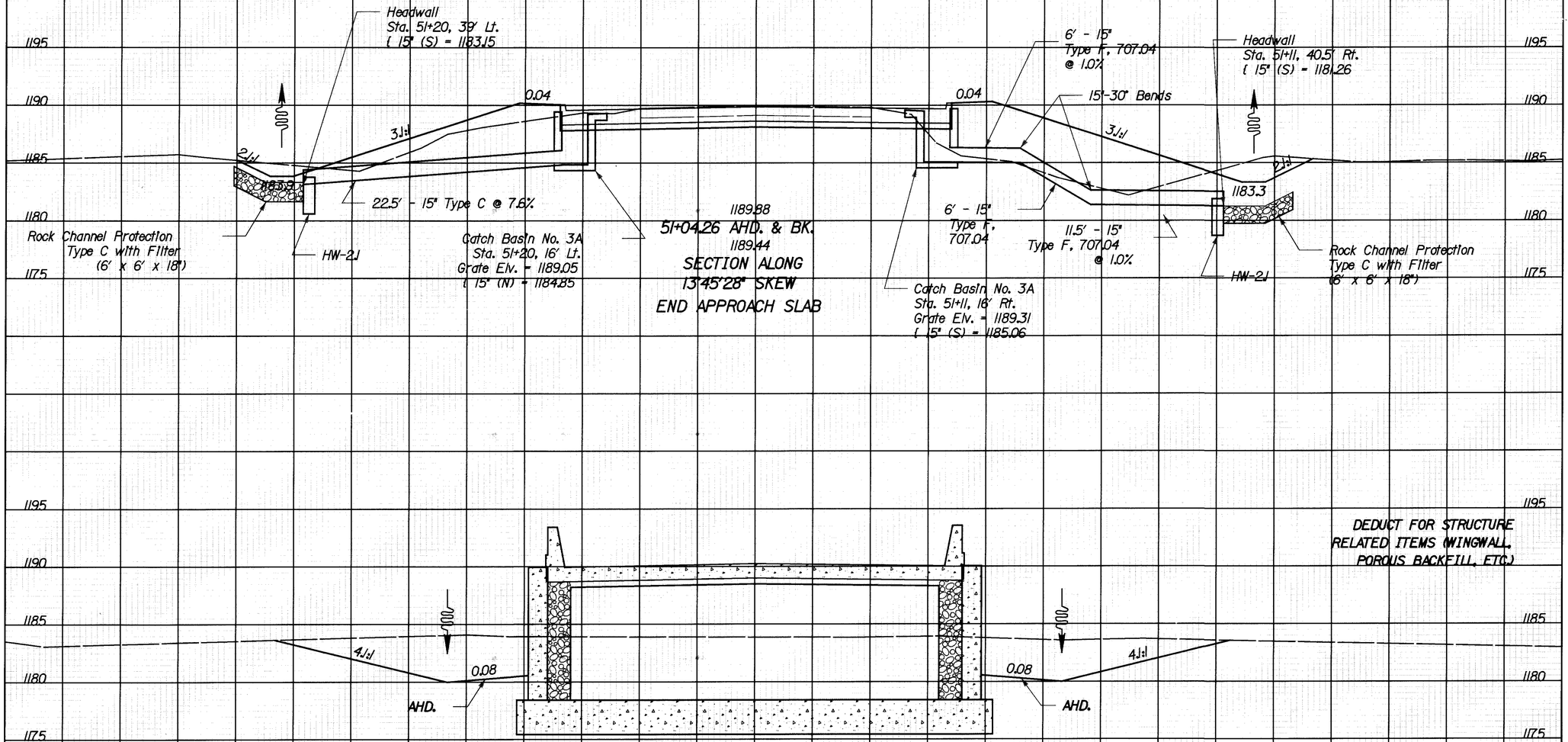

(BRIDGE LIMITS STA. 47+92.70 TO STA. 50+79.26)

℄ Survey & Construction

STA. 50+79.26 AHD.

STA. 50+79.26 AHD.

203	SHEET TOTAL

END AREA		VOLUME	
CUT	FILL	CUT	FILL
68	113		
		81	134
			-19
107	176		
		81	115

CALCULATED DLW
CHECKED

CROSS SECTIONS
GRANGER ROAD (C.H. 21)

MED-71-15.78

415
940

SEEDING	
END WIDTH	SQ. YDS.
102	
	533
90	
	437
	970

℄ Survey & Construction

60 50 40 30 20 10 0 10 20 30 40 50 60

1190
R/W
1185
1180
1175

3:1
2.5:1
1178.8
1187.76
52+00.00
1187.98
2.5:1
2:1
14:1
1176.9
R/W

3:1
2:1
1181.2
1189.00
51+50.00
1189.29
2.5:1
2:1
1178.6
R/W

END AREA	
CUT	FILL
67	59
76	36
SHEET TOTAL	

VOLUME	
CUT	FILL
132	88
122	126
254	214

CALCULATED DLW
CHECKED

CROSS SECTIONS
GRANGER ROAD (C.H. 21)

MED-71-15.78

416
940

SEEDING	
END WIDTH	SQ. YDS.
65	328
95	547
	875

℄ Survey & Construction

60 50 40 30 20 10 0 10 20 30 40 50 60

1190
1185
1180
1175
1170

R/W

4:1

1184.88
52+86.88
1184.94

2:1

2:1

1171.2

R/W

1186.21
52+50.00
1186.38

2:1

2:1

1175.6

2:1

2:1

1172.5

R/W

℄ Survey & Construction

END AREA	
CUT	FILL
54	7
82	30
SHEET TOTAL	

VOLUME	
CUT	FILL
93	25
138	82
231	107

CALCULATED DLW

CHECKED

CROSS SECTIONS
GRANGER ROAD (C.H. 21)

MED-71-15.78

417
940

SEEDING END WIDTH	SEEDING SO. YDS.		END AREA CUT	END AREA FILL	VOLUME CUT	VOLUME FILL
		℄ Survey & Construction				
		60 50 40 30 20 10 0 10 20 30 40 50 60				
		BEGIN WORK STA. 54+00				
		1180 1175 1170 R/W				
		54+00.00				
0		AHD. BK. END SEEDING STA. 53+75				
14		BEGIN EARTHWORK STA. 53+75 BK.	0	0		
	372	WINDFALL ROAD (C.H. 101)			27	31
		WINDFALL ROAD (C.H. 101)				
	-25	Drive @ Sta. 53+10.90, Lt.			-12	
		Drive @ Sta. 53+10.90, Lt.				
	126	Drive @ Sta. 53+10.90, Lt. See Sheet 419			3	0
		1190 1185 1180 1175 R/W 3:1				
		1184.11 53+06.50 1183.50				
19		AHD. BK. Sta. 53+06.5	1	0		
38		Sta. 53+06.5 AHD. BK.	42	9		
	112	℄ Survey & Construction			35	6
	585	SHEET TOTAL 50 40 30 20 10 0 10 20 30 40 50 SHEET TOTAL			53	37

CALCULATED DLW CHECKED

CROSS SECTIONS
GRANGER ROAD (C.H. 21)

MED-71-15.78

418
940

℄ REFERENCE POINTS

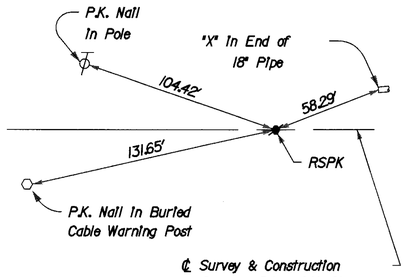

℄ Survey & Construction
Granger Rd. - C.H. 21

REF PT. STA. 45+00.00

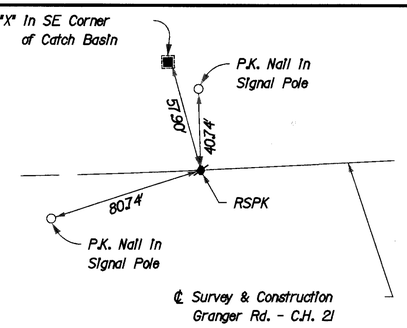

℄ Survey & Construction
Granger Rd. - C.H. 21

REF PT. STA. 47+08.49

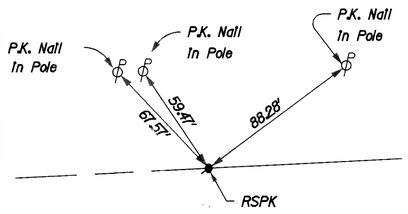

REF PT. STA. 51+50.00

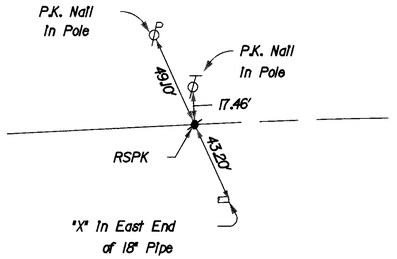

REF PT. STA. 54+77.76

HORIZONTAL SCALE IN FEET
0 20 10 40

INTERSECTION DETAIL
GRANGER ROAD & NICHOLS ROAD

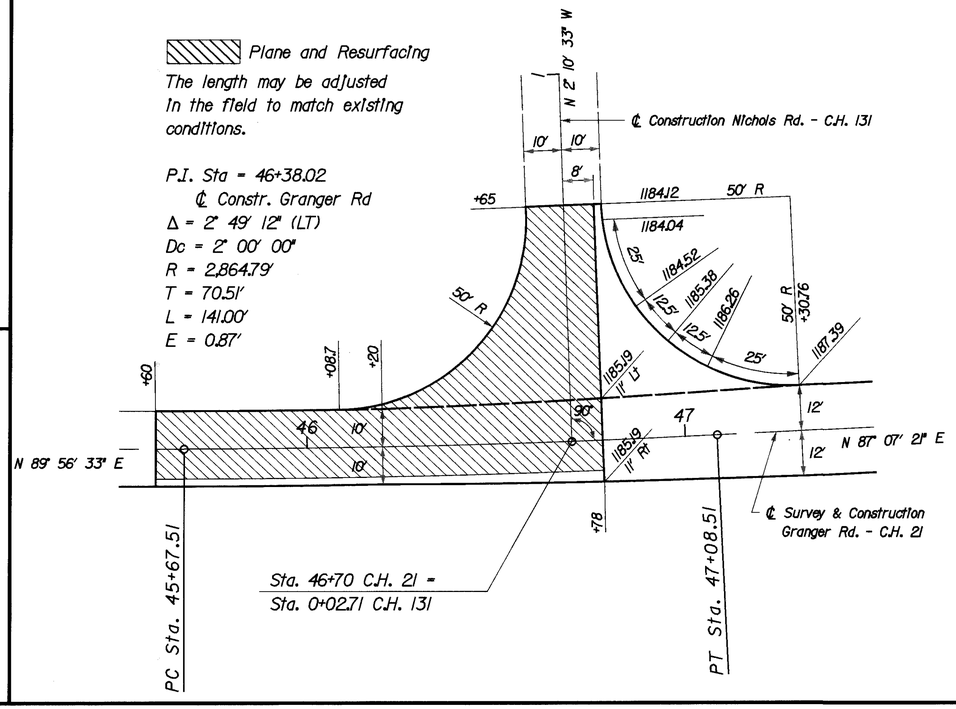

DRIVEWAY PLAN AND PROFILE
Sta. 53+10.90 Lt.

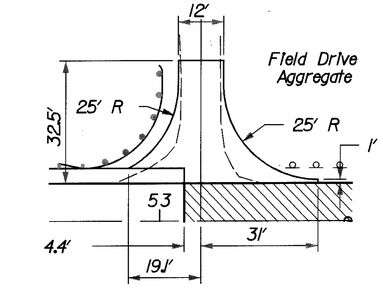

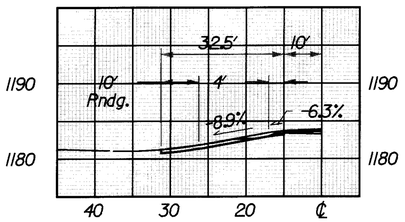

Cadd Measured Area = 626 sq. ft.
Item 304 Aggregate Base
V = (626 sq. ft. x 0.5 ft) ÷ 27
= 11.59 cu. yds.
Total Carried to Sheet 375

CALCULATED DLW
CHECKED

MISCELLANEOUS DETAILS
GRANGER ROAD (C.H. 21)

MED-71-15.78

419
940

ITEM	ITEM EXT.	GRAND TOTAL	UNIT	DESCRIPTION	AS PER PLAN SHEET REFERENCE
202	23000	8140	SQ. YDS.	PAVEMENT REMOVED	
202	38000	1000	LIN. FT.	GUARDRAIL REMOVED	
203	12000	10756	CU. YDS	EXCAVATION NOT INCLUDING EMBANKMENT CONSTRUCTION	
203	20000	434	CU. YDS.	EMBANKMENT	
203	50000	8507	SQ. YDS.	SUBGRADE COMPACTION	
254	01000	106	SQ. YDS.	PAVEMENT PLANING, BITUMINOUS	
304	20000	2258	CU. YDS.	AGGREGATE BASE	
407	10000	11	GALLON	TACK COAT	
408	10000	4499	GALLON	BITUMINOUS PRIME COAT	
606	13000	562.5	LIN. FT.	GUARDRAIL, TYPE 5	
606	13050	200	LIN. FT.	GUARDRAIL, TYPE 5A	
606	22000	2	EACH	ANCHOR ASSEMBLY, TYPE B-98	
606	26500	2	EACH	ANCHOR ASSEMBLY, TYPE T	
620	10300	24	EACH	DELINEATOR, TYPE C, POST MOUNTED	
620	15300	3	EACH	DELINEATOR, TYPE D, POST MOUNTED	
621	00100	59	EACH	RAISED PAVEMENT MARKER	
626	00100	20	EACH	BARRIER REFLECTOR, TYPE A	
887		0.96	MILE	EDGE LINE (5 YEAR WARRANTY)	
887		0.48	MILE	LANE LINE (5 YEAR WARRANTY)	
855	10000	11,748	SQ. YDS.	4" ASPHALT TREATED FREE DRAINING BASE	
880		4992	CU. YDS.	ASPHALT CONCRETE (7 YEAR WARRANTY)	
870	10000	24186	SQ. YDS.	SEEDING AND MULCHING (CARRIED TO "ITEM 870 SEEDING AND MULCHING" GENERAL NOTE)	

(QUANTITIES CARRIED TO GENERAL SUMMARY UNLESS OTHERWISE NOTED)

CALCULATED PS
CHECKED PG

ROADWAY SUBSUMMARY OF QUANTITIES
CONNECTION "W" I.R. 271

MED-71-15.78

421
940

DESIGN FILE : i:\pd_med_1r71\dgn\reltd\finaldrainage\271rsum.dgn
USERNAME : nvonderе
DATE : 06-DEC-1999
TIME : 10:5
271RSUM

CONNECTION 'W' I.R. 271

FROM STA.		TO STA.																
ITEM 202 - PAVEMENT REMOVED																		
970 +	27.07 CONN. W	973 +	17 CONN. W	-	289.93 L.F.	X	(	35 +	43)	/	2				/		9 -	1256.36 SQ. YDS.
973 +	17 CONN. W	998 +	98.25 CONN. W	-	2581.25 L.F.	X		24							/		9 -	6883.33 SQ. YDS.
																TOTAL	-	**8139.69 SQ. YDS.**
ITEM 203 - SUBGRADE COMPACTION																		
970 +	27.07 CONN. W	973 +	64.26 CONN. W	-	337.19 L.F.	X		24							/		9 -	899.17 SQ. YDS.
970 +	27.07 CONN. W	973 +	64.26 CONN. W	-	337.19 L.F.	X		10							/		9 -	374.66 SQ. YDS.
970 +	27.07 CONN. W	973 +	64.26 CONN. W	-	337.19 L.F.	GORE AREA		-	4277.11 SQ. FT.						/		9 -	475.23 SQ. YDS.
973 +	64.26 CONN. W	998 +	98.25 CONN. W	-	2533.99 L.F.	X	(	24 +	10 +		4)				/		9 -	6757.31 SQ. YDS.
																TOTAL	-	**8506.37 SQ. YDS.**
ITEM 254 - PAVEMENT PLANING, BITUMINOUS (T = 1 1/2')																		
998 +	98.25 CONN. W	999 +	23.25 CONN. W	-	25 L.F.	X	(	24 +	10 +		4)				/		9 -	105.56 SQ. YDS.
ITEM 304 - AGGREGATE BASE																		
970 +	27.07 CONN. W	973 +	64.26 CONN. W	-	337.19 L.F.	X		24				X	(	6 /	12)/		27 -	149.86 CU. YDS.
970 +	27.07 CONN. W	973 +	64.26 CONN. W	-	337.19 L.F.	X		11.83				X	(	6 /	12)/		27 -	73.87 CU. YDS.
970 +	27.07 CONN. W	973 +	64.26 CONN. W	-	337.19 L.F.	GORE AREA		-	4277.11 SQ. FT.			X	(	6 /	12)/		27 -	79.21 CU. YDS.
973 +	64.26 CONN. W	998 +	98.25 CONN. W	-	2533.99 L.F.	X	(	24 +	11.83 +		5.83)	X	(	6 /	12)/		27 -	1954.93 CU. YDS.
																TOTAL	-	**2257.87 CU. YDS.**
ITEM 408 - BITUMINOUS PRIME COAT																		
970 +	27.07 CONN. W	973 +	64.26 CONN. W	-	337.19 L.F.	X		24				/		9 X	0.4 GAL./SQ/ YDS.		-	359.67 GALLONS
970 +	27.07 CONN. W	973 +	64.26 CONN. W	-	337.19 L.F.	X		8				/		9 X	0.4 GAL./SQ/ YDS.		-	119.89 GALLONS
970 +	27.07 CONN. W	973 +	64.26 CONN. W	-	337.19 L.F.	GORE AREA		-	4277.11 SQ. FT.			/		9 X	0.4 GAL./SQ/ YDS.		-	190.09 GALLONS
973 +	64.26 CONN. W	998 +	98.25 CONN. W	-	2533.99 L.F.	X	(	24 +	8 +		2)	/		9 X	0.4 GAL./SQ/ YDS.		-	3829.14 GALLONS
																TOTAL	-	4498.79 GALLONS
ITEM 302 - BITUMINOUS AGGREGATE BASE, PG 64-22																		
970 +	27.07 CONN. W	973 +	64.26 CONN. W	-	337.19 L.F.	X		24				X	(	11 /	12)/		27 -	274.75 CU. YDS.
970 +	27.07 CONN. W	973 +	64.26 CONN. W	-	337.19 L.F.	X		10.33				X	(	11 /	12)/		27 -	118.26 CU. YDS.
970 +	27.07 CONN. W	973 +	64.26 CONN. W	-	337.19 L.F.	GORE AREA		-	4277.11 SQ. FT.			X	(	11 /	12)/		27 -	145.21 CU. YDS.
973 +	64.26 CONN. W	998 +	98.25 CONN. W	-	2533.99 L.F.	X	(	24 +	10.33 +		4.33)	X	(	11 /	12)/		27 -	3325.94 CU. YDS.
																TOTAL	-	**3864.16 CU. YDS.** ⊗
ITEM 855 - 4" ASPHALT TREATED FREE DRAINING BASE																		
970 +	27.07 CONN. W	973 +	64.26 CONN. W	-	337.19 L.F.	X		24							/		9 -	899.17 SQ. YDS.
970 +	27.07 CONN. W	973 +	64.26 CONN. W	-	337.19 L.F.	X		11.33							/		9 -	424.48 SQ. YDS.
970 +	27.07 CONN. W	973 +	64.26 CONN. W	-	337.19 L.F.	GORE AREA		-	4277.11 SQ. FT.						/		9 -	475.23 SQ. YDS.
973 +	64.26 CONN. W	998 +	98.25 CONN. W	-	2533.99 L.F.	X	(	24 +	11.33 +		5.33)				/		9 -	9,948.82 SQ. YDS.
																TOTAL	-	**11,747.70 SQ. YDS.**
ITEM 407 - TACK COAT																		
998 +	98.25 CONN. W	999 +	23.25 CONN. W	-	25 L.F.	X	(	24 +	10 +		4)	/		9 X	0.1 GAL./SQ/ YDS.		-	10.56 GALLONS
ITEM 407 - TACK COAT FOR INTERMEDIATE COURSE																		
970 +	27.07 CONN. W	973 +	64.26 CONN. W	-	337.19 L.F.	X		24				/		9 X	0.05 GAL./SQ/ YDS.		-	44.96 GALLONS
970 +	27.07 CONN. W	973 +	64.26 CONN. W	-	337.19 L.F.	X		10				/		9 X	0.05 GAL./SQ/ YDS.		-	18.73 GALLONS
970 +	27.07 CONN. W	973 +	64.26 CONN. W	-	337.19 L.F.	GORE AREA		-	4277.11 SQ. FT.			/		9 X	0.05 GAL./SQ/ YDS.		-	23.76 GALLONS
973 +	64.26 CONN. W	998 +	98.25 CONN. W	-	2533.99 L.F.	X	(	24 +	10 +		4)	/		9 X	0.05 GAL./SQ/ YDS.		-	534.95 GALLONS
																TOTAL	-	**622.4 GALLONS** ⊗
ITEM 858 - ASPHALT CONCRETE INTERMEDIATE COURSE, 19mm, TYPE A																		
970 +	27.07 CONN. W	973 +	64.26 CONN. W	-	337.19 L.F.	X		24				X	(	1.75 /	12)/		27 -	43.71 CU. YDS.
970 +	27.07 CONN. W	973 +	64.26 CONN. W	-	337.19 L.F.	X		10				X	(	1.75 /	12)/		27 -	18.21 CU. YDS.
970 +	27.07 CONN. W	973 +	64.26 CONN. W	-	337.19 L.F.	GORE AREA		-	4277.11 SQ. FT.			X	(	1.75 /	12)/		27 -	23.1 CU. YDS.
973 +	64.26 CONN. W	998 +	98.25 CONN. W	-	2533.99 L.F.	X	(	24 +	10 +		4)	X	(	1.75 /	12)/		27 -	520.09 CU. YDS.
																TOTAL	-	**605.11 CU. YDS.** ⊗
ITEM 858 - ASPHALT CONCRETE SURFACE COURSE, 12.5 mm, TYPE A																		
970 +	27.07 CONN. W	973 +	64.26 CONN. W	-	337.19 L.F.	X		24				X	(	1.5 /	12)/		27 -	37.47 CU. YDS.
970 +	27.07 CONN. W	973 +	64.26 CONN. W	-	337.19 L.F.	X		10				X	(	1.5 /	12)/		27 -	15.61 CU. YDS.
970 +	27.07 CONN. W	973 +	64.26 CONN. W	-	337.19 L.F.	GORE AREA		-	4277.11 SQ. FT.			X	(	1.5 /	12)/		27 -	19.8 CU. YDS.
973 +	64.26 CONN. W	999 +	23.25 CONN. W	-	2558.99 L.F.	X	(	24 +	10 +		4)	X	(	1.5 /	12)/		27 -	450.19 CU. YDS.
																TOTAL	-	**523.07 CU. YDS.** ⊗
ITEM 202 - GUARDRAIL REMOVED																		
987 +	38.37 CONN. W	992 +	64.37 CONN. W	LT.	- 526 L.F.												-	525 LIN. FT.
987 +	38.16 CONN. W	992 +	21.64 CONN. W	RT.	- 483.48 L.F.				DEDUCT FOR CURVE								-	475 LIN. FT.
																TOTAL	-	**1000 LIN. FT.**
ITEM 606 - GUARDRAIL, TYPE 5																		
990 +	21.1 CONN. W	991 +	43.5 CONN. W	LT.	- 143.5 L.F.				DEDUCT TYPE B ANCHOR ASSEMBLY								-	125 LIN. FT.
987 +	70.5 CONN. W	992 +	28.5 CONN. W	RT.	- 458 L.F.				DEDUCT TYPE B ANCHOR ASSEMBLY								-	437.5 LIN. FT.
																TOTAL	-	**562.5 LIN. FT.**

⊗ Quantities shown for information only. A quantity of 4992 Cu.Yd. of Item 880 Asphalt Concrete (7 Year Warranty) is carried to Sheet 421.

Quantities Carried to Roadway SubSummary for Connection "W" I.R. 271, See Sht. 421.

CALCULATED PG CHECKED PS

CALCULATIONS CONNECTION "W" I.R. 271

MED-71-15.78

422
940

DESIGN FILE : i:\pd_med_1r71\dgn\reitd\finaldrainage\271cal.dgn
USERNAME : nvondere
DATE : 06-DEC-1999
TIME : 10:31
271CAL.DGN

ITEM 606 - GUARDRAIL, TYPE 5A															
988 +	24.5	CONN. W	990 +	21.1	CONN. W	LT.	-	196.6 L.F.						-	200 LIN. FT.
ITEM 606 - ANCHOR ASSEMBLY, TYPE B-98															
991 +	43.5	CONN. W	991 +	81	CONN. W		-	37.5 L.F.						-	1 EACH
992 +	28.5	CONN. W	992 +	66	CONN. W	RT.	-	37.5 L.F.						-	1 EACH
													TOTAL	-	2 EACH
ITEM 606 - ANCHOR ASSEMBLY, TYPE T															
988 +	12	CONN. W	988 +	24.5	CONN. W	LT.	-	12.5 L.F.						-	1 EACH
987 +	58	CONN. W	987 +	70.5	CONN. W	RT.	-	12.5 L.F.						-	1 EACH
													TOTAL	-	2 EACH
ITEM 626 - BARRIER REFLECTORS, TYPE A (WHITE)															
988 +	12	CONN. W	991 +	81	CONN. W	LT.	-	375 L.F.				/	50 + 1	-	9 EACH
ITEM 626 - BARRIER REFLECTORS, TYPE A (YELLOW)															
987 +	58	CONN. W	992 +	66	CONN. W	RT.	-	487.5 L.F.				/	50 + 1	-	11 EACH
ITEM 620 - DELINEATORS, POST MOUNTED, TYPE C (WHITE)															
973 +	64.26	CONN. W	977 +	97.74	CONN. W	LT.	-	433.48 L.F.				/	200	-	2 EACH
977 +	97.41	CONN. W	993 +	72.32	CONN. W	LT.	-	1574.91 L.F.	ADD CURVE LENGTH	16.04		/	80	-	20 EACH
993 +	72.32	CONN. W	999 +	23.25	CONN. W	LT.	-	550.93 L.F.				/	200	-	2 EACH
													TOTAL	-	24 EACH
ITEM 620 - DELINEATORS, POST MOUNTED, TYPE D (YELLOW)															
973 +	64.26	CONN. W	977 +	97.74	CONN. W	RT.	-	433.48 L.F.				/	200 + 1	-	3 EACH
ITEM 621 - RAISED PAVEMENT MARKER (ONE WAY WHITE)															
973 +	64.26	CONN. W	993 +	72.32	CONN. W	-		2008.06 L.F.	SUBTRACT CURVE LENGTH	19.25		/	40	-	51 EACH
993 +	72.32	CONN. W	999 +	23.25	CONN. W	-		550.93 L.F.				/	80	-	8 EACH
													TOTAL	-	59 EACH
ITEM 887- EDGE LINE (WHITE)															
973 +	64.26	CONN. W	999 +	23.25	CONN. W	LT.	-	2558.99 L.F.				/	5280	-	0.48 MILE
ITEM 887 - EDGE LINE (YELLOW)															
973 +	64.26	CONN. W	999 +	23.25	CONN. W	RT.	-	2558.99 L.F.	SUBTRACT CURVE LENGTH	38.5		/	5280	-	0.48 MILE
ITEM 887- LANE LINE															
973 +	64.26	CONN. W	999 +	23.25	CONN. W	-		2558.99 L.F.	SUBTRACT CURVE LENGTH	19.25		/	5280	-	0.48 MILE

Quantities Carried to Roadway SubSummary for Connection "W" I.R. 271, See Sht. 421.

CALCULATED PG
CHECKED PS

CALCULATIONS
CONNECTION "W" I.R. 271

MED-71-15.78

DESIGN FILE : i:\pd_med_ir71\dgn\reltd\finaldrainage\271cal.dgn
USERNAME : nvondere
DATE : 06-DEC-1999
TIME : 10:31
271CAL.DGN

CONNECTION 'W' I.R. 271 SUPERELEVATION TABLE

STATION	B.L. CONST. STATION	OUTSIDE E.O.P. ELEV. P.G.	CROSS SLOPE	WIDTH	CENTER OF LANES ELEVATION	WIDTH	CROSS SLOPE	INSIDE E.O.P. ELEV.
STA. EQN. - BEGIN BL. & SUPER TRANS.	970 + 27.07	1171.30	0.016	12	1171.49	12	0.016	1171.68
	970 + 50.00	1171.34	0.019	12	1171.57	12	0.019	1171.80
	970 + 75.00	1171.38	0.024	12	1171.67	12	0.024	1171.96
	971 + 0.00	1171.42	0.029	12	1171.77	12	0.029	1172.12
	971 + 25.00	1171.58	0.035	12	1172.00	12	0.035	1172.42
TS	971 + 29.29	1171.45	0.036	12	1171.88	12	0.036	1172.31
	971 + 50.00	1171.47	0.040	12	1171.95	12	0.040	1172.43
	971 + 75.00	1171.48	0.045	12	1172.02	12	0.045	1172.56
	972 + 0.00	1171.47	0.050	12	1172.07	12	0.050	1172.67
	972 + 25.00	1171.45	0.055	12	1172.11	12	0.055	1172.77
	972 + 50.00	1171.42	0.060	12	1172.14	12	0.060	1172.86
	972 + 75.00	1171.37	0.066	12	1172.16	12	0.066	1172.95
	973 + 0.00	1171.31	0.071	12	1172.16	12	0.071	1173.01
	973 + 25.00	1171.24	0.076	12	1172.15	12	0.076	1173.06
BEGIN FULL SUPER SC	973 + 29.29	1171.23	0.077	12	1172.15	12	0.077	1173.08
	973 + 50.00	1171.16	0.077	12	1172.08	12	0.077	1173.01
	973 + 75.00	1171.06	0.077	12	1171.98	12	0.077	1172.91
	974 + 0.00	1170.95	0.077	12	1171.87	12	0.077	1172.80
	974 + 25.00	1170.82	0.077	12	1171.74	12	0.077	1172.67
	974 + 50.00	1170.68	0.077	12	1171.60	12	0.077	1172.53
	974 + 75.00	1170.53	0.077	12	1171.45	12	0.077	1172.38
	975 + 0.00	1170.37	0.077	12	1171.29	12	0.077	1172.22
	975 + 25.00	1170.19	0.077	12	1171.11	12	0.077	1172.04
	975 + 50.00	1170.00	0.077	12	1170.92	12	0.077	1171.85
	975 + 75.00	1169.80	0.077	12	1170.72	12	0.077	1171.65
END FULL SUPER CS	975 + 84.80	1169.71	0.077	12	1170.63	12	0.077	1171.56
	976 + 0.00	1169.58	0.071	12	1170.43	12	0.071	1171.28
	976 + 25.00	1169.35	0.062	12	1170.09	12	0.062	1170.84
	976 + 50.00	1169.11	0.053	12	1169.75	12	0.053	1170.38
	976 + 75.00	1168.85	0.043	12	1169.37	12	0.043	1169.88
	977 + 0.00	1168.58	0.034	12	1168.99	12	0.034	1169.40
	977 + 25.00	1168.30	0.025	12	1168.60	12	0.025	1168.90
	977 + 50.00	1168.01	0.015	12	1168.19	12	0.015	1168.37
	977 + 75.00	1167.70	0.006	12	1167.77	12	0.006	1167.84
ST	977 + 84.80	1167.57	0.002	12	1167.59	12	0.002	1167.62
END TRANS BK. / BEGIN TRANS AHD.	977 + 91.27	1167.49	0.000	12	1167.49	12	0.000	1167.49
TS	977 + 97.74	1167.41	-0.003	12	1167.37	12	-0.003	1167.34
	978 + 0.00	1167.38	-0.004	12	1167.33	12	-0.004	1167.28
	978 + 25.00	1167.04	-0.014	12	1166.87	12	-0.014	1166.70
	978 + 50.00	1166.69	-0.024	12	1166.40	12	-0.024	1166.11
	978 + 75.00	1166.33	-0.034	12	1165.92	12	-0.034	1165.51
	979 + 0.00	1165.96	-0.044	12	1165.43	12	-0.044	1164.90
	979 + 25.00	1165.58	-0.054	12	1164.93	12	-0.054	1164.28
	979 + 50.00	1165.20	-0.064	12	1164.43	12	-0.064	1163.66
	979 + 75.00	1164.82	-0.074	12	1163.93	12	-0.074	1163.04
BEGIN FULL SUPER SC	979 + 97.74	1164.47	-0.083	12	1163.47	12	-0.083	1162.47
	980 + 0.00	1164.43	-0.083	12	1163.43	12	-0.083	1162.43
	980 + 25.00	1164.05	-0.083	12	1163.05	12	-0.083	1162.05
	980 + 50.00	1163.67	-0.083	12	1162.67	12	-0.083	1161.67
	980 + 75.00	1163.29	-0.083	12	1162.29	12	-0.083	1161.29
	981 + 0.00	1162.91	-0.083	12	1161.91	12	-0.083	1160.91
	981 + 25.00	1162.53	-0.083	12	1161.53	12	-0.083	1160.53
	981 + 50.00	1162.15	-0.083	12	1161.15	12	-0.083	1160.15
	981 + 75.00	1161.77	-0.083	12	1160.77	12	-0.083	1159.77

STATION	B.L. CONST. STATION	OUTSIDE E.O.P. ELEV. P.G.	CROSS SLOPE	WIDTH	CENTER OF LANES ELEVATION	WIDTH	CROSS SLOPE	INSIDE E.O.P. ELEV.
	982 + 0.00	1161.39	-0.083	12	1160.39	12	-0.083	1159.39
	982 + 25.00	1161.01	-0.083	12	1160.01	12	-0.083	1159.01
	982 + 50.00	1160.63	-0.083	12	1159.63	12	-0.083	1158.63
	982 + 75.00	1160.25	-0.083	12	1159.25	12	-0.083	1158.25
	983 + 0.00	1159.87	-0.083	12	1158.87	12	-0.083	1157.87
	983 + 25.00	1159.48	-0.083	12	1158.48	12	-0.083	1157.48
	983 + 50.00	1159.10	-0.083	12	1158.10	12	-0.083	1157.10
	983 + 75.00	1158.72	-0.083	12	1157.72	12	-0.083	1156.72
	984 + 0.00	1158.34	-0.083	12	1157.34	12	-0.083	1156.34
	984 + 25.00	1157.96	-0.083	12	1156.96	12	-0.083	1155.96
	984 + 50.00	1157.58	-0.083	12	1156.58	12	-0.083	1155.58
	984 + 75.00	1157.20	-0.083	12	1156.20	12	-0.083	1155.20
	985 + 0.00	1156.82	-0.083	12	1155.82	12	-0.083	1154.82
	985 + 25.00	1156.44	-0.083	12	1155.44	12	-0.083	1154.44
	985 + 50.00	1156.06	-0.083	12	1155.06	12	-0.083	1154.06
	985 + 75.00	1155.68	-0.083	12	1154.68	12	-0.083	1153.68
	986 + 0.00	1155.30	-0.083	12	1154.30	12	-0.083	1153.30
	986 + 25.00	1154.92	-0.083	12	1153.92	12	-0.083	1152.92
	986 + 50.00	1154.57	-0.083	12	1153.57	12	-0.083	1152.57
	986 + 75.00	1154.22	-0.083	12	1153.22	12	-0.083	1152.22
	987 + 0.00	1153.90	-0.083	12	1152.90	12	-0.083	1151.90
	987 + 25.00	1153.59	-0.083	12	1152.59	12	-0.083	1151.59
	987 + 50.00	1153.29	-0.083	12	1152.29	12	-0.083	1151.29
	987 + 75.00	1153.01	-0.083	12	1152.01	12	-0.083	1151.01
	988 + 0.00	1152.75	-0.083	12	1151.75	12	-0.083	1150.75
	988 + 25.00	1152.50	-0.083	12	1151.50	12	-0.083	1150.50
	988 + 50.00	1152.27	-0.083	12	1151.27	12	-0.083	1150.27
	988 + 75.00	1152.05	-0.083	12	1151.05	12	-0.083	1150.05
	989 + 0.00	1151.85	-0.083	12	1150.85	12	-0.083	1149.85
	989 + 25.00	1151.66	-0.083	12	1150.66	12	-0.083	1149.66
	989 + 50.00	1151.49	-0.083	12	1150.49	12	-0.083	1149.49
	989 + 75.00	1151.34	-0.083	12	1150.34	12	-0.083	1149.34
	990 + 0.00	1151.20	-0.083	12	1150.20	12	-0.083	1149.20
	990 + 25.00	1151.07	-0.083	12	1150.07	12	-0.083	1149.07
	990 + 50.00	1150.94	-0.083	12	1149.94	12	-0.083	1148.94
	990 + 75.00	1150.81	-0.083	12	1149.81	12	-0.083	1148.81
	991 + 0.00	1150.67	-0.083	12	1149.67	12	-0.083	1148.67
	991 + 25.00	1150.54	-0.083	12	1149.54	12	-0.083	1148.54
	991 + 50.00	1150.41	-0.083	12	1149.41	12	-0.083	1148.41
	991 + 75.00	1150.28	-0.083	12	1149.28	12	-0.083	1148.28
END FULL SUPER CS	991 + 83.68	1150.23	-0.083	12	1149.23	12	-0.083	1148.23
	992 + 0.00	1150.15	-0.077	12	1149.23	12	-0.077	1148.30
	992 + 25.00	1150.02	-0.066	12	1149.23	12	-0.069	1148.40
	992 + 50.00	1149.89	-0.056	12	1149.22	12	-0.060	1148.50
	992 + 75.00	1149.75	-0.045	12	1149.21	12	-0.051	1148.60
	993 + 0.00	1149.62	-0.035	12	1149.20	12	-0.042	1148.70
	993 + 25.00	1149.49	-0.024	12	1149.20	12	-0.033	1148.81
	993 + 50.00	1149.36	-0.014	12	1149.19	12	-0.024	1148.90
END SUPER TRANS RT. SC	993 + 72.32	1149.24	-0.005	12	1149.18	12	-0.016	1148.99
	993 + 75.00	1149.23	-0.004	12	1149.18	12	-0.016	1148.99
	993 + 83.68	1149.18	0.000	12	1149.18	12	-0.016	1148.99
	994 + 0.00	1149.10	0.007	12	1149.18	12	-0.016	1148.99
END SUPER TRANS LT.	994 + 21.68	1148.98	0.016	12	1149.17	12	-0.016	1148.98
NORMAL SECTION	994 + 25.00	1148.97	0.016	12	1149.16	12	-0.016	1148.97

CALCULATED PS
CHECKED PG

SUPERELEVATION TABLE

MED-71-15.78

424
940

DESIGN FILE : i:\pd_med_ir71\dgn\reltd\finaldrainage\271ge.dgn
USERNAME : nvondere
271GE.DGN 11/5/99 CAR

Cross References	
Guardrail	75-76
Drainage	77-96
Underdrains	97-128
Signing	561-606
Lighting	607-643
Tree Planting	647-663
Noise Walls	664-679

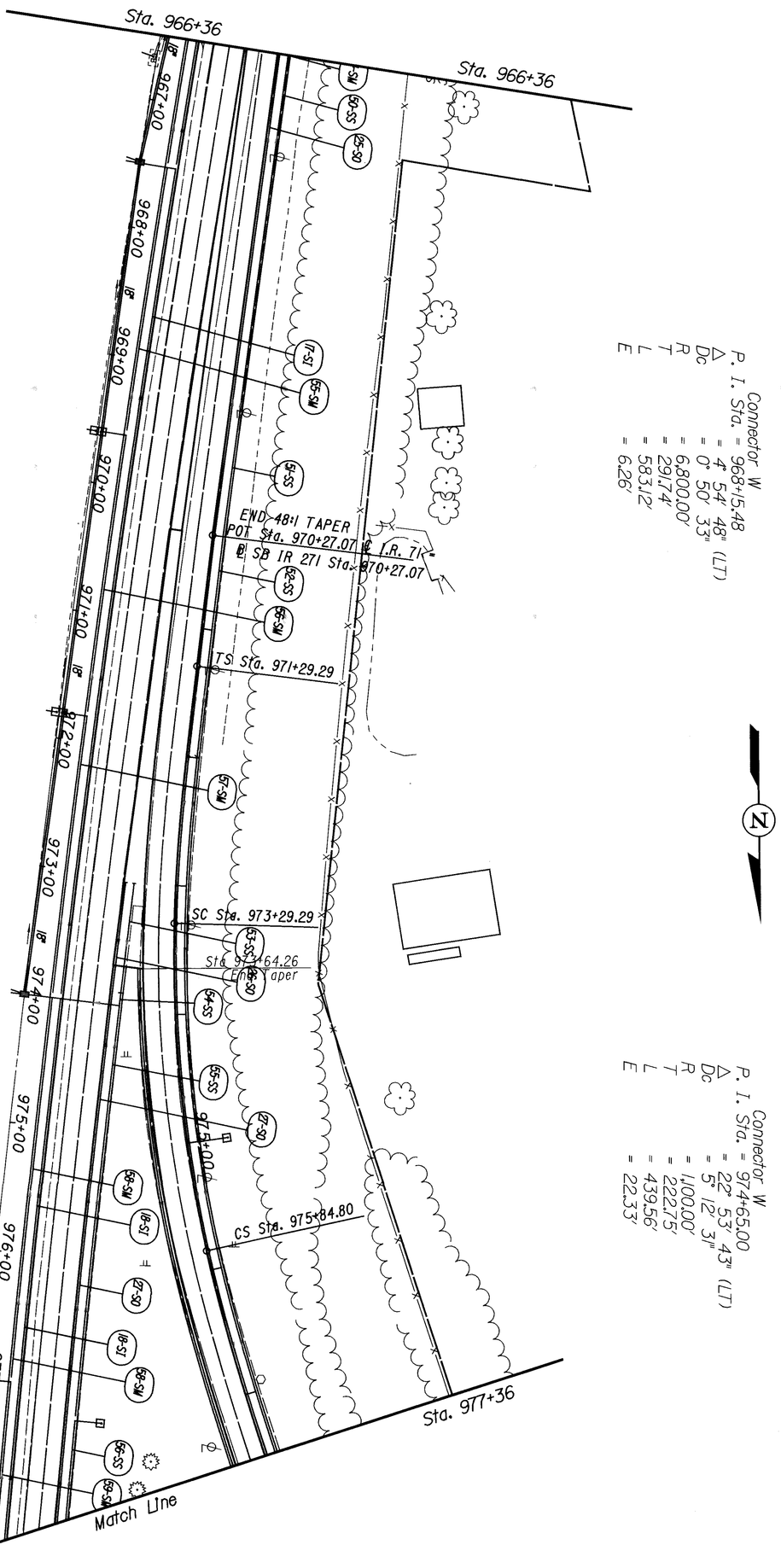

425/940	MED - 71 - 15.78	IR 271 CONNECTOR W STA. 966+36 TO STA. 977+36	CALCULATED CHECKED	0 50 100 HORIZONTAL SCALE IN FEET

'W' I.R. 271

P.I. Sta = 974+61.07
Δ = 25° 03' 12" (LT)
Dc = 5° 30' 00"
R = 1,041.74'
Ls = 200.00'
Theta = 5° 30' 00"
LT = 133.40'
ST = 66.73'
x = 199.82'
y = 6.40'
k = 99.97'
p = 1.60'
Δc = 14° 03' 12" (LT)
Lc = 255.51'
Ts = 331.78'
Es = 27.04'
eMAX. = 0.077

END 48:1 TAPER
POT Sta. 970+27.07 ℄ I.R. 71 - SB IR 271 Sta. 970+87.07
TS Sta. 971+28.29
SC Sta. 973+39.29
Sta 973+64.26 End open
CS Sta. 975+84.80
ST Sta. 977+84.80
℄ PROPOSED CONNECTION 'W' I.R. 271
℄ EXISTING CONNECTION 'W' I.R. 271
MATCH LINE 982+77
N 7° 38' 35" E
N 17° 24' 57" W
TS Sta. 977+97.74
SC Sta. 979+97.74
6-UD
7-UD
1-UD
8-UD
9-UD
2-UD
3-UD
14-UD
49A-D
18"

CROSS REFERENCES	
DESCRIPTION	SHEET NO.
UNDERDRAIN TABLE	127
MAINLINE P&P	182-184

STA. 970+27.07
1,171.34
1,171.30
P.V.I. Sta. 975+00.00 Elev. = 1,172.05
800' V.C.
+0.16 %
-1.52 %

| | | |

℄ PROP. CONNECTION 'W' I.R. 271

P.I. Sta = 985+89.67
Δ = 107° 15' 49" (RT)
Dc = 7° 45' 00"
R = 739.30'
Lsl = 200'
Thetal = 7° 31' 52"
LTl = 133.460
STl = 66.78
Ls2 = 188.64'
Theta2 = 7° 44' 33"
LT2 = 122.32
ST2 = 66.57
Δc = 91° 54' 37" (RT)
Lc = 1,185.94'
Tl = 1106.66
T2 = 1097.38
Es = 513.42'
eMAX. = 0.0833

℄ PROP. CONNECTION 'W' I.R. 271

P.I. Sta = 995+12.33
Δ = 1° 12' 02" (RT)
Dc = 0° 28' 00"
R = 12,277.67'
T = 128.65'
L = 257.28'
E = 0.67'
e = N/C

CROSS REFERENCES	
DESCRIPTION	SHEET NO.
UNDERDRAIN TABLE	127
MAINLINE P&P	184
SUPERELEVATION TABLE	424
STRUCTURE PLANS	721-736

STA. 987+64.00, 32' RT.
PROP. M.H. NO. 3
TOP OF COVER EL. 1150.55
FL. 18" (N. & W.) EL. 1143.84

110' - 18" TYPE C CONDUIT @ 1.00%

STA. 986+50, 48' RT.
PROP. C.B. NO. 5A, A.P.P.
TOP OF GRATE EL. 1149.50
FL. 18" (N.E.) EL. 1144.93

STA. 987+55.86, 47.05' RT.
EX. C.B. (TO BE REMOVED)
TOP OF GRATE EL. 1148.0±
FL. 18" (N.W.) EL. 1144.0±

POINT OF MINIMUM VERTICAL CLEARANCE (17.0'±)

-0.52 % -0.53 %

P.V.I. Sta. 988+00.00 Elev. - 1,152.25

400' V.C.

STA. 987+55.86, 33.97' LT.
PROP. C.B. NO. 5A, A.P.P.
TOP OF GRATE EL. 1151.46
FL. 36" (E.) EL. 1142.00
FL. 18" (S.E.) EL. 1143.10

STA. 987+55.86, 33.97' LT.
EX. C.B.
TOP OF GRATE EL. 1151.5±
FL. 36" (E.) EL. 1142.0±
FL. 18" (S.E.) EL. 1143.1±

STA. 989+15.84, 29.50' LT.
PROP. C.B. NO. 5A, A.P.P.
TOP OF GRATE EL. 1149.90
FL. 36" (E. & W.) EL. 1141.00

STA. 989+15.84, 29.50' LT.
EX. C.B.
TOP OF GRATE EL. 1149.9±
FL. 36" (E. & W.) EL. 1141.0±

STA. 990+52.27, 49.72' LT.
PROP. M.H. NO. 3
TOP OF COVER EL. 1152.00
FL. 36" (W.) EL. 1140.25
FL. 36" (E.) EL. 1140.05

STA. 990+52.27, 49.72' LT.
EX. M.H.
TOP OF COVER EL. 1152.0±
FL. 36" (W.) EL. 1140.3±
FL. 36" (E.) EL. 1140.1±

STA. 993+70.40, 32.10' LT.
PROP. C.B. NO. 5A, A.P.P.
TOP OF GRATE EL. 1147.55
FL. 36" (W.) EL. 1138.43
FL. 36" (E.) EL. 1138.23

STA. 994+48.78, 57.13' LT.
FL. EX. 36" (W.)
OUTLET EL. 1137.1±

STA. 993+70.40, 32.10' LT.
EX. C.B.
TOP OF GRATE EL. 1147.6±
FL. 36" (W.) EL. 1138.4±
FL. 36" (E.) EL. 1138.2±

1180	1170	1160	1150	1140	1130	1120	1110

983+00	984+00	985+00	986+00	987+00	988+00	989+00	990+00	991+00	992+00	993+00	994+00	995+00

1,159.87	1,159.10	1,158.34	1,157.58	1,156.82	1,156.06	1,155.30	1,154.92	1,154.57	1,154.22	1,153.90	1,153.59	1,153.29	1,153.01	1,152.75	1,152.50	1,152.27	1,152.05	1,151.85	1,151.66	1,151.49	1,151.34	1,151.20	1,150.94	1,150.67	1,150.41	1,150.15	1,149.89	1,149.62	1,149.36	1,149.10	1,148.84	1,148.57
1,159.44	1,158.59	1,157.54	1,156.60	1,155.56	1,155.27	1,154.45	1,153.81	1,153.46	1,152.96	1,152.49	1,152.24	1,152.19	1,152.23	1,151.72	1,151.35	1,151.18	1,151.00	1,150.59	1,150.50	1,150.20	1,149.87	1,149.67	1,149.09	1,148.60								

MATCH LINE 982+77

MATCH LINE 995+27

℄ EXISTING CONNECTION 'W'

℄ PROPOSED CONNECTION 'W' I.R. 271

DO NOT DISTURB

+12, 12.5' LT. POINT OF MINIMUM TYPE T VERTICAL CLEARANCE

+58, 40' RT. TYPE T

+81, 12.5' LT. TYPE B-98

+66, 40' RT. TYPE B-98

℄ EXIST. CONNECTION 'E' I.R. 271

EX. TRANSMISSION LINE (OHIO EDISON)

1-UD 2-UD 3-UD 4-UD 5-UD 6-UD 7-UD 8-UD 9-UD 10-UD 11-UD 12-UD 13-UD 14-UD 15-UD 16-UD 17-UD

1-R 2-R 3-R

1-GR 2-GR

181-D 182-D 183-D 184-D 185-D 186-D

DESIGN FILE : h:\pd_med_ir71\dgn\rslt-d\finaldrainage\271gp2.dgn
USERNAME : mvondere
DATE : 06-DEC-1999
TIME : 10:59
271GP2.DGN

HORIZONTAL SCALE IN FEET 0 50 100

CALCULATED PS CHECKED W.C

PLAN AND PROFILE CONNECTION 'W' I.R. 271

MED - 71 - 15.78

427 940

℄ PROP. CONNECTION 'W' I.R. 271

P.I. Sta = 995+12.33
Δ = 1° 12' 02" (RT)
Dc = 0° 28' 00"
R = 12,277.67'
T = 128.65'
L = 257.28'
E = 0.67'

℄ PROP. CONNECTION 'W' I.R. 271

P.I. Sta = 997+69.61
Δ = 1° 12' 02" (LT)
Dc = 0° 28' 00"
R = 12,277.67'
T = 128.65'
L = 257.28'
E = 0.67'

PLANING AND RESURFACING (T= 1½")

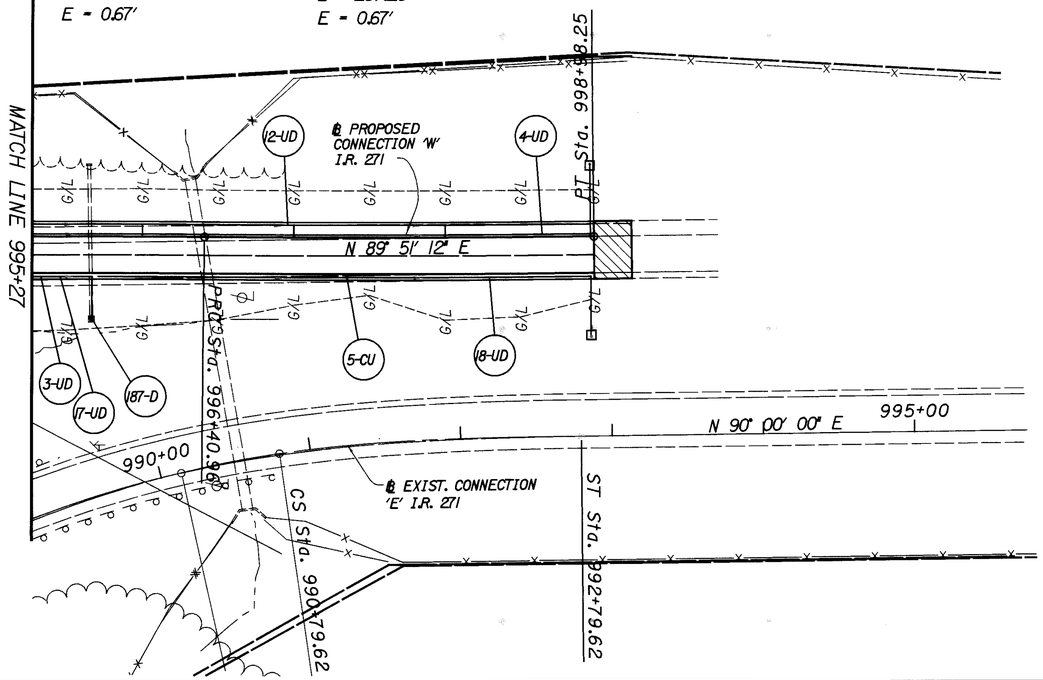

CROSS REFERENCES	
DESCRIPTION	SHEET NO.
UNDERDRAIN TABLE	127

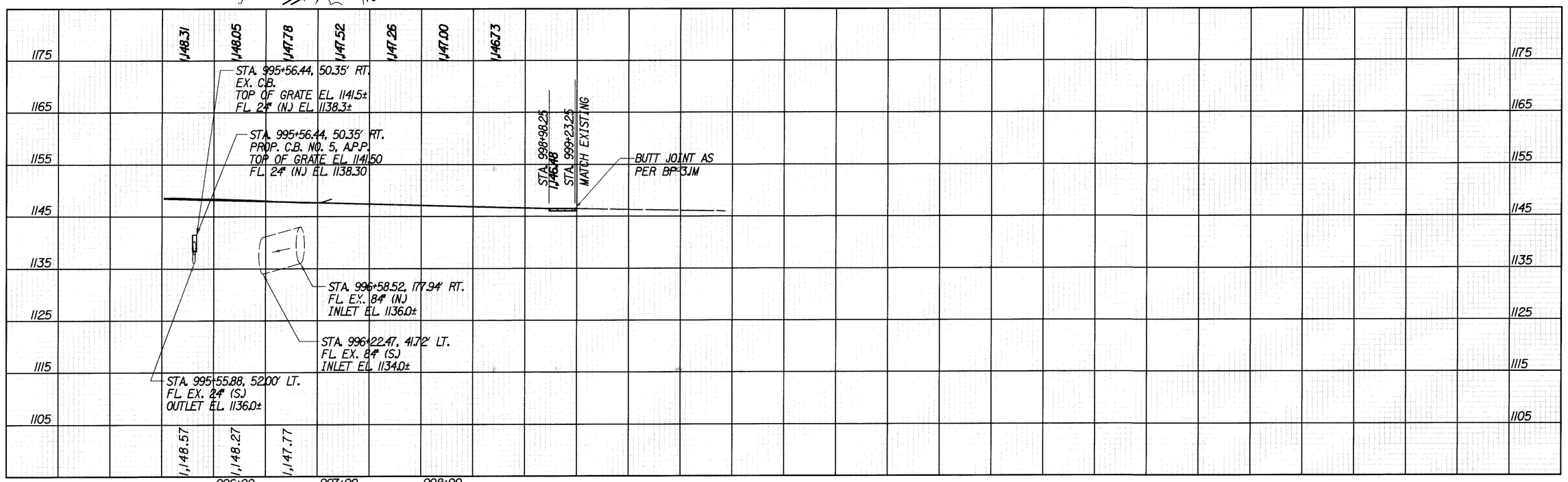

HORIZONTAL SCALE IN FEET
0 50 100

CALCULATED PS
CHECKED WJC

PLAN AND PROFILE
CONNECTION 'W' I.R. 271

MED - 71 - 15.78

428
940

DESIGN FILE : i:\pd_med_lr71\dgn\reitd\finaldrainage\271gp3.dgn
USERNAME : nvanderp
DATE : 06-DEC-1999
TIME : 11:00
271GP3.SGN

SEEDING		END AREA		VOLUME		CALCULATED	CHECKED
END WIDTH	SQ. YDS.	CUT	FILL	CUT	FILL	PS	PG
82	464	240	0	432	2		
85	217	227	1	186	1		
85	AHEAD	212	1	AHEAD			
	681 SHEET TOTAL			618	3		

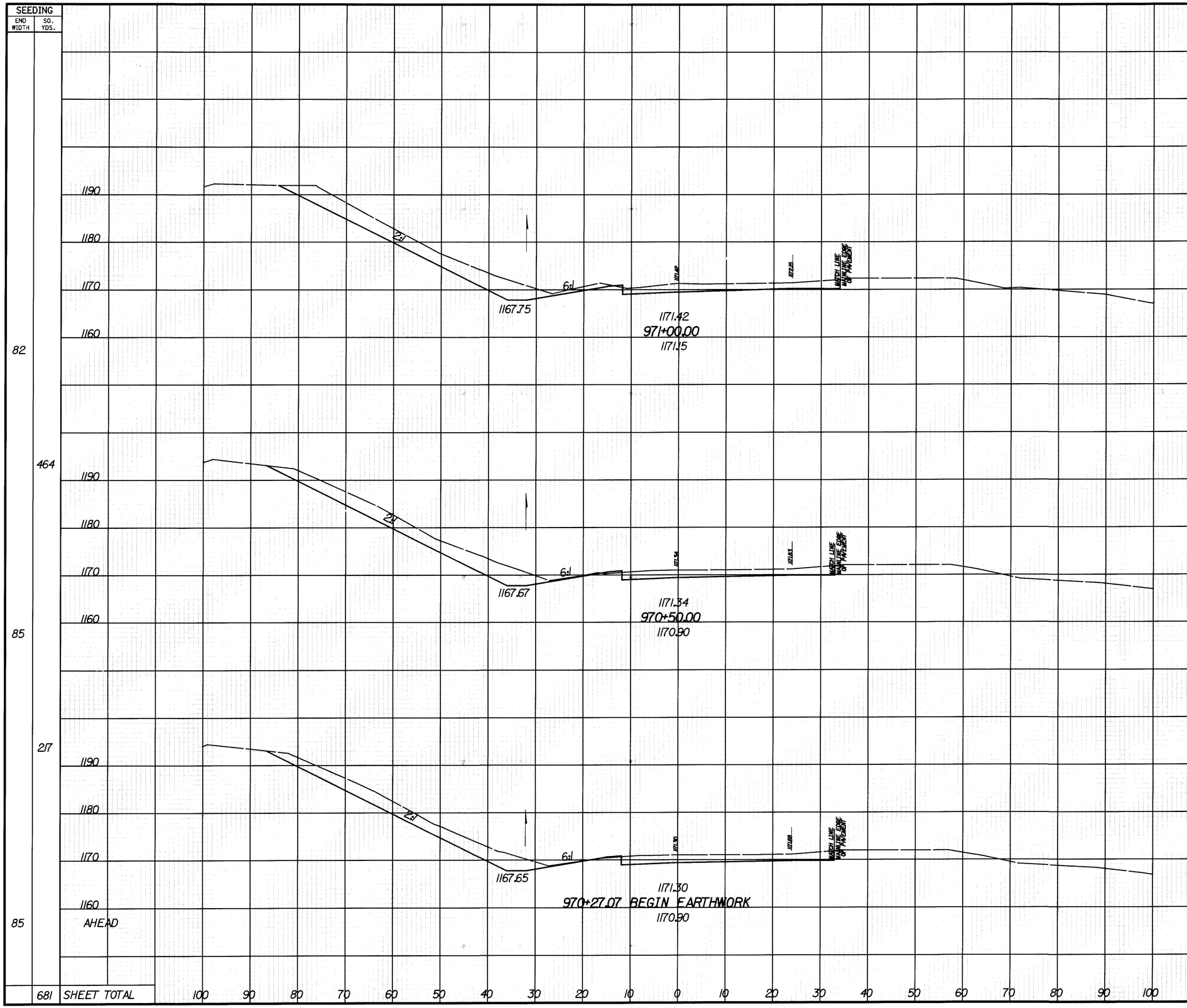

DESIGN FILE : i:\pd_med_ir71\dgn\reltd\finaldrainage\rconwsht.dgn
USERNAME : nvondere
DATE : 06-DEC-1999
TIME : 12:08

CROSS SECTIONS
CONNECTION 'W' I.R. 271

MED - 71 - 15.78

429
940

TE : 06-DEC-1999
ME : 12:14

DESIGN FILE : i:\pd_med_ir71\dgn\reltd\finaldrainage\rconwsht.dgn
USERNAME : nvondere

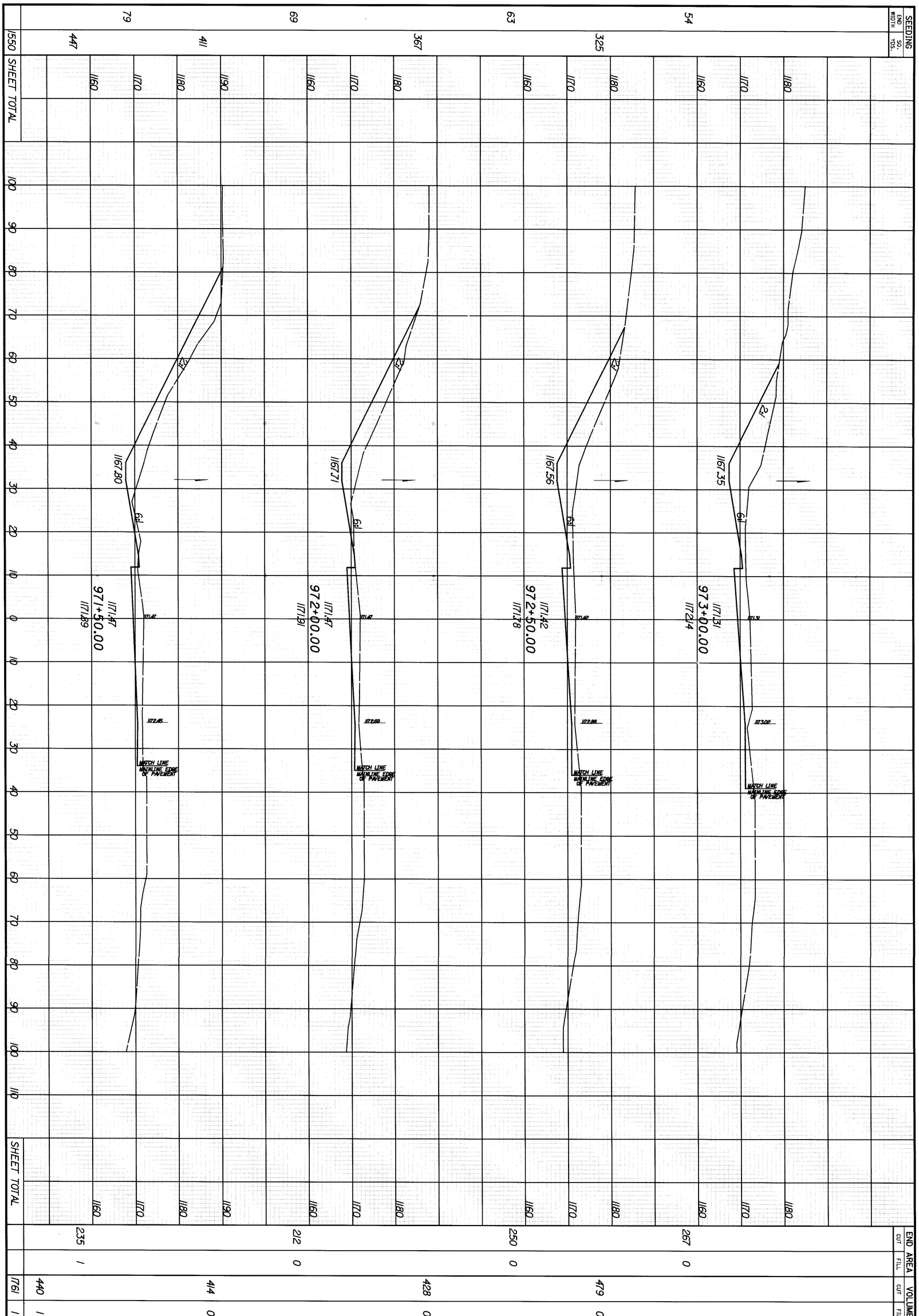

430
940

MED - 71 - 15.78

CROSS SECTIONS
CONNECTION 'W' I.R. 271

CALCULATED PS
CHECKED PG

SEEDING	
END WIDTH	SQ. YDS.
120	600
96	494
82	406
64	328
	1828

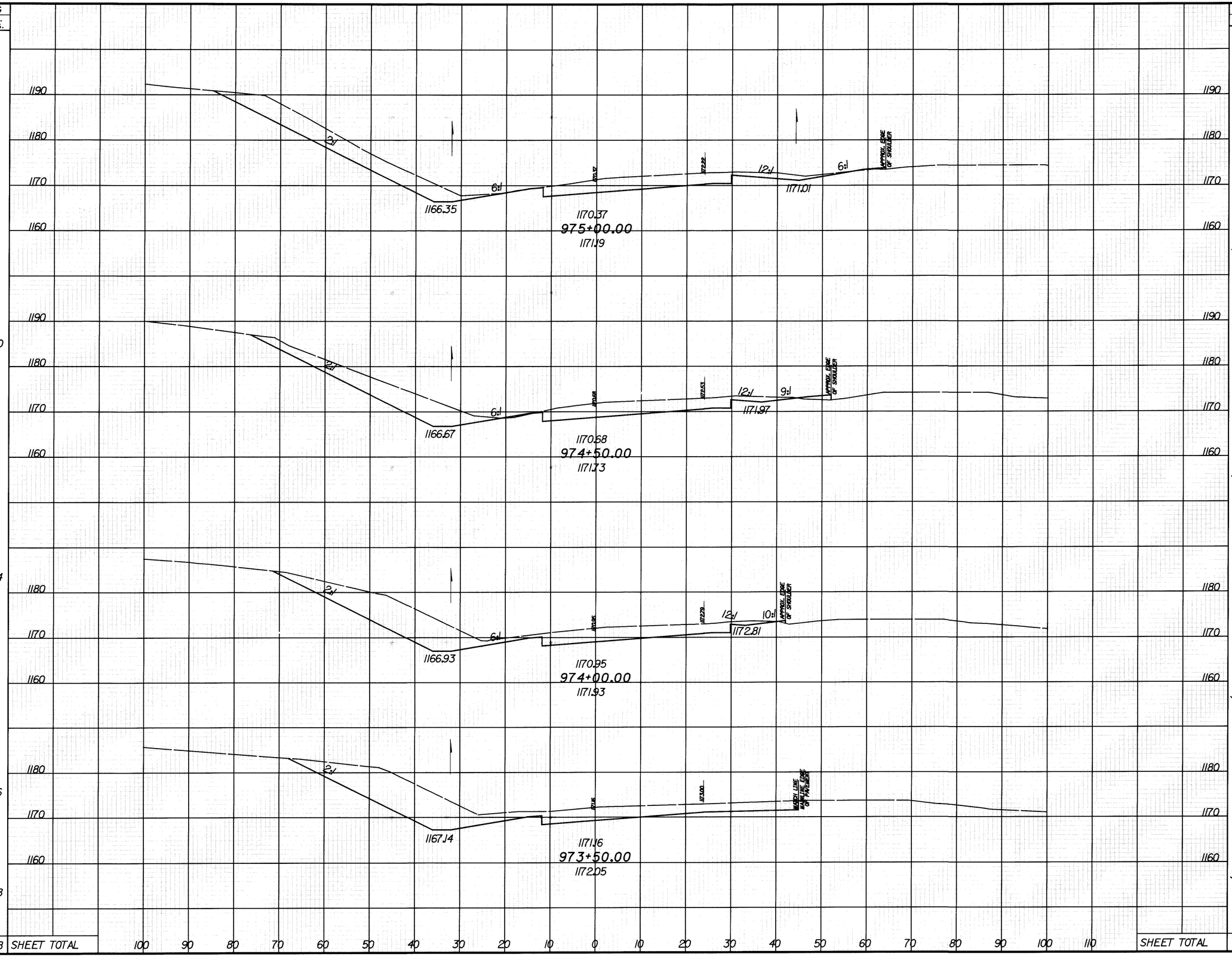

END AREA		VOLUME	
CUT	FILL	CUT	FILL
326	1	575	7
294	7	589	7
342	0	674	0
387	0	605	0
		1838	14
SHEET TOTAL			

CALCULATED PS
CHECKED PG

CROSS SECTIONS
CONNECTION 'W' I.R. 271

MED - 71 - 15.78

431
940

DESIGN FILE : i:\pd_med_ir71\dgn\reltd\finaldrainage\rconwsht.dgn
USERNAME : nvondere
DATE : 06-DEC-1999
TIME : 12:13

SEEDING END WIDTH	SEEDING SQ. YDS.	END AREA CUT	END AREA FILL	VOLUME CUT	VOLUME FILL
127	678	223	3	376	5
117	736	183	3	350	20
148	786	194	19	475	22
135	708	319	5	598	6
	2908 SHEET TOTAL			1799	53

CALCULATED PS
CHECKED PG

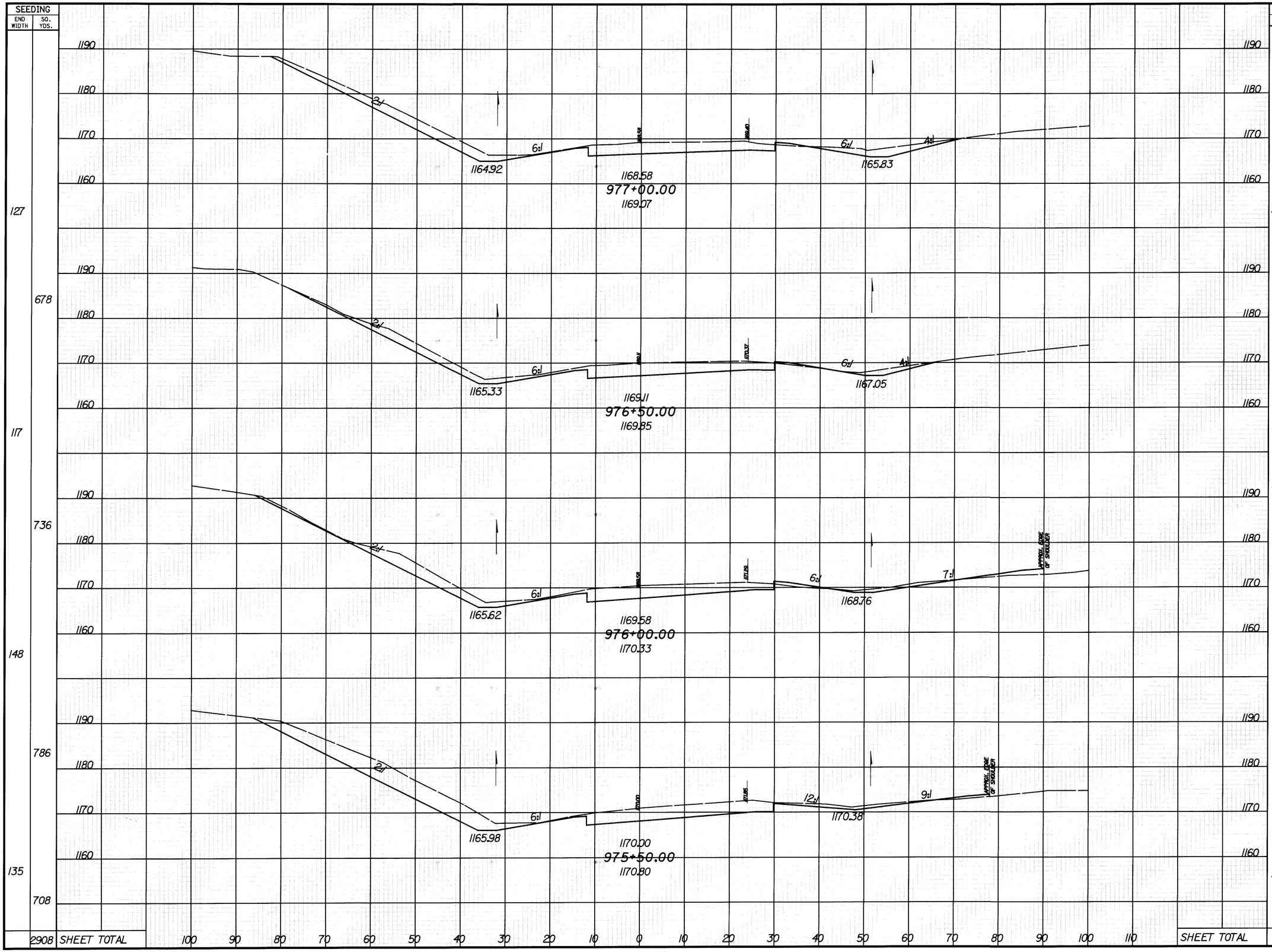

CROSS SECTIONS
CONNECTION 'W' I.R. 271

MED - 71 - 15.78

DESIGN FILE : i:\pd_med_ir71\dgn\reltd\finaldrainage\rconwsht.dgn
USERNAME : nvondere
DATE : 06-DEC-1999
TIME : 12:13

DATE : 06-DEC-1999
TIME : 12:13

DESIGN FILE : i:\pd_med_ir71\dgn\reltd\finaldrainage\rconwsht.dgn
USERNAME : nvondere

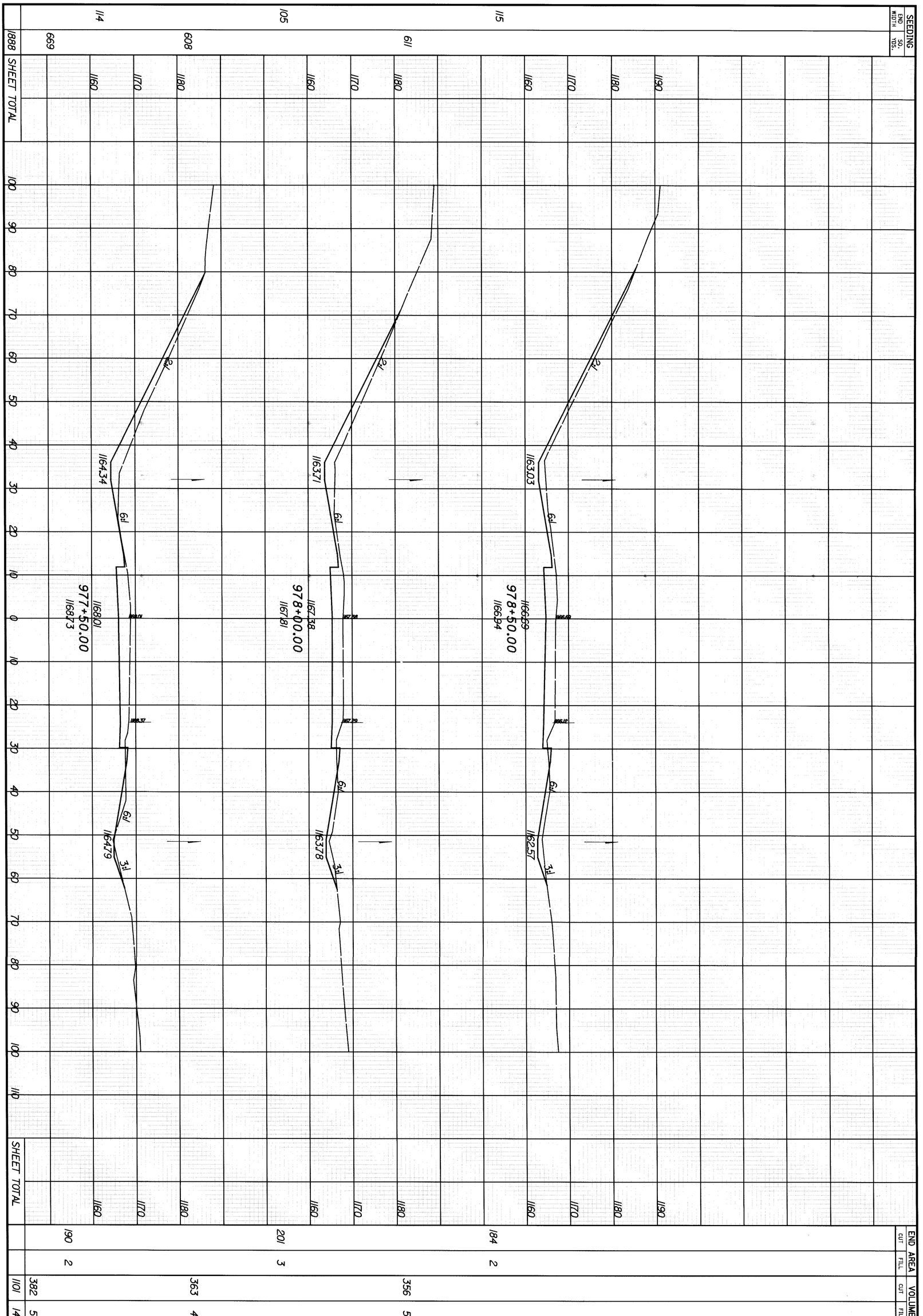

433
940

MED - 71 - 15.78

CROSS SECTIONS
CONNECTION 'W' I.R. 271

CALCULATED PS
CHECKED PG

ATE : 06-DEC-1999
IME : 12:12

DESIGN FILE : i:\pd_med_ir71\dgn\reltd\finaldrainage\rconwsht.dgn
USERNAME : nvondere

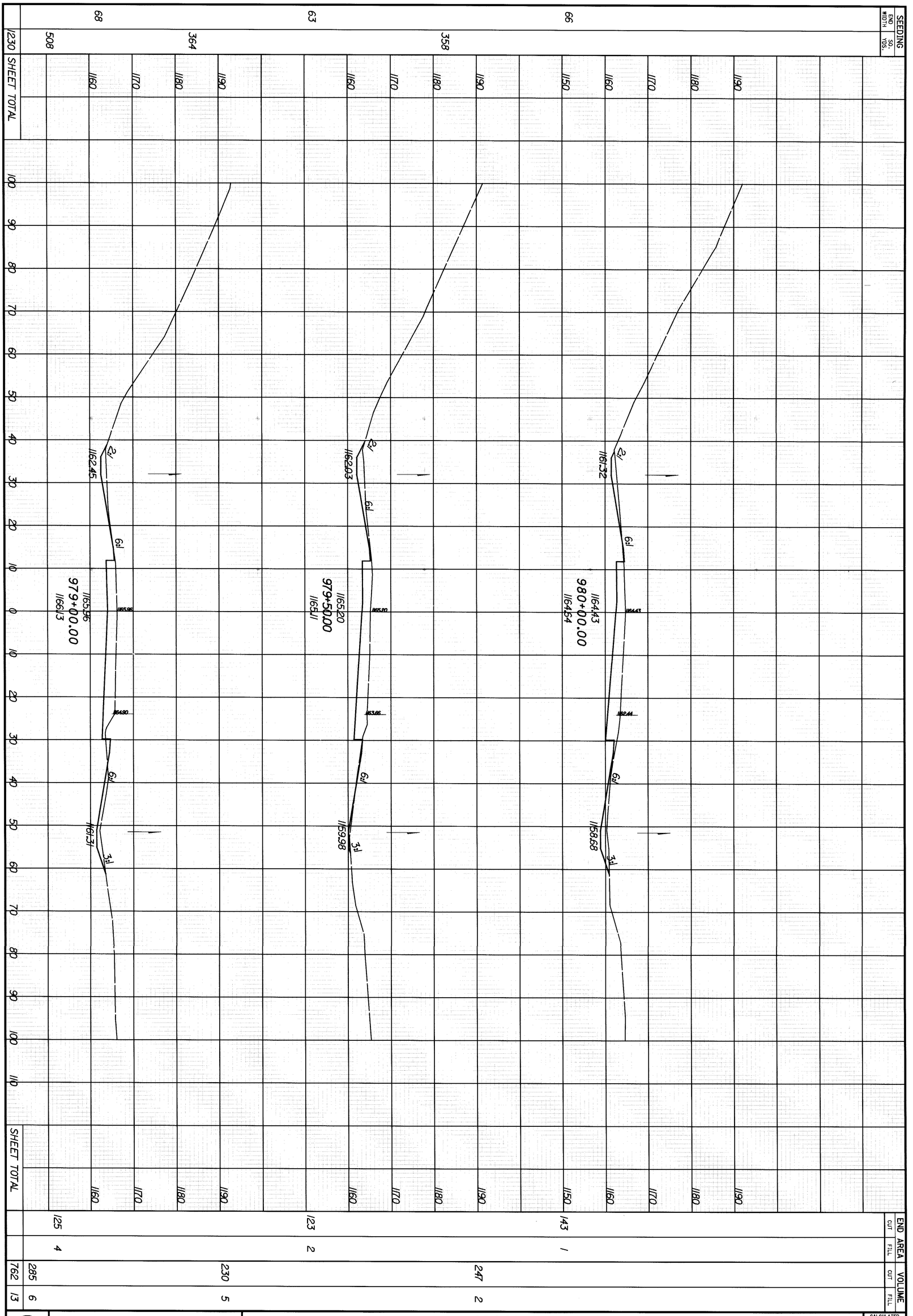

MED - 71 - 15.78

CROSS SECTIONS
CONNECTION 'W' I.R. 271

CALCULATED PS
CHECKED PG

SEEDING	
END WIDTH	SQ. YDS.
67	375
68	381
69	375
	1131

SHEET TOTAL

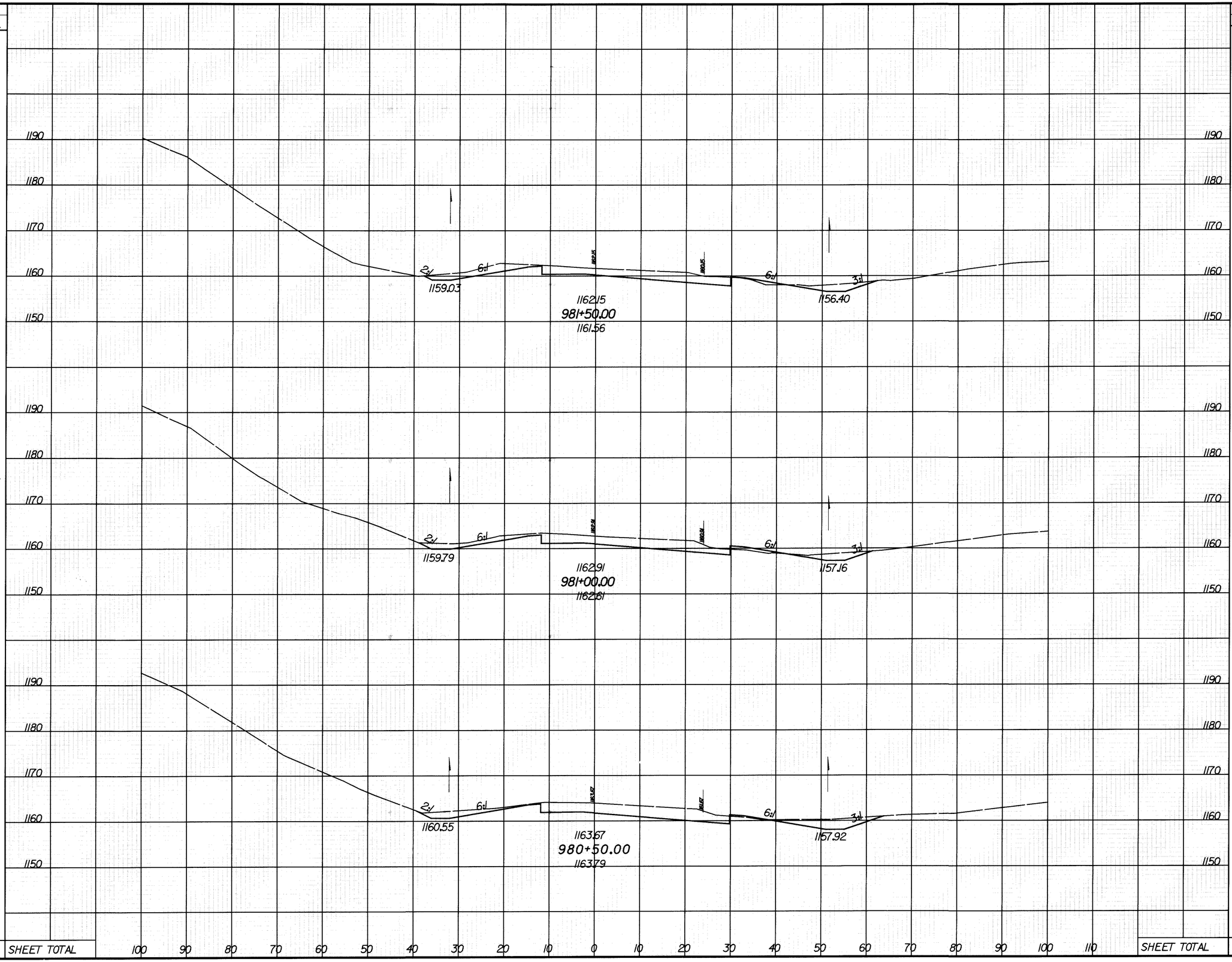

END AREA		VOLUME	
CUT	FILL	CUT	FILL
122	4		
		223	9
120	6		
		247	8
147	2		
		269	2
		739	19

SHEET TOTAL

CALCULATED PS
CHECKED PG

CROSS SECTIONS
CONNECTION 'W' I.R. 271

MED - 71 - 15.78

435
940

DESIGN FILE : i:\pd_med_ir71\dgn\reltd\finaldrainage\rconwsht.dgn
USERNAME : nvondere
DATE : 06-DEC-1999
TIME : 12:12

SEEDING		END AREA		VOLUME		CALCULATED PS	CHECKED PG
END WIDTH	SQ. YDS.	CUT	FILL	CUT	FILL		
77	414	130	11	246	19		
72	386	136	9	256	21		
67	372	140	14	242	16		
	1172 SHEET TOTAL			744	56		

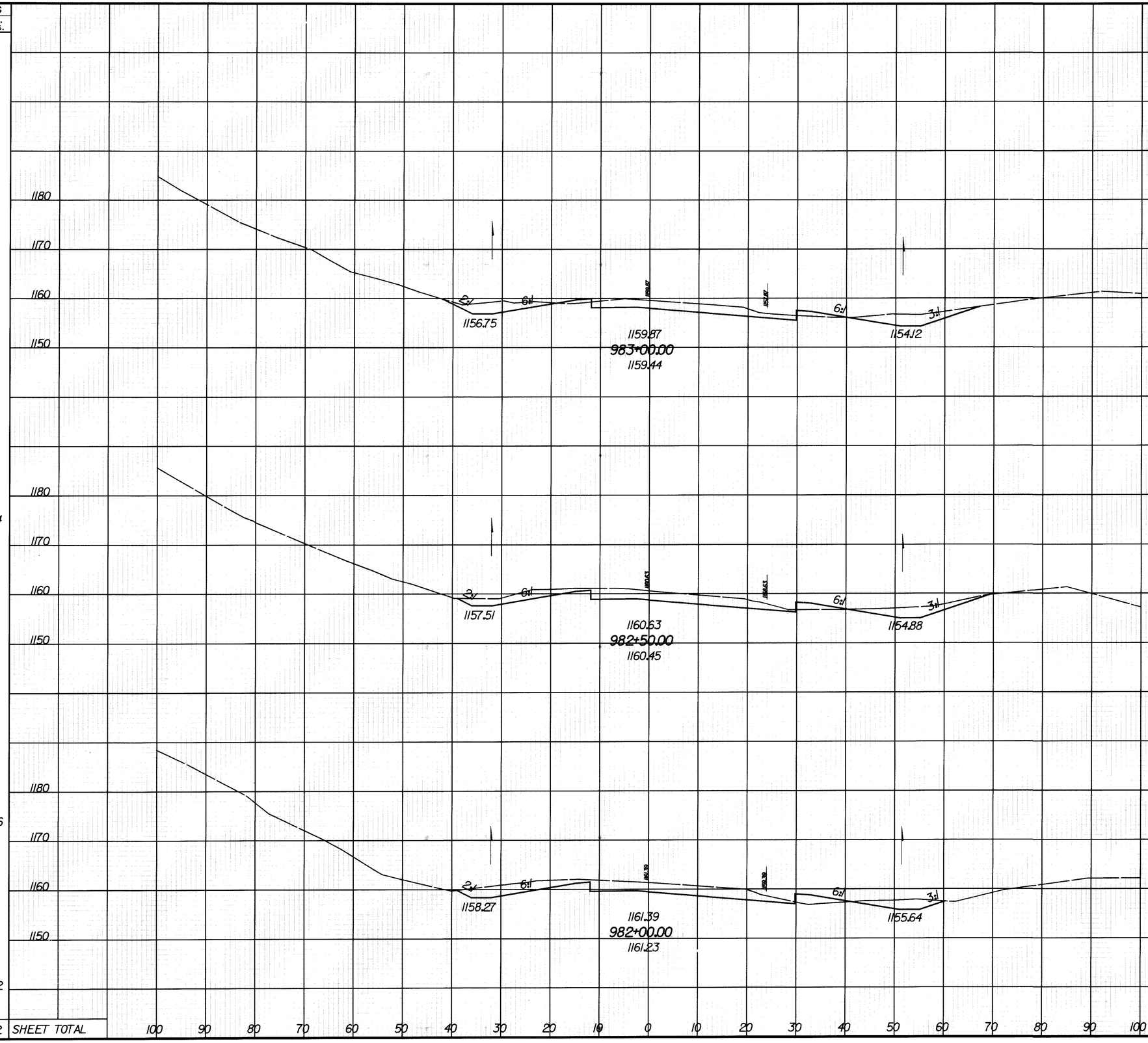

CROSS SECTIONS
CONNECTION 'W' I.R. 271

MED - 71 - 15.78

436
940

DESIGN FILE : i:\pd_med_1r71\dgn\reltd\finaldrainage\rconwsht.dgn
USERNAME : nvondere
DATE : 06-DEC-1999
TIME : 12:11

ATE : 06-DEC-1999 DESIGN FILE : i:\pd_med_ir71\dgn\reltd\finaldrainage\rconwsht.dgn
IME : 12:11 USERNAME : nvondere

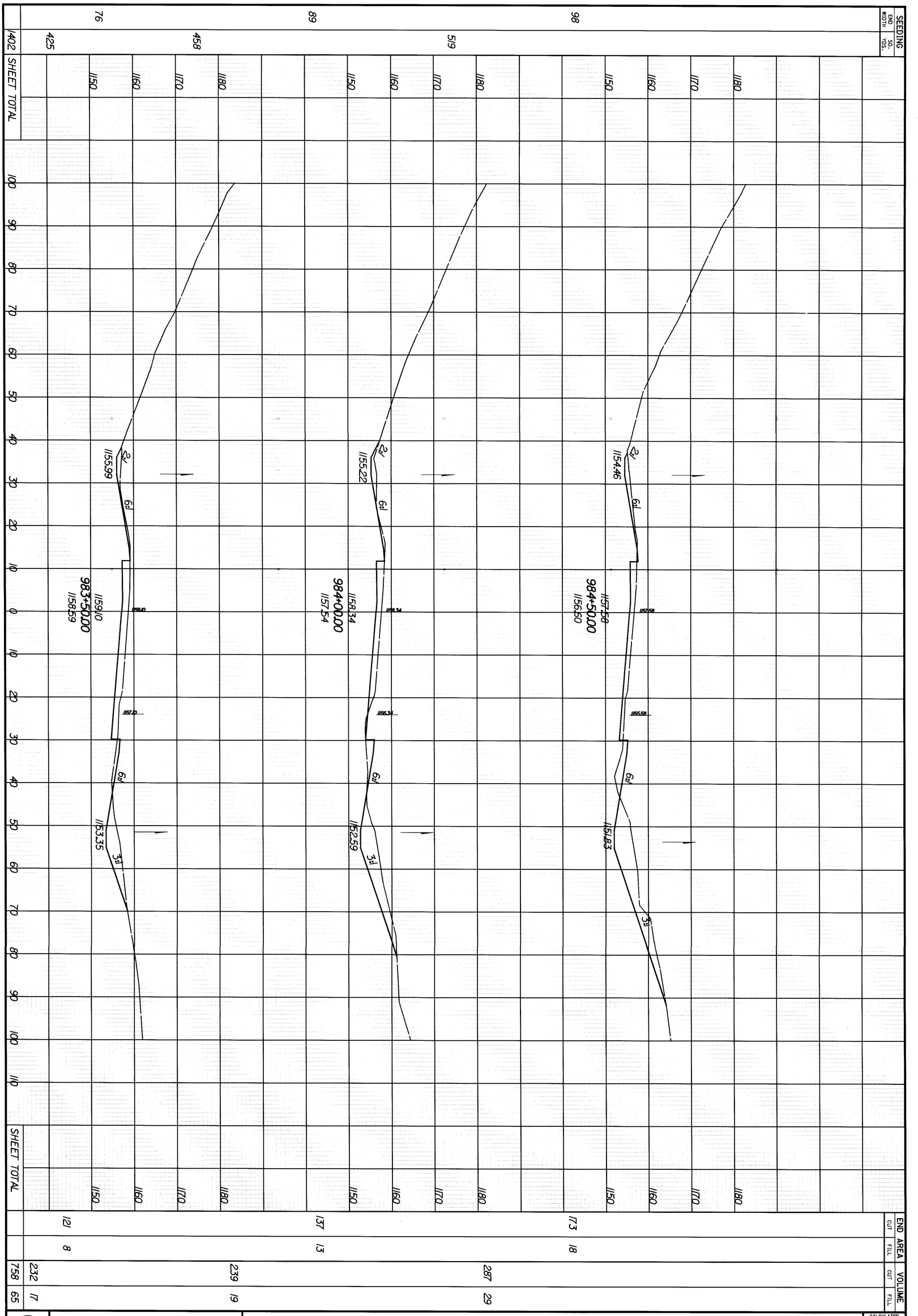

437
940

MED - 71 - 15.78

CROSS SECTIONS
CONNECTION 'W' I.R. 271

CALCULATED PS
CHECKED PG

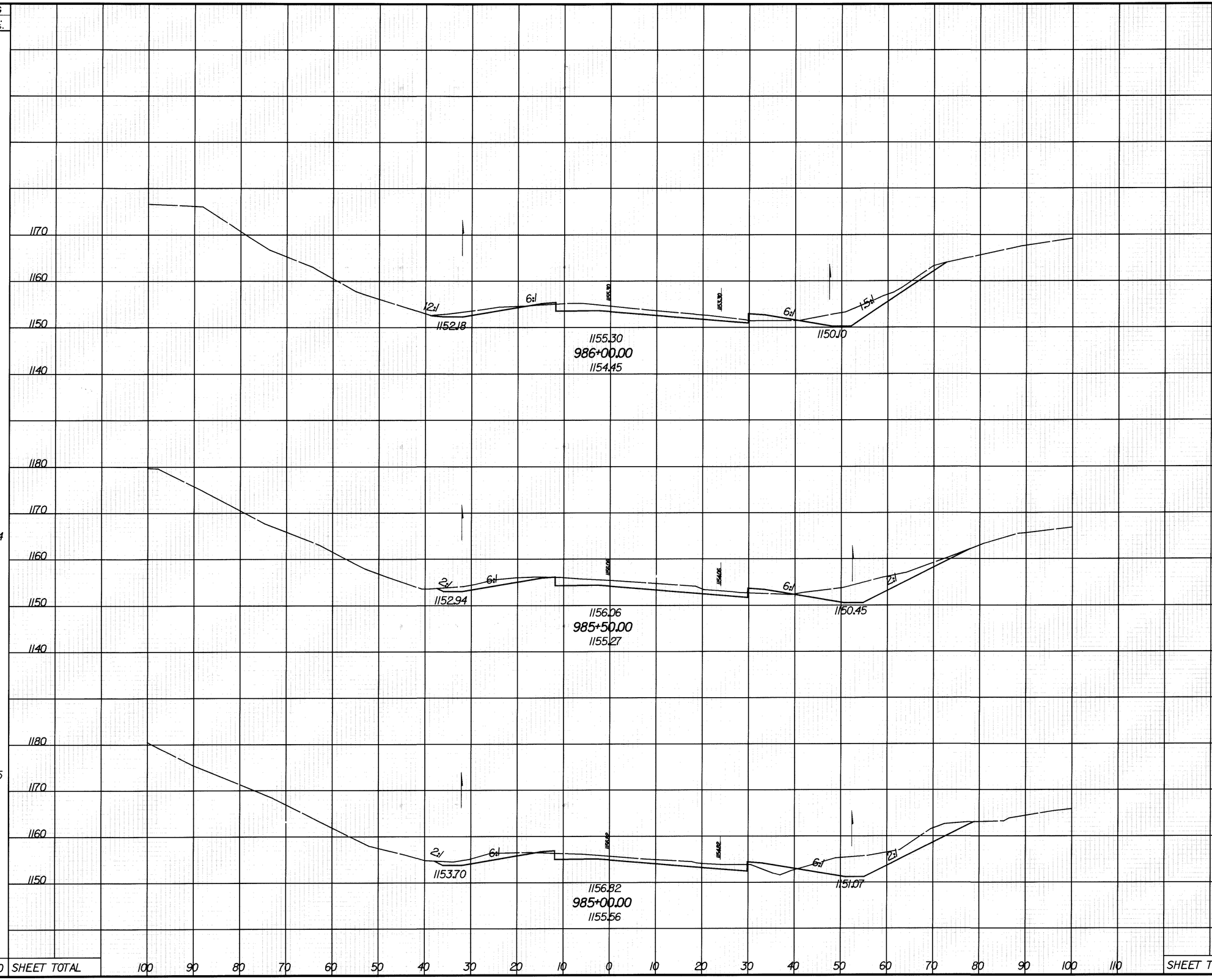

SEEDING END WIDTH	SEEDING SQ. YDS.	END AREA CUT	END AREA FILL	VOLUME CUT	VOLUME FILL
82		112	11		
				242	16
	464				
85		150	6		
				287	19
	475				
86					
	511	160	14		
				308	30
1450	SHEET TOTAL			837	65

CALCULATED PS
CHECKED PG

CROSS SECTIONS
CONNECTION 'W' I.R. 271

MED - 71 - 15.78

438/940

DESIGN FILE : i:\pd_med_ir71\dgn\reltd\finaldrainage\rconwsht.dgn
USERNAME : nvondere

DATE : 06-DEC-1999
TIME : 13:29

SEEDING	
END WIDTH	SQ. YDS.
47	
	325
70	
	419
81	
	453
1197	SHEET TOTAL

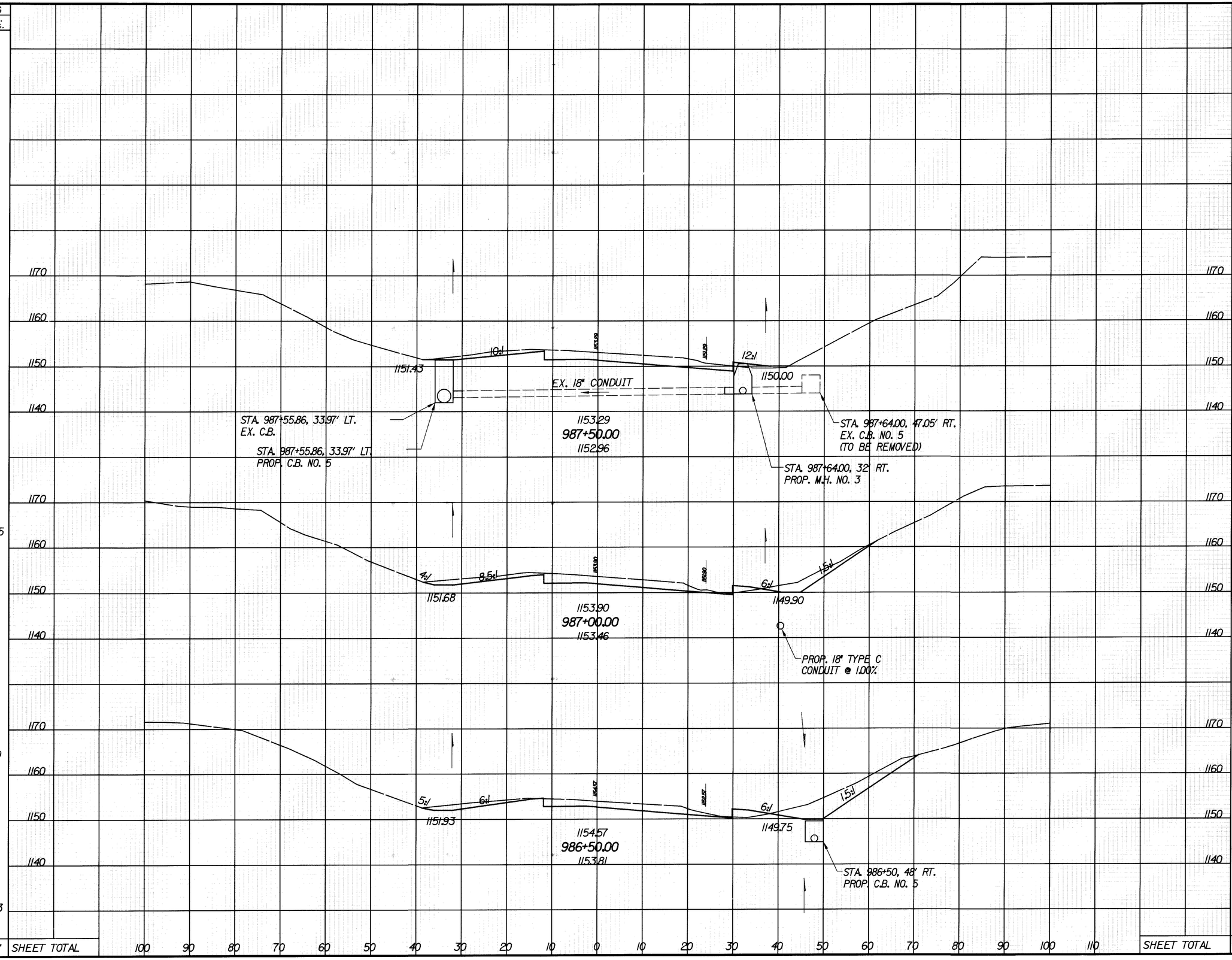

END AREA		VOLUME	
CUT	FILL	CUT	FILL
90	9		
112	6	187	14
151	10	244	15
		243	20
SHEET TOTAL		674	49

CALCULATED PS
CHECKED PG

CROSS SECTIONS
CONNECTION 'W' I.R. 271

MED - 71 - 15.78

439
940

DESIGN FILE : i:\pd_med_ir71\dgn\reltd\finaldrainage\rconwsht.dgn
USERNAME : nvondere
DATE : 06-DEC-1999
TIME : 13:29

SEEDING	
END WIDTH	SQ. YDS.
56	
350	
70	
342	
53	
278	
970	SHEET TOTAL

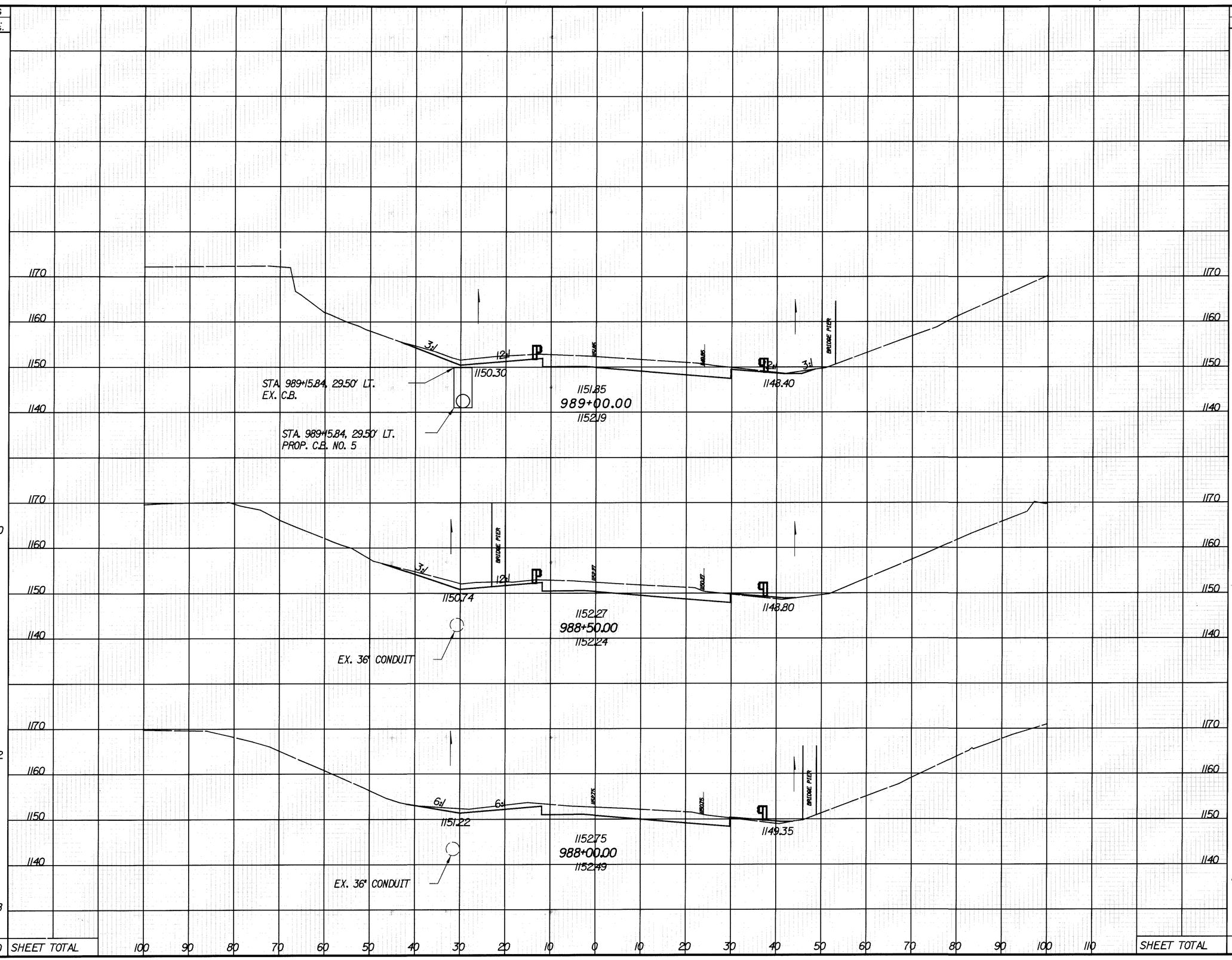

END AREA		VOLUME	
CUT	FILL	CUT	FILL
139	0		
240	4		
120	4		
209	9		
106	5		
181	14		
SHEET TOTAL		630	27

CALCULATED PS
CHECKED PG

CROSS SECTIONS
CONNECTION 'W' I.R. 271

MED - 71 - 15.78

440
940

DESIGN FILE : i:\pd_med_ir71\dgn\reltd\finaldrainage\rconwsht.dgn
USERNAME : nvondere
DATE : 06-DEC-1999
TIME : 13:28

SEEDING END WIDTH	SEEDING SQ. YDS.
70	339
52	
52	289
52	289
52	300
1217	SHEET TOTAL

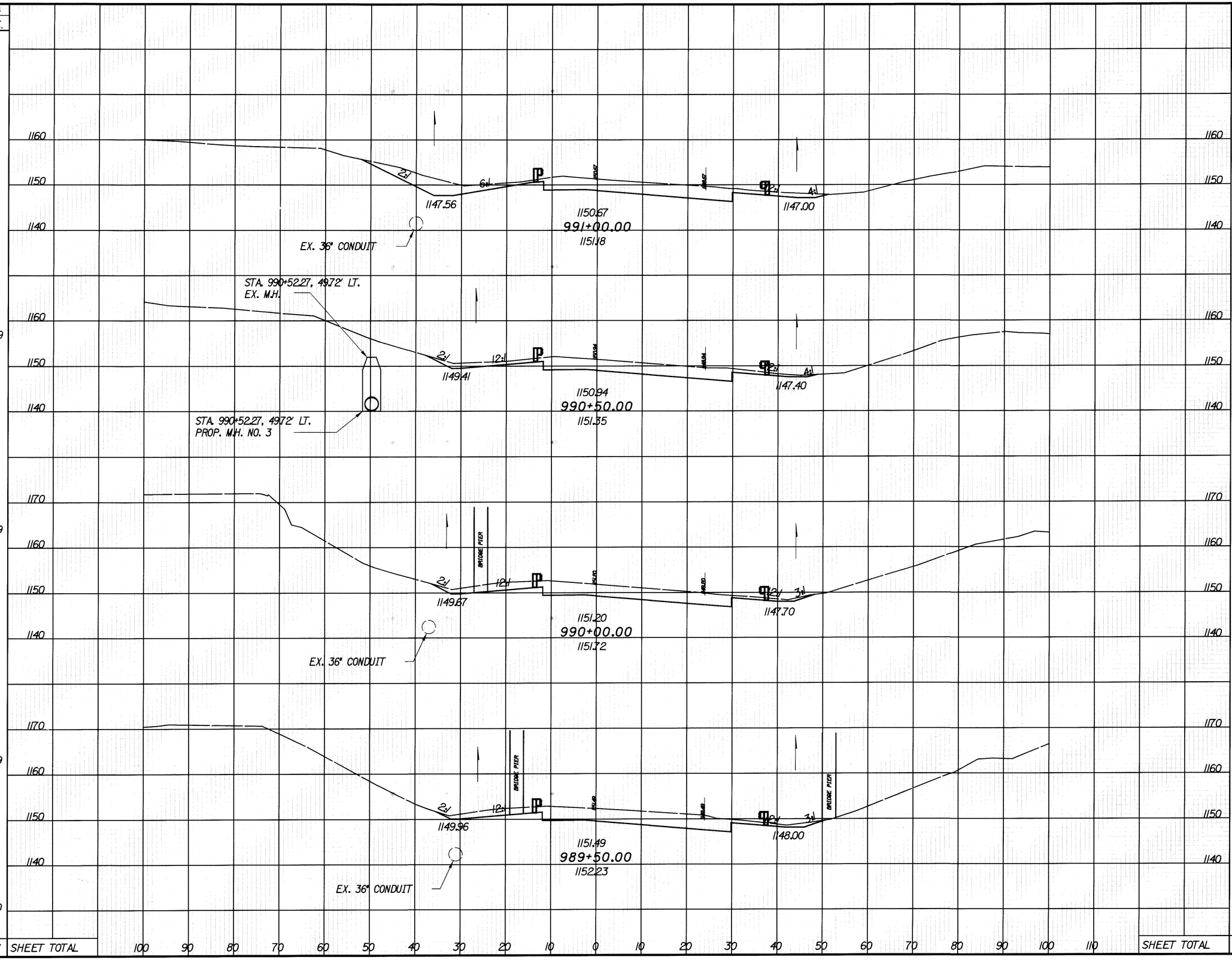

END AREA CUT	END AREA FILL	VOLUME CUT	VOLUME FILL
199	0		
		312	0
138	0		
		267	0
151	0		
		287	0
159	0		
		276	0
1142	0		

CALCULATED PS
CHECKED PG

CROSS SECTIONS
CONNECTION 'W' I.R. 271

MED - 71 - 15.78

441
940

DESIGN FILE : i:\pd_med_ir71\dgn\reltd\finaldrainage\rconwsht.dgn
USERNAME : nvondere
DATE : 06-DEC-1999
TIME : 13:28

SEEDING	
END WIDTH	SQ. YDS.
92	475
79	436
78	417
72	406
74	400
	2134 SHEET TOTAL

STA. 993+70.40, 32.10' LT.
EX. C.B.
1145.70
STA. 993+70.40, 32.10' LT.
PROP. C.B. NO. 5
1149.36
993+50.00
1149.87
1145.99
EX. 36" CONDUIT
1149.62
993+00.00
1150.20
1146.48
EX. 36" CONDUIT
1149.89
992+50.00
1150.50
1147.01
EX. 36" CONDUIT
1150.15
992+00.00
1150.59
1147.29
EX. 36" CONDUIT
1150.41
991+50.00
1151.00
1144.50
1145.00
1145.50
1146.00
1146.50

END AREA		VOLUME	
CUT	FILL	CUT	FILL
169	1		
193	1	335	2
215	0	378	1
205	0	389	0
221	0	394	0
		389	0
SHEET TOTAL		1885	3

CALCULATED PS
CHECKED PG

CROSS SECTIONS
CONNECTION 'W' I.R. 271

MED - 71 - 15.78

442
940

DESIGN FILE : i:\pd_med_ir71\dgn\reltd\finaldrainage\rconwsht.dgn
USERNAME : nvondere
DATE : 06-DEC-1999
TIME : 12:10

SEEDING				END AREA		VOLUME		
END WIDTH	SQ. YDS.			CUT	FILL	CUT	FILL	CALCULATED PS / CHECKED PG
57	325	STA. 995+55.88, 52.00 LT. F.L. EX. 24" (SJ) OUTLET	STA. 995+56.44, 50.35' RT. PROP. C.B. NO. 5 EX. 24" CONDUIT 1148.05 996+00.00 1148.27 STA. 995+56.44, 50.35' RT. EX. C.B.	116	4	229	4	
60	336		1148.31 995+50.00 1148.57	131	0	242	1	
61	350		1148.57 995+00.00 1148.60 1143.98	130	1	249	1	
65	367	STA. 994+48.78, 57.13 LT. F.L. EX. 36" OUTLET EL. 1137.70	1148.84 994+50.00 1149.09 1144.08	139	0	258	3	
67	442	EX. 36" CONDUIT	1149.10 994+00.00 1149.67 1144.18	140	3	286	4	
	1820	SHEET TOTAL				1264	13	

CROSS SECTIONS
CONNECTION 'W' I.R. 271

MED - 71 - 15.78

443
940

DESIGN FILE : i:\pd_med_ir71\dgn\reltd\finaldrainage\rconwsht.dgn
USERNAME : nvondere
DATE : 06-DEC-1999
TIME : 12:09

SEEDING END WIDTH	SEEDING SQ. YDS.	END AREA CUT	END AREA FILL	VOLUME CUT	VOLUME FILL
52	242	87	3	162	5
35	214	88	3	160	6
42	261	85	4	160	7
52	303	88	4	188	8
	1020 SHEET TOTAL			670	26

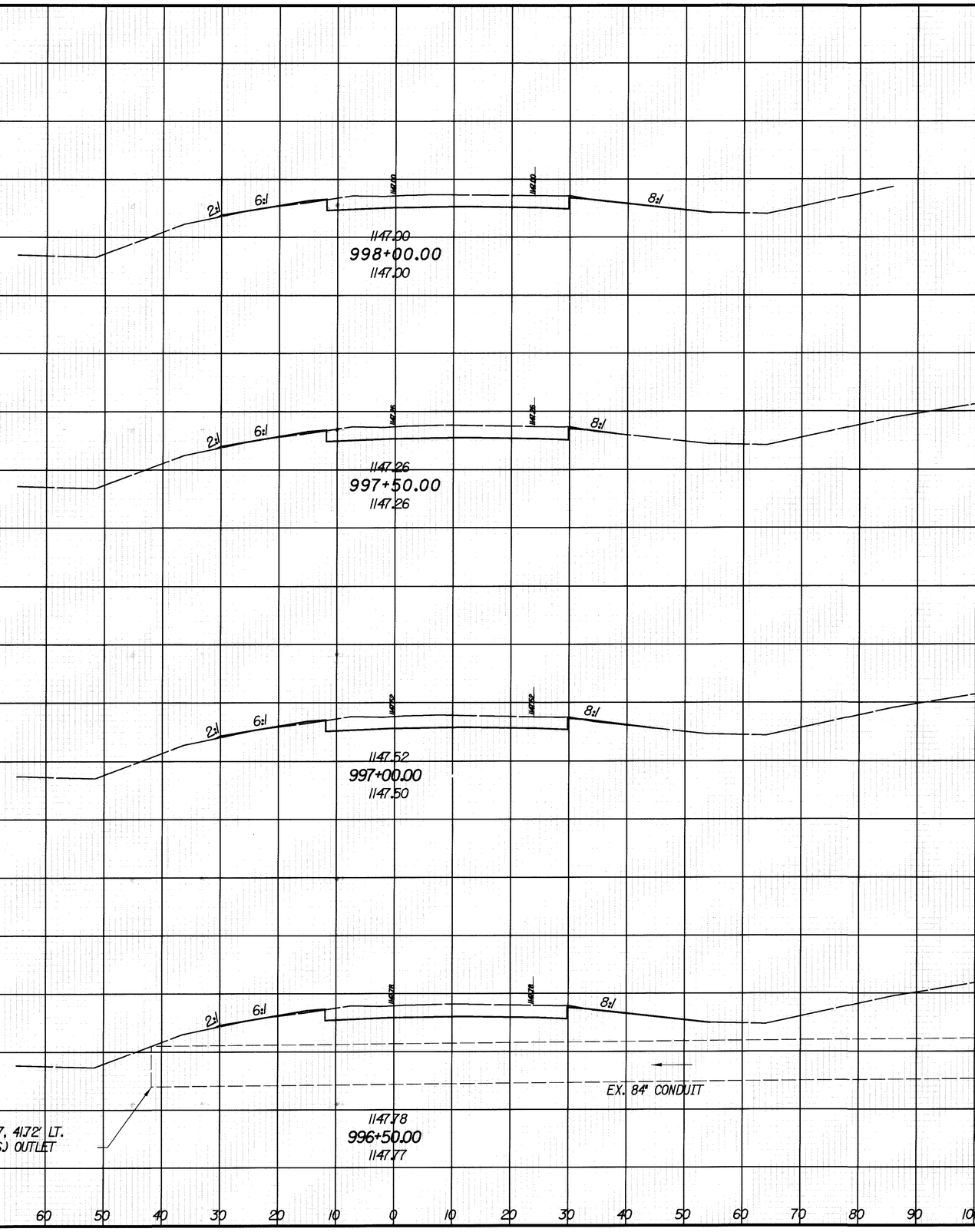

CALCULATED PS
CHECKED PG

CROSS SECTIONS
CONNECTION 'W' I.R. 271

MED - 71 - 15.78

444
940

DATE : 06-DEC-1999
TIME : 12:09
DESIGN FILE : i:\pd_med_ir71\dgn\reltd\finaldrainage\rconwsht.dgn
USERNAME : nvondere

SEEDING END WIDTH	SEEDING SQ. YDS.		END AREA CUT	END AREA FILL	VOLUME CUT	VOLUME FILL
	24186	TOTAL I.R. 271 'W' CONNECTION CARRIED TO THE SUMMARY. SEE SHEET NO. ___			10756	434
					-6783	
		TOTALS CARRIED TO THE SUMMARY. SEE SHEET NO. ___			17539	434
		DEDUCT FOR 202 PAVEMENT REMOVAL				
		TOTAL I.R. 271 'W' CONNECTION				
4		STA. 999+25 BACK	0	0		
		999+25.00 END WORK				
		999+23.25 MATCH EXISTING & END EARTHWORK				
	61				0	1
38		1146.48 998+98.25 END NEW PAVEMENT 1146.4	AHEAD 0	3		
			BACK 86	3		
	244				155	6
50		1146.73 998+50.00 1146.73	88	3		
	283					
	588	SHEET TOTAL			162	6
					317	13

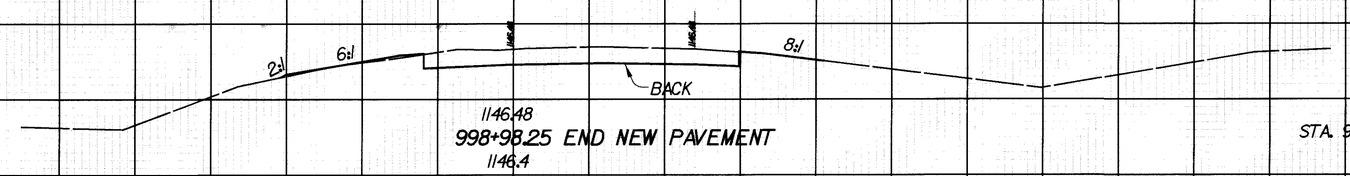

CALCULATED PS
CHECKED PG

CROSS SECTIONS
CONNECTION 'W' I.R. 271

MED - 71 - 15.78

445
940

DESIGN FILE : i:\pd_med_ir71\dgn\reltd\finaldrainage\rconwsht.dgn
USERNAME : nvondere
DATE : 06-DEC-1999
TIME : 12:27

DATE : 06-DEC-1999
TIME : 11:24
DESIGN FILE : I:\pd_med_lr71\dgn\pavement details\lr271conn.dgn
USERNAME : nvondere

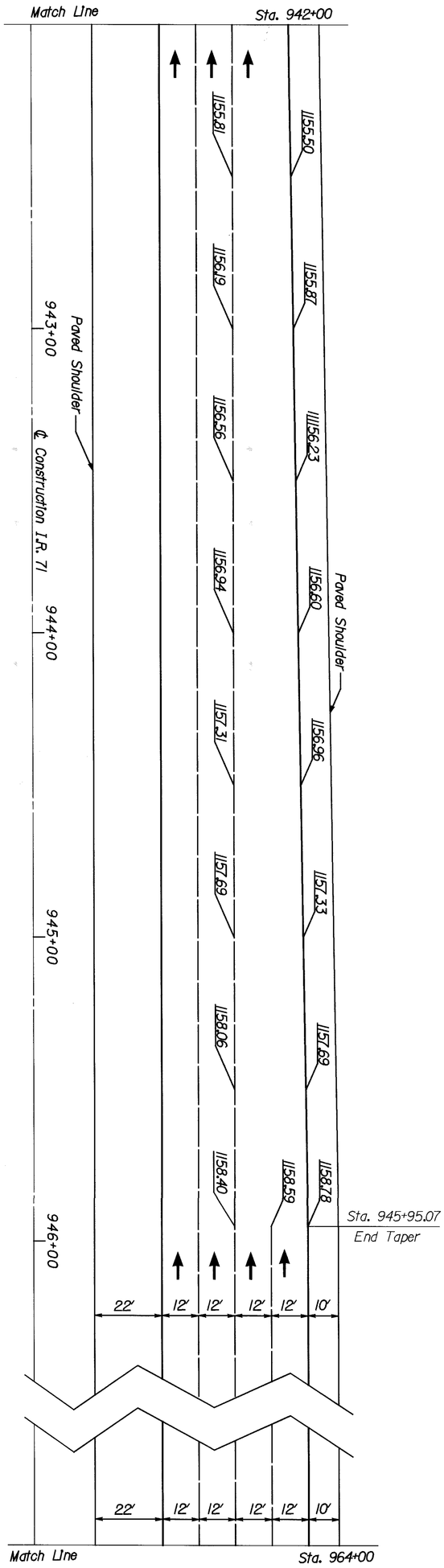

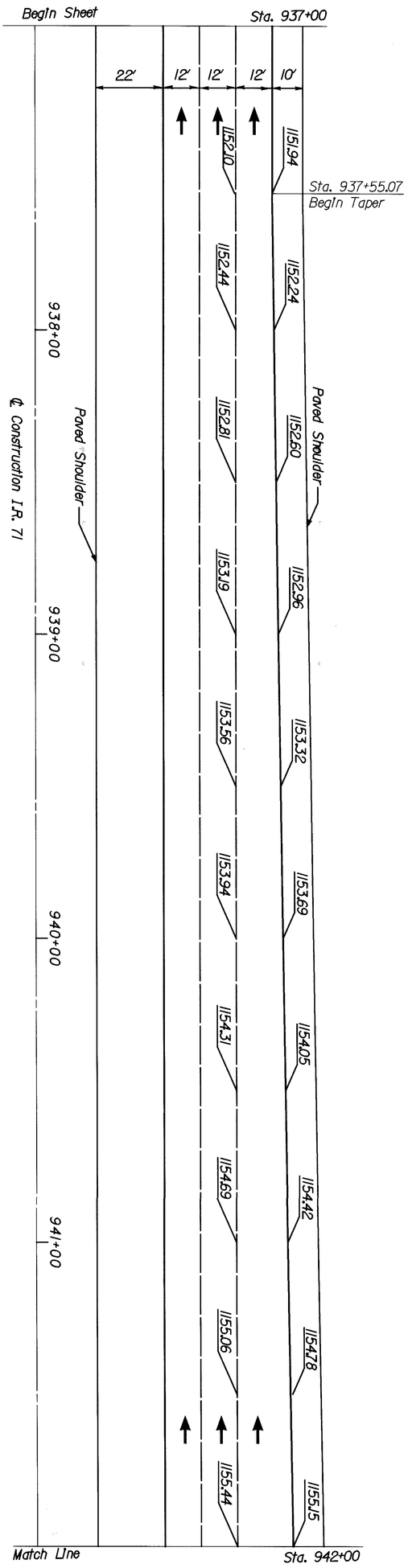

940 / 446	MED-71-15.78	PAVEMENT DETAIL - I. R. 271 CONNECTOR W Sta. 937+00 to Sta. 964+00	CALCULATED DJV CHECKED JWR	0 20 40 HORIZONTAL SCALE IN FEET

DATE : 06-DEC-1999
TIME : 11:24
DESIGN FILE : i:\pd_med_ir71\dgn\pavement details\ir271conn.dgn
USERNAME : nvondere

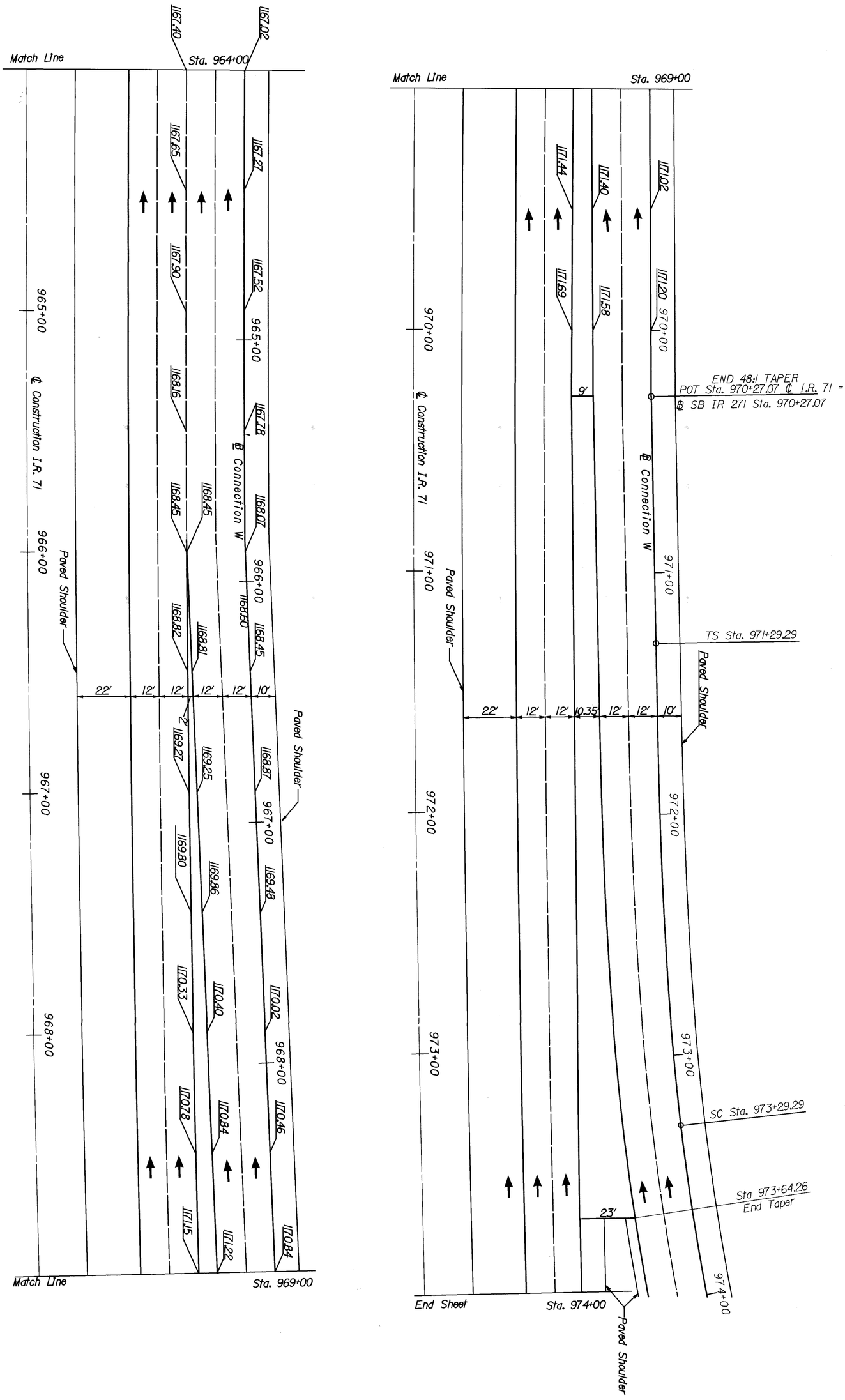

447 / 940	MED-71-15.78	PAVEMENT DETAIL - I. R. 271 CONNECTOR W Sta. 964+00 to Sta. 970+00	CALCULATED DJV CHECKED JWR	0 20 10 40 HORIZONTAL SCALE IN FEET

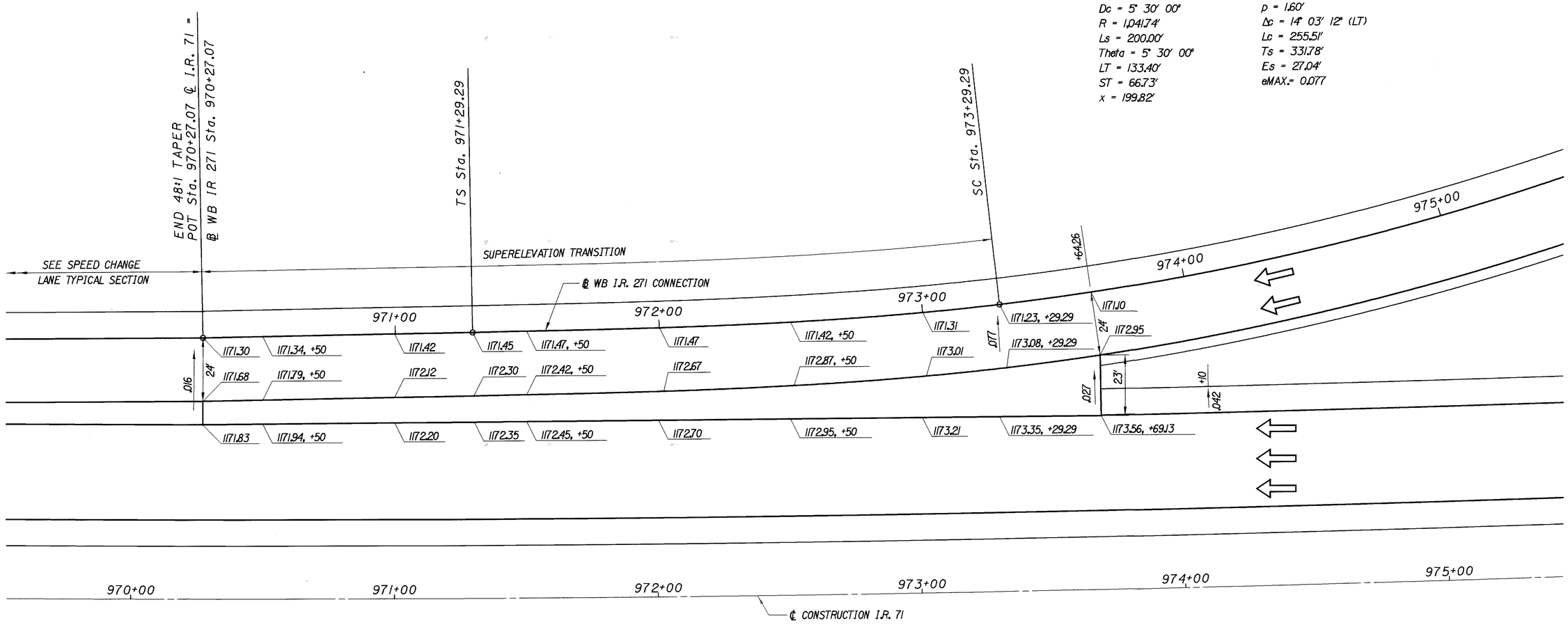

℄ CONSTRUCTION I.R. 71 CURVE DATA

P.I. Sta = 984+41.65
Δ = 26° 45' 35" (LT)
Dc = 0° 22' 00"
R = 15,626.07'
T = 3,716.85
L = 7,298.08'
E = 435.97'

NOTE:

CROSS SLOPES SHOWN ON THE RAMPS THROUGH THE SUPERELEVATION TRANSITION AREAS REPRESENT THE CROSS SLOPE NORMAL TO THE RAMP ℄

HORIZONTAL SCALE IN FEET
0 10 20 40

CALCULATED PO
CHECKED PS

PAVEMENT DETAIL
CONNECTION "W" I.R. 271

MED-71-5.78

448
940

DESIGN FILE : i:\pd_med.ir71\dgn\r-eltd\finaldrainage\7885gl.dgn
USERNAME : jrogers
DATE : 07-DEC-1999
TIME : 07:23
7885GL.DGN 11/3/99 SAM

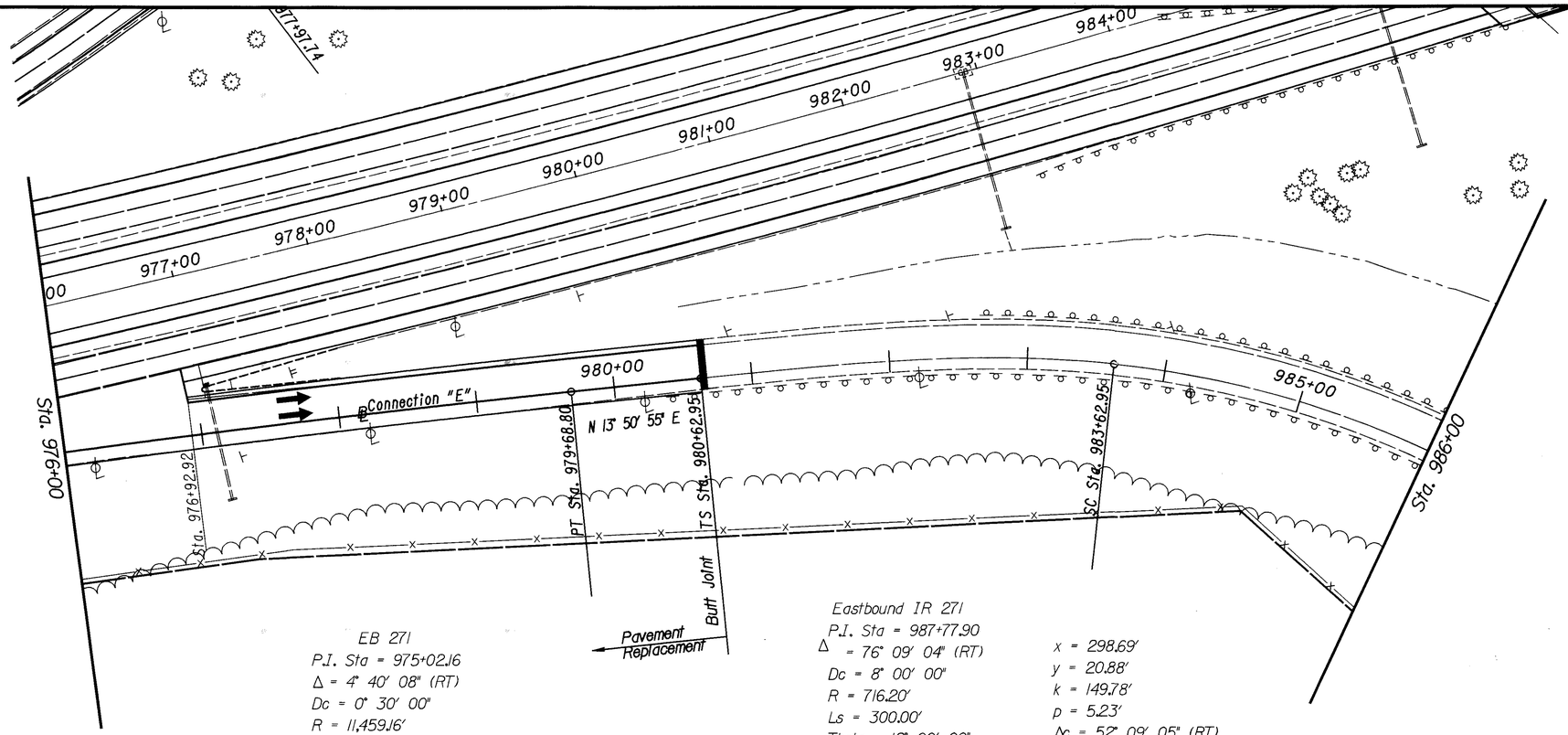

IR 71 Curve Data
P.I. Sta = 984+41.65
Δ = 26° 45' 35" (LT)
Dc = 0° 22' 00"
R = 15,626.07'
T = 3,716.85'
L = 7,298.08'
E = 435.97'

Cross References	
Guardrail	75-76
Drainage	77-96
Underdrains	97-128
Signing	561-606
Lighting	607-643
Tree Planting	647-663
Noise Walls	664-679

EB 271
P.I. Sta = 975+02.16
Δ = 4° 40' 08" (RT)
Dc = 0° 30' 00"
R = 11,459.16'
T = 467.15'
L = 933.79'
E = 9.52'

Eastbound IR 271
P.I. Sta = 987+77.90
Δ = 76° 09' 04" (RT)
Dc = 8° 00' 00"
R = 716.20'
Ls = 300.00'
Theta = 12° 00' 00"
LT = 200.46'
ST = 100.42'
x = 298.69'
y = 20.88'
k = 149.78'
p = 5.23'
Δc = 52° 09' 05" (RT)
Lc = 651.89'
Ts = 714.96'
Es = 200.25'

B.M. #1, Sta. 990+93.07
O.D.O.T. Disc In Headwall,
Stamped Elev. 1149.65

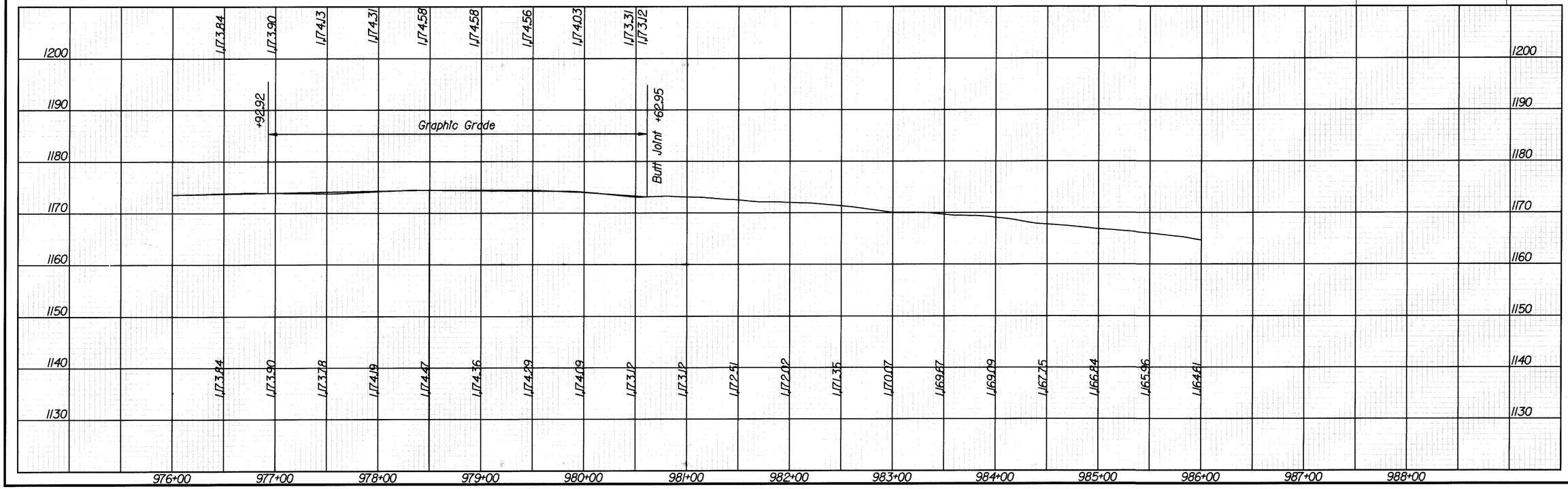

HORIZONTAL SCALE IN FEET
0

CALCULATED
CHECKED

PLAN AND PROFILE
I.R. 271 CONNECTOR "E"

MED-71-15.78

449
940

DESIGN FILE : i:\pd_med_ir71\dgn\planprofile\271eppl.dgn
USERNAME : nvonderle
DATE : 06-DEC-1999
TIME : 12:32

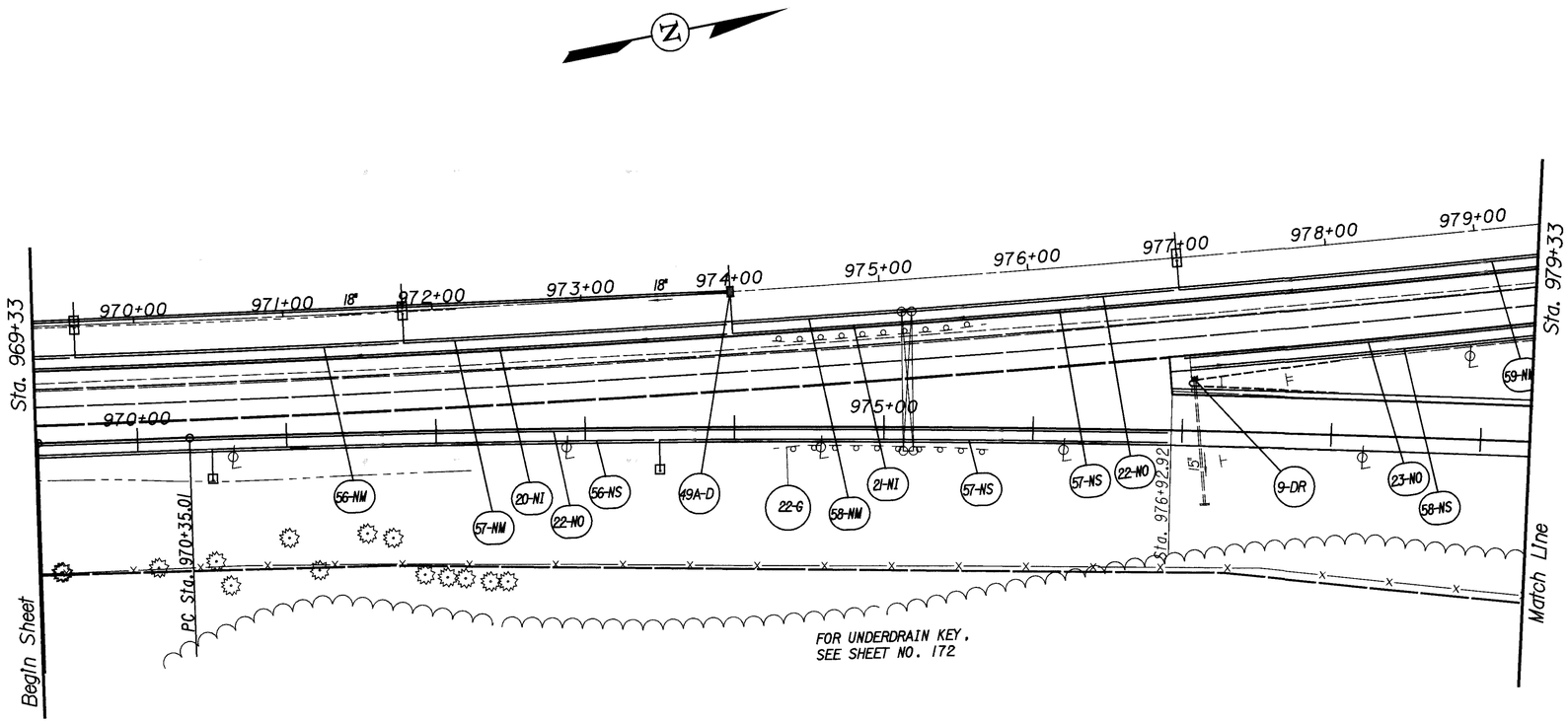

I.R.71
P. I. Sta. = 984+41.65
Δ = 26° 45′ 35″ (LT)
Dc = 0° 22′ 00″
R = 15,626.07′
T = 3,716.85′
L = 7298.08′
E = 435.97′

E.B. I.R. 271
P. I. Sta. = 975+02.16
Δ = 4° 40′ 08″ (RT)
Dc = 0° 30′ 00″
R = 11,459.16′
T = 467.15′
L = 933.79′
E = 9.52′

Cross References	
Guardrail	75-76
Drainage	77-96
Underdrains	97-128
Signing	561-606
Lighting	607-643
Tree Planting	647-663
Noise Walls	664-679

DATE : 06-DEC-1999
TIME : 12:38
DESIGN FILE : i:\pd_med_ir71\dgn\planprofile\ir271ebl.dgn
USERNAME : nvondere

HORIZONTAL SCALE IN FEET
0 50 100

CALCULATED
CHECKED

IR 271 EASTBOUND
STA. 969+33 TO STA 979+33

MED - 71 - 15.78

450
940

Eastbound I.R. 271
P. I. Sta. = 987+77.90
△ = 76° 09′ 04" (RT)
Dc = 8° 00′ 00"
R = 716.20′
Ls = 300.00′
Theta = 12° 00′ 00"
LT = 200.46′
ST = 100.42′
x = 298.69′
y = 20.88′
k = 149.78′
p = 5.23′
△c = 52° 09′ 05" (RT)
Lc = 651.89′
Ts = 714.96′
Es = 200.25′

Connector W
P. I. Sta. = 988+87.94
△ = 107° 24′ 37" (RT)
Dc = 8° 00′ 00"
R = 716.20′
Ls = 300.00′
Theta = 12° 00′ 00"
LT = 200.46′
ST = 100.42′
x = 298.69′
y = 20.88′
k = 149.78′
p = 5.23′
△c = 83° 24′ 37" (RT)
Lc = 1,042.63′
Ts = 1,132.07′
Es = 502.55′

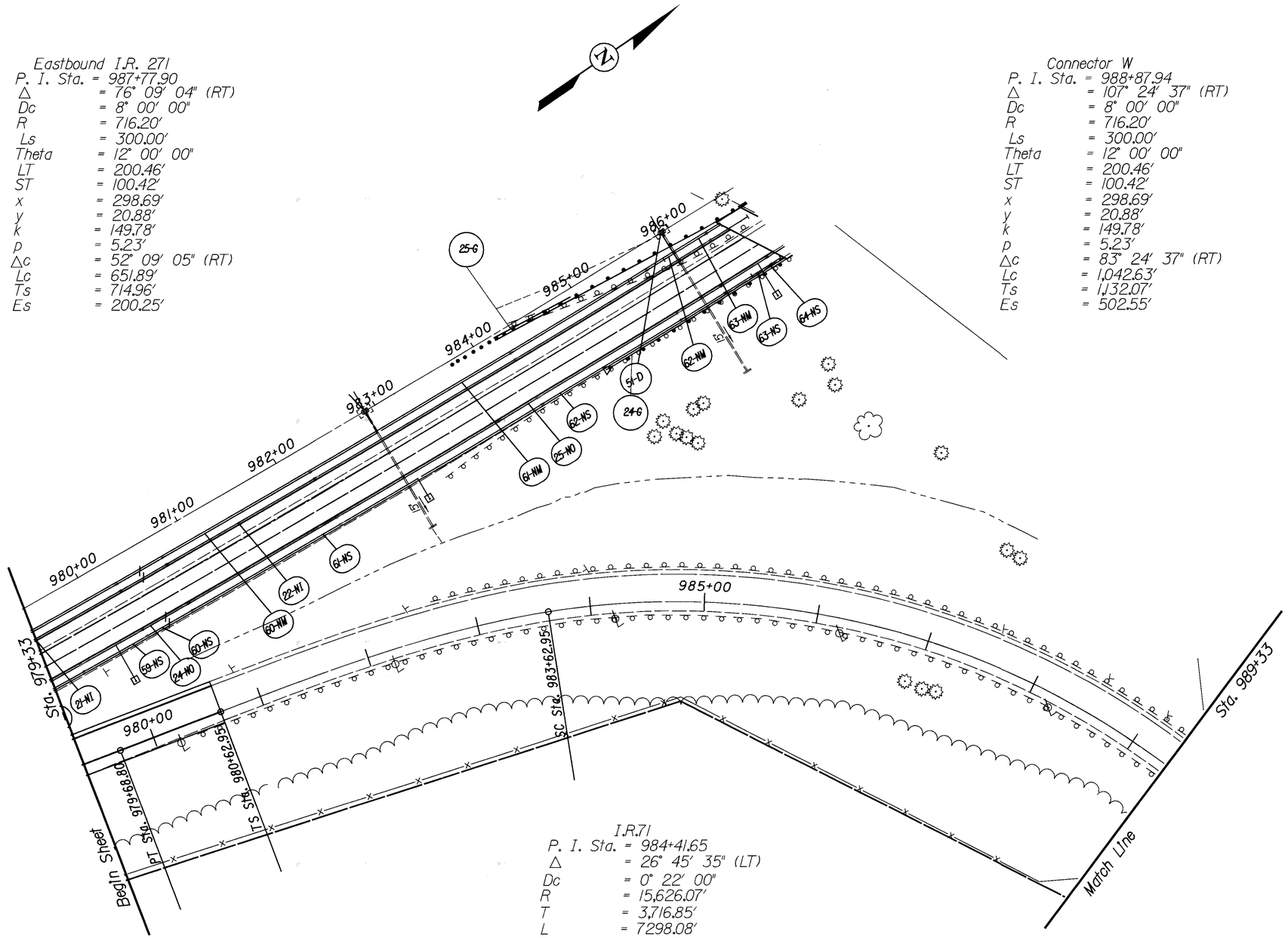

I.R.71
P. I. Sta. = 984+41.65
△ = 26° 45′ 35" (LT)
Dc = 0° 22′ 00"
R = 15,626.07′
T = 3,716.85′
L = 7298.08′
E = 435.97′

Cross References	
Guardrail	75-76
Drainage	77-96
Underdrains	97-128
Signing	561-606
Lighting	607-643
Tree Planting	647-663
Noise Walls	664-679

DESIGN FILE : i:\pd_med_ir71\dgn\planprofile\ir271tebl.dgn
USERNAME : mvondere
DATE : 06-DEC-1999
TIME : 12:38

HORIZONTAL SCALE IN FEET
0 50 100
CALCULATED
CHECKED

IR 271 EASTBOUND
STA. 989+33 TO STA. 999+13.97

MED - 71 - 15.78

451
940

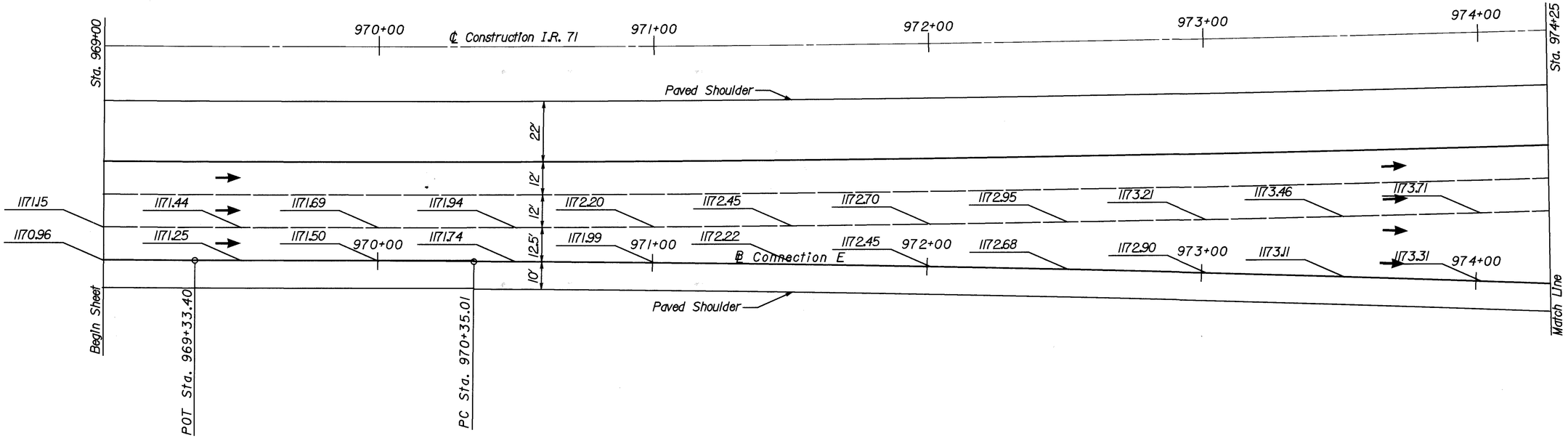

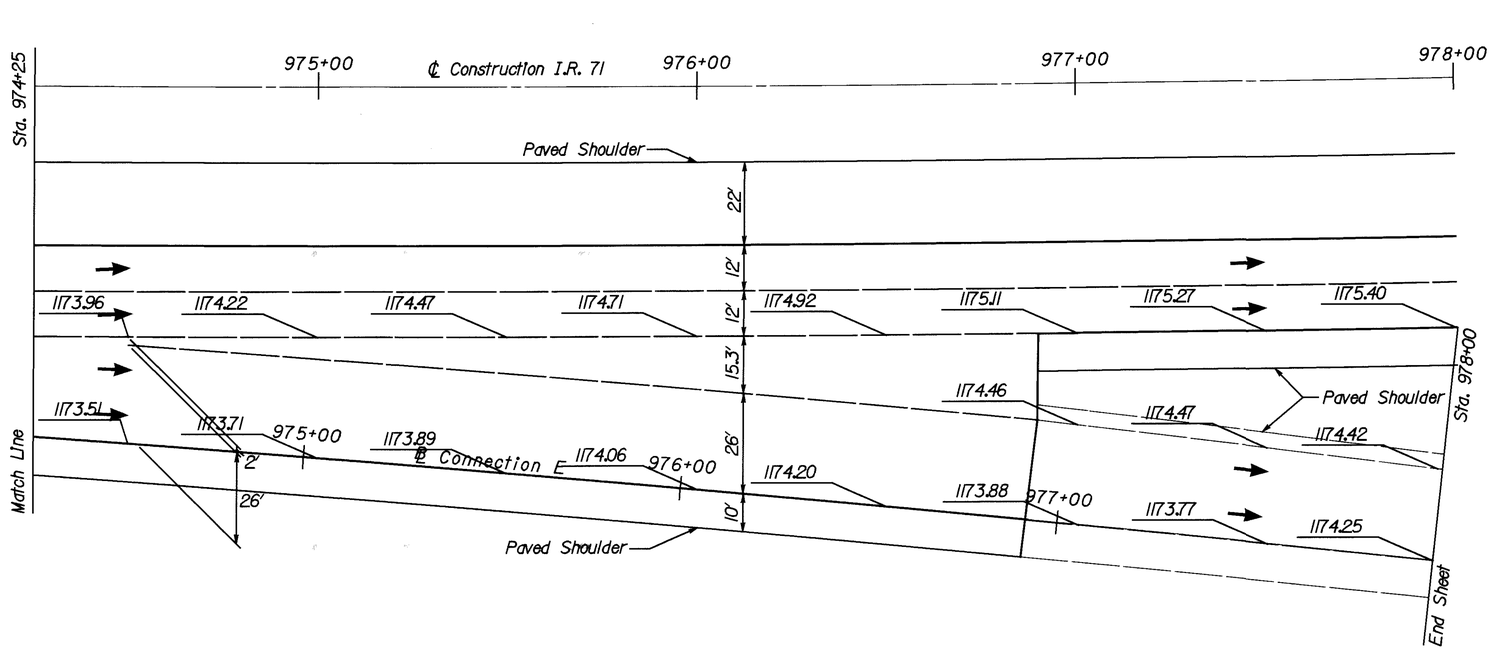

HORIZONTAL SCALE IN FEET
0 10 20 40

CALCULATED DJV
CHECKED JWR

PAVEMENT DETAIL - I. R. 271 CONNECTOR E
Sta. 969+00 to Sta. 978+00

MED-71-15.78

452
940

DESIGN FILE : i:\pd_med_ir71\dgn\pavement details\ir271conn.dgn
USERNAME : nvondere

DATE : 06-DEC-1999
TIME : 12:40

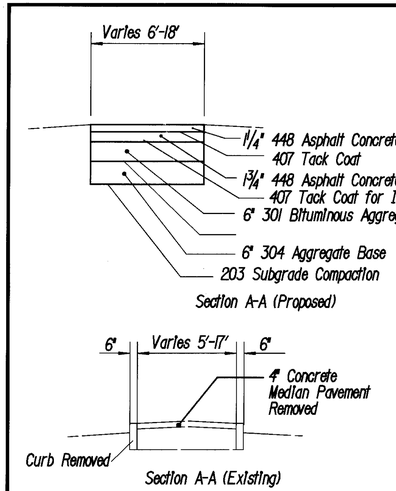

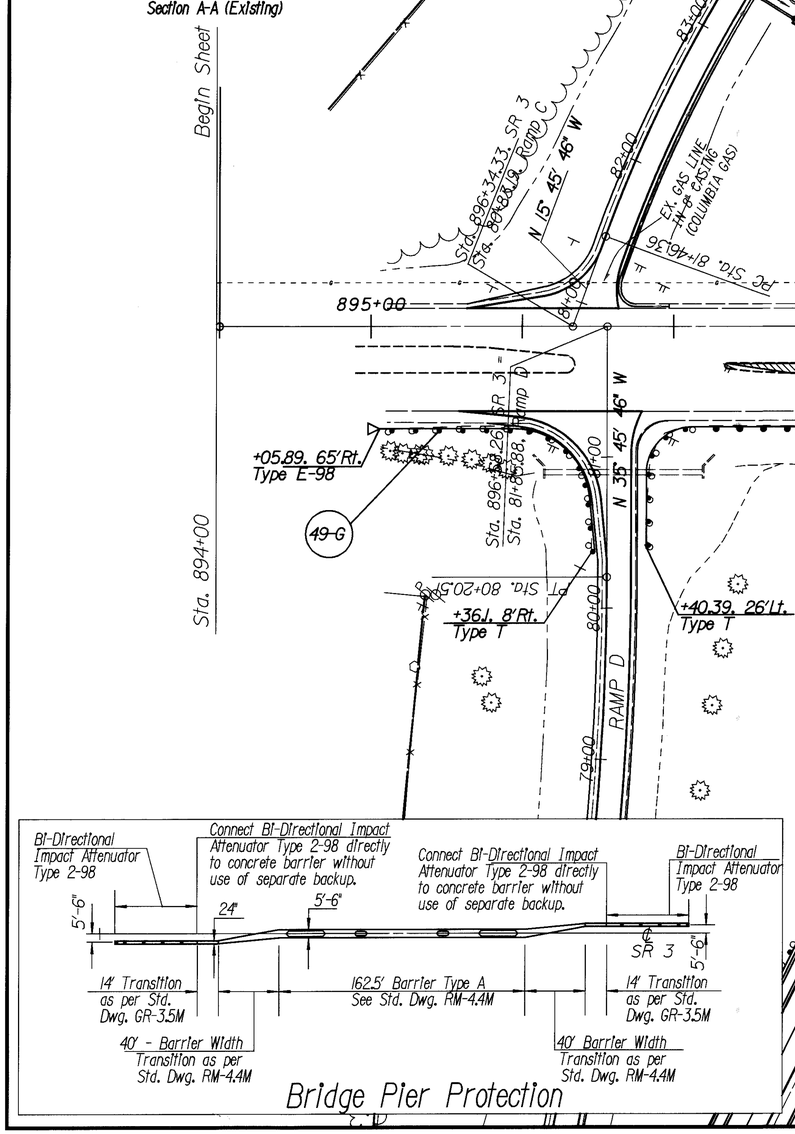

Centerline References for S.R. 3		
	Northing	Easting
Sta. 895+00	556894.1853	63416.2789
Sta. 905+00	557478.6160	64227.7226

615 Temporary Pavement, As Per Plan = 84 Sq. Yds.
NOTE: Quantity Carried to General Summary.

HORIZONTAL SCALE IN FEET
0 50 100

CALCULATED | CHECKED

SR 3
Sta 894+00.00 to Sta 906+50.00

MED - 71 - 15.78

453
940

DESIGN FILE : i:\pd_MED_IR71\DGN\sr3.dgn
USERNAME : jrogers
DATE : 30-DEC-1999
TIME : 14:39

DATE : 03-DEC-1999
TIME : 08:53

DESIGN FILE : I:\pd\...MED_IR71\DGN\PlanProfile\sr3ral.dgn
USERNAME : pfought

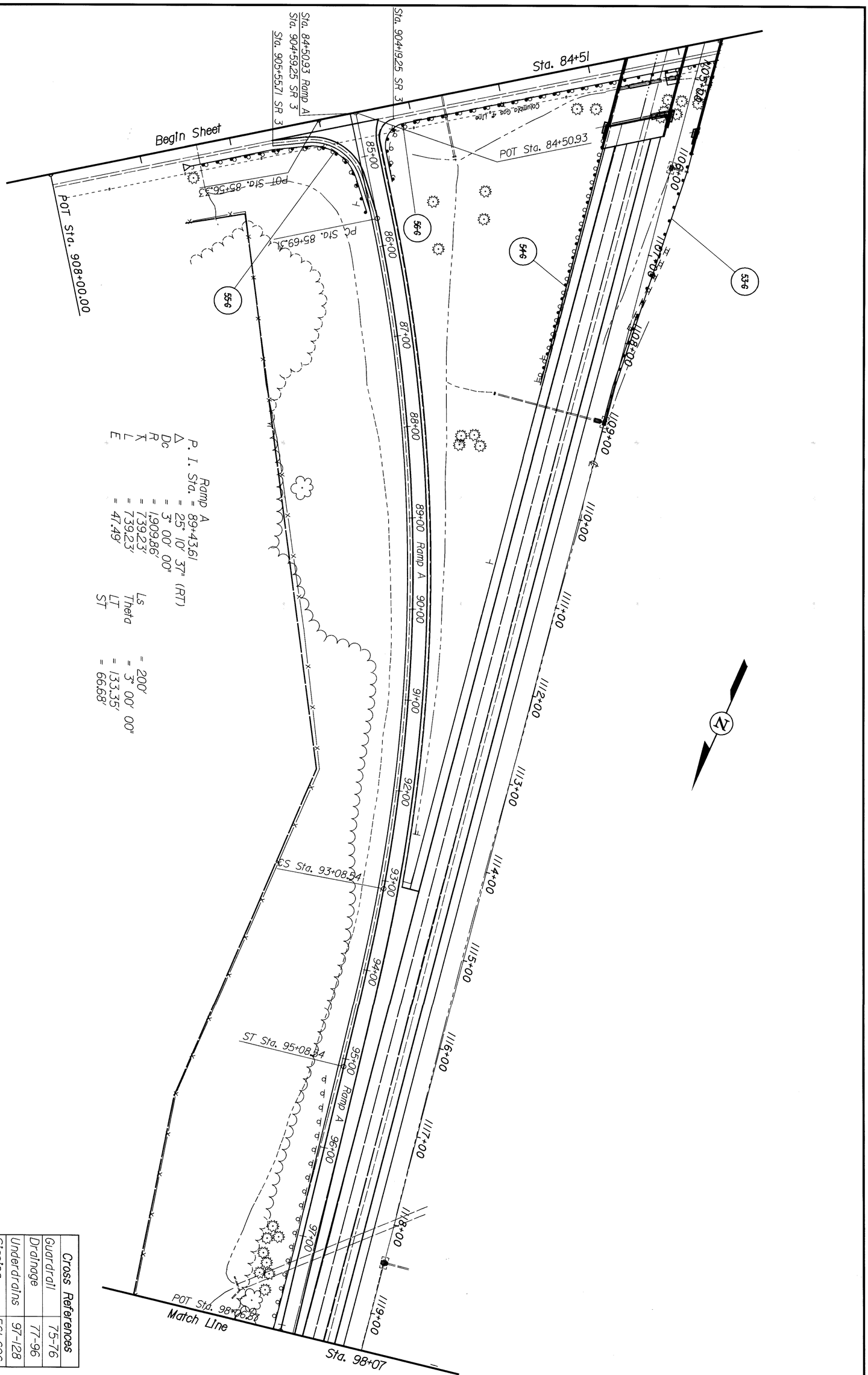

Cross References	
Guardrail	75-76
Drainage	77-96
Underdrains	97-128
Signing	561-606
Lighting	607-643
Tree Planting	647-663
Noise Walls	664-679

454
940

MED - 71 - 15.78

SR 3 RAMP A
STA. 84+51 TO STA. 94+51

CALCULATED
CHECKED

0 50 100
HORIZONTAL SCALE IN FEET

DESIGN FILE : i:\pd_med_ir71\dgn\pavement details\sr3.dgn
USERNAME : jrogers

DATE : 01-DEC-1999
TIME : 07:31

HORIZONTAL SCALE IN FEET
0 10 20 40

CALCULATED DJV
CHECKED JWR

PAVEMENT DETAIL S.R. 3 RAMP "A" STA. 1113+00 TO STA. 1122+00

MED-71-15.78

455
940

DESIGN FILE : i:\pd_med_lr71\dgn\pavement details\sr3.dgn
USERNAME : jrogers

DATE : 01-DEC-1999
TIME : 07:32

HORIZONTAL SCALE IN FEET
0 10 20 40

CALCULATED DJV
CHECKED JWR

PAVEMENT DETAIL S.R. 3 RAMP "A"
STA. 1123+00 TO STA. 1132+00

MED-71-15.78

456
940

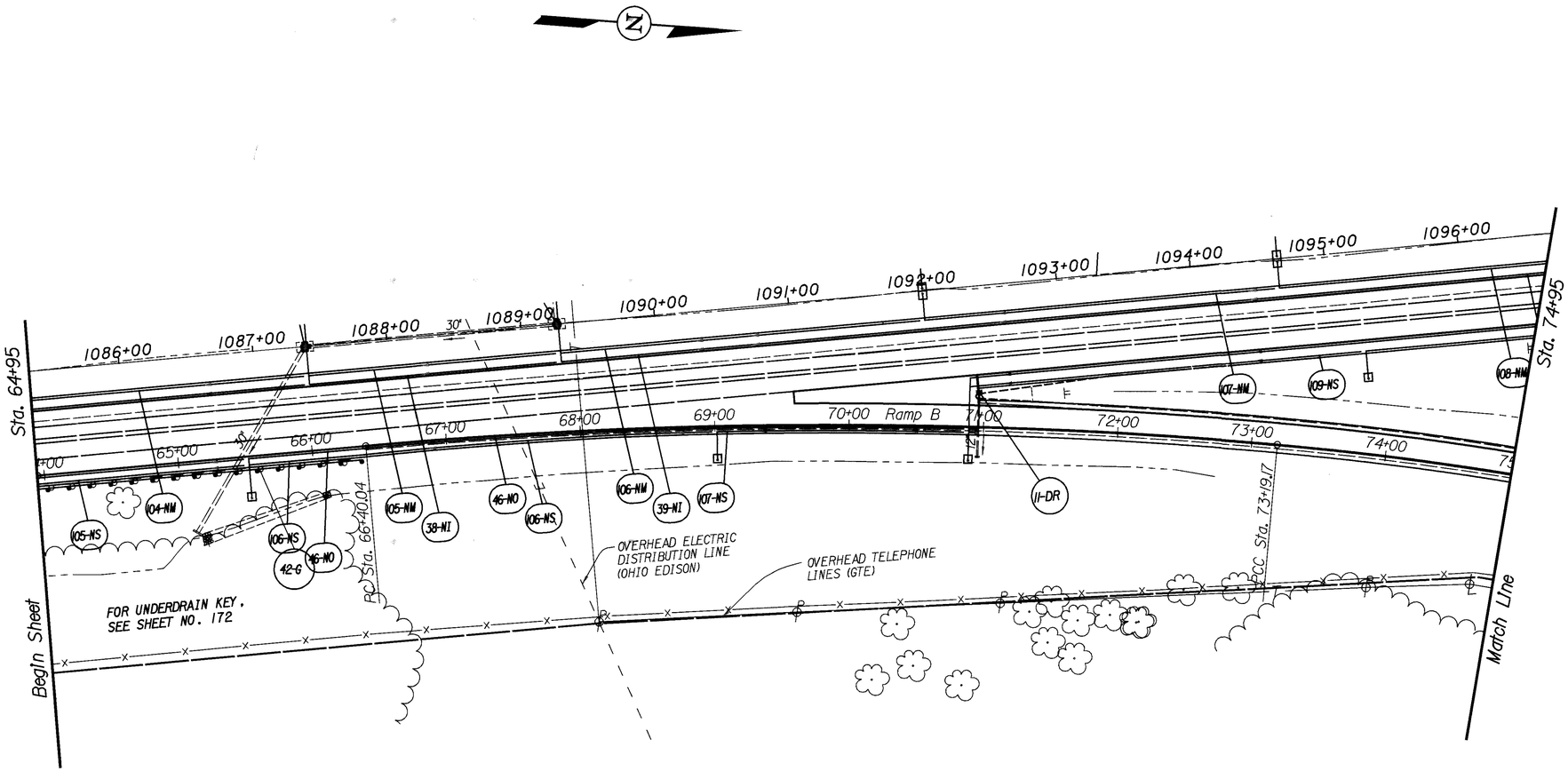

Ramp B

P. I. Sta.	=	69+80.50
Δ	=	10° 11′ 13″ (RT)
Dc	=	1° 30′ 00″
R	=	3,819.72′
T	=	340.46′
L	=	679.13′
E	=	15.14′

Cross References	
Guardrail	75-76
Drainage	77-96
Underdrains	97-128
Signing	561-606
Lighting	607-643
Tree Planting	647-663
Noise Walls	664-679

DESIGN FILE : i:\pd_MED_IR71\DGN\PlanProfile\sr-3rbi.dgn
USERNAME : pfought
DATE : 03-DEC-1999
TIME : 08:54

HORIZONTAL SCALE IN FEET
0 50 100

CALCULATED | CHECKED

SR 3 RAMP B
STA. 64+95 TO STA. 74+95

MED - 71 - 15.78

457
940

DESIGN FILE : i:\pd_med_ir71\dgn\pavement details\sr3.dgn
USERNAME : jrogers

DATE : 01-DEC-1999
TIME : 07:31

HORIZONTAL SCALE IN FEET
0 10 20 40

CALCULATED DJV
CHECKED JWR

PAVEMENT DETAIL S.R. 3 RAMP "B"
STA. 1084+00 TO STA. 1093+00

MED-71-15.78

458
940

Ramp C
P. I. Sta. = 83+88.05
△ = 27° 59′ 10" (RT)
Dc = 6° 00′ 00"
R = 954.93′
△c = 21° 59′ 10" (RT)
Lc = 366.44′
Es = 30.11′

Ls = 200′
Theta = 6° 00′ 00"
Lt = 133.41′
St = 66.74′

Ls = 200′
Theta = 2° 30′ 00"
Lt = 133.35′
St = 66.68′

Ramp C
P. I. Sta. = 90+40.36
△ = 11° 31′ 05" (LT)
Dc = 2° 30′ 00"
R = 2,291.83′
△c = 9° 01′ 05" (LT)
Lc = 360.72′
Es = 11.90′

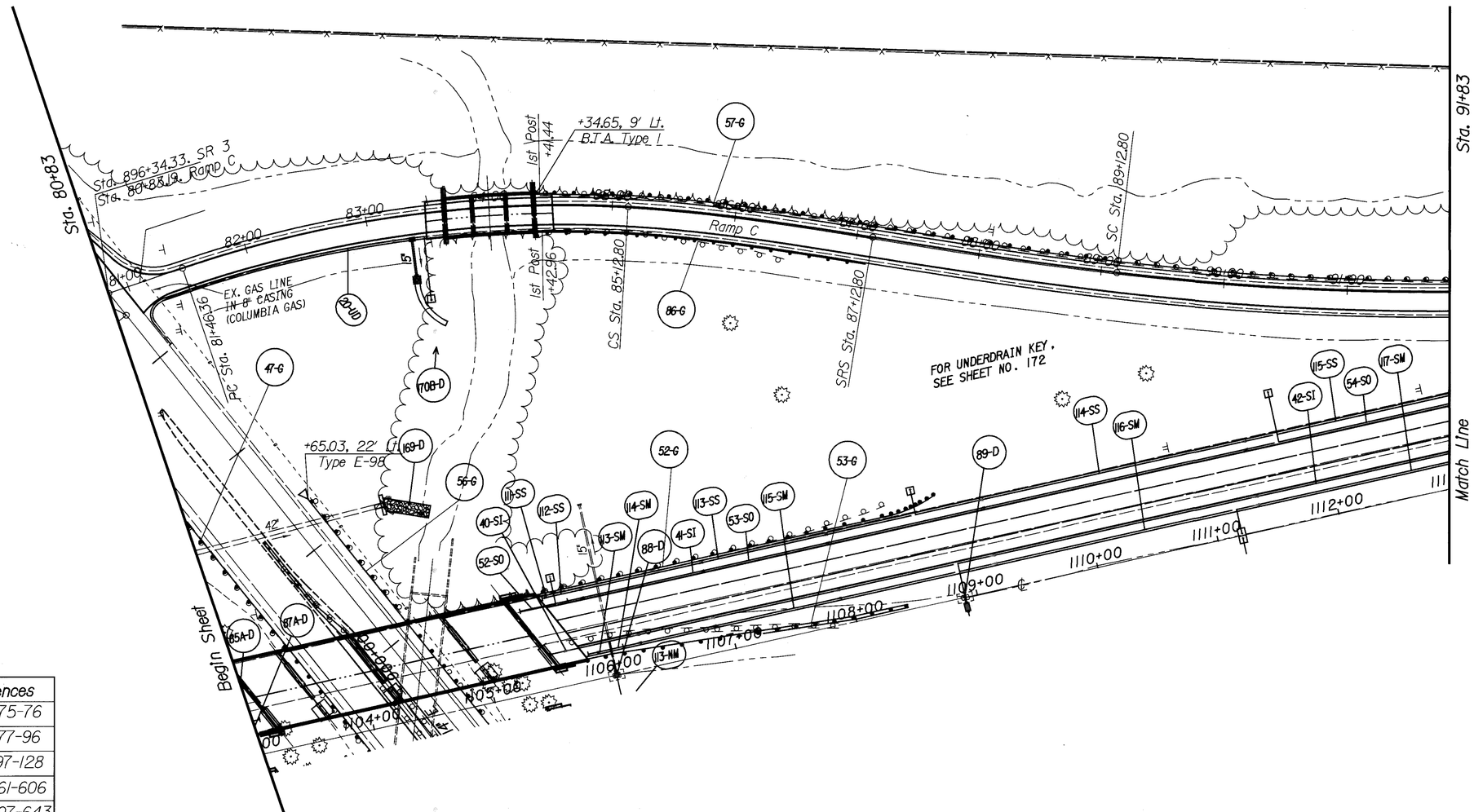

Cross References	
Guardrail	75-76
Drainage	77-96
Underdrains	97-128
Signing	561-606
Lighting	607-643
Tree Planting	647-663
Noise Walls	664-679

DESIGN FILE : i:\pd_MED_JR71\DGN\PlanProfile\sr3rcl.dgn
USERNAME : pfought
DATE : 03-DEC-1999
TIME : 12:16

HORIZONTAL SCALE IN FEET
0 50 100
CALCULATED
CHECKED

SR 3 RAMP C
STA. 80+83 TO STA 91+83

MED - 71 - 15.78

459
940

Ramp C
P. I. Sta. = 96+13.98
△ = 10° 11' 13" (LT)
Dc = 1° 30' 00"
R = 3,819.72
T = 340.46'
L = 679.13'
E = 15.14'

Cross References	
Guardrail	75-76
Drainage	77-96
Underdrains	97-128
Signing	561-606
Lighting	607-643
Tree Planting	647-663
Noise Walls	664-679

DESIGN FILE : i:\pd_MED_IR71\DGN\PlanProfile\sr3rc1.dgn
USERNAME : pfought
DATE : 03-DEC-1999
TIME : 12:18

HORIZONTAL SCALE IN FEET
0 50 100
CALCULATED
CHECKED

SR 3 RAMP C
STA. 91+83 TO STA. 101+98

MED - 71 - 15.78

460
940

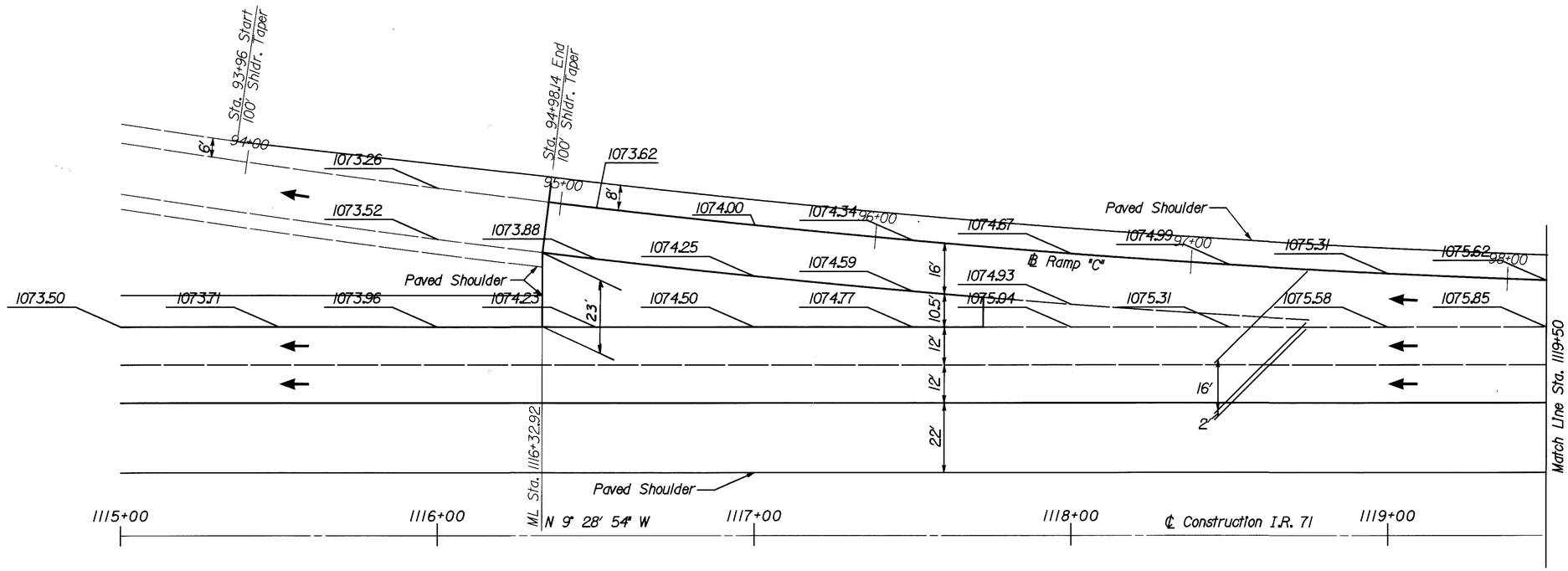

DESIGN FILE : i:\pd_med_ir71\dgn\pavement details\sr3.dgn
USERNAME : jrogers

DATE : 01-DEC-1999
TIME : 07:32

HORIZONTAL SCALE IN FEET
0 10 20 40

CALCULATED DJV
CHECKED JWR

PAVEMENT DETAIL S.R. 3 RAMP "C"
STA. 1115+00 TO STA. 1125+00

MED-71-15.78

461
940

Ramp D
P. I. Sta. = 76+08.62
Δ = 25° 00′ 18" (LT)
Dc = 3° 00′ 00"
R = 1,909.86′
Δc = 22° 00′ 18" (LT)
Lc = 733.50′
Es = 46.84′

Ls = 200′
\Theta = 3° 00′ 00"
Lt = 133.35′
St = 66.68′

Cross References	
Guardrail	75-76
Drainage	77-96
Underdrains	97-128
Signing	561-606
Lighting	607-643
Tree Planting	647-663
Noise Walls	664-679

DESIGN FILE : i:\pd\MED.JR71\DGN\PlanProfile\sr_x.dgn
USERNAME : pfought
DATE : 03-DEC-1999
TIME : 12:19

HORIZONTAL SCALE IN FEET
0 50 100
CALCULATED
CHECKED

SR 3 RAMP D
STA. 67+86 TO STA. 77+86

MED - 71 - 15.78

462
940

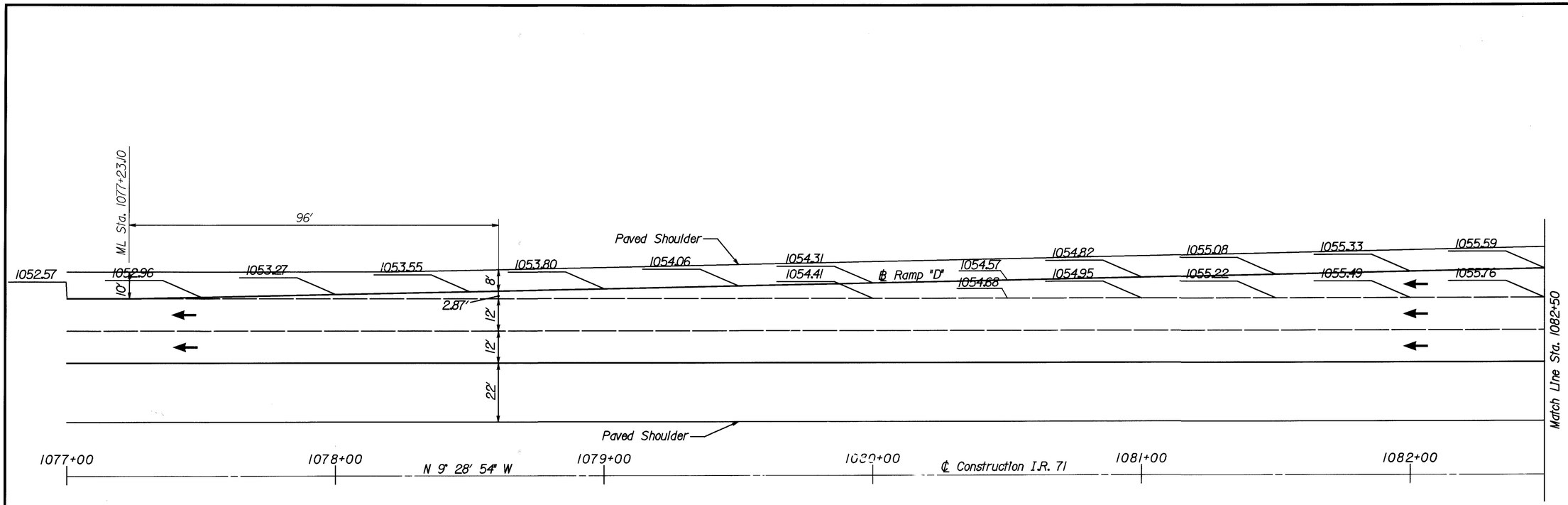

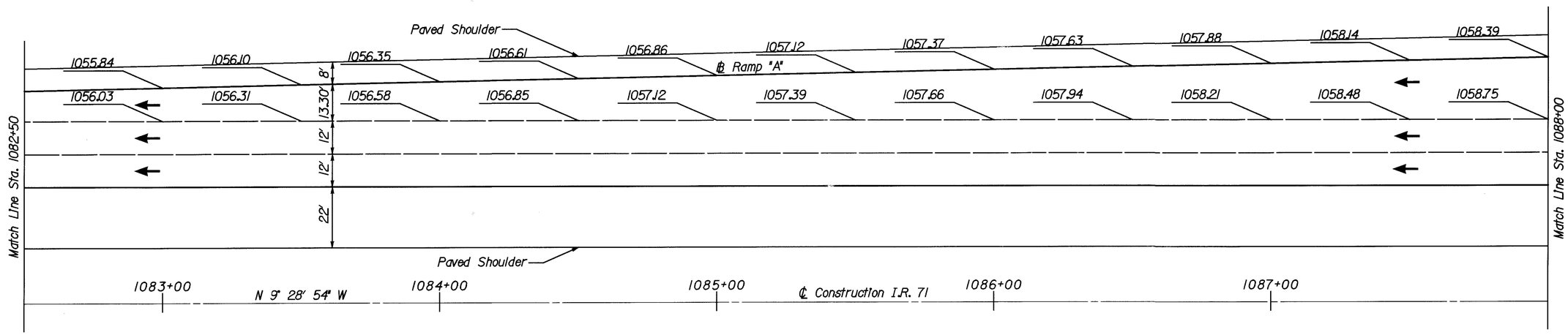

DESIGN FILE : i:\pd_med.ir71\dgn\pavement details\sr3.dgn
USERNAME : jrogers

DATE : 01-DEC-1999
TIME : 07:32

HORIZONTAL SCALE IN FEET
0 10 20 40

CALCULATED DJV
CHECKED JWR

PAVEMENT DETAIL S.R. 3 RAMP "D"
STA. 1077+00 TO STA. 1088+00

MED-71-15.78

463
940

DESIGN FILE : I:\pd_med_ir71\dgn\pavement details\sr3.dgn
USERNAME : jrogers

DATE : 01-DEC-1999
TIME : 07:32

HORIZONTAL SCALE IN FEET
0 10 20 40

CALCULATED DSV
CHECKED JWR

PAVEMENT DETAIL S.R. 3 RAMP "D"
STA. 1088+00 TO STA. 1095+00

MED-71-15.78

464
940

DESIGN FILE : I:\pd_med_ir71\dgn\pavement details\sr3.dgn
USERNAME : jrogers
DATE : 01-DEC-1999
TIME : 07:31

S.R. 3 RAMP "B"

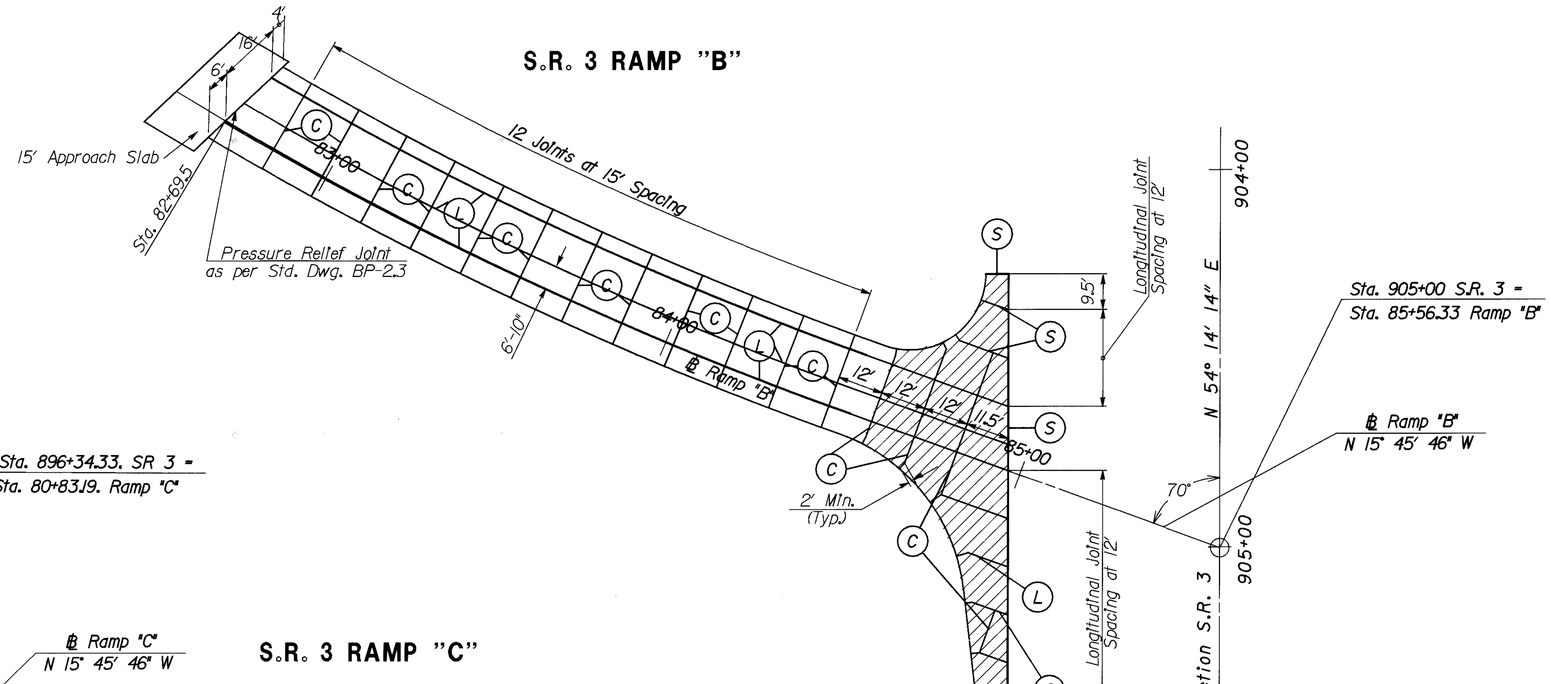

S.R. 3 RAMP "C"

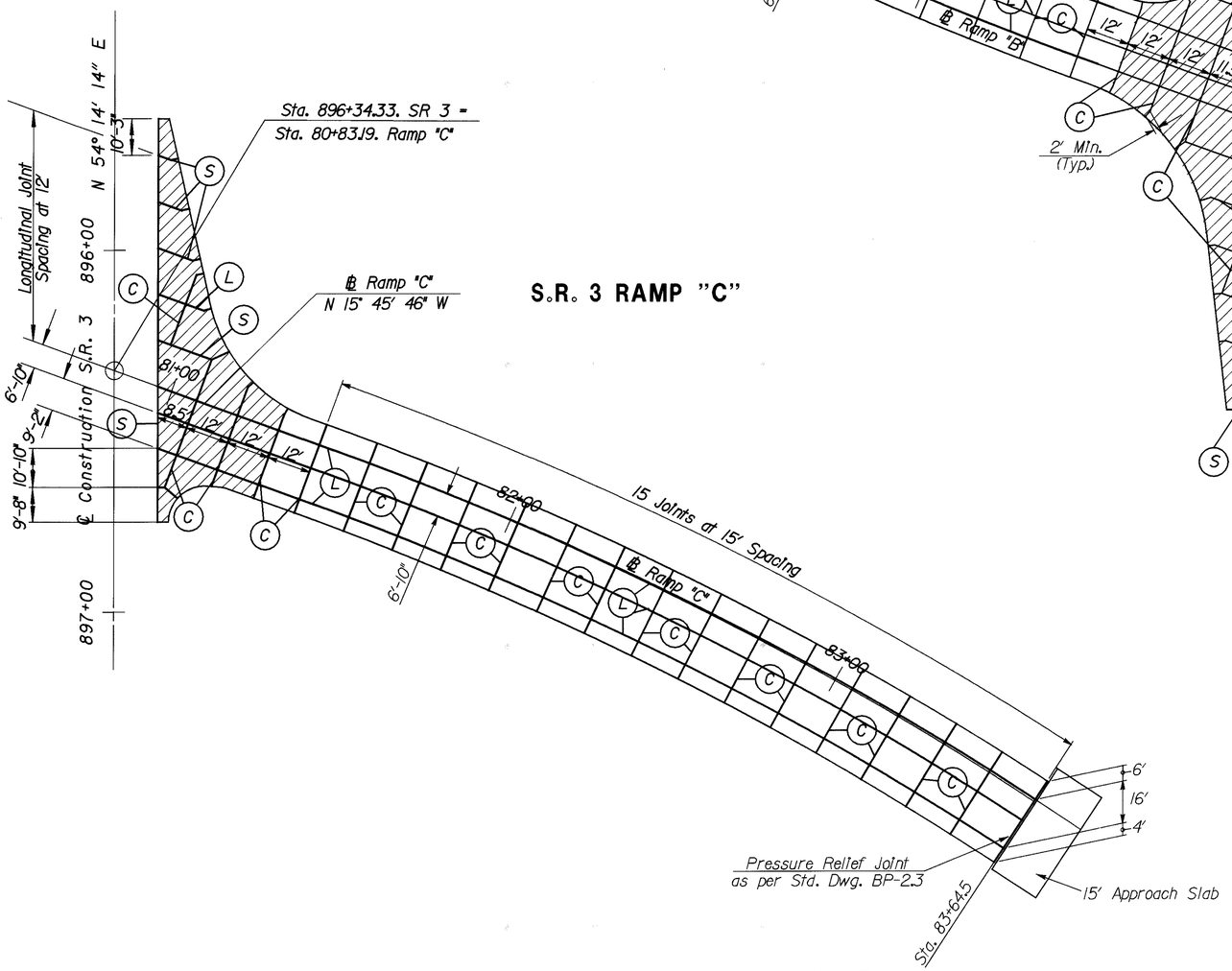

Note: For S.R. 3 Ramp Typical Section, See Sheet 17.

- Class "FS" Concrete

LEGEND

- (L) Standard Longitudinal Joint As Per BP-2.1M
- (S) Standard Longitudinal Joint As Per BP-2.1M Without Tie Bars
- (C) Contraction Joint As Per BP-2.1M

CALCULATED DJV CHECKED JWR

HORIZONTAL SCALE IN FEET

PAVEMENT JOINT DETAIL S.R. 3 RAMPS "B" & "C"

MED-71-15.78

465
940

DESIGN FILE : i:\pd_MED_IR71\DGN\Pvmntrpr\pvmtrepr_ga.dgn
USERNAME : pfought
DATE : 03-DEC-1999
TIME : 12:25

SOUTHBOUND ROADSIDE REST AREA PARKING LOT

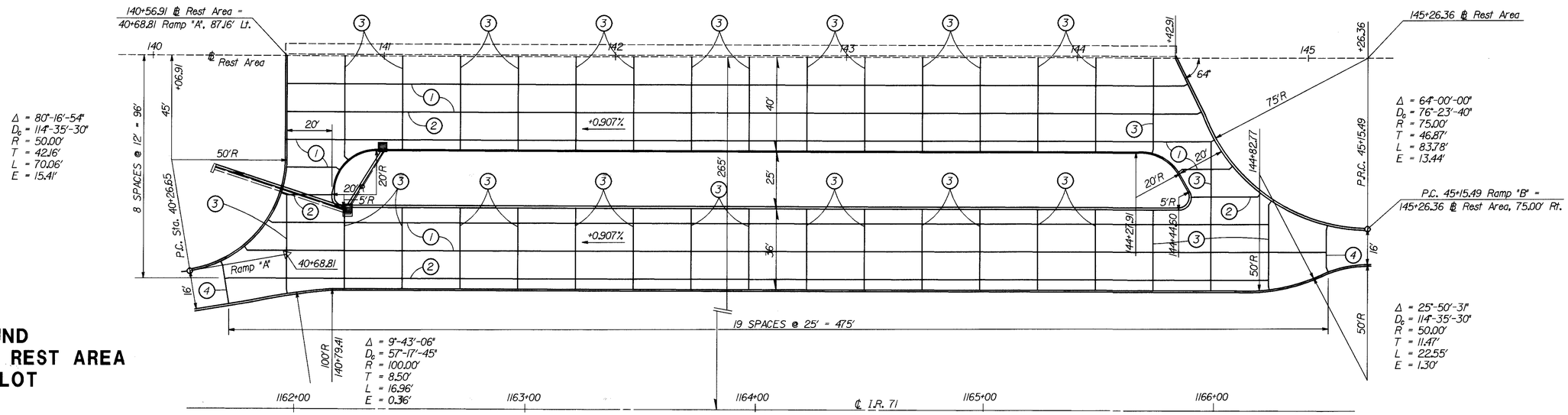

NORTHBOUND ROADSIDE REST AREA PARKING LOT

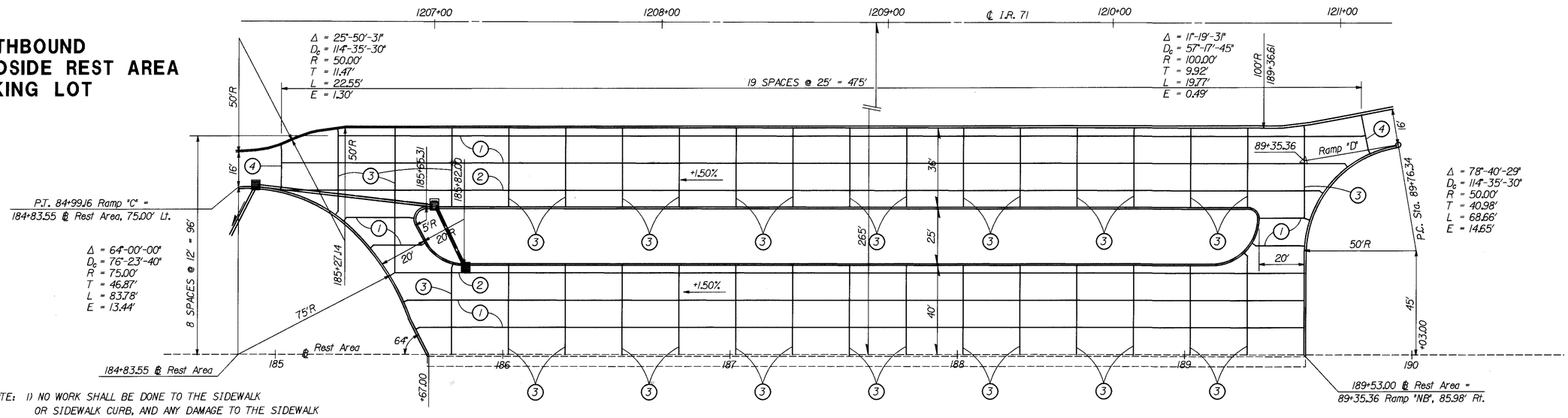

NOTE: 1) NO WORK SHALL BE DONE TO THE SIDEWALK OR SIDEWALK CURB, AND ANY DAMAGE TO THE SIDEWALK OR SIDEWALK CURB SHALL BE THE RESPONSIBILITY OF THE CONTRACTOR.

2) THE TRANSVERSE JOINTS IN THE RAMPS SHALL BE ALIGNED AS CLOSE AS POSSIBLE WITH THE LONGITUDINAL JOINTS IN THE PARKING LOT RADIUS AREAS.

3) PARKING LOT PAVEMENT ELEVATIONS TO BE REPLACED AT SAME ELEVATION AS EXISTING.

4) FOR U.G. UTILITY LOCATIONS SEE SHEETS 198-203.

5) THE EXISTING PAVEMENT BUILDUP FOR PARKING AREA AND RADIUS AREAS ARE SIMILAR TO EXISTING RAMP PAVEMENT BUILDUP AS SHOWN ON THIS SHEET.

6) CONTRACTOR IS NOT TO DISTURB EXISTING LIGHTING CIRCUITS DURING PAVEMENT OPERATIONS AT THE REST AREAS.

JOINT LEGEND

1. STANDARD LONGITUDINAL JOINT
2. STANDARD LONGITUDINAL JOINT WITHOUT TIE BARS
3. STANDARD CONTRACTION JOINT
4. STANDARD EXPANSION JOINT WITHOUT DOWELS

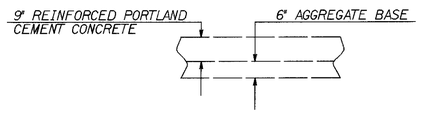

EXISTING PAVEMENT BUILDUP FOR PARKING AND RADIUS AREAS

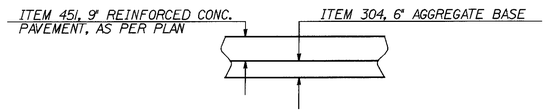

PROPOSED PAVEMENT BUILDUP FOR PARKING AND RADIUS AREAS

HORIZONTAL SCALE IN FEET
0 25 50

CALCULATED DJV
CHECKED JWR

REST AREA PAVEMENT DETAILS

MED-71-15.78

Cross References	
Guardrail	75-76
Drainage	77-96
Underdrains	97-128
Signing	561-606
Lighting	607-643
Tree Planting	647-663
Noise Walls	664-679

I.R.71
P. I. Sta. = 1149+64.08
Δ = 8° 28′ 56″ (RT)
Dc = 0° 15′ 00″
R = 22,918.23′
T = 1,699.54′
L = 3,392.88′
E = 62.93′

S.B. Rest Area
P. I. Sta. = 35+88.48
Δ = 5° 38′ 59″ (LT)
Dc = 1° 30′ 00″
R = 3,819.72′
T = 188.48′
L = 376.65′
E = 4.65′

DESIGN FILE : i:\pd_MED.IR71\DGN\PlanProfile\sbrppbl.dgn
USERNAME : pfought
DATE : 03-DEC-1999
TIME : 12:27

HORIZONTAL SCALE IN FEET
0 50 100

CALCULATED
CHECKED

SOUTHBOUND REST AREA, RAMP A
STA. 1149+32.91 TO STA. 1162+58.89

MED - 71 - 15.78

467
940

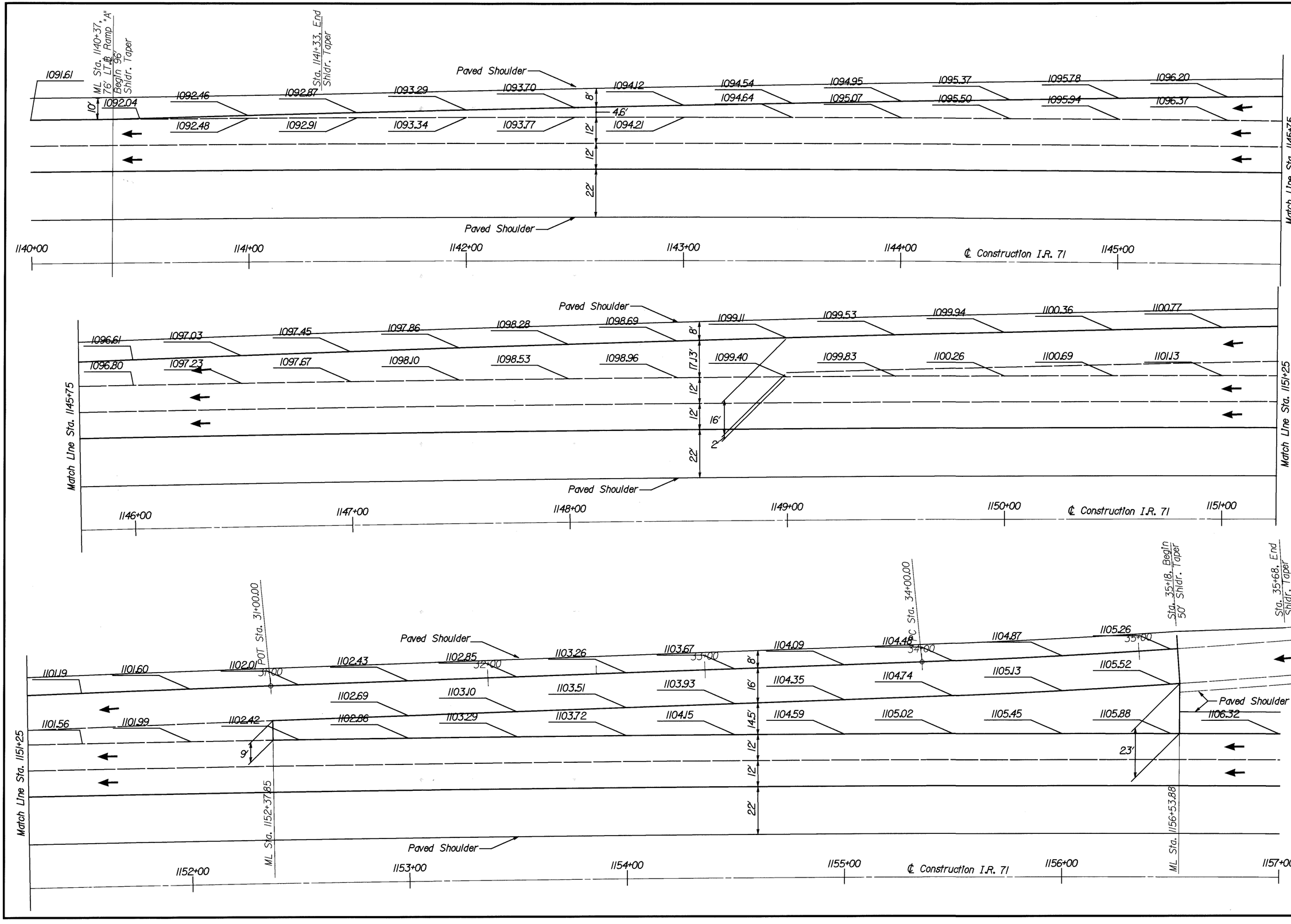

DESIGN FILE : I:\pd_med_lr71\dgn\pavement details\restareas.dgn
USERNAME : jrogers

DATE : 01-DEC-1999
TIME : 09:05

HORIZONTAL SCALE IN FEET
0 10 20 40

CALCULATED DJV
CHECKED JWR

PAVEMENT DETAIL SOUTHBOUND REST AREA RAMP "A"
STA. 1140+00 TO STA. 1157+00

MED-71-15.78

S.B. Rest Area
P. I. Sta. = 45+93.57
△ = 13° 59′ 08" (RT)
Dc = 9° 00′ 00"
R = 636.62′
T = 78.08′
L = 155.39′
E = 4.77′

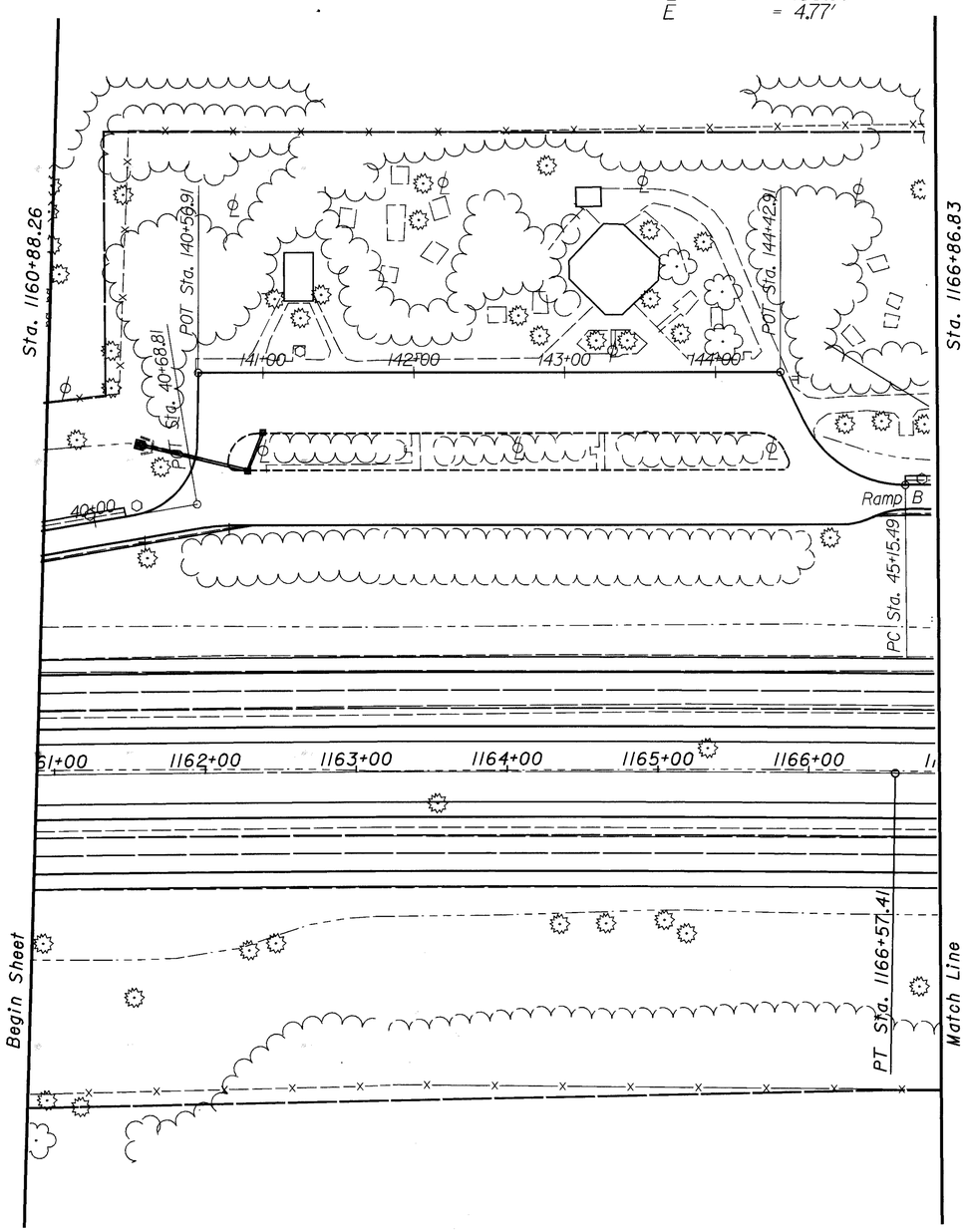

Cross References	
Guardrail	75-76
Drainage	77-96
Underdrains	97-128
Signing	561-606
Lighting	607-643
Tree Planting	647-663
Noise Walls	664-679

DESIGN FILE : h:\pd_MED_IR71\DGN\PlanProfile\sra1.dgn
USERNAME : pfought
DATE : 03-DEC-1999
TIME : 12:29

N

0 50 100
HORIZONTAL SCALE IN FEET

CALCULATED | CHECKED

SOUTHBOUND REST AREA
STA. 1160+88.26 TO STA. 1166+86.83

MED - 71 - 15.78

469
940

S.B. Rest Area
P. I. Sta. = 51+05.08
△ = 12° 58′ 13″ (LT)
Dc = 1° 30′ 00″
R = 3,819.72′
T = 434.20′
L = 864.69′
E = 24.60′

Sta. 1165+33.18

POT Sta. 144+42.9

Sta. 1177+86.49

PT Sta. 55+35.57

PC Sta. 45+15.49

PRC Sta. 46+70.88

Ramp B

SAN

Match Line

Begin Sheet

PT Sta. 1166+57.41

Cross References	
Guardrail	75-76
Drainage	77-96
Underdrains	97-128
Signing	561-606
Lighting	607-643
Tree Planting	647-663
Noise Walls	664-679

HORIZONTAL SCALE IN FEET
0 50 100

CALCULATED | CHECKED

SOUTHBOUND REST AREA,, RAMP B
STA. 1165+33.18 TO STA. 1177+86.49

MED - 71 - 15.78

470
940

DESIGN FILE : I:\pd_MED..IR71\DGN\PlanProfile\sbrpal.dgn
USERNAME : p.fought
DATE : 03-DEC-1999
TIME : 12:31

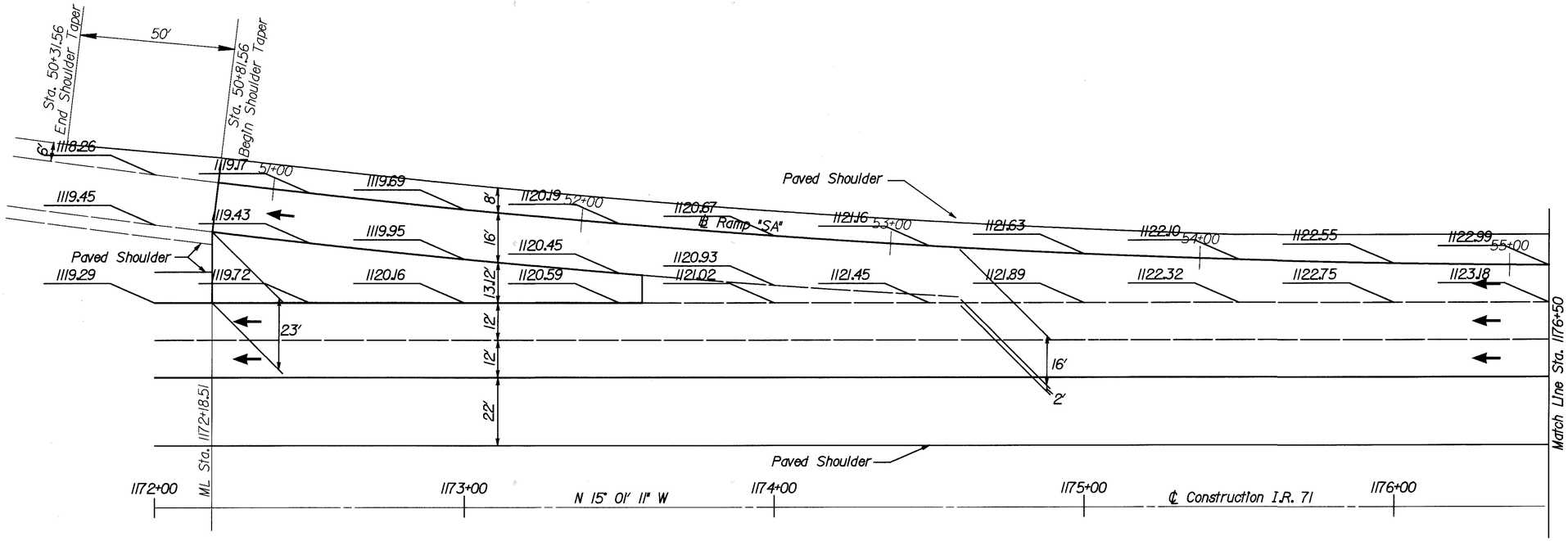

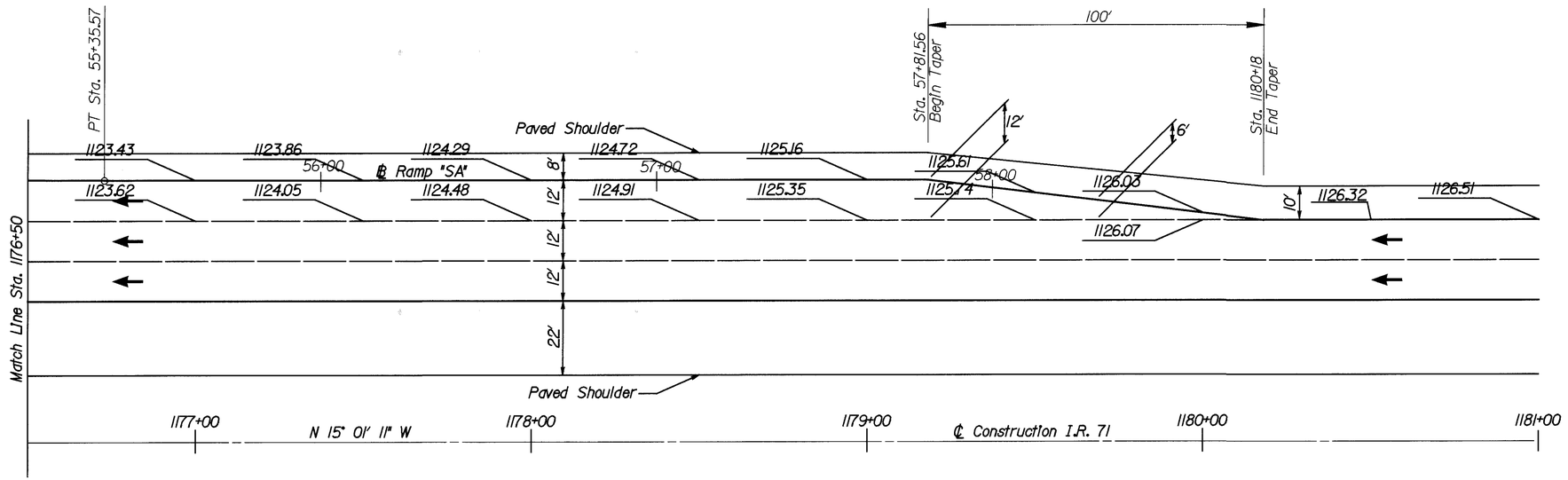

N

0 10 20 40
HORIZONTAL SCALE IN FEET

CALCULATED DJV
CHECKED JWR

PAVEMENT DETAIL SOUTHBOUND REST AREA RAMP "B"
STA. 1172+00 TO STA. 1181+00

MED-71-15.78

471
940

DESIGN FILE : i:\pd_med_ir71\dgn\pavement details\restareas.dgn
USERNAME : jrogers

DATE : 01-DEC-1999
TIME : 09:05

DATE : 03-DEC-1999
TIME : 12:33

DESIGN FILE : I:\pd_MED_IR71\DGN\PlanProfile\nbrarpal.dgn
USERNAME : pfought

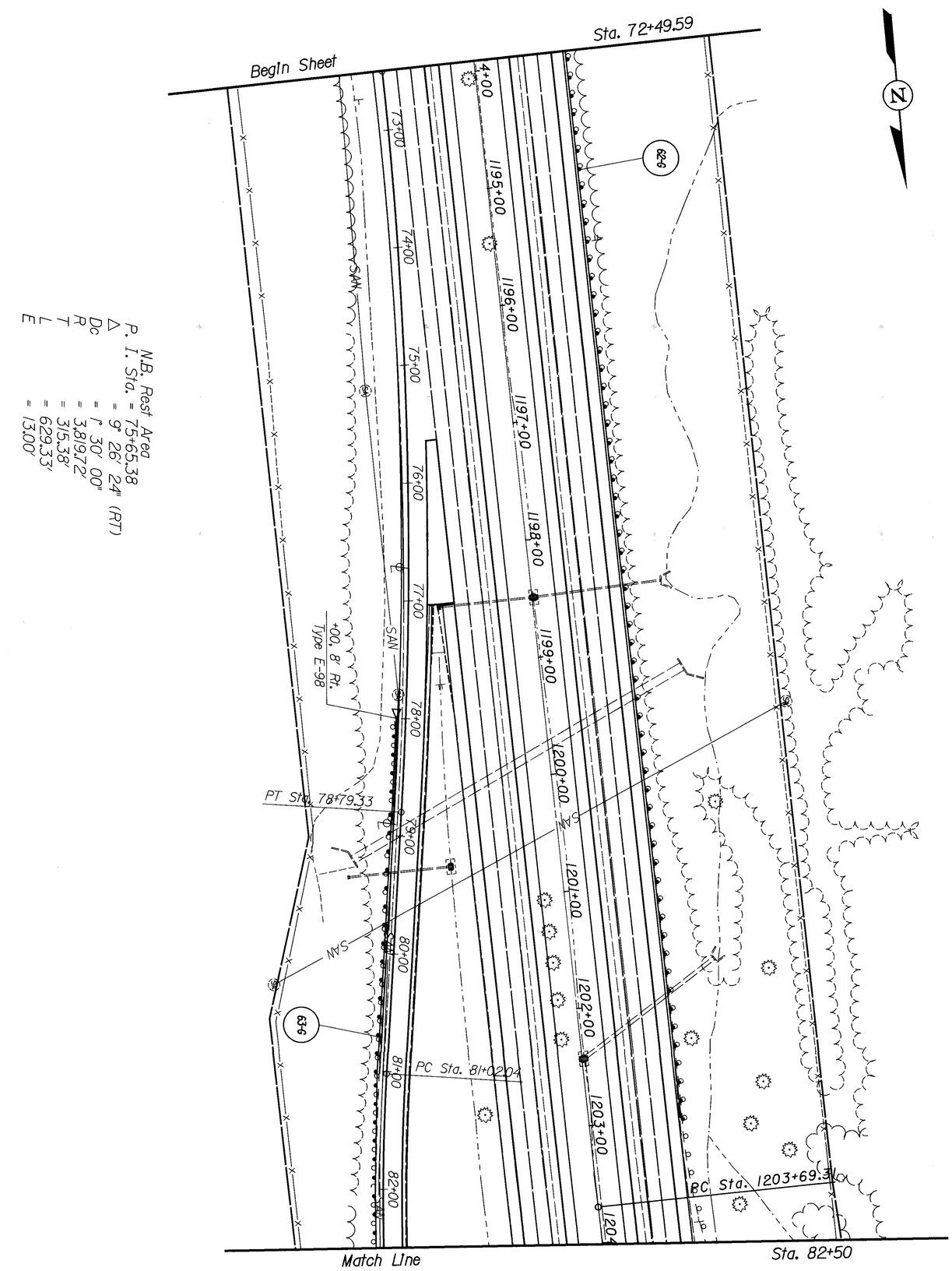

P. I. Sta. = 75+65.38
N.B. Rest Area
Δ = 9° 26' 24" (RT)
Dc = 1° 30' 00"
R = 3,819.72'
T = 315.38'
L = 629.33'
E = 13.00'

Cross References	
Guardrail	75-76
Drainage	77-96
Underdrains	97-128
Signing	561-606
Lighting	607-643
Tree Planting	647-663
Noise Walls	664-679

472
940

MED - 71 - 15.78

NORTHBOUND REST AREA, RAMP C
STA. 72+49.59 TO STA. 82+50

CALCULATED
CHECKED

0 50 100
HORIZONTAL SCALE IN FEET

N

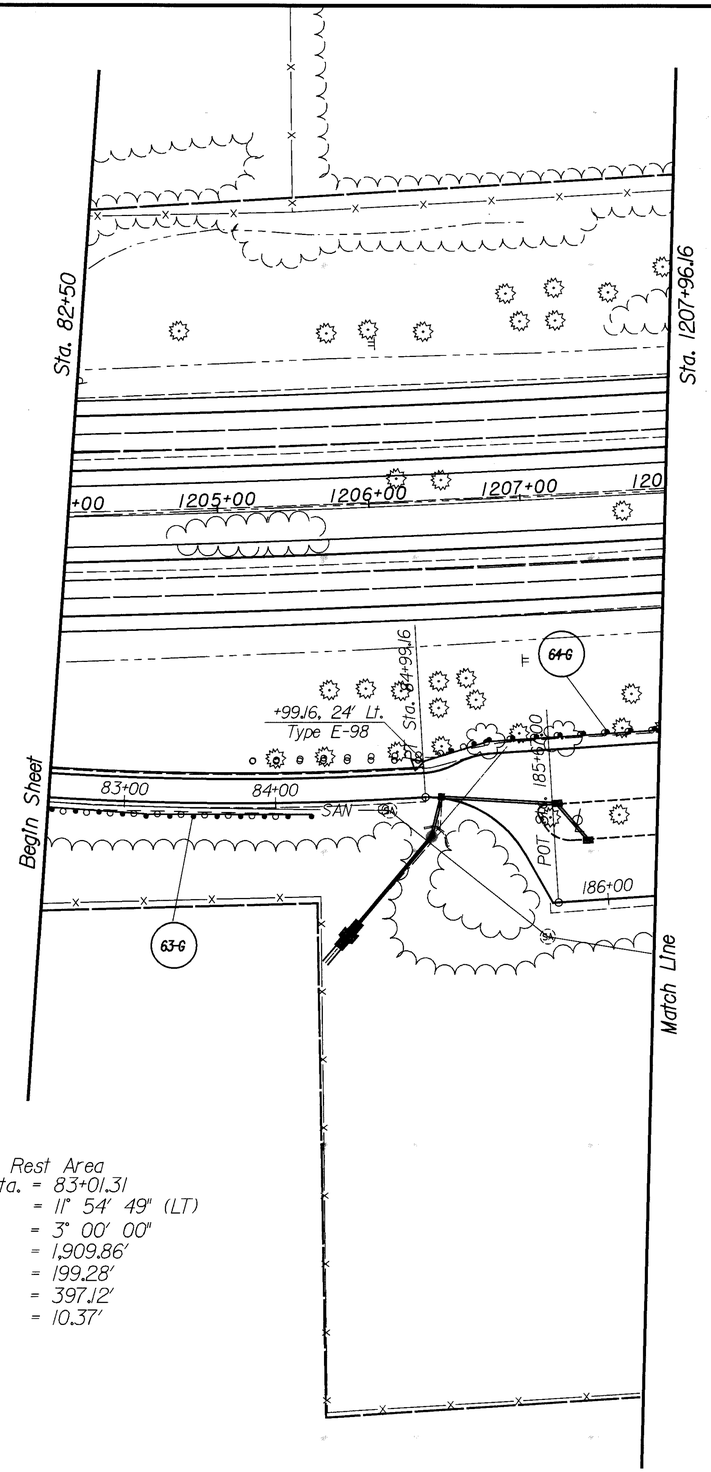

N.B. Rest Area
P. I. Sta. = 83+01.31
Δ = 11° 54' 49" (LT)
Dc = 3° 00' 00"
R = 1,909.86'
T = 199.28'
L = 397.12'
E = 10.37'

Cross References	
Guardrail	75-76
Drainage	77-96
Underdrains	97-128
Signing	561-606
Lighting	607-643
Tree Planting	647-663
Noise Walls	664-679

DESIGN FILE : i:\pd\...MED_IR71\DGN\PlanProfile\nbrarpa.dgn
USERNAME : pfought
DATE : 03-DEC-1999
TIME : 12:33

HORIZONTAL SCALE IN FEET
0 50 100
CALCULATED
CHECKED

NORTHBOUND REST AREA RAMP C
STA. 82+50 TO STA. 1207+96.16

MED - 71 - 15.78

473
940

DESIGN FILE : I:\pd_med_ir71\dgn\pavement details\restareas.dgn
USERNAME : jrogers

DATE : 01-DEC-1999
TIME : 09:04

N

0 10 20 40
HORIZONTAL
SCALE IN FEET

CALCULATED DJV
CHECKED JWR

PAVEMENT DETAIL NORTHBOUND REST AREA RAMP "C"
STA. 1190+00 TO STA. 1199+00

MED-71-15.78

474
940

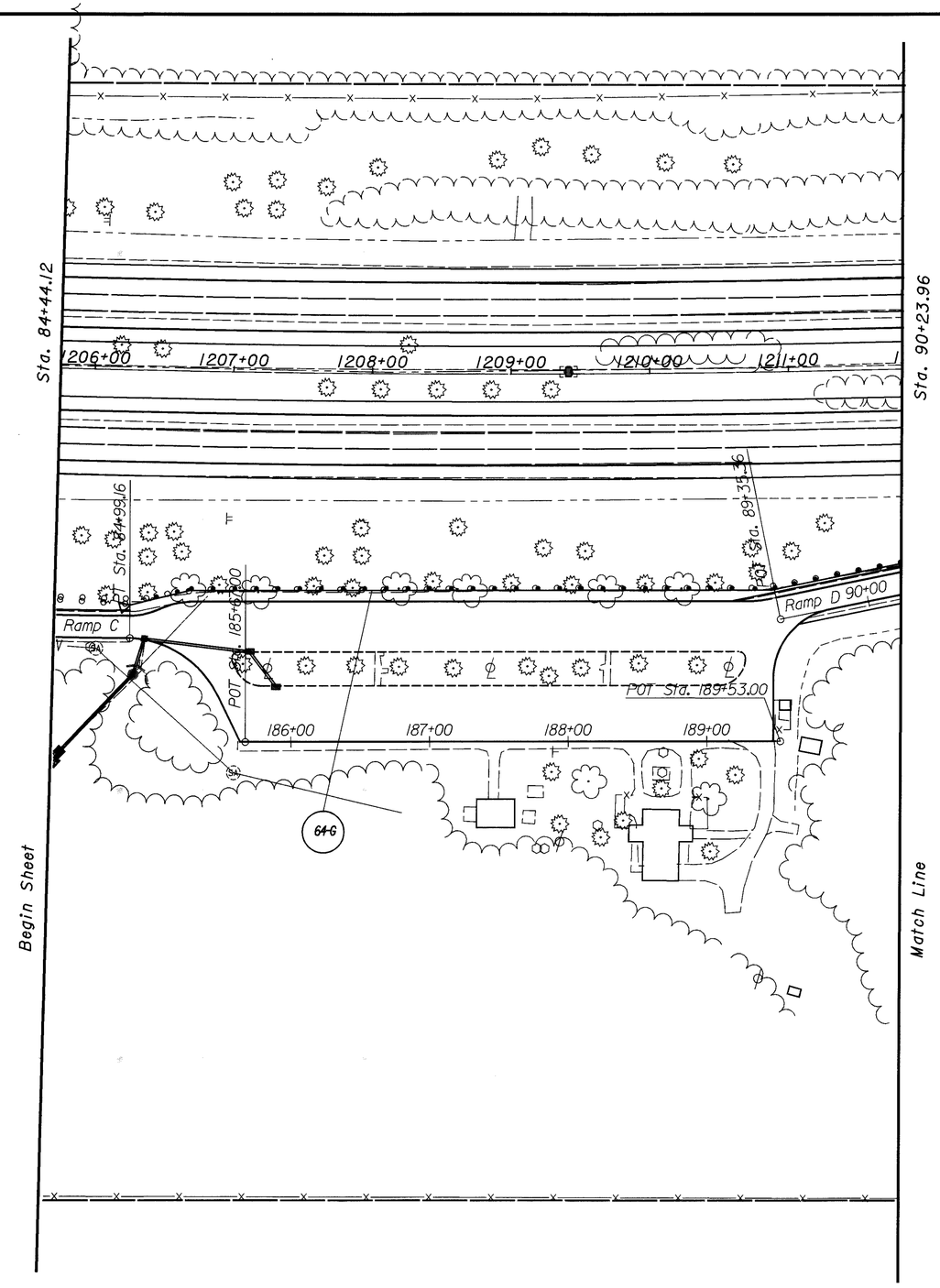

Cross References	
Guardrail	75-76
Drainage	77-96
Underdrains	97-128
Signing	561-606
Lighting	607-643
Tree Planting	647-663
Noise Walls	664-679

HORIZONTAL SCALE IN FEET
0 50 100

CALCULATED
CHECKED

NORTHBOUND REST AREA
STA. 84+44.12 TO STA. 90+23.96

MED - 71 - 15.78

DATE : 03-DEC-1999
TIME : 12:35
DESIGN FILE : i:\pd_MED_IR71\DGN\PlanProfile\nral.dgn
USERNAME : pfought

DATE : 03-DEC-1999
TIME : 11:10
7885DMA.DGN

DESIGN FILE : i:\pd_med_lr71\dgn\reltd\finaldrainage\7885dma.dgn
USERNAME : jrogers

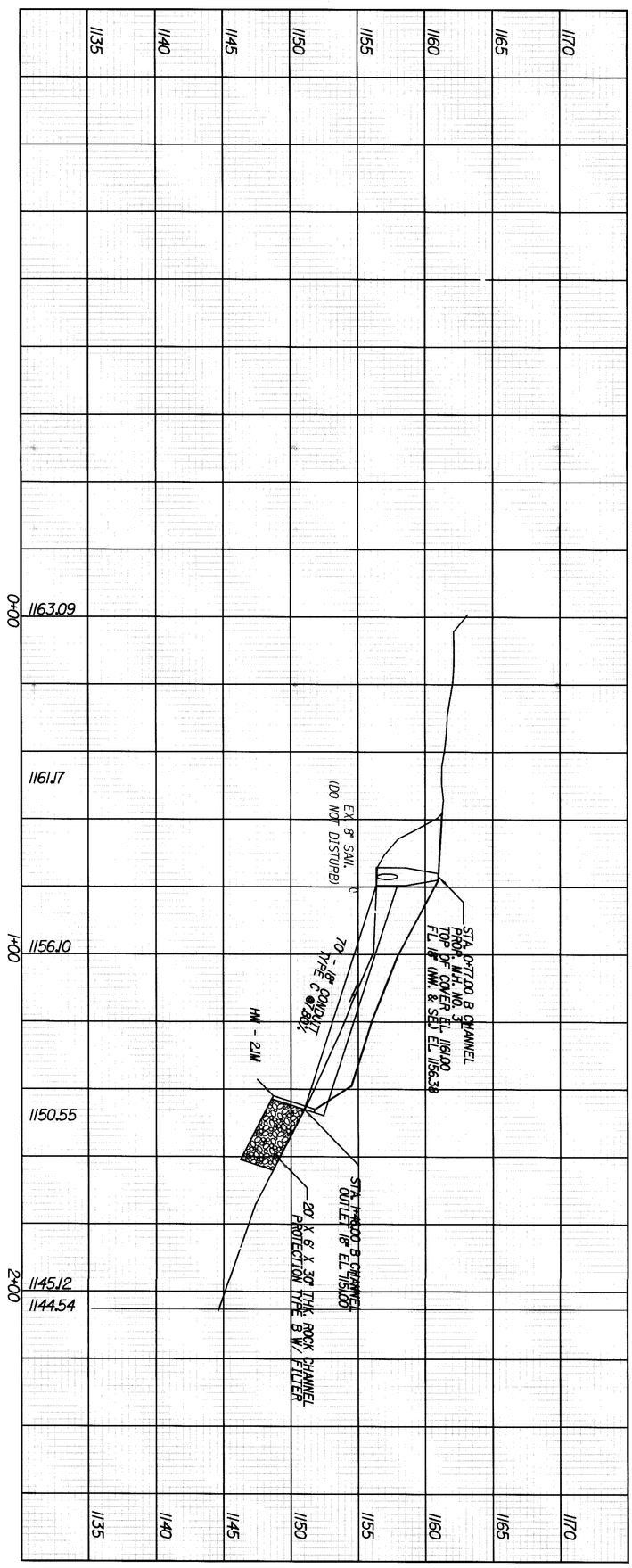

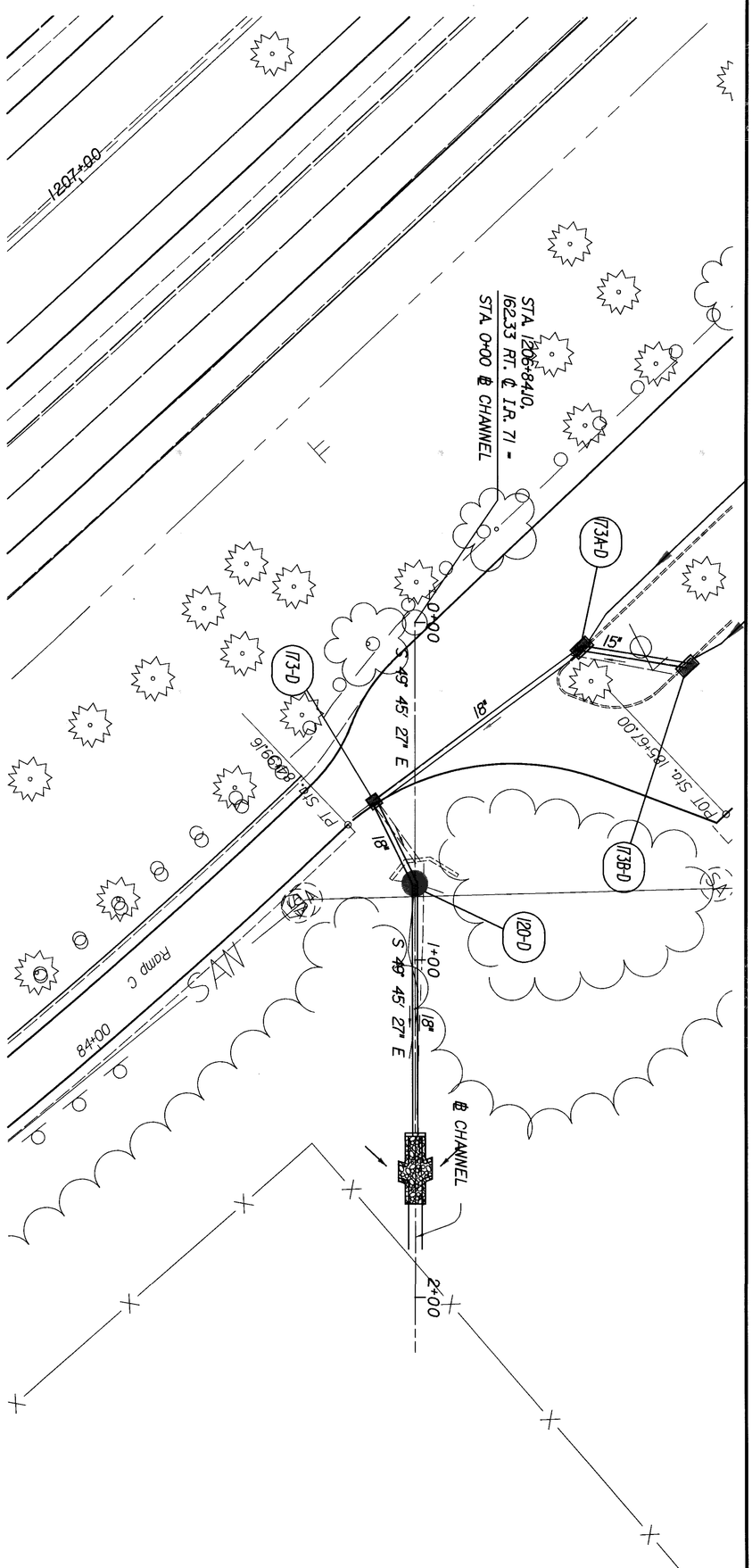

476
940

MED - 71 - 15.78

NORTHBOUND REST AREA CHANNEL DETAIL

CALCULATED PRS
CHECKED PDG

SEEDING	
END WIDTH	SQ. YDS.
57	
	139
57	
	139

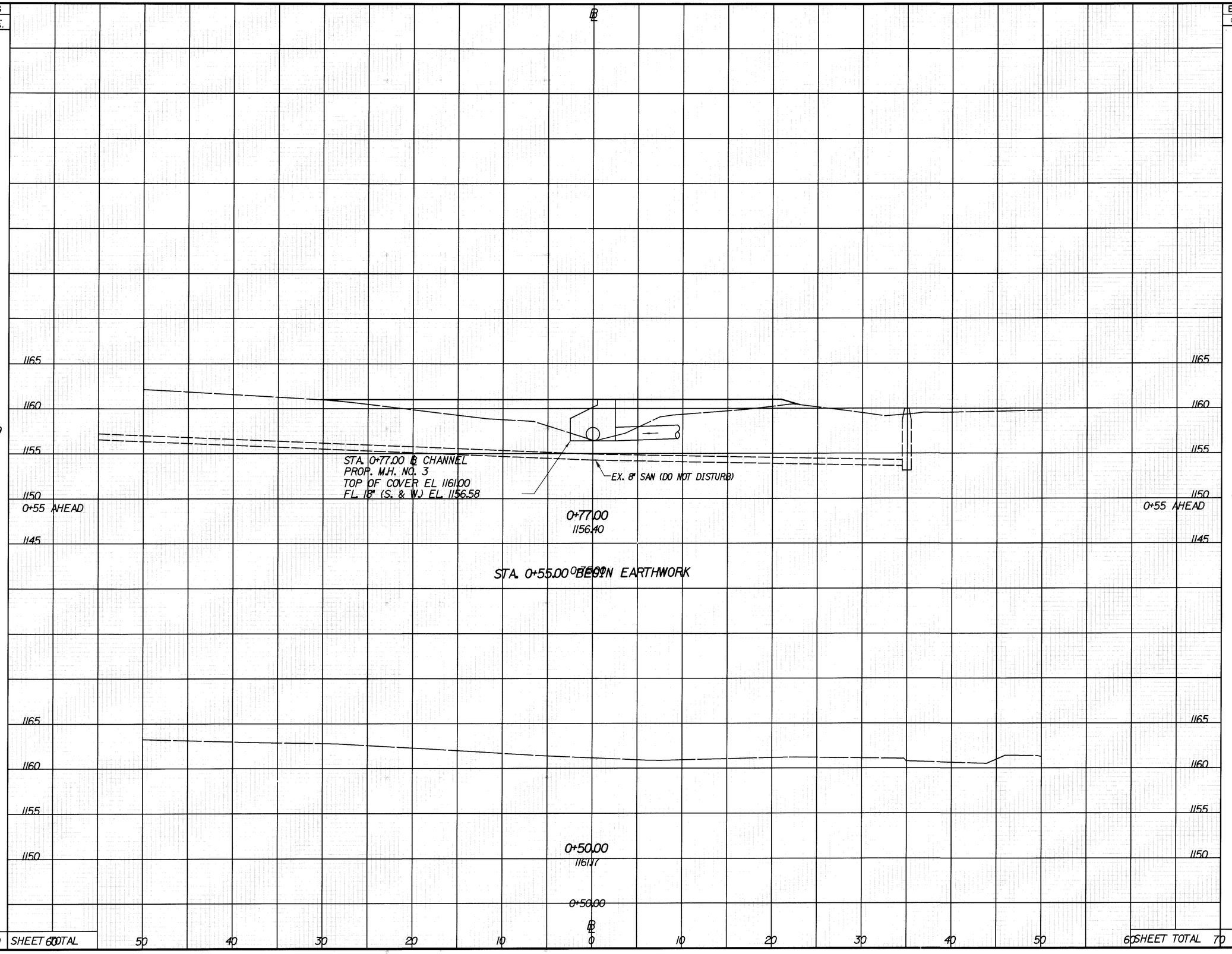

END AREA		VOLUME	
CUT	FILL	CUT	FILL
0	98		
		0	60
0	50		

SEEDING END WIDTH	SEEDING SQ. YDS.	
	702	TOTAL RESTAREA SEEDING AND MULCHING CARRIED TO SUMMARY, SEE SHEET NO. 136.
0	0	AHEAD
10	0	1+66 BACK
	68	
66		
	177	
61		
	168	
60		
	150	
	563	SHEET TOTAL

℄

TOTAL RESTAREA EARTHWORK CARRIED TO SUMMARY, SHEET NO. 136.

BACK

STA. 1+66.00 END EARTHWORK

1155 / 1150 / 1145 / 1140 / 1160 / 1155 / 1150 / 1145 / 1160 / 1155 / 1150 / 1145 / 1160 / 1155 / 1150 / 1145

6:1 — 1151.25 — 6:1 — 6:1 — 1150.75 — 100:1

STA. 1+46.00 ℄ CHANNEL
FL. 18" (S.)
OUTLET EL. 1151.00

1+50.00
1150.55
1+50.00

40:1 — 8:1 — 20:1 — 1153.63

PROP. 18" STORM

1+25.00
1153.47
1+25.00

80:1

PROP. 18" STORM

EX. 8" SAN (DO NOT DISTURB)

1+00.00
1156.10
1+00.00

℄

50 40 30 20 10 0 10 20 30 40 50

SHEET TOTAL

END AREA CUT	END AREA FILL	VOLUME CUT	VOLUME FILL
		28	294
0	0		
		7	5
23	16		
		21	42
0	74		
		0	121
0	56		
		0	66
		28	234

CALCULATED PRS
CHECKED PDG

CROSS SECTIONS
N.B. REST AREA CHANNEL

MED - 71 - 15.78

478
940

DESIGN FILE : i:\pd_med_1r71\dgn\rreltd\finaldrinage\7885dmb.dgn
USERNAME : jrogers
DATE : 03-DEC-1999
TIME : 12:19

DATE : 03-DEC-1999
TIME : 12:36

DESIGN FILE : I:\pd_MED_IR71\DGN\PlanProfile\nbrarpbl.dgn
USERNAME : pfought

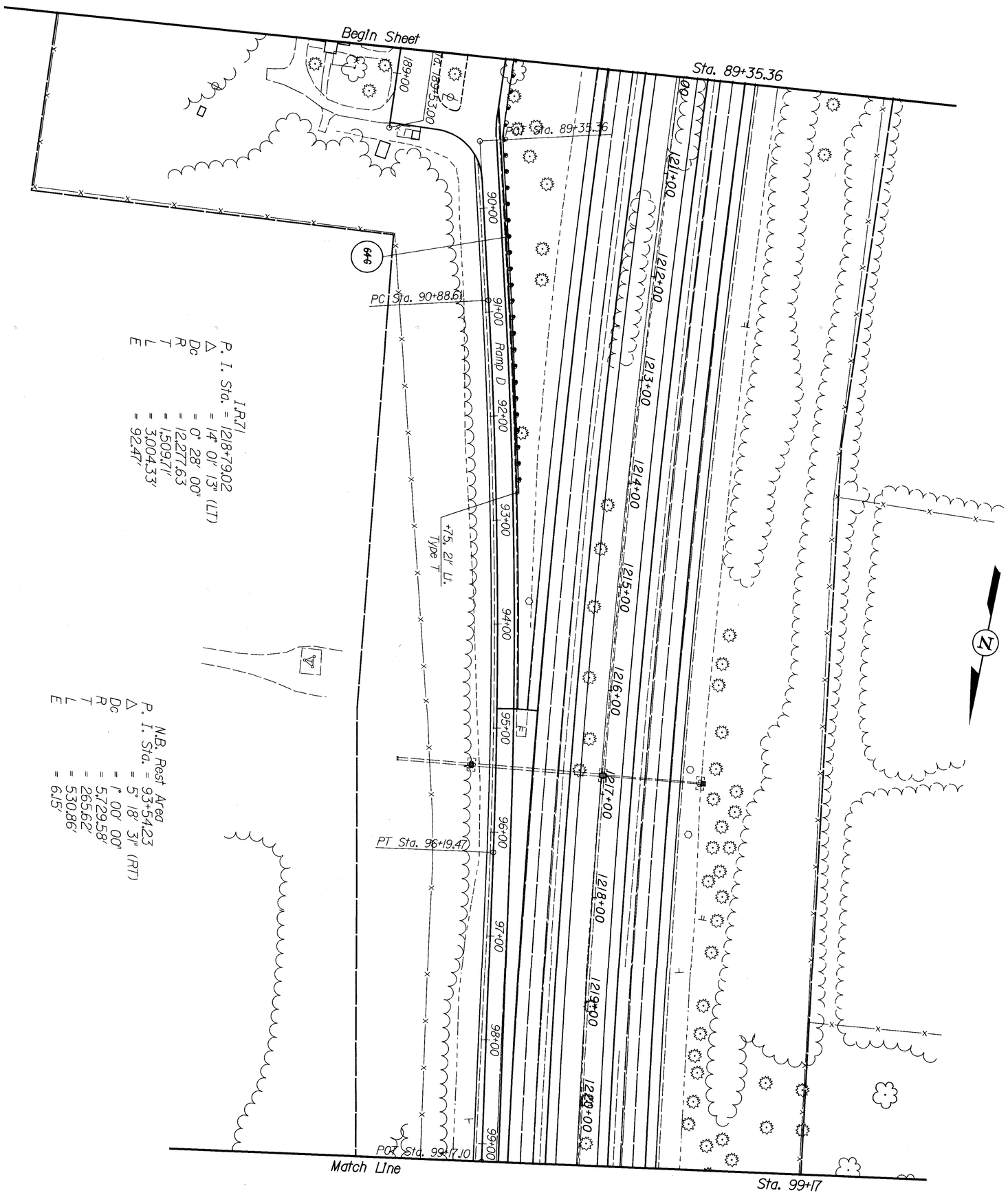

Cross References	
Guardrail	75-76
Drainage	77-96
Underdrains	97-128
Signing	561-606
Lighting	607-643
Tree Planting	647-663
Noise Walls	664-679

479/940	MED - 71 - 15.78	NORTHBOUND REST RAMP D STA. 89+35.36 TO STA. 99+17	CALCULATED / CHECKED	0 50 100 HORIZONTAL SCALE IN FEET

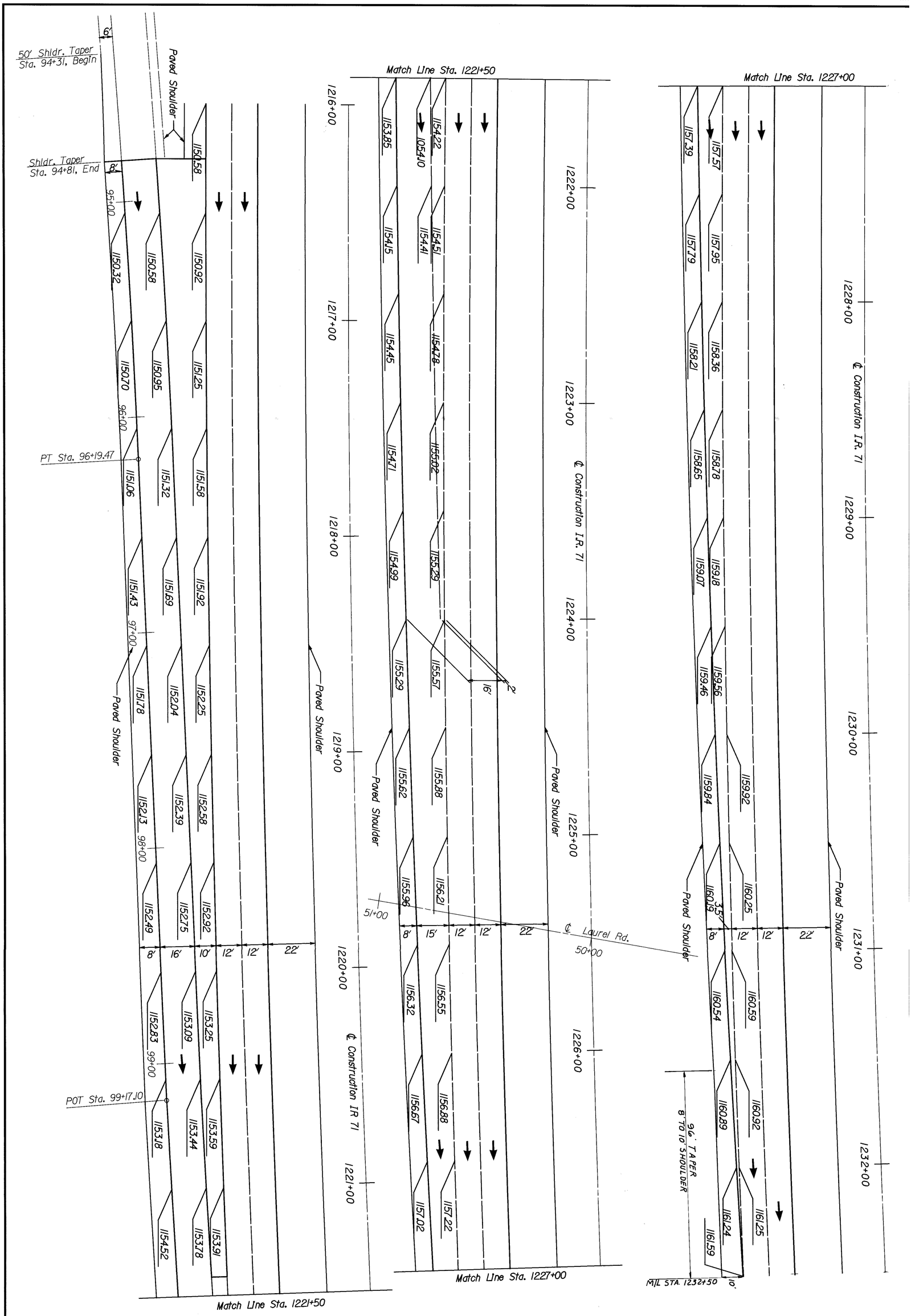

480 / 940	MED-71-15.78	PAVEMENT DETAIL NORTHBOUND REST AREA RAMP "D" STA. 1216+00 TO STA. 1232+50	CALCULATED DJV CHECKED JWR	0 10 20 40 HORIZONTAL SCALE IN FEET

Bi-Directional Impact Attenuator Type 2-98

Connect Bi-Directional Impact Attenuator Type 2-98 directly to concrete barrier without use of separate backup.

Connect Bi-Directional Impact Attenuator Type 2-98 directly to concrete barrier without use of separate backup.

Bi-Directional Impact Attenuator Type 2-98

5'-6" 24" 5'-6"

49+00 50+00 51+00 52+00 ℄ SR 303

14' Transition as per Std. Dwg. GR-3.5M

185.5' Barrier Type A See Std. Dwg. RM-4.4M

14' Transition as per Std. Dwg. GR-3.5M

40' Barrier Width Transition as per Std. Dwg. RM-4.4M

40' Barrier Width Transition as per Std. Dwg. RM-4.4M

Bridge Pier Protection

Begin Sheet

Sta. 40+00

Match Line

Sta. 52+50

℄ Ramp A

℄ Ramp A Spur

℄ Ramp B Spur

℄ Ramp B

P.C. Sta. 53+06.82

P.T. Sta. 51+73.84

P.S.C. Sta. 49+73.38

P.S. Sta. 46+12.56

48+12.56

+37, 8'Lt. Type 1

+13, 44'Lt. Type E-98

+40.9, 5.5'Rt. Type 2-98

+20, 47.5'Rt. Type E-98

+528, 8'Lt. Type B-98

+81.50, ℄ Type 2-98

POT Sta. 48+03.27

POT Sta. 48+47.

POT Sta. 47+58.8

PC Sta. 44+17.58

PT Sta. 45+20.26

PC Sta. 47+20.26

POT Sta. 31+01.45

POT Sta. 37+01.45

79-G 85-G 93-G 104-G 72-G

SR 303

N 89° 15' 06" E

N 20° 44' 54" W

N 87° 28'

S 16° 14' 07" E

S 16° 14' 07" E

S 16° 14' 07" E

R=1910.00' L=1910.00'

T=1910.00' CH=S 16° 14' 07" E

127+00 127.3+00 127.4+00 1267+00 1269+00 1265+00 1264+00

UCATV

SAN

EX. 10" SAN.

EX. 16" WATER LINE

UNDERGROUND CATV (CABLEVISION)

EX. UNDERGROUND ELECTRIC FOR LIGHTING

OVERHEAD ELECTRIC DISTRIBUTION LINE (OHIO EDISON) (CABLEVISION)

OVERHEAD TELEPHONE LINES (GTE)

6" Varies 5'-11" 6"

Curb Removed

Section A-A (Existing)

Varies 6'-18"

For quantities see sht. 135.

1¼" 448 Asphalt Concrete Surface Course Type 1, PG 64-22
407 Tack Coat
1¾" 448 Asphalt Concrete Intermediate Course Type 2, PG 64-22
407 Tack Coat for Intermediate Course
6" 301 Bituminous Aggregate Base
6" 304 Aggregate Base
203 Subgrade Compaction

Section A-A (Proposed)

DESIGN FILE : i:\pd_MED_IR71\DGN\sr303sl.dgn
USERNAME : jrogers
DATE : 30-DEC-1999
TIME : 14:40

HORIZONTAL SCALE IN FEET
0 50 100

CALCULATED
CHECKED

SR 303
Sta 40+00.00 to Sta 56+50.00

MED - 71 - 15.78

482
940

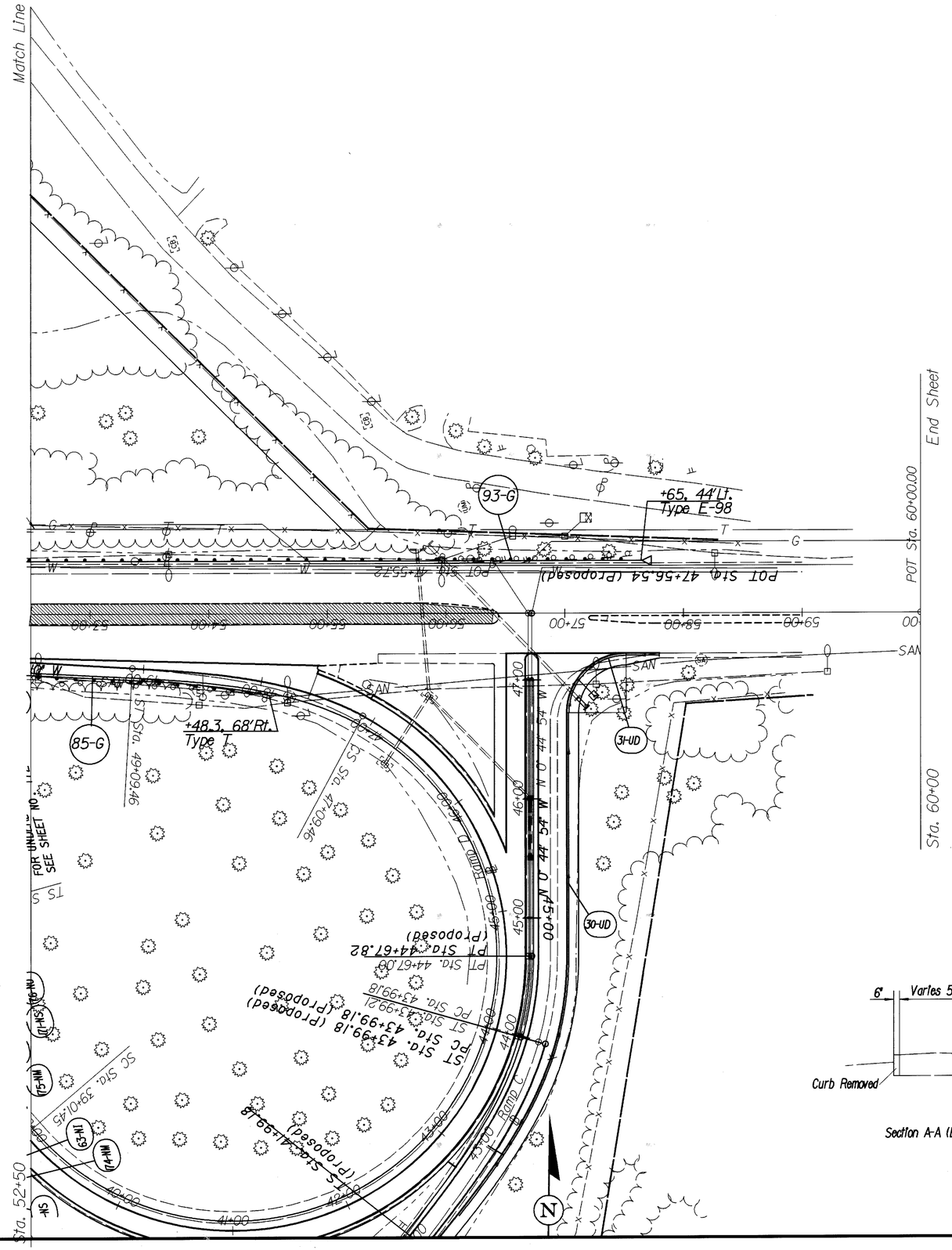

6" Varies 5'-17' 6"

Curb Removed

Section A-A (Existing)

Varies 6'-18"

- 1¼" 448 Asphalt Concrete Surface Course Type 1, PG 64-22
- 407 Tack Coat
- 1¾" 448 Asphalt Concrete Intermediate Course Type 2, PG 64-22
- 407 Tack Coat for Intermediate Course
- 6" 301 Bituminous Aggregate Base
- 6" 304 Aggregate Base
- 203 Subgrade Compaction

Section A-A (Proposed)

For quantities see sht. 135.

HORIZONTAL SCALE IN FEET
0 50 100

CALCULATED

CHECKED

SR 303
Sta 52+50.00 to Sta 60+00.00

MED - 71 - 15.78

483
940

DESIGN FILE : i:\pdf_MED_IR71\DGN\sr303s2.dgn
USERNAME : pfought

DATE : 08-DEC-1999
TIME : 12:08

S.R. 303 RAMP "C"

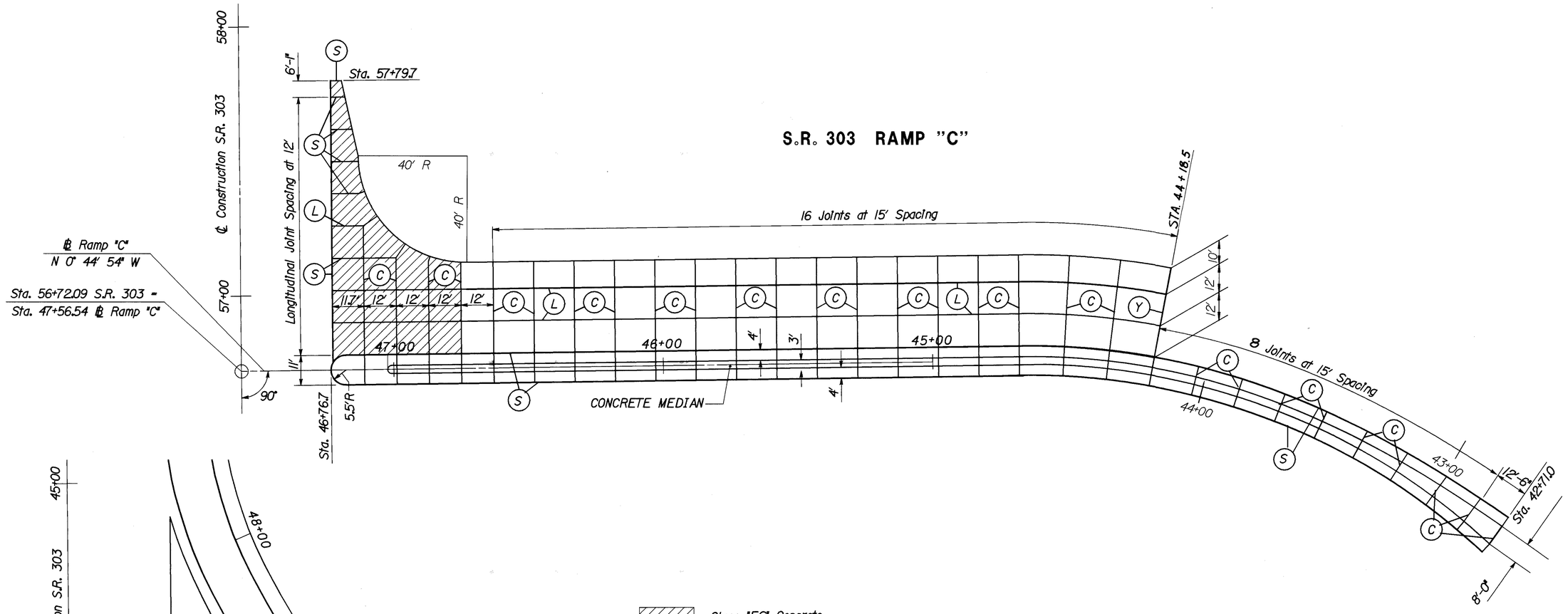

S.R. 303 RAMP "A"

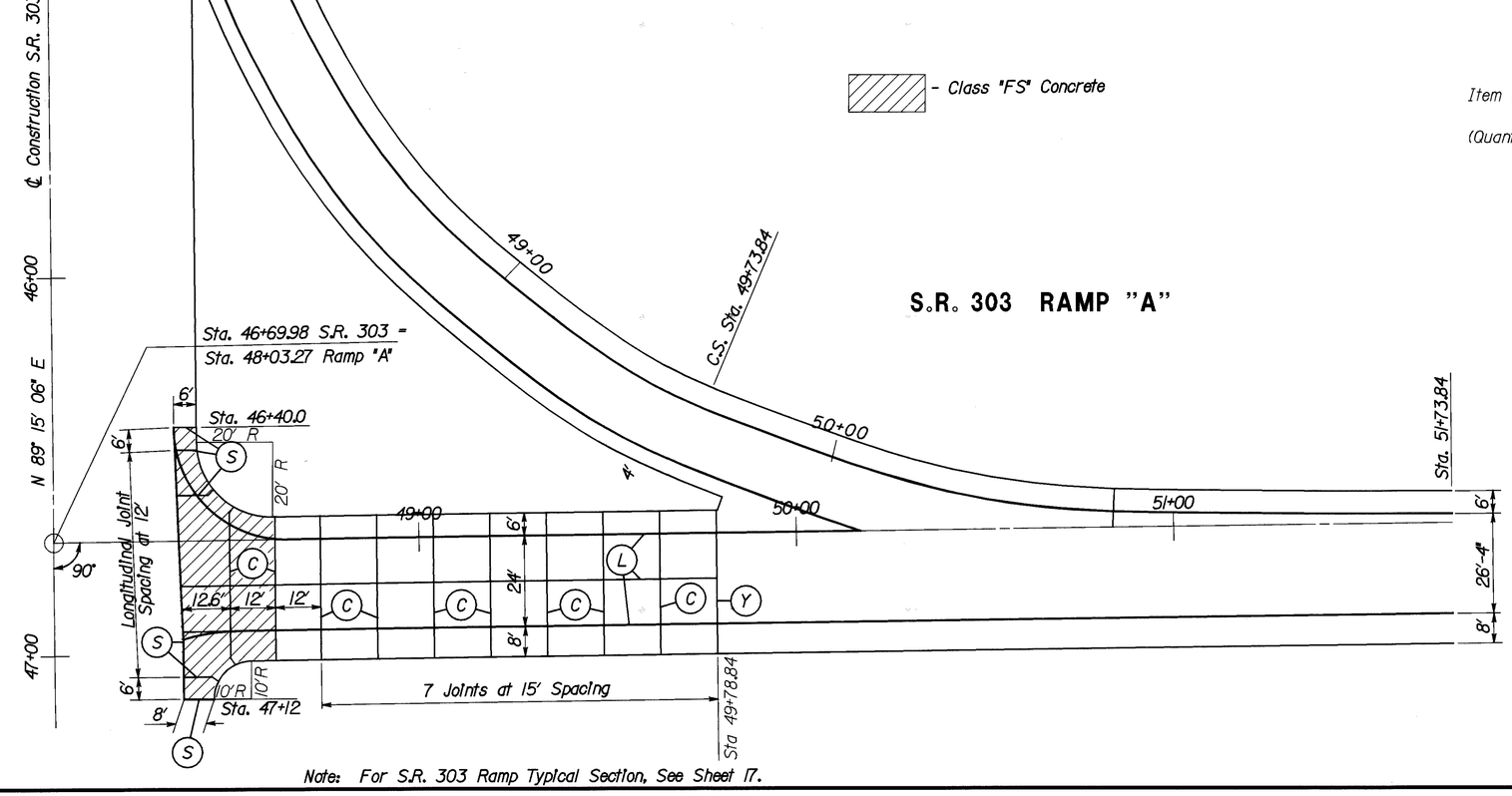

- Class "FS" Concrete

Item 830 Concrete Median 580 Sq. Yds.
(CADD generated quantity)
(Quantity carried to the General Summary.)

LEGEND

- (L) Standard Longitudinal Joint As Per BP-2.1
- (S) Standard Longitudinal Joint As Per BP-2.1 Without Tie Bars
- (C) Contraction Joint As Per BP-2.1
- (Y) Butt Joint Between Existing Pavement and Proposed Pavement, A Doweled Type Y Joint As Per BP-2.5 Shall Be Provided. Grouting and Drilling Requirements Shall Be Per Specification 255 and BP-2.5 Except The Requirement That The Drilling Device Shall Be Capable Of Drilling Three Holes At One Time Shall Be Waived.

Note: For S.R. 303 Ramp Typical Section, See Sheet 17.

HORIZONTAL SCALE IN FEET
0 10 20 40

CALCULATED DJV
CHECKED

PAVEMENT JOINT DETAIL
S.R. 303 RAMPS "A" & "C"

MED-71-15.78

484
940

DESIGN FILE : i:\pd_med_lr71\dgn\pavement details\sr303.dgn
USERNAME : jrogers
DATE : 06-DEC-1999
TIME : 07:48

DESIGN FILE : i:\pd_med_ir71\dgn\pavement details\sr303.dgn
USERNAME : jrogers

DATE : 01-DEC-1999
TIME : 08:59

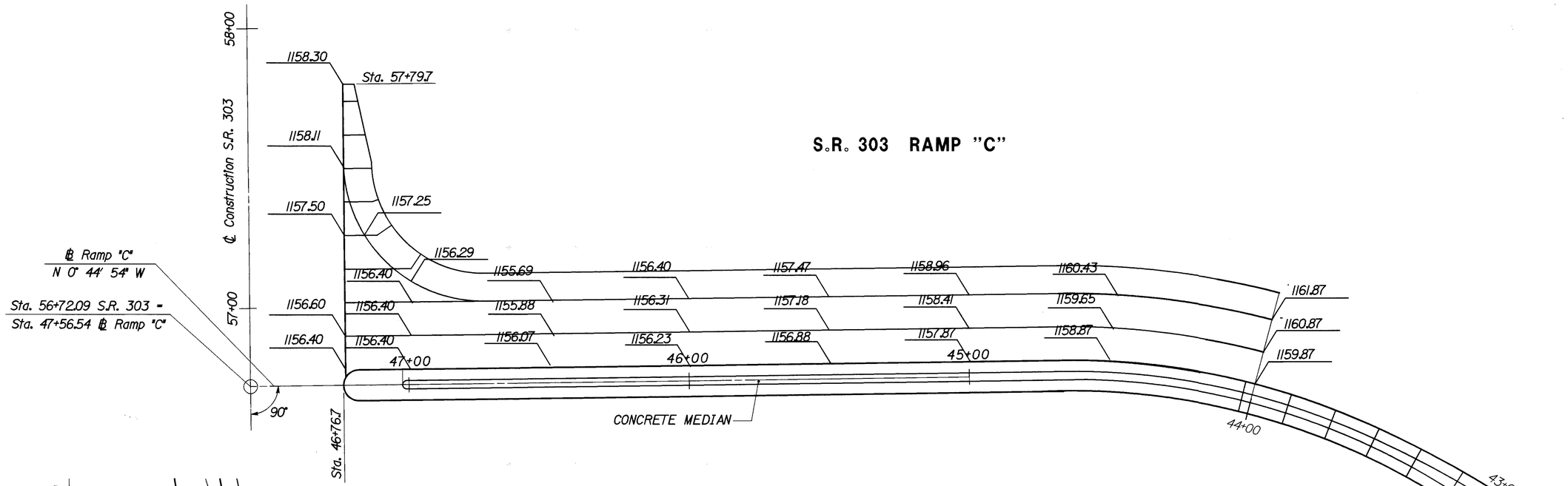

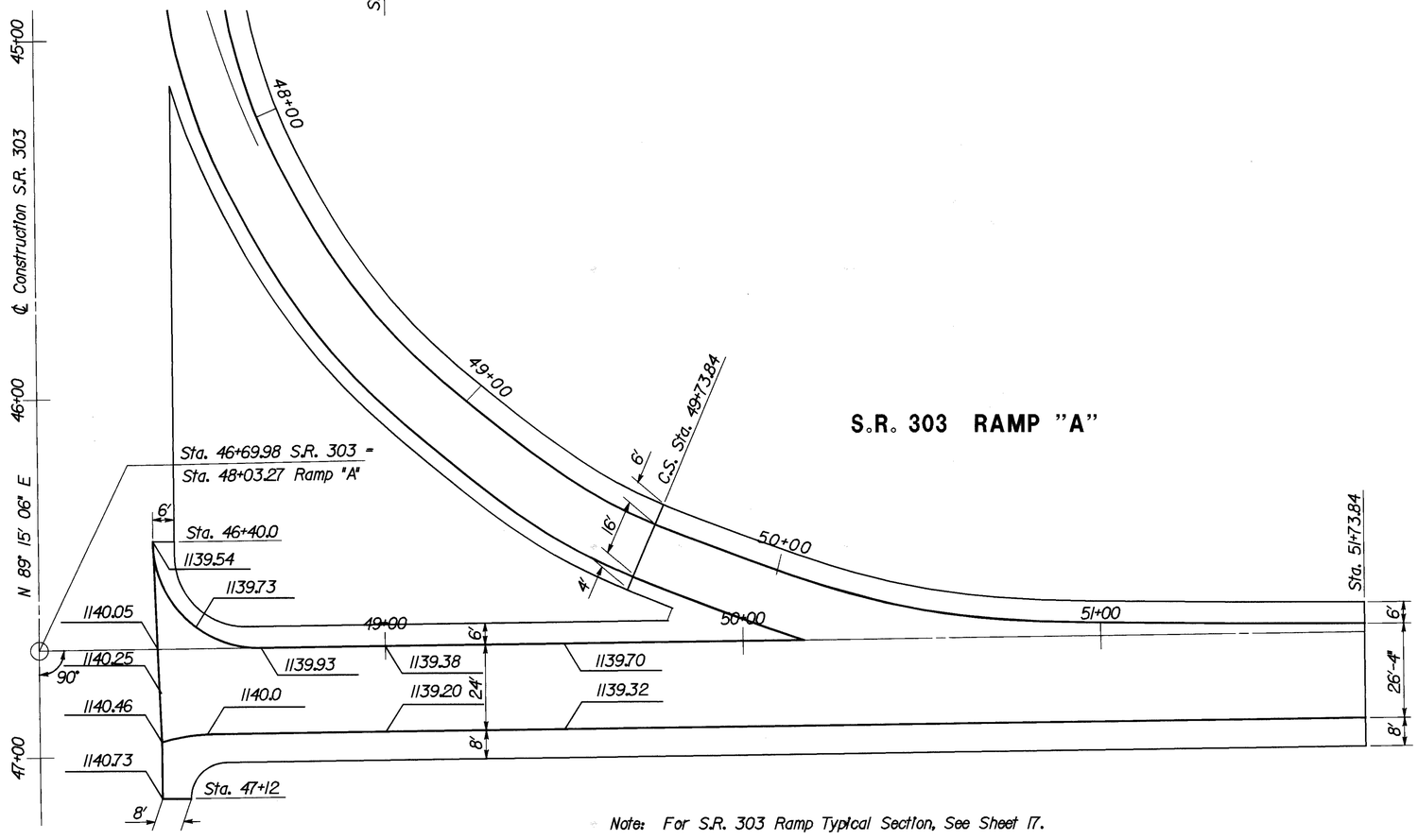

Note: For S.R. 303 Ramp Typical Section, See Sheet 17.

N

0 10 20 40
HORIZONTAL SCALE IN FEET

CALCULATED DJV
CHECKED JWR

PAVEMENT JOINT DETAIL
S.R. 303 RAMPS "A" & "C"

MED-71-15.78

484A
940

DATE : 07-DEC-1999
TIME : 09:10

DESIGN FILE : h:\pd_MED_IR71\DGN\PlanProfile\pepper.dgn
USERNAME : jpuente

Cross References	
Guardrail	75-76
Drainage	77-96
Underdrains	97-128
Signing	561-606
Lighting	607-643
Tree Planting	647-663
Noise Walls	664-679

Ramp A
P. I. Sta. = 48+31.13
Δ = 61° 31' 16" (LT)
Dc = 16° 22' 13"
R = 350.00'
Ls = 200.00'
Theta = 16° 22' 13"
LT = 133.91'
ST = 67.19'
x = 198.37'
y = 18.94'
k = 99.73'
p = 4.75'
Δc = 28° 46' 50" (LT)
Lc = 175.81'
Ts = 310.87'
Es = 62.83'

Ramp A
P. I. Sta. = 45+87.41
Δ = 8° 28' 44" (RT)
Dc = 2° 30' 00"
R = 229.83'
T = 169.89'
L = 339.16'
E = 6.29'

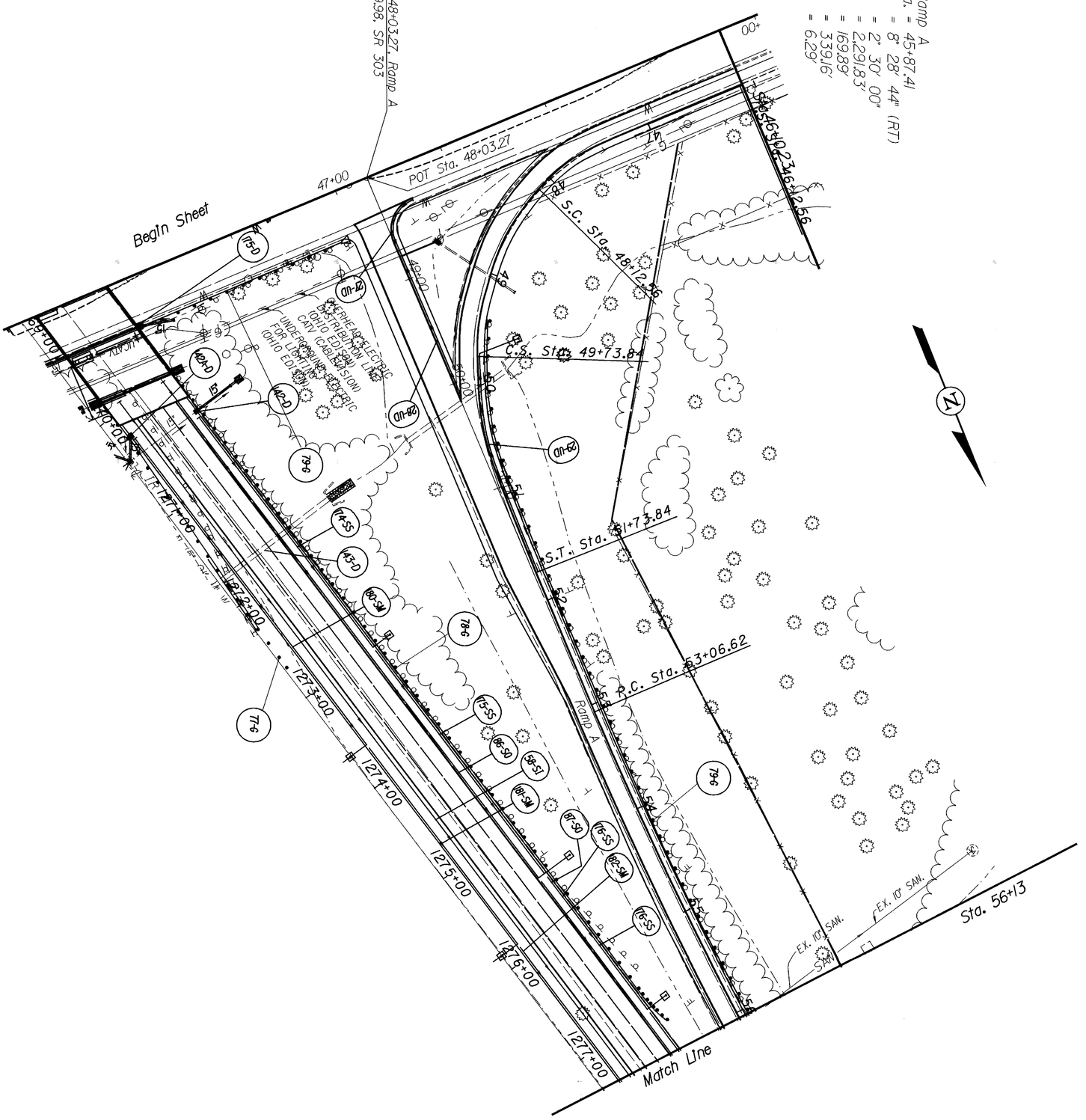

485 / 940	MED - 71 - 15.78	SR 303 RAMP A STA. 48+03.27 TO STA. 56.13	CALCULATED CHECKED	0 50 100 HORIZONTAL SCALE IN FEET

Cross References	
Guardrail	75-76
Drainage	77-96
Underdrains	97-128
Signing	561-606
Lighting	607-643
Tree Planting	647-663
Noise Walls	664-679

DATE : 06-DEC-1999
TIME : 07:46
DESIGN FILE : i:\pd\..MED.IR71\DGN\PlanProfile\sr303rdl.dgn
USERNAME : pfought

N

HORIZONTAL SCALE IN FEET
0 50 100

CALCULATED | CHECKED

SR 303 RAMP A
STA. 56+13 TO STA 62+58

MED - 71 - 15.78

485A
940

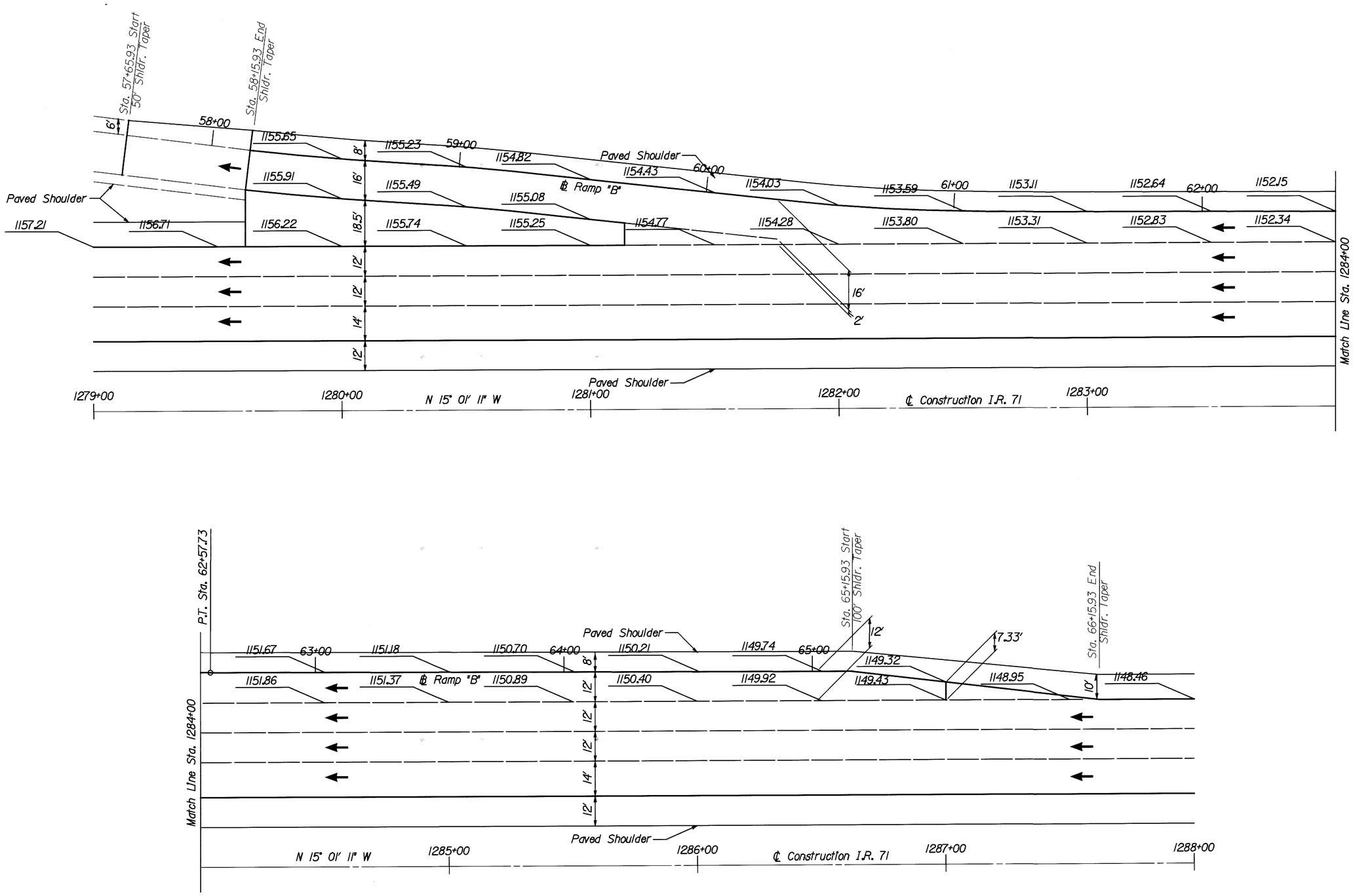

DESIGN FILE : i:\pd_MED_IR71\DGN\pavement details\sr303.dgn
USERNAME : pfought

DATE : 08-DEC-1999
TIME : 11:07

0 10 20 40
HORIZONTAL SCALE IN FEET

CALCULATED DJV
CHECKED JWR

PAVEMENT DETAIL S.R. 303 RAMP "A"
STA. 1279+00 TO STA. 1288+00

MED-71-15.78

486
940

Cross References	
Guardrail	75-76
Drainage	77-96
Underdrains	97-128
Signing	561-606
Lighting	607-643
Tree Planting	647-663
Noise Walls	664-679

DESIGN FILE : i:\pod_MED_JR7\DGN\PlanProfile\sr303rbl.dgn
USERNAME : pfought

DATE : 03-DEC-1999
TIME : 12:38

HORIZONTAL SCALE IN FEET
0 50 100

CALCULATED | CHECKED

SR 303 RAMP B
STA. 32+00 TO STA. 42+00

MED - 71 - 15.78

487
940

Ramp B
P. I. Sta. = 49+49.13
△ = 90° 00' 00" (LT)
Dc = 24° 54' 40"
R = 230.00'
LS = 200.00'
Theta = 24° 54' 40"
LT = 134.68'
ST = 67.89'
x = 196.25'
y = 28.60'
k = 99.37'
p = 7.20'
△c = 40° 10' 40" (LT)
Lc = 161.28'
Ts = 336.57'
Es = 105.45'

DESIGN FILE : i:\pd_MED_IR71\DGN\pavement details\sr303.dgn
USERNAME : pfought
DATE : 08-DEC-1999
TIME : 11:08

N

0 10 20 40
HORIZONTAL SCALE IN FEET

CALCULATED DJV
CHECKED JWR

PAVEMENT DETAIL S.R. 303 RAMP "B"
STA. 1241+00 TO STA. 1251+00

MED-71-15.78

489
940

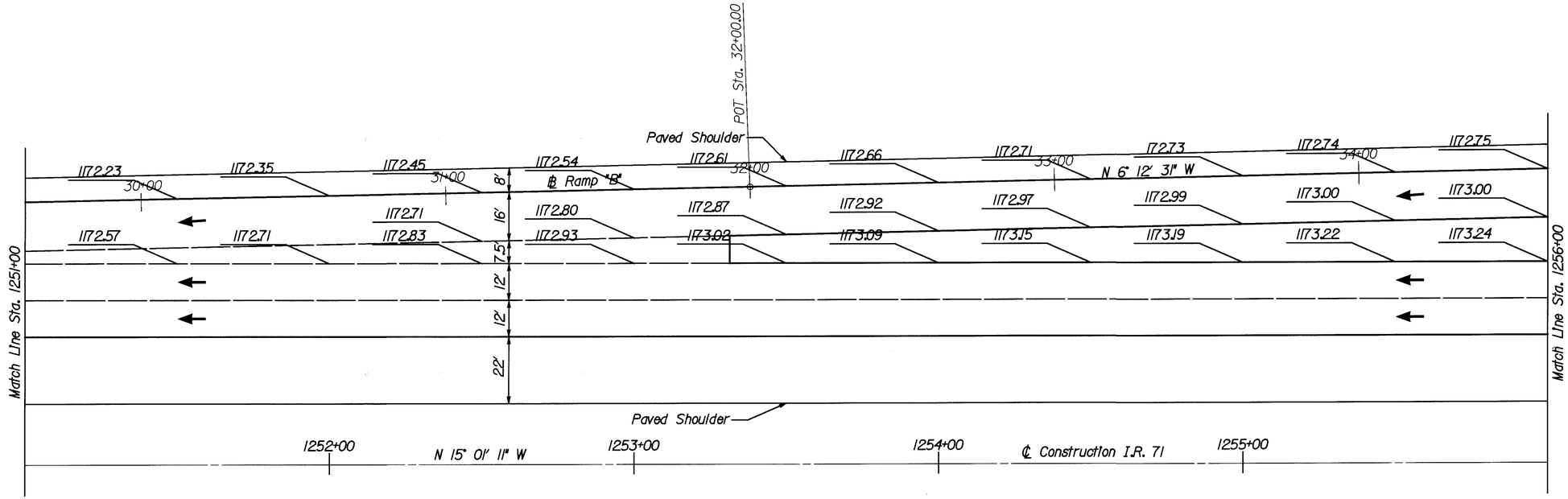

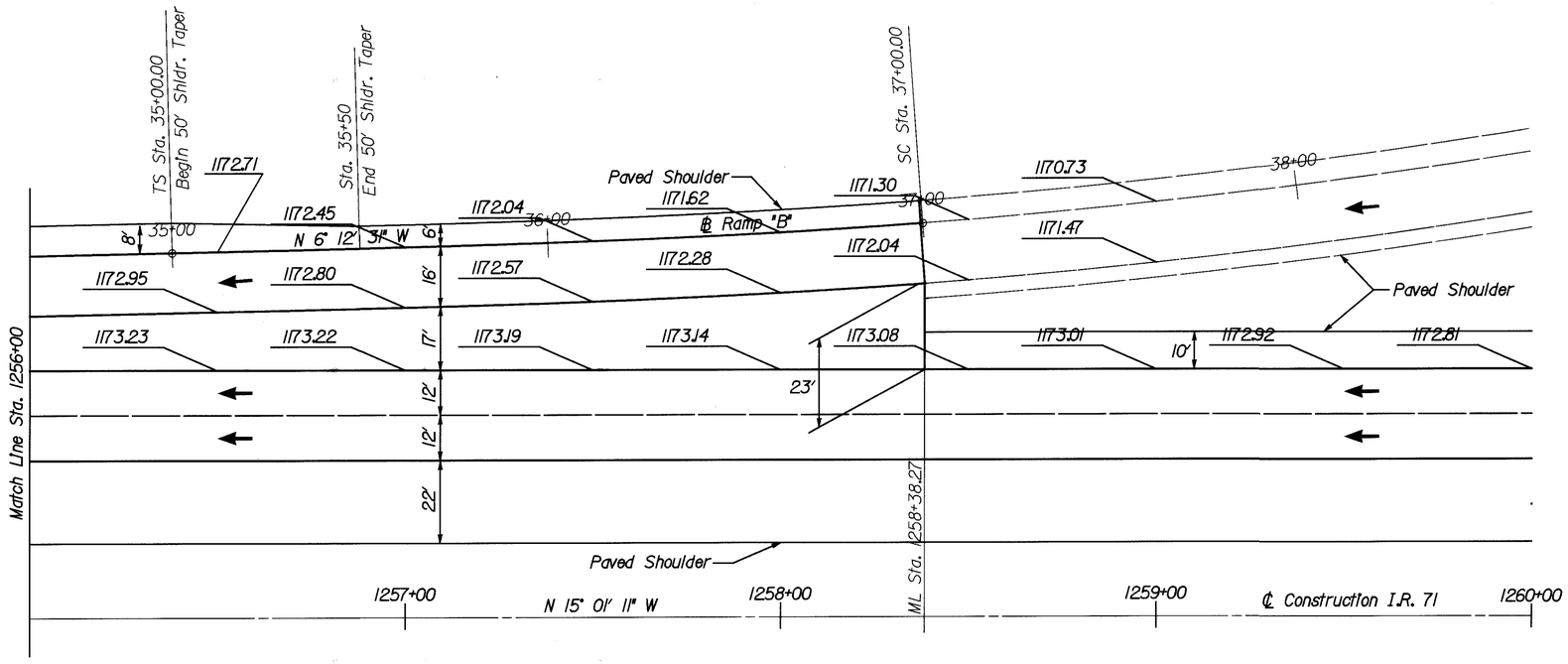

DESIGN FILE : I:\pd_MED_JR71\DGN\pavement details\sr303.dgn
USERNAME : pfought

DATE : 02-DEC-1999
TIME : 12:05

HORIZONTAL SCALE IN FEET
0 10 20 40

CALCULATED DJV
CHECKED JWR

PAVEMENT DETAIL S.R. 303 RAMP "B"
STA. 1251+00 TO STA. 1260+00

MED-71-15.78

490
940

DATE : 06-DEC-1999
TIME : 07:50

DESIGN FILE : I:\pd_MED_IR71\DGN\PlanProfile\sr303rcl.dgn
USERNAME : pfought

Cross References	
Guardrail	75-76
Drainage	77-96
Underdrains	97-128
Signing	561-606
Lighting	607-643
Tree Planting	647-663
Noise Walls	664-679

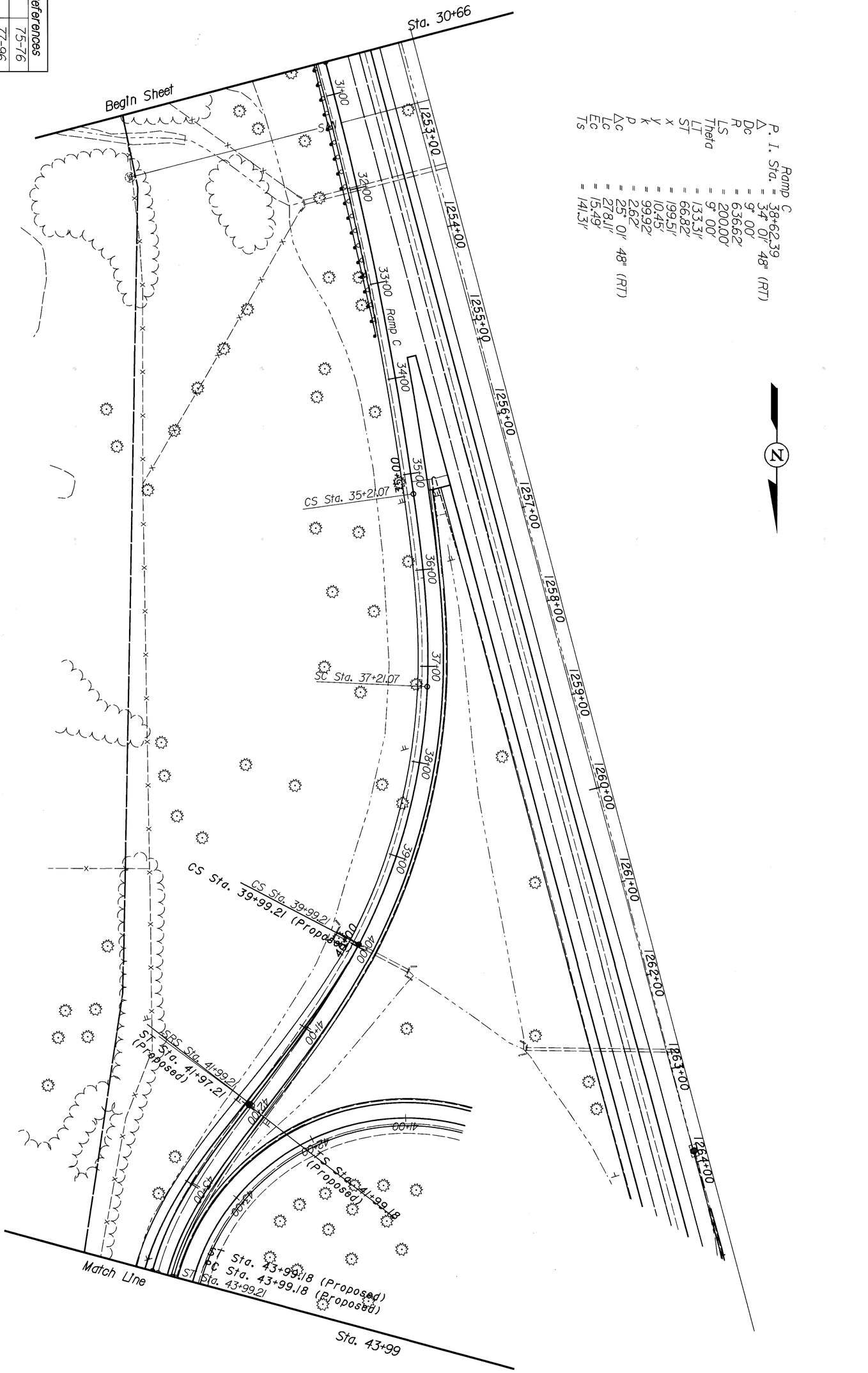

491 / 940	MED - 71 - 15.78	SR 303 RAMP C STA. 30+66 TO STA. 43+99	CALCULATED CHECKED 0 50 100 HORIZONTAL SCALE IN FEET

Cross References	
Guardrail	75-76
Drainage	77-96
Underdrains	97-128
Signing	561-606
Lighting	607-643
Tree Planting	647-663
Noise Walls	664-679

P. I. Sta. = Ramp CD 44+33.72
Δ = 15° 38' 15" (LT)
Dc = 22° 46' 54"
R = 251.50'
T = 34.54'
L = 68.64'
E = 2.36'

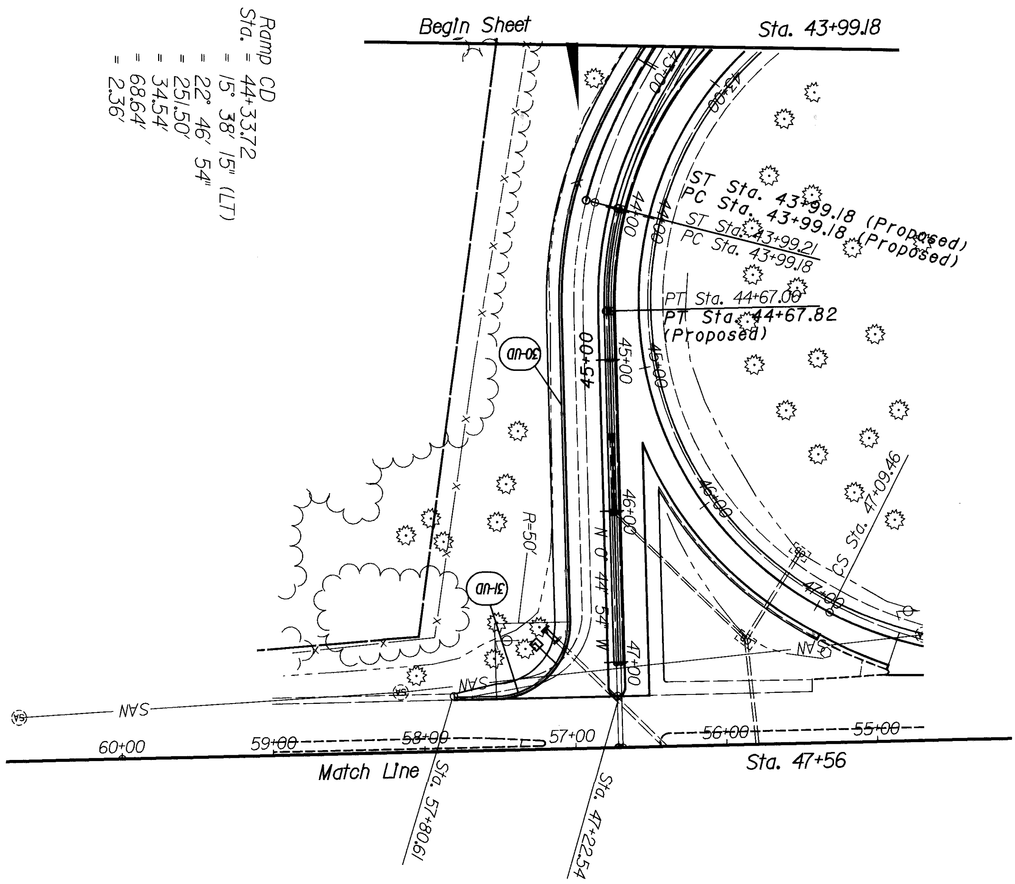

DESIGN FILE : I:\pdf_MED_IR71\DGN\pavement details\sr303.dgn
USERNAME : pfought

DATE : 02-DEC-1999
TIME : 12:05

HORIZONTAL SCALE IN FEET
0 10 20 40

CALCULATED DJV
CHECKED JWR

PAVEMENT DETAIL S.R. 303 RAMP "C"
STA. 1248+00 TO STA. 1258+00

MED-71-15.78

493
940

SEEDING		END AREA		VOLUME		CALCULATED	CHECKED
END WIDTH	SQ. YDS.	CUT	FILL	CUT	FILL	NJV	JWR

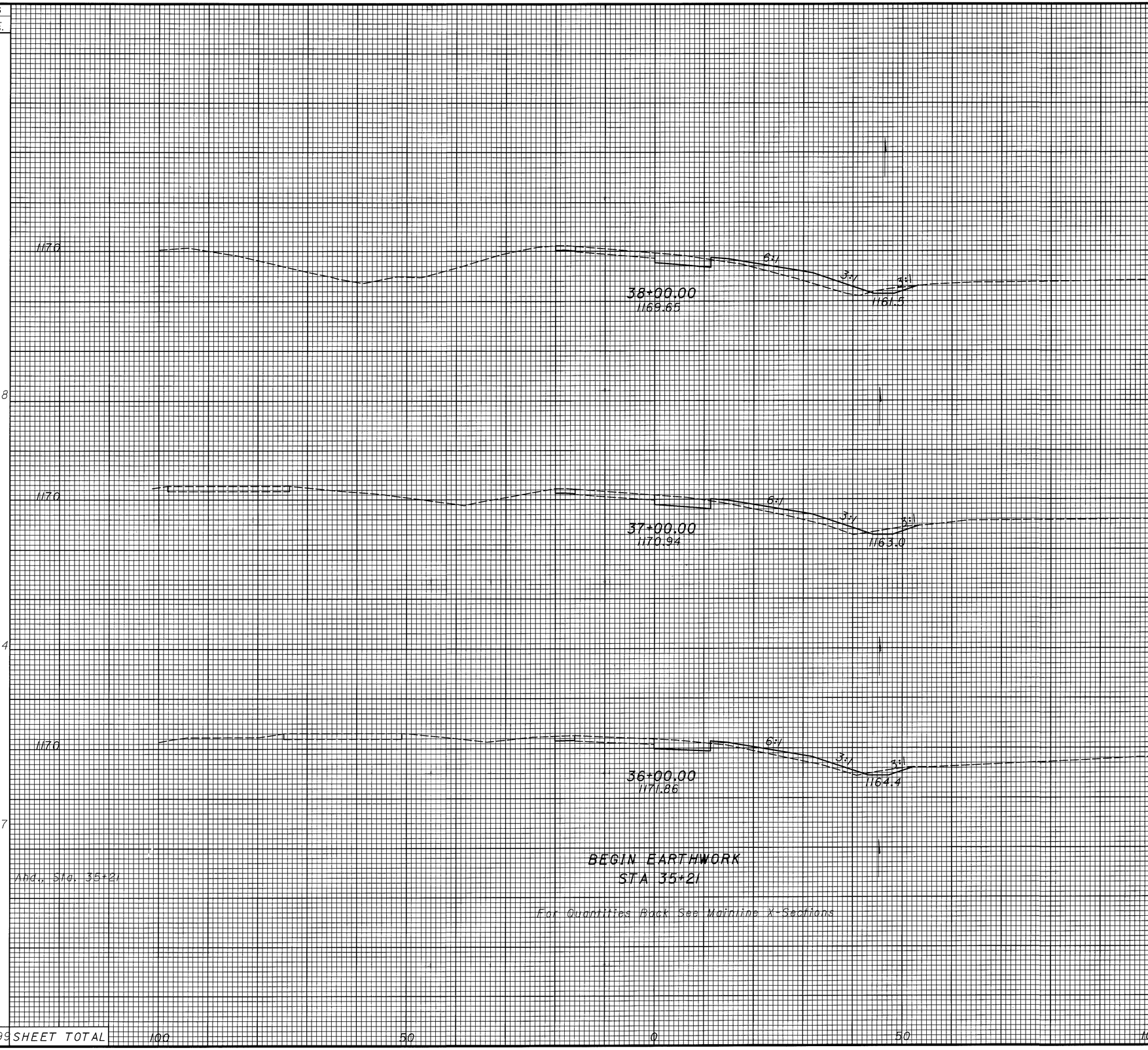

52		30	41			
	578			115	135	
52		32	32			
	544			115	107	
46		30	26			
	377			94	67	
40		34	20			
	1499 SHEET TOTAL		SHEET TOTAL	324	309	

100 50 0 50 100

CROSS SECTIONS - S.R. 303 RAMP C
STA. 36+00 TO STA. 38+00

MED-71-15.78

494
940

SEEDING	
END WIDTH	SQ. YDS.
44	522
50	511
42	522
52	
	1555



END AREA		VOLUME	
CUT	FILL	CUT	FILL
38	26		
		133	102
34	29		
		122	100
32	25		
		115	122
30	41		
		370	324

CALCULATED N.J.V.
CHECKED J.W.R.

CROSS SECTIONS - S.R. 303 RAMP C
STA. 39+00 TO STA. 41+00

MED-71-15.78

495
940

SEEDING			END AREA		VOLUME	
STA.	END WIDTH	SQ. YDS.	CUT	FILL	CUT	FILL
50						
			130	2		
522					389	26
44			80	12		
489					219	70
44	Stg. 41+00		38	26		
	1011	SHEET TOTAL			608	96

CALCULATED NJV

CHECKED JWR

CROSS SECTIONS - S.R. 303 RAMP C

STA. 42+00 TO STA. 43+00

MED-71-15.78

496
940

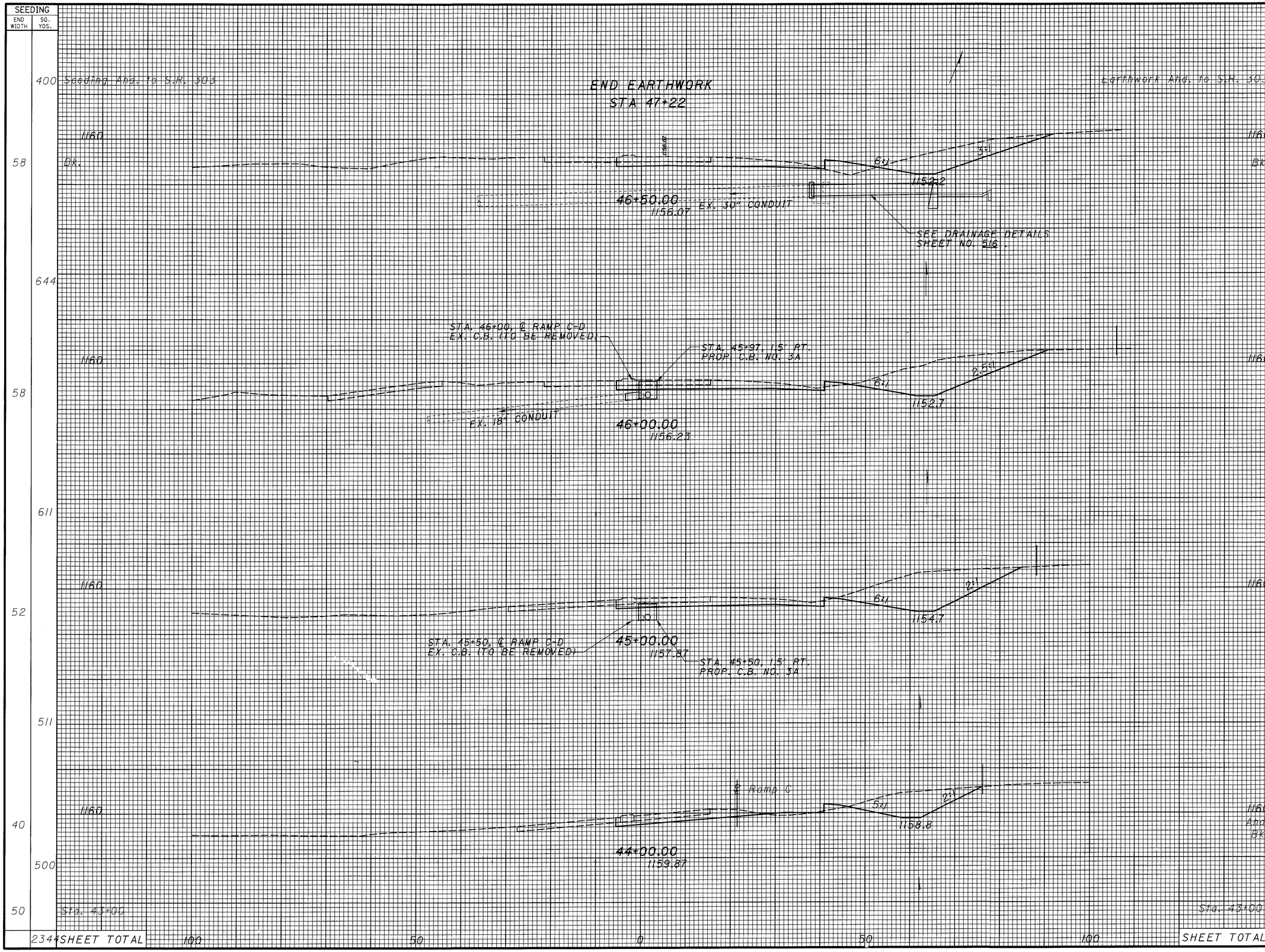

END AREA CUT	END AREA FILL	VOLUME CUT	VOLUME FILL
		220	40
160	20		
		361	22
230	4		
		889	9
250	1		
		711	13
And. 134	6		
Bk. 116	6		
		456	13
130	2		
		2996	121

CALCULATED NJV
CHECKED JWR

CROSS SECTIONS - S.R. 303 RAMP CD
STA. 44+00 TO STA. 46+50

MED-71-15.78

DATE : 06-DEC-1999
TIME : 10:39

DESIGN FILE : I:\pd_med_1r71\dgn\planprofile\sr303rpd1.dgn
USERNAME : jrogers

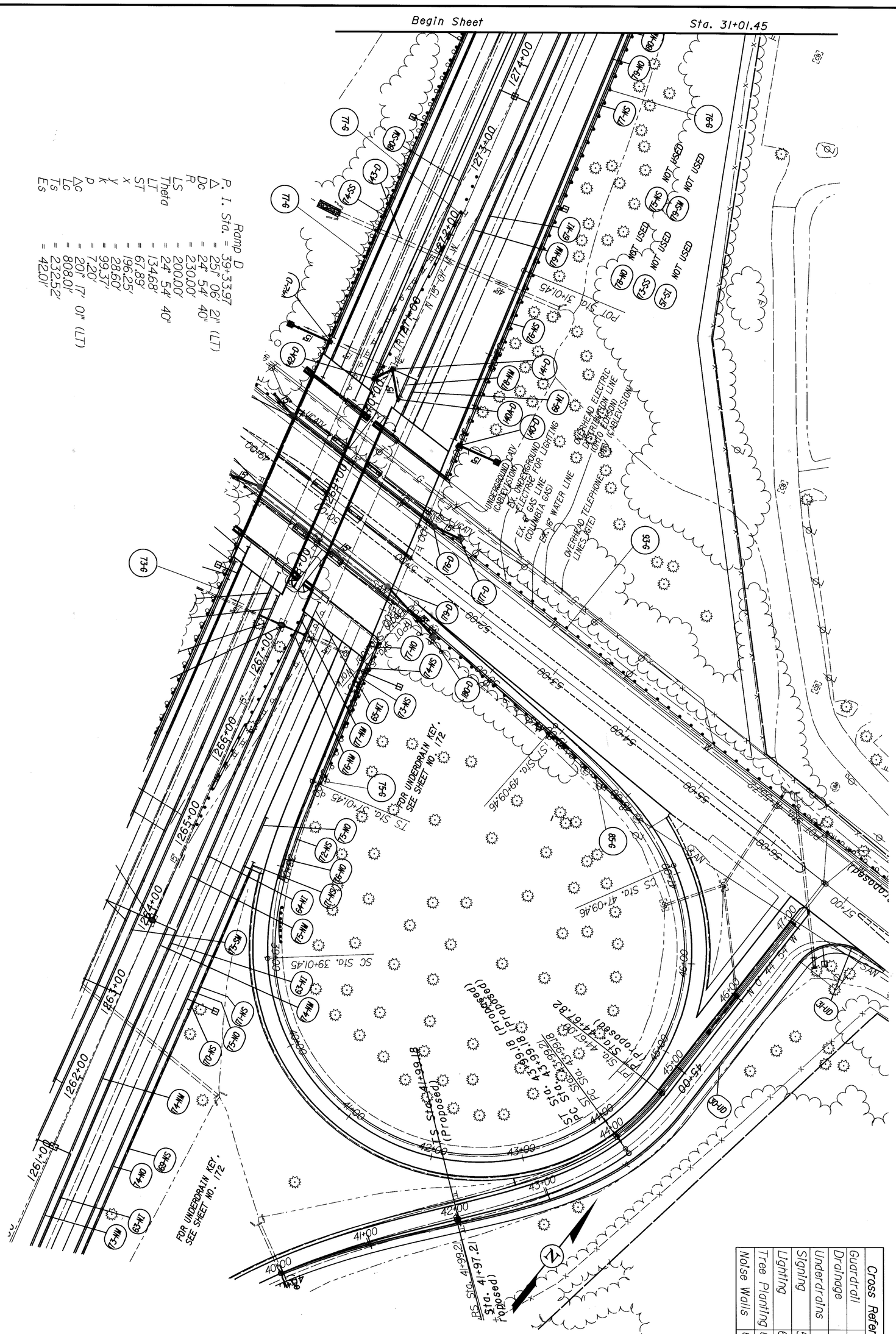

Cross References	
Guardrail	75-76
Drainage	77-96
Underdrains	97-128
Signing	561-606
Lighting	607-643
Tree Planting	647-663
Noise Walls	664-679

498 940	MED - 71 - 15.78	SR 303 RAMP D STA. 51+09.93 TO STA. 31+01.45	CALCULATED CHECKED	0 50 100 HORIZONTAL SCALE IN FEET

DESIGN FILE : i:\pd_MED_IR71\DGN\pavement details\sr303.dgn
USERNAME : pfought

DATE : 02-DEC-1999
TIME : 12:06

HORIZONTAL SCALE IN FEET
0 10 20 40

CALCULATED DSV
CHECKED JWR

PAVEMENT DETAIL S.R. 303 RAMP "D"
STA. 1264+00 TO STA. 1273+00

MED-71-15.78

499
940

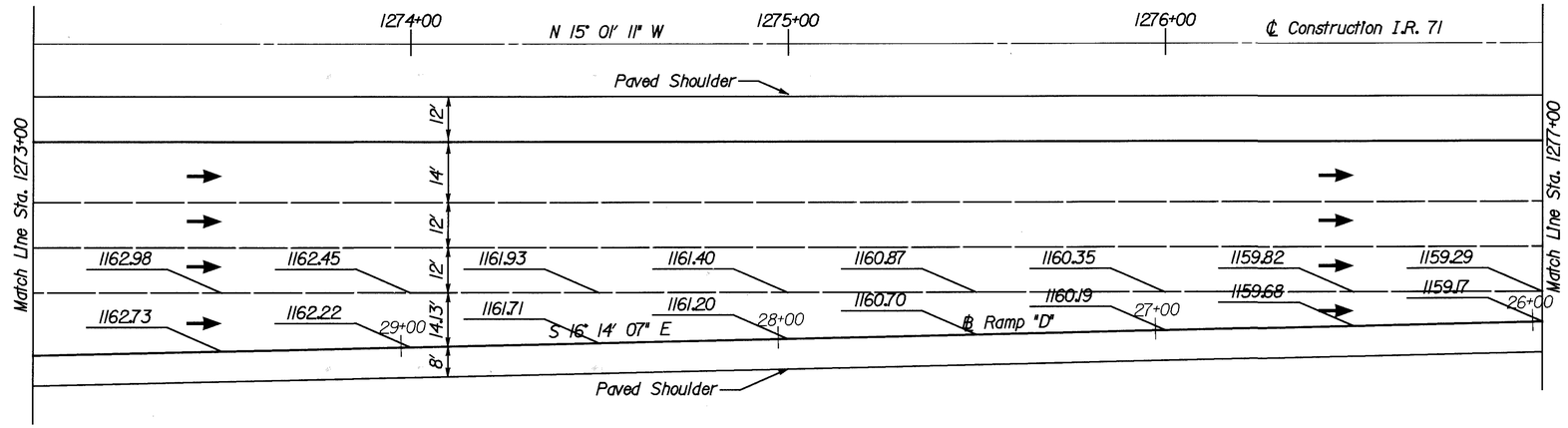

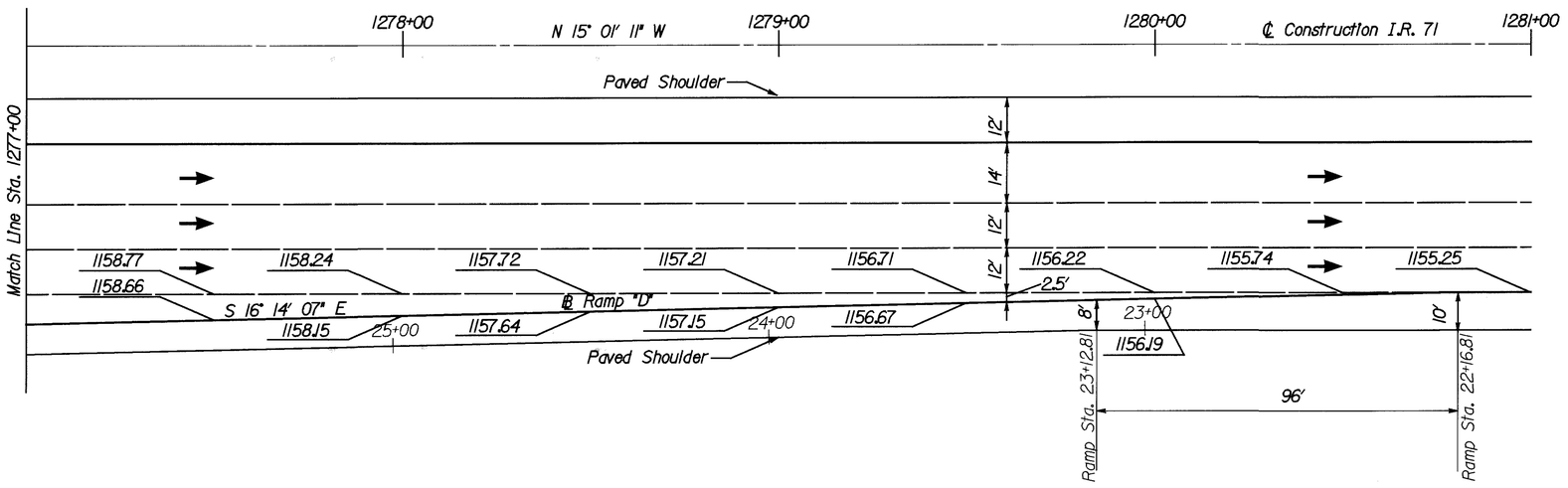

DESIGN FILE : i:\pd_MED_JR71\DGN\pavement details\sr303.dgn
USERNAME : pfought

DATE : 02-DEC-1999
TIME : 12:06

HORIZONTAL SCALE IN FEET
0 10 20 40

CALCULATED DJV
CHECKED JWR

PAVEMENT DETAIL S.R. 303 RAMP "D"
STA. 1273+00 TO STA. 1281+00

MED-71-15.78

500
940

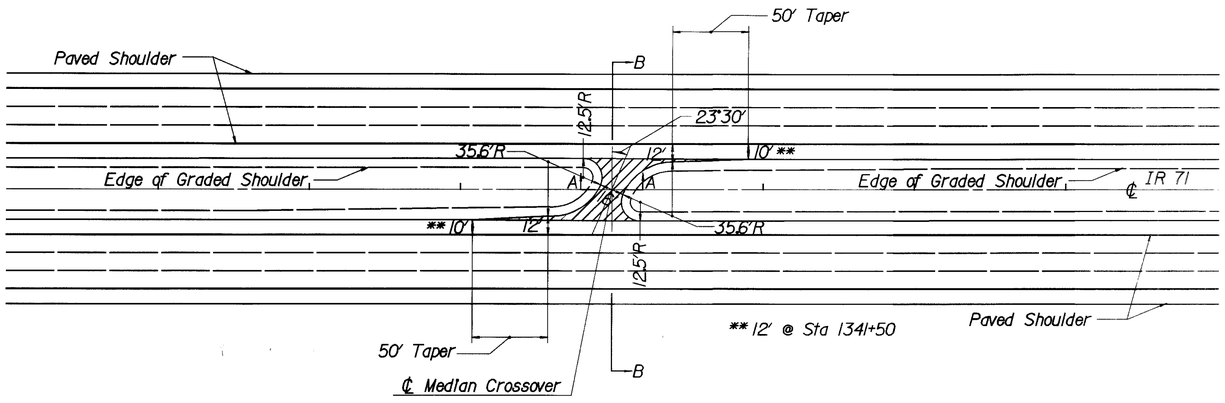

TYPICAL MEDIAN CROSSOVER DETAIL

Applies: Between Sta. 993+50
Between Sta. 1186+44
Between Sta. 1341+50

MEDIAN CROSSOVER PAVEMENT

LEGEND

(1) 1 1/2" ITEM 858 - Asphalt Concrete Surface Course, 12.5mm, Type A (446)

(2) ITEM 407 - Tack Coat for Intermediate Course

(3) 1 3/4" ITEM 858 - Asphalt Concrete Intermediate Course, 19mm, Type A (446)

(4) ITEM 407 - Tack Coat

(7) ITEM 408 -Bituminous Prime Coat

(8) 6" ITEM 304 - Aggregate Base

(9) ITEM 203 - Subgrade Compaction

(10) ITEM 870 - Seeding and Mulching

(26) ITEM 302 - Bituminous Aggregate Base, PG64-22, Thickness as Shown

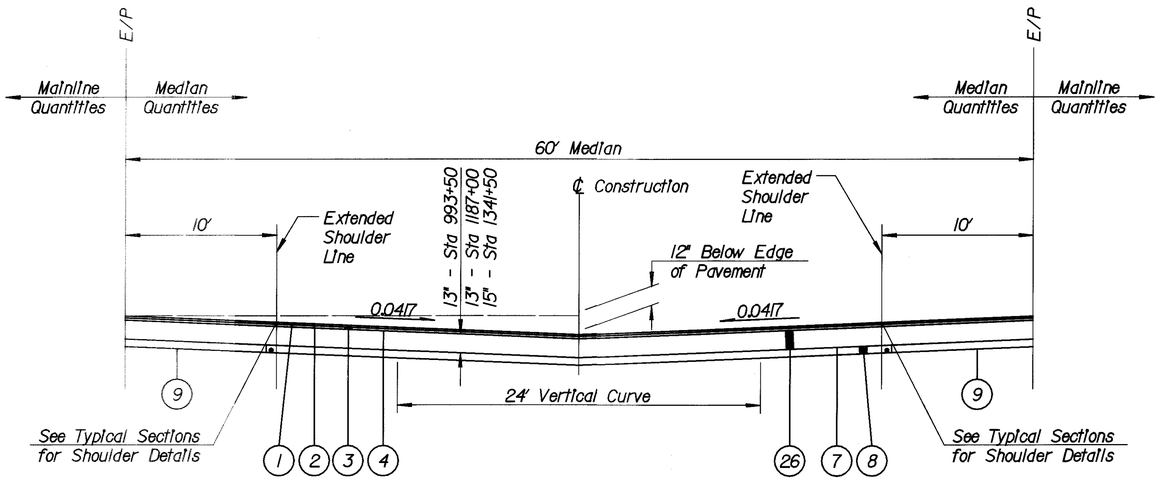

SECTION B-B

* 13" - Sta 993+50
13" - Sta 1187+00
15" - Sta 1341+50

MEDIAN CROSSOVER QUANTITIES

Station	203 Subgrade Compaction	302 Bituminous Aggregate Base, PG64-22 *	304 6" Aggregate Base	407 Tack Coat for Intermediate Course	407 Tack Coat	408 Bituminous Prime Coat	858 1/2" Asphalt Concrete Surface Course, 12.5mm, Type A (446)	858 3/4" Asphalt Concrete Intermediate Course, 19mm, Type A (446)
	Square Yard	Cubic Yard	Cubic Yard	Gallon	Gallon	Gallon	Cubic Yard	Cubic Yard
Sta. 993+50	162	59	33	81	162	64.8	7	8
Sta. 1187+00	162	59	33	81	162	64.8	7	8
Sta. 1341+50	102	43	17	51	102	40.8	4	5
Sub-Totals								
Totals Carried to the General Summary	426	161	83	213	426	170.4	18	21

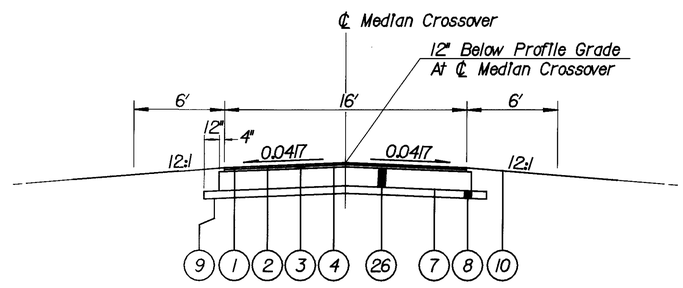

SECTION A-A

CALCULATED DRV CHECKED JWR

MEDIAN CROSSOVER DETAILS

MED-71-15.78

501
940

DESIGN FILE : i:\pd_med_ir71\dgn\misc. details\med71gm.dgn
USERNAME : nvondere
DATE : 06-DEC-1999
TIME : 07:28

RUMBLE STRIP CALCULATIONS

Sta. 883+00 to Sta. 1269+00 = 38,600 L.F. - (1,291 L.F. of Structures) = 37,309 L.F.

Item 618 Rumble Strips, Type 2 (Asphalt):
(37,309 L.F.)(2 Shldr.) = 74,618 L.F.

Item 618 Rumble Strips, Type 2 (Asphalt) as per plan
(37,309 L.F.)(2 Shldr.) = 74,618 L.F.

Sta. 1269+00 to Sta. 1394+40 = 12,540 L.F. - (120 L.F. of Structures) = 12,420 L.F.

Item 618 Rumble Strips, Type 2 (Asphalt):
(12,420 L.F.)(4 Shldr.) = 49,680 L.F.

SUB-SUMMARY

STA.	Item 618 Rumble Strips, Type 2 (Asphalt)	Item 618 Rumble Strips, Type 2 (Asphalt) as per plan
	Lin. Ft.	Lin. Ft.
883+00 to 1269+00	74,618	74,618
1269+00 to 1394+40	49,680	
TOTALS	124,298	74,618

Quantities carried to General Summary

LOCATION OF RUMBLE STRIPS AS PER PLAN

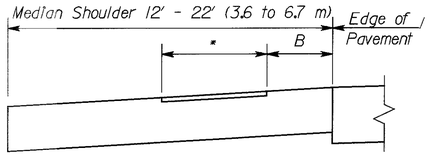

* See BP-9.1 for Rumble Strip details

Median Shoulder Offset, as per plan
B = 5' for 22' shoulders, Sta. 883+00 to 1260+00
B = Var. 19' to 5' thru shoulder transition, Sta. 1260+00 to 1263+00

(See Note 2.)

NOTES

1. See Standard Construction Drawing BP-9.1M & BP-9.2M for additional Rumble Strip details.
2. This item shall meet the requirements of Spec. 618 and Std. Dwg. BP-9.1. except for the location of the Rumble Strip on the Median Shoulder as detailed on this sheet. All costs associated with this item shall be included in the bid price Item 618, Rumble Strips Type 2, (Asphalt) as per plan

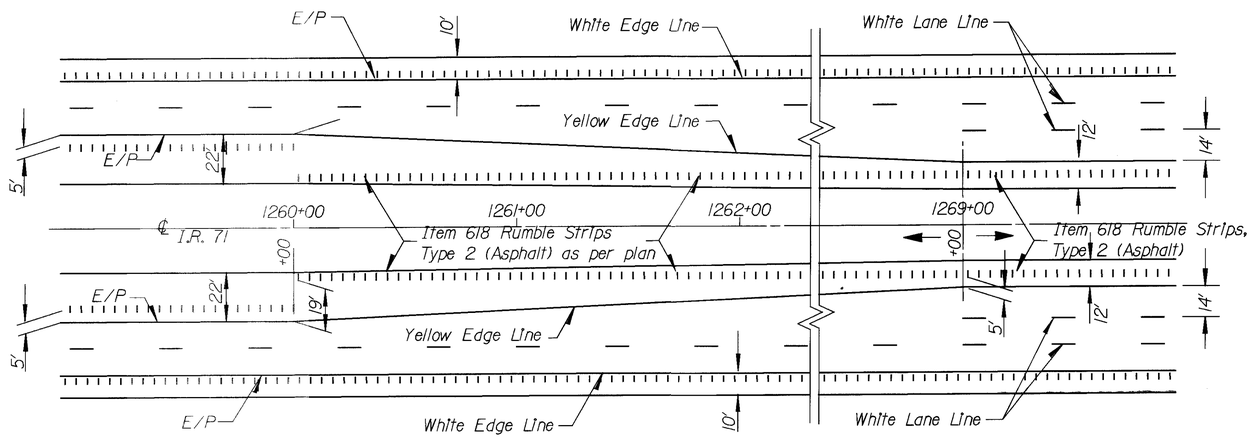

DESIGN FILE : i:\pdf_med_ir71\dgn\pavemark\rumstrp.dgn
USERNAME : jrogers
DATE : 08-DEC-1999
TIME : 09:24

CALCULATED RLS CHECKED JwR

SHOULDER RUMBLE STRIP DETAILS & QUANTITIES

MED-71-15.78

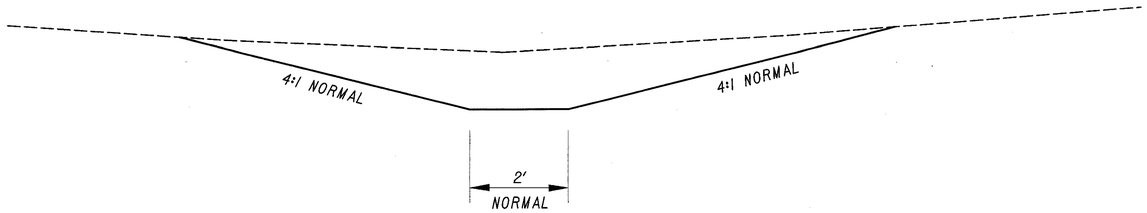

ITEM 203 - DITCH CLEANOUT DETAIL

THE PROPOSED DITCH CLEANOUT SHALL BE GRADED TO PROVIDE A POSITIVE OUTLET AND CONSTRUCTED AS DIRECTED BY THE ENGINEER. SEE GENERAL NOTES.

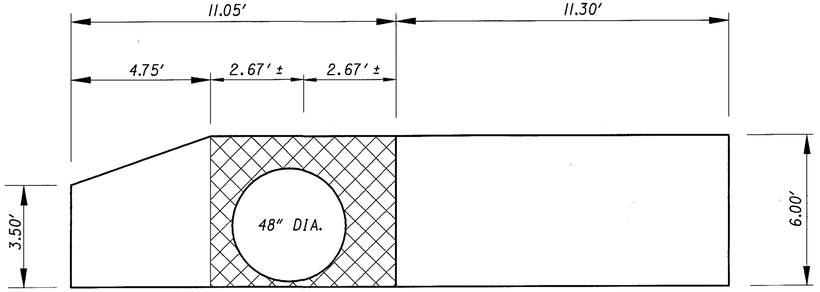

HEADWALL PATCHING DETAIL

STA. 855+20

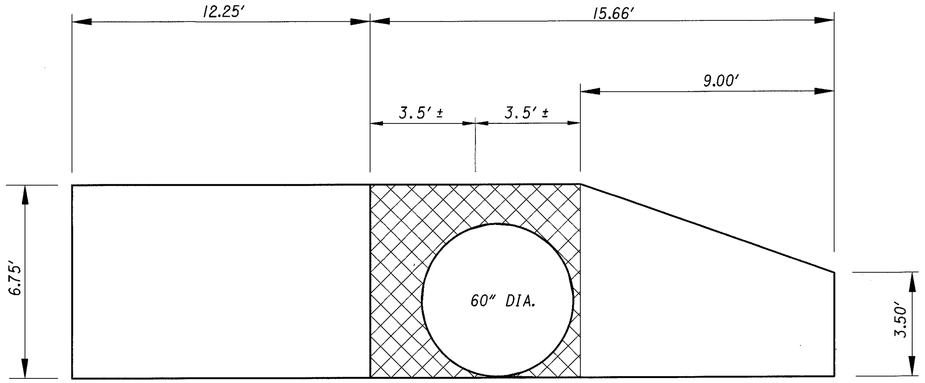

HEADWALL PATCHING DETAIL

STA. 851+50

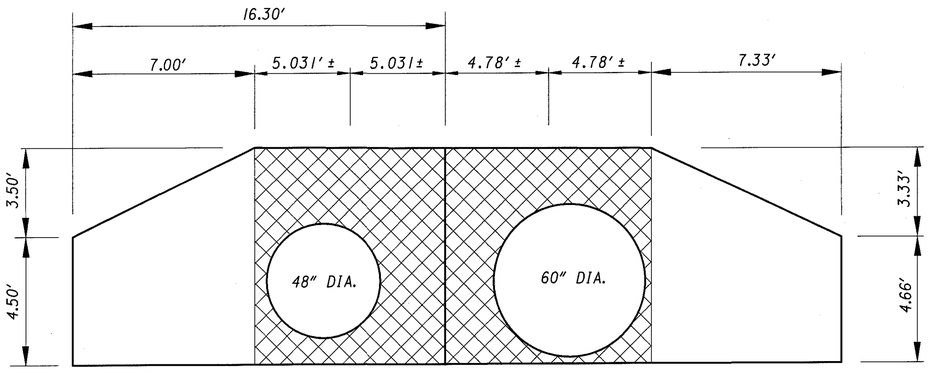

HEADWALL PATCHING DETAIL

STA. 853+75

APPROXIMATE PATCHING AREA
AS APPROVED BY THE ENGINEER

(8-D) **HEADWALL PATCHING - LINER COLLAR FAILING**

STA. 852+50, RT.

ITEM 519 PATCHING CONCRETE STRUCTURES

APPROXIMATE PATCHING AREA

6.75 x 3.5 x 2 =	47.25	SQ. FEET
PI/4 x (60/12) ^2 =	-19.63	SQ. FEET
	27.62	SQ. FEET

(11-D) **HEADWALL PATCHING - LINER COLLAR FAILING**

STA. 855+20, RT.

ITEM 519 PATCHING CONCRETE STRUCTURES

APPROXIMATE PATCHING AREA

6.75 x 2.67 x 2 =	32.04	SQ. FEET
PI/4 x (48/12) ^2 =	-12.57	SQ. FEET
	19.47	SQ. FEET

(10-D) **HEADWALL PATCHING - LINER COLLAR FAILING**

STA. 853+75, LT.

ITEM 519 PATCHING CONCRETE STRUCTURES

APPROXIMATE PATCHING AREA

8 x 5.031 x 2 =	47.25	SQ. FEET
8 x 4.78 x 2 =	71.66	SQ. FEET
PI/4 x (48/12) ^2 =	-19.63	SQ. FEET
PI/4 x (60/12) ^3 =	-19.63	SQ. FEET
	119.98	SQ. FEET

CALCULATED WJC
CHECKED PS

DRAINAGE DETAILS

MED - 71 - 15.78

503
940

7885DMC.DGN

CALCULATED W.J.C. CHECKED P.S.

DRAINAGE DETAILS

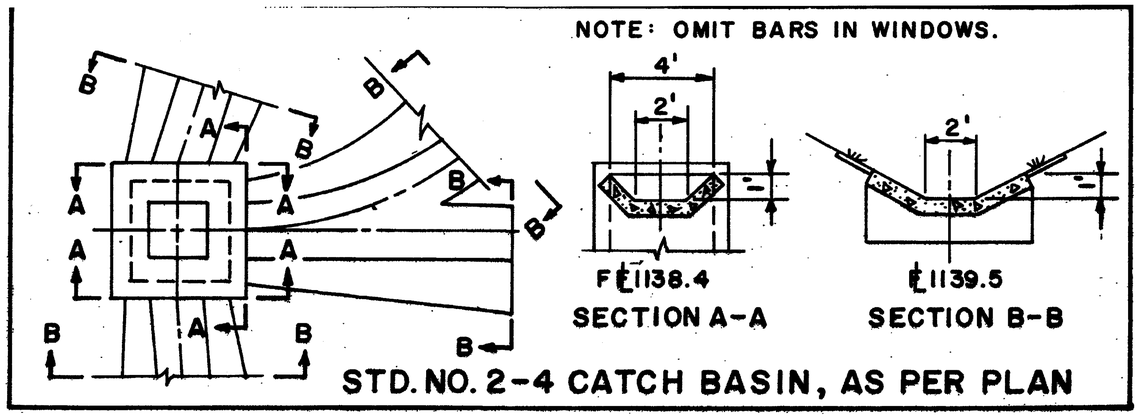

CATCH BASIN NO. 4, 4A, 5 AND 5A
AS PER PLAN

ITEM 670 DITCH EROSION PROTECTION SHALL BE CONSTRUCTED AS PER STD. CONSTRUCTION DRAWING CB-3.1M AND CB-3.2M

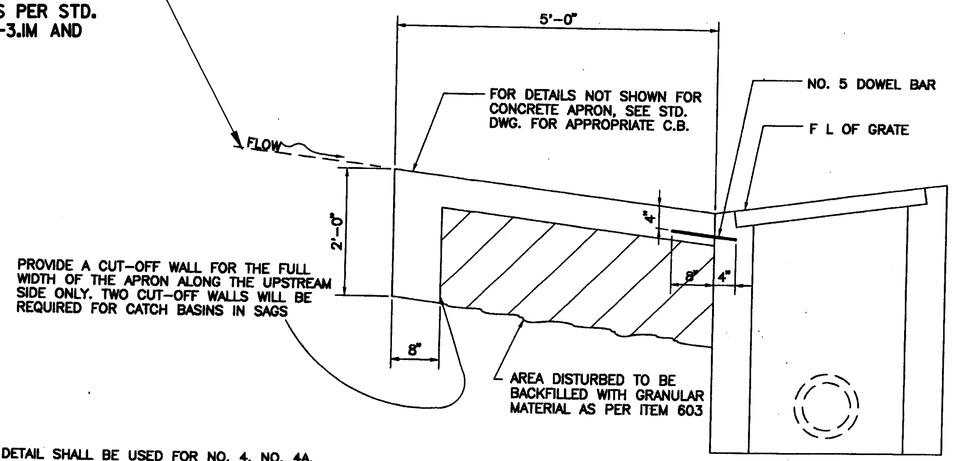

THIS DETAIL SHALL BE USED FOR NO. 4, NO. 4A, NO. 5 AND NO. 5A CATCH BASINS, AS PER PLAN. FOR DETAILS NOT SHOWN SEE STD. DWG. CB-3.1M, CB 3.2M, AND CB 3.4M.

THE REQUIREMENTS OF ITEM 604 SHALL GOVERN THE REPLACEMENT OF THE EXISTING CATCH BASIN. THE WORK SHALL INCLUDE THE REMOVAL AND DISPOSAL OF THE EXISTING CATCH BASIN AND ITS SUBSEQUENT REPLACEMENT. THE CONCRETE APRON SHALL BE REPLACED AND BACKFILLED AS SHOWN HERE AND IN THE STANDARD DRAWING FOR THE PERTINENT CATCH BASIN

PAYMENT FOR THE ABOVE WORK SHALL BE INCLUDED IN THE UNIT BID PRICE FOR ITEM 604 CATCH BASIN, NO.4,5,4A, 5A AS PER PLAN, AND SHALL CONSTITUTE FULL COMPENSATION FOR FURNISHING ALL MATERIAL, LABOR, TOOLS, AND EQUIPMENT INCIDENTAL TO COMPLETE THIS ITEM OF WORK.

BAR LOCATION DETAIL
FOR NO. 4, 4A, 5 AND 5A C.B.

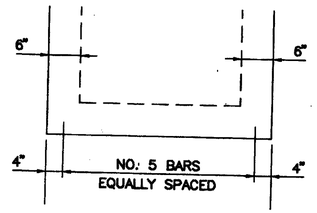

THE NUMBER OF BARS NEEDED ALONG EACH SIDE OF A NO. 4 AND 4A CATCH BASIN WITH A CONCRETE APRON IS 7. FOR A NO. 5 AND 5A CATCH BASIN, THE NUMBER OF BARS NEEDED ALONG EACH SIDE WITH A CONCRETE APRON IS 4

CATCH BASIN NO.	TOTAL # OF BARS FOR A	
	STD. APRON	SEG. APRON
4 & 4A	7	14
5 & 5A	12	16

THE FURNISHING AND PLACING OF STEEL FOR THE 5/8" X 12" DOWEL BARS SHALL BE PER 509 REINFORCING STEEL. THE DOWEL BARS SHALL BE EPOXY COATED PER 509.10. THE DOWEL BARS SHALL BE INSTALLED PER 510 OR CAST INTO THE BASIN. BOLT IN INSERTS MAY BE USED. THE CATCH BASIN SHALL BE PRECAST OR CAST-IN-PLACE CONCRETE. BRICK OR CONCRETE BLOCK WILL NOT BE PERMITTED. THE 6" CONCRETE APRON SHALL BE REINFORCED PER 601.04(3).

MED - 71 - 15.78

504
940

7885DDZ.DGN

CROSS REFERENCES	
PLAN & PROFILE	172-218
DRAINAGE SUBSUMMARY	77-96
TYPICAL SECTIONS	8-22

ITEM 830 CURB, TYPE 6, AS PER PLAN

THE CONCRETE CURB SHALL BE CONSTRUCTED AS SHOWN IN STANDARD DRAWING BP-5.1M EXCEPT THE TOTAL CURB HEIGHT IS INCREASED AS FOLLOWS:

ON THE S.R. 18 AND THE S.R. 303 STRUCTURE THE TOTAL CURB HEIGHT SHALL BE 24 1/4"; THE I.R. 271, WILBUR, ROCKY RIVER AND S.R. 3 STRUCTURES SHALL HAVE A TOTAL CURB HEIGHT OF 22 1/4"

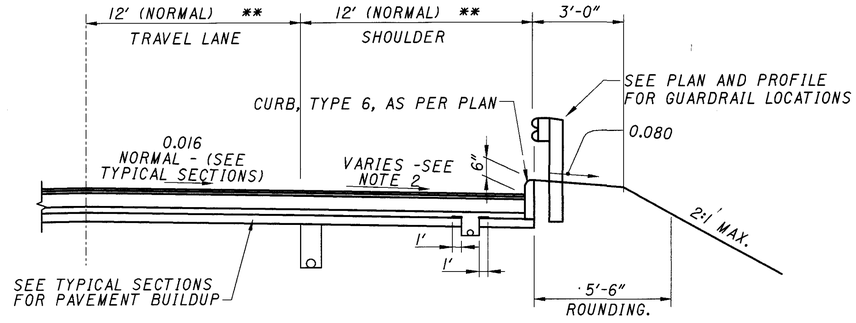

SHOULDER DETAIL - LOW PROFILE GRADE END OF STRUCTURE

NOT TO SCALE

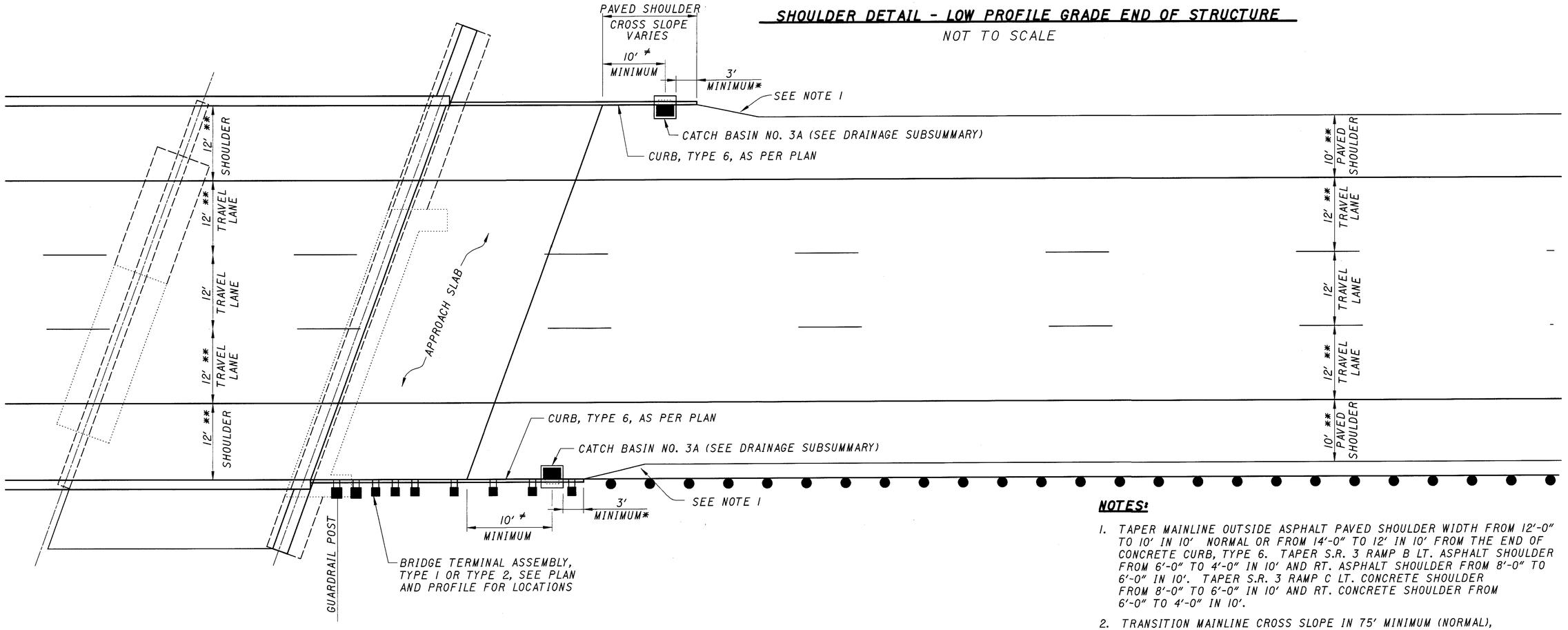

** THE MEDIAN SIDE PAVED SHOULDER IS 12' AND THE MEDIAN SIDE TRAVEL LANE IS 14' AT S.R. 303. THE STRUCTURE MEDIAN SIDE SHOULDER AT S.R. 303 IS 14' WITH THE MEDIAN SIDE TRAVEL LANE OF 14'.

DRAINAGE DETAIL - LOW PROFILE GRADE END OF STRUCTURE

MAINLINE LAYOUT SHOWN. SEE S.R. 3 RAMP TYPICALS SECTIONS FOR S.R. 3 RAMP PAVEMENT LAYOUT AT CATCH BASIN LOCATION. SEE GRANGER ROAD TYPICAL SECTION FOR GRANGER ROAD PAVEMENT LAYOUT AT CATCH BASIN LOCATION. CATCH BASIN LOCATION CONCEPT IS SAME FOR ALL LOW PROFILE GRADE ENDS OF THE STRUCTURES, AS APPROVED BY THE ENGINEER.

NOTES:

1. TAPER MAINLINE OUTSIDE ASPHALT PAVED SHOULDER WIDTH FROM 12'-0" TO 10' IN 10' NORMAL OR FROM 14'-0" TO 12' IN 10' FROM THE END OF CONCRETE CURB, TYPE 6. TAPER S.R. 3 RAMP B LT. ASPHALT SHOULDER FROM 6'-0" TO 4'-0" IN 10' AND RT. ASPHALT SHOULDER FROM 8'-0" TO 6'-0" IN 10'. TAPER S.R. 3 RAMP C LT. CONCRETE SHOULDER FROM 8'-0" TO 6'-0" IN 10' AND RT. CONCRETE SHOULDER FROM 6'-0" TO 4'-0" IN 10'.
2. TRANSITION MAINLINE CROSS SLOPE IN 75' MINIMUM (NORMAL), USE 90' WHERE SHOULDER IS 14' WIDE

≠ PLACE CATCH BASIN BETWEEN GUARDRAIL POSTS BEYOND 10' WHERE PROPOSED GUARDRAIL IS TO BE ERECTED.

* EXTEND CURB 2' PAST GUARDRAIL POST IF 3' BEYOND CATCH BASIN DOES NOT EXTEND 2' BEYOND CLOSEST GUARDRAIL POST.

7885DDX.DGN

HORIZONTAL SCALE IN METERS
0 2 4

CALCULATED PS
CHECKED PDG

DRAINAGE DETAILS

MED - 71 - 15.78

505
940

HEADWALLS

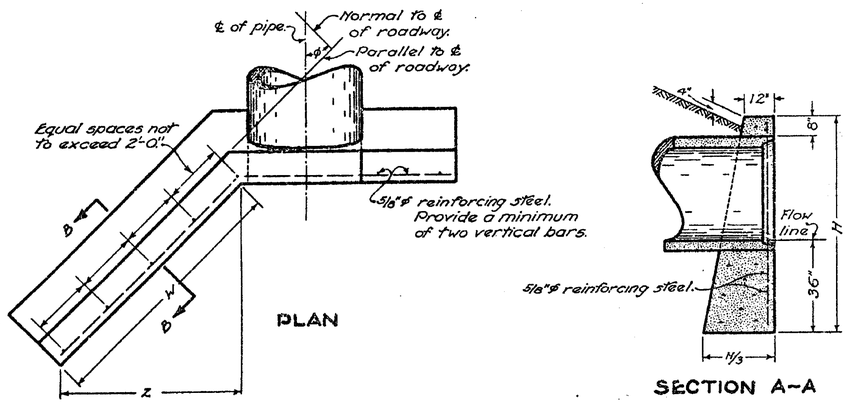

PLAN

SECTION A-A

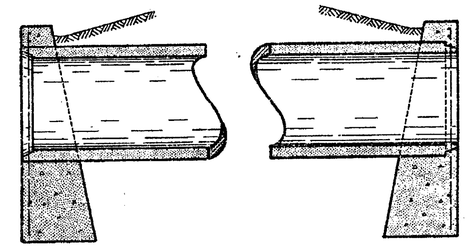

INLET END
GROOVE OR BELL UPSTREAM

OUTLET END
TONGUE OR SPIGOT DOWNSTREAM

RIGID PIPE

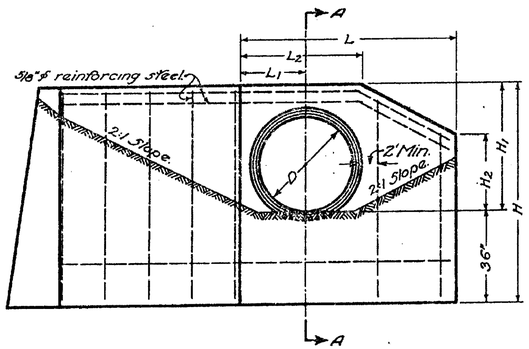

ELEVATION

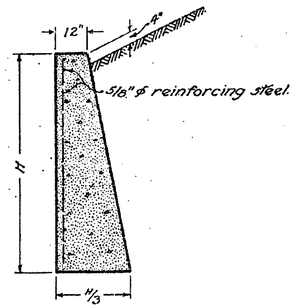

SECTION B-B

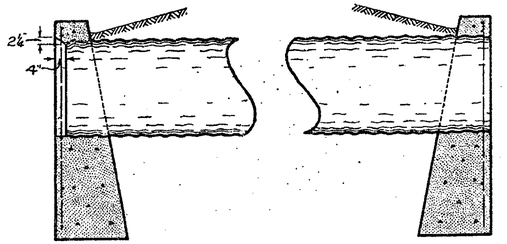

INLET END

OUTLET END

CORRUGATED PIPE

END TREATMENT AT HEADWALL

NOTES

No 2 HEADWALL where required will be provided for skewed culverts having a diameter or rise of 36 inches or less.

CONCRETE shall be Class "C."

REINFORCING STEEL BARS shall be 5/8 inch round.

DIMENSIONS AND QUANTITIES are shown for circular sections only. When used with reinforced elliptical concrete pipe or corrugated metal pipe arches it will be necessary to determine such dimensions and quantities which shall generally conform with those listed for the nearest size circular pipe. The dimensions established by vertical diameter shall apply to rise and the dimensions established by horizontal diameter shall apply to span.

Chamfer all exposed corners 3/4 of an inch.

FOUNDATION. Where the soil borings indicate a bearing capacity of less than 2600 pounds per square foot it will be necessary to increase the width of the footing.

		ϕ=15°										ϕ=30°									
	PIPE DIAM.	L	L_1	L_2	W	Z	H	H_1	H_2	CONC. C.Y.	STEEL LBS.	PIPE DIAM.	L	L_1	L_2	W	Z	H	H_1	H_2	CONC. C.Y.	STEEL LBS.
SLOPE 2:1	15"	2'-11"	0'-11"	1'-7"	2'-9"	2'-8"	5'-2"	2'-2"	1'-5"	1.4	41	15"	2'-11"	0'-11"	1'-7"	3'-1"	2'-8"	5'-2"	2'-2"	1'-5"	1.6	42
	18"	3'-7"	1'-1"	1'-10"	3'-4"	3'-2"	5'-5"	2'-5"	1'-7"	1.8	46	18"	3'-7"	1'-1"	1'-10"	3'-8"	3'-2"	5'-5"	2'-5"	1'-7"	2.0	48
	21"	4'-1"	1'-3"	2'-2"	3'-10"	3'-8"	5'-8"	2'-8"	1'-8"	2.2	50	21"	4'-1"	1'-3"	2'-2"	4'-3"	3'-8"	5'-8"	2'-8"	1'-8"	2.4	52
	24"	4'-9"	1'-5"	2'-6"	4'-4"	4'-2"	5'-11"	2'-11"	1'-10"	2.7	61	24"	4'-9"	1'-5"	2'-6"	4'-10"	4'-2"	5'-11"	2'-11"	1'-10"	3.0	63
	30"	5'-11"	1'-7"	2'-10"	5'-4"	5'-2"	6'-5"	3'-5"	2'-2"	3.8	76	30"	5'-11"	1'-7"	2'-10"	6'-0"	5'-2"	6'-5"	3'-5"	2'-2"	4.2	78
	36"	7'-0"	1'-10"	3'-4"	6'-7"	6'-4"	7'-0"	4'-0"	2'-6"	5.4	87	36"	7'-0"	1'-10"	3'-4"	7'-4"	6'-4"	7'-0"	4'-0"	2'-6"	5.8	97
SLOPE 4:1	15"	4'-1"	0'-11"	1'-7"	3'-3"	3'-2"	5'-2"	2'-2"	1'-10"	1.9	47	15"	3'-9"	0'-11"	1'-7"	3'-8"	3'-2"	5'-2"	2'-2"	1'-7"	1.9	47
	18"	4'-10"	1'-1"	1'-10"	3'-10"	3'-8"	5'-5"	2'-5"	2'-0"	2.4	57	18"	4'-6"	1'-1"	1'-10"	4'-3"	3'-8"	5'-5"	2'-5"	1'-10"	2.4	57
	21"	5'-8"	1'-3"	2'-2"	4'-4"	4'-2"	5'-8"	2'-8"	2'-3"	2.9	63	21"	5'-2"	1'-3"	2'-2"	4'-10"	4'-2"	5'-8"	2'-8"	2'-0"	3.0	68
	24"	6'-5"	1'-5"	2'-6"	4'-10"	4'-8"	5'-11"	2'-11"	2'-6"	3.5	74	24"	5'-11"	1'-5"	2'-6"	5'-5"	4'-8"	5'-11"	2'-11"	2'-2"	3.6	74
	30"	7'-9"	1'-7"	2'-10"	5'-10"	5'-8"	6'-5"	3'-5"	3'-0"	4.8	92	30"	7'-2"	1'-7"	2'-10"	6'-7"	5'-8"	6'-5"	3'-5"	2'-8"	4.9	92
	36"	9'-3"	1'-10"	3'-4"	7'-1"	6'-10"	7'-0"	4'-0"	3'-5"	6.6	112	36"	8'-6"	1'-10"	3'-4"	7'-11"	6'-10"	7'-0"	4'-0"	3'-0"	6.7	111

		ϕ=45°										ϕ=60°									
	PIPE DIAM.	L	L_1	L_2	W	Z	H	H_1	H_2	CONC. C.Y.	STEEL LBS.	PIPE DIAM.	L	L_1	L_2	W	Z	H	H_1	H_2	CONC. C.Y.	STEEL LBS.
SLOPE 2:1	15"	2'-11"	0'-11"	1'-7"	3'-9"	2'-8"	5'-2"	2'-2"	1'-5"	1.8	44	15"	2'-11"	0'-11"	1'-7"	5'-4"	2'-8"	5'-2"	2'-2"	1'-5"	2.3	54
	18"	3'-7"	1'-1"	1'-10"	4'-6"	3'-2"	5'-5"	2'-5"	1'-7"	2.3	56	18"	3'-7"	1'-1"	1'-10"	6'-4"	3'-2"	5'-5"	2'-5"	1'-7"	2.9	61
	21"	4'-1"	1'-3"	2'-2"	5'-2"	3'-8"	5'-8"	2'-8"	1'-8"	2.8	61	21"	4'-1"	1'-3"	2'-2"	7'-4"	3'-8"	5'-8"	2'-8"	1'-8"	3.5	73
	24"	4'-9"	1'-5"	2'-6"	5'-11"	4'-2"	5'-11"	2'-11"	1'-10"	3.4	67	24"	4'-9"	1'-5"	2'-6"	8'-4"	4'-2"	5'-11"	2'-11"	1'-10"	4.3	80
	30"	5'-11"	1'-7"	2'-10"	7'-4"	5'-2"	6'-5"	3'-5"	2'-2"	4.8	90	30"	5'-11"	1'-7"	2'-10"	10'-4"	5'-2"	6'-5"	3'-5"	2'-2"	6.0	105
	36"	7'-0"	1'-10"	3'-4"	8'-11"	6'-4"	7'-0"	4'-0"	2'-6"	6.6	110	36"	7'-0"	1'-10"	3'-4"	12'-8"	6'-4"	7'-0"	4'-0"	2'-6"	8.3	128
SLOPE 4:1	15"	3'-7"	0'-11"	1'-7"	4'-6"	3'-2"	5'-2"	2'-2"	1'-5"	2.1	50	15"	3'-4"	0'-11"	1'-7"	6'-4"	3'-2"	5'-2"	2'-2"	1'-4"	2.6	59
	18"	4'-2"	1'-1"	1'-10"	5'-2"	3'-8"	5'-5"	2'-5"	1'-7"	2.6	60	18"	3'-11"	1'-1"	1'-10"	7'-4"	3'-8"	5'-5"	2'-5"	1'-5"	3.3	70
	21"	4'-10"	1'-3"	2'-2"	5'-11"	4'-2"	5'-8"	2'-8"	1'-9"	3.2	71	21"	4'-7"	1'-3"	2'-2"	8'-4"	4'-2"	5'-8"	2'-8"	1'-7"	4.0	77
	24"	5'-6"	1'-5"	2'-6"	6'-7"	4'-8"	5'-11"	2'-11"	1'-11"	3.8	83	24"	5'-2"	1'-5"	2'-6"	9'-4"	4'-8"	5'-11"	2'-11"	1'-9"	4.7	95
	30"	6'-8"	1'-7"	2'-10"	8'-0"	5'-8"	6'-5"	3'-5"	2'-4"	5.3	95	30"	6'-3"	1'-7"	2'-10"	11'-4"	5'-8"	6'-5"	3'-5"	2'-1"	6.5	116
	36"	7'-11"	1'-10"	3'-4"	9'-8"	6'-10"	7'-0"	4'-0"	2'-7"	7.3	116	36"	7'-5"	1'-10"	3'-4"	13'-8"	6'-10"	7'-0"	4'-0"	2'-4"	8.9	139

BUREAU OF LOCATION AND DESIGN
OHIO DEPARTMENT OF HIGHWAYS

HEADWALLS

DATE 6-1-65

STANDARD CONSTRUCTION HW-2 DRAWING

APPROVED Ben Rike ENGR. L. & D.

CALCULATED PDG CHECKED DAW

DRAINAGE DETAILS

MED - 71 - 15.78

506
940

7885DDY.DGN

HEADWALLS

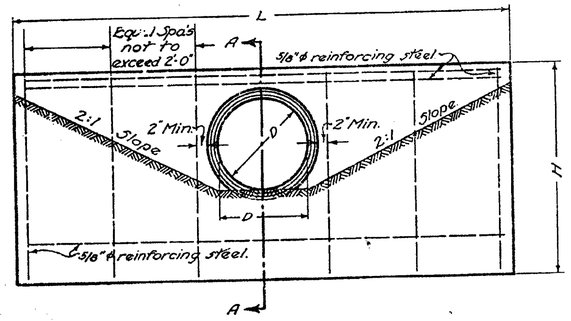

ELEVATION

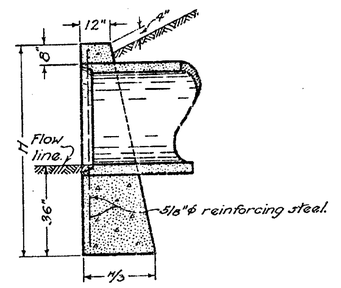

SECTION A-A

STANDARD Nº 1 HEADWALL

DIMENSIONS			QUANTITIES ONE HEADWALL	
DIAMETER	H	L	CONCRETE CU. YDS.	REINFORCING STEEL LBS.
15"	5'-2"	7'-0"	1.7	41
18"	5'-5"	8'-4"	2.2	57
21"	5'-8"	9'-8"	2.8	62
24"	5'-11"	11'-0"	3.3	69
30"	6'-5"	13'-8"	4.7	92
36"	7'-0"	16'-4"	6.5	105

L CIRCULAR SECTIONS ≅ 5D + 4†
LL ELLIPTICAL OR PIPE-ARCH ≅ 4R + 4† + S
H CIRCULAR SECTIONS ≅ D + † + 44"
H ELLIPTICAL OR PIPE-ARCH ≅ R + † + 44"
D ≅ DIAMETER OF PIPE
R ≅ RISE OF PIPE
S ≅ SPAN OF PIPE
† ≅ THICKNESS OF BARREL
L ≅ LENGTH OF HEADWALL
H ≅ HEIGHT OF HEADWALL

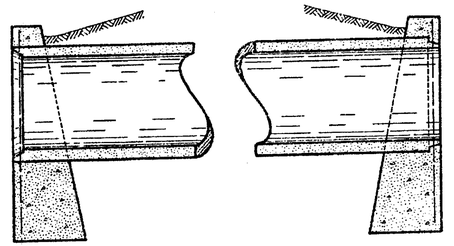

INLET END
GROOVE OR BELL UPSTREAM

OUTLET END
TONGUE OR SPIGOT DOWNSTREAM

RIGID PIPE

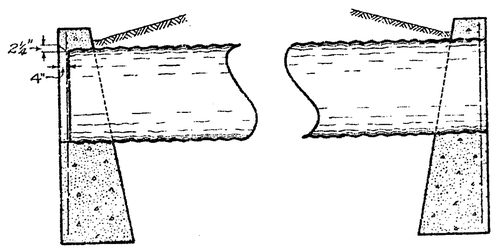

INLET END

OUTLET END

CORRUGATED PIPE

END TREATMENT AT HEADWALL

NOTES

Nº 1 HEADWALL where required will be provided for nonskewed culverts having a diameter or rise of 36 inches or less.

CONCRETE shall be Class "C".

REINFORCING STEEL BARS shall be 5/8 inch round.

DIMENSIONS AND QUANTITIES are shown for circular sections only. It will be necessary to determine dimensions for the Nº1 headwall required for reinforced elliptical concrete pipe or corrugated metal pipe arches in accordance with the equations listed on this drawing.

Chamfer all exposed corners ¾ of an inch.

FOUNDATION. Where the soil borings indicate a bearing capacity of less than 2600 pounds per square foot it will be necessary to increase the width of the base.

BUREAU OF LOCATION AND DESIGN
OHIO DEPARTMENT OF HIGHWAYS

DATE 6-1-65

HEADWALLS

STANDARD CONSTRUCTION DRAWING HW-1

APPROVED _____ ENGR. L. & D.

CALCULATED PDG
CHECKED DAW

DRAINAGE DETAILS

MED - 71 - 15.78

507
940

7885DD8.DGN

HW-2A

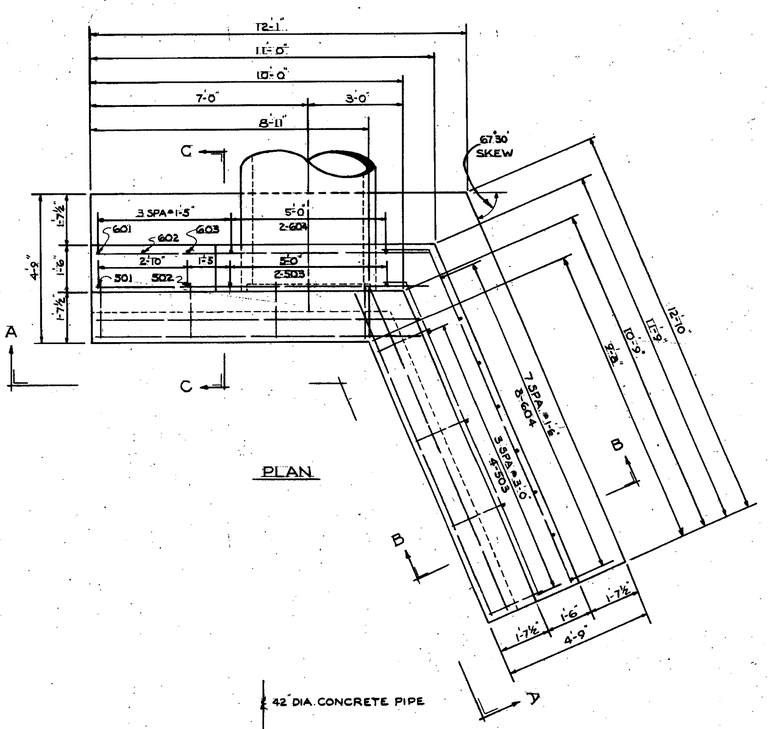

PLAN

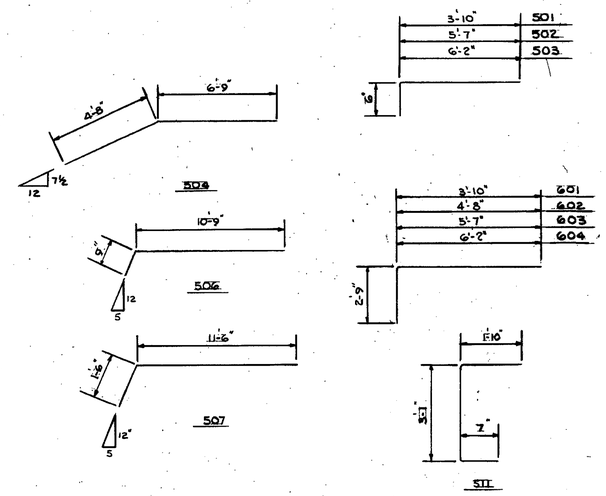

42" DIA. CONC. CULVERT

ONE REQUIRED

STEEL FOR ONE HEADWALL

REINFORCING STEEL SCHEDULE

MARK	NO. REQD	LENGTH	WEIGHT	SHP	MARK	NO. REQD	LENGTH	WEIGHT	SHP
501	1	4'-3"	5	BT	511	8	5'-4"	44	BT
502	1	6'-0"	7	BT	512	8	4'-5"	37	ST
503	6	6'-7"	41	BT					
504	2	11'-5"	24	BT	601	1	6'-6"	10	BT
505	2	8'-6"	18	ST	602	1	7'-4"	11	BT
506	6	11'-5"	71	BT	603	1	8'-3"	12	BT
507	6	12'-11"	81	BT	604	10	8'-10"	133	BT
508	7	10'-4"	75	ST	605	4	4'-6"	27	ST
509	1	9'-7"	10	ST					
510	6	11'-2"	70	ST					

TOTAL = 676#

NOTE:
13.1 CU. YDS. CLASS "C" CONCRETE. FOR ONE HEADWALL.
f_c = 3400# - f_s = 20,000# - P = 35#/CU. FT.
MAXIMUM BEARING PRESSURE AT TOE = 2,000#/SQ.FT.
ALL REINFORCING STEEL DIMENSIONS ARE FROM OUT TO OUT.
ALL REINFORCING STEEL SHALL HAVE A MINIMUM COVER OF 2" UNLESS OTHERWISE NOTED.

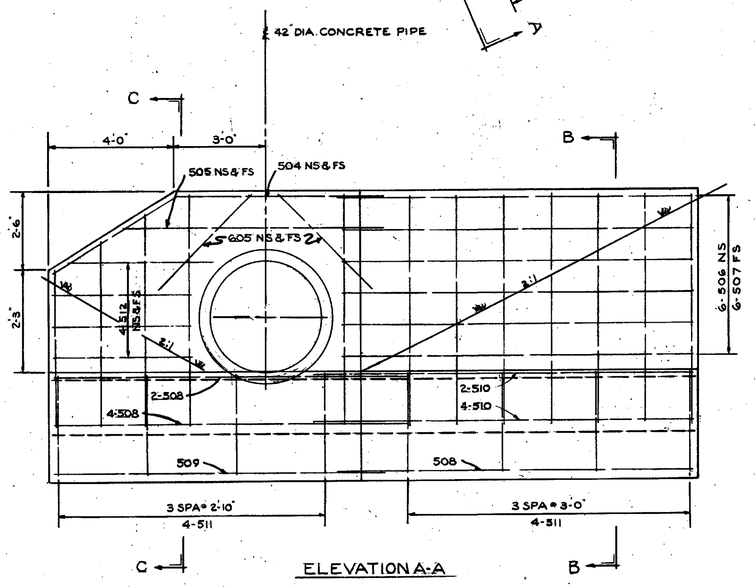

ELEVATION A-A

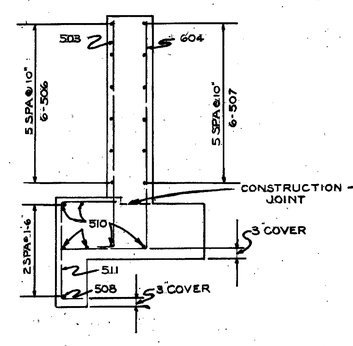

SECTION B-B

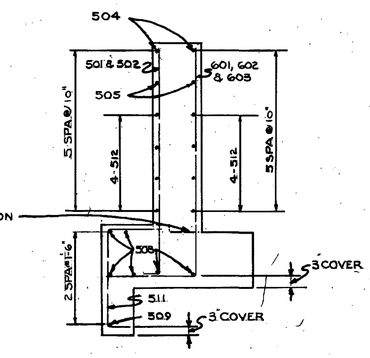

SECTION C-C

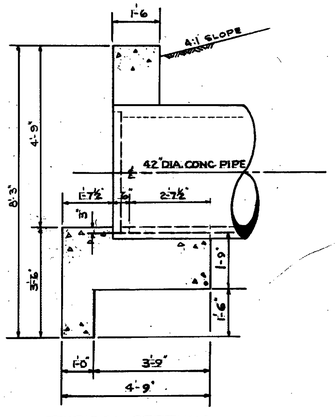

TYPICAL SECTION

CALCULATED PDG
CHECKED DAW

DRAINAGE DETAILS

MED - 71 - 15.78

508
940

7885DDW.DGN

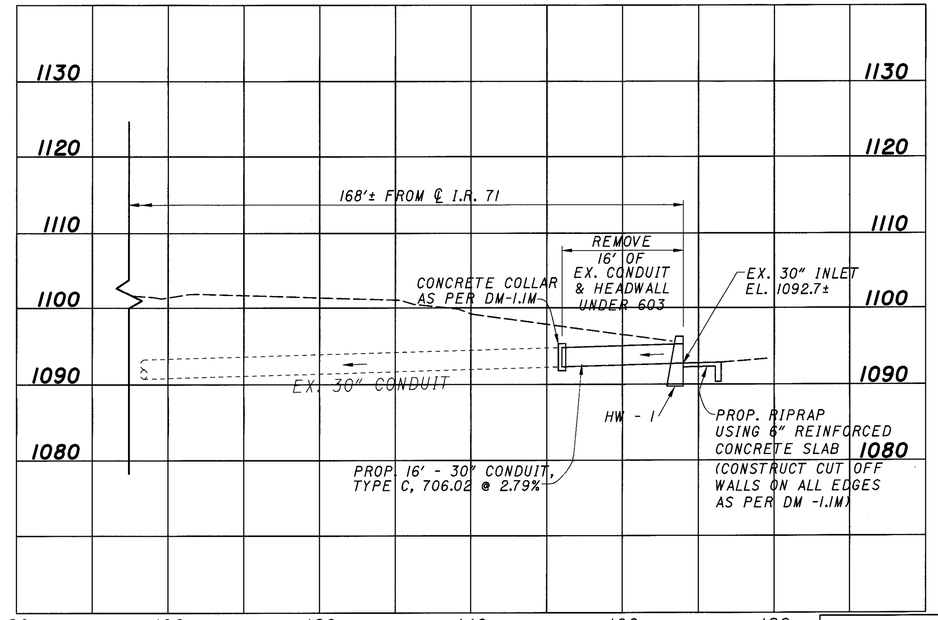

16-D

EX. 30" CONDUIT
STA. 884+32 RT. (STA. 13+35 S.R. 18 RAMP C)

CROSS REFERENCES	
PLAN & PROFILE	176-177
DRAINAGE SUBSUMMARY	77-80
DRAINAGE CALCS.	138
DRAINAGE DETAILS	507

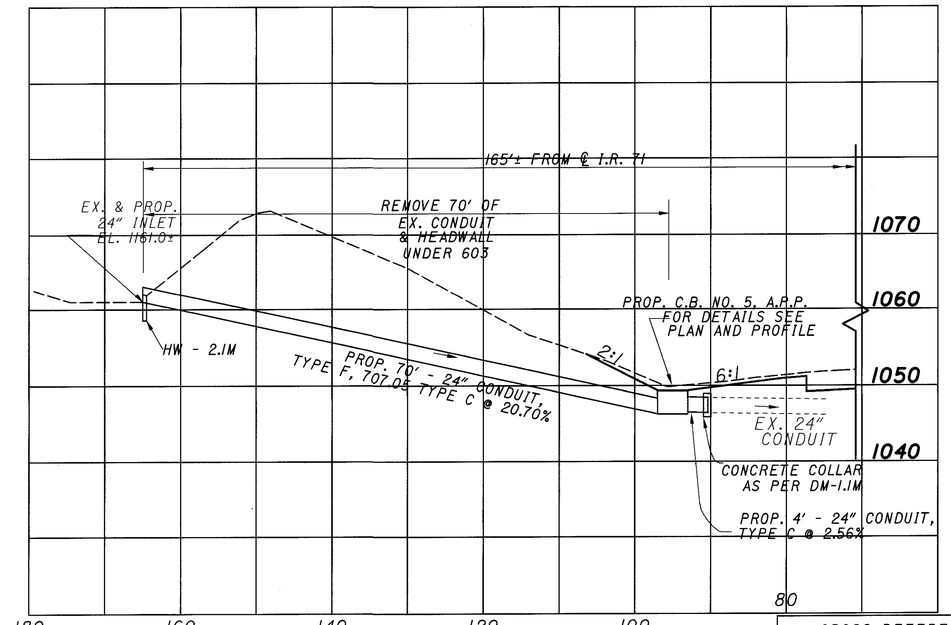

79-D

EX. 24" CONDUIT
STA. 1075+85 LT.

CROSS REFERENCES	
PLAN & PROFILE	191
DRAINAGE SUBSUMMARY	81-84

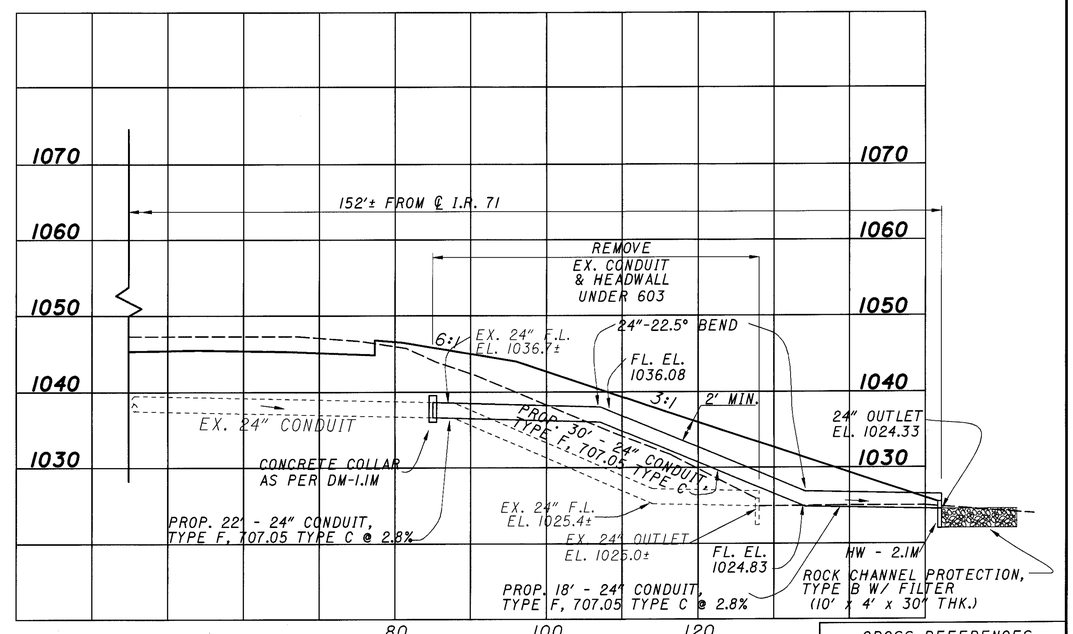

74-D

EX. 24" CONDUIT
STA. 1067+40 RT.

CROSS REFERENCES	
PLAN & PROFILE	191
DRAINAGE SUBSUMMARY	81-84
DRAINAGE CALCS.	143

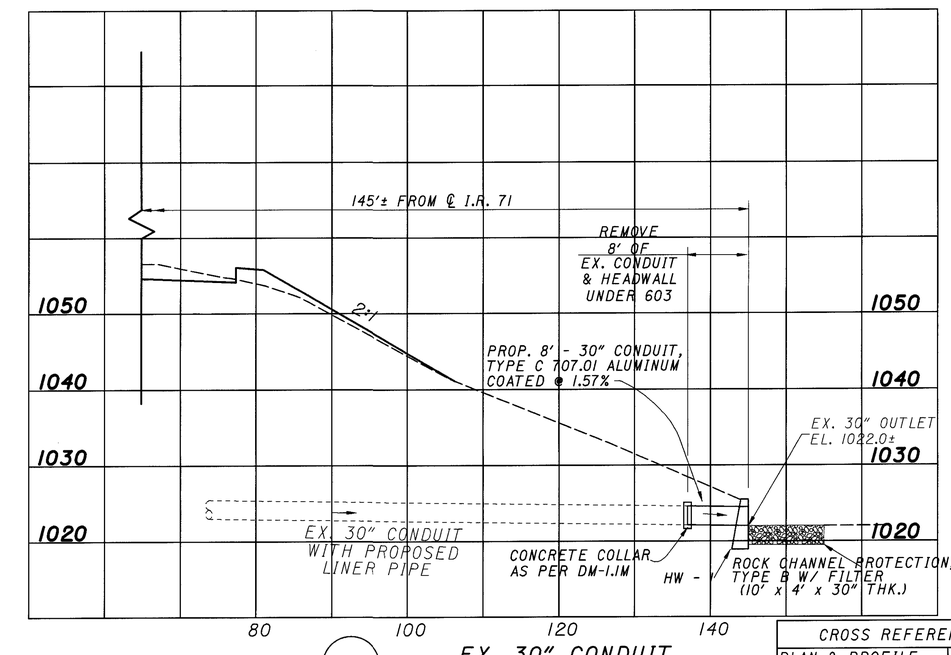

82-D

EX. 30" CONDUIT
STA. 1082+95 RT.

CROSS REFERENCES	
PLAN & PROFILE	192
DRAINAGE SUBSUMMARY	81-84
CULVERT DETAIL	523
DRAINAGE CALCS.	144
DRAINAGE DETAILS	507

CALCULATED PRS
CHECKED PDG

DRAINAGE DETAILS (PIPE REPLACEMENT)

MED - 71 -15.78

509
940

7885DFA.DGN 8/23/99 IPS

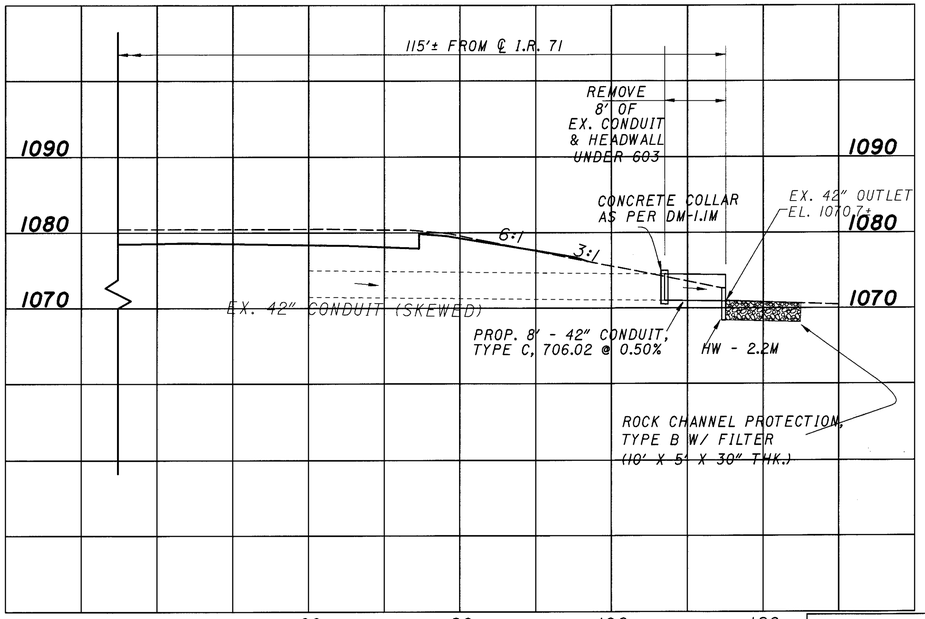

92-D

EX. 42" CONDUIT
STA. 1127+20 RT.

CROSS REFERENCES	
PLAN & PROFILE	196
DRAINAGE SUBSUMMARY	85-88
DRAINAGE CALCS.	144

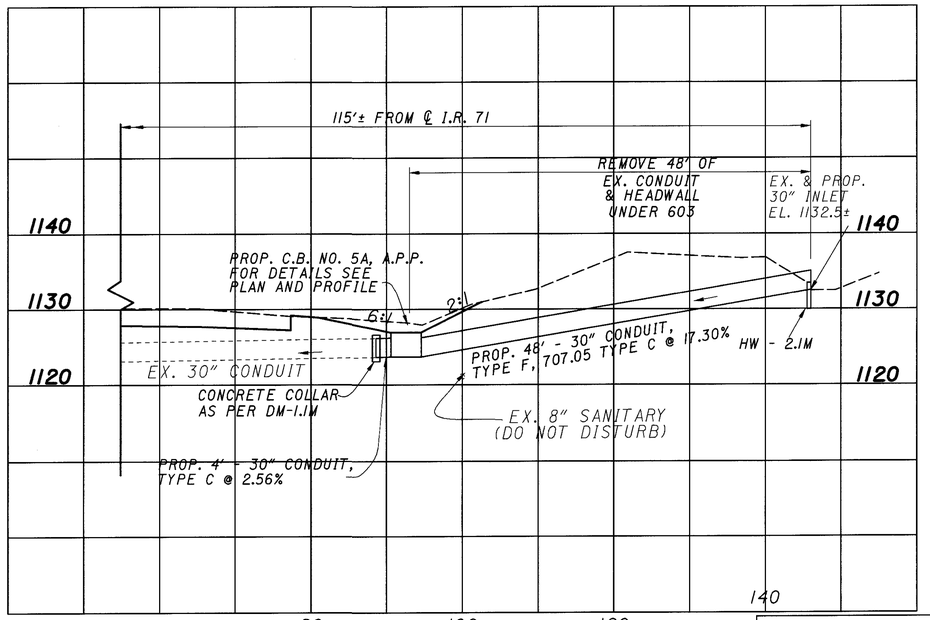

109-D

EX. 30" CONDUIT
STA. 1185+74 RT.

CROSS REFERENCES	
PLAN & PROFILE	200
DRAINAGE SUBSUMMARY	85-88

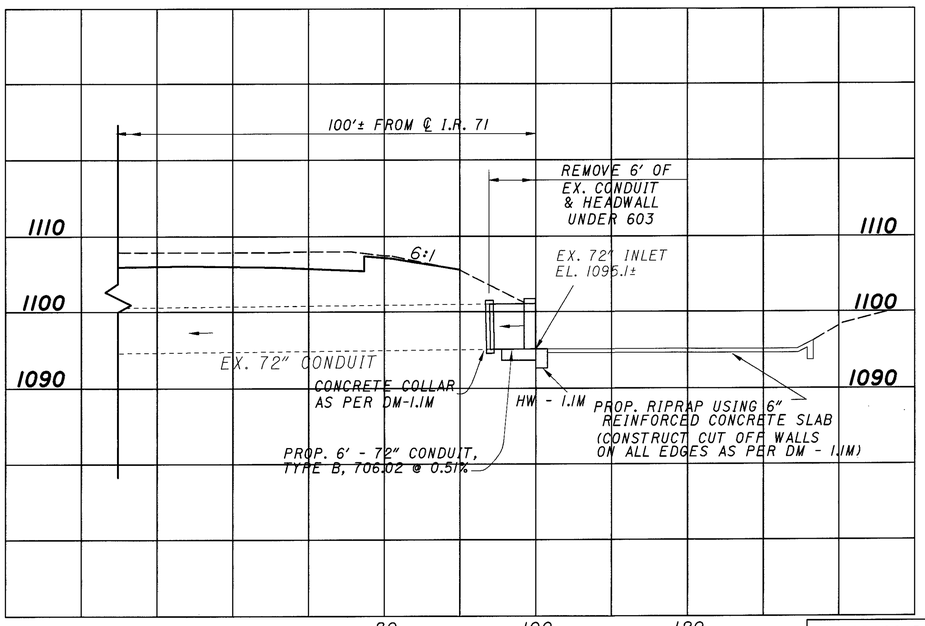

103-D

EX. 72" CONDUIT
STA. 1158+55 RT.

CROSS REFERENCES	
PLAN & PROFILE	198
DRAINAGE SUBSUMMARY	85-88
DRAINAGE CALCS.	145

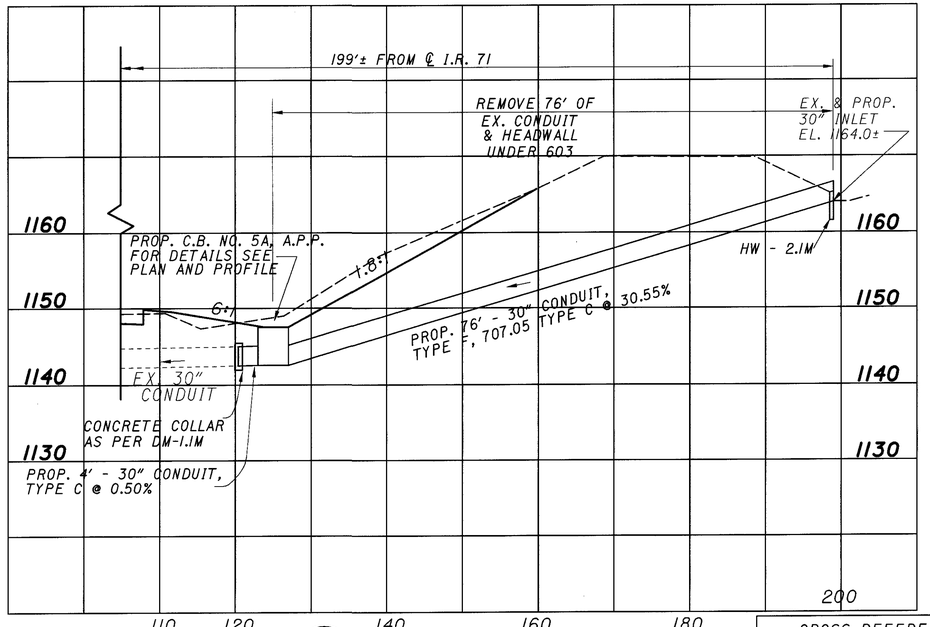

123-D

EX. 30" CONDUIT
STA. 1216+76 RT.

CROSS REFERENCES	
PLAN & PROFILE	203
DRAINAGE SUBSUMMARY	85-88

CALCULATED PRS
CHECKED PDG

DRAINAGE DETAILS (PIPE REPLACEMENT)

MED - 71 -15.78

510
940

7885DFB.DGN 8/23/99 PS

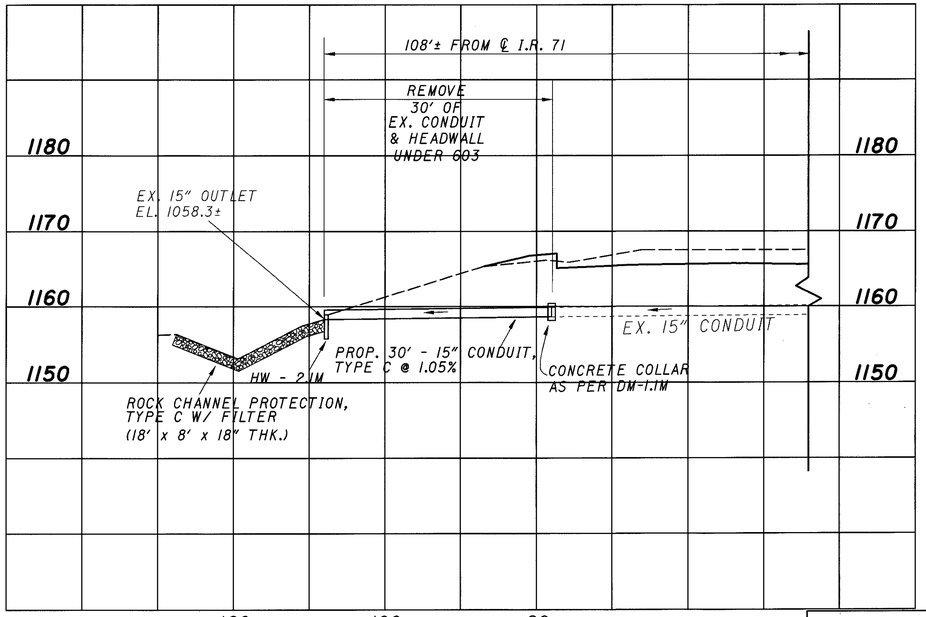

(135-D) EX. 15" CONDUIT STA. 1242+34 LT.

CROSS REFERENCES	
PLAN & PROFILE	205
DRAINAGE SUBSUMMARY	89-92
DRAINAGE CALCS.	146

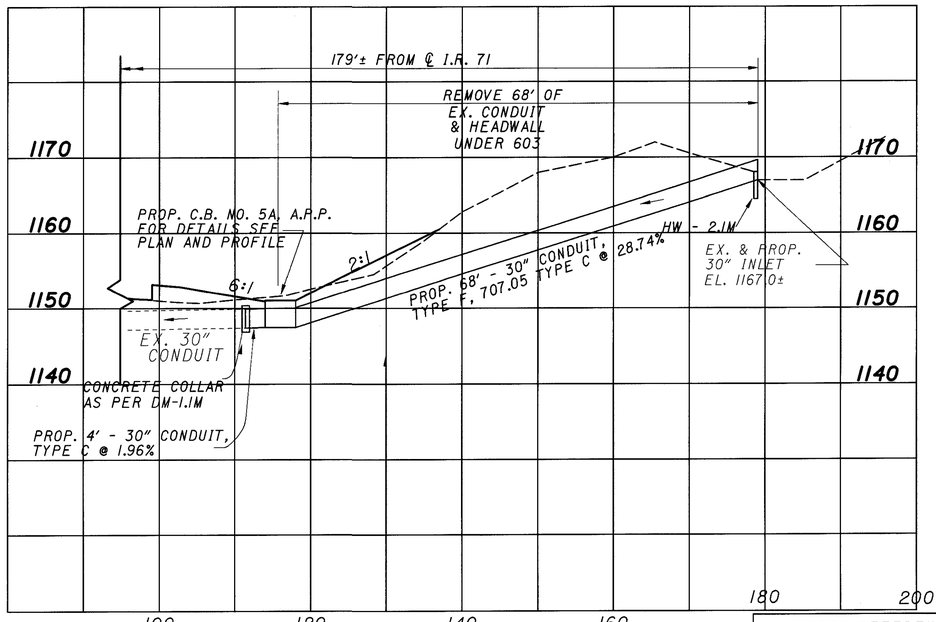

(126-D) EX. 30" CONDUIT STA. 1221+34 RT.

CROSS REFERENCES	
PLAN & PROFILE	203
DRAINAGE SUBSUMMARY	85-88

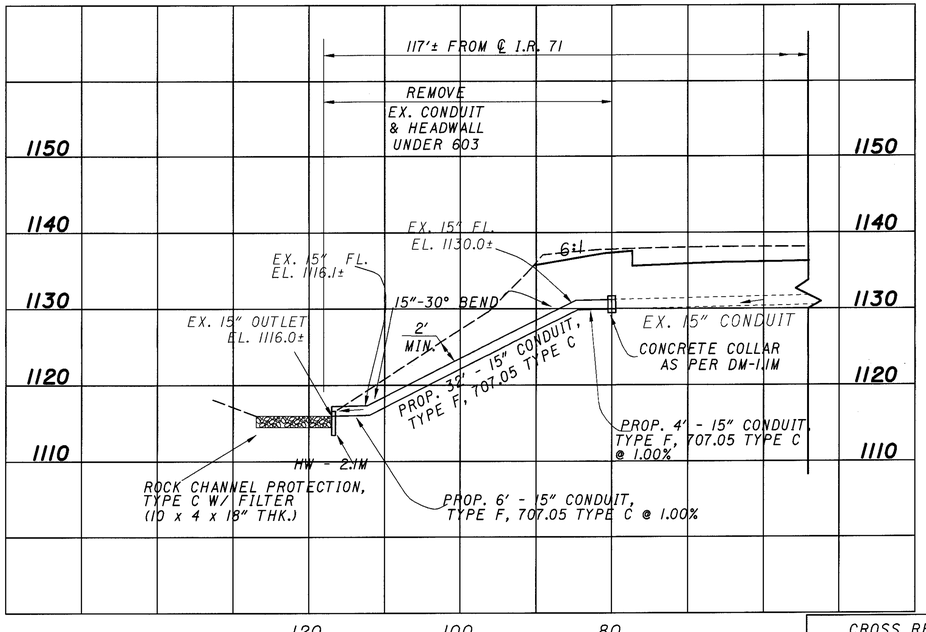

(114-D) EX. 15" CONDUIT STA. 1198+41 LT.

CROSS REFERENCES	
PLAN & PROFILE	201
DRAINAGE SUBSUMMARY	85-88
DRAINAGE CALCS.	145

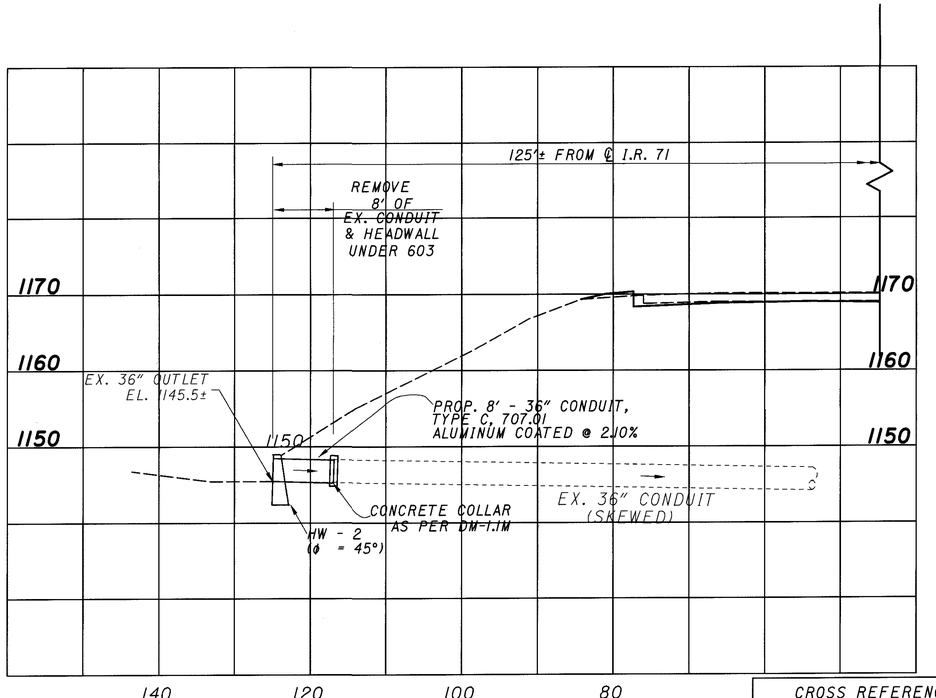

(55-D) EX. 36" CONDUIT STA. 991+35 LT.

CROSS REFERENCES	
PLAN & PROFILE	185
DRAINAGE SUBSUMMARY	81-84
DRAINAGE DETAILS	506

CALCULATED PRS CHECKED PDG

DRAINAGE DETAILS (PIPE REPLACEMENT)

MED - 71 -15.78

511
940

7885DFC 8/23/99 PS

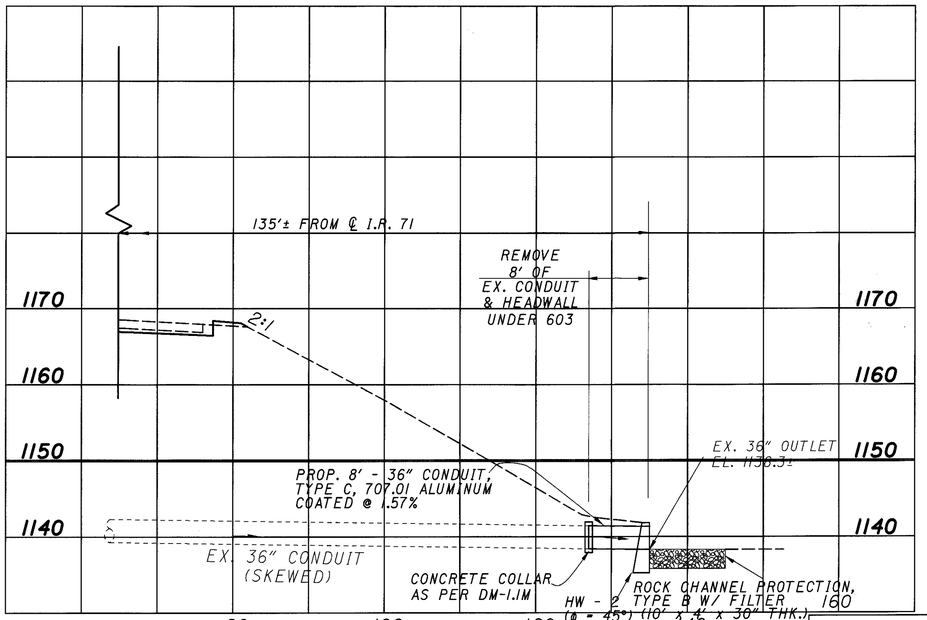

55-D

EX. 36" CONDUIT
STA. 993+68 RT.

CROSS REFERENCES	
PLAN & PROFILE	185
DRAINAGE SUBSUMMARY	81-84
DRAINAGE CALCS.	412
DRAINAGE DETAILS	506

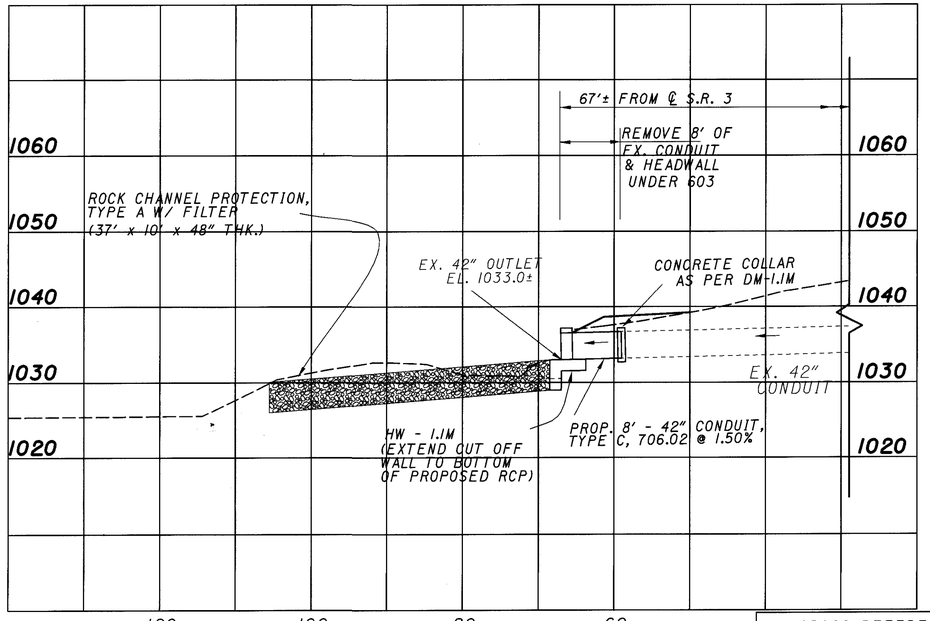

169-D

EX. 42" CONDUIT
STA. 899+10 S.R. 3 LT.

CROSS REFERENCES	
PLAN & PROFILE	194
DRAINAGE SUBSUMMARY	89-92
DRAINAGE CALCS.	146

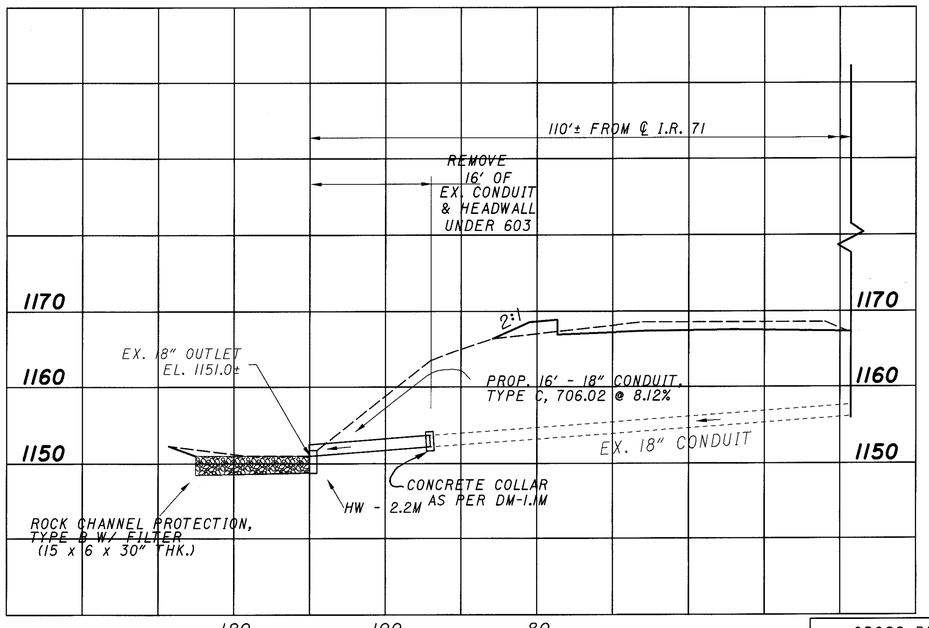

139-D

EX. 18" CONDUIT
STA. 1267+34 LT.

CROSS REFERENCES	
PLAN & PROFILE	207
DRAINAGE SUBSUMMARY	89-92
DRAINAGE CALCS.	146

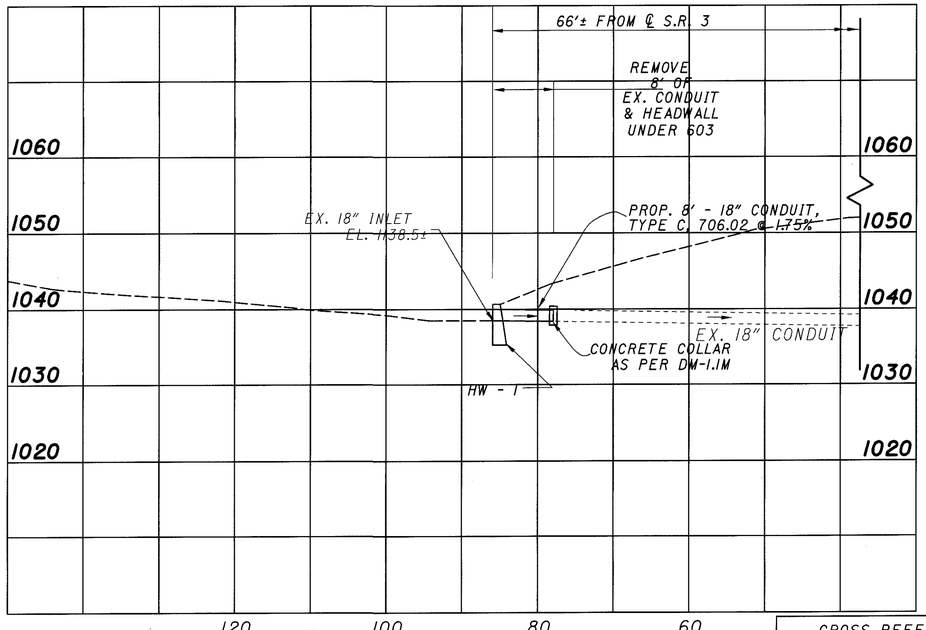

170-D

EX. 18" CONDUIT
STA. 903+65 S.R. 3 LT.

CROSS REFERENCES	
PLAN & PROFILE	194
DRAINAGE SUBSUMMARY	89-91
DRAINAGE DETAILS	507

CALCULATED PRS
CHECKED PDG

DRAINAGE DETAILS (PIPE REPLACEMENT)

MED - 71 -15.78

512
940

7885DFH.DGN 8/23/99 PS

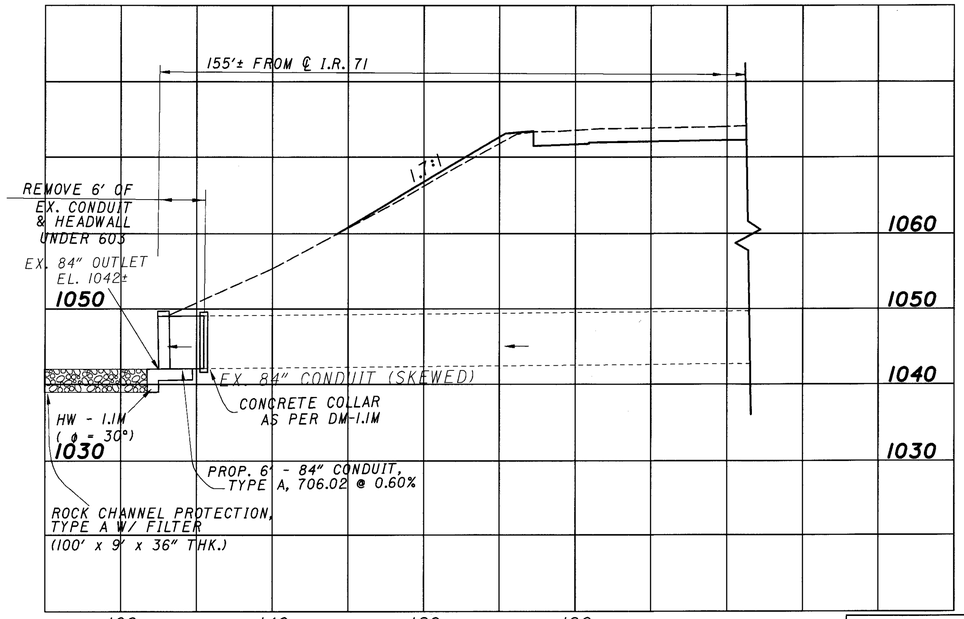

90-D

EX. 84" CONDUIT
STA. 1116+80 LT.

CROSS REFERENCES	
PLAN & PROFILE	195
DRAINAGE SUBSUMMARY	85-88
DRAINAGE CALCS.	144

CALCULATED PRS
CHECKED PDG

DRAINAGE DETAILS (PIPE REPLACEMENT)

MED - 71 -15.78

512A
940

7885DFLDGN 8/23/99 PS

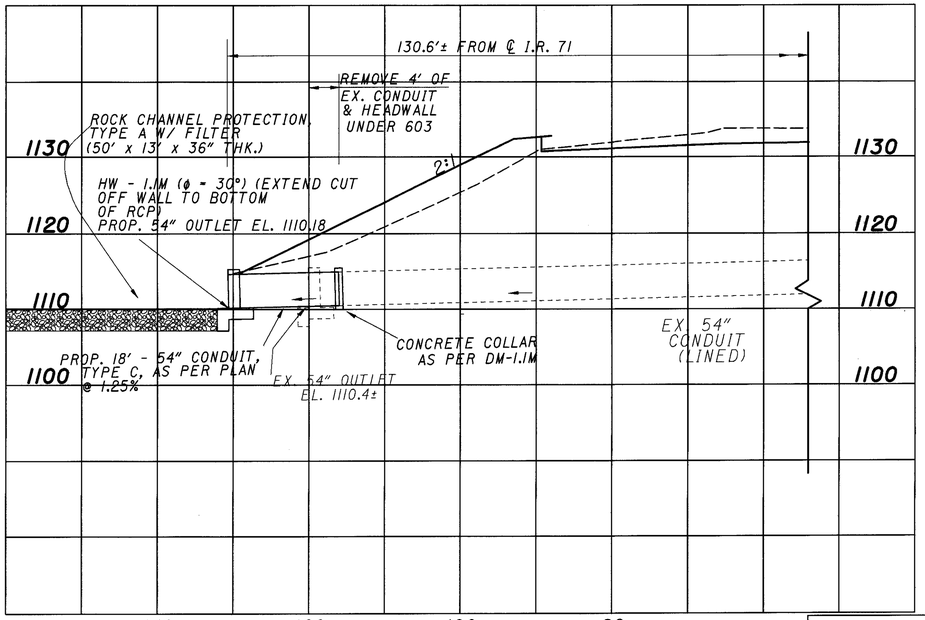

32-D

EX. 54" CONDUIT (SKEW 40° 45')
STA. 913+45 LT.

CROSS REFERENCES	
PLAN & PROFILE	178-179
DRAINAGE SUBSUMMARY	77-80
GENERAL NOTES	35
DRAINAGE CALCS.	140

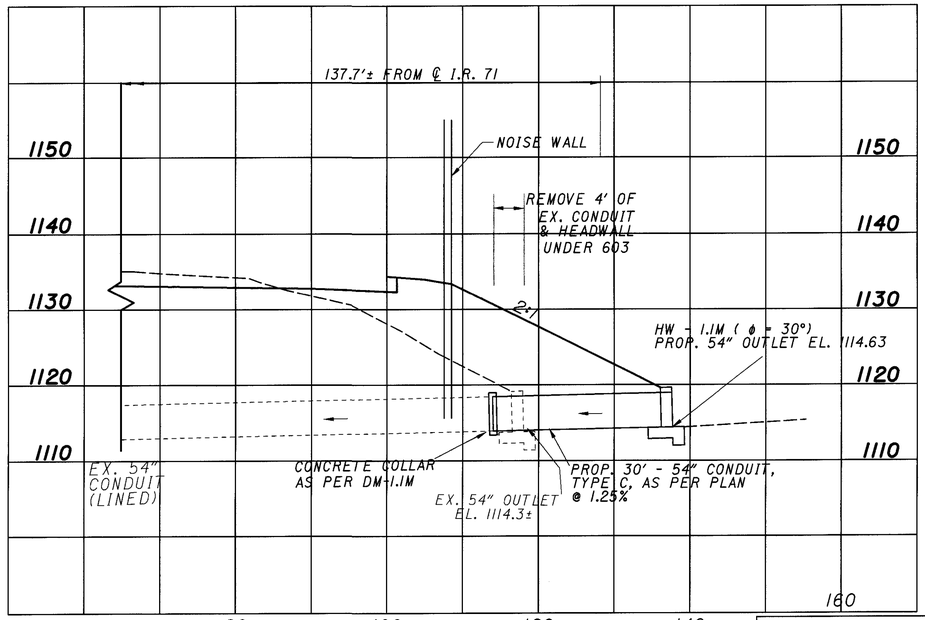

34-D

EX. 54" CONDUIT (SKEW 40° 45')
STA. 915+45 RT.

CROSS REFERENCES	
PLAN & PROFILE	179
DRAINAGE SUBSUMMARY	77-80
GENERAL NOTES	35

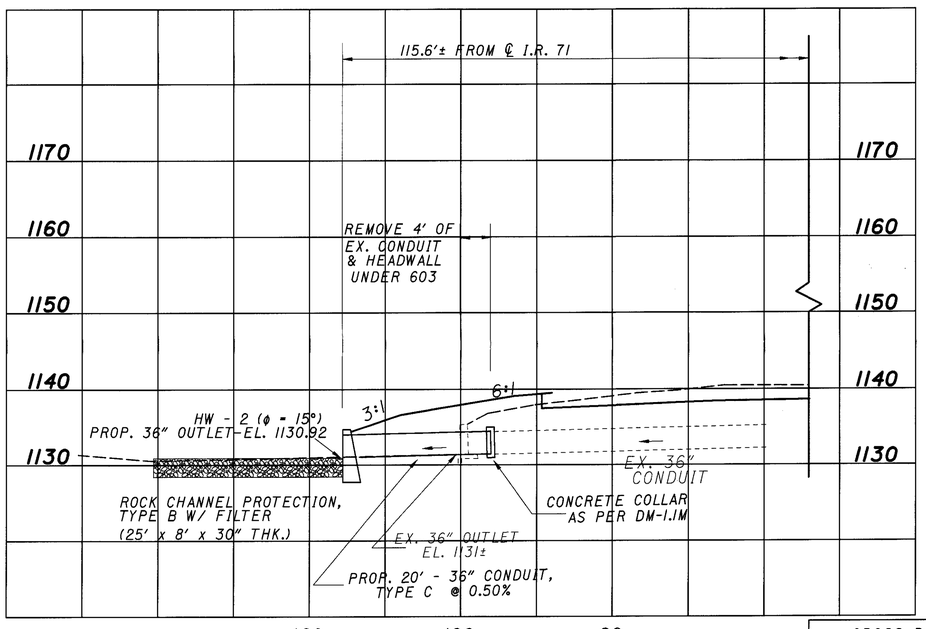

36-D

EX. 36" CONDUIT (SKEW 13°)
STA. 921+88 LT.

CROSS REFERENCES	
PLAN & PROFILE	179
DRAINAGE SUBSUMMARY	77-80
DRAINAGE CALCS.	140
DRAINAGE DETAILS	506

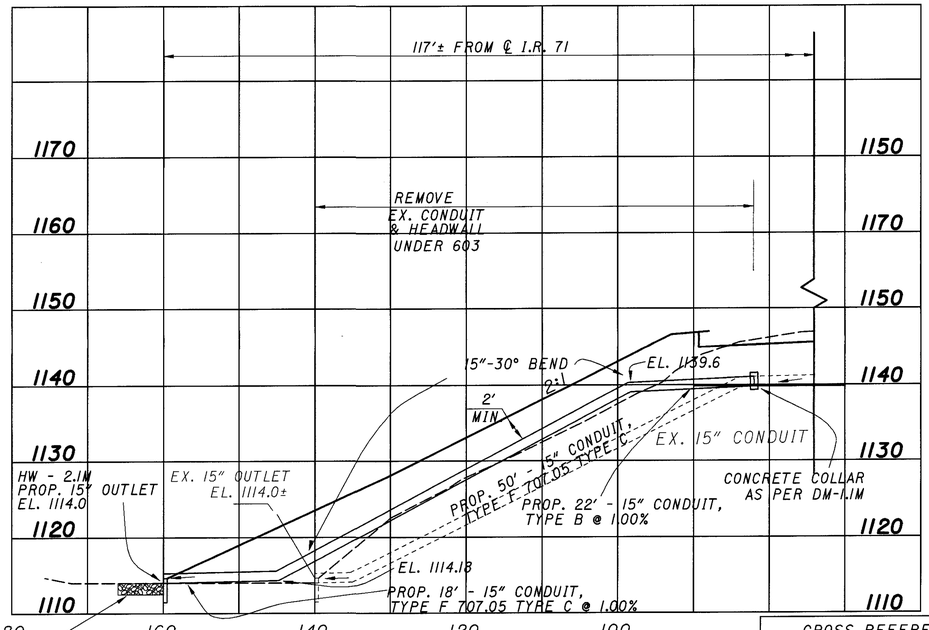

38-D

EX. 15" CONDUIT
STA. 931+68 LT.

CROSS REFERENCES	
PLAN & PROFILE	180
DRAINAGE SUBSUMMARY	77-80
DRAINAGE CALCS.	141

CALCULATED PRS
CHECKED PDG

DRAINAGE DETAILS (PIPE EXTENSION)

MED - 71 -15.78

513
940

7885DFD.DGN 8/23/99 PS

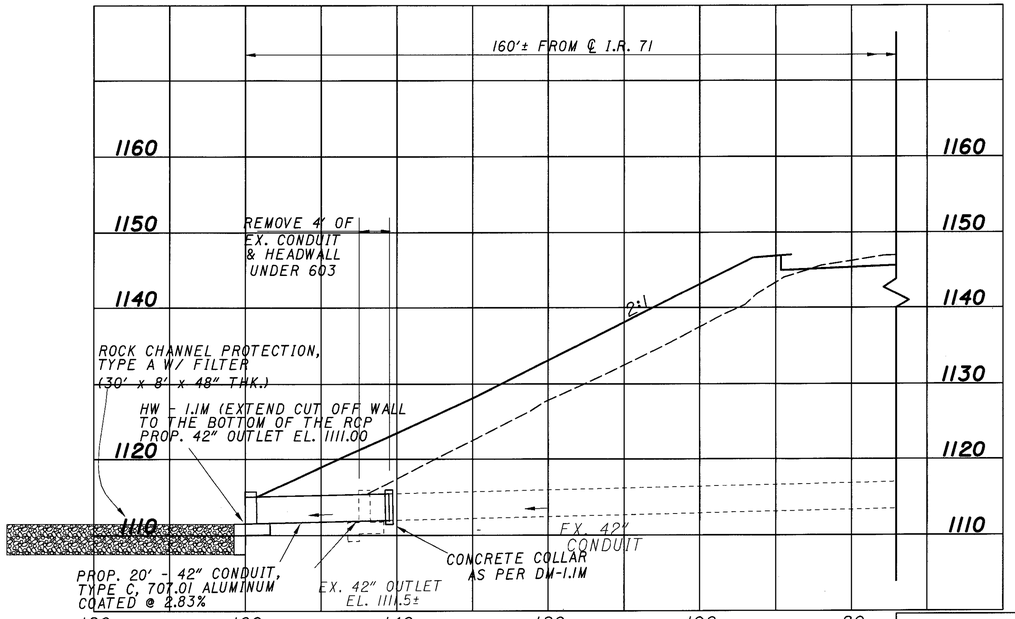

39-D

EX. 42" CONDUIT (SKEW 7°)
STA. 932+25 LT.

CROSS REFERENCES	
PLAN & PROFILE	180
DRAINAGE SUBSUMMARY	77-80
CULVERT DETAIL	519
DRAINAGE CALCS.	141

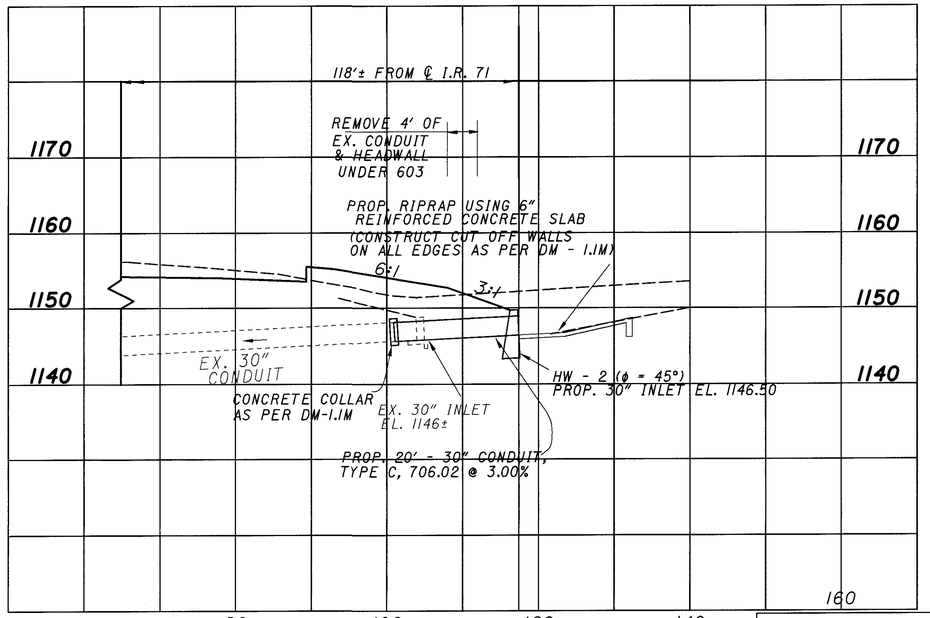

41-D

EX. 30" CONDUIT (SKEW 39° L.F.)
STA. 943+45 RT.

CROSS REFERENCES	
PLAN & PROFILE	181
DRAINAGE SUBSUMMARY	77-80
DRAINAGE CALCS.	141
DRAINAGE DETAILS	506

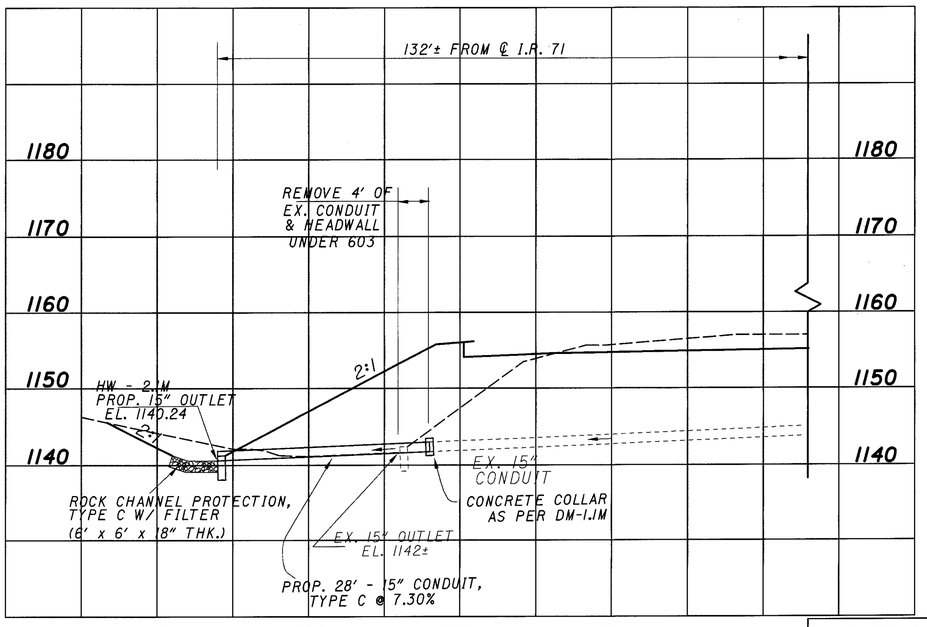

40-D

EX. 15" CONDUIT
STA. 944+68 LT.

CROSS REFERENCES	
PLAN & PROFILE	181
DRAINAGE SUBSUMMARY	77-80
DRAINAGE CALCS.	141

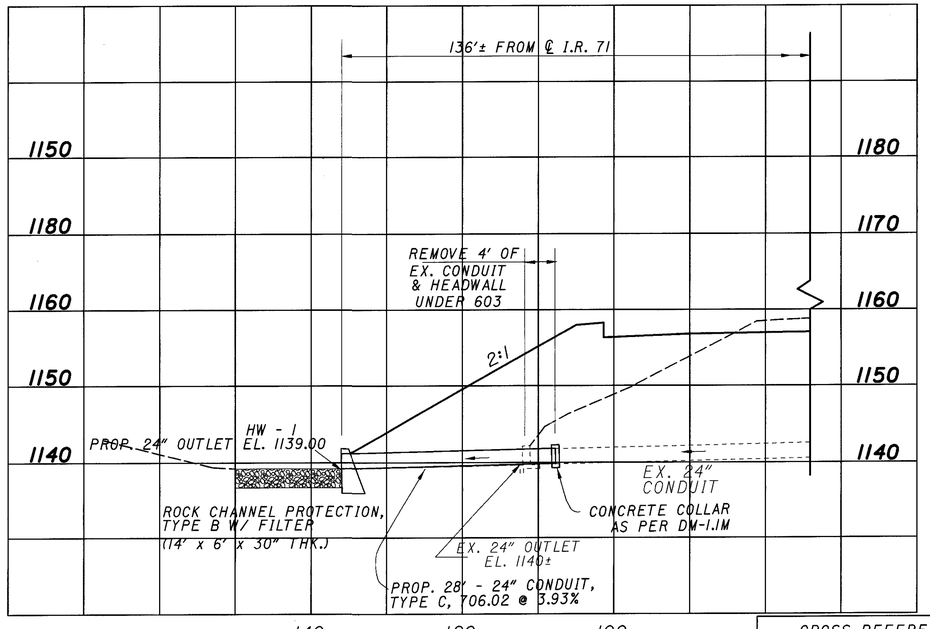

41A-D

EX. 24" CONDUIT
STA. 947+50 LT.

CROSS REFERENCES	
PLAN & PROFILE	181
DRAINAGE SUBSUMMARY	77-80
DRAINAGE CALCS.	141
DRAINAGE DETAILS	507

CALCULATED PRS
CHECKED PDG

DRAINAGE DETAILS (PIPE EXTENSION)

MED - 71 -15.78

514
940

78850FE.DGN 8/23/99 PS

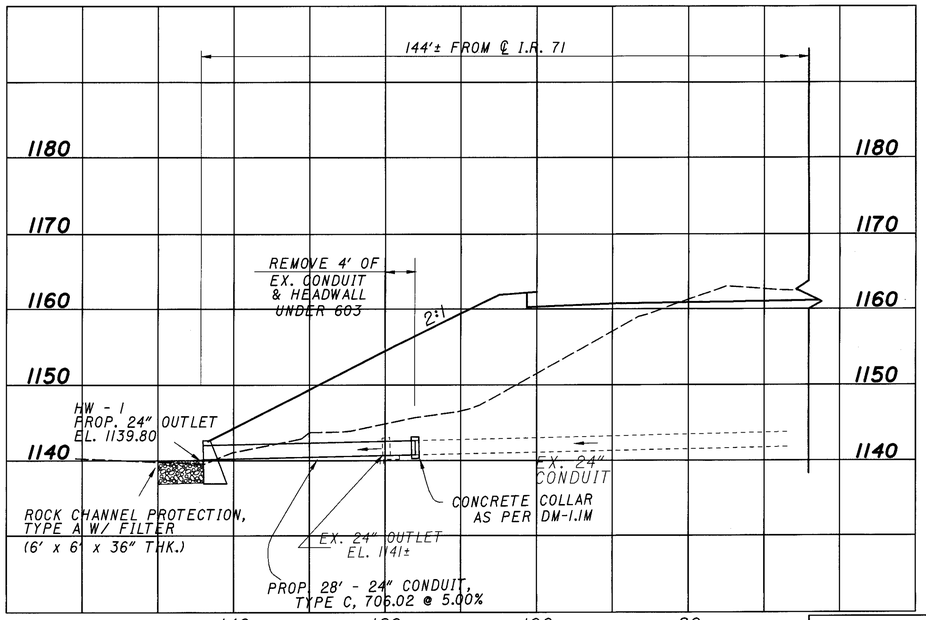

42-D

EX. 24" CONDUIT
STA. 952+68 LT.

CROSS REFERENCES	
PLAN & PROFILE	182
DRAINAGE SUBSUMMARY	77-80
DRAINAGE CALCS.	142
DRAINAGE DETAILS	507

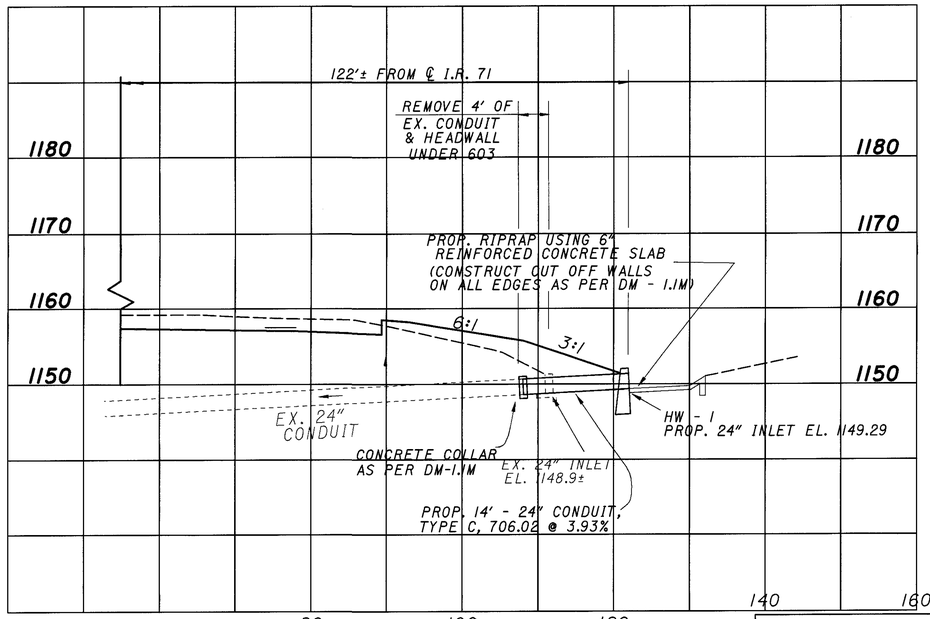

41A-D

EX. 24" CONDUIT
STA. 947+50 RT.

CROSS REFERENCES	
PLAN & PROFILE	181
DRAINAGE SUBSUMMARY	77-80
DRAINAGE CALCS.	142
DRAINAGE DETAILS	507

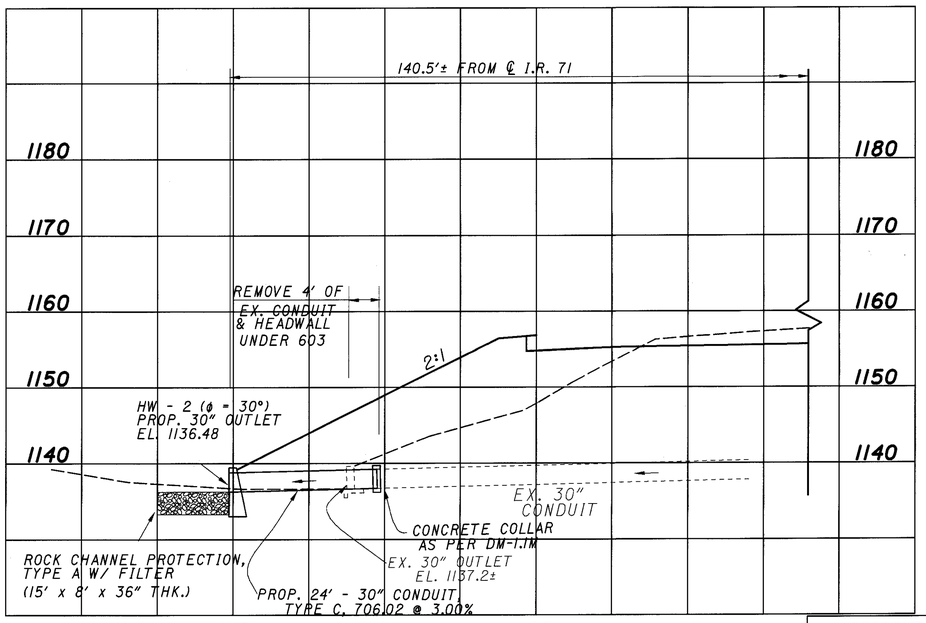

41-D

EX. 30" CONDUIT (SKEW 39°)
STA. 945+33 LT.

CROSS REFERENCES	
PLAN & PROFILE	181
DRAINAGE SUBSUMMARY	77-80
DRAINAGE CALCS.	141
DRAINAGE DETAILS	506

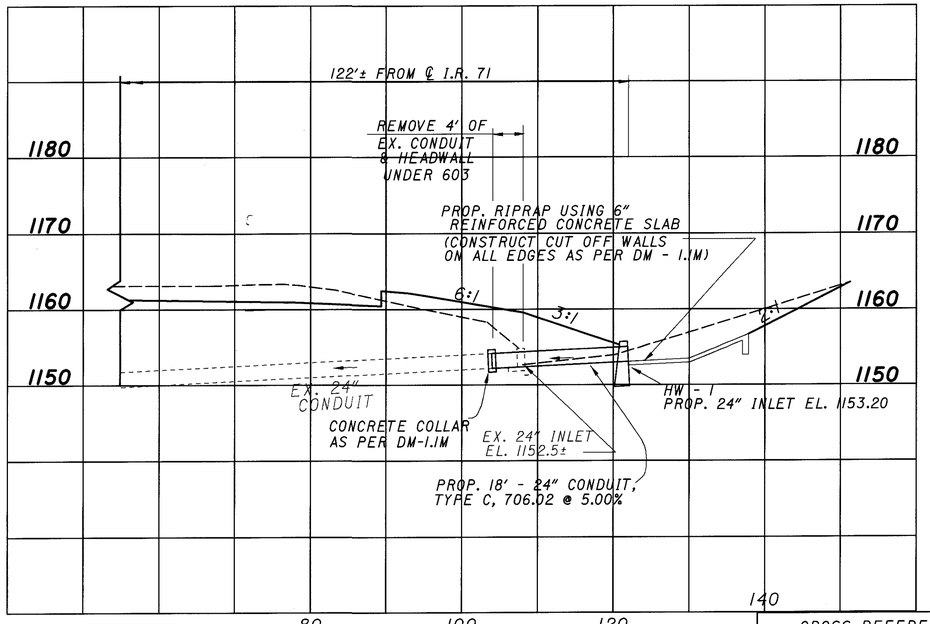

42-D

EX. 24" CONDUIT
STA. 952+68 RT.

CROSS REFERENCES	
PLAN & PROFILE	182
DRAINAGE SUBSUMMARY	77-80
DRAINAGE CALCS.	142
DRAINAGE DETAILS	507

CALCULATED PRS
CHECKED PDG

DRAINAGE DETAILS (PIPE EXTENSION)

MED - 71 -15.78

515
940

78850FF.DGN 8/23/99 PS

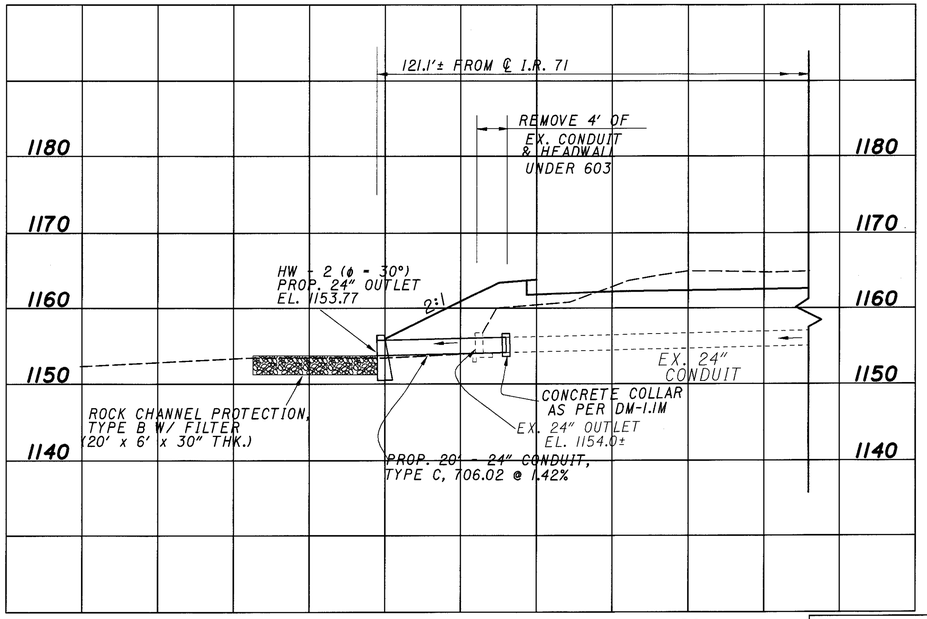

43-D

EX. 24" CONDUIT (SKEW 35°)
STA. 955+60 LT.

CROSS REFERENCES	
PLAN & PROFILE	182
DRAINAGE SUBSUMMARY	81-84
DRAINAGE DETAILS	506
DRAINAGE CALCS.	142

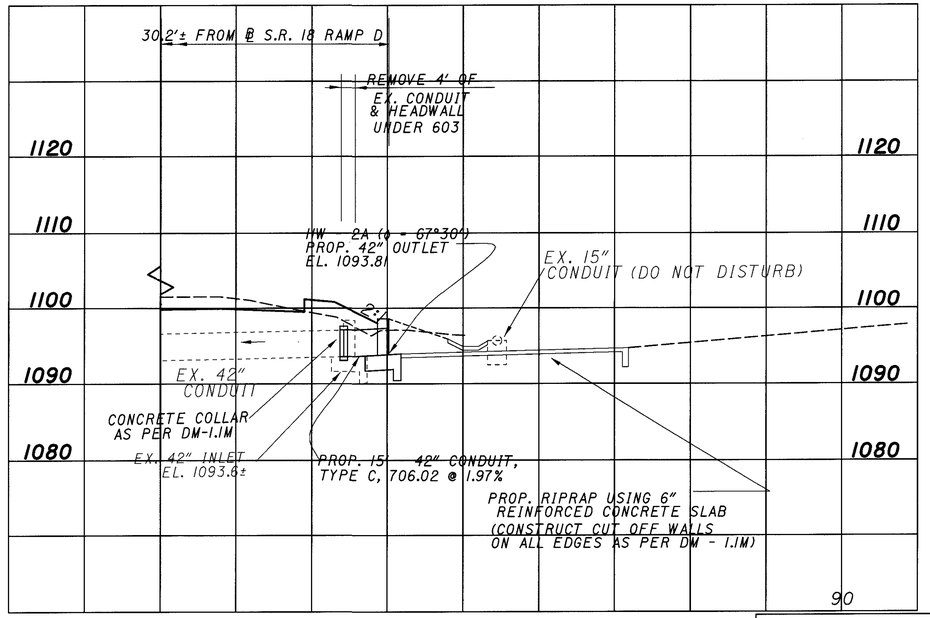

26-D

EX. 42" CONDUIT (SKEW 27°59'28" L.F. ℄S.R.18)
STA. 1+32 RT. S.R. 18 RAMP D

CROSS REFERENCES	
PLAN & PROFILE	177
DRAINAGE SUBSUMMARY	77-80
DRAINAGE DETAILS	508
DRAINAGE CALCS.	139

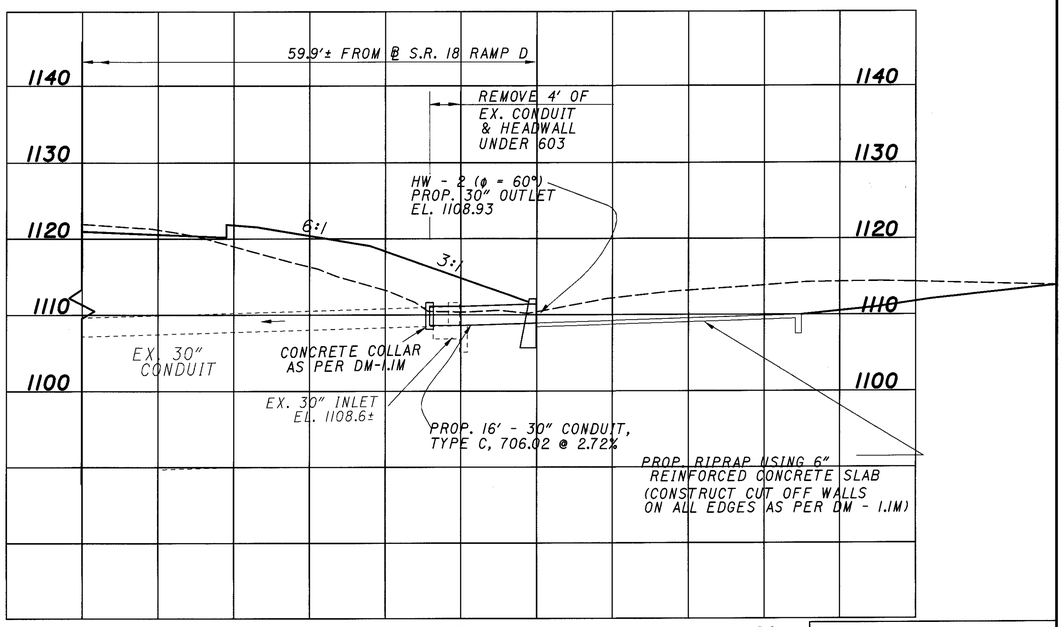

28-D

EX. 30" CONDUIT (SKEW 33° R.F.)
STA. 8+60 RT. S.R. 18 RAMP D

CROSS REFERENCES	
PLAN & PROFILE	177
DRAINAGE SUBSUMMARY	77-80
DRAINAGE DETAILS	506
DRAINAGE CALCS.	139

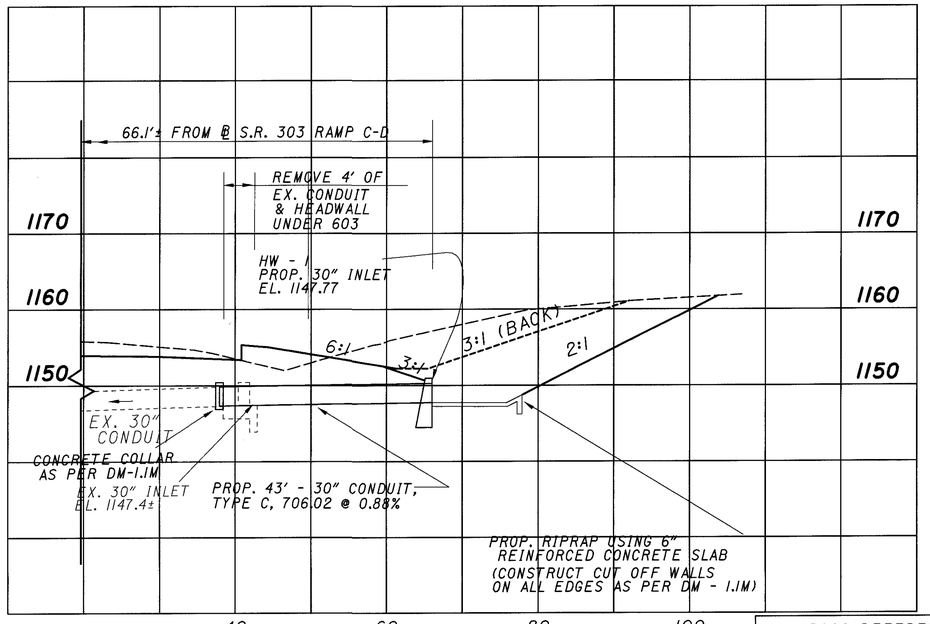

180C-D

EX. 30" CONDUIT (SKEW 49° R.F. ℄ S.R.303)
STA. 46+84.54 38.91' RT. S.R. 303 RAMP C-D

CROSS REFERENCES	
PLAN & PROFILE	491-492
DRAINAGE SUBSUMMARY	93-96
DRAINAGE DETAILS	507
DRAINAGE CALCS.	146A

CALCULATED PRS
CHECKED PDG

DRAINAGE DETAILS (PIPE EXTENSION)

MED - 71 -15.78

516
940

7885DFG.DGN 8/23/99 PS

CROSS REFERENCES	
PLAN & PROFILE	176-177
DRAINAGE SUBSUMMARY	77-80
TYPICAL SECTIONS	8-22
DRAINAGE CALCS.	138

DRAINAGE AREA = 46 ACRES	
Q_{50} =	96 cfs
Q_{100} =	107 cfs
HW_{50} =	6.7'
HW_{100} =	8.2'
V 50 =	19 ft/s (n=0.009)
V 100 =	23 ft/s (n=0.009)

STA. 888+41.83 ℄ CONST. I.R. 71 =
STA. 10+00.00 ℄ CULVERT

EX. 48" CORRUGATED METAL PIPE CULVERT WITH PROPOSED SS837 LINER PIPE, GROUTED IN PLACE

74°

9+00 10+00 11+00

889+00 888+00

10' SHOULDER 36' 10' SHOULDER 20' 20' 10' SHOULDER 36' 10' SHOULDER

20-D

ITEM SS837 BACKFILL FOR LINER PIPE
ESTIMATED QUANTITY CALCULATION

$\frac{\pi(4)^2}{4(27)}$ = 0.47 CU. YARD / FT.

$\frac{\pi(3)^2}{4(27)}$ = - 0.26 CU. YARD / FT.

0.21 CU. YARD / FT.
X 270 FT. LENGTH
= 56.70 CU. YARDS X 2
USE 114 CU. YARDS (QUANTITY CARRIED TO DRAINAGE SUBSUMMARY)

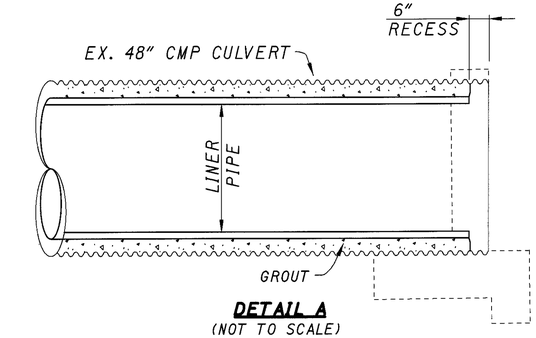

DETAIL A
(NOT TO SCALE)

IF THE 36" OR 39.416" LINER PIPE, IS USED A 6" RECESS FROM 42" (MIN.) TO 36" OR 39.416" IS REQUIRED AT THE INLET

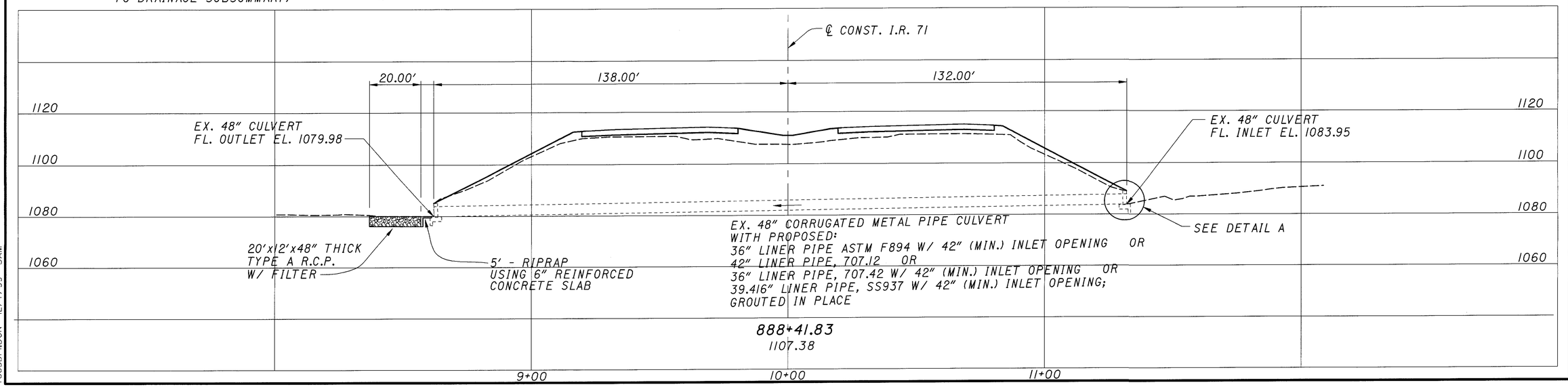

7885DP1.DGN 12/7/99 SAM

CALCULATED PRS
CHECKED PDG

HORIZONTAL SCALE IN FEET
0 10 20 40

CULVERT DETAIL (LINER) STA. 888+41.83

MED - 71 - 15.78

517
940

CROSS REFERENCES	
PLAN & PROFILE	178
DRAINAGE SUBSUMMARY	77-80
TYPICAL SECTIONS	8-22
DRAINAGE CALCS.	140

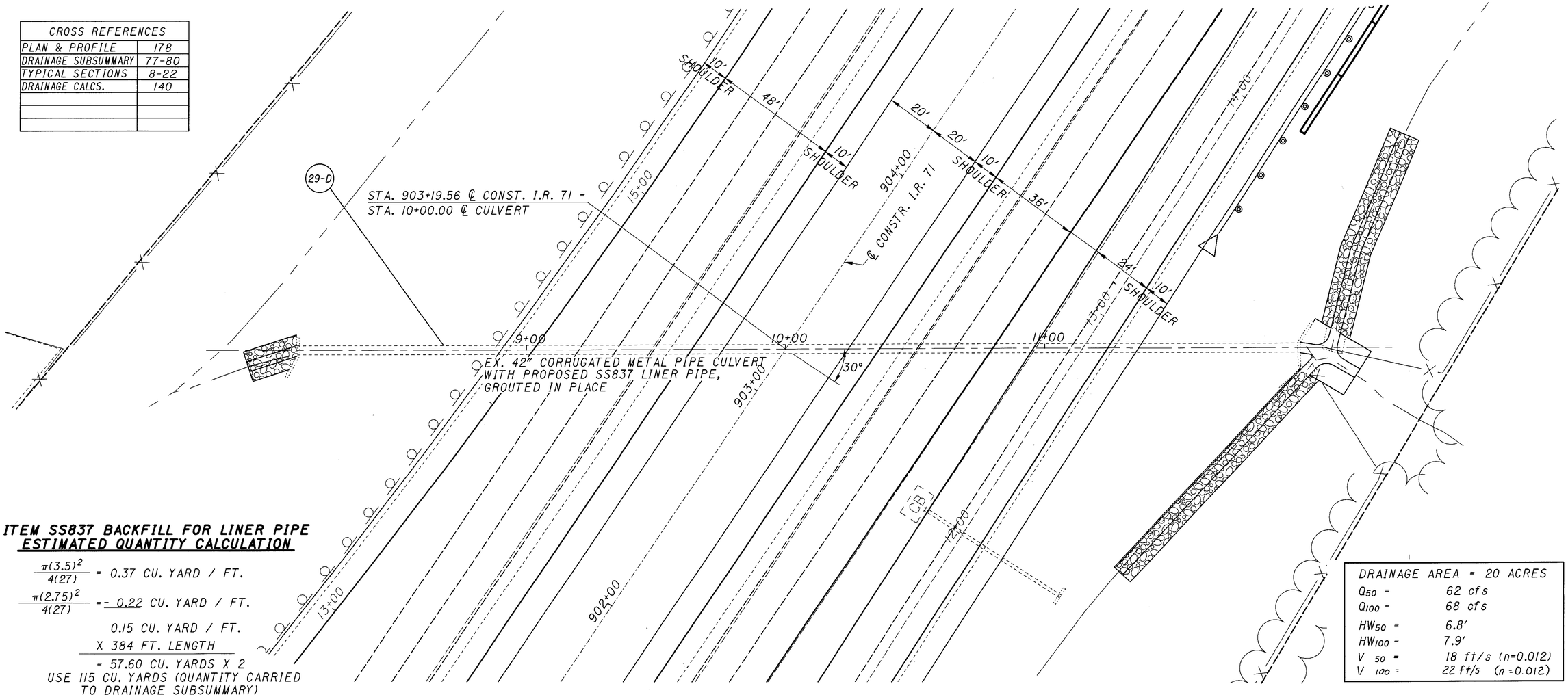

ITEM SS837 BACKFILL FOR LINER PIPE
ESTIMATED QUANTITY CALCULATION

$\frac{\pi(3.5)^2}{4(27)}$ = 0.37 CU. YARD / FT.

$\frac{\pi(2.75)^2}{4(27)}$ = 0.22 CU. YARD / FT.

0.15 CU. YARD / FT.
X 384 FT. LENGTH
= 57.60 CU. YARDS X 2

USE 115 CU. YARDS (QUANTITY CARRIED TO DRAINAGE SUBSUMMARY)

DRAINAGE AREA = 20 ACRES

Q_{50} =	62 cfs
Q_{100} =	68 cfs
HW_{50} =	6.8'
HW_{100} =	7.9'
V 50 =	18 ft/s (n=0.012)
V 100 =	22 ft/s (n=0.012)

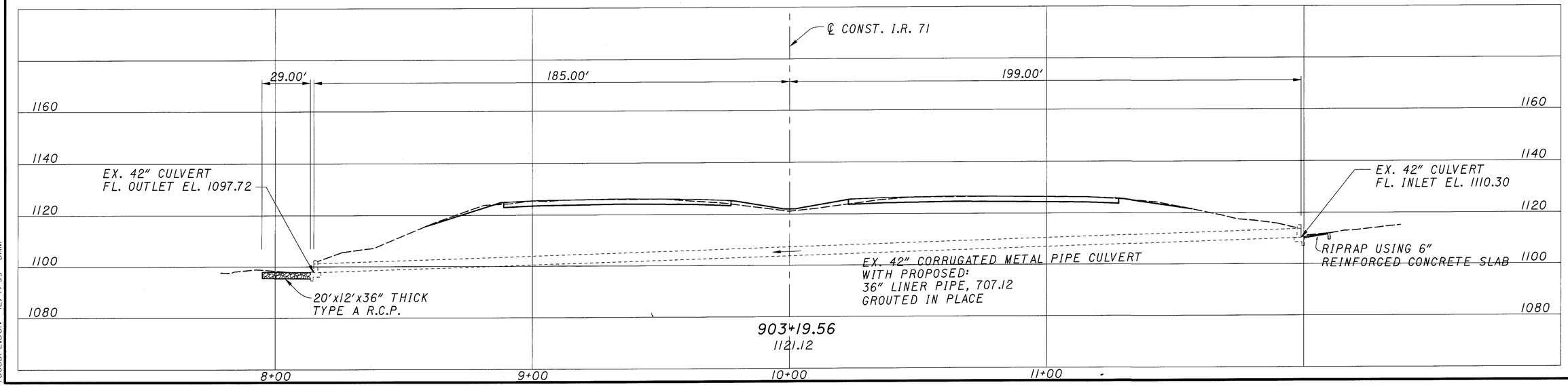

HORIZONTAL SCALE IN FEET
0 10 20 40

CALCULATED PRS
CHECKED PDG

CULVERT DETAIL (LINER)
STA. 903+19.56

MED - 71 - 15.78

518
940

7885DP2.DGN 12/7/99 SAM

DRAINAGE AREA = 56 ACRES

Q_{50} =	110 cfs	V_{50} =	20 ft/s (n=0.012)
Q_{100} =	123 cfs	V_{100} =	24 ft/s (n=0.012)
HW_{50} =	9.9′		
HW_{100} =	11.6′		

ITEM SS837 BACKFILL FOR LINER PIPE ESTIMATED QUANTITY CALCULATION

$\frac{\pi(3.5)^2}{4(27)}$ = 0.37 CU. YARD / FT.

$\frac{\pi(3)^2}{4(27)}$ = -0.26 CU. YARD / FT.

0.11 CU. YARD / FT.
X 284 FT. LENGTH
= 31.24 CU. YARDS X 2
USE 63 CU. YARDS (QUANTITY CARRIED TO DRAINAGE SUBSUMMARY)

CROSS REFERENCES	
PLAN & PROFILE	180
DRAINAGE SUBSUMMARY	77-80
TYPICAL SECTIONS	8-22
DRAINAGE DETAILS	514
DRAINAGE CALCS.	141

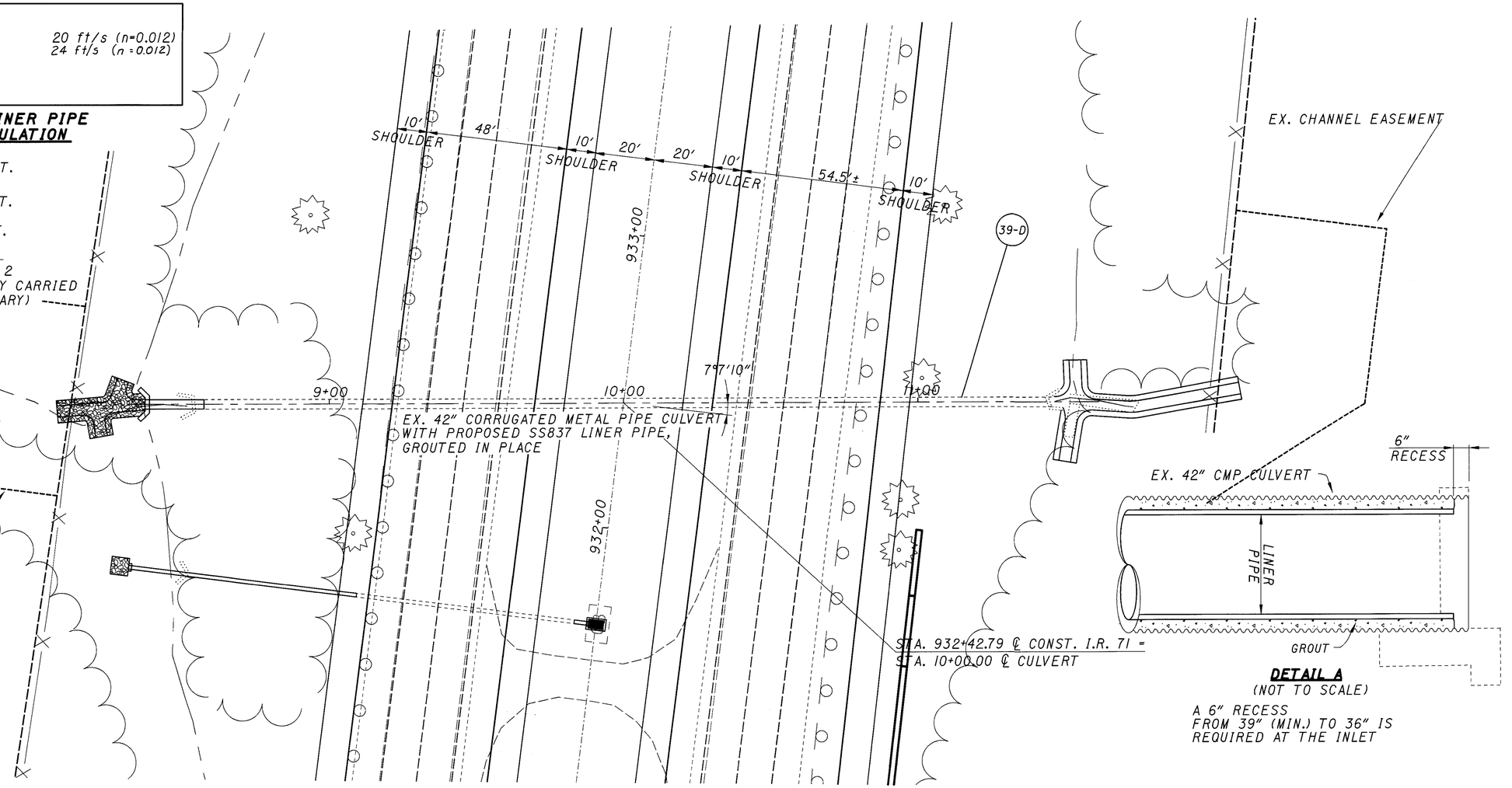

DETAIL A
(NOT TO SCALE)

A 6″ RECESS FROM 39″ (MIN.) TO 36″ IS REQUIRED AT THE INLET

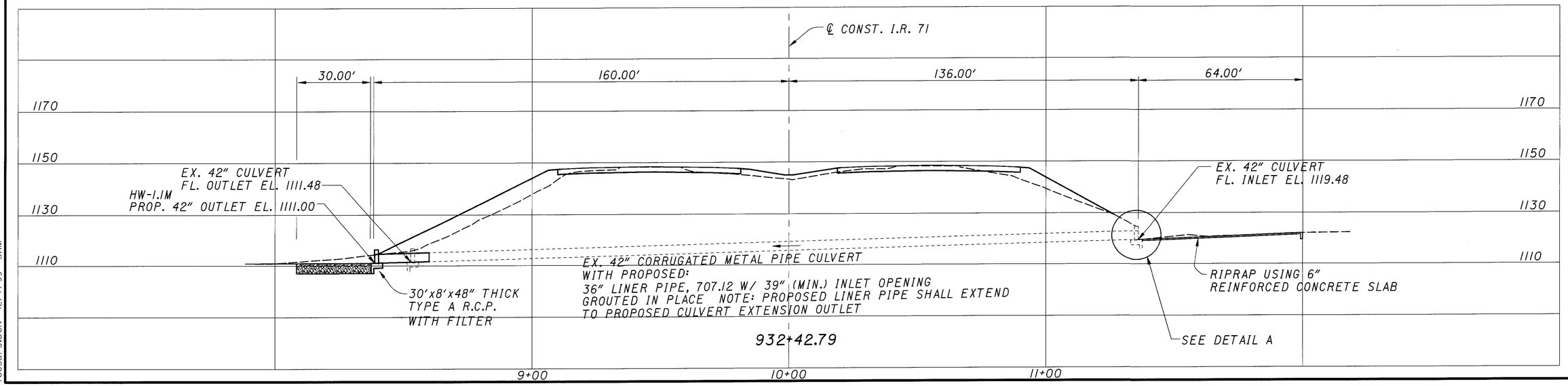

HORIZONTAL SCALE IN FEET
0 10 20 40

CALCULATED PRS
CHECKED PDG

CULVERT DETAIL (LINER)
STA. 932+42.79

MED - 71 - 15.78

519
940

7885DP3.DGN 12/7/99 SAM

CROSS REFERENCES	
PLAN & PROFILE	185
DRAINAGE SUBSUMMARY	81-84
TYPICAL SECTIONS	8-22
DRAINAGE CALCS.	142

DRAINAGE AREA = 20 ACRES			
Q_{50} =	50 cfs	V_{50} =	20 ft/s (n=0.009)
Q_{100} =	57 cfs	V_{100} =	25 ft/s (n = 0.009)
HW_{50} =	4.9′		
HW_{100} =	6.2′		

10′ SHOULDER | 36′ | 10′ SHOULDER | 20′ | 20′ | 10′ SHOULDER | 36′ | 10′ SHOULDER

1000+00

57-D

90°

9+00 | 10+00 | 11+00

EX. 36″ CORRUGATED METAL PIPE CULVERT WITH PROPOSED SS837 LINER PIPE, GROUTED IN PLACE

999+00

STA. 999+22.97 ℄ CONST. I.R. 71 = STA. 10+00.00 ℄ CULVERT

998+00

ITEM SS837 BACKFILL FOR LINER PIPE ESTIMATED QUANTITY CALCULATION

$\frac{\pi(3)^2}{4(27)}$ = 0.26 CU. YARD / FT.

$\frac{\pi(2.25)^2}{4(27)}$ = - 0.15 CU. YARD / FT.

0.11 CU. YARD / FT.

X 244 FT. LENGTH

= 26.84 CU. YARDS X 2

USE 54 CU. YARDS (QUANTITY CARRIED TO DRAINAGE SUBSUMMARY)

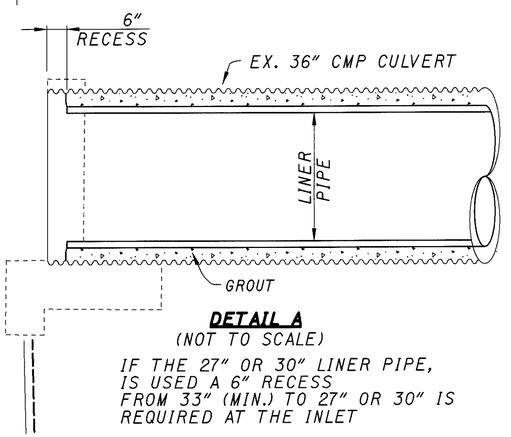

DETAIL A
(NOT TO SCALE)

IF THE 27″ OR 30″ LINER PIPE, IS USED A 6″ RECESS FROM 33″ (MIN.) TO 27″ OR 30″ IS REQUIRED AT THE INLET

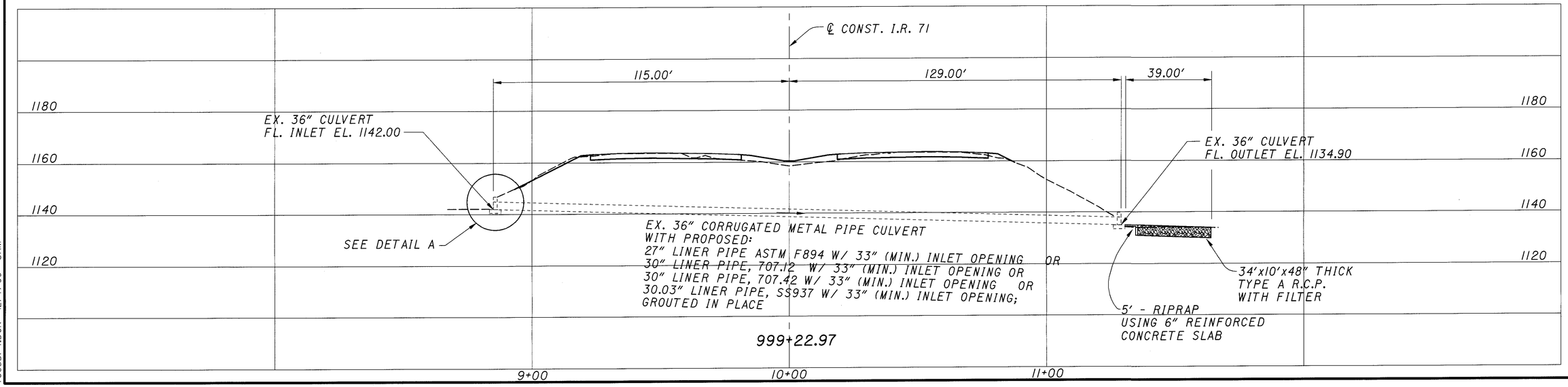

N

HORIZONTAL SCALE IN FEET
0 10 20 40

CALCULATED PRS
CHECKED PDG

CULVERT DETAIL (LINER)
STA. 999+22.97

MED - 71 - 15.78

520
940

7885DP4.DGN 12/7/99 SAM

CROSS REFERENCES	
PLAN & PROFILE	186
DRAINAGE SUBSUMMARY	81-84
TYPICAL SECTIONS	8-22
DRAINAGE CALCS.	142

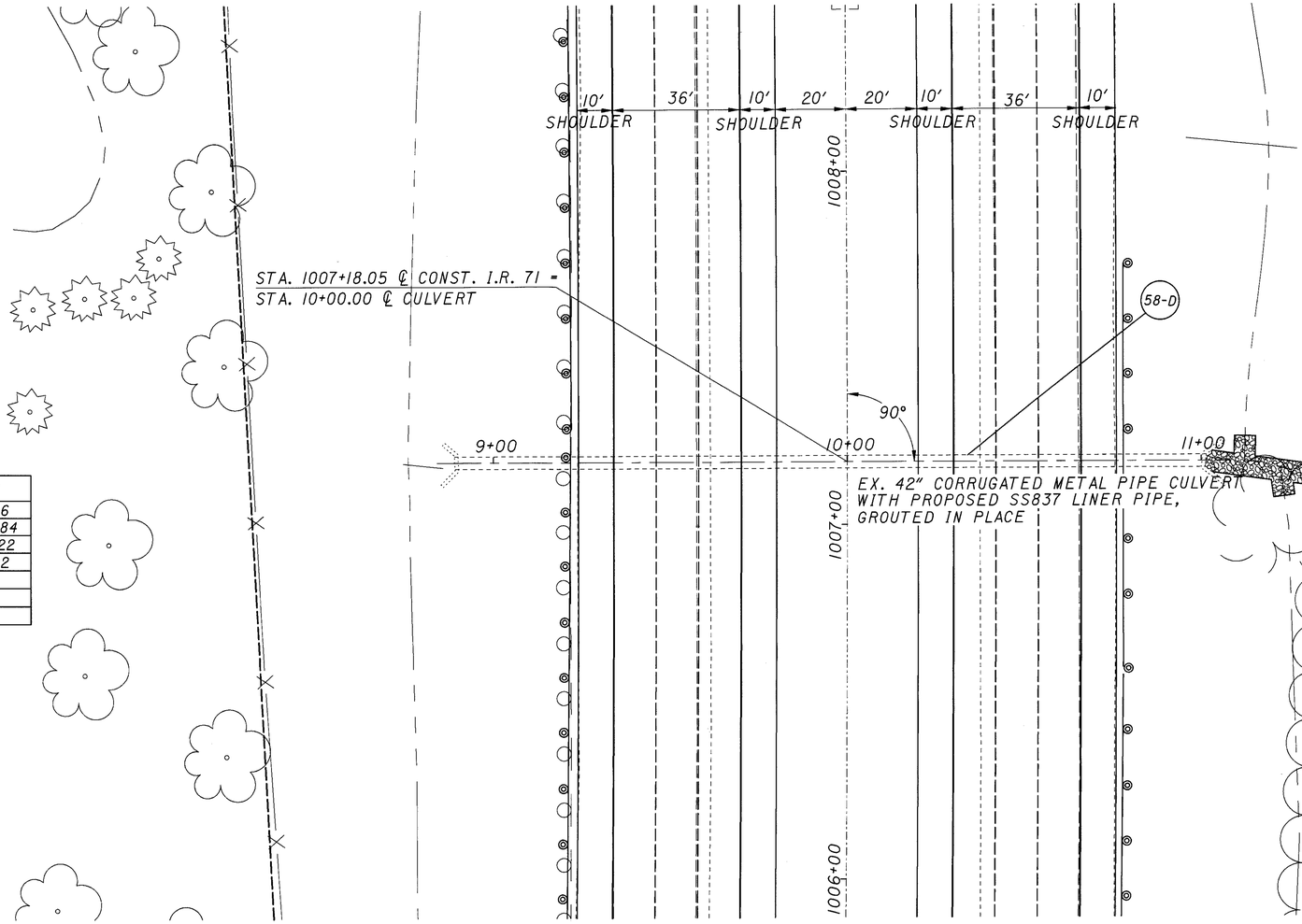

DRAINAGE AREA = 26 ACRES			
Q_{50} =	68 cfs	V_{50} =	15 ft/s (n=0.009)
Q_{100} =	77 cfs	V_{100} =	19 ft/s (n=0.009)
HW_{50} =	6.2'		
HW_{100} =	7.4'		

ITEM SS837 BACKFILL FOR LINER PIPE ESTIMATED QUANTITY CALCULATION

$\frac{\pi(3.5)^2}{4(27)}$ = 0.37 CU. YARD / FT.

$\frac{\pi(2.75)^2}{4(27)}$ = - 0.22 CU. YARD / FT.

0.15 CU. YARD / FT.
X 212 FT. LENGTH
= 31.80 CU. YARDS X 2
USE 64 CU. YARDS (QUANTITY CARRIED TO DRAINAGE SUBSUMMARY)

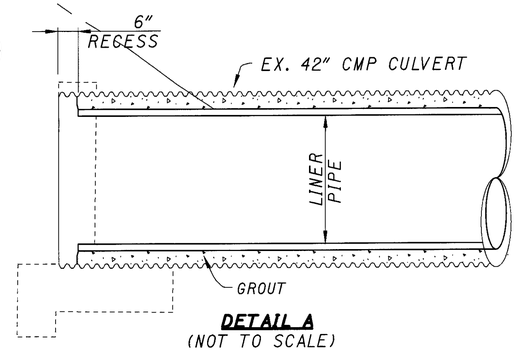

DETAIL A
(NOT TO SCALE)

IF THE 33" LINER PIPE, IS USED A 6" RECESS FROM 36" (MIN.) TO 33" IS REQUIRED AT THE INLET

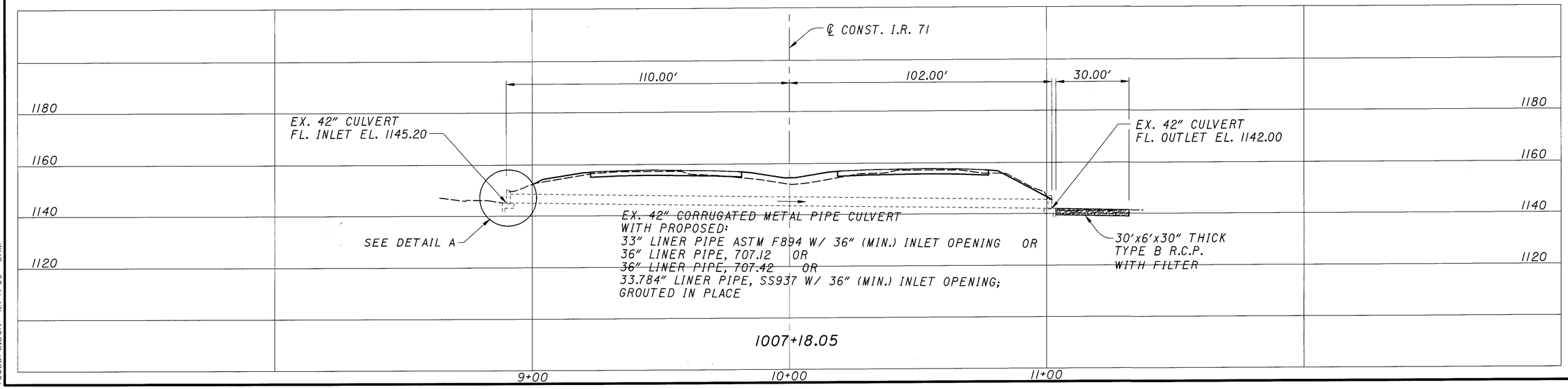

HORIZONTAL SCALE IN FEET
0 10 20 40

CALCULATED PRS
CHECKED PDG

CULVERT DETAIL (LINER) STA. 1007+18.05

MED - 71 - 15.78

521
940

7885DP5.DGN 12/7/99 SAM

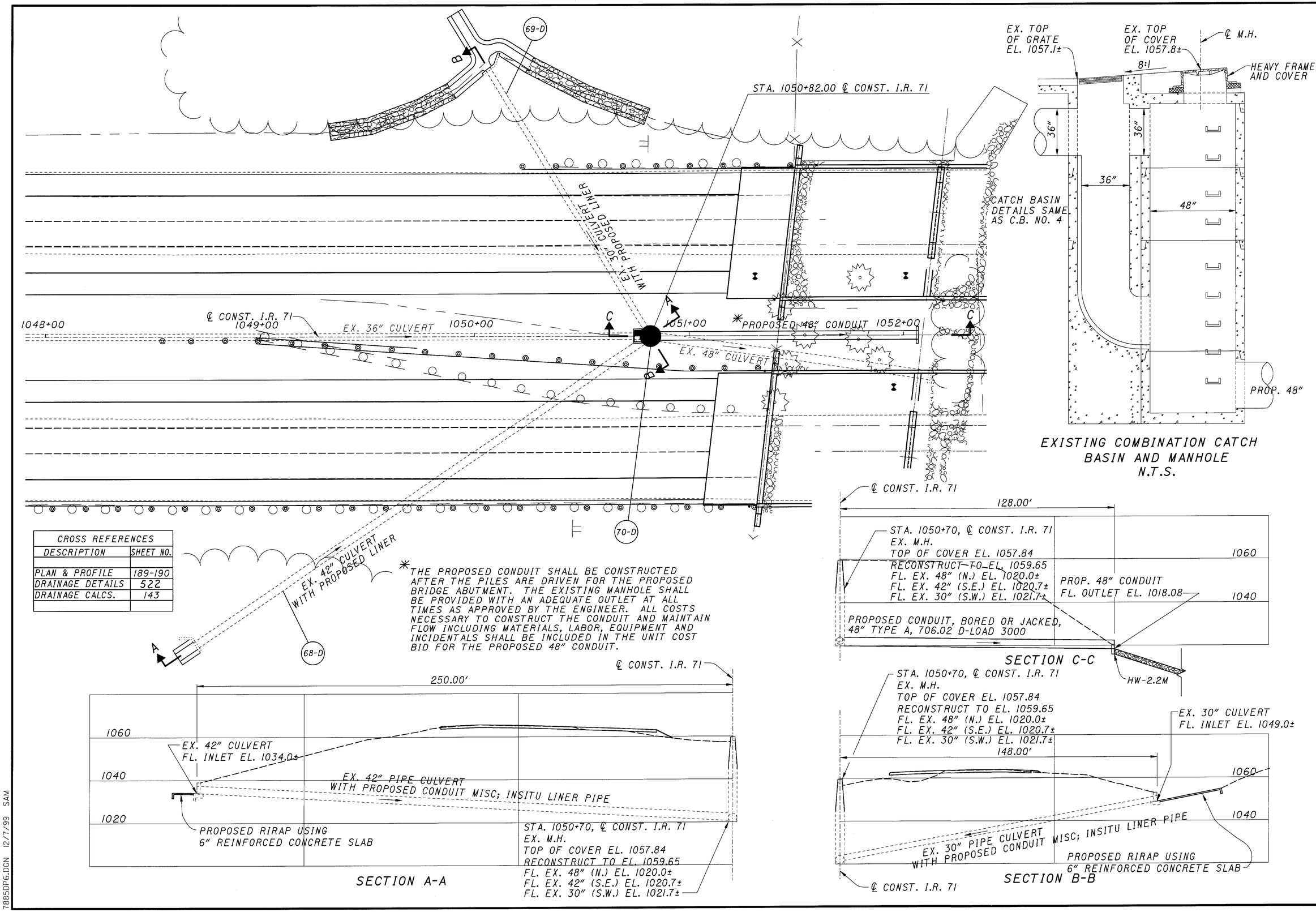

CROSS REFERENCES	
DESCRIPTION	SHEET NO.
PLAN & PROFILE	189-190
DRAINAGE DETAILS	522
DRAINAGE CALCS.	143

✳ THE PROPOSED CONDUIT SHALL BE CONSTRUCTED AFTER THE PILES ARE DRIVEN FOR THE PROPOSED BRIDGE ABUTMENT. THE EXISTING MANHOLE SHALL BE PROVIDED WITH AN ADEQUATE OUTLET AT ALL TIMES AS APPROVED BY THE ENGINEER. ALL COSTS NECESSARY TO CONSTRUCT THE CONDUIT AND MAINTAIN FLOW INCLUDING MATERIALS, LABOR, EQUIPMENT AND INCIDENTALS SHALL BE INCLUDED IN THE UNIT COST BID FOR THE PROPOSED 48" CONDUIT.

EXISTING COMBINATION CATCH BASIN AND MANHOLE N.T.S.

SECTION C-C

SECTION A-A

SECTION B-B

HORIZONTAL SCALE IN FEET
0 10 20 40

CALCULATED PRS
DECKED PDG

STORM SEWER/CULVERT DETAIL (LINER)
STA. 1050+82.00

MED - 71 - 15.78

522
940

7885DP6.DGN 12/1/99 SAM

DRAINAGE AREA = 67 ACRES

Q_{50} =	32 cfs	V_{50} =	13 ft/s (n=0.009)
Q_{100} =	38 cfs	V_{100} =	17 ft/s (n=0.009)
HW_{50} =	5.2′		
HW_{100} =	7.8′		

ITEM SS837 BACKFILL FOR LINER PIPE
ESTIMATED QUANTITY CALCULATION

$\frac{\pi(2.5)^2}{4(27)}$ = 0.18 CU. YARD / FT.

$\frac{\pi(2)^2}{4(27)}$ = - 0.12 CU. YARD / FT.

0.06 CU. YARD / FT.

X 286 FT. LENGTH

= 17.16 CU. YARDS X 2

USE 34 CU. YARDS (QUANTITY CARRIED TO DRAINAGE SUBSUMMARY)

STA. 1082+95.00 ℄ CONST. I.R. 71 =
STA. 10+00.00 ℄ CULVERT

82-D

1084+00

1083+00

1082+00

90°

9+00

11+00

EX. 30″ CORRUGATED METAL PIPE CULVERT WITH PROPOSED SS837 LINER PIPE, GROUTED IN PLACE

10′ SHOULDER | 46.7± | 10′ SHOULDER | 20′ | 20′ SHOULDER | 10′ | 36′ | 10′ SHOULDER

CROSS REFERENCES	
PLAN & PROFILE	192
DRAINAGE SUBSUMMARY	81-84
TYPICAL SECTIONS	8-22
DRAINAGE DETAILS	509
DRAINAGE CALCS.	144

HORIZONTAL SCALE IN FEET
0 10 20 40

CALCULATED PRS
CHECKED PDG

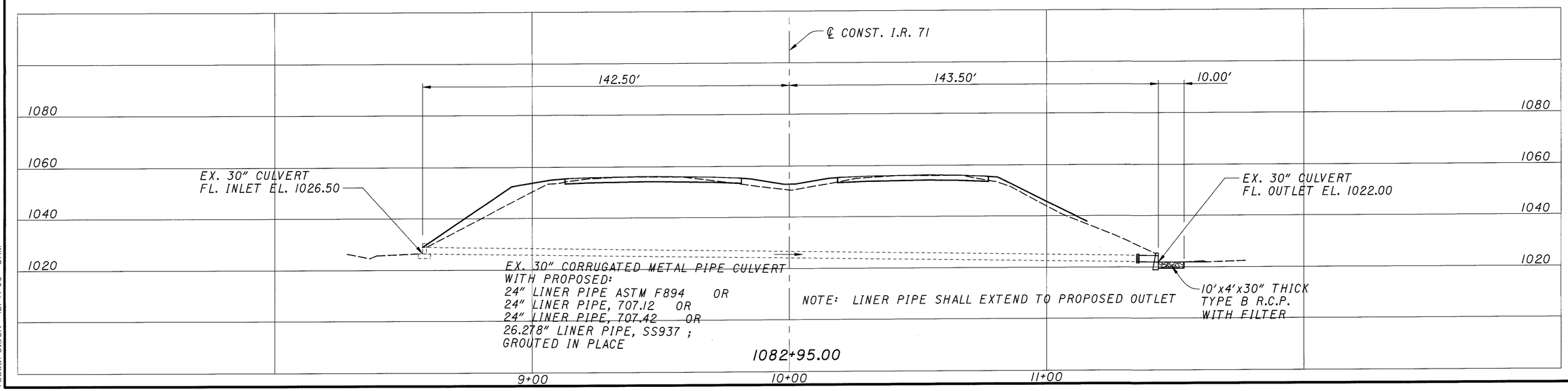

CULVERT DETAIL (LINER)
STA. 1082+95.00

MED - 71 - 15.78

523
940

7885DP8.DGN 12/7/99 SAM

DRAINAGE AREA = 19 ACRES	
Q_{50} =	64 cfs
Q_{100} =	72 cfs
HW_{50} =	5.6'
HW_{100} =	7.8'
V 50 =	20 ft/s (n=0.009)
V 100 =	24 ft/s (n=0.009)

CROSS REFERENCES	
PLAN & PROFILE	201
DRAINAGE SUBSUMMARY	85-88
TYPICAL SECTIONS	8-22
DRAINAGE CALCS.	145

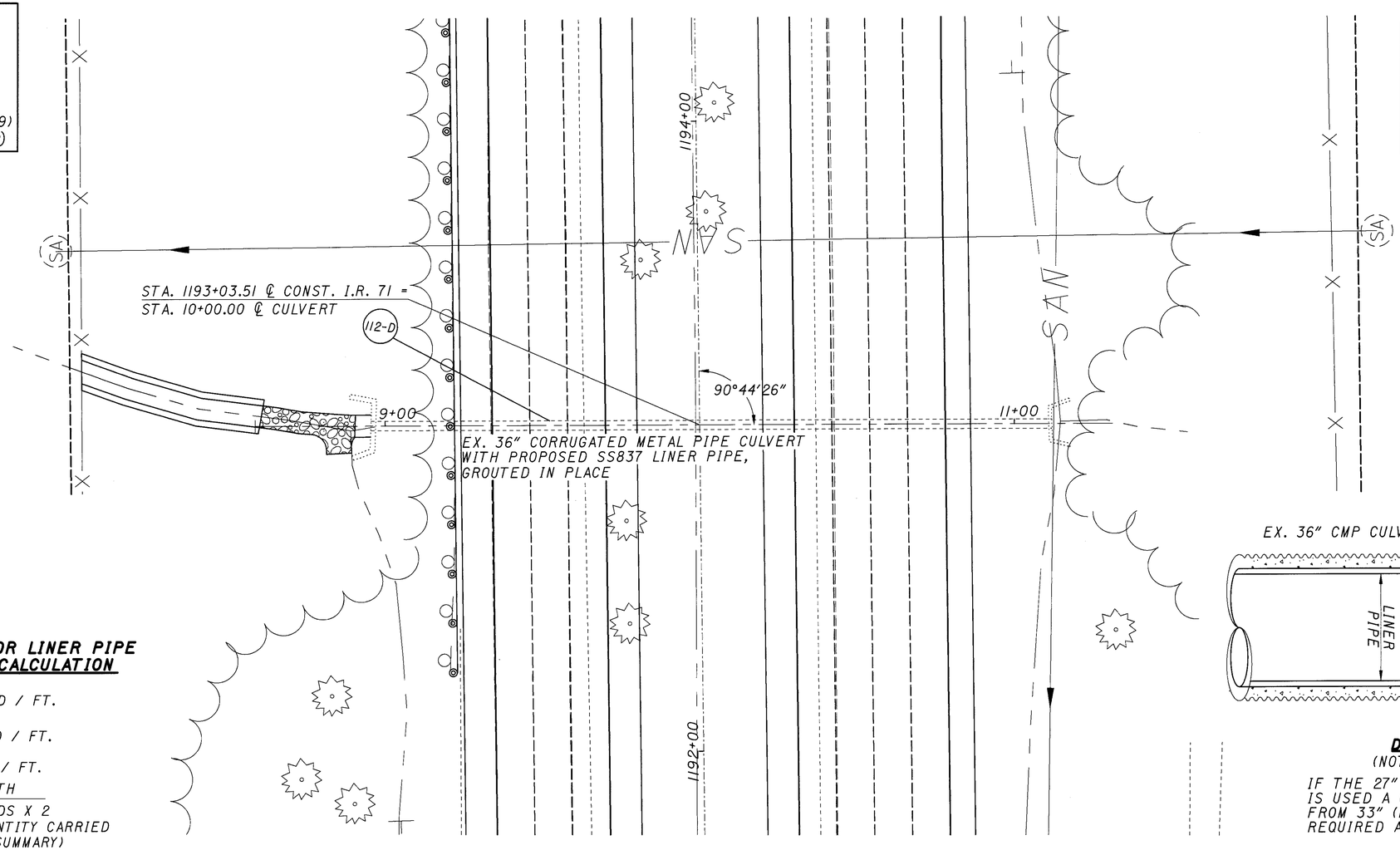

ITEM SS837 BACKFILL FOR LINER PIPE
ESTIMATED QUANTITY CALCULATION

$\frac{\pi(3)^2}{4(27)}$ = 0.26 CU. YARD / FT.

$\frac{\pi(2.25)^2}{4(27)}$ = - 0.15 CU. YARD / FT.

0.11 CU. YARD / FT.
X 206 FT. LENGTH
= 22.66 CU. YARDS X 2
USE 45 CU. YARDS (QUANTITY CARRIED TO DRAINAGE SUBSUMMARY)

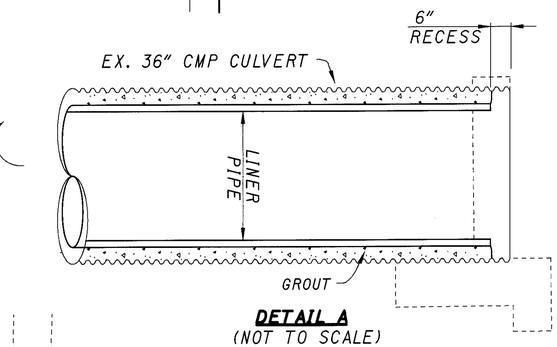

DETAIL A
(NOT TO SCALE)

IF THE 27" OR 30" LINER PIPE, IS USED A 6" RECESS FROM 33" (MIN.) TO 27" OR 30" IS REQUIRED AT THE INLET

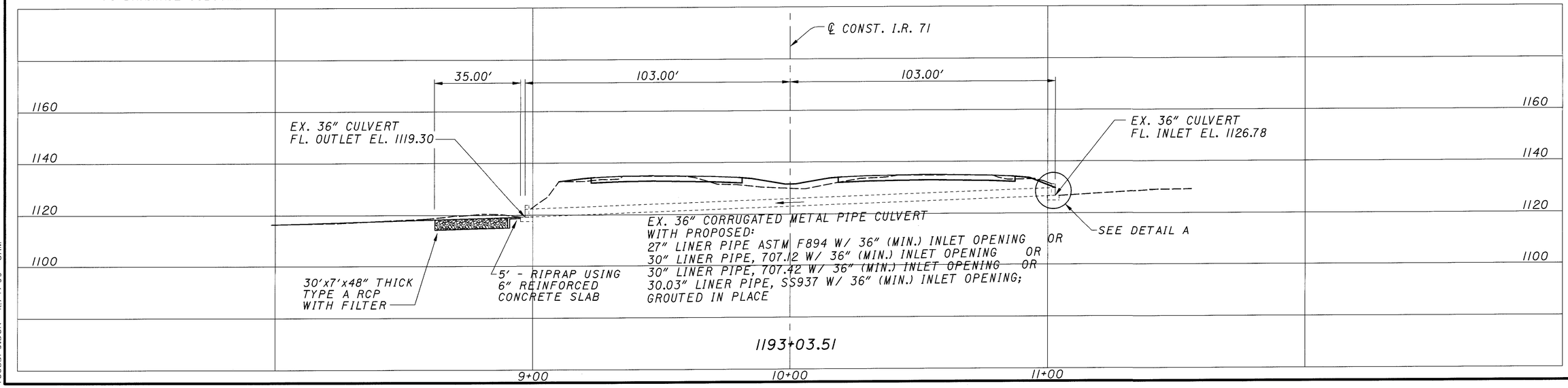

HORIZONTAL SCALE IN FEET
0 10 20 40

CALCULATED PRS
CHECKED PDG

CULVERT DETAIL (LINER)
STA. 1193+03.51

MED - 71 - 15.78

524
940

7885DP9.DGN 12/7/99 SAM

CROSS REFERENCES	
PLAN & PROFILE	202
DRAINAGE SUBSUMMARY	85-88
TYPICAL SECTIONS	8-22
DRAINAGE CALCS.	145

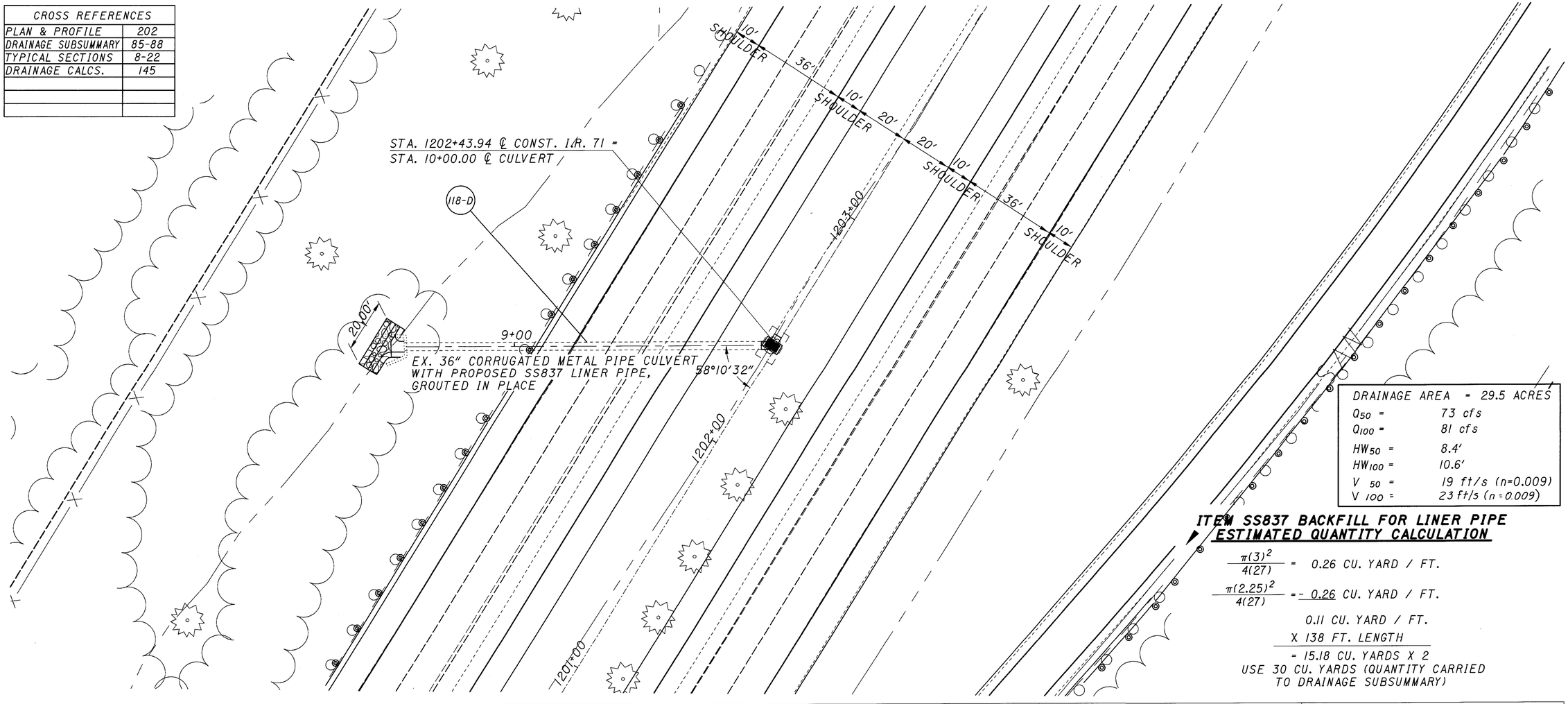

DRAINAGE AREA = 29.5 ACRES	
Q_{50} =	73 cfs
Q_{100} =	81 cfs
HW_{50} =	8.4'
HW_{100} =	10.6'
V 50 =	19 ft/s (n=0.009)
V 100 =	23 ft/s (n=0.009)

ITEM SS837 BACKFILL FOR LINER PIPE
ESTIMATED QUANTITY CALCULATION

$\frac{\pi(3)^2}{4(27)}$ = 0.26 CU. YARD / FT.

$\frac{\pi(2.25)^2}{4(27)}$ = - 0.26 CU. YARD / FT.

0.11 CU. YARD / FT.
X 138 FT. LENGTH
= 15.18 CU. YARDS X 2
USE 30 CU. YARDS (QUANTITY CARRIED TO DRAINAGE SUBSUMMARY)

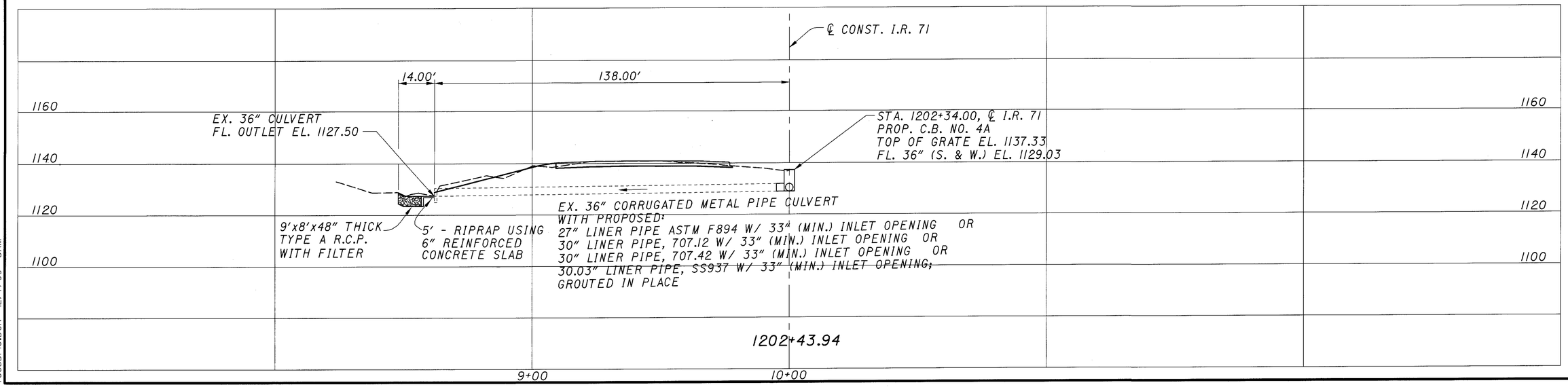

N

HORIZONTAL SCALE IN FEET
0 10 20 40

CALCULATED PRS
CHECKED PDG

CULVERT DETAIL (LINER)
STA. 1202+43.94

MED - 71 - 15.78

525
940

7885DPIO.DGN 12/7/99 SAM

CROSS REFERENCES	
PLAN & PROFILE	205
DRAINAGE SUBSUMMARY	89-92
TYPICAL SECTIONS	8-22
DRAINAGE CALCS.	146

SAM HOUSTON (SA)

10' SHOULDER 36' 10' 20' 20' 10' SHOULDER 36' 10' SHOULDER

1241+00

1240+00

75°19'14"

9+00 10+00 11+00

34-D

EX. 72" CORRUGATED METAL PIPE CULVERT
WITH PROPOSED SS837 LINER PIPE,
GROUTED IN PLACE

STA. 1240+41.42 ℄ CONST. I.R. 71 =
STA. 10+00.00 ℄ CULVERT

DRAINAGE AREA = 186 ACRES	
Q_{50} =	293 cfs
Q_{100} =	335 cfs
HW_{50} =	12.7'
HW_{100} =	14.9'
V 50 =	17 ft/s (n=0.009)
V 100 =	21 ft/s (n=0.009)

ITEM SS837 BACKFILL FOR LINER PIPE
ESTIMATED QUANTITY CALCULATION

$\frac{\pi(6)^2}{4(27)}$ = 1.05 CU. YARD / FT.

$\frac{\pi(5)^2}{4(27)}$ = - 0.73 CU. YARD / FT.

0.32 CU. YARD / FT.
X 230 FT. LENGTH
= 73.60 CU. YARDS X 2
USE 147 CU. YARDS (QUANTITY CARRIED TO DRAINAGE SUBSUMMARY)

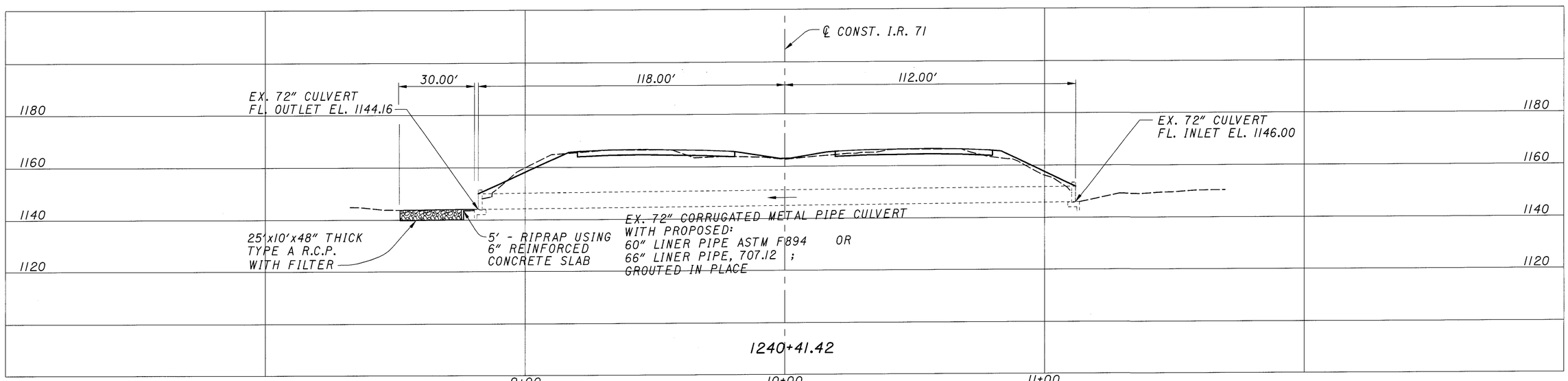

HORIZONTAL SCALE IN FEET
0 10 20 40

CALCULATED PRS
CHECKED PDG

CULVERT DETAIL (LINER)
STA. 1240+41.42

MED - 71 - 15.78

526
940

7885DPIL.DGN 12/1/99 SAM

DRAINAGE AREA = 16 ACRES			
Q_{50} =	56 cfs	V_{50} =	20 ft/s (n=0.009)
Q_{100} =	64 cfs	V_{100} =	25 ft/s (n = 0.009)
HW_{50} =	6.0'		
HW_{100} =	7.1'		

ITEM SS837 BACKFILL FOR LINER PIPE
ESTIMATED QUANTITY CALCULATION

$\frac{\pi(3)^2}{4(27)}$ = 0.26 CU. YARD / FT.

$\frac{\pi(2.25)^2}{4(27)}$ = - 0.15 CU. YARD / FT.

0.11 CU. YARD / FT.

X 388 FT. LENGTH

= 42.68 CU. YARDS X 2

USE 85 CU. YARDS (QUANTITY CARRIED TO DRAINAGE SUBSUMMARY)

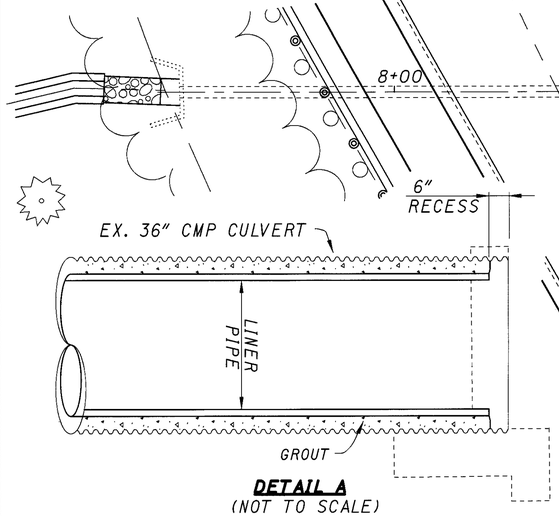

DETAIL A
(NOT TO SCALE)

IF THE 27" OR 30" LINER PIPE, IS USED A 6" RECESS FROM 33" (MIN.) TO 27" OR 30" IS REQUIRED AT THE INLET

CROSS REFERENCES	
PLAN & PROFILE	206
DRAINAGE SUBSUMMARY	89-92
TYPICAL SECTIONS	8-22
DRAINAGE CALCS.	146

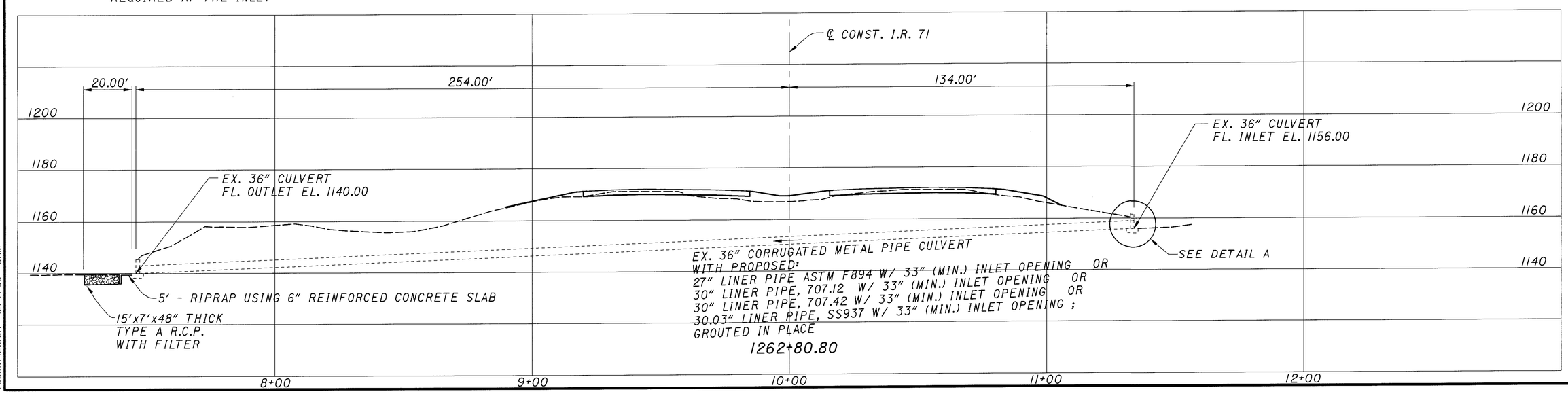

HORIZONTAL SCALE IN FEET
0 10 20 40

CALCULATED PRS
CHECKED PDG

CULVERT DETAIL (LINER)
STA. 1262+80.80

MED - 71 - 15.78

527
940

7885DP12.DGN 12/7/99 SAM

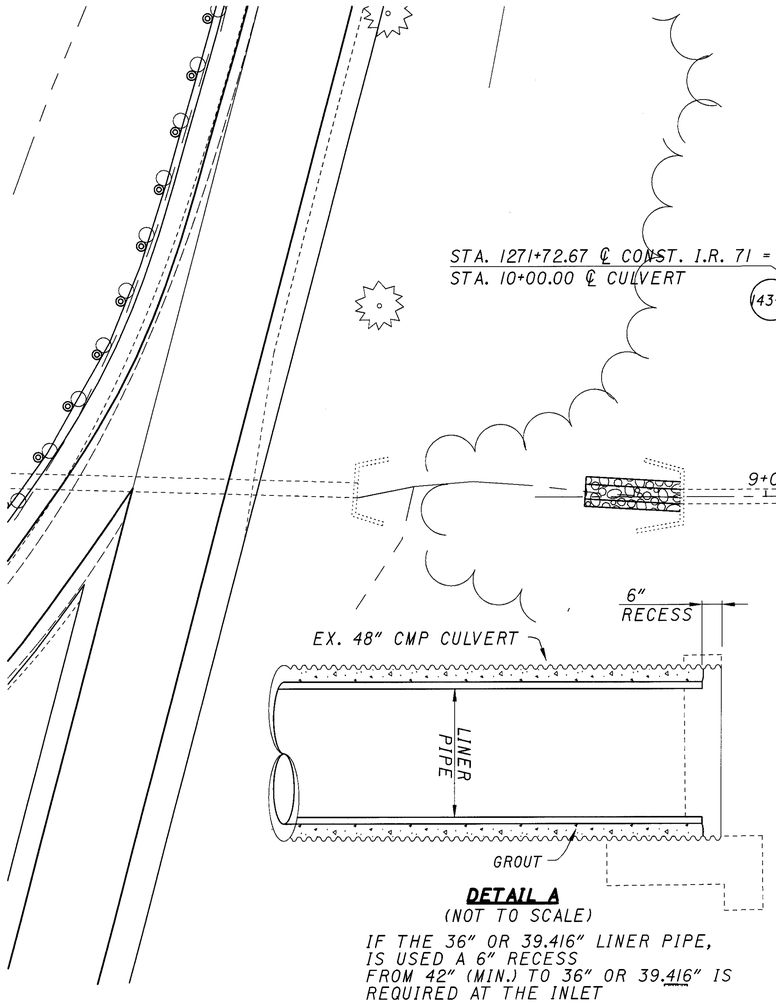

DETAIL A
(NOT TO SCALE)

IF THE 36" OR 39.416" LINER PIPE, IS USED A 6" RECESS FROM 42" (MIN.) TO 36" OR 39.416" IS REQUIRED AT THE INLET

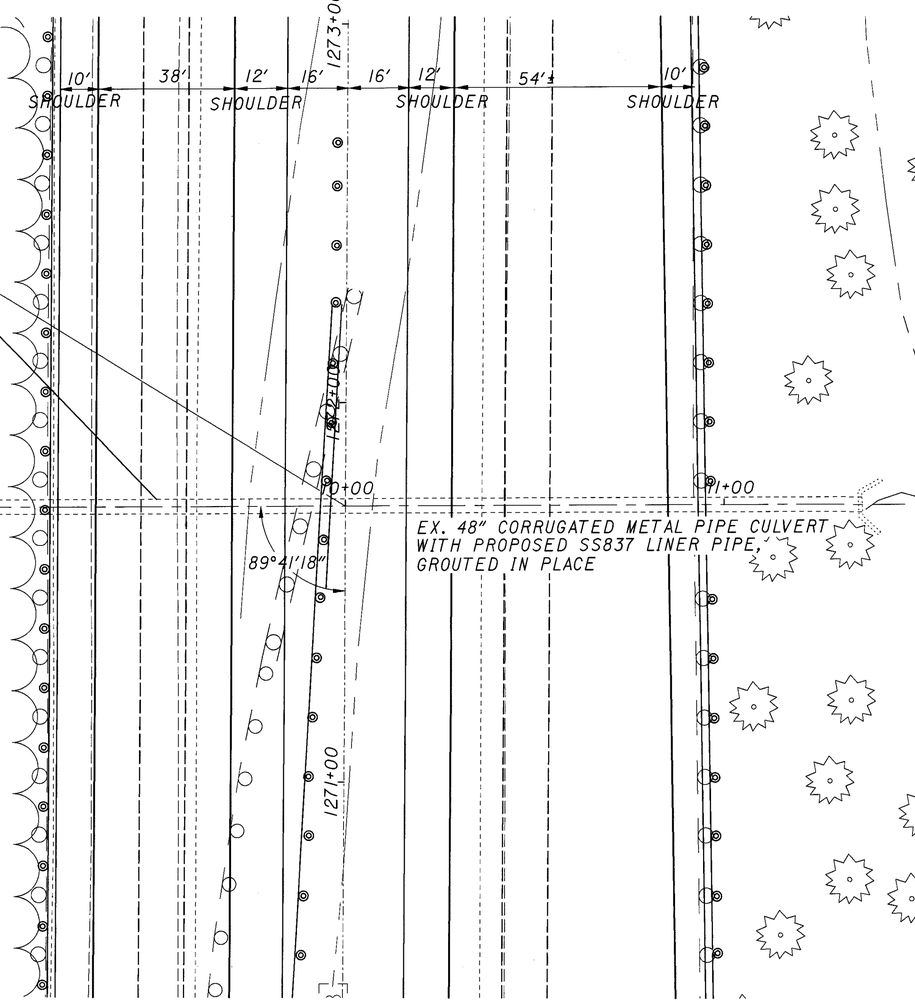

CROSS REFERENCES	
PLAN & PROFILE	207
DRAINAGE SUBSUMMARY	89-92
TYPICAL SECTIONS	8-22
DRAINAGE CALCS.	146

DRAINAGE AREA = 56 ACRES
Q_{50} = 111 cfs
Q_{100} = 127 cfs
HW_{50} = 8.2'
HW_{100} = 10'
V_{50} = 16 ft/s (n=0.009)
V_{100} = 19 ft/s (n=0.009)

ITEM SS837 BACKFILL FOR LINER PIPE
ESTIMATED QUANTITY CALCULATION

$\frac{\pi(4)^2}{4(27)}$ = 0.47 CU. YARD / FT.

$\frac{\pi(3)^2}{4(27)}$ = - 0.26 CU. YARD / FT.

0.21 CU. YARD / FT.
X 268 FT. LENGTH
= 56.28 CU. YARDS X 2
USE 113 CU. YARDS (QUANTITY CARRIED TO DRAINAGE SUBSUMMARY)

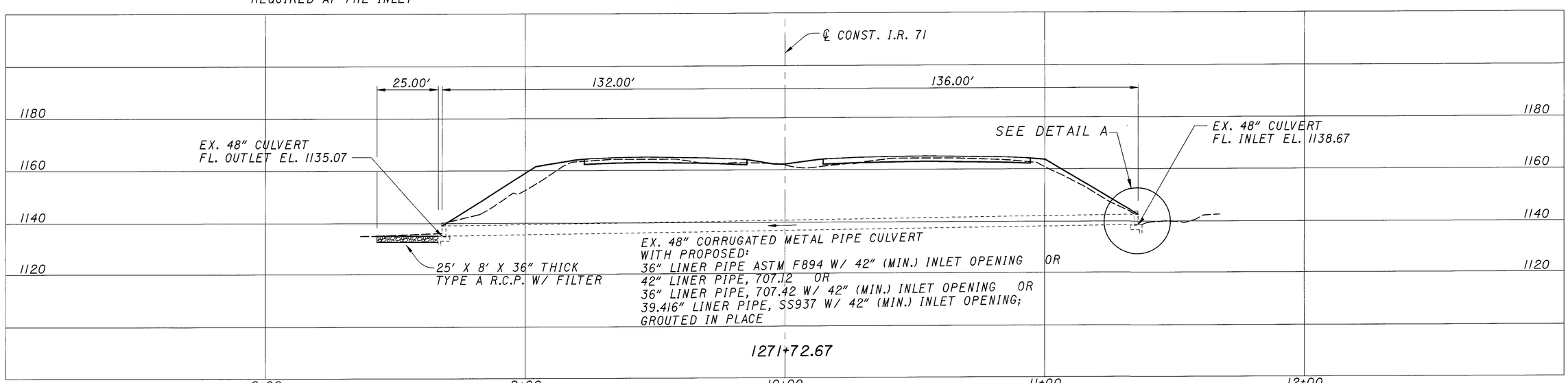

HORIZONTAL SCALE IN FEET
0 10 20 40

CALCULATED PRS
CHECKED PDG

CULVERT DETAIL (LINER)
STA. 1271+72.67

MED - 71 - 15.78

528
940

7885DP13.DGN 12/7/99 SAM

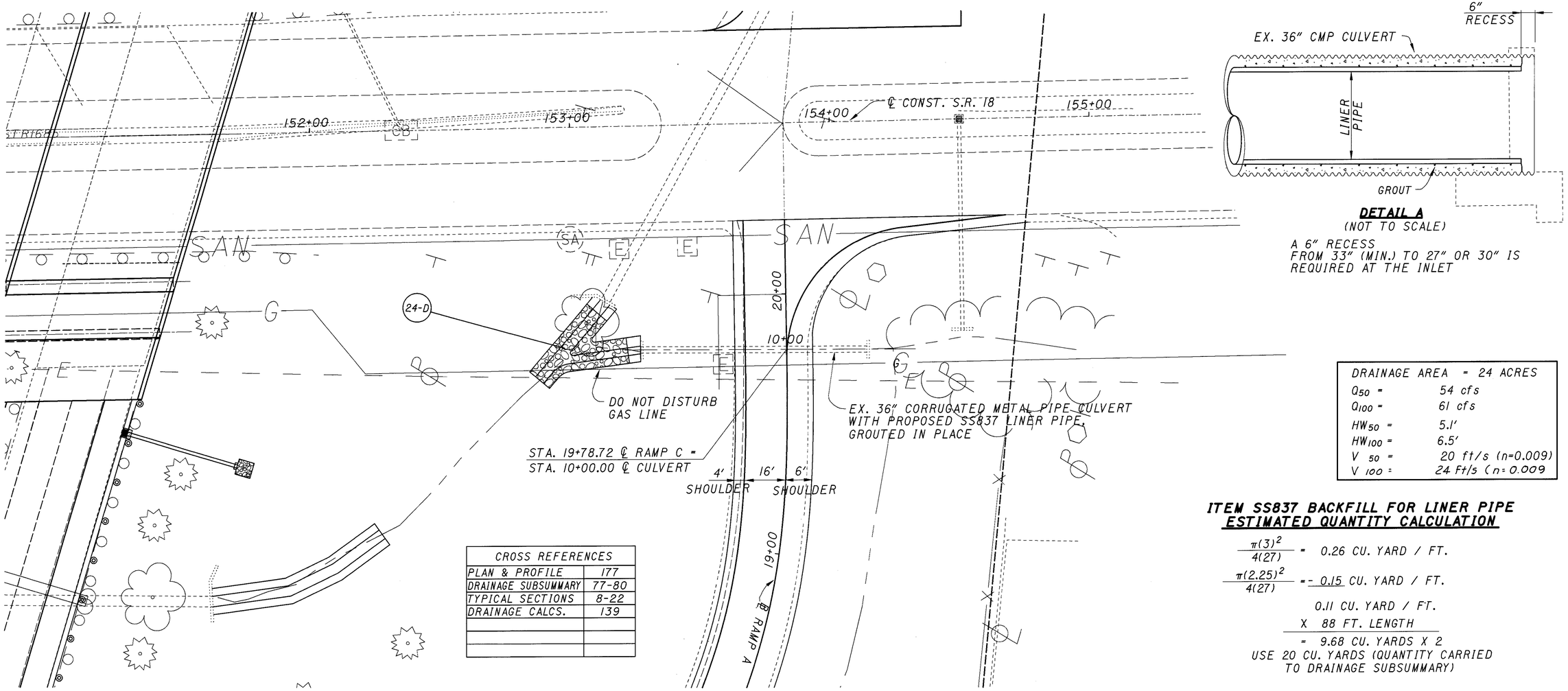

DETAIL A
(NOT TO SCALE)

A 6" RECESS FROM 33" (MIN.) TO 27" OR 30" IS REQUIRED AT THE INLET

DRAINAGE AREA = 24 ACRES	
Q_{50} =	54 cfs
Q_{100} =	61 cfs
HW_{50} =	5.1'
HW_{100} =	6.5'
V_{50} =	20 ft/s (n=0.009)
V_{100} =	24 ft/s (n=0.009

CROSS REFERENCES	
PLAN & PROFILE	177
DRAINAGE SUBSUMMARY	77-80
TYPICAL SECTIONS	8-22
DRAINAGE CALCS.	139

ITEM SS837 BACKFILL FOR LINER PIPE
ESTIMATED QUANTITY CALCULATION

$\frac{\pi(3)^2}{4(27)}$ = 0.26 CU. YARD / FT.

$\frac{\pi(2.25)^2}{4(27)}$ = - 0.15 CU. YARD / FT.

0.11 CU. YARD / FT.
X 88 FT. LENGTH
= 9.68 CU. YARDS X 2
USE 20 CU. YARDS (QUANTITY CARRIED TO DRAINAGE SUBSUMMARY)

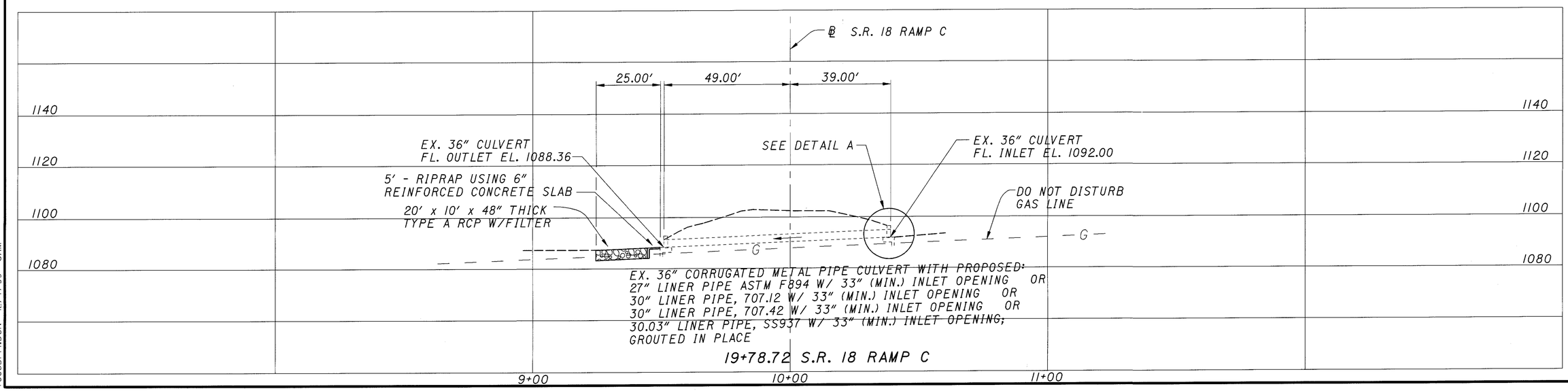

HORIZONTAL SCALE IN FEET
0 10 20 40

CALCULATED PRS
CHECKED PDG

CULVERT DETAIL (LINER)
STA. 19+78.72 S.R. 18 RAMP C

MED - 71 - 15.78

529
940

7885DP14.DGN 12/7/99 SAM

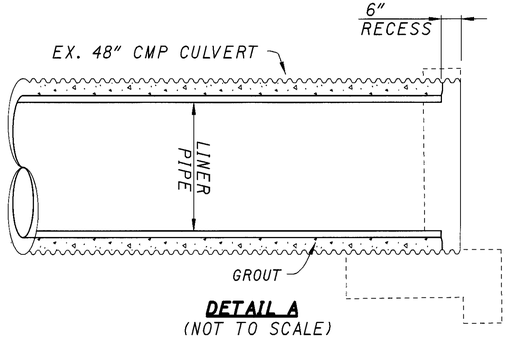

DETAIL A
(NOT TO SCALE)

IF THE 36" OR 39.416" LINER PIPE, IS USED A 6" RECESS FROM 42" (MIN.) TO 36" OR 39.416" IS REQUIRED AT THE INLET

DRAINAGE AREA	= 53 ACRES
Q_{50} =	104 cfs
Q_{100} =	117 cfs
HW_{50} =	6.2'
HW_{100} =	6.9'
V 50 =	17 ft/s (n=0.009)
V 100 =	21 ft/s (n=0.009)

ITEM SS837 BACKFILL FOR LINER PIPE
ESTIMATED QUANTITY CALCULATION

$\frac{\pi(4)^2}{4(27)}$ = 0.47 CU. YARD / FT.

$\frac{\pi(3)^2}{4(27)}$ = - 0.26 CU. YARD / FT.

0.21 CU. YARD / FT.
X 86 FT. LENGTH
= 18.06 CU. YARDS X 2
USE 36 CU. YARDS (QUANTITY CARRIED TO DRAINAGE SUBSUMMARY)

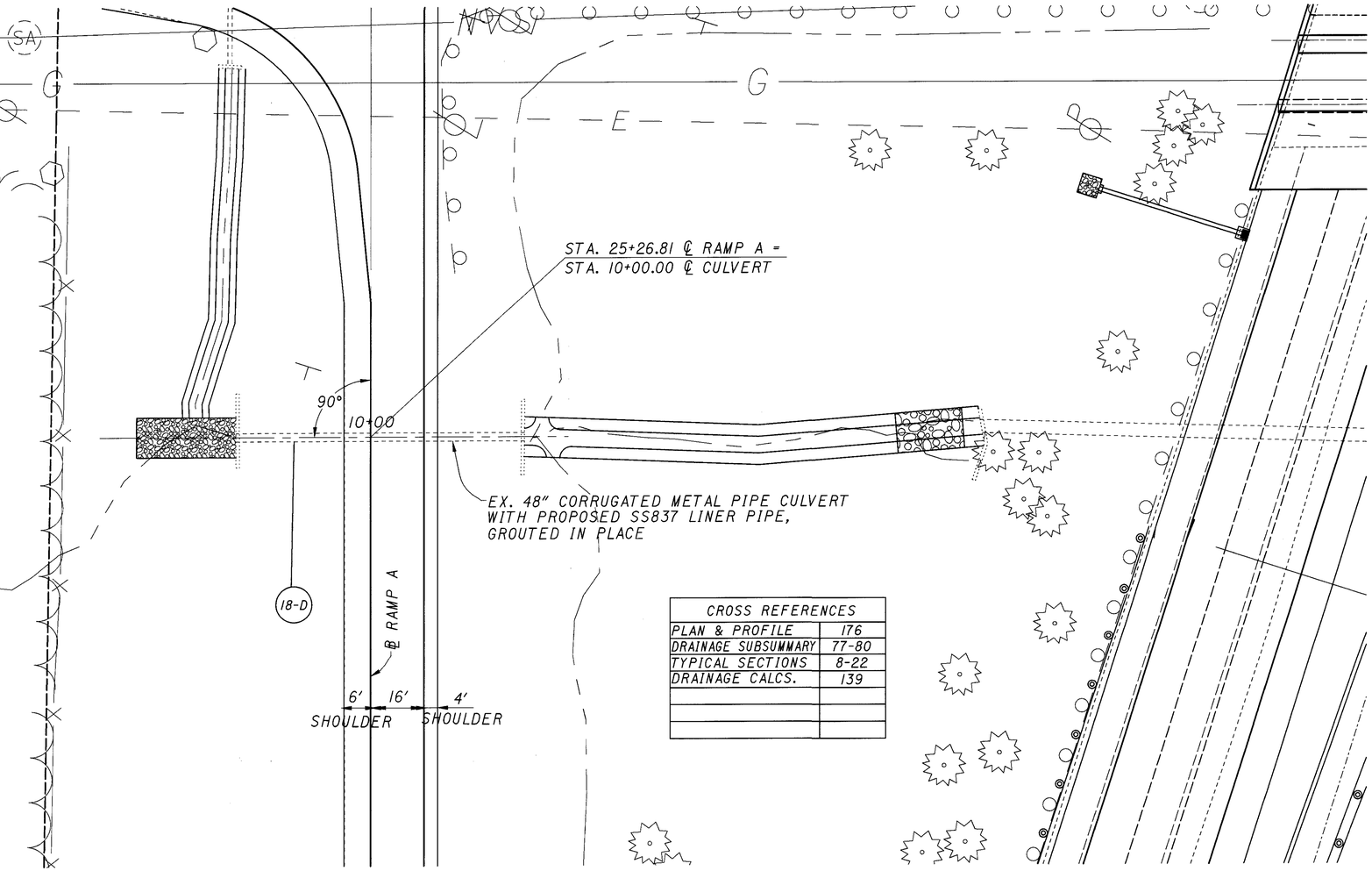

CROSS REFERENCES	
PLAN & PROFILE	176
DRAINAGE SUBSUMMARY	77-80
TYPICAL SECTIONS	8-22
DRAINAGE CALCS.	139

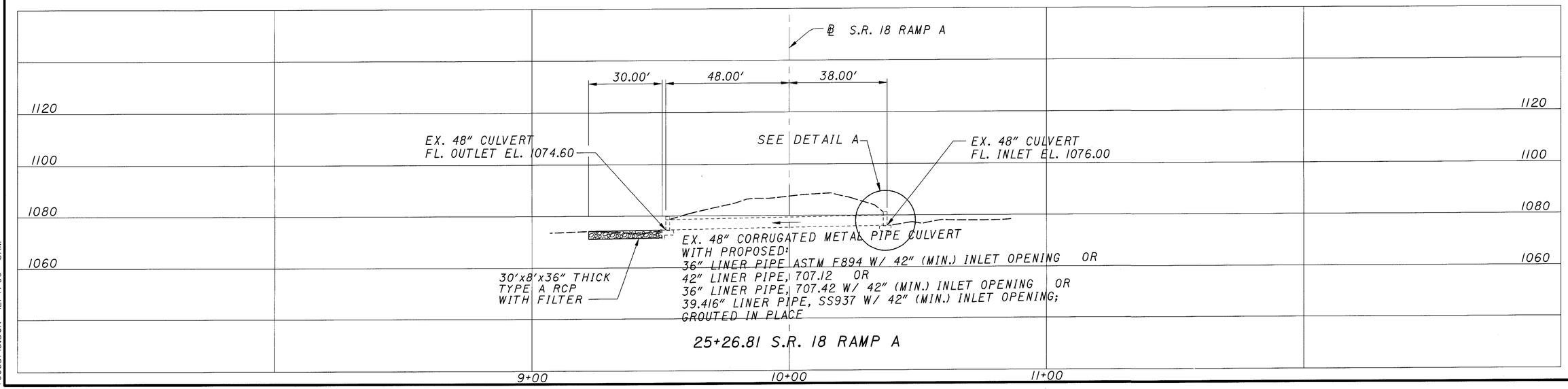

HORIZONTAL SCALE IN FEET
0 10 20 40

CALCULATED PRS
CHECKED PDG

CULVERT DETAIL (LINER)
STA. 25+26.81 S.R. 18 RAMP A

MED - 71 - 15.78

530
940

7885DP15.DGN 12/7/99 SAM

STRUCUTRE DRAINAGE PROFILES
STA. 889+00 TO STA. 989+00

CALCULATED W.JC | CHECKED PS

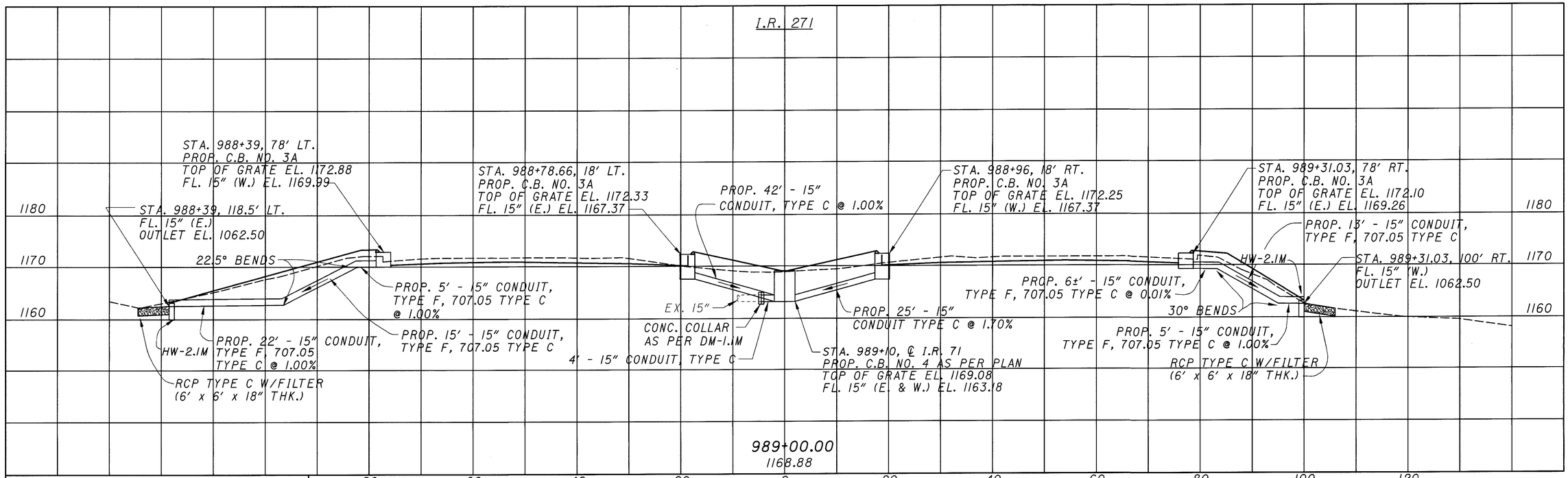

CROSS REFERENCES	
184-185	PLAN AND PROFILE
505	DRAINAGE DETAILS
142	DRAINAGE CALCS.
263	CROSS SECTIONS

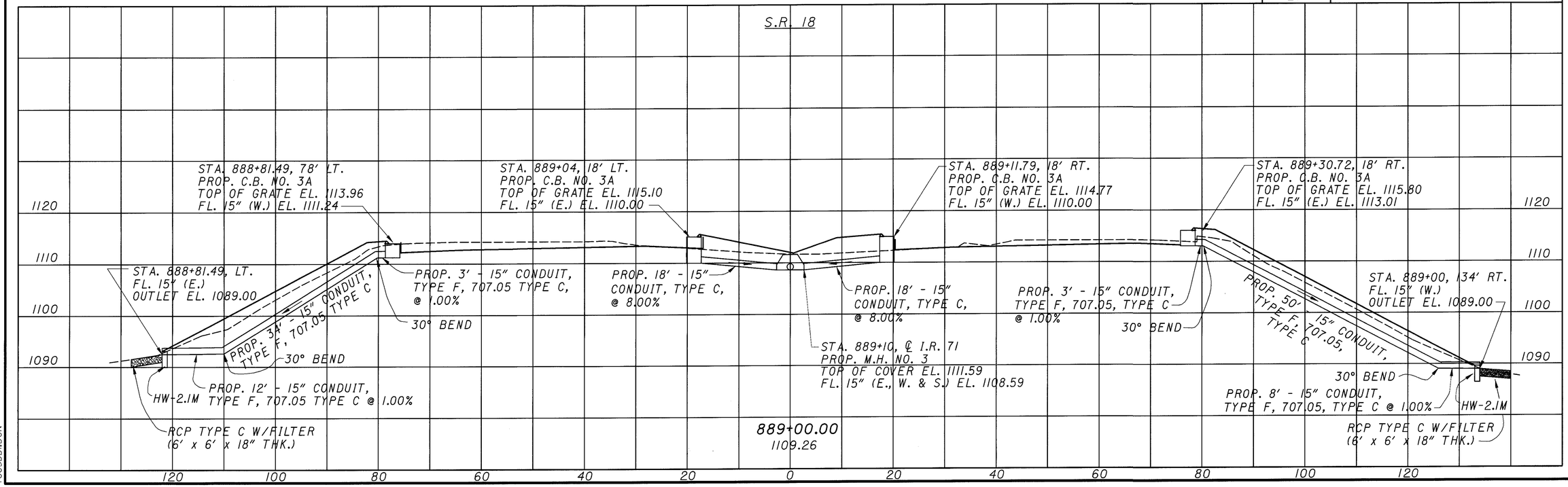

CROSS REFERENCES	
177	PLAN AND PROFILE
505	DRAINAGE DETAILS
138-139	DRAINAGE CALCS.
234	CROSS SECTIONS

MED-71-15.78

531
940

7885DDI.DGN

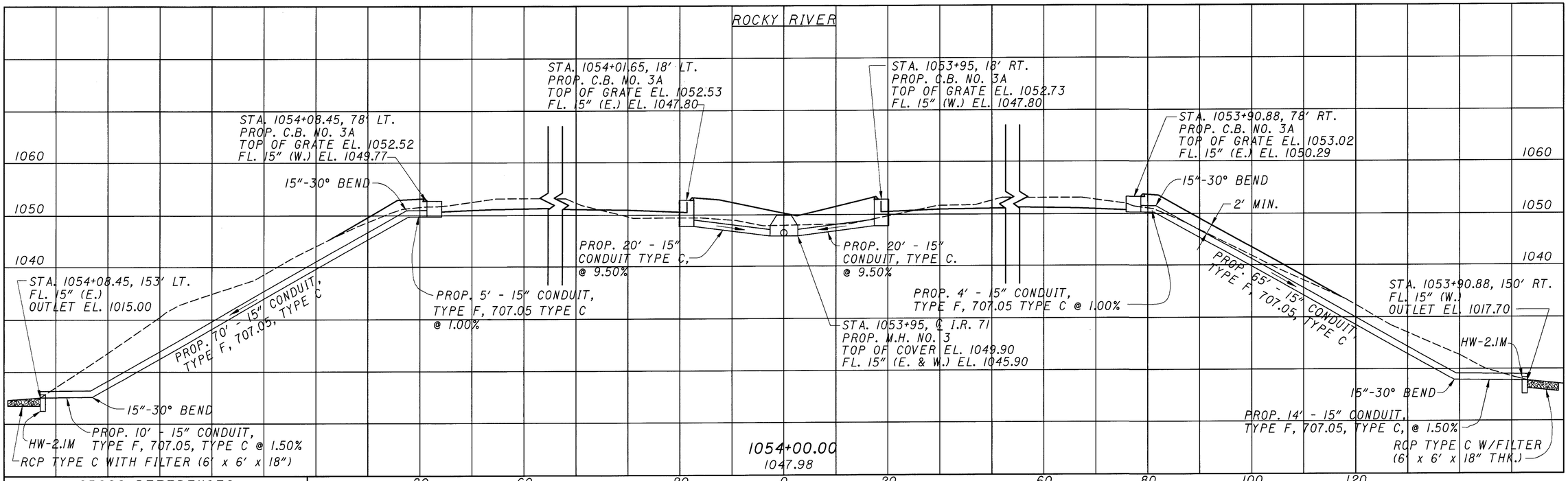

CROSS REFERENCES	
190	PLAN AND PROFILE
505	DRAINAGE DETAILS
143	DRAINAGE CALCS.
281	CROSS SECTIONS

CROSS REFERENCES	
186-187	PLAN AND PROFILE
505	DRAINAGE DETAILS
142	DRAINAGE CALCS.
270	CROSS SECTIONS

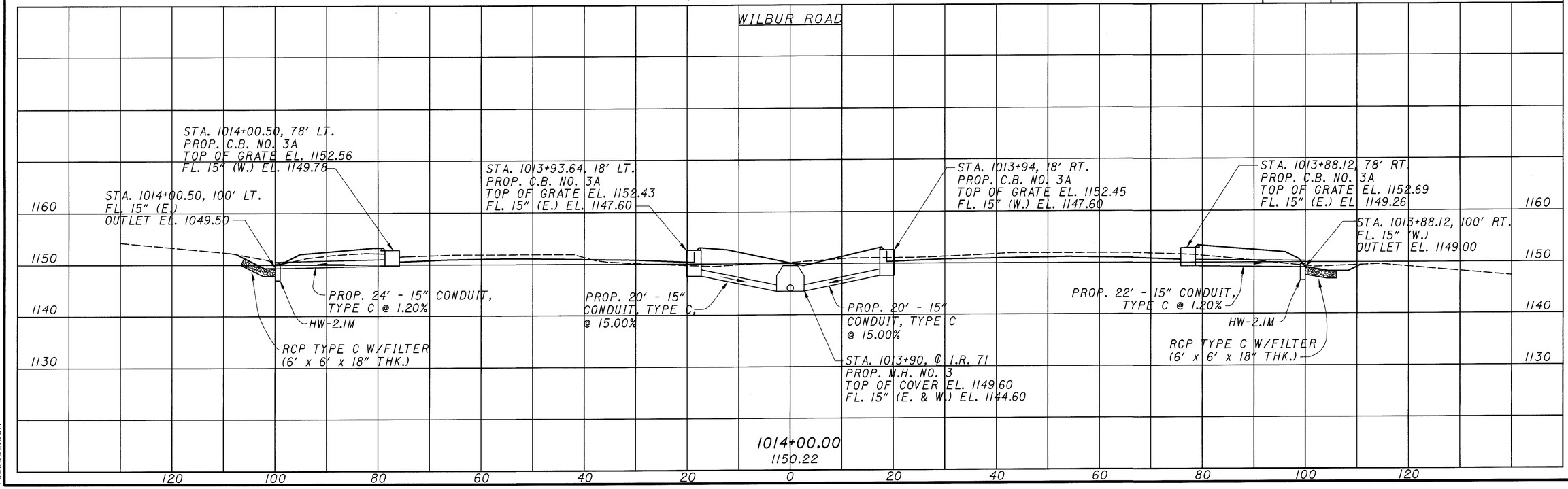

STRUCUTRE DRAINAGE PROFILES
STA. 1014+00 TO STA. 1054+00

CALCULATED WJC
CHECKED PS

MED - 71 - 15.78

532
940

7885DD2.DGN

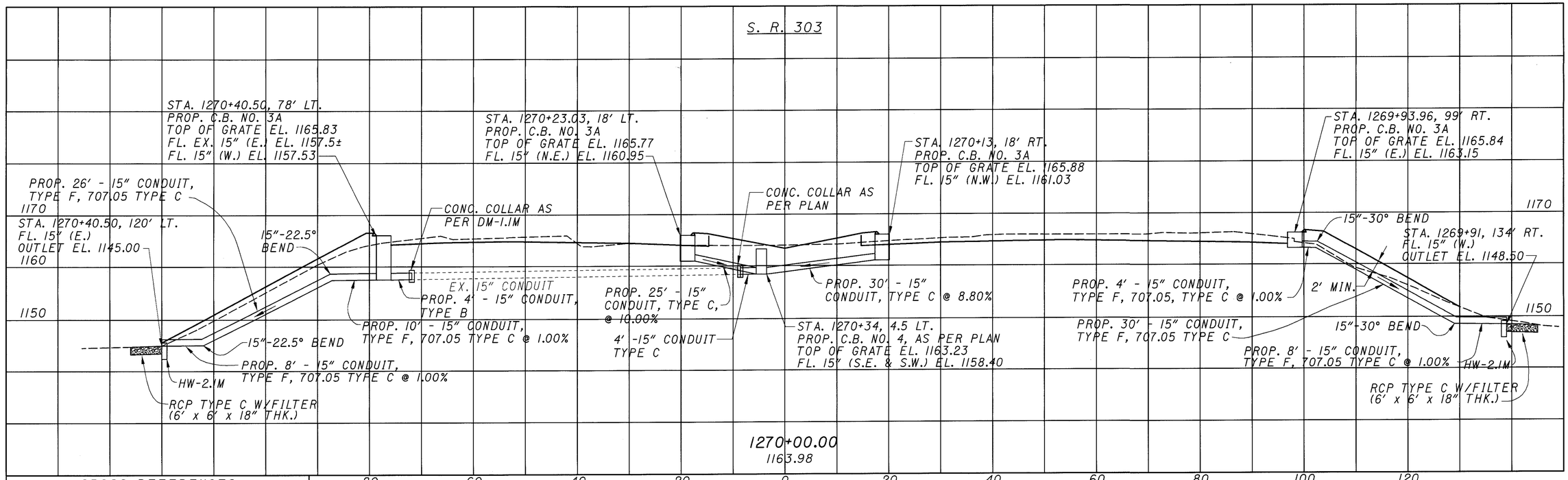

CROSS REFERENCES	
207	PLAN AND PROFILE
505	DRAINAGE DETAILS
146	DRAINAGE CALCS.
340	CROSS SECTIONS

CROSS REFERENCES	
194	PLAN AND PROFILE
505	DRAINAGE DETAILS
144	DRAINAGE CALCS.
294	CROSS SECTIONS

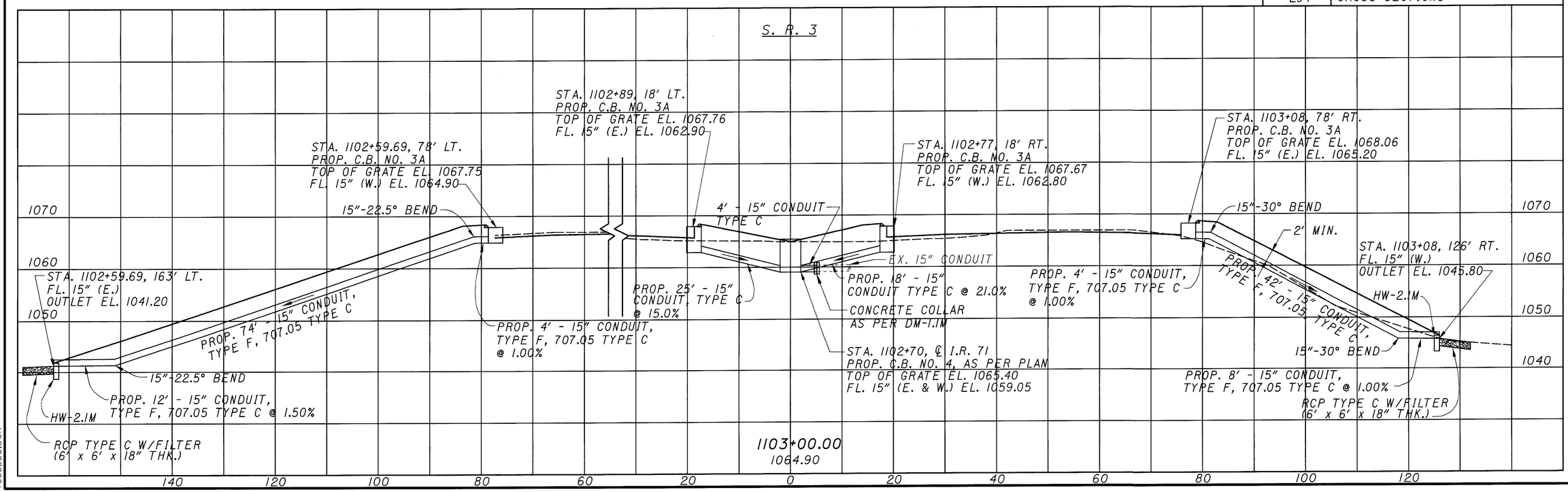

CALCULATED WJC
CHECKED PS

STRUCUTRE DRAINAGE PROFILES
STA. 1103+00 TO STA. 1270+00

MED- 71-15.78

533
940

7885D03.DGN

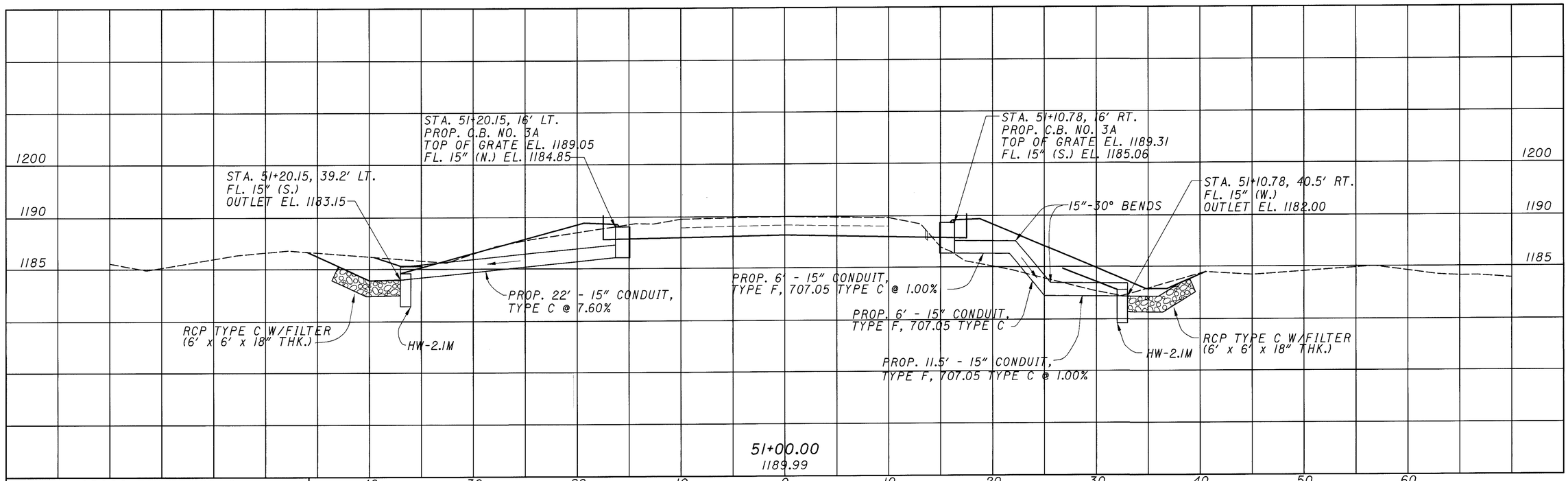

CROSS REFERENCES	
173	PLAN AND PROFILE
505	DRAINAGE DETAILS
146	DRAINAGE CALCS.
415	CROSS SECTIONS

CROSS REFERENCES	
183	PLAN AND PROFILE
505	DRAINAGE DETAILS
146	DRAINAGE CALCS.
413	CROSS SECTIONS

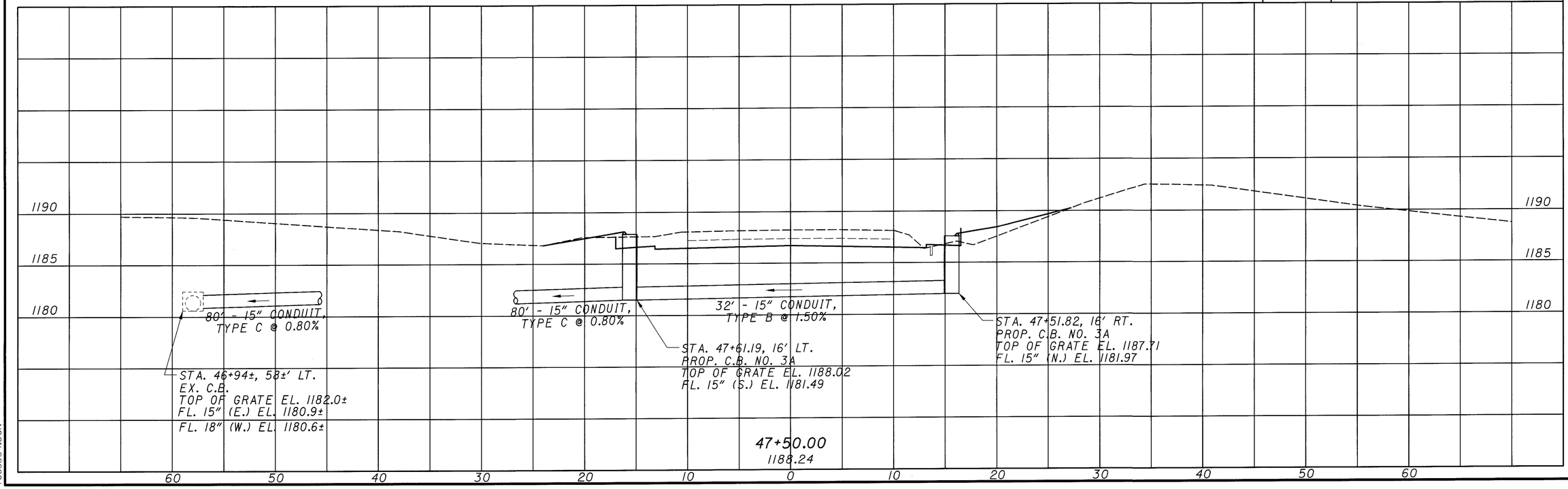

CALCULATED WJC
CHECKED PS

STRUCUTRE DRAINAGE PROFILES
GRANGER ROAD

MED-71-15.78

534
940

7885DD4.DGN

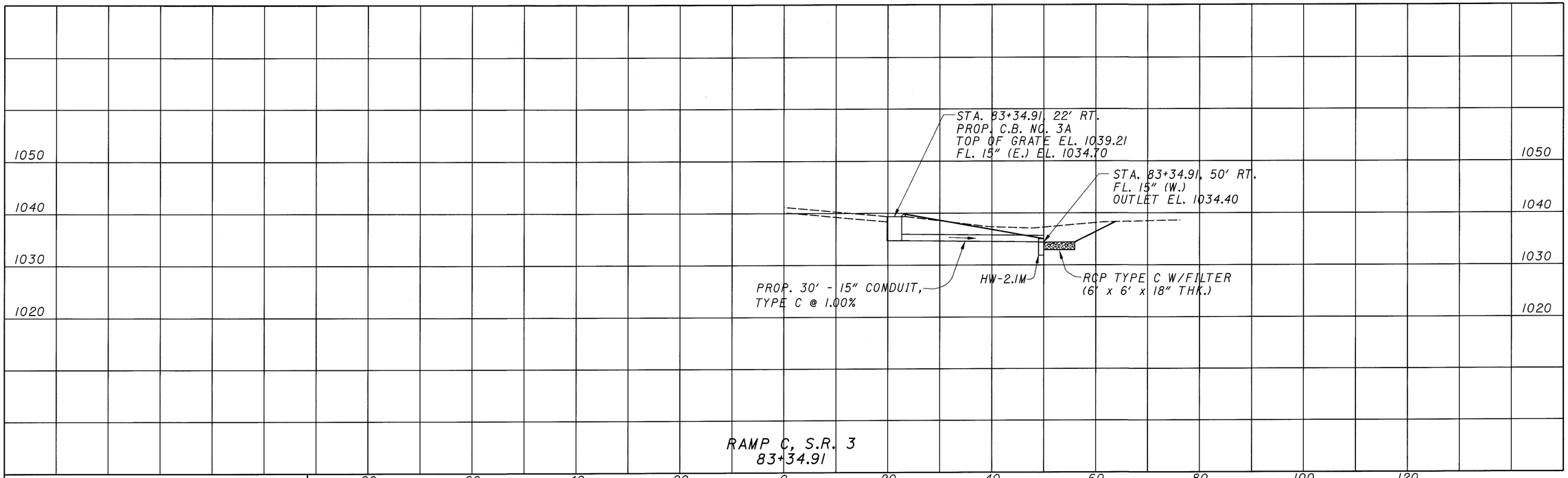

RAMP C, S.R. 3
83+34.91

CROSS REFERENCES	
459-460	PLAN AND PROFILE
505	DRAINAGE DETAILS
146A	DRAINAGE CALCS.

CROSS REFERENCES	
457	PLAN AND PROFILE
505	DRAINAGE DETAILS
146A	DRAINAGE CALCS.

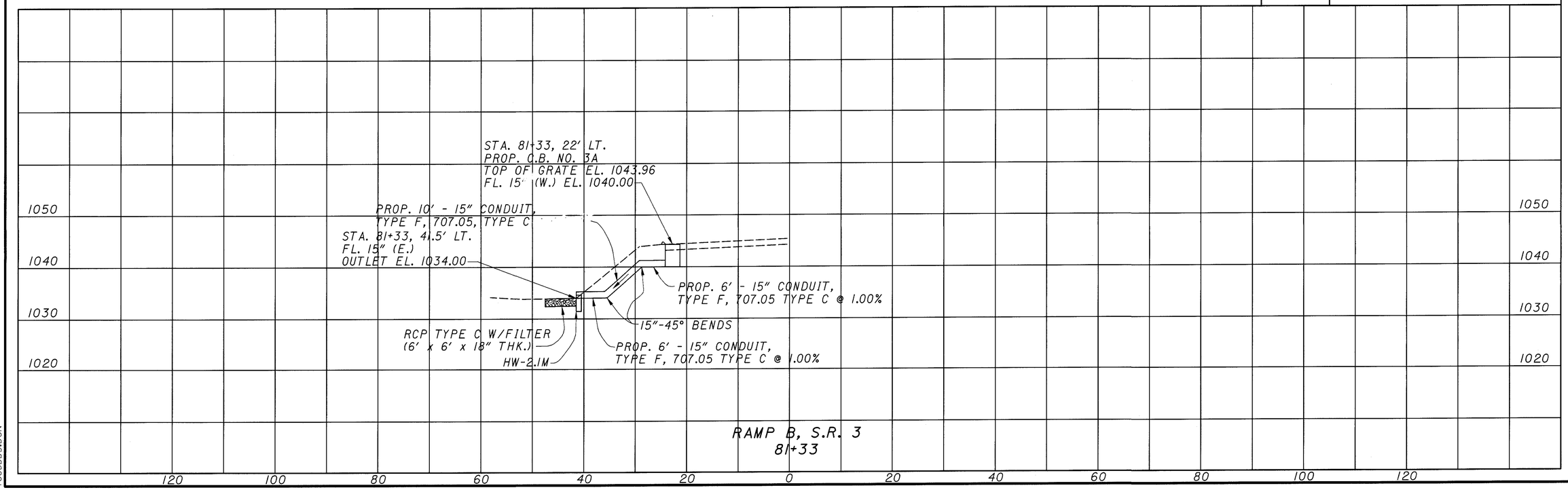

RAMP B, S.R. 3
81+33

7885DD5.DGN

CALCULATED WJC
CHECKED PS

STRUCUTRE DRAINAGE PROFILES
RAMP B AND RAMP C

MED-71-15.78

535
940

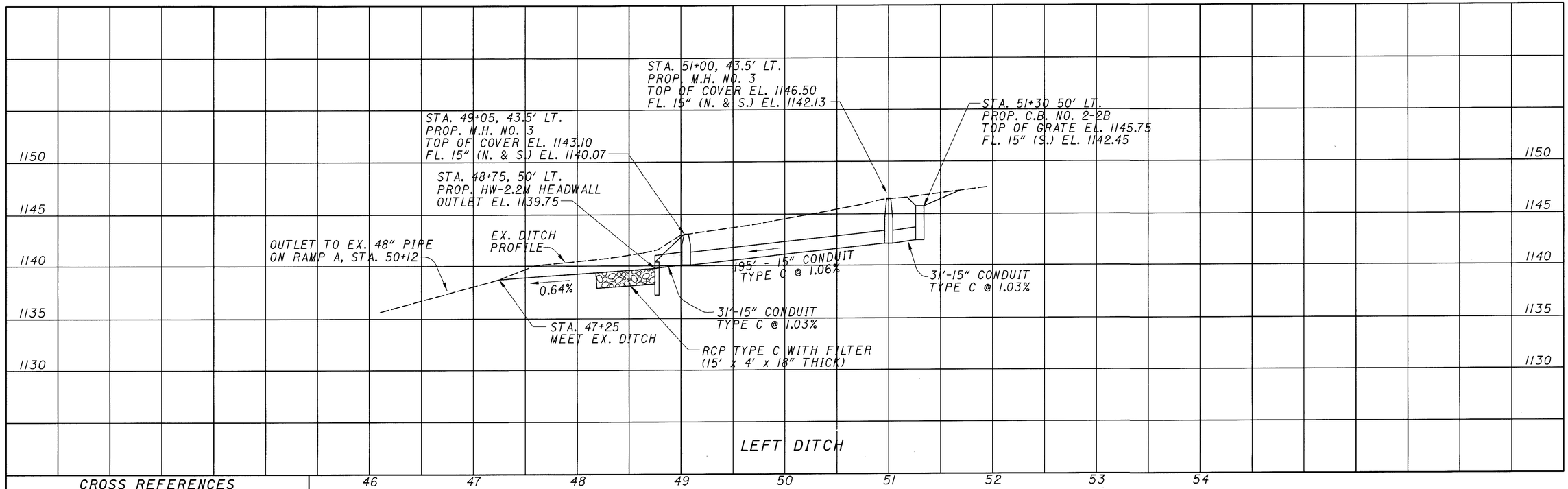

CROSS REFERENCES	
207	PLAN AND PROFILE
146A	DRAINAGE CALCS.

CROSS REFERENCES	
207	PLAN AND PROFILE
146A	DRAINAGE CALCS.

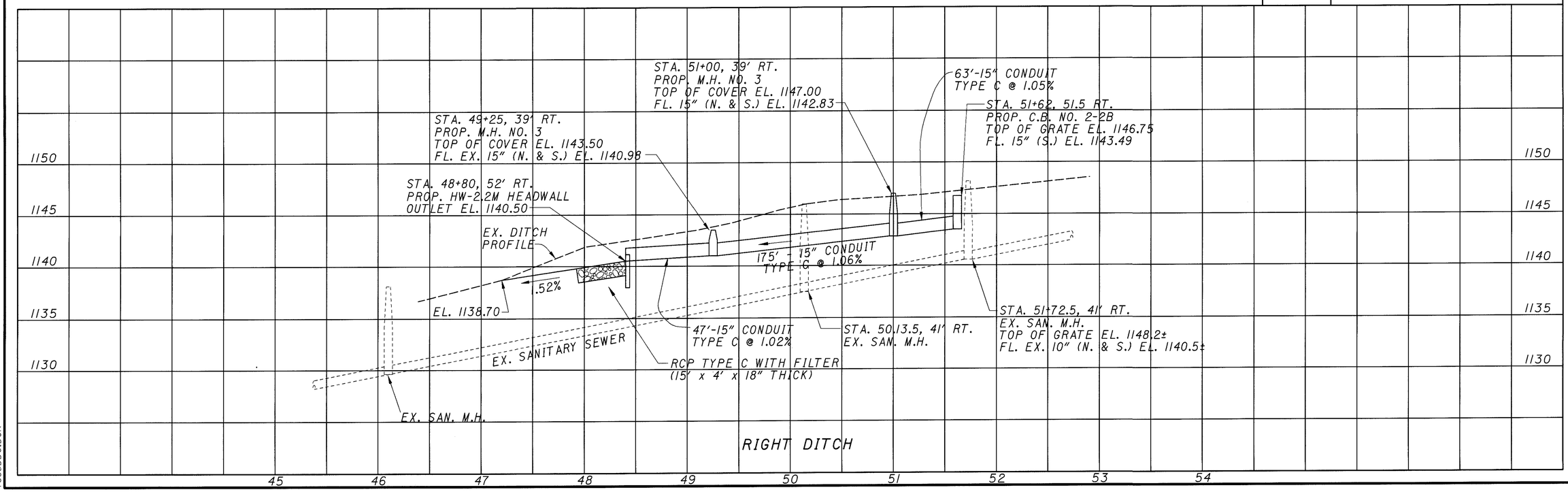

CALCULATED WJC
CHECKED PS

DRAINAGE PROFILES
S.R. 303

MED-71-15.78

536
940

7885D06.DGN

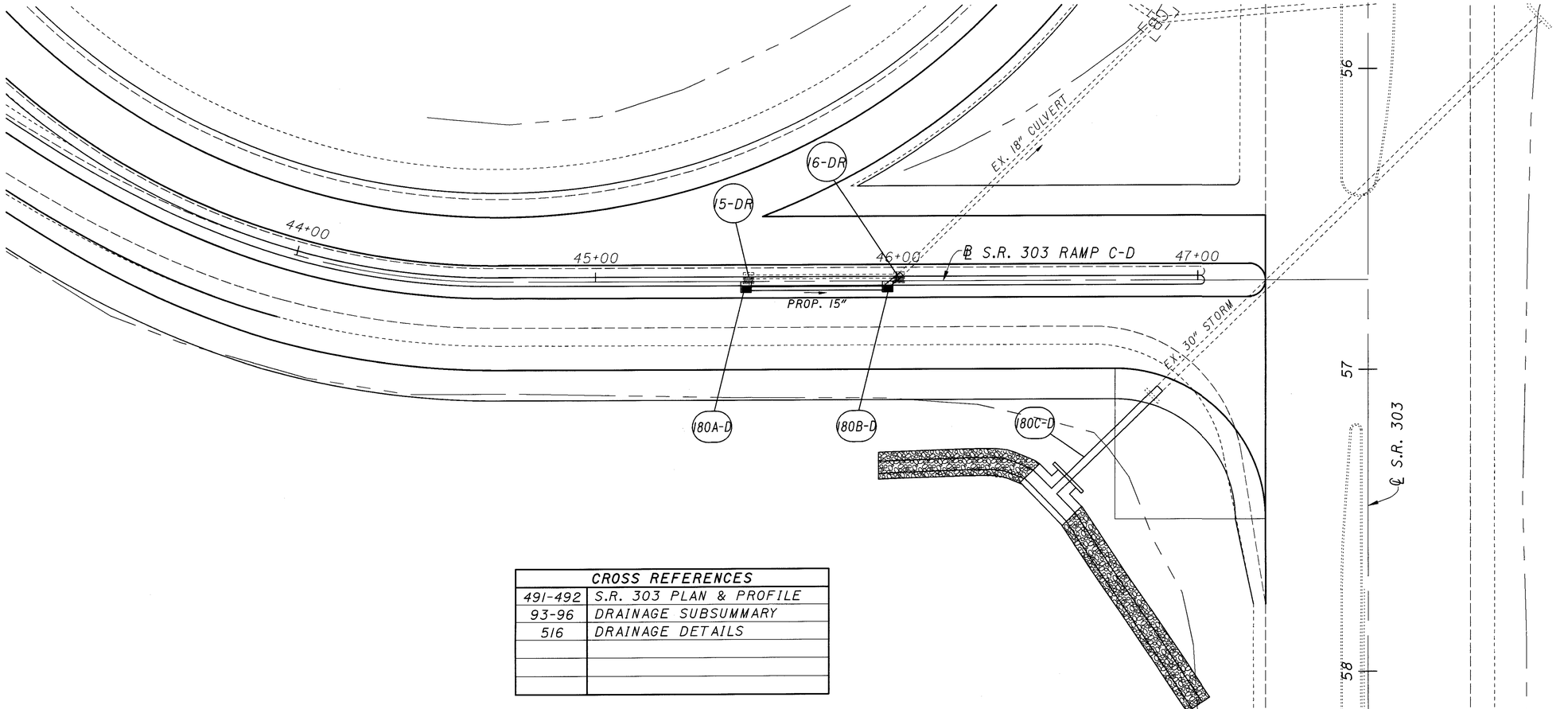

CROSS REFERENCES	
491-492	S.R. 303 PLAN & PROFILE
93-96	DRAINAGE SUBSUMMARY
516	DRAINAGE DETAILS

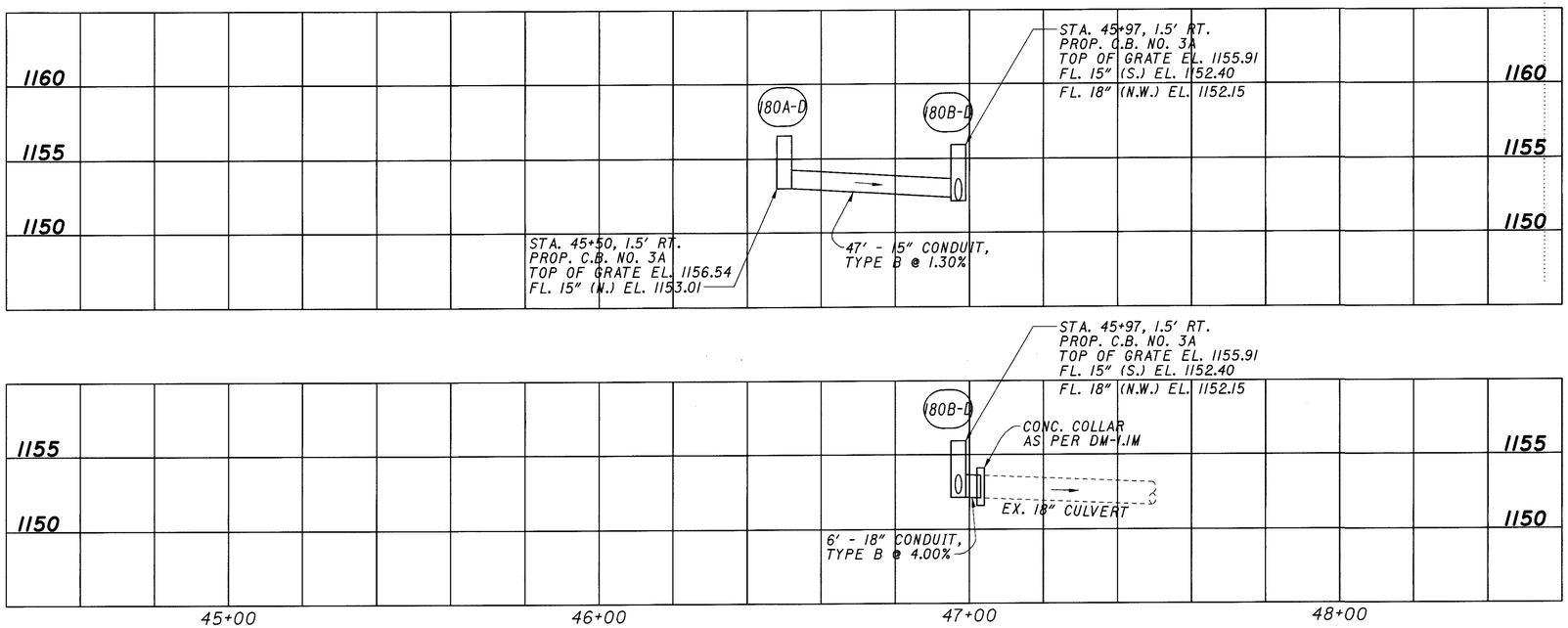

N

HORIZONTAL SCALE IN FEET
0 10 20 40

CALCULATED | CHECKED

S.R. 303 RAMP C-D
DRAINAGE PROFILES

MED - 71 - 15.78

536A
940

REL_303DRAIN.DGN

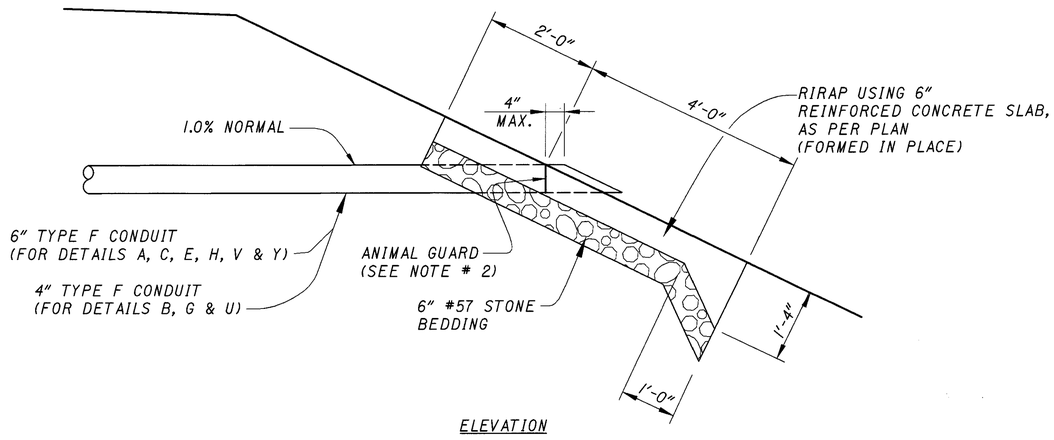

ELEVATION

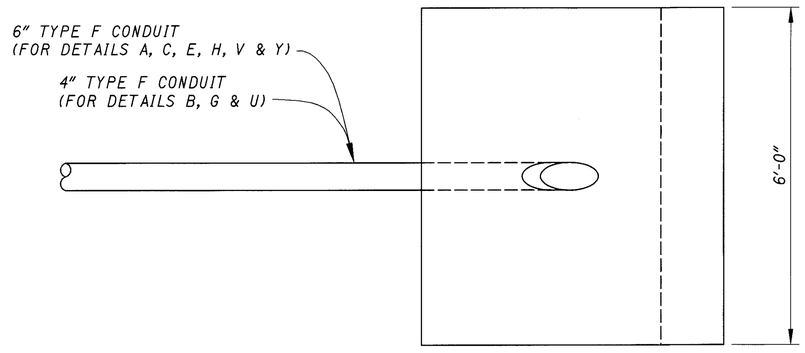

PLAN

NOTES:

1. SOME LOCATIONS FOR RIPRAP PLACEMENT WILL HAVE AN EXISTING HEADWALL NEARBY, DO NOT DISTURB THESE HEADWALLS. THE OUTLET SHALL BE PLACED SO THERE IS POSITIVE DRAINAGE FLOW AND SHALL NOT OUTLET BEHIND THE HEADWALL OR BE PLACED IN A MANNER THAT WILL ERODE THE GROUND AROUND THE HEADWALLS AS DIRECTED BY THE ENGINEER.
2. ANIMAL GUARD IS TO BE PLACED VERTICALLY AS PER STANDARD DRAWING DW-1.1M. LOCATE AS FAR AS POSSIBLE IN FROM THE END OF PIPE TOWARDS THE RIPRAP.
3. RIPRAP PADS SHALL CONFORM TO THE PROPOSED OR EXISTING SLOPE AT OUTLET LOCATION.

OUTLET DETAIL TO RIPRAP

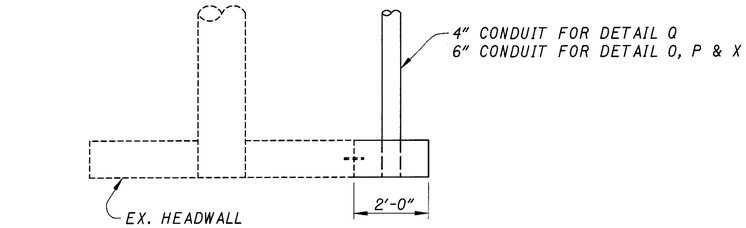

PLAN

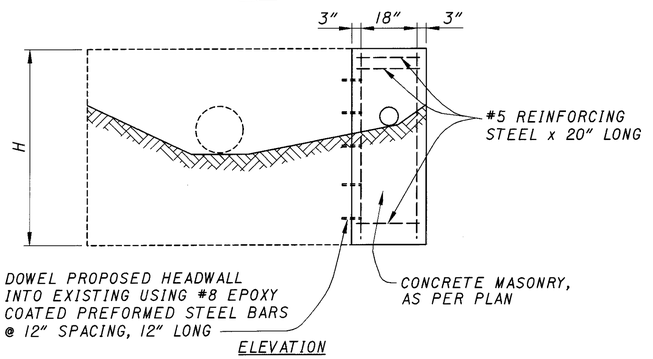

ELEVATION

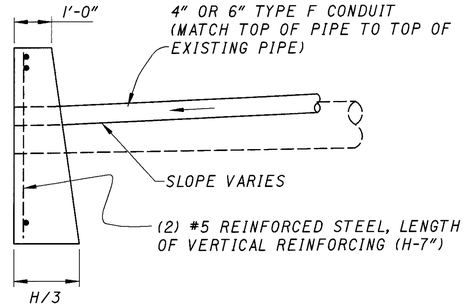

END VIEW

WHEN TYING INTO HEADWALL OF EXISTING 15" CONDUIT, H = 5'-2"
FOR 18" CONDUIT, H = 5'-5"

SEE HW-1 HEADWALL DETAIL FOR MORE INFORMATION, SEE SHEET 507

OUTLET DETAIL TO HEADWALL

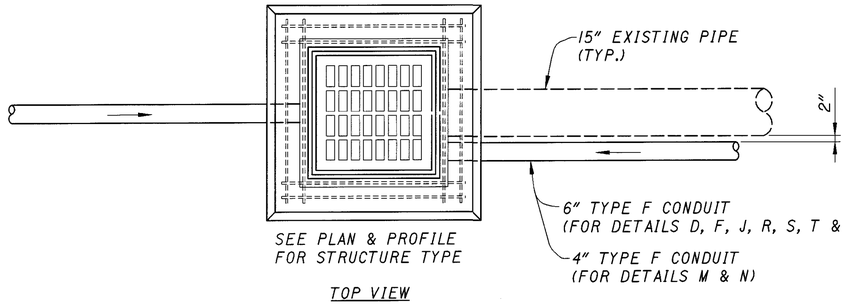

TOP VIEW

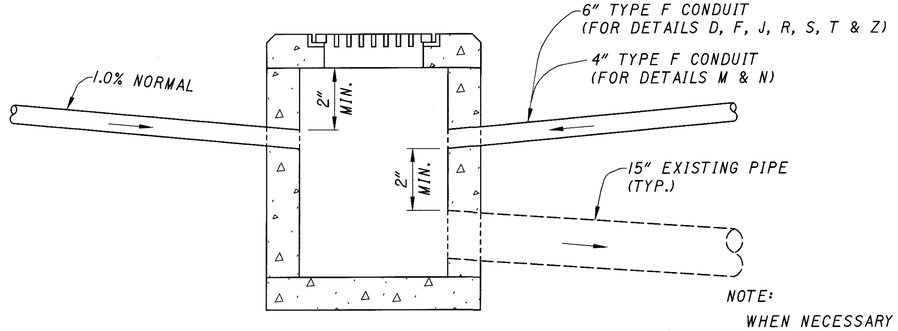

CROSS-SECTION

NOTE:
WHEN NECESSARY TO AVOID EXISTING PIPES, CONNECT THE TYPE F CONDUIT TO THE SIDE OF THE CATCH BASIN OR MANHOLE WITH APPROPRIATE BEND

OUTLET DETAIL TO CATCH BASIN OR MANHOLE

CALCULATED W.J.C. CHECKED P.S.

UNDERDRAIN DETAILS

MED - 71 - 15.78

537
940

7885DDA.DGN

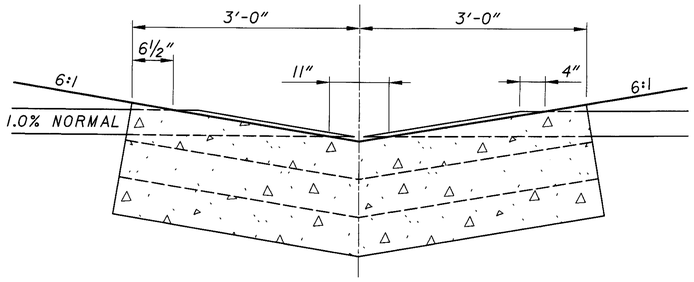

CROSS SECTION

NOTE:

OUTLET DETAIL TO SHARED RIPRAP IS USED WITH UNDERDRAIN DETAIL "W" FOR NARROW MEDIAN FROM STATION 1263+00 TO THE END OF THE PROJECT.

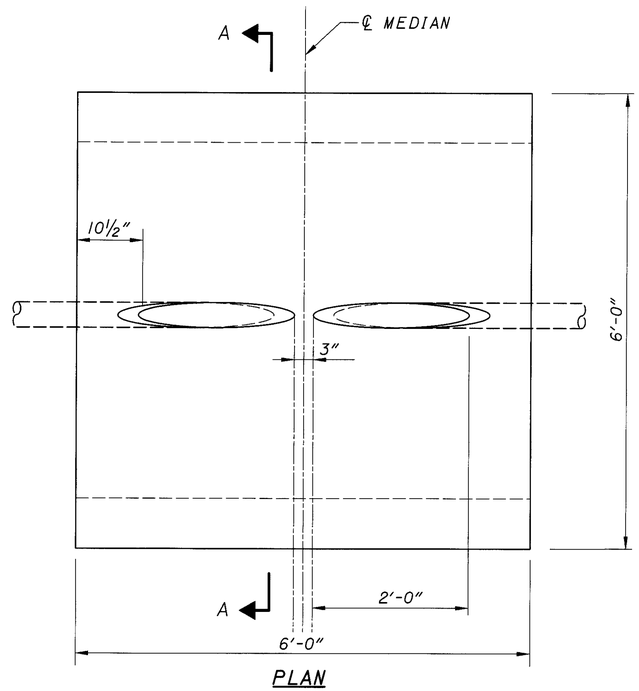

PLAN

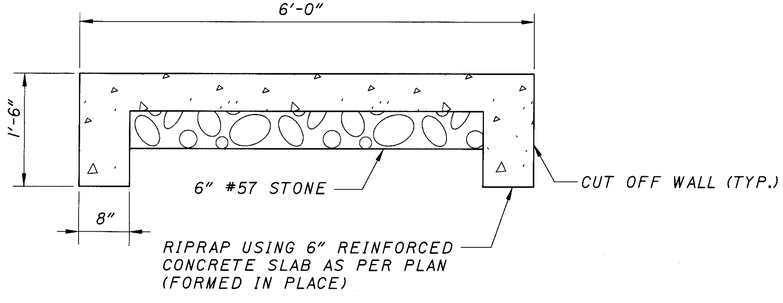

SECTION A-A

OUTLET DETAIL TO SHARED RIPRAP

SEE SHEET 537 FOR ADDITIONAL NOTES & DETAILS

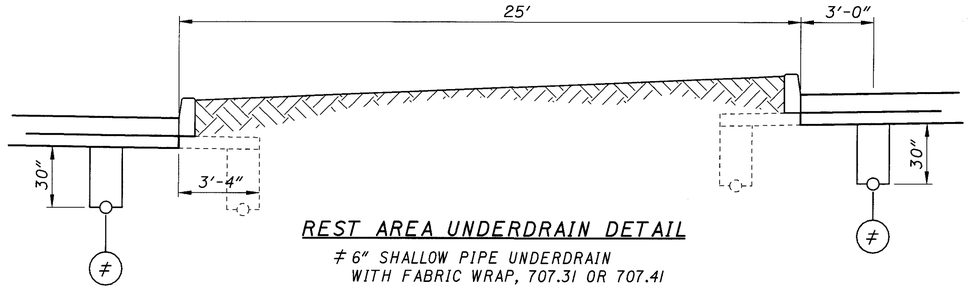

REST AREA UNDERDRAIN DETAIL

≠ 6" SHALLOW PIPE UNDERDRAIN WITH FABRIC WRAP, 707.31 OR 707.41

LEGEND

4" BY TYPE PIPE UNDERDRAIN WITH FABRIC WRAP, 707.31 OR 707.41, AS PER PLAN (12" NORMAL DEPTH), OR

6" BY TYPE PIPE UNDERDRAIN WITH FABRIC WRAP, 707.31 OR 707.41 (30" NORMAL DEPTH)

OUTLET PIPE

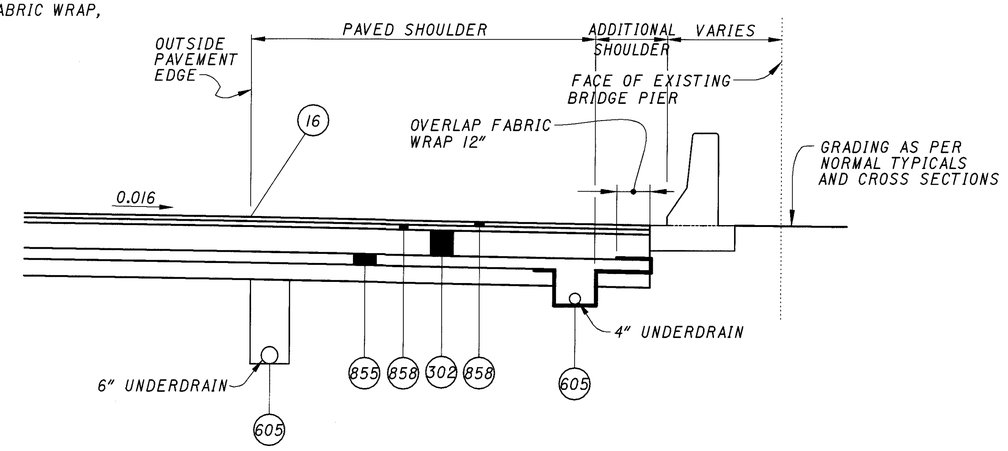

SHOULDER EDGE COURSE AND UNDERDRAIN WITH FABRIC WRAP, 707.31 OR 707.41, AS PER PLAN DETAIL TYPICAL FOR OUTSIDE SHOULDER BARRIER

SEE TYPICAL SECTIONS FOR PAVEMENT BUILDUP

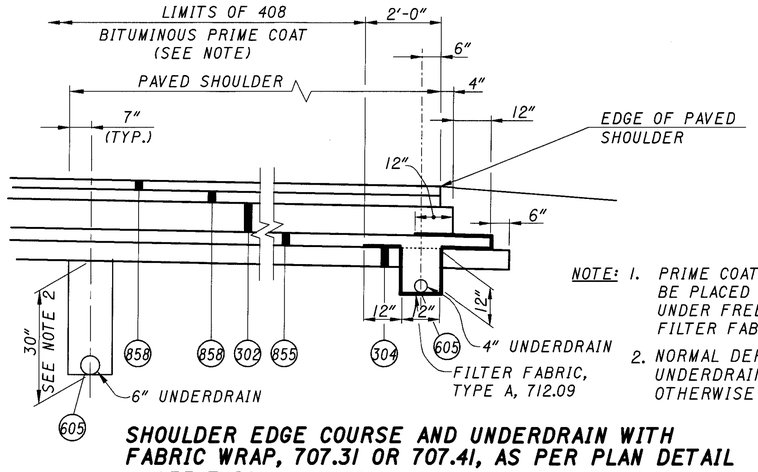

NOTE: 1. PRIME COAT SHALL NOT BE PLACED ON TOP OF OR UNDER FREE DRAINING BASE FILTER FABRIC.

2. NORMAL DEPTH OF 6" PIPE UNDERDRAIN IS 30" UNLESS OTHERWISE NOTED.

SHOULDER EDGE COURSE AND UNDERDRAIN WITH FABRIC WRAP, 707.31 OR 707.41, AS PER PLAN DETAIL

SEE TYPICAL SECTIONS FOR PAVEMENT BUILDUP

CALCULATED WJC CHECKED PS

UNDERDRAIN DETAILS

MED - 71 - 15.78

538 / 940

7885DD0.DGN

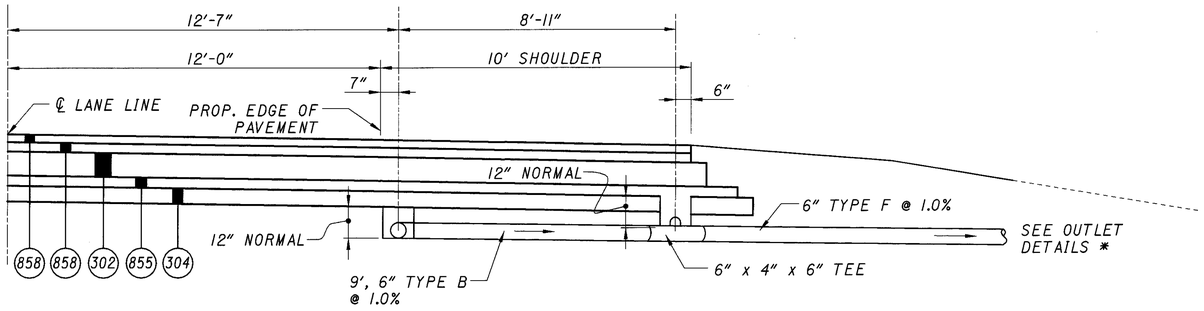

SECTION

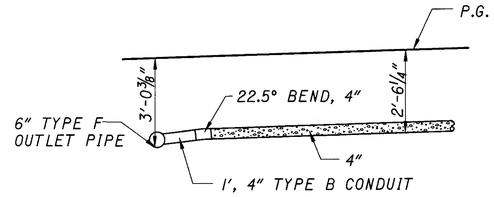

PROFILE AT EDGE OF SHOULDER

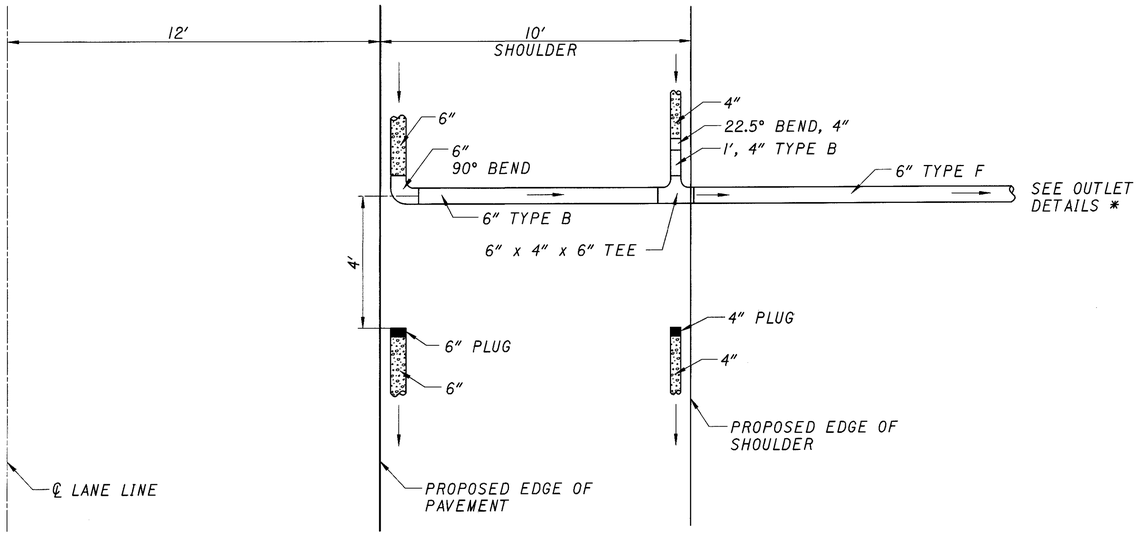

PLAN

UNDERDRAIN DETAIL L4 & L5

*FOR UNDERDRAIN DETAIL L4, SEE OUTLET DETAIL TO RIPRAP
FOR UNDERDRAIN DETAIL L5, SEE OUTLET DETAIL TO CATCH BASIN

LEGEND

4" BY TYPE PIPE UNDERDRAIN WITH FABRIC WRAP, 707.31 OR 707.41, AS PER PLAN (12" NORMAL DEPTH), OR

6" BY TYPE PIPE UNDERDRAIN WITH FABRIC WRAP, 707.31 OR 707.41 (30" NORMAL DEPTH)

OUTLET PIPE

ROCK CUT UNDERDRAIN NOTE:

THE NORMAL DEPTH OF THE ROCK CUT UNDERDRAINS IS AS SHOWN ON THIS SHEET. IF ANY SECTION IN THE ROCK CUT AREA REQUIRES OVER-EXCAVATION PER 203.04(b), THE DEPTH OF THE APPLICABLE ROCK CUT AND SHALLOW PIPE UNDERDRAINS SHALL BE MODIFIED TO A DEPTH 6" BELOW THE BOTTOM OF THE UNDERCUT (24" BELOW ITEM 304 - AGGREGATE BASE). THIS DEPTH SHALL APPLY TO ALL UNDERDRAIN SUBSUMMARIES UNDER REFERENCE NUMBERS 6-NO, 6-NI, 6-SI, 6-SO, 33-NO, 28B-NI, 26B-SI, 27-SI, 36B-SO, AND 37-SO.

OUTLET THE DEEPER UNDERDRAINS FOR 6-NO, 6-NI, 6-SI, AND 6-SO PER UNDERDRAIN DETAIL "F" IN LIEU OF UNDERDRAIN DETAIL "L4" OR "L5" (NOTE THAT THE OUTLET STATION FOR 6-SO MUST THEN CHANGE FROM 854+25 TO 855+70 AND THE PRECEDING UNDERDRAIN LENGTH EXTENDED); FOR 33-NO AND 36B-NI, USE DETAIL "A" IN LIEU OF "L4"; FOR 28B-NI AND 26B-NI, USE DETAIL "D" IN LIEU OF "L5". ADJUST THE NORTHERN DEPTHS TO 24" FOR THE 6" UNCLASSIFIED PIPE UNDERDRAINS FOR 28A-NI, 26-NI, AND 36A-NI; ADJUST THE SOUTHERN DEPTHS TO 24" FOR 29A-NI, 27A-SI, AND 37A-SO. CHANGE ALL BENDS AND BRANCHES QUANTITIES AS REQUIRED. ADDITIONAL QUANTITIES OF OUTLET PIPE (6" CONDUIT, TYPE B AND TYPE F, 707.33 OR 707.41; AND 4" CONDUIT, TYPE F, 707.33 OR 707.41) HAS BEEN PROVIDED IN THE UNDERDRAIN SUBSUMMARY TOTALS SHEET FOR OUTLETTING THE DEEPER UNDERDRAINS. ALL MATERIALS, LABOR, AND INCIDENTALS TO PROPERLY PLACE THESE ITEMS SHALL BE INCLUDED IN THE UNIT PRICE BIDS FOR THE FOLLOWING:

ITEM 603 - 4" CONDUIT, TYPE F, 707.33 OR 707.41	30 FEET
ITEM 603 - 6" CONDUIT, TYPE F, 707.33 OR 707.41	20 FEET
ITEM 603 - 6" CONDUIT, TYPE B, 707.33 OR 707.41	75 FEET

QUANTITIES CARRIED TO THE UNDERDRAIN SUBSUMMARY, SEE SHEET 128

CALCULATED W.J.C. CHECKED P.S.

UNDERDRAIN DETAILS

MED - 71 - 15.78

539
940

7885DD7.DGN

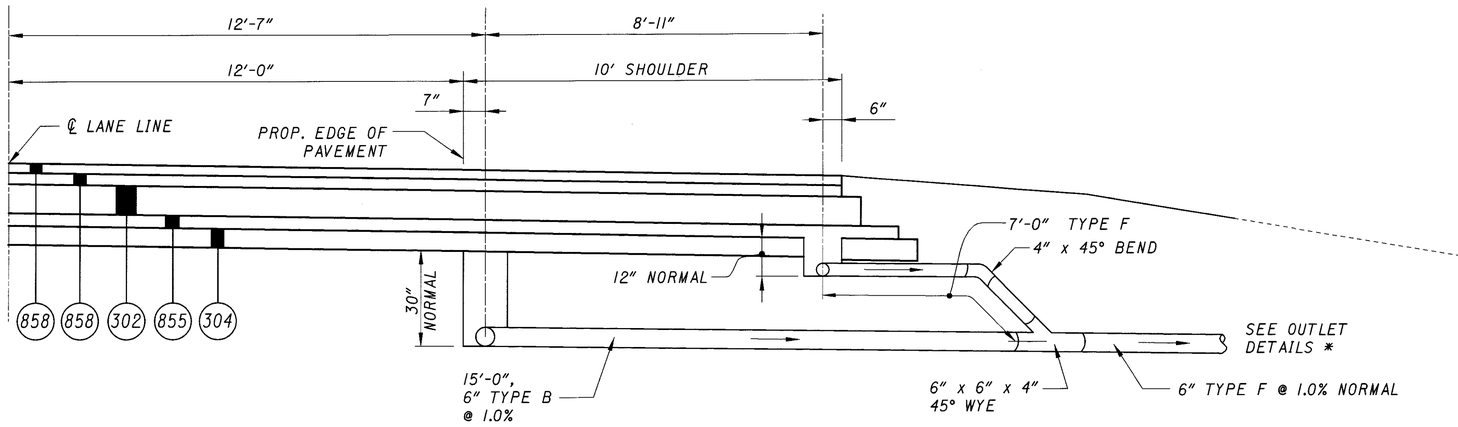

SECTION

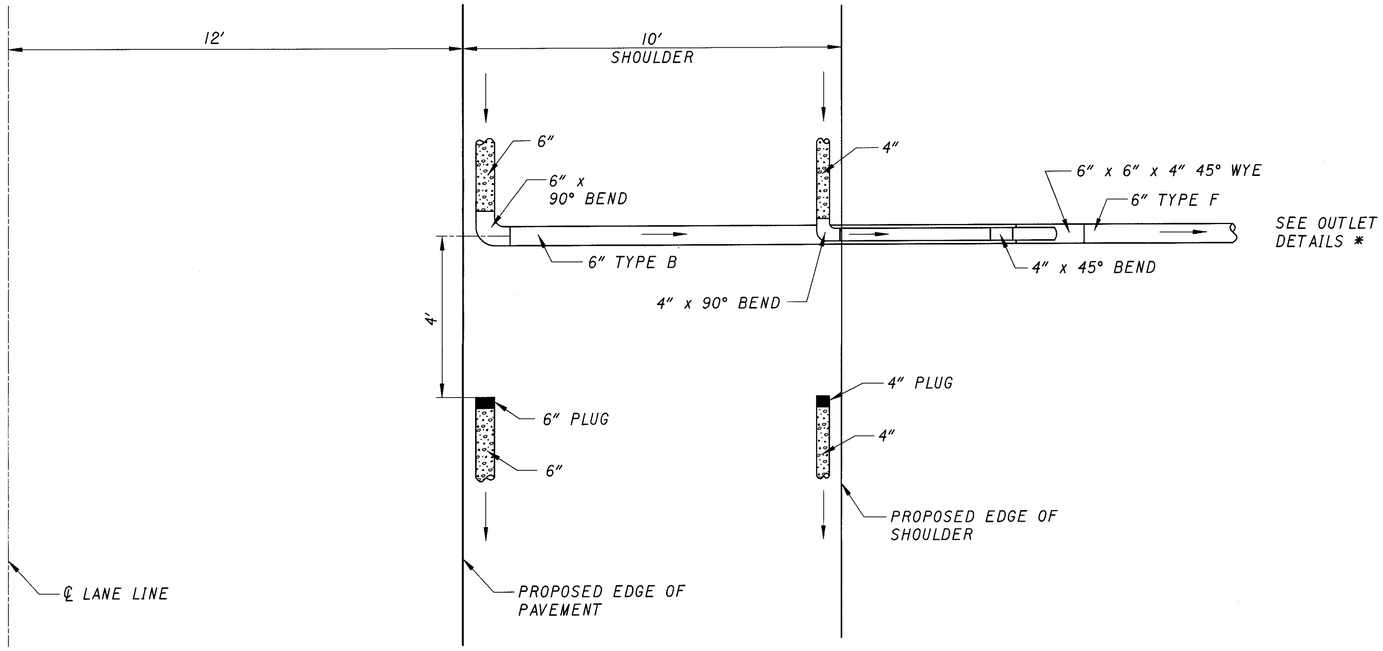

PLAN

UNDERDRAIN DETAILS A, D, O & L2

*FOR UNDERDRAIN DETAIL A, SEE OUTLET DETAIL TO RIPRAP

FOR UNDERDRAIN DETAIL D, SEE OUTLET DETAIL TO CATCH BASIN,

FOR UNDERDRAIN DETAIL O, SEE OUTLET DETAIL TO HEADWALL,

FOR UNDERDRAIN DETAIL L2, OUTLET DIRECTLY TO PROPOSED ROCK CHANNEL PROTECTION

LEGEND

4" BY TYPE PIPE UNDERDRAIN WITH FABRIC WRAP, 707.31 OR 707.41, AS PER PLAN (12" NORMAL DEPTH), OR

6" BY TYPE PIPE UNDERDRAIN WITH FABRIC WRAP, 707.31 OR 707.41 (30" NORMAL DEPTH)

OUTLET PIPE

CALCULATED W.J.C
CHECKED P.S.

UNDERDRAIN DETAILS

MED - 71 - 15.78

540
940

7885DDB.DGN

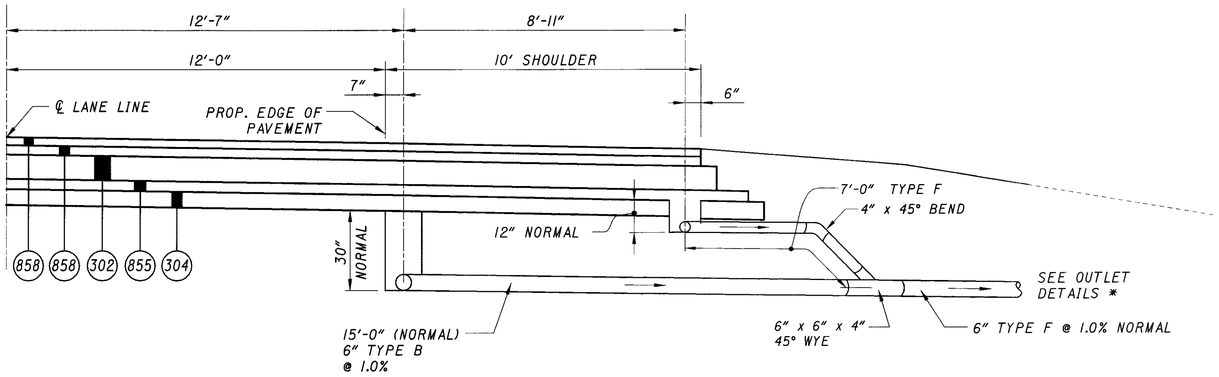

SECTION

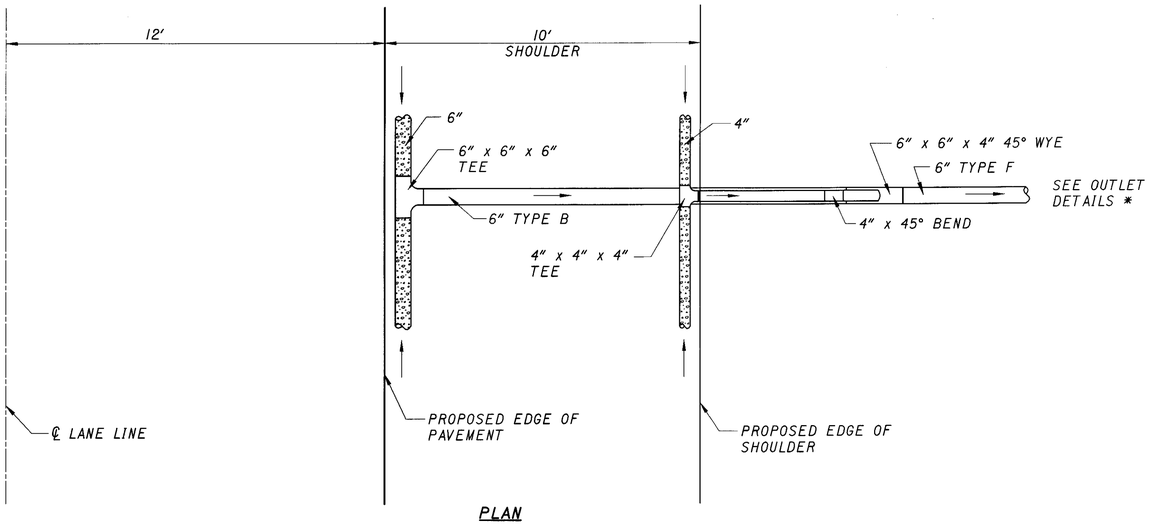

PLAN

NOTE:

DEPTH OF THE 4". FREE-DRAINING BASE UNDERDRAIN WILL VARY, WHICH WILL AFFECT PIPE LENGTHS.

UNDERDRAIN DETAILS C, J & P

*FOR UNDERDRAIN DETAIL C, SEE OUTLET DETAIL TO RIPRAP

FOR UNDERDRAIN DETAIL J, SEE OUTLET DETAIL TO CATCH BASIN OR MANHOLE

FOR UNDERDRAIN DETAIL P, SEE OUTLET DETAIL TO HEADWALL

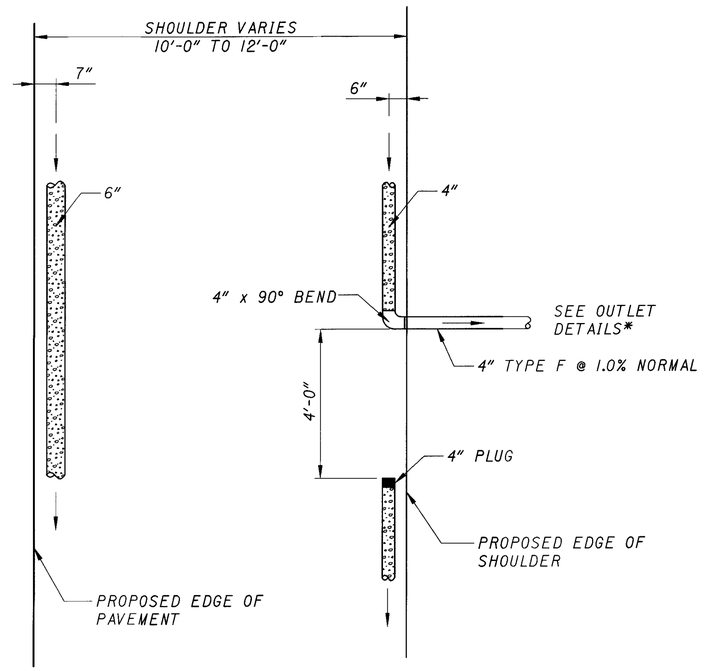

NOTE:

WHEN THIS DETAIL IS USED ON THE HIGH SIDE OF A SUPERELEVATED SECTION, THE 6" UNDERDRAIN IS NOT PRESENT.

CONNECTION DETAIL FOR UNDERDRAIN DETAILS B, M, Q, W & LI

* FOR UNDERDRAIN DETAIL B, SEE OUTLET DETAIL TO RIPRAP

FOR UNDERDRAIN DETAIL M, SEE OUTLET DETAIL TO CATCH BASIN

FOR UNDERDRAIN DETAIL Q, SEE OUTLET DETAIL TO EXISTING HEADWALL

FOR UNDERDRAIN DETAIL W, SEE OUTLET DETAIL TO SHARED RIPRAP

FOR UNDERDRAIN DETAIL LI, OUTLET DIRECTLY TO PROPOSED ROCK CHANNEL PROTECTION

LEGEND

4" BY TYPE PIPE UNDERDRAIN WITH FABRIC WRAP, 707.31 OR 707.41, AS PER PLAN (12" NORMAL DEPTH), OR

6" BY TYPE PIPE UNDERDRAIN WITH FABRIC WRAP, 707.31 OR 707.41 (30" NORMAL DEPTH)

OUTLET PIPE

CALCULATED W.J.C. CHECKED P.S.

UNDERDRAIN DETAILS

MED - 71 - 15.78

541
940

7885DDD.DGN

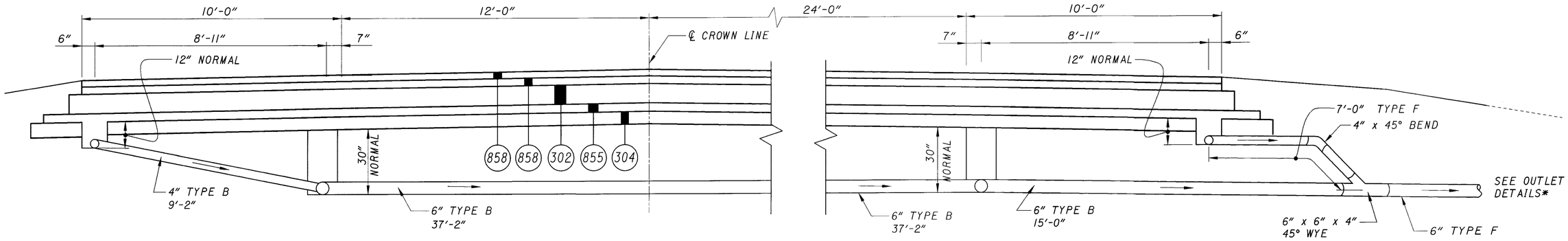

CROSS SECTION

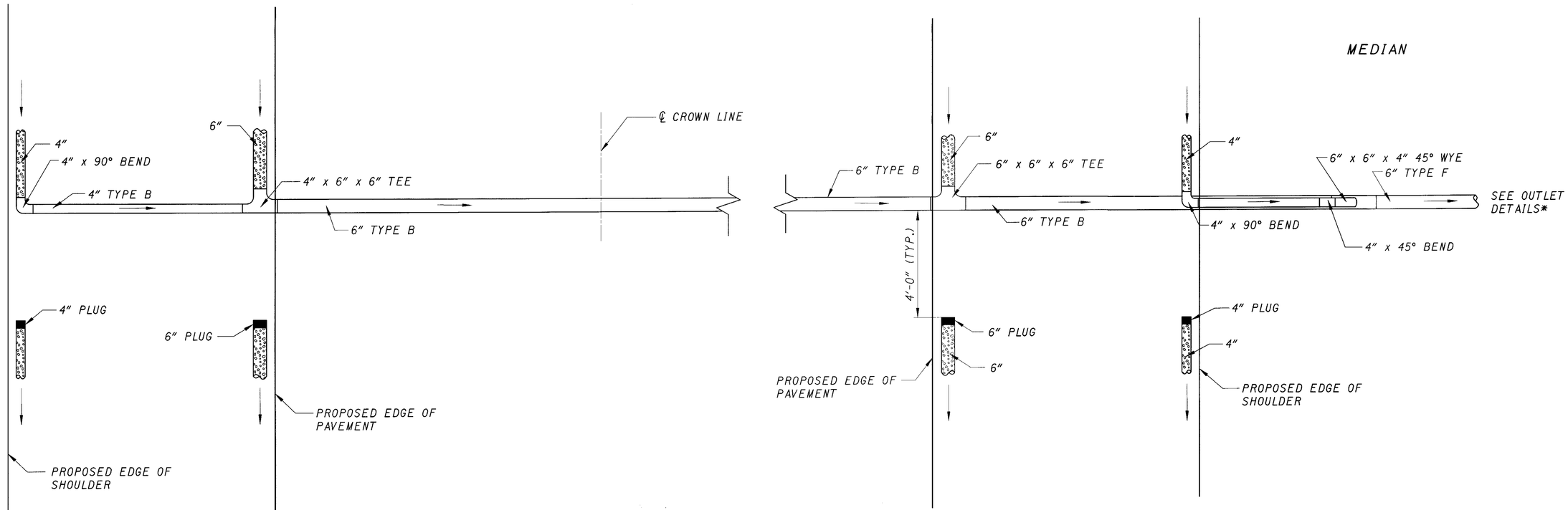

PLAN

NOTE:

1. DETAIL "F" IN SUPERELEVATED SECTIONS WILL HAVE NO 6" SUBGRADE UNDERDRAIN ON THE MEDIAN SIDE. OUTLET CONDUIT IS INCLUDED IN THE UNDERDRAIN SUMMARY WITH SUBGRADE CONNECTIONS FROM THE OUTSIDE.
2. DETAIL "Z" ALWAYS HAS NO 4" FREE-DRAINING BASE UNDERDRAIN ON THE FAR SIDE FROM THE OUTLET. SO THE 4" x 6" x 6" TEE SHOWN WILL BE A 6" x 90° BEND. ALSO ON THAT SIDE, THE 6" SUBGRADE UNDERDRAIN WILL NOT CONTINUE AFTER THE OUTLET. SEE UNDERDRAIN SUMMARY AND PLAN SHEETS FOR MORE INFORMATION.

UNDERDRAIN DETAILS E, F & Z

*FOR UNDERDRAIN DETAIL E, SEE OUTLET DETAIL TO RIPRAP

FOR UNDERDRAIN DETAIL F & Z SEE OUTLET DETAIL TO CATCH BASIN OR MANHOLE

LEGEND

4" BY TYPE PIPE UNDERDRAIN WITH FABRIC WRAP, 707.31 OR 707.41, AS PER PLAN (12" NORMAL DEPTH), OR

6" BY TYPE PIPE UNDERDRAIN WITH FABRIC WRAP, 707.31 OR 707.41 (30" NORMAL DEPTH)

OUTLET PIPE

CALCULATED WJC
CHECKED PS

UNDERDRAIN DETAILS

MED - 71 - 15.78

542
940

7885DDE.DGN

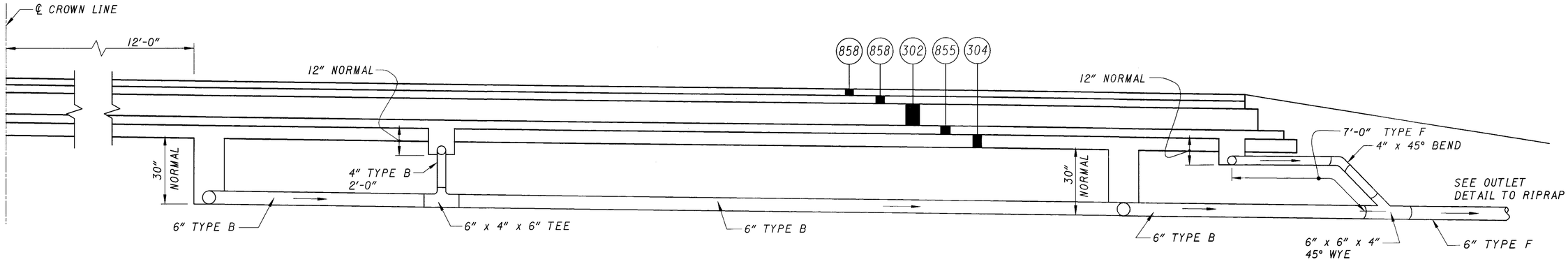

CROSS SECTION

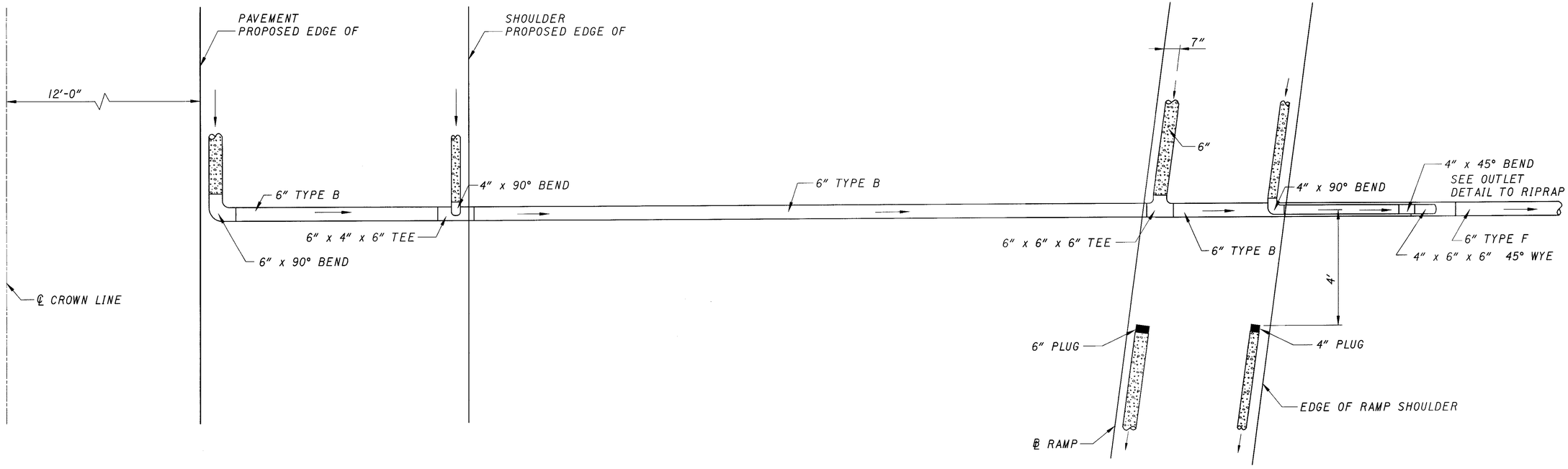

PLAN

CONNECTION DETAIL FOR UNDERDRAIN DETAIL H

NOTE:

THIS DETAIL IS USED UNDER RAMP B OF S.R. 3

LEGEND

4" BY TYPE PIPE UNDERDRAIN WITH FABRIC WRAP, 707.31 OR 707.41, AS PER PLAN (12" NORMAL DEPTH), OR

6" BY TYPE PIPE UNDERDRAIN WITH FABRIC WRAP, 707.31 OR 707.41 (30" NORMAL DEPTH)

OUTLET PIPE

CALCULATED WJC CHECKED PS

UNDERDRAIN DETAILS

MED - 71 - 15.78

543 / 940

7885DDF.DGN

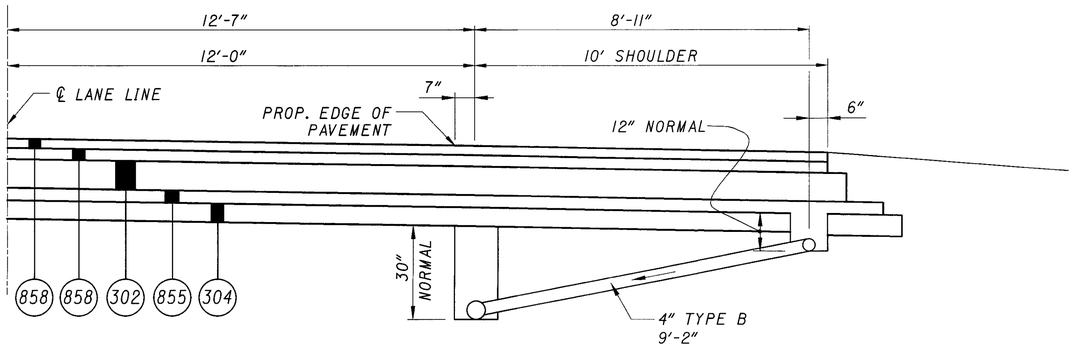

CROSS SECTION

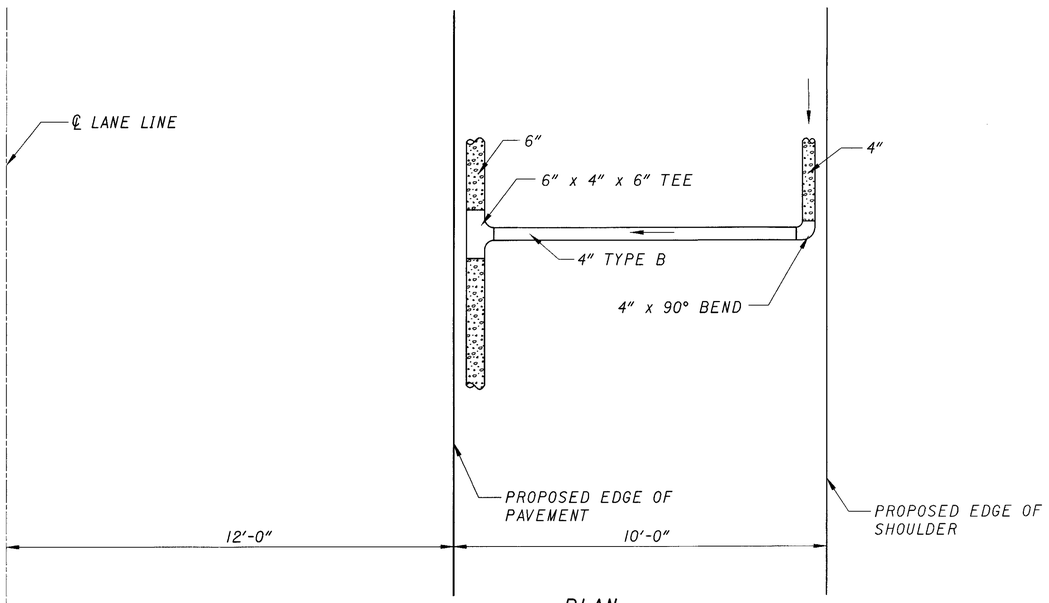

PLAN

UNDERDRAIN DETAIL K

NOTE:
IN RAMP GORES, DETAIL "I" MAY OUTLET ONLY THE 6", SUBGRADE UNDERDRAIN, SEE UNDERDRAIN SUMMARY FOR PIPE QUANTITIES. DETAIL "I" IS ALSO USED IN THE REST AREAS FOR 6" PIPE TO BE OUTLETTED AS THE 4" IS DETAILED BELOW.

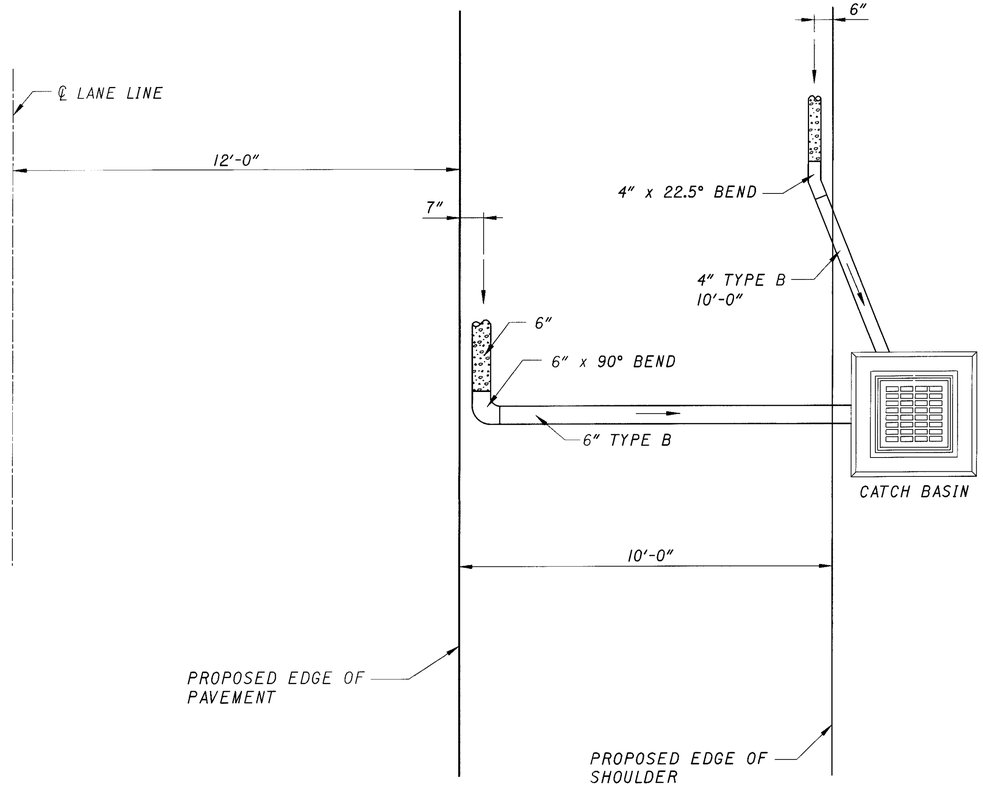

UNDERDRAIN DETAIL I

LEGEND

4" BY TYPE PIPE UNDERDRAIN WITH FABRIC WRAP, 707.31 OR 707.41, AS PER PLAN (12" NORMAL DEPTH), OR

6" BY TYPE PIPE UNDERDRAIN WITH FABRIC WRAP, 707.31 OR 707.41 (30" NORMAL DEPTH)

OUTLET PIPE

CALCULATED W.JC CHECKED PS

UNDERDRAIN DETAILS

MED - 71 - 15.78

544
940

7885DDG.DGN

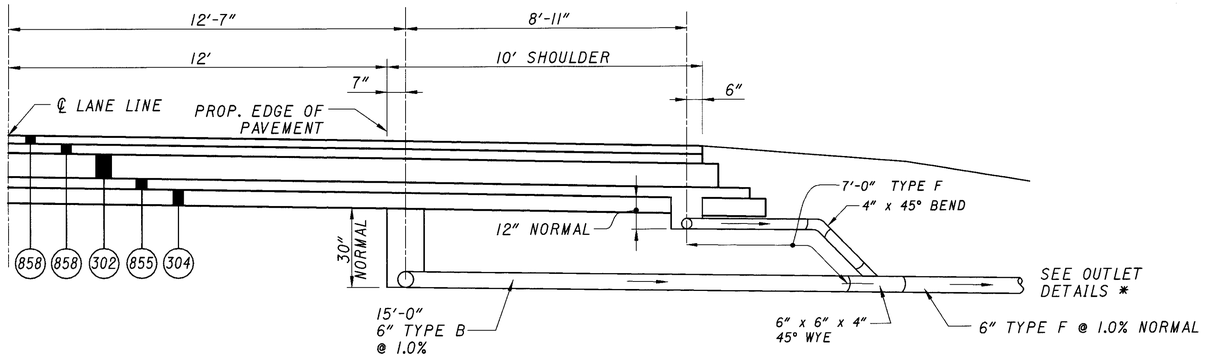

SECTION

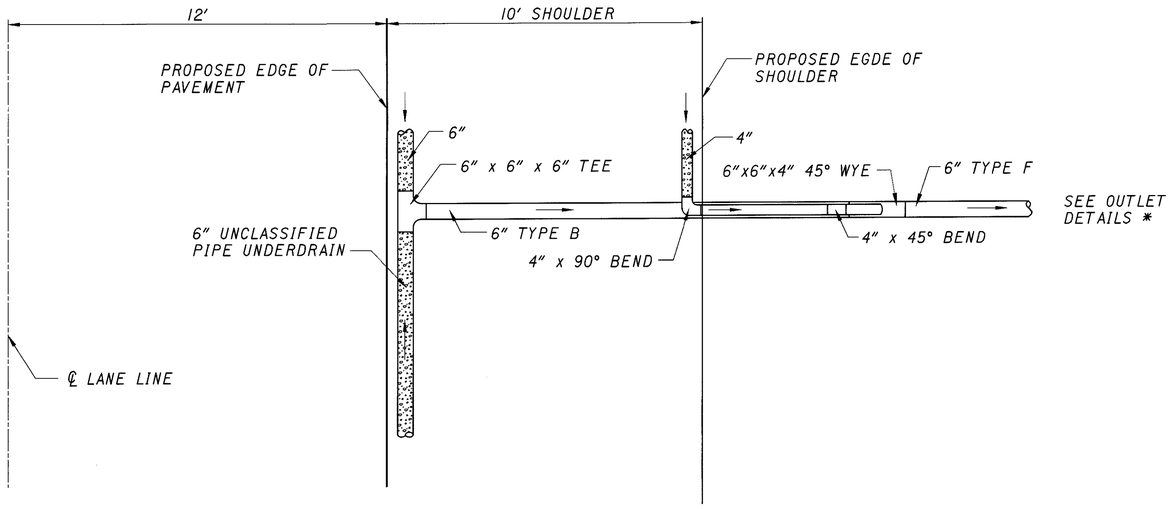

UNDERDRAIN DETAILS R, V & L3

* FOR UNDERDRAIN DETAIL R, SEE OUTLET DETAIL TO CATCH BASIN OR MANHOLE
* FOR UNDERDRAIN DETAIL V, SEE OUTLET DETAIL TO RIPRAP
  FOR UNDERDRAIN DETAIL L3, OUTLET DIRECTLY TO PROPOSED ROCK CHANNEL PROTECTION

LEGEND

4" BY TYPE PIPE UNDERDRAIN WITH FABRIC WRAP, 707.31 OR 707.41, AS PER PLAN (12" NORMAL DEPTH), OR

6" BY TYPE PIPE UNDERDRAIN WITH FABRIC WRAP, 707.31 OR 707.41 (30" NORMAL DEPTH)

OUTLET PIPE

CALCULATED W.J.C. CHECKED P.S.

UNDERDRAIN DETAILS

MED - 71 - 15.78

545/940

7885DDH.DGN

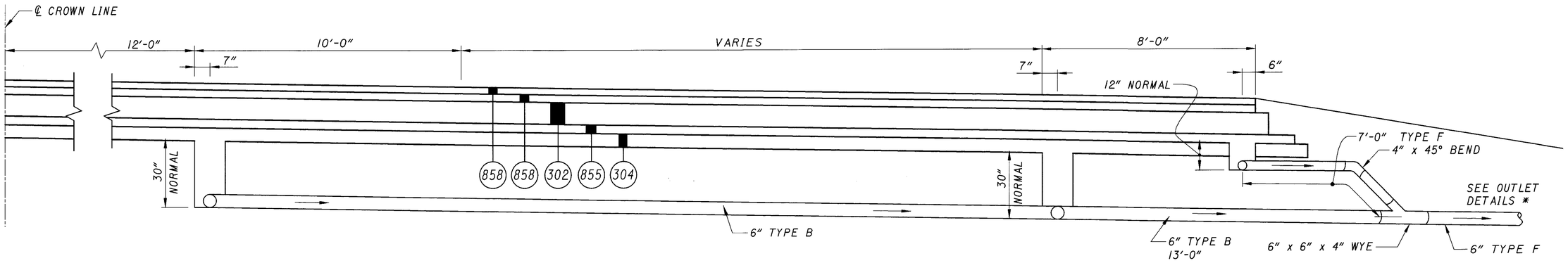

CROSS SECTION

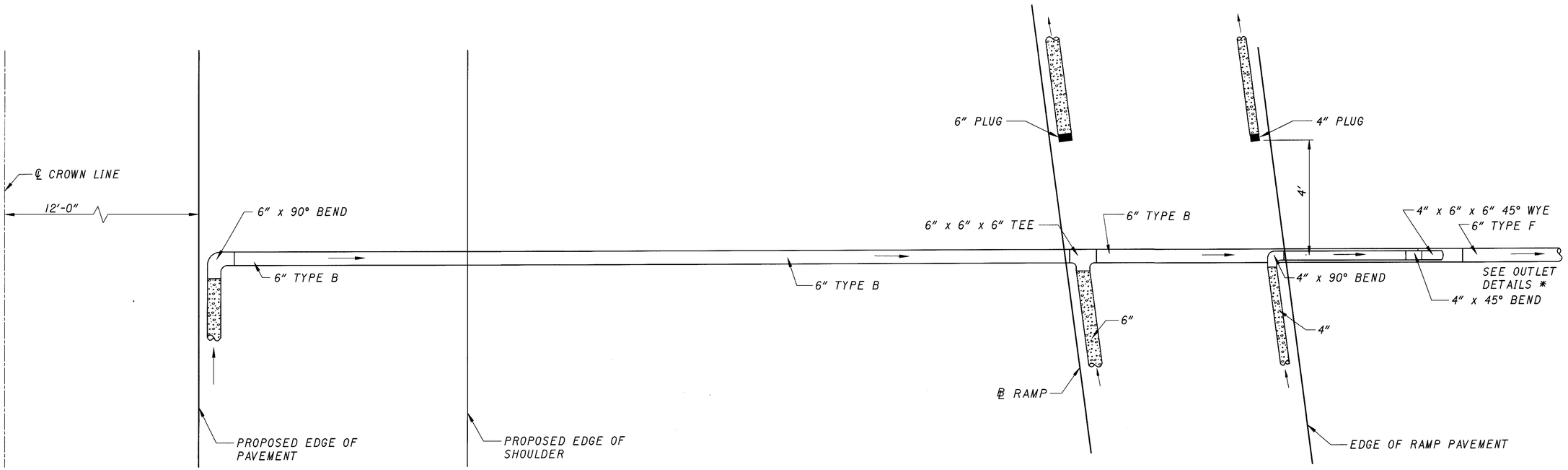

PLAN

CONNECTION DETAIL FOR UNDERDRAIN DETAILS X & Y

* FOR UNDERDRAIN DETAIL X, SEE OUTLET DETAIL TO HEADWALL
  FOR UNDERDRAIN DETAIL Y, SEE OUTLET DETAIL TO RIPRAP

LEGEND

4" BY TYPE PIPE UNDERDRAIN WITH FABRIC WRAP, 707.31 OR 707.41, AS PER PLAN (12" NORMAL DEPTH), OR

6" BY TYPE PIPE UNDERDRAIN WITH FABRIC WRAP, 707.31 OR 707.41 (30" NORMAL DEPTH)

OUTLET PIPE

CALCULATED W.J.C.
CHECKED P.S.

UNDERDRAIN DETAILS

MED - 71 - 15.78

546
940

7885DDJ.DGN

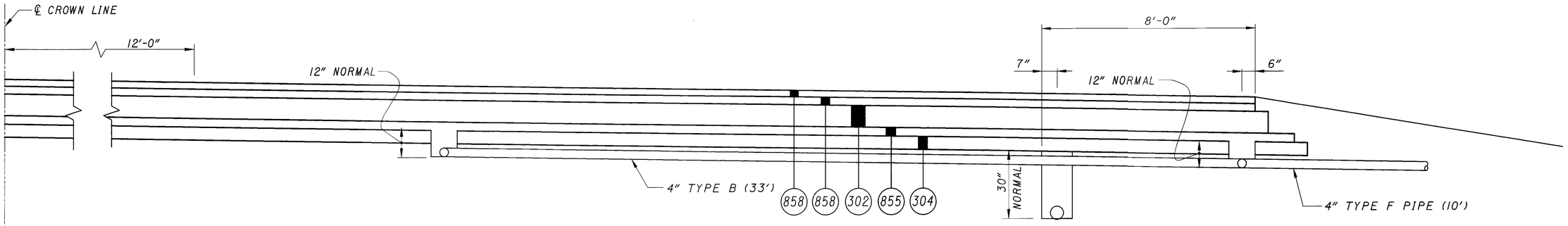

CROSS SECTION

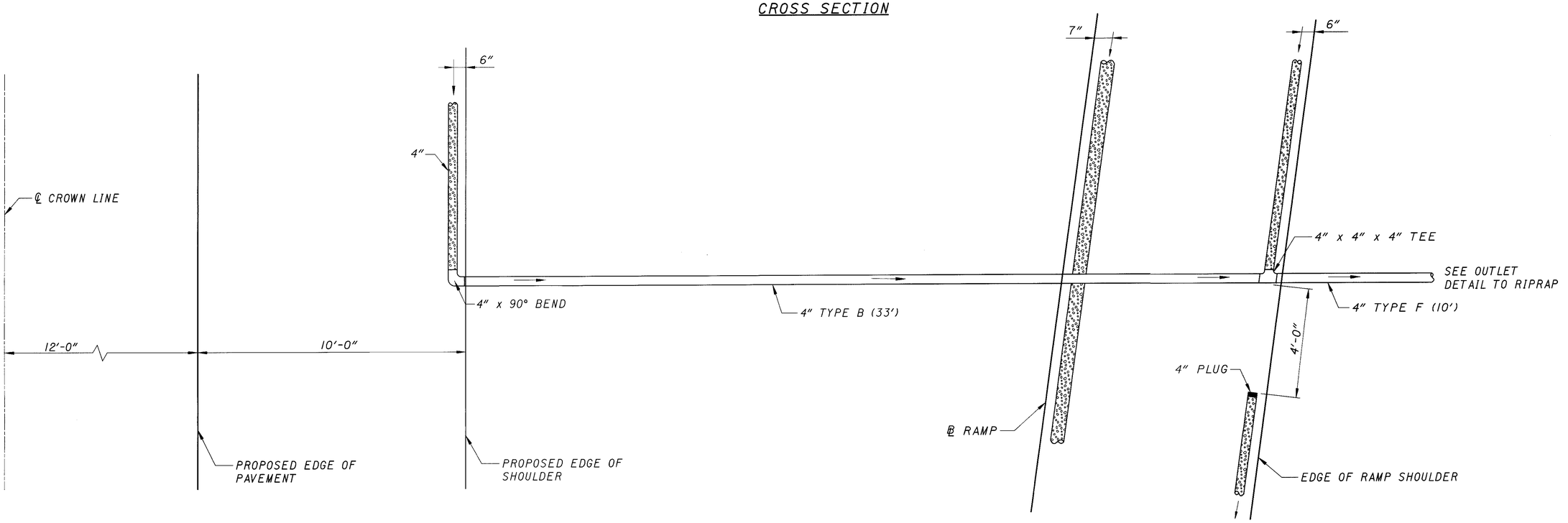

PLAN

NOTE:
DETAIL "U" IS TO BE USED ONLY AT "RAMP C" TO S.R. 18

LEGEND

4" BY TYPE PIPE UNDERDRAIN WITH FABRIC WRAP, 707.31 OR 707.41, AS PER PLAN (12" NORMAL DEPTH), OR

6" BY TYPE PIPE UNDERDRAIN WITH FABRIC WRAP, 707.31 OR 707.41 (30" NORMAL DEPTH)

OUTLET PIPE

CONNECTION DETAIL FOR UNDERDRAIN DETAIL U

CALCULATED W.J.C. CHECKED P.S.

UNDERDRAIN DETAILS

MED - 71 - 15.78

547
940

7885DDL.DGN

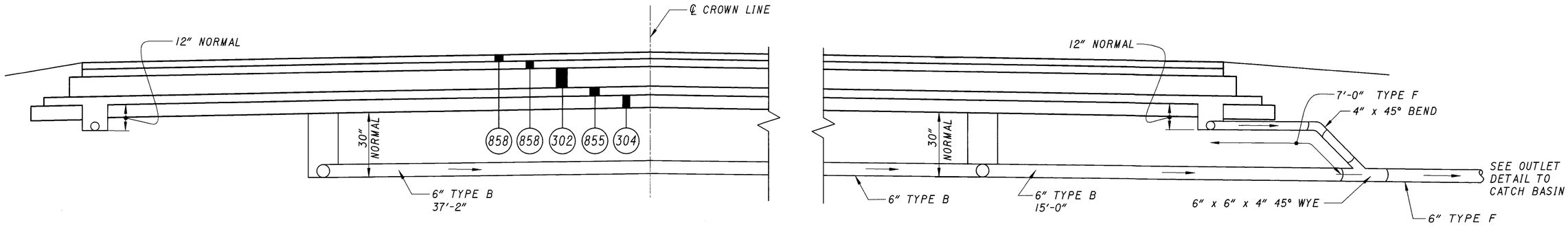

CROSS SECTION

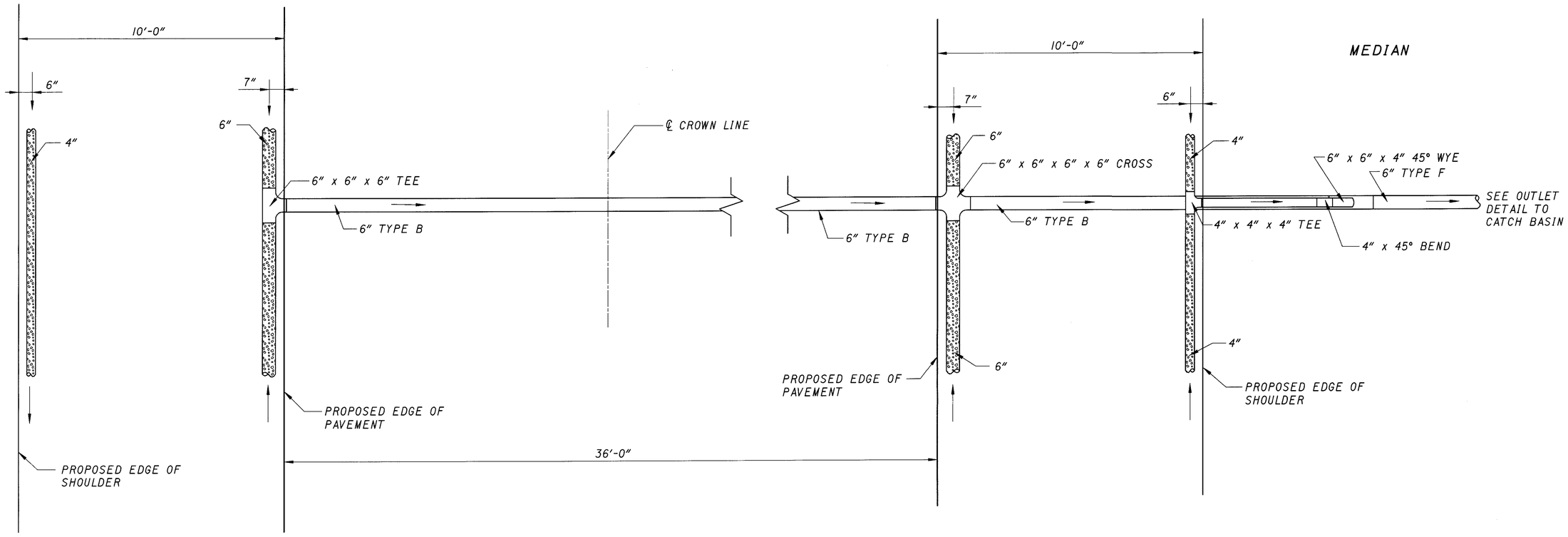

PLAN

NOTE:

DETAIL "T" IS USED ONLY AT THE SOUTHERN END OF THIS PROJECT.

UNDERDRAIN DETAIL T

LEGEND

4" BY TYPE PIPE UNDERDRAIN WITH FABRIC WRAP, 707.31 OR 707.41, AS PER PLAN (12" NORMAL DEPTH), OR

6" BY TYPE PIPE UNDERDRAIN WITH FABRIC WRAP, 707.31 OR 707.41 (30" NORMAL DEPTH)

OUTLET PIPE

CALCULATED W.JC CHECKED PS

UNDERDRAIN DETAILS

MED - 71 - 15.78

548
940

7885DDM.DGN

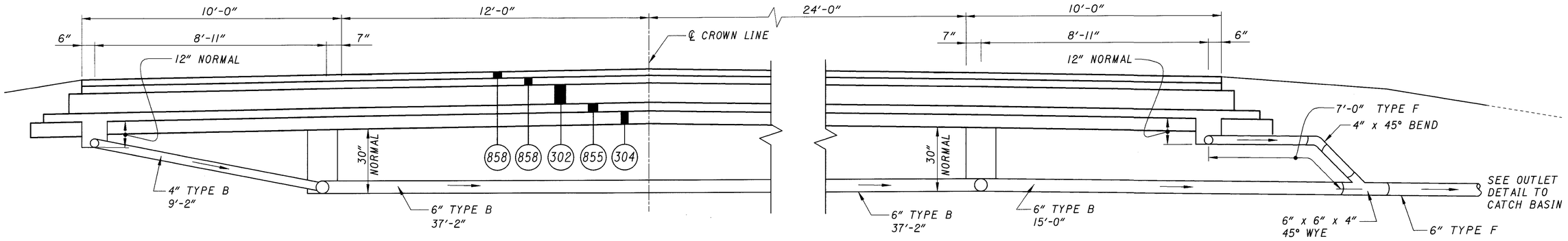

CROSS SECTION

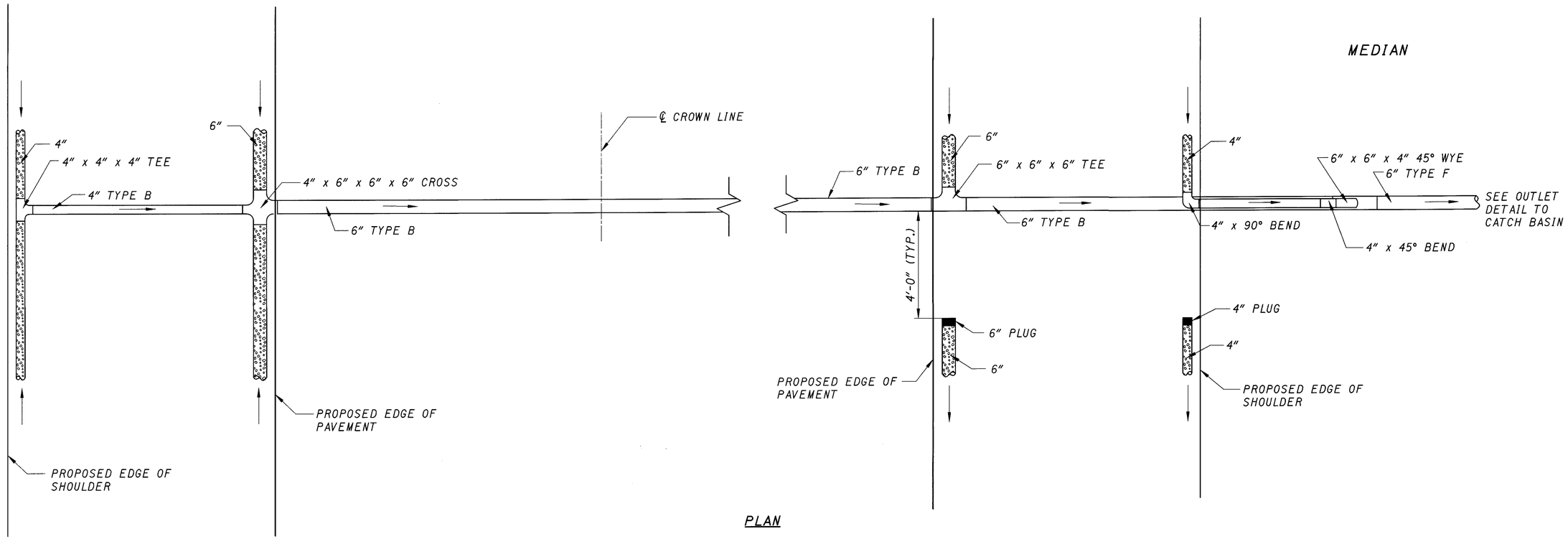

PLAN

LEGEND

4" BY TYPE PIPE UNDERDRAIN WITH FABRIC WRAP, 707.31 OR 707.41, AS PER PLAN (12" NORMAL DEPTH), OR

6" BY TYPE PIPE UNDERDRAIN WITH FABRIC WRAP, 707.31 OR 707.41 (30" NORMAL DEPTH)

OUTLET PIPE

NOTE:

DETAIL "S" IS SPECIFIC FOR A LOCATION IMMEDIATELY NORTH OF EASTBOUND RAMP TO I.R. 271

UNDERDRAIN DETAIL S

CALCULATED W.J.C. CHECKED P.S.

UNDERDRAIN DETAILS

MED - 71 - 15.78

549
940

7885DDN.DGN

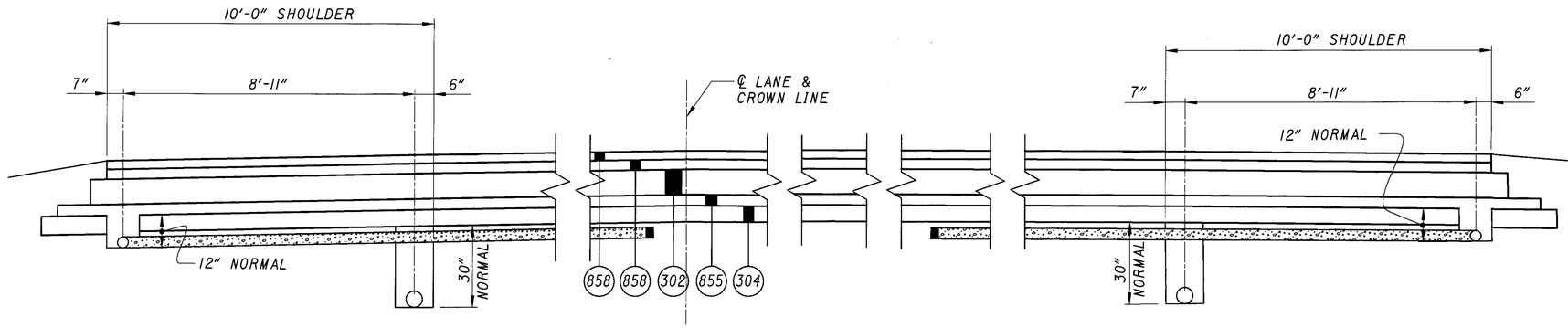

SECTION

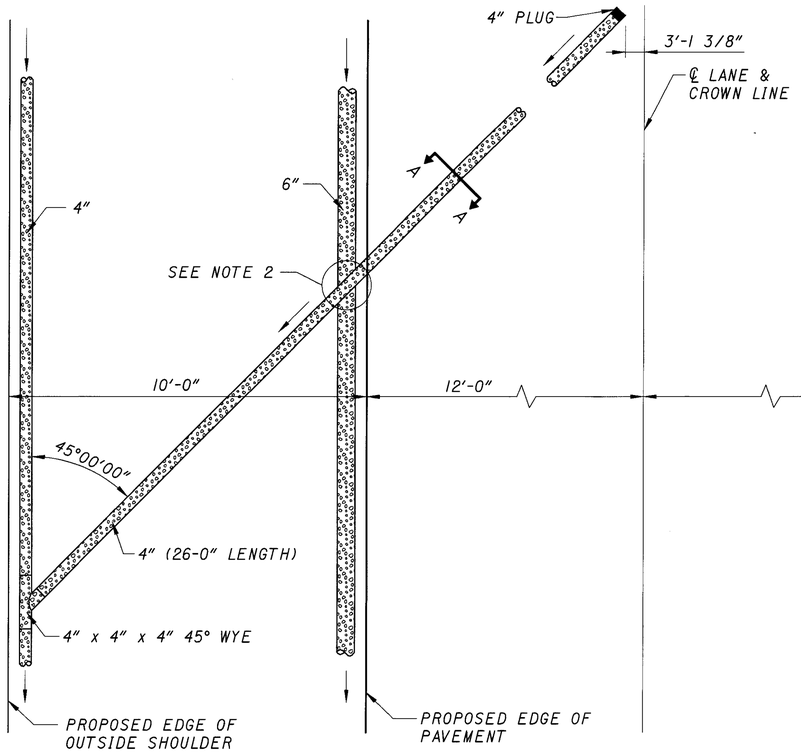

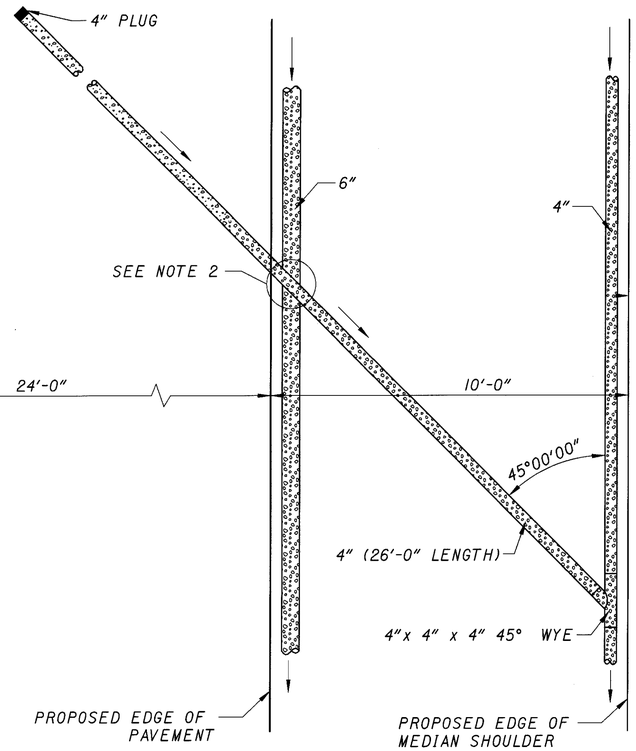

PLAN

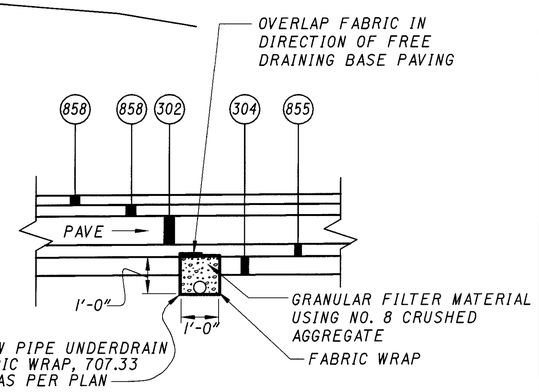

SECTION A-A

APPLICABLE FOR ALL TRANSVERSE UNDERAINS

NOTE:

1. THE CONSTRUCTION OF THE TRANSVERSE UNDERDRAIN IS DICTATED BY THE APPLICABLE CONSTRUCTION PHASE IN EACH STAGE. IN THE SUPERELEVATED SECTIONS WHERE THE TRANSVERSE UNDERDRAINS FLOW TOWARDS THE MEDIAN, THE PROPOSED TRANSVERSE UNDERDRAIN SHALL BE CONSTRUCTED TO THE OUTSIDE EDGE OF THE PAVEMENT. THE CONSTRUCTION OF THESE UNDERDRAINS SHALL BE CONSTRUCTED PART WIDTH IN ACCORDANCE WITH THE MAINTENANCE OF TRAFFIC PHASES.

2. TRANSVERSE UNDERDRAINS WILL EXTEND ACROSS THE SUBGRADE UNDERDRAIN AND THROUGH THE TOP OF THE PREVIOUSLY PLACED SUBGRADE UNDERDRAIN GRANULAR MATERIAL AND FABRIC WRAP. THE CONTRACTOR SHALL CAREFULLY EXCAVATE THE 304 MATERIAL AT THE LOCATION OF THE SUBGRADE UNDERDRAIN CROSSING TO EXPOSE THE SUBGRADE UNDERDRAIN FABRIC WRAP, CUT THE FABRIC WRAP, EXCAVATE THE NECESSARY GRANULAR MATERIAL, AND RE-FOLD THE SUBGRADE UNDERDRAIN FABRIC BEFORE THE TRANSVERSE FABRIC WRAP IS PLACED AND THE TRENCH IS FILLED. THUS, THE TRANSVERSE TRENCH EXCAVATION AT THIS CROSSING LOCATION SHALL PROCEED WITH EXTREME CARE, TO THE SATISFACTION OF THE ENGINEER, SO AS NOT TO DISTURB ANY SUBGRADE UNDERDRAIN.

LEGEND

4" BY TYPE PIPE UNDERDRAIN WITH FABRIC WRAP, 707.31 OR 707.41, AS PER PLAN (12" NORMAL DEPTH), OR

6" BY TYPE PIPE UNDERDRAIN WITH FABRIC WRAP, 707.31 OR 707.41 (30" NORMAL DEPTH), OR

4" SHALLOW PIPE UNDERDRAIN WITH FABRIC WRAP, 707.33 OR 707.41, AS PER PLAN (12" NORMAL DEPTH)

OUTLET PIPE

TRANSVERSE UNDERDRAINS

CALCULATED WJC CHECKED PS

UNDERDRAIN DETAILS

MED - 71 - 15.78

550/940

7885DD1.DGN

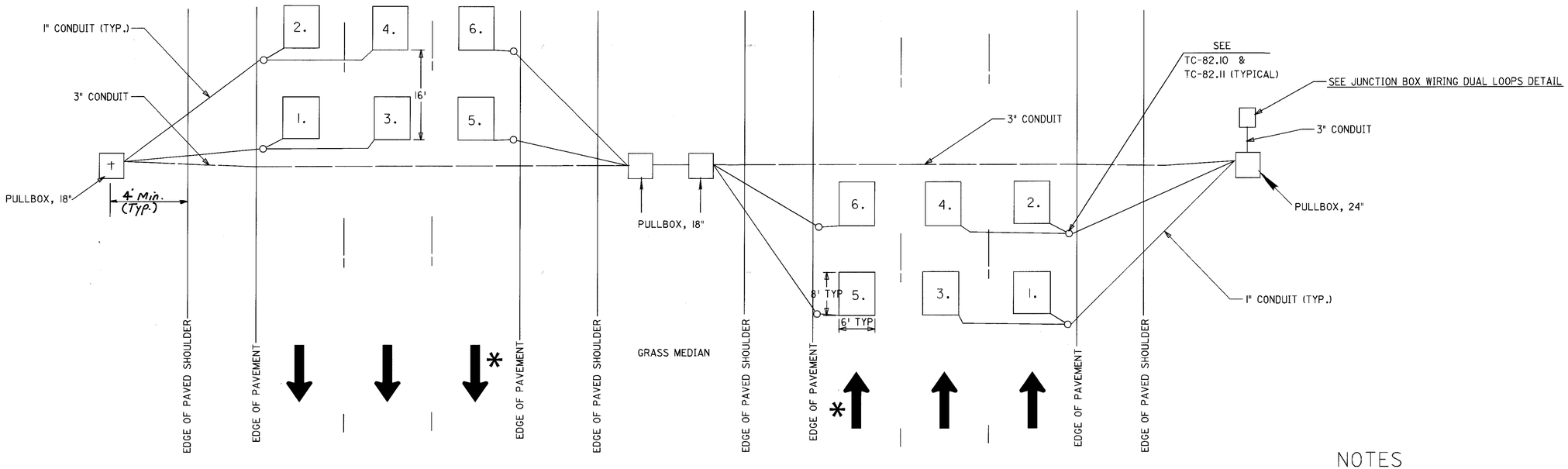

AUTOMATIC TRAFFIC RECORDER INSTALLATION

6 LANE SECTION

TO BE INSTALLED AT THE FOLLOWING LOCATIONS :

Sta 1037+75
Sta 1181+00
Sta 1314+50

* 6TH LANE OPEN TO TRAFFIC ONLY AT STA. 1314+50

ITEM	ITEM EXT.	1037+75	1181+00	1314+50	TOTAL	UNIT	DESCRIPTION
603	00400	80	80	80	240	LIN.FT.	4" CONDUIT, TYPE E
625	25500	185	185	185	555	LIN.FT.	CONDUIT, 3", 713.04
625	29000	185	185	185	555	LIN.FT.	TRENCH
625	29901	1	1	1	3	EACH	JUNCTION BOX, AS PER PLAN
625	30700	3	3	3	9	EACH	PULL BOX, 713.08, 18"
625	30706	1	1	1	3	EACH	PULL BOX, 713.08, 24"
625	32000	1	1	1	3	EACH	GROUND ROD
632	26501	12	12	12	36	EACH	DETECTOR LOOP, AS PER PLAN
632	65200	1430	1430	1430	4290	LIN.FT.	LOOP DETECTOR LEAD-IN CABLE
(QUANTITIES CARRIED TO GENERAL SUMMARY, SHEETS 70 & 73)							

NOTES

1. ITEM 632 DETECTOR LOOP, AS PER PLAN
   ALL LOOPS SHALL BE 6' X 8'. LOOPS SHALL BE SPACED 16' FROM LEADING EDGE TO LEADING EDGE. INSTALLATION OF LOOPS SHALL CONFORM TO TC-82.10 & TC-82.11 EXCEPT THAT LOOPS SHALL BE INSTALLED WITH WITH FOUR (4) TURNS, AND HAVE A MINIMUM COVER OF 3 INCHES FOR ASPHALT -3/4 INCH FOR CONCRETE AND CUT AS PER SHEET 554.

2. ADJACENT LOOPS (TRANSVERSE AND LONGITUDINAL) SHALL BE INSTALLED IN OPPOSITE DIRECTIONS, i.e., LOOP 1 AND LOOP 4, CLOCKWISE LOOP 2 AND LOOP 3 COUNTERCLOCKWISE. EACH LOOP SHALL HAVE A SEPARATE LEAD-IN CABLE ROUTED TO THE JUNCTION BOX. EACH CABLE AND WIRE SHALL BE TAGGED AND IDENTIFIED IN ACCORDANCE WITH 632.04

3. REFFERENCE IS MADE TO STANDARD DRAWING HL-30.11 FOR DETAILS OF DRAINING PULLBOXES. UNDERDRAINS FOR PULLBOXES SHALL BE USED AS DIRECTED BY THE ENGINEER AND SHALL BE PROVIDED WHERE THE LENGTH REQUIRED FOR A SATISFACTORY OUTLET DOES NOT EXCEED APPROXIMATELY 20'. AN ESTIMATED QUANTITY OF 80' OF ITEM 603, 4" CONDUIT TYPE E IS INCLUDED IN THE GENERAL SUMMARY FOR THIS PURPOSE.

4. FIVE (5) WORKING DAYS PRIOR TO THE SCHEDULED INSTALLATION, THE CONTRACTOR SHALL CONTACT OFFICE OF TECH. SERVICES AT 614-466-3727.

5. ALL ITEMS SHALL CONFORM TO C&M SPECIFICATIONS 625, 713, 632, 732, 633 AND 733, UNLESS OTHERWISE SPECIFIED.

6. LOOPS SHALL BE CUT IN THE SURFACE ASPHALT COURSE. THEY SHALL NOT BE INSTALLED BETWEEN THE INTERMEDIATE AND SURFACE COURSES.

7. ALL SENSORS ARE TO BE TESTED BY O.D.O.T. PERSONNEL AFTER THE INSTALLATION IS COMPLETE SO AS TO VERIFY THAT THE STATION IS UP AND OPERATING PROPERLY. IF THE ELECTRONIC EQUIPMENT DOES NOT PERFORM PROPERLY BECAUSE OF A POORLY INSTALLED SENSOR, THE CONTRACTOR SHALL BE RESPONSIBLE FOR THE REPLACEMENT OF THE FAULTY SENSOR, AS SOON AS POSSIBLE AT HIS OWN COST.

8. IT IS THE INTENT OF THIS PLAN TO OPEN CUT THE CONDUIT ACROSS I.R. 71. QUANTITIES TO PERFORM THIS OPERATION ARE INCLUDED IN THE SUMMARY. THE CONTRACTOR SHALL COORDINATE HIS UNDERDRAIN OPERATIONS AND TRAFFIC RECORDER CONDUIT OPERATION SO THAT EACH ITEM IS PLACED CORRECTLY AS APPROVED BY THE ENGINEER. THE CONTRACTOR SHALL NOT TRENCH THROUGH THE FREE DRAINING BASE.

9. ITEM 625 JUNCTION BOX, AS PER PLAN SHALL MEET REQUIREMENTS OF ITEM 625 JUNCTION BOX EXCEPT AS SHOWN ON DETAIL ON SHEET 553.

CALCULATED RLS | CHECKED JWR

DATE	
06/06/91	
09/28/92	
03/26/93	
07/25/95	
01/21/98	
10/08/98	

6 LANE DUAL LOOPS PLAN INSERT SHEET

MED-71-15.78

551
940

SBW

REF.FILE #1 LEVELS ON:
REF.FILE #2 LEVELS ON:
REF.FILE #3 LEVELS ON:
REF.FILE #4 LEVELS ON:

DESIGN FILE : i:\pd_med_lr7\dgn\misc. details\dualloop.dgn
USERNAME : nvonderb

DATE : 01-DEC-1999
TIME : 13:05

LEVELS ON:1-64
PLOT QUEUE:\\DOI\PLOT\oce
PEN TABLE:h:\data\pb\PDotCross.OCE.pen

FILENAME:h:\pd_med_lr7\dgn\misc. details\dualloop.dgn
DATE & TIME:01-DEC-1999 13:05
USERNAME:nvonderb
PROJECT:NONE

design file: dualloop.dgn

GUARDRAIL AND JUNCTION BOX DETAIL

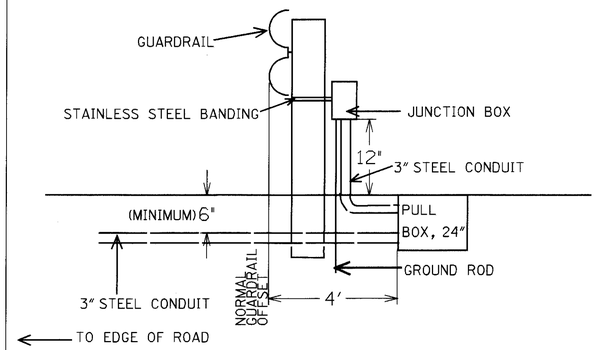

NOTES

1. ENCLOSURE.
   A. NEMA-(A NUMERAL) WEATHER TIGHT (GIVE SIZE).
   B. TO PAINT OVER PUNCH OUTS & HOLES & RESTORE FINISHIN INTEGRITY. (HOLES FOR CONDUIT, BARRIER STRIP MOUNTING SCREWS, CONNECTOR, EXT.).
   C. EPOXY FINISH.
2. BARRIER STRIPS.
   A. #8 SCREWS.
   B. (P/N) OR APPROVED EQUAL.
   C. USE STAINLESS STL. FASTENERS.
   D. TERMINALS SHALL BE MARKED #1-26 (HOWEVER-TAPE ETC.).
3. TERMINALS.
   A. FORKED "STA-KON" OR EQUAL.
   B. PRGRER FOR WIRE GAUGE & SCREW SIZE.
   C. SOLDERED & CRIMPED.
   D. NON-INSULATED.
4. MAIN CONNECTOR.
   A. AMPHENOL "MS" TYPE MS-3102A-28-12(288).
   B. SEAL WITH RTV ON FLAUGE.
   C. USE STAINLESS FASTENERS.
5. MATING CONNECTOR.
   A. AMPHENOL "MS" TYPE.
   B. 97-3106A-28-12P.
   C. 97-3057-1016-1.
6. CONNECTION SCHEME FOR 26 CONDUCTORS.

JUNCTION BOX WIRING
TWO LOOPS PER LANE
6 LANES

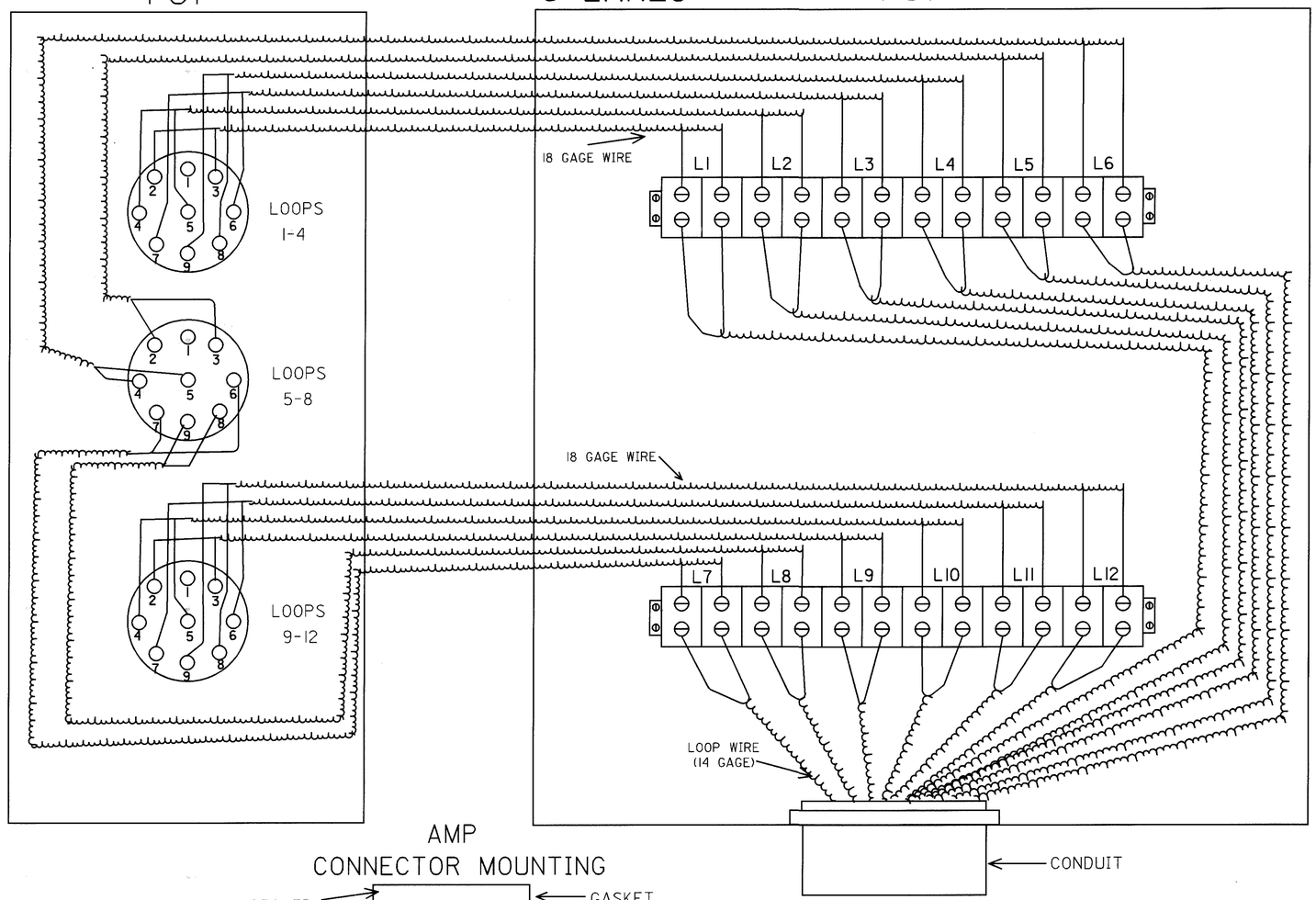

AMP CONNECTOR MOUNTING

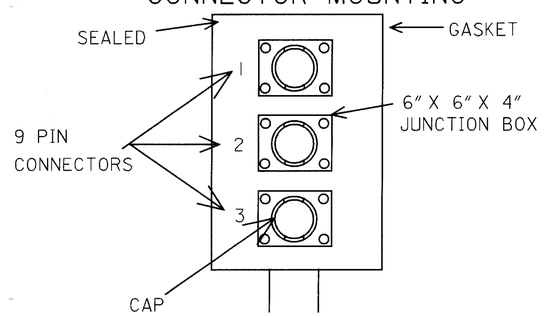

DESIGN FILE : i:\pd_med_ir7\dgn\misc. details\juncbox.dgn
USERNAME : jrogers
DATE : 09-DEC-1999
TIME : 11:27
design file: JUNCBOX.dgn

DATE 07/16/99

JUNCTION BOX WIRING DUAL LOOPS DETAIL

MED-71-15.78

552
940

SRW

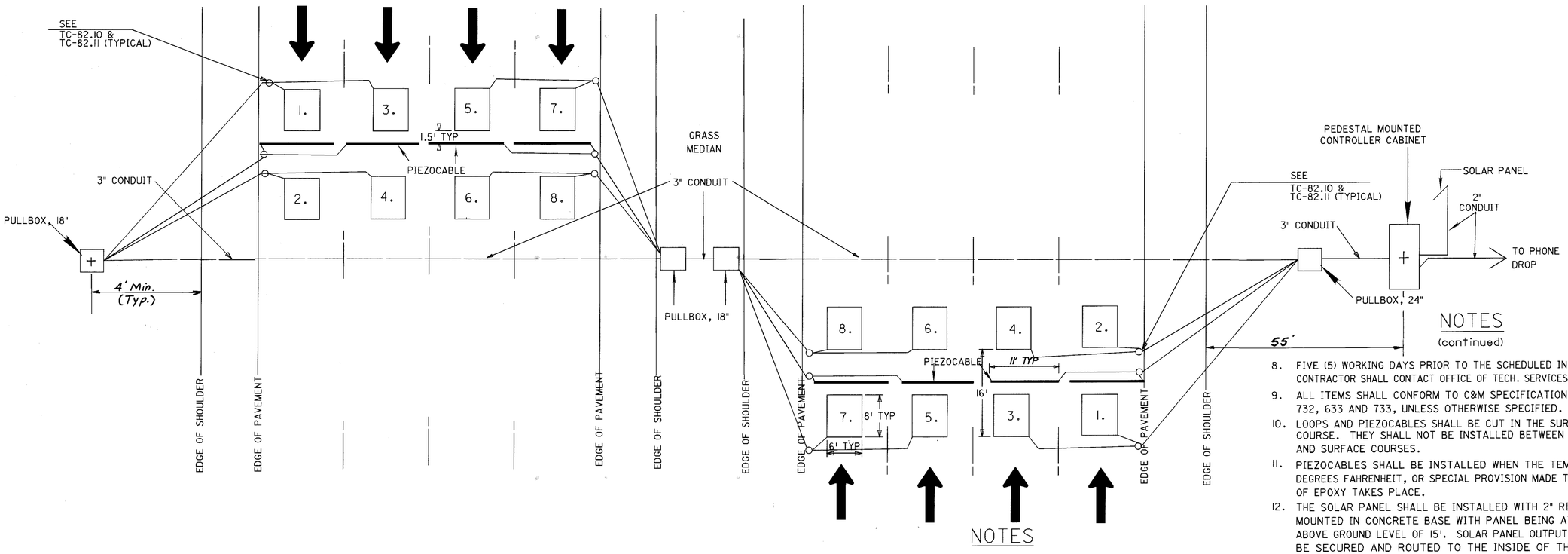

DESIGN FILE : i:\pd_med_ir71\dgn\misc. details\classm71.dgn
USERNAME : jrogers

DATE : 09-DEC-1999
TIME : 12:02

filename: classM71

AUTOMATIC TRAFFIC RECORDER INSTALLATION
8 LANE SECTION
APPLIES @ STA. 940+00

ITEM	ITEM EXT.	TOTAL	UNIT	DESCRIPTION
603	00400	80	LIN.FT.	4" CONDUIT, TYPE E
625	25400	15	LIN.FT.	CONDUIT, 2", 713.04
625	25500	220	LIN.FT.	CONDUIT, 3", 713.04
625	29000	230	LIN.FT.	TRENCH
625	30700	3	EACH	PULL BOX, 713.08, 18"
625	30706	1	EACH	PULL BOX, 713.08, 24"
625	32000	1	EACH	GROUND ROD
632	26501	16	EACH	DETECTOR LOOP, AS PER PLAN
632	63000	1	EACH	PHONE DROP
632	64020	1	EACH	PEDESTAL FOUNDATION
632	65200	3040	LIN.FT.	LOOP DETECTOR LEAD-IN CABLE
632	89800	1	EACH	PEDESTAL, 3' TRANSFORMER BASE
632	90400	8	EACH	SIGNALIZATION, MISC. : PIEZOCABLE AXLE SENSOR CLASS 2 (11' IN LENGTH)
633	65001	1	EACH	CABINET WITHOUT CONTROLLER, AS PER PLAN
633	70500	12	SQ. FT.	CONTROLLER WORK PAD
633	99000	1	EACH	CONTROLLER ITEM, MISC. : SOLAR PANEL
(QUANTITIES CARRIED TO GENERAL SUMMARY, SHEETS 70 & 73)				

NOTES

1. ITEM 632 DETECTOR LOOP, AS PER PLAN
ALL LOOPS SHALL BE 6' X 8'. LOOPS SHALL BE SPACED 16' FROM LEADING EDGE TO LEADING EDGE. INSTALLATION OF LOOPS SHALL CONFORM TO TC-82.10 & TC-82.11 EXCEPT THAT LOOPS SHALL BE INSTALLED WITH FOUR (4) TURNS, AND HAVE A MINIMUM COVER OF 3 INCHES FOR ASPHALT -3/4 INCH FOR CONCRETE AND CUT AS PER SHEET 554.
2. THE PIEZOCABLE SENSOR SHALL BE MADE BY MEASUREMENT SPECIALITIES ROAD TRAX BRASS LINGUINI (BL) CLASS I AXLE SENSOR OR EQUIVALENT. THE 11 FOOT SENSOR SHALL BE CENTERED IN THE 12 FOOT LANE. PAYMENT WILL BE AT THE CONTRACT UNIT PRICE PER EACH ITEM SIGNALIZATION, MISC.: PIEZOCABLE AXLE SENSOR, CLASS 2 (11 FEET IN LENGTH) AND SHALL INCLUDE ALL MATERIAL, LABOR, TOOLS, EQUIPMENT AND INCIDENTALS NECESSARY FOR EACH INSTALLATION, IN PLACE COMPLETE AND ACCEPTED.
THE PIEZOCABLE LEADIN CABLE IS PURCHASED AT DIFFERENT LENGTHS AS PART OF THE SENSOR AND SHALL NOT BE SPLICED. INCLUDED WITH THIS ITEM SHALL BE PAVEMENT CUTTING OF SLOTS, LEADIN WIRE IN PLACE, AND THE APPLICATION OF SEALANT. CONDUIT, DRILLING, TRENCHING, BACKFILLING, AND SURFACE RESTORATION FROM THE EDGE OF THE PAVEMENT TO THE PULL BOX SHALL ALSO BE INCLUDED.
3. CONTROLLER WORK PAD SHALL BE 3 FOOT BY 4 FOOT BY 6 INCHES DEEP AND SHALL BE LEVEL.
4. THE ALUMINUM CONTROLLER CABINET SHALL BE A PEDESTAL MOUNTED NEMA SIZE 3 AS SHOWN ON PLAN SHEET 554.
5. CABLE AND WIRE SHALL BE IDENTIFIED IN ACCORDANCE WITH 632.04. IDENTIFICATION SHALL INCLUDE THE DIRECTION OF TRAVEL (i.e., NB, WB) AND THE LOOP NUMBER AS SHOWN. EACH CABLE AND WIRE SHALL HAVE 5' COILED IN THE CONTROLLER CABINET FOR CONNECTION TO THE DATA COLLECTION SYSTEM.
6. ADJACENT LOOPS (TRANSVERSE AND LONGITUDINAL) SHALL BE INSTALLED IN OPPOSITE DIRECTIONS, i.e., LOOP 1 AND LOOP 4, CLOCKWISE LOOP 2 AND LOOP 3 COUNTERCLOCKWISE. EACH LOOP SHALL HAVE A SEPARATE LEAD-IN CABLE ROUTED TO THE CONTROLLER CABINET AND TAGGED.
7. REFERENCE IS MADE TO STANDARD DRAWING HL-30.11 FOR DETAILS OF DRAINING PULLBOXES. UNDERDRAINS FOR PULLBOXES SHALL BE USED AS DIRECTED BY THE ENGINEER AND SHALL BE PROVIDED WHERE THE LENGTH REQUIRED FOR A SATISFACTORY OUTLET DOES NOT EXCEED APPROXIMATELY 20'. AN ESTIMATED QUANTITY OF 80' OF ITEM 603, 4" CONDUIT TYPE E IS INCLUDED IN THE GENERAL SUMMARY FOR THIS PURPOSE.

NOTES (continued)

8. FIVE (5) WORKING DAYS PRIOR TO THE SCHEDULED INSTALLATION, THE CONTRACTOR SHALL CONTACT OFFICE OF TECH. SERVICES AT 614-466-3727.
9. ALL ITEMS SHALL CONFORM TO C&M SPECIFICATIONS 625, 713, 632, 732, 633 AND 733, UNLESS OTHERWISE SPECIFIED.
10. LOOPS AND PIEZOCABLES SHALL BE CUT IN THE SURFACE ASPHALT COURSE. THEY SHALL NOT BE INSTALLED BETWEEN THE INTERMEDIATE AND SURFACE COURSES.
11. PIEZOCABLES SHALL BE INSTALLED WHEN THE TEMP. IS ABOVE 60 DEGREES FAHRENHEIT, OR SPECIAL PROVISION MADE TO ENSURE CURING OF EPOXY TAKES PLACE.
12. THE SOLAR PANEL SHALL BE INSTALLED WITH 2" RIGID CONDUIT MOUNTED IN CONCRETE BASE WITH PANEL BEING AT A MIN. HEIGHT ABOVE GROUND LEVEL OF 15'. SOLAR PANEL OUTPUT CABLE SHALL BE SECURED AND ROUTED TO THE INSIDE OF THE CABINET FOR CONNECTION TO TERMINAL BLOCK. SOLAR PANEL SHALL BE MOUNTED AT A 45° ANGLE FACING SOUTH.
13. SOLAR PANEL SHALL BE A SOLAREX MODEL VLX 32 (32 WATTS) OR AN APPROVED EQUAL WITH MOUNTING HARDWARE, CABLES AND INCLUDING ALL MATERIALS, LABOR, TOOLS, EQUIPMENT, AND INCIDENTALS NECESSARY TO CONSTRUCT THIS ITEM AS APPROVED BY THE ENGINEER.
14. THE CONTRACTOR SHALL BE RESPONSIBLE FOR INSTALLING AND TESTING THE PHONE DROP INSIDE OF THE CONTROLLER CABINET. THE CONTRACTOR SHALL BE RESPONSIBLE FOR ALL CHARGES INCURRED PRIOR TO THE TRANSFER OF THE TELEPHONE ACCOUNT. THE CONTRACTOR SHALL COORDINATE WITH ODOT, TELECCOMMUNICATIONS, MR. MIKE WIGGINS (614-466-4452) TO TRANSFER THE TELEPHONE ACCOUNT AND THE BILLING RESPONSIBLITY FROM THE CONTRACTOR TO ODOT. PAYMENT WILL BE AT THE CONTRACT UNIT PRICE PER EACH ITEM 632 PHONE DROP AND SHALL INCLUDE ALL MATERIAL, LABOR, TOOLS, EQUIPMENT, INCIDENTALS AND PAYMENT OF ALL PHONE COMPANY FEES NECESSARY FOR EACH INSTALLATION, IN PLACE COMPLETE AND ACCEPTED.
15. ALL SENSORS ARE TO BE TESTED BY O.D.O.T. PERSONNEL AFTER THE INSTALLATION IS COMPLETE SO AS TO VERIFY THAT THE STATION IS UP AND OPERATING PROPERLY. IF THE ELECTRONIC EQUIPMENT DOES NOT PERFORM PROPERLY BECAUSE OF A POORLY INSTALLED SENSOR, THE CONTRACTOR SHALL BE RESPONSIBLE FOR THE REPLACEMENT OF THE FAULTY SENSOR, AS SOON AS POSSIBLE AT HIS OWN COST.
16. THE PULL BOX COVERS IN THE ASPHALT SHOULDER SHALL BE A HEAVY DUTY FRAME AND LID (NEENAH R-6686 OR APPROVED EQUAL). THIS ITEM SHALL INCLUDE ALL COSTS OF LABOR, MATERIALS AND EQUIPMENT NECESSARY TO INSTALL EACH ITEM 625 - PULL BOX, 713.08, 18 & 24 IN. AS PER PLAN
17. IT IS THE INTENT OF THIS PLAN TO OPEN CUT THE CONDUIT ACROSS I.R. 71. QUANTITIES TO PERFORM THIS OPERATION ARE INCLUDED IN THE SUMMARY. THE CONTRACTOR SHALL COORDINATE HIS UNDERDRAIN OPERATIONS AND TRAFFIC RECORDER CONDUIT OPERATION SO THAT EACH ITEM IS PLACED CORRECTLY AS APPROVED BY THE ENGINEER. THE CONTRACTOR SHALL NOT TRENCH THROUGH THE FREE DRAINING BASE. PART WIDTH CONSTRUCTION WILL BE UTILIZED ON THIS PROJECT AND THE CONTRACTOR SHALL COORDINATE THE TRAFFIC RECORDER CONDUIT OPERATION ACCORDINGLY AS APPROVED BY THE ENGINEER.

CALCULATED RLS | CHECKED Jwp

DATE 07/26/99

8 LANE CLASSIFICATION SITE PLAN INSERT SHEET

MED-71-15.78

553
940

SBW

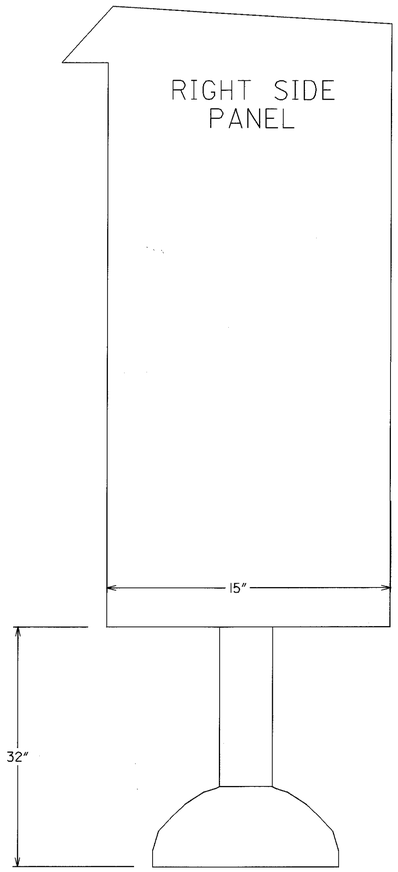

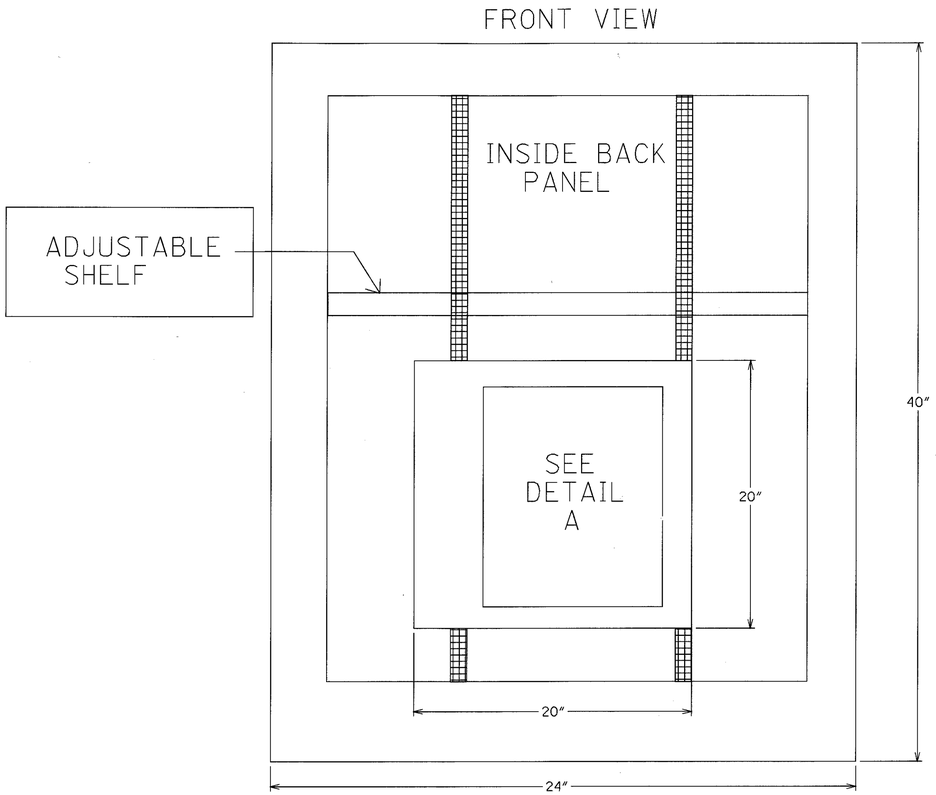

DETAIL A
DIFFERENT TERMINAL BLOCKS

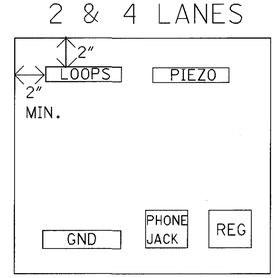

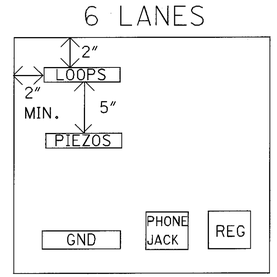

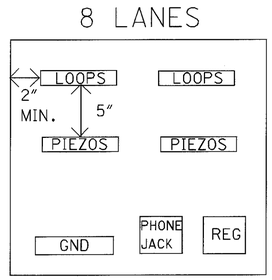

NOTES

CABINET WITHOUT CONTROLLER, AS PER PLAN

1. THE ALUMINUM CABINET SHALL BE A PEDESTEL MOUNTED SIZE 3 AS SHOWN IN TABLE 7.3-1 OF THE NEMA STANDARD PUBLICATION No TS 2-1992. THE NOMINAL DIMENSIONS ARE: 24 INCHES WIDE BY 40 INCHES HIGH BY 15 INCHES DEEP.
   IT SHALL BE SHEET ALUMINUM AS DETAILED IN SECTION 7.2.2.1 OR CAST ALUMINUM DETAILED IN SECTION 7.2.2.2. IT SHALL ALSO CONFORM TO SECTIONS: 7.4, 7.5 EXCEPT FOR 7.5.7, 7.6 WITH ONE SHELF, 7.7.3, 7.8.3 SIZE 5, 7.8.4.
   THE CABINET SHALL BE INSTALLED WITH INTERNAL COMPONENTS FOR THE WEIGH-IN-MOTION EQUIPMENT AS NECESSARY TO PROVIDE COMPLETE OPERATION OF THE WIM SYSTEM.
   A. IT SHALL BE EQUIPPED WITH TWO ADJUSTABLE "C" CHANNELS MOUNTED ON EACH OF THE THREE INTERIOR SIDES FOR THE PURPOSE OF MOUNTING TERMINAL STRIP PANELS AND SHELVING. FURNISH THE CABINETS WITH ONE ADJUSTABLE SHELF WHICH WILL NOT SAG WHEN LOADED WITH THE WIM ELECTRONICS. DESIGN THE SHELVING TO ALLOW FOR THE PASSAGE OF AIR. PLACE NO EQUIPMENT ON THE BOTTOM OF THE CABINET.
   B. MOUNT A GROUNDING STRIP TO THE TERMINAL STRIP PANEL ON THE CABINET WALL FOR CONNECTION OF ALL COMMON CONDUCTORS WITH THE STRIP GROUNDING TO THE GROUND ROD.
   C. INSTALL THE HOUSING CABINET AS TO ALLOW ALL EQUIPMENT TO STAND IN AN UPRIGHT POSITION WITH ALL EQUIPMENT AND DEVICES CAPABLE OF BEING REMOVED BY PULLING STRAIGHT OUT AND NOT TURNING SIDEWAYS AND WITHOUT RELOCATING OR DISCONNECTING ONE DEVICE TO REMOVE ANOTHER DEVICE.
   D. PROVIDE THAT ALL CONNECTIONS ARE MADE ON TERMINAL BLOCKS USING SOLDERED SPADE TYPE CONNECTORS. PROVIDE THAT ALL HOUSING CABINET WIRING AND TERMINALS ARE CLEARLY MARKED AND LABELED AS SHOWN ON THE CABINET WIRING DIAGRAM DETAILS. PROVIDE THAT WIRING IS LACED OR BOUND TOGETHER WITH SELF-LOCKING NYLON TIE-WRAPS. MAKE A LOOP NUMBERING DIAGRAM WITH CORRESPONDING TERMINAL NUMBERS FOR EACH SITE AND STORE IN A PLASTIC WEATHER PROOF ENVELOP IN THE ENCLOSURE. PROVIDE A DUPLICATE DIAGRAM TO THE ODOT PROJECT INSPECTOR.
   E. INSTALL ALL HOUSING CABINETS SO AS TO WITHSTAND ALL WEATHER CONDITIONS AND PREVENT THE INTRUSION OF REPTILES, RODENTS, AND INSECTS.
   F. THE CABINET SHALL INCLUDE A VENT, BUT NO FAN.
   G. MOUNTING FACILITIES SHALL INCLUDE ONE BACK PANEL WITH 5 HOLES (ALUMINUM).
   H. TERMINAL STRIPS MOUNTED HORIZONTALLY ON BACK PANEL 2" FROM TOP AND SIDES EQUIDISTANTLY SPACED FOR 2 LANE APPLICATIONS. SOLAR PANEL AND GROUND BAR TO BE MOUNTED 2" FROM BOTTOM AND LEFT OF BACK PANEL FOR ALL APPLICATIONS. 4-6 LANE APPLICATIONS TO HAVE ONE ROW OF TWO TERMINAL STRIPS MOUNTED HORIZONTALLY 2" FROM TOP AND SIDES OF BACK PLATE AND ONE ROW OF TWO TERMINAL STRIPS MOUNTED 8" FROM TOP 2" FROM AND SIDES BACK PLATE EQUIDISTANTLY SPACED. 8 LANE APPLICATIONS TO HAVE TWO ROWS OF THREE TERMINAL BLOCKS W/ 1ST ROW 2" FROM TOP AND SIDES OF BACK PLATE AND SECOND ROW 8" FROM TOP AND 2" FROM SIDES OF BACK PLATE EQUIDISTANTLY SPACED.
   I. LOCKS KEYED TO STATE MASTER.
2. THE CABINET SHALL BE ORIENTED SO THAT THE DOOR OPENS AWAY FROM THE ROADWAY, SO THAT THE FIELD TECHNICIAN CAN OBSERVE TRAFFIC WHILE WORKING ON THE SYSTEM.

TERMINAL BLOCK DETAILS

2 LNS - 4 LOOPS - BEAU TYPE 78008 TERMINAL STRIP OR EQIVALENT

2 LNS - 4 LOOPS & 4 PIEZOS - BEAU TYPE 78008 TERMINAL STRIP OR EQIVALENT x 2

4 LNS - 8 LOOPS - BEAU TYPE 78016 TERMINAL STRIP OR EQIVALENT

4 LNS - 8 LOOPS & 8 PIEZOS - BEAU TYPE 78016 TERMINAL STRIP OR EQIVALENT x 2

6 LNS - 12 LOOPS - BEAU TYPE 78024 TERMINAL STRIP OR EQIVALENT

6 LNS - 12 LOOPS & 12 PIEZOS - BEAU TYPE 78024 TERMINAL STRIP OR EQIVALENT x 2

8 LNS - 16 LOOPS - BEAU TYPE 78016 TERMINAL STRIP OR EQIVALENT x 2

8 LNS - 16 LOOPS & 16 PIEZOS - BEAU TYPE 78016 TERMINAL STRIP OR EQIVALENT x 4

CALCULATED | CHECKED

DATE 01/29/99 05/11/99

NEMA SIZE 3 CABINET DETAILS

MED-71-15.78

554
940

SBW

DESIGN FILE: I:\pd_med_lr7\dgn\misc. details\med7latrl.dgn
USERNAME : nvondere
DATE : 01-DEC-1999
TIME : 11:20
DESIGN FILE: MEDTIATRL.dgn

4" EDGE LINE

LOCATION	STATION (Mainline Stationing)	Linear Feet White	Linear Feet Yellow
NORTHBOUND			
Northbound Lanes	833+00 to 870+93	3793	
	882+91 to 903+20	2029	
	930+05 to 970+35	4030	
	976+90 to 1084+32	10,742	
	1092+35 to 1120+94	2859	
	1131+44 to 1190+47	5903	
	1198+47 to 1222+09	2362	
	1232+59 to 1248+59	1600	
	1256+59 to 1270+46	1387	
	1280+96 to 1394+40	11,344	
	833+00 to 1394+40		56,140
	(Ramp Stationing)		
Exit Ramp "C", SR 18	870+93 (Mainline) to 0+00	28	
	0+00 to 19+75	1975	
	Distance Along Radius	115	
	11+78 to 20+28		850
Entrance Ramp "D", SR 18	Distance Along Radius	85	
	1+04 to 14+73	1369	
	905+73 (ML) to 930+05 (ML)	2432	
	0+35 to 11+23		1088
Exit Ramp IR 271 Eastbound	970+35 to 980+63	1028	
	976+93 to 980+63		370
Exit Ramp "B", SR 3	62+95 to 84+52	2157	
	Distance Along Radius	110	
	70+97 to 84+89		1392
Entrance Ramp "A", SR 3	Distance Along Radius	160	
	85+60 to 98+07	1247	
	98+07 to 1131+44 (Mainline)	1200	
	84+63 to 98+07		1344
Exit Ramp Rest Area	1190+47 (Mainline) to 72+50	345	
	72+50 to 84+99	1249	
	77+03 to 84+99		796
Entrance Ramp Rest Area	89+71 to 99+17	946	
	99+17 to 1232+59	1200	
	89+71 to 99+17		946
Exit Ramp "C", SR 303	1248+59 (Mainline) to 30+65	345	
	30+65 to 46+72	1607	
	Distance Along Radius	105	
	45+54 to 47+22	168	
	35+20 to 47+22		1202
	45+54 to 47+22		168
Entrance Ramp "D", SR 303	1280+96 (Mainline) to 34+01	1200	
	34+01 to 51+10	1709	
	34+01 to 45+54		1153
	45+54 to 47+10		156
	Continued		

4" EDGE LINE (CONTINUED)

LOCATION	STATION (Mainline Stationing)	Linear Feet White	Linear Feet Yellow
SOUTHBOUND			
Southbound Lanes	833+00 to 862+23	2923	
	872+73 to 899+51	2678	
	904+05 to 937+55	3350	
	969+27 to 1077+23	10,796	
	1087+73 to 1116+33	2860	
	1124+36 to 1140+38	1602	
	1151+58 to 1172+18	2060	
	1180+18 to 1241+31	6113	
	1251+81 to 1279+61	2780	
	1287+41 to 1394+40	10,699	
	833+00 to 1394+40		56,140
	(Ramp Stationing)		
Entrance Ramp "A", SR 18	0+00 to 25+67	2567	
	Distance Along Radius	170	
	11+93 to 26+64		1471
Exit Ramp "B", SR 18	Distance Along Radius	65	
	0+76 to 15+67	1491	
	0+36 to 11+13		1077
Ent Ramp IR 271 W Connecter	937+55 to 973+64	3609	
	970+12 to 973+64		352
Entrance Ramp "D", SR 3	1077+23 (Mainline) to 67+86	1200	
	67+86 to 80+32	1246	
	Distance Along Radius	165	
	67+86 to 80+30		1344
Exit Ramp "C", SR 3	Distance Along Radius	105	
	81+39 to 102+98	2159	
	81+03 to 94+97		1394
Entrance Ramp Rest Area	1140+38 (Mainline) to 31+00	1200	
	31+00 to 40+27	927	
	31+00 to 40+27		927
Exit Ramp Rest Area	45+15 to 55+36	1021	
	55+36 to 1180+18 (Mainline)	345	
	45+15 to 50+83		568
Entrance Ramp "B", SR 303	1241+31 (Mainline) to 31+94	1200	
	31+94 to 50+96	1902	
	31+94 to 46+44		1450
	46+44 to 48+05		161
Ramp "B" Spur	46+44 to 48+10	166	
	46+44 to 48+03		159
Exit Ramp "A", SR 303	46+12 to 62+58	1646	
	62+58 to 1287+41 (Mainline)	338	
	47+80 to 50+12		232
	50+12 to 58+16		804
Ramp "A" Spur	48+36 to 50+17	181	
	48+36 to 50+17		181
	Total Linear Feet	134,393	134,561
	Total Linear Feet	268,954	
Total Miles Carried to Pavement Marking Sum, Sheet 560		50.94	

8" CHANNELIZING LINE

LOCATION	STATION (Mainline Stationing)	Linear Feet White
NORTHBOUND		
Exit Ramp "C", SR 18	880+31 to 882+91	260
	880+31 to 11+78 (Ramp)	260
Entrance Ramp "D", SR 18	902+20 to 903+70	150
Exit Ramp IR 271 Eastbound	974+30 to 976+90	260
	974+30 to 976+93 (Ramp)	260
Exit Ramp "B", SR 3	1089+75 to 1092+35	260
	1089+75 to 70+97 (Ramp)	260
Entrance Ramp "A", SR 3	1119+44 to 1120+94	150
Exit Ramp Rest Area	1195+87 to 1198+47	260
	1195+87 to 77+03 (Ramp)	260
Entrance Ramp Rest Area	1220+59 to 1222+09	150
Exit Ramp "C", SR 303	1253+99 to 1256+59	260
	1253+99 to 35+20 (Ramp)	260
	44+00 (Ramp) to 47+05 (Ramp)	305
Entrance Ramp "D", SR 303	1268+96 to 1270+46	150
SOUTHBOUND		
Entrance Ramp "A", SR 18	872+73 to 874+23	150
Exit Ramp "B", SR 18	899+51 to 902+11	260
	11+13 (Ramp) to 902+11	260
	0+51 (Ramp) to 2+84 (Ramp)	233
Ent Ramp IR 271 W Connecter	969+27 to 970+27	100
Entrance Ramp "D", SR 3	1087+73 to 1089+23	150
Exit Ramp "C", SR 3	1116+33 to 1118+93	260
	94+97 (Ramp) to 1118+93	260
Entrance Ramp Rest Area	1150+88 to 1152+38	150
Exit Ramp Rest Area	1172+18 to 1174+78	260
	50+83 (Ramp) to 1174+78	260
Entrance Ramp "B", SR 303	1251+81 to 1253+31	150
	48+05 (Ramp) to 49+15 (Ramp)	110
Exit Ramp "A", SR 303	1279+61 to 1282+11	260
	58+16 (Ramp) to 1282+11	260
Ramp "A" Spur	48+55 (Spur) to 51+72 (Spur)	317
Total Carried to Pavement Marking Summary, Sheet 560		6945

NOTE: For I-271 quantities not shown see Sheet 421

DESIGN FILE : i:\pd_med_ir71\dgn\pavemark\medpm.dgn
USERNAME : nvondere
DATE : 06-DEC-1999
TIME : 07:57

CALCULATED NJV
CHECKED jwp

PAVEMENT MARKING

MED-71-15.78

555
940

4" LANE LINE

LOCATION	STATION (Mainline Stationing)	Linear Feet White
NORTHBOUND		
Northbound Lanes	833+00 to 1394+00	56,100
	1263+00 to 1394+00	13,100
Exit Ramp "C", SR 18	876+11 to 880+31	420
Entrance Ramp "D", SR 18	1+00 (Ramp) to 14+73 (Ramp)	1373
	905+73 to 930+05	2432
Ent Ramp "D" to Exit IR 271 EB	903+70 to 974+30	7060
Exit Ramp "B", SR 3	1087+55 to 1089+75	220
Entrance Ramp "A", SR 3	1120+94 to 1123+74	280
Exit Ramp Rest Area	1193+67 to 1195+87	220
Entrance Ramp Rest Area	1222+09 to 1224+89	280
Exit Ramp "C", SR 303	1251+79 to 1253+99	220
Entrance Ramp "D", SR 303	1270+46 to 1273+26	280
SOUTHBOUND		
Southbound Lanes	833+00 to 1394+00	56,100
	1263+00 to 1394+00	13,100
Entrance Ramp "A", SR 18	869+93 to 872+73	280
Exit Ramp "B" to Ent IR 271 W	902+11 to 969+27	6716
Ent Ramp IR 271 W Connecter	945+95 to 973+64	2769
Entrance Ramp "D", SR 3	1084+93 to 1087+73	280
Exit Ramp "C", SR 3	1118+93 to 1121+13	220
Entrance Ramp Rest Area	1148+08 to 1150+88	280
Exit Ramp Rest Area	1174+78 to 1176+98	220
Entrance Ramp "B", SR 303	1249+01 to 1251+81	280
Exit Ramp "A", SR 303	1282+11 to 1284+41	220
	Total Linear Feet	162,450
Total Miles Carried to Pavement Marking Sum, Sheet 560		30.77

24" STOP LINE

LOCATION	STATION (Ramp Stationing)	Linear Feet White
NORTHBOUND		
Exit Ramp "C", SR 18	20+16	35
Exit Ramp "B", SR 3	84+83	35
Exit Ramp "C", SR 303	47+05	36
SOUTHBOUND		
Exit Ramp "B", SR 18	0+51	35
Exit Ramp "C", SR 3	81+10	32
Exit Ramp "A" Spur, SR 303	48+55	26
Total Carried to Pavement Marking Summary, Sheet 560		199

24" TRANSVERSE LINE

LOCATION	STATION (Mainline Stationing)	Linear Feet White
NORTHBOUND		
Exit Ramp "C", SR 18	880+31 to 882+91	325
Exit Ramp IR 271 Eastbound	974+30 to 976+90	325
Exit Ramp "B", SR 3	1089+75 to 1092+35	325
Exit Ramp Rest Area	1195+87 to 1198+47	325
Exit Ramp "C", SR 303	1253+99 to 1256+59	325
SOUTHBOUND		
Exit Ramp "B", SR 18	899+51 to 902+11	325
Exit Ramp "C", SR 3	1116+33 to 1118+93	325
Exit Ramp Rest Area	1172+18 to 1174+78	325
Exit Ramp "A", SR 303	1279+61 to 1282+11	325
Total Carried to Pavement Marking Summary, Sheet 560		2925

WORD "ONLY" ON PAVEMENT, 96"

LOCATION	STATION (Ramp Stationing)	Each White
NORTHBOUND		
Exit Ramp "C", SR 303	45+30	2
SOUTHBOUND		
Exit Ramp "B", SR 18	1+94	2
Exit Ramp "A" Spur, SR 303	49+55	2
	50+85	1
Total Carried to Pavement Marking Summary, Sheet 560		7

6" CROSSWALK LINE

LOCATION	STATION (Ramp Stationing)	Linear Feet White
NORTHBOUND		
Exit Ramp "C", SR 303	47+11	150
Entrance Ramp "D", SR 303	47+33	32
SOUTHBOUND		
Entrance Ramp "B", SR 303	48+30	32
Ramp "B" Spur	47+93	50
Exit Ramp "A", SR 303	48+25	32
Ramp "A" Spur	48+49	65
Total Carried to Pavement Marking Summary, Sheet 560		361

LANE ARROWS

LOCATION	STATION (Ramp Stationing)	Each White
NORTHBOUND		
Exit Ramp "C", SR 303	44+30	2
	46+30	2
SOUTHBOUND		
Exit Ramp "B", SR 18	1+14	2
	2+74	2
Exit Ramp "A" Spur, SR 303	49+00	2
	50+10	2
	51+60	1
Total Carried to Pavement Marking Summary, Sheet 560		13

4" PARKING LOT STALL MARKING

LOCATION	STATION (Rest Area Stationing)	Linear Feet White
NORTHBOUND		
Rest Area	185+66 to 189+48	1125
SOUTHBOUND		
Rest Area	140+59 to 144+41	1125
Total Carried to Pavement Marking Summary, Sheet 560		2250

HANDICAP SYMBOL MARKING

LOCATION	STATION (Rest Area Stationing)	Each White
NORTHBOUND		
Rest Area	188+53	1
	188+77	1
SOUTHBOUND		
Rest Area	142+85	1
	143+09	1
Total Carried to Pavement Marking Summary, Sheet 560		4

DESIGN FILE : i:\pd_med_lr71\dgn\pavemark\medpm.dgn
USERNAME : nvonder
DATE : 06-DEC-1999
TIME : 07:58

CALCULATED NJ / CHECKED

PAVEMENT MARKING

MED-71-15.78

556
940

RAISED PAVEMENT MARKERS

LOCATION	STATION	@ LANE LINES 1-Way @ 120' Spa. White Each	@ EDGE LINES 2-Way @ 80' Spa. Yellow/Red Each	@ CHANNELIZING LINES 2-Way @ 40' Spa. White/Red Each
	(Mainline Stationing)			
NORTHBOUND				
Northbound Lanes	833+50 to 1393+90	468		
	(Ramp Stationing)			
Exit Ramp "C", SR 18	880+31 (ML) to 882+71 (ML)			7
	880+31(ML) to 11+58			7
	12+38 to 19+58		10	
Entrance Ramp "D", SR 18	1+13 to 10+73		13	
	902+50 (ML) to 903+70 (ML)			4
Northbound Lanes	904+80 (ML) to 973+20 (ML)	58		
Exit Ramp IR 271 Eastbound	974+30 (ML) to 976+70 (ML)			7
	974+30 (ML) to 975+73			7
	976+53 to 980+53		6	
Exit Ramp "B", SR 3	1089+75 (ML) to 1092+15 (ML)			7
	1089+75 (ML) to 70+77			7
	71+57 to 84+37		17	
Entrance Ramp "A", SR 3	84+77 to 97+57		17	
	1119+74 (ML) to 1120+94 (ML)			4
Exit Ramp Rest Area	1195+87 (ML) to 1198+27 (ML)			7
	1195+87 (ML) to 76+83			7
	77+63 to 84+83		10	
Entrance Ramp Rest Area	89+87 to 98+67		12	
	1220+89 (ML) to 1222+09 (ML)			4
Exit Ramp "C", SR 303	1253+99 (ML) to 1256+39 (ML)			7
	1253+99 (ML) to 35+00			7
	35+80 to 47+00		15	
	44+00 to 47+05			9
Lt.	45+70 to 46+50		2	
Entrance Ramp "D", SR 303	47+15 to 48+35			4
	45+60 to 46+40		2	
	34+50 to 44+90		14	
	1269+26 (ML) to 1270+46 (ML)			4
	Continued			

LOCATION	STATION	@ LANE LINES 1-Way @ 120' Spa. White Each	@ EDGE LINES 2-Way @ 80' Spa. Yellow/Red Each	@ CHANNELIZING LINES 2-Way @ 40' Spa. White/Red Each
	(Mainline Stationing)			
SOUTHBOUND				
Southbound Lanes	833+50 to 1393+90	468		
	(Ramp Stationing)			
Entrance Ramp "A", SR 18	872+73 (ML) to 873+93 (ML)			4
	12+43 to 26+03		18	
Exit Ramp "B", SR 18	0+50 to 2+84			7
	1+23 to 10+83		13	
	11+13 to 902+11 (ML)			7
	899+71 (ML) to 902+11 (ML)			7
Southbound Lanes	903+30 (ML) to 968+10 (ML)	55		
Ent Ramp IR 271 W Connecter	969+27 (ML) to 970+07 (ML)			3
	970+92 to 977+32		9	
Entrance Ramp "D", SR 3	1087+73 (ML) to 1088+93 (ML)			4
	68+36 to 81+16		17	
Exit Ramp "C", SR 3	81+57 to 94+37		17	
	95+17 to 1118+93 (ML)			7
	1116+53 (ML) to 1118+93 (ML)			7
Entrance Ramp Rest Area	1150+88 (ML) to 1152+08 (ML)			4
	31+50 to 40+30		12	
Exit Ramp Rest Area	45+43 to 50+23		7	
	51+03 to 1174+78 (ML)			7
	1172+38 (ML) to 1174+78 (ML)			7
Entrance Ramp "B", SR 303	1251+81 (ML) to 1253+01 (ML)			3
	32+44 to 45+24		17	
	46+75 to 47+55		2	
	48+35 to 49+15			3
Ramp "B" Spur	46+04 to 47+63		3	
Exit Ramp "A", SR 303	47+70 to 50+10		4	
	53+56 to 57+56		6	
	58+36 to 1282+11 (ML)			7
	1279+71 (ML) to 1282+11 (ML)			7
Ramp "A" Spur	48+55 to 51+72			9
	48+76 to 52+76		6	
	Subtotals	1049	249	192
Total Carried to Pavement Marking Summary, Sheet 560		1490		

NOTE: For I-271 quantities not shown see Sheet 421.

DESIGN FILE : i:\pd_med_lr71\dgn\pavemark\medpm.dgn
USERNAME : nvondere

DATE : 06-DEC-1999
TIME : 08:02

CALCULATED NJV
CHECKED gwp

PAVEMENT MARKING

MED-71-15.78

557
940

DELINEATORS

LOCATION	STATION	DELINEATOR Type C Each	DELINEATOR Type D Each	SPACING Feet
	(Mainline Stationing)			
NORTHBOUND				
Northbound Lanes	833+00 to 869+00	10		400
	886+00 to 898+00	4		400
	910+00 to 966+00	15		400
	979+00 to 1083+00	27		400
	1095+50 to 1111+50	5		400
	1133+50 to 1189+50	15		400
	1201+50 to 1213+50	4		400
	1232+00 to 1248+00	5		400
	1259+00 to 1263+00	2		400
	1284+00 to 1392+00	28		400
	(Ramp Stationing)			
Exit Ramp "C", SR 18	0+00 to 12+00	7		200
	12+00		1	-
	13+10 to 15+50		4	80
	16+50	1	1	-
	17+50 to 19+00	4		50
	20+00	1		-
Entrance Ramp "D", SR 18	1+50 to 9+50		5	200
	9+50 to 15+50	4		200
Exit Ramp IR 271 Eastbound	969+00 to 977+00	5		200
	977+00 to 981+00		3	200
Exit Ramp "B", SR 3	65+10 to 71+10	4		200
	71+10 to 79+10		5	200
	79+10 to 84+10	6		100
Entrance Ramp "A", SR 3	85+00 to 93+00		5	200
	93+00 to 1130+40 (ML)	9		200
Exit Ramp Rest Area	1192+50 (ML) to 77+10	4		200
	77+10 to 85+10		5	200
Entrance Ramp Rest Area	90+50 to 94+50		3	200
	94+50 to 1230+00 (ML)	8		200
Exit Ramp "C", SR 303	1250+70 (ML) to 35+30	4		200
	35+30		1	-
	36+90 to 40+10		5	80
	41+30	1	1	-
	42+50 to 45+00	6		50
	46+00 to 47+00	2		100
Entrance Ramp "D", SR 303	45+80 to 47+30		4	50
	38+20 to 43+70		12	50
	38+20	1		-
	37+20 to 1279+80 (ML)	8		200
	Continued			

LOCATION	STATION	DELINEATOR Type C Each	DELINEATOR Type D Each	SPACING Feet
	(Mainline Stationing)			
SOUTHBOUND				
Southbound Lanes	833+00 to 861+00	7		400
	882+00 to 898+00	5		400
	909+00 to 961+00	14		400
	974+00 to 1078+00	27		400
	1097+50 to 1113+50	5		400
	1124+50 to 1140+50	5		400
	1158+50 to 1170+50	4		400
	1180+00 to 1240+00	16		400
	1261+00 to 1277+00	5		400
	1288+00 to 1392+00	27		400
	(Ramp Stationing)			
Entrance Ramp "A", SR 18	1+50 to 17+50	9		200
	17+50 to 25+50		5	200
Exit Ramp "B", SR 18	0+80 to 3+80	7		50
	4+80	1	1	-
	6+20		1	-
	7+80 to 9+40		3	80
	11+00		1	-
	11+00 to 905+40 (ML)	4		200
Ent Ramp IR 271 W Connecter	965+00 to 973+00	5		200
	973+00 to 977+00		5	100
Entrance Ramp "D", SR 3	1080+30 (ML) to 72+90	8		200
	72+90 to 80+90		5	200
Exit Ramp "C", SR 3	81+40 to 86+80	7		90
	86+80 to 94+80		5	200
	94+80 to 100+80	4		200
Entrance Ramp Rest Area	1142+85 (ML) to 35+50	8		200
	35+50 to 39+50		3	200
Exit Ramp Rest Area	45+15 to 46+75	3		80
	46+75 to 50+75		3	200
	50+75 to 1178+10 (ML)	4		200
Entrance Ramp "B", SR 303	1242+50 (ML) to 37+10	9		200
	37+10 to 45+10		5	200
	47+00 to 48+20		3	60
Ramp "B" Spur	47+10		1	-
Exit Ramp "A", SR 303	48+20 to 49+70		4	50
	52+00 to 58+00		4	200
	58+00 to 1285+45 (ML)	4		200
Ramp "A" Spur	49+00 to 50+50		2	150
Totals Carried to Pavement Marking Summary, Sheet 560		378	106	

NOTE: For I-271 quantities not shown see Sheet 421.

CALCULATED NJJ | CHECKED gwR

PAVEMENT MARKING

MED-71-15.78

558
940

DESIGN FILE : i:\pd_med_lr71\dgn\pavemark\medpm.dgn
USERNAME : nvondere

DATE : 06-DEC-1999
TIME : 08:02

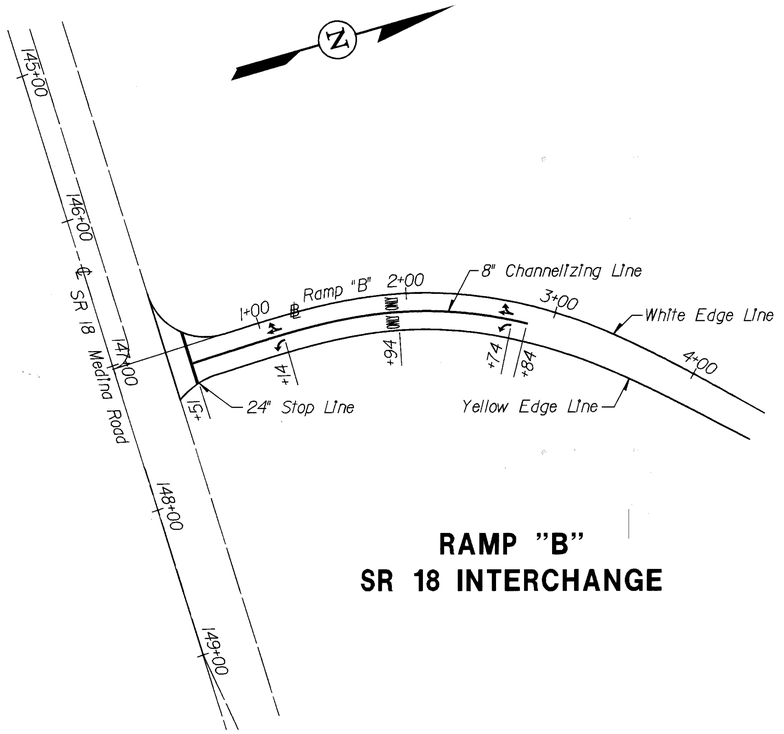

RAMP "B"
SR 18 INTERCHANGE

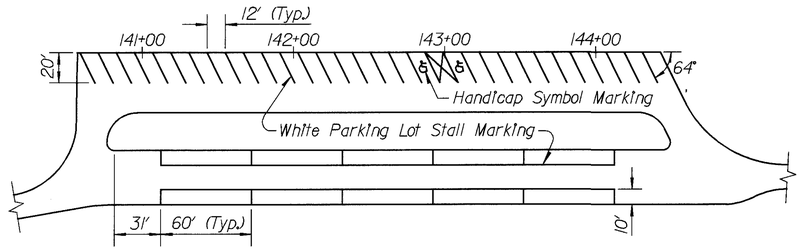

SOUTHBOUND REST AREA

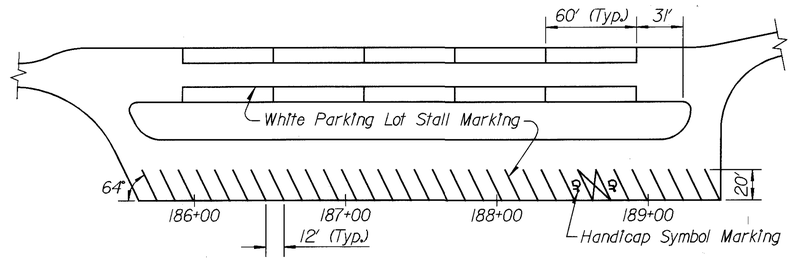

NORTHBOUND REST AREA

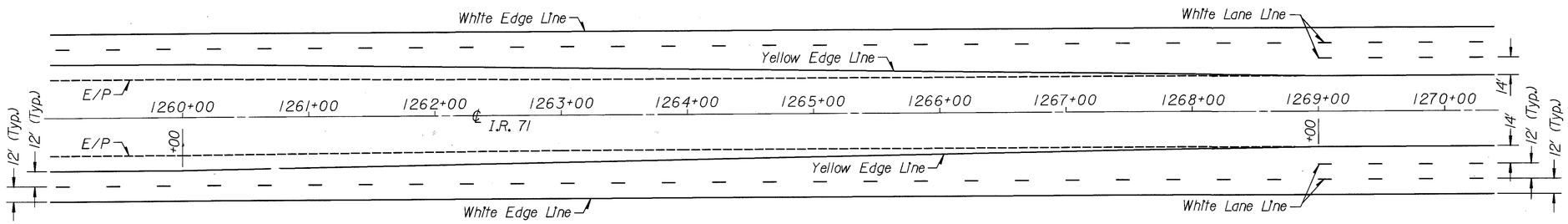

I.R. 71 LANE TRANSITION

DESIGN FILE : i:\pd_med_ir71\dgn\pavemark\medpm2.dgn
USERNAME : nvondere

DATE : 06-DEC-1999
TIME : 08:10

CALCULATED | CHECKED

PAVEMENT MARKING DETAILS

MED-71-15.78

559
940

NOTE: PAVEMENT MARKINGS

THE FOLLOWING PAVEMENT MARKINGS SHALL BE APPLIED TO THE NEW PAVEMENT IN THE MEDIANS OF SR 3 AND SR 303: SOLID DOUBLE CENTERLINES AND YELLOW TRANSVERSE LINES SHALL BE PLACED TO THE NOSE OF THE IMPACT ATTENUATOR. YELLOW EDGE LINES SHALL BE PLACED DOWN EACH SIDE OF THE ATTENUATOR AND BARRIER.

THE FOLLOW QUANTITIES ARE PROVIDED FOR THIS WORK:

ITEM **887** - CENTER LINE 0.68 MILE

ITEM **887** - EDGE LINE 0.11 MILE

ITEM **644** - TRANSVERSE LINE 800 LIN. FT.

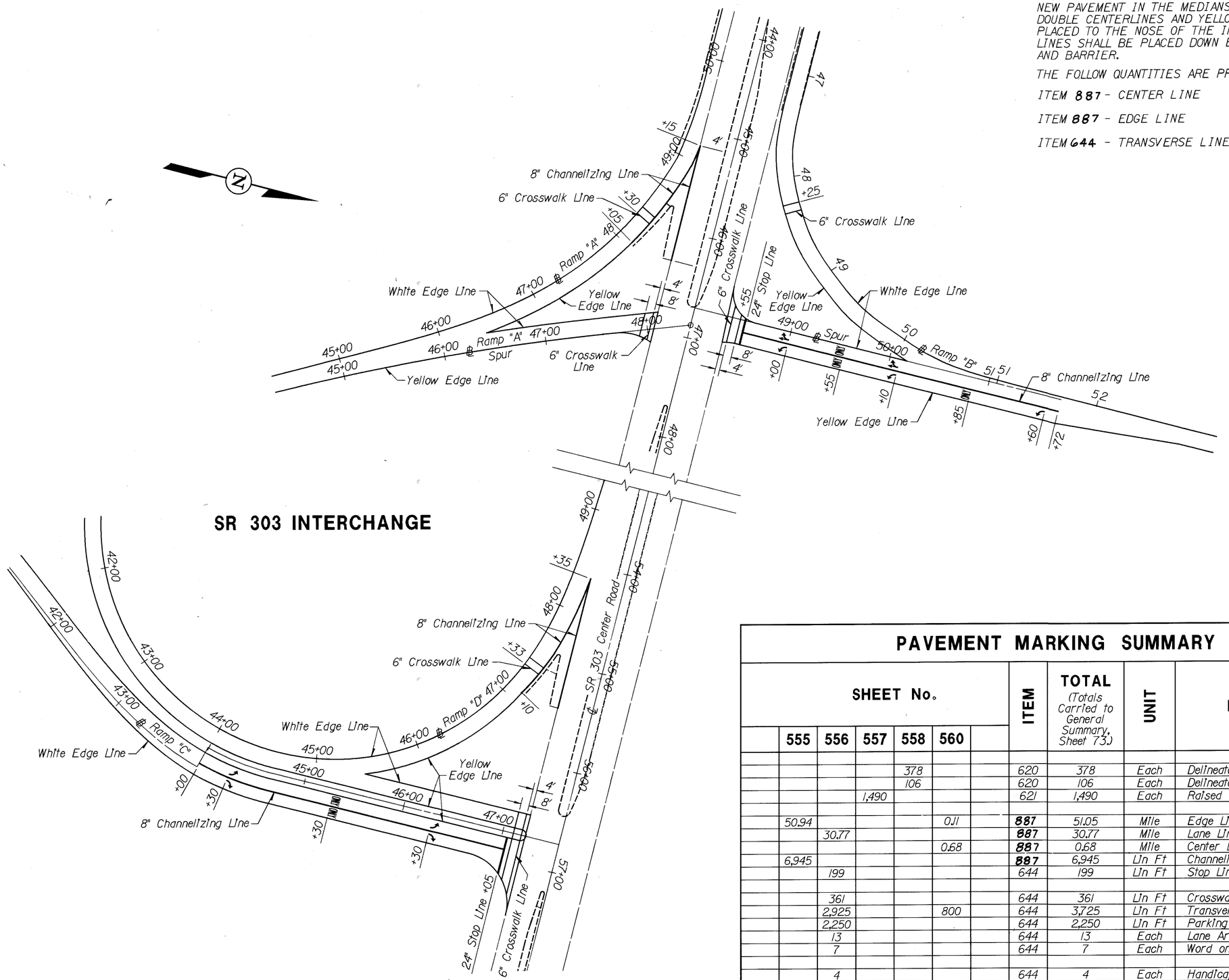

PAVEMENT MARKING SUMMARY

SHEET No. 555	556	557	558	560		ITEM	TOTAL (Totals Carried to General Summary, Sheet 73.)	UNIT	DESCRIPTION
			378			620	378	Each	Delineator, Type C, Post Mounted
			106			620	106	Each	Delineator, Type D, Post Mounted
		1,490				621	1,490	Each	Raised Pavement Marker
50.94				0.11		**887**	51.05	Mile	Edge Line (5 Year Warranty)
	30.77					**887**	30.77	Mile	Lane Line (5 Year Warranty)
				0.68		**887**	0.68	Mile	Center Line (5 Year Warranty)
6,945						**887**	6,945	Lin Ft	Channelizing Line (5 Year Warranty)
	199					644	199	Lin Ft	Stop Line
	361					644	361	Lin Ft	Crosswalk Line
	2,925			800		644	3,725	Lin Ft	Transverse Line
	2,250					644	2,250	Lin Ft	Parking Lot Stall Marking
	13					644	13	Each	Lane Arrow
	7					644	7	Each	Word on Pavement, 96"
	4					644	4	Each	Handicap Symbol Marking

CALCULATED NJV CHECKED JWR

PAVEMENT MARKING SUMMARY & DETAILS

MED-71-15.78

560/940

DATE : 06-DEC-1999 TIME : 08:14

DESIGN FILE : i:\pd_med_ir71\dgn\pavemark\medpm2.dgn USERNAME : nvondere

REF-FILE *1:\NDA_MED_JRT\DGN\LGMTG\alignmnt.dgn
REF-FILE *1 LEVELS ON:1\L21.641
REF-FILE *2:\NDA_MED_JRT\DGN\Lighting\conventional.dgn
REF-FILE *2 LEVELS ON:1\35,37,38,641
REF-FILE *3:\NDA_MED_JRT\DGN\abc2dembu.dgn
REF-FILE *3 LEVELS ON:1\641
REF-FILE *4:\NDA_MED_JRT\DGN\ygrdrail.dgn
REF-FILE *4 LEVELS ON:1\641

QUANTITIES
CALC BY CVH
DATE 12/97
CHKD BY MJS
DATE: 12/97

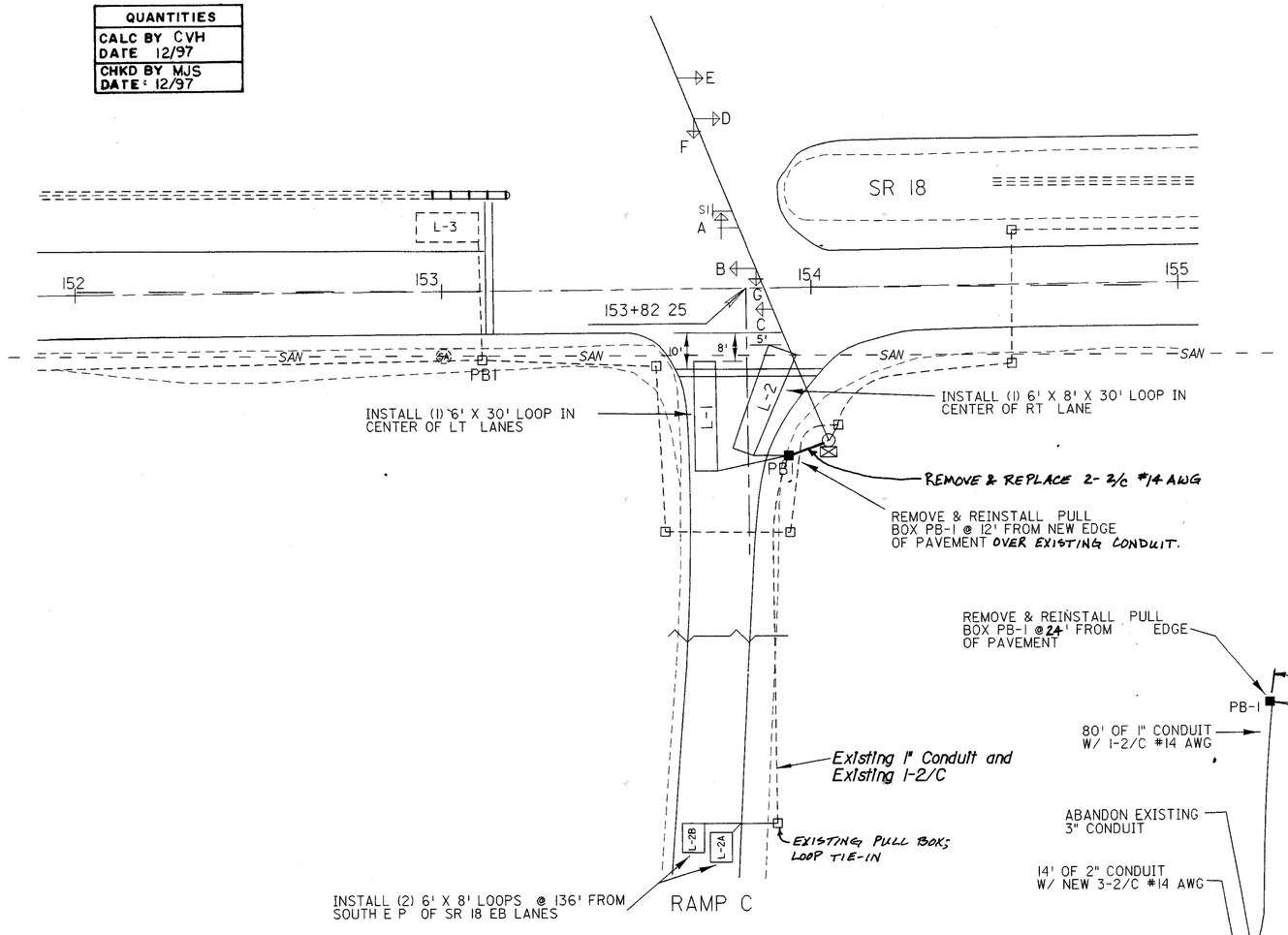

RAMP B SR 18				
ITEM	ITEM EXT	TOTAL	UNIT	DESCRIPTION
625	25100	80	LIN FT	CONDUIT, 1", 713 04
625	25400	24	LIN FT	CONDUIT, 2", 713.04
625	25500	25	LIN FT	CONDUIT, 3", 713 04
625	29000	119	LIN FT.	TRENCH
625	31600	3	EACH	PULL BOX, MISC : REMOVED AND REINSTALLED, 713 08, 18"
632	65300	945	LIN FT	LOOP DETECTOR LEAD-IN CABLE, 2/C, #14 AWG.
632	26500	5	EACH	DETECTOR LOOP
632	27201	1	EACH	LOOP DETECTOR TIE -IN, AS PER PLAN

NOTE: All Quantities Carried to the Traffic Control General Summary. See Sheets 562 & 563.

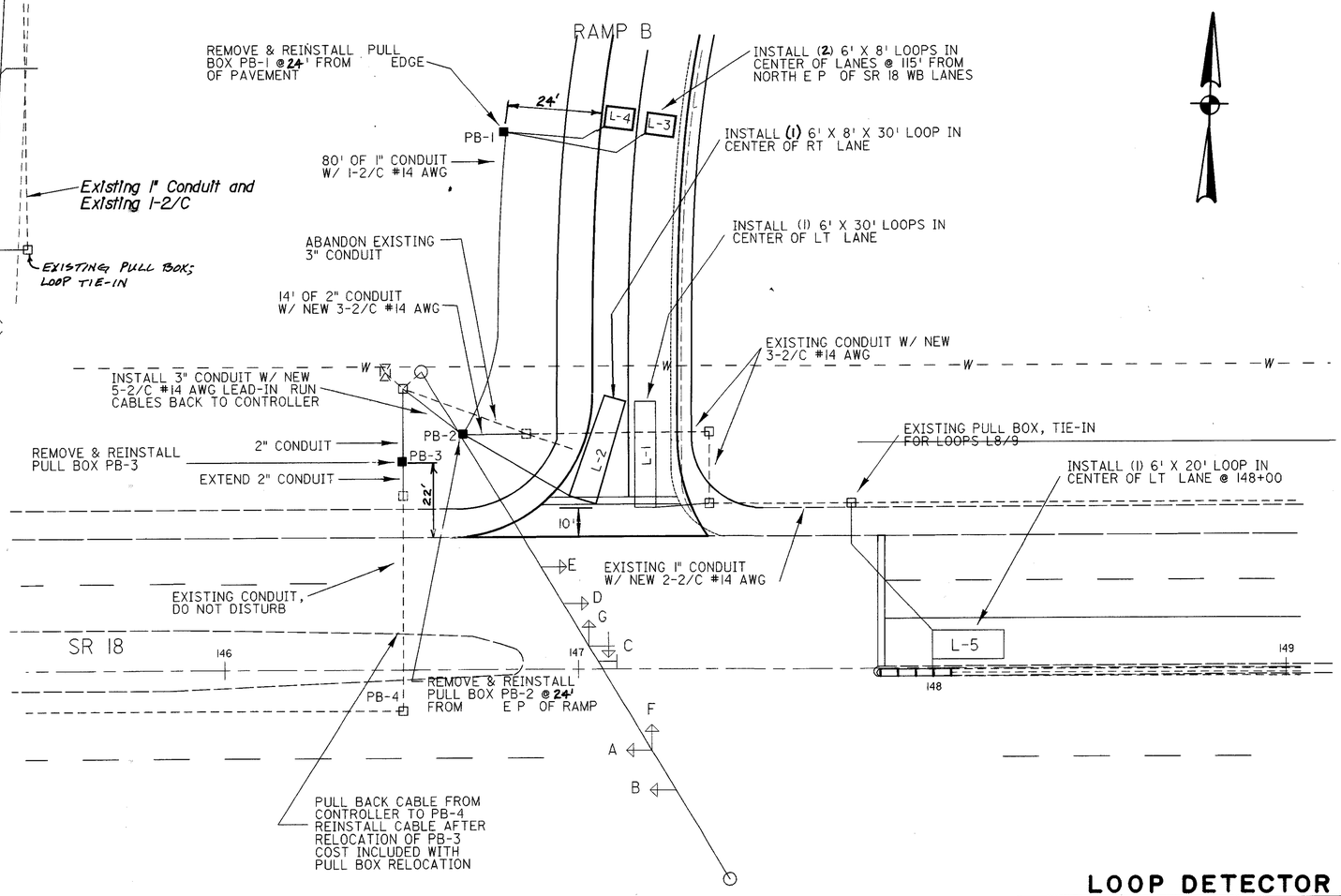

RAMP C SR 18				
ITEM	ITEM EXT	TOTAL	UNIT	DESCRIPTION
632	26500	4	EACH	DETECTOR LOOP
632	27201	3	EACH	LOOP DETECTOR TIE -IN, AS PER PLAN
625	31600	1	EACH	PULL BOX, MISC : REMOVED AND REINSTALLED, 713 08, 18"
632	65300	50	LIN. FT.	LOOP DETECTOR LEAD-IN CABLE 2/C #14 AWG

NOTE: All Quantities Carried to the Traffic Control General Summary. See Sheets 562 & 563.

HORIZONTAL SCALE IN FEET
0 10 20 40

CALCULATED | CHECKED

LOOP DETECTOR
Ramps B & C @ S.R. 18

MED-71-15.78

560A
940

LOOP DETECTOR
RAMPS B&C @ S.R. 18

RASTER REFERENCE FILE: 357ANF.tif
FILENAME: \\OPS_MED_JRT\DGN\LGMTG\BSCH-3.dgn
DATE & TIME: 26-NOV-1999 09:08
USERNAME: mfox
PROJECT: NONE
LEVELS ON:1\641
PLOT QUEUE: \\OPS\PLOT1pce
RSRC TABLES: H:\Bstd\dgn\pdfCodeCross.DCE.pen

QUANTITIES
CALC. BY: CVH DATE: 12/97
CHKD. BY: MJS DATE: 12/97

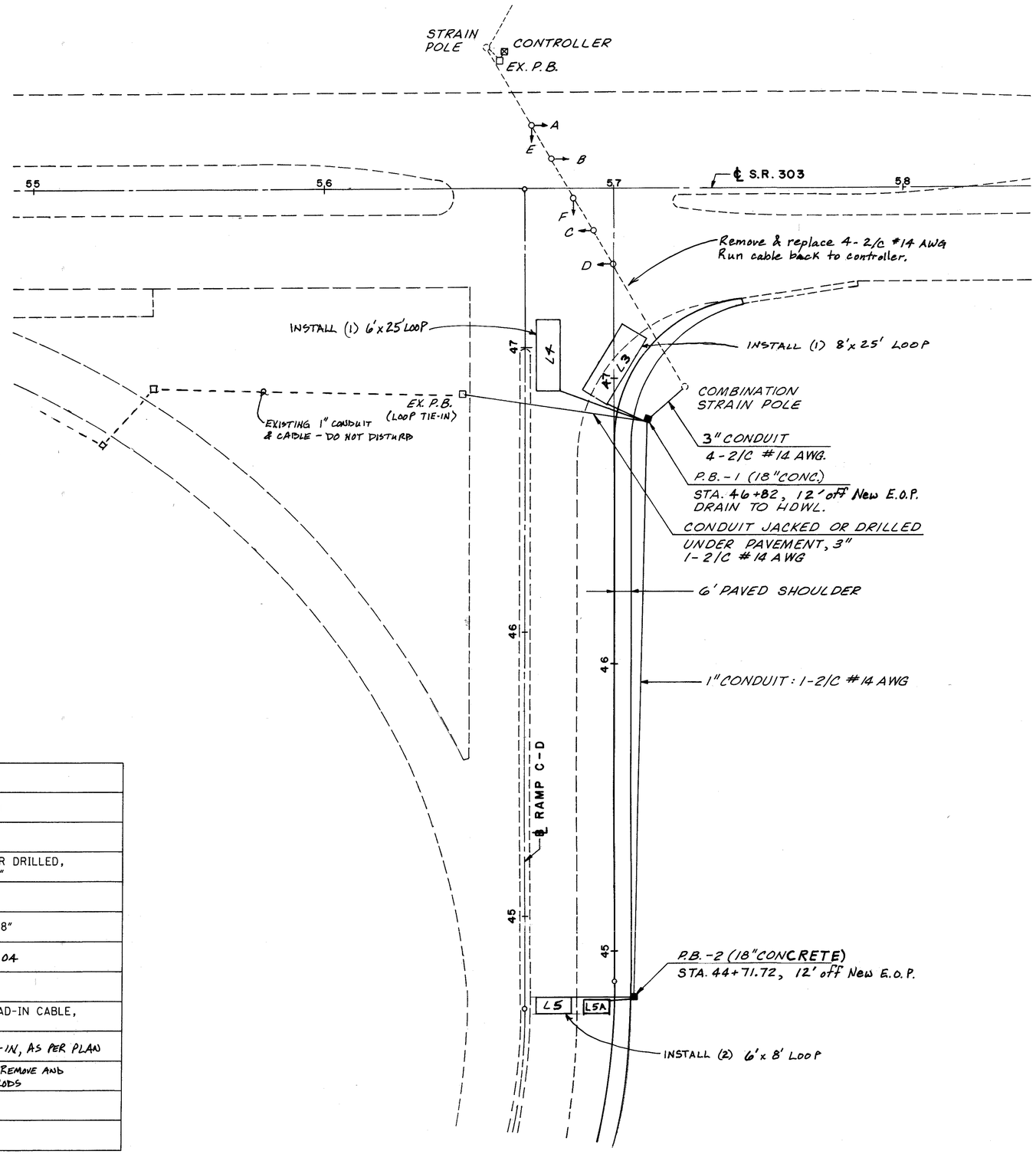

RAMP W SR 303				
ITEM	ITEM EXT.	TOTAL	UNIT	DESCRIPTION
625	25100	196	LIN. FT.	CONDUIT, 1", 713.04
625	25900	84	LIN. FT.	CONDUIT, JACKED OR DRILLED, UNDER PAVEMENT 3"
625	29000	218	LIN. FT.	TRENCH
625	30700	2	EACH	PULL BOX, 713.08, 18"
625	25500	18	LIN. FT.	CONDUIT, 3", 713.04
632	26500	4	EACH	DETECTOR LOOP
632	65300	1119	LIN. FT.	LOOP DETECTOR LEAD-IN CABLE, 2/C, #14 AWG
632	27200	1	EACH	LOOP DETECTOR TIE-IN, AS PER PLAN
632	90500	134	LIN. FT.	SIGNALIZATION, MISC.: REMOVE AND REPLACE LASHING RODS

NOTE: All Quantities Carried to the Traffic Control General Summary. See Sheets 562 & 563.

HORIZONTAL SCALE IN FEET
0 20 40

CALCULATED | CHECKED

LOOP DETECTOR
RAMP CD @ S.R. 303

MED-71-15.78

560B
940

LOOP DETECTOR
RAMP W @ S.R. 303

REF.FILE #1 LEVELS ON:
REF.FILE #2 LEVELS ON:
REF.FILE #3 LEVELS ON:
REF.FILE #4 LEVELS ON:

DESIGN FILE : i:\pd_MED_JR71\DGN\Lighting\7885CP2.dgn
USERNAME : mfox
DATE : 26-NOV-1999
TIME : 09:18

LEVELS ON:1-64
PLOT QUEUE:\\DOIPLOT\bos
REF: i:\tables\dgn\bosCrossSec.pen

RASTER REFERENCE FILES:357.tif

FILENAME:\\BOS_MED_JR71\pd_MED_JR71\DGN\Lighting\7885CP2.dgn
DATE & TIME: 26-NOV-1999 09:18
USERNAME: mfox
PROJECT: NONE

REMOVAL OF OHIO LOGO SIGNS

ALL SIGNS LISTED ON THIS PROJECT AS "REMOVED BY OTHERS" ARE THE PROPERTY OF OHIO LOGOS, INC.

OHIO LOGOS, INC. IS RESPONSIBLE FOR REMOVAL AND REERECTION OF THE LOGO SIGNS. THE CONTRACTOR SHALL CONTACT OHIO LOGOS, INC. (1-800-860-5646) IN WRITING A MINIMUM OF THIRTY (30) DAYS PRIOR TO THE PROJECT BEGINNING DATE. THIS INFORMATION SHALL BE SENT TO:

OHIO LOGOS, INC.
4384 TULLER RD.
DUBLIN, OH 43017
ATTN: ROGER ROSE, GENERAL MANAGER

THE CONTRACTOR, AT THE COMPLETION OF THIS PROJECT, SHALL NOTIFY OHIO LOGOS, INC. THAT THEY CAN REERECT THE SIGNS THAT HAD BEEN PREVIOUSLY REMOVED.

FREEWAY LOCATION IDENTIFICATION SYSTEM SIGNS

THESE SIGNS CONSIST OF A MAINLINE MARKER (N-44B) OR RAMP MARKER (N-43B), ATTACHED TO GUIDE AND DESTINATION SIGNS WITH AN ITEM 630 SIGN BACKING ASSEMBLY IF ATTACHED TO A GROUND-MOUNTED SIGN OR AN ITEM 630 SIGN SUPPORT ASSEMBLY, POLE MOUNTED IF ATTACHED TO THE VERTICAL MEMBER OF AN OVERHEAD SIGN STRUCTURE.

THE CONTRACTOR SHALL DETERMINE THE CORRECT STRAIGHT LINE MILEAGE, IN HUNDREDTH'S OF A MILE, FOR EACH SIGN BASED ON THE FINAL LOCATION OF THE SIGN. THE CORRECT MILEAGE SHALL BE DETERMINED ONLY AFTER THE MILE MARKERS HAVE BEEN LOCATED BY THE DEPARTMENT. THE PLAN SHOWS THE ROUTE NUMBER, ROUTE DIRECTION AND THE RAMP CODES (WHERE APPLICABLE). SEE SHEET NO. 575 FOR DETAILS. THE CONTRACTOR SHALL PROVIDE THE ENGINEER WITH A RECORD OF THE STRAIGHT LINE MILEAGE FOR EACH FREEWAY LOCATION IDENTIFICATION SYSTEM SIGN.

PAYMENT FOR THIS WORK SHALL BE INCLUDED IN THE UNIT PRICE BID PER SQUARE YARD FOR ITEM 630, SIGN, FLAT SHEET, TYPE G. THE REQUIRED ITEM 630, SIGN BACKING ASSEMBLY OR ITEM 630 SIGN SUPPORT ASSEMBLY, POLE MOUNTED ARE PAID SEPARATELY AS INDICATED.

SIGNS REPLACEMENTS

WITH RESPECT TO THE REPLACEMENT OF EXISTING SIGNS THE CONTRACTOR SHALL IN NO CASE REMOVE A SIGN UNLESS THE APPLICABLE REPLACEMENT CAN BE ERECTED WITHIN THE SAME WORKING DAY.

HIGHWAY LIGHTING

THERE IS EXISTING HIGHWAY LIGHTING ON THIS PROJECT. PLEASE CALL THE ODOT DISTRICT ROADWAY SERVICES MANAGER (419)281-0513 Ext. 341 TWO (2) WEEKS PRIOR TO CONSTRUCTION FOR THE LOCATION OF UNDERGROUND LIGHTING CIRCUITRY.

MILE MARKER LOCATION

THE LOCATION OF MILE MARKERS ON THESE PLANS ARE APPROXIMATE AND A MORE PRECISE LOCATION WILL BE PROVIDED BY THE DEPARTMENT. THE CONTRACTOR SHALL NOTIFY THE ENGINEER AT LEAST THIRTY (30) DAYS IN ADVANCE OF THE PLANNED DATE OF MILE MARKER INSTALLATION. THE ENGINEER WILL CONTACT THE OFFICE OF TECHNICAL SERVICES (614)466-4224 WHICH WILL LOCATE THE LONGITUDINAL POSITION OF MILE MARKER, BY MEANS OF A PAINT MARK ON THE PAVEMENT EDGE. ALTERNATE MARKS WILL NOT BE PROVIDED ON DIVIDED HIGHWAYS AND THE CONTRACTOR SHALL SET MARKS FOR THE OPPOSITE ROADWAY ACROSS FROM THE PROVIDED MARK. ANY EXISTING DELINEATORS FALLING WITHIN 50' OF A MILE MARKER SHALL BE REMOVED. REMOVAL OF ANY DELINEATORS SHALL BE INCLUDED IN THE LUMP SUM PRICE BID FOR ITEM 201 - CLEARING AND GRUBBING, AS PER PLAN.

ITEM 201 - CLEARING AND GRUBBING, AS PER PLAN

CLEARING AND GRUBBING SHALL BE PERFORMED IN AREAS AS DIRECTED BY THE ENGINEER TO PROVIDE ADEQUATE CLEAR SIGHT DISTANCE TO SIGNS ERECTED AS PART OF THIS PLAN. SEE SHEET NO. 561A FOR GUIDE FOR CLEARING AND GRUBBING.

IN ADDITION TO THE REQUIREMENTS OF ITEM 201, ALL VEGETATION MECHANICALLY REMOVED BY CUTTING OR MOWING SHALL HAVE A CUT STUMP HERBICIDE TREATMENT APPLIED TO EACH INDIVIDUL REMAINING STUMP WITHIN TWO (2) HOURS OF CUTTING. CARE SHALL BE EXERCISED TO APPLY TREATMENT ONLY TO INDIVIDUAL STUMPS SO AS NOT TO HARM OTHER VEGETATION. THE CUT STUMP TREATMENT SHALL BE GARLON 4 OR PATHFINDER II RTU APPLIED IN ACCORDANCE WITH LABEL DIRECTIONS. APPLICATORS OF THE CUT STUMP TREATMENT SHALL BE CURRENTLY LICENSED OHIO COMMERCIAL APPLICATORS IN THE APPROPRIATE CATEGORY. EVIDENCE OF VALID LICENSES SHALL BE PROVIDED TO THE ENGINEER FOR VERIFICATION.

ITEM 620 - DELINEATOR INSTALLED, BY TYPE, BY SUPPORT

FLEXIBLE POSTS SHALL BE INSTALLED SO THAT THE FACE OF THE REFLECTOR, OTHER THAN RED IS 90 DEGREES TO THE CENTERLINE FACING APPROACHING TRAFFIC AND TO SUCH A DEPTH THAT THE TOPS OF THE INSTALLED REFLECTORS SHALL BE 4 FEET PLUS OR MINUS ABOVE THE ELEVATION OF THE ADJACENT EDGE OF PAVEMENT.

REMOVAL OF GROUND MOUNTED SIGN AND REERECTION, AS PER PLAN

THE GROUND MOUNTED SIGNS THAT ARE MOUNTED ON BEAMS WILL BE EITHER MOUNTED BACK ON NEW BEAMS OR MOUNTED OVERHEAD ON NEW STRUCTURES AS INDICATED IN THE PLANS. THE COSTS FOR REMOVING, STORING AND REERECTION OF THE SIGNS, INCLUDING ALL NECESSARY HARDWARE FOR A COMPLETE INSTALLATION ON THE NEW OVERHEAD SIGN SUPPORT SHALL BE INCLUDED AND PAID UNDER ITEM 630 REMOVAL OF GROUND MOUNTED SIGN AND REERECTION, AS PER PLAN PER EACH.

CALCULATED
CHECKED

SIGNING GENERAL NOTES AND MISCELLANEOUS DETAIL

MED-71-15.78

561
940

7885REL_TNA.DGN 1/28/00 SAM

NOTE:
THE R-19 AND R-123 SIGNS SHALL BE REERECTED BACK TO BACK AT APPROXIMATELY THE MIDPOINT OF THE MEDIAN WIDTH AT A 45 DEGREE ANGLE TO THE TRAFFIC FLOW.

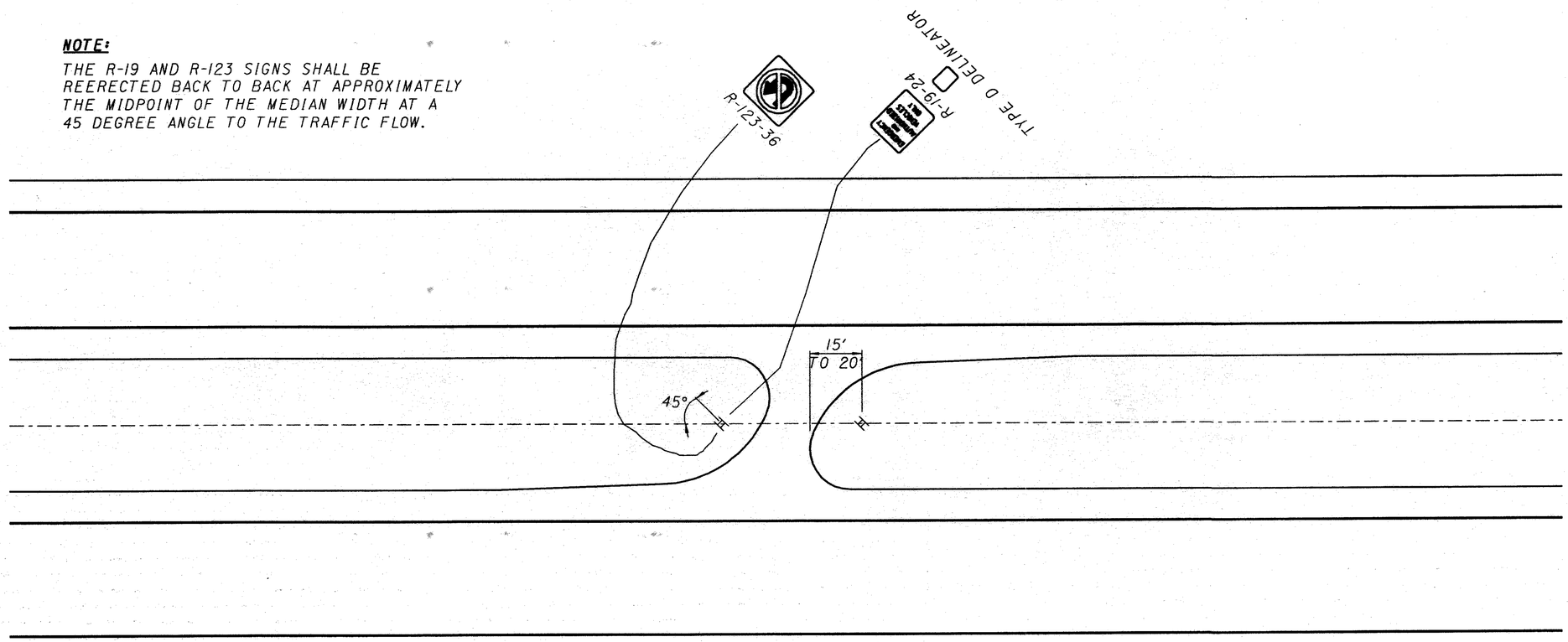

STANDARD SIGNING FOR U-TURN MEDIAN CROSSOVER

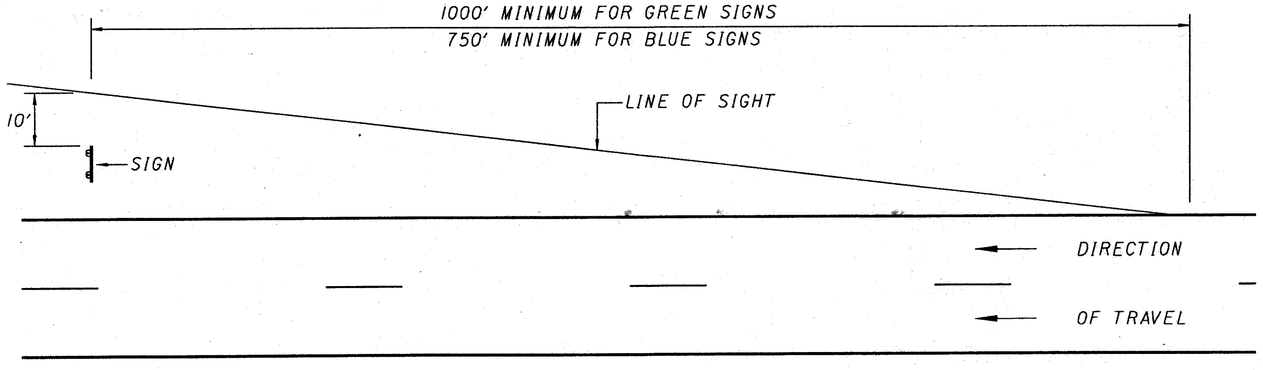

GUIDE FOR CLEARING AND GRUBBING

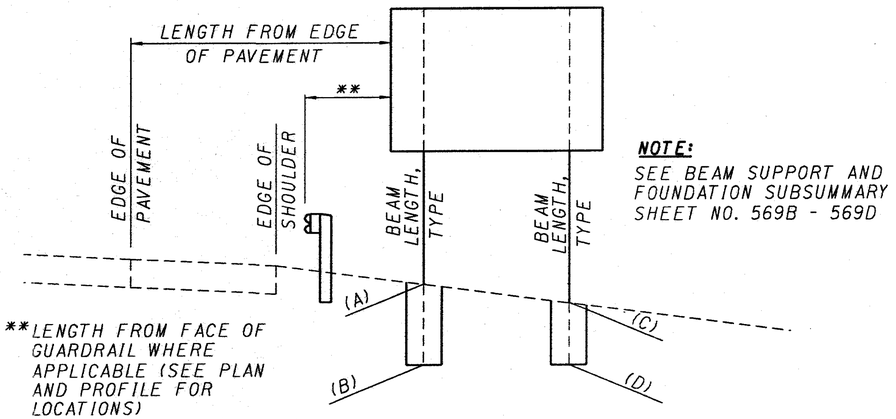

NOTE:
SEE BEAM SUPPORT AND FOUNDATION SUBSUMMARY SHEET NO. 569B - 569D

GROUND MOUNTED SIGN ON BEAM DETAIL

CALCULATED PS
CHECKED PDG

SIGNING MISCELLANEOUS DETAILS

MED-71-15.78

561A
940

7885REL_TDA.DGN 1/27/00 SAM

SHEET No.														ITEM	ITEM EXT.	TOTAL	UNIT	DESCRIPTION	SEE SHEET No.
407	551/553	560A	560B	564	565	566	567	568	569	569A	569D	569E	619						
																		TRAFFIC CONTROL	
				2	2		2							620	31200	6	EACH	DELINEATOR, REMOVED FOR DISPOSAL	
				2	2		2							620	40301	6	EACH	REFLECTOR, TYPE D, AS PER PLAN	
		80	196											625	25100	276	LIN FT	CONDUIT, 1", 713.04	
	15/555 220	24												625	25400	39	LIN FT	CONDUIT, 2", 713.04	
		25	18											625	25500	818	LIN FT	CONDUIT, 3", 713.04	
			84											625	25900	84	LIN FT	CONDUIT, JACKED OR DRILLED, SIZE 3"	
	555 230	119	218											625	29000	1122	LIN FT	TRENCH	
	9/3		2											625	30700	14	EACH	PULL BOX, 713.08, 18"	
		4												625	31600	4	EACH	PULL BOX, MISC.: REMOVED AND REINSTALLED, 713.08, 18"	
	3/1			4	5	6	4			3		4		625	32000	30	EACH	GROUND ROD	
				15	12	12	12							630	02100	51	LIN. FT.	GROUND MOUNTED SUPPORT, NO. 2 POST	
141				336	275	276	321	515	484	481				630	03100	2829	LIN. FT.	GROUND MOUNTED SUPPORT, NO. 3 POST	
											813			630	06400	813	LIN. FT.	GROUND MOUNTED SUPPORT, S4X7.7 BEAM	
											77			630	06500	77	LIN. FT.	GROUND MOUNTED SUPPORT, W6X9 BEAM	
											113			630	07500	113	LIN. FT.	GROUND MOUNTED SUPPORT, W10X22 BEAM	
											241			630	07600	241	LIN. FT.	GROUND MOUNTED SUPPORT, W10X12 BEAM	
								65	50	50				630	08004	165	LIN. FT.	ONE WAY SUPPORT, NO. 3 POST	
											66			630	09000	66	EACH	BREAKAWAY BEAM CONNECTION	
				1						3				630	20400	3	EACH	OVERHEAD SIGN SUPPORT, TYPE TC-12.30, DESIGN 4, 20' ARM	
												1		630	20500	1	EACH	OVERHEAD SIGN SUPPORT, TYPE TC-12.30, DESIGN 5, 22' ARM	
												1		630	20600	1	EACH	OVERHEAD SIGN SUPPORT, TYPE TC-12.30, DESIGN 6, 26' ARM	
					1									630	20700	1	EACH	OVERHEAD SIGN SUPPORT, TYPE TC-12.30, DESIGN 7, 24' ARM	
				1	1	6	4					1		630	20900	13	EACH	OVERHEAD SIGN SUPPORT, TYPE TC-12.30, DESIGN 9, 26' ARM	
				1										630	45500	1	EACH	OVERHEAD SIGN SUPPORT, TYPE TC-7.65, DESIGN 8, 75' SPAN	
				1	1									630	45500	2	EACH	OVERHEAD SIGN SUPPORT, TYPE TC-7.65, DESIGN 8, 85' SPAN	
					1									630	45500	1	EACH	OVERHEAD SIGN SUPPORT, TYPE TC-7.65, DESIGN 8, 93' SPAN	
				1	1									630	45500	2	EACH	OVERHEAD SIGN SUPPORT, TYPE TC-7.65, DESIGN 8, 97' SPAN	
												2		630	77900	2	EACH	OVERPASS STRUCTURE MOUNTED SIGN SUPPORT, TYPE TC-18.26, DESIGN 9	
				8	5	10	4	1		7		3		630	79500	38	EACH	SIGN SUPPORT ASSEMBLY, POLE MOUNTED	
				67	40	15	6	93	225	161	110	5		630	80102	722	SQ. FT.	SIGN, FLAT SHEET, TYPE G	
				1247	1623	1032	750			240	516			630	80204	5408	SQ. FT.	SIGN, EXTRU SHEET, TYPE G	
											42			630	82000	42	EACH	SIGN BACKING ASSEMBLY	
											66			630	84500	66	EACH	GROUND MOUNTED BEAM SUPPORT FOUNDATION	
				8	8	6	4			3		3		630	84510	32	EACH	RIGID OVERHEAD SIGN SUPPORT FOUNDATION	
				4	5	6	4	2	16	7	7			630	84900	51	EACH	REMOVAL OF GROUND MOUNTED SIGN AND DISPOSAL	
16				11	12	14	17	20	8	11	12			630	85100	121	EACH	REMOVAL OF GROUND MOUNTED SIGN AND REERECTION	
				1										630	85101	1	EACH	REMOVAL OF GROUND MOUNTED SIGN AND REERECTION, AS PER PLAN	
				4	7	6	4				2			630	85400	23	EACH	REMOVAL OF GROUND MOUNTED MAJOR SIGN AND DISPOSAL	
											19			630	85600	19	EACH	REMOVAL OF GROUND MOUNTED MAJOR SIGN AND REERECTION	
				1										630	85601	1	EACH	REMOVAL OF GROUND MOUNTED MAJOR SIGN AND REERECTION, AS PER PLAN	
11				12	13	15	15	29	22	18	24			630	86002	159	EACH	REMOVAL OF GROUND MOUNTED POST SUPPORT AND DISPOSAL	
				10	10	12	8				30			630	86102	70	EACH	REMOVAL OF GROUND MOUNTED BEAM SUPPORT AND DISPOSAL	
					1									630	86310	1	EACH	REMOVAL OF STRUCTURE MOUNTED SIGN AND DISPOSAL	
												4		630	86320	4	EACH	REMOVAL OF STRUCTURE MOUNTED SIGN AND REERECTION	
												2		630	87100	2	EACH	REMOVAL OF OVERHEAD MOUNTED SIGN AND REERECTION	
				2	3									630	87400	5	EACH	REMOVAL OF OVERHEAD MOUNTED SIGN AND DISPOSAL	
												1		630	89706	1	EACH	REMOVAL OF OVERHEAD SIGN SUPPORT AND DISPOSAL, TYPE TC-12.30	
				1	1									630	89802	2	EACH	REMOVAL OF OVERHEAD SIGN SUPPORT AND DISPOSAL, TYPE TC-7.65	
					1									630	89806	1	EACH	REMOVAL OF OVERHEAD SIGN SUPPORT AND DISPOSAL, TYPE TC-18.24	
												4		630	89808	4	EACH	REMOVAL OF OVERHEAD SIGN SUPPORT AND DISPOSAL, TYPE TC-18.26	
													15	631	84000	15	EACH	SIGN SERVICE	
													22	631	84300	22	EACH	SIGN WIRED	
													15	631	85302	15	EACH	DISCONNECT SWITCH WITH ENCLOSURE, 30 AMP	
													2	631	85500	2	EACH	SWITCH ENCLOSURE MOUNTING BRACKET ASSEMBLY	
													2	631	87200	2	EACH	BALLAST, TYPE CMRI-I75-480, REMOTE	

REV. 2-22-00

DESIGN FILE : $$$$$$$$$$DESIGNFILESPECIFICATION$$$$$$$$$$
USERNAME : $$$$INSTRUCTIONS$$$$
DATE : $$$$DATE$$$$
TIME : $$$$$TIME$$$$$

TRAFFIC CONTROL GENERAL SUMMARY

MED-71-15.78

562
940

SHEET No.														ITEM	ITEM EXT.	TOTAL	UNIT	DESCRIPTION	SEE SHEET No.
		560B	560A		564	565	566	567	568	569			619						
																		TRAFFIC CONTROL	
													17	631	87202	17	EACH	BALLAST, TYPE CMRI-175-480, INTEGRAL	
													19	631	87302	19	EACH	BALLAST, TYPE CMRI-250-480, INTEGRAL	
													19	631	88200	19	EACH	MERCURY VAPOR LUMINAIRE, TYPE TC-31.20 WITH 175 WATT LAMP	
													19	631	88300	19	EACH	MERCURY VAPOR LUMINAIRE, TYPE TC-31.20 WITH 250 WATT LAMP	
													4	631	94412	4	EACH	REMOVAL OF SIGN SERVICE AND DISPOSAL	
		4	9											632	26500	13	EACH	DETECTOR LOOP	
		1	4											632	27201	5	EACH	LOOP DETECTOR TIE IN, AS PER PLAN	561
		1119	995											632	65300	2114	LIN. FT.	LOOP DETECTOR LEAD-IN CABLE, 2 CONDUCTOR, No. 14 AWG	
		134												632	90500	134	LIN. FT.	SIGNALIZATION, MISC.: REMOVE AND REPLACE LASHING RODS	

DESIGN FILE : i:\users\gwilliam\med71\sign\med71sub.dgn
USERNAME : gwilliam

DATE : 10-DEC-1999
TIME : 12:14

CALCULATED A.L. CHECKED jwp

TRAFFIC CONTROL GENERAL SUMMARY

MED-71-15.78

SIGNING SUB-SUMMARY

Note: Sheet Totals Carried To Traffic Control General Summary Sheet 562 .

REF. NO.	STATION	SIDE	CODE	SIZE	LEVEL	630 SIGNS FLAT SHEET TYPE "G"	630 SIGNS EXTRU SHEET TYPE "G"	630 REMOVAL OF GROUND MTD SIGN & RERECTION MINOR	630 REMOVAL OF GROUND MTD SIGN & RERECTION MAJOR	630 REMOVAL OF GROUND MTD. SIGN & REERECTION AS PER PLAN MINOR	630 REMOVAL OF GROUND MTD. SIGN & REERECTION AS PER PLAN MAJOR	630 REMOVAL OF OVERHEAD MTD. SIGN & DISPOSAL	620 DELINEATOR, REMOVED FOR DISPOSAL	620 REFLECTOR, TYPE D, AS PER PLAN	630 REMOVAL OF GROUND MTD. SIGN & DISPOSAL MINOR	630 REMOVAL OF GROUND MTD. SIGN & DISPOSAL MAJOR	630 SIGN SUPPORT ASSEMBLY, POLE MOUNTED	625 GROUND RODS	630 GROUND MOUNTED SUPPORTS NO. 2 POST	630 GROUND MOUNTED SUPPORTS NO. 3 POST	630 OVERHEAD SIGN SUPPORTS TC-7.65 DESIGN 8 85' SPAN	630 OVERHEAD SIGN SUPPORTS TC-7.65 DESIGN 8 75' SPAN	630 OVERHEAD SIGN SUPPORTS TC-7.65 DESIGN 8 97' SPAN	630 OVERHEAD SIGN SUPPORTS TC 12.30		630 OVERHEAD SIGN SUPPORTS TC 12.30 DESIGN 4 20' ARM	630 OVERHEAD SIGN SUPPORTS TC 12.30 DESIGN 9 26' ARM	630 RIGID OVERHEAD SIGN SUPPORT FOUNDATION	630 REMOVAL OF GRD. MTD. POST SUPPORT AND DISPOSAL	630 REMOVAL OF GRD. MTD. BEAM SUPPORT AND DISPOSAL	630 REMOVAL OF OVER-HEAD SIGN SUPPORT AND DISPOSAL TYPE TC-7.65
	MAIN LINE					SQ. FT.	SQ. FT.	EACH	EACH	EACH	EACH	EACH	EACH		EACH	EACH	EACH	EACH	LIN. FT.	LIN. FT.	EACH	EACH	EACH			EACH	EACH	POST	BEAM	EACH
1	843+00	LT	W-54A-144	12'x4'			48											1								1		1			
			N-44B-18	1.5'x1'		1.5											1														
2	847+27	RT	NO WORK																												
2A	855+00	LT	FOR QUANTITIES SEE SHEET 569B																												
3	856+22	RT	GEP	8'x2'														1										1	1		
			GB	13'x12'																											
	857+47	RT	GEP	8'x2'						1																				2	
			GB	13'x12'	1						1																				
			N-44B-18	1.5x1'		1.5											1														
4	862+00	RT	IM-37-36	3'x1.5'		4.5														15.5/15.5										
			M-5-36-2	3'x3'		9.0																									
5	862+00	LT	IM-38-36	3'x1.5'		4.5														15.5/15.5										
			M-5-36-2	3'x3'		9.0																									
6	870+81	RT	GEP	8'x2'			16.0										2	1				1					2				
			GB	13'x10'	1		130.0																								
		RT	GEP	8'x2'			16.0										2														
			GE	11'x12'-6"	1		137.5																								
			N-44B-18	1.5x1'		1.5											1														
		RT	GEP	8'x2'											1														2		
			GE	10'x12'												1															
7	880+37	LT	W-49R-48	4'x4'				1												15.0/15.0										
8	883+92		FOR QUANTITIES SEE SHEET 569B																												
9	888+63	RT	GEP	8'x2'								1																			1
			GB	13'x9.5'								1																			
10	898+41	LT	FOR QUANTITIES SEE SHEET 569B																												
11	899+00	RT	N-41-12	1'x4'				1										15.0											1		
12	900+18	RT	W-49R-48	4'x4'				1												15.0/15.0									2		
12A	901+00	LT	GG	18' x 10'			180.0											1					1					2			
			GEP	8'x2'			16.0																								
			GE	16' x 13'			208.0																								
			N-44B-18	1.5x1'		1.5											1														
13	929+95.25	RT	W-60R-48	4'x4'		16.0														15.0/15.0										
14	911+20	LT	GEP	8'x2'											1														2		
			GE	13'x9.5'												1															
15	920+75	RT	W-53R-48	4'x4'		16.0														15.0/15.5										
16	922+75	RT	M-37-36	3'x1.5'				1												15.5/15.5									1		
			M-5-36-2	3'x3'				1																							
17	925+92	LT	W-42-48	4'x4'				1												15.0/15.0									2		
		LT	W-42-48	4'x4'				1												15.0/15.0									2		
17A	927+40	LT	GG	18'x10'			180.0											1					1					2			
			GEP	8'x2'			16.0																								
			GE	23' x 13'			299.0																								
			N-44B-18	1.5x1'		1.5											1														
18	929+43	LT	GEP	8'x2'											1														2		
			GB	13'x12'												1															
19	931+16	RT	FOR QUANTITIES SEE SHEET 569B																												
20	931+35	MED	R-19-24	2'x2.5'				1					1	1						15.5/15.5									1		
			R-123-36	3'x3'				1																							
21	931+60	MED	R-19-24	2'x2.5'				1					1	1						15.5/15.5									1		
			R-123-36	3'x3'				1																							
22	934+17	RT	GEP	8'x2'											1														2		
			GB	13'x9.5'												1															
	SHEET TOTAL					66.5	1246.5	11		1	1	2	2	2	4	4	8	4	15.0	335.5	1	1	1			1	1	8	12	10	1

DESIGN FILE : $$$$$$$$$$DESIGNFILESPECIFICATION$$$$$$$$$$
USERNAME : $$$$INSTRUCTIONS$$$$
DATE : $$$$DATE$$$$
TIME : $$$$TIME$$$$

CALCULATED
CHECKED

SIGNING QUANTITIES

MED-71-15.78

564
940

SIGNING SUB-SUMMARY

REF. NO.	STATION	SIDE	CODE	SIZE	LEVEL	630 SIGNS FLAT SHEET TYPE "G" SQ. FT.	630 SIGNS EXTRU SHEET TYPE "G" SQ. FT.	630 REMOVAL OF GROUND MTD SIGN & RERECTION MINOR EACH	630 REMOVAL OF GROUND MTD SIGN & RERECTION MAJOR EACH	630 REMOVAL OF STRUCTURE MTD. SIGN & DISPOSAL EACH	630 REMOVAL OF OVERHEAD MTD. SIGN & DISPOSAL EACH	620 DELINEATOR, REMOVED FOR DISPOSAL EACH	620 REFLECTOR, TYPE D, AS PER PLAN EACH	630 REMOVAL OF GROUND MTD. SIGN & DISPOSAL MINOR EACH	630 REMOVAL OF GROUND MTD. SIGN & DISPOSAL MAJOR EACH	630 SIGN SUPPORT ASSEMBLY, POLE MOUNTED EACH	625 GROUND RODS EACH	630 GROUND MOUNTED SUPPORTS NO. 2 POST LIN. FT.	630 GROUND MOUNTED SUPPORTS NO. 3 POST LIN. FT.	630 OVERHEAD SIGN SUPPORTS TC-7.65 DESIGN 8 97' SPAN EACH	630 OVERHEAD SIGN SUPPORTS TC-7.65 DESIGN 8 93' ARM EACH	630 OVERHEAD SIGN SUPPORTS TC-7.65 DESIGN 8 85' SPAN EACH	630 OVERHEAD SIGN SUPPORTS TC 12.30 DESIGN 9 26' ARM EACH	630 OVERHEAD SIGN SUPPORTS TC 12.30 DESIGN 7 24' ARM EACH	630 RIGID OVERHEAD SIGN SUPPORT FOUNDATION EACH	630 REMOVAL OF GRD. MTD. POST SUPPORT AND DISPOSAL POST EACH	630 REMOVAL OF GRD. MTD. BEAM SUPPORT AND DISPOSAL BEAM EACH	630 REMOVAL OF OVER-HEAD SIGN SUPPORT AND DISPOSAL TYPE TC-7.65 EACH	630 REMOVAL OF OVER-HEAD SIGN SUPPORT AND DISPOSAL TYPE TC-18.24 EACH
	MAIN LINE																											
23	935+14	LT	FOR QUANTITIES SEE SHEET 569B																									
24	942+50	LT	M-38-36	3'x1.5'				1										15.5/15.5							1			
			M-5-36-2	3'x3'				1																				
24A	932+25.30	RT	GG	17'x10'			170.0										1				1			2				
			GEP	8'x2'			16.0																					
			GB	23' x 13'			299.0																					
			N-44B-18	1.5'x1'		1.5										1												
25	948+93	RT	GEP	8'x2'										1													2	
			GB	13'x9.5'											1													
26	953+80	LT	GEP	8'x2'			16.0										1			1				2				
			GE	18'x12'-6"	1		225.0																					
			GG	18'x10'			180.0																					
			N-44B-18	1.5'x1'		1.5										1												
27	956+63	LT	GEP	8'x2'										1													2	
			GB	12'x12'											1													
28	964+61	RT	GEP	8'x2'										1													2	
			GB	13'x9.5'											1													
29	946+05.07	LT	W-60R-48	4'x4'		16.0												15.0/15.5										
30	971+00	RT	GG	18'x10'			180.0										1				1			2				
			GEP	8'x2'			16.0																					
			GB	18'x10'-6"			189.0																					
			N-44B-18	1.5'x1'		1.5										1												
31	955+80	LT	W-53R-48	4'x4'		16.0												15.0/15.5										
32	974+16	LT	W-49R-48	4'x4'				1										15.0/15.5							2			
33	975+14	RT	GEP	8'x2'							1																1	
			GB	14'x7'							1																	
			GG	17'x9.5'							1																	
34	975+71	LT	W-54B	16'x5'											2											4		
35	977+19	RT	W-98-48	4'x5'				1										15.0/15.0							1			
36	977+67	RT	FOR QUANTITIES SEE SHEET 569B																									
37	979+80	RT	M-37-36	3'x1.5'				1										15.5/16.0							1			
			M-5-36-2	3'x3'				1																				
38	988+00	BRDG	W-54B	16'x5'						1																		1
39	1001+60	RT	FOR QUANTITIES SEE SHEET 569B																									
40	1003+24	RT	N-41-12	1'x4'				1											12.0									
41	1038+20	RT	GEP	8'x2'			16.0										1						1	1				
			GB	12'x12'	1		144.0																					
			N-44B-18	1.5x1		1.5										1												
42	1039+40	RT	GEP	8'x2'										1													2	
			GB	9'x7'											1													
43	1040+31	LT	R-35-48	4'x5'				1										15.5/15.5							2			
44	1050+45	RT	FOR QUANTITIES SEE SHEET 569B																									
45	1050+78	LT	FOR QUANTITIES SEE SHEET 569B																									
46	1061+12	LT	FOR QUANTITIES SEE SHEET 569B																									
47	1066+12	RT	GEP	8'x2'										1													2	
			GB	9'x7'											1													
48	1066+70	MED	R-19-24	2'x2.5'				1				1	1					15.0/15.0							1			
			R-123-36	3'x3'				1																				
49	1066+84	RT	GEP	8'x2'			16.0										1					1		1				
			GB	13'x12'	1		156.0																					
			N-44B-18	1.5x1		1.5										1												
50	1067+15	MED	R-19-24	2'x2.5'				1				1	1					15.0/15.0							1			
			R-123-36	3'x3'				1																				
	SHEET TOTAL					39.5	1623.0	12		1	3	2	2	5	7	5	5	12	27.5	1	1	1	1	1	8	13	10	1	1

DESIGN FILE : $$$$$$$$$$DESIGNFILESPECIFICATION$$$$$$$$$$
USERNAME : $$$$INSTRUCTIONS$$$$
DATE : $$$$DATE$$$$
TIME : $$$$TIME$$$$

CALCULATED
CHECKED

SIGNING QUANTITIES

MED-71-15.78

SIGNING SUB-SUMMARY

Note: Sheet Totals Carried To Traffic Control General Summary Sheet 562 .

REF. NO.	STATION	SIDE	CODE	SIZE	LEVEL	630 SIGNS FLAT SHEET TYPE "G" SQ. FT.	630 SIGNS EXT.RU SHEET TYPE "G" SQ. FT.	630 REMOVAL OF GROUND MTD SIGN & RERECTION MINOR EACH	630 REMOVAL OF GROUND MTD SIGN & RERECTION MAJOR EACH	630 REMOVAL OF GROUND MTD. SIGN & DISPOSAL MINOR EACH	630 REMOVAL OF GROUND MTD. SIGN & DISPOSAL MAJOR EACH	630 SIGN SUPPORT ASSEMBLY, POLE MOUNTED EACH	625 GROUND RODS EACH	630 GROUND MOUNTED SUPPORTS NO. 2 POST LIN. FT.	630 GROUND MOUNTED SUPPORTS NO. 3 POST LIN. FT.	630 OVERHEAD SIGN SUPPORTS TC 12.30 EACH	630 OVERHEAD SIGN SUPPORTS TC 12.30 EACH	630 OVERHEAD SIGN SUPPORTS TC 12.30 DESIGN 9 26' ARM EACH	630 OVERHEAD SIGN SUPPORTS TC 12.30 EACH	630 OVERHEAD SIGN SUPPORTS TC 12.30 EACH	630 OVERHEAD SIGN SUPPORTS TC 12.30 EACH	630 RIGID OVERHEAD SIGN SUPPORT FOUNDATION EACH	630 REMOVAL OF GRD. MTD. POST SUPPORT AND DISPOSAL POST EACH	630 REMOVAL OF GRD. MTD. BEAM SUPPORT AND DISPOSAL BEAM EACH
	MAIN LINE																							
51	1074+38	LT	M-38-36	3'x1.5'				1							15.5/16.0								1	
			M-5-36-2	3'x3'				1																
52	1084+40	RT	GEP	8'x2'						1														2
			GB	8'x7'							1													
		RT	GEP	8'x2'			16.0						1					1				1		
			GE	12'x12'-6"	1		150.0																	
			N-44B-18	1.5x1		1.5						1												
53	1093+00	RT	FOR QUANTITIES SEE SHEET 569B																					
54	1095+00	LT	W-49R-48	4'x4'				1							15.0/15.5								2	
55	1096+45	RT	M-37-36	3'x1.5'				1							15.5/16.0								1	
			M-5-36-2	3'x3'				1																
56	1110+71	RT	N-41-12	1'x4'				1						12.0									1	
57	1112+86	LT	M-38-36	3'x1.5'				1							15.5/16.0								1	
			M-5-36-2	3'x3'				1																
58	1113+79	RT	W-49R-48	4'x4'				1							15.0/15.5								2	
59	1115+57	LT	FOR QUANTITIES SEE SHEET 569B																					
60	1124+35	LT	GEP	8'x2'			16.0						1					1				1		
			GE	12'x12'-6"	1		150.0																	
			N-44B-18	1.5x1		1.5						1												
		LT	GEP	8'x2'						1														
			GB	10'x9.5'							1													2
61	1134+56	LT	N-44B-18	1.5x1		1.5						1												
62	1135+00	RT	M-37-36	3'x1.5'				1							15.5/16.0								1	
			M-5-36-2	3'x3'				1																
63	1142+62	LT	GEP	8'x2'						1														2
			GB	13'x9.5'							1													
	1142+75	LT	GEP	8'x2'			16.0						1					1				1		
			GB	13'x12'	1		156.0																	
			N-44B-18	1.5x1		1.5						1												
64	1146+10	RT	N-44B-18	1.5x1		1.5						1												
65	1148+57	RT	FOR QUANTITIES SEE SHEET 569B																					
66	1157+37	LT	W-49R-48	4'x4'				1							15.0/15.5								2	
67	1166+84	LT	NO WORK																					
68	1171+33	LT	FOR QUANTITIES SEE SHEET 569B																					
69	1177+08	RT	GEP	8'x2'			16.0						1					1				1		
			GB	14'x12'	1		168.0																	
			N-44B-18	1.5x1		1.5						1												
	1177+28	RT	GEP	8'x2'						1														2
			GB	14'x9.5'							1													
70	1180+21	LT	N-44B-18	1.5x1		1.5						1												
71	1190+34	RT	N-44B-18	1.5x1		1.5						1												
72	1195+53	LT	GEP	8'x2'						1														2
			GB	10'x9.5'							1													
73	1195+55	LT	GEP	8'x2'			16.0						1					1				1		
			GB	12'x12'	1		144.0																	
74	1199+17	RT	FOR QUANTITIES SEE SHEET 569B																					
75	1206+07	LT	GA-1	5'x1.5'				1							14.5/14.5								2	
76	1212+37	LT	FOR QUANTITIES SEE SHEET 569B																					
77	1218+14	LT	N-44B-18	1.5x1		1.5						1												
78	1225+00	RT	GN-VAR	5'x2'				1							14.5/14.5								2	
79	1226+15	LT	FOR QUANTITIES SEE SHEET 569B																					
80	1231+14	RT	GEP	8'x2'			16.0						1					1				1		
			GB	14'x12'	1		168.0																	
			N-44B-18	1.5x1		1.5						1												
	1231+24	RT	GEP	8'x2'						1														2
			GB	14'x9.5'							1													
	SHEET TOTAL					15.0	1032.0	14		6	6	10	6	12.0	275.5			6				6	15	12

DESIGN FILE : $$$$$$$$$$DESIGNFILESPECIFICATION$$$$$$$$$$
USERNAME : $$$$INSTRUCTIONS$$$$
DATE : $$$$DATE$$$$
TIME : $$$$TIME$$$$

CALCULATED
CHECKED

SIGNING QUANTITIES

MED-71-15.78

566
940

SIGNING SUB-SUMMARY

Note: Sheet Totals Carried To Traffic Control General Summary Sheet 562 .

REF. NO.	STATION	SIDE	CODE	SIZE	LEVEL	630 SIGNS FLAT SHEET TYPE "G" SQ. FT.	630 SIGNS EXTRU SHEET TYPE "G" SQ. FT.	630 REMOVAL OF GROUND MTD SIGN & RERECTION MINOR EACH	630 REMOVAL OF GROUND MTD SIGN & RERECTION MAJOR EACH	620 DELINEATOR, REMOVED FOR DISPOSAL EACH	620 REFLECTOR, TYPE D AS PER PLAN EACH	630 REMOVAL OF GROUND MTD. SIGN & DISPOSAL MINOR EACH	630 REMOVAL OF GROUND MTD. SIGN & DISPOSAL MAJOR EACH	630 SIGN SUPPORT ASSEMBLY, POLE MOUNTED EACH	625 GROUND RODS EACH	630 GROUND MOUNTED SUPPORTS NO. 2 POST LIN. FT.	630 GROUND MOUNTED SUPPORTS NO. 3 POST LIN. FT.	630 OVERHEAD SIGN SUPPORTS TC 12.30 DESIGN 9 26' ARM EACH	630 RIGID OVERHEAD SIGN SUPPORT FOUNDATION EACH	630 REMOVAL OF GRD. MTD. POST SUPPORT AND DISPOSAL POST EACH	630 REMOVAL OF GRD. MTD. BEAM SUPPORT AND DISPOSAL BEAM EACH
	MAIN LINE																				
81	1236+32	LT	M-38-36	3'x1.5'				1									15.5/16.0			1	
			M-5-36-2	3'x3'				1													
82	1248+48	RT	GEP	8'x2'								1									2
			GB	14'x9.5'									1								
		RT	GEP	8'x2'			16.0								1			1	1		
			GE	14'x12'-6"	1		175.0														
			N-44B-18	1.5'x1'		1.5								1							
83	1257+34	RT	FOR QUANTITIES SEE SHEET 569B																		
84	1258+50	RT	M-37-36					1												1	
			M-5-36-2					1													
	1260+00	RT	M-37-36	3'x1.5'													17.0/17.5				
			M-5-36-2	3'x3'																	
85	1258+87	LT	W-49R-48	4'x4'				1									16.0/16.0			2	
86	1263+93	RT	W-49R-48	4'x4'				1									16.0/16.0			2	
87	1264+32	RT	N-41-12	1'x4'				1								12.0				1	
88	1275+36	LT	M-38-36	3'x1.5'				1									17.0/17.5			1	
			M-5-36-2	3'x3'				1													
89	1278+19	LT	W-47-48	4'x4'				1									16.0/16.0			2	
90	1278+72	LT	FOR QUANTITIES SEE SHEET 569C																		
91	1286+00	RT	M-37-36	3'x1.5'				1									15.5/16.0			1	
			M-5-36-2	3'x3'				1													
92	1287+20	LT	GEP	8'x2'			16.0								1			1	1		
			GE	14'x12'-6"	1		175.0														
			N-44B	1.5x1		1.5								1							
	1287+40	LT	GEP	8'x2'								1									2
			GB	14'x6'									1								
93	1296+41	RT	FOR QUANTITIES SEE SHEET 569C																		
94	1299+60	MED	R-19-24	2'x2.5'				1		1	1						15.0/15.5			1	
			R-123-36	3'x3'				1													
95	1300+20	MED	R-19-24	2'x2.5'				1		1	1						15.0/15.5			1	
			R-123-36	3'x3'				1													
96	1306+51	RT	FOR QUANTITIES SEE SHEET 569C																		
97	1312+11	LT	GEP	8'x2'			16.0								1			1	1		
			GB	14'x12'	1		168.0														
			N-44B-18	1.5'x1'		1.5								1							
	1312+27	LT	GEP	8'x2'								1									2
			GB	14'x9.5'									1								
98	1332+14	LT	GEP	8'x2'								1									2
			GB	14'x9'-6"									1								
	1332+34	LT	GEP	8'x2'			16.0								1			1	1		
			GB	14'x12'	1		168.0														
			N-44B-18	1.5'x1'		1.5								1							
99	1353+37	RT	N-88-54	4.5'x3.5'				1									15.5/16.0			2	
100	1391+34	LT	FOR QUANTITIES SEE SHEET 569C																		
	SHEET TOTAL					6.0	750.0	17		2	2	4	4	4	4	12.0	320.5	4	4	15	8

DESIGN FILE : $$$$$$$$$$DESIGNFILESPECIFICATION$$$$$$$$$$
USERNAME : $$$$INSTRUCTIONS$$$$
DATE : $$$$DATE$$$$
TIME : $$$$TIME$$$$

CALCULATED
CHECKED

SIGNING QUANTITIES

MED-71-15.78

SIGNING SUB-SUMMARY

Note: Sheet Totals Carried To Traffic Control General Summary Sheet 562 .

REF. NO.	STATION	SIDE	CODE	SIZE	LEVEL	630 SIGNS FLAT SHEET TYPE "G" SQ. FT.	630 SIGNS EXTRU SHEET TYPE "G" SQ. FT.	630 REMOVAL OF GROUND MTD SIGN & RERECTION MINOR EACH	630 REMOVAL OF GROUND MTD SIGN & RERECTION MAJOR EACH	630 REMOVAL OF GROUND MTD. SIGN & DISPOSAL MINOR EACH	630 REMOVAL OF GROUND MTD. SIGN & DISPOSAL MAJOR EACH	630 SIGN SUPPORT ASSEMBLY, POLE MOUNTED EACH	630 GROUND MOUNTED SUPPORTS NO. 3 POST LIN. FT.	630 GROUND MOUNTED SUPPORTS ONE WAY NO. 3 POST LIN. FT.	630 REMOVAL OF GRD. MTD. POST SUPPORT AND DISPOSAL POST EACH
	S.R. 18 INTERCHANGE														
	RAMP "C"														
101	13+05	LT	W-47-48	4'x4'				1					16.0/16.0		2
		RT	W-47-48	4'x4'				1					16.0/16.0		2
102	14+34	RT	FOR QUANTITIES SEE SHEET 569C												
103	17+55	RT	R-70-48	4'x3'				1					14.0/14.5		2
104	18+34	RT	D-4-A	7'x1.5'				1					12.5/13.0		2
105	19+05	LT	R-41A-36	3'x2'				1					13.0/13.5		1
		RT	R-41A-36	3'x2'				1					13.0/13.5		1
106	19+93	RT	R-41B-36	3'x3'				1					14.0		2
			R-43L-48	4'x1.5'		6.0								15.5	
			R-43R-48	4'x1.5'		6.0									
106A	19+93	LT	R-41B-36	3'x3'				1					14.0		2
			R-43L-48	4'x1.5'				1						15.5	
			R-43R-48	4'x1.5'				1							
	RAMP "A"														
107	25+47	LT	R-15A-36	3'x3'				1					14.0/14.5		1
	S.R. 18 MAIN LINE														
108	147+40	RT	N-44B-18	1.5' x 1'		1.5						1			
108A	149+70	RT	FOR QUANTITIES SEE SHEET 569E												
		MED													
	149+95														
109	151+75	MED	FOR QUANTITIES SEE SHEET 569E												
	152+00	LT													
109A	154+25	LT	FOR QUANTITIES SEE SHEET 569E												
	154+36	LT													
	RAMP "B"														
110	0+65	LT	R-41B-36	3'x3'				1					15.5		2
			R-3R-36	3'x4.5'				1						17.0	
			R-43L-48	4'x1.5'		6.0									
			R-43R-48	4'x1.5'		6.0									
111	0+65	RT	R-41B-36	3'x3'				1					15.5		2
			R-3L-36	3'x4.5'				1						17.0	
			R-43L-48	4'x1.5'		6.0									
			R-43R-48	4'x1.5'		6.0									
112	0+84	LT	W-82-36	3'x3'					1						1
			WP-76P-24	2'x2'					1						
			W-81-42	3.5'x3.5'		12.25							14.5/14.5		
112A	2+00	LT	R-41A-36	3'x2'		6.0							13.0/13.5		
		RT	R-41A-36	3'x2'		6.0							13.0/13.5		
113	1+77	LT	R-31A					1							2
		RT	R-31A					1							2
	3+25	LT	R-31A-36	3'x2.5'		7.5							13.5/14.0		
		RT	R-31A-36	3'x2.5'		7.5							13.5/14.0		
114	5+07	RT	D-4A	7'x1.5'				1					13.0/13.5		2
115	5+63	LT	FOR QUANTITIES SEE SHEET 569C												
116	7+50	LT	W-47-48	4'x4'				1					16.0/16.0		2
117	8+06	RT	FOR QUANTITIES SEE SHEET 569C												
	RAMP "D"														
118	1+94	RT	R-15A-36	3'x3'				1					14.0/14.5		1
119	900+73	RT	W-53R-48	4'x4'		16.0							16.0/16.0		
	SHEET TOTAL					92.75		20	2			1	514.5	65.0	29

DESIGN FILE : $$$$DESIGNFILESPECIFICATION$$$$$$$$$$
USERNAME : $$$$INSTRUCTIONS$$$$
DATE : $$$$DATE$$$$
TIME : $$$$TIME$$$$

CALCULATED
CHECKED

SIGNING QUANTITIES

MED-71-15.78

SIGNING SUB-SUMMARY

Note: Sheet Totals Carried To Traffic Control General Summary Sheet 562 .

REF. NO.	STATION	SIDE	CODE	SIZE	LEVEL	630 SIGNS FLAT SHEET TYPE "G" SQ. FT.	630 SIGNS EXTRU SHEET TYPE "G" SQ. FT.	630 REMOVAL OF GROUND MTD SIGN & RERECTION MINOR EACH	630 REMOVAL OF GROUND MTD SIGN & RERECTION MAJOR EACH	630 REMOVAL OF GROUND MTD. SIGN & DISPOSAL MINOR EACH	630 REMOVAL OF GROUND MTD. SIGN & DISPOSAL MAJOR EACH	630 GROUND MOUNTED SUPPORTS NO. 3 POST LIN. FT.	630 GROUND MOUNTED SUPPORTS ONE WAY NO. 3 POST LIN. FT.	630 OVERHEAD SIGN SUPPORTS	630 REMOVAL OF GRD. MTD. POST SUPPORT AND DISPOSAL POST EACH
	S.R. 3 INTERCHANGE														
	RAMP "A"														
120	77+00	RT	FOR QUANTITIES SEE SHEET 569C												
121	79+00	RT	NO WORK												
122	82+90	RT	R-41A	3'x2'				1				13.0/13.5			1
		LT	R-41A	3'x2'				1				13.0/13.5			1
123	84+60	LT	R-1-48	4'x4'		16.0				1		15.0			1
			R-41B-36	3'x3'		9.0				1					2
			R-43R-48	4'x1.5'		6.0				1			16.5		
			R-43L-48	4'x1.5'		6.0				1					
124	84+60	RT	R-1-48	4'x4'		16.0				1		15.0			2
			R-41B-36	3'x3'		9.0				1					
			R-43R-48	4'x1.5'		6.0							16.5		
			R-43L-48	4'x1.5'		6.0									
	RAMP "B"														
125	85+50	RT	R-15A-36	3'x3'				1				14.0/15.0			1
125A	902+00	LT	IM-38-36	3'x1.5'		4.5						17.5/17.5			
			M-5-36-2	3'x3'		9.0									
			IM-21-30	2.5'x2'		5.0									
	902+93	LT	M-45							1					1
125B	899+11	RT	IM-37-36	3'x1.5'		4.5						17.5/17.5			
			M-5-36-2	3'x3'		9.0									
			IM-21-30	2.5'x2'		5.0									
			M-45							1					1
	RAMP "C"														
126	81+30	LT	R-1-48	4'x4'		16.0				1		15.0			2
			R-41B-36	3'x3'		9.0				1					
			R-43R-48	4'x1.5'		6.0				1			16.5		
			R-43L-48	4'x1.5'		6.0				1					
127	81+30	RT	R-1-48	4'x4'		16.0				1		15.0/15.0			2
			R-41B-36	3'x3'		9.0				1					
128	83+50	LT	R-41A-36	3'x2'				1				13.0/13.5			1
		RT	R-41A-36	3'x2'				1				13.0/13.5			1
129	88+05		FOR QUANTITIES SEE SHEET 569C												
	RAMP "D"														
130	80+23	LT	R-15A-36	3'x3'				1				14.0/15.0			1
130A-130D			FOR QUANTITIES SEE SHEET 569D												
	S.R. 303 INTERCHANGE														
	RAMP "C"														
131	37+00	RT	W-47-48	4'x4'		16.0						15.5/16.0			
		LT	W-47-48	4'x4'		16.0						15.5/16.0			
132	41+15	RT	W-82-36	3'x3'						1					1
			W-81-42	3.5'x3.5'		12.25						15.0/15.5			
133	41+92		FOR QUANTITIES SEE SHEET 569D												
134	42+10		R-41A-36	3'x2'				1				13.0/13.5			1
		RT	R-41A-36	3'x2'				1				13.0/13.5			1
135	43+00	RT	R-31F-36	3'x2.5'		7.5						14.0/14.5			
136	45+00	RT	W-47-48	4'x4'						1					2
	SHEET TOTAL					224.75		8		16		484.0	49.5		22

DESIGN FILE : $$$$$$$$$DESIGNFILESPECIFICATION$$$$$$$$$
USERNAME : $$$$INSTRUCTIONS$$$$
DATE : $$$$DATE$$$$
TIME : $$$$TIME$$$$

CALCULATED
CHECKED

SIGNING QUANTITIES

MED-71-15.78

SIGNING SUB-SUMMARY

Note: Sheet Totals Carried To Traffic Control General Summary Sheet 562 .

REF. NO.	STATION	SIDE	CODE	SIZE	LEVEL	630 SIGNS FLAT SHEET TYPE "G" SQ. FT.	630 SIGNS EXTRU SHEET TYPE "G" SQ. FT.	630 REMOVAL OF GROUND MTD SIGN & RERECTION MINOR EACH	630 REMOVAL OF GROUND MTD SIGN & RERECTION MAJOR EACH	630 REMOVAL OF GROUND MTD. SIGN & DISPOSAL MINOR EACH	630 REMOVAL OF GROUND MTD. SIGN & DISPOSAL MAJOR EACH	630 SIGN SUPPORT ASSEMBLY, POLE MOUNTED EACH	625 GROUND RODS EACH	630 GROUND MOUNTED SUPPORTS NO. 3 POST LIN. FT.	630 GROUND MOUNTED SUPPORTS ONE WAY NO. 3 POST LIN. FT.	630 OVERHEAD SIGN SUPPORTS TC 12.30 DESIGN 4 20' ARM EACH	630 RIGID OVERHEAD SIGN SUPPORT FOUNDATION EACH	630 REMOVAL OF GRD. MTD. POST SUPPORT AND DISPOSAL POST EACH
	S.R. 3 INTER. (Cont.)																	
	RAMP "D"																	
137	45+00	RT	R-31F-36	3'x2.5'		7.5								14.5/15.0				
137A	46+81	RT	W-81-42	3.5'x3.5'		12.25								14.5/15.0				
138	46+73	RT	R-41B-36	3'x3'				1						14.0				2
			R-43R-48	4'x1.5'				1							15.5			
			R-43L-48	4'x1.5'				1										
139	45+00	LT	R-15A-36	3'x3'				1						14.0/14.5				1
140	46+05	LT	R-2-36	3'x3'				1						14.5/15.0				2
140A	47+30	LT	W-81-42	3.5'x3.5'		12.25								14.5/15.0				
	RAMP "B"																	
141	45+92	LT	R-15A-36	3'x3'				1						14.0/15.0				1
142	47+46	LT	R-2-36	3'x3'				1						14.5/15.0				2
142A	47+90	LT	W-81-42	3.5'x3.5'		12.25								14.5/15.0				
	48+31	LT	W-81-42	3.5'x3.5'		12.25								14.5/15.0				
143	48+00	LT	W-82-36	3'x3'						1								1
			WP-76P-24	2'x2'						1								
144	0+50	LT	W-82-36	3'x3'						1								1
			WP-76P-24	2'x2'						1								
			W-81-42	3.5'x3.5'		12.25								14.5/14.5				
145	48+53	RT	R-3R-36	3'x4.5'				1						15.5				2
			R-41B-36	3'x3'		9.0									17.0			
			R-43R-48	4'x1.5'		6.0												
			R-43L-48	4'x1.5'		6.0												
145A	48+53	LT	R-3L-36	3'x4.5'				1						15.5				2
			R-41B-36	3'x3'		9.0									17.0			
			R-43R-48	4'x1.5'		6.0												
			R-43L-48	4'x1.5'		6.0												
146	48+40	LT	W-82-36	3'x3'						1								1
			WP-76P-24	2'x2'						1								
			W-81-42	3.5'x3.5'		12.25								14.5/14.5				
146A	50+00	RT	R-31A-36	3'x2.5'		7.5								13.5/14.5				
147	52+00	LT	R-41A-36	3'x2'				1						13.5/14.5				1
147A	52+00	RT	R-41A-36	3'x2'				1						13.5/14.5				1
			R-31A-36	3'x2.5'		7.5												
148	52+67	LT	W-82-36	3'x3'						1								1
			W-81-42	3.5'x3.5'		12.25								14.5/15.0				
149	54+67	LT	FOR QUANTITIES SEE SHEET 569D															
	S.R. 303 MAIN LINE																	
150	45+05	RT	N-44B-18	1.5'x1'		1.5						1						
150A	47+40	LT	N-44B-18	1.5'x1'		1.5						1						
150B	49+00	RT	FOR QUANTITIES SEE SHEET 569E															
151	51+06	RT	FOR QUANTITIES SEE SHEET 569E															
	51+25	MED																
151A	54+22	RT	N-44B-18	1.5'x1'		1.5						1						
151B	56+40	LT	N-44B-18	1.5'x1'		1.5						1						
	I.R. 71 MAIN LINE																	
152	1267+25	MED	W-54A	16'x5'			80.0						1			1	1	
			N-44B-18	1.5'x1'		1.5						1						
153	1294+15	MED	W-54B	16'x5'			80.0						1			1	1	
			N-44B-18	1.5'x1'		1.5						1						
154	1307+35	MED	W-54B	16'x5'			80.0						1			1	1	
			N-44B-18	1.5'x1'		1.5						1						
	SHEET TOTAL					160.75	240.0	11		7		7	3	480.5	49.5	3	3	18

DESIGN FILE : $$$$$$$$$$DESIGNFILESPECIFICATION$$$$$$$$$$
USERNAME : $$$$INSTRUCTIONS$$$$
DATE : $$$$DATE$$$$$
TIME : $$$$TIME$$$$

CALCULATED
CHECKED

SIGNING QUANTITIES

MED-71-15.78

569A
940

630

SHEET NO.	REFERENCE NO.	STATION	SIDE	CODE	SIZE (FEET)	GUARDRAIL		FOR DETAIL SHOWING POINTS OF ELEVATIONS A, B, C, & D SEE SHEET						SIGNS		GROUND MOUNTED SUPPORTS				REMOVAL OF GROUND MOUNTED SIGN AND DISPOSAL		GROUND MOUNTED BEAM SUPPORT FOUNDATION	SIGN BACKING ASSEMBLY	REMOVAL OF GROUND MOUNTED POST SUPPORT AND DISPOSAL	REMOVAL OF GROUND MOUNTED BEAM SUPPORT AND DISPOSAL	BREAKAWAY BEAM CONNECTION	REMOVAL OF GROUND MOUNTED SIGN AND REERECTION	
								OFFSET BEHIND GUARDRAIL	ELEV. TOP OF FOUNDATION		ELEV. BOTTOM OF FOUNDATION		OFFSET FROM EDGE OF PAVEMENT	FLAT SHEET, TYPE G	EXTRU SHEET, TYPE G	S4 x 7.7 BEAM	W 6 x 9 BEAM	W 10 x 12 BEAM	W 10 x 22 BEAM									
						YES	NO	FEET	A	C	B	D	FEET	SQ. FT.		LIN. FT.				MINOR	MAJOR	EACH	EACH	EACH	EACH	EACH	MINOR	MAJOR
	2A	855+00	LT.	R-9-84	7' x 6'	X		4	98.8	98.1	94.8	94.1			42.0	18/19						2				2		
				N-44B-18	1.5' x 1'									1.5									1					
	8	883+92	RT.	GF	8' x 5'		X		99.0	98.4	95.0	94.4	16			17/17.5						2		2		2		1
				N-44B-18	1.5' x 1'									1.5									1					
	10	898+41	LT.	GF	8' x 5'		X		99.0	98.5	95.0	94.5	16			17/17.5						2		2		2		1
				N-44B-18	1.5' x 1'									1.5									1					
	19	931+16 / 941+00	RT.	R-9-84	7' x 6'		X		98.8	98.1	94.8	94.1	16			18/19						2				2	2	1
				N-44B-18	1.5' x 1'									1.5									1					
	23	935+14	LT.	R-9-84	7' x 6'	X		4	98.0	96.0	94.0	92.0				19/21						2				2	2	1
				N-44B-18	1.5' x 1'									1.5									1					
	36	977+67	RT.	GF	8' x 5'		X		98.9	98.4	94.9	94.4	16			17/17.5						2		2		2		1
				N-44B-18	1.5' x 1'									1.5									1					
	39	1001+60	RT.	GJ	8' x 3'	X		4	97.5	95.5	93.5	91.5				16.5/18.5						2				2	2	1
				N-44B-18	1.5' x 1'									1.5									1					
	44	1050+45	RT.	GB	17' x 6'	X		4	97.5	96.0	92.5	91.0					19.5/21					2				2	2	1
				N-44B-18	1.5' x 1'									1.5									1					
	45	1050+78	LT.	GJ	9' x 4'	X		4	98.6	97.8	94.6	93.8				16.5/17.5						2				2	2	1
				N-44B-18	1.5' x 1'									1.5									1					
	46	1061+12	LT.	R-9-84	7' x 6'	X		4	98.8	98.0	94.8	94.0				18/19						2				2	2	1
				N-44B-18	1.5' x 1'									1.5									1					
	53	1093+00	RT.	GF	8' x 5'		X		99.0	99.0	95.0	95.0	16			17/17						2		2		2		1
				N-44B-18	1.5' x 1'									1.5									1					
	59	1115+57	LT.	GF	8' x 5'		X		99.0	99.0	95.0	95.0	16			17/17						2		2		2		1
				N-44B-18	1.5' x 1'									1.5									1					
	65	1148+57	RT.	R-9-84	7' x 6'		X		98.8	98.1	94.8	94.1	16			18/19						2		2		2		1
				N-44B-18	1.5' x 1'									1.5									1					
	68	1171+33	LT.	RA-4-72	6' x 5.5'		X		99.0	98.5	95.0	94.5	16			17.5/18						2		2		2	1	
				N-44B-18	1.5' x 1'									1.5									1					
	74	1199+17	RT.	RA-4-72	6' x 5.5'		X		99.0	98.6	95.0	94.6	16			17.5/18						2		2		2	1	
				N-44B-18	1.5' x 1'									1.5									1					
	76	1212+37	LT.	R-9-84	7' x 6'		X		98.7	98.0	94.7	94.0	16			18.5/19						2				2	2	1
				N-44B-18	1.5' x 1'									1.5									1					
	79	1226+15	LT.	RA-1-132	11' x 4.5'	X		4	98.6	97.6	94.6	93.6				17/18						2		2		2		1
				GSF-1	5' x 1.5'																		2				1	
				N-44B-18	1.5' x 1'									1.5									1					
	83	1257+34	RT.	GF	8' x 5'		X		99.0	99.0	95.0	95.0	16			17/17						2		2		2		1
				N-44B-18	1.5' x 1'									1.5									1					
TOTALS CARRIED TO SHEET NO. 569A														27.0	42.0	606.0	40.5					36	20	20	14	36	5	13

CALCULATED PS
CHECKED PDG

SIGNING SUBSUMMARY
BEAM SUPPORTS AND FOUNDATIONS

MED-71-15.78

569B
940

7885REL_TSA.DGN 1/28/00 SAM

630

SHEET NO.	REFERENCE NO.	STATION	SIDE	CODE	SIZE (FEET)	GUARDRAIL YES	GUARDRAIL NO	FOR DETAIL SHOWING POINTS OF ELEVATIONS A, B, C, & D SEE SHEET: OFFSET BEHIND GUARDRAIL FEET	ELEV. TOP OF FOUNDATION A	ELEV. TOP OF FOUNDATION C	ELEV. BOTTOM OF FOUNDATION B	ELEV. BOTTOM OF FOUNDATION D	OFFSET FROM EDGE OF PAVEMENT FEET	SIGNS: FLAT SHEET, TYPE G SQ. FT.	SIGNS: EXTRU-SHEET, TYPE G SQ. FT.	GROUND MOUNTED SUPPORTS: S4 x 7.7 BEAM LIN. FT.	GROUND MOUNTED SUPPORTS: W 6 x 9 BEAM LIN. FT.	GROUND MOUNTED SUPPORTS: W 10 x 12 BEAM LIN. FT.	GROUND MOUNTED SUPPORTS: W 10 x 22 BEAM LIN. FT.	REMOVAL OF GROUND MOUNTED SIGN AND DISPOSAL: MINOR EACH	REMOVAL OF GROUND MOUNTED SIGN AND DISPOSAL: MAJOR EACH	GROUND MOUNTED BEAM SUPPORT FOUNDATION EACH	SIGN BACKING ASSEMBLY EACH	REMOVAL OF GROUND MOUNTED POST SUPPORT AND DISPOSAL EACH	REMOVAL OF GROUND MOUNTED BEAM SUPPORT AND DISPOSAL EACH	BREAKAWAY BEAM CONNECTION EACH	REMOVAL OF GROUND MOUNTED SIGN AND REERECTION: MINOR EACH	REMOVAL OF GROUND MOUNTED SIGN AND REERECTION: MAJOR EACH
	90	1278+72	LT.	GF	8' x 5'		X		98.6	98.0	94.6	94.0	16			17.5/18						2		2		2				1
				N-44B-18	1.5' x 1'									1.5										1						
	93	1296+41	RT.	R-9-84	7' x 6'		X		98.8	98.8	94.8	94.2	16			18.5/19						2				2	2			1
				N-44B-18	1.5' x 1'									1.5										1						
	96	1306+51	RT.	GJ	9' x 4'	X		4	97.5	95.0	93.5	91.0				17.5/20						2				2	2	1		
				N-44B-18	1.5' x 1'									1.5										1						
	100	1391+34	LT.	R-9-84	7' x 6'		X		98.6	98.0	94.6	94.0	16			18.5/19						2				2	2			1
				N-44B-18	1.5' x 1'									1.5										1						
		S.R. 18 INTERCHANGE																												
	102	17+02 RAMP C	RT.	M-2-36-2	3' x 3'																				1			1		
				M-25-30	2.5' x 2'																							1		
				D-4B-48	10' x 4'		X		98.2	97.3	92.2	91.3	12					19/20				2				2	2			1
				N-43B-18	1.5' x 1'									1.5										1						
	115	5+63 RAMP B	LT.	M-2-36-2	3' x 3'																				1			1		
				M-25-30	2.5' x 2'																							1		
				D-4B-48	10' x 4'		X		98.5	97.3	92.5	91.3	16					19/20				2				2	2			1
				N-43B-18	1.5' x 1'									1.5										1						
	117	8+06 RAMP B	RT.	M-2-36-2	3' x 3'																				1			1		
				M-25-30	2.5' x 2'																							1		
				D-4B-48	10' x 4'		X		98.3	97.5	92.3	91.5	16					19/20				2				2	2			1
				N-43B-18	1.5' x 1'									1.5										1						
		S.R. 3 INTERCHANGE																												
	120	77+00 RAMP A	RT.	M-2-36-2	3' x 3'									9.0										1						
				M-25-30	2.5' x 2'									5.0																
				D-4B-48	9' x 4'		X		98.9	97.8	93.9	92.8	12		36.0		17.5/18.5					2					2			
				N-43B-18	1.5' x 1'									1.5										1						
	129	88+05 RAMP C	LT.	M-2-36-2	3' x 3'									9.0										1						
				M-25-30	2.5' x 2'									5.0																
				D-4B-48	9' x 4'	X		4	97.5	95.5	91.5	89.5			36.0			20/21.5				2					2			
				N-43B-18	1.5' x 1'									1.5										1						
				M-2-24																	1									
				M-25-21																	1									
				D-4B																	1				2					
		TOTALS CARRIED TO SHEET NO. 569D												41.5	72.0	148.0	36.0	158.5		3		18	14	4	12	18	7	6		

CALCULATED PS
CHECKED PDG

SIGNING SUBSUMMARY
BEAM SUPPORTS AND FOUNDATIONS

MED-71-15.78

569C
940

7885REL_TSB.DGN 1/26/00 SAM

630

SHEET NO.	REFERENCE NO.	STATION	SIDE	CODE	SIZE (FEET)	GUARDRAIL YES	GUARDRAIL NO	FOR DETAIL SHOWING POINTS OF ELEVATIONS A, B, C, & D SEE SHEET: OFFSET BEHIND GUARDRAIL FEET	ELEV. TOP OF FOUNDATION A	ELEV. TOP OF FOUNDATION C	ELEV. BOTTOM OF FOUNDATION B	ELEV. BOTTOM OF FOUNDATION D	OFFSET FROM EDGE OF PAVEMENT FEET	SIGNS: FLAT SHEET, TYPE G SQ. FT.	SIGNS: EXTRU-SHEET, TYPE G SQ. FT.	GROUND MOUNTED SUPPORTS: S4 x 7.7 BEAM LIN. FT.	W 6 x 9 BEAM LIN. FT.	W 10 x 12 BEAM LIN. FT.	W 10 x 22 BEAM LIN. FT.	REMOVAL OF GROUND MOUNTED SIGN AND DISPOSAL: MINOR EACH	REMOVAL OF GROUND MOUNTED SIGN AND DISPOSAL: MAJOR EACH	GROUND MOUNTED BEAM SUPPORT FOUNDATION EACH	SIGN BACKING ASSEMBLY EACH	REMOVAL OF GROUND MOUNTED POST SUPPORT AND DISPOSAL EACH	REMOVAL OF GROUND MOUNTED BEAM SUPPORT AND DISPOSAL EACH	BREAKAWAY BEAM CONNECTION EACH	REMOVAL OF GROUND MOUNTED SIGN AND REERECTION: MINOR EACH	REMOVAL OF GROUND MOUNTED SIGN AND REERECTION: MAJOR EACH
		S.R. 3 MAINLINE																											
	130A	897+00	LT.	GH-1	14' x 9.5'		X		98.5	97.4	91.7	90.7	17		133.0				25/29			2						2		
				N-44B-18	1.5' x 1'									1.5										1						
	130B	897+10	RT.	M-52A	9' x 2.5'	X		4.7	99.3	99.1	95.3	95.1			22.5	14.5/14.5						2					2		
				N-44B-18	1.5' x 1'									1.5										1						
	130C	904+00	RT.	GH-1	13' x 9.5'	X		4	95.9	92.2	89.2	85.5			123.5				27.5/31			2					2		
				N-44B-18	1.5' x 1'									1.5										1						
	130D	904+15	LT.	M-52A	9' x 2.5'	X		6.85	99.0	98.6	95.0	94.6			22.5	15/15						2					2		
				N-44B-18	1.5' x 1'									1.5										1						
		S.R. 303 INTERCHANGE																											
	133	41+92 RAMP C	RT.	M-2-36-3	3.75' x 3'									11.3										1						
				M-25-30	2.5' x 2'									5.0																
				D-4B-48	10' x 4'		X		98.7	97.8	92.7	91.8	16		40.0			18.5/19.5				2					2		
				N-43B-18	1.5' x 1'									1.5										1						
				M-2-24																1									
				M-25-21																1									
				D-4B																	1					2			
	149	54+67 RAMP A	LT.	M-2-36-3	3.75' x 3'									11.3										1				2		
				M-25-30	2.5' x 2'									5.0																
				D-4B-48	10' x 4'	X		4	99.4	95.1	93.4	89.1			40.0			20/24				2							
				D-4A-24	10' x 2'										20.0															
				N-43B-18	1.5' x 1'									1.5										1						
				M-2-24																1									
				M-25-21																1									
				D-4B																	1					2			
	TOTAL FROM THIS SHEET													41.6	401.5	59.0		82.0	112.5	4	2	12	8		4	12		
	TOTAL FROM SHEET NO. 569B													27.0	42.0	606.0	40.5					36	20	20	14	36	5	13
	TOTAL FROM SHEET NO. 569C													41.5	72.0	148.0	36.0	158.5		3		18	14	4	12	18	7	6
	TOTALS CARRIED TO TRAFFIC CONTROL GENERAL SUMMARY													110.1	515.5	813.0	76.5	240.5	112.5	7	2	66	42	24	30	66	12	19

CALCULATED PS
CHECKED PDG

SIGNING SUBSUMMARY
BEAM SUPPORTS AND FOUNDATIONS

MED-71-15.78

569D
940

7885REL_TSC.DGN 1/26/00 SAM

SHEET NO.	REFERENCE NO.	STATION	SIDE	CODE	SIZE (FEET)	LEVEL	GUARDRAIL YES	GUARDRAIL NO	OFFSET BEHIND GUARDRAIL FEET	625 GROUND RODS EACH	SIGNS FLAT SHEET, TYPE G SQ. FT.		630 REMOVAL OF OVERHEAD MOUNTED SIGN AND REERECTION, MAJOR EACH	SIGN SUPPORT ASSEMBLY, POLE MOUNTED EACH	OVERHEAD SIGN SUPPORTS TC-12.30 DESIGN 5 22' ARM EACH	OVERHEAD SIGN SUPPORTS TC-12.30 DESIGN 6 26' ARM EACH	OVERHEAD SIGN SUPPORTS TC-12.30 DESIGN 9 26' ARM EACH	OVERPASS STRUCTURE MOUNTED SIGN SUPPORT TC-18.26 DESIGN 9 EACH	RIGID OVERHEAD SIGN SUPPORT FOUNDATION EACH	REMOVAL OF OVERHEAD SIGN SUPPORT AND DISPOSAL TYPE TC-12.30 EACH	REMOVAL OF OVERHEAD SIGN SUPPORT AND DISPOSAL TYPE TC-18.26 EACH	REMOVAL OF STRUCTURE MOUNTED SIGN AND REERECTION EACH	
		S.R. 18 MAINLINE																					
	108A	149+95	RT.	GH	11' x 4.5'	1		X		1								1				1	1
	109	151+75	LT.	GH	11' x 4.5'			X										1				1	1
	109A	154+36	LT.	GH-1	9' x 7.5'	1	X		8				2										
			LT.	GH-1	9' x 7.5'					1							1		1				
				N-44B-18	1.5' x 1'						1.5			1									
		154+25		GH-1	9' x 7.5'															1			
				GH-1	9' x 7.5'																		
		S.R. 303 MAINLINE																					
	150B	49+00	RT.	GH	9' x 7.5'	1	X		6.5	1						1			1				
				N-44B-18	1.5' x 1'						1.5			1									
		49+25	RT.	GH	9' x 7.5'																	1	1
	151	51+40	LT.	GH	9' x 7.5'	1	X		6.5	1					1				1				
				N-44B-18	1.5' x 1'						1.5			1									
		51+06	LT.	GH	9' x 7.5'																	1	1
	TOTALS CARRIED TO TRAFFIC CONTROL GENERAL SUMMARY									4	4.5		2	3	1	1	1	2	3	1	4	4	

CALCULATED PS
CHECKED PDG

SIGNING SUBSUMMARY
SIDEROAD OVERHEAD SUPPORTS

MED-71-15.78

569E
940

7885REL_TSD.DGN 1/26/00 SAM

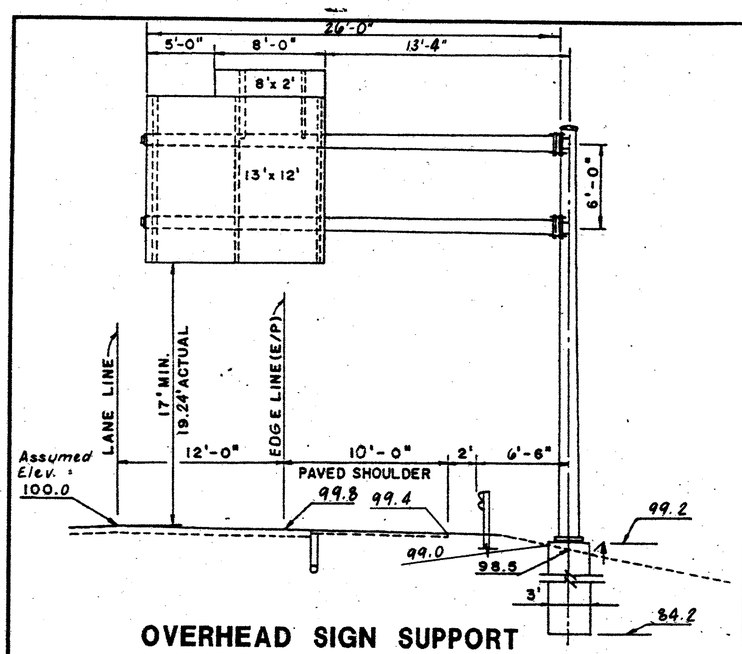

OVERHEAD SIGN SUPPORT

STA. 856+22, 84.5' RT. ℄ I.R. 71

3

TC-12.30, DESIGN 9
POLE = 30'-0"
ARM = 26'-0"

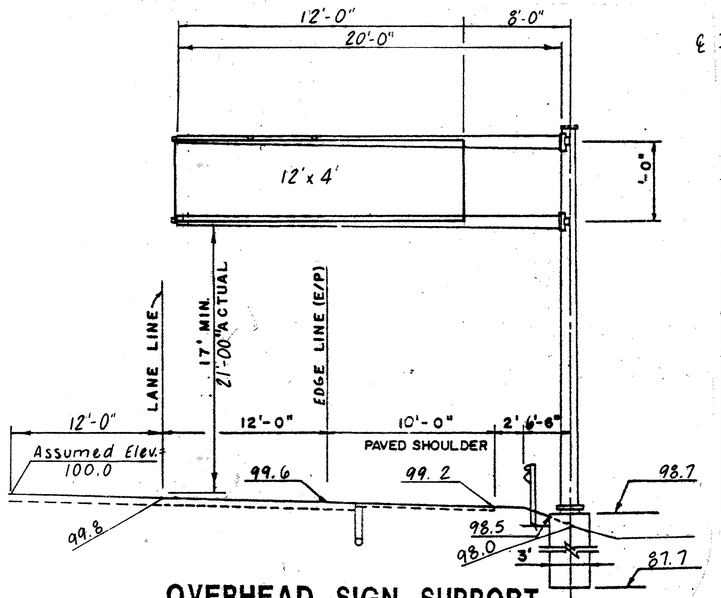

OVERHEAD SIGN SUPPORT

STA. 843+00, 11.5' LT. ℄ I.R. 71

1

TC-12.30, DESIGN 4
POLE = 27'-0"
ARM = 20'-0"

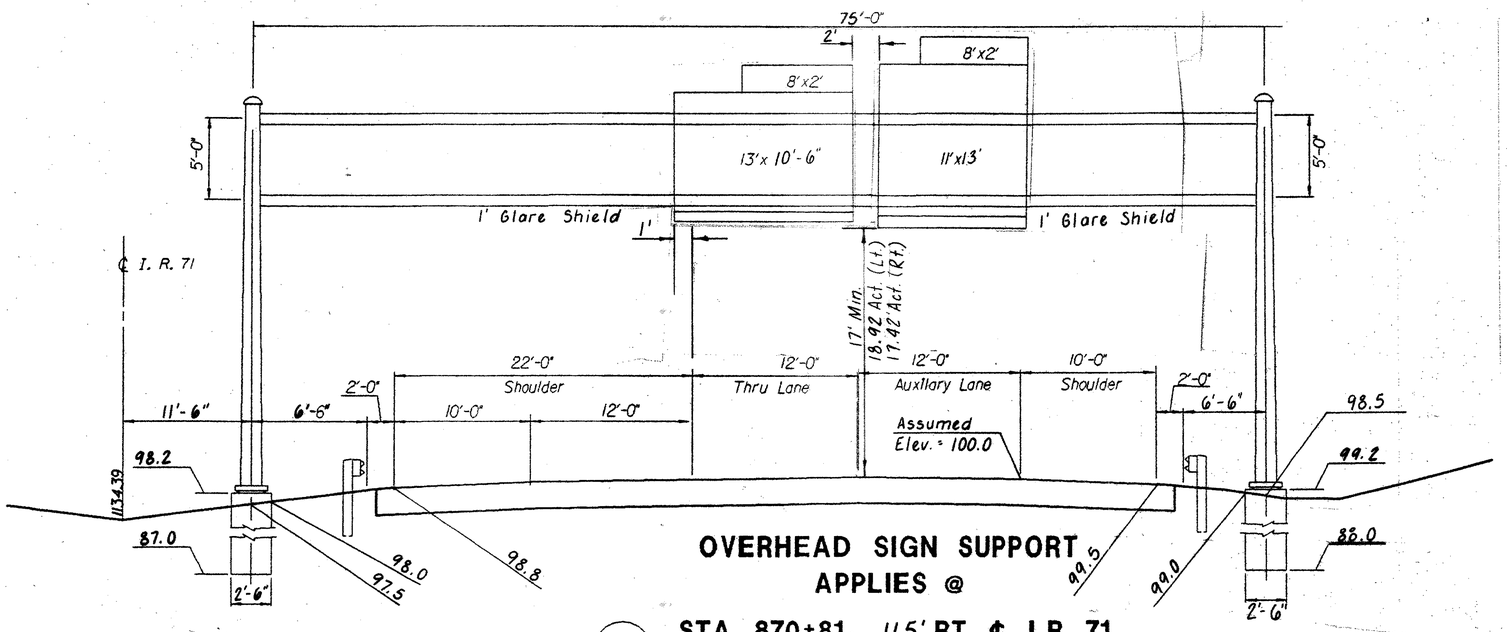

OVERHEAD SIGN SUPPORT
APPLIES @

STA. 870+81, 11.5' RT. ℄ I.R. 71

6

TC-7.65, DESIGN 8
LT. POLE = 29'-0"
RT. POLE = 28'-0"

HORIZONTAL SCALE IN FEET

CALCULATED

CHECKED

OVERHEAD SIGN SUPPORT DETAILS

MED - 71 - 15.78

570
940

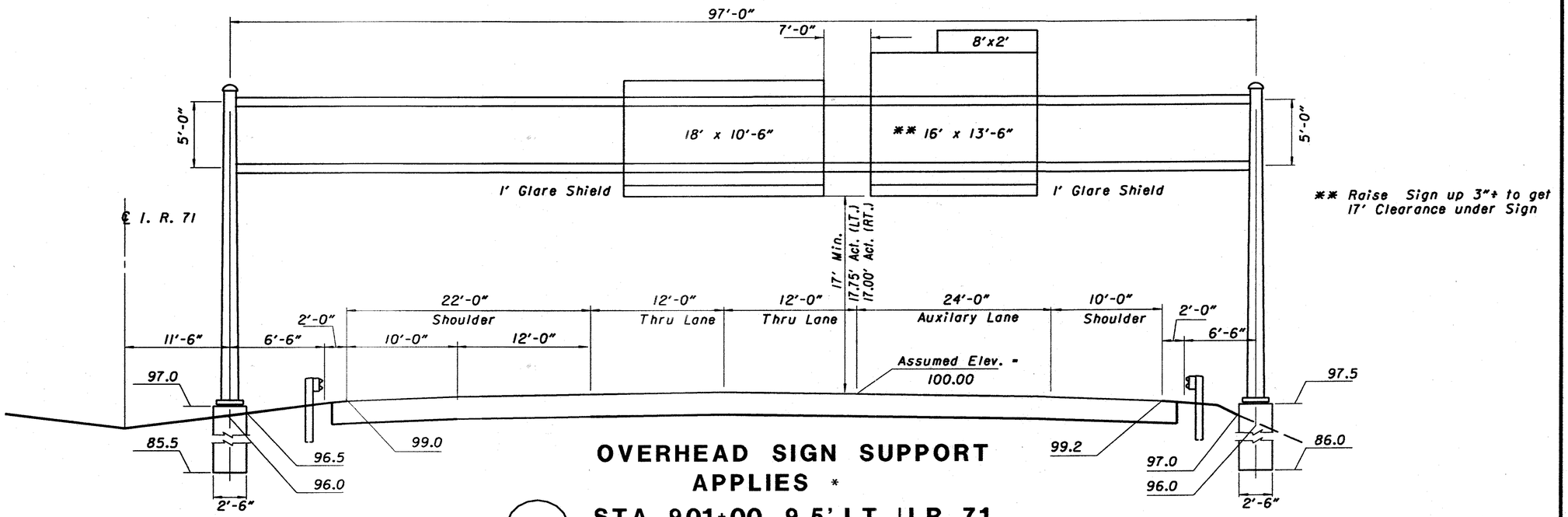

** Raise Sign up 3"± to get 17' Clearance under Sign

OVERHEAD SIGN SUPPORT
APPLIES *
12A STA. 901+00, 9.5' LT. ℄I.R. 71

TC-7.65, DESIGN 8
LT. POLE - 29'-6"
RT. POLE - 29'-0"

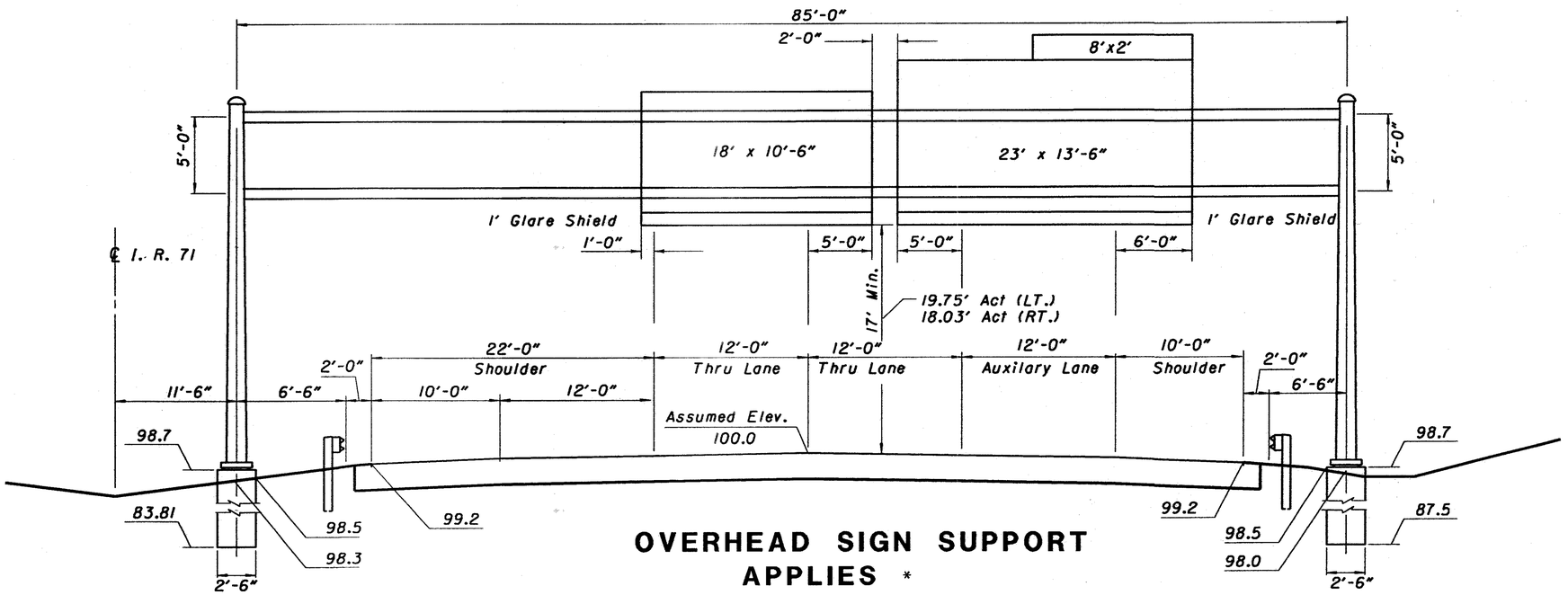

OVERHEAD SIGN SUPPORT
APPLIES *
17A STA. 927+40, 9.5' LT. ℄I.R. 71

TC-7.65, DESIGN 8
LT. POLE = 29'-6", RT. POLE = 29'-6"

OVERHEAD SIGN SUPPORT DETAILS

MED-71-15.78

571
940

DATE : $$$$DATE$$$$ DESIGN FILE : $$$$$$$$$$DESIGNFILESPECIFICATION$$$$$$$$$$
TIME : $$$$TIME$$$$ USERNAME : $$$$INSTRUCTIONS$$$$

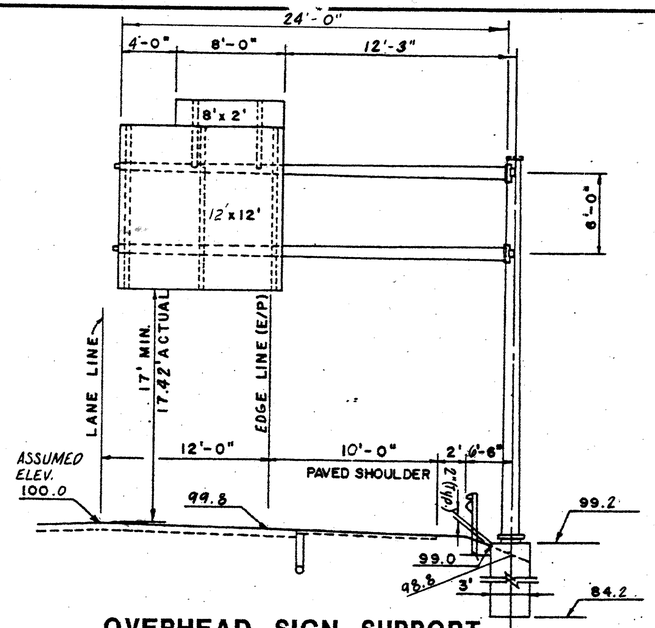

OVERHEAD SIGN SUPPORT

41 STA. 1038+20, 83.5' RT. ℄ I.R. 71

TC-12.30, DESIGN 7
POLE = 28'-0"
ARM = 24'-0"

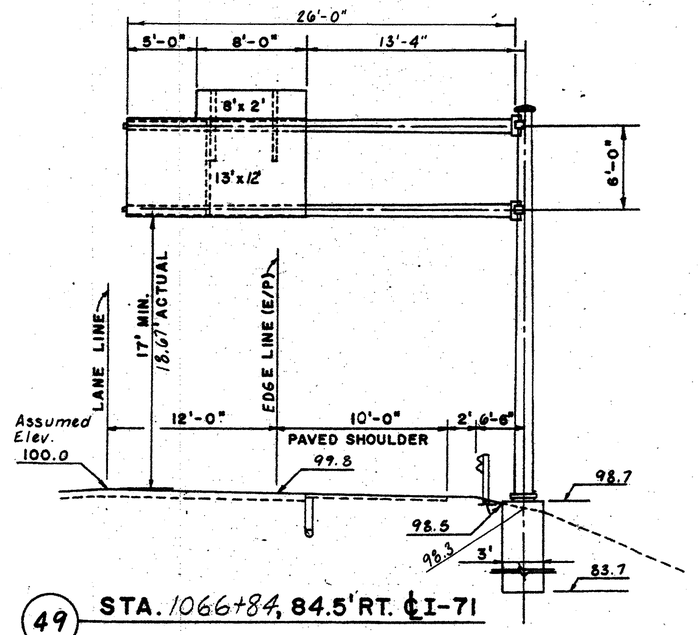

49 STA. 1066+84, 84.5' RT. ℄ I-71

TC-12.30 DESIGN 9
POLE = 30'-0"
ARM = 26'-0"

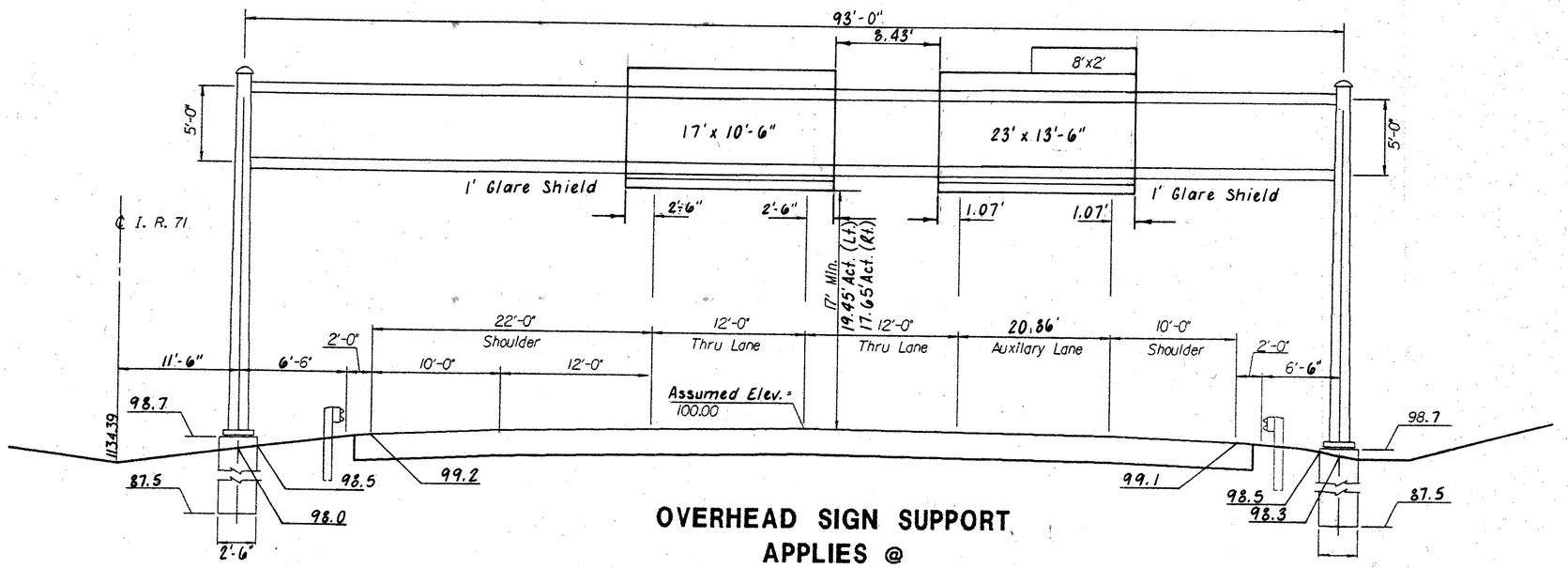

OVERHEAD SIGN SUPPORT APPLIES @

24A STA. 932+25.30, 11.5' RT. ℄ I.R. 71

TC-7.65, DESIGN 8
LT. POLE = 29'-0"
RT. POLE = 29'-0"

HORIZONTAL SCALE IN FEET
0

CALCULATED
CHECKED

OVERHEAD SIGN SUPPORT DETAILS

MED - 71 - 15.78

572
940

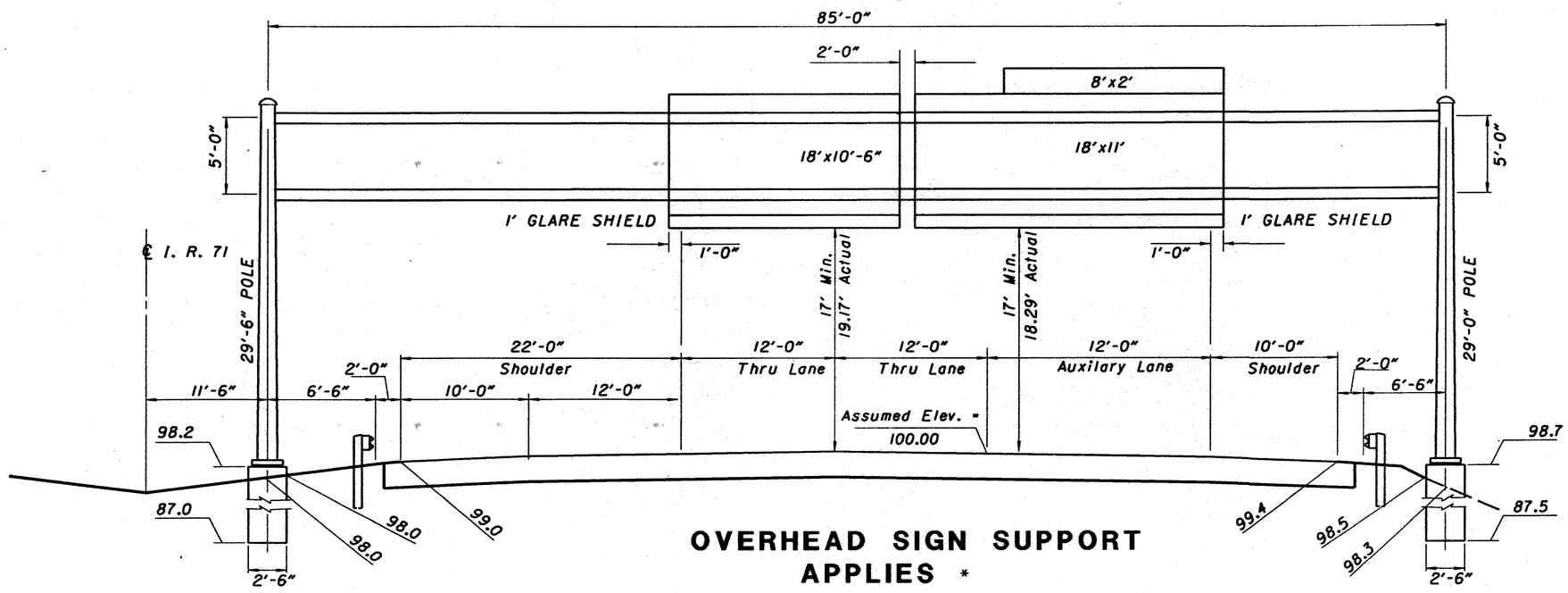

OVERHEAD SIGN SUPPORT
APPLIES *

30 **STA. 971+00, 11.5' RT. I.R. 71**

TC-7.65, DESIGN 8
LT. POLE = 29'-6"
RT. POLE = 29'-0"

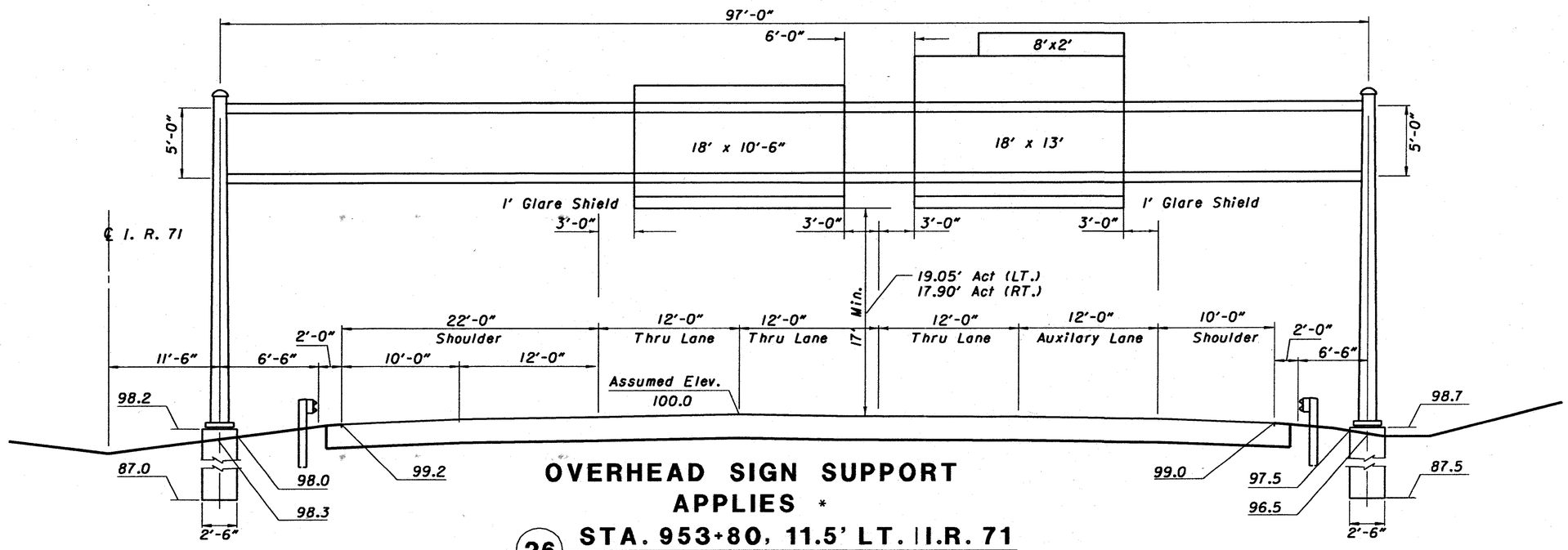

OVERHEAD SIGN SUPPORT
APPLIES *

26 **STA. 953+80, 11.5' LT. I.R. 71**

TC-7.65, DESIGN 8
LT. POLE = 29'-6", RT. POLE = 29'-0"

OVERHEAD SIGN SUPPORT DETAILS

MED-71-15.78

573
940

DATE : $$$$DATE$$$$ DESIGN FILE : $$$$$$$$$$DESIGNFILESPECIFICATION$$$$$$$$$$
TIME : $$$$TIME$$$$ USERNAME : $$$$INSTRUCTIONS$$$$

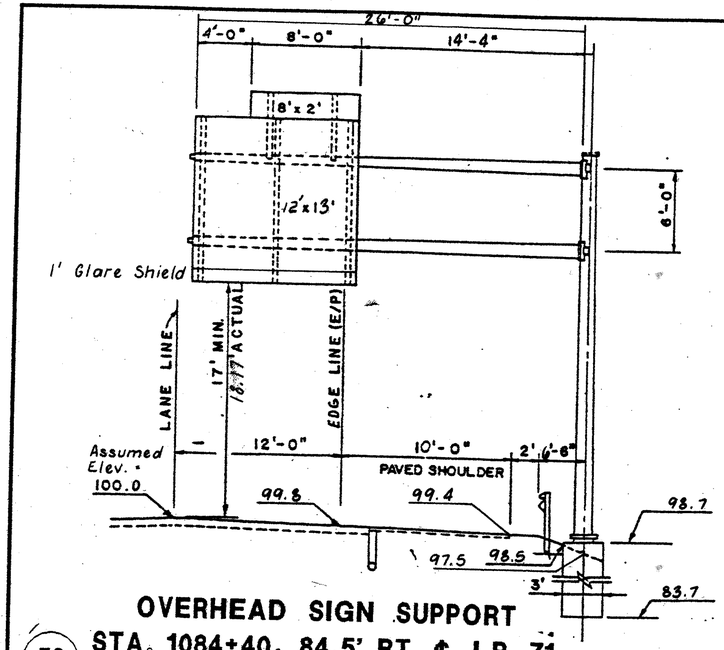

OVERHEAD SIGN SUPPORT

52 **STA. 1084+40, 84.5' RT. ℄ I.R. 71**

TC-12.30, DESIGN 9
POLE - 30'-0"
ARM - 26'-0"

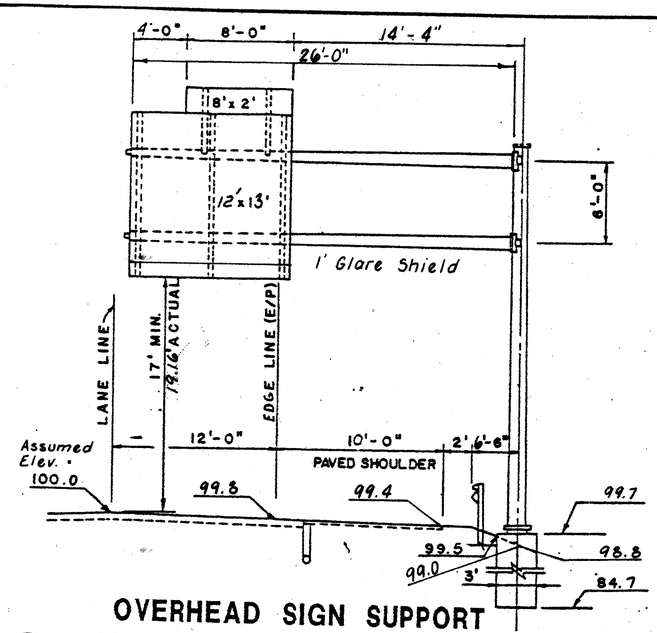

OVERHEAD SIGN SUPPORT

60 **STA. 1124+35, 87.5' LT. ℄ I.R. 71**

TC-12.30, DESIGN 9
POLE - 30'-0"
ARM - 26'-0"

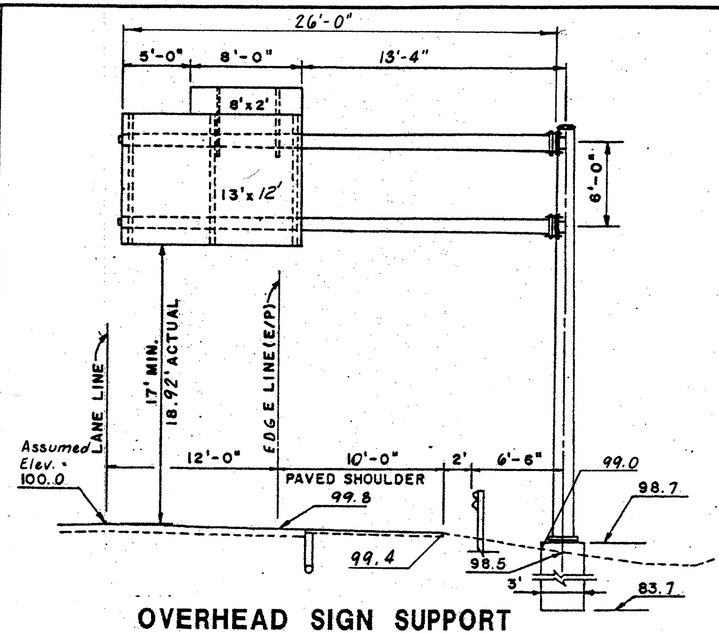

OVERHEAD SIGN SUPPORT

63 **STA. 1142+75, 87.5' LT. ℄ I.R. 71**

TC-12.30, DESIGN 9
POLE - 30'-0"
ARM - 26'-0"

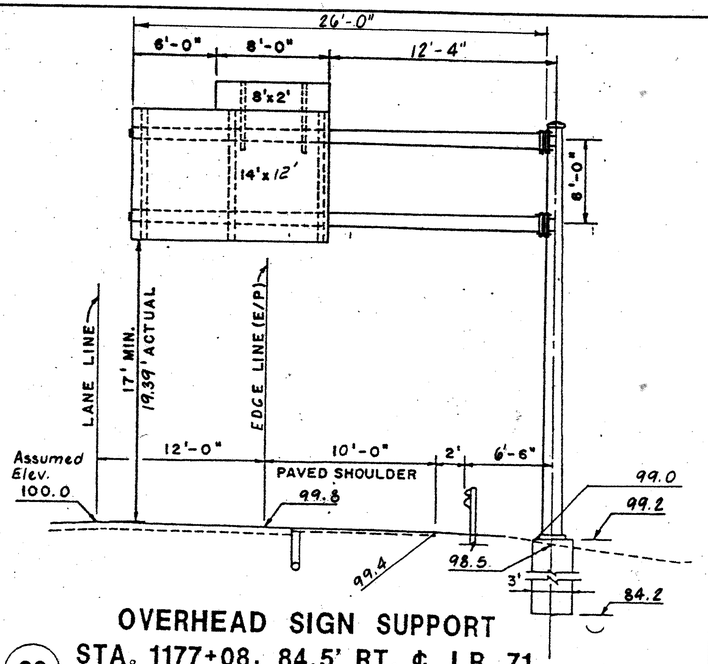

OVERHEAD SIGN SUPPORT

69 **STA. 1177+08, 84.5' RT. ℄ I.R. 71**

TC-12.30, DESIGN 9
POLE - 30'-0"
ARM - 26'-0"

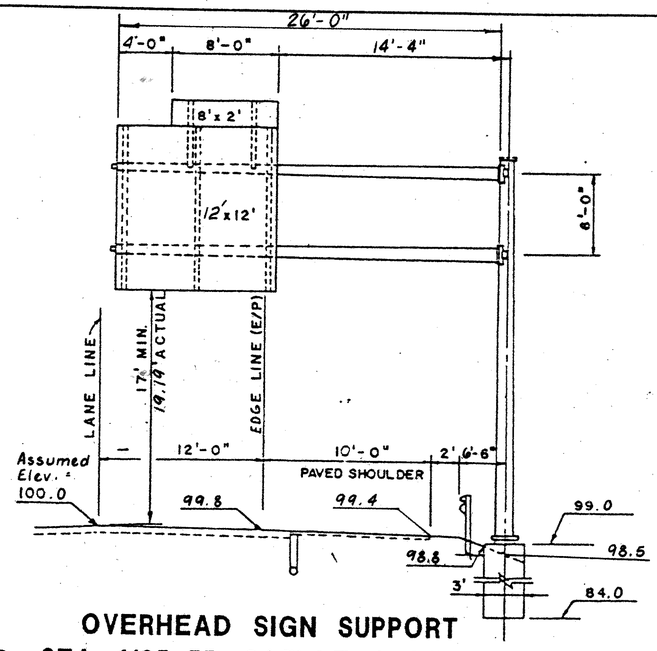

OVERHEAD SIGN SUPPORT

73 **STA. 1195+55, 84.5' LT. ℄ I.R. 71**

TC-12.30, DESIGN 9
POLE - 30'-0"
ARM - 26'-0"

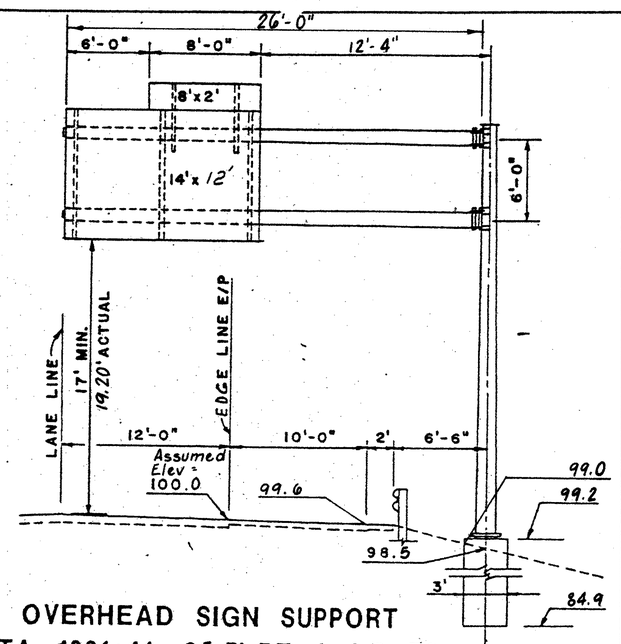

OVERHEAD SIGN SUPPORT

80 **STA. 1231+14, 85.5' RT. ℄ I.R. 71**

TC-12.30, DESIGN 9
POLE - 30'-0"
ARM - 26'-0"

HORIZONTAL SCALE IN FEET
0

CALCULATED | CHECKED

OVERHEAD SIGN SUPPORT DETAILS

MED - 71 - 15.78

574
940

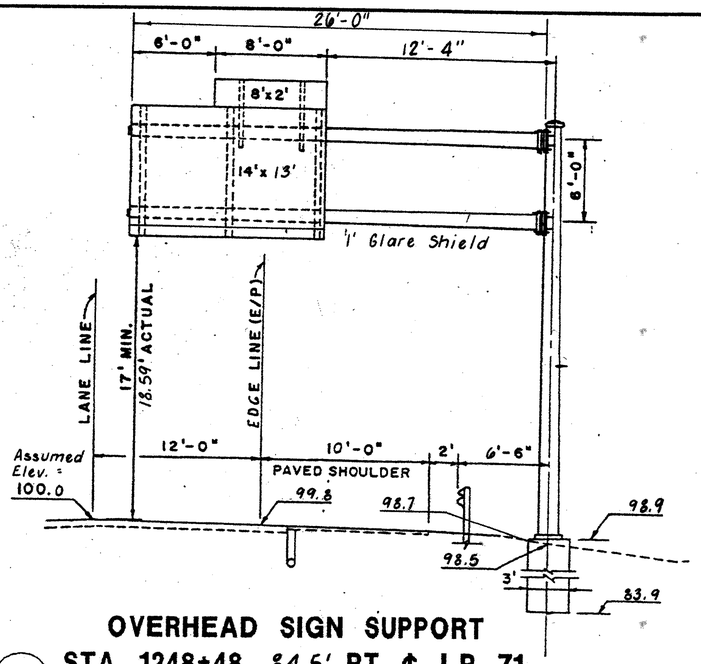

OVERHEAD SIGN SUPPORT
STA. 1248+48, 84.5' RT. ℄ I.R. 71

82

TC-12.30, DESIGN 9
POLE = 30'-0"
ARM = 26'-0"

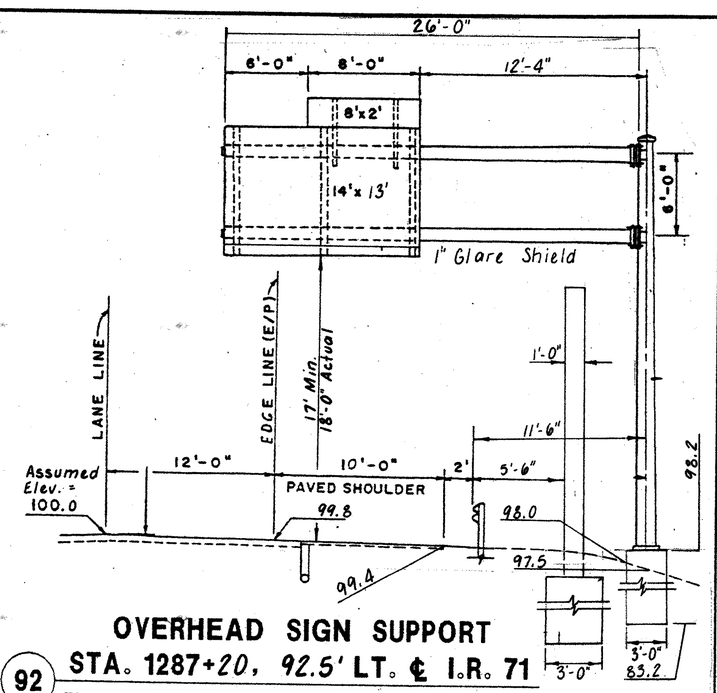

OVERHEAD SIGN SUPPORT
STA. 1287+20, 92.5' LT. ℄ I.R. 71

92

TC-12.30, DESIGN 9
POLE = 30'-0"
ARM = 26'-0"

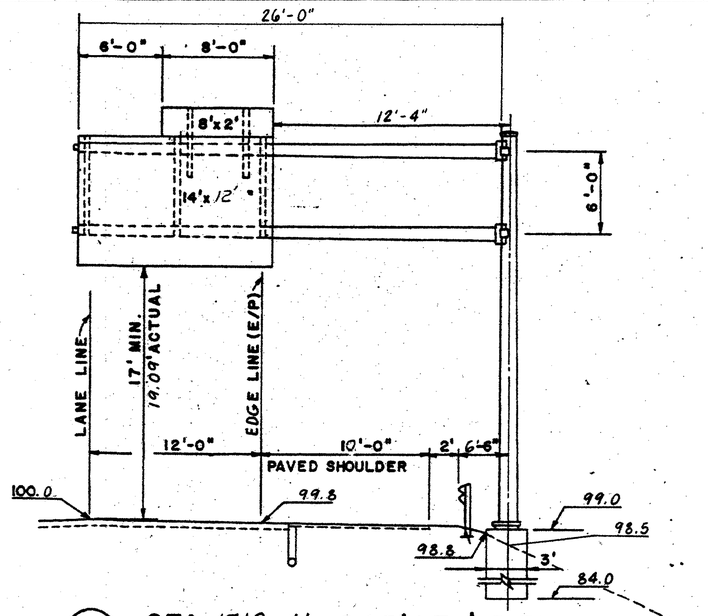

STA. 1312+11, 84.5' LT. ℄ I-71

97

TC-12.30, DESIGN 9
POLE = 30'-0"
ARM = 26'-0"

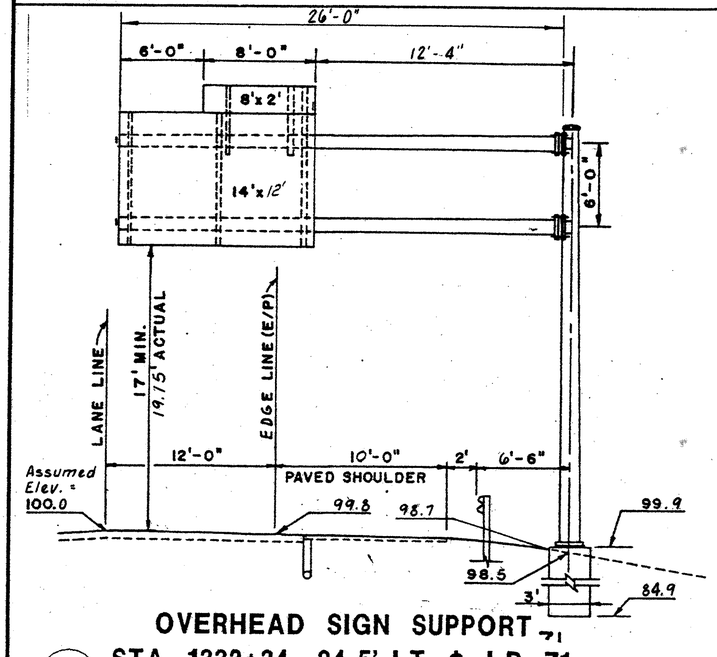

OVERHEAD SIGN SUPPORT
STA. 1332+34, 84.5' LT. ℄ I.R. 71

98

TC-12.30, DESIGN 9
POLE = 30'-0"
ARM = 26'-0"

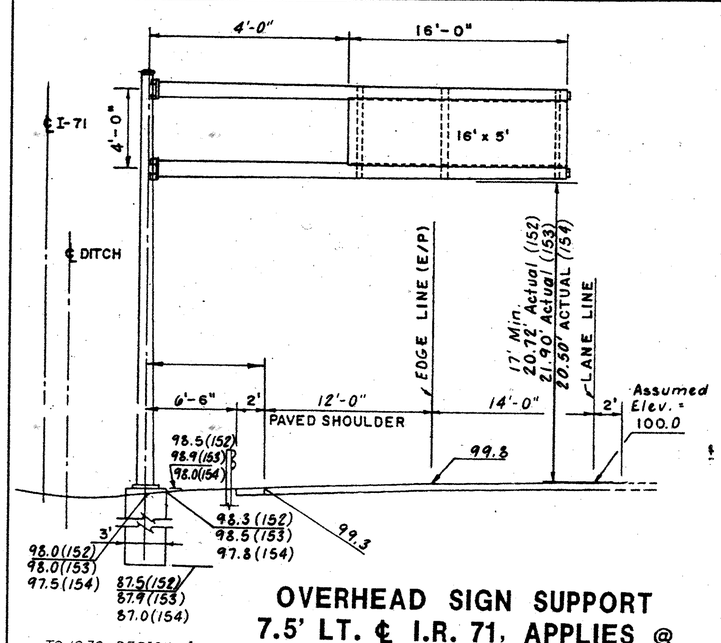

TC-12.30. DESIGN 4
POLE = 27'-0"
ARM = 20'-0"

OVERHEAD SIGN SUPPORT
7.5' LT. ℄ I.R. 71, APPLIES @

SIGN 152, STA. 1267+25
SIGN 153, STA. 1294+15
SIGN 154, STA. 1307+35

HORIZONTAL SCALE IN FEET
0

CALCULATED
CHECKED

OVERHEAD SIGN SUPPORT DETAILS

MED - 71 - 15.78

574A
940

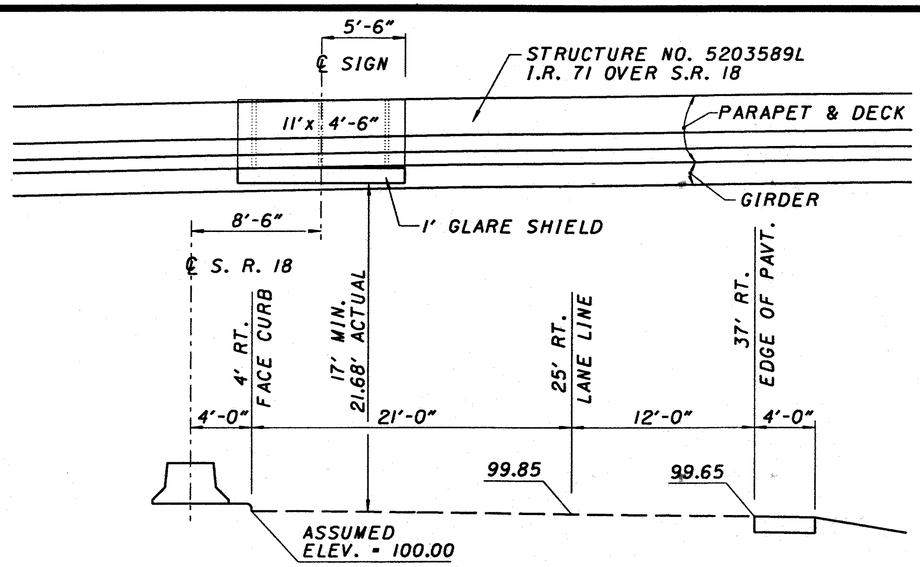

SIGN SUPPORT
108A STA. 149+95, 8.5' RT. ℄ S.R. 18

TC-18.26, DESIGN 9

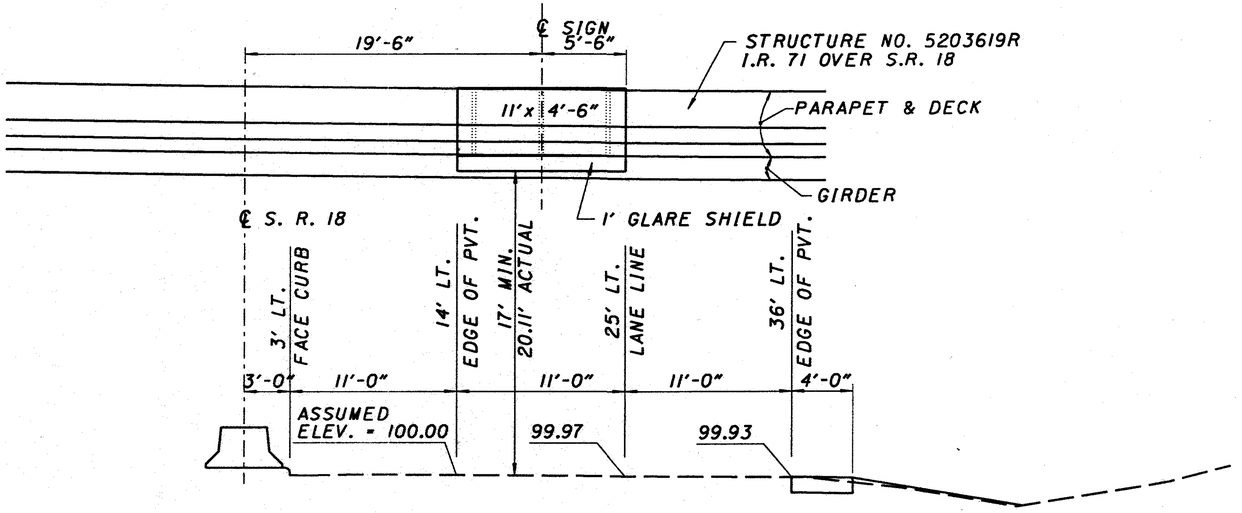

SIGN SUPPORT
109 STA. 151+75, 19.5' LT. ℄ S.R. 18

TC-18.26, DESIGN 9

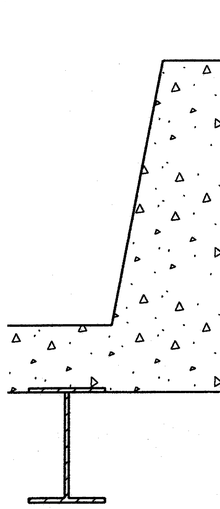

BRIDGE MOUNTED SIGN SUPPORT DETAIL

SEE STR. 5203589L & 5203619R I.R. 71
OVER S.R. 18 PLANS AND
STANDARD CONSTRUCTION
DWG. TC-18.26 FOR ADDITIONAL DETAILS

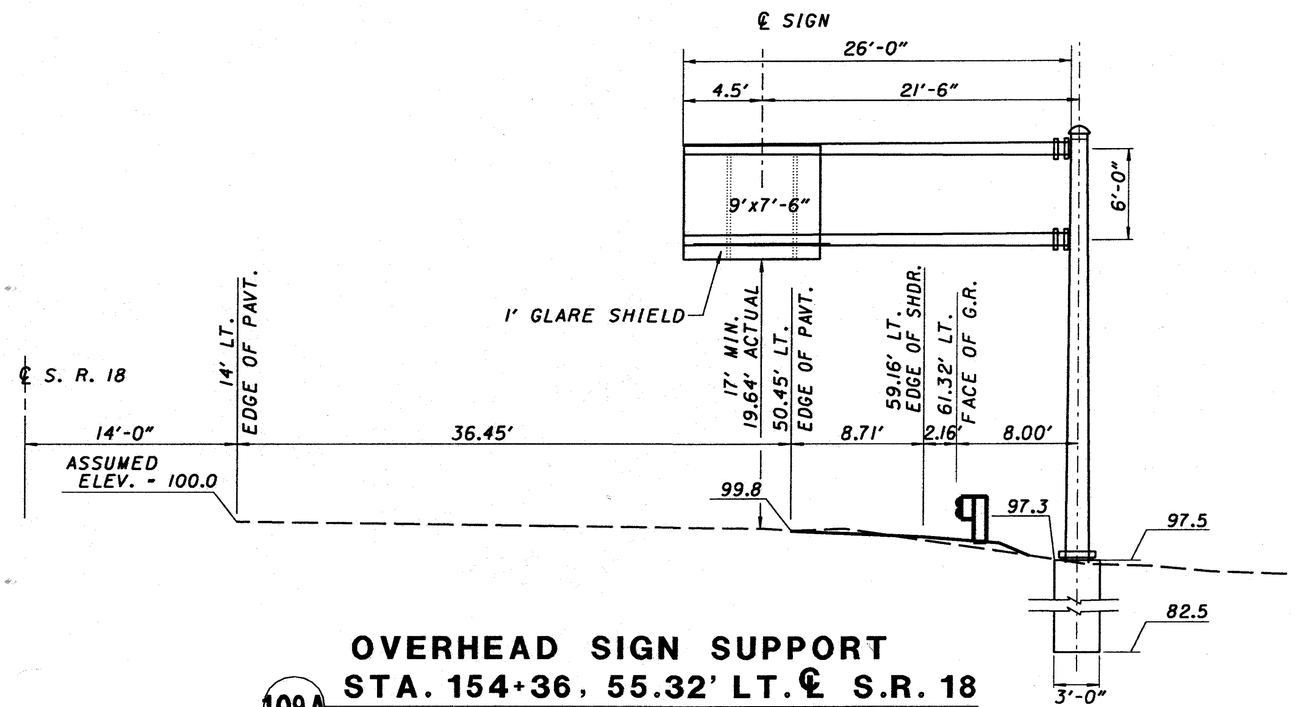

OVERHEAD SIGN SUPPORT
109A STA. 154+36, 55.32' LT. ℄ S.R. 18

TC-12.30, DESIGN 9
POLE = 30'-0"
ARM = 26'-0"

OVERHEAD SIGN SUPPORT DETAILS

MED-71-15.78

574B
940

CALCULATED
CHECKED

7885REL_SIGN.DGN 1/28/00 SAM

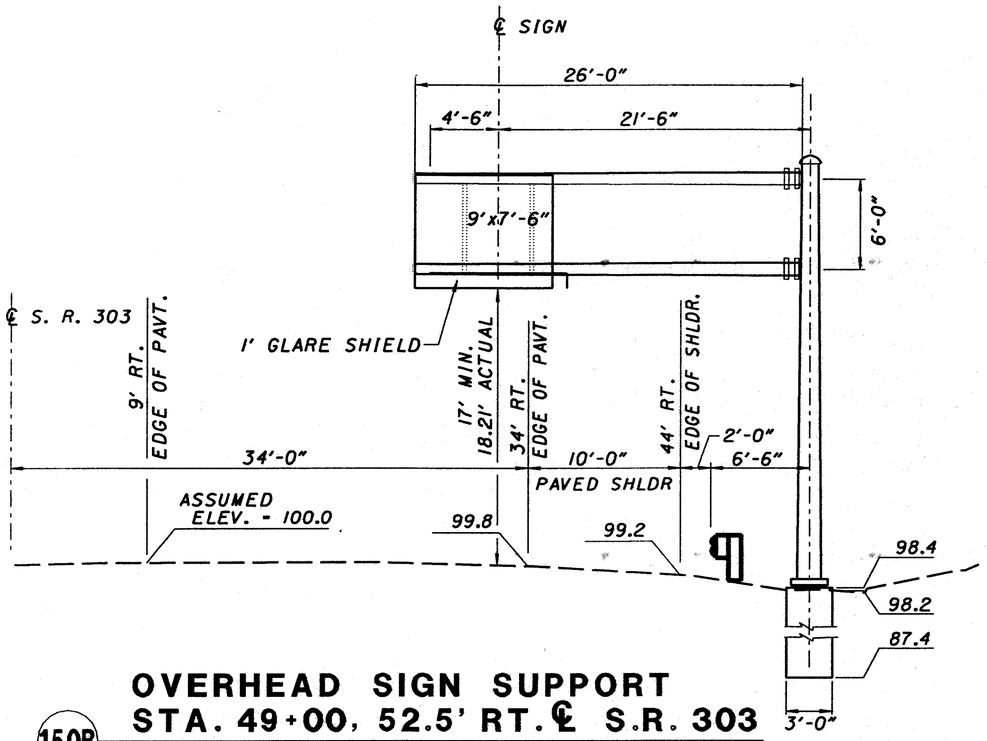

OVERHEAD SIGN SUPPORT
STA. 49+00, 52.5' RT. ℄ S.R. 303

150B

TC-12.30, DESIGN 6
POLE - 28'-0"
ARM - 26'-0"

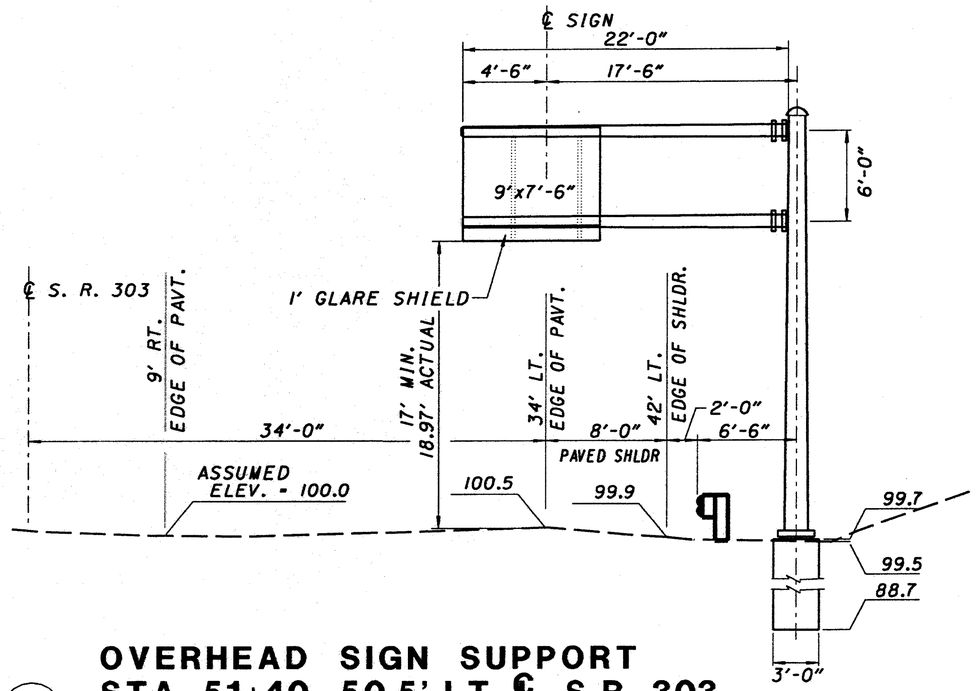

OVERHEAD SIGN SUPPORT
STA. 51+40, 50.5' LT. ℄ S.R. 303

151

TC-12.30, DESIGN 5
POLE - 28'-0"
ARM - 22'-0"

CALCULATED
CHECKED

OVERHEAD SIGN SUPPORT DETAILS

MED-71-15.78

574C
940

7985REL_SIGN.DGN 1/28/00 SAM

FREEWAY LOCATION IDETIFICATION SYSTEM SIGN DETAIL

GROUND MOUNTED

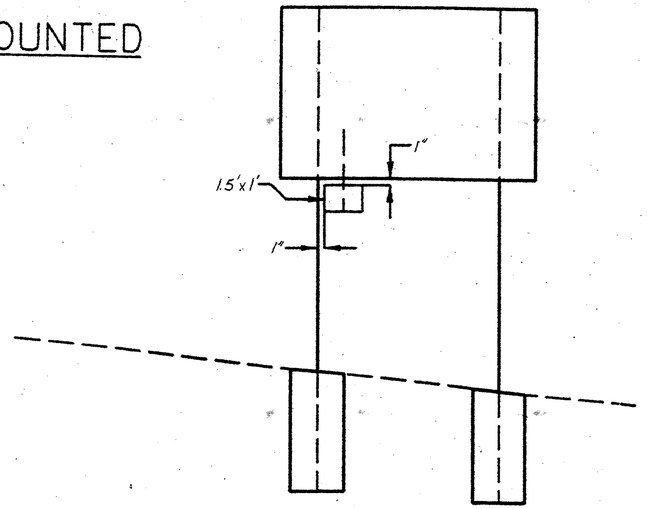

POLE MOUNTED

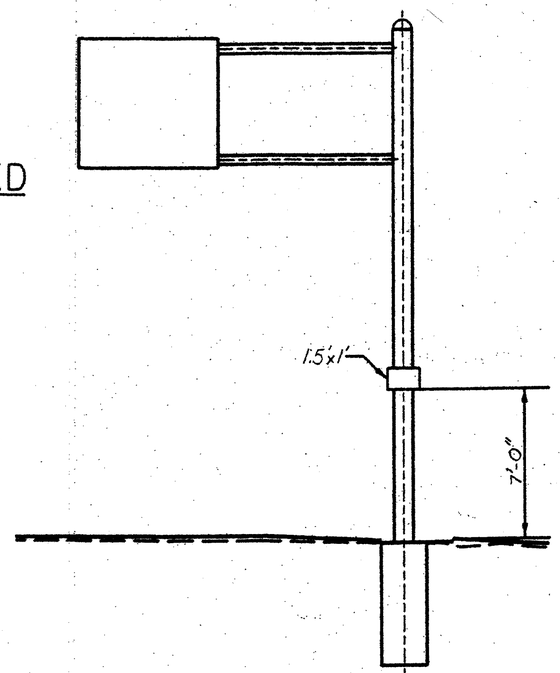

POLE MOUNTED

DATE : 12-NOV-1999
TIME : 06:30

DESIGN FILE : I:\users\gwilliam\med71\sign\med71sub.dgn
USERNAME : gwilliam

LOCATION IDENTIFICATION SIGN DETAIL

MED-71-15.78

575
140

USERNAME: ##########USER##########
PROJECT: ##########PROJECT##########
LEVELS ON: ##########LEVELSON##########
PLOT QUEUE: ##############QUEUE##############
PEN TABLE: ############PENTABLE############
REF.FILE *2: ##########REF.FILENAME2##############
REF.FILE *2 LEVELS ON: ##########REF.FILE2##############
REF.FILE *3: ##########REF.FILENAME3##############
REF.FILE *3 LEVELS ON: ##########REF.FILE3##############
REF.FILE *4: ##########REF.FILENAME4##############
REF.FILE *4 LEVELS ON: ##########REF.FILE4##############

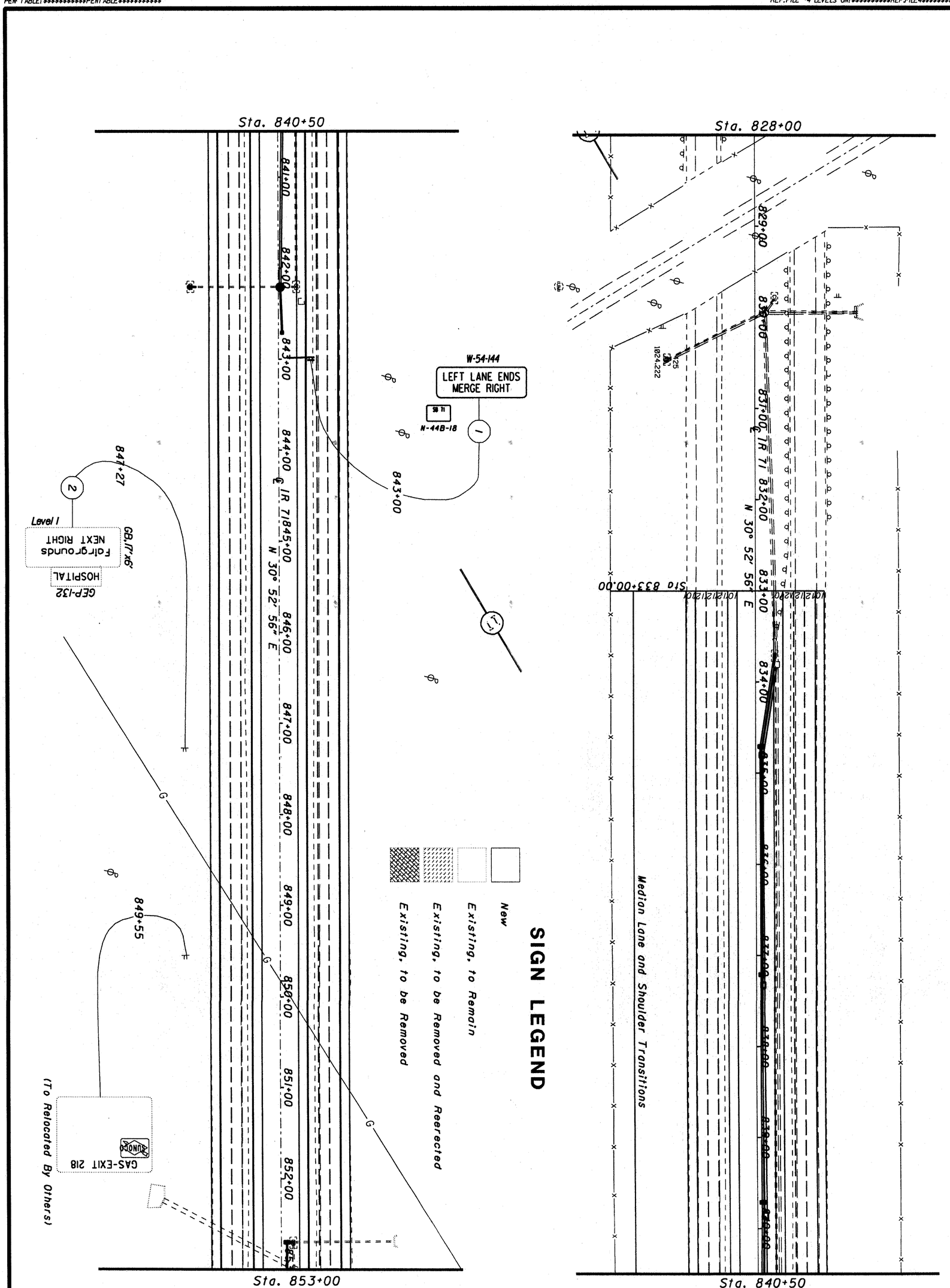

576 / 940	MED - 71 - 15.78	SIGNING LINE SHEET STA. 828+00 TO STA. 853+00	CALCULATED / CHECKED	HORIZONTAL SCALE IN FEET

REF.FILE *2:##########REF.FILENAME2##########
REF.FILE *2 LEVELS ON:##########REF.FILE2##########
REF.FILE *3:##########REF.FILENAME3##########
REF.FILE *3 LEVELS ON:##########REF.FILE3##########
REF.FILE *4:##########REF.FILENAME4##########
REF.FILE *4 LEVELS ON:##########REF.FILE4##########

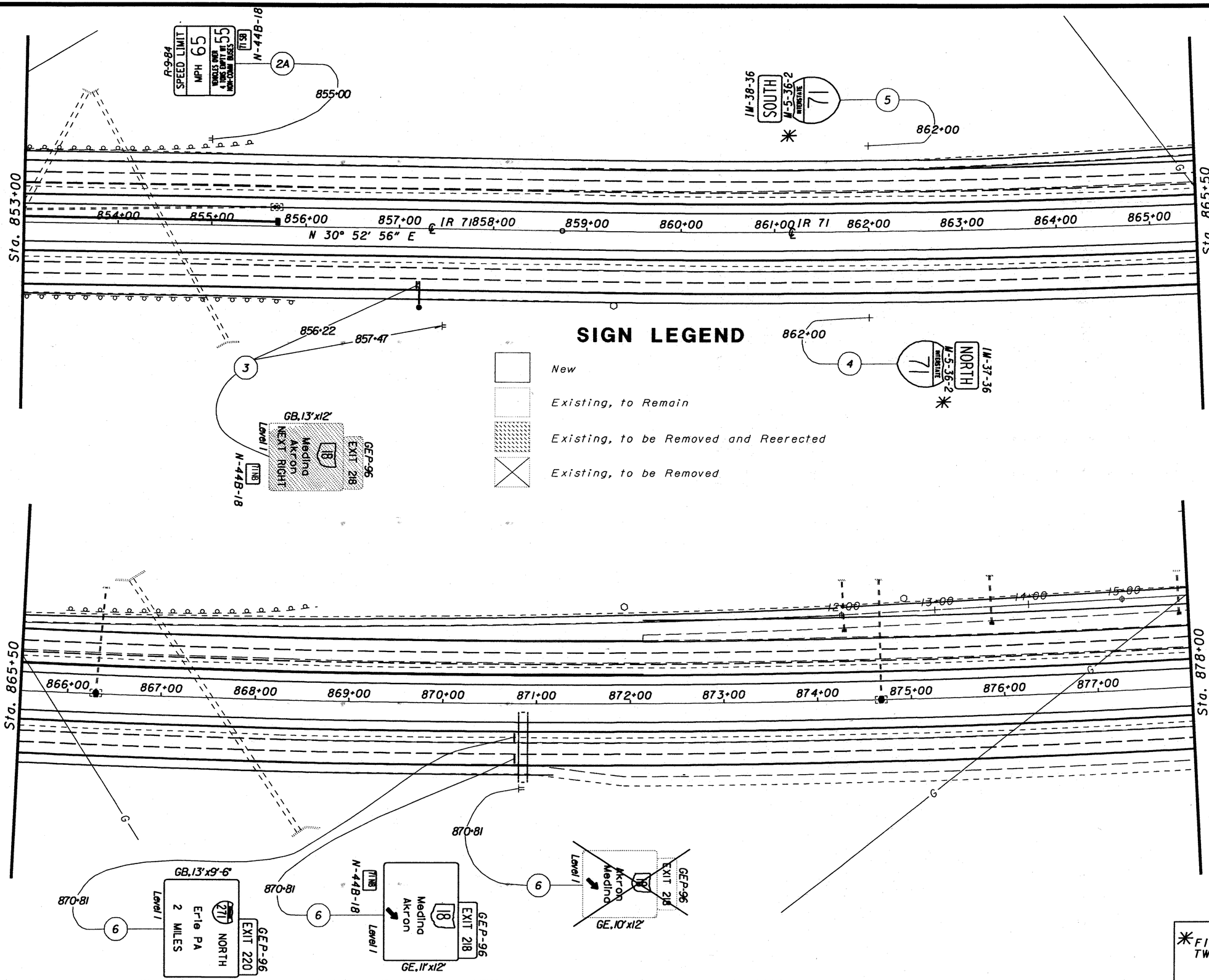

LEVELS ON:##########LEVELSON##########
REF.FILE:##########REFFILE##########
PEN TABLE:##########PENTABLE##########
USERNAME:##########USER##########
PROJECT:##########PROJECT##########

HORIZONTAL SCALE IN FEET
0 25 50 100
CALCULATED
CHECKED

SIGNING LINE SHEET
STA. 853+00 TO STA. 878+00

MED - 71 - 15.78

577
940

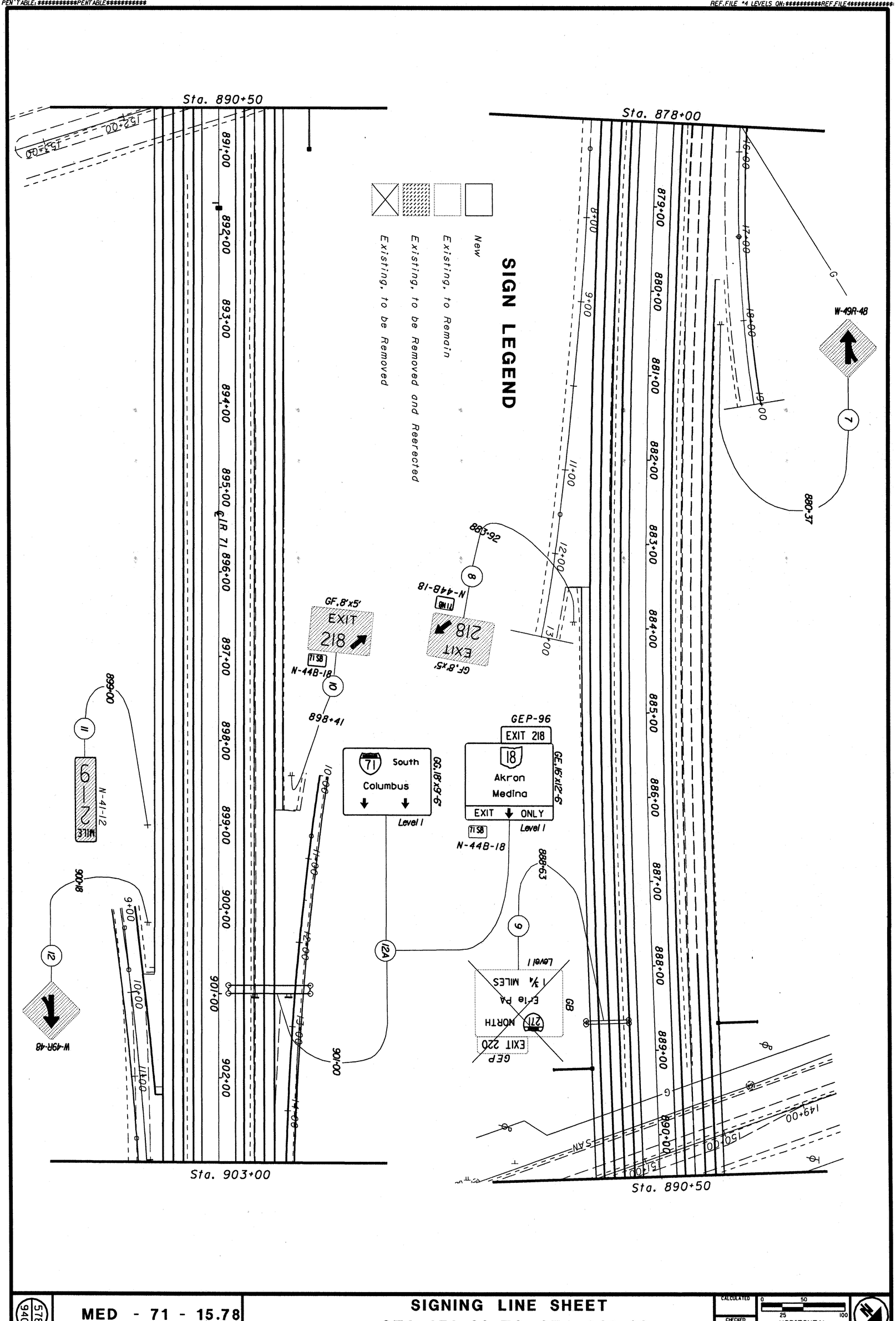
Sta. 890+50
Sta. 878+00
Sta. 903+00
Sta. 890+50
SIGN LEGEND
New
Existing, to Remain
Existing, to be Removed and Reerected
Existing, to be Removed
W-49R-48
GF,8'x5'
EXIT 218
71 SB
N-44B-18
GF,8'x5'
EXIT 218
71 NB
N-44B-18
GEP-96
EXIT 218
18
Akron
Medina
EXIT ONLY
71 SB
N-44B-18
Level I
GE,16'x12'-6"
71
South
Columbus
Level I
GG,18'x9'-6"
GEP
EXIT 220
271
NORTH
1 ¾ MILES
Erie PA
Level I
GB
MILE 2—9
N-41-12
W-49R-48
SAN
7
8
9
10
11
12
12A
880-37
888-92
888-63
898-41
899-00
898-08
900-00
901+00
902+00
903+00
878+00
879+00
880+00
881+00
882+00
883+00
884+00
885+00
886+00
887+00
888+00
889+00
890+00
891+00
892+00
893+00
894+00
895+00
896+00
897+00
898+00
899+00
900+00
901+00
902+00
149+00
150+00
151+00
152+00
153+00
6+00
7+00
8+00
9+00
10+00
11+00
12+00
13+00
14+00
15+00
16+00
17+00
18+00
19+00
6+00
7+00
8+00
9+00
10+00
11+00
12+00
13+00
14+00
15+00
16+00
17+00
18+00
19+00
G
G
G

USERNAME: ##########USER##########
PROJECT: #########PROJECT#########
LEVELS ON: ##########LEVELSON##########
PLOT QUEUE: ##############QUEUE##############
PEN TABLE: ############PENTABLE############
REF.FILE *2: ##########REF.FILENAME2##########
REF.FILE *2 LEVELS ON: ############REF.FILE2############
REF.FILE *3: ##########REF.FILENAME3##########
REF.FILE *3 LEVELS ON: ############REF.FILE3############
REF.FILE *4: ##########REF.FILENAME4##########
REF.FILE *4 LEVELS ON: ############REF.FILE4############

Sta. 915+50

Sta. 903+00

N 11° 18' 41" E

SIGN LEGEND

New

Existing, to Remain

Existing, to be Removed and Reerected

Existing, to be Removed (To Be Relocated By Others)

GAS EXIT 216
DIESEL

Sta. 910+05.25
End 48:1 Taper

EXIT PANEL TO BE PLACED AT LEFT MOST EDGE OF SIGN. THE ARROW ON THE LEFT SIDE SHALL BE COVERED UP BY THE PANEL AND LEFT IN PLACE FOR FUTURE USE.

Begin Auxiliary Lane Shoulder
Sta 909+60.04, 88' Lt.

Begin Auxiliary Lane
Sta 909+60.04, 78' Lt.

GEP
EXIT 218
18
Akron
Medina
GE
Level I

W-42-48
14'-5"

GEP-96
EXIT 218
18
Akron
Medina
EXIT ONLY
GE, 23' x 12'-6"
Level I

GG, 18'x9'-6"
71
South
Columbus
71 SB
Level I
N-44B-18

W-53R-48
STA. 920+75
RIGHT LANE ENDS

M-5-36-2
NORTH
M-37-36

Sta. 928+00

916+00 917+00 918+00 919+00 920+00 ℄ IR 71 921+00 922+00 923+00 924+00 925+00 926+00 927+00

904+00 905+00 906+00 907+00 908+00 909+00 ℄ IR 71 910+00 911+00 912+00 913+00 914+00 915+00

13+00 14+00 15+00 16+00 17+00 18+00 19+00 20+00

922+75 922+19 925+92 927+40 911+20

15 16 17 17A 14

* FIELD DRILL FOR TWO (2) SUPPORTS SIGN #16

579
940

MED - 71 - 15.78

SIGNING LINE SHEET
STA. 903+00 TO STA. 928+00

CALCULATED
CHECKED

0 50
25 100
HORIZONTAL SCALE IN FEET

(TO BE RELOCATED BY OTHERS)

GB,13'x12'
GEP EXIT 218 (18) Medina Akron NEXT RIGHT Level I

TYPE D DELINEATOR
R-19-24 EMERGENCY OR STRANDED VEHICLES ONLY

R-123-36

R-9-84 SPEED LIMIT 65 MPH 55 MPH WHEN FLASHING

N-44B-18 (TLSB)

FOOD - EXIT 218
IHOP
IHOP'S BIG BOY
BOB EVANS RESTAURANT
PONDEROSA

Sta. 928+00
929+00 930+00 931+00 932+00 933+00 ℄ IR 71 934+00 935+00 936+00 937+00 938+00 939+00 940+00
N 17° 16' 41" E
Sta. 940+50

929-43
931-35
935-14
938-80

R-19-24 EMERGENCY OR STRANDED VEHICLES ONLY
DELINEATOR TYPE D
931-60
931-16
932+25.30
934-17

R-123-36

(RELOCATE TO STA. 941+00)

R-9-84 SPEED LIMIT 65 MPH 55 MPH WHEN FLASHING

N-44B-18 (TLNB)

GG,17'x9'-6" Level I
(71) NORTH Cleveland

GB,13'x9'-6" Level I
¾ MILES Erie PA NORTH
(220) EXIT 220
GEP-96

(71) NORTH Erie PA ¾ MILE EXIT ONLY
EXIT 220
GEP-96
GB,23' x 12'-6"

W-60R-48
STA. 929+95.25

M-38-36 SOUTH M-5-36-2 WINDSTAR (71)

942+50

Sta. 945+95.07 End Taper

945+00 950+00

Sta. 940+50
941+00 942+00 ℄ IR 71 943+00 944+00 945+00 946+00 947+00 948+00 949+00 950+00 951+00 952+00
Sta. 953+00

(RELOCATED FROM STA. 931+16)

941-00

R-9-84 SPEED LIMIT 65 MPH 55 MPH WHEN FLASHING

N-44B-18 (TLNB)

W-60R-48
STA. 946+05.07

948+93

GB,13'x9'-6" Level I
NEXT RIGHT Erie PA (220) NORTH
EXIT 220
GEP-96

SIGN LEGEND

- New
- Existing, to Remain
- Existing, to be Removed and Reerected
- Existing, to be Removed

✱ FIELD DRILL FOR TWO (2) SUPPORTS SIGNS 20, 21 & 24

HORIZONTAL SCALE IN FEET
0 25 50 100

CALCULATED
CHECKED

SIGNING LINE SHEET
STA. 928+00 TO STA. 953+00

MED - 71 - 15.78

580
940

REF.FILE *1: ##########REF.FILENAME1##########
REF.FILE *2: ##########REF.FILENAME2##########
REF.FILE *2 LEVELS ON: ##########REF.FILE2##########
REF.FILE *3: ##########REF.FILENAME3##########
REF.FILE *3 LEVELS ON: ##########REF.FILE3##########
REF.FILE *4: ##########REF.FILENAME4##########
REF.FILE *4 LEVELS ON: ##########REF.FILE4##########

UNIC, M. I. INC.: ##########INCLUDE: ####
USERNAME: ##########USERS##########
PROJECT: ##########PROJECT##########
LEVELS ON: ##########LEVELSON##########
PLOT QUEUE: ##########QUEUE##########
PEN TABLES: ##########PENTABLES##########

USERNAME: $$$$$$$$$$USER$$$$$$$$$
PROJECT: $$$$$$$$$PROJECT$$$$$$$$
LEVELS ON: $$$$$$$$$$$LEVELSON$$$$$$$$$$$
PLOT QUEUE: $$$$$$$$$$$$$$QUEUE$$$$$$$$$$$$$$
PEN TABLE: $$$$$$$$$$$$PENTABLE$$$$$$$$$$$$
REF.FILE *2: $$$$$$$$$$$REF.FILENAME2$$$$$$$$$$$$$$
REF.FILE *2 LEVELS ON: $$$$$$$$$$$REF.FILE2$$$$$$$$$$$
REF.FILE *3: $$$$$$$$$$$REF.FILENAME3$$$$$$$$$$$$$$
REF.FILE *3 LEVELS ON: $$$$$$$$$$$REF.FILE3$$$$$$$$$$$
REF.FILE *4: $$$$$$$$$$$REF.FILENAME4$$$$$$$$$$$$$$
REF.FILE *4 LEVELS ON: $$$$$$$$$$$REF.FILE4$$$$$$$$$$$

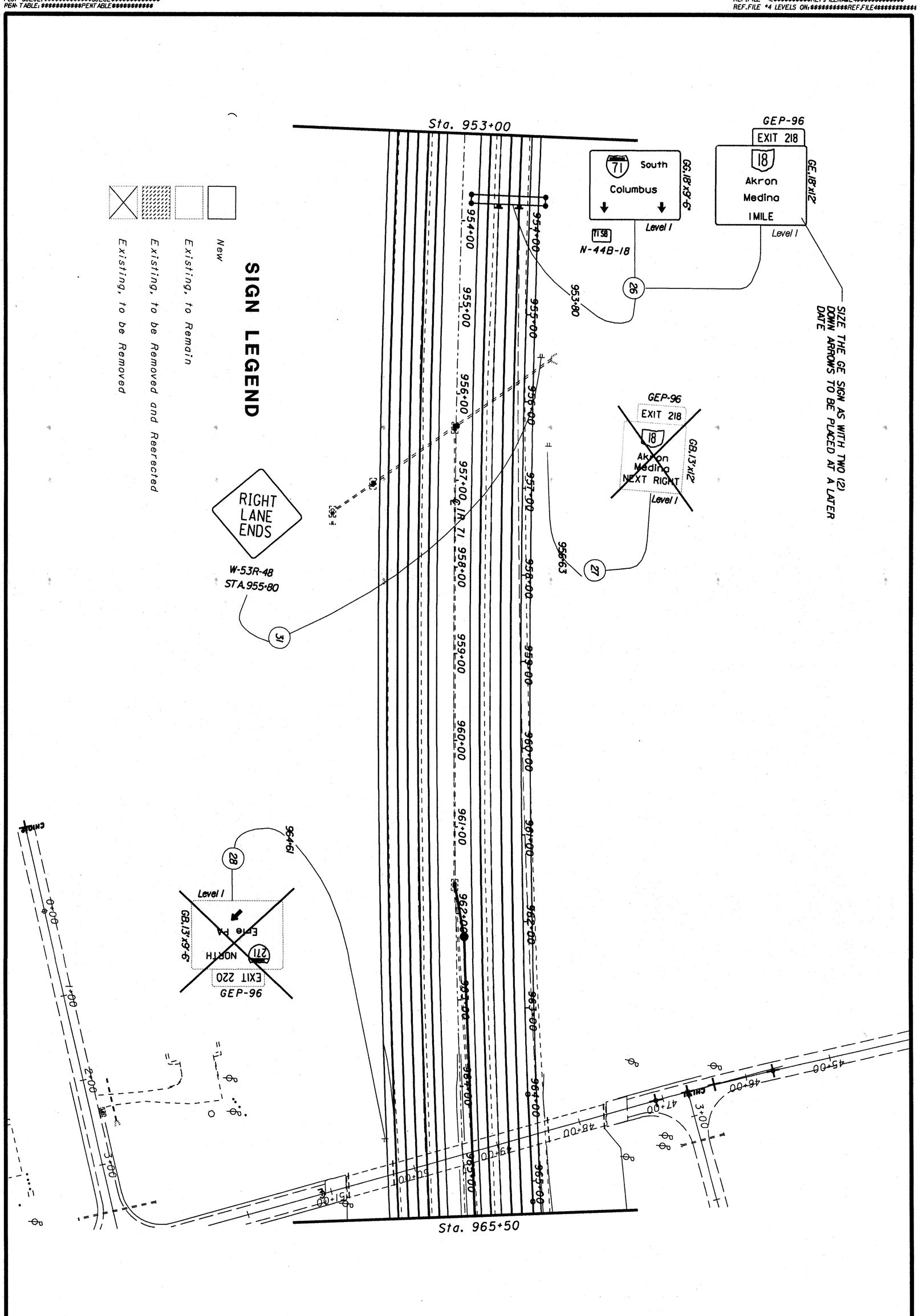

581 / 940	MED - 71 - 15.78	SIGNING LINE SHEET STA. 953+00 TO STA. 965+50	CALCULATED CHECKED 0 50 25 100 HORIZONTAL SCALE IN FEET

DATE & TIME: ****TIME&DATE****
USERNAME: *********USER*********
PROJECT: *********PROJECT*********

LEVELS ON: **********LEVELSON**********
PLOT QUEUE: **********QUEUE**********
PEN TABLE: **********PENTABLE**********

REF.FILE *1 LEVELS ON: **********REF.FILE1**********
REF.FILE *2: **********REF.FILENAME2**********
REF.FILE *2 LEVELS ON: **********REF.FILE2**********

REF.FILE *3: **********REF.FILENAME3**********
REF.FILE *3 LEVELS ON: **********REF.FILE3**********
REF.FILE *4: **********REF.FILENAME4**********
REF.FILE *4 LEVELS ON: **********REF.FILE4**********

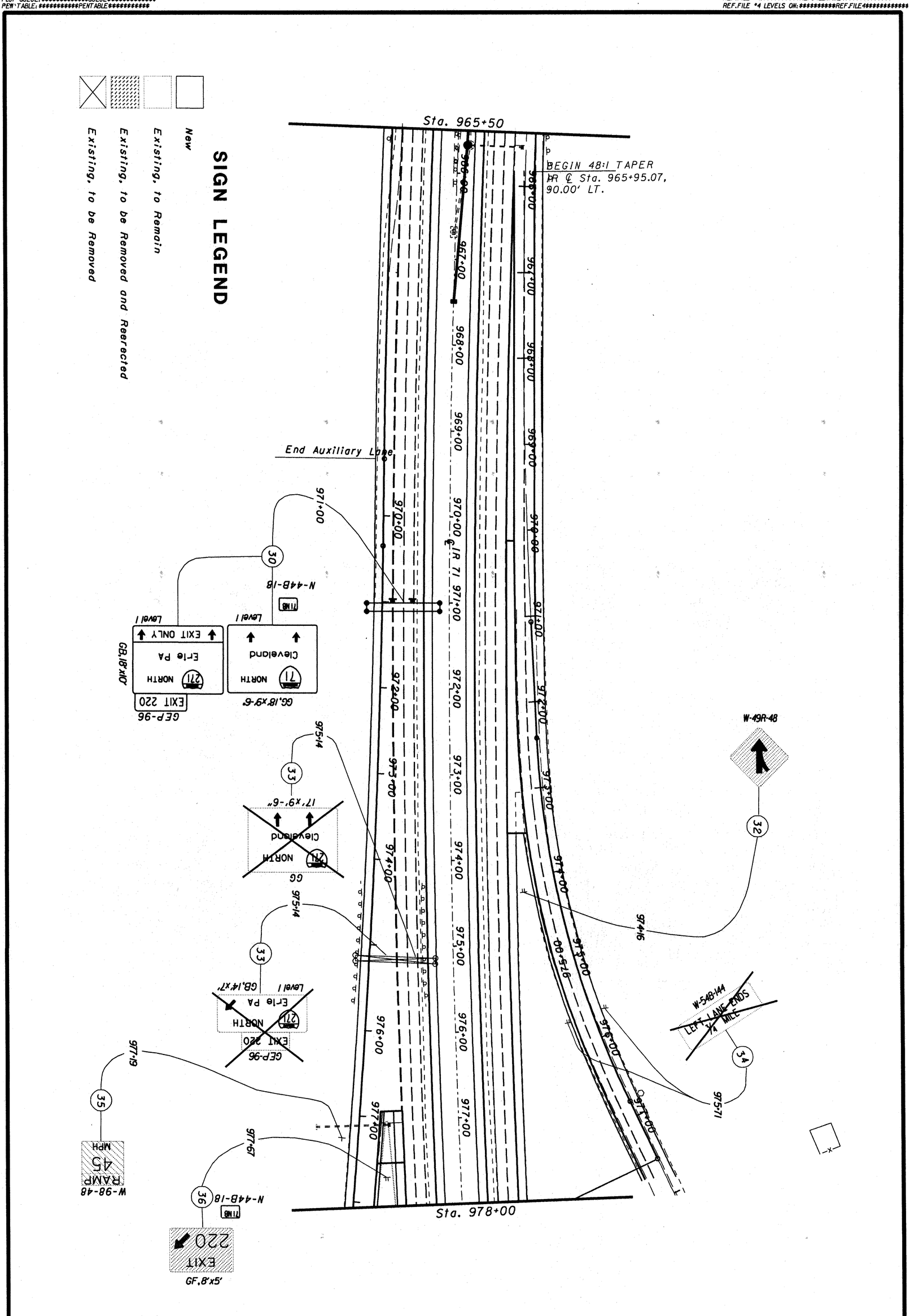

582 / 940	MED - 71 - 15.78	SIGNING LINE SHEET STA. 965+50 TO STA. 978+00	CALCULATED / CHECKED 0 25 50 100 HORIZONTAL SCALE IN FEET

USERNAME: ##########USER#########
PROJECT: ########PROJECT########
LEVELS ON: ###########LEVELSON###########
PLOT QUEUE: ################QUEUE################
PEN_TABLE: ##############PENTABLE############
REF.FILE *2: ###########REF.FILENAME2###############
REF.FILE *2 LEVELS ON: ############REF.FILE2##############
REF.FILE *3: ###########REF.FILENAME3###############
REF.FILE *3 LEVELS ON: ############REF.FILE3##############
REF.FILE *4: ###########REF.FILENAME4###############
REF.FILE *4 LEVELS ON: ############REF.FILE4##############

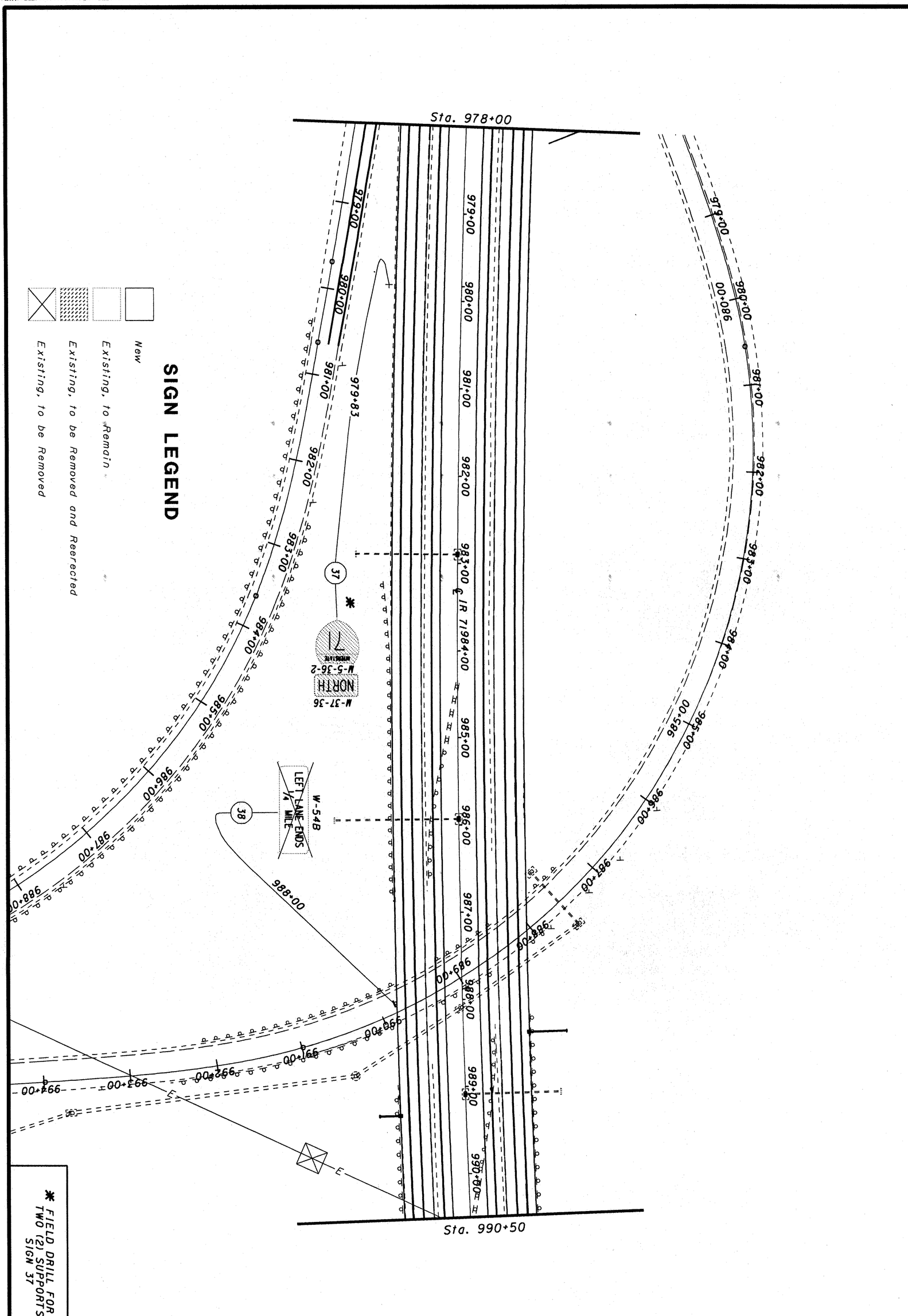

583 940	MED - 71 - 15.78	SIGNING LINE SHEET STA. 978+00 TO STA. 990+50	CALCULATED / CHECKED	0 50 25 100 HORIZONTAL SCALE IN FEET

USERNAME: $$$$$$$$$$USER$$$$$$$$$$
PROJECT: $$$$$$$$$PROJECT$$$$$$$$$
LEVELS ON: $$$$$$$$$$$LEVELSON$$$$$$$$$$$
PLOT QUEUE: $$$$$$$$$$$$$$QUEUE$$$$$$$$$$$$$$
PEN-TABLE: $$$$$$$$$$$$PENTABLE$$$$$$$$$$$$
REF.FILE *2: $$$$$$$$$$$$REF.FILENAME2$$$$$$$$$$$$$$
REF.FILE *2 LEVELS ON: $$$$$$$$$$$$REF.FILE2$$$$$$$$$$$$$$
REF.FILE *3: $$$$$$$$$$$$REF.FILENAME3$$$$$$$$$$$$$$
REF.FILE *3 LEVELS ON: $$$$$$$$$$$$REF.FILE3$$$$$$$$$$$$$$
REF.FILE *4: $$$$$$$$$$$$REF.FILENAME4$$$$$$$$$$$$$$
REF.FILE *4 LEVELS ON: $$$$$$$$$$$$REF.FILE4$$$$$$$$$$$$$$

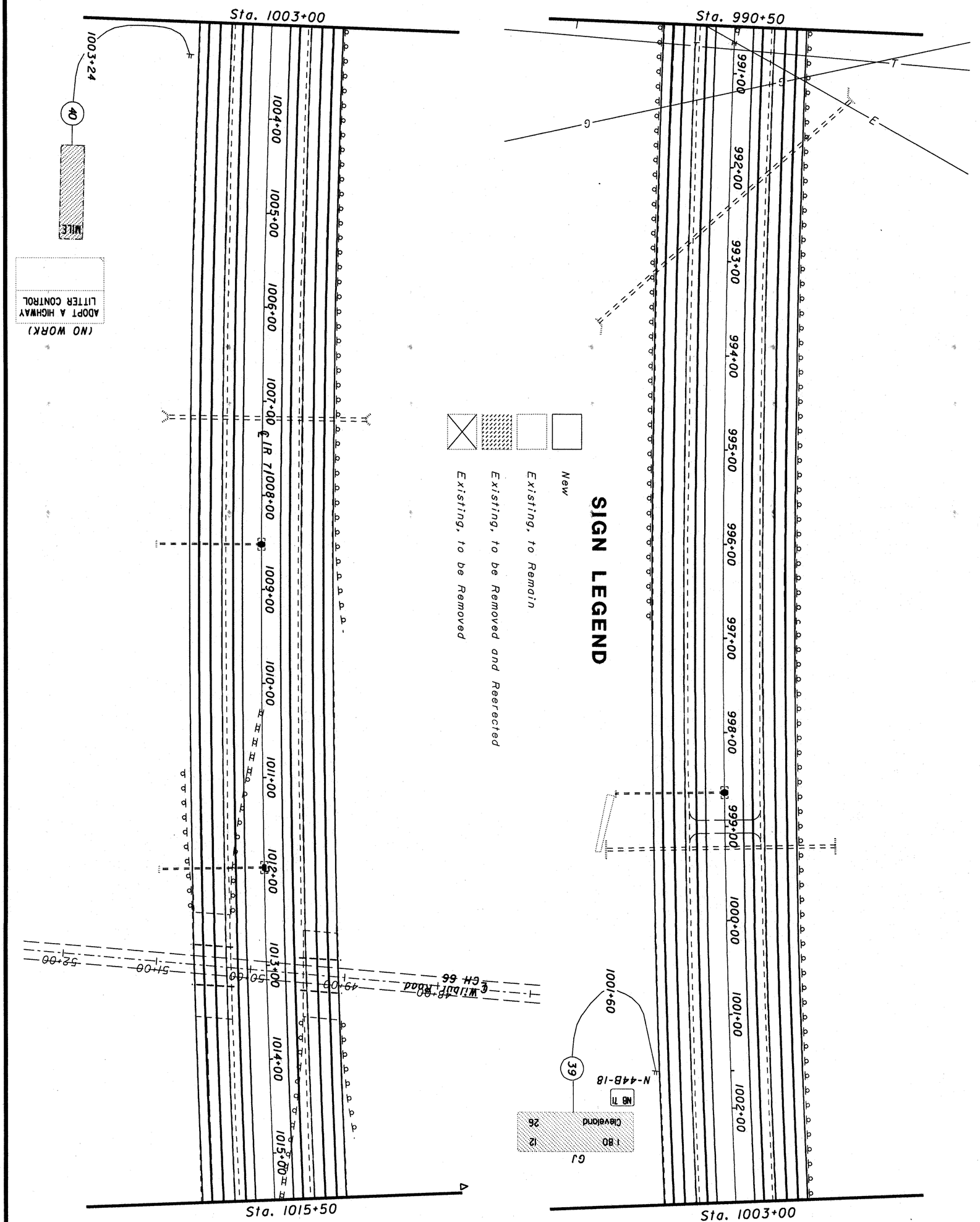

584 / 940	MED - 71 - 15.78	SIGNING LINE SHEET STA. 990+50 TO STA. 1015+50	CALCULATED / CHECKED 0 50 100 / 25 HORIZONTAL SCALE IN FEET

DATE & TIME: ########TIME&DATE########
USERNAME: ##########USER##########
PROJECT: #########PROJECT#########
LEVELS ON: ###########LEVELSON###########
PLOT QUEUE: ################QUEUE################
PEN TABLE: ############PENTABLE############
REF.FILE *2: ##########REF.FILENAME2##############
REF.FILE *2 LEVELS ON: ###########REF.FILE2##############
REF.FILE *3: ##########REF.FILENAME3##############
REF.FILE *3 LEVELS ON: ###########REF.FILE3##############
REF.FILE *4: ##########REF.FILENAME4##############
REF.FILE *4 LEVELS ON: ###########REF.FILE4##############

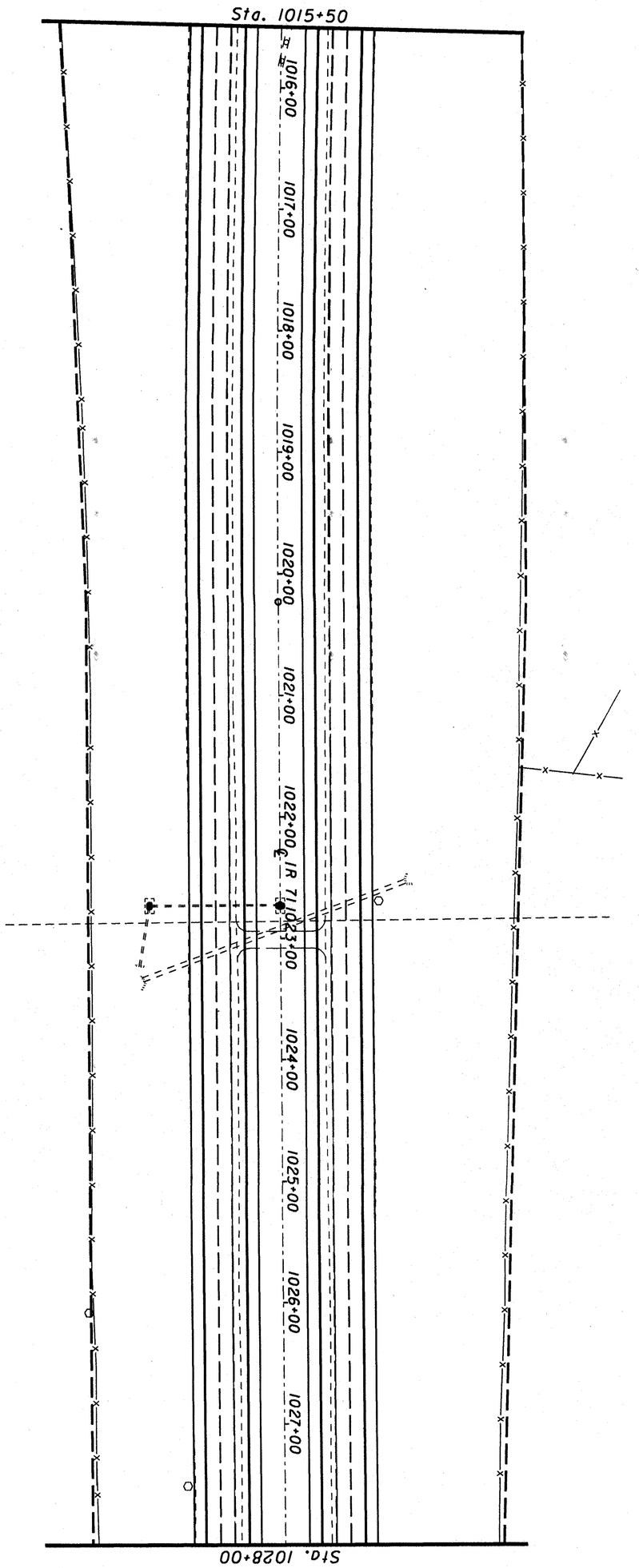

585
940

MED - 71 - 15.78

SIGNING LINE SHEET
STA. 1015+50 TO STA. 1028+00

CALCULATED

CHECKED

0 50
25 100
HORIZONTAL SCALE IN FEET

USERNAME: $$$$$$$$$$USER$$$$$$$$$$
PROJECT: $$$$$$$$$$PROJECT$$$$$$$$$$
LEVELS ON: $$$$$$$$$$LEVELSON$$$$$$$$$$
PLOT QUEUE: $$$$$$$$$$$$$QUEUE$$$$$$$$$$$$$
PEN TABLE: $$$$$$$$$$$$PENTABLE$$$$$$$$$$$$
REF.FILE *2: $$$$$$$$$$REF.FILENAME2$$$$$$$$$$$$$
REF.FILE *2 LEVELS ON: $$$$$$$$$$$REF.FILE2$$$$$$$$$$$
REF.FILE *3: $$$$$$$$$$REF.FILENAME3$$$$$$$$$$$$$
REF.FILE *3 LEVELS ON: $$$$$$$$$$$REF.FILE3$$$$$$$$$$$
REF.FILE *4: $$$$$$$$$$REF.FILENAME4$$$$$$$$$$$$$
REF.FILE *4 LEVELS ON: $$$$$$$$$$$REF.FILE4$$$$$$$$$$$

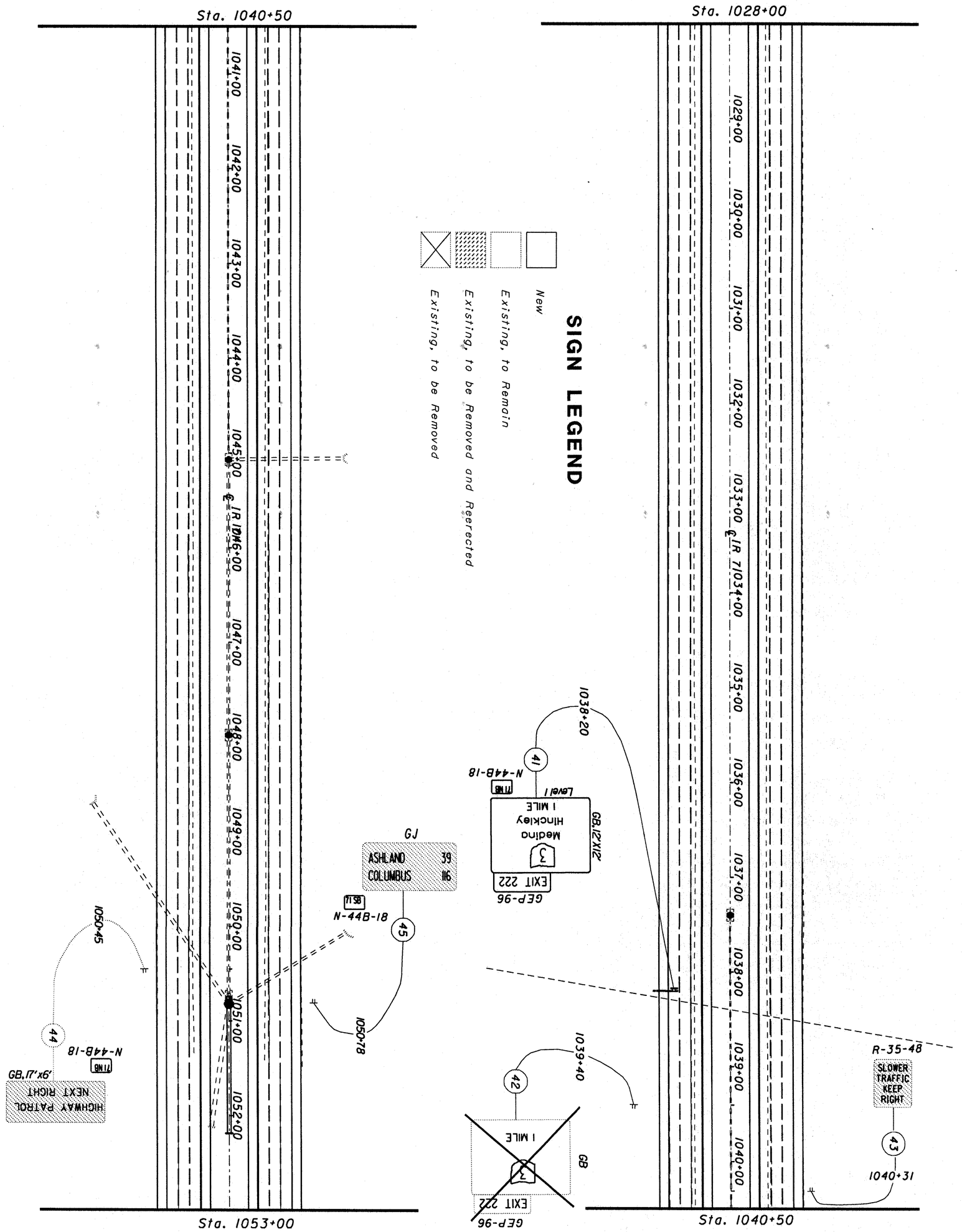

586 940	MED - 71 - 15.78	SIGNING LINE SHEET STA. 1028+00 TO STA. 1053+00	CALCULATED CHECKED	0 50 25 100 HORIZONTAL SCALE IN FEET

USERNAME: $$$$$$$$$$USER$$$$$$$$$$
PROJECT: $$$$$$$$$PROJECT$$$$$$$$$
LEVELS ON: $$$$$$$$$$LEVELSON$$$$$$$$$$
PLOT QUEUE: $$$$$$$$$$$$$$QUEUE$$$$$$$$$$$$$$
P&W TABLE: $$$$$$$$$$$$PENTABLE$$$$$$$$$$$$
REF.FILE *2: $$$$$$$$$$REF.FILENAME2$$$$$$$$$$$$$$$
REF.FILE *2 LEVELS ON: $$$$$$$$$$REF.FILE2$$$$$$$$$$
REF.FILE *3: $$$$$$$$$$REF.FILENAME3$$$$$$$$$$$$$$$
REF.FILE *3 LEVELS ON: $$$$$$$$$$REF.FILE3$$$$$$$$$$
REF.FILE *4: $$$$$$$$$$REF.FILENAME4$$$$$$$$$$$$$$$
REF.FILE *4 LEVELS ON: $$$$$$$$$$REF.FILE4$$$$$$$$$$

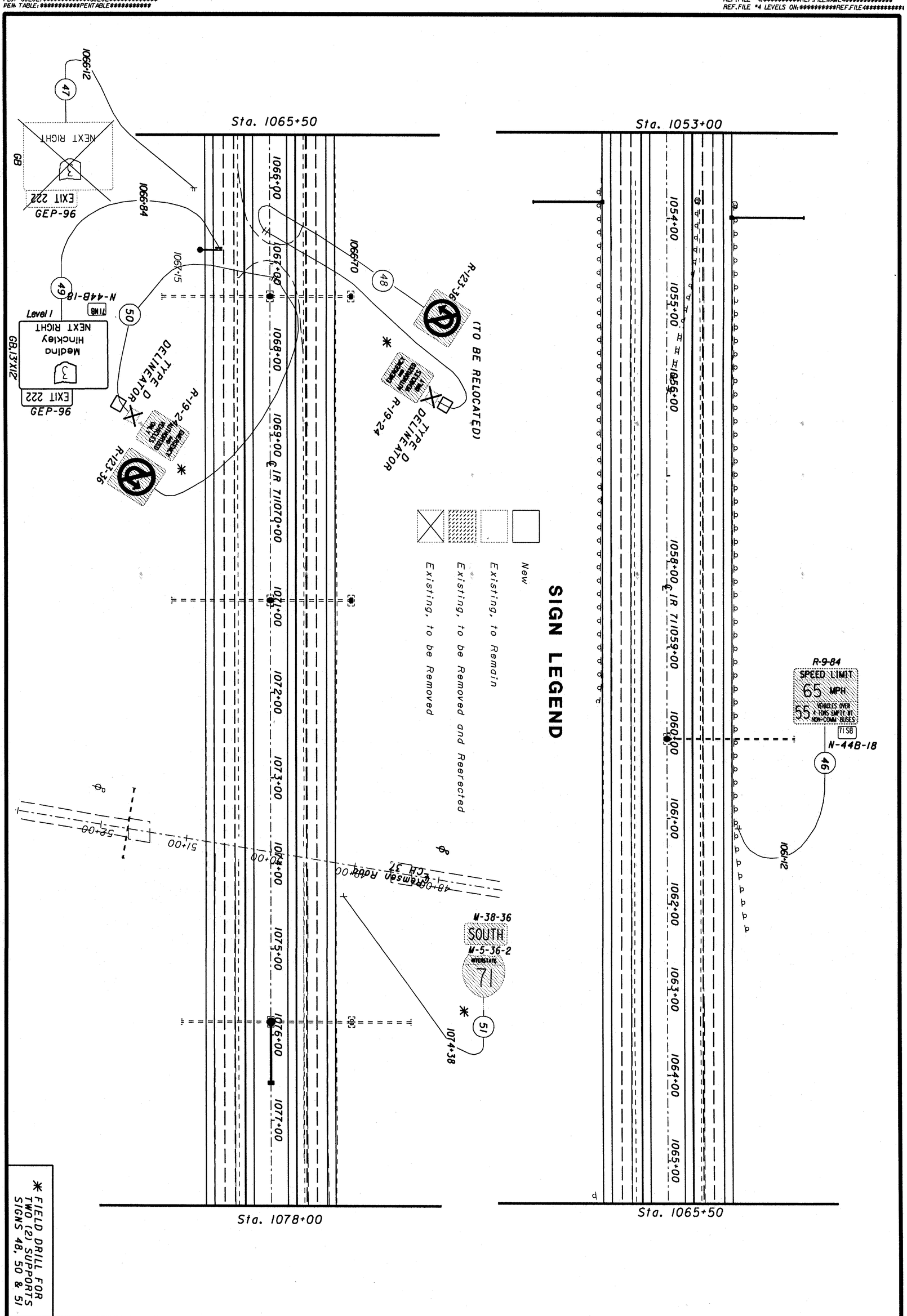

* FIELD DRILL FOR TWO (2) SUPPORTS SIGNS 48, 50 & 51

587
940

MED - 71 - 15.78

SIGNING LINE SHEET
STA. 1053+00 TO STA. 1078+00

CALCULATED
CHECKED

0 50
25 100
HORIZONTAL SCALE IN FEET

USERNAME: ##########USER##########
PROJECT: ##########PROJECT##########
LEVELS ON: ##########LEVELSON##########
PLOT QUEUE: ##########QUEUE##########
PEN TABLE: ##########PENTABLE##########
REF.FILE *2: ##########REF.FILENAME2##########
REF.FILE *2 LEVELS ON: ##########REF.FILE2##########
REF.FILE *3: ##########REF.FILENAME3##########
REF.FILE *3 LEVELS ON: ##########REF.FILE3##########
REF.FILE *4: ##########REF.FILENAME4##########
REF.FILE *4 LEVELS ON: ##########REF.FILE4##########

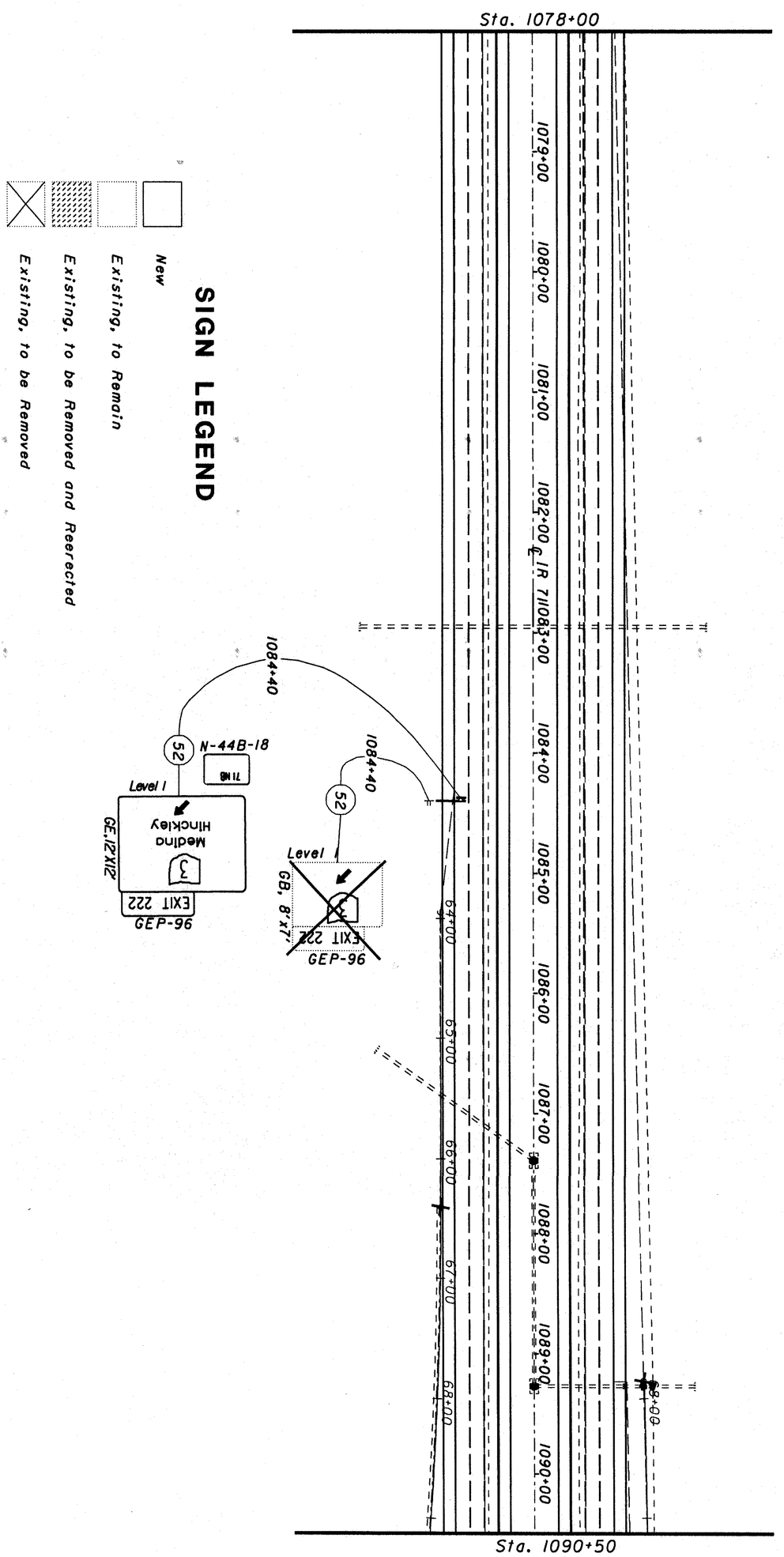

REF.FILE *2: $$$$$$$$$$REF.FILENAME2$$$$$$$$$$$$$
REF.FILE *2 LEVELS ON: $$$$$$$$$$REF.FILE2$$$$$$$$$$$$$
REF.FILE *3: $$$$$$$$$$REF.FILENAME3$$$$$$$$$$$$$
REF.FILE *3 LEVELS ON: $$$$$$$$$$REF.FILE3$$$$$$$$$$$$$
REF.FILE *4: $$$$$$$$$$REF.FILENAME4$$$$$$$$$$$$$
REF.FILE *4 LEVELS ON: $$$$$$$$$$REF.FILE4$$$$$$$$$$$$$

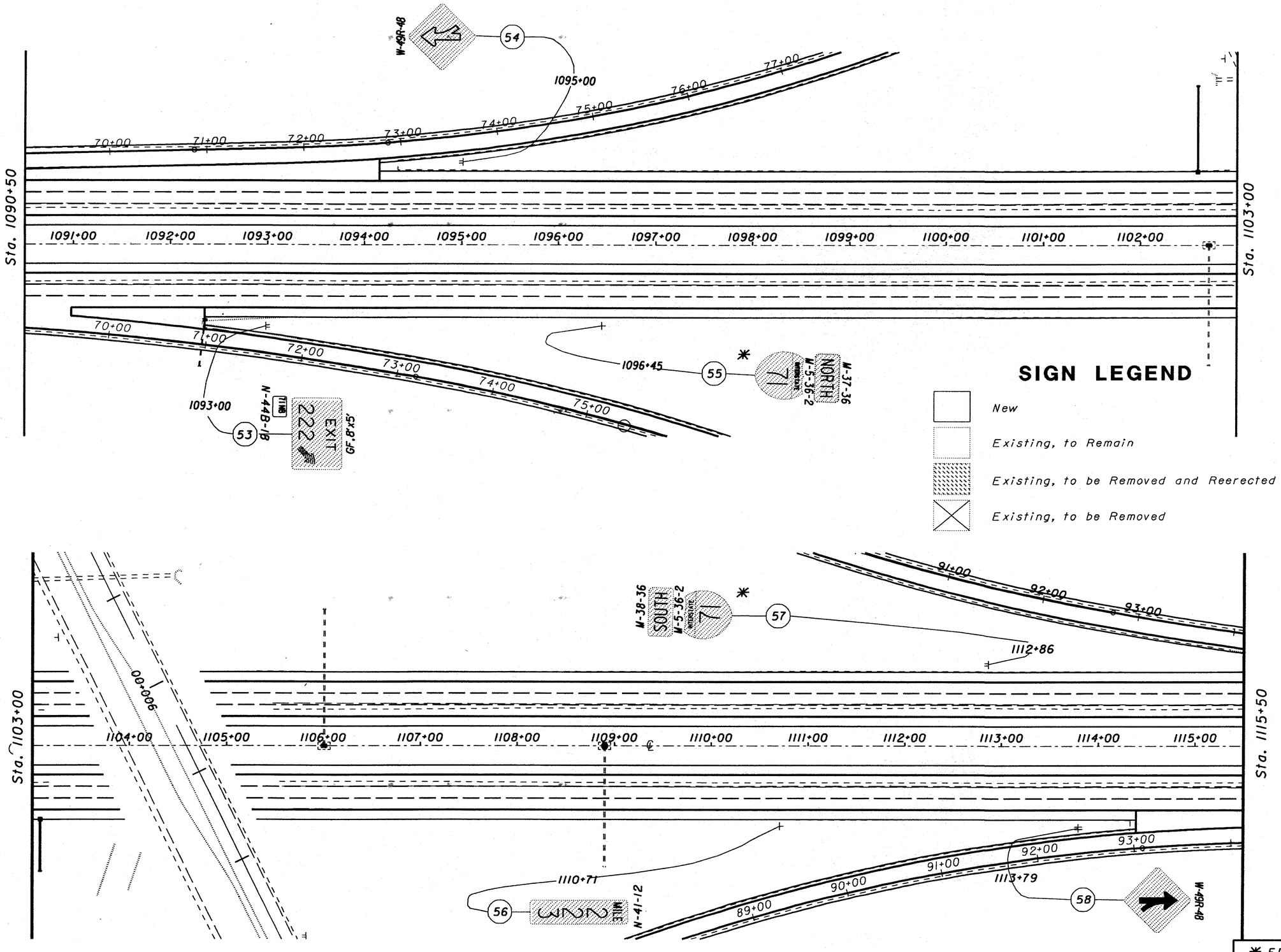

SIGN LEGEND

- New
- Existing, to Remain
- Existing, to be Removed and Reerected
- Existing, to be Removed

* FIELD DRILL FOR TWO (2) SUPPORTS SIGNS 55 & 57

HORIZONTAL SCALE IN FEET
0 25 50 100

CALCULATED | CHECKED

SIGNING LINE SHEET
STA. 1090+50 TO STA. 1115+50

MED - 71 - 15.78

589
940

LEVELS ON: $$$$$$$$$$LEVELSON$$$$$$$$$$
PLOT TITLE: $$$$$$$$$$PLOTTITLE$$$$$$$$$$
PEN TABLE: $$$$$$$$$$PENTABLE$$$$$$$$$$
USERNAME: $$$$$$$$$$USERNAME$$$$$$$$$$
PROJECT: $$$$$$$$$$PROJECT$$$$$$$$$$

REF.FILE *2: $$$$$$$$$$REF.FILENAME2$$$$$$$$$$
REF.FILE *2 LEVELS ON: $$$$$$$$$$REF.FILE2$$$$$$$$$$
REF.FILE *3: $$$$$$$$$$REF.FILENAME3$$$$$$$$$$
REF.FILE *3 LEVELS ON: $$$$$$$$$$REF.FILE3$$$$$$$$$$
REF.FILE *4: $$$$$$$$$$REF.FILENAME4$$$$$$$$$$
REF.FILE *4 LEVELS ON: $$$$$$$$$$REF.FILE4$$$$$$$$$$

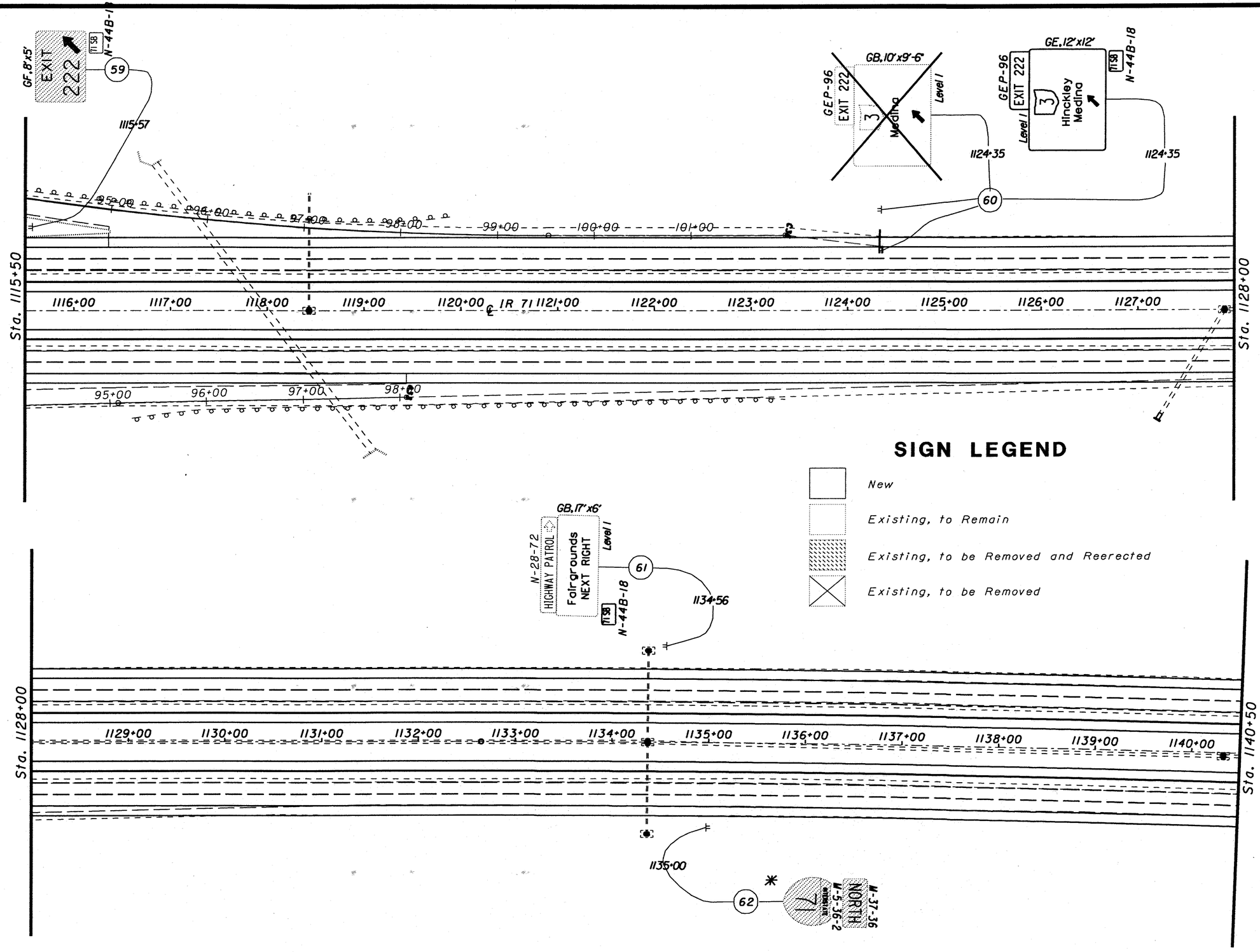

HORIZONTAL SCALE IN FEET
0 25 50 100

CALCULATED
CHECKED

SIGNING LINE SHEET
STA. 1115+50 TO STA. 1140+50

MED - 71 - 15.78

590
940

LEVELS ON: $$$$$$$$$$LEVELSON$$$$$$$$$$
PLOT QUEUE: $$$$$$$$$$QUEUE$$$$$$$$$$
PEN TABLE: $$$$$$$$$$PENTABLE$$$$$$$$$$
USERNAME: $$$$$$$$$$USER$$$$$$$$$$
PROJECT: $$$$$$$$$$PROJECT$$$$$$$$$$

USERNAME: $$$$$$$$$USER$$$$$$$$$
PROJECT: $$$$$$$$PROJECT$$$$$$$$

LEVELS ON: $$$$$$$$$$LEVELSON$$$$$$$$$$$
PLOT QUEUE: $$$$$$$$$$$$$QUEUE$$$$$$$$$$$$$
REN. TABLE: $$$$$$$$$$$$PENTABLE$$$$$$$$$$$

REF.FILE *2: $$$$$$$$$$REF.FILENAME2$$$$$$$$$$$$$
REF.FILE *2 LEVELS ON: $$$$$$$$$$REF.FILE2$$$$$$$$$$

REF.FILE *3: $$$$$$$$$$REF.FILENAME3$$$$$$$$$$$$$
REF.FILE *3 LEVELS ON: $$$$$$$$$$REF.FILE3$$$$$$$$$$
REF.FILE *4: $$$$$$$$$$REF.FILENAME4$$$$$$$$$$$$$
REF.FILE *4 LEVELS ON: $$$$$$$$$$REF.FILE4$$$$$$$$$$

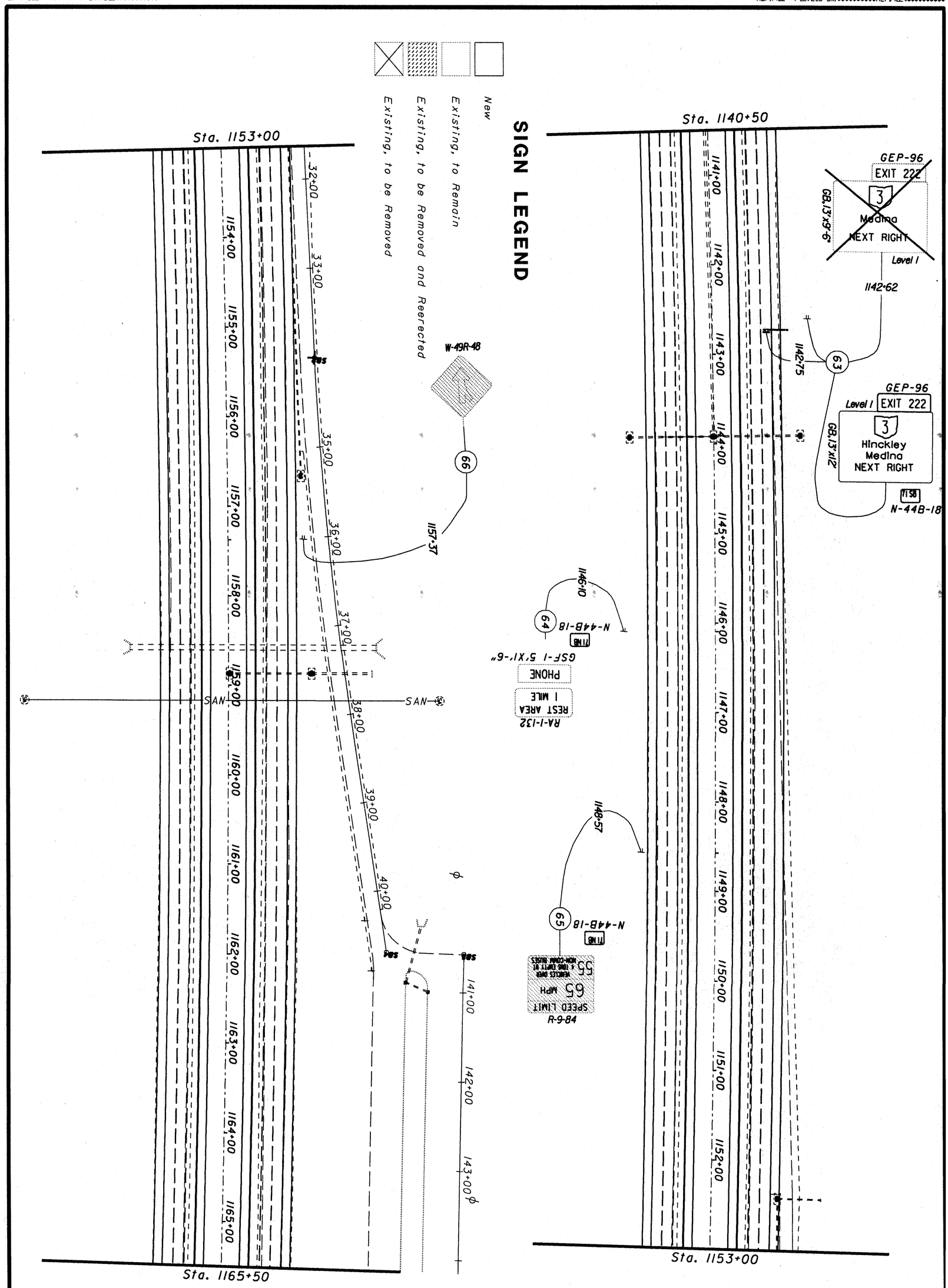

591 / 940	MED - 71 - 15.78	SIGNING LINE SHEET STA. 1140+50 TO STA. 1165+50	CALCULATED CHECKED 0 50 25 100 HORIZONTAL SCALE IN FEET

SIGN LEGEND

- New
- Existing, to Remain
- Existing, to be Removed and Reerected
- Existing, to be Removed

HORIZONTAL SCALE IN FEET
0 25 50 100

CALCULATED
CHECKED

SIGNING LINE SHEET
STA. 1165+50 TO STA. 1190+50

MED - 71 - 15.78

592
940

Sta. 1165+50
Sta. 1178+00
Sta. 1178+00
Sta. 1190+50

(No Work)
NORTH 271 To Erie PA NEXT RIGHT
Level 1
GB.26'x12'
67
1166-84
46+00
47+00
48+00
49+00
50+00
51+00
52+00
53+00
54+00
55+00
REST AREA
RA-4-72
68
T1 SB
N-44B-18
1171-33
1166+00
1167+00
1168+00
1169+00
1170+00
1171+00
1172+00
1173+00
1174+00
1175+00
1176+00
1177+00
1177-08
1177-28
69
1½ MILE
Level 2
GB.14'x9'6"
303
Brunswick
EXIT 226
GEP-96
GB.14'x12'
Level 1
Brunswick Hinckley 1½ MILE
T1 NB
N-44B-18
(TO BE RELOCATED BY OTHERS)
1169-27
LODGING-EXIT 226
RA-2-132
REST AREA
70
T1 SB
N-44B-18
1180+21
Hinckley Road
CH-136
1179+00
1180+00
1181+00
1182+00
1183+00
1184+00
1185+00
1186+00
1187+00
1188+00
1189+00
1190+00
49+00
50+00
51+00
52+00
SAN
1190-34
T1 NB
N-44B-18
71
RA-2-132
REST AREA

REF.FILE *3:$$$$$$$$$$REF.FILENAME3$$$$$$$$$$$$$$
REF.FILE *3 LEVELS ON:$$$$$$$$$$REF.FILE3$$$$$$$$$$$$$$
REF.FILE *4:$$$$$$$$$$REF.FILENAME4$$$$$$$$$$$$$$
REF.FILE *4 LEVELS ON:$$$$$$$$$$REF.FILE4$$$$$$$$$$$$$$
REF.FILE *2:$$$$$$$$$$REF.FILENAME2$$$$$$$$$$$$$$
REF.FILE *2 LEVELS ON:$$$$$$$$$$REF.FILE2$$$$$$$$$$$$$$

LEVELS ON:$$$$$$$$$$LEVELSON$$$$$$$$$$$$$$
PLOT QUEUE:$$$$$$$$$$QUEUE$$$$$$$$$$$$$$
PEN TABLE:$$$$$$$$$$PENTABLE$$$$$$$$$$$$$$

USERNAME:$$$$$$$$$$USER$$$$$$$$$$
PROJECT:$$$$$$$$$$PROJECT$$$$$$$$$$

USERNAME: $$$$$$$$$USER$$$$$$$$$
PROJECT: $$$$$$$$$PROJECT$$$$$$$$$
LEVELS ON: $$$$$$$$$$LEVELSON$$$$$$$$$$
PLOT QUEUE: $$$$$$$$$$$$$$$QUEUE$$$$$$$$$$$$$$$
PEN TABLE: $$$$$$$$$$$$$PENTABLE$$$$$$$$$$$$
REF.FILE *2: $$$$$$$$$$REF.FILENAME2$$$$$$$$$$$$$$
REF.FILE *2 LEVELS ON: $$$$$$$$$$REF.FILE2$$$$$$$$$$$$$$
REF.FILE *3: $$$$$$$$$$$$REF.FILENAME3$$$$$$$$$$$$$$
REF.FILE *3 LEVELS ON: $$$$$$$$$$$$REF.FILE3$$$$$$$$$$$$$$
REF.FILE *4: $$$$$$$$$$$$REF.FILENAME4$$$$$$$$$$$$$$
REF.FILE *4 LEVELS ON: $$$$$$$$$$$$REF.FILE4$$$$$$$$$$$$$$

SIGN LEGEND

- New
- Existing, to Remain
- Existing, to be Removed and Reerected
- Existing, to be Removed

Sta. 1190+50

SAN

1191+00
1192+00
1193+00
1194+00
1195+00
1196+00
1197+00
1198+00
1199+00
1200+00
1201+00
1202+00

73+00
74+00
75+00
76+00
77+00
78+00
79+00
80+00
81+00

GEP-96
EXIT 222
3
Medina
1 1/2 MILE
Level I
GB 10'x9'-6"

GEP-96
Level I
EXIT 222
3
Hinckley
Medina
1 1/2 MILE
GB 12'x12'
T158
N-44B-18

1195+53
1195+55
72
73

1196+17
71
N-44B-18
T148
REST AREA 27
RA-4-72

Sta. 1203+00

593 940	MED - 71 - 15.78	SIGNING LINE SHEET STA. 1190+50 TO STA. 1203+00	CALCULATED / CHECKED	0 50 25 100 HORIZONTAL SCALE IN FEET

USERNAME: ##########USER##########
PROJECT: ##########PROJECT##########
LEVELS ON: ##########LEVELSON##########
PLOT QUEUE: ##########QUEUE##########
REN. TABLE: ##########PENTABLE##########
REF.FILE *2: ##########REF.FILENAME2##########
REF.FILE *2 LEVELS ON: ##########REF.FILE2##########
REF.FILE *3: ##########REF.FILENAME3##########
REF.FILE *3 LEVELS ON: ##########REF.FILE3##########
REF.FILE *4: ##########REF.FILENAME4##########
REF.FILE *4 LEVELS ON: ##########REF.FILE4##########

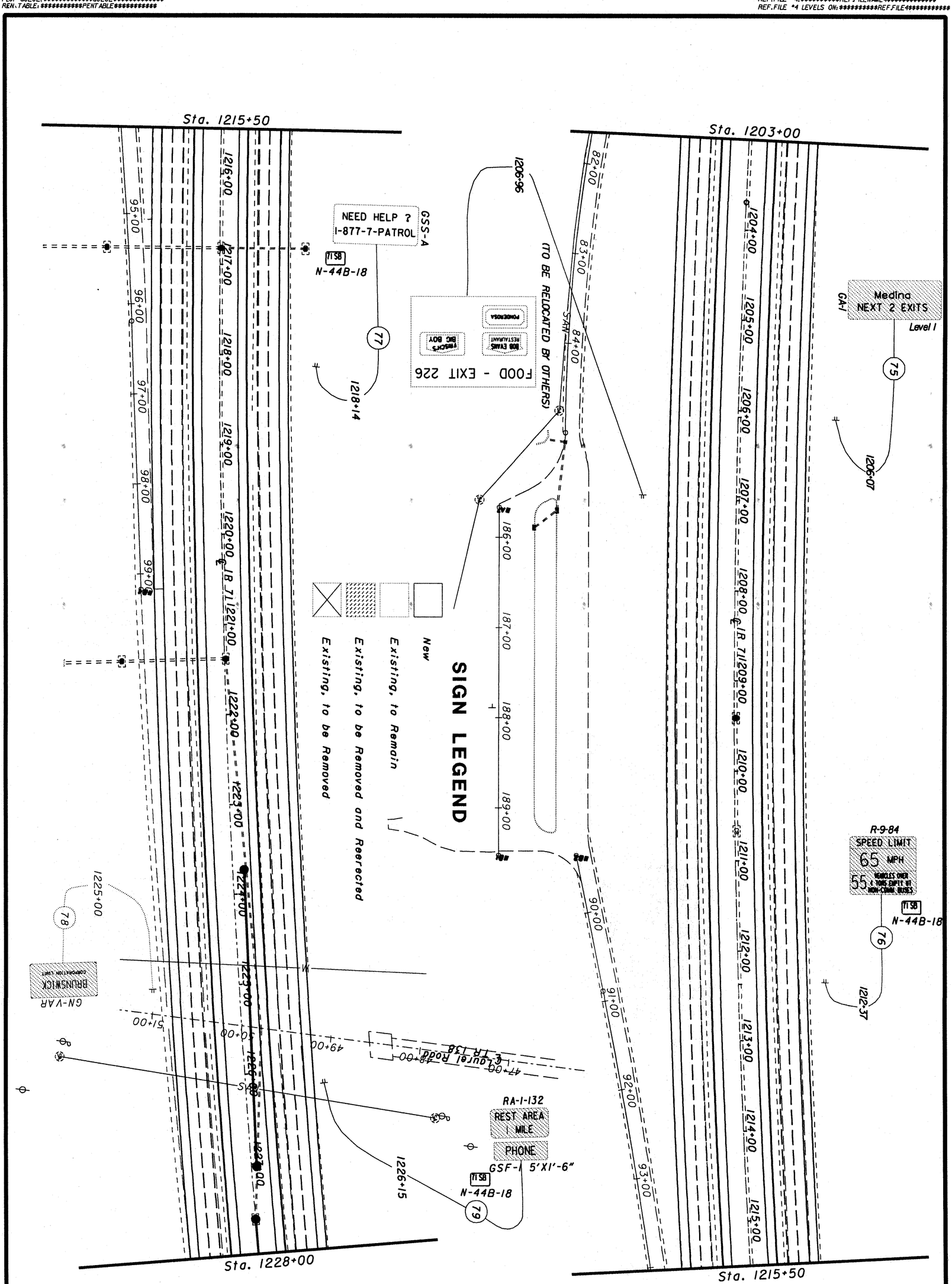

594 / 940	MED - 71 - 15.78	SIGNING LINE SHEET STA. 1203+00 TO STA. 1228+00	CALCULATED / CHECKED	0 50 25 100 HORIZONTAL SCALE IN FEET

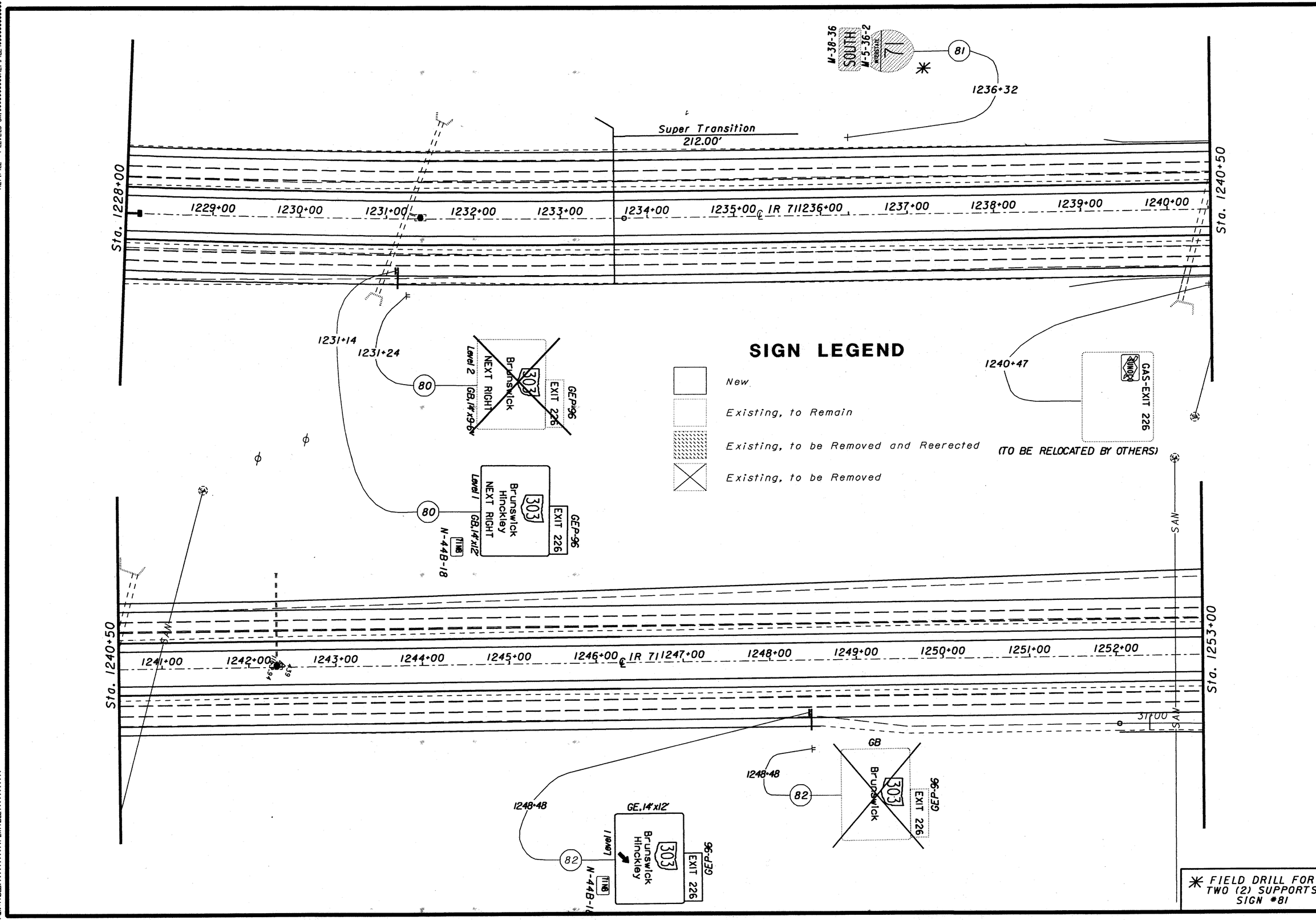

✱ FIELD DRILL FOR TWO (2) SUPPORTS SIGN #81

HORIZONTAL SCALE IN FEET

0 25 50 100

CALCULATED

CHECKED

SIGNING LINE SHEET
STA. 1228+00 TO STA. 1253+00

MED - 71 - 15.78

595/940

SIGN LEGEND

- New
- Existing, to Remain
- Existing, to be Removed and Reerected
- Existing, to be Removed

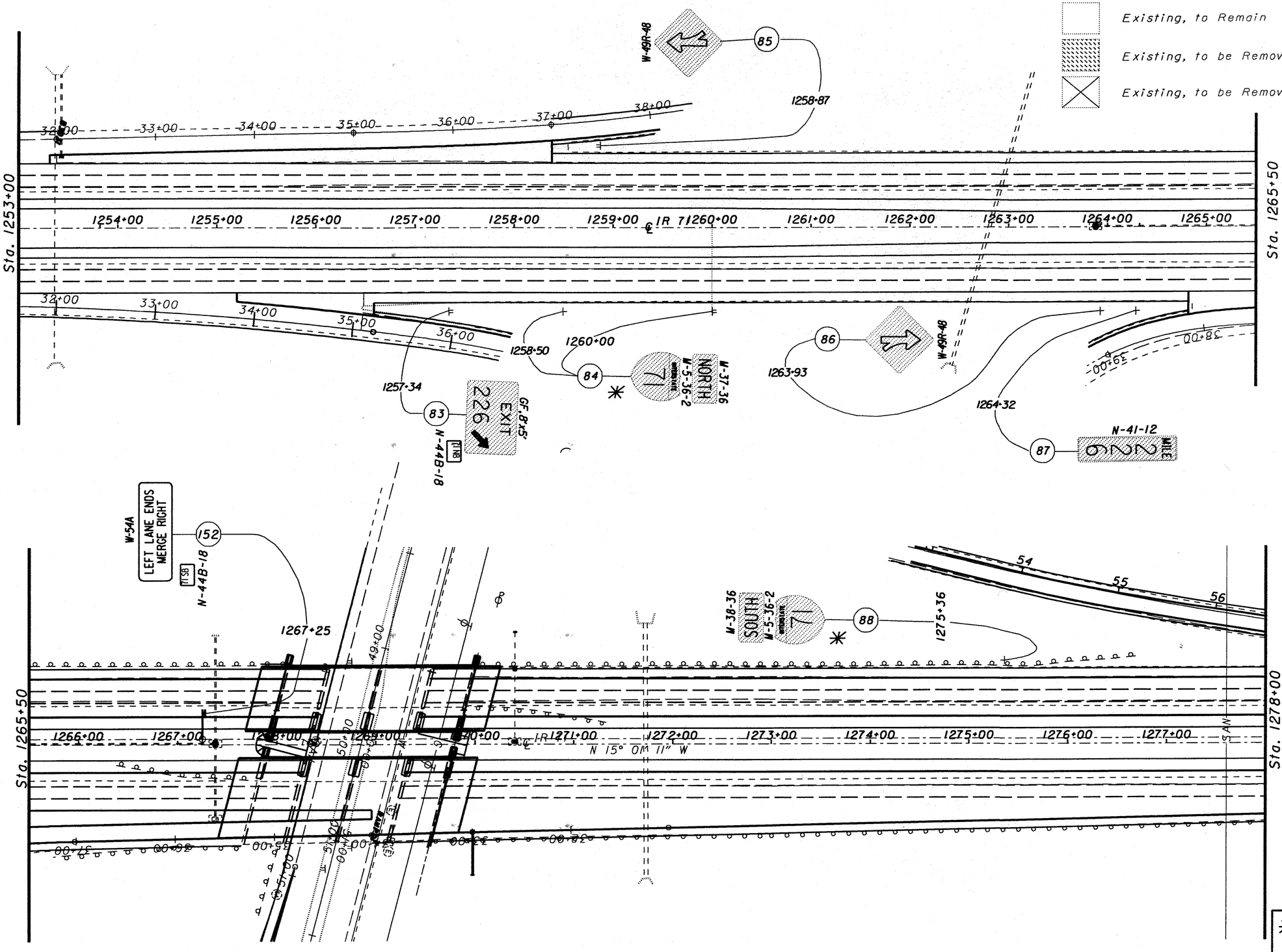

✳ FIELD DRILL FOR TWO (2) SUPPORTS SIGNS 84 & 88

HORIZONTAL SCALE IN FEET
0 25 50 100

CALCULATED

CHECKED

SIGNING LINE SHEET
STA. 1253+00 TO STA. 1278+00

MED - 71 - 15.78

596
940

REF.FILE *2,$$$$$$$$$$REF.FILENAME2$$$$$$$$$$$$$$$
REF.FILE *2 LEVELS ON,$$$$$$$$$$REF.FILE2$$$$$$$$$$$$$$$
REF.FILE *3,$$$$$$$$$$REF.FILENAME3$$$$$$$$$$$$$$$
REF.FILE *3 LEVELS ON,$$$$$$$$$$REF.FILE3$$$$$$$$$$$$$$$
REF.FILE *4,$$$$$$$$$$REF.FILENAME4$$$$$$$$$$$$$$$
REF.FILE *4 LEVELS ON,$$$$$$$$$$REF.FILE4$$$$$$$$$$$$$$$
LEVELS ON,$$$$$$$$$$LEVELSON$$$$$$$$$$$$$$$
USERNAME,$$$$$$$$$$USER$$$$$$$$$$
PROJECT,$$$$$$$$$$PROJECT$$$$$$$$$$
PERMITABLE,$$$$$$$$$$PERMITABLE$$$$$$$$$$

REF.FILE *2:$$$$$$$$$$REF.FILENAME2$$$$$$$$$$
REF.FILE *3:$$$$$$$$$$REF.FILENAME3$$$$$$$$$$
REF.FILE *4:$$$$$$$$$$REF.FILENAME4$$$$$$$$$$
REF.FILE *2 LEVELS ON:$$$$$$$$$$REF.FILE2$$$$$$$$$$
REF.FILE *3 LEVELS ON:$$$$$$$$$$REF.FILE3$$$$$$$$$$
REF.FILE *4 LEVELS ON:$$$$$$$$$$REF.FILE4$$$$$$$$$$

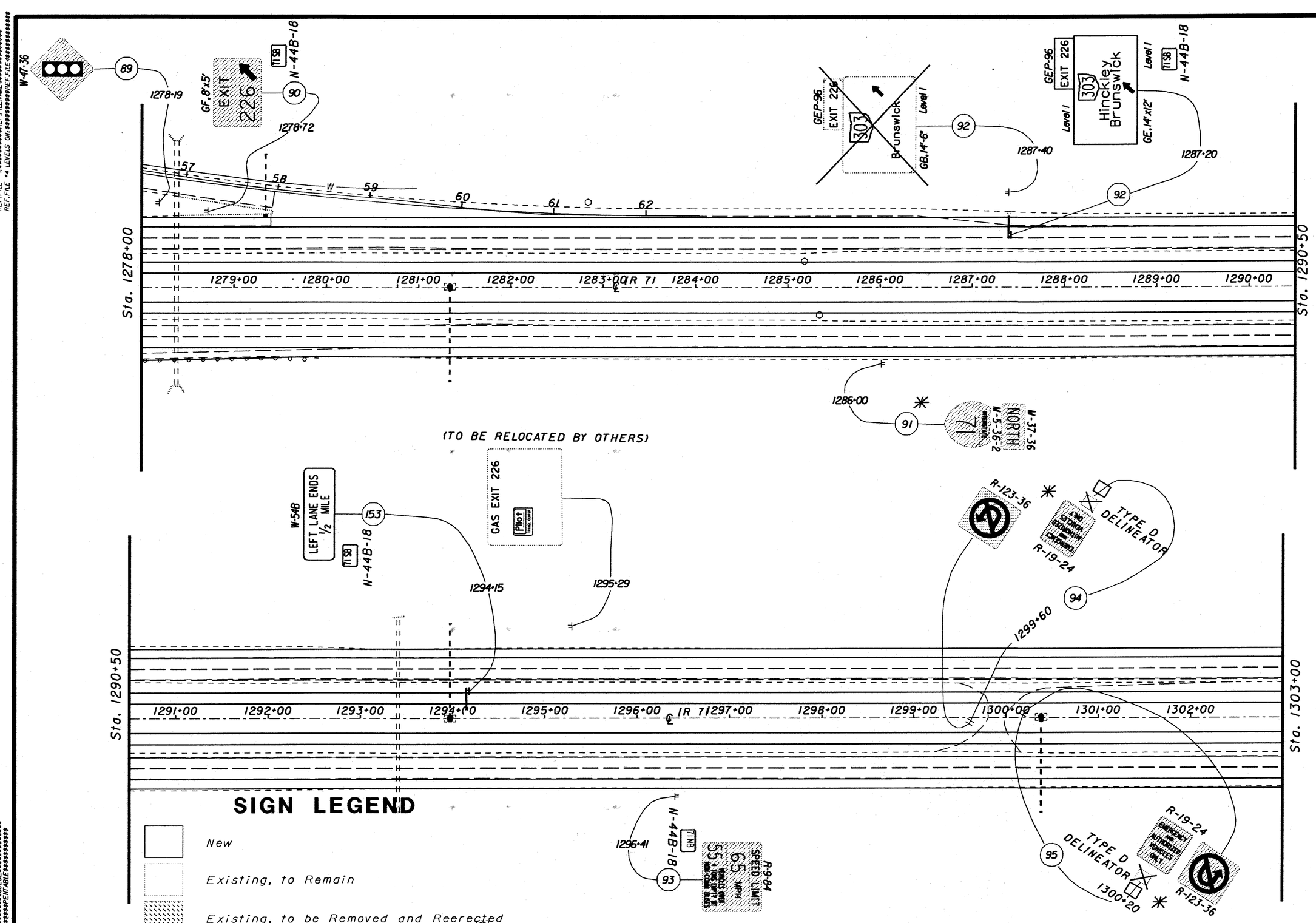

SIGN LEGEND

- New
- Existing, to Remain
- Existing, to be Removed and Reerected
- Existing, to be Removed

✳ FIELD DRILL FOR TWO (2) SUPPORTS SIGNS 91, 94 & 95

SIGNING LINE SHEET
STA. 1278+00 TO STA. 1303+00

MED - 71 - 15.78

597
940

HORIZONTAL SCALE IN FEET
0 25 50 100

CALCULATED
CHECKED

LEVELS ON:$$$$$$$$$$LEVELSON$$$$$$$$$$
PLOT QUEUE:$$$$$$$$$$QUEUE$$$$$$$$$$
PEN TABLE:$$$$$$$$$$PENTABLE$$$$$$$$$$
USERNAME:$$$$$$$$$$USER$$$$$$$$$$
PROJECT:$$$$$$$$$$PROJECT$$$$$$$$$$

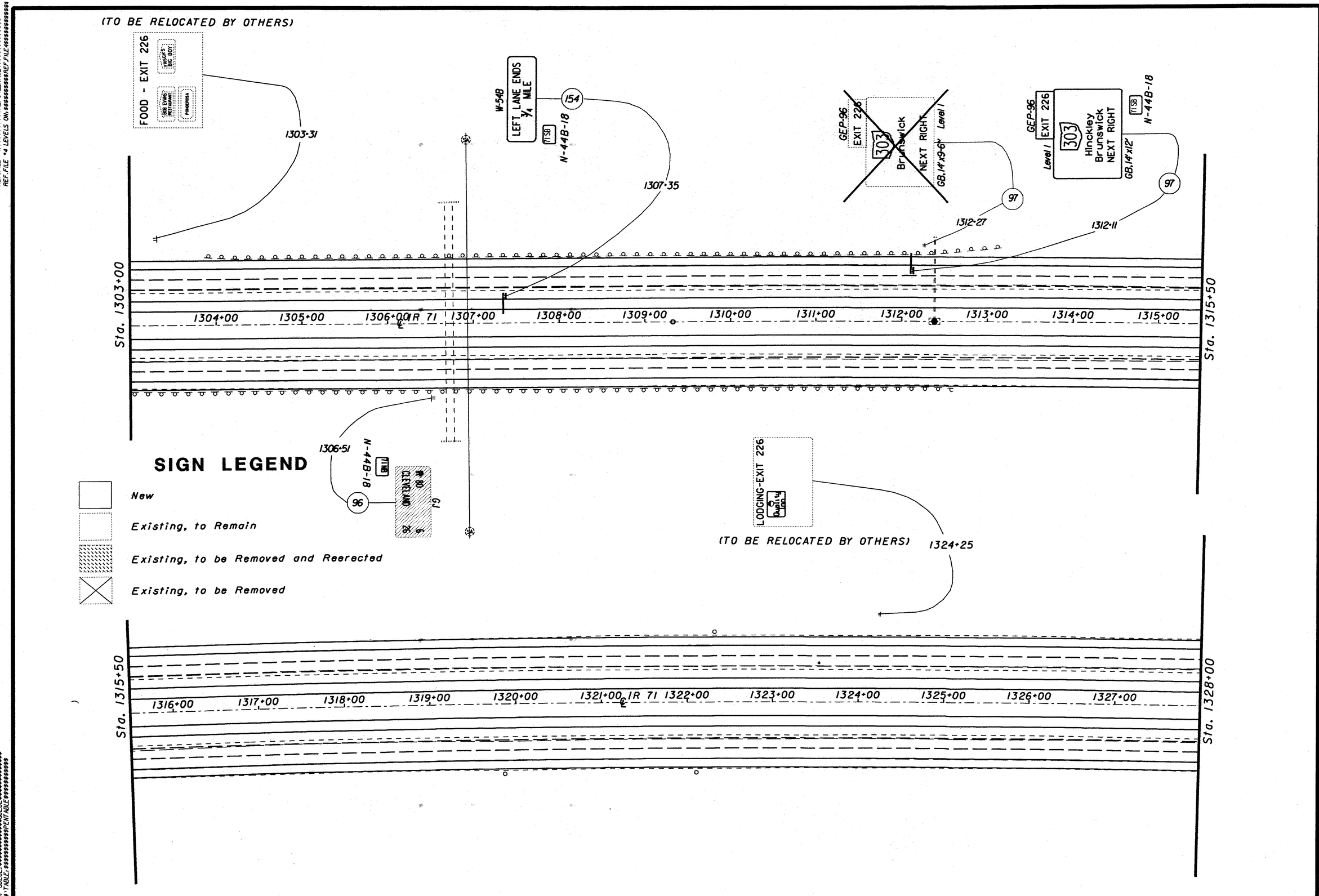

SIGN LEGEND

- New
- Existing, to Remain
- Existing, to be Removed and Reerected
- Existing, to be Removed

HORIZONTAL SCALE IN FEET 0 25 50 100

CALCULATED

CHECKED

SIGNING LINE SHEET
STA. 1303+00 TO STA. 1328+00

MED - 71 - 15.78

598/940

USERNAME: $$$$$$$$$$USER$$$$$$$$$$
PROJECT: $$$$$$$$$PROJECT$$$$$$$$$
LEVELS ON: $$$$$$$$$$$LEVELSON$$$$$$$$$$$
PLOT QUEUE: $$$$$$$$$$$$$$$QUEUE$$$$$$$$$$$$$$$
PEN TABLE: $$$$$$$$$$$$$PENTABLE$$$$$$$$$$$$$
REF.FILE *2: $$$$$$$$$$REF.FILENAME2$$$$$$$$$$$$$
REF.FILE *2 LEVELS ON: $$$$$$$$$$REF.FILE2$$$$$$$$$$
REF.FILE *3: $$$$$$$$$$REF.FILENAME3$$$$$$$$$$$$$
REF.FILE *3 LEVELS ON: $$$$$$$$$$REF.FILE3$$$$$$$$$$
REF.FILE *4: $$$$$$$$$$REF.FILENAME4$$$$$$$$$$$$$
REF.FILE *4 LEVELS ON: $$$$$$$$$$REF.FILE4$$$$$$$$$$

Sta. 1340+50

1341+00
1342+00
1343+00
1344+00
1345+00
1346+00 ℄ IR 71
1347+00
1348+00
1349+00
1350+00
1351+00
1352+00

Sta. 1353+00

Sta. 1328+00

1329+00
1330+00
1331+00
1332+00
1333+00
1334+00 ℄ IR 71
1335+00
1336+00
1337+00
1338+00
1339+00
1340+00

Sta. 1340+50

GEP-96
EXIT 226
303
Brunswick
1 MILE
GB, 14'x9-6"
Level 1

1332+14
98

GEP-96
Level 1
EXIT 226
303
Hinckley
Brunswick
1 MILE
GB, 14'x12'
71 SB
N-44B-18

1332+34
98

SIGN LEGEND

- New
- Existing, to Remain
- Existing, to be Removed and Reerected
- Existing, to be Removed

596 / 640	MED - 71 - 15.78	SIGNING LINE SHEET STA. 1328+00 TO STA. 1353+00	CALCULATED CHECKED 0 50 25 100 HORIZONTAL SCALE IN FEET

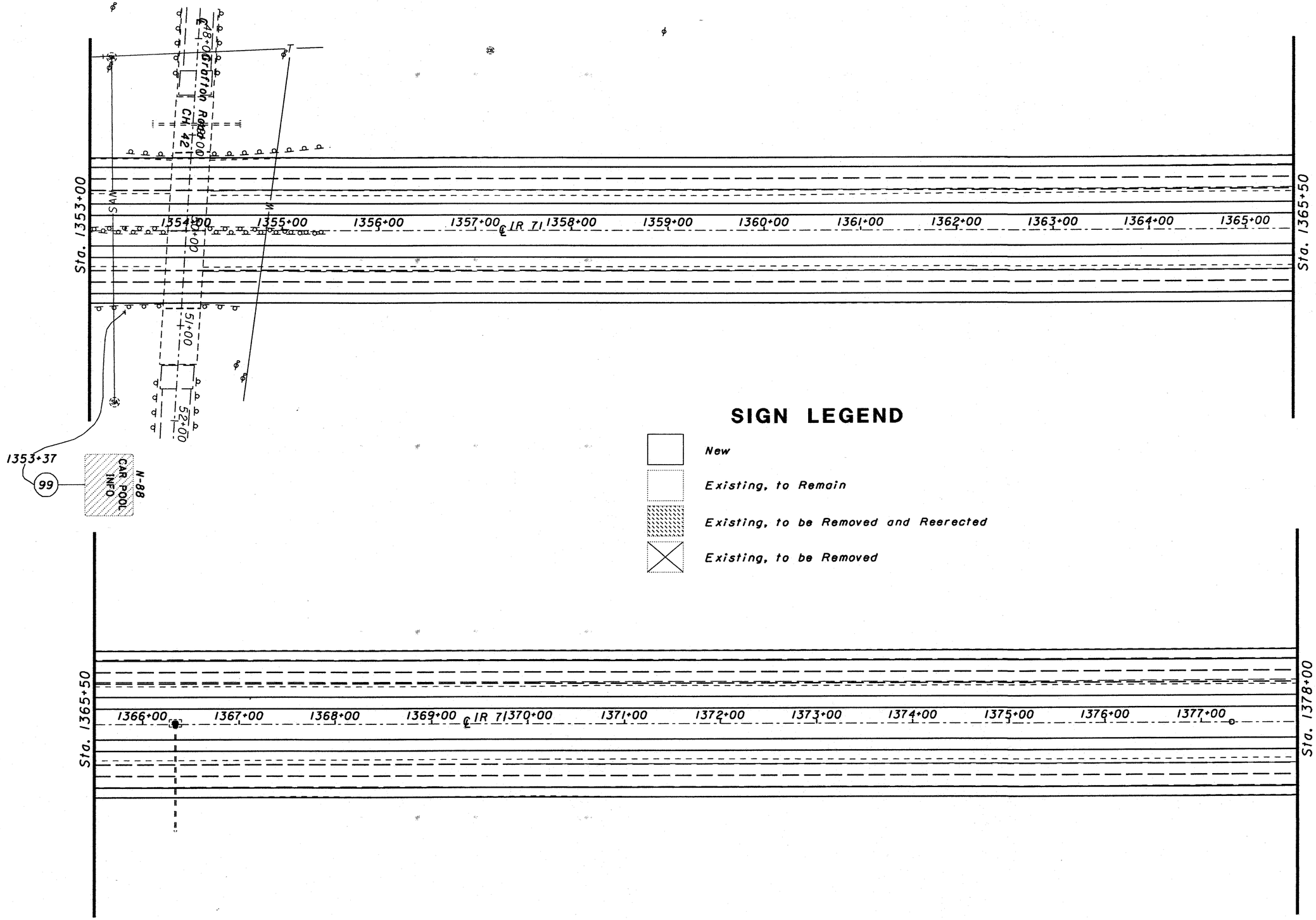

SIGN LEGEND

- New
- Existing, to Remain
- Existing, to be Removed and Reerected
- Existing, to be Removed

HORIZONTAL SCALE IN FEET
0 25 50 100

CALCULATED
CHECKED

SIGNING PLAN SHEET
STA. 1353+00 TO STA. 1378+00

MED - 71 - 15.78

600
940

REF.FILE *2 LEVELS ON: ##########REF.FILENAME2##########
REF.FILE *3 LEVELS ON: ##########REF.FILENAME3##########
REF.FILE *4 LEVELS ON: ##########REF.FILENAME4##########

LEVELS ON: ##########LEVELSON##########
PLOT QUEUE: ##########QUEUE##########
PEN TABLE: ##########PENTABLE##########
USERNAME: ##########USER##########
PROJECT: ##########PROJECT##########

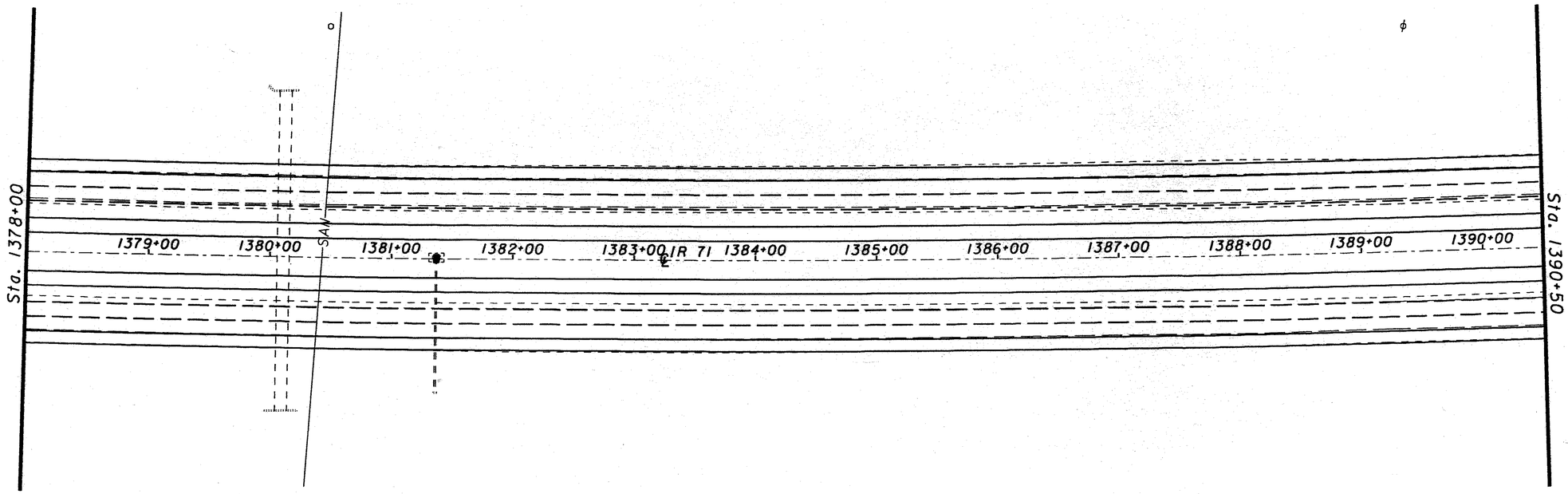

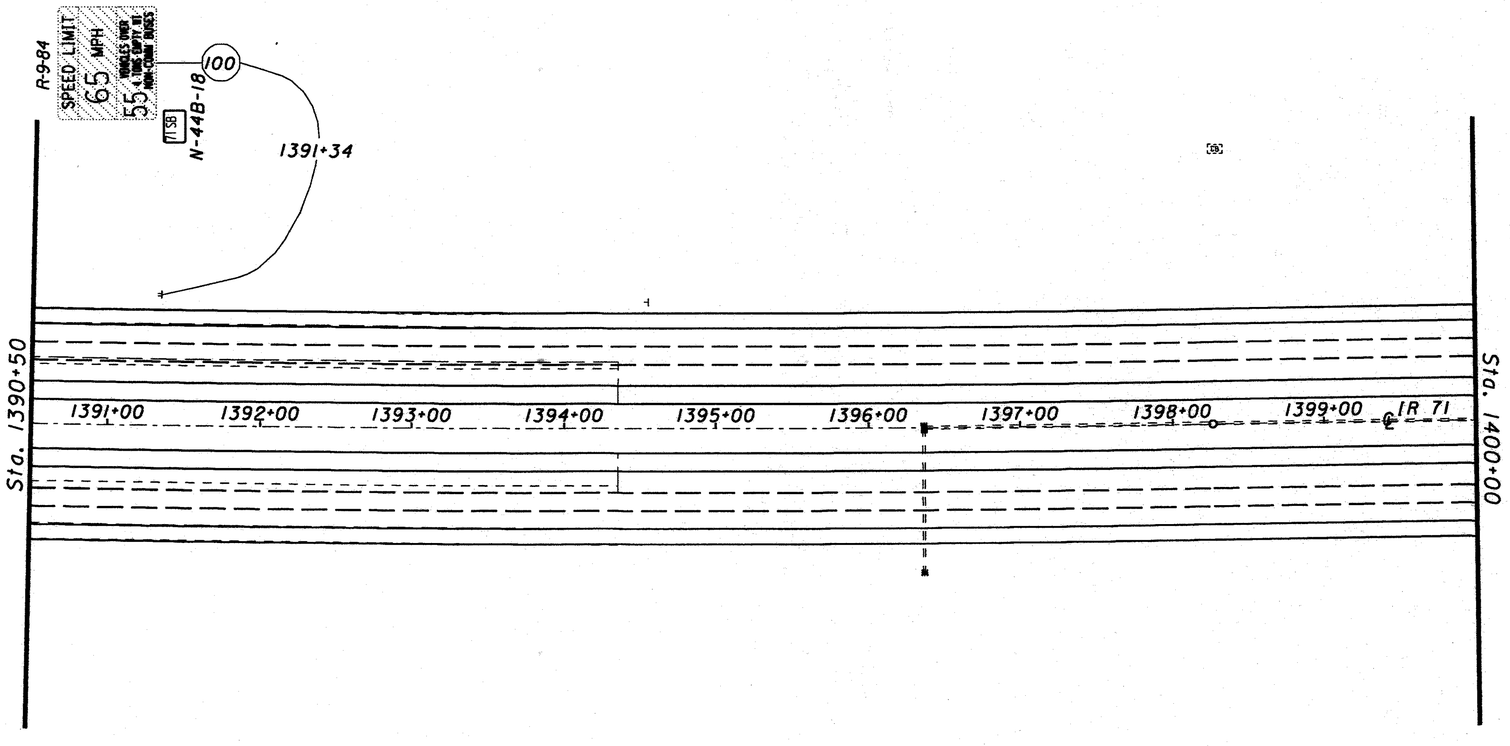

SIGN LEGEND

- New
- Existing, to Remain
- Existing, to be Removed and Reerected
- Existing, to be Removed

0 25 50 100
HORIZONTAL SCALE IN FEET

CALCULATED
CHECKED

SIGNING LINE SHEET
STA. 1378+00 TO STA. 1400+00

MED - 71 - 15.78

601
940

REF.FILE *2:$$$$$$$$$$$REF.FILENAME2$$$$$$$$$$$$$
REF.FILE *2 LEVELS ON:$$$$$$$$$$$REF.FILE2$$$$$$$$$$$$
REF.FILE *3:$$$$$$$$$$$REF.FILENAME3$$$$$$$$$$$$$
REF.FILE *3 LEVELS ON:$$$$$$$$$$$REF.FILE3$$$$$$$$$$$$
REF.FILE *4:$$$$$$$$$$$REF.FILENAME4$$$$$$$$$$$$$
REF.FILE *4 LEVELS ON:$$$$$$$$$$$REF.FILE4$$$$$$$$$$$$
USERNAME:$$$$$$$$$$USER$$$$$$$$$
PROJECT:$$$$$$$$PROJECT$$$$$$$$
LEVELS ON:$$$$$$$$$$$LEVELSON$$$$$$$$$$$$
PLOT QUEUE:$$$$$$$$$$$$$$QUEUE$$$$$$$$$$$$$
PENTABLE:$$$$$$$$$$$PENTABLE$$$$$$$$$$$

REF.FILE *2:$$$$$$$$$$$$REF-FILENAME2$$$$$$$$$$$$
REF.FILE *2 LEVELS ON: $$$$$$$$$$$$REF-FILE2$$$$$$$$$$$$

REF.FILE *3:$$$$$$$$$$$$REF-FILENAME3$$$$$$$$$$$$
REF.FILE *3 LEVELS ON: $$$$$$$$$$$$REF-FILE3$$$$$$$$$$$$
REF.FILE *4:$$$$$$$$$$$$REF-FILENAME4$$$$$$$$$$$$
REF.FILE *4 LEVELS ON: $$$$$$$$$$$$REF-FILE4$$$$$$$$$$$$

USERNAME: $$$$$$$$$$USER$$$$$$$$$$
PROJECT: $$$$$$$$$$PROJECT$$$$$$$$$$

LEVELS ON: $$$$$$$$$$LEVELSON$$$$$$$$$$
HATCH OBJECTS: $$$$$$$$$$HATCH$$$$$$$$$$
PEN TABLE: $$$$$$$$$$PENTABLE$$$$$$$$$$

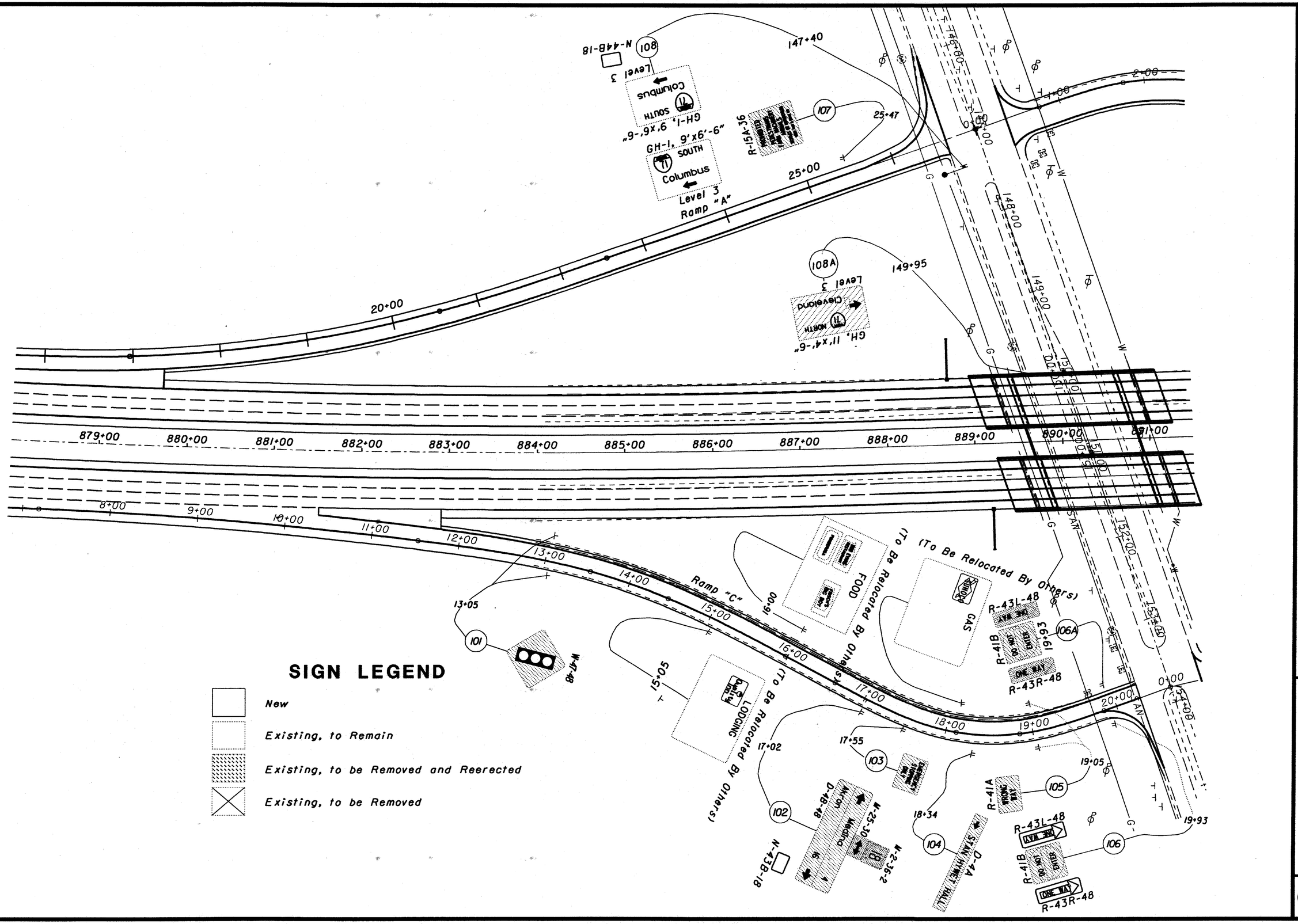

SIGN LEGEND

- New
- Existing, to Remain
- Existing, to be Removed and Reerected
- Existing, to be Removed

SIGNING LINE SHEET
S.R. 18 INTERCHANGE, RAMPS A & C

CALCULATED
CHECKED

HORIZONTAL SCALE IN FEET
0 25 50 100

MED - 71 - 15.78

602
940

REF.FILE *1: ##########REFFILENAME1##########
REF.FILE *2: ##########REFFILENAME2##########
REF.FILE *2 LEVELS ON: ##########REFFILE2##########
REF.FILE *3: ##########REFFILENAME3##########
REF.FILE *3 LEVELS ON: ##########REFFILE3##########
REF.FILE *4: ##########REFFILENAME4##########
REF.FILE *4 LEVELS ON: ##########REFFILE4##########

USERNAME: ##########USER##########
PROJECT: ##########PROJECT##########

LEVELS ON: ##########LEVELSON##########
PLOT QUEUE: ##########QUEUE##########
PEN TABLE: ##########PENTABLE##########

R-43R-48
VEH. SIGN
DO NOT ENTER
ONE WAY
R-43L-48
R-41B-36
R-3L-36
STOP WHEN RED
W-82-36
PED XING WP-76P-24
111
112
0+84
W-81-42
0+65
R-41A WRONG WAY
112A
0+00
1+00
2+00
K-2-36-2
K-25-30
Akron Medina
D-1B-48
N-43B-17
5+63
115
W-47-48
116
7+50
(To Be Relocated By Others)
FOOD
8+55
1+77
3+25
113
R-31A-36
ONE WAY
110
R-43R-48
R-3R-36
R-41B-36
R-43L-48
STAN HYWET HALL
114
5+07
(To Be Relocated By Others)
FOOD
5+55
K-2-36-2
K-25-30
Akron Medina
N-43B-17
117
8+06
148+00
149+00
150+00
151+00
152+00
153+00
154+00
890+00
891+00
892+00
893+00
894+00
895+00
896+00
897+00
898+00
899+00
900+00
901+00
902+00
GH, 11'x4'-6"
SOUTH
Columbus
Level 3
151+75
109
1+00
2+00
3+00
4+00
5+00
6+00
7+00
8+00
9+00
10+00
11+00
900+73
W-53R-48
119
RIGHT LANE ENDS
0+00
R-15A-36
194
118
154+25
154+36
109A
Level 3
Cleveland
NORTH
GH-1, 9'x6'-6"
GH-1, 9'x6'-6"
NORTH
Cleveland
Level 3
To Be Relocated
See Detail On Sheet —
N-44B-18

SIGN LEGEND

- New
- Existing, to Remain
- Existing, to be Removed and Reerected
- Existing, to be Removed

HORIZONTAL SCALE IN FEET
0 50 100

CALCULATED
CHECKED

SIGNING LINE SHEET
S.R. 18 INTERCHANGE RAMPS B & D

MED - 71 - 15.78

603
940

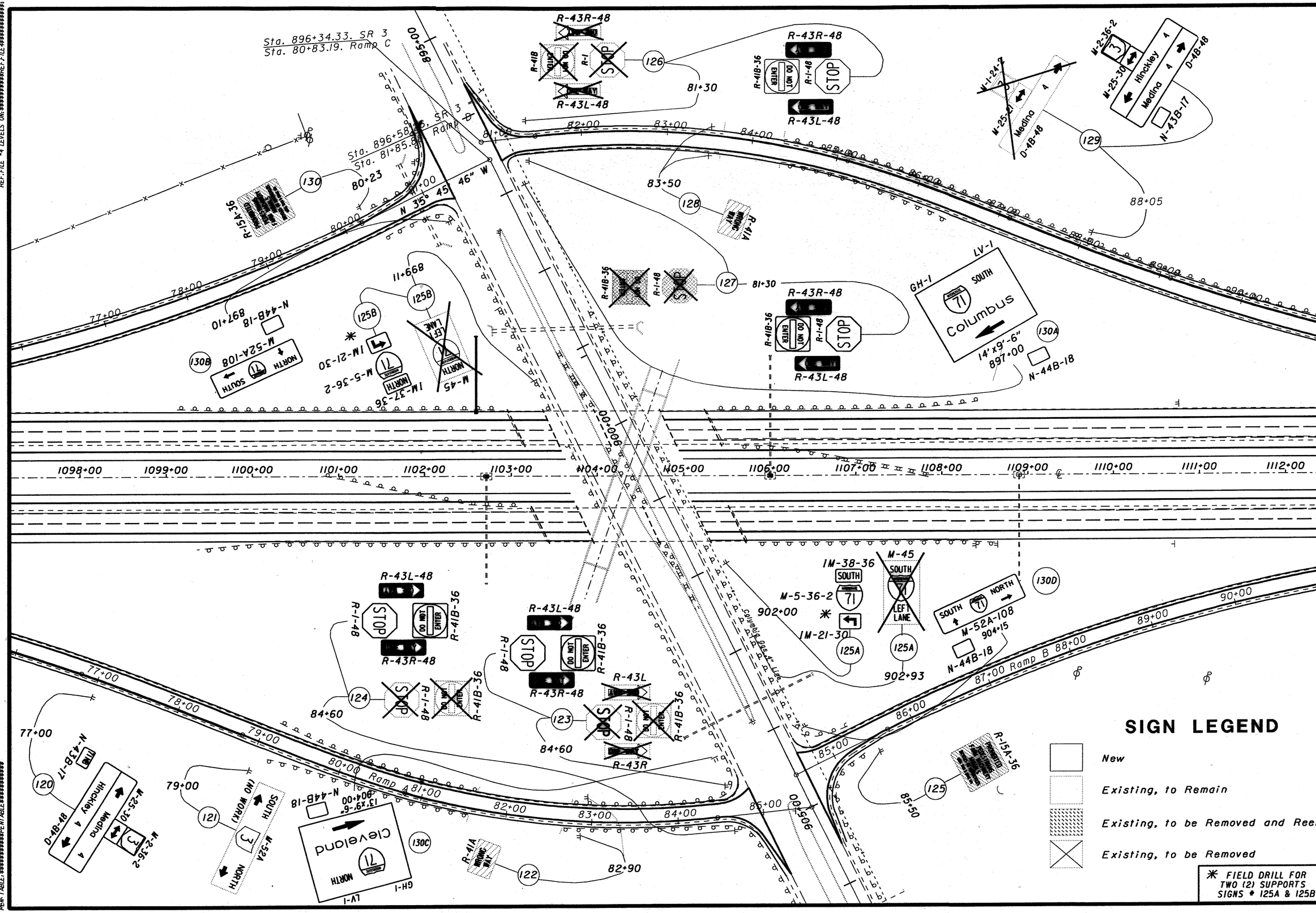

SIGN LEGEND

- New
- Existing, to Remain
- Existing, to be Removed and Reerected
- Existing, to be Removed

✳ FIELD DRILL FOR TWO (2) SUPPORTS SIGNS # 125A & 125B

HORIZONTAL SCALE IN FEET 0 25 50 100

CALCULATED

CHECKED

SIGNING LINE SHEET
S. R. 3 INTERCHANGE RAMPS A, B, C, & D

MED - 71 - 15.78

604/940

REF-FILE *2:$$$$$$$$$$REF-FILENAME2$$$$$$$$$$
REF-FILE *2 LEVELS ON: $$$$$$$$$$REF-FILE2$$$$$$$$$$

REF-FILE *3:$$$$$$$$$$REF-FILENAME3$$$$$$$$$$
REF-FILE *3 LEVELS ON: $$$$$$$$$$REF-FILE3$$$$$$$$$$
REF-FILE *4:$$$$$$$$$$REF-FILENAME4$$$$$$$$$$
REF-FILE *4 LEVELS ON: $$$$$$$$$$REF-FILE4$$$$$$$$$$

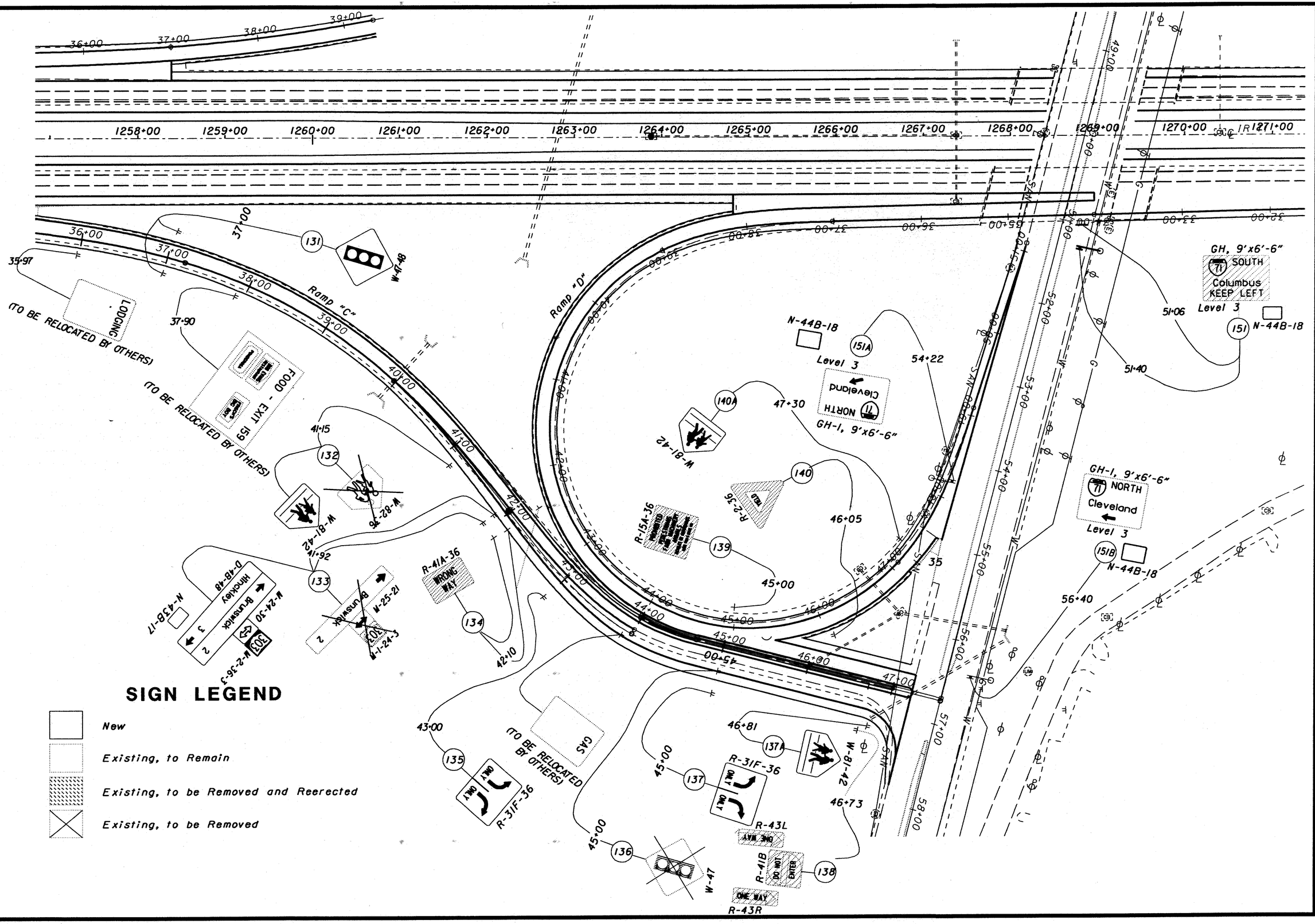

SIGN LEGEND

- New
- Existing, to Remain
- Existing, to be Removed and Reerected
- Existing, to be Removed

SIGNING LINE SHEET
S.R. 303 INTERCHANGE RAMPS C & D
MED - 71 - 15.78

605
940

LEVELS ON:$$$$$$$$$$LEVELSON$$$$$$$$$$
PLOT QUEUE:$$$$$$$$$$PLOTQUEUE$$$$$$$$$$
PEN TABLE:$$$$$$$$$$PENTABLE$$$$$$$$$$

USERNAME:$$$$$$$$$$USER$$$$$$$$$$
PROJECT:$$$$$$$$$$PROJECT$$$$$$$$$$

REF-FILE *1 LEVELS ON: ##########REF-FILENAME1##########
REF-FILE *2 LEVELS ON: ##########REF-FILENAME2##########
REF-FILE *3 LEVELS ON: ##########REF-FILENAME3##########
REF-FILE *4 LEVELS ON: ##########REF-FILENAME4##########
REF-FILE *1 LEVELS ON: ##########REF-FILE1##########
REF-FILE *2 LEVELS ON: ##########REF-FILE2##########

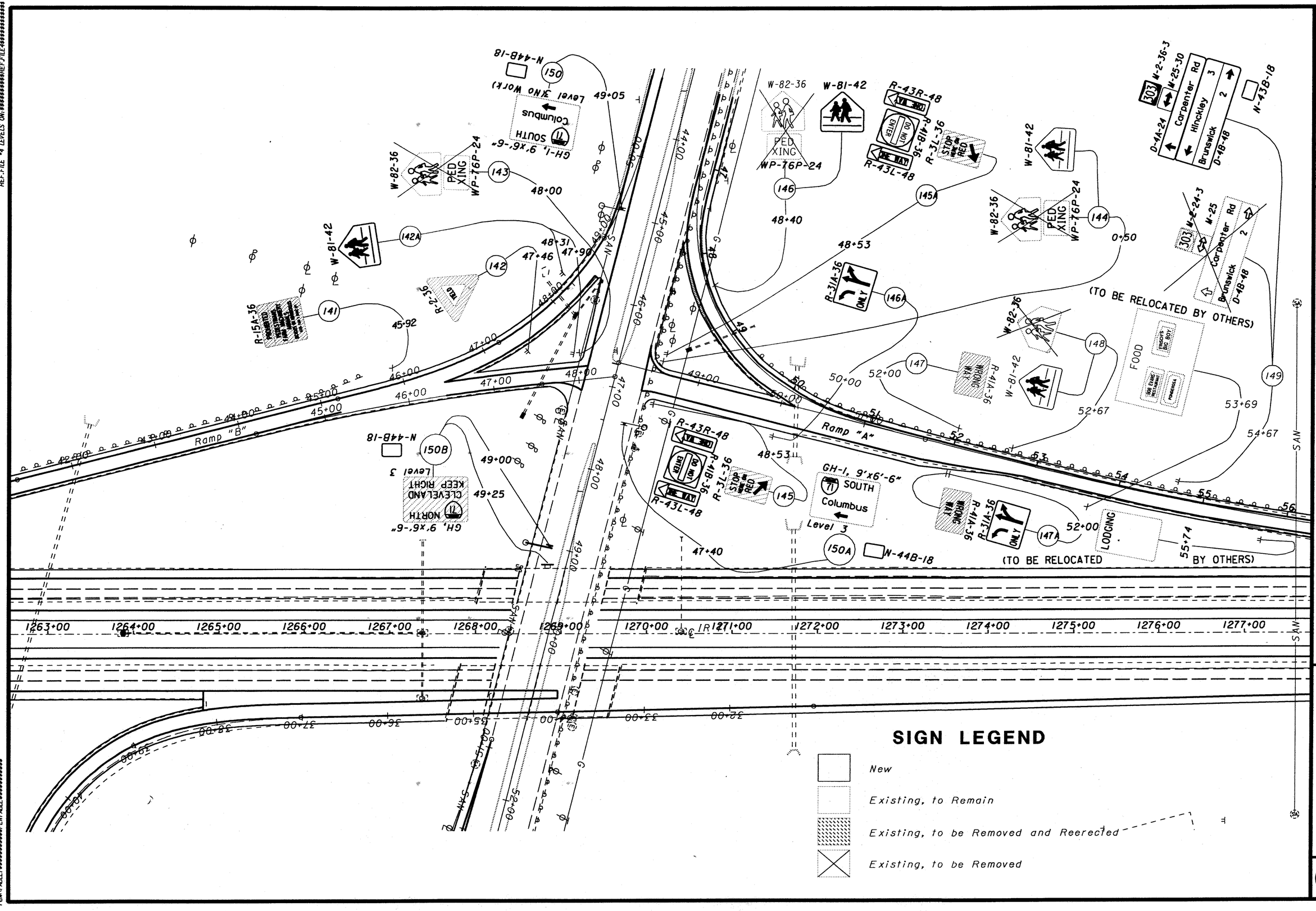
Ramp "B"
Ramp "A"
W-82-36
PED XING
WP-76P-24
W-81-42
R-43R-48
R-43L-48
R-3L-36
STOP HERE ON RED
R-15A-36
R-2-36
R-3I4-36
ONLY
R-41A-36
WRONG WAY
GH-1, 9'x6'-6"
SOUTH
Columbus
Level 3
GH, 9'x6'-6"
NORTH
CLEVELAND
KEEP RIGHT
N-44B-18
N-43B-18
D-4A-24
Carpenter Rd
Hinckley
Brunswick
D-48-48
W-2-36-3
W-25-30
W-2-24-3
W-25
FOOD
LODGING
(TO BE RELOCATED BY OTHERS)
SAW
SAW
SAW

REF.FILE #1 LEVELS ON:
REF.FILE #2 LEVELS ON:
REF.FILE #3 LEVELS ON:
REF.FILE #4 LEVELS ON:

LIGHTING GENERAL NOTES

POWER SERVICE, AS PER PLAN

THE POWER SUPPLYING AGENCY FOR THIS PROJECT IS:

Ohio Edison Company - Distribution
6326 Lake Avenue
Elyria, Ohio 44035
440-324-0231

Ohio Edison Company - Transmission
76 South Main Street
Akron, Ohio 44308
330-384-5180

THIS PROJECT WILL RECEIVE 480 VOLT, THREE WIRE GROUNDED NEUTRAL

ELECTRICAL ENERGY FROM EXISTING POWER SERVICES SHALL CONTINUE TO BE CHARGED TO THE MAINTAINING AGENCY. THE CONTRACTOR SHALL PAY ELECTRICAL ENERGY CHARGES FOR NEW POWER SERVICES ESTABLISHED BY THIS PROJECT. AFTER ACCEPTANCE OF THE LIGHTING WORK, POWER SERVICE ELECTRICAL ENERGY ACCOUNTS SHALL BE TRANSFERED TO THE OHIO DEPARTMENT OF TRANSPORTATION. THIS SHALL INCLUDE NEW POWER SERVICE ESTABLISHED BY THIS PROJECT AS WELL AS REASSIGNMENT OF THE EXISTING SERVICE DUE TO WORK PERFORMED BY THIS PROJECT.

CONVENTIONAL LUMINAIRES

STYLE B LUMINAIRES SHALL HAVE SINGLE RATED 480 V, 400 W, INTEGRAL REGULATOR BALLASTS FOR USE WITH HIGH PRESSURE SODIUM LAMPS AND SHALL BE GENERAL ELECTRIC M400, WESTINGHOUSE OV-25, ITT AMERICAN 400, OR EQUAL APPROVED BY THE ENGINEER.

UNDERPASS LUMINAIRES

UNDERPASS LUMINAIRES SHALL BE HOLOPHANE "UNDERPASS WALLPACK", WESTINGHOUSE, OR GENERAL ELECTRIC WL-250 UNDERPASS UNIT OR EQUAL APPROVED BY THE ENGINEER, AND SHALL BE FURNISHED WITH AN INTEGRAL FUSE HOLDER AND 10-AMPERE FUSE. THE INTEGRAL HIGH PRESSURE SODIUM BALLAST SHALL BE OF A REGULATOR TYPE RATED FOR 480 VOLTS, 100 WATTS.

LAMPS

HIGH PRESSURE SODIUM LAMPS SHALL BE GENERAL ELECTRIC "LUCALOX", WESTINGHOUSE "CERAMALUX", SYLVANIA "LUMALUX", OR EQUAL APPROVED BY THE ENGINEER.

UNDERDRAINS FOR PULL BOXES

REFERENCE IS MADE TO STANDARD DRAWING HL-30.11 FOR DETAILS OF DRAINING PULL BOXES. UNDERDRAINS FOR PULL BOXES SHALL BE USED AS DIRECTED BY THE THE ENGINEER, AND SHALL BE PROVIDED WHERE THE LENGTH REQUIRED FOR A SATIS-FACTORY OUTLET DOES NOT EXCEED APPROXIMATELY 20 FEET. AN ESTIMATED QUANTITY OF " 1240 LINEAR FEET OF ITEM 603 4" CONDUIT, TYPE E" IS INCLUDED IN THE LIGHTING GENERAL SUMMARY FOR THIS PURPOSE.

CONDUIT ON STRUCTURE

EXPANSION FITTINGS FOR CONDUIT ON STRUCTURES SHALL BE OZ TYPE AX, CROUSE-HINDS TYPE XJ-4, APPLETON TYPE XJ-4, OR EQUAL APPROVED BY THE ENGINEER, FOR THE FOLLOWING BRIDGES:

MED-71-2088E
MED-71-2092W

EACH EXPANSION FITTING SHALL HAVE A COPPER EXTERNAL BINDING JUMPER.

HIGH VOLTAGE DIRECT CURRENT TEST

A HIGH VOLTAGE DIRECT CURRENT TEST SHALL BE PERFORMED ON NEW CIRCUITS ONLY. EXISTING CIRCUITS SHALL NOT BE TESTED. THE TEST SHALL NOT BE PERFORMED UNTIL AFTER ALL NEW CONSTRUCTION, SUCH AS GUARDRAIL, FENCE, DELINEATOR POSTS, SIGN SUPPORTS, ETC., IN THE IMMEDIATE VICINITY OF THE LOCATION OF CABLE RUN BEING TESTED, HAS BEEN COMPLETED.

A LUMP SUM PAYMENT FOR THIS TEST HAS BEEN INCLUDED IN THE LIGHTING GENERAL SUMMARY.

PADLOCKS AND KEYS

PADLOCKS FURNISHED SHALL BE EITHER BRASS OR BRONZE, EQUAL TO MASTER NO. 4BKA OR WILSON BOHANNAN 660A, AND SHALL BE KEYED IN ACCORDANCE WITH SPECIFICATION 631.08 PARRAGRAPH 3. PAYMENT SHALL BE INCLUDED IN THE BID FOR THE ITEMS BEING LOCKED.

ITEM 625 - SERVICE TO UNDERPASS LIGHTING

THIS ITEM SHALL CONSIST OF PROVIDING COMPLETE ELECTRICAL SERVICE, EXCEPT FOR LUMINAIRES AND STRUCTURE GROUNDING, FOR THE UNDERPASS LIGHTING SYSTEM ON A BRIDGE AS SHOWN IN THE PLANS.

THE INSTALLATION WORK SHALL INCLUDE CONDUITS, CONDUIT GROUNDING, MOUNTINGS, FITTINGS, JUNCTION BOXES, CABLES, AND ALL INCIDENTALS NECESSARY TO COMPLETE, READY FOR USE, THE SERVICE AS DETAILED ON SHEETS 630 & 636 PAYMENT WILL BE MADE AT THE UNIT PRICE BID FOR EACH "ITEM 625 - SERVICE TO UNDERPASS LIGHTING" AND SHALL INCLUDE ALL EQUIPMENT, LABOR, AND MATERIALS NECESSARY TO COMPLETE THE WORK AS SPECIFIED. COMPONENT PARTS NOT SPECIFICALLY MENTIONED BUT REQUIRED FOR SATISFACTORY OPERATION OF THIS ITEM SHALL BE FURNISHED AND CONSIDERED PAID FOR AS PART OF THE ITEM.

ITEM 202-LIGHT POLE REMOVED

THE ITEM OF WORK SHALL CONSIST OF REMOVING AN EXISTING LIGHT POLE INCLUDING THE BRACKET ARM(S) AND TRANSFORMER BASE (IF USED). THE CONTRACTOR SHALL TAKE POSSESSION OF THE LIGHT POLE AND DISPOSE OF IT PROPERLY OFF THE PROJECT SITE.

PAYMENT WILL BE MADE AT THE UNIT BID PRICE PER EACH ITEM 202 "LIGHT POLE REMOVED."

ITEM 202-LIGHT POLE FOUNDATION REMOVED

THIS ITEM OF WORK WILL CONSIST OF REMOVING AN EXISTING LIGHT POLE FOUNDATION TO A MINIMUM OF ONE FOOT BELOW FINISHED GRADE, BACKFILLING THE RESULTANT DEPRESSION WITH COMPACTED SOIL AND RESTORING THE DISTURBED AREA.

PAYMENT WILL BE MADE FOR EACH ITEM 202 "LIGHT POLE FOUNDATION REMOVED "

ITEM 202-PULLBOX REMOVED

THIS ITEM OF WORK WILL CONSIST OF REMOVING AN EXISTING PULLBOX WHICH SHALL THEN BE PROPERLY DISPOSED OF. THE RESULTANT OPENING SHALL THEN BE BACKFILLED TO GRADE WITH SUITABLE COMPACTED SOIL AND RESTORED TO MATCH SURROUNDING AREA.

PAYMENT WILL BE MADE FOR EACH ITEM 202 "PULLBOX REMOVED."

ITEM 202 POWER SERVICE REMOVED, AS PER PLAN

THIS ITEM OF WORK INCLUDES THE REMOVAL OF THOSE PORTIONS OF THE EXISTING POWER SERVICE NOT BEING REUSED. EXISTING UNDERGROUND CONDUIT AND WIRING MAY BE ABANDONED IN PLACE EXCEPT WHEN NEW WIRING IS TO BE PLACED IN EXISTING CONDUITS OR PULL BOXES. IN THIS LATTER CASE, THE OLD WIRES SHALL BE REMOVED. REMOVED MATERIALS SHALL BECOME THE PROPERTY OF THE CONTRACTOR AND SHALL BE REMOVED FROM THE PROJECT SITE. ALL DISTURBED AREAS SHALL BE RESTORED AS TO MATCH THE SURROUNDING AREA.

THIS ITEM WILL ALSO COMPENSATE THE CONTRACTOR FOR COORDINATING WITH THE POWER COMPANY TO INSURE THAT THEY DISCONNECT AND REMOVE ANY OF THEIR ITEMS THAT ARE A PART OF THE POWER SERVICE. IT ALSO INCLUDES RETURNING TO THE POWER COMPANY ANY ITEMS BELONGING TO THEM THAT WERE REMOVED BY THE CONTRACTOR, SUCH AS THE THE METER BASE.

PAYMENT WILL BE MADE FOR EACH ITEM "POWER SERVICE REMOVED, AS PER PLAN" AND SHALL BE FULL COMPENSATION INCLUDING ALL LABOR, MATERIALS, AND INCIDENTALS REQUIRED TO COMPLETE THE INSTALLATION IN A SATISFACTORY WORKMAN-LIKE MANNER.

ITEM 202 LUMINAIRE REMOVED

THIS ITEM OF WORK SHALL CONSIST OF THE REMOVAL AND DISPOSAL OF AN EXISTING LUMINAIRE.

THE LUMINAIRE SHALL BECOME THE PROPERTY OF THE CONTRACTOR AND SHALL BE DISPOSED OF PROPERLY, OFF OF THE PROJECT SITE.

PAYMENT SHALL BE MADE AT THE UNIT PRICE BID FOR EACH "ITEM 202 LUMINAIRE REMOVED" AND SHALL BE FULL COMPENSATION FOR ALL LABOR, MATERIALS, AND INCIDENTALS REQUIRED TO COMPLETE THE WORK SATISFACTORILY.

HIGH MAST LUMINAIRES

THE LUMINAIRE ARRAYS AND ASSOCIATED ILLUMINATION TEST AREAS SPECIFIED IN SECTION 713.21 OF THE CONSTRUCTION AND MATERIAL SPECIFICATIONS ARE HEREBY WAIVED FOR THIS PROJECT. INSTEAD, THE LUMINAIRES FOR TOWER LIGHTING SHALL MEET THE FOLLOWING REQUIREMENTS.

ASYMMETRIC, TYPE I, LUMINAIRES FOR TOWER LIGHTING MAY BE HOLOPHANE "HMST" TEST #36801 OR #36802, OR GENERAL ELECTRIC "HM" TEST #7349, OR COOPER "HMC" TEST #764130.

ASYMMETRIC, TYPE II OR TYPE III, LUMINAIRES FOR TOWER LIGHTING MAY BE HOLOPHANE "HMST" TEST #36648, OR GENERAL ELECTRIC "HM" TEST #7349, OR COOPER "HMC" TEST #764130.

SYMMETRIC, TYPE V, LUMINAIRES FOR TOWER LIGHTING MAY BE HOLOPHANE "HMST" TEST #36383, OR GENERAL ELECTRIC "HM" TEST #6312, OR COOPER "HAL" TEST # 48381.

IN ADDITION, OTHER LUMINAIRES WILL BE CONSIDERED IF THE DESIGNED INTENSITY AND UNIFORMITY ARE PROVIDED USING THE THE DESIGNED POLE LOCATIONS AND THE DESIGNED NUMBER AND TYPE OF FIXTURES PER POLE.

CALCULATED | CHECKED

Lighting General Notes

MED-71-15.78

607
940

FILENAME: I:\OPD_MELL_JHY\LIGHTING\LIGHTGEN.DGN
PLOTTED ON: 09-DEC-1999 16:24:09 BY: JHYOUNG
DATE & TIME: 09-DEC-1999 16:24
USERNAME: mfox
PROJECT: NONE
LEVELS ON: 1-63
REF. FILE: I:\OPD_MELL_JHY\LIGHTING\DGN\OpenCross.DGE.pen
REF. TABLE: I:\MDOT\PMP\OpenCross.DGE.pen

REF-FILE #1 LEVELS ON:
REF-FILE #2 LEVELS ON:
REF-FILE #3 LEVELS ON:
REF-FILE #4 LEVELS ON:

GENERAL NOTES

LOW MAST LUMINAIRES

THE LUMINAIRE ARRAYS AND ASSOCIATED ILLUMINATION TEST AREAS SPECIFIED IN SECTION 713.21 OF THE CONSTRUCTION AND MATERIAL SPECIFICATIONS ARE HEREBY WAIVED FOR THIS PROJECT. INSTEAD, THE LUMINAIRES FOR LOW MAST LIGHTING SHALL MEET THE FOLLOWING REQUIREMENTS.

ASYMMETRIC, TYPE II OR TYPE III, LUMINAIRES FOR LOW MAST LIGHTING MAY BE HOLOPHANE "HMST" TEST #36648, OR GENERAL ELECTRIC "HM" TEST #7349, OR COOPER "HMC" TEST #764130.

SYMMETRIC, TYPE V, LUMINAIRES FOR LOW MAST LIGHTING MAY BE HOLOPHANE "HMST" TEST #36383, OR GENERAL ELECTRIC "HM" TEST #6312, OR COOPER "HAL" TEST# 48381.

IN ADDITION, OTHER LUMINAIRES WILL BE CONSIDERED IF THE DESIGNED INTENSITY AND UNIFORMITY ARE PROVIDED USING THE DESIGNED POLE LOCATIONS AND THE TYPE OF FIXTURE PER POLE.

RECONNECTION OF OVERHEAD SIGNS TO NEW LIGHTING CIRCUITS

THE EXISTING LIGHTED SIGNS SHALL BE RECONNECTED TO THE NEW OFF STRUCTURE CANTILEVERED OVERHEAD SIGN SUPPORT LIGHTING CIRCUITS. PAYMENT FOR THIS WORK WILL BE UNDER THE FOLLOWING ITEMS:

DISCONNECTION OF THE SIGN FROM THE EXISTING CIRCUIT SHALL BE PAID BY ITEM SPECIAL – "DISCONNECT EXISTING CIRCUIT".

REMOVAL OF THE EXISTING PULL BOX SHALL BE ITEM 202 – "PULL BOX REMOVED".

REPLACEMENT OF A NEW PULL BOX AT THE SPECIFIED LOCATION SHALL BE PAID UNDER ITEM 625 – "PULL BOX, 18", 713.08".

RECONNECTION OF THE SIGNS TO THE NEW LIGHTING CIRCUIT SHALL BE PROVIDED BY ITEM 625 – "CABLE SPLICE KITS" (2 PER PULL BOX).

ITEM 202 – DISCONNECT EXISTING CIRCUIT

THIS ITEM OF WORK SHALL CONSIST OF THE DISCONNECTION OF AN EXISTING LIGHT CIRCUIT AT A PULL BOX OR AT A LIGHT POLE.

DISCONNECTION AT A PULL BOX SHALL INVOLVE CUTTING THE EXISTING CIRCUIT AND REMOVING ALL SPLICE KITS. ANY CABLE THAT IS TO BE ABANDONED SHALL BE TERMINATED IN A MANNER SUCH THAT NO CABLE IS LEFT REMAINING IN THE PULL BOX.

DISCONNECTION AT A LIGHT POLE SHALL INVOLVE THE REMOVAL OF THAT PART OF THE CABLE THAT IS TO BE ABANDONED FROM THE POLE. THESE ENDS OF THE CONNECTOR KITS FROM WHICH THE ABANDONED CABLE IS REMOVED SHALL BE PLUGGED AND TAPED.

ANY CABLE THAT IS TO BE REUSED IN A PULL BOX OR LIGHT POLE SHALL BE CUT IN A MANNER SO THAT THERE IS SUFFICIENT LENGTH OF CABLE LEFT FOR RECONNECTION. CABLE SPLICE KITS AND CONNECTOR KITS WILL BE PAID FOR RESPECTIVELY UNDER EACH ITEM 625.

PAYMENT WILL BE MADE AT THE UNIT BID PRICE FOR EACH ITEM 202 – "DISCONNECT EXISTING CIRCUIT" AND SHALL BE FULL COMPENSATION INCLUDING ALL LABOR, MATERIALS, AND INCIDENTIALS REQUIRED TO COMPLETE THE WORK.

PORTABLE POWER UNIT

THE CONTRACTOR SHALL SUPPLY A PORTABLE POWER UNIT AS SPECIFIED IN THE O.D.O.T. CONSTRUCTION AND MATERIAL SPECIFICATIONS. A QUANTITY OF "1 EACH" OF ITEM 625, "PORTABLE POWER UNIT", IS INCLUDED IN THE GENERAL SUMMARY FOR THIS PURPOSE.

LIGHT TOWER FOUNDATIONS, AS PER PLAN

IN LIEU OF THE TOP OF FOUNDATION RELATIONSHIP SHOWN IN THE STANDARD DRAWINGS, LIGHT TOWER FOUNDATIONS SHALL EXTEND 6" ABOVE GROUND OR PLATFORM. THE 6" EXTENSION IS INCLUDED IN THE FOUNDATION DEPTH.

ITEM SPECIAL – MAINTAIN EXISTING LIGHTING

EXISTING ROADWAYS WHICH ARE TO REMAIN OPEN TO TRAFFIC DURING CONSTRUCTION OF THIS PROJECT AND WHICH ARE LIGHTED SHALL HAVE THE LIGHTING MAINTAINED AS DESCRIBED HEREIN.

BEFORE ANY WORK IS STARTED IN THE IMMEDIATE VICINITY OF ANY EXISTING LIGHTING CIRCUITS, REPRESENTATIVES OF THE STATE, THE MAINTAINING AGENCY AND THE CONTRACTOR SHALL MAKE A VISUAL INSPECTION OF THE EXISTING ROADWAY LIGHTING CIRCUITS TO BE MAINTAINED. DURING THIS INSPECTION, A WRITTEN RECORD OF THE CONDITION OF THE EXISTING LIGHTING SHALL BE MADE BY THE STATE'S REPRESENTATIVE. THIS WRITTEN REPORT SHALL NOTE INDIVIDUAL LUMINAIRES WHICH ARE NOT IN WORKING ORDER, INDIVIDUAL POLES WHICH ARE NOT STANDING, AND INDIVIDUAL CIRCUITS WHICH ARE NOT IN WORKING ORDER. THE COMPLETED REPORT SHALL BE SIGNED BY THE REPRESENTATIVES OF THE STATE, THE MAINTAINING AGENCY, AND THE CONTRACTOR. IF AS A RESULT OF THIS INSPECTION, IT IS DETERMINED THAT THE CONDITION OF THE EXISTING SYSTEM IS BELOW THAT REQUIRED FOR THE SAFETY OF THE TRAVELING PUBLIC, THEN THE MAINTAINING AGENCY SHALL MAKE REPAIRS NECESSARY TO RETURN THE SYSTEM TO AN ACCEPTABLE CONDITION. FOLLOWING THESE REPAIRS, THE SYSTEM SHALL AGAIN BE INSPECTED AND A REPORT MADE AND SIGNED AS OUTLINED HEREIN.

WHEN THE EXISTING SYSTEM IS IN AN ACCEPTABLE CONDITION, IT SHALL BE TURNED OVER TO THE CONTRACTOR WHO SHALL THEN BE REQUIRED TO MAINTAIN THE EXISTING LIGHTING TO THE CONDITION OUTLINED IN THIS REPORT WITH THE EXCEPTION OF KNOCKDOWNS DUE TO TRAFFIC ACCIDENTS.

REPLACEMENT OF KNOCKED–DOWN UNITS SHALL BE DONE ONLY WHEN THE ENGINEER HAS DETERMINED THAT THE REPLACEMENT OF THE KNOCKED–DOWN UNIT IS NECESSARY AND SHALL BE PAID SEPARATELY ON A UNIT BASIS.

BETTERMENTS SHALL BE COVERED IN ITEMS OF WORK PERTAINING TO THE CONSTRUCTION OF PERMANENT IMPROVEMENTS.

SHOULD THE CONTRACTOR DESIRE THE REMOVAL OF THE EXISTING LIGHTING BEFORE THE NEW LIGHTING IS OPERATIONAL, THE CONTRACTOR SHALL THEN BE RESPONSIBLE FOR ADEQUATE TEMPORARY LIGHTING OF THAT PORTION OF THE EXISTING ROADWAY AFFECTED BY THE REMOVAL OF THE EXISTING LIGHTING.

PRIOR TO INSTALLING SUCH LIGHTING, THE CONTRACTOR SHALL PREPARE AND SUBMIT FOUR (4) SETS OF THE TEMPORARY LIGHTING PLAN TO THE DIRECTOR FOR REVIEW AND APPROVAL.

THIS PLAN SHALL SHOW LOCATION OF POLES, LENGTH OF BRACKET ARMS, STYLE OF LUMINAIRES, MOUNTING HEIGHT, WIRING METHODS, AND OTHER PERTINENT INFORMATION. THE TEMPORARY LIGHTING SHALL PROVIDE AN AVERAGE INITIAL INTENSITY OF 1.2 FOOTCANDLES WITH AN AVERAGE TO MINIMUM UNIFORMITY NOT TO EXCEED 4:1. MOUNTING HEIGHT FOR TEMPORARY LUMINAIRES SHALL NOT BE LESS THAN 27' AND MINIMUM OVERHEAD CONDUCTOR CLEARANCE SHALL BE 20'. TEMPORARY OVERHEAD CONSTRUCTION SHALL NOT BE LESS THAN GRADE "A" FOR STRENGTH REQUIREMENT AS DEFINED BY THE NATIONAL ELECTRIC SAFETY CODE. WOOD POLES WITH OVERHEAD WIRING MAY BE USED. HOWEVER, TEMPORARY LIGHTING SHALL MEET FEDERAL AND STATE SAFETY CRITERIA. IF BREAKAWAY POLES ARE USE TO MEET THESE CRITERIA, THEN UNDERGROUND WIRING SHALL BE USED. RECONDITIONED OR USED MATERIALS MAY BE FURNISHED FOR TEMPORARY LIGHTING.

ALL MATERIALS NESESSARY TO COMPLETE THE TEMPORARY LIGHTING SHALL BE FURNISHED AND INSTALLED BY THE CONTRACTOR. WHEN NO LONGER NEEDED, THE TEMPORARY LIGHTING INSTALLATION SHALL BE REMOVED AND PROPERLY DISPOSED OF BY THE CONTRACTOR.

THE MAINTAINING AGENCY WILL PAY FOR ELECTRICAL ENERGY CONSUMED BY EXISTING POWER SERVICES AND BY PROPOSED PERMANENT POWER SERVICES AFTER ACCEPTANCE. THE CONTRACTOR WILL PAY FOR ELECTRICAL ENERGY, INSTALLATION, REMOVAL, AND MAINTENANCE OF ANY TEMPORARY POWER SERVICES.

THE LUMP SUM PRICE BID FOR ITEM SPECIAL – MAINTAINING EXISTING LIGHTING, SHALL INCLUDE PAYMENT FOR ALL LABOR, EQUIPMENT, MATERIALS, AND INCIDENTALS NECESSARY TO MAINTAIN THE EXISTING LIGHTING AS SPECIFIED HEREIN.

ADDITIONAL PULL BOXES AND CABLE SPLICING KITS

AN ESTIMATED QUANTITY OF 60 EACH OF ITEM 625 PULL BOX, 713.08, 18" AND A QUANTITY OF 180 EACH OF ITEM 625 CABLE SPLICING KIT ARE PROVIDED AS DIRECTED BY THE ENGINEER. THE LIGHTING PLANS WILL HAVE A "PB**" INDICATING APPROXIMATELY WHERE THE PULL BOXES SHOULD BE PLACED.

ITEM 625 – CONDUIT JACKED OR DRILLED, AS PER PLAN

THIS ITEM SHALL CONSIST OF FURNISHING AND INSTALLING CONDUIT OF THE SIZE OR SIZES INDICATED UNDER EXISTING PAVEMENT AND CONTIGUOUS SHOULDERS BY AN APPROVED METHOD SUCH AS "DRILLING" OR "JACKING".

THE CONTRACTOR SHALL PLACE THE CONDUIT WITH THE LEAST AMOUNT OF DISTURBANCE TO THE EXISTING PAVEMENT, SUBBASE, BERM PAVEMENT, OR SHOULDERS OF THE ROADWAY. ALL PUSH PITS OR ANY NECESSARY EXCAVATIONS SHALL BE BACKFILLED AND RESTORED IN ACCORDANCE WITH 625.01.

MEASUREMENT OF THE CONDUIT SHALL BE THE ACTUAL AMOUNT OF LINEAL FEET INSTALLED UNDER PAVEMENT AND SHOULDERS, MEASURED IN PLACE AS ACCEPTED BY THE ENGINEER. THE UNIT PRICE BID FOR ITEM 625 "CONDUIT JACKED OR DRILLED, AS PER PLAN" SHALL BE FULL COMPENSATION FOR EXCAVATION, DRILLING OR JACKING, BACKFILLING, COMPACTION, RESTORATION, AND ALL LABOR, MATERIAL, EQUIPMENT AND INCIDENTALS NECESSARY TO COMPLETE THE WORK AS SPECIFIED.

LIGHT TOWER LUMINAIRE MOUNTING ARRANGEMENT

LUMINAIRE MOUNTING ARMS FOR TOWER LIGHTING UNITS SHALL BE INSTALLED BY THE POLE MANUFACTURERS SO THAT THE REQUIRED NUMBER OF LUMINAIRES CAN BE INSTALLED ON THE LUMINAIRE MOUNTING RING IN A SYMMETRICAL ARRANGEMENT. WHEN ONLY TWO (2) ARMS ARE REQUIRED THEY SHALL BE POSITIONED SO THE ARMS ARE PARALLEL TO THE CENTERLINE OR BASELINE OF THE PAVEMENT FROM WHICH THE TOWER IS STATIONED.

UNLESS OTHERWISE SPECIFIED IN THE PLANS, ALL LUMINAIRES WITH ASYMMETRIC DISTRIBUTIONS SHALL BE INSTALLED SO THE "ARROW" OR "STREET SIDE" DESIGNATION ON THE OPTICAL ASSEMBLY IS POSTIONED PERPENDICULAR TO THE CENTERLINE OR BASELINE OF THE PAVEMENT FROM WHICH THE TOWER IS STATIONED. ANY OPTICAL ROTATION CALLED FOR WILL BE EXPRESSED AS A CLOCKWISE (CW) OR COUNTERCLOCKWISE (CCW) ANGULAR MEASUREMENT FROM THE NORMAL "ARROW" ORIENTATION.

GLARE SHEILDS, AS PER PLAN

ALL LUMINAIRES MOUNTED AT THE TOWERS LOCATIONS SPECIFIED SHALL HAVE THE 90 DEGREE GLARE SHIELD INSTALLED ON THE HOUSE SIDE.

PAYMENT WILL BE MADE AT THE UNIT BID PRICE FOR EACH ITEM 625 'GLARE SHEIDS, AS PER PLAN".

CONTINGENCY QUANTITIES

THE CONTRACTOR SHALL NOT ORDER MATERIALS OR PERFORM WORK FOR ITEMS DESIGNATED BY PLAN NOTE TO BE USED "AS DIRECTED BY THE ENGINEER" UNLESS AUTHORIZED BY THE ENGINEER. THE ACTUAL WORK LOCATIONS AND QUANTITIES USED FOR SUCH ITEMS SHALL BE INCORPORATED INTO THE FINAL CHANGE ORDER GOVERNING COMPLETION OF THIS PROJECT.

ANCHOR BASE FOUNDATIONS

ALL LIGHT POLE FOUNDATIONS DESIGNATED FOR ANCHOR BASE POLES (NOT ALUMINUNM TRANSFORMER BASE POLES) SHALL HAVE THEIR FOUNDATION FORMED SUCH THAT THE TOP OF FOUNDATION SHALL BE 8" TO 12" ABOVE FINISHED GRADE

CALCULATED | CHECKED

Lighting General Notes

MED-71-15.78

608
940

FILENAME: INDOT_MED_71\15\Lighting\GENGNOTE.dgn
DATE & TIME: 09-DEC-1999 16:25
USERNAME: mfox
PROJECT: NONE
LEVELS ON: [64]
PLOT QUEUE: \\DGN\PLOT\oce
PEN TABLE: IN:\dot\Ndot\Use\Cross_OCE.pen

LOCATION - SHEET NUMBER											ITEM	ITEM EXT.	GRAND TOTAL	UNIT	DESCRIPTION	SEE SHEET NO.
GENERAL NOTES		S.R. 18			I.R. 271	S.R. 3	NB REST AREA	S.R. 303								
607	608	611	612	618	613	614	615	616	617	682						
															LIGHTING	
			6	10							202	75300	16	EACH	PULL BOX REMOVED	
			7	42			9				202	75400	58	EACH	LIGHT POLE REMOVED	
			7	42			9				202	75500	58	EACH	LIGHT POLE FOUNDATION REMOVED	
			7	42			9				202	75506	58	EACH	LUMINAIRE REMOVED	
				1							202	75511	1	EACH	POWER SERVICE REMOVED, AS PER PLAN	607
		1			2		1		10		202	75800	14	EACH	DISCONNECT EXISTING CIRCUIT	
			LUMP								202	98000	LUMP		REMOVAL MISC.: EXISTING UNDERPASS LIGHTING SYSTEM	
1,240											603	00400	1,240	LIN FT	4" CONDUIT, TYPE E	
		38				18	18	12	5		625	00500	91	EACH	CONNECTOR KIT, TYPE II	
						18	9	12	5		625	00600	44	EACH	CONNECTOR KIT, TYPE III	
						6					625	01004	6	EACH	CONNECTOR KIT, TYPE VII B	
	180	9	3		16	24	3	4	32		625	01500	271	EACH	CABLE SPLICING KIT	
		1									625	05700	1	EACH	LIGHT POLE, DESIGN A25B40	
						4					625	06300	4	EACH	LIGHT POLE, DESIGN AT12B41.7	
		1				14					625	06400	15	EACH	LIGHT POLE, DESIGN AT15B41.7	
		7									625	06500	7	EACH	LIGHT POLE, DESIGN AT18B41.7	
		2									625	08700	2	EACH	LIGHT POLE, DESIGN A25B50	
		2						12	5		625	09400	19	EACH	LIGHT POLE, DESIGN AT15B51.7	
							9				625	10500	9	EACH	LIGHT POLE, MISC.: DESIGN A30835	
		1									625	10500	1	EACH	LIGHT POLE, MISC.: DESIGN A30840	
		2									625	10500	2	EACH	LIGHT POLE, MISC.: DESIGN A25845	
		2									625	10500	2	EACH	LIGHT POLE, MISC.: DESIGN A30845	
					5						625	13200	5	EACH	LIGHT TOWER, BBBB100	
					5			2			625	13204	7	EACH	LIGHT TOWER, BBBB110	
								2	2		625	13208	4	EACH	LIGHT TOWER, BBBB120	
								3			625	13400	3	EACH	LIGHT TOWER, BBBBBB100	
					3			3			625	13404	6	EACH	LIGHT TOWER, BBBBBB110	
					1			1			625	13406	2	EACH	LIGHT TOWER, BBBBBB120	
		8				18					625	14100	26	EACH	LIGHT POLE FOUNDATION, 24" X 8' DEEP	
		9					9	12	5		625	14200	35	EACH	LIGHT POLE FOUNDATION, 24" X 10' DEEP	
					14			11	2		625	15201	27	EACH	LIGHT TOWER FOUNDATION, 36" X 25' DEEP, AS PER PLAN	608
	1										625	20000	1	EACH	PORTABLE POWER UNIT	
					3						625	21100	3	EACH	LIGHT TOWER MAINTENANCE PLATFORM, TYPE B	
					2						625	21200	2	EACH	LIGHT TOWER MAINTENANCE PLATFORM, TYPE C	
			551		540	5,070		1,905	1,500		625	23200	9,296	LIN FT	NO. 4 AWG 5000 VOLT DISTRIBUTION CABLE	
			207		1,035						625	23300	1,902	LIN FT	NO. 2 AWG 5000 VOLT DISTRIBUTION CABLE	
		2,512				3,021	1,260	2,394	1,000		625	23400	10,187	LIN FT	NO. 10 AWG POLE AND BRACKET CABLE	
					1,685	6,490	2,212	7,555	1,780		625	24320	19,722	LIN FT	1-1/2" DUCT CABLE WITH THREE NO. 4 AWG 5000 VOLT CABLES	
		7,185	2,613		5,420						625	24330	15,218	LIN FT	1-1/2" DUCT CABLE WITH THREE NO. 2 AWG 5000 VOLT CABLES	
					110	80					625	25400	190	LIN FT	CONDUIT, 2", 713.04	
			39		165	375		405	490		625	25500	1,474	LIN FT	CONDUIT, 3", 713.04	
		164	559		350	860		400			625	25901	2,333	LIN FT	CONDUIT, JACKED OR DRILLED, AS PER PLAN 3"	608
										2,546	625	25920	2,546	LIN FT	CONDUIT, MISC.: 4" MULTICELL RACEWAY	682
							9				625	26250	9	EACH	LUMINAIRE, CONVENTIONAL, STYLE B, TYPE 2, 200 WATT, 713.11, 240 VOLT	
		14				18					625	26250	32	EACH	LUMINAIRE, CONVENTIONAL, STYLE B, TYPE 2, 200 WATT, HPS, 713.11, 480 VOLT	
		4						12	5		625	26250	21	EACH	LUMINAIRE, CONVENTIONAL, STYLE B, TYPE 3, 310 WATT, HPS, 713.11, 480 VOLT	
					28			16	8		625	26260	52	EACH	LUMINAIRE, HIGH MAST ASYMMETRIC, 400 WATT, HPS, 713.21, 480 VOLT	
					36			42			625	26260	78	EACH	LUMINAIRE, HIGH MAST SYMMETRIC, 400 WATT, HPS, 713.21, 480 VOLT	
					12				12		625	27500	24	EACH	LUMINAIRE, UNDERPASS, HIGH PRESSURE SODIUM, 713.13	

REF.FILE *1: 1 LEVELS ON:
REF.FILE *1:
REF.FILE *2:
REF.FILE *2: 2 LEVELS ON:
REF.FILE *3: 3 LEVELS ON:
REF.FILE *3:
REF.FILE *4:
REF.FILE *4: 4 LEVELS ON:

FILENAME: hqdn_mod_lrr\hqdn\lighting\7885lg2.dgn
DATE & TIME: 10-DEC-1999 15:41
USERNAME: mordere
PROJECT: NONE
LEVELS ON: 1 7 64
REF.FILE: \\DOPLOT\ops
REF.FILE: N:\dlgn\plot\pforOpsCross.DCE.pen

CALCULATED NJV
CHECKED M.L.F.

LIGHTING GENERAL SUMMARY

MED-71-15.78

609
940

REF.FILE "1 LEVELS ON:
REF.FILE "1 LEVELS ON:
REF.FILE "2 LEVELS ON:
REF.FILE "2 LEVELS ON:

REF.FILE "3 LEVELS ON:
REF.FILE "4 LEVELS ON:
REF.FILE "4 LEVELS ON:

LOCATION - SHEET NUMBER											ITEM	ITEM EXT.	GRAND TOTAL	UNIT	DESCRIPTION	SEE SHEET NO.
GENERAL NOTES		S.R. 18			I.R. 271	S.R. 3	NB REST AREA	S.R. 303								
607	608	611	612	618	613	614	615	616	617	682						
					28			16	8		625	28001	52	EACH	GLARE SHIELD, AS PER PLAN	608
		6,985	2,673		6910	6,790	2,122	7,540	2,210		625	29002	35,330	LIN FT	TRENCH, 24" DEEP	
	60	5	7		6	7		2	6		625	30700	93	EACH	PULL BOX, 713.08, 18"	
										24	625	30707	24	EACH	PULL BOX, 713.08, 24", AS PER PLAN	683
		18			28	18	9	34	9		625	32000	116	EACH	GROUND ROD	
					3	1			2		625	33000	6	EACH	STRUCTURE GROUNDING SYSTEM	
			2		1	1		2			625	34001	6	EACH	POWER SERVICE, AS PER PLAN	607
					4				4		625	37100	8	EACH	SERVICE TO UNDERPASS LIGHTING	
LUMP											625	38000	LUMP		HIGH VOLTAGE TEST	
	LUMP										SPECIAL	62540000	LUMP		MAINTAIN EXISTING LIGHTING	608

CALCULATED VJJ
CHECKED M.L.F.

LIGHTING GENERAL SUMMARY

MED-71-15.78

610
940

FILENAME: h:\pw_med_lr71\dgn\lighting7885lg2.dgn
DATE & TIME: 10-DEC-1999 15:14
USERNAME: mnordere
PROJECT: NONE

LEVELS ON: 1 (641)
DGN TEMPLATE: \\OOTPLOT\xxx
PEN TABLE: h:\dgnlib\pw\pwlib\penCross_OCE.pen

REF.FILE *1: Multi-Lvl.
REF.FILE *1: LEVELS ON:
REF.FILE *2: LEVELS ON:
REF.FILE *2:
REF.FILE *3: LEVELS ON:
REF.FILE *3:
REF.FILE *4: LEVELS ON:
REF.FILE *4:

SHEET No.	REFERENCE NO.	ROADWAY	STATION TO STATION From	STATION TO STATION To	SIDE	202 Light Pole Removed	202 Light Pole Foundation Removed	202 Luminaire Removed	202 Disconnect Existing Circuit	202 Pull Box Removed	625 Light Pole, Design AT15B4L7	625 Light Pole, Design AT15B5L7	625 Light Pole, Design AT18B4L7	625 Light Pole, Design A25B40	625 Light Pole, Design A25B45	625 Light Pole, Design A25B50	625 Light Pole, Design A30B40	625 Light Pole, Design A30B45	625 GROUND ROD	625 Connector Kit, Type II	625 Connector Kit, Type III	625 Cable Splicing Kit	625 Luminaire, Conventional, Style 'B' IES Type II, 200 Watt HPS, 480 Volt	625 Luminaire, Conventional, Style 'B' IES Type III, 310 Watt HPS, 480 Volt	625 Light Pole, Foundation, 24" X 8' Deep	625 Light Pole, Foundation, 24" X 10' Deep	625 Pull Box, 713.08, 18"	625 No. 10 AWG Pole and Bracket Cable	625 1/2" Duct Cable With 3 NO. 2 AWG 5000 Volt Cables	625 1/2" Duct Cable With 3 NO. 4 AWG 5000 Volt Cables	625 NO. 2 AWG 5000 Volt Distribution Cable	625 NO. 4 AWG 5000 Volt Distribution Cable	625 Conduit, 3", 713.04	625 Conduit, Jacked or Drilled, As Per Plan, 3"	625 Trench, 24" Deep
						EACH					EACH								EACH				EACH		EACH			LIN.FT.	LIN.FT.	LIN.FT.	LIN.FT.		LIN.FT.	LIN.FT.
622	AA-5	I.R.-71	863+06		Lt.								1						1	2			1		1			126							
			863+06	865+32																									333						323
622	AA-4	I.R.-71	865+32		Lt.										1				1	2			1			1		150							
			865+32	868+44																									319						309
622	AA-3	I.R.-71	868+44		Lt.										1				1	2			1			1		150							
			868+44	870+75																									234						224
622	PB-AA4	I.R.-71	870+75		Lt.																	3					1							
			870+75 Lt.	870+75 Rt.																													121		
			870+75 Lt.	871+40																									81						71
622	PB-AA5	I.R.-71	870+75		Rt.																	3					1							
622	AA-2	I.R.-71	871+40		Lt.													1	1	2			1			1		160							
			871+40	874+23																									290						280
622	AA-1	I.R.-71	874+23		Lt.													1	1	2			1			1		160							
			874+23	21+00																									906						896
623	AA-0	Ramp 'A'	26+21		Lt.				1											2															
			26+21	21+00																									531						521
623	PB-AA3	Ramp 'A'	21+00		Lt.																												43		
623	Sign *108	SR-18	147+40		Rt.																						1								
623	Sign *108A	SR-18	149+70		Rt.																						1								
627	DC-13	I.R.-71	945+95		Lt.						1								1	2			1		1			120							
			943+17	945+95																									288						278
627	DC-12	I.R.-71	943+17		Lt.								1						1	2			1		1			126							
			940+30	943+17																									297						287
627	DC-11	I.R.-71	940+30		Lt.								1						1	2			1		1			126							
			938+68	940+30																									172						162
627	DC-10	I.R.-71	937+33		Lt.								1						1	2			1		1			126							
			938+68	937+33																									145						135
627	DC-9	I.R.-71	938+68		Rt.								1						1	2			1		1			126							
			935+70	938+68																									310						300
627	DC-8	I.R.-71	935+70		Rt.								1						1	2			1		1			126							
			932+83	935+70																									297						287
627	DC-7	I.R.-71	932+83		Rt.								1						1	2			1		1			126							
			930+05	932+83																									289						279
626	DC-6	I.R.-71	930+05		Rt.												1		1	2			1			1		150							
			912+40	918+20																									595						585
625	DC-5	I.R.-71	912+40		Rt.										1				1	2				1		1		160							
			909+58	912+40																									292						282
625	PB-DO (EX)	I.R.-71	909+58		Rt.																	3													
			908+32	909+58																									136						126
625	DC-4	I.R.-71	908+32		Rt.										1				1	2				1		1		160							
			904+44	908+32																									399						389
625	DC-3	I.R.-71	904+44		Rt.							1							1	2				1			1	140							
			900+83	904+44																									371						361
624	DC-2	I.R.-71	900+83		Rt.							1							1	2				1		1		140							
			0+90	900+83																									900						890
624	DC-1	Ramp 'D'	0+90		Rt.									1					1	2			1			1		140							
			0+85	0+90																															
TOTALS CARRIED TO LIGHTING GENERAL SUMMARY									1		1	2	7	1	2	2	1	2	18	38		9	14	4	8	9	5	2512	7185				164	6985

LEVELS ON: [1-64]
REF.FILE *1: D:\projpilot\dgn\DC-1.dgn
REF.FILE *2: D:\projpilot\dgn\DC-2.dgn
REF.FILE *3: D:\projpilot\dgn\DC-3.dgn
REF.FILE *4: D:\projpilot\dgn\DC-4.dgn
REF.FILE *5: D:\projpilot\dgn\DC-5.dgn
REF.FILE *6: D:\projpilot\dgn\DC-6.dgn
REF.FILE *7: D:\projpilot\dgn\DC-7.dgn
REF.FILE *8: D:\projpilot\dgn\DC-8.dgn
REF.FILE *9: D:\projpilot\dgn\DC-9.dgn
REF.FILE *10: D:\projpilot\dgn\DC-10.dgn
REF.FILE *11: D:\projpilot\dgn\DC-11.dgn
REF.FILE *12: D:\projpilot\dgn\DC-12.dgn
REF.FILE *13: D:\projpilot\dgn\DC-13.dgn
REF.FILE *14: D:\projpilot\dgn\AA-0.dgn
REF.FILE *15: D:\projpilot\dgn\AA-1.dgn
REF.FILE *16: D:\projpilot\dgn\AA-2.dgn
REF.FILE *17: D:\projpilot\dgn\AA-3.dgn
REF.FILE *18: D:\projpilot\dgn\AA-4.dgn
REF.FILE *19: D:\projpilot\dgn\AA-5.dgn
REF.FILE *20: D:\projpilot\dgn\PB-AA3.dgn
REF.FILE *21: D:\projpilot\dgn\PB-AA4.dgn
REF.FILE *22: D:\projpilot\dgn\PB-AA5.dgn
REF.FILE *23: D:\projpilot\dgn\PB-DO.dgn
REF.FILE *24: D:\projpilot\dgn\Sign108.dgn
REF.FILE *25: D:\projpilot\dgn\Sign108A.dgn
REF.FILE *26: D:\projpilot\dgn\Ramp'A'.dgn
REF.FILE *27: D:\projpilot\dgn\Ramp'D'.dgn
REF.FILE *28: D:\projpilot\dgn\OverCross_OCE.pen
REF.FILE TABLE: D:\dist\dgn\pen\OverCross_OCE.pen

FILENAME: D:\projpilot\dgn\MED-71-15.94_LIGHTING\DGN\Lighting\988LSUdgn
DATE & TIME: 10-DEC-1999 15:19
USERNAME: dfought
PROJECT: NONE

CALCULATED MLF
CHECKED

LIGHTING SUB-SUMMARY

MED-71-15.94

611
940

REF.FILE *1 LEVELS ON:
REF.FILE *2 LEVELS ON:
REF.FILE *3 LEVELS ON:
REF.FILE *4 LEVELS ON:

LIGHTING SUB-SUMMARY

SHEET No.	REFERENCE NO.	ROADWAY	STATION TO STATION From	STATION TO STATION To	SIDE	202 Light Pole Removed EACH	202 Light Pole Foundation Removed EACH	202 Luminaire Removed EACH	202 Disconnect Existing Circuit EACH	202 Pull Box Removed EACH	202 Removal of Existing Underpass Lighting System LUMP	625	625	625 Power Service, As Per Plan EACH	625	625	625 GROUND ROD EACH	625 Connector Kit, Type II EACH	625 Connector Kit, Type III EACH	625 Cable Splicing Kit EACH	625 Luminaire, Conventional, Style 'B' IES Type II, 200 Watt HPS, 480 Volt EACH	625 Luminaire, Conventional, Style 'B' IES Type III, 310 Watt HPS, 480 Volt EACH	625 Light Pole, Foundation, 24" X 8' Deep EACH	625 Light Pole, Foundation, 24" X 10' Deep EACH	625 Pull Box, 713.08, 18" EACH	625 No. 10 AWG Pole and Bracket Cable LIN.FT.	625 1½" Duct Cable With 3 NO. 2 AWG 5000 Volt Cables LIN.FT.	625 1½" Duct Cable With 3 NO. 4 AWG 5000 Volt Cables LIN.FT.	625 NO. 2 AWG 5000 Volt Distribution Cable LIN.FT.	625 NO. 4 AWG 5000 Volt Distribution Cable LIN.FT.	625 Conduit, 3", 713.04 LIN.FT.	625 Conduit, Jacked or Drilled, As Per Plan, 3" LIN.FT.	625 Trench, 24" Deep LIN.FT.
627	PB-DC-6	I.R.-71	938+68		Lt.																								207			197	
626	PB-DC-4	I.R.-71	927+40		Rt.															3										138	10	108	
626	PB-DC-3	I.R.-71	918+20		Rt.																					932							922
624	PB-DC-1	Ramp 'D'	0+82		Rt.																									144		134	
624	Sign *109	SR-18	152+00		Lt.																				1					110			100
624	Sign *109A	SR-18	154+35		Lt.																													
624	Sign *12A	SR-18	901+00		Lt.																				1					159	29	120	
626	Sign *15	SR-18	918+20		Rt.																				1								
626	Sign *17A	SR-18	927+40		Lt.																				2		274						264
627	Sign *24A	SR-18	945+00		Rt.																				1		634						624
628	Sign *26	SR-18	953+80		Lt.																				1		773						763
622		I.R.-71	865+71		Lt.	1	1	1		1																								
622		I.R.-71	869+01		Lt.	1	1	1		1																								
622		I.R.-71	872+21		Lt.	1	1	1		1																								
624		SR-18	0+68 RAMP 'D'		Rt.					1																								
624		SR-18	0+90 RAMP 'D'		Rt.	1	1	1																										
625		I.R.-71	907+70		Rt.	1	1	1																										
625		I.R.-71	910+65		Rt.	1	1	1																										
625		I.R.-71	914+23		Rt.	1	1	1																										
624		SR-18	149+80	1151+80	Lt.&Rt.					2	LUMP																							
623	CC-A	SR-18	147+44		Rt.									1																				
624	CC-D	Ramp 'D'	0+90		Rt.									1																				
TOTALS CARRIED TO LIGHTING GENERAL SUMMARY						7	7	7		6	LUMP			2						3				7		2613		207	551	39	559	2673	

CALCULATED MLF CHECKED

MED-71-15.94

612
940

FILENAME: I:\pw_MELL-HY\USKN\Lighting\d98sLSSU.dgn
DATE & TIME: 10-DEC-1999 15:19
USERNAME: pfaught
PROJECT: NONE

LEVELS ON: [1-64]
REF.FILE: I:\pw_MELL-HY\PLOT\pce
REF.FILE: I:\d01sta\pw\Pce\Cross_OCE.pen

REF.FILE *1 LEVELS ON:
REF.FILE *2 LEVELS ON:
REF.FILE *3 LEVELS ON:
REF.FILE *4 LEVELS ON:
REF.FILE *5 LEVELS ON:

LIGHTING SUB–SUMMARY

QUANTITIES
CALC. BY: AFS DATE: 5/16/94
CHKD. BY: MCB DATE: 6/1/94

SHEET. No.	REF. No.	STATION FROM	STATION TO	SIDE	CABLE SPLICING KIT	LIGHT TOWER FOUNDATION 36" X 25', A.P.P.	LIGHT TOWER MAINTENANCE PLATFORM TYPE–B	LIGHT TOWER MAINTENANCE PLATFORM TYPE–C	NO. 4 AWG 5000 VOLT DISTRIBUTION CABLE	NO. 2 AWG 5000 VOLT DISTRIBUTION CABLE	1.5" DUCT CABLE WITH *THREE* NO. 2 AWG 5000 V CABLES	1.5" DUCT CABLE WITH *THREE* NO. 4 AWG 5000 V CABLES	CONDUIT, 3", 713.04	CONDUIT JACKED OR DRILLED 3", *AS PER PLAN*	TRENCH 24" DEEP	LIGHT TOWER, BBBB100	LIGHT TOWER, BBBB110		LIGHT TOWER, BBBBBB110	LIGHT TOWER, BBBBBB120	LUMINAIRE, ASYMMETRIC 400 W, HPS 713.21, 480 V	LUMINAIRE, SYMMETRIC 400 W, HPS 713.21, 480 V	LUMINAIRE, UNDERPASS, 713.13	PULL BOX, 713.08, 18"	STRUCTURE GROUNDING SYSTEM	GROUND ROD	GLARE SHIELDS, AS PER PLAN	SERVICE TO UNDERPASS LIGHTING	POWER SERVICE AS PER PLAN	DISCONNECT EXISTING CIRCUIT	CONDUIT, 2", 713.04
																		625												202	625
					EACH	EACH	EACH	EACH	LIN. FT.	LIN. FT.	LIN. FT.	LIN. FT.	LIN. FT.	LIN. FT.	LIN. FT.	EACH	EACH		EACH	EACH	EACH	EACH	EACH	EACH	EACH		EACH	EACH	EACH	LIN. FT.
		I.R.71 AND I.R.271 NEW INSTALLATION																												
		CIRCUIT W																												
629	CC–K	51+07 GRANGER	*964+71 CONN. W.*	LT																								1	1	
629		51+07 GRANGER		LT/LT						870			90	200	90															
629	PB–W1	*964+71 CONN. W.*		LT	4																				1					
629		*964+71 CONN. W.*	*962+63 CONN. W.*	LT								220			210															
629	WK–1	*962+63 CONN. W.*		LT		1		1								1					4						2	*4*		
629		*964+71 CONN. W.*	*968+83 CONN. W.*	LT							430				420															
629	WK–2	*968+83 CONN. W.*		LT		1	1									1					4						2	*4*		
629		*968+83 CONN. W.*	*974+13 CONN. W.*	LT							540				530															
629	WK–3	*974+13 CONN. W.*		LT		1	1										1				4						2	*4*		
629		*974+13 CONN. W.*	*978+63 CONN. W.*	LT/RT							610			50	550												2			
629	WK–4	*978+63 CONN. W.*		RT		1													1				6							
629		*978+63 CONN. W.*	*984+38 CONN. W.*	RT							510				500												2			
629	WK–5	*984+38 CONN. W.*		RT		1													1				6				2			
629		*984+38 CONN. W.*	*987+73 CONN. W.*	RT								310			300															
630	PB–W2	*987+73 CONN. W.*		RT	4																				1					
630	UP–W12–10	*987+73 CONN. W.*	*988+53 CONN. W.*	RT																				3		1		1		
630		*987+73 CONN. W.*	*989+83 CONN. W.*	RT								220			210															
630	PB–W3	*989+83 CONN. W.*		RT	1																				1				1	
630	UP–W3–1	*989+83 CONN. W.*	*988+83 CONN. W.*	RT																				3		1		1		
630		*987+73 CONN. W.*	*988+13 CONN. W.*	RT/LT					*270*			*90*	30	50	30															
630	PB–W4	*988+13 CONN. W.*		LT	4																				1					
630	UP–W9–7	*988+13 CONN. W.*	*988+93 CONN. W.*	LT																				3				1		
630		*988+13 CONN. W.*	*990+13 CONN. W.*	LT					*270*			220			210															
630	PB–W5	*990+13 CONN. W.*	*990+43 CONN. W.*	LT	1							*70*			*60*										1					
630	UP–W4–6	*990+13 CONN. W.*	*989+23 CONN. W.*	LT																				3				1		
629		*988+13 CONN. W.*	*992+73* I.R.71	LT/LT								*555*			*545*															
629	WK–6	*992+73* I.R.71		LT		1		1									1				4						2	*4*		
		CIRCUIT E																												
629	CC–K	51+07 GRANGER																												
629		51+07 GRANGER	*965+63 CONN. E.*	LT/RT						165			45		45															
629	EK–1	*965+63 CONN. E.*		RT		1										1					4						2	*4*		
629		*965+63 CONN. E.*	*971+13 CONN. E.*	RT							560				550															
629	EK–2	*971+13 CONN. E.*		RT		1	1									1					4						2	*4*		
629		*971+13 CONN. E.*	*974+83 CONN. E.*	RT							380				370															
629	PB–E1	*974+83 CONN. E.*		RT	2																				1					
629		*974+83 CONN. E.*	*976+63 CONN. E.*	RT							190				180															
629	EK–3	*976+63 CONN. E.*		RT		1											1				4						2	*4*		
629		*976+63 CONN. E.*	*982+63* I.R.71	RT/RT							740			50	680															
629	EK–4	*982+63* I.R.71		RT		1													1				6				2			
629		*982+63* I.R.71	*990+63 CONN. W.*	RT/RT							460				450															
629	EK–7	*990+63 CONN. W.*		RT		1														1			6				2			
																							4				2			
629	EK–8	*991+43 CONN. W.*		LT		1										1														
629		*982+63* I.R.71	*987+68 CONN. E.*	RT/LT							*565*				*555*															
629	EK–5	*987+68 CONN. E.*		LT		1											1						4				2			
629		*987+68 CONN. E.*	*991+63 CONN. E.*	LT							*435*				*425*															
629	EK–6	*991+63 CONN. E.*		LT		1											1						4				2			
		STRUCTURE MED–71–2088E NEW INSTALLATION																												
631		81+55 RAMP B	82+65 RAMP B	RT																						1				110
		SHEET TOTALS			16	14	3	2	*540*	*1035*	5420	*1685*	*165*	350	6910	5	5		3	1	28	36	12	6	3	28	*28*	4	1	2	110

CALCULATED | CHECKED

LIGHTING SUB-SUMMARY

MED–71–15.78

613
940

LIGHTING SUB–SUMMARY

FILENAME: I:\PDP_MELL_HWY\USER\Lighting\results.dgn
DATE & TIME: 10-DEC-1999 15:00
USERNAME: mfox
PROJECT: NONE
LEVELS ON: [1-63]
PLOT QUEUE: PDPLOT108
REFA TABLE: I:\MDist\Plan\OneCross_OCE.pen

LIGHTING SUB–SUMMARY

QUANTITIES
CALC. BY: AFS DATE: 5/16/94
CHKD. BY: MCB DATE: 6/1/94

SHEET. No.	REF. No.	STATION FROM	STATION TO	SIDE	625 CONNECTOR KIT, TYPE II EACH	CONNECTOR KIT, TYPE III EACH	CONNECTOR KIT, TYPE VII B EACH	CABLE SPICING KIT EACH	LIGHT POLE DESIGN, AT12B41.7 EACH	LIGHT POLE DESIGN, AT15B41.7 EACH	LIGHT POLE FOUNDATION 24"X8' DEEP EACH	NO. 4 AWG 5000 VOLT DISTRIBUTION CABLE LIN. FT.	NO. 10 AWG POLE AND BRACKET CABLE LIN. FT.	1.5" DUCT CABLE WITH THREE NO. 4 AWG 5000 V CABLES LIN. FT.	CONDUIT, 2", 713.04 LIN. FT.	CONDUIT, 3", 713.04 LIN. FT.	CONDUIT JACKED OR DRILLED UNDER PAVEMENT 3"A.P.P. LIN. FT.	TRENCH 24" DEEP LIN. FT.	LUMINAIRE, STYLE B, TYPE II 200 W, HPS 713.11, 480V EACH	PULLBOX 713.08, 18" EACH	GROUND ROD EACH	POWER SERVICE AS PER PLAN EACH	STRUCTURE GROUNDING SYSTEM EACH	GLARE SHIELD AS PER PLAN EACH
I.R.71 AND S.R.3 NEW INSTALLATION																								
CIRCUIT A																								
631	CC–J	896+55 S.R.3		RT																		1		
		896+55 S.R.3	81+20 RAMP B	RT/LT								330				100		100						
	PB–B1	81+20 RAMP B		LT				4													1			
		81+20 RAMP B	895+60 S.R.3	LT/LT								330					100							
	AJ–1	895+60 S.R.3		LT	1	1				1	1		169.5						1		1			
		81+20 RAMP B	897+15 S.R.3	LT/RT								510				80	80	80						
	AJ–2	897+15 S.R.3		RT	1	1				1	1		169.5						1		1			
		897+15 S.R.3	904+00 S.R.3	RT										695				685						
	PB–A1	904+00 S.R.3		RT				4												1				
		904+00 S.R.3	904+00 S.R.3	RT/LT								330					100							
	AJ–3	904+00 S.R.3		LT	1	1				1	1		169.5						1		1			
		904+00 S.R.3	905+60 S.R.3	RT								510				100	60	100						
631	AJ–4	905+60 S.R.3		RT	1	1				1	1		169.5						1		1			
CIRCUIT B																								
631	CC–J	896+55 S.R.3		RT																				
		896+55 S.R.3	81+20 RAMP B	RT/LT								330												
	PB–B1	81+20 RAMP B		LT				2																
		81+20 RAMP B	1087+69 I.R.71	LT/LT										1570				1560						
	BJ–1	1087+69 I.R.71		LT	1	1				1	1		169.5						1		1			
		1087+69 I.R.71	1084+69 I.R.71	LT										310				300						
	BJ–2	1084+69 I.R.71		LT	1	1	2			1	1		169.5						1		1			
		1084+69 I.R.71	1081+69 I.R.71	LT										310				300						
	BJ–3	1081+69 I.R.71		LT	1	1				1	1		169.5						1		1			
		1084+69 I.R.71	1085+34 I.R.71	LT/RT								720					160	70						
	BJ–4	1085+34 I.R.71		RT	1	1				1	1		169.5						1		1			
		1085+34 I.R.71	1090+00 I.R.71	RT										480				470						
	PB–B2	1090+00 I.R.71		RT				4												1				
		1090+00 I.R.71	70+55 RAMP B	RT/RT										200				190						
	BJ–5	70+55 RAMP B		RT	1	1			1		1		162						1		1			
		70+55 RAMP B	72+50 RAMP B	RT										210				200						
	BJ–7	72+50 RAMP B		RT	1	1			1		1		162						1		1			
		72+50 RAMP B	1093+39 I.R.71	RT/RT								240					70							
631	BJ–6	1093+39 I.R.71		RT	1	1				1	1		169.5						1		1			
CIRCUIT C																								
632	CC–J	896+55 S.R.3		RT																				
		896+55 S.R.3	81+20 RAMP B	RT/LT								330												
	PB–B1	81+20 RAMP B		LT				2																
		81+20 RAMP B	896+00 S.R.3	LT/LT								330					100							
	PB–C1	896+00 S.R.3		LT				2												1				
		896+00 S.R.3	83+50 RAMP C	LT/LT								840						270						
	PB–C2	83+50 RAMP C		LT				2												1				
		83+50 RAMP C	84+50 RAMP C	LT/LT								270			80			20			1			
	PB–C3	84+50 RAMP C		LT				2												1				
		84+50 RAMP C	93+45 RAMP C	LT										910				900						
	CJ–6	93+45 RAMP C		LT	1	1	2		1		1		162						1		1			
		93+45 RAMP C	1115+24 I.R.71	LT/LT										95		35	50	35						
	CJ–7	1115+24 I.R.71		LT	1	1				1	1		169.5						1		1			
		93+45 RAMP C	95+40 RAMP C	LT										205				195						
	CJ–5	95+40 RAMP C		LT	1	1			1		1		162						1		1			
		95+40 RAMP C	1118+61 I.R.71	LT/LT										200				190						
	PB–C4	1118+61 I.R.71		LT				2												1				
		1118+61 I.R.71	1123+24 I.R.71	LT										475				465						
	CJ–4	1123+24 I.R.71		LT	1	1				1	1		169.5						1		1			
		1123+24 I.R.71	1123+94 I.R.71	LT/RT										210		60	140	60						
	CJ–2	1123+94 I.R.71		RT	1	1	2			1	1		169.5						1		1			
		1123+94 I.R.71	1120+94 I.R.71	RT										310				300						
	CJ–1	1120+94 I.R.71		RT	1	1				1	1		169.5						1		1			
		1123+94 I.R.71	1126+94 I.R.71	RT										310				300						
632	CJ–3	1126+94 I.R.71		RT	1	1				1	1		169.5						1		1			
		SHEET TOTALS			18	18	6	24	4	14	18	5070	3021	6490	80	375	860	6790	18	7	18	1	1			

Lighting Sub-Summary

MED-71-15.78

614
940

LIGHTING SUB–SUMMARY

REF.FILE "1" LEVELS ON:
REF.FILE "2" LEVELS ON:
REF.FILE "3" LEVELS ON:
REF.FILE "4" LEVELS ON:
REF.FILE "5" LEVELS ON:
Sht.-367
FILENAME: \\dgn\...\med_rr\\dgn\lghtmgv\ds0sld2.dgn
DATE & TIME: 10-DEC-1999 09:20
USERNAME: rhermon
PROJECT: NONE
LEVELS ON: 1-641
PLOT QUEUE: \\D2\PLOT\ocs
REM. TABLE: N:\DIst6\Yuba\OceaCross...OCE.pen

REF.FILE #1 LEVELS ON:
REF.FILE #2 LEVELS ON:
REF.FILE #3 LEVELS ON:
REF.FILE #4 LEVELS ON:

SHEET No.	REFERENCE NO.	ROADWAY	STATION TO STATION From	STATION TO STATION To	SIDE	202 Light Pole Removed EACH	202 Light Pole Foundation Removed EACH	202 Luminaire Removed EACH	202 Disconnect Existing Circuit EACH	625 Light Pole, Design A30B35 EACH	625 Luminaire, Conventional, Style 'B' IES Type II, 200 Watt HPS, 240 Volt EACH	625 Light Pole, Foundation, 24" X 10' Deep EACH	625 Connector Kit, Type II LIN.FT.	625 Connector Kit, Type III LIN.FT.	625 Cable Splicing Kit EACH	625 No. 10 AWG Pole and Bracket Cable LIN.FT.	625 1/2" DUCT CABLE WITH 3 NO. 4 AWG 5000 VOLT CABLES LIN.FT.	625 TRENCH, 24" DEEP LIN.FT.		625 GROUND ROD EACH		
633	NB-P1	Ramp NB	91+45		Rt.					1	1	1	2	1		140				1		
	NB-L1	Ramp NB	NB-PB1	NB-P1	Rt.												197	187				
	NB-P2	Ramp NB	94+00		Rt.					1	1	1	2	1		140				1		
	NB-L2	Ramp NB	NB-P1	NB-P2	Rt.												264	254				
	NB-P3	Ramp NB	1220+35		Rt.					1	1	1	2	1		140				1		
	NB-L3	Ramp NB	NB-P2	NB-P3	Rt.												261	251				
	NB-P4	I.R.-71	1222+55		Rt.					1	1	1	2	1		140				1		
	NB-L4	I.R.-71	NB-P3	NB-P4	Rt.												252	242				
	NB-P5	I.R.-71	1224+79		Rt.					1	1	1	2	1		140				1		
	NB-L5	I.R.-71	NB-P4	NB-P5	Rt.												233	223				
	NB-P6	I.R.-71	1227+25		Rt.					1	1	1	2	1		140				1		
	NB-L6	I.R.-71	NB-P5	NB-P6	Rt.												238	228				
	NB-P7	I.R.-71	1229+69		Rt.					1	1	1	2	1		140				1		
	NB-L7	I.R.-71	NB-P6	NB-P7	Rt.												258	248				
	NB-P8	I.R.-71	1232+10		Rt.					1	1	1	2	1		140				1		
	NB-L8	I.R.-71	NB-P7	NB-P8	Rt.												256	246				
	NB-P9	I.R.-71	91+45		Rt.					1	1	1	2	1		140				1		
	NB-L9	I.R.-71	NB-P8	NB-P9	Rt.												253	243				
	NB-PB1	Ramp NB	89+58.50		Rt.				1						3							
	L1	Ramp NB	91+45		Rt.	1	1	1														
	L2	Ramp NB	94+00		Rt.	1	1	1														
	L3	Ramp NB	96+50		Rt.	1	1	1														
	L4	I.R.-71	1220+34		Rt.	1	1	1														
	L5	I.R.-71	1222+54		Rt.	1	1	1														
	L6	I.R.-71	1224+79		Rt.	1	1	1														
	L7	I.R.-71	1227+24		Rt.	1	1	1														
	L8	I.R.-71	1229+69		Rt.	1	1	1														
633	L9	I.R.-71	1232+09		Rt.	1	1	1														
TOTALS CARRIED TO LIGHTING GENERAL SUMMARY						9	9	9	1	9	9	9	18	9	3	1260	2212	2122		9		

CALCULATED MLF CHECKED

LIGHTING SUB-SUMMARY

MED-71-15.94

615
940

FILENAME: I:\pdn_med_1r\ngn\lighting\V88bls1sd.dgn
DATE & TIME: 10-DEC-1999 10:03
USERNAME: rherman
PROJECT: NONE
LEVELS ON: 1 63
PLOT QUEUE: \\DGN\PLOT\oce
OPEN TABLE: i:\ndot\sd\plot\oce\oceCross_OCE.pen

LIGHTING SUB–SUMMARY

QUANTITIES
CALC. BY: AFS DATE: 5/16/94
CHKD. BY: MCB DATE: 6/1/94

SHEET. No.	REF. No.	STATION FROM	STATION TO	SIDE	625 CONNECTOR KIT, TYPE II EACH	CONNECTOR KIT, TYPE III EACH	CABLE SPICING KIT EACH	LIGHT POLE DESIGN, AT15B51.7 EACH	LIGHT POLE FOUNDATION 24"X10' DEEP EACH	LIGHT TOWER FOUNDATION 36"X25' DEEP AS PER PLAN EACH	NO. 4 AWG 5000 VOLT DISTRIBUTION CABLE LIN. FT.	NO. 10 AWG POLE AND BRACKET CABLE LIN. FT.	1.5" DUCT CABLE WITH THREE NO. 4 AWG 5000 V CABLES LIN. FT.	CONDUIT 3", 713.04 LIN. FT.	CONDUIT JACKED OR DRILLED UNDER PAVEMENT 3" A.P.P. LIN. FT.	TRENCH 24" DEEP LIN. FT	LIGHT TOWER BBBB110 EACH	LIGHT TOWER BBBB120 EACH	LIGHT TOWER BBBBBB100 EACH	LIGHT TOWER BBBBBB110 EACH	LIGHT TOWER BBBBBB120 EACH	LUMINAIRE, STYLE B, TYPE III 310 W, HPS 713.11, 480V EACH	LUMINAIRE, ASYMMETRIC 400 W HPS 713.21, 480V EACH	LUMINAIRE, SYMMETRIC 400 W, HPS 713.21, 480V EACH	LUMINAIRE, UNDERPASS, 713.13 EACH	PULLBOX 713.08, 18" EACH	GROUND ROD EACH	POWER SERVICE, AS PER PLAN EACH	GLARE SHIELD AS PER PLAN EACH
I.R. 71 AND S.R. 303 NEW INSTALLATION																														
CIRCUIT B																														
634	BM–8	1242+34 I.R. 71		LT	1	1		1	1			199.5											1				1			
		1242+34 I.R. 71	1244+34 I.R. 71	LT									210			200														
	BM–7	1244+34 I.R. 71		LT	1	1		1	1			199.5											1				1			
		1244+34 I.R. 71	1246+34 I.R. 71	LT									210			200														
	BM–6	1246+34 I.R. 71		LT	1	1		1	1			199.5											1				1			
		1246+34 I.R. 71	1248+34 I.R. 71	LT									210			200														
	BM–5	1248+34 I.R. 71		LT	1	1		1	1			199.5											1				1			
		1248+34 I.R. 71	1251+84 I.R. 71	LT									360			350														
	BM–4	1251+84 I.R. 71		LT						1							1							4				2		4
		1251+84 I.R. 71	36+00 RAMP B	LT									560			550														
	BM–3	36+00 RAMP B		LT						1								1						4				2		4
		36+00 RAMP B	42+50 RAMP B	LT/RT									790		50	730														
	BM–2	42+50 RAMP B		RT						1									1						6			2		
		42+50 RAMP B	48+10 S.R. 303	RT/RT									440			430														
	BM–1	48+10 S.R. 303		RT						1									1						6			2		
		48+10 S.R. 303	48+00 S.R. 303	RT							180			50		50														
634	CC–M	48+00 S.R. 303		RT																									1	
CIRCUIT A																														
635	CC–M	48+00 S.R. 303		RT																										
		48+00 S.R. 303	47+87 S.R. 303	RT/LT							975			215	100	215														
	AM–1	47+87 S.R. 303		LT						1										1					6			2		
		47+87 S.R. 303	55+25 RAMP A	LT/RT									530			520														
	AM–2	55+25 RAMP A		RT						1									1						6			2		
		55+25 RAMP A	1280+34 I.R. 71	RT/LT									480		50	420														
	AM–3	1280+34 I.R. 71		LT	1	1		1	1			199.5											1				1			
		1280+34 I.R. 71	1281+67 I.R. 71	LT									150			140														
	PB–A1	1281+67 I.R. 71		LT			2																					1		
		1281+67 I.R. 71	1282+84 I.R. 71	LT									130			120														
	AM–4	1282+84 I.R. 71		LT	1	1		1	1			199.5											1				1			
		1282+84 I.R. 71	1284+84 I.R. 71	LT									210			200														
	AM–5	1284+84 I.R. 71		LT	1	1		1	1			199.5											1				1			
		1284+84 I.R. 71	1286+84 I.R. 71	LT									210			200														
	AM–6	1286+84 I.R. 71		LT	1	1		1	1			199.5											1				1			
		1286+84 I.R. 71	1288+84 I.R. 71	LT									210			200														
635	AM–7	1288+84 I.R. 71		LT	1	1		1	1			199.5											1				1			
CIRCUIT C																														
634	CN–8	1242+84 I.R. 71		RT	1	1		1	1			199.5											1				1			
		1242+84 I.R. 71	1244+84 I.R. 71	RT									210			200														
	CN–7	1244+84 I.R. 71		RT	1	1		1	1			199.5											1				1			
		1244+84 I.R. 71	1246+84 I.R. 71	RT									210			200														
	CN–6	1246+84 I.R. 71		RT	1	1		1	1			199.5											1				1			
		1246+84 I.R. 71	1249+34 I.R. 71	RT									270			260														
	CN–5	1249+34 I.R. 71		RT						1							1							4				2		4
		1249+34 I.R. 71	1254+24 I.R. 71	RT									490			480														
	PB–C1	1254+24 I.R. 71		RT			2																					1		
		1254+24 I.R. 71	1254+84 I.R. 71	RT									70			60														
	CN–4	1254+84 I.R. 71		RT						1								1						4				2		4
		1254+84 I.R. 71	1260+59 I.R. 71	RT									690		50	630														
	CN–3	1260+59 I.R. 71		RT						1										1					6			2		
		1260+59 I.R. 71	36+62, RAMP D	RT/LT									595		50	535														
	CN–2	36+62 RAMP D		LT						1										1					6			2		
		36+62 RAMP D	44+80 RAMP D	LT									320			310														
	CN–1	44+80 RAMP D		LT						1													1		6			2		
		36+62 RAMP D	53+00 S.R. 303	LT/LT							750			140	100	140														
634	CC–N	53+00 S.R. 303		LT																									1	
SHEET TOTALS					12	12	4	12	12	11	1905	2394	7555	405	400	7540	2	2	3	3	1	12	16	42		2	34	2	16

REF.FILE "1" LEVELS ON:
REF.FILE "1 LEVELS ON:
REF.FILE "2 LEVELS ON:

REF.FILE "3 LEVELS ON:
REF.FILE "3 LEVELS ON:
REF.FILE "4 LEVELS ON:
REF.FILE "4 LEVELS ON:

Sht-368

FILENAME: \\xpo_med_1\rdgn\rdgn\rdgv\rdsh63.dgn
DATE & TIME: 10-DEC-1999 10:12
USERNAME: rherman
PROJECT: NONE

LEVELS ON: 1-641
PLOT QUEUE: \\DRIPLOT\oce
REM TABLE: \\xp0d0s1d\xpa0\xpa0oce\Cross_OCE.pen

CALCULATED | CHECKED

Lighting Sub-Summary

MED-71-15.78

LIGHTING SUB–SUMMARY

QUANTITIES
CALC. BY: AFS DATE: 5/16/94
CHKD. BY: MCB DATE: 6/1/94

					625																								202
SHEET. No.	REF. No.	STATION FROM	STATION TO	SIDE	CONNECTOR KIT, TYPE II	CONNECTOR KIT, TYPE III	CABLE SPICING KIT	LIGHT POLE DESIGN, AT15B51.7	LIGHT POLE FOUNDATION 24"X10' DEEP	LIGHT TOWER FOUNDATION 36"X25' DEEP, AS PER PLAN	NO. 4 AWG 5000 VOLT DISTRIBUTION CABLE	NO. 10 AWG POLE AND BRACKET CABLE	1.5" DUCT CABLE WITH THREE NO. 4 AWG 5000 V CABLES	CONDUIT 3", 713.04	CONDUIT JACKED OR DRILLED UNDER PAVEMENT 3"	TRENCH 24" DEEP	LIGHT TOWER BBBB100	LIGHT TOWER BBBB110	LIGHT TOWER BBBB120	LUMINAIRE, STYLE B, TYPE III 310 W, HPS 713.11, 480W	LUMINAIRE, ASYMMETRIC 400 W HPS 713.21, 480V	LUMINAIRE, SYMMETRIC 400 W, HPS 713.21, 480V	LUMINAIRE, UNDERPASS, 713.13	PULLBOX 713.08, 18"	GROUND ROD	SERVICE TO UNDERPASS LIGHTING	GLARE SHIELD AS PER PLAN	STRUCTURE GROUNDING SYSTEM	DISCONNECT EXISTING CIRCUIT
					EACH	EACH	EACH	EACH	EACH	EACH	LIN. FT.	LIN. FT.	LIN. FT.	LIN. FT.	LIN. FT.	LIN. FT.	EACH	EACH	EACH	EACH	EACH	EACH	EACH	EACH	EACH	EACH	EACH	EACH	EACH
I.R. 71 AND S.R. 303 NEW INSTALLATION																													
CIRCUIT D																													
635	CC–N	53+00 S.R. 303		LT																									
		53+00 S.R. 303	1272+34 I.R. 71	LT/RT							1500			490		490													
	DN–1	1272+34 I.R. 71		RT						1									1		4			2		4			
		1272+34 I.R. 71	1278+64 I.R. 71	RT									640			630													
	DN–2	1278+64 I.R. 71		RT						1									1		4			2		4			
		1278+64 I.R. 71	1281+59 I.R. 71	RT									320			310													
	DN–3	1281+59 I.R. 71		RT	1	1		1	1			200								1				1					
		1281+59 I.R. 71	1283+34 I.R. 71	RT									190			180													
	DN–4	1283+34 I.R. 71		RT	1	1		1	1			200								1				1					
		1283+34 I.R. 71	1285+34 I.R. 71	RT									210			200													
	DN–5	1285+34 I.R. 71		RT	1	1		1	1			200								1				1					
		1285+34 I.R. 71	1287+34 I.R. 71	RT									210			200													
	DN–6	1287+34 I.R. 71		RT	1	1		1	1			200								1				1					
		1287+34 I.R. 71	1289+34 I.R. 71	RT									210			200													
635	DN–7	1289+34 I.R. 71		RT	1	1		1	1			200								1				1					
REVISIONS TO EXISTING SYSTEM																													
EXISTING CIRCUIT S																													
636		47+51.33 S.R. 303		RT			2																						1
	PB–S5	49+20 S.R. 303		RT			4													1									1
	UP–S6–4	49+20 S.R. 303	50+10 S.R. 303	RT																		3		1		1			
	PB–S3	50+10 S.R. 303		RT			2													1									
	UP–S3–1	50+10 S.R. 303	51+25 S.R. 303	RT																		3		1		1			
	PB–S1	51+25 S.R. 303		RT			2													1									
		52+56.33 S.R. 303		RT			2																						1
636		54+66.33 S.R. 303		RT			2																						1
EXISTING CIRCUIT T																													
636		46+16.33 S.R. 303		LT			2																						1
		48+56.33 S.R. 303		LT			2																						1
	PB–T5	48+95 S.R. 303		LT			2													1									
	UP–T6–4	48+95 S.R. 303	49+90 S.R. 303	LT																		3		1					
	PB–T3	49+90 S.R. 303		LT			2													1									
	UP–T3–1	49+90 S.R. 303	51+05 S.R. 303	LT																		3		1					
	PB–T1	51+05 S.R. 303		LT			4													1									
		51+56.33 S.R. 303		LT			2																						1
		53+66.33 S.R. 303		LT			2																						1
636		55+96.33 S.R. 303		LT			2																						1
SHEET TOTALS					5	5	32	5	5	2	1500	1000	1780	490		2210			2	5	8		12	6	9	4	8	2	10

Lighting Sub-Summary

MED-71-15.78

617
940

LIGHTING SUB–SUMMARY

REF.FILE *1; LEVELS ON:
REF.FILE *2; LEVELS ON:
REF.FILE *3; LEVELS ON:
REF.FILE *4; LEVELS ON:
FILENAME: H:\pdf_files\lighting\lgtsub.dgn
DATE & TIME: 10-DEC-1999 10:24
USERNAME: rherman
PROJECT: NONE
LEVELS ON: 1-63
PLOT QUEUE: \\DIPLOT\oce
PEN TABLE: N:\DistAdp\pdfOceCross_OCE.pen

REF.FILE #1 LEVELS ON:
REF.FILE #2 LEVELS ON:
REF.FILE #3 LEVELS ON:
REF.FILE #4 LEVELS ON:

SHT.-3/UB

FILENAME=I:\OPL_MELLIN\MAIN\LIGHTING\803SUB.dgn
DATE & TIME=10-DEC-1999 15:01
USERNAME=mfox
PROJECT=NONE

LEVELS ON=1,63
ACTIVE MODEL=3D PLOT.pce
REGN TABLE=I:\DGN\default\pltr\OpenCross.OCE.pen

LIGHTING SUB-SUMMARY

QUANTITIES
CALC. BY: AFS DATE: 5/16/94
CHKD. BY: MCB DATE: 6/1/94

SHEET. No.	REF. No.	STATION FROM	STATION TO	SIDE	202 LIGHT POLE REMOVED EACH	LIGHT POLE FOUNDATION REMOVED EACH	LUMINAIRE REMOVED EACH	PULL BOX REMOVED EACH	POWER SERVICE REMOVED, *AS PER PLAN* EACH	REMOVAL OF EXISTING UNDERPASS LIGHTING SYSTEM LUMP	REMOVAL OF MISCELLANEOUS COMBINATION BRACKET ARM AND LUMINAIRE EACH
		I.R.71 AND I.R.271 REMOVALS									
629		51+07 GRANGER RD.		LT							
629		51+19 GRANGER RD.		LT					1		
629		*967+58 CONN. E.*		RT	1	1	1				
629		*970+58 CONN. E.*		RT	1	1	1				
629		*972+13 CONN. E.*		RT				1			
629		*972+13 CONN. W.*		RT				1			
629		*977+23 CONN. W.*		RT	1	1	1				
629		*979+23 CONN. W.*		RT	1	1	1				
629		*981+23 CONN. W.*		RT	1	1	1				
629		*983+23 CONN. W.*		RT	1	1	1				
629		*985+23 CONN. W.*		RT	1	1	1				
629		*987+23 CONN. W.*		RT	1	1	1				
629		*989+23 CONN. W.*		RT	1	1	1				
629		*989+83 CONN. W.*		RT				1			
629		*991+23 CONN. W.*		RT	1	1	1				
629		*993+63 CONN. W.*		RT	1	1	1				
629		*972+13 CONN. W.*		LT				1			
629		*971+23 CONN. W.*		LT	1	1	1				
629		*969+23 CONN. W.*		LT	1	1	1				
629		*967+23 CONN. W.*		LT	1	1	1				
629		*965+23 CONN. W.*		LT	1	1	1				
629		*963+48 CONN. W.*		LT	1	1	1				
629		*961+63 CONN. W.*		LT	1	1	1				
629		*973+23 CONN. W.*		LT	1	1	1				
629		*975+23 CONN. W.*		LT	1	1	1				
629		*972+83 CONN. E.*		RT	1	1	1				
629		*974+53 CONN. E.*		RT	1	1	1				
629		*976+18 CONN. E.*		RT	1	1	1				
629		*977+88 CONN. E.*		RT				1			
629		*977+88 CONN. E.*		LT	1	1	1				
629		*978+18 CONN. E.*		RT	1	1	1				
629		*980+18 CONN. E.*		RT	1	1	1				
629		*982+18 CONN. E.*		RT	1	1	1				
629		*984+18 CONN. E.*		RT	1	1	1				
629		*986+18 CONN. E.*		RT	1	1	1				
629		*988+18 CONN. E.*		RT	1	1	1				
629		*990+18 CONN. E.*		RT	1	1	1				
629		*992+18 CONN. E.*		RT	1	1	1				
629		*993+43 CONN. E.*		RT				1			
629		*993+43 CONN. E.*		LT				1			
629		*996+63 CONN. W.*		RT	1	1	1				
629		*999+43 CONN. W.*		LT				1			
629		*1000+13 CONN. W.*		LT	1	1	1				
SHEET *629* TOTALS					33	33	33	8	1		
		I.R.71 AND S.R.303 REMOVALS									
636		46+16.33		LT	1	1	1				
636		48+56.33		LT	1	1	1				
636		51+05		LT				1			
636		51+56.33		LT	1	1	1				
636		53+66.33		LT	1	1	1				
636		55+66.33		LT	1	1	1				
636		47+51.33		RT	1	1	1				
636		49+20		RT				1			
636		50+10.33		RT	1	1	1				
636		52+56.33		RT	1	1	1				
636		54+66.33		RT	1	1	1				
SHEET *636* TOTALS					9	9	9	2			
SHEET TOTALS					42	42	42	10	1		

CALCULATED | CHECKED

Lighting Sub-Summary

MED-71-15.78

618
940

LIGHTING SUB–SUMMARY

NOTE: 631 ITEMS CARRIED TO TRAFFIC CONTROL GENERAL SUMMARY SHEETS 562,563

QUANTITIES
CALC. BY: AFS DATE: 5/16/94
CHKD. BY: MCB DATE: 6/1/94

				631																				
SHEET. No.	REF. No.	STATION FROM	TO	SIDE	SIGN SERVICE	SIGN WIRED		DISCONNECT SWITCH WITH ENCLOSURE, 30 AMP	SWITCH ENCLOSURE MOUNTING BRACKET ASSEMBLY	BALLAST, TYPE CMRI–175–480, *REMOTE*	BALLAST, TYPE CMRI–175–480, INTEGRAL	BALLAST, TYPE CMRI–250–480, INTEGRAL		MERCURY VAPOR LUMINAIRE, TYPE TC–31.21 WITH 175 W LAMP	MERCURY VAPOR LUMINAIRE, TYPE TC–31.21 WITH 250 W LAMP							
					EACH	EACH		EACH	EACH	EACH	EACH	EACH		EACH	EACH									
		I.R. 71 AND S.R. 18 NEW INSTALLATION																						
623	SIGN–B108A	149+70 S.R. 18		RT	1	1		1	1	1				1										
622	SIGN – 6	870+81 I.R. 71		RT	1	2		1			2	1		2	1									
624	SIGN–D109A	154+35 S.R. 18		LT	1	2		1			1			1										
624	SIGN–D109	151+75 S.R. 18		LT	1	1		1	1	1				1										
		I.R. 71 AND I.R. 271 NEW INSTALLATION																						
629	SIGN 30	97+00 IR-71		RT.	1	2		1			4			4										
		I.R. 71 AND S.R. 3 NEW INSTALLATION																						
631	SIGN–B52	1084+40 I.R. 71		RT	1	1		1				2			2									
632	SIGN–C60	1124+35 I.R. 71		LT	1	1		1				2			2									
		I.R. 71 AND S.R. 303 NEW INSTALLATION																						
634	SIGN–C82	1248+48 I.R. 71		RT	1	1		1				2			2									
635	SIGN–A92	1287+20 I.R. 71		LT	1	1		1				2			2									
		I.R. 71 AND S.R. 303 REVISIONS TO EXISTING SYSTEM																						
636	SIGN–T151	51+25 S.R. 303		LT	1	1		1			1			1										
636	SIGN–S150B	49+00 S.R. 303		RT	1	1		1			1			1										
		I.R. 71 AND S.R. 18 NEW INSTALLATION (Cont.)																						
624	SIGN 12A	901+00 IR-71		LT.	1	2		1			2	2		2	2									
626	SIGN 17A	927+40 IR-71		LT.	1	2		1			2	3		2	3									
627	SIGN 24A	932+25.30 IR-71		RT.	1	2		1			2	3		2	3									
628	SIGN 26	953+80 IR-71		LT.	1	2		1			2	2		2	2									
	SHEET TOTALS				15	22		15	2	2	17	19		19	19									

REF.FILE #1 LEVELS ON:
REF.FILE #2 LEVELS ON:
REF.FILE #3 LEVELS ON:
REF.FILE #4 LEVELS ON:

CALCULATED | CHECKED

SIGN LIGHTING SUB-SUMMARY

MED-71-15.78

619
940

FILENAME: I:\pd_MED_JR7\DGN\Lighting7885LM.dgn
DATE & TIME: 09-DEC-1999 18:18
USERNAME: mfox
PROJECT: NONE

LEVELS ON: [1-6,8-11,19-34,37-52,54-56,58-60,63,641]
PLOT QUEUE: \\DOIPLOT\oce
PEN TABLE: I:\d01std\plot\Oce\Crass_OCE.pen

REF.FILE *1: I:\pd_med_Jr7\dgn\alignmnt.dgn
REF.FILE *1 LEVELS ON: [4,8-52,54-57,59,61,62,641]
REF.FILE *2: I:\pd_med_Jr7\dgn\alignmnt.dgn
REF.FILE *2 LEVELS ON: [2-4,8,10-52,54-57,59,62,641]
REF.FILE *3: I:\pd_med_Jr7\dgn\alignmnt.dgn
REF.FILE *3 LEVELS ON: [2-4,8-39,41-52,54-57,62,641]
REF.FILE *4: I:\pd_med_Jr7\dgn\alignmnt.dgn
REF.FILE *4 LEVELS ON: [2-4,8,10-38,41-52,54-57,62,641]

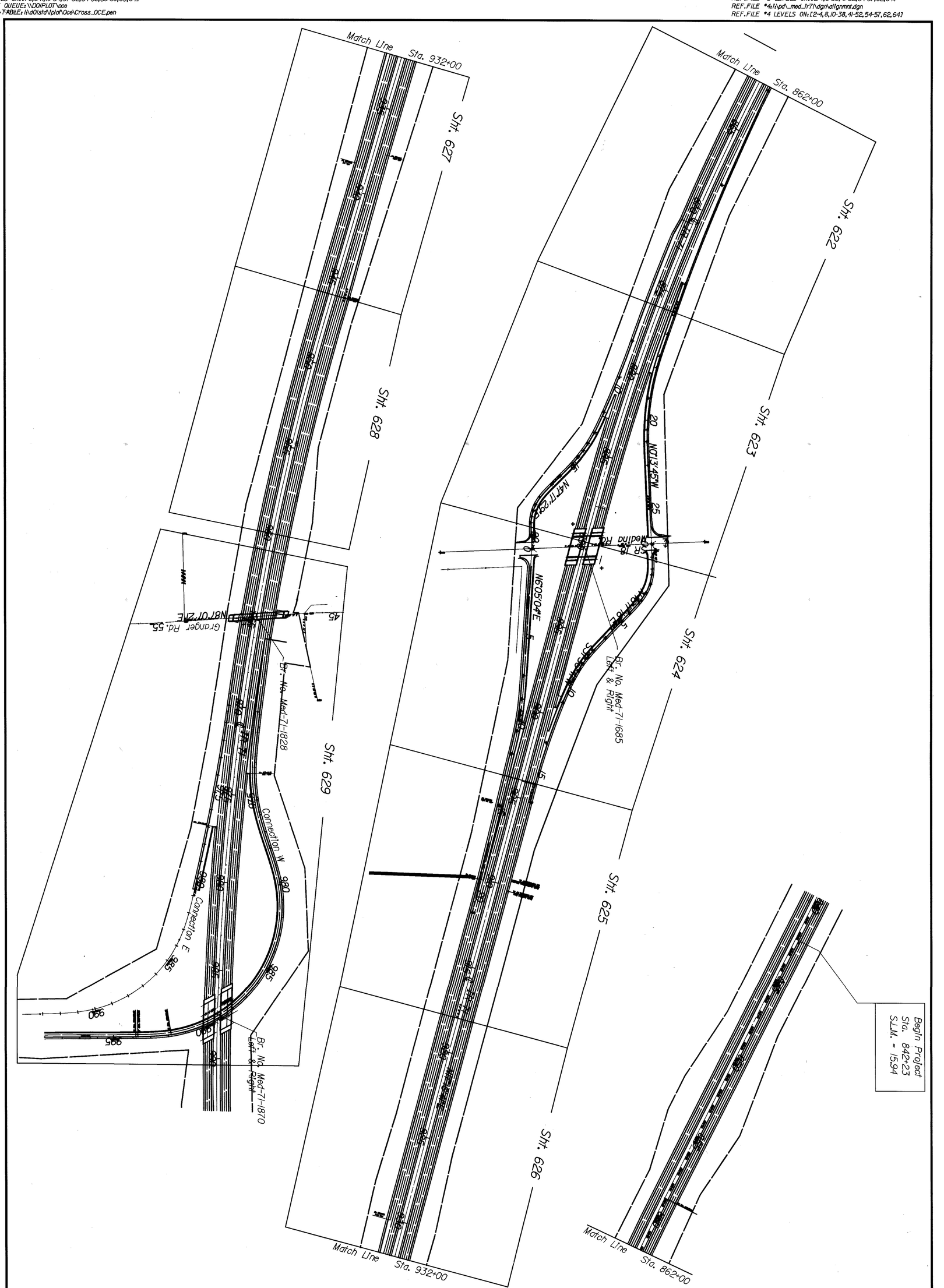

620 / 940	MED-71-15.78	SCHEMATIC PLAN	0 250 125 500 HORIZONTAL SCALE IN FEET	N

FILENAME: h:\pd_MED_IR71\DGN\Lighting\7885LM.dgn
DATE & TIME: 10-DEC-1999 13:26
USERNAME: mfox
PROJECT: NONE

LEVELS ON: [1-6, 8-11, 19-34, 37-52, 54-56, 58-60, 63, 641
PLOT QUEUE: \\DOI\PLOT\oce
PEN TABLE: i:\dot\std\plot\Dce\Cross_DCE.pen

REF FILE *1: i:\pd_med_ir71\dgn\allgnmnt.dgn
REF FILE *1 LEVELS ON: [4, 8-52, 54-57, 59, 61, 62, 641
REF FILE *2: i:\pd_med_ir71\dgn\allgnmnt.dgn
REF FILE *2 LEVELS ON: [2-4, 8, 10-52, 54-57, 59, 62, 641

REF FILE *3: i:\pd_med_ir71\dgn\allgnmnt.dgn
REF FILE *3 LEVELS ON: [2-4, 8-39, 41-52, 54-57, 62, 641
REF FILE *4: i:\pd_med_ir71\dgn\allgnmnt.dgn
REF FILE *4 LEVELS ON: [2-4, 8, 10-38, 41-52, 54-57, 62, 641

Sht. 633
Sht. 634
Sht. 631
Sht. 635
Sht. 632
Br. No. Med-71-2034 Left & Right
Br. No. Med-71-2402 Left & Right
Br. No. Med-71-2090 Left & Right
Ramp A
Ramp B
Ramp C
Ramp D
SR 3
Bridge No. Cuy-71-0000
Medina Cty.
Cuyahoga Cty.
Boston Rd.
End Project Sta. 1406+34 S.L.M.=

621 / 940	MED-71-15.78	SCHEMATIC PLAN	0 250 125 500 HORIZONTAL SCALE IN FEET	N

REF-FILE *1; LEVELS ON:
REF-FILE *2; 2 LEVELS ON.
REF-FILE *3; 3 LEVELS ON:
REF-FILE *4; 4 LEVELS ON (135-38,64)

LIGHTING LEGEND

- EXISTING PULL BOX
- EXISTING PULL BOX TO BE REMOVED
- PULL BOX
- EXISTING SIGN (CANTILEVER TYPE)
- EXISTING CONVENTIONAL LIGHTING
- EXISTING COMBINATION CONVENTIONAL LIGHTING AND TRAFFIC SIGNAL POLE
- CONVENTIONAL 310 W LIGHTING 50' MOUNTING HEIGHT
- HIGH MAST TOWER, ASYMMETRICAL LUMINAIRES
- CONVENTIONAL 200 W LIGHTING, 40' MOUNTING HEIGHT
- HIGH MAST TOWER, SYMMETRICAL LUMINAIRES
- CONVENTIONAL 200 W LIGHTING, 30' MOUNTING HEIGHT
- EXISTING BRIDGE UNDERPASS LIGHTING
- PROPOSED BRIDGE UNDERPASS LIGHTING
- EXISTING CABLE OR CONDUIT
- OVERHEAD SIGN (SPAN TYPE)
- EXISTING OVERHEAD SIGN (SPAN TYPE)
- TRAFFIC LANE
- OVERHEAD SIGN SUPPORT (CANTILEVER TYPE)
- EXISTING SERVICE POLE
- PROPOSED SERVICE POLE
- EXISTING POWER POLE
- EXISTING CONTROL CENTER
- PROPOSED CONTROL CENTER W/ PULL BOX
- EXISTING CONVENTIONAL LIGHTING TO BE REMOVED
- EXISTING POST TOP MOUNTED LUMINARE TO BE REMOVED
- EXISTING CONTROL CENTER TO BE REMOVED
- EXISTING CABLE OR CONDUIT TO BE ABANDONED
- EXISTING SERVICE POLE TO BE REMOVED
- DISTRIBUTION CABLE IN CONDUIT JACKED UNDER PVMT
- DISTRIBUTION CABLE IN CONDUIT
- 1.5" DUCT CABLE SYSTEM W/ 3 NO. 4 AWG 5000V CABLES
- 1.5" DUCT CABLE SYSTEM W/ 3 NO. 2 AWG 5000V CABLES
- 1.5" NO. 4 AWG DUCT CABLE IN 3" CONDUIT JACKED UNDER PVMT
- 1.5" NO. 2 AWG DUCT CABLE IN 3" CONDUIT JACKED UNDER PVMT
- EXISTING BRIDGE MOUNTED SIGN
- PROPOSED BRIDGE MOUNTED SIGN
- CONDUIT STUB
- EXISTING POST TOP MOUNTED LUMINAIRE
- CONDUIT JACKED OR DRILLED

NOTE: Contractor shall make sure that the conduit jacked and/or drilled misses the pile supports for the noise wall.

TOWER DESIGNATION AA-1
FIRST LETTER IS THE CIRCUIT DESIGNATION
SECOND LETTER IS THE POWER SERVICE DESIGNATION
THE # IS THE TOWER OR POLE NUMBER ON THE CIRCUIT

ALL OFFSET DISTANCES SHOWN, LEFT OR RIGHT, ARE MEASURED FROM THE EDGE OF PAVEMENT. *TYPICAL ALL PLAN SHEETS.*

THE POWER SUPPLYING AGENCY FOR THIS PROJECT IS

Ohio Edison Company - Distribution
6326 Lake Avenue
Elyria, Ohio 44035
440-324-0231

Ohio Edison Company - Transmission
76 South Main Street
Akron, Ohio 44308
330-384-5180

AA-5 Sta. 863+06 I-71 18.00 LT 1 200 Watt Luminaire 40' Pole, 18' Arm
AA-4 STA. 865+32 I-71 25.00 LT 1 200 Watt Luminaire 1 45' Pole, 25' Arm
AA-3 STA. 868+44 I-71 25.00 LT 1 200 Watt Luminaire 1 45' Pole, 25' Arm
PB-AA4 STA. 870+75
AA-2 STA. 871+40 I-71 30.00 LT 1 200 Watt Luminaire 1 45' Pole, 30' Arm
AA-1 STA. 874+23 I-71 30.00 LT 1 200 Watt Luminaire 1 45' Pole, 30' Arm
AT Sta. 11+92.79
PC Sta. 0+00.00
EX. 2" GAS LINE (M.F.C. DRILLING) (ABANDONED)
EX. 2" GAS LINE (M.F.C. DRILLING) (ABANDONED)
EX. 2" GAS LINE (M.F.C. DRILLING) (ABANDONED)
862+00 863+00 864+00 865+00 866+00 867+00 868+00 869+00 870+00 871+00 IR 71 872+00 873+00 874+00 875+00 STA. 876+00
PB-AA5 STA. 870+75
Sign AA-6 STA. 870+81
Do Not Disturb
Match Line
NOTE: Existing Ramp C Lighting To Remain

HORIZONTAL SCALE IN FEET
0 25 50 100
CALCULATED
CHECKED

S.R. 18 Interchange
Partial Lighting

MED-71-15.78

622
940

FILENAME: i:\pdp_MELLJR\(NJK)\lighting\r880u1*.dgn
DATE & TIME: 10-DEC-1999 13:18
USERNAME: mfox
PROJECT: NONE
LEVELS ON: 1***

MSLF.FILE: *1:\ADM_MED_IRT\DGN\Lighting\conventional.dgn
REF.FILE *1 LEVELS ON(1,35-38,64)
REF.FILE *2:\ADM_MED_IRT\DGN\Lighting\abc-2dambi.dgn
REF.FILE *2 LEVELS ON(1,12-4,8-16,18,20-52,54-59,61,62,641)

REF.FILE *3:\ADM_MED_IRT\DGN\Lighting\alignmnt.dgn
REF.FILE *3 LEVELS ON(1,3,5,9-37,39,41-52,54-57,59,60,641)
REF.FILE *4:\ADM_MED_IRT\DGN\Lighting\conventional.dgn
REF.FILE *4 LEVELS ON(1,35-38,641)

Proposed Lighting Control
Center 'A' Sta. 147+44, 64' Rt.
Pull Box 'PB-AA1'
Sta. 147+36, 59' Rt.
S.R.-18 Stationing

Traffic Signal Power Service Pole
Traffic Signal Controller
Traffic Signal Pull Box
Traffic Signal Strain Pole

AA-0 Sta. 26+21 (Ramp 'A')
Re-connect (existing)

Sign #108A Sta. 149+70 (SR-18)
Circuit

Insert 'A'
Scale = 100':1"

Sign #108 Sta. 147+40 (SR-18)
Traffic Signal Strain Pole

Pull Box PB-AA3
Sta. 21+00, 17' Lt.
(Ramp 'A')

Pull Box PB-AA2
Sta. 21+00, 26' Rt.
(Ramp 'A')

Sign #108A
(Mounted (SR-18) On Structure)

Insert 'A'

Ramp 'A'
N 0° 13' 45" W

Ramp 'C'
N 47° 17' 29" E

S.R.-18
Medina Road

Match Line
Match Line

Sta. 876+00
Sta. 890+00

CONTROL CENTER DATA							
CONTROL CENTER	CONNECTED LOAD KVA	SERVICE ENTRANCE CONDUCTOR SIZE-AWG	ENCLOSURE RATING AMPS	CIRCUIT NUMBER	CIRCUIT LOAD AMPS	CIRCUIT FUSE SIZE AMPS	MAINTAINENCE AGENCY
SR-18							
A	2.82	4	60	A	5.88	60	ODOT

NOTES: FOR LEGEND, SEE SHEET 622

HORIZONTAL SCALE IN FEET
0 25 50 100

CALCULATED | CHECKED

S.R. 18 Interchange
Partial Lighting

MED-71-15.78

623
940

FILENAME: I:\ADM_MED_IRT\DGN\Lighting\dd50u12.dgn
DATE & TIME: 10-DEC-1999 13:19
USERNAME: mfox
PROJECT: NONE

LEVELS ON(1,64)
PLOT QUEUE: \\DOPLOT\oce
PEN TABLE: I:\MDOT\DPT\DoeCross.OCE.pen

FILENAME: I:\pd_MED_IR71\DGN\Lighting\885LP3.dgn
DATE & TIME: 10-DEC-1999 13:19
USERNAME: mfox
PROJECT: NONE

REF.FILE *1: I:\pd_MED_IR71\DGN\Lighting\conventional.dgn
REF.FILE *1 LEVELS ON: [35-38,64]
REF.FILE *2: I:\pd_MED_IR71\DGN\Lighting\abc2dcmb.dgn
REF.FILE *2 LEVELS ON: [2-4,8-16,18,20-52,54-59,61,62,64]

LEVELS ON: [1-64]
PLOT QUEUE: \\DOIPLOT\oce
PEN TABLE: I:\dOIstd\plot\Oce\Cross_OCE.pen

REF.FILE *3: I:\pd_MED_IR71\DGN\Lighting\allgnmnt.dgn
REF.FILE *3 LEVELS ON: [3,9-37,39,41-52,54-57,59,64]
REF.FILE *4: I:\pd_MED_IR71\DGN\Lighting\prdrain.dgn
REF.FILE *4 LEVELS ON: [1-64]

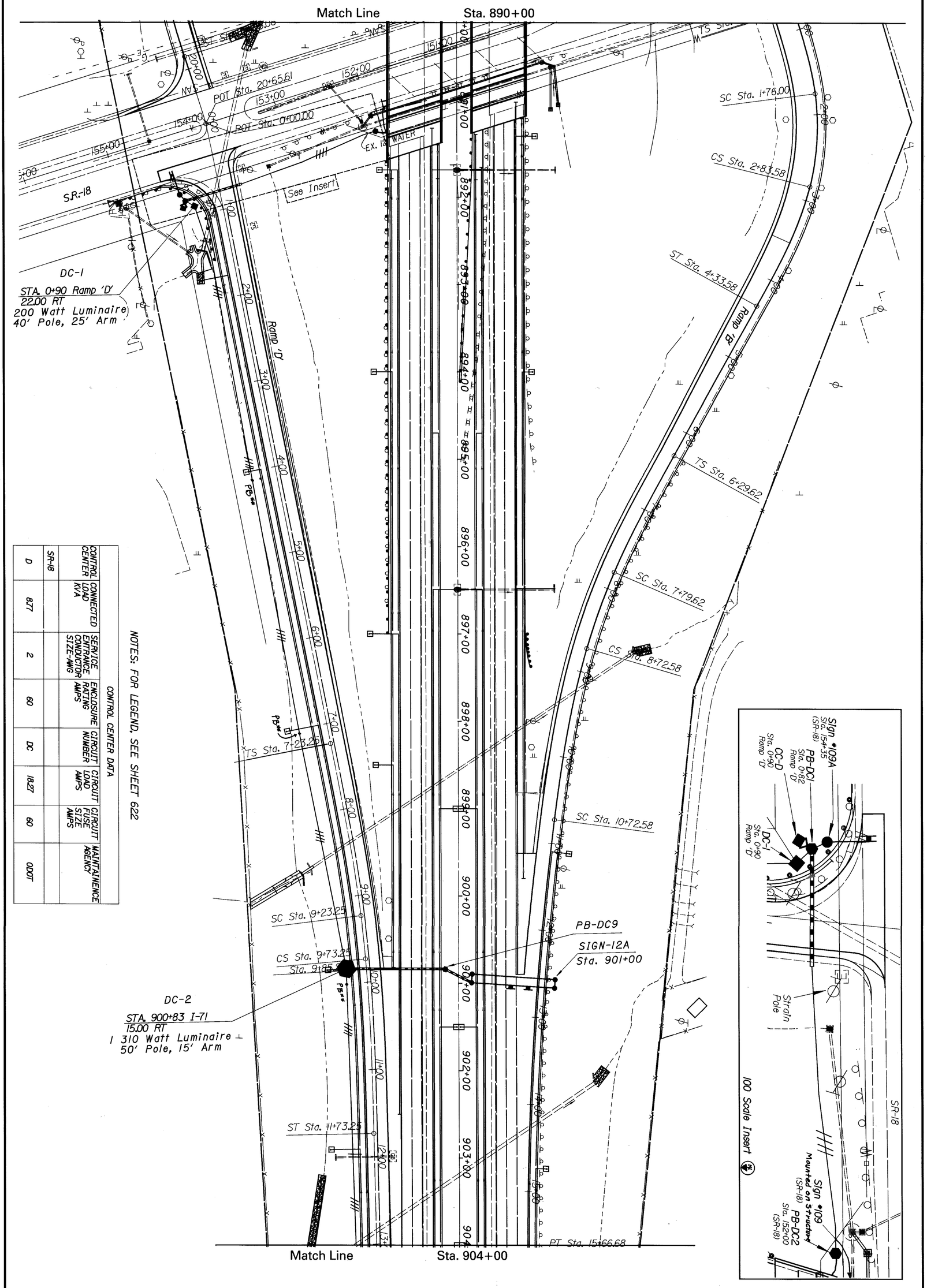

NOTES: FOR LEGEND, SEE SHEET 622

CONTROL CENTER DATA

CONTROL CENTER	CONNECTED LOAD KVA	SERVICE ENTRANCE CONDUCTOR SIZE-AWG	ENCLOSURE RATING AMPS	CIRCUIT NUMBER	CIRCUIT LOAD AMPS	CIRCUIT FUSE SIZE AMPS	MAINTAINENCE AGENCY
SR-18							
D	8.77	2	60	DC	18.27	60	ODOT

624 / 940	MED-71-15.78	S.R. 18 Interchange Partial Lighting	CALCULATED CHECKED 0 25 50 100 HORIZONTAL SCALE IN FEET

FILENAME: I:\pd_MED_IR71\DGN\Lighting\885LP4.dgn
DATE & TIME: 10-DEC-1999 13:20
USERNAME: mfox
PROJECT: NONE

REF.FILE *1: I:\pd_MED_IR71\DGN\Lighting\conventional.dgn
REF.FILE *1 LEVELS ON: [35-38,64]
REF.FILE *2: I:\pd_med_Ir71\dgn\abc2dcmb.dgn
REF.FILE *2 LEVELS ON: [2-4,8-16,18,20-52,54-59,61,62,64]

LEVELS ON: [1-64]
PLOT QUEUE: \\DOIPLOT\oce
REN. TABLE: I:\d0lstd\plot\Oce\Cross_OCE.pen

REF.FILE *3: I:\pd_MED_IR71\DGN\Lighting\alignmnt.dgn
REF.FILE *3 LEVELS ON: [3,5,9-37,39-52,54-57,59,60,64]
REF.FILE *4:
REF.FILE *4 LEVELS ON:

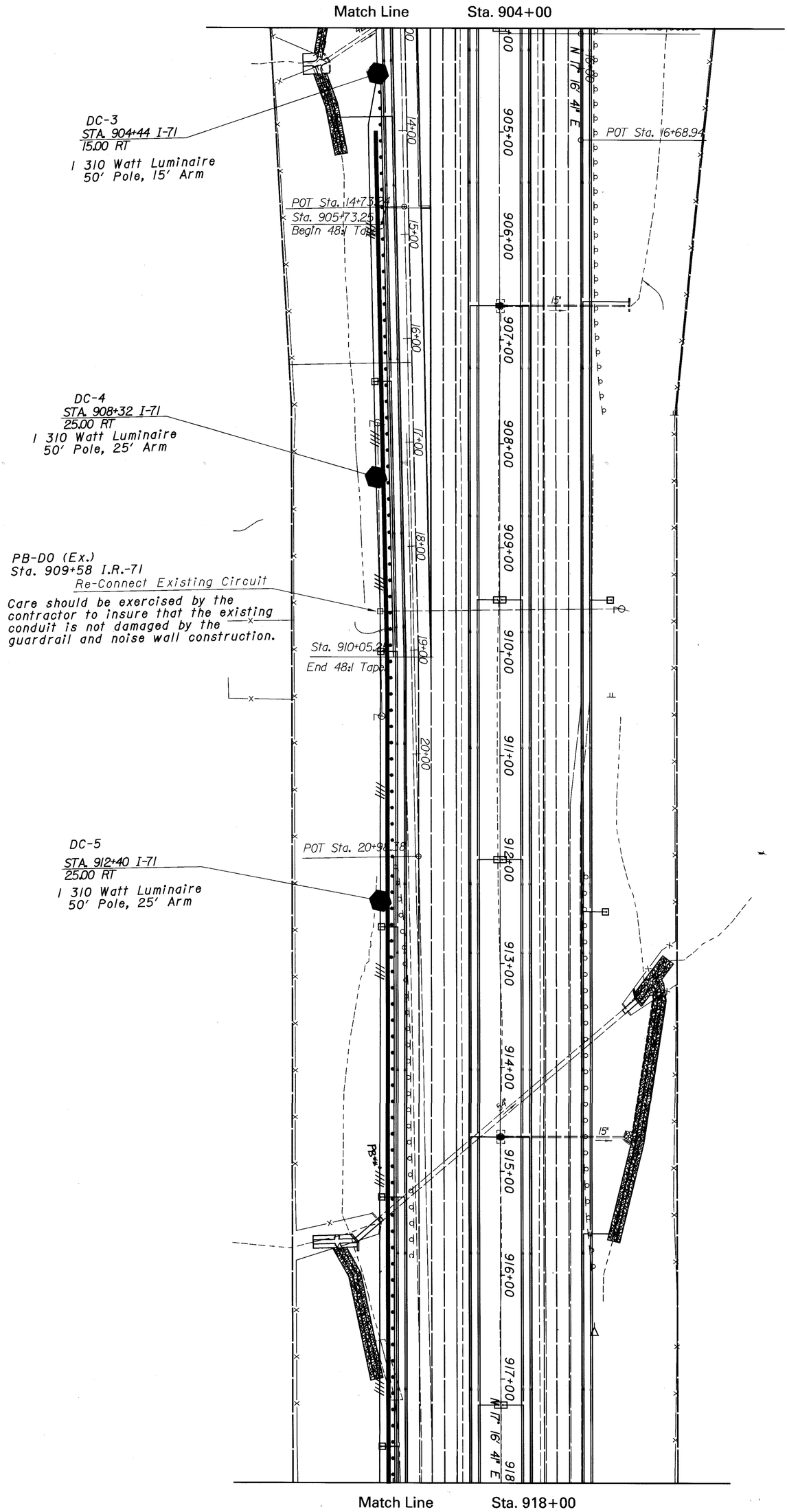

NOTES: FOR LEGEND, SEE SHEET 622

625 / 940	MED-71-15.78	S.R. 18 Interchange Partial Lighting	CALCULATED CHECKED	0 50 25 100 HORIZONTAL SCALE IN FEET

FILENAME: I:\pd_MED_JR71\DGN\Lighting\7885LP5.dgn
DATE & TIME: 10-DEC-1999 13:20
USERNAME: mfox
PROJECT: NONE

LEVELS ON: [1-64]
PLOT QUEUE: \\DOIPLOT\oce
REN. TABLE: I:\dOIstd\Iplot\Oce\Cross_OCE.pen

REF.FILE *1: I:\pd_MED_JR71\DGN\Lighting\conventional.dgn
REF.FILE *1 LEVELS ON: [35-38,64]
REF.FILE *2: I:\pd_med_Jr71\dgn\abc2dcmb.dgn
REF.FILE *2 LEVELS ON: [2-4,8-16,18,20-52,54-59,61,62,64]

REF.FILE *3: I:\pd_MED_JR71\DGN\Lighting\allgnmnt.dgn
REF.FILE *3 LEVELS ON: [3,5,9-37,39-52,54-57,59,60,64]
REF.FILE *4:
REF.FILE *4 LEVELS ON:

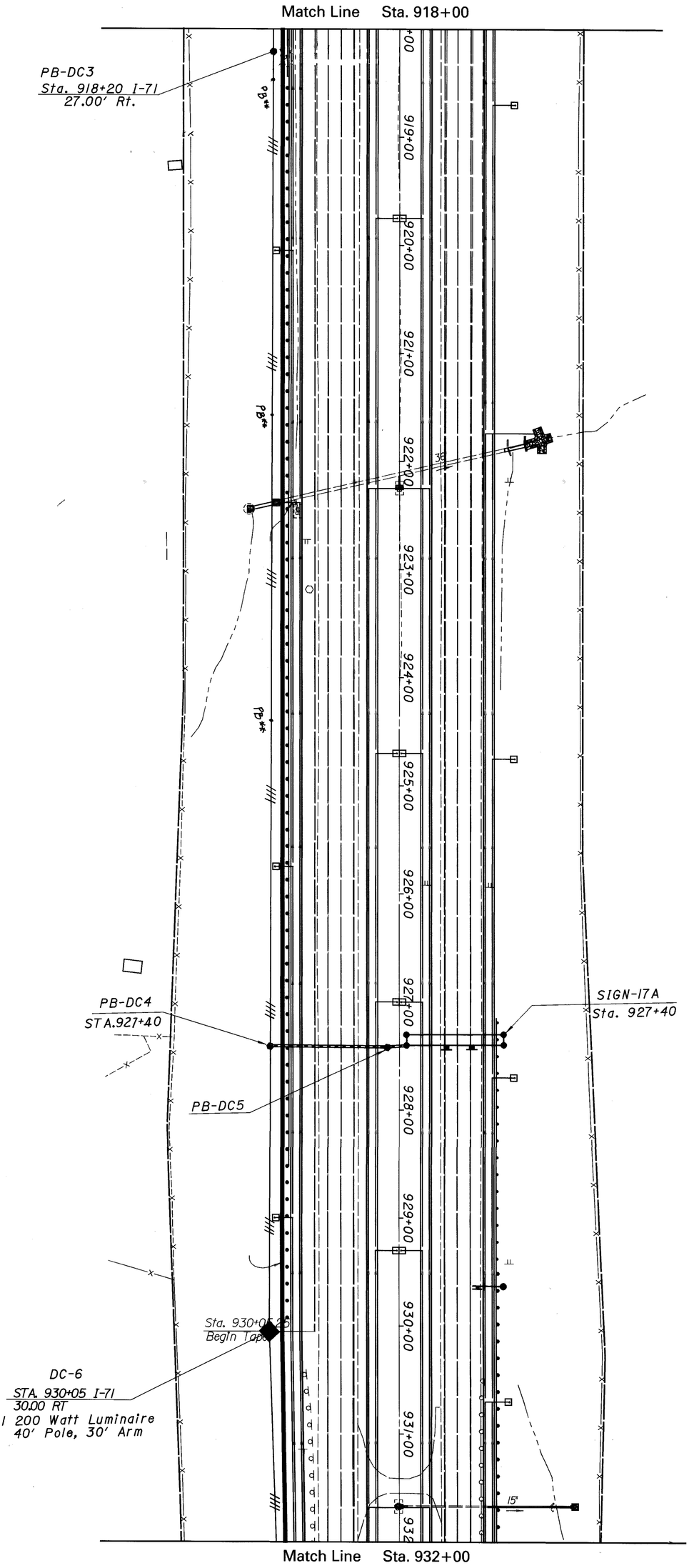

NOTES: FOR LEGEND, SEE SHEET 622

626 / 940	MED-71-15.78	S.R. 18 Interchange Partial Lighting	CALCULATED CHECKED	0 50 25 100 HORIZONTAL SCALE IN FEET

FILENAME: i:\pd_MED_IR71\DGN\Lighting\7885LP6.dgn
DATE & TIME: 10-DEC-1999 13:21
USERNAME: mfox
PROJECT: NONE

LEVELS ON: [1-64]
PLOT QUEUE: \\DOIPLOT\oce
REN. TABLE: i:\d01std\pld\Oce\Cross_OCE.pen

REF.FILE *1: i:\pd_MED_IR71\DGN\Lighting\conventional.dgn
REF.FILE *1 LEVELS ON: [35,37,38,64]
REF.FILE *2: i:\pd_med_ir71\dgn\abc2dcmb.dgn
REF.FILE *2 LEVELS ON: [2-4,8-16,18,20-52,54-59,61,62,64]

REF.FILE *3: i:\pd_MED_IR71\DGN\Lighting\alignmnt.dgn
REF.FILE *3 LEVELS ON: [3,5,9-37,39-52,54-57,59,60,64]
REF.FILE *4:
REF.FILE *4 LEVELS ON:

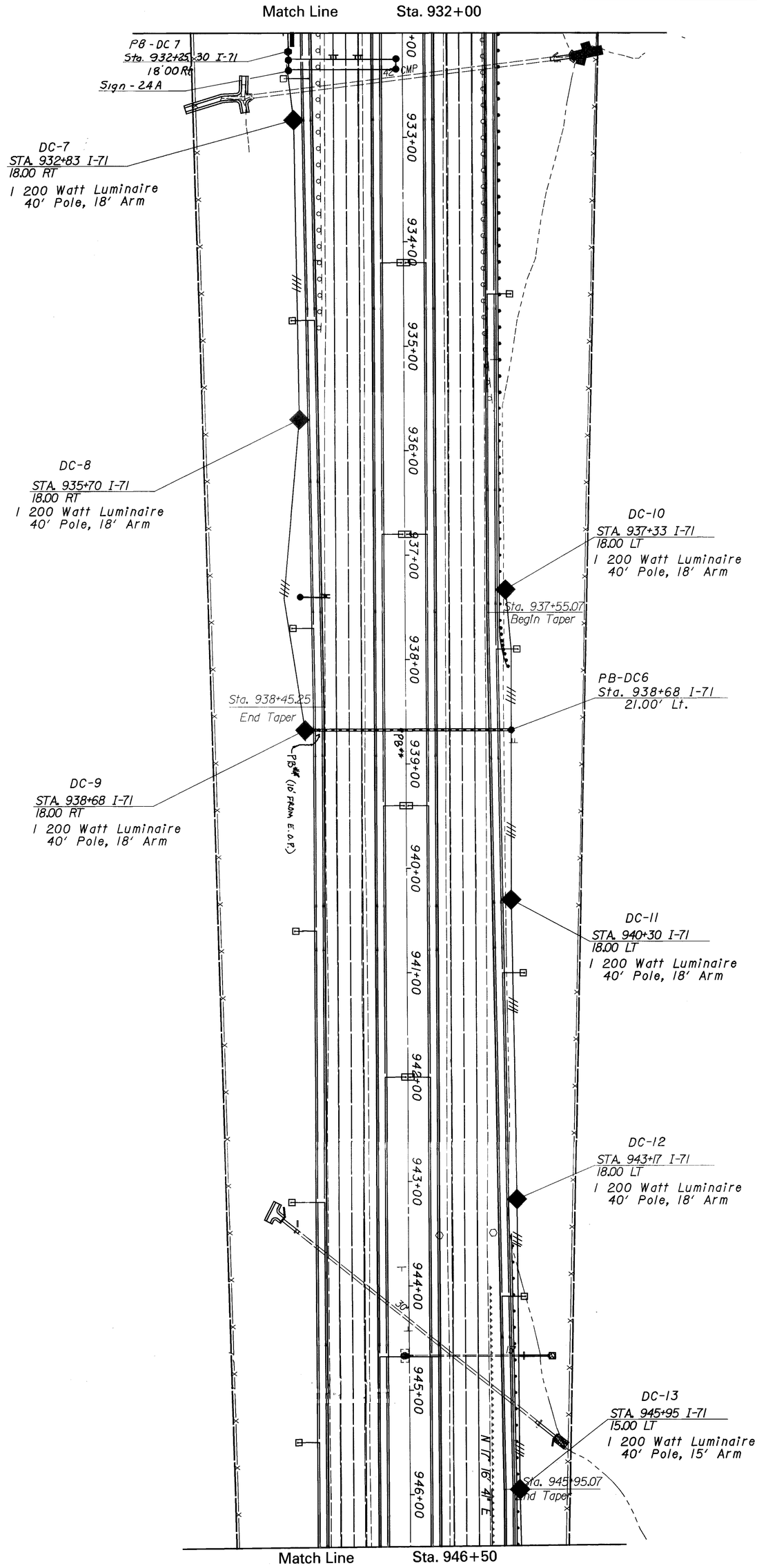

NOTES: FOR LEGEND, SEE SHEET 622

627 / 940	MED-71-15.78	S. R. 18 Interchange Partial Lighting	CALCULATED CHECKED 0 25 50 100 HORIZONTAL SCALE IN FEET

FILENAME: i:\pd_MED_IR71\DGN\Lighting\V885LP47.dgn
DATE & TIME: 10-DEC-1999 13:21
USERNAME: mfox
PROJECT: NONE

LEVELS ON: [1-64]
PLOT QUEUE: \\DOIPLOT\oce
PEN TABLE: i:\d01std\plot\Oce\Cross_OCE.pen

REF.FILE *1: i:\pd_MED_IR71\DGN\Lighting\conventional.dgn
REF.FILE *1 LEVELS ON: [35, 37, 38, 64]
REF.FILE *2: i:\pd_med_ir71\dgn\abc2dcmb.dgn
REF.FILE *2 LEVELS ON: [2-4, 8-16, 18, 20-52, 54-59, 61, 62, 64]

REF.FILE *3: i:\pd_MED_IR71\DGN\Lighting\allgnmnt.dgn
REF.FILE *3 LEVELS ON: [3, 5, 9-37, 39-52, 54-57, 59, 60, 64]
REF.FILE *4:
REF.FILE *4 LEVELS ON:

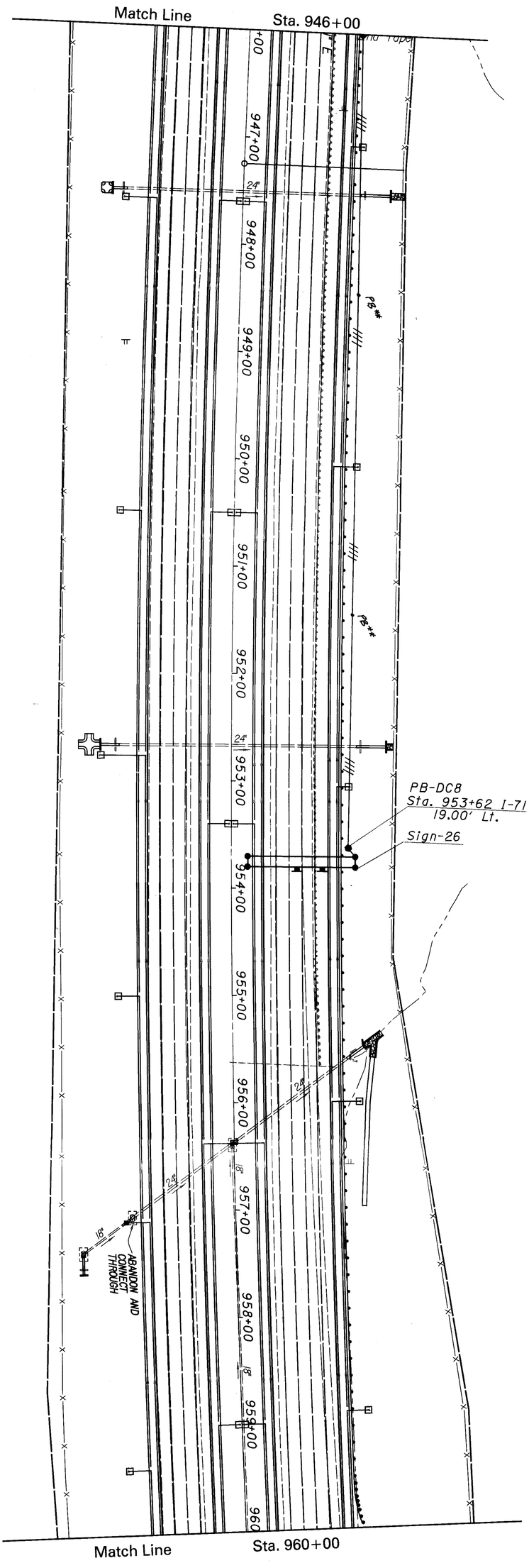

NOTES: FOR LEGEND, SEE SHEET 622

940 / 628	MED-71-15.78	S.R. 18 Interchange Partial Lighting	CALCULATED CHECKED	0 50 25 100 HORIZONTAL SCALE IN FEET

CONTROL CENTER DATA							
CONTROL CENTER	CONNECTED LOAD KVA	SERVICE ENTRANCE CONDUCTOR SIZE–AWG	ENCLOSURE RATING AMPS	CIRCUIT NUMBER	CIRCUIT LOAD AMPS.	CIRCUIT FUSE SIZE AMPS.	MAINTAINENCE AGENCY
I–271							
K	33.66	2	100	E	33.60	100	ODOT
				W	36.52	100	

NOTES: EXISTING POLE MOUNTED CONTROL CENTER AND SERVICE POLE AT STA. 51+07 GRANGER RD. SHALL BE REMOVED. A NEW POLE MOUNTED CONTROL CENTER SHALL BE INSTALLED AT THE SAME LOCATION.

FOR LEGEND, SEE SHEET 622

SEE SHEET 630 FOR UNDERPASS LIGHTING DETAILS.

0' 100' 200' 300'
SCALE IN FEET

SERVICE POLE STA. 5+07 40' LT(±) GRANGER RD.
SERVICE POLE STA. 5+19 40' LT(±)
POWER POLE STA. 52+28 40' LT.(±) GRANGER RD.
POLE MOUNTED CONTROL CENTER K STA. 5+07 40' LT.(±) GRANGER RD.
EK–1 STA. 965+63 CONN. E 42' RIGHT 4 LUMINAIRES 100' POLE
STA. 967+58 CONN. E. 15' RIGHT
STA. 967+58 CONN. E 15' RIGHT
STA. 965+23 CONN.W 15' LEFT
STA. 967+23 CONN.W 15' LEFT
WK–2 STA. 968+83 CONN. W 38' LEFT 4 LUMINAIRES 100' POLE
STA. 969+23 CONN.W 15' LEFT
STA. 970+58 CONN. E 15' RIGHT
EK–2 STA. 971+13 CONN. E 47' RIGHT 4 LUMINAIRES 100' POLE
STA. 971+23 CONN.W 15' LEFT
STA. 972+13 CONN.W 15' LEFT
STA. 972+13 CONN. E 15' RIGHT
STA. 972+13 15' RIGHT
STA. 972+83 CONN. E 15' RIGHT
STA. 973+23 CONN.W 15' LEFT
STA. 974+53 CONN. E 15' RIGHT
WK–3 STA. 974+13 CONN. W 35' LEFT 4 LUMINAIRES 110' POLE
STA. 975+23 CONN.W 15' LEFT
STA. 977+23 CONN.W 15' RIGHT
STA. 976+18 CONN. E 15' RIGHT
EK–3 STA. 976+63 CONN.E 50' RIGHT 4 LUMINAIRES 110' POLE
STA. 977+88 CONN. E 15' LEFT
STA. 977+88 CONN. E 15' RIGHT
STA. 978+18 CONN. E 15' RIGHT
WK–4 STA. 978+63 CONN. W 100' RIGHT 6 LUMINAIRES 110' POLE
STA. 980+18 CONN. E 15' RIGHT
STA. 981+23 CONN.W 15' RIGHT
STA. 982+18 CONN. E 15' RIGHT
EK–4 STA. 982+631–71 60' RIGHT 6 LUMINAIRES 110' POLE
STA. 983+23 CONN.W 15' RIGHT
WK–5 STA. 984+38 CONN. W 80' RIGHT 6 LUMINAIRES 110' POLE
STA. 984+18 CONN. E. 15' RIGHT
STA. 985+23 CONN.W 15' RIGHT
STA. 986+18 CONN. E 15' RIGHT
STA. 987+23 CONN.W 15' RIGHT
STA. 988+18 CONN. E 15' RIGHT
EK–5 STA. 987+68 CONN. E 60' LEFT WITH 4 LUMINAIRES 110' POLE
STA. 988+13 CONN. W 15' RIGHT
STA. 989+13 CONN. W 15' RIGHT
STA. 990+18 CONN. E 15' RIGHT
STA. 991+13 CONN. W 15' RIGHT
EK–6 STA. 991+63 CONN. E 40' LEFT WITH 4 LUMINAIRES 110' POLE
STA. 992+18 CONN. E 15' RIGHT
STA. 992+73 I–71 30' LEFT 4 LUMINAIRES 110' POLE
STA. 993+43 CONN. E 15' RIGHT
STA. 993+43 CONN. E 60' LEFT
STA. 993+63 CONN. W 15' RIGHT
STA. 996+63 CONN. W 15' RIGHT
STA. 999+43 CONN. W 15' LEFT
STA. 1000+13 CONN. W 15' LEFT
EK–7 STA. 990+63 CONN. W 120' RIGHT 6 LUMINAIRES 100' POLE
WK–7 STA. 990+43 CONN. W 65' LEFT WITH 4 LUMINAIRES 100' POLE
WK–1 STA. 962+63 CONN. W STA. LEFT 36' LUMINAIRES 100' POLE
STA. 961+63 CONN.W 15' LEFT
STA. 963+48 CONN. W 15' LEFT
PB–W1 STA. 964+11
PB–W2 STA. 987+73
PB–W3 STA. 989+73
PB–W4 STA. 988+13
PB–W5 STA. 990+13
CONNECTION W
CONNECTION E
CIRCUIT W 2–NO. 2 AWG
CIRCUIT E 2–NO. 2 AWG
CIRCUIT W 2–NO. 4 AWG
CIRCUIT E 2–NO. 4 AWG
STA. 979+23 CONN.W 15' RIGHT
BRIDGE NO. MED–71–1870 L & R
AT&T FIBERLINE
28,160 ADT
O.E. TOWER 68' M.H.
O.E. TOWER
SOHIO EDISON R/W=150 FT. CARLISLE–STAR 345 KV LINE
MATCH LINE STA. 965+00
MATCH LINE
W. GRANGER RD.
54.75'
59.7'
15"
18"
24"
36"
42"
84"
96"
150'
960+00
963+00
965+00
970+00
975+00
980+00
985+00
990+00
Sign #30 Sta. 971+00 IR–71 Connection to Lighting Circuit made at Light Tower EK–2 Terminal Block. Run conduit from tower foundation to truss sign.

Note:
All references to 2 - No. 4 AWG & 2 - No. 2 AWG
Shall Be: 3 - No. 4 AWG & 3 - No. 2 AWG

HORIZONTAL SCALE IN FEET
0 50 100 200
CALCULATED
CHECKED

I–271 Interchange
High Mast Lighting

MED–71–15.78

629
940

I–271 INTERCHANGE
HIGH MAST LIGHTING

mtl-FILE: *1:\ldot_med_jrt\dgn\mmmm.dgn
REF_FILE *1:LEVELS ON:15,641
REF_FILE *2:\ldot_med_jrt\dgn\abc2comb.dgn
REF_FILE *2:LEVELS ON:11-641
REF_FILE *2:\ldot_med_jrt\dgn\abc2comb.dgn
REF_FILE *2:LEVELS ON:12-4,8-16,18,20-52,54-59,61,62,641
REF_FILE *3:\ldot_med_jrt\dgn\proatrindgn
REF_FILE *3:LEVELS ON:11-641
REF_FILE *4:\ldot_med_jrt\dgn\blankstr.dgn
REF_FILE *4:LEVELS ON:15,16,18,21,24,39,55,56,59,641
REF_FILE *4:LEVELS ON:15,16,18,21,24,39,55,56,59,641
I:\LEVELS ON:11-641
PLOT OUTLINE: \2D\PLOT\oss
PEN TABLES: h:\d0\std\plot\GeoCross_OCE.pen
DATE & TIME: 10-DEC-1999 13:21
USERNAME: mfox
PROJECT: NONE

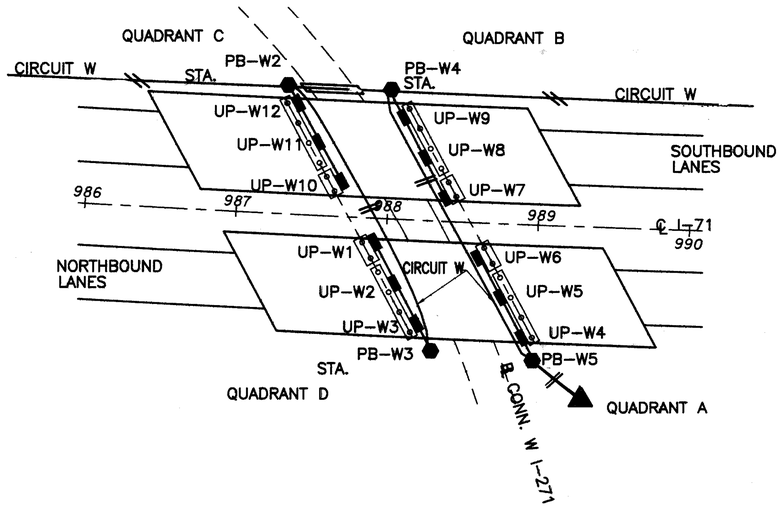

PROPOSED UNDERPASS LIGHTING PLAN

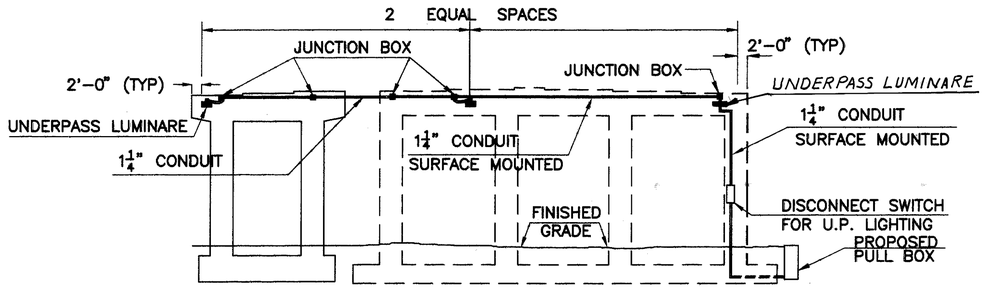

PROPOSED UNDERPASS LIGHTING, QUADRANT D

NOTE: REFER TO STANDARD DRAWING HL–20.31, (5–1–87) FOR DETAILS.

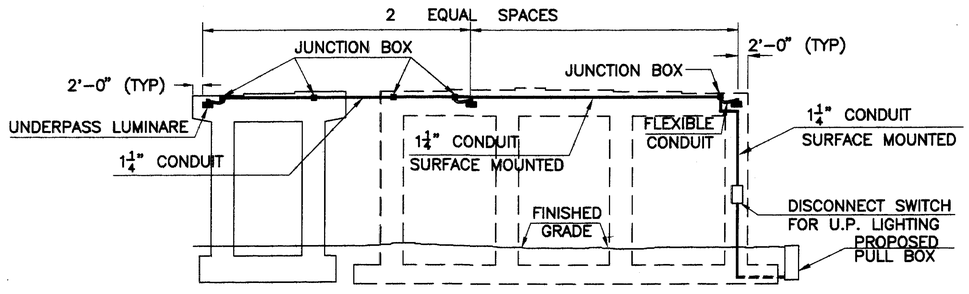

PROPOSED UNDERPASS LIGHTING, QUADRANT C
QUADRANTS A & B SIMILAR

NOTE: REFER TO STANDARD DRAWING HL–20.31, (5–1–87) FOR DETAILS.

NOTES: FOR LEGEND, SEE SHEET *622*

HORIZONTAL SCALE IN FEET
0 25 50 100

CALCULATED | CHECKED

I–271 Interchange
Underpass Lighting Details

MED–71–15.78

630
940

FILE NAME: i:\dgn_mtl\jht\usr\lighting\d830s1-sdgn
DATE & TIME: 10-DEC-1999 13:22
USERNAME: mfox
PROJECT: NONE
LEVELS ON: 1 63 64
PLOT QUEUE: \\DUPLOT\oce
PEN TABLE: i:\dot\dfs\pat\OakCross.OCE.pen
REF. FILE *1 LEVELS ON: 13, 9-37, 39-52, 54-57, 59, 60, 641
REF. FILE *2
REF. FILE *2 LEVELS ON:
REF. FILE *3
REF. FILE *3 LEVELS ON:
REF. FILE *4
REF. FILE *4 LEVELS ON:

CONTROL CENTER DATA							
CONTROL CENTER	CONNECTED LOAD KVA	SERVICE ENTRANCE CONDUCTOR SIZE–AWG	ENCLOSURE RATING AMPS	CIRCUIT NUMBER	CIRCUIT LOAD AMPS.	CIRCUIT FUSE SIZE AMPS.	MAINTAINENCE AGENCY
SR–3							
J	5.11	4	60	A	2.12	30	ODOT
				B	4.01	30	
				C	4.51	30	

NOTE: Structure plans show 2 inch conduit is within the concrete parapet.
The length of the conduit in the concrete parapet is 75.5 feet.
Where the conduit leaves the structure an expansion sleeve should be included.
TWO ADDITIONAL PULL BOXES, 713.08, 24" HAVE BEEN INCLUDED IN THE LIGHTING GENERAL SUMMARY FOR BRIDGE NO. MED-71-2092W WHICH WERE NOT INCLUDED IN THE COMMON STRUCTURE SHEET - ITS CONDUIT DETAILS TABLE ON PAGE 682

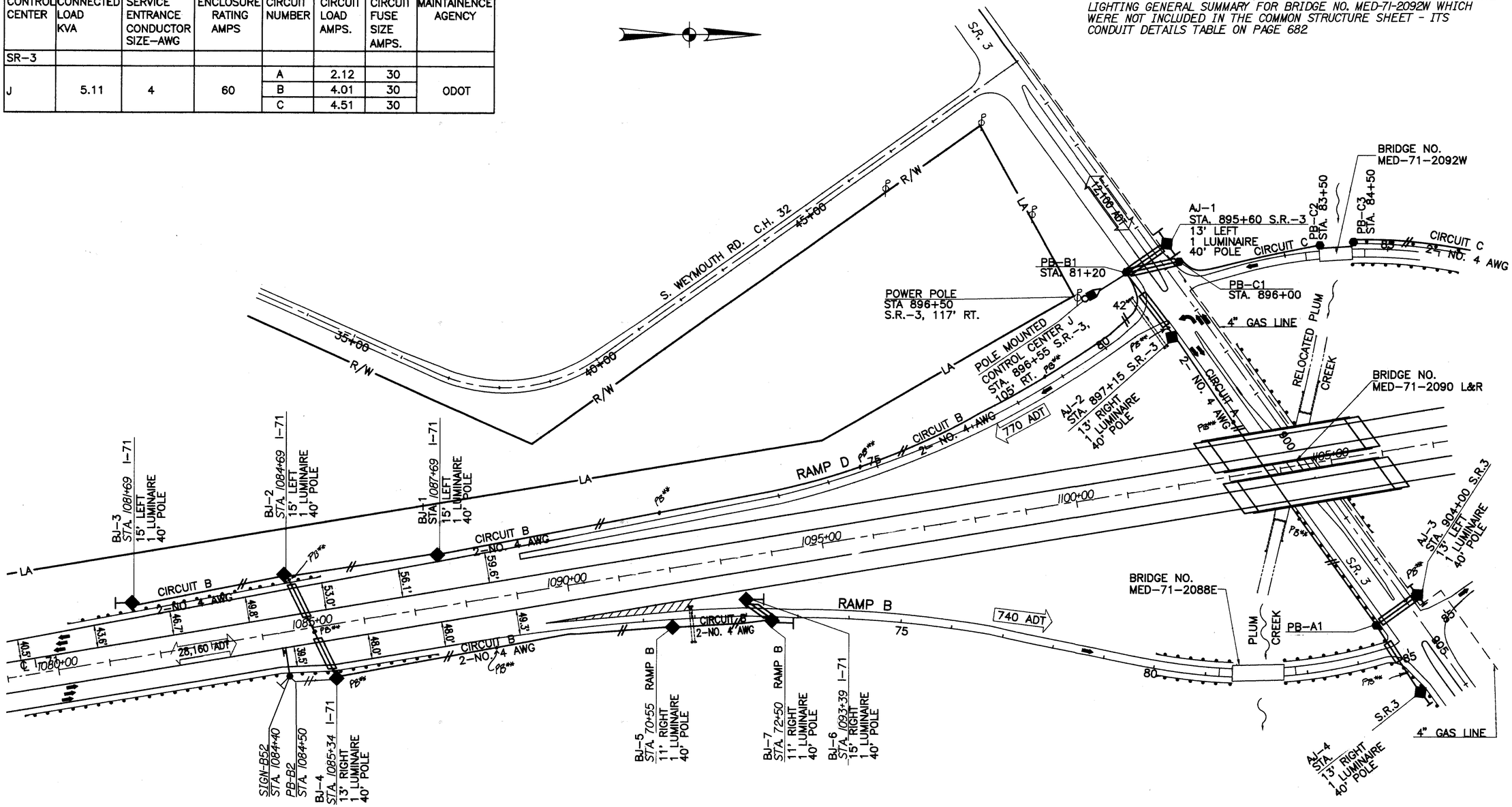

Note:
All references to 2 - No. 4 AWG & 2 - No. 2 AWG
Shall Be: 3 - No. 4 AWG & 3 - No. 2 AWG

NOTES: FOR LEGEND, SEE SHEET 622.

2" CONDUIT SHALL BE INSTALLED IN THE RIGHT PARAPET WALL OF BRIDGE NO. MED-71-2088E AND CAPPED AT EACH END OF THE PARAPET. SEE SHEET 682 FOR DETAILS.

0' 100' 200' 300'
SCALE IN FEET

S.R.3 INTERCHANGE
PARTIAL LIGHTING

HORIZONTAL SCALE IN FEET 0 50 100 200
CALCULATED
CHECKED

S.R. 3 Interchange
Partial Lighting

MED-71-15.78

631
940

REF.FILE *1: \\ADOT_MED_IRT\Design\Lighting\CONVENTIONAL.DGN
REF.FILE *1 LEVELS ON: 15, 20, 641
REF.FILE *2: \\ADOT_MED_IRT\DGN\Lighting\CONVENTIONAL.DGN
REF.FILE *2 LEVELS ON: 138, 61, 641
REF.FILE *3: LEVELS ON:
REF.FILE *3 LEVELS ON:
REF.FILE *4: LEVELS ON:
REF.FILE *4 LEVELS ON:

FILENAME: \\ADOT_MED_IRT\DGN\Lighting\V8DGN\SR3-IVLdgn
DATE & TIME: 10-DEC-1999 13:22
USERNAME: mfox
PROJECT: NONE
LEVELS ON: 11-641
PLOT SCALE: 1.000000
REF TABLE: \\ADOT_MED_IRT\DGN\Data\Cross_DCE.pen

NOTE: SEE NOTE ON SHEET 631 CONCERNING THE CONDUIT RUNNING BETWEEN PULL BOXES PB-C2 & PBC3.

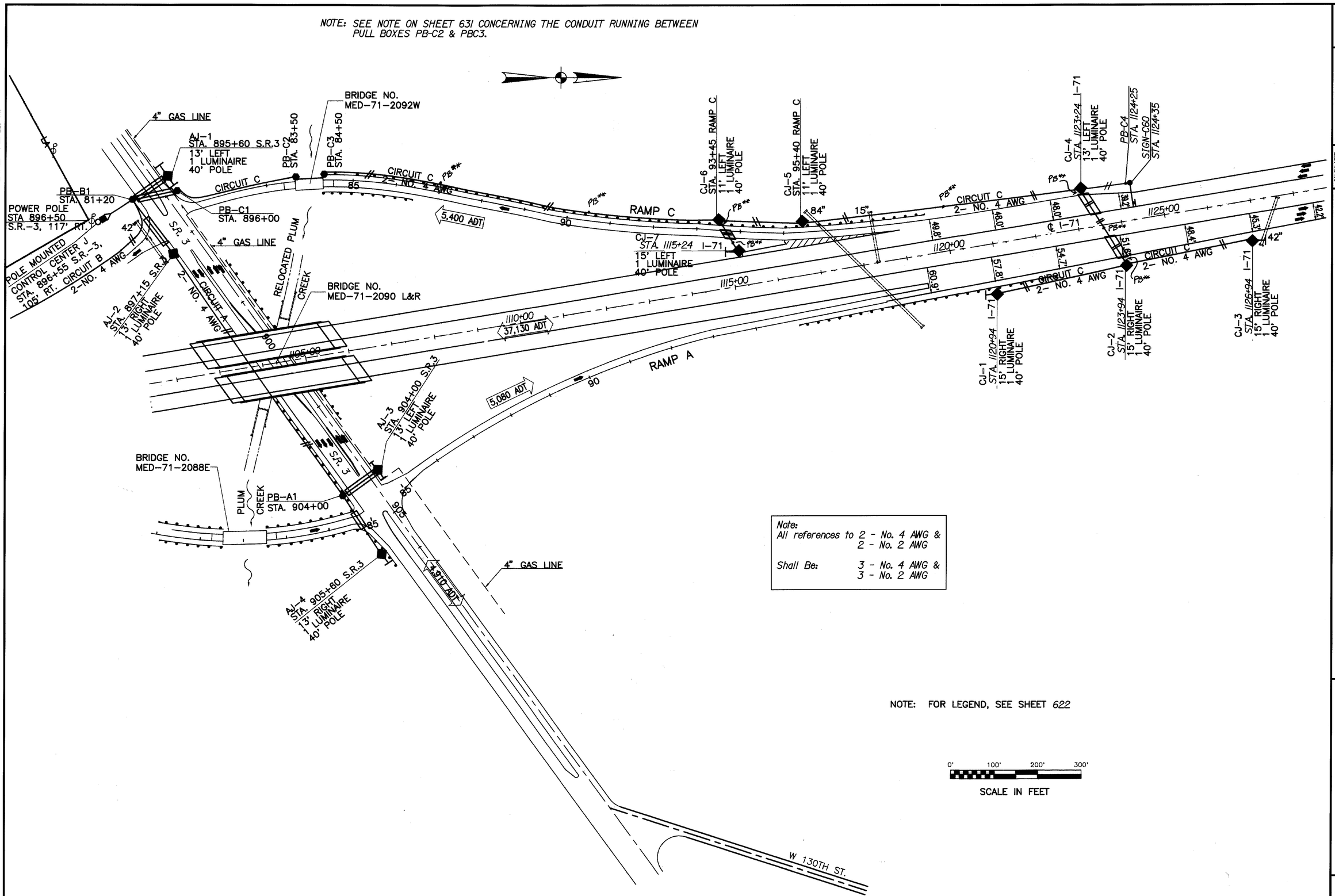

Note:
All references to 2 - No. 4 AWG & 2 - No. 2 AWG

Shall Be: 3 - No. 4 AWG & 3 - No. 2 AWG

NOTE: FOR LEGEND, SEE SHEET *622*

0' 100' 200' 300'
SCALE IN FEET

N

0 50 100 200
HORIZONTAL SCALE IN FEET

CALCULATED

CHECKED

S.R. 3 Interchange
Partial Lighting

MED-71-15.78

632
940

S.R.3 INTERCHANGE
PARTIAL LIGHTING

FILE NAME: I:\ODOT\MED\J_JH71\DGN\LIGHTING\XXSJLP11.dgn
DATE & TIME: 10-DEC-1998 13:23
USERNAME: mfox
PROJECT: NONE
LEVELS ON: 1-641
PLOT OUTLINE: \\ODOTPLOT\oce
REQ'D TABLE: I:\ODOT\DGN\OceVCross_OCE.pen
REF. FILE *1: I:\ODOT\MED\J_JH71\DGN\ALIGNMENT.dgn
REF. FILE *1 LEVELS ON: 1,3,5,9-37,39-52,54-57,59,60,641
REF. FILE *2: I:\ODOT\MED\J_JH71\DGN\Lighting\conventional.dgn
REF. FILE *2 LEVELS ON: 1,37,38,61,641
REF. FILE *3: I:\ODOT\MED\J_JH71\DGN\BRKONTR.dgn
REF. FILE *3 LEVELS ON: 1,5,6,16,18,21,24,33,55,56,59,641
REF. FILE *4:
REF. FILE *4 LEVELS ON:

NOTE: FOR LEGEND, SEE SHEET 622.

NOTE: All stationing refers to mainline I-71 unless otherwise specified.

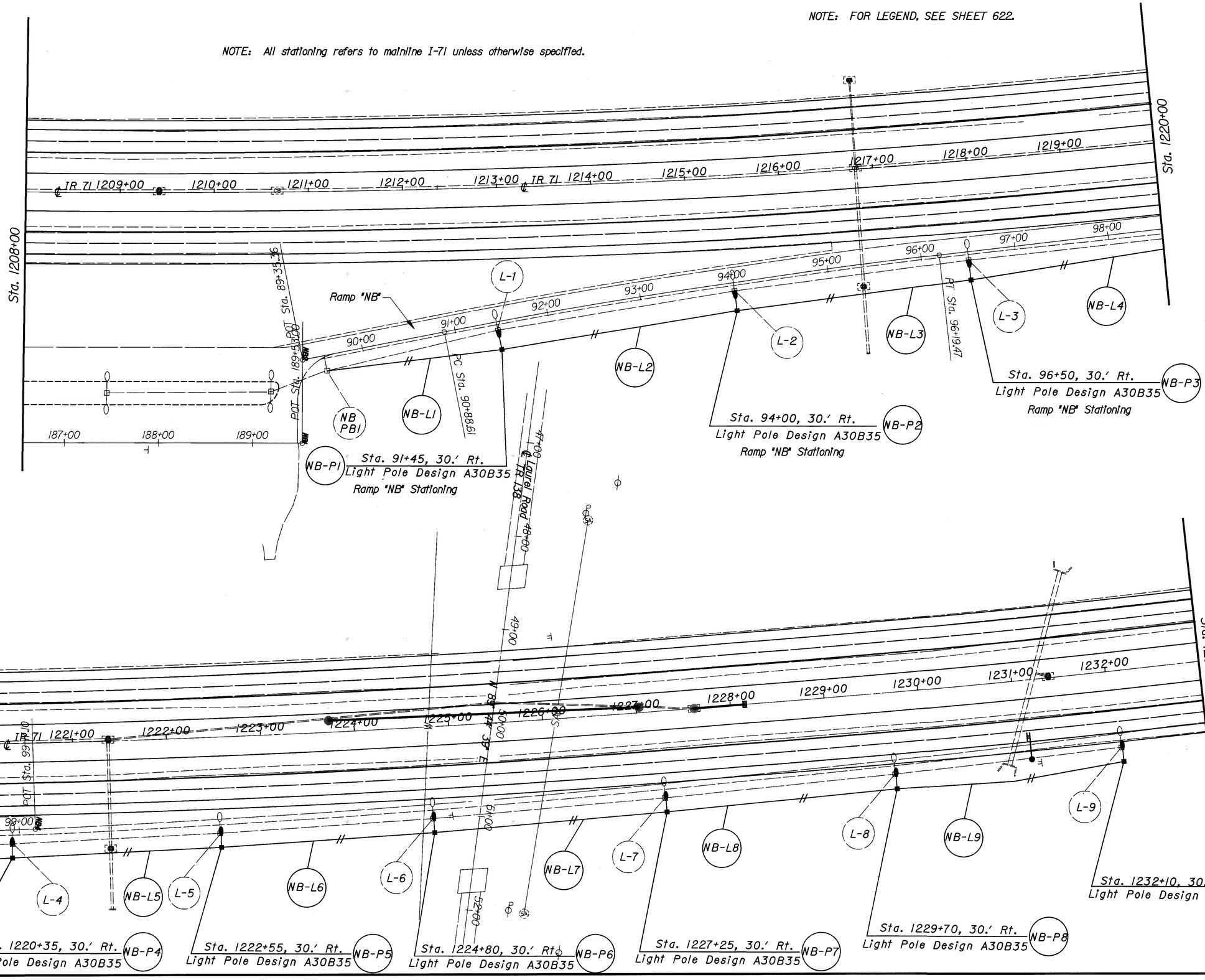
Sta. 1208+00
Sta. 1220+00
Sta. 1233+00
IR 71 1209+00
1210+00
1211+00
1212+00
1213+00
IR 71 1214+00
1215+00
1216+00
1217+00
1218+00
1219+00
1220+00
1221+00
1222+00
1223+00
1224+00
1225+00
1226+00
1227+00
1228+00
1229+00
1230+00
1231+00
1232+00
187+00
188+00
189+00
90+00
91+00
92+00
93+00
94+00
95+00
96+00
97+00
98+00
99+00
49+00
47+00
52+00
Ramp "NB"
POT Sta. 89+35.36
POT Sta. 189+51.00
PC Sta. 90+88.61
PT Sta. 96+19.47
POT Sta. 99+71.10
L-1
L-2
L-3
L-4
L-5
L-6
L-7
L-8
L-9
NB-L1
NB-L2
NB-L3
NB-L4
NB-L5
NB-L6
NB-L7
NB-L8
NB-L9
NB PBI
NB-P1
Sta. 91+45, 30.' Rt.
Light Pole Design A30B35
Ramp "NB" Stationing
NB-P2
Sta. 94+00, 30.' Rt.
Light Pole Design A30B35
Ramp "NB" Stationing
NB-P3
Sta. 96+50, 30.' Rt.
Light Pole Design A30B35
Ramp "NB" Stationing
NB-P4
Sta. 1220+35, 30.' Rt.
Light Pole Design A30B35
NB-P5
Sta. 1222+55, 30.' Rt.
Light Pole Design A30B35
NB-P6
Sta. 1224+80, 30.' Rt.
Light Pole Design A30B35
NB-P7
Sta. 1227+25, 30.' Rt.
Light Pole Design A30B35
NB-P8
Sta. 1229+70, 30.' Rt.
Light Pole Design A30B35
NB-P9
Sta. 1232+10, 30.' Rt.
Light Pole Design A30B35
Left Ramp "NB"
138.00' Left
Left Ramp "NB" 47+00
Left Ramp "NB" 49+00
Left Ramp "NB" 52+00
Left Ramp "NB" 54+00
Left Ramp "NB" 56+00
Left Ramp "NB" 58+00
Left Ramp "NB" 59+00
Left Ramp "NB" 61+00
Left Ramp "NB" 63+00
Left Ramp "NB" 64+00
Left Ramp "NB" 66+00
Left Ramp "NB" 68+00
Left Ramp "NB" 70+00
Left Ramp "NB" 72+00
Left Ramp "NB" 74+00
Left Ramp "NB" 76+00
Left Ramp "NB" 78+00
Left Ramp "NB" 80+00
Left Ramp "NB" 82+00
Left Ramp "NB"

CONTROL CENTER DATA							
CONTROL CENTER	CONNECTED LOAD KVA	SERVICE ENTRANCE CONDUCTOR SIZE–AWG	ENCLOSURE RATING AMPS	CIRCUIT NUMBER	CIRCUIT LOAD AMPS.	CIRCUIT FUSE SIZE AMPS.	MAINTAINENCE AGENCY
SR–303							
M	19.20	4	60	A	16.80	60	ODOT
				B	23.20	60	
N	19.78	4	60	C	29.20	60	ODOT
				D	12.00	60	

Note:
All references to 2 - No. 4 AWG & 2 - No. 2 AWG
Shall Be: 3 - No. 4 AWG & 3 - No. 2 AWG

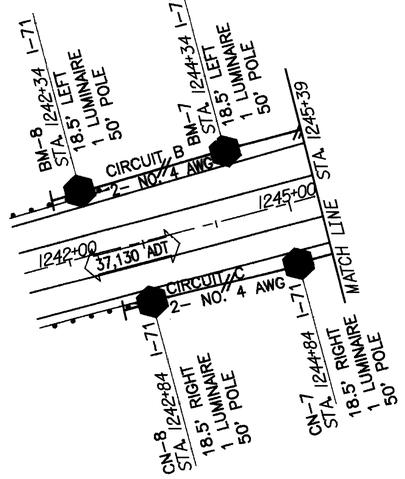

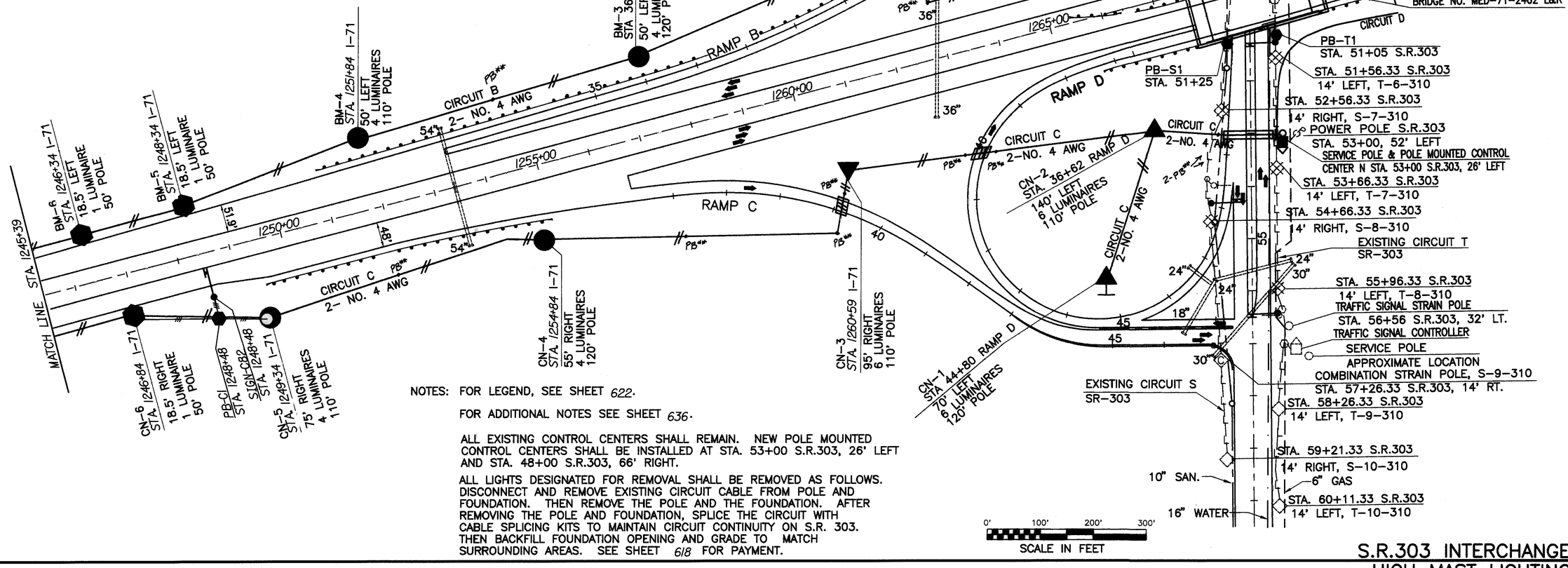

NOTES: FOR LEGEND, SEE SHEET 622.

FOR ADDITIONAL NOTES SEE SHEET 636.

ALL EXISTING CONTROL CENTERS SHALL REMAIN. NEW POLE MOUNTED CONTROL CENTERS SHALL BE INSTALLED AT STA. 53+00 S.R.303, 26' LEFT AND STA. 48+00 S.R.303, 66' RIGHT.

ALL LIGHTS DESIGNATED FOR REMOVAL SHALL BE REMOVED AS FOLLOWS. DISCONNECT AND REMOVE EXISTING CIRCUIT CABLE FROM POLE AND FOUNDATION. THEN REMOVE THE POLE AND THE FOUNDATION. AFTER REMOVING THE POLE AND FOUNDATION, SPLICE THE CIRCUIT WITH CABLE SPLICING KITS TO MAINTAIN CIRCUIT CONTINUITY ON S.R. 303. THEN BACKFILL FOUNDATION OPENING AND GRADE TO MATCH SURROUNDING AREAS. SEE SHEET 618 FOR PAYMENT.

S.R.303 INTERCHANGE
HIGH MAST LIGHTING

S.R. 303 Interchange
High Mast Lighting

HORIZONTAL SCALE IN FEET 0 50 100 200

CALCULATED | CHECKED

MED–71–15.78

634
940

REF. FILE *1:\ldot_med_lrf\ndgn\ndgnmmm.dgn
REF. FILE *1 LEVELS ON:1,5,20,641
REF. FILE *2:\ldot_med_lrf\ndgn\ndkartr.dgn
REF. FILE *2 LEVELS ON:1,5,16,18,21,24,39,55,56,59,641
REF. FILE *3:\ldot_med_lrf\ndgn\ndkartr.dgn
REF. FILE *3 LEVELS ON:1,5,16,18,21,24,39,55,56,59,641
REF. FILE *4:\ldot_med_lrf\ndgn\ddcombo.dgn
REF. FILE *4 LEVELS ON:1,2-4,8-16,18,20-52,54-59,61,62,641

LEVELS ON:1-641
PLOT OBJECT:\ODOT.PLOT.tbl
PEN TABLE:I:\v08.stm\plot\DetCross_OCE.pen
FILENAME:I:\DGN_MCLU_LRF\NJK\NJgnmgv185LF13.dgn
DATE & TIME:10-DEC-1999 13:24
USERNAME:mfox
PROJECT:NONE

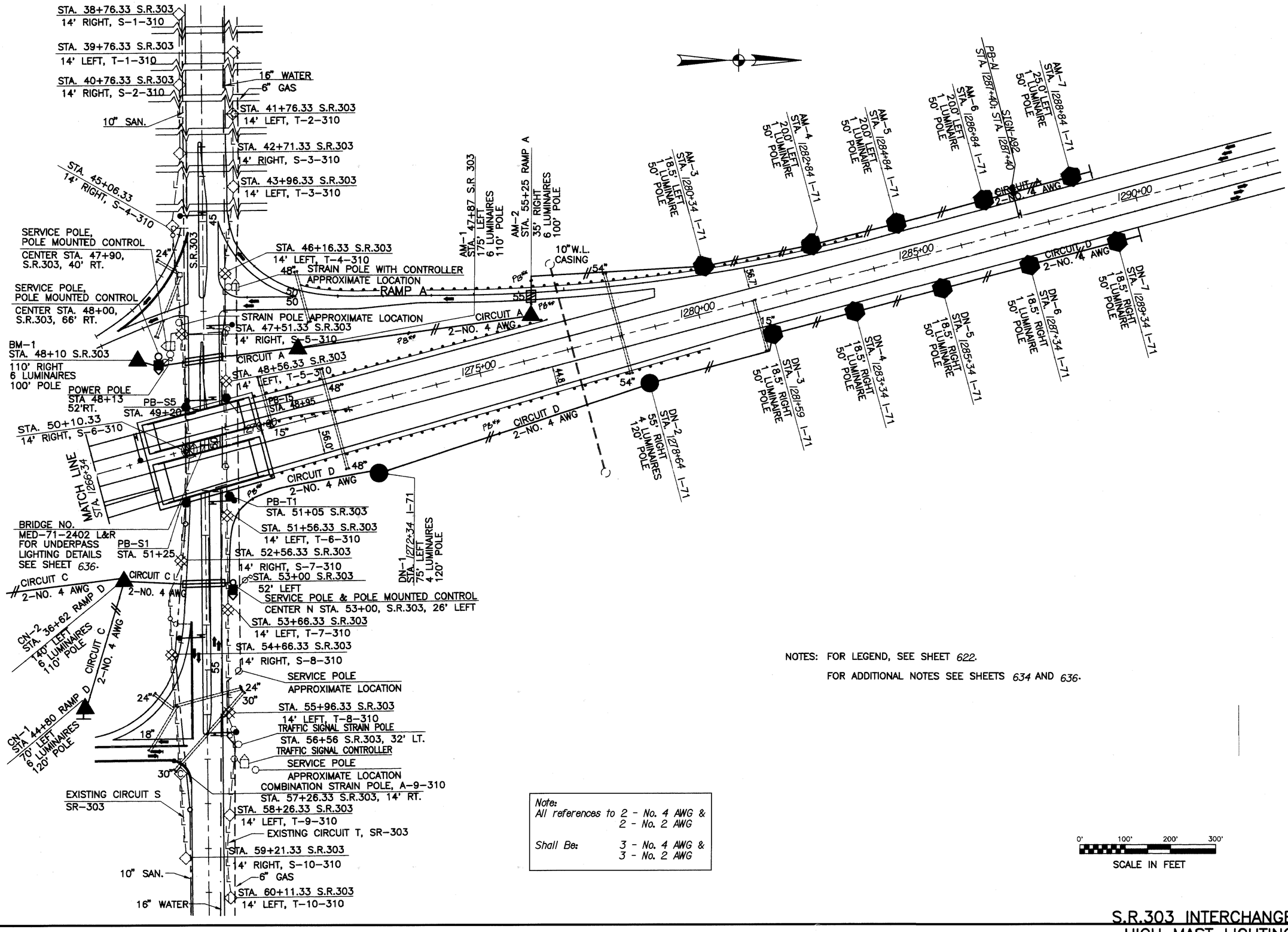

NOTES: FOR LEGEND, SEE SHEET 622.

FOR ADDITIONAL NOTES SEE SHEETS 634 AND 636.

Note:	
All references to	2 - No. 4 AWG & 2 - No. 2 AWG
Shall Be:	3 - No. 4 AWG & 3 - No. 2 AWG

0' 100' 200' 300'

SCALE IN FEET

S.R.303 INTERCHANGE
HIGH MAST LIGHTING

0 50 100 200 HORIZONTAL SCALE IN FEET

CALCULATED

CHECKED

S.R. 303 Interchange
High Mast Lighting

MED-71-15.78

635
940

REF. FILE *1 \\hdot_med_jrr\signmmm.dgn
REF. FILE *1 LEVELS ON:1,3,5,9-37,39-52,54-57,59,60,641
REF. FILE *2 \\hdot_med_jrr\dgn\abc2combudgn
REF. FILE *2 LEVELS ON:12-4,8-16,18,20-52,54-59,61,62,641
REF. FILE *3 \\hdot_med_jrr\dgn\ordercontrolsudgn
REF. FILE *3 LEVELS ON:1(-641)
REF. FILE *4 \\hdot_med_jrr\dgn\lohtextr.dgn
REF. FILE *4 LEVELS ON:1(5,16,18,21,24,39,55,56,641
REF. FILE *4 LEVELS ON:1(5,16,18,21,24,39,55,56,641
FILE NAME: \\HDOT_MED_JRR\MAIN\Lighting\v8DGN\Hmdgn
DATE & TIME: 10-DEC-1999 13:25
USERNAME: mfox
PROJECT: NONE
LEVELS ON:1(-641
PLOT QUEUE: \\QUEPLOT\oce
PEN TABLE: \\HDOT\dot\plot\OceCross_OCE.pen

SIGN-150B 1-175W LUMINAIRE
SIGN- 151 1-175W LUMINAIRE

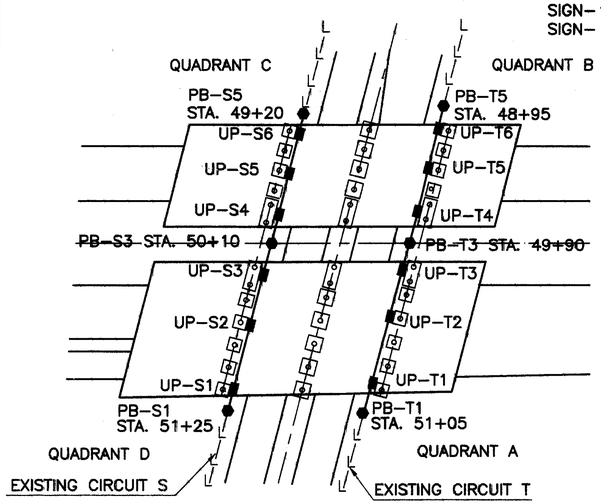

PROPOSED UNDERPASS LIGHTING PLAN

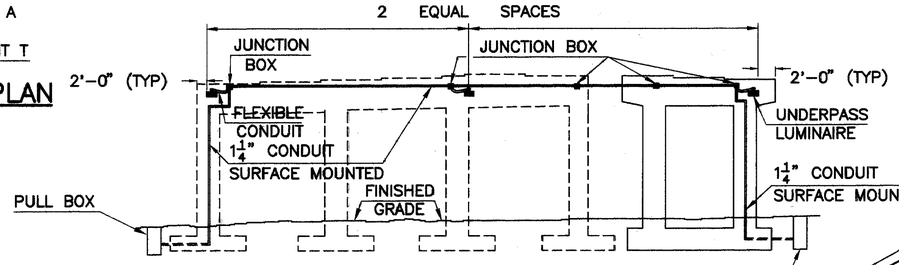

PROPOSED UNDERPASS LIGHTING QUADRANT B
QUADRANT D SIMILAR

NOTE: 1-1/4" CONDUIT TO BRIDGE MOUNTED SIGN SHALL BE MOUNTED TO BOTTOM OF BRIDGE DECK.

Note:
All references to 2 - No. 4 AWG & 2 - No. 2 AWG
Shall Be: 3 - No. 4 AWG & 3 - No. 2 AWG

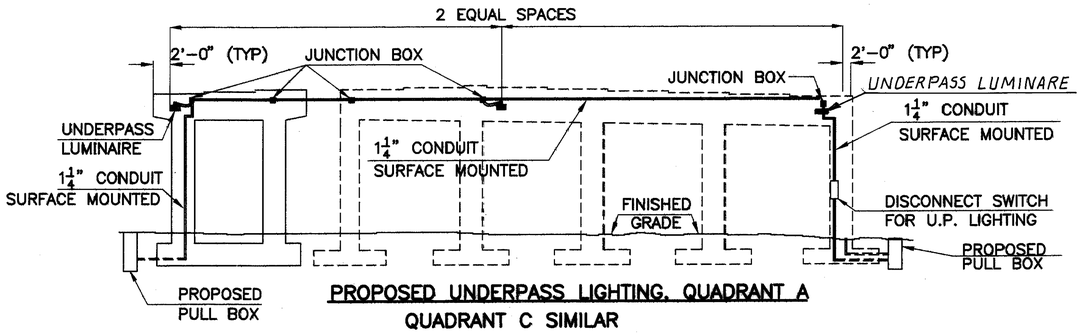

PROPOSED UNDERPASS LIGHTING, QUADRANT A
QUADRANT C SIMILAR

NOTE: ALL EXISTING SIGN LIGHTING COMPONENTS SHALL BE REMOVED.

NOTE: S.R. 303 CIRCUITS S AND T SHALL REMAIN IN PLACE AND ALL LIGHTS DESIGNATED FOR REMOVAL SHALL BE REMOVED. THE UNDERPASS LIGHTING WILL BE ADDED TO S.R.303 CIRCUITS S AND T.
ALL LIGHT POLE FOUNDATIONS SHALL BE REMOVED 4 FEET BELOW FINSHED GRADE. PAYMENT SHALL BE INCLUDED WITH ITEM 202, LIGHT POLE FOUNDATION REMOVED AND A ITEM 625, CABLE SPLICING KIT PROVIDED TO COMPLETE THE CIRCUIT.

FOR ADDITIONAL NOTES SEE SHEET 634.
FOR LEGEND SEE SHEET 622.

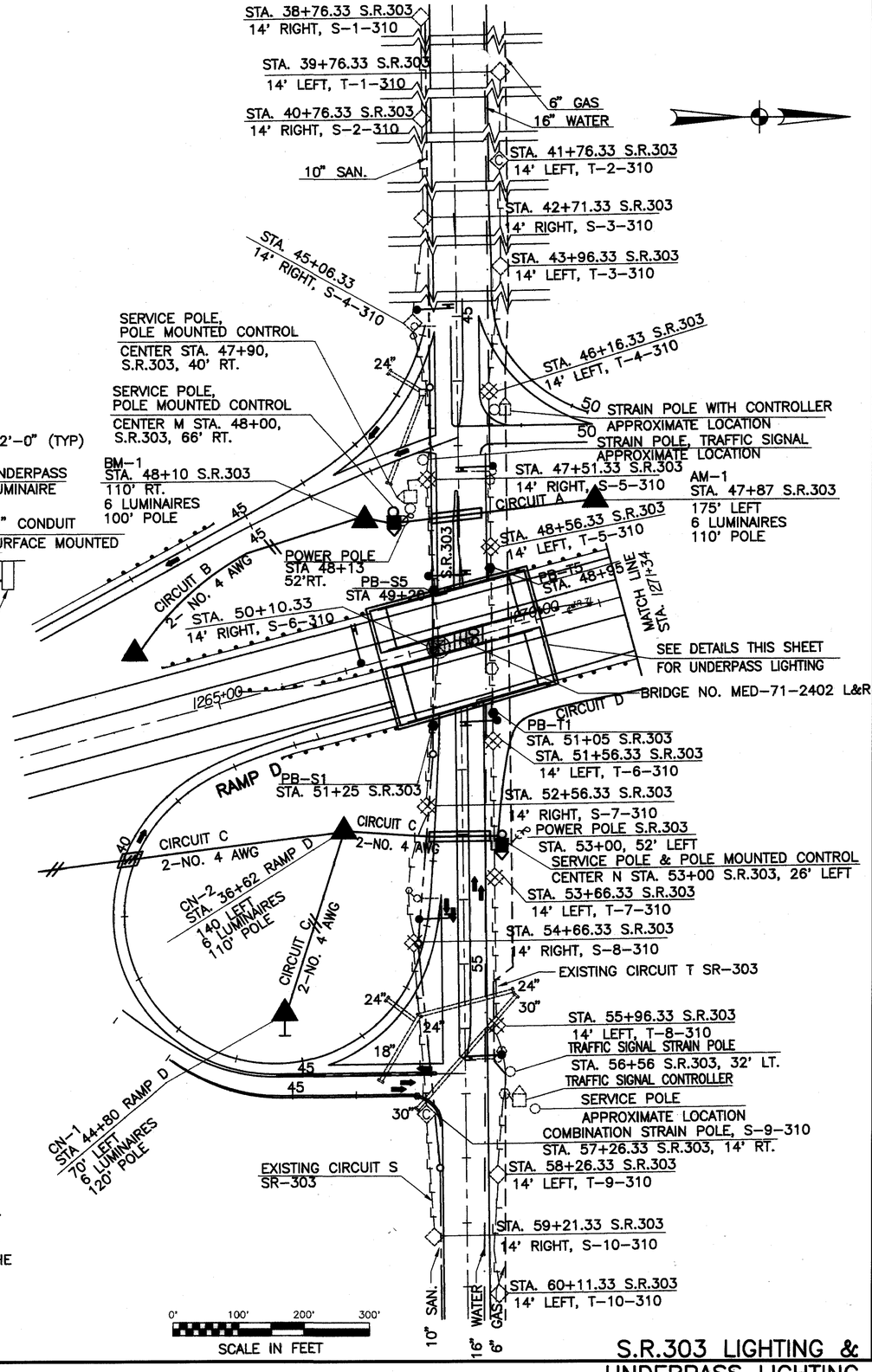

S.R.303 LIGHTING & UNDERPASS LIGHTING

HORIZONTAL SCALE IN FEET

CALCULATED | CHECKED

S.R. 303 Lighting and Underpass Lighting

MED-71-15.78

636
940

REF.FILE *1: \\ODOT_MED_IT\rdalignment.dgn
REF.FILE *1 LEVELS ON: 1,3,5,9-37,39-52,54-57,59,60,641
REF.FILE *2: \\ODOT_MED_IT\TRAFFIC\Lighting\conventional.dgn
REF.FILE *2 LEVELS ON: 1,37,38,61,641
REF.FILE *3:
REF.FILE *3 LEVELS ON:
REF.FILE *4:
REF.FILE *4 LEVELS ON:
FILENAME: \\ODOT_MED_IT\DATA\TRAFFIC\Lighting\CONVENTIONAL.DGN
DATE & TIME: 10-DEC-1999 13:25
USERNAME: mfox
PROJECT: NONE
LEVELS ON: 1-641
ACTIVE DGN: \\ODOT_MED_IT\DATA\TRAFFIC\Lighting\CONVENTIONAL.DGN
REF FILE: \\ODOT_MED_IT\DATA\TRAFFIC\Lighting\CrossCross_OCE.pen

CIRCUIT DIAGRAMS

REF.FILE *1 LEVELS ON:
REF.FILE *1 LEVELS ON:
REF.FILE *2 LEVELS ON:
REF.FILE *2 LEVELS ON:
REF.FILE *3 LEVELS ON:
REF.FILE *4 LEVELS ON:
REF.FILE *4 LEVELS ON:

SR-18 CIRCUIT A

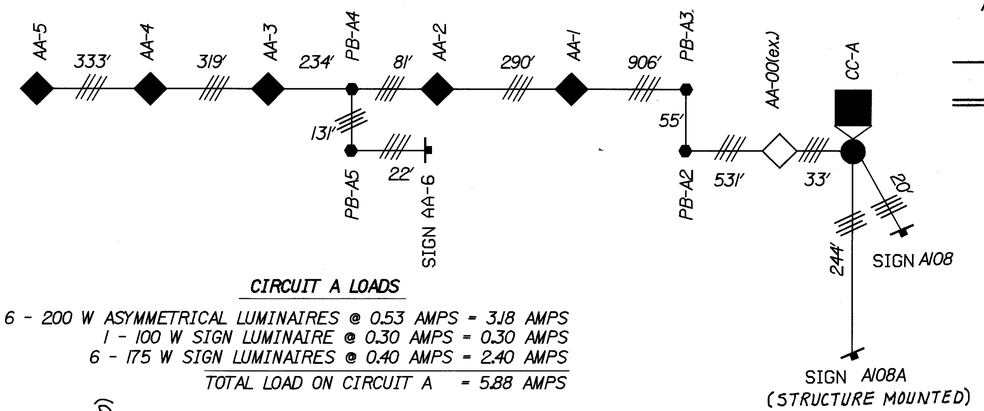

CIRCUIT A LOADS

6 - 200 W ASYMMETRICAL LUMINAIRES @ 0.53 AMPS	=	3.18 AMPS
1 - 100 W SIGN LUMINAIRE @ 0.30 AMPS	=	0.30 AMPS
6 - 175 W SIGN LUMINAIRES @ 0.40 AMPS	=	2.40 AMPS
TOTAL LOAD ON CIRCUIT A	=	5.88 AMPS

CIRCUIT DC LOADS

9 - 200 W ASYMMETRICAL LUMINAIRES @ 0.53 AMPS	=	4.77 AMPS
4 - 310 W ASYMMETRICAL LUMINAIRES @ 0.80 AMPS	=	3.20 AMPS
1 - 100 W SIGN LUMINAIRE @ 0.30 AMPS	=	0.30 AMPS
16 - 175 W SIGN LUMINAIRES @ 0.40 AMPS	=	6.40 AMPS
6 - 250 W SIGN LUMINAIRES @ 0.60 AMPS	=	3.60 AMPS
TOTAL LOAD ON CIRCUIT DC	=	18.27 AMPS

SR-18 CIRCUIT DC

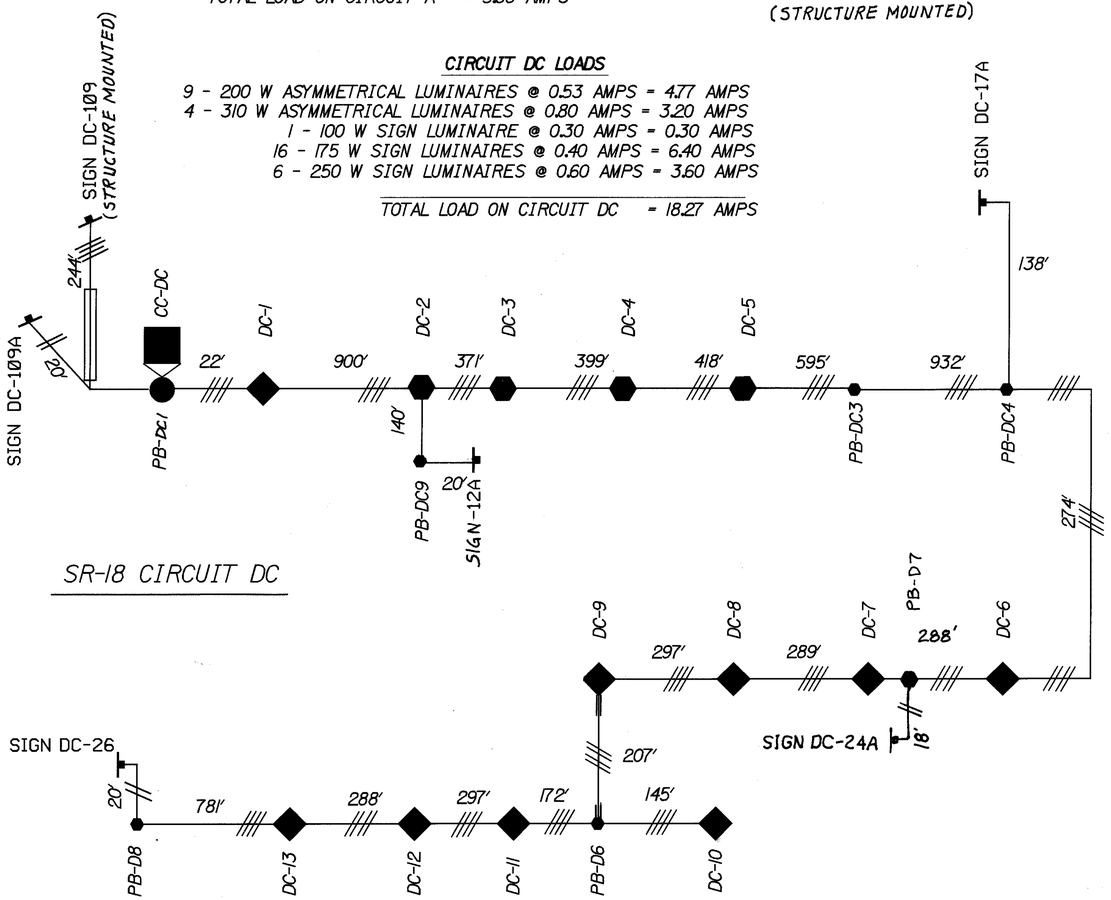

1-1/2" DUCT CABLE W/3 NO. 4 AWG WIRE

1-1/2" DUCT CABLE W/3 NO. 2 AWG WIRE

3 NO. 4 AWG DISTRIBUTION CABLE

3 NO. 2 AWG DISTRIBUTION CABLE

CIRCUIT E LOADS

20 - 400 W SYMMETRICAL LUMINAIRES @ 1.00 AMP	=	20.00 AMPS
12 - 400 W ASYMMETRICAL LUMINAIRES @ 1.00 AMP	=	12.00 AMPS
4 - 175 W SIGN LUMINAIRES @ 0.40 AMPS	=	1.60 AMPS
TOTAL LOAD ON CIRCUIT E	=	33.60 AMPS

I-271 CIRCUIT E

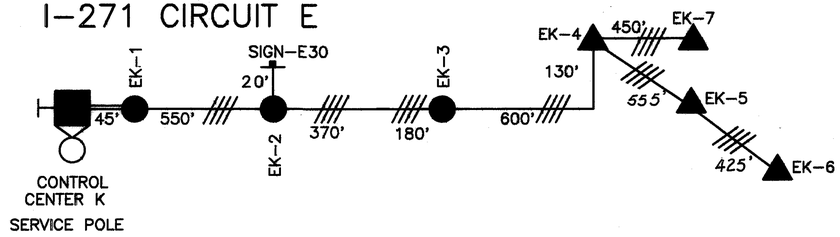

I-271 CIRCUIT W

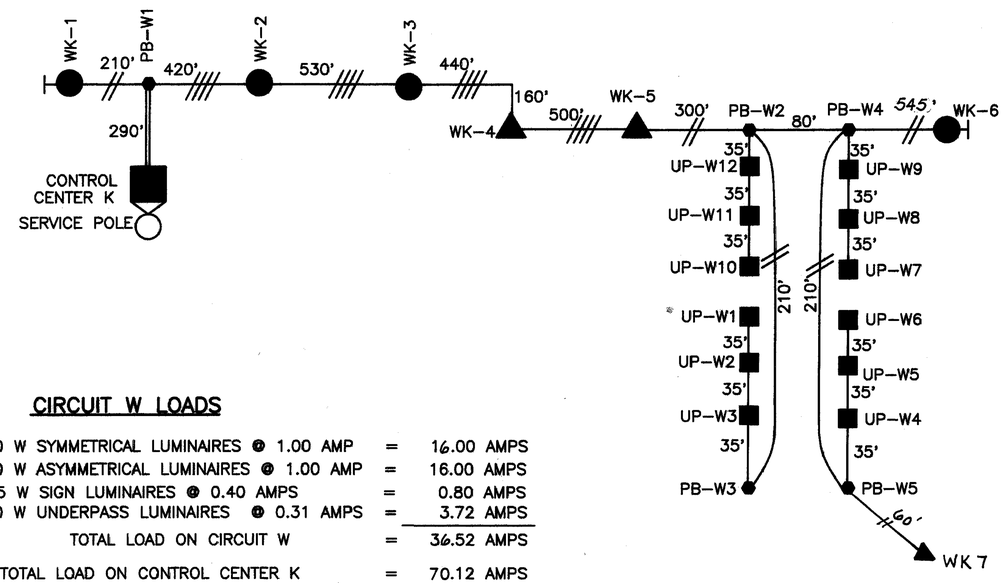

CIRCUIT W LOADS

16 - 400 W SYMMETRICAL LUMINAIRES @ 1.00 AMP	=	16.00 AMPS
16 - 400 W ASYMMETRICAL LUMINAIRES @ 1.00 AMP	=	16.00 AMPS
2 - 175 W SIGN LUMINAIRES @ 0.40 AMPS	=	0.80 AMPS
12 - 100 W UNDERPASS LUMINAIRES @ 0.31 AMPS	=	3.72 AMPS
TOTAL LOAD ON CIRCUIT W	=	36.52 AMPS
TOTAL LOAD ON CONTROL CENTER K	=	70.12 AMPS
OR	=	33.66 KVA

NOTES: FOR LEGEND SEE SHEET 622

HORIZONTAL SCALE IN FEET
0

CALCULATED
CHECKED

SR-18 & I-271 CIRCUIT DIAGRAMS

MED-71-15.78

637
940

I-271
CIRCUIT DIAGRAMS

FILENAME: \\Apps\...\MED_I-271\Admin\Graphics\SR18CIRCUIT.dgn
DATE & TIME: 10-DEC-1999 13:27
USERNAME: mfox
PROJECT: NONE

LEVELS ON: 1-641
PLOT QUEUE: \\2DPLOT\2DP
REF. TABLE: I:\ROOTS\DATA\CADD\Cross_DOC.pen

REF.FILE #1 LEVELS ON:
REF.FILE #2 LEVELS ON:
REF.FILE #2 LEVELS ON:

REF.FILE #3 LEVELS ON:
REF.FILE #3 LEVELS ON:
REF.FILE #4 LEVELS ON:
REF.FILE #4 LEVELS ON:

CIRCUIT DIAGRAMS

1–1/2" DUCT CABLE W/3 NO. 4 AWG WIRE

1–1/2" DUCT CABLE W/3 NO. 2 AWG WIRE

3 NO. 4 AWG DISTRIBUTION CABLE

3 NO. 2 AWG DISTRIBUTION CABLE

CIRCUIT A LOADS

4 – 200 W CONVENTIONAL LUMINAIRES @ 0.53 AMPS	= 2.12 AMPS
TOTAL LOAD ON CIRCUIT A	= 2.12 AMPS

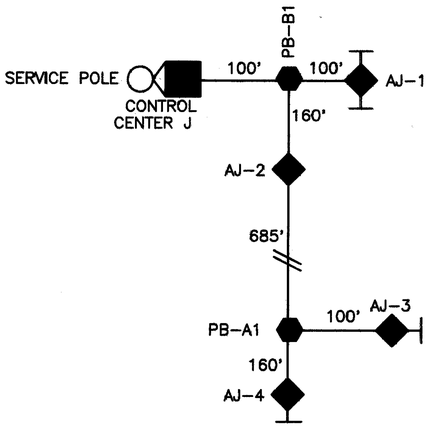

S.R.–3 CIRCUIT A

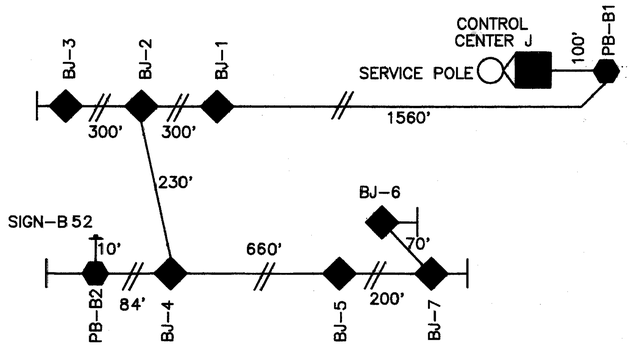

S.R.–3 CIRCUIT B

CIRCUIT B LOADS

7 – 200 W CONVENTIONAL LUMINAIRES @ 0.53 AMPS	= 3.71 AMPS
1 – 100 W SIGN LUMINAIRE @ 0.30 AMPS	= 0.30 AMPS
TOTAL LOAD ON CIRCUIT B	= 4.01 AMPS

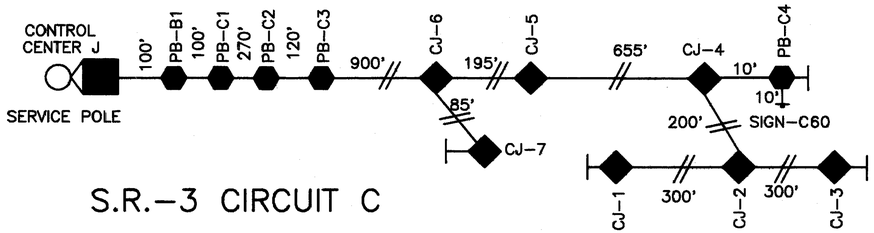

S.R.–3 CIRCUIT C

CIRCUIT C LOADS

7 – 200 W CONVENTIONAL LUMINAIRES @ 0.53 AMPS	= 3.71 AMPS
2 – 175 W SIGN LUMINAIRES @ 0.40 AMPS	= 0.80 AMPS
TOTAL LOAD ON CIRCUIT C	= 4.51 AMPS
TOTAL LOAD ON CONTROL CENTER J	= 10.64 AMPS
OR	= 5.11 KVA

CIRCUIT D LOADS

5 – 310 W CONVENTIONAL LUMINAIRES @ 0.80 AMPS	= 4.00 AMPS
8 – 400 W ASYMMETRICAL LUMINAIRES @ 1.00 AMP	= 8.00 AMPS
TOTAL LOAD ON CIRCUIT D	= 12.00 AMPS

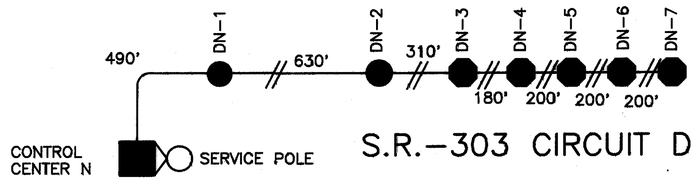

S.R.–303 CIRCUIT D

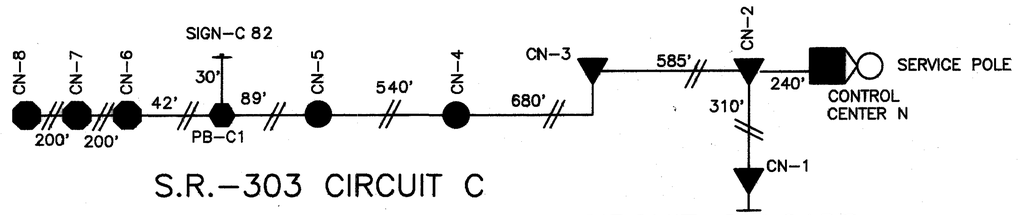

S.R.–303 CIRCUIT C

CIRCUIT C LOADS

18 – 400 W SYMMETRICAL LUMINAIRES @ 1.00 AMP	= 18.00 AMPS
8 – 400 W ASYMMETRICAL LUMINAIRES @ 1.00 AMP	= 8.00 AMPS
3 – 310 W CONVENTIONAL LUMINAIRES @ 0.80 AMPS	= 2.40 AMPS
2 – 175 W SIGN LUMINAIRES @ 0.40 AMPS	= 0.80 AMPS
TOTAL LOAD ON CIRCUIT C	= 29.20 AMPS
TOTAL LOAD ON CONTROL CENTER N	= 41.20 AMPS
OR	= 19.78 KVA

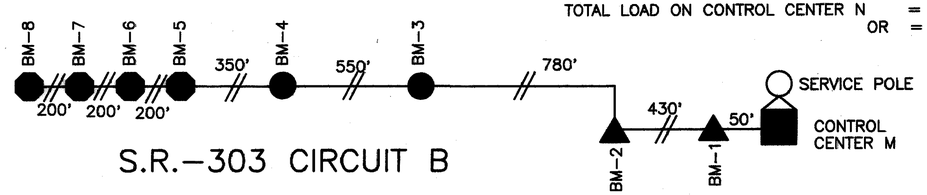

S.R.–303 CIRCUIT B

CIRCUIT B LOADS

12 – 400 W SYMMETRICAL LUMINAIRES @ 1.00 AMP	= 12.00 AMPS
8 – 400 W ASYMMETRICAL LUMINAIRES @ 1.00 AMP	= 8.00 AMPS
4 – 310 W CONVENTIONAL LUMINAIRES @ 0.80 AMPS	= 3.20 AMPS
TOTAL LOAD ON CIRCUIT B	= 23.20 AMPS

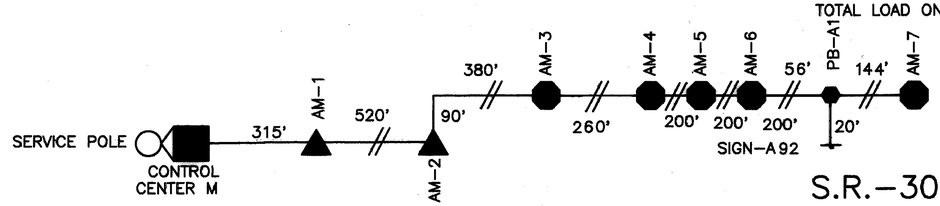

S.R.–303 CIRCUIT A

CIRCUIT A LOADS

12 – 400 W SYMMETRICAL LUMINAIRES @ 1.00 AMP	= 12.00 AMPS
5 – 310 W CONVENTIONAL LUMINAIRES @ 0.80 AMPS	= 4.00 AMPS
2 – 175 W SIGN LUMINAIRES @ 0.40 AMPS	= 0.80 AMPS
TOTAL LOAD ON CIRCUIT A	= 16.80 AMPS
TOTAL LOAD ON CONTROL CENTER M	= 40.00 AMPS
OR	= 19.20 KVA

NOTES: FOR LEGEND SEE SHEET 622

HORIZONTAL SCALE IN FEET

CALCULATED

CHECKED

S.R.-3 & S.R.-303 Circuit Diagram

MED-71-15.78

638
940

S.R.–3 & S.R.–303
CIRCUIT DIAGRAMS

FILENAME: I:\DGN_MELLINI\MAINLIGHTING\V8DGNLIB\dgn
DATE & TIME: 10-DEC-1999 13:27
USERNAME: mfox
PROJECT: NONE
LEVELS ON: 1\641
PLOT QUEUE: \\DGNPLOT\dgn
REFA TABLE: I:\DGN\default\plot\OpenCross.DCE.pen

SEEDING	
END WIDTH	SQ. YDS.

END AREA		VOLUME	
CUT	FILL	CUT	FILL

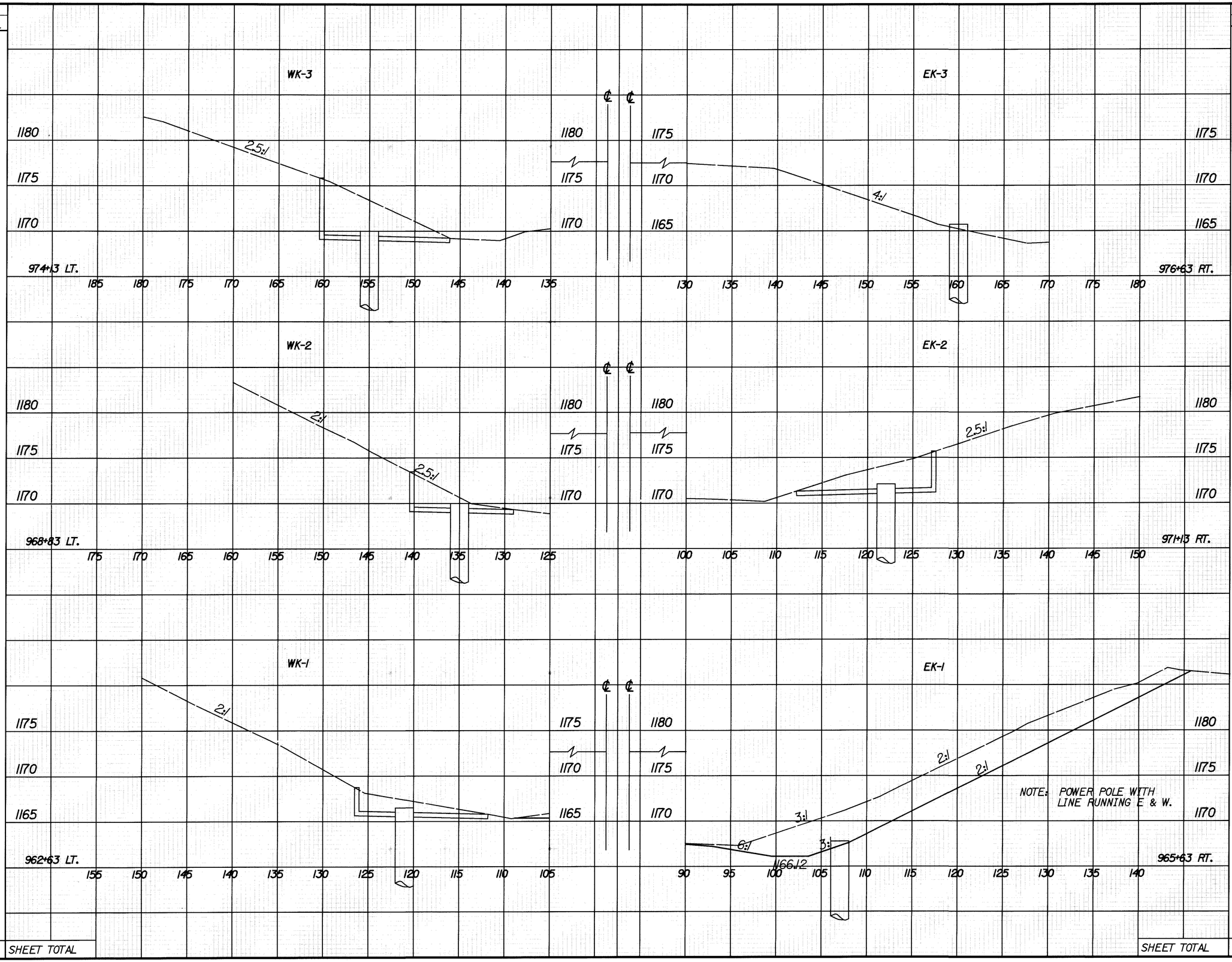

REF. FILE #1: LEVELS ON:
REF. FILE #1: LEVELS ON:
REF. FILE #2: LEVELS ON:
REF. FILE #2: LEVELS ON:

REF. FILE #3: LEVELS ON:
REF. FILE #3: LEVELS ON:
REF. FILE #4: LEVELS ON:
REF. FILE #4: LEVELS ON:

FILENAME: I:\pd_MED_JR71\DGN\xsl\ght.dgn
DATE & TIME: 10-DEC-1999 07:05
USERNAME: mfox
PROJECT: NONE

LEVELS ON: [1-3,5-61,63,64]
PLOT QUEUE: \\DOIPLOT\oce
PEN TABLE: I:\d0lstd\plot\Oce\Cross_OCE.pen

CALCULATED DJV
CHECKED JWR

TOWER LIGHTING CROSS SECTIONS
STA. 962+63 TO STA. 976+63

MED-71-15.78

SEEDING	
END WIDTH	SQ. YDS.

END AREA		VOLUME	
CUT	FILL	CUT	FILL

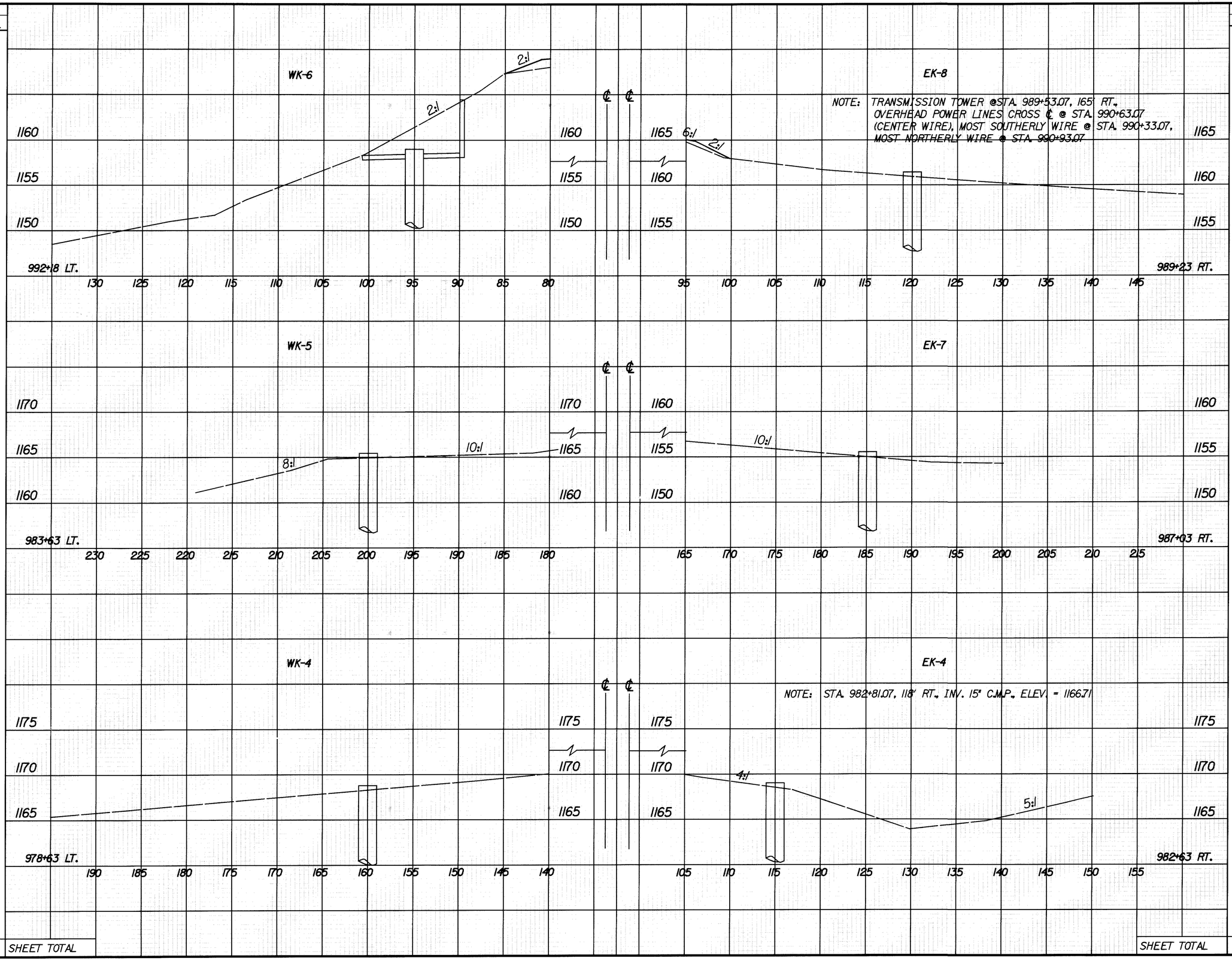

SHEET TOTAL

SHEET TOTAL

CALCULATED DJV
CHECKED JWR

TOWER LIGHTING CROSS SECTIONS
STA. 978+63 TO STA. 992+18

MED-71-15.78

REF.FILE #1: LEVELS ON:
REF.FILE #2: LEVELS ON:
REF.FILE #3: LEVELS ON:
REF.FILE #4: LEVELS ON:

FILENAME: I:\pd_MED_DRT\Dsh\Xslight.dgn
DATE & TIME: 10-DEC-1999 07:04
USERNAME: mfox
PROJECT: NONE

LEVELS ON: [1-3,5-61,63,64]
PLOT QUEUE: \\DOIPLOT\oce
PEN TABLE: I:\dotstd\plot\oce\Cross_OCE.pen

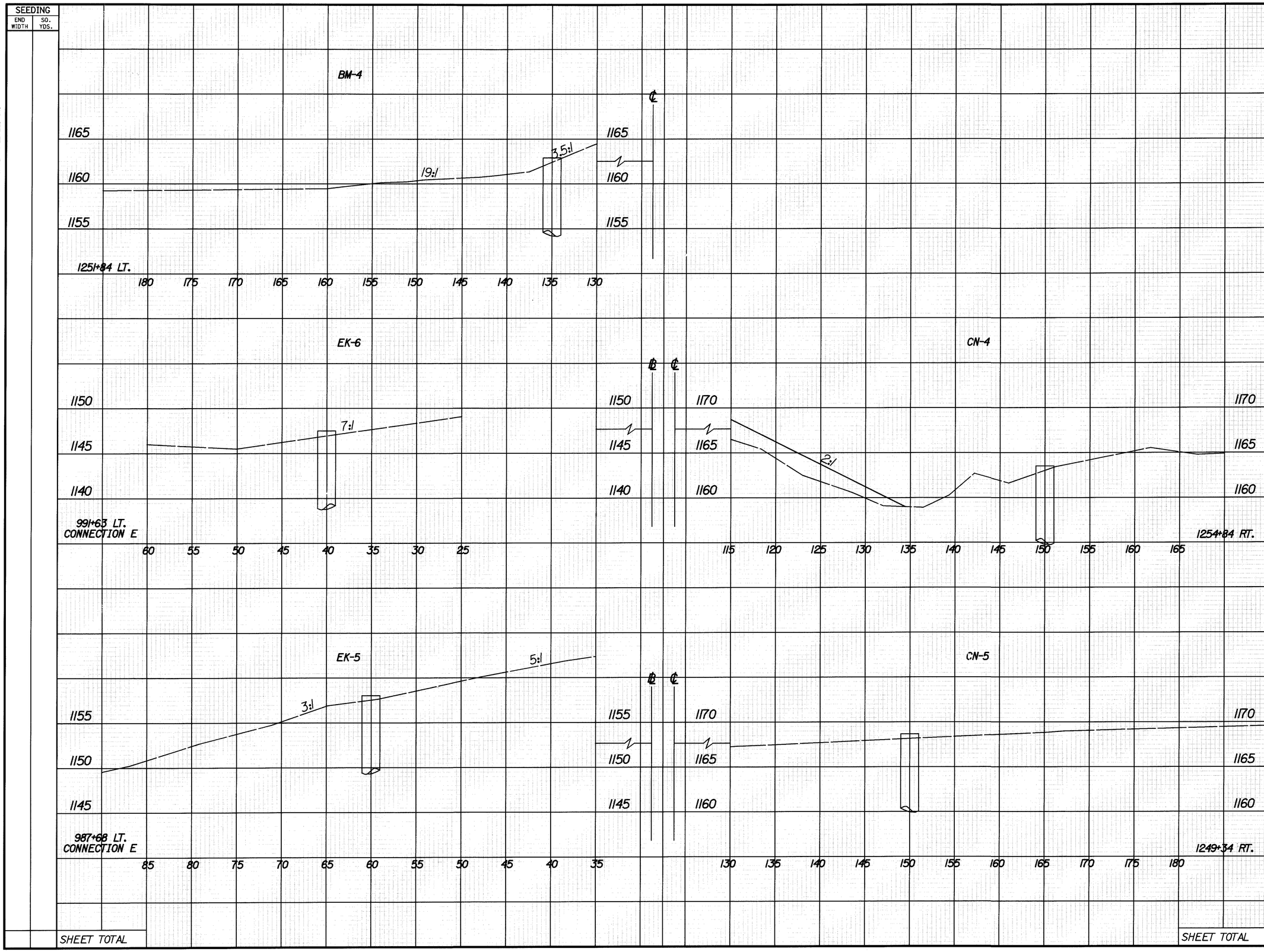

END AREA		VOLUME	
CUT	FILL	CUT	FILL

CALCULATED DJV
CHECKED JWR

TOWER LIGHTING CROSS SECTIONS
STA. 987+68 TO STA. 1254+84

MED-71-15.78

641
940

REF.FILE #1 LEVELS ON:
REF.FILE #2 LEVELS ON:
REF.FILE #3 LEVELS ON:
REF.FILE #4 LEVELS ON:

FILENAME: I:\od\MED_IH71\Oak\xsligh1.dgn
DATE & TIME: 10-DEC-1999 07:04
USERNAME: mfox
PROJECT: NONE

LEVELS ON: [1-3,5-61,63,64]
PLOT QUEUE: \\DOIPLOT\oce
\REN\TABLE: I:\dOlstd\plot\Oce\Cross_OCE.pen

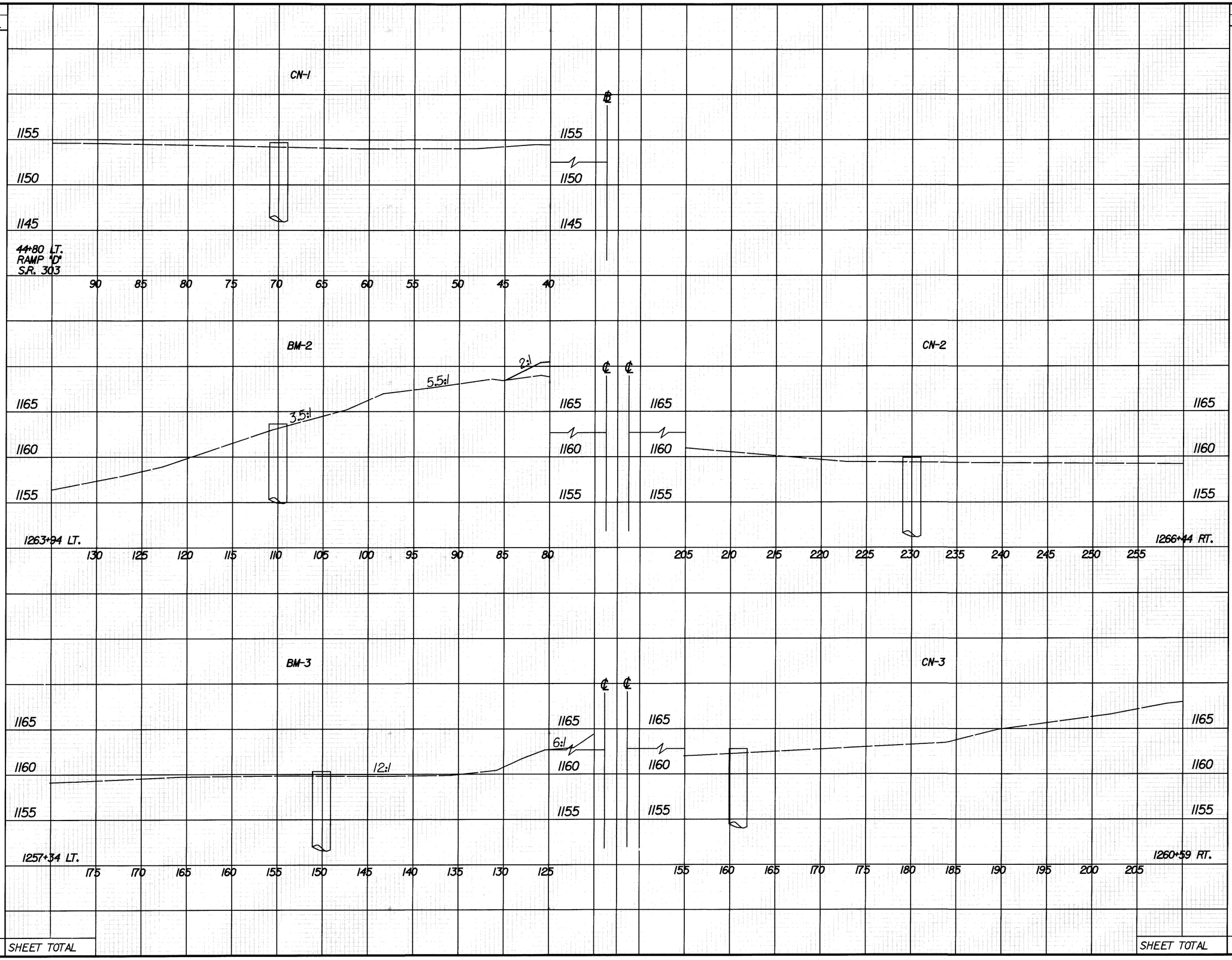

END AREA		VOLUME	
CUT	FILL	CUT	FILL

CALCULATED DJV
CHECKED JWR

TOWER LIGHTING CROSS SECTIONS
STA. 1257+34 TO STA. 1266+44

MED-71-15.78

REF.FILE #1 LEVELS ON:
REF.FILE #2 LEVELS ON:
REF.FILE #3 LEVELS ON:
REF.FILE #4 LEVELS ON:

LEVELS ON:[1-3,5-61,63,64]
PLOT QUEUE:\\DOIPLOT\oce
PEN\TABLE:1:\dOIstd\Ipla\Oce\Cross_OCE.pen
DATE & TIME:10-DEC-1999 07:04
USERNAME:mfox
PROJECT:NONE

FILENAME: I:\pd_MED_IRT\DGN\xslight.dgn
DATE & TIME: 10-DEC-1999 07:03
USERNAME: mfox
PROJECT: NONE

LEVELS ON: [1-3,5-61,63,64]
PLOT QUEUE: \\DOIPLOT\oce
PEN-TABLE: I:\d0lstd\plot\Oce\Cross_OCE.pen

REF.FILE #1:
REF.FILE #1 LEVELS ON:
REF.FILE #2:
REF.FILE #2 LEVELS ON:

REF.FILE #3:
REF.FILE #3 LEVELS ON:
REF.FILE #4:
REF.FILE #4 LEVELS ON:

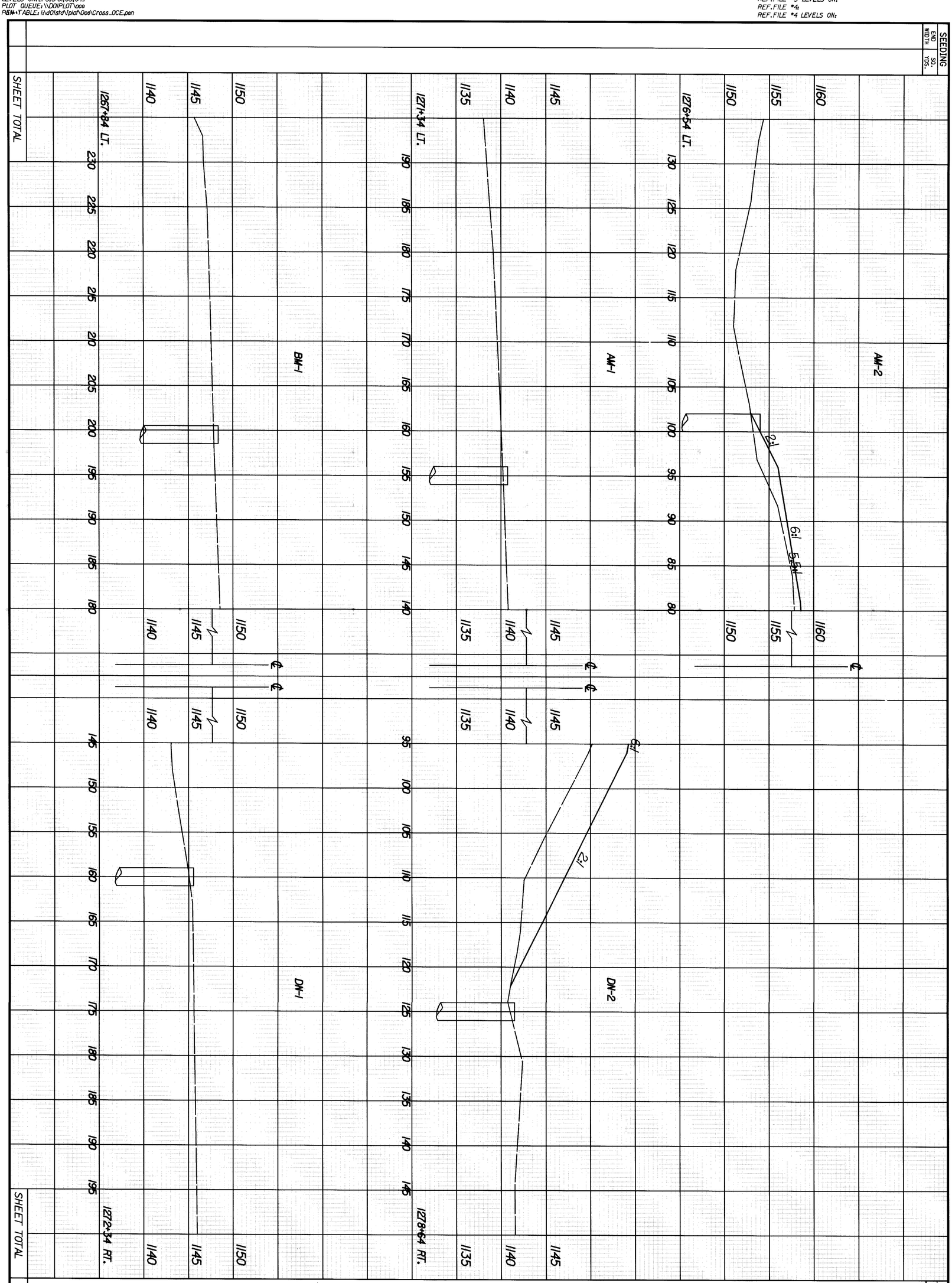

643
940

MED-71-15.78

TOWER LIGHTING CROSS SECTIONS
STA. 1267+84 TO STA. 1278+64

CALCULATED DJV
CHECKED JWR

REF.FILE #1: LEVELS ON:
REF.FILE #1 LEVELS ON:
REF.FILE #2 LEVELS ON:
REF.FILE #3: LEVELS ON:
REF.FILE #3 LEVELS ON:
REF.FILE #4 LEVELS ON:
REF.FILE #4 LEVELS ON:

DESIGN FILE : i:\pd_med_ir71\dgn\plantings\plntgnotz.dgn
USERNAME : jrogers

DATE : 30-NOV-1999
TIME : 12:41

DESIGN FILE : i:\pd_med_ir71\dgn\plantings\plntgnotz.dgn
USERNAME : jrogers

DATE : 30-NOV-1999
TIME : 12:41

FILENAME: i:\pd_med_ir71\dgn\plantings\plntgnotz.dgn
DATE & TIME: 30-NOV-1999 12:41
USERNAME: jrogers
PROJECT: NONE

CONCRETE WALL PLANTING AREA

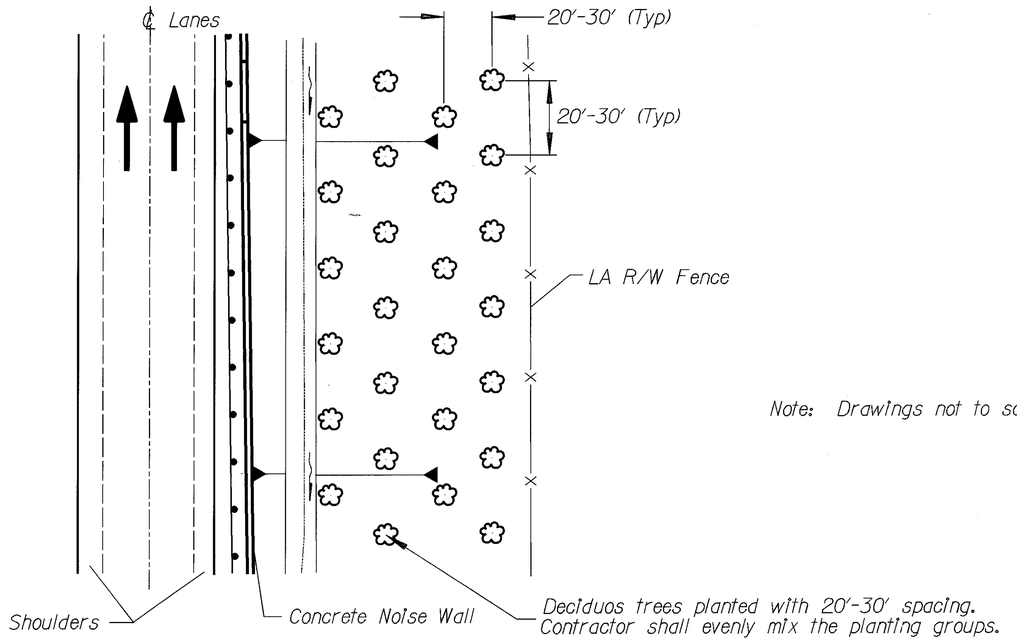

Note: Drawings not to scale

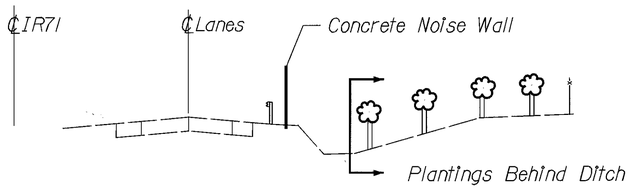

Roadway Typical Section

TREE WALL PLANTING AREA

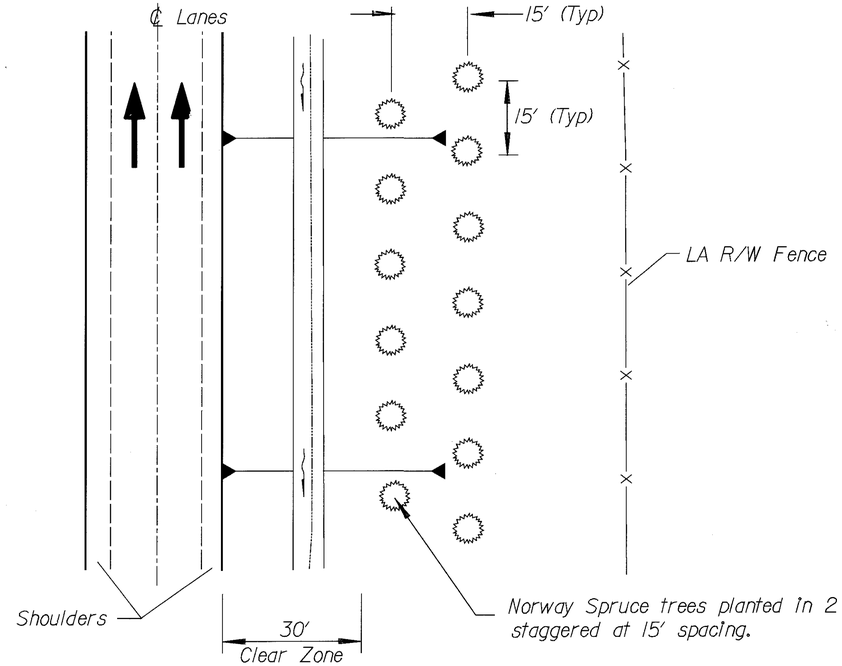

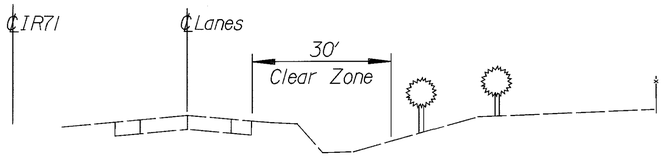

Roadway Typical Section

BOTANICAL NAME	COMMON NAME
FRAXINUS AMERICANA (JUNGINER)	WHITE ASH
ACER SACCHARUM (COMMEMORATION)	SUGAR MAPLE
PLATANUS X ACERIFOLICA (BLOODGOOD)	LONDON PLANE TREE
PICEA ABIES	NORWAY SPRUCE
QUERCUS RUBRA	RED OAK
QUERCUS PALUSTRIS	PIN OAK

LANDSCAPING SUBSUMMARY

	STATION												
ITEM	805+00 to 20+00	905+00 to 932+50	1232+00 to 1247+00	1282+00 to 1302+00	1315+00 to 1328+50	1328+00 to 1343+00	1333+00 to 1341+00	1398+00 to 1408+00	ITEM	ITEM EXTENSION	GRAND TOTAL	UNIT	DESCRIPTION
	Lt.	Rt.	Lt.	Lt.	Rt.	Lt.	Rt.	Lt.					
661	53	87		67				34	661	40080	241	EACH	DECIDUOUS TREE, 2" CALIPER, FRAXINUS AMERICANA (JUNGINER) B&B 24" MIN.
661	53	87		67				34	661	40080	241	EACH	DECIDUOUS TREE, 2" CALIPER, ACER SACCHARUM (COMMEMORATION) B&B 16" MIN.
661	53	87		67				34	661	40080	241	EACH	DECIDUOUS TREE, 2" CALIPER, PLATANUS X ACERIFOLICA (BLOODGOOD) B&B 16" MIN.
661	53	87		67				34	661	40080	241	EACH	DECIDUOUS TREE, 2" CALIPER, QUERCUS RUBRA B&B 20" MIN.
661	53	87		67				34	661	40080	241	EACH	DECIDUOUS TREE, 2" CALIPER, QUERCUS PALUSTRIS B&B 20" MIN.
661			194		174	194	108		661	50140	670	EACH	EVERGREEN TREE, 7' HEIGHT, PICEA ABIES B&B 24" MIN.
662	6625	10875	2910	8375	2610	2910	1620	4250	662	30000	40,175	GAL	LANDSCAPE WATERING
	1	2	3	4	5	6	7	8					

(TOTALS CARRIED TO GENERAL SUMMARY, SEE SHEET 74)

CALCULATED RLS CHECKED JWR

PLANTING DETAILS AND LANDSCAPING SUBSUMMARY

MED-71-15.78

Note: For Tree Quantities see sheet 647

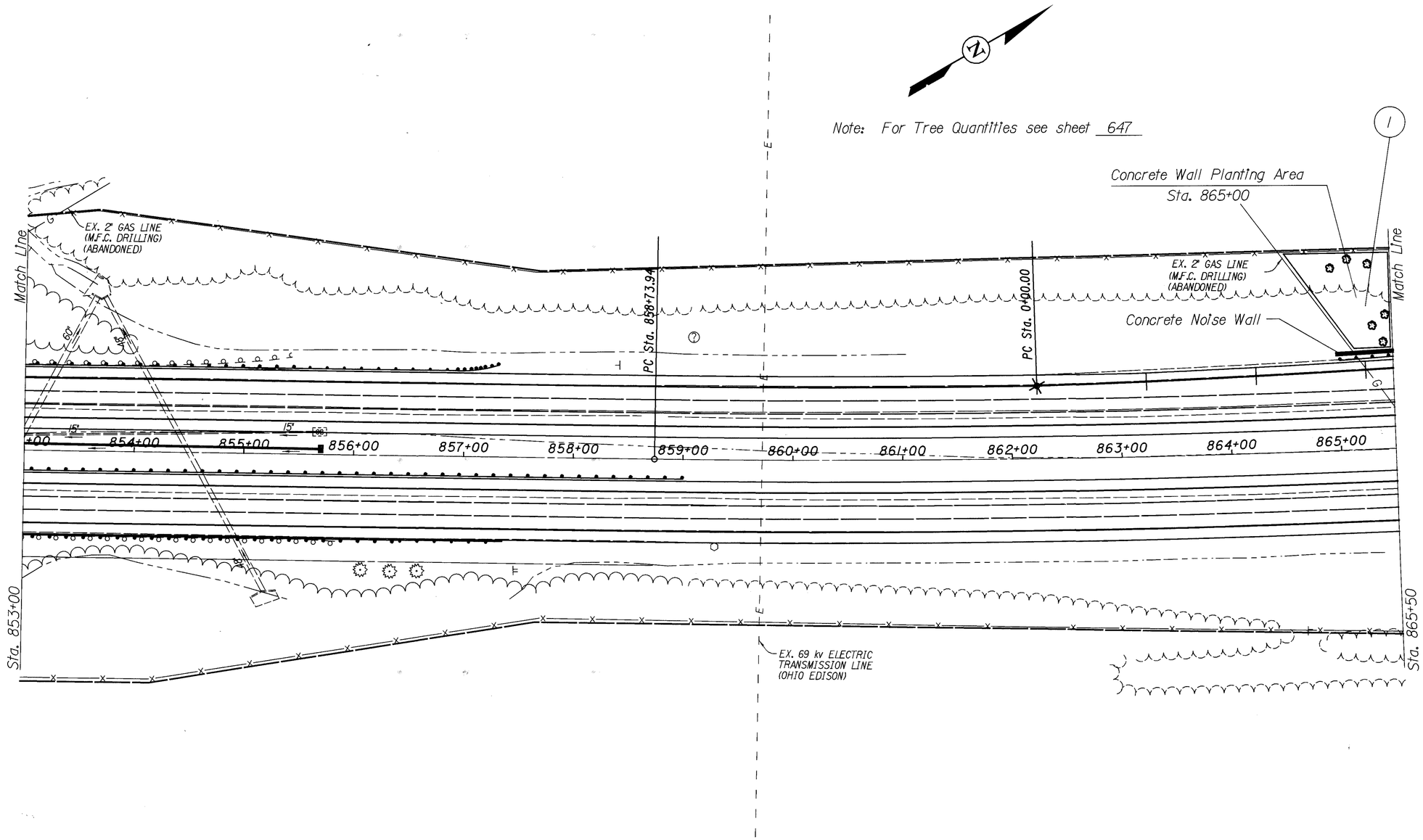

HORIZONTAL SCALE IN FEET
0 50 100

CALCULATED | CHECKED

PLANTING SHEET
Sta 853+00.00 to Sta 865+50.00

MED - 71 - 15.78

648
940

DATE : 24-NOV-1999
TIME : 14:02

DESIGN FILE : i:\pd_med_lr71\dgn\plantings\pp01.dgn
USERNAME : jrogers

Note: For Tree Quantities see sheet 647

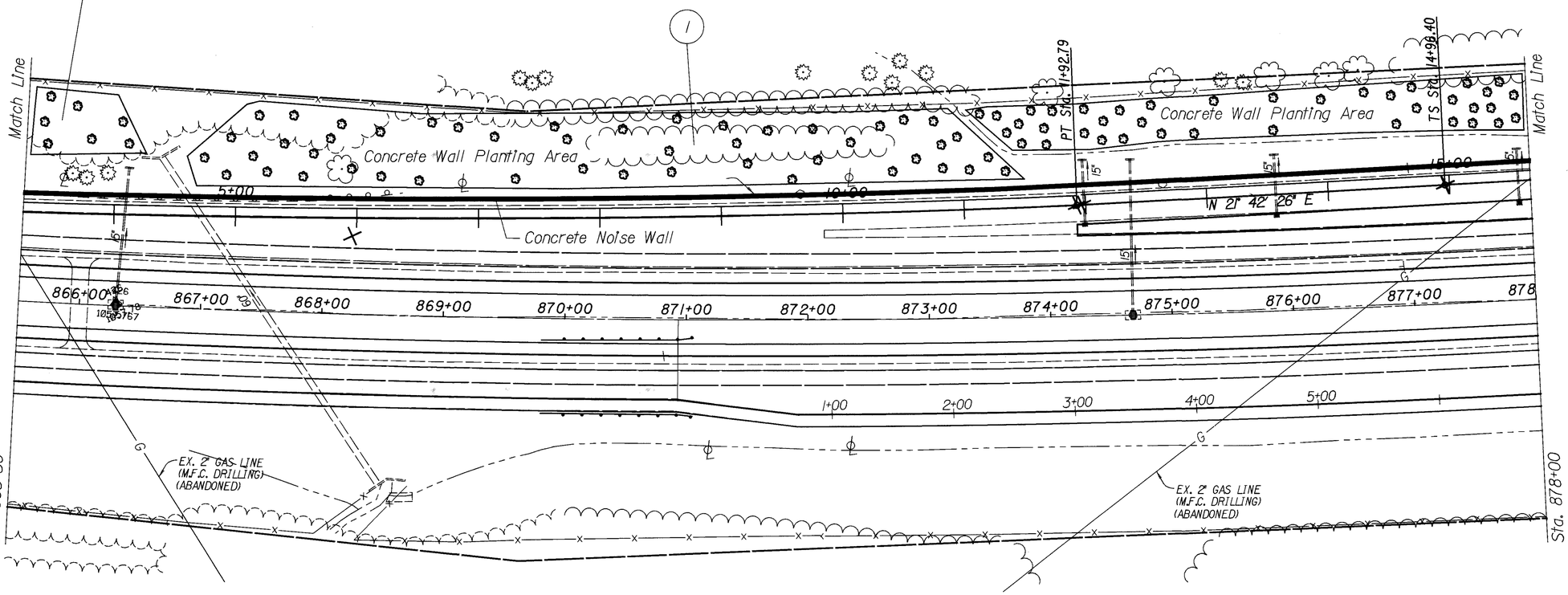

HORIZONTAL SCALE IN FEET
0 50 100

CALCULATED | CHECKED

PLANTING SHEET
Sta 865+50.00 to Sta 878+00.00

MED - 71 - 15.78

649
940

DESIGN FILE : i:\pd_med.lr71\dgn\plantings\pp02.dgn
USERNAME : jrogers

DATE : 24-NOV-1999
TIME : 14:59

DATE : 24-NOV-1999
TIME : 15:06

DESIGN FILE : I:\pd_med_lr7i\dgn\plantings\pp03.dgn
USERNAME : jrogers

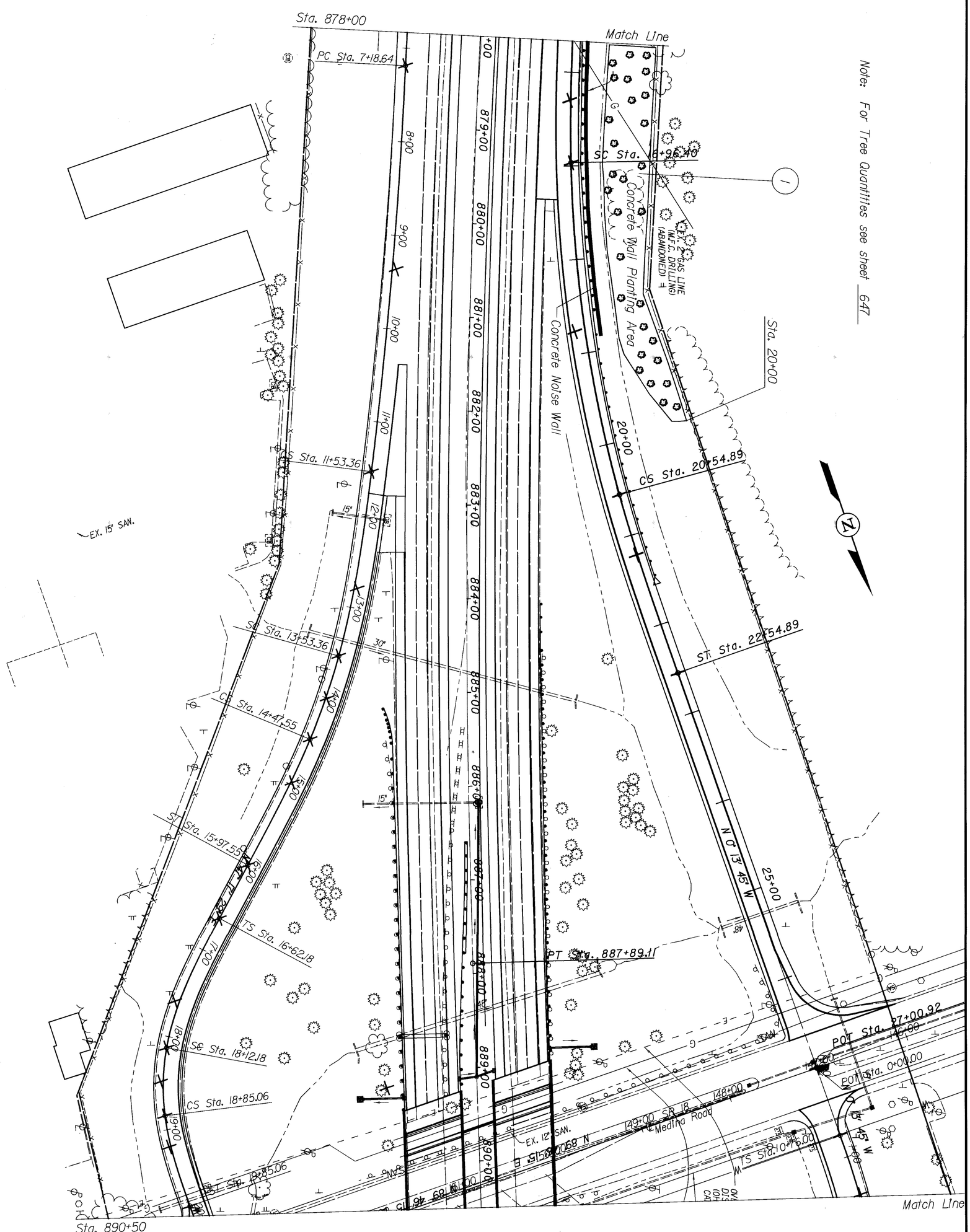

650 / 940	MED - 71 - 15.78	PLANTING SHEET Sta 878+00.00 to Sta 890+50.00	CALCULATED CHECKED	0 50 100 HORIZONTAL SCALE IN FEET

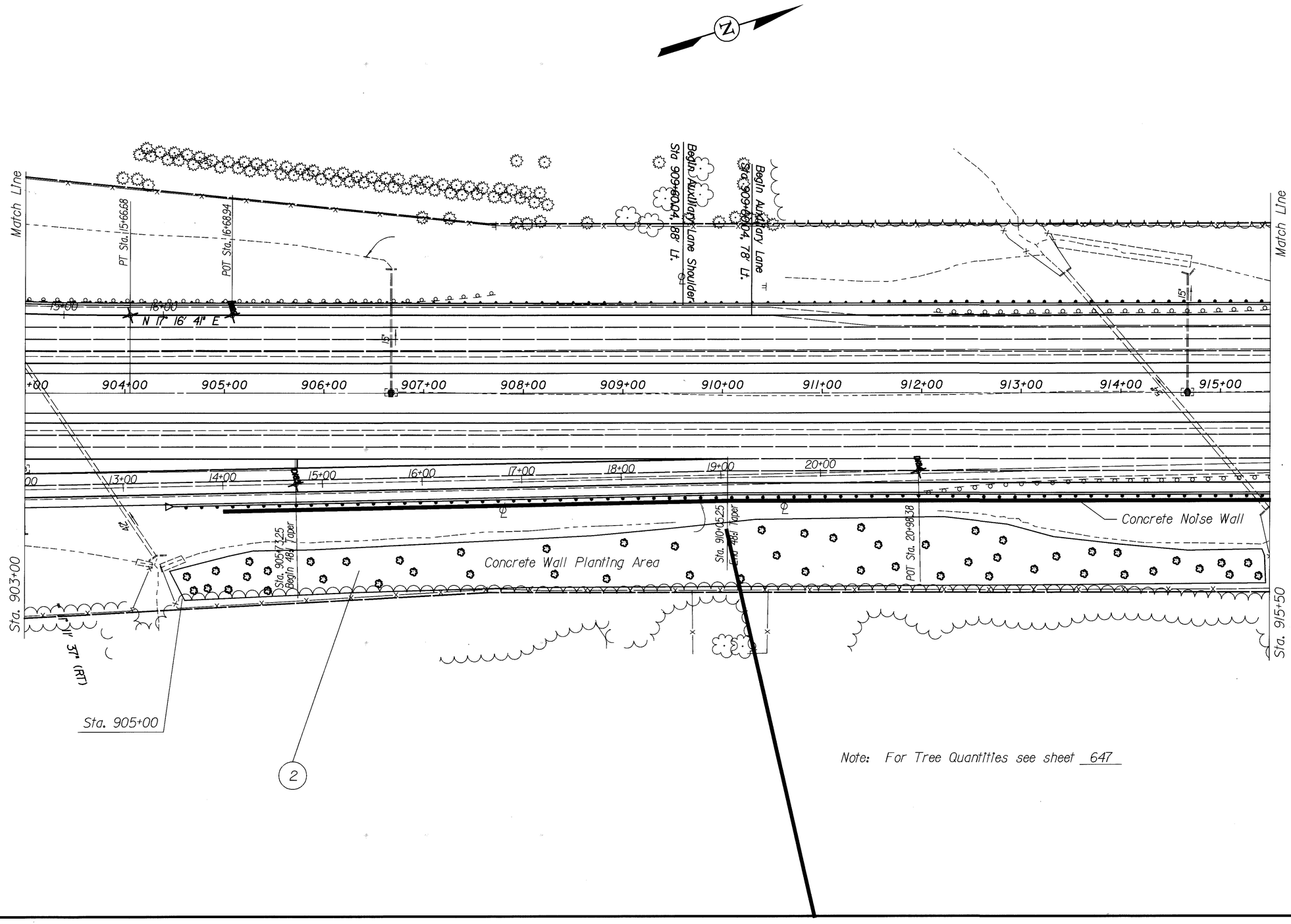

Note: For Tree Quantities see sheet 647

DESIGN FILE : it\pd_med_lr-71\dgn\plantings\pp04.dgn
USERNAME : jrogers

DATE : 24-NOV-1999
TIME : 15:07

HORIZONTAL SCALE IN FEET
0 50 100

CALCULATED | CHECKED

PLANTING SHEET
Sta 903+00.00 to Sta 915+50.00

MED - 71 - 15.78

651
940

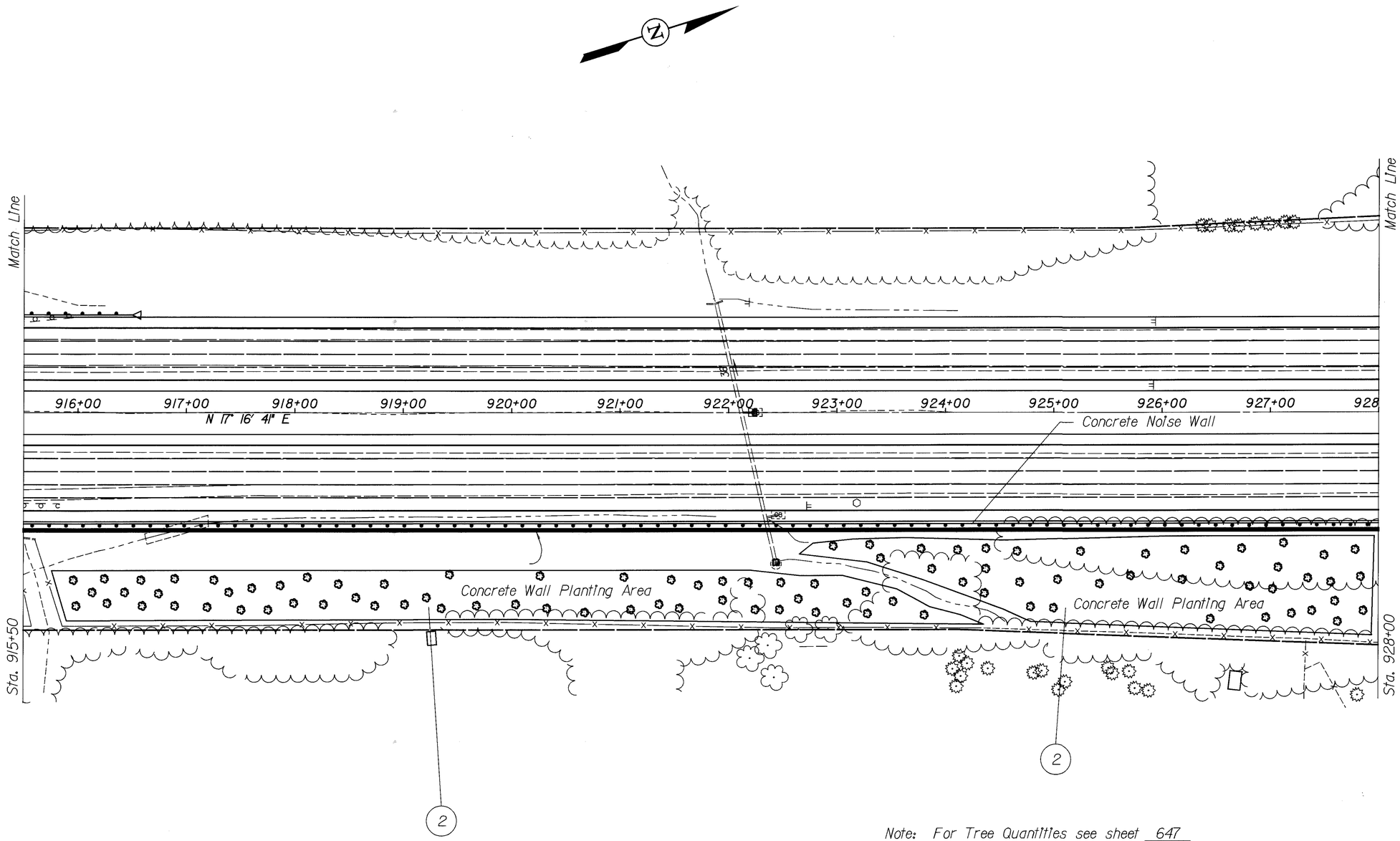

Note: For Tree Quantities see sheet 647

HORIZONTAL SCALE IN FEET
0 50 100

CALCULATED | CHECKED

PLANTING
Sta 915+50.00 to Sta 928+00.00

MED - 71 - 15.78

652
940

DATE : 24-NOV-1999
TIME : 15:07

DESIGN FILE : I:\pd_med_lr71\dgn\plantings\pp06.dgn
USERNAME : jrogers

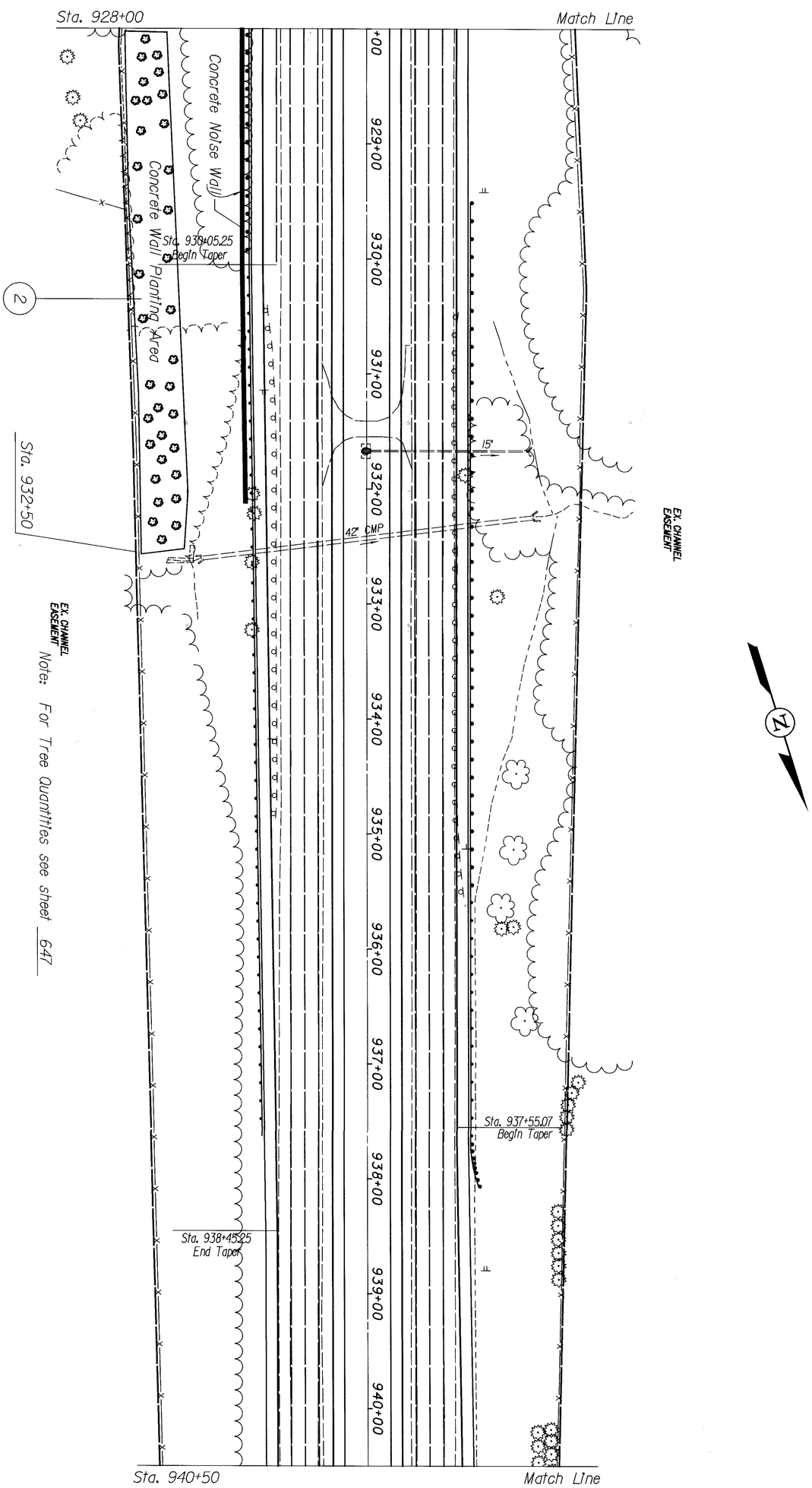

653 / 940	MED - 71 - 15.78	PLANTING SHEET Sta 928+00.00 to Sta 940+50.00	CALCULATED CHECKED	0 50 100 HORIZONTAL SCALE IN FEET

Note: For Tree Quantities see sheet 647

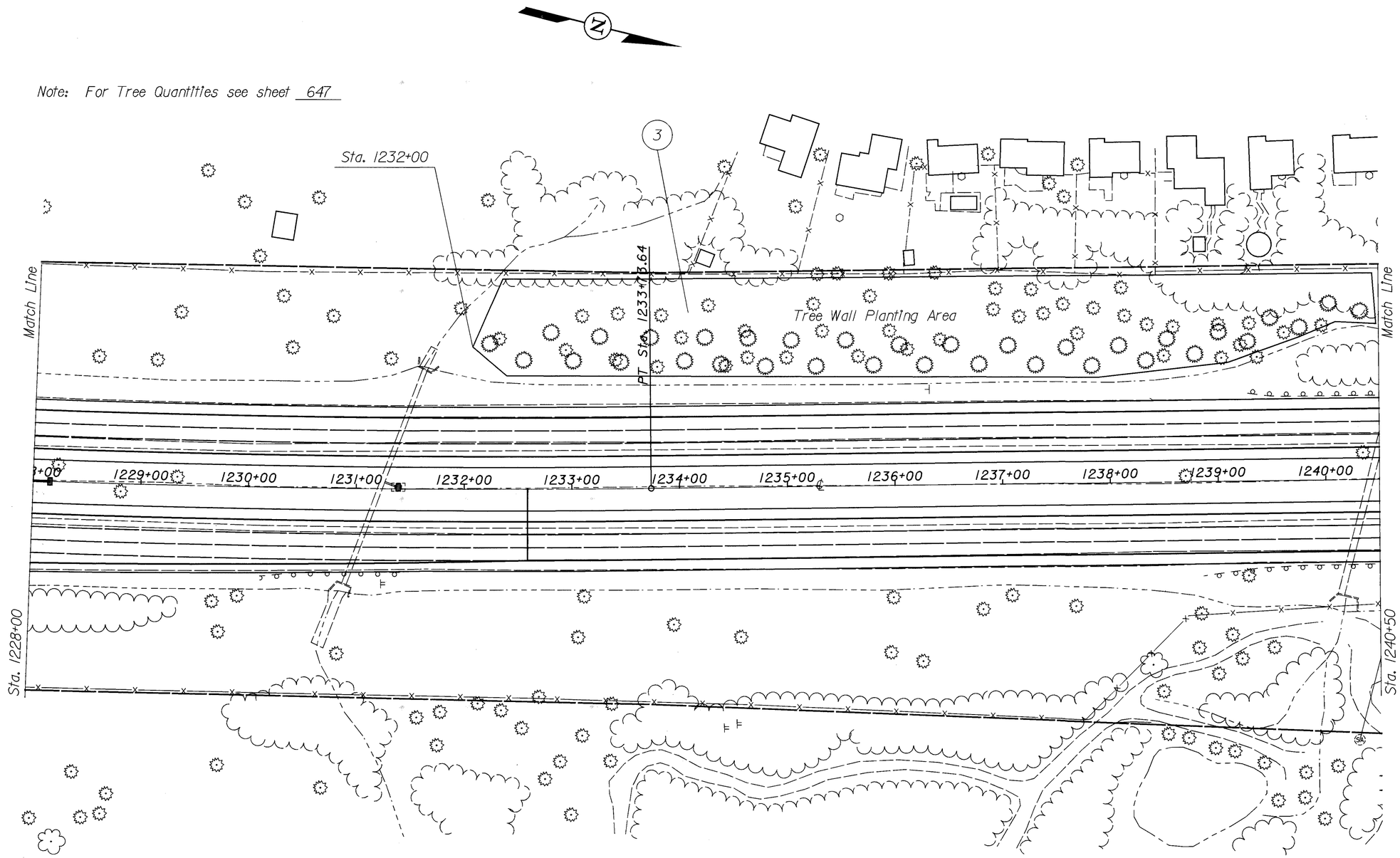

DESIGN FILE : H:\pd_med_ir71\dgn\plantings\pp07.dgn
USERNAME : jrogers

DATE : 24-NOV-1999
TIME : 6:07

HORIZONTAL SCALE IN FEET
0 50 100

CALCULATED | CHECKED

PLANTING SHEET
Sta 1228+00.00 to Sta 1240+50.00

MED - 71 - 15.78

654
940

DATE : 24-NOV-1999
TIME : 15:07

DESIGN FILE : h:\pd_med_lr71\dgn\plantings\pp08.dgn
USERNAME : jrogers

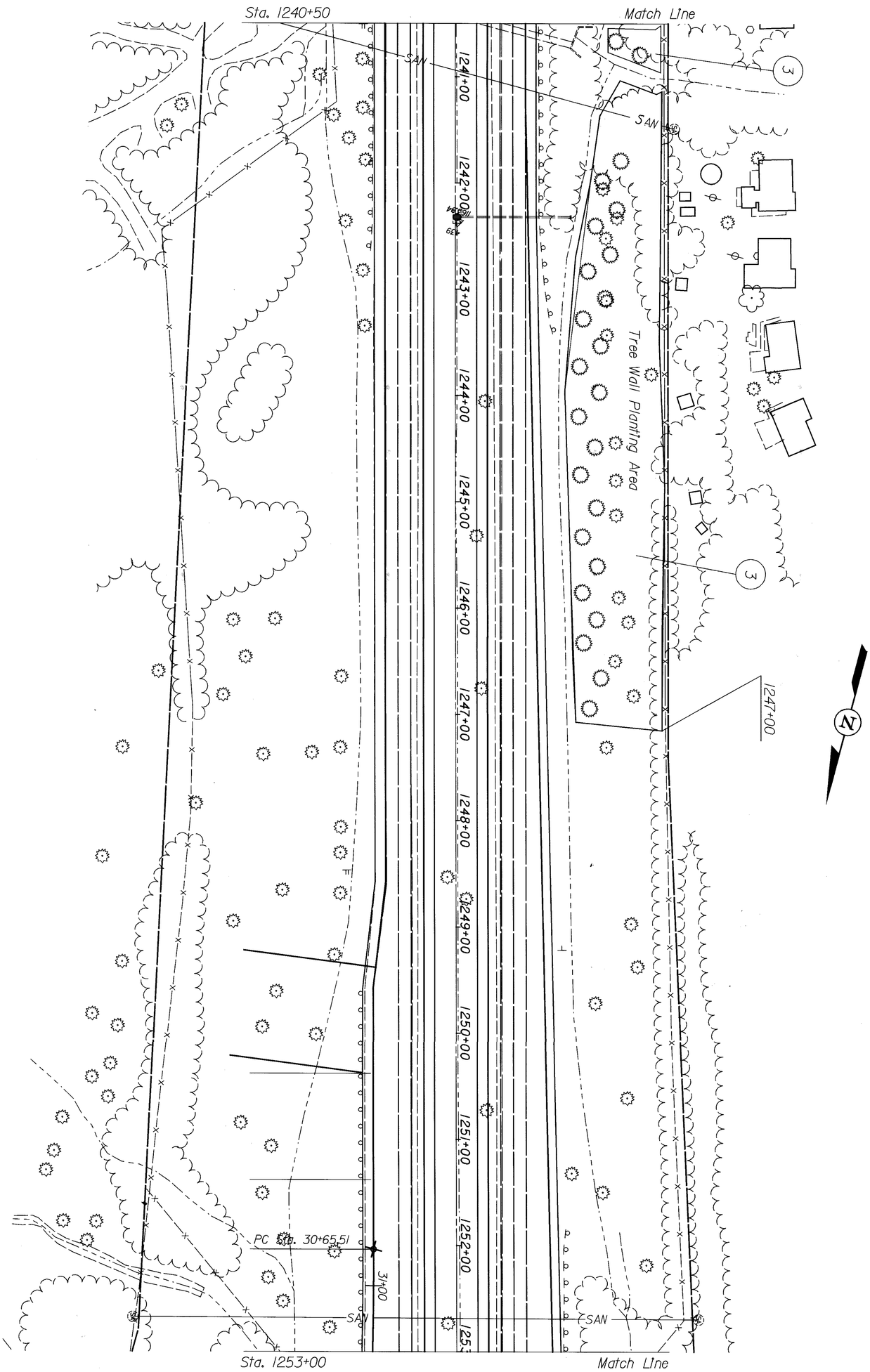

Note: For Tree Quantities see sheet 647

655 940	MED - 71 - 15.78	PLANTING SHEET 1240+40 to Sta 1253+00.00	CALCULATED / CHECKED	0 50 100 HORIZONTAL SCALE IN FEET

Note: For Tree Quantities see sheet 647

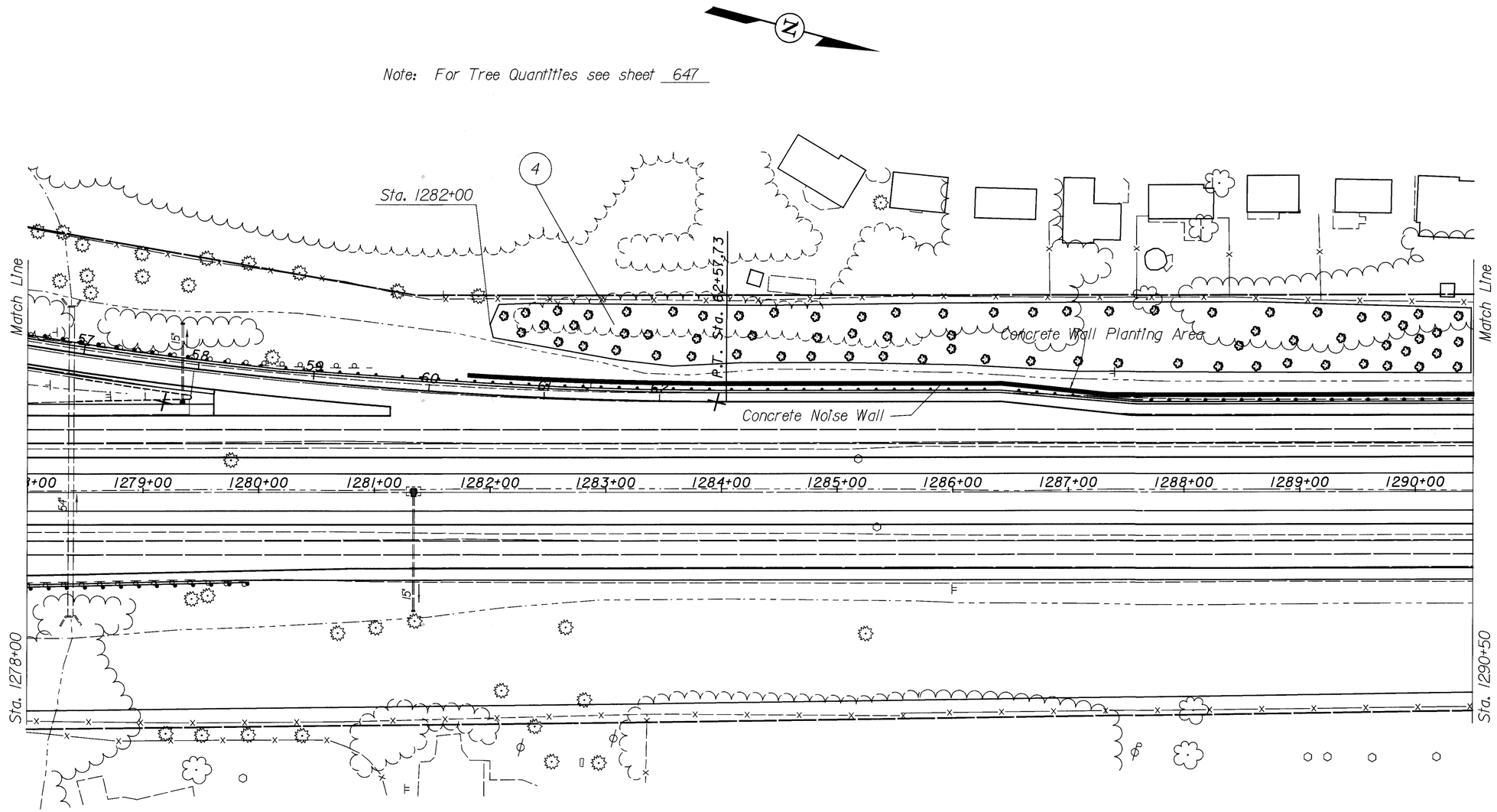

HORIZONTAL SCALE IN FEET
0 50 100

CALCULATED
CHECKED

PLANTING SHEET
Sta 1278+00.00 to Sta 1290+50.00

MED - 71 - 15.78

DATE : 24-NOV-1999
TIME : 15:07
DESIGN FILE : i:\pd_med_lr71\dgn\plantings\pp09.dgn
USERNAME : jrogers

Note: For Tree Quantities see sheet 647

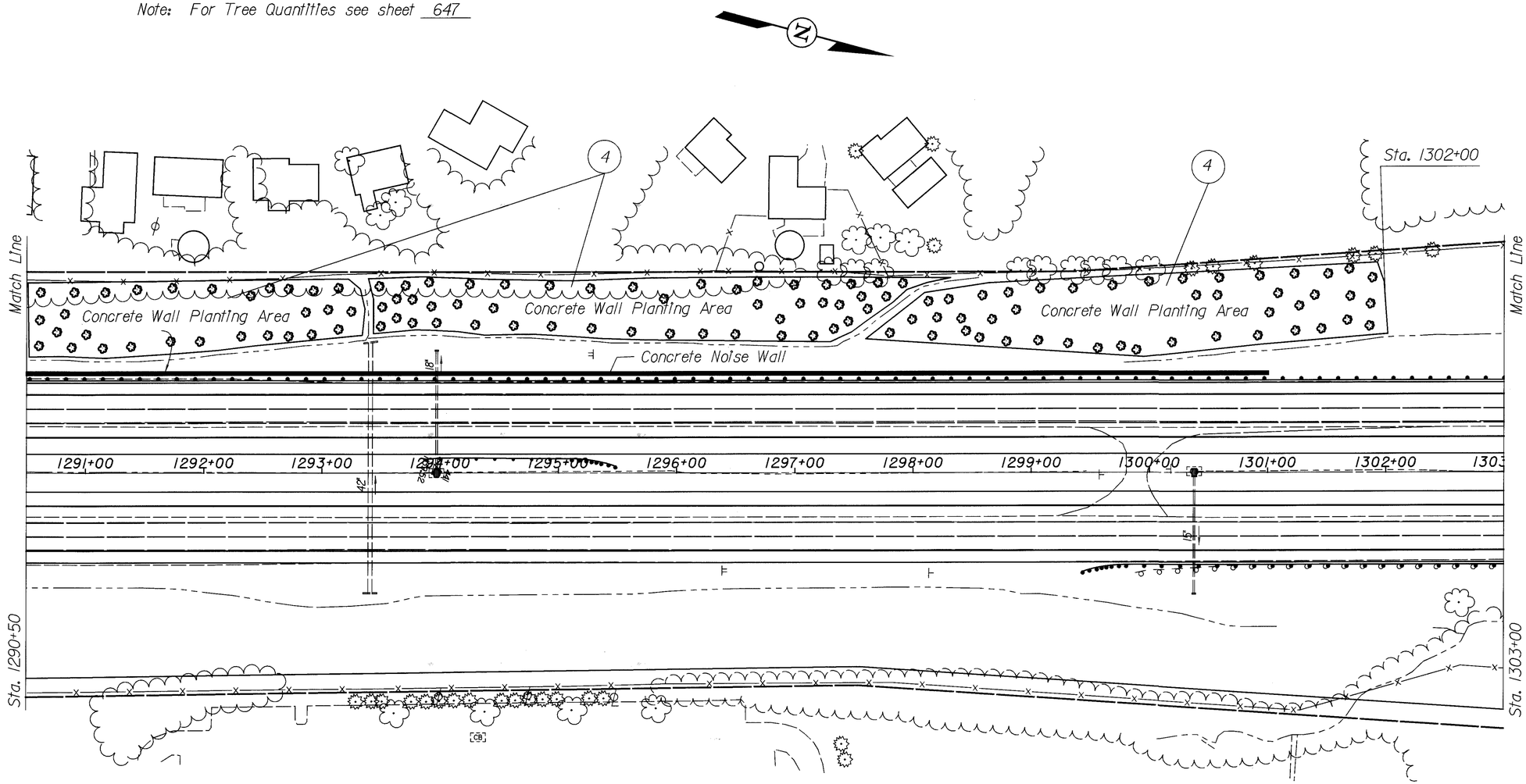

DATE : 24-NOV-1999
TIME : 15:07

DESIGN FILE : i:\pd_med_lr71\dgn\plantings\pp10.dgn
USERNAME : jrogers

HORIZONTAL SCALE IN FEET
0 50 100

CALCULATED | CHECKED

PLANTING SHEET
Sta 1290+50.00 to Sta 1303+00.00

MED - 71 - 15.78

657
940

DATE : 24-NOV-1999
TIME : 15:07

DESIGN FILE : h:\pd_med_lr71\dgn\plantings\ppll.dgn
USERNAME : jrogers

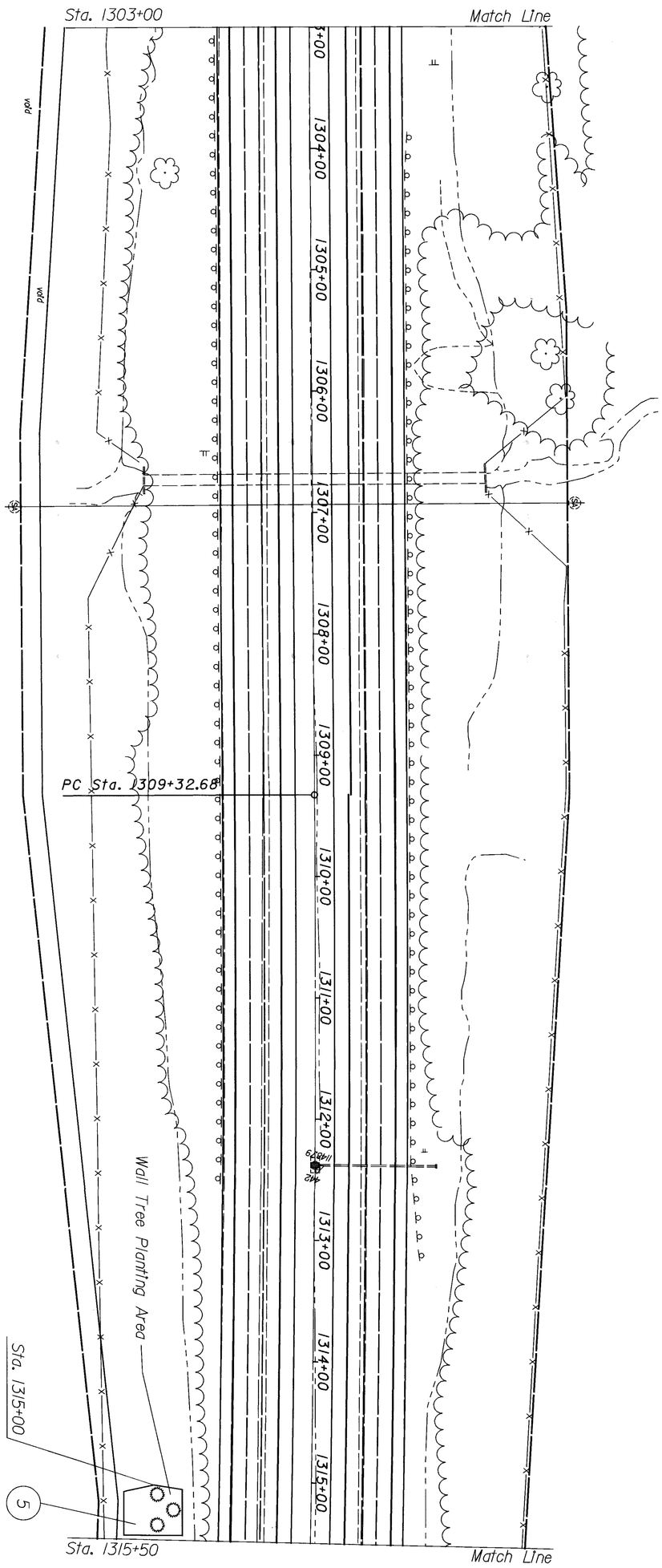

Note: For Tree Quantities see sheet 647

658
940

MED - 71 - 15.78

PLANTING SHEET
Sta 1303+00.00 to Sta 1315+50.00

CALCULATED
CHECKED

0 50 100
HORIZONTAL SCALE IN FEET

DATE : 24-NOV-1999
TIME : 15:07

DESIGN FILE : I:\pd_med_lr71\dgn\plantings\ppl2.dgn
USERNAME : jrogers

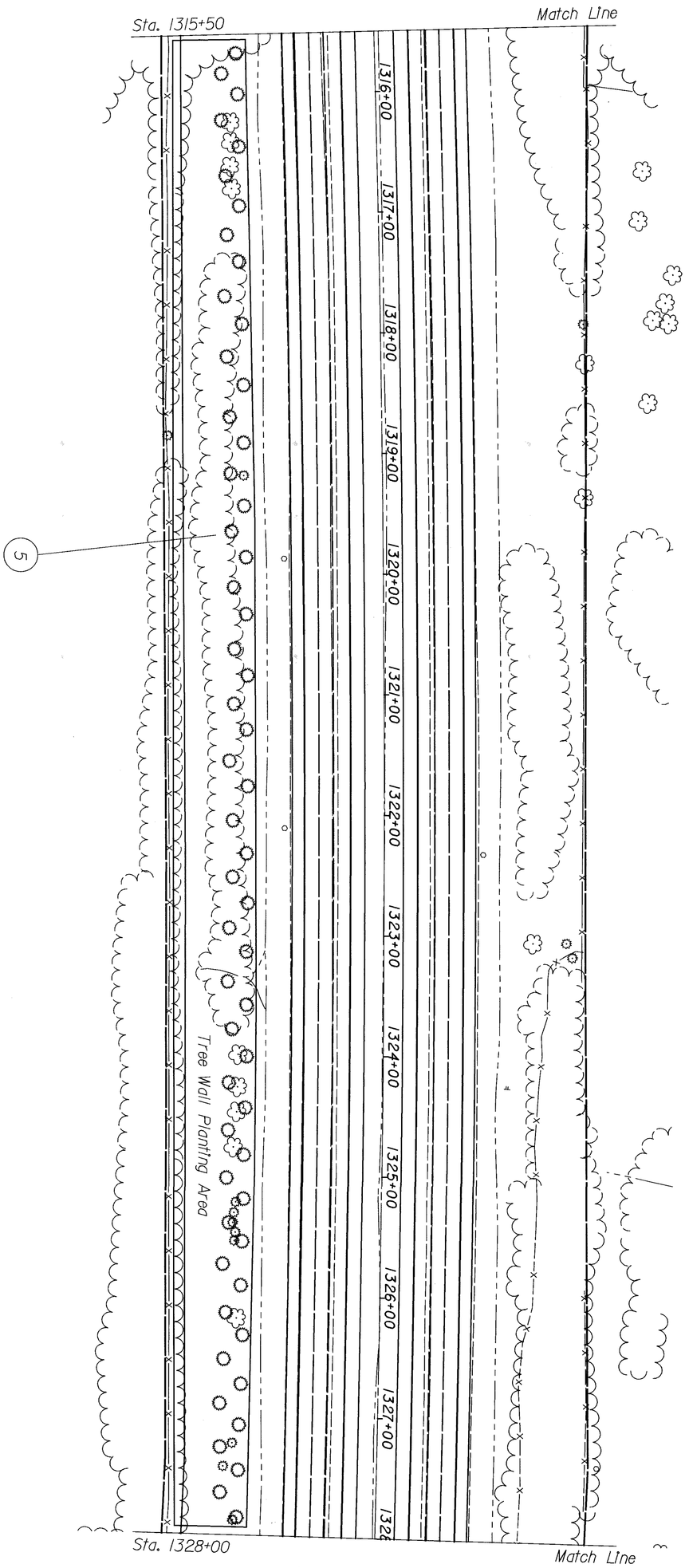

Note: For Tree Quantities see sheet 647

659
940

MED - 71 - 15.78

PLANTING SHEET
Sta 1315+50 toSta 1328+00.00

CALCULATED
CHECKED

0 50 100
HORIZONTAL SCALE IN FEET

Note: For Tree Quantities see sheet 647

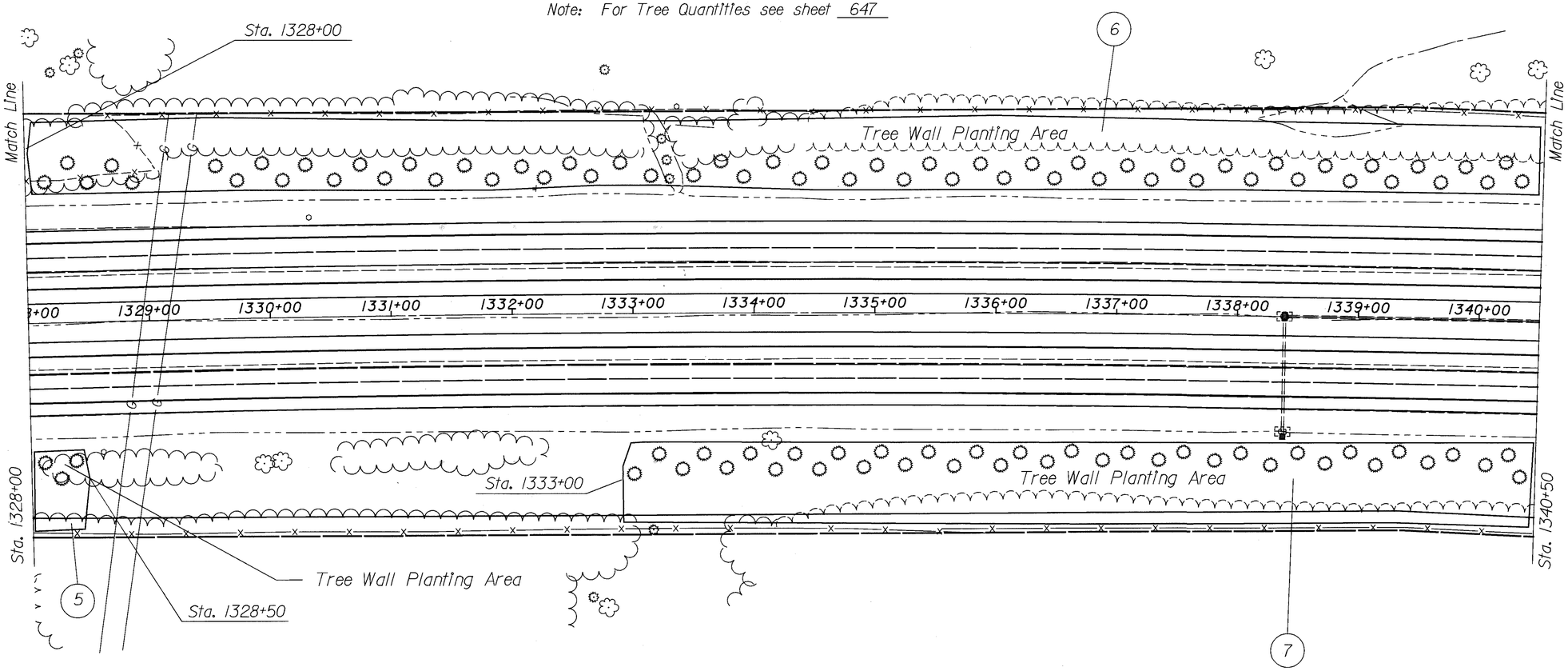

HORIZONTAL SCALE IN FEET
0 50 100

CALCULATED | CHECKED

PLANTING SHEET
Sta 1328+00.00 to Sta 1340+50.00

MED - 71 - 15.78

660
940

DATE : 24-NOV-1999
TIME : 15:07

DESIGN FILE : i:\pd_med_lr7h\dgn\plantings\ppl3.dgn
USERNAME : jrogers

Note: For Tree Quantities see sheet 647

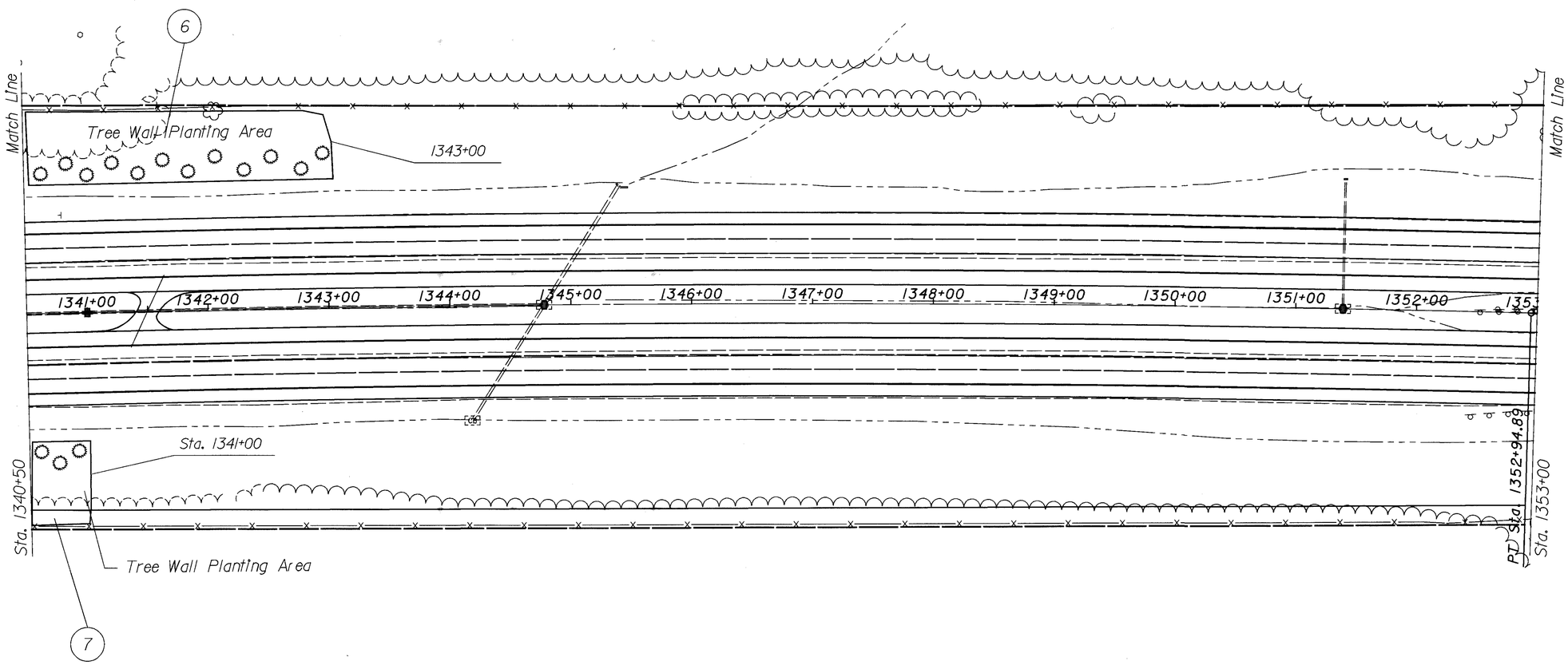

DESIGN FILE : i:\od_med_lr7i\dgn\plantings\ppl4.dgn
USERNAME : jrogers

DATE : 24-NOV-1999
TIME : 15:07

HORIZONTAL SCALE IN FEET
0 50 100

CALCULATED | CHECKED

PLANTING SHEET
Sta 1340+50.00 to Sta 1353+00.00

MED - 71 - 15.78

661
940

Note: For Tree Quantities see sheet 647

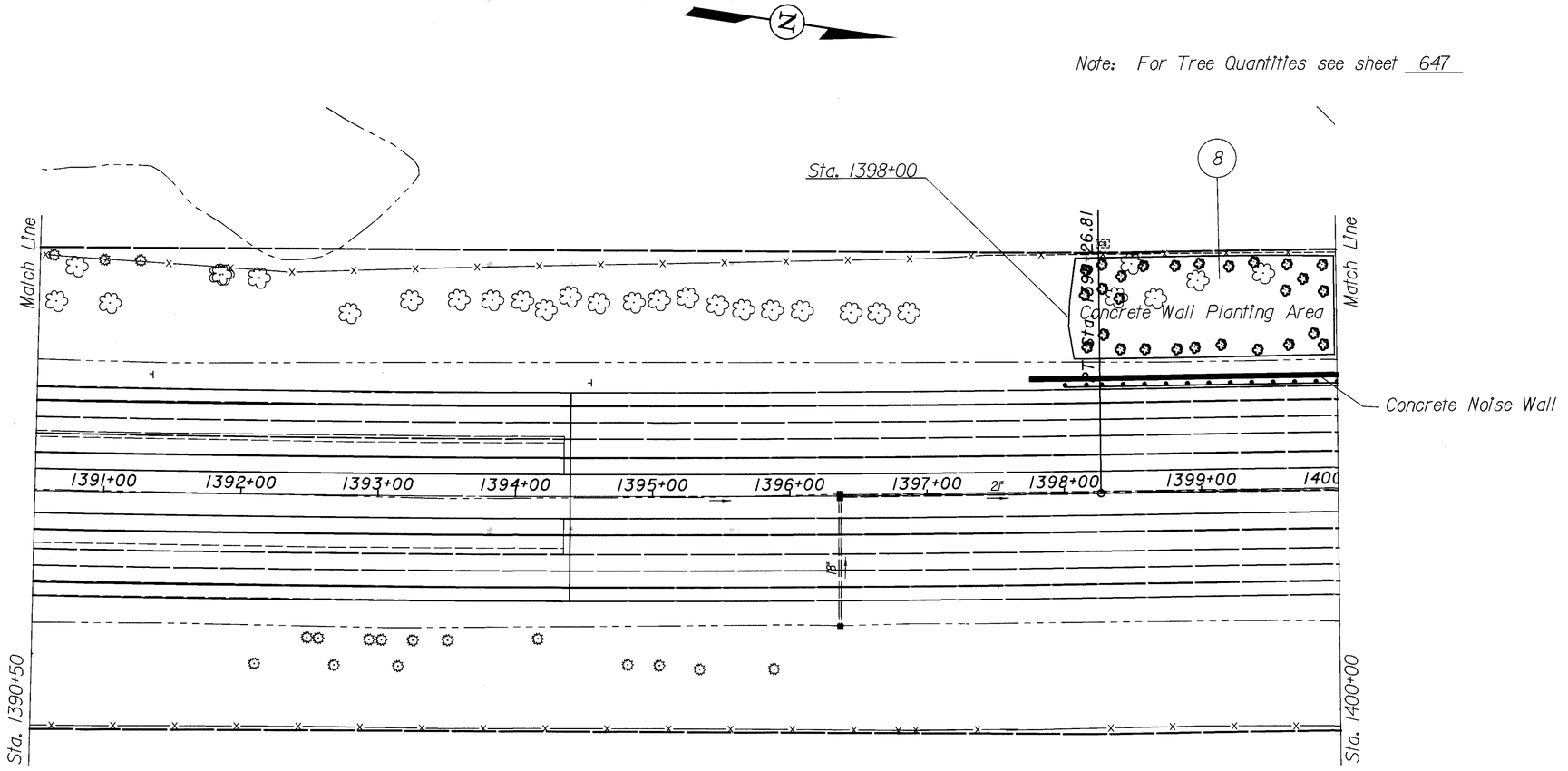

DESIGN FILE : i:\pd_med_lr71\dgn\plantings\pp15.dgn
USERNAME : jrogers

DATE : 24-NOV-1999
TIME : 15:07

HORIZONTAL SCALE IN FEET
0 50 100

CALCULATED | CHECKED

PLANTING SHEET
Sta 1390+50 to Sta 1400+00.00

MED - 71 - 15.78

662
940

DATE : 24-NOV-1999
TIME : 15:07

DESIGN FILE : I:\pd_med_ir71\dgn\plantings\ppl6.dgn
USERNAME : jrogers

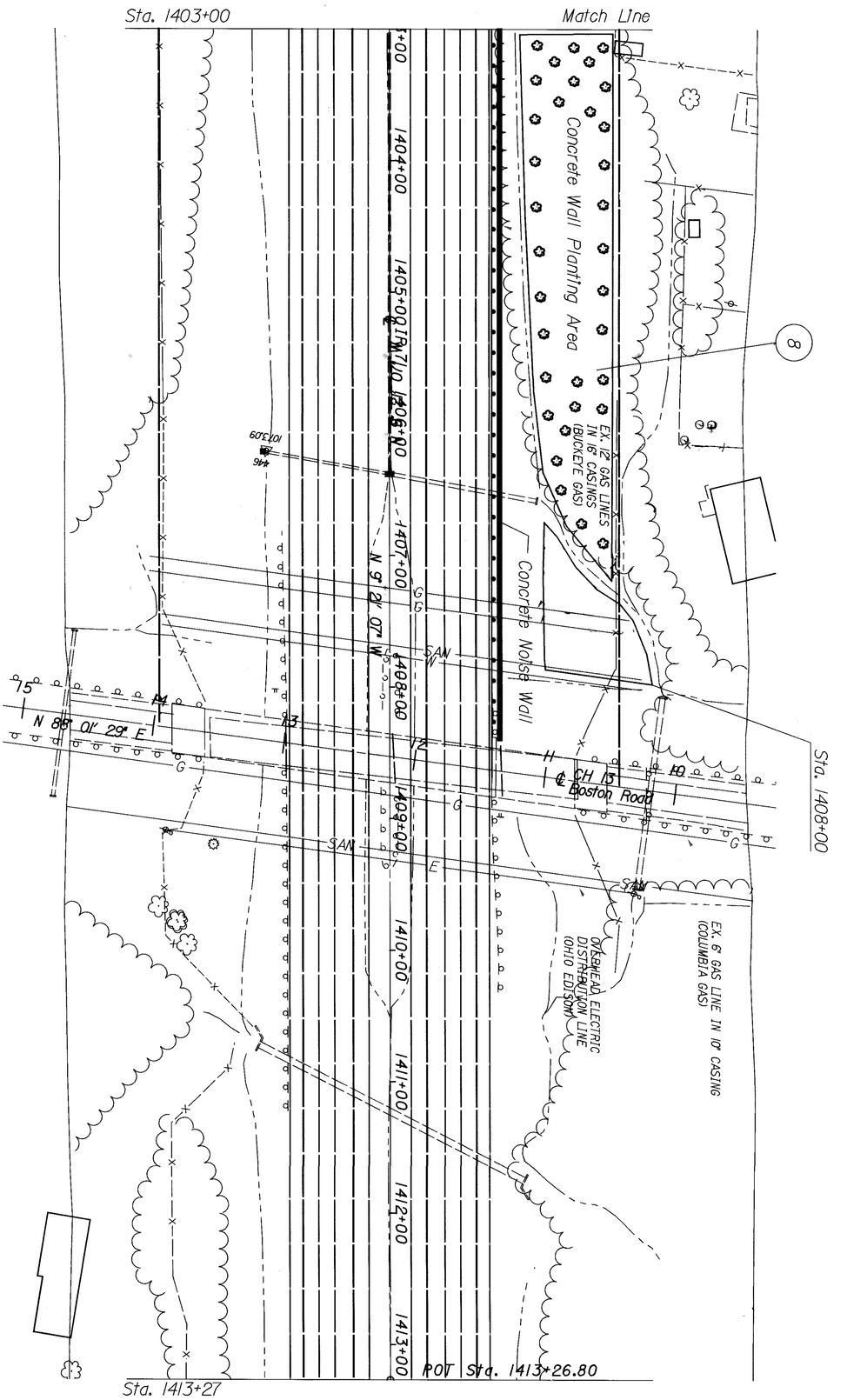

Note: For Tree Quantities see sheet 647

663 / 940	MED - 71 - 15.78	PLANTING SHEET Sta. 1403+00.00 to Sta. 1413+27.0	CALCULATED / CHECKED	0 HORIZONTAL SCALE IN FEET

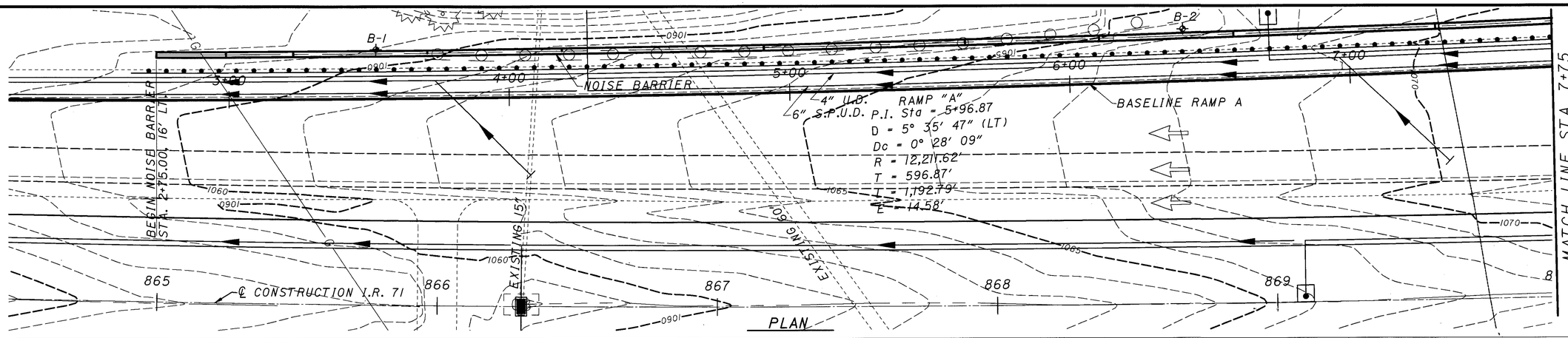

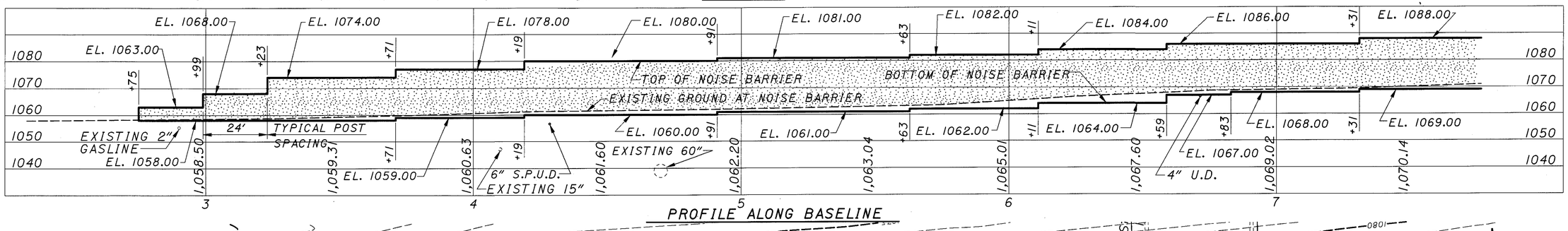

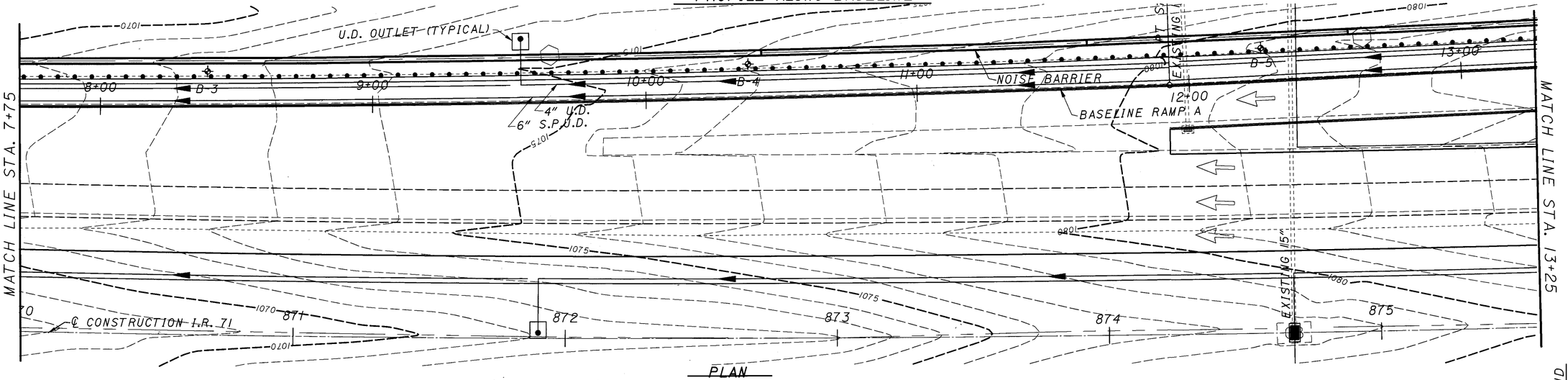

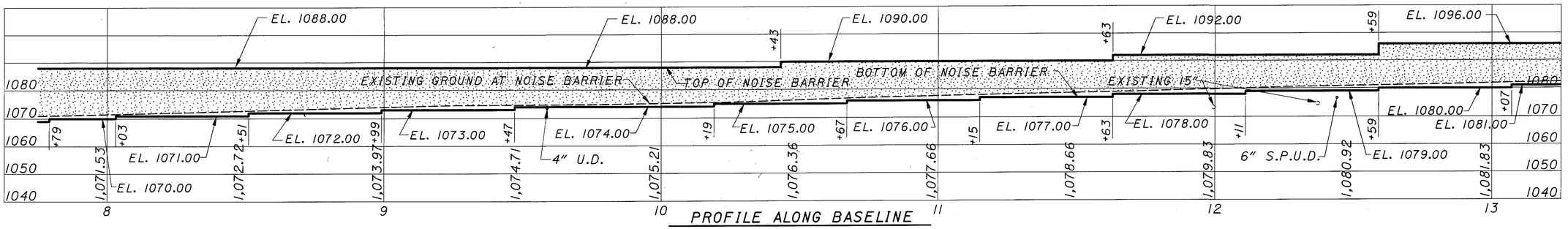

LEGEND
U.D. - UNDER DRAIN
S.P.U.D. - SHALLOW PIPE UNDER DRAIN

SITE-1.DGN 10/26/99 RB

DESIGN AGENCY
RICHLAND ENGINEERING LIMITED
29 NORTH PARK STREET
MANSFIELD, OHIO 44902

DATE
REVIEWED JB 11/9/99
DRAWN RRB REVISED
DESIGNED DAP CHECKED PS

NOISE BARRIER SITE PLAN - 1
SITE NO. 1

MED-71-15.78

1 / 16

664
940

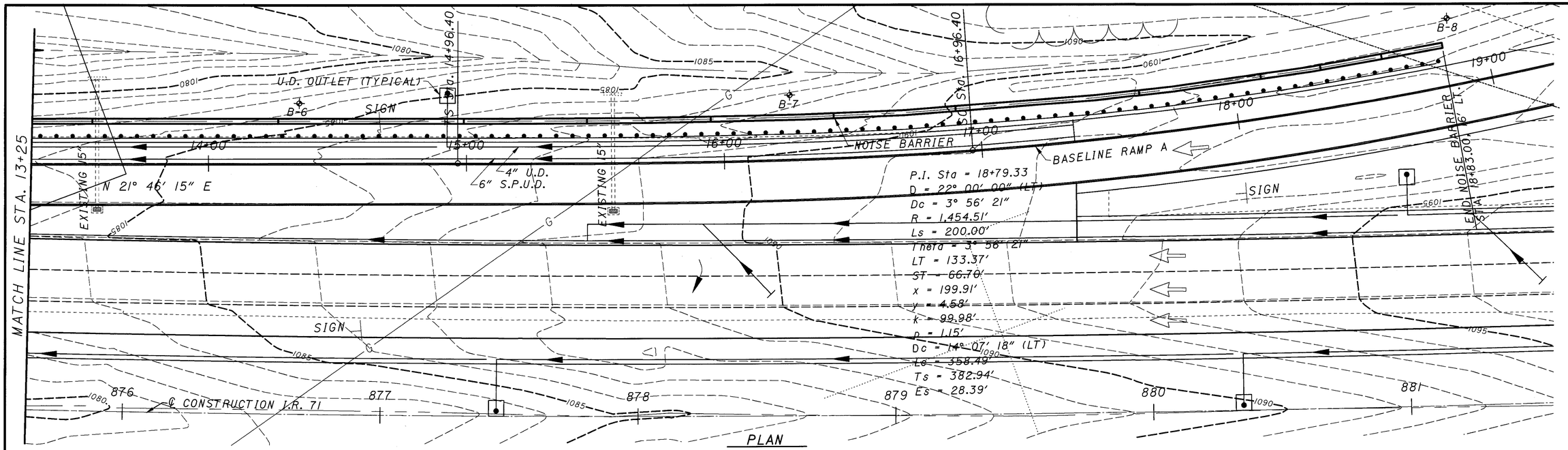

PLAN

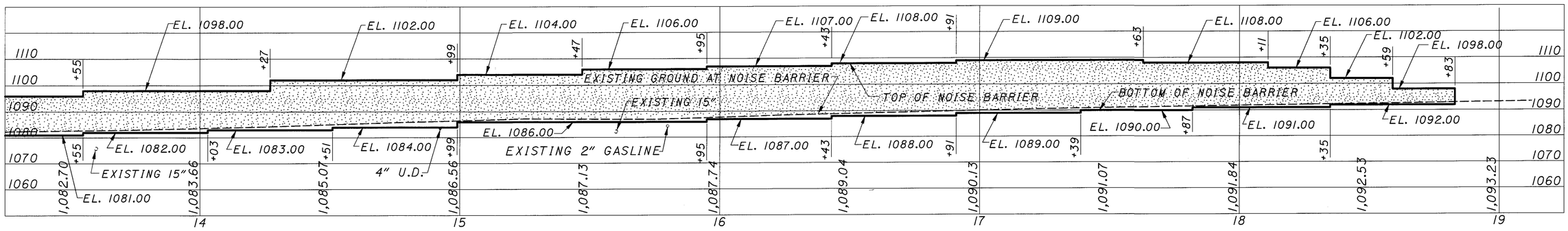

LEGEND

U.D. = UNDER DRAIN
S.P.U.D. = SHALLOW PIPE UNDER DRAIN

SITE-1.DGN 10/26/99 RB

DESIGN AGENCY
RICHLAND ENGINEERING LIMITED
29 NORTH PARK STREET
MANSFIELD, OHIO 44902

DATE 11/9/99
REVIEWED JB
REVISED
DRAWN RRB
DESIGNED DAP
CHECKED PS

NOISE BARRIER SITE PLAN - 2
SITE NO. 1

MED-71-15.78

2 / 16

665
940

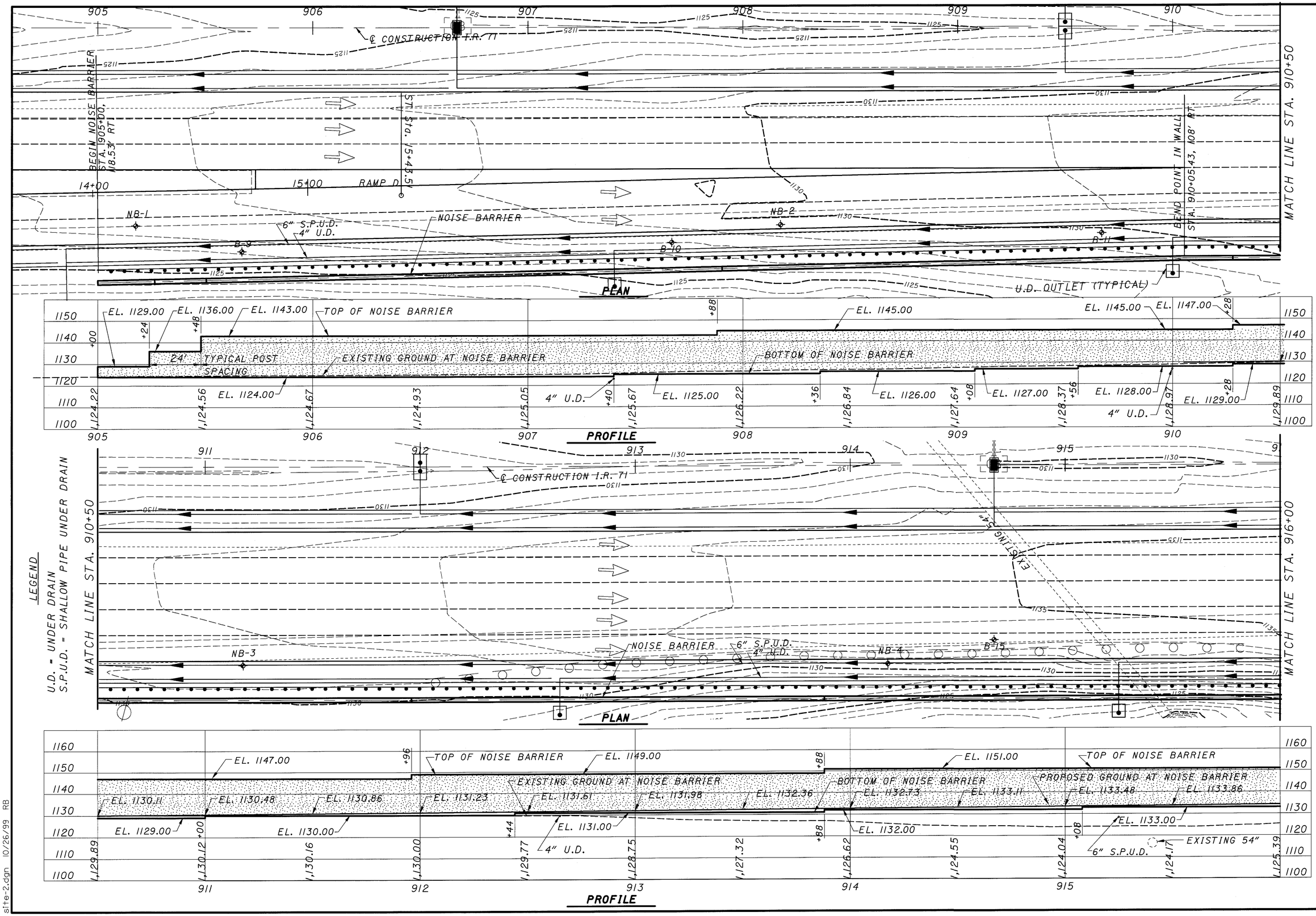

site-2.dgn 10/26/99 RB

DESIGN AGENCY
RICHLAND ENGINEERING LIMITED
29 NORTH PARK STREET
MANSFIELD, OHIO 44902

DESIGNED	DRAWN	REVIEWED	DATE
DAP	RRB	JB	11/9/99
CHECKED	REVISED		
PS			

NOISE BARRIER SITE PLAN - 3
SITE NO. 2

MED-71-15.78

3 / 16

666
940

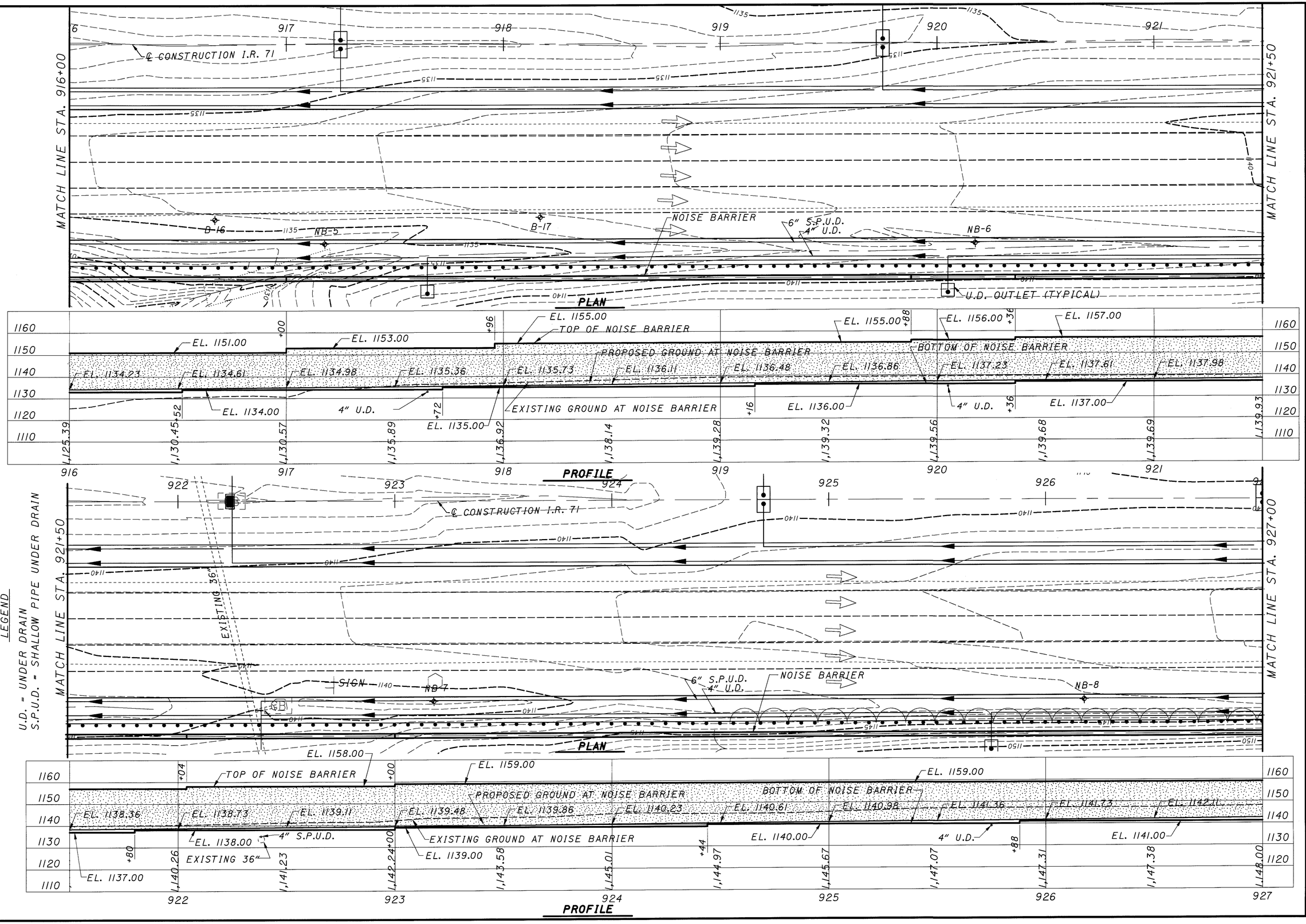

site-2.dgn 10/26/99 RB

DESIGN AGENCY
RICHLAND ENGINEERING LIMITED
29 NORTH PARK STREET
MANSFIELD, OHIO 44902

DESIGNED	DRAWN	REVIEWED	DATE
DAP	RRB	JB	11/9/99
CHECKED	REVISED		
PS			

PLAN - 4

NOISE BARRIER SITE PLAN
SITE NO. 2

MED-71-15.78

4 / 16

667
940

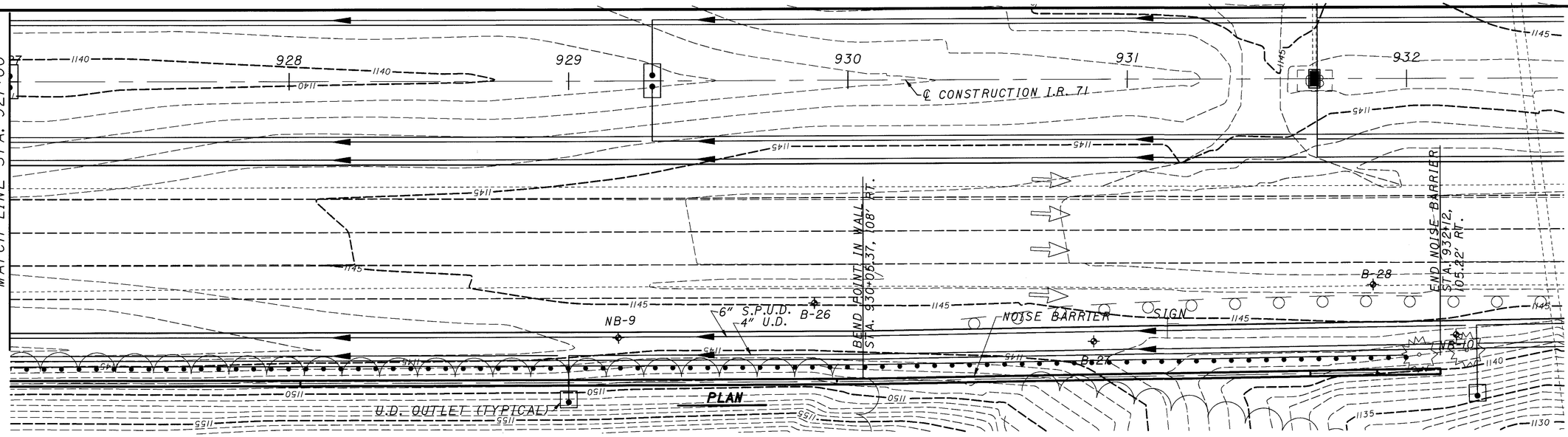

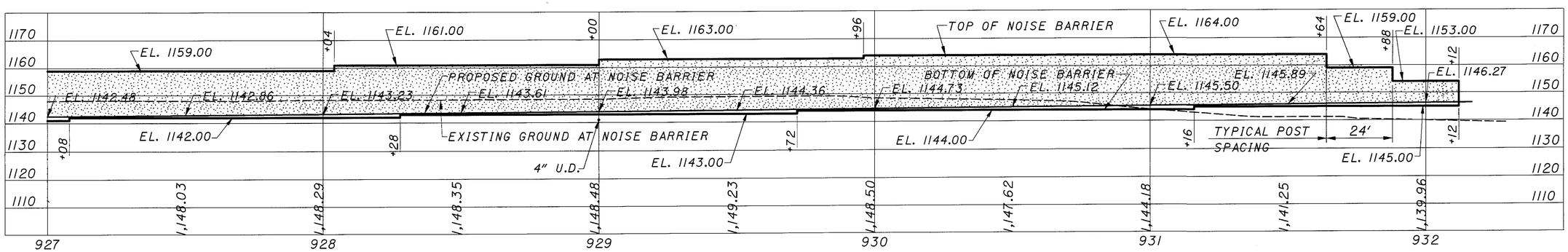

PROFILE

LEGEND

U.D. = UNDER DRAIN
S.P.U.D. = SHALLOW PIPE UNDER DRAIN

site-2.dgn 10/26/99 RB

DESIGN AGENCY
RICHLAND ENGINEERING LIMITED
29 NORTH PARK STREET
MANSFIELD, OHIO 44902

DESIGNED DAP | DRAWN RRB | CHECKED PS | REVIEWED JB | DATE 11/9/99 | REVISED

NOISE BARRIER SITE PLAN - 5
SITE NO. 2

MED-71-15.78

5 / 16

668
940

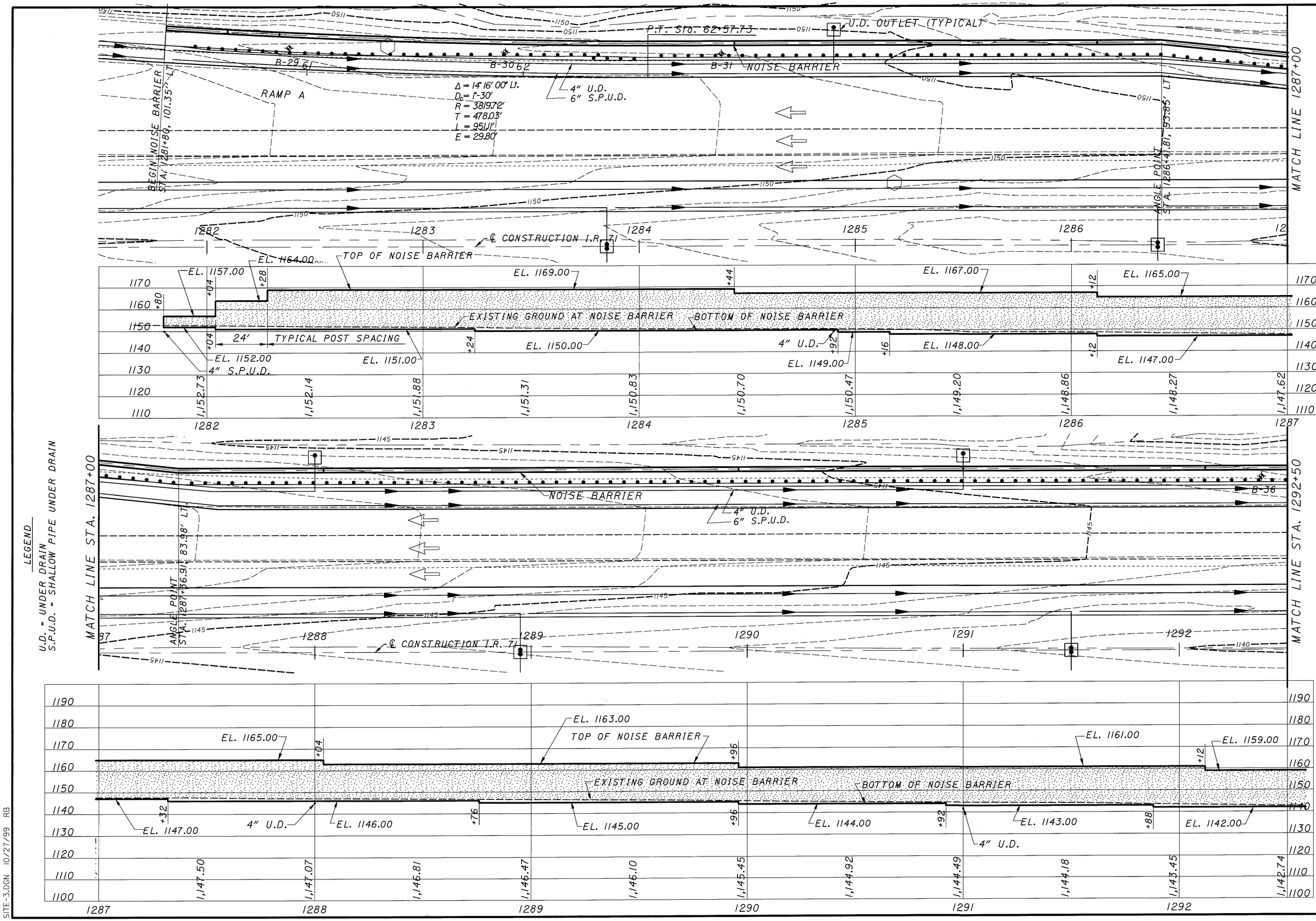

DESIGN AGENCY
RICHLAND ENGINEERING LIMITED
29 NORTH PARK STREET
MANSFIELD, OHIO 44902

DESIGNED DAP | CHECKED PS | DRAWN RRB | REVISED | REVIEWED JB | DATE 11/9/99

NOISE BARRIER SITE PLAN - 6
SITE NO. 4

MED-71-15.78

6/16

669/940

SITE-3.DGN 10/27/99 RB

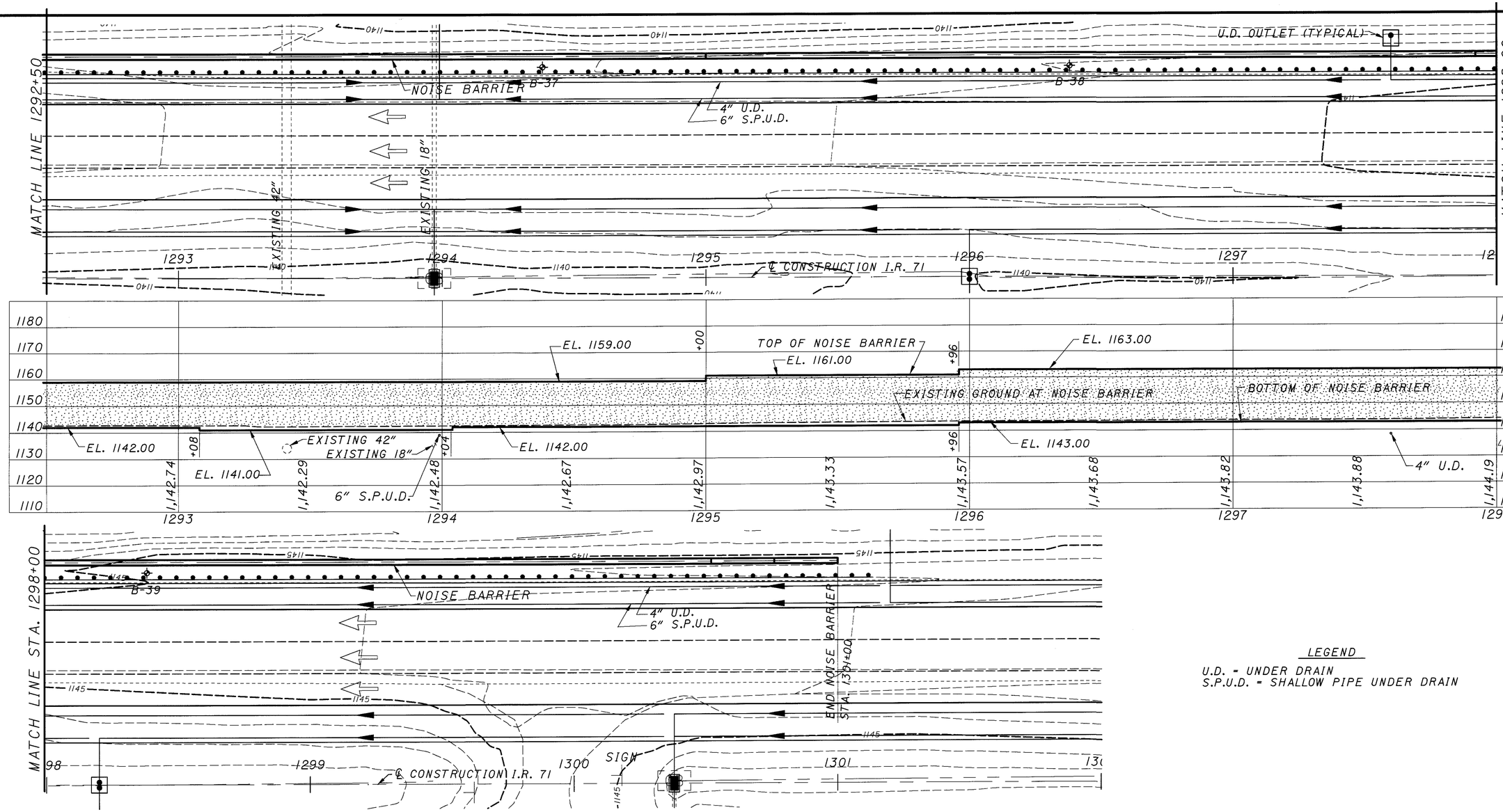

LEGEND

U.D. - UNDER DRAIN
S.P.U.D. - SHALLOW PIPE UNDER DRAIN

SITE-3.DGN 10/27/99 RB

DESIGN AGENCY
RICHLAND ENGINEERING LIMITED
29 NORTH PARK STREET
MANSFIELD, OHIO 44902

DATE REVIEWED JB 11/9/99
DRAWN RRB REVISED
DESIGNED DAP CHECKED PS

NOISE BARRIER SITE PLAN - 7
SITE NO. 4

MED-71-15.78

7 / 16

670
940

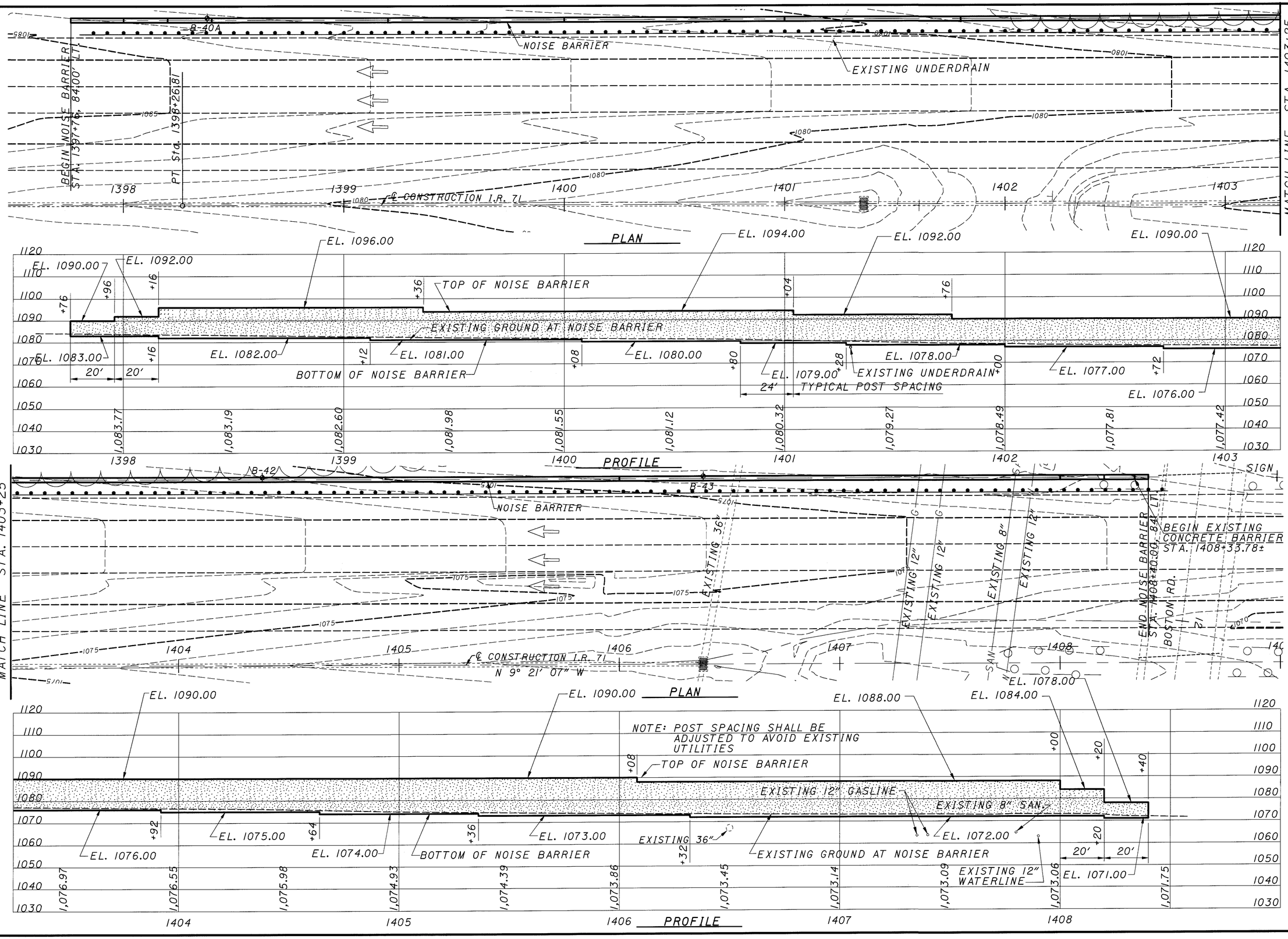

RICHLAND ENGINEERING LIMITED
DESIGN AGENCY
29 NORTH PARK STREET
MANSFIELD, OHIO 44902

REVIEWED JB DATE 11/9/99
DRAWN RRB REVISED
DESIGNED DAP CHECKED PS

NOISE BARRIER SITE PLAN - 8
SITE NO. 6

MED-71-15.78

8 / 16

671
940

SITE-4.DGN 10/21/99 RB

≠ SHOULDER WIDTH

SITE NO. 1	10'-0" MAINLINE, VARIES 6'-0" TO 8'-0" ON RAMP
SITE NO. 2	10'-0" RAMP & MAINLINE
SITE NO. 4	8'-0" TO 10'-0" ON RAMP, 10'-0" MAINLINE
SITE NO. 6	10'-0" MAINLINE

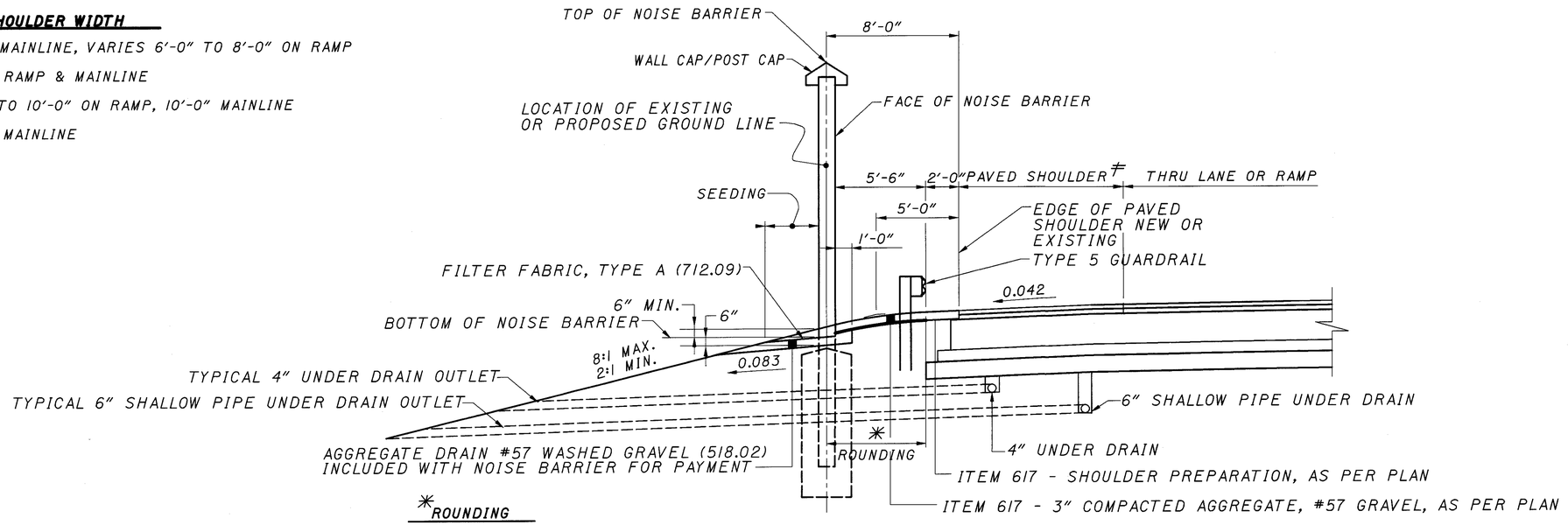

✳ ROUNDING

SITE NO. 1, 4 & 6 - 4'-0" ROUNDING
SITE NO. 2 - 10'-0" ROUNDING

NOISE BARRIER TYPICAL SECTION

NOISE BARRIER ESTIMATED QUANTITIES

CALCULATED DAP DATED 11/99
CHECKED RB DATED 11/99

ITEM	ITEM EXT.	QUANTITY	UNIT	DESCRIPTION	SITE NO. 1	SITE NO. 2	SITE NO. 4	SITE NO. 6
SPECIAL	60610200	1,756	S.F.	NOISE BARRIER (REFLECTIVE), 10' HEIGHT AND UNDER	744	312	240	460
SPECIAL	60610210	12,552	S.F.	NOISE BARRIER (REFLECTIVE), OVER 10' TO 14' HEIGHT	3,912	624	600	7,416
SPECIAL	60610220	112,272	S.F.	NOISE BARRIER (REFLECTIVE), OVER 14' TO 20' HEIGHT	22,104	49,200	33,744	7,224
617	11101	1,028	TON	COMPACTED AGGREGATE, AS PER PLAN	226	382	270	150
617	20001	5,275	S.Y.	SHOULDER PREPARATION, AS PER PLAN	1,161	1,959	1,387	768

NOTE: QUANTITIES CARRIED TO THE GENERAL SUMMARY SHEET 68.

DESIGN AGENCY
RICHLAND ENGINEERING LIMITED
29 NORTH PARK STREET
MANSFIELD, OHIO 44902

DATE 11/9/99
REVIEWED JB
DRAWN RRB
REVISED
DESIGNED DAP
CHECKED PS

NOISE BARRIER TYPICAL SECTION AND ESTIMATED QUANTITIES

MED-71-15.78

9/16

672/940

TYPICAL.DGN 7/21/99 RB

GENERAL NOTES
Noise Barrier

I. Description
II. Posts
III. Barrier Materials
IV. Construction Methods
V. Acceptance Criteria
VI. Method of measurement
Vii. Method of Payment

ITEM SPECIAL-NOISE BARRIER

I. Description

This work shall consist of furnishing and installing noise barriers including all material, labor and equipment required in accordance with these provisions and applicable standards and in conformity with the dimensions, lines and grades shown on the plans.

No mixing of barrier material types or colors at any one noise barrier will be allowed.

Barrier material type supplied for reflective noise barrier projects shall be any listed on sheet 12 of 16 unless otherwise specified.

Individual barrier fabrication and erection details, except for posts and foundations, shall be as per approved Manufacturer's drawings listed on sheets 12 of 16 Posts and foundations shall be as detailed in these plans. Project plan post and foundation details govern over manufacturer's drawings.

Post spacing shown in the noise barrier material Manufacturer's approved drawings may be used in lieu of the post spacing shown in the plans. Any interference with utilities, under drains or other post spacing adjustments required to meet design plan alignment, connections to structures, or other conditions created due to changing of post spacings shall be at the Contractor's expense.

Copies of the Manufacturer's drawings listed on sheets 12 of 16 shall be furnished the Engineer before any work is initiated, All project specific details not covered by the plans or the Manufacturer's drawings shall be approved by the Engineer before work is initiated.

The barrier and the associated work shall conform to sections 499 and 501 of the CMS as appropriate.

II. Posts

A. CONCRETE POSTS, PEDESTALS, SPREAD FOOTINGS, and DRILLED SHAFTS

Reinforcing steel shall be ASTM A615, Grade 60.

Concrete shall be Class C concrete, CMS 511, except for drilled shaft concrete which shall conform to Section D. Concrete for Drilled Shafts.

B. PRESTRESSED CONCRETE POSTS

Item 515 of the CMS shall apply except as modified below.

Prestressed Concrete;
compressive strength - 5,000 PSI,
compressive strength at transfer of prestress - 4,000 PSI
prestressing strand - ASTM A416.
Ultimate strength F's = 270,000 PSI.
Initial stress = 0.70 F's.

Prestressing strand shall be ½" diameter with an area of 0.153 sq. in. An initial tensile force of 28900 lbs. shall be applied to each strand. Exposed strand ends shall be painted with approved epoxy. See Section A. above for specifications and application rates.

C. CONCRETE FOR DRILLED SHAFTS

Concrete for all drilled shafts shall be Class S Concrete and shall be in accordance with Item 511 except as modified and supplemented herein. The required slump is 7 inches plus or minus ½ inch. The maximum water to cement ratio shall be 0.50 for concrete placed under water. The requirements of adding 10 percent more cement to the concrete mix shall be waived. The top 10 feet of concrete in the drilled shafts are required to be vibrated. Only a minimal vibratory effort is necessary. SPECIAL CARE shall be taken NOT to OVER-VIBRATE the drilled shaft concrete.

NOTE: If the casing is removed using a vibratory hammer, no other vibratory effort is needed. The concrete for the drilled shaft shall be placed as per 511 except as modified by the plans. The concrete placement operation shall be continuous from the start to finish. The concrete for the drilled shaft shall be placed promptly after the final inspection of the shaft. If practicable, the concrete shall be placed in a clean, dry excavation. Care shall be taken to ensure that concrete is not being placed in moving water. The concrete can be placed in a dry drilled shaft excavation by the free fall method provided the concrete falls to its final position through air without striking the sides of the hole, the reinforcing steel cage or any other obstruction. The free fall method allows the concrete to be dropped from the top through a centering chute to the concrete's final position.

If the engineer determines that dewatering is not practicable, the contractor may be given permission to place the concrete under water. The drilled shaft excavation shall be filled with water to such a depth that all water motion has ceased. The concrete shall then be placed by means of a concrete pump. The concrete pump pipe shall have a diameter that is not less than 4 inches. The concrete pump equipment shall be so arranged that no vibrations result which might damage fresh concrete. Pipes carrying concrete from the pump to the shaft should be arranged with a minimum number of bends. The pipe used to convey the concrete to the bottom of the drilled shaft excavation shall be anchored to the steel casing to prevent the pipe from undulating during the initial placement of the concrete.

The pumping equipment shall be suitable in kind and adequate in capacity for the work required. The use of aluminum pipe as a conveyance for the concrete will not be permitted. An adequate quantity of grout, mortar, or concrete with coarse aggregate omitted shall be pumped through the equipment ahead of the specification concrete to provide lubrication to the pumping system. The concrete used for lubrication shall not be placed in the shaft. The lubrication process will not be repeated as long as the pumping operations are continuous. The operation of the pump shall be such that a continuous stream of concrete without air pockets is produced. In order to prevent the contamination of the concrete placed initially at the bottom of the shaft, the outlet end of the pumping pipe shall be sealed with a diaphragm or plug that is flushed out when the hydrostatic pressure from the column of concrete exceeds that of the water in the shaft. The initial rate of concrete placement must be carefully controlled so as not to lift or displace the cage of reinforcing steel. The conveying system shall be water tight and the outlet end shall always remain well below the top of the freshly placed concrete. The preferred concrete placement procedure is to maintain the outlet end of the pumping system at approximately 10 feet below the top of the fresh concrete. When the concrete reaches the top of the drilled shaft column, all laitance shall be removed.

III. Barrier Materials

Acceptable Noise panel designs are listed on sheets 12 of 16.
Materials shall either meet the manufacturer's requirements listed on their approved drawings or CMS requirements if not listed on manufacturer's approved drawings.

Concrete Noise barrier panels shall be precast, prestressed, or cast in place.

IV. POST AND WALL CAP

Post and wall cap height shall be 4 inches. The caps may be designed integral with the wall and/or the post or attached separately. The bottom of the post cap shall be above the top of the wall cap by no more than 1 inch. Where walls on either side of the post are at different plan specified elevation the 1 inch space between post cap and wall cap shall be based on the higher wall. Wall caps shall be 4 inches wider than the wall and centered on the top of the wall to give a 2 inch overhang on both sides.Post caps shall overhang all vertical edges of the post by 2 inches. The vertical ends of the wall cap shall be no less than 1 inch from the vertical face of the posts, whether integral or separately attached.

Caps shall have designed reinforcement and concrete cover meeting AASHTO requirements.

If the caps are to be cast and attached separAtely to the top of the wall and/or post, the concrete design strength for the cap shall be equal to the wall.

Anchorage systems between separate caps and the wall or posts shall be designed in accordance with AASHTO and shall have a galvanized coating if the accepted anchorage system is steel. The anchor system in the installed condition shall not be visible when viewing the finished wall. Payment for all of the above shall be incidental to the pertinent Item Special - Noise Barrier.

V. Construction Methods

A. Noise barriers shall be installed in accordance with the plans. Joints and connections shall be secured in such a manner as to be structurally sound with no visible openings for sound transmission. Noise panel attachments to posts and installation methods shall be structurally sound, give adequate support to the noise panels, and be secured to the post or adequately blocked between the post's flanges to eliminate movement at the support and eliminate any possible vibration.

Exclusive of the Contractor's choice of noise barrier panel, the top of installed noise barriers shall match the top of wall design elevations, with no variation between posts, unless the design plans require an elevation change.

The plan detailed elevations for the top of the noise barrier shall be maintained. If any additional panel height and square feet of noise panel are required to meet the plan elevations due to the Contractor's choice of post spacings and noise panels, the additional square feet shall not be included for payment.

B. Marred, chipped, scratched, spalled, or any other damage deemed detrimental to the noise barriers by the Engineer shall be repaired or replaced in accordance with the manufacturer's recommendations, as approved by the Engineer, at the Contractor's expense.

C. Trench backfill shall be with Class S concrete modified as per II.D. above. The method of placement shall not allow voids or excessive segregation and shall be performed to the satisfaction of the Engineer.

GENERAL NOTES CONTINUED Sheet 11/16

RICHLAND ENGINEERING LIMITED
29 NORTH PARK STREET
MANSFIELD, OHIO 44902

REVISED	DESIGNED	DRAWN	REVIEWED	DATE
	DAP	RRB	JB	11/9/99
	CHECKED	REVISED	STRUCTURE FILE NUMBER	
	PS			

NOISE BARRIER GENERAL NOTES

MED-71-15.78

10/16

673/940

148-9NBD

D. All excess excavation shall be disposed of in a manner satisfactory to the Engineer.

E. After erection of the noise barrier, the disturbed area shall be left in a finished condition at the direction of the Engineer and a growth of grass established, at the Contractor's expense, in accordance with CMS Item 659.

F. Tolerances

1. Posts (measured at top)
   a. Vertical alignment shall be within 0.05 inch/ft. of height.
   b. Posts shall be set within +/- ½ inch of their specified location.

2. Noise barriers
   a. Vertical alignment shall be within 0.05 inch/ft. of height.

G. Horizontal joints shall be aligned with horizontal joints in adjacent panels between adjacent posts.

VI. Acceptance Requirements

In addition to conforming with the structural requirements as shown in the plans, it is also necessary to comply with the following aesthetic requirements.

The Contractor shall deliver to the job site one full size noise panel, and one full size post representative of the product the contractor is going to supply. The Engineer will evaluate whether both the noise panel and post meet all plan specified federal color standard, texture, trim, and/or coating requirements. To facilitate this comparison, the contractor shall supply the Engineer with a copy of "Federal Standard 595B Color Used in Government Procurement". If either the noise panel or post do not meet the plan requirements the Contractor shall have another noise panel or post manufactured and delivered to the job site for approval by the Engineer. If the plans do not specify a color, texture, trim, or coating requirement, it will still be necessary to deliver the sample post and panel to the job site. Prior to the production of any additional noise barriers or posts the sample post and panel must be delivered to the job site and approved if required.

The sample post and panel will become the control post and panel with which all subsequent posts and panels will be compared. This control post and panel shall be delivered to, and if necessary, moved to different locations to facilitate comparisons with the remaining posts and panels.

Any delivered and/or erected posts and panels which do not match the control post and panel or do not conform with the structural requirements as shown in the plans shall be removed and replaced at no additional costs.

All concrete noise barrier panels shall have a sealer/stain applied to match the Federal color number listed in the plan.

VII. Method of Measurement

Noise barrier plan quantities are measured in square feet of acceptable barrier using a height from bottom of wall to top of wall and a length from post to post as detailed in the plans. The cost of the post cap and wall cap shall be incidental to the cost of the noise barrier. Where a noise barrier is constructed behind a concrete parapet the bottom the wall shall be defined as the top of the parapet for measurement purposes.

Final plan quantities of noise barrier in square feet shall not include any addition for noise barrier heights greater than plan requirements. The additional heights of noise barrier required to accommodate the contractor's selected manufactured barrier materials or post spacing either greater or less than plan post spacing shall not be included for payment.

VIII. Basis of Payment

Noise barriers, completed and in place, as described in method of measurement, will be paid for at the contract unit price per square foot. This payment shall be full compensation for all materials, labor and equipment necessary to construct the noise barrier. All excavation, backfill with suitable material and any adjustment in earthwork quantities required due to the contractor's selected noise panel, sealing/staining, aggregate drains, compaction, disposal of surplus or unsuitable materials, seeding, fertilizing and mulching of disturbed areas shall also be included for payment.

ITEM	DESCRIPTION	UNIT
	REFLECTIVE TYPE	
Special	Noise Barrier (Reflective) 10 ft. ht. and under	Sq.ft.
Special	Noise Barrier (Reflective), over 10 to 14 ft. ht.	Sq.ft.
Special	Noise Barrier (Reflective), over 14 to 20 ft. ht.	Sq.ft.

ABBREVIATIONS

AITC	American Institute of Timber Construction
ASTM	American Society for Testing and Materials
CMS	Construction and Materials Specifications of ODOT
ILI	Indiana Limestone Institute
LPG	Volatile Petroleum Solvent (liquid propane gas)
SSPC	Structural Steel Painting Council
VPS	Voluntary Product Standard

ITEM SPECIAL-NOISE BARRIER (REFLECTIVE) 10 FT. HEIGHT AND UNDER

ITEM SPECIAL-NOISE BARRIER (REFLECTIVE) OVER 10 TO 14 FT. HEIGHT

ITEM SPECIAL-NOISE BARRIER (REFLECTIVE) OVER 14 TO 20 FT. HEIGHT

In order to assure positive drainage under the noise barrier, a 6" thick layer of #57 washed gravel meeting 518.02 shall be placed under the noise barrier panels. A filter fabric, Type A meeting 712.09 shall be used on top of the gravel behind the noise barrier. All disturbed areas behind the noise barrier shall be seeded and muched. See typical sections on sheet 9 of 16 for additional details.

Payment for all of the above shall be at the unit price bid per square foot for the above Items, which shall include all labor, equipment, materials, and incidentals to complete the above work.

ITEM 617 COMPACTED AGGREGATE, AS PER PLAN

This Item shall be used to place aggregate between the noise barrier and the paved shoulder. All Items of 617 shall apply except that the compaction requirment is waived and the aggregate shall be #57 gravel placed 3 inches thick.

Payment for all of the above shall be at the unit price bid per ton for Item 617-Compacted Aggregate, as per plan, which shall include all labor, equipment, materials, and incidentals necessary to complete the above work.

ITEM 617 SHOULDER PREPARATION, AS PER PLAN

This Item shall be used to remove material between the aggregate drain and the paved shoulder . All Items of 617 shall be followed except that the existing surface shall be loosened to a depth of 3 inches.

Payment for all of the above shall be at the unit price bid per square yard for Item 617-shoulder preparation, as per plan, which shall include all labor, equipment, materials, and incidentals necessary to complete the above work.

REVIEW OF DRAINAGE FACILITIES

The locations and depths of existing culverts, storm and sanitary sewers as shown in the plans were taken from the field survey information and original construction plans and are assumed to be approximate.

Before any work is started on the project and again before final acceptance by the state. Representatives of the state and the contractor, along with local representatives, shall make an inspection of all existing sewers, roadway pipes and edge drain outlets which are to remain in service and which may be affected by the work. The condition of the existing conduits and their appurtenance shall be determined from field observations. Records of the inspection shall be kept in writing by the state.

All existing sewer, roadway pipes and edge drain outlets inspected initially by the above mentioned parties shall be maintained and left in a condition reasonably comparable to that determined by the original inspection. Any change in the condition resulting from the contractors operations shall be corrected by the contractor to the satisfaction of the state at the contractors expense.

Payment for all operations described above shall be included in the contract price for the pertinent Item Special-Noise Barrier items.

RICHLAND ENGINEERING LIMITED
29 NORTH PARK STREET
MANSFIELD, OHIO 44902

DESIGNED DAP | DRAWN RRB | REVIEWED JB | DATE 11/9/99
CHECKED PS | REVISED | STRUCTURE FILE NUMBER

REVISED

NOISE BARRIER GENERAL NOTES

MED-71-15.78

APPROVED REFLECTIVE BARRIER SUPPLIERS

CONCRETE

SUPPLIERS	DRAWINGS & NOTES	VARIABLES COLOR TEXTURE PATTERN BRICK STYLE
Faddis Concrete Products 3515 Kings Hwy. Downingtown, PA 19335 Telephone: (800) 777-7973 Fax: 1-215-873-8431	USODOT-1 Sheets 1-6 Nov. 1993 Note: Up to 3283 N per Meter on Structures Note: Panels per Evercrete Limited D -7700297 - Sheets 1 & 2 Feb. 18,1997	Form lined ashlar sandstone texture on side away from freeway. The texture on the freeway side shall be ashlar sandstone impressed design with a relief of at least ½". The relief shall be measured from the depth at the center of the impressed joint. The width to depth ratio shall be 2:1 or less (if the depth is ½", the width of the joint shall not exceed a nominal 1" plus ⅛"). The panels shall be set flush with the posts on the freeway side. The panels, wall cap and posts shall be stained to a brown color meeting Federal Color #30252 All horizontal joint lines shall be aligned with adjacent panels between posts.
The Reinforced Earth Company Midwest Region 760 Pasquinelli Drive Suite 344 Westmount,Ill. 60559 Telephone:(708) 655-0044 Fax:(708) 655-0064	FW-1 & FW-2 of 3 (5/17/83) Fanwall/Durisol Technical Handbook (10/1/89) with ODOT posts	
Concrete Tech. Inc. 95 Mound Park Drive Springboro,Ohio 45066 Telephone:(513) 224-1867	Sheet #1 & P-3 (10/22/83)	
Baxter Concrete Products, Inc. 3370 Port Union Road Hamilton, Ohio 45014 Telephone: (513) 860-3593	#92202-Sheets 1-17 (10-5-92)	
Soundcore 4043 Maple Road, Suite 106 Amherst, NY 14226 Telephone: (716) 833-7651	Soundcore - Standard Hollowcore Precast Noise Barriers Drawing No. DET-1 (2-12-97)	
Concrete Products, Inc. P.O. Box 2799 Redmond, Washington 98073 Telephone: (206) 881-7910	Precast Noise Abatement Wall System 1 January 13, 1994 Precast Noise Abatement Wall System 2 January 13, 1994 Precast Noise Abatement Wall System 3 January 13, 1994	
Prestress Engineering Corp. P.O. Box 609 Algonquin, Illinois 60102-0609 Telephone: (708) 658-4545	Precast Noise Abatement Wall January, 1994	
Sidley Precast Div. P.O. Box 70 Thompson, Ohio 44086 Telephone: (216) 298-3232	Noise Barrier March 04, 1994	

CONCRETE

RICHLAND ENGINEERING LIMITED
29 NORTH PARK STREET
MANSFIELD, OHIO 44902

REVISED	DESIGNED	DRAWN	REVIEWED	DATE
	DAP	RRB	JB	11/9/99
	CHECKED	REVISED	STRUCTURE FILE NUMBER	
	PS			

NOISE BARRIER DETAILS

MED-71-15.78

675/940

148-9NBD

TABLE - DETAILS FOR SPREAD FOOTINGS*

PANEL GROUP	LENGTH L	WIDTH W	A BARS	B BARS
I	7'-6"	3'-6"	4-#5x7'-2" Top 4-#6x7'-2" Bot.	6-#5x3'-2" Top & Bottom
II	9'-0"	5'-6"	6-#5x8'-8" Top 6-#6x8'-8" Bot.	7-#5x5'-2" Top & Bottom
III	10'-6"	7'-6"	7-#5x10'-2" Top 7-#6x10'-2" Bot.	7-#5x7'-2" Top & Bottom
IV	12'-0"	9'-6"	9-#5x11'-8" Top 9-#6x11'-8" Bot.	9-#5x9'-2" Top & Bottom

Note: Soil should be able to handle a minimum allowable bearing pressure = 1.25 tons per sq. ft.

* All post and panel noise barriers shall utilize drilled shaft foundations unless otherwise indicated on the plans or directed by the Engineer.

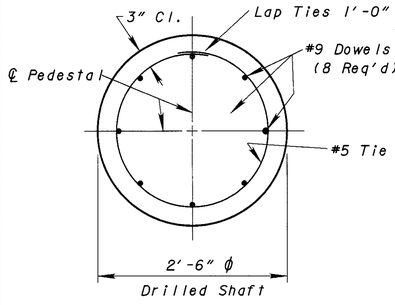

SECTION C-C

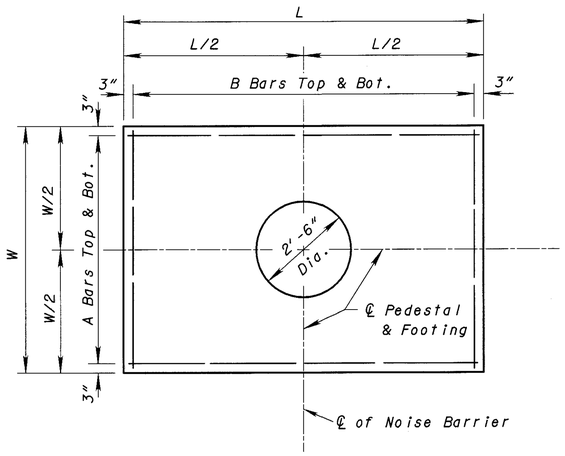

PLAN

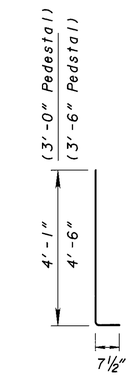

#9 DOWEL

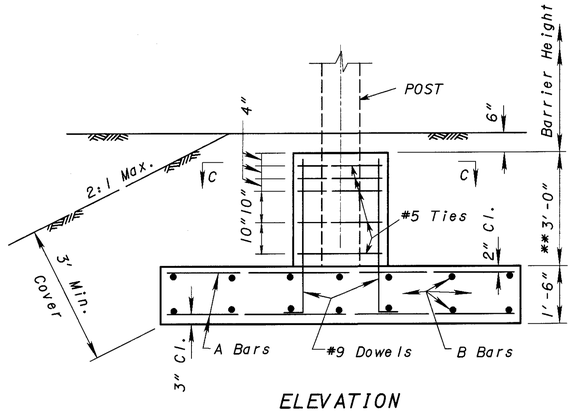

ELEVATION

SPREAD FOOTING FOUNDATION

** 3'-6" Pedestal for all embedded posts except concrete.

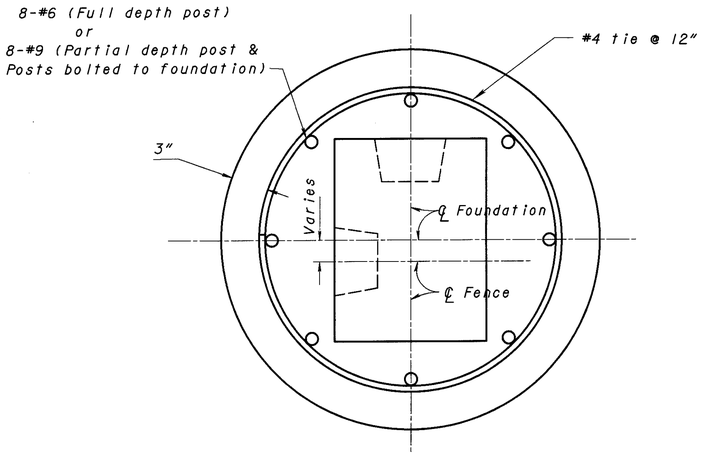

TYPICAL DRILLED SHAFT CROSS-SECTION

148-9NBD

RICHLAND ENGINEERING LIMITED
29 NORTH PARK STREET
MANSFIELD, OHIO 44902

REVISED | DESIGNED DAP | DRAWN RRB | REVIEWED JB | DATE 11/9/99
CHECKED PS | REVISED | STRUCTURE FILE NUMBER

NOISE BARRIER DETAILS

MED-71-15.78

13/16

676/940

LINE POST DETAILS

NOTE: For post sizes and concrete post reinforcement, see Noise Barrier Table on Sheet 16/16

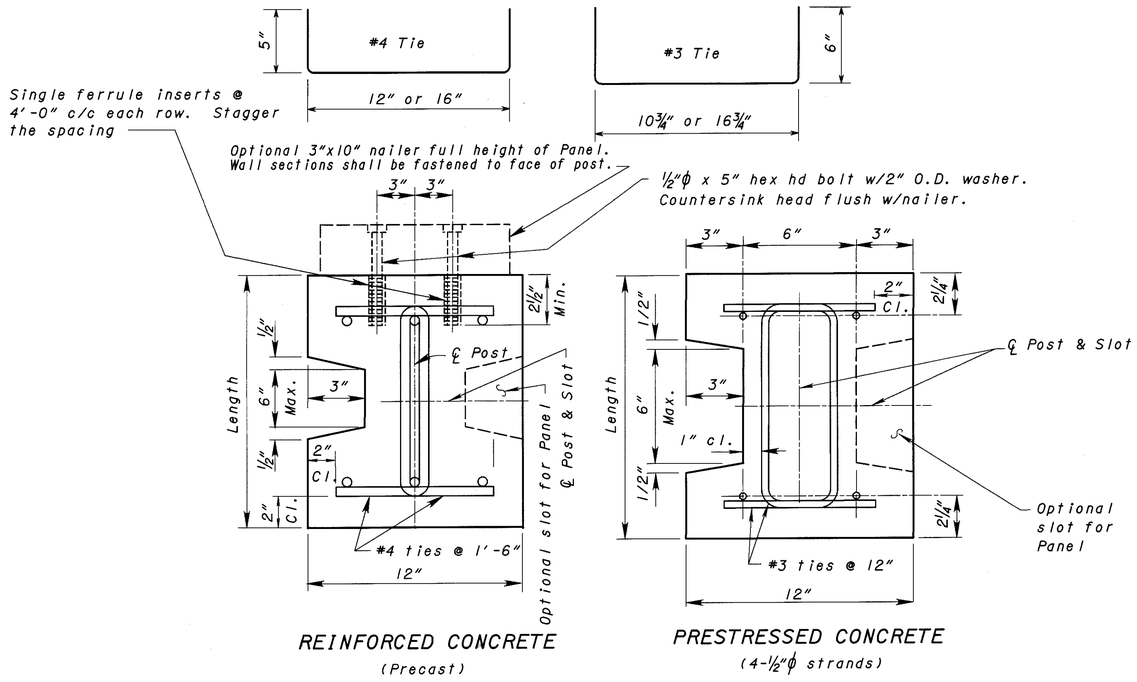

REINFORCED CONCRETE
(Precast)

PRESTRESSED CONCRETE
(4-½"ϕ strands)

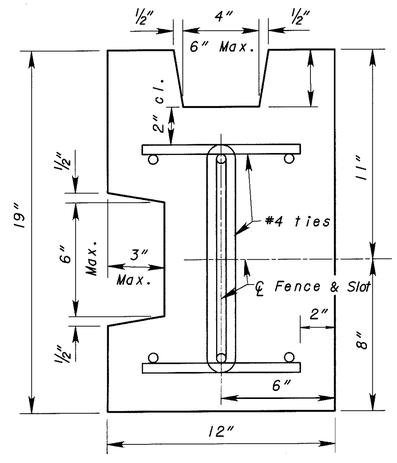

REINFORCED CONCRETE
CORNER POST

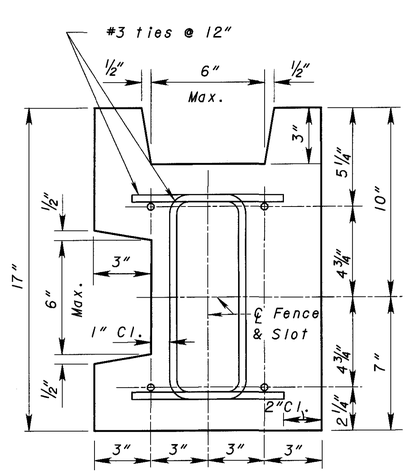

PRESTRESSED CONCRETE
CORNER POST

RICHLAND ENGINEERING LIMITED
29 NORTH PARK STREET
MANSFIELD, OHIO 44902

REVISED	DESIGNED	DRAWN	REVIEWED	DATE
	DAP	RRB	JB	11/9/99
	CHECKED	REVISED	STRUCTURE FILE NUMBER	
	PS	11/18/98		

NOISE BARRIER DETAILS

MED-71-15.78

14/16

677
940

148-9NBD

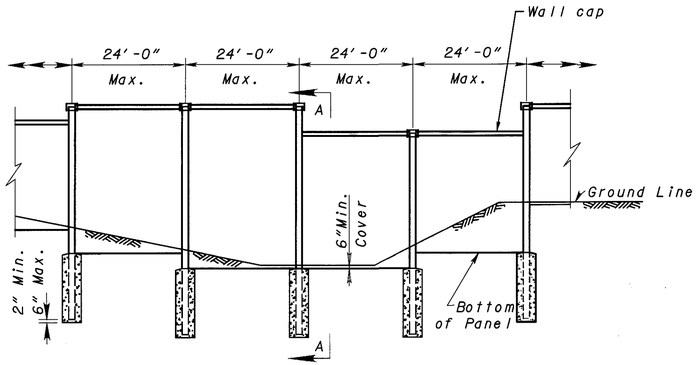

FRONT ELEVATION
(Post and Panel Noise Barrier)

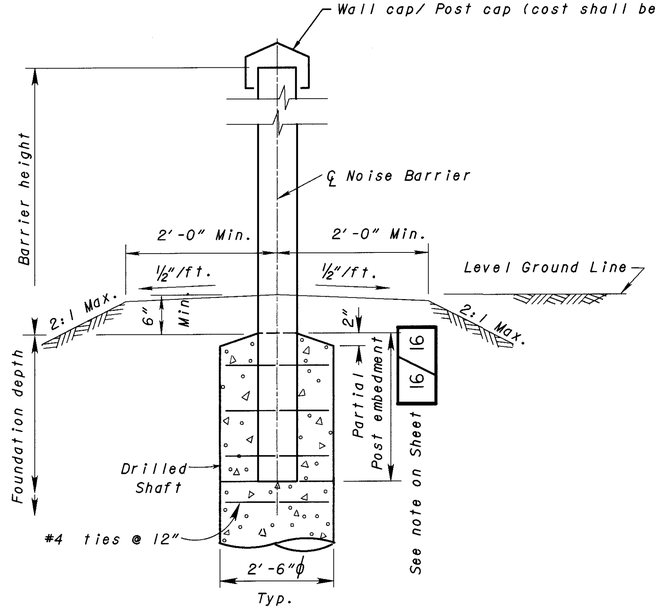

SECTION A-A

RICHLAND ENGINEERING LIMITED
29 NORTH PARK STREET
MANSFIELD, OHIO 44902

REVISED	DESIGNED	DRAWN	REVIEWED	DATE
	DAP	RRB	JB	11/9/99
	CHECKED	REVISED	STRUCTURE FILE NUMBER	
	PS	11/18/98		

NOISE BARRIER DETAILS

MED-71-15.78

15/16

678/940

148-9NBD

(1) Transverse grade slope will be as designated in the plans

(2) N = summation SP Test Values at 12 inches and 18 inches.

NOISE BARRIER TABLE (POST AND PANEL CONSTRUCTION)

BARRIER HEIGHT (FEET)	POST SPACING (FEET)				PANEL GROUP	POST SIZE			SOIL TYPE	FOUNDATION DEPTH (FEET)						
	8 & Under	Over 8 Thru 12	Over 12 Thru 16	Over 16 Thru 24									SITE NO. 1 STA. 2+75 TO STA. 7+50	SITE NO.2	SITE NO. 1 STA. 7+50 TO STA. 18+75 SITE NO. 4 SITE NO. 6
									TRANSVERSE GROUND SLOPE (1)	N (2)	0-2	2-4	4-8	8-16	16-32
12 and Less	10 and Less	8 and Less	6 and Less	I	Reinforced Concrete	12"x16"	W/6 #4		LEVEL	12.5	12.5	7.0	5.0	4.0
									5:1	13.5	13.5	7.5	5.0	4.0
									4:1	13.5	13.5	7.5	5.0	4.0
									3:1	14.0	14.0	8.0	5.0	4.0
									2:1	14.5	15.0	8.0	5.5	4.0
						Prestressed Concrete	12"x14"	W/4 strands	LEVEL	17.0	17.0	9.5	7.5	5.0
									5:1	18.5	18.5	10.0	8.0	5.0
									4:1	19.0	18.5	10.5	8.0	5.0
									3:1	19.5	19.0	10.5	8.0	5.0
									2:1	20.0	20.0	11.0	8.5	5.5
Greater Than 12 Thru 16	Greater Than 10 Thru 14	Greater Than 8 Thru 12	Greater Than 6 Thru 10	II	Reinforced Concrete	12"x16"	W/6 #6		LEVEL	21.5	21.0	13.5	9.5	6.5
									5:1	23.0	23.0	14.5	10.0	7.0
									4:1	23.5	23.0	14.5	10.0	7.0
									3:1	25.0	24.0	15.0	10.5	7.0
									2:1	25.5	24.5	16.0	11.0	7.0
						Prestressed Concrete	12"x14"	W/4 strands	LEVEL	*	*	19.0	13.0	9.0
									5:1	*	*	20.5	14.0	9.0
									4:1	*	*	21.0	14.5	9.0
									3:1	*	*	22.0	15.0	9.5
									2:1	*	*	24.0	15.0	10.0
Greater Than 16 Thru 20	Greater Than 14 Thru 20	Greater Than 12 Thru 16	Greater Than 10 Thru 14	III	Reinforced Concrete	12"x16"	W/6 #9								
						Prestressed Concrete	12"x14"	W/4 strands							
		Greater Than 16 Thru 20	Greater Than 14 Thru 20	IV	Reinforced Concrete	12"x20"	W/6 #9								
						Prestressed Concrete	12"x20"	w/4 strands							

LEGEND: (**)- Top of foundation.

NOTES:

Noise barrier height is the distance from the top of drilled shaft to the top of the higher barrier wall at that post, rounded to the nearest foot.

All posts and panel noise barriers shall utilize drilled shaft foundations unless otherwise indicated on the plans or directed by the Engineer.

If within the required length of the foundation, bedrock is encountered, the drilled shaft foundation may be terminated after 3 feet of penetration into hard bedrock or 6 feet of penetration into soft bedrock.

Embedment of posts into the drilled shafts shall not be less than 3'-6", except for concrete posts which shall be embedded not less than 3'-0".

* - not an acceptable design - select or install at a lower spacing to meet the height requirements of the wall.

RICHLAND ENGINEERING LIMITED
29 NORTH PARK STREET
MANSFIELD, OHIO 44902

REVISED

DESIGNED DAP | DRAWN RRB | REVIEWED JB | DATE 11/9/99

CHECKED PS | REVISED 11/18/98 | STRUCTURE FILE NUMBER

NOISE BARRIER DETAILS

MED-71-15.78

148-9NBD

INDEX OF STRUCTURE SHEETS

	STRUCTURE SHEET NO.
COMMON STRUCTURE SHEETS INDEX OF SHEET NUMBERS, COMMON STRUCTURE NOTES, TRAILING END PARAPET DETAILS, ITS CONDUIT DETAILS, METALIZING NOTES	CSS1 THRU CSS7
MED-71-1685 (I-71 OVER SR18) NEW STRUCTURE	1 THRU 34 OF 34
MED-71-1828 (GRANGER ROAD OVER I-71) NEW STRUCTURE	1 THRU 16 OF 16
MED-71-1870 (I-71 OVER I-271) NEW SUPERSTRUCTURE AND WIDENING OF EXISTING SUBSTRUCTURES	1 THRU 39 OF 39
MED-71-1918 (I-71 OVER WILBUR ROAD) NEW SUPERSTRUCTURE AND WIDENING OF EXISTING SUBSTRUCTURE	1 THRU 22 OF 22
MED-71-1992 (I-71 OVER ROCKY RIVER) NEW SUPERSTRUCTURE AND WIDENING OF EXISTING SUBSTRUCTURES	1 THRU 23 OF 23
MED-71-2088E (RAMP B @ SR3) NEW SUPERSTRUCTURE AND WIDENING OF EXISTING ABUTMENTS, PIER ENCASEMENT	1 THRU 16 OF 16
MED-71-2090 (I-71 OVER SR3) NEW SUPERSTRUCTURE AND WIDENING OF EXISTING SUBSTRUCTURES	1 THRU 31 OF 31
MED-71-2092W (RAMP C @ SR3) NEW SUPERSTRUCTURE AND WIDENING OF EXISTING ABUTMENTS, PIER ENCASEMENT	1 THRU 18 OF 18
MED-71-2402 (I-71 OVER SR303) NEW SUPERSTRUCTURE AND WIDENING OF EXISTING SUBSTRUCTURES	1 THRU 46 OF 46
MAINLINE OVERHEAD STRUCTURES CONCRETE COLUMN PIER ENCASEMENT, PAINTING OF STRUCTURAL STEEL BEAMS AND MINOR OTHER REHABILITATION OF REMSEN ROAD, SLEEPY HOLLOW ROAD, LAUREL ROAD AND GRAFTON ROAD STRUCTURES OVER I-71	1 THRU 9 OF 9

ITEM 507, STEEL PILES OR C.I.P. REINFORCED CONCRETE PILES

THE ESTIMATED PILE LENGTHS SHOWN IN THE PLANS ARE THE CALCULATED PILE LENGTHS BASED ON THE DESIGN LOADS. THE ORDER LENGTHS AS SHOWN IN THE ESTIMATED QUANTITIES ARE THE ESTIMATED PILE LENGTH PLUS AN ADDITIONAL LENGTH UP TO 5 FEET FOR FRICTION DESIGN PILES. FOR PILES TO BEDROCK, THE ORDER LENGTH WILL BE APPROXIMATELY THE ESTIMATED PILE LENGTH.

ITEM 523, DYNAMIC LOAD TESTS

THIS PAY ITEM HAS BEEN INCLUDED IN THE ESTIMATED QUANTITIES FOR MED-71-2090 ONLY. THE TEST SHALL BE PERFORMED FOR STAGE 1 CONSTRUCTION. DURING STAGE 2 CONSTRUCTION AN ADDITIONAL TEST MAY BE REQUIRED IF DRIVING CONDITIONS VARY FROM STAGE 1. ALSO INCLUDED ARE ADDITIONAL HOURS THAT MAY BE USED FOR OTHER SITES WITHIN THIS PROJECT AS DIRECTED BY THE ENGINEER. IF ADDITIONAL TESTING IS NOT USED PORTION OF THIS PAY ITEM WILL BE NON-PERFORMED.

ITEM 844, HIGH PERFORMANCE CONCRETE TESTING

THIS PAY ITEM HAS BEEN INCLUDED IN THE ESTIMATED QUANTITIES ON A SELECT NUMBER OF STRUCTURES. BASED THE CONTRACTORS OPERATIONS AND SEQUENCING OF THE CONCRETE DECK POURS, THE PROJECT ENGINEER SHALL HAVE THE OPTION TO SELECT WERE THE TESTING WILL BE PERFORMED. THE TOTAL NUMBER OF TEST PERFORMED WILL EQUAL THE NUMBER OF TIMES THIS PAY ITEM APPEARS. FOR EACH PAY ITEM A TEST WILL BE REQUIRED FOR STAGE 1 AND STAGE 2 CONSTRUCTION. IN THE PLANS FOUR SITES HAVE BEEN SELECTED (MED-71-1828,1918, 2090 & 2402). THE TESTING REQUIREMENTS OF 844.11 SHALL BE MEET FOR THIS PROJECT FOR A TOTAL OF EIGHT CONCRETE DECK POURS. ALL COSTS OF THE TESTING SHALL BE INCLUDED FOR PAYMENT UNDER THE LUMP SUM BID PRICE FOR HIGH PERFORMANCE CONCRETE TESTING BASED ON THE ABOVE PREMISE.

ITEM 503, COFFERDAMS, CRIBS AND SHEETING

THIS PAY ITEM SHALL INCLUDED ALL WORK NECCESSARY TO CONSTRUCT THE BRIDGES PER THE PLANS. THIS SHALL INCLUDE ALL TEMPORARY SHEETING REQUIRED TO MAINTAIN TRAFFIC DURING STAGE CONSTRUCTION, APPROXIMATE LOCATION SHOWN IN THE SPECIFIC PLANS.

MAINLINE STRUCTURES

THE ELEVATIONS ON THE SITE PLAN ARE GIVEN AT THE PROFILE GRADE. THE STATIONING IS ALONG THE CENTERLINE OF EITHER THE NORTHBOUND OR SOUTHBOUND STRUCTURES ON IR-71.

DESIGN AGENCY
ODOT CENTRAL OFFICE
OFFICE OF PRODUCTION

DESIGNED DFT | DRAWN BKL | REVISED TAA | DATE 10-1-99 | REVISED | STRUCTURE FILE NUMBER

COMMON STRUCTURE SHEET
INDEX SHEETS
AND COMMON NOTES

MED-71-15.78

CSS1

680
940

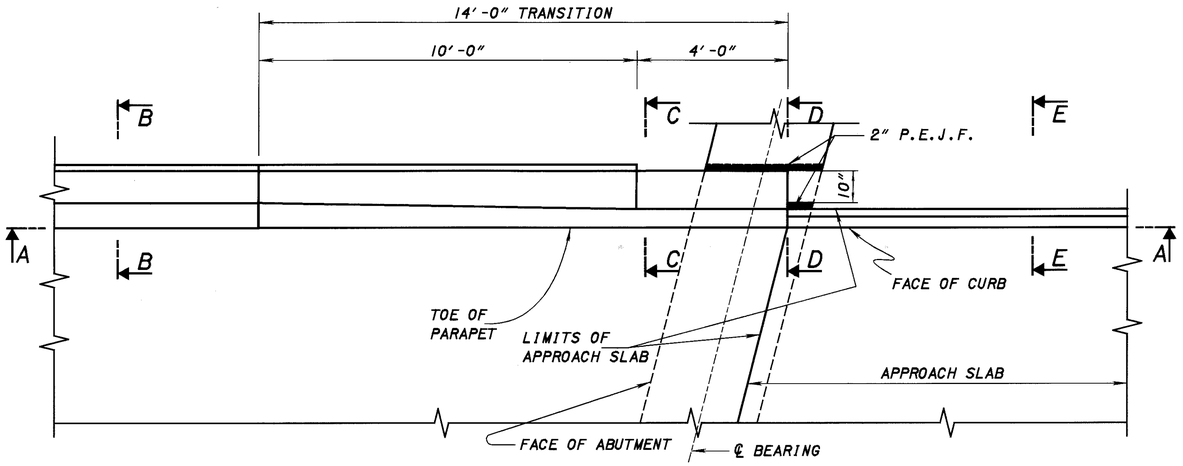

PART PLAN AT ABUTMENT

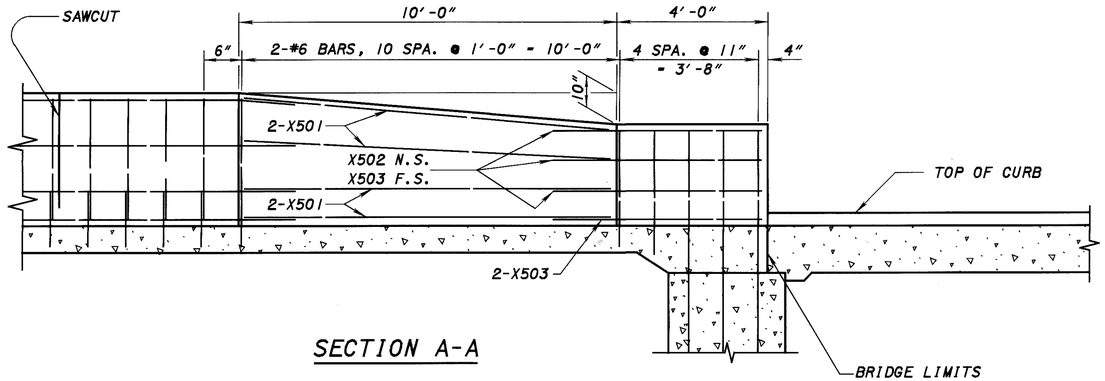

SECTION A-A

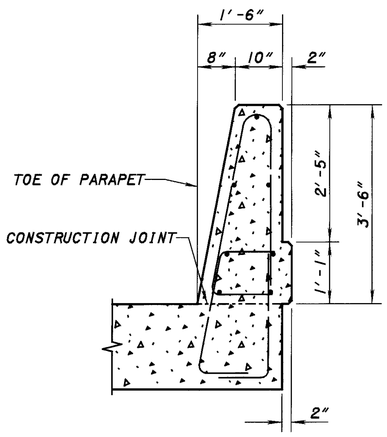

SECTION B-B

Area = 4.26 ft²

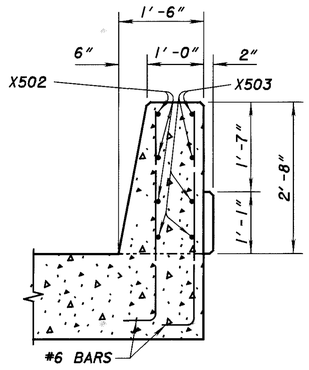

SECTION C-C

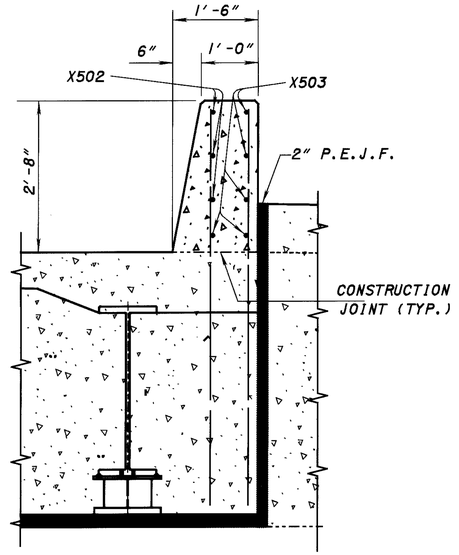

SECTION D-D

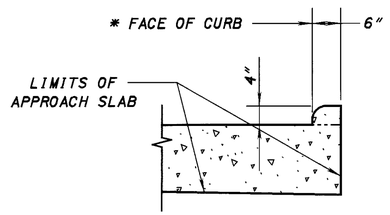

SECTION E-E

NOTES

THIS SHEET IS INTENDED TO BE USED TO SUPPLEMENT PLAN DETAILS FOR PARAPET TRANSITION AT THE TRAILING END OF THE STRUCTURE WHERE A BRIDGE TERMINAL ASSEMBLY IS NOT USED. THIS WILL OCCUR ONLY ON THE MAINLINE STRUCTURES, SEE PLAN DETAILS FOR FURTHER INFORMATION. ALL REINFORCING STEEL WILL REMAIN ESSENTIALLY THE SAME. X502 WILL NOT BE REQUIRED TO BE BENT AT THIS LOCATION PER THESE DETAILS. IN THE REINFORCING STEEL LIST FOR EACH BRIDGE X502 WILL BE LISTED AS AN X503 BAR FOR DETERMINATION OF NUMBER OF BARS PER THESE DETAILS.

QUANTITIES OF CONCRETE, REINFORCING STEEL, DEFLECTION JOINT SAWCUT AND CAULKING MATERIAL FOR PARAPET ARE INCLUDED WITH ITEM 844 HIGH PERFORMANCE CONCRETE, SUPERSTRUCTURE (PARAPET).

FOR ADDITIONAL INFORMATION ON THE CONCRETE CURB SHOWN IN SECTION E-E SEE STD. CONST. DWG. BP-5.1. THE CURB SHALL BE TYPE 4-A.

MIN. LAP SPLICES: #5 BAR = 2′-6″
#6 BAR = 3′-0″

LEGEND: N.S. = NEAR SIDE
F.S. = FAR SIDE

* THE FACE OF CURB SHALL MATCH THE SLOPE OF THE PARAPET AND TRANSITION TO TYPE 4-A WITHIN 4′-0″.

DESIGN AGENCY: ODOT CENTRAL OFFICE OFFICE OF PRODUCTION

DESIGNED	DRAWN	REVISED	DATE
DFT	BKL	TAA	10-1-99

CHECKED — REVISED — STRUCTURE FILE NUMBER

COMMON STRUCTURE SHEET

PARAPET DETAILS AT TRAILING END

MED-71-15.78

CSS2

681
940

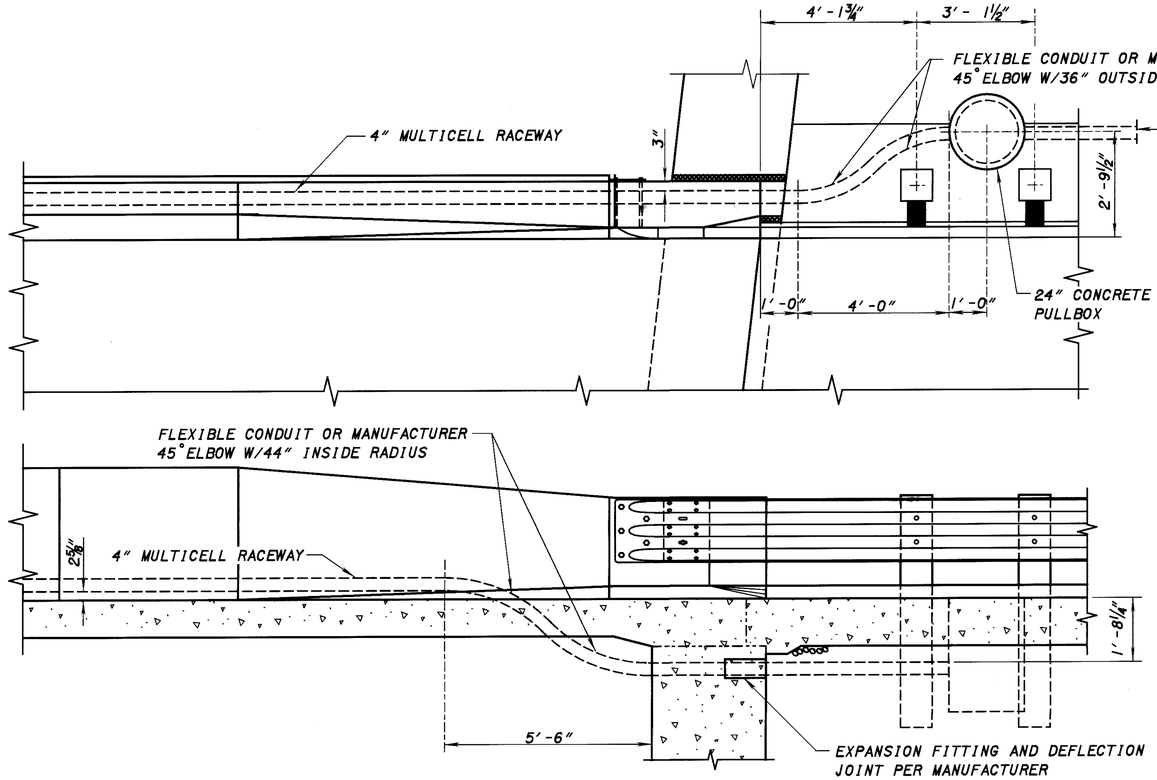

CONDUIT DETAILS FOR SEMI-INTEGRAL BRIDGE W/STRAIGHT WINGWALLS

	625	625		
	PULL BOX, CONCRETE 24", 713.08, AS PER PLAN	CONDUIT MISC: 4" MULTICELL RACEWAY		
BRIDGE NO.	EACH	FEET		
MED-71-1685	4	477		
MED-71-1870	4	429		
MED-71-1918	4	228		
MED-71-1992	4	464		
MED-71-2090	4	544		
MED-71-2402	4	404		
TOTALS	24	2546		

QUANTITIES CARRIED TO LIGHTING GENERAL SUMMARY, SEE SHEET 609 AND 610.

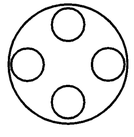

CROSS-SECTION 4″ MULTICELL RACEWAY

(4 INNERDUCTS)

NOTES:

ITEM 625, CONDUIT, MISC.: 4" MULTICELL RACEWAY:

THE ITS RACEWAY SHALL CONSIST OF A FACTORY ASSEMBLED SYSTEM OF (4) INNERDUCTS WITHIN A PROTECTIVE OUTERDUCT. IN GENERAL THE OUTERDUCT SHALL BE PVC CAPABLE OF BURIAL OR CONCRETE ENCASEMENT.

THE ELBOWS, BENDS, OR FITTINGS REQUIRED FOR THE CONSTRUCTION SHALL BE STANDARD UNITS MADE BY THE RACEWAY MANUFACTURER.

THE INNERDUCTS SHALL BE NOMINAL 1", SCHEDULE 40 PVC PER 713.07 WITH A BELL INSERTION DEPTH OF 2" MINIMUM.

THE COUPLING SHALL BE DESIGNED IN A MANNER TO PERMIT EASY FIELD ASSEMBLY. THE COUPLING SHALL BE MARKED OR KEYED IN A MANNER TO ENSURE THE INNERDUCTS ARE PROPERLY ALIGNED, ANY COLOR CODES ARE CONTINUED AND THE ADJOINING SECTION IS INSERTED TO THE PROPER DEPTH IN THE BELL. ALL KEYS AND/OR MARKINGS SHALL BE VISIBLE AFTER ASSEMBLY BEFORE BURIAL. THE SEALING SYSTEM SHALL BE DESIGNED TO ASSURE AIR INTEGRITY OF EACH INDIVIDUAL INNERDUCT AND WATER INTEGRITY OF THE ENTIRE SYSTEM.

WHERE MULTICELL DUCT IS TO REMAIN EMPTY, A ¼" NYLON ROPE SHALL BE INSTALLED IN EACH EMPTY DUCT. THE ROPE WILL REMAIN TO BE USED FOR A FUTURE CABLE INSTALLATION.

THE CONDUIT SHALL BE PLACED IN THE OUTSIDE SHOULDER PARAPET FOR BOTH THE LEFT AND RIGHT STRUCTURES. FINAL INSTALLATION DETAILS WILL BE BASED ON COORDINATION WITH CONTRACTOR AND CONDUIT MANUFACTURER AND APPROVED BY THE PROJECT ENGINEER.

THE RACEWAY WILL BE PAID FOR AT THE UNIT PRICE BID FOR ITEM 625 - CONDUIT MISC.: 4" MULTICELL RACEWAY. THIS PRICE SHALL INCLUDE THE INCIDENTAL COST OF THE FITTINGS AND ALL OTHER ITEMS NECESSARY TO PROVIDE A COMPLETE AND FUNCTIONAL SYSTEM. AS RECOMMENDED BY THE MANUFACTURER AND APPROVED BY THE PROJECT ENGINEER.

DESIGN AGENCY
OHIO DEPARTMENT OF TRANSPORTATION
OFFICE OF PRODUCTION

DESIGNED DFT | DRAWN BRC | REVISED | CHECKED

REVISED BRC | DATE 10-1-99 | STRUCTURE FILE NUMBER

COMMON STRUCTURE SHEET
ITS CONDUIT DETAILS

MED-71-15.78

CSS3

682
940

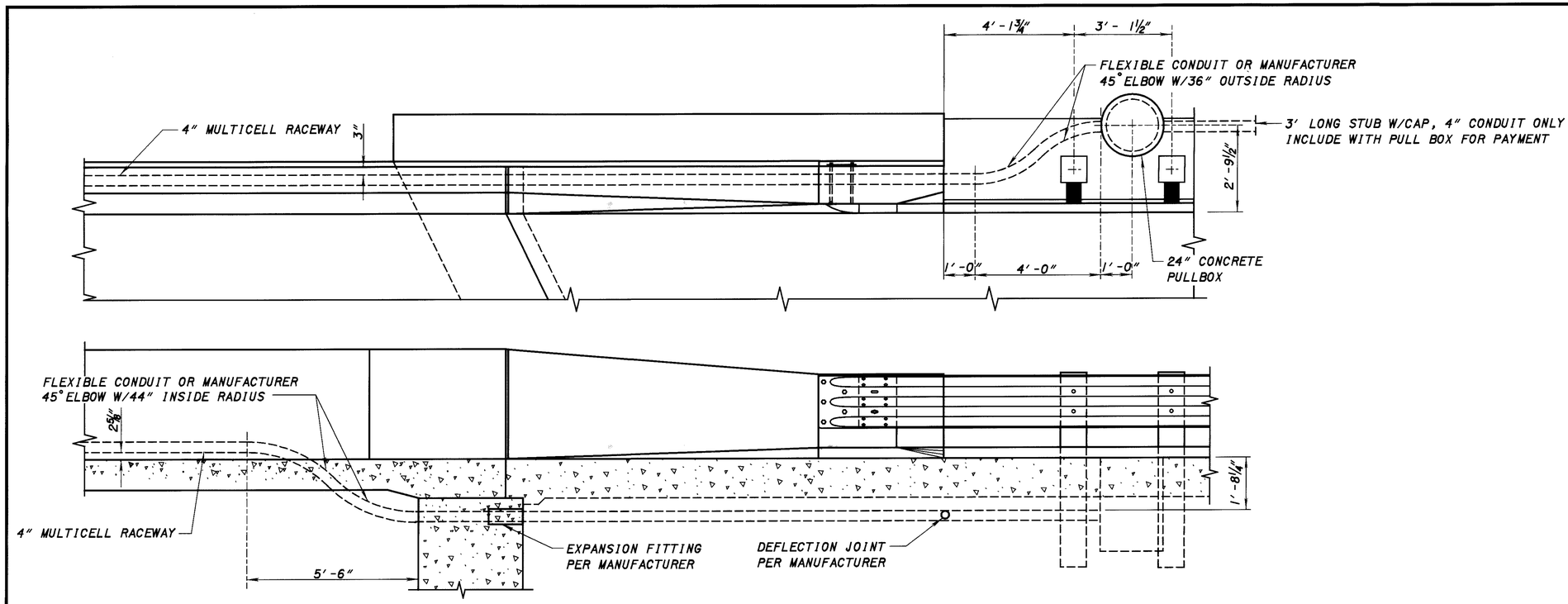

CONDUIT DETAILS FOR SEMI-INTEGRAL BRIDGE W/TURNBACK WINGWALLS

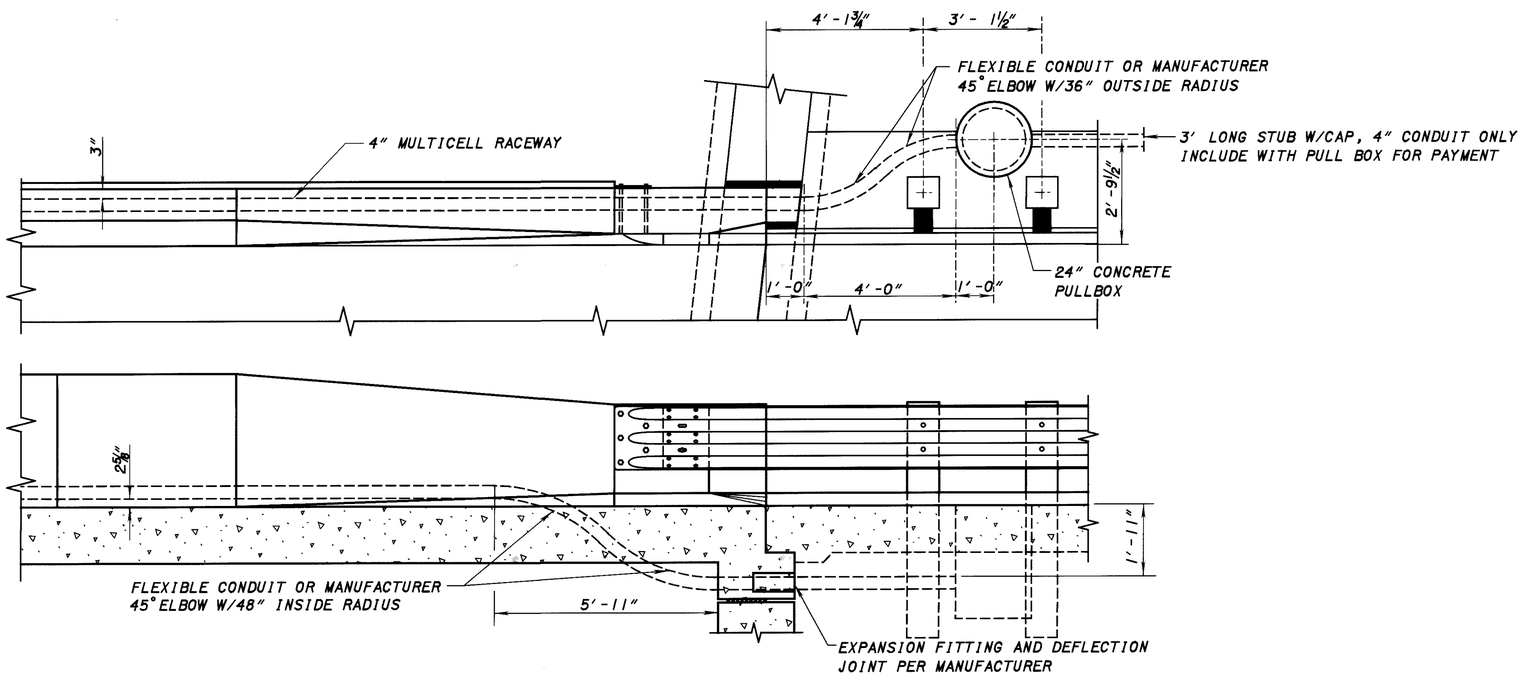

CONDUIT DETAILS FOR SLAB BRIDGE W/STRAIGHT WINGWALLS

DESIGN AGENCY
OHIO DEPARTMENT
OF TRANSPORTATION
OFFICE OF PRODUCTION

DESIGNED	DRAWN	REVISED	DATE
DFT	BRC	BRC	10-1-99
CHECKED	REVISED	STRUCTURE FILE NUMBER	

COMMON STRUCTURE SHEET
ITS CONDUIT DETAILS

MED-71-15.78

CSS4

683
940

ITEM 530 - STRUCTURE, MISC.: METALLIC COATING SYSTEM

DESCRIPTION

THIS ITEM SHALL CONSIST OF FURNISHING ALL NECESSARY LABOR, MATERIALS AND EQUIPMENT TO CLEAN, METALIZE AND SEAL ALL STRUCTURAL STEEL SURFACES, AS SPECIFIED HEREIN. THE METALLIC COATING SYSTEM SHALL BE APPLIED IN A STRUCTURAL STEEL FABRICATION SHOP QUALIFIED PER SUPPLEMENTAL SPECIFICATION 863 WITH PERFORMANCE OF THE SYSTEM IN PERMANENT BUILDINGS PER SS 863.07.

PRE-FABRICATION MEETING

AS PART OF THE PRE-FABRICATION MEETING REQUIRED UNDER SS 863, THE FABRICATOR AND/OR METALIZING APPLICATOR SHALL PRESENT AND DISCUSS METHODS OF OPERATION, INCLUDING REPAIRS, TO ACCOMPLISH ALL PHASES OF THE PREPARATION AND COATING WORK.

QUALITY CONTROL

QUALITY CONTROL SPECIALIST

THE FABRICATOR'S QCPS (QUALITY CONTROL PAINT SPECIALIST) REQUIRED UNDER SS863, SHALL BE RESPONSIBLE FOR ALL QUALITY CONTROL REQUIREMENTS OF THIS SPECIFICATION. THE QCPS SHALL HAVE THE TESTING EQUIPMENT SPECIFIED PER SS863.29.

QUALITY CONTROL POINTS

QUALITY CONTROL POINTS (QCP) ARE POINTS IN TIME WHEN ONE PHASE OF THE WORK IS COMPLETE AND READY FOR INSPECTION BY THE QCPS AND QA INSPECTORS. THE NEXT OPERATIONAL STEP SHALL NOT PROCEED UNLESS THE QCP HAS BEEN ACCEPTED OR QA INSPECTION WAIVED BY THE QA INSPECTOR. AT THESE POINTS THE FABRICATOR SHALL AFFORD ACCESS TO INSPECT ALL AFFECTED SURFACES. IF QA INSPECTION INDICATES A DEFICIENCY, THAT PHASE OF THE WORK SHALL BE CORRECTED IN ACCORDANCE WITH THESE SPECIFICATIONS PRIOR TO BEGINNING THE NEXT PHASE OF WORK. DISCOVERY OF DEFECTIVE WORK OR MATERIAL AFTER A QUALITY CONTROL POINT IS PAST OR FAILURE OF THE FINAL PRODUCT BEFORE FINAL ACCEPTANCE, SHALL NOT IN ANY WAY PREVENT REJECTION OR OBLIGATE THE DEPARTMENT TO FINAL ACCEPTANCE.

QUALITY CONTROL POINTS (QCP)	(PURPOSE)
1) SOLVENT CLEANING	REMOVE ASPHALTIC CEMENT, OIL, GREASE, SALT, DIRT ETC.
2) ABRASIVE BLASTING	BLASTED SURFACE TO RECEIVE METALLIC COATING, INCLUDING REPAIR OF FINS, TEARS, SLIVERS OR SHARP EDGES, PER AWS.
3) METALLIC COAT APPLICATION (METALIZING)	CHECK SURFACE CLEANLINESS, APPLY METALIZING, CHECK COATING THICKNESS.
4) ADHESION	CHECK ADHESION OF METALIZING.
5) SEAL COAT APPLICATION	CHECK SURFACE CLEANLINESS, APPLY SEAL COAT, CHECK COATING THICKNESS.
6) FIELD REVIEW	ENGINEER'S FIELD INSPECTION OF THE SYSTEM

SOLVENT CLEANING (QCP #1)

THE QCPS SHALL DOCUMENT AND CHECK THE PERFORMANCE OF THE SOLVENT CLEANING AND THAT DEFECTS ON EXPOSED SURFACES ARE CORRECTED PRIOR TO RELEASE TO THE METALIZING PROCESS.

ABRASIVE BLASTING (QCP #2)

ABRASIVES SHALL ALSO BE CHECKED FOR OIL CONTAMINATION BEFORE USE. A SMALL SAMPLE OF ABRASIVES SHALL BE ADDED TO ORDINARY TAP WATER. ANY DETECTION OF A OIL FILM ON THE SURFACE OF THE WATER SHALL BE CAUSE FOR REJECTION. THE QCPS SHALL PERFORM AND RECORD THIS TEST AT THE START OF EACH SHIFT. THE QCPS SHALL RECORD THE SURFACE PROFILE WITH REPLICA TAPE ASTM D4417-93 METHOD C.

THE QCPS SHALL RECORD THE AMBIENT TEMPERATURE AND DEW POINT NO MORE THAN ONE (1) HOUR BEFORE BLASTING. ENVIRONMENTAL CONDITIONS SHALL BE MONITORED EVERY FOUR (4) HOURS DURING THE BLASTING OPERATION.

FOR <u>AUTOMATED BLASTING PROCESS</u>: FIVE (5) EACH RECORDED READINGS AT RANDOM LOCATIONS ON ONE MEMBER FOR 20% OF THE MAIN MEMBERS OR ONE (1) BEAM PER SHIFT (WHICH EVER IS GREATER) AND ONE (1) RECORDED READING FOR 10% OF ALL SECONDARY MATERIAL.

FOR <u>MANUAL BLASTING PROCESS</u>: FIVE (5) EACH RECORDED READINGS AT RANDOM LOCATIONS FOR EACH MAIN MEMBER AND ONE (1) RECORDED READING FOR 25% OF ALL SECONDARY MATERIAL.

THE QCPS SHALL PERFORM AND RECORD THE FOLLOWING TEST TO ENSURE THAT THE COMPRESSED AIR IS NOT CONTAMINATED: BLOW AIR FROM THE NOZZLE FOR 30 SECONDS ONTO A WHITE CLOTH OR BLOTTER HELD IN A RIGID FRAME. IF ANY OIL OR OTHER CONTAMINANTS ARE PRESENT ON THE CLOTH OR BLOTTER, ABRASIVE BLASTING SHALL BE SUSPENDED UNTIL THE PROBLEM IS CORRECTED AND THE OPERATION IS VERIFIED BY A REPEATED TEST. THIS TEST SHALL BE DONE PRIOR TO BLOWING, AT THE START OF EACH SHIFT.

METALLIC COAT APPLICATION AND THICKNESS (QCP #3)

THE QCPS SHALL RECORD THE TIME BETWEEN BLASTING AND APPLICATION OF THE METALIZING. THE QCPS SHALL RECORD THE AMBIENT TEMPERATURE AND DEW POINT NO MORE THAN ONE (1) HOUR BEFORE APPLICATION OF THE METALIZING ENVIRONMENTAL CONDITIONS SHALL BE MONITORED EVERY FOUR (4) HOURS DURING THE METALIZING OPERATION.

GAUGES SHALL BE CALIBRATED ON THE BLASTED STEEL SURFACE TO BE METALIZED. THICKNESS SHALL BE DETERMINED BY USE OF TYPE 2 MAGNETIC GAGE IN ACCORDANCE WITH THE FOLLOWING:

FIVE SEPARATE SPOT MEASUREMENTS SHALL BE MADE, SPACED EVENLY OVER EACH 100 SQUARE FEET OF METALIZED SURFACE AREA. THREE GAGE READINGS SHALL BE MADE FOR EACH SPOT MEASUREMENT. THE GAGE SHALL BE MOVED A DISTANCE OF ONE TO THREE (1 TO 3) INCHES FOR EACH NEW GAUGE READING. ANY UNUSUALLY HIGH OR LOW GAGE READING THAT CANNOT BE REPEATED CONSISTENTLY SHALL BE DISCARDED. THE AVERAGE (MEAN) OF THE THREE (3) GAGE READINGS SHALL BE USED AS THE SPOT MEASUREMENT. THE AVERAGE OF FIVE (5) SPOT MEASUREMENTS FOR EACH SUCH 100 SQUARE FEET AREA SHALL NOT BE LESS THAT THE SPECIFIED THICKNESS. NO SINGLE SPOT MEASUREMENT IN ANY 100 SQUARE FEET AREA SHALL BE LESS THAN 80% OF THE SPECIFIED MINIMUM THICKNESS. ANY ONE OF THREE (3) READINGS WHICH ARE AVERAGED TO PRODUCE EACH SPOT MEASUREMENT, MAY UNDER-RUN BY A GREATER AMOUNT. THE FIVE (5) SPOT MEASUREMENTS SHALL BE MADE FOR EACH 100 SQUARE FEET OF AREA.

ADHESION (QCP #4)

BEFORE SEALING, THE QCPS SHALL TEST FOR ADHESION IN ACCORDANCE WITH ASTM D 4541. THE QCPS SHALL PERFORM FIVE (5) TESTS AT RANDOM LOCATIONS SELECTED BY THE QA INSPECTOR ON THE FIRST MAIN MEMBER, INCLUDING SPLICE PLATES. THEREAFTER, TEN PERCENT (10%) OF THE MAIN MATERIAL SHALL BE TESTED IN THE SAME MANNER. FIVE PERCENT (5%) OF ALL SECONDARY MATERIAL SHALL BE TESTED AT A RATE OF ONE (1) ADHESION TEST. THE MINIMUM ACCEPTABLE ADHESION SHALL BE 1000 PSI.

SEAL COAT APPLICATION AND THICKNESS (QCP #5)

THE QCPS SHALL RECORD THE STORAGE TEMPERATURE, LOT AND STOCK NUMBERS, AND DATE OF MANUFACTURE OF THE SEALANT.

THE QCPS SHALL DOCUMENT THAT ALL SPRAY EQUIPMENT USED FOLLOWS THE SEALER MANUFACTURER'S EQUIPMENT RECOMMENDATIONS. EQUIPMENT SHALL BE SUITABLE FOR USE WITH THE SPECIFIED SEALER TO AVOID SEALER APPLICATION PROBLEMS.

THE QCPS SHALL RECORD THE TIME BETWEEN METALIZING AND SEAL COAT APPLICATION. THE QCPS SHALL RECORD THE AMBIENT TEMPERATURE AND HUMIDITY NO MORE THAN ONE (1) HOUR BEFORE APPLICATION OF THE SEAL COAT. ENVIRONMENTAL CONDITIONS SHALL BE MONITORED EVERY FOUR (4) HOURS DURING THE SEALING OPERATION.

THE SAME TEST FOR ABRASIVE BLASTING AIR CONTAMINATION SHALL BE MADE BY THE SEALER APPLICATOR AND VERIFIED BY THE QCPS TO ENSURE THAT THE TRAPS OR SEPARATORS ARE WORKING PROPERLY. THIS IS NOT REQUIRED FOR AN AIRLESS SPRAYER.

THE SEALANT THICKNESS SHALL BE VISUALLY VERIFIED BY THE QCPS SUCH THAT ALL PEAKS AND VALLEYS ARE COVERED AND THAT THE SEALED SURFACE IS WITHOUT SURFACE ROUGHNESS ATTRIBUTED TO THE METALIZING. PINHOLING SHALL BE AVOIDED BY METHOD OF APPLICATION.

FIELD REVIEW (QCP #6)

THE ENGINEER SHALL VISUALLY INSPECT THE METALIZING TO ESTABLISH THAT FIELD WELDED AND DAMAGED AREAS ARE REPAIRED AS PER THIS SPECIFICATION.

PROCEDURAL OPTIONS

THESE SPECIFICATIONS GOVERN THE MINIMUM ACCEPTABLE APPLICATION OF THE METALIZED COATING SYSTEM. THE APPLICATOR MAY PROPOSE VARIATIONS FROM THE SPECIFICATION, SUCH AS BLAST PROFILE, BLAST MEDIUM, TIME BETWEEN OPERATIONS AND THICKNESS OF METALIZING PASSES. THE PROPOSAL SHALL BE ACCOMPANIED BY THE QUALIFICATION TEST PLATES REQUIRED UNDER "QUALIFICATIONS FOR METALIZING APPLICATORS". THESE TESTS SHALL BE COMPARED TO QUALIFICATION TEST PLATES PRODUCED ACCORDING TO THIS SPECIFICATION. THE OFFICE OF STRUCTURAL ENGINEERING SHALL DETERMINE IF THE PROPOSAL IS ACCEPTABLE.

DESIGN AGENCY
ODOT CENTRAL OFFICE
OFFICE OF PRODUCTION

DESIGNED	DRAWN	REVIEWED	DATE
OSE		JDR	10-01-99

CHECKED VF
REVISED
STRUCTURE FILE NUMBER

COMMON STRUCTURE SHEET
METALIZING NOTES

MED-71-15.78

CSS5

684
940

ITEM 530 - STRUCTURE, MISC.: METALLIC COATING SYSTEM CONTINUED

QUALIFICATIONS FOR METALIZING APPLICATORS

EQUIPMENT AND OPERATOR QUALIFICATIONS:

EACH EQUIPMENT OPERATOR SHALL DEMONSTRATE THE ABILITY TO SET UP AND OPERATE THE METALIZING AND SEALING EQUIPMENT THAT WILL BE USED. THIS PROOF OF QUALITY SHALL BE DEMONSTRATED WITH THE INTENDED FEEDSTOCK AND SEALANT MATERIALS.

THE QCPS SHALL RECORD THAT EACH SPRAY OPERATOR DEMONSTRATED TO THE QCPS THE ABILITY TO APPLY THE SEALER AS PREVIOUSLY SPECIFIED. ANY OPERATOR WHO DOES NOT DEMONSTRATE THIS ABILITY SHALL NOT SPRAY.

ADHESION

IN THE PRESENCE OF THE QCPS AND QA INSPECTORS, THE APPLICATOR SHALL PREPARE AND METALIZE, AS SPECIFIED, A 3" x 12" x 1/8" COUPON OF ASTM A606 OR A588, GRADE 50 STEEL. THIS COUPON SHALL BE USED FOR THE ADHESION TEST PER ASTM D4541. IF THE TEST FAILS, IT SHALL BE REPEATED USING A NEW TEST PLATE. IF THE TEST FAILS ON THE SECOND PLATE, THE EQUIPMENT AND WORK SHALL BE DEEMED UNACCEPTABLE. NO METALIZING WORK SHALL BE PERFORMED PRIOR TO THE ACCEPTANCE OF THE ADHESION TEST COUPON BY THE OSE.

BEND TEST

IN THE PRESENCE OF THE QCPS AND QA INSPECTORS, THE APPLICATOR SHALL PREPARE AND METALIZE, AS SPECIFIED, A 3" x 12" x 1/8" COUPON OF A606 OR A588, GRADE 50 STEEL. ONCE COATED, THE COUPONS SHALL BE COLD BENT 180 DEGREES AROUND A 1/2 INCH DIAMETER MANDREL. THE METALIZING SHALL BE ON THE OUTSIDE OF THE COUPON. NO DELAMINATION OF THE COATING IS PERMITTED. CRACKING OF THE COATING IS PERMITTED, PROVIDED THE COATING ADHERES TO THE COUPON. THE COATING SHALL ADHERE TO THE FACE OF THE COUPON. THE BEND TEST FAILS IF THE COATING CAN BE PICKED OFF WITH A KNIFE BLADE. NO METALIZING WORK SHALL BE PERFORMED PRIOR TO THE ACCEPTANCE OF THE BEND TEST COUPON BY THE OSE.

SURFACE PREPARATION

ALL FABRICATION PER SS863 SHALL BE COMPLETE PRIOR TO SURFACE PREPARATION. PAYMENT OF SS863 FABRICATION MAY BE ACCEPTED PRIOR TO METALIZING.

SOLVENT CLEANING :

THE STEEL SHALL BE SOLVENT CLEANED WERE NECESSARY TO REMOVE ALL TRACES OF ASPHALTIC CEMENT, OIL, GREASE, DIESEL FUEL DEPOSITS, AND OTHER SOLUBLE CONTAMINANTS PER SSPC-SP 1. UNDER NO CIRCUMSTANCES SHALL ANY ABRASIVE BLASTING BE DONE TO AREAS WITH ASPHALTIC CEMENT, OIL, GREASE, OR DIESEL FUEL DEPOSITS. THE STEEL SHALL BE ALLOWED TO DRY BEFORE BLAST CLEANING BEGINS.

REMOVAL OF SURFACE DEFECTS:

ALL FINS, TEARS, SLIVERS AND BURRED OR SHARP EDGES THAT APPEAR AFTER THE BLASTING OPERATION SHALL BE CONDITIONED PER ASTM A6 AND THE AREA RE-BLASTED TO PROVIDE THE SPECIFIED SURFACE PROFILE.

ABRASIVE BLAST CLEANING:

ALL STRUCTURAL STEEL SURFACES SHALL BE BLAST CLEANED ACCORDING TO SSPC-SP5. THE APPEARANCE OF THE BLAST-CLEANED SURFACE SHALL CLOSELY APPROXIMATE THE PICTORIAL STANDARDS OF SSPC-VIS 1-89. STEEL SHALL BE MAINTAINED IN A BLAST CLEANED CONDITION UNTIL IT HAS RECEIVED A METALLIC COATING.

ANY ABRASIVE BLASTING WHICH IS DONE WHEN THE STEEL TEMPERATURE IS LESS THAN 5° F ABOVE THE DEW POINT SHALL BE RE-BLASTED WHEN THE STEEL TEMPERATURE IS AT LEAST 5° F ABOVE THE DEW POINT.

THE ABRASIVE SHALL BE GRIT PRODUCING A MINIMUM ANGULAR SURFACE PROFILE OF THREE (3) MILS. IF RECYCLABLE GRIT IS USED, IT SHALL BE CLEANED OF PAINT CHIPS, RUST, MILL SCALE AND OTHER FOREIGN MATERIAL BY EQUIPMENT SPECIFICALLY DESIGNED FOR SUCH CLEANING.

ALL ABRASIVES AND RESIDUE SHALL BE REMOVED FROM ALL SURFACES TO BE METALIZED WITH A VACUUM CLEANER EQUIPPED WITH A BRUSH-TYPE CLEANING TOOL, OR BY DOUBLE BLOWING.

ALL CORNERS OF THERMALLY CUT OR SHEARED EDGES SHALL HAVE A 1/16 INCH RADIUS OR EQUIVALENT FLAT SURFACE AT A SUITABLE ANGLE. PRIOR TO BLASTING, THERMALLY CUT MATERIAL SHALL HAVE THE SIDES GROUND AS NECESSARY TO REMOVE THE HARDENED EDGES.

APPLICATION OF METALLIC COATING (METALIZING)

STEEL SURFACE

THE METALIZING SHALL COAT ALL SURFACES. PRIOR TO APPLICATION OF THE METALLIC COATING, THE STEEL SURFACE TO BE METALIZED SHALL MEET THE REQUIREMENTS UNDER "SURFACE PREPARATION". THE METALIZING SHALL NOT BE APPLIED TO A SURFACE WHICH SHOWS ANY SIGN OF SURFACE MOISTURE. THERMAL SPRAYING SHALL NOT BE PERFORMED WHEN THE STEEL TEMPERATURE IS LESS THAN 5° F ABOVE THE DEW POINT. THE MINIMUM APPLICATION SURFACE TEMPERATURE SHALL BE ZERO DEGREES (0°) FAHRENHEIT.

IF COMBUSTION FLAME SPRAY EQUIPMENT IS USED, THE INITIAL STARTING ONE TO TWO (1 TO 2) SQUARE FEET SURFACE AREA OF ANY METALIZING PASS SHALL BE PREHEATED TO APPROXIMATELY 250° FAHRENHEIT. THE METALIZING OPERATION PROGRESSION SHALL BE SUCH THAT THIS PREHEAT IS MAINTAINED.

EQUIPMENT AND TECHNIQUES:

THE METALIZING MAY BE APPLIED USING EITHER COMBUSTION FLAME SPRAYING EQUIPMENT OR BY ELECTRIC ARC SPRAYING EQUIPMENT OPERATED IN ACCORDANCE WITH THE MANUFACTURER'S LATEST WRITTEN INSTRUCTIONS, INCLUDING BUT NOT LIMITED TO AIR PRESSURE AND GUN ANGLE RELATIVE TO THE WORK SURFACE.

THERMAL SPRAY OPERATORS SHALL APPLY THE METALIZING IN A MANNER THAT PROMOTES UNIFORM COVERAGE AND PREVENTS DISCONTINUITY OF THE APPLIED COATING. SPRAYING SHALL BE PERFORMED IN A BLOCK PATTERN, TYPICALLY TWO (2) SQUARE FEET. THE METALIZING SHALL OVERLAP FIFTY PERCENT (50%) ON EACH PASS TO ENSURE UNIFORM COVERAGE. THE REQUIRED COATING THICKNESS SHALL BE OBTAINED IN MULTIPLE LAYERS. EACH LAYER SHALL BE APPLIED AT RIGHT ANGLES TO THE PREVIOUS LAYER. SPRAYING DISTANCE SHOULD BE BETWEEN SIX TO EIGHT (6 TO 8) INCHES FROM THE WORK SURFACE TO ENSURE THE METAL IS PLASTIC ON IMPACT. ANY DEFECTS SHALL BE IMMEDIATELY CORRECTED.

STARTUP AND ADJUSTMENT OF THERMAL SPRAY EQUIPMENT SHALL BE DONE OFF THE SURFACE BEING METALIZED.

THE METALIZING SHALL COAT ALL SURFACES. METALIZING IN THE VICINITY OF PREVIOUSLY COATED (METALIZED, SEALED OR OTHER) SURFACES SHALL BE CONDUCTED IN A MANNER THAT PREVENTS MOLTEN METAL FROM STRIKING THE COATING AND OTHERWISE MINIMIZES COATING DAMAGE. COATINGS DAMAGED BY METALIZING OPERATIONS SHALL BE REPAIRED IN ACCORDANCE WITH THIS SPECIFICATION.

METALIZING THICKNESS

THE METALIZING SHALL BE APPLIED TO A MINIMUM THICKNESS OF TWELVE (12) MILS. IN GENERAL, ANY PASS SHALL NOT DEPOSIT MORE THAN FOUR (4) MILS. THE TOP OF THE TOP FLANGE SHALL RECEIVE A COAT NOT LESS THAN 0.5 MILS NOR MORE THAN 1.5 MILS.

THE FIRST PASS OF METALIZING SHALL BE COMPLETED WITHIN TWELVE (12) HOURS OF BLASTING, BEFORE FLASH RUST OR DETERIORATION OF THE STEEL FROM THE SPECIFIED SURFACE CLEANLINESS. THE TIME BETWEEN ADDITIONAL METALIZING PASSES SHALL BE NO MORE THAN SIX (6) HOURS.

METALIZING WIRE:

PURE ZINC (99.99%) METALIZING WIRE SHALL BE USED, POWDER MATERIAL WILL NOT BE ACCEPTED. THE WIRE USED FOR METALIZING SHALL BE IN ACCORDANCE WITH ASTM B833. THE WIRE MANUFACTURER SHALL PROVIDE CERTIFIED TEST DATA PER SS863.09.

SYSTEM IDENTIFICATION

THE COMPLETION DATE (MONTH AND YEAR) OF THE METALLIC COATING SYSTEM AND THE LETTERS MZA OR MZF SHALL BE STENCILED ON THE STEEL IN FOUR (4) INCH LETTERS WITH A BLACK URETHANE PAINT. THE TYPE OF THERMAL SPRAYING EQUIPMENT IS REPRESENTED BY AN "A" FOR ELECTRIC ARC OR A "F" FOR COMBUSTION FLAME. THIS DATE SHALL BE APPLIED AT FOUR (4) LOCATIONS NEAR THE END OF EACH OUTSIDE BEAM ON THE OUTSIDE WEB VISIBLE FROM THE ROAD OR AS DIRECTED BY THE OSE.

SEALER APPLICATION

GENERAL:

THE AREAS OF STRUCTURAL STEEL THAT ARE EMBEDDED IN, PARTIALLY EMBEDDED IN, OR IN CONTACT WITH CAST-IN-PLACE CONCRETE SHALL BE SEALED (E.G, TOP AND SIDES OF TOP FLANGE). WHEN THE STRUCTURE IS AN INTEGRAL ABUTMENT, ALL METALIZED SURFACES FROM THE END OF THE BEAM TO ONE (1) FOOT PAST THE ABUTMENT INTERFACE SHALL BE SEALED.

SEALER SHALL NOT BE APPLIED WHEN THE METALIZING STEEL SURFACE TEMPERATURE IS LESS THAN 5° F ABOVE THE DEW POINT. THE SURFACES TO BE SEALED SHALL BE DRY. SEALERS SHALL NOT BE APPLIED IN RAIN, SNOW, FOG OR MIST, OR TO FROSTED OR ICE-COATED SURFACES. THE AMBIENT AND SURFACE TEMPERATURES SHALL BE PER THE SEALER MANUFACTURER'S RECOMMENDATIONS.

HANDLING OF SEALER

ALL SEALER SHALL BE DELIVERED TO THE FABRICATOR IN ORIGINAL, UNOPENED CONTAINERS WITH LABELS INTACT. MINOR DAMAGE TO CONTAINERS IS ACCEPTABLE PROVIDED THE CONTAINER HAS NOT BEEN PUNCTURED.

SEALER SHALL BE STORED AT THE TEMPERATURE RECOMMENDED BY THE MANUFACTURER TO PREVENT SEALER DETERIORATION.

DESIGN AGENCY
ODOT CENTRAL OFFICE
OFFICE OF PRODUCTION

DESIGNED	DRAWN	REVIEWED	DATE
OSE		JDR	10-01-99

CHECKED	REVISED	STRUCTURE FILE NUMBER
VF		

COMMON STRUCTURE SHEET
METALIZING NOTES

MED-7 1-15.78

CSS6

ITEM 530 - STRUCTURE, MISC.: METALLIC COATING SYSTEM CONTINUED

ALL CONTAINERS OF SEALER SHALL REMAIN UNOPENED UNTIL USE. THE LABEL INFORMATION SHALL BE LEGIBLE AND CHECKED AT THE TIME OF USE. SOLVENT USED FOR CLEANING EQUIPMENT IS EXEMPT FROM THE ABOVE REQUIREMENTS.

EACH CONTAINER OF SEALER SHALL BE CLEARLY MARKED OR LABELED TO SHOW SEALER IDENTIFICATION, COMPONENT, LOT NUMBER, STOCK NUMBER, DATE OF MANUFACTURE, AND INFORMATION AND WARNINGS AS MAY BE REQUIRED BY FEDERAL AND STATE LAWS.

SEALER WHICH HAS LIVERED, GELLED OR OTHERWISE DETERIORATED DURING STORAGE SHALL NOT BE USED. THE OLDEST SEALER OF EACH KIND SHALL BE USED FIRST. NO SEALER SHALL BE USED WHICH HAS SURPASSED ITS SHELF LIFE.

THE APPLICATOR SHALL PROVIDE THERMOMETERS CAPABLE OF MONITORING THE MAXIMUM HIGH AND LOW TEMPERATURES WITHIN THE STORAGE FACILITY. THE APPLICATOR IS RESPONSIBLE FOR PROPERLY DISPOSING OF ALL UNUSED SEALER AND SEALER CONTAINERS

EQUIPMENT AND TECHNIQUES

SEALERS SHALL BE APPLIED BY SPRAY METHODS. SPRAY EQUIPMENT SHALL BE KEPT CLEAN SO DIRT, DRIED SEALER AND OTHER FOREIGN MATERIALS ARE NOT DEPOSITED IN THE SEALER FILM. ANY SOLVENT LEFT IN THE EQUIPMENT SHALL BE COMPLETELY REMOVED BEFORE USING.

IF AIR SPRAY IS USED, TRAPS OR SEPARATORS SHALL BE PROVIDED TO REMOVE OIL AND CONDENSED WATER FROM THE AIR. THE TRAPS OR SEPARATORS MUST BE OF ADEQUATE SIZE AND MUST BE DRAINED PERIODICALLY DURING OPERATIONS.

THE SEALANT THICKNESS SHALL BE VISUALLY VERIFIED SUCH THAT ALL PEAKS AND VALLEYS ARE COVERED AND THAT THE SEALED SURFACE IS WITHOUT SURFACE ROUGHNESS ATTRIBUTED TO THE METALIZING. PINHOLING SHALL BE AVOIDED BY METHOD OF APPLICATION.

THE APPLICATOR SHALL TAKE PRECAUTION TO PREVENT CONTAMINATION OF SURFACES THAT HAVE BEEN PREPARED FOR SEALING AND SURFACES FRESHLY SEALED. THE SEALER SHALL BE APPLIED NO MORE THAN EIGHT (8) HOURS OF THE COMPLETION OF THE METALIZING.

THE SEALER SHALL BE APPLIED IN THE SHOP. THE STEEL SHALL NOT BE HANDLED UNNECESSARILY OR REMOVED FROM THE SHOP UNTIL THE SEALER HAS DRIED SUFFICIENTLY TO RESIST BEING MARRED IN HANDLING AND SHIPPING.

TYPE OF SEALER

AN AIR DRIED CLEAR PHENOLIC, EITHER "METALLIZING SEALER #9876" OR "9127", MANUFACTURED BY KEELER AND LONG (PPG)P.O. BOX 460, WATERTOWN CT 06795, OR "METCO AP" MANUFACTURED BY METCO, OR EQUAL TO METCO AP MANUFACTURED BY AKRON PAINT & VARNISH, OR OTHER APPROVED EQUAL.

HANDLING, SHIPPING, FIELD WELDING OR OTHER SURFACE DEFECTS

SPECIFIED AREAS OF FIELD WELDING, OTHER THAN STUD WELDING, SHALL REQUIRE THE REMOVAL OF THE METALIZED COATING BY GRINDING OR OTHER METHODS ACCEPTABLE TO THE ENGINEER.

SMALL AREAS OF METALIZING TOTALING LESS THAN ONE (1) SQUARE FOOT PER MAIN MEMBER THAT ARE REMOVED, MARRED, DAMAGED, OR REJECTED SHALL BE REPAIRED ACCORDING TO ASTM A780 ANNEX 1. LARGER AREAS OF METALIZING SHALL BE REPAIRED BY REMOVAL AND REPLACEMENT OF THE DAMAGED AREA AS SPECIFIED HEREIN. AT THE COMPLETION OF CONSTRUCTION, THE METALIZED COATING SHALL BE UNDAMAGED AND THE SURFACES FREE FROM GREASE, OIL, CHALK MARKS, PAINT, CONCRETE SPLATTER OR OTHER SILAGE.

THE CONTRACTOR IS RESPONSIBLE FOR SUPPLYING THIS METALLIC COATING SYSTEM. REQUIRED REPAIRS WILL BE AT NO ADDITIONAL COMPENSATION.

METHOD OF MEASUREMENT

THE LUMP SUM PRICE BID SHALL INCLUDE THE COST OF ALL LABOR, MATERIALS AND EQUIPMENT NECESSARY TO COMPLETE THE WORK. ALL STRUCTURAL STEEL TO BE PAID FOR UNDER ITEM 863 SHALL BE METALIZED.

BASIS OF PAYMENT

PAYMENT WILL BE MADE AT CONTRACT PRICES FOR:

ITEM	UNIT	DESCRIPTION
530	LUMP SUM	STRUCTURE MISC.: METALLIC COATING SYSTEM

MED-71-2402 L&R (I-71 OVER S.R. 303) SHALL BE METALIZED, SEE PLAN DETAILS.

DESIGN AGENCY
ODOT CENTRAL OFFICE
OFFICE OF PRODUCTION

DESIGNED	DRAWN	REVISED	DATE
OSE		JDR	10-01-99
CHECKED	REVISED		STRUCTURE FILE NUMBER
VF			

COMMON STRUCTURE SHEET
METALIZING NOTES

MED-71-15.78

CSS7

686
940

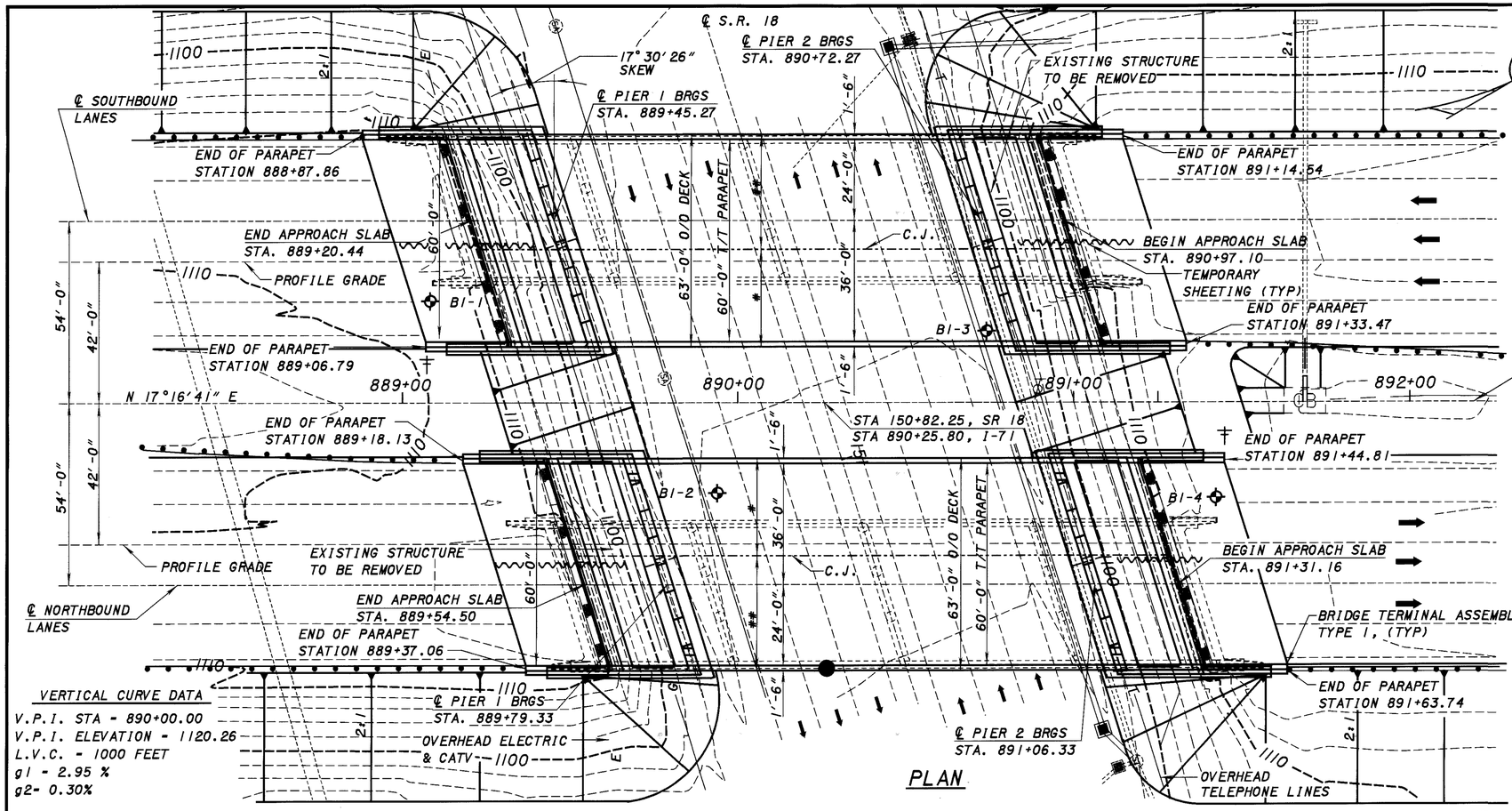

PLAN

VERTICAL CURVE DATA

V.P.I. STA = 890+00.00
V.P.I. ELEVATION = 1120.26
L.V.C. = 1000 FEET
g1 = 2.95 %
g2= 0.30%

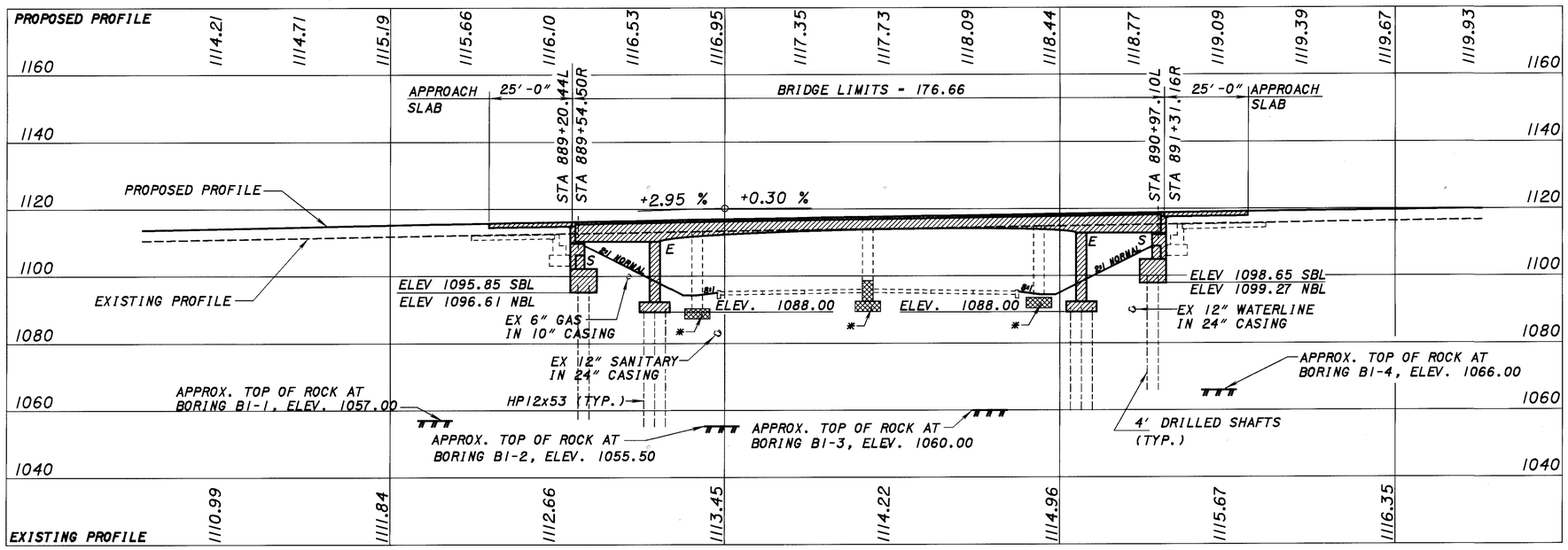

E - EXPANSION
S - SEMI-INTEGRAL (EXPANSION BEARING)

PROFILE

(ALONG ℄ NB SHOWN, SB PROFILE SIMILAR)

* NOTE: PORTIONS OF SUBSTRUCTURE UNITS TO REMAIN, SEE SHEET 8 / 34 FOR FURTHER DETAILS.

NOTES

EARTHWORK LIMITS SHOWN ARE APPROXIMATE. ACTUAL SLOPES SHALL CONFORM TO PLAN CROSS SECTIONS.

PILES ARE HP12x53 FOR THE ABUTMENT WINGWALLS AND PIERS. THE ESTIMATED PAY LENGTHS ARE:

REAR ABUTMENT WINGWALLS - 40 FEET
PIER 1 AND PIER 2 - 35 AND 30 FEET
FORWARD ABUTMENT WINGWALLS - 40 FEET

DESIGN TRAFFIC

2000 ADT - 34900 2000 ADTT - 7678
2020 ADT - 49130 2020 ADTT - 10809

BENCHMARK DATA

BM #1 - STATION 922+51.07 ELEVATION - 1135.48
ODOT DISC IN HEADWALL, STAMPED

* - STAGE 1 CONSTRUCTION - 29'-0"
** - STAGE 2 CONSTRUCTION - 34'-0"
● 16'-10" REQUIRED MINIMUM VERTICAL CLEARANCE (16'-6" PLUS 4" FOR FUTURE SR 18 WORK)
17'-1" ACTUAL MINIMUM VERTICAL CLEARANCE (CLEARANCES ARE TO EXISTING ROADWAY)
† NO BRIDGE TERMINAL ASSEMBLY, SEE CSS2 FOR ADDITIONAL DETAILS.

EXISTING STRUCTURE

TYPE: CONTINUOUS STEEL BEAMS WITH REINFORCED CONCRETE DECK AND SUBSTRUCTURE.

SPANS:
S.B.L.: 40'-0"±, 51'-0"±, 51'-0"±, 40'-0"± C/C BRGS.
N.B.L.: 40'-0"±, 51'-0"±, 51'-0"±, 40'-0"± C/C BRGS.

ROADWAY: 42'-0"± F/F OF PARAPETS

LOADING: CF 2000 (57) AND A.A.S.H.O. ALTERNATIVE LOADING

SKEW: 17°30'30"± (R.F.)

WEARING SURFACE: CONCRETE

APPROACH SLABS: 25'-0" LONG AS-1-54

ALIGNMENT: TANGENT

CROWN: 3/16" PER FOOT

DATE BUILT: 1957

SFN: 5203570 L / 5203600 R

PROPOSED STRUCTURE

TYPE: END ANCHORED CONTINUOUS A572 STEEL COMPOSITE HAUNCHED GIRDER WITH REINFORCED CONCRETE DECK ON REINFORCED CONCRETE SUBSTRUCTURES.

SPANS:
S.B.L.: 23'-0", 127'-0", 23'-0" C/C BRGS.
N.B.L.: 23'-0", 127'-0", 23'-0" C/C BRGS.

ROADWAY: 60'-0" TOE/TOE OF PARAPETS

LOADING: HS 20-44 (CASE 1) AND ALTERNATE MILITARY LOADING

SKEW: 17°30'26" (R.F.)

WEARING SURFACE: MONOLITHIC CONCRETE

APPROACH SLABS: 25'-0", LONG AS-1-81, 60'-0" TOE/TOE PARAPET

ALIGNMENT: TANGENT

SUPERELEVATION: 0.018 FT/FT

LONGITUDE: 81°47'40" LATITUDE 41°08'14"

DESIGN AGENCY: ODOT CENTRAL OFFICE / OFFICE OF PRODUCTION
DESIGNED: TAA
DRAWN: TAA
REVIEWED: BRC
CHECKED: DFT
REVISED:
DATE: 12-10-99
STRUCTURE FILE NUMBER: 5203589L/5203619R

MEDINA COUNTY
STA. 889+20.44L
STA. 890+97.10L
MEDINA COUNTY
STA. 889+54.50R
STA. 891+31.16R

SITE PLAN
MED-71-1685 L/R
I-71 OVER S.R. 18

MED-71-15.78

1 / 34

687 / 940

		MED-71-1685 L	MED-71-1685 R		ESTIMATED QUANTITIES	MED-71-1685 L				MED-71-1685 R			
ITEM	EXTENSION	TOTAL	TOTAL	UNIT	DESCRIPTION	ABUT.	PIERS	SUPER.	GEN.	ABUT.	PIERS	SUPER.	GEN.
202	11203	LUMP	LUMP		PORTIONS OF STRUCTURE REMOVED, OVER 20 FOOT SPAN, AS PER PLAN	LUMP	LUMP	LUMP		LUMP	LUMP	LUMP	
503	11101	LUMP	LUMP		COFFERDAMS, CRIBS AND SHEETING, AS PER PLAN				LUMP				LUMP
503	21301	LUMP	LUMP		UNCLASSIFIED EXCAVATION, AS PER PLAN	LUMP	LUMP			LUMP	LUMP		
505	11100	LUMP	LUMP		PILE DRIVING EQUIPMENT MOBILIZATION				LUMP				LUMP
507	00200	3641	3641	LF	STEEL PILES HP12X53, FURNISHED	1190	2451			1190	2451		
507	00250	3641	3641	LF	STEEL PILES HP12X53, DRIVEN	1190	2451			1190	2451		
507	50500	49	49	EACH	STEEL PILE SPLICES	14	35			14	35		
512	44400	9	9	SY	TYPE B WATERPROOFING	9				9			
SPECIAL	51267200	45	45	SY	WATERPROOFING, MISC.: SEMI-INTEGRAL ABUTMENT JOINT WATERPROOFING	45				45			
SPECIAL	51267510	1540	1540	SY	SEALING OF CONCRETE SURFACES (EPOXY-URETHANE)	410	468	662		410	468	662	
516	13200	613	613	SF	1/2" PREFORMED EXPANSION JOINT FILLER	522	70	21		522	70	21	
516	44100	16	16	EACH	ELASTOMERIC BEARING WITH INTERNAL LAMINATES AND LOAD PLATE	16				16			
					(NEOPRENE) (15"x20"x2 1/4" PAD AND 16"x21"x1 1/2" PLATE)								
516	44100	16	16	EACH	ELASTOMERIC BEARING WITH INTERNAL LAMINATES AND LOAD PLATE		16				16		
					(NEOPRENE), (16"x24"x2 1/4" PAD AND 17"x25"x 2" PLATE)								
518	21231	LUMP	LUMP		POROUS BACKFILL WITH FILTER FABRIC, AS PER PLAN	LUMP				LUMP			
518	40000	132	132	LF	6" PERFORATED CORRUGATED PLASTIC PIPE	132				132			
518	40010	140	140	LF	6" NON-PERFORATED CORRUGATED PLASTIC PIPE, INCLUDING SPECIALS	140				140			
524	94902	640	640	LF	DRILLED SHAFTS, 48" DIAMETER, ABOVE BEDROCK	640				640			
601	21000	173	173	SY	CONCRETE SLOPE PROTECTION				173				173
607	98200	LUMP	LUMP		FENCE, MISC.: SCREEN FENCE				LUMP				LUMP
816	00600	LUMP	LUMP		FIELD PAINTING NEW STEEL, INTERMEDIATE AND FINISH COAT, SYSTEM IZEU			LUMP				LUMP	
842	40501	288	288	CY	CLASS C CONCRETE, PIER ABOVE FOOTINGS, AS PER PLAN		288				288		
842	44101	283	283	CY	CLASS C CONCRETE, ABUTMENT NOT INCLUDING FOOTING, AS PER PLAN	283				283			
842	46501	398	398	CY	CLASS C CONCRETE, FOOTING, AS PER PLAN	251	147			251	147		
844	48001	313	313	CY	HIGH PERFORMANCE CONCRETE SUPERSTRUCTURE (DECK), AS PER PLAN, MIX 4			313				313	
844	48021	71	71	CY	HIGH PERFORMANCE CONCRETE SUPERSTRUCTURE (PARAPET), AS PER PLAN, MIX 4 *			71				71	
844	48041	34	34	CY	HIGH PERFORMANCE CONCRETE SUBSTRUCTURE, AS PER PLAN, MIX 4	34				34			
844	49000	LUMP	LUMP		HIGH PERFORMANCE CONCRETE TRIAL MIX			LUMP				LUMP	
863	10100	LUMP	LUMP		STRUCTURAL STEEL MEMBERS, LEVEL FIVE (5) FABRICATION			LUMP				LUMP	
863	20000	2928	2928	EACH	WELDED STUD SHEAR CONNECTORS	192		2736		192		2736	
863	95020	LUMP	LUMP		STRUCTURAL STEEL, MISC. : TIE DOWN DEVICES	LUMP				LUMP			

* PARAPET ON THE APPROACH SLAB IS INCLUDED WITH THIS ITEM

DESIGN AGENCY
ODOT CENTRAL OFFICE
OFFICE OF PRODUCTION

REVIEWED DFT DATE 12-10-99
STRUCTURE FILE NUMBER 5203589L/5203619R

DRAWN TAA REVISED

DESIGNED TAA CHECKED RJH

ESTIMATED QUANTITIES
MED-71-1685 L/R
I-71 OVER SR18

MED-71-15.78

GENERAL NOTES

STANDARD DRAWINGS AND SPECIFICATIONS:

REFERENCE SHALL BE MADE TO STANDARD DRAWINGS:

AS-1-81	REVISED 09-15-94
SBR-1-99	DATED 01-12-99
PCB-1-91	REVISED 07-06-99
GSD-1-96	DATED 02-12-97
MH-1.1M	DATED 10-21-97

AND TO SUPPLEMENTAL SPECIFICATIONS:

816	DATED 04-21-97
842	DATED 01-06-99
844	DATED 01-06-99
863	DATED 10-12-99
899	DATED 10-21-98
910	DATED 07-28-98
911	DATED 07-10-97
954	DATED 09-09-97

DESIGN SPECIFICATIONS:

THIS STRUCTURE CONFORMS TO "STANDARD SPECIFICATIONS FOR HIGHWAY BRIDGES" ADOPTED BY THE AMERICAN ASSOCIATION OF STATE HIGHWAY AND TRANSPORTATION OFFICIALS, 1996 INCLUDING THE 1997 AND 1998 INTERIM SPECIFICATIONS AND THE ODOT DESIGN MANUAL.

DESIGN LOADING:

HS20-44, CASE I AND THE ALTERNATE MILITARY LOADING.

DESIGN DATA:

HIGH PERFORMANCE CONCRETE - COMPRESSIVE STRENGTH 4500 PSI (SUPERSTRUCTURE)

HIGH PERFORMANCE CONCRETE - COMPRESSIVE STRENGTH 4000 PSI (SUBSTRUCTURE)

ITEM 842 CONCRETE - COMPRESSIVE STRENGTH 4000 PSI (SUBSTRUCTURE)

REINFORCING STEEL - ASTM A615, A616 OR A617 GRADE 60 MINIMUM YIELD STRENGTH 60 Ksi. SPIRAL REINFORCEMENT MAY BE PLAIN BARS, ASTM A82 OR A615

STRUCTURAL STEEL - A572 - YIELD STRENGTH 50 Ksi

DECK PROTECTION METHOD - EPOXY COATED REINFORCING STEEL AND 2½" CONCRETE COVER AND HIGH PERFORMANCE CONCRETE.

MONOLITHIC WEARING SURFACE IS ASSUMED, FOR DESIGN PURPOSES, TO BE 1" THICK.

EXISTING STRUCTURE VERIFICATION:

DETAILS AND DIMENSIONS SHOWN ON THESE PLANS PERTAINING TO THE EXISTING STRUCTURE HAVE BEEN OBTAINED FROM PLANS OF THE EXISTING STRUCTURE AND FROM FIELD OBSERVATIONS AND MEASUREMENTS. CONSEQUENTLY, THEY ARE INDICATIVE OF THE EXISTING STRUCTURE AND THE PROPOSED WORK BUT THEY SHALL BE CONSIDERED TENTATIVE AND APPROXIMATE. THE CONTRACTOR IS REFERRED TO CMS SECTIONS 102.05, 105.02 AND 513.02.

CONTRACT BID PRICES SHALL BE BASED UPON A RECOGNITION OF THE UNCERTAINTIES DESCRIBED ABOVE AND UPON A PREBID EXAMINATION OF THE EXISTING STRUCTURE BY THE CONTRACTOR. HOWEVER, ALL PROJECT WORK SHALL BE BASED UPON ACTUAL DETAILS AND DIMENSIONS WHICH HAVE BEEN VERIFIED BY THE CONTRACTOR IN THE FIELD.

EXISTING BRIDGE PLANS MAY BE INSPECTED IN THE OFFICE OF STRUCTURAL ENGINEERING IN COLUMBUS, OHIO OR AT THE ODOT DISTRICT THREE OFFICE IN ASHLAND, OHIO.

ITEM 202 PORTIONS OF STRUCTURE REMOVED OVER 20 FOOT SPAN, AS PER PLAN:

PORTION OF THE STRUCTURE REMOVED, AS PER PLAN, SHALL INCLUDE THE ELEMENTS INDICATED IN THE PLANS AND GENERAL NOTES AND ARE NOT SEPARATELY LISTED FOR PAYMENT, EXCEPT FOR WEARING COURSE REMOVAL. ITEMS TO BE REMOVED INCLUDE ALL EXISTING MATERIALS BEING REPLACED BY NEW CONSTRUCTION AND MISCELLANEOUS ITEMS THAT ARE NOT SHOWN TO BE INCORPORATED INTO THE FINAL CONSTRUCTION AND ARE DIRECTED TO BE REMOVED BY THE ENGINEER. SEE SHEET 8/34 FOR PLAN DETAILS.

PROTECTION OF TRAFFIC:

PRIOR TO DEMOLITION OF ANY PORTIONS OF THE EXISTING SUPERSTRUCTURE, THE CONTRACTOR SHALL SUBMIT PLANS FOR THE PROTECTION OF TRAFFIC (VEHICULAR, PEDESTRIAN , ETC.) ADJACENT TO AND/OR UNDER THE STRUCTURE TO THE ENGINEER FOR APPROVAL. THESE PLANS SHALL INCLUDE PROVISIONS FOR ANY DEVICES AND STRUCTURES THAT MAY BE NECESSARY TO ENSURE SUCH PROTECTION. TEMPORARY VERTICAL CLEARANCES SPECIFIED IN THE PROPOSAL SHALL BE MAINTAINED AT ALL TIMES EXCEPT AS OTHERWISE APPROVED BY THE ENGINEER.

PAYMENT

ALL WORK SHALL BE PAID FOR UNDER ITEM 202 PORTIONS OF STRUCTURES REMOVED, AS PER PLAN

TRAFFIC MAINTENANCE:

SEE ROADWAY PLANS FOR ADDITIONAL TRAFFIC NOTES AND DETAILS.

SEALING OF CONCRETE SURFACES (EPOXY-URETHANE)

EPOXY-URETHANE SHALL BE THE "BUFF" COLOR MEETING FEDERAL COLOR STANDARD NO. 37722 AS PER THE DETAILS IN THE PLAN.

ITEM SPECIAL - WATERPROOFING, MISC.: SEMI-INTEGRAL ABUTMENT JOINT WATERPROOFING

INSTALL A 3 FOOT WIDE STRIP, 3/32 INCH THICK, GENERAL PURPOSE, HEAVY DUTY NEOPRENE SHEET WITH NYLON FABRIC REINFORCEMENT AT LOCATIONS SHOWN IN THE PLANS. SECURE THE 3 FOOT WIDE NEOPRENE SHEETING TO THE CONCRETE WITH 1¼" X 3/32" (LENGTH X SHANK DIAMETER) #10 GALVANIZED BUTTON HEAD SPIKE THROUGH A 1 INCH OUTSIDE DIAMETER, #10 GAGE GALVANIZED WASHER. MAXIMUM FASTENER SPACING IS 9 INCHES. OTHER SIMILAR GALVANIZED DEVICES WHICH WILL NOT DAMAGE EITHER THE NEOPRENE OR THE CONCRETE MAY BE USED SUBJECT TO THE APPROVAL OF THE ENGINEER.

CENTER THE NEOPRENE STRIPS ON ALL JOINTS. FOR HORIZONTAL JOINTS, SECURE THE HORIZONTAL NEOPRENE STRIP BY USING A SINGLE LINE OF FASTENERS, STARTING AT 6 INCHES (+/-) FROM THE TOP OF THE NEOPRENE STRIP. FOR THE VERTICAL JOINTS SECURE THE VERTICAL NEOPRENE STRIP BY USING A SINGLE VERTICAL LINE OF FASTENERS, STARTING AT 6 INCHES (+/-) FROM THE VERTICAL EDGE OF THE NEOPRENE STRIP NEAREST TO THE CENTERLINE OF ROADWAY. FOR VERTICAL JOINTS, INSTALL 2 ADDITIONAL FASTENERS, AT 6 INCHES CENTER TO CENTER, ACROSS THE TOP OF THE NEOPRENE STRIP ON THE SAME SIDE OF THE VERTICAL JOINT AS WHERE THE SINGLE VERTICAL ROW OF FASTENERS IS LOCATED.

THE VERTICAL NEOPRENE STRIPS SHOULD COMPLETELY OVERLAP THE HORIZONTAL STRIPS. LAPS IN THE LENGTH OF THE HORIZONTAL STRIPS DUE TO MATERIAL MANUFACTURING SHALL BE AT LEAST ONE FOOT IN LENGTH, IF NOT VULCANIZED OR ADHESIVE BONDED, OR 6 INCHES IN LENGTH IF THE LAP IS VULCANIZED OR ADHESIVE BONDED. NO LAPS ARE ACCEPTABLE IN VERTICALLY INSTALLED NEOPRENE STRIPS.

THE NEOPRENE SHEETING SHALL BE 3/32 INCH THICK GENERAL PURPOSE, HEAVY DUTY NEOPRENE SHEET WITH NYLON FABRIC REINFORCEMENT. THE SHEETING SHALL BE "FAIRPRENE NUMBER NN-0003", BY E. I. DUPONT DE NEMOURS AND COMPANY, INC., "WINGPRENE" BY THE GOODYEAR TIRE AND RUBBER COMPANY, OR AN APPROVED ALTERNATE. THE NEOPRENE SHEETING SHALL CONFORM TO THE FOLLOWING:

DESCRIPTION OF TEST	ASTM METHOD	REQUIREMENT
THICKNESS, INCHES	D 751	0.094 ± .01
BREAKING STRENGTH,GRAB WXF, LBS, MINIMUM	D 751	700 X 700
ADHESIVE 1" STRIP, 2" MINIMUM, LBS,MINIMUM	D 751	9
BURST STRENGTH (MULLEN) PSI, MINIMUM	D 751	1400
HEAT AGING 70 HOURS T 212 F, 180 BEND WITHOUT CRACKING	D 2136	NO CRACKING OF COATING
LOW TEMPERATURE BRITTLENESS 1 HOUR AT -40 F, BEND AROUND ¼ INCH MANDREL	D 2136	NO CRACKING OF COATING

PAYMENT FOR LABOR MATERIALS AND INSTALLATION OF THESE ITEMS SHALL BE INCLUDED IN INTEM SPECIAL- WATERPROOFING, MISC. : SEMI-INTEGRAL ABUTMENT JOINT WATERPROOFING.

PAINTING OF 863 STEEL

THE COLOR OF THE FINISH COAT SHALL BE A LIGHT GRAY COLOR MEETING FEDERAL STANDARD NUMBER 16440. IN ADDITION TO THE STEEL STRINGER TO BE PAINTED INCIDENTALS SUCH AS CROSSFRAMES AND BEARINGS SHALL BE INCLUDED FOR PAYMENT.

ITS CONDUIT

THE CONDUIT SHALL BE PLACED WITHIN THE OUTSIDE PARAPET OF L & R STRUCTURES. SEE CSS3 & CSS4 FOR DETAILS.

ITEM 503, UNCLASSIFIED EXCAVATION, AS PER PLAN:

UNCLASSIFIED EXCAVATION SHALL BE IN ACCORDANCE WITH 503 EXCEPT THAT THE BACKFILL MATERIAL BEHIND THE ABUTMENTS SHALL BE 203 MATERIAL PLACED IN 6" LIFTS. EXCAVATION AT ABUTMENTS IN ADDITION TO THAT NECESSARY TO REMOVE PORTION OF THE EXISTING STRUCTURE SHALL BE INCLUDED IN THE LUMP SUM PRICE BID FOR ITEM 503, UNCLASSIFIED EXCAVATION FOR PAYMENT.

ITEM 842 CLASS C CONCRETE, (FOOTINGS, PIERS AND ABUTMENTS) AS PER PLAN

THE COARSE AGGREGATE SHALL BE NO. 8 LIMESTONE. THESE ITEMS SHALL INCLUDE THE COST OF THE REINFORCING STEEL.

ITEM 844 HIGH PERFORMANCE CONCRETE, AS PER PLAN

THE DESIGN MIX SHALL BE MIX NO. 4 LIMESTONE. THE OPTION OF SLIPFORM CONSTRUCTION OF THE BRIDGE PARAPET IS NOT PERMITTED. THESE ITEMS SHALL INCLUDE THE COST OF THE REINFORCING STEEL.

REINFORCING STEEL:

NEW REINFORCING STEEL MAY REQUIRE FIELD CUTTING OR BENDING TO BE PROPERLY FITTED. PAYMENT SHALL BE INCLUDED UNDER ITEM 844 HIGH PERFORMANCE CONCRETE.

ITEM 518 - POROUS BACKFILL WITH FILTER FABRIC, AS PER PLAN

POROUS BACKFILL SHALL BE #57 GRAVEL ONLY.

PILES DRIVEN TO BEDROCK:

PILES SHALL BE DRIVEN TO REFUSAL ON BEDROCK. REFUSAL SHALL BE CONSIDERED AS OBTAINED BY PENETRATING SOFT BEDROCK FOR SEVERAL INCHES WITH A MINIMUM RESISTANCE OF 20 BLOWS PER INCH OR REFUSAL SHALL BE CONSIDERED AS OBTAINED AFTER THE PILE HAS CONTACTED HARD BEDROCK AND THE PILE HAS THEN RECEIVED AT LEAST 20 BLOWS.

THE DESIGN LOAD IS 40 TONS PER PILE FOR THE ABUTMENT WINGWALL PILES AND 60 TONS PER PILE FOR THE PIER PILES.

863 STRUCTURAL STEEL MISC.: TIE DOWN DEVICES

DESCRIPTION: THIS ITEM SHALL CONSIST OF FURNISHING ALL MATERIALS, LABOR, AND EQUIPMENT NECESSARY TO INSTALL ALL THREADBARS, NUTS, WASHERS, GREASE AND ALL OTHER MATERIAL NECESSARY TO INSTALL THE TIE-DOWN DEVICE AS SHOWN ON THE PLANS AND AS SPECIFIED HEREIN.

MATERIALS: THE THREADBARS AND NUTS SHALL BE AASHTO M275-79 (TYPE II) OR ASTM A722. THE NUTS AND WASHERS SHALL BE GALVANIZED PER 711.02. THE STANDARD PIPE SHALL CONFORM TO ASTM A501, BE GALVANIZED AND BE INCLUDED WITH STRUCTRUAL STEEL FOR PAYMENT. THE GREASE PACKED INSIDETHE STANDARD PIPE SHALL MEET TRADE SPECIFICATIONS FOR WHEEL BEARING GREASE. THREADED BARS SHALL BE EPOXY COATED PER ASTM A755.

CONSTRUCTION REQUIREMENTS: THE THREADBARS AT EACH GIRDER END SHALL BE INITIALLY TIGHTENED TO A SNUG TIGHT CONDITION AT THE TIME OF GIRDER ERECTION PRIOR TO RELEASING CRANE SUPPORT. AT THE CONTRACTOR'S OPTION AN ALTERNATE HOLD-DOWN SUPPORT METHOD MAY BE USED AT THE ABUTMENTS DURING STEEL ERECTION UNTIL THE PERMINANT TIE-DOWN DEVICES ARE INSTALLED. ALL THREADBARS AT EACH GIRDER END SHALL BE TENSIONED SIMULTANEOUSLY IN ACCORDANCE WITH THE THREADBAR MANUFACTURER'S RECOMMENDATIONS SO AS NOT TO OVERSTRESS THE STRUCTURAL STEEL AND ELASTOMERIC BEARINGS. AFTER THE THREADBARS HAVE BEEN TENTSIONED TO FINAL STRESS, ANY DAMAGED GALVANIZING ON THE ASSOCIATED HARDWARE SHALL BE REPAIRED IN ACCORDANCE WITH ASTM A780. GREASE SHALL THEN BE PUMPED INTO THE STANDARD PIPES THROUGH A FLEXIBLE HOSE. COMMENCING AT THE BOTTOM AND PROGRESSIVELY RAISED IN MANNER TO FILL THE CAVITY COMPLETELY TO THE TOP OF THE PIPE.

BASIS OF PAYMENT, THIS WORK SHALL BE PAID FOR AT THE CONTRACT UNIT PRICE, LUMP SUM (CONSISTING OF FOUR THREADBARS AND ASSOCIATED HARDWARE) WHICH PRICE SHALL INCLUDED ALL COSTS FOR PERFORMING THE WORK AS SHOWN ON THE PLANS AND AS SPECIFIED HEREIN.

ERECTION OF STRUCTURAL STEEL: ERECTION OF THE STRUCTURAL STEEL WILL REQUIRE INITIAL SNUG TIGHT INSTALLATION OF THE TIE DOWN DEVICES AT ABUTMENTS IN ADDITION TO SECURING NECESSARY LATERAL BRACING PRIOR TO RELEASING CRANE SUPPORT. THE CONTRACTOR MAY SUBMIT TO THE ENGINEER FOR APPROVAL, AN ALTERNATE METHOD OF PROVIDING TEMPORARY TIE DOWN SUPPORT DURING ERECTION. THE CONTRACTOR SHALL PREPARE AND SUBMIT FOR APPROVAL CONSTRUCTION PLANS IN ACCORDANCE WITH 501.06. TO FACILITATE ERECTION AND INSTALLATION OF FIELD SECTIONS. THE CONTRACTOR MAY SUBMIT FOR APPROVAL PLANS TO PROVIDE TEMPORARY FALSE WORK INCLUDING PROPOSED PROTECTION AND MAINTENANCE OF TRAFFIC ON SR18.

SURVEY DISC ON STRUCTURE:

THE CONTRACTOR SHALL NOTIFY THE ENGINEER AT LEAST ONE (1) WEEK IN ADVANCE OF POURING THE CONCRETE FOR COMPLETION OF THE ABUTMENT. THE ENGINEER WILL PROVIDE THE CONTRACTOR ONE (1) SURVEY DISC FOR EACH STRUCTURE (OBTAINED FROM THE DISTRICT SURVEYOR) WHICH THE CONTRACTOR SHALL PLACE IN THE SURFACE OF THE FRESH CONCRETE. THE LOCATION OF THE DISC SHALL BE ON THE ABUTMENT, AND ON A FLAT, HORIZONTAL SURFACE BEYOND THE EDGE OF DECK AND PARAPET. THE BENCHMARK SHALL BE ACCESSIBLE TO A SURVEYOR'S ROD WITHOUT ANY OBSTRUCTIONS. COST OF THIS WORK IS CONSIDERED INCIDENTAL TO THE CONCRETE BID ITEM.

DESIGN AGENCY: ODOT CENTRAL OFFICE OFFICE OF PRODUCTION

REVIEWED	DATE	STRUCTURE FILE NUMBER
JFF	12-10-99	5203589L/5203619R

DRAWN	REVISED
JFF	

DESIGNED	CHECKED
TAA	DFT

GENERAL NOTES
MED-71-1685 L/R
I-71 OVER SR18

MED-71-15.78

3/34

689/940

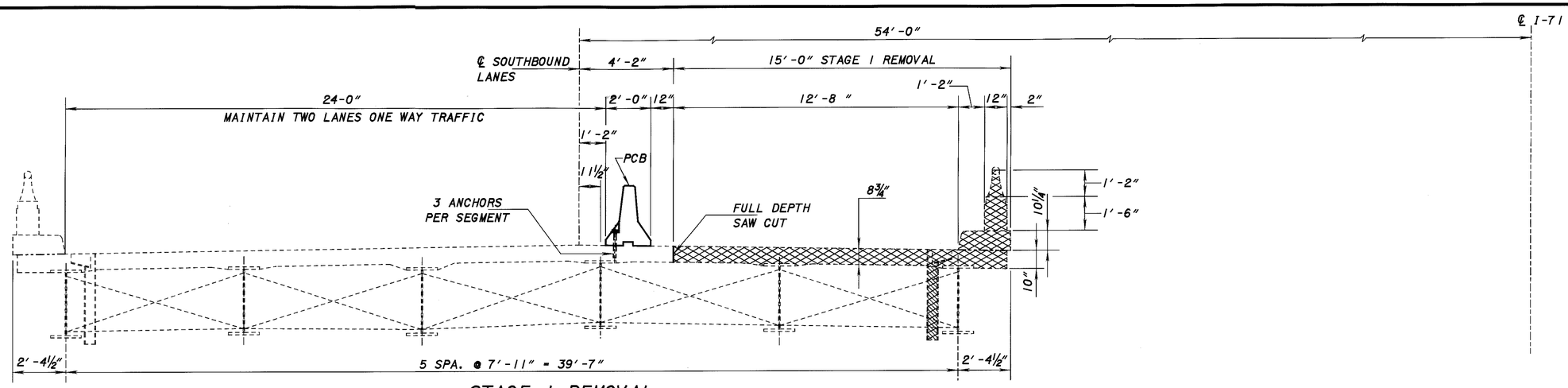

STAGE I REMOVAL

(SOUTHBOUND LANES SHOWN)

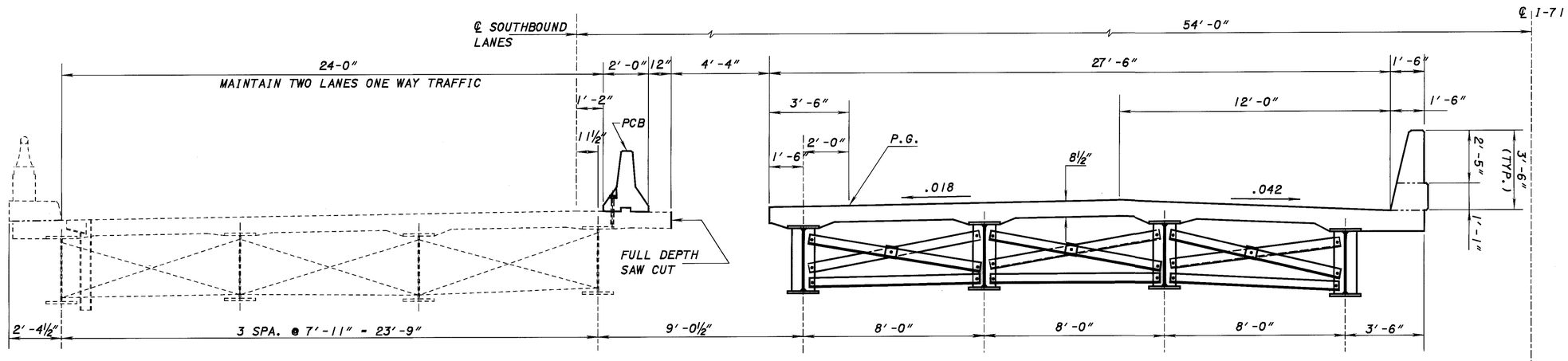

STAGE I CONSTRUCTION

(SOUTHBOUND LANES SHOWN)

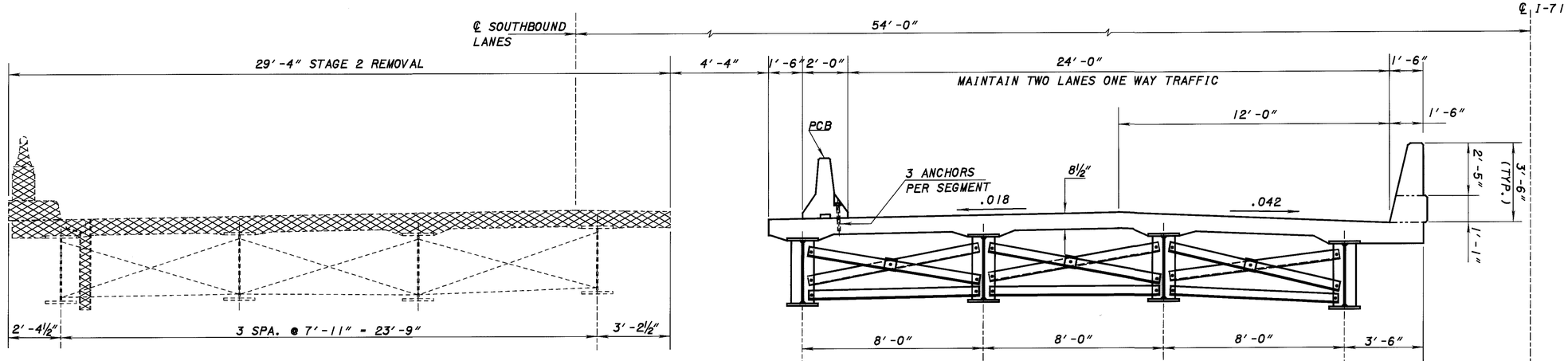

STAGE 2 REMOVAL

(SOUTHBOUND LANES SHOWN)

DESIGN AGENCY
ODOT CENTRAL OFFICE
OFFICE OF PRODUCTION

REVISED DFT
DATE 12-10-99
STRUCTURE FILE NUMBER 5203589L/5203619R

DRAWN BKL
REVISED

DESIGNED BKL
CHECKED TAA

STAGE CONSTRUCTION DETAILS
MED-71-1685 L
I-71 OVER S.R. 18

MED-71-15.78

4/34

690
940

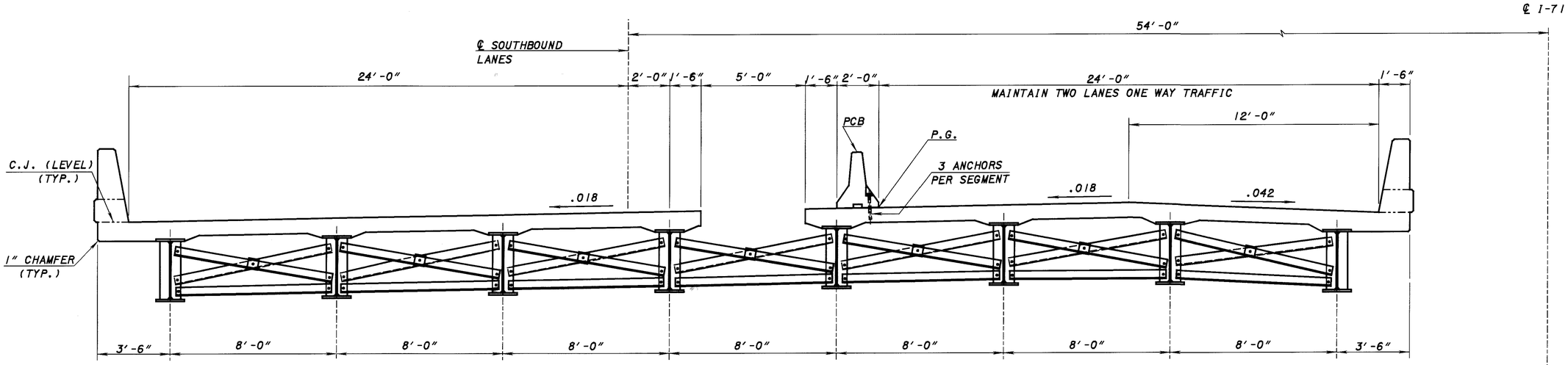

STAGE 2 CONSTRUCTION

(SOUTHBOUND LANES SHOWN)

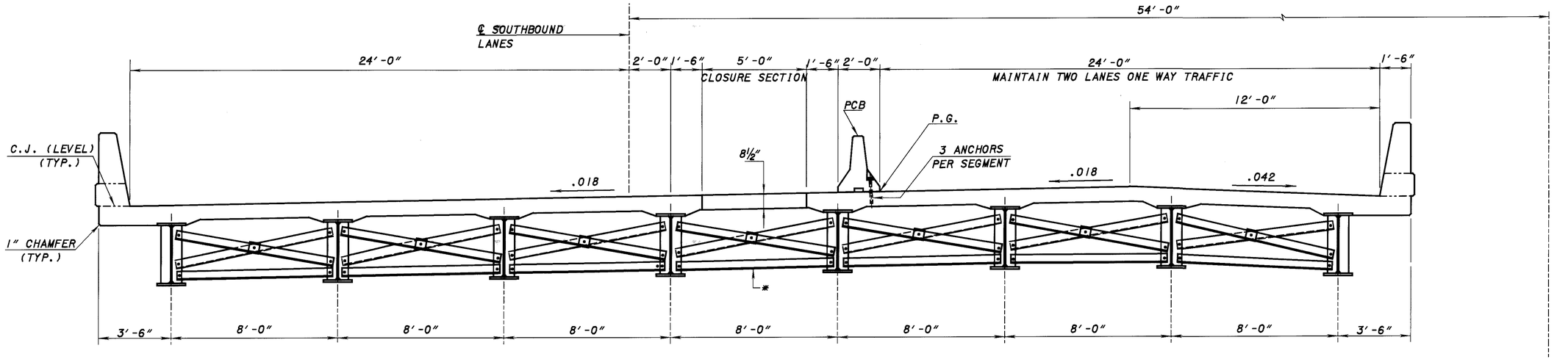

CLOSURE SECTION CONSTRUCTION

(SOUTHBOUND LANES SHOWN)

* PLACE CROSSFRAMES IN POSITION PRIOR TO POURING OF THE CLOSURE POUR

NOTES AND LEGEND

TEMPORARY BARRIERS SHALL BE ANCHORED TO EXISTING AND PROPOSED BRIDGE DECK. THREE (3) ANCHORS PER TEMPORARY BARRIER SEGMENT ARE REQUIRED ON THE TRAFFIC SIDE OF THE BARRIER. THE ANCHOR BOLT PATTERN SHALL BE SYMMETRICAL ABOUT THE CENTER OF EACH SEGMENT. SEE STD. DWG. PCB-91 FOR ADDITIONAL DETAILS.

PCB - INDICATES PORTABLE CONCRETE BARRIER.

PROPOSED WORK

1. MAINTAIN TRAFFIC BY USE OF STAGE CONSTRUCTION
2. REPLACE CONCRETE DECK AND STEEL BEAMS
3. CONSTRUCT NEW SUBSTRUCTURE UNITS

DESIGN AGENCY
ODOT CENTRAL OFFICE
OFFICE OF PRODUCTION

DESIGNED	DRAWN	REVIEWED	DATE
BKL	BKL	DFT	12-10-99
CHECKED	REVISED	STRUCTURE FILE NUMBER	
HLG		52035891/520361 9R	

STAGE CONSTRUCTION DETAILS
MED-71-1685 L
I-71 OVER S.R. 18

MED-71-15.78

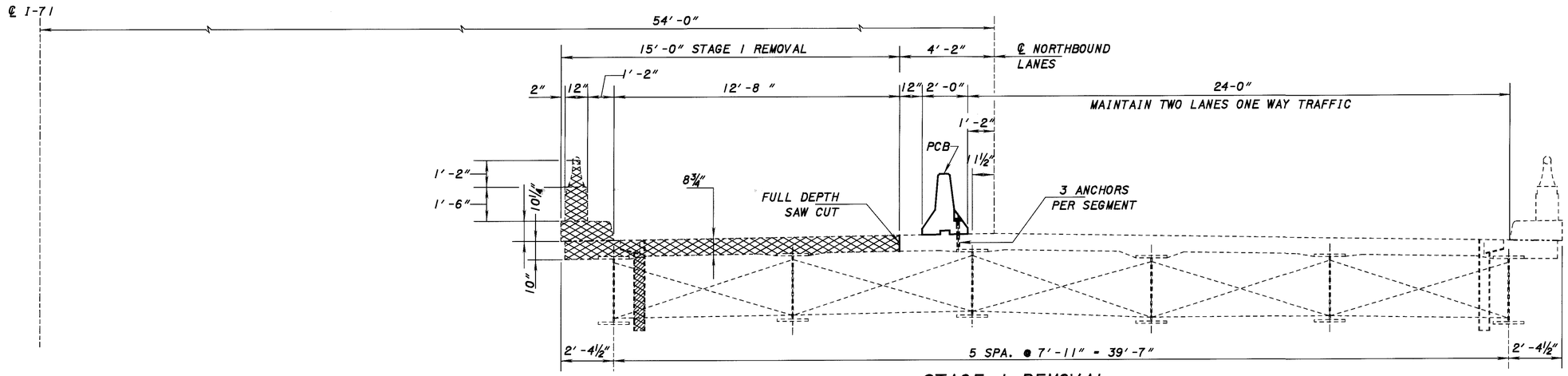

STAGE 1 REMOVAL

(NORTHBOUND LANES SHOWN)

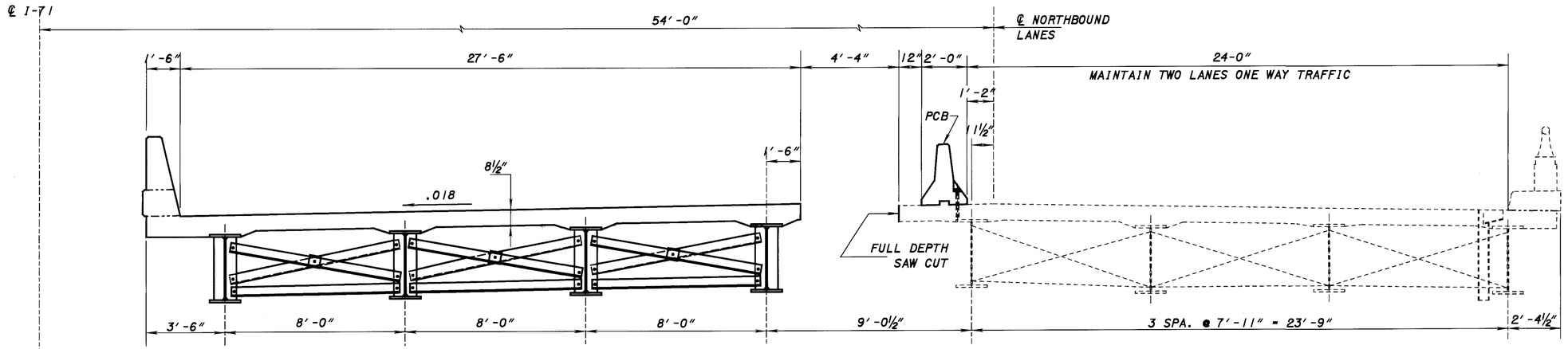

STAGE 1 CONSTRUCTION

(NORTHBOUND LANES SHOWN)

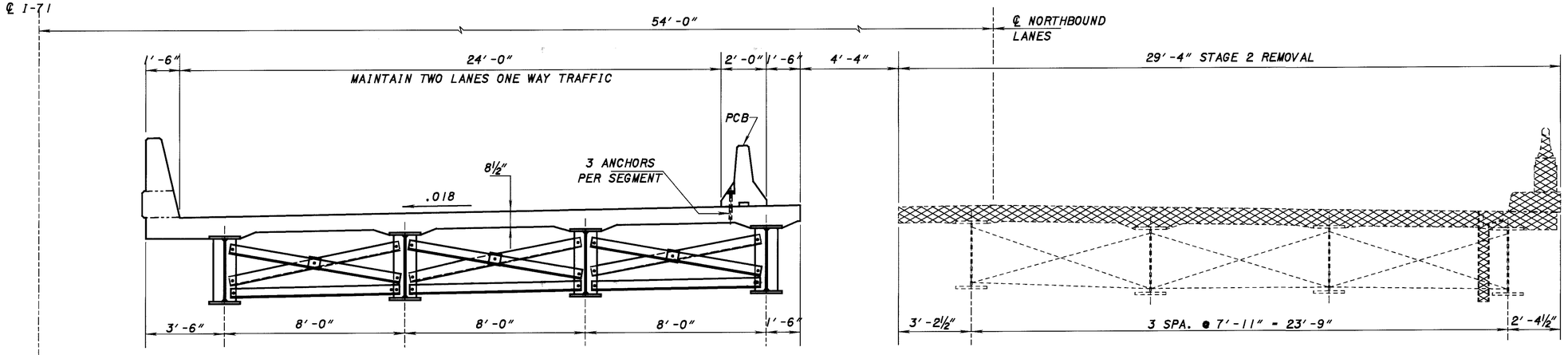

STAGE 2 REMOVAL

(NORTHBOUND LANES SHOWN)

DESIGN AGENCY
ODOT CENTRAL OFFICE
OFFICE OF PRODUCTION

REVISED	DATE	STRUCTURE FILE NUMBER
DFT	12-19-99	5203589L/5203619R

DESIGNED	DRAWN	REVISED
BKL	BKL	

CHECKED TAA

STAGE CONSTRUCTION DETAILS

MED-71-1685 R
I-71 OVER S.R. 18

MED-71-15.78

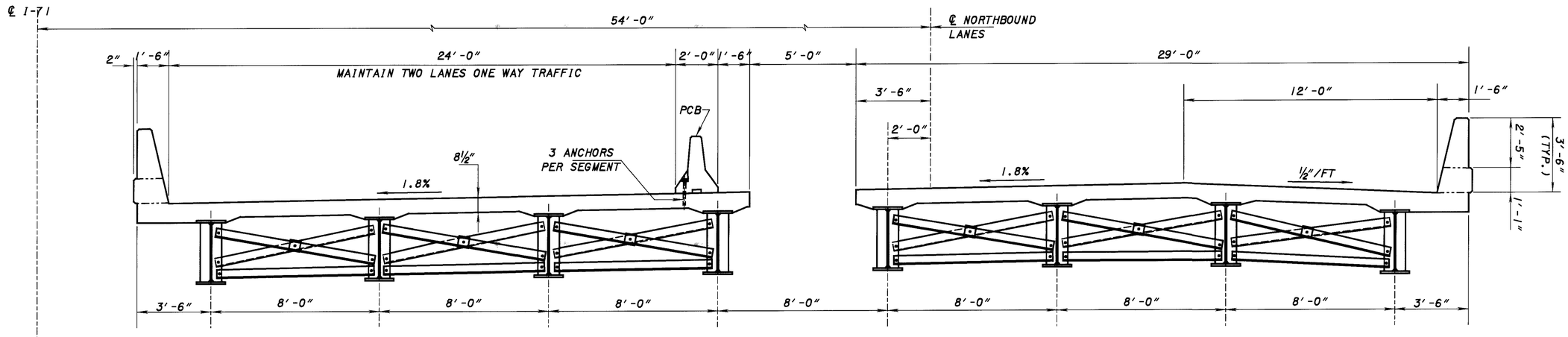

STAGE 2 CONSTRUCTION

(NORTHBOUND LANES SHOWN)

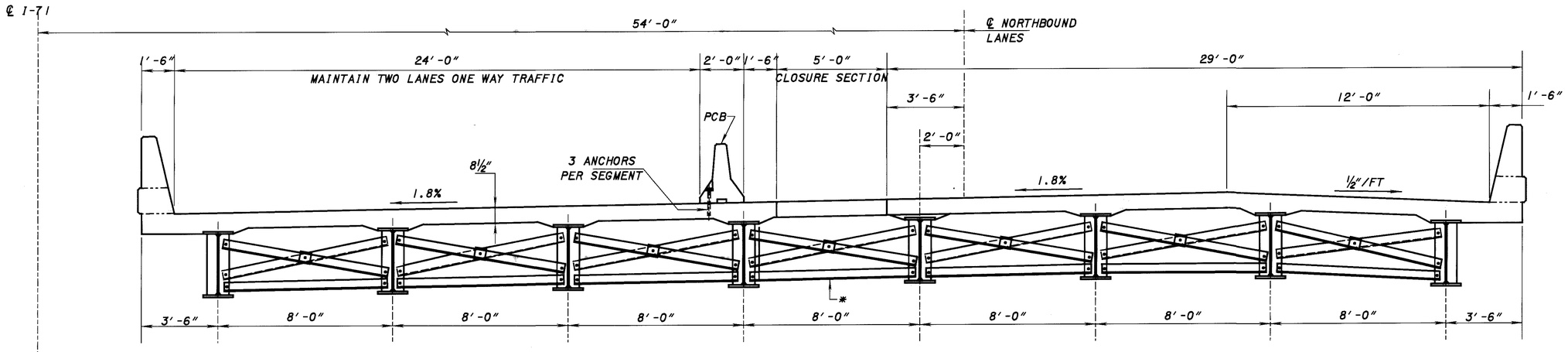

* PLACE CROSSFRAMES IN POSITION PRIOR TO POURING OF THE CLOSURE POUR

CLOSURE SECTION CONSTRUCTION

(NORTHBOUND LANES SHOWN)

PROPOSED WORK

1. MAINTAIN TRAFFIC BY USE OF STAGE CONSTRUCTION
2. REPLACE CONCRETE DECK AND STEEL BEAMS
3. CONSTRUCT NEW SUBSTRUCTURE UNITS

NOTES AND LEGEND

TEMPORARY BARRIERS SHALL BE ANCHORED TO EXISTING AND PROPOSED BRIDGE DECK. THREE (3) ANCHORS PER TEMPORARY BARRIER SEGMENT ARE REQUIRED ON THE TRAFFIC SIDE OF THE BARRIER. THE ANCHOR BOLT PATTERN SHALL BE SYMMETRICAL ABOUT THE CENTER OF EACH SEGMENT. SEE STD. DWG. PCB-91 FOR ADDITIONAL DETAILS.

PCB - INDICATES PORTABLE CONCRETE BARRIER.

DESIGN AGENCY: ODOT CENTRAL OFFICE, OFFICE OF PRODUCTION

DESIGNED	DRAWN	REVIEWED	DATE
BKL	BKL	DFT	12-10-99

CHECKED	REVISED	STRUCTURE FILE NUMBER
TAA		5203589L/5203619R

STAGE CONSTRUCTION DETAILS

MED-71-1685 R
I-71 OVER S.R. 18

MED-71-15.78

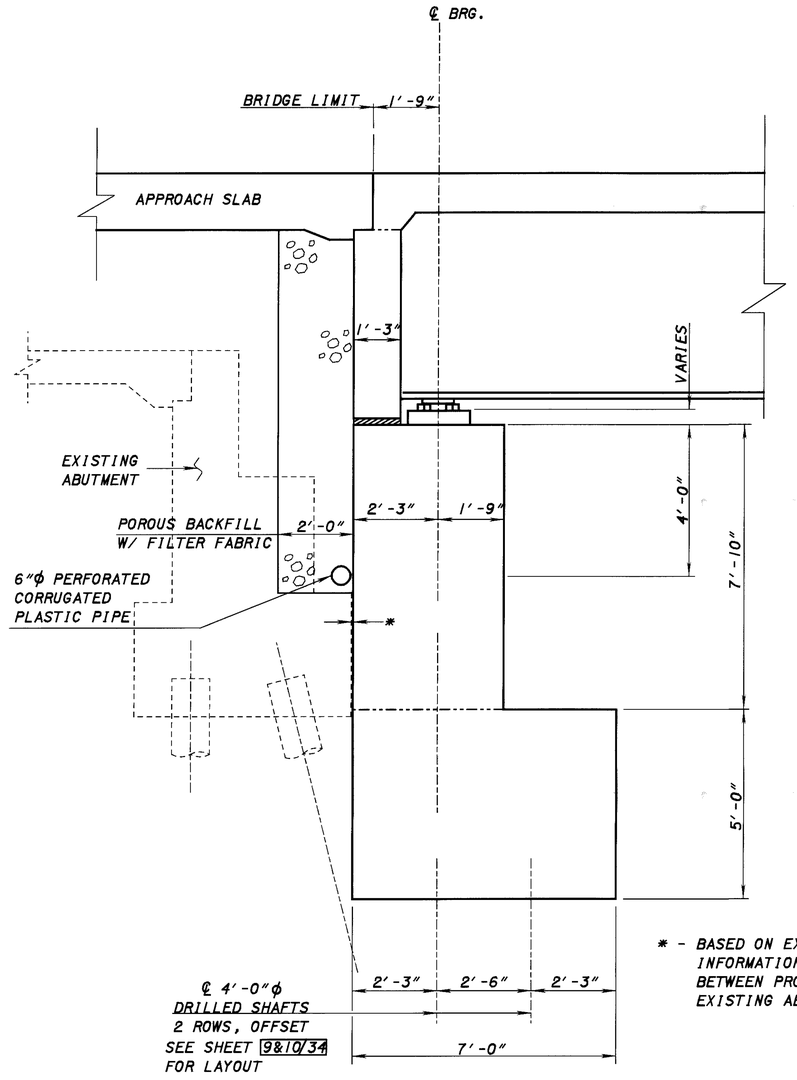

* - BASED ON EXISTING PLAN INFORMATION, CLEARANCE BETWEEN PROPOSED AND EXISTING ABUTMENT IS ½".

ABUTMENT SECTION

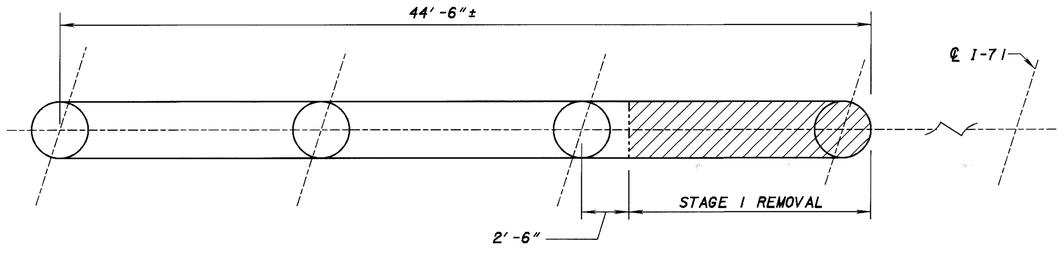

STAGE PIER REMOVAL

NOTES

Existing Abutment Removals: The proximity of the existing abutment will interfere with the proposed abutment construction. The Contractor shall assume that the existing abutment and front row of piles shall be removed. After an assessment by the Contractor of the location of the existing abutment by field verification and method of construction to be used including proposed temporary sheeting plans and stage construction procedures, The contractor may propose a plan to incorporate the existing abutment into the temporary shoring plan. With this plan, portions of the existing abutment may be left in-place, but in any case the existing abutment backwall and approach slab shall be removed. If portions of the existing abutment are left in place the Contractor will need to submit plans to deal with any conflicts between the existing battered front row of piles and the proposed abutment construction.

The existing abutment northbound right side and southbound left side wingwall and footing shall be removed. This portion of the abutment will conflict with the proposed abutment wingwall and footing. The existing pile in the wingwall footing may remain, proposed pile location may need to be adjusted to avoid conflict.

All work necessary shall be included for payment under 202-Portions of Structure removed, as per plan.

Temporary Shoring: In order to construct the proposed substructures temporary shoring is required, see footing plan layout details for approximate locations. The Contractor shall construct a concrete reinforced wall similar to the abutment turnback wingwall and footings in the required locations. The retaining wall shall be placed parallel to the outside turnback walls, details will be similar. In between the proposed abutment and pier temporary shoring is required for construction, the details of the concrete end walls may be used. The height of the wall need only be as required by the Contractor construction needs and operation to construct and retain the proposed slopes and concrete slope protection. The temporary shoring shall tie the proposed abutment and pier together in order to provide a closed box configuration, to resist uplift and skew forces. The proposed turnback wingwalls and end wall between the pier and abutment shall be the basis of the temporary shoring construction, details to be incorporated into a temporary shoring plan. The Contractor may choose to propose an alternate temporary shoring plan, the temporary shoring shall be capable of supporting the embankment and highway loadings and provide the necessary lateral resistant due to the uplift and skew forces. All labor, materials to construct the temporary shoring shall be included for payment under 503-Cofferdams, Cribbing and Sheeting, as per plan.

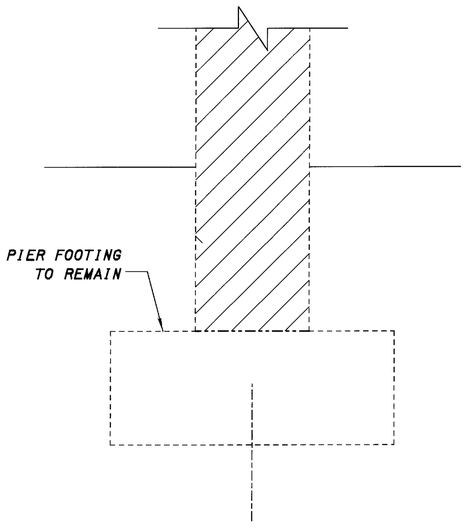

PIER 1 & 3 REMOVAL

REMOVE PIER 1 AND 3 TO TOP OF EXISTING FOOTINGS.

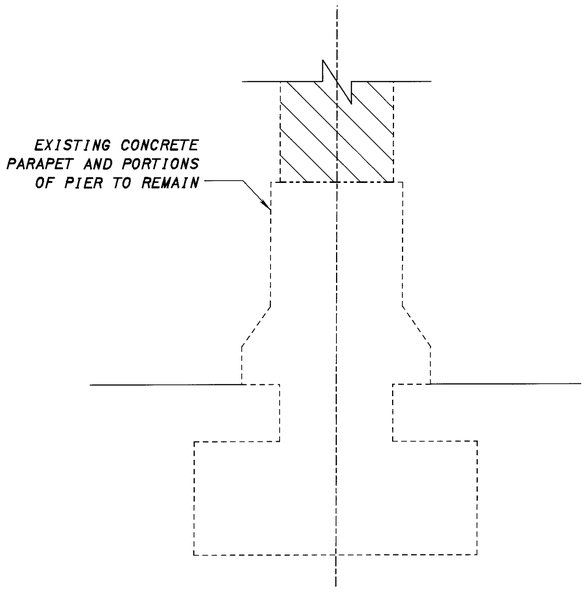

PIER 2 REMOVAL

REMOVE EXISTING PIER 2 TO TOP OF EXISTING PARAPET. THE PIER COLUMN SHALL BE SAW CUT A MINIMUM 1" DEEP AROUND THE PERIMETER AND REMAINING CONCRETE REMOVED TO PROVIDE A SMOOTH, EVEN SURFACE AT THE SAME LEVEL AS TOP OF PARAPET.

DESIGN AGENCY
ODOT CENTRAL OFFICE
OFFICE OF PRODUCTION

REVISED TAA DATE 12-10-99
STRUCTURE FILE NUMBER 5203589L/5203619R

DRAWN BKL REVISED
DESIGNED DFT CHECKED BKL

REMOVAL AND STAGE CONSTRUCTION DETAILS
MED-71-1685 L/R
I-71 OVER S.R. 18

MED-71-15.87

8 / 34

694 / 940

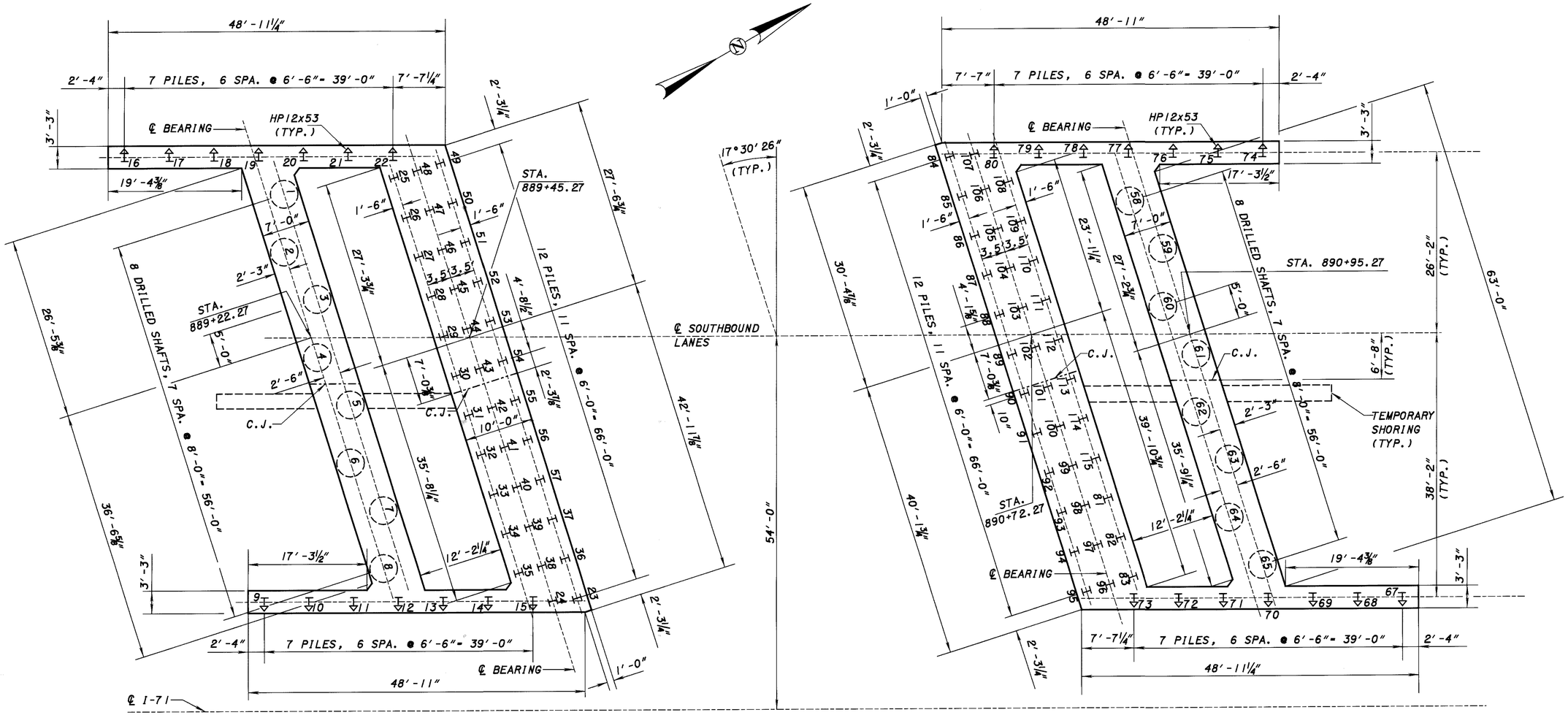

PILE NUMBERING NOTE: PILE #66 HAS BEEN OMITTED.

FOR TEMPORARY SHORING NOTES SEE SHEET 8/34

LEGEND

- INDICATES 4'-0" DIA, DRILLED SHAFT
- INDICATES STEEL HP12X53 PILES
- INDICATES BATTERED PILE (1:4)
- 43 INDICATES PILE NUMBERING

DRILLED SHAFTS ARE DESIGNED FOR UPLIFT AT AN ALLOWABLE SIDE ADHESION OF ½ TSF, THUS THE CASING SHALL BE PULLED FOR ALL DRILLED SHAFTS IF ONE IS USED. DRILLED SHAFTS SHALL TERMINATE AT TOP OF BEDROCK. TOP OF BEDROCK ELEVATION VARIES AS SHOWN ON SITE PLAN. BEDROCK SHALL BE CONSIDERED WHEN AUGER CAN NO LONGER PROCEED. WEATHERING BEDROCK THAT CAN BE DRILLED THRU WILL NOT BE CONSIDERED AS COMPETENT BEDROCK.

FOOTING- PLAN

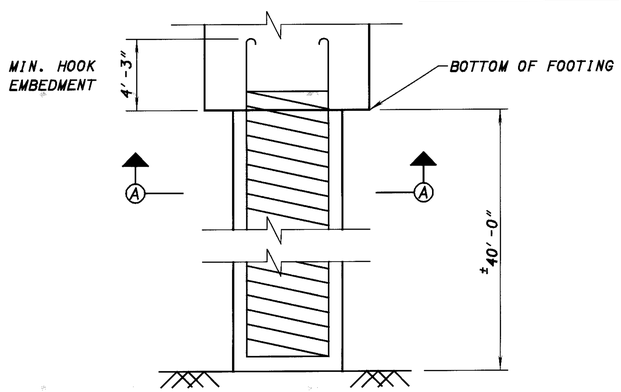

DRILLED SHAFT DETAIL

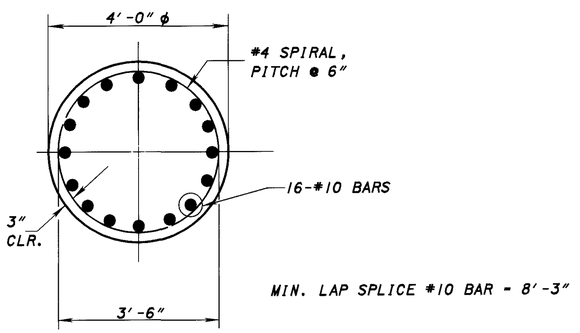

SECTION A-A

MIN. LAP SPLICE #10 BAR = 8'-3"

REINFORCING STEEL, INCLUDING HOOK BARS, TO BE INCLUDED WITH ITEM 524, DRILLED SHAFTS, FOR PAYMENT.

DESIGN AGENCY: ODOT CENTRAL OFFICE, OFFICE OF PRODUCTION

DESIGNED	DRAWN	REVISED	DATE	STRUCTURE FILE NUMBER
TAA	TAA	DFT	12-10-99	5203589L
CHECKED	REVISED			
BRC				

FOOTING DETAILS

MED-71-1685 L
I-71 OVER S.R. 18

MED-71-15.78

9/34

695/940

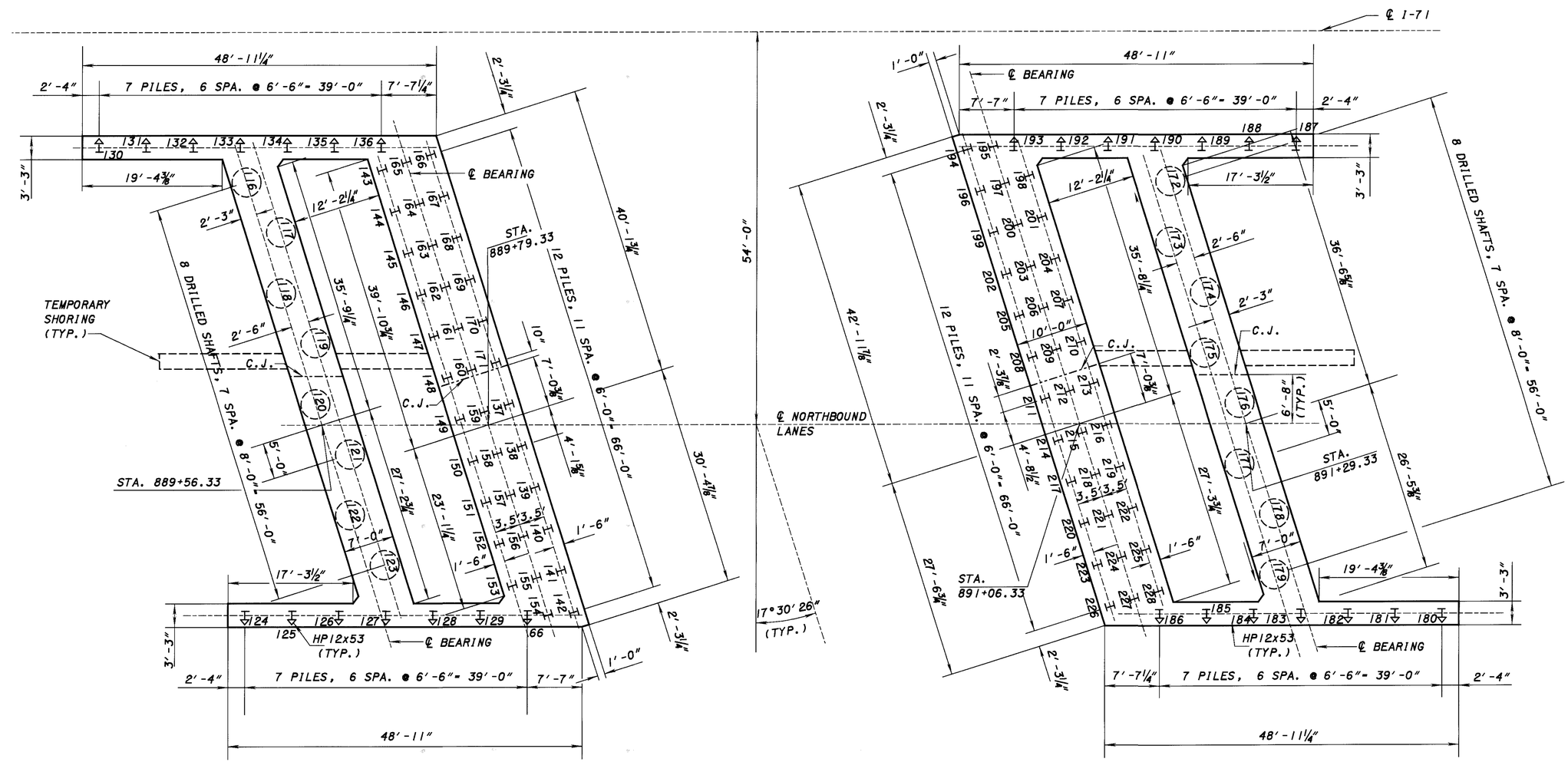

LEGEND

- INDICATES 4'-0" DIA, DRILLED SHAFT
- INDICATES STEEL HP12X53 PILES
- INDICATES BATTERED PILE (1:4)
- 43 INDICATES PILE NUMBERING

FOOTING- PLAN

SEE SHEET 9/34 FOR MORE INFO.

DESIGN AGENCY: ODOT CENTRAL OFFICE, OFFICE OF PRODUCTION

DESIGNED	DRAWN	REVIEWED	DATE
TAA	TAA	DFT	12-10-99
CHECKED	REVISED	REVISED	STRUCTURE FILE NUMBER
BRC			5203619R

FOOTING DETAILS
MED-71-1685 R
I-71 OVER S.R. 18

MED-71-15.78

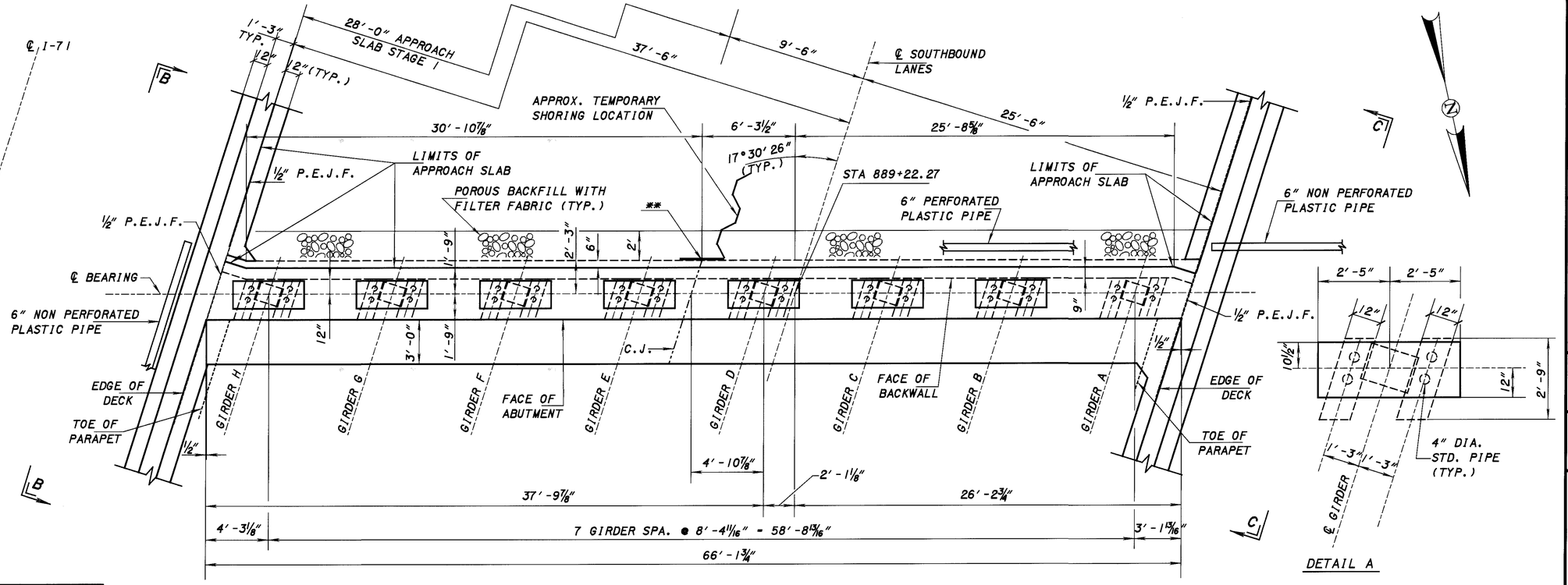

REAR ABUTMENT- PLAN

DETAIL A

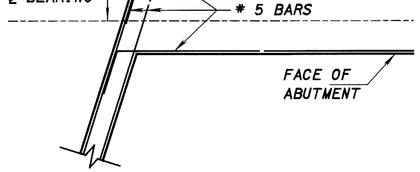

TYPICAL REINFORCING STEEL AT CORNER
(VIEW AS SEEN IS BELOW BEAM SEAT)

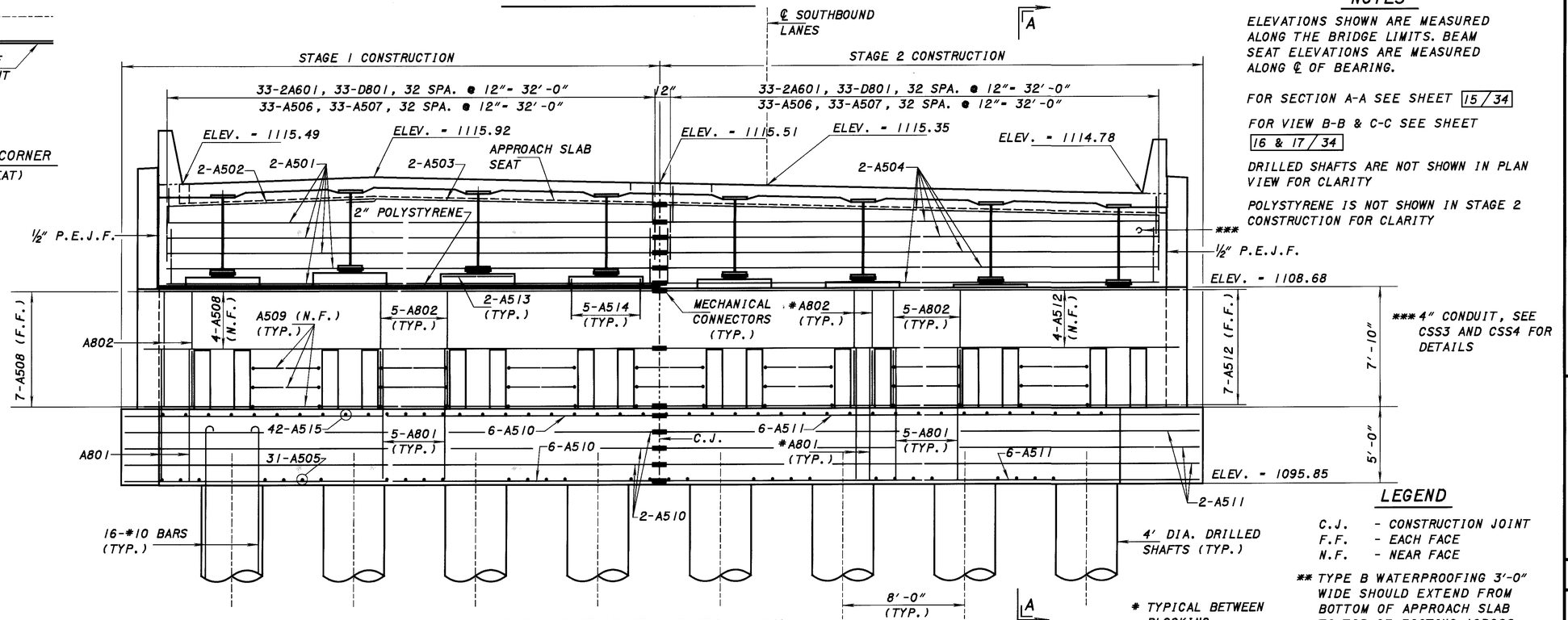

REAR ABUTMENT- ELEVATION

LOCATION	ELEVATION
GIRDER A	1108.68
GIRDER B	1108.87
GIRDER C	1109.06
GIRDER D	1109.25
GIRDER E	1109.44
GIRDER F	1109.63
GIRDER G	1109.70
GIRDER H	1109.41

BEAM SEAT ELEVATIONS ARE GIVEN AT TOP OF CONCRETE STEP.

NOTES

ELEVATIONS SHOWN ARE MEASURED ALONG THE BRIDGE LIMITS. BEAM SEAT ELEVATIONS ARE MEASURED ALONG ℄ OF BEARING.

FOR SECTION A-A SEE SHEET 15/34

FOR VIEW B-B & C-C SEE SHEET 16 & 17/34

DRILLED SHAFTS ARE NOT SHOWN IN PLAN VIEW FOR CLARITY

POLYSTYRENE IS NOT SHOWN IN STAGE 2 CONSTRUCTION FOR CLARITY

LEGEND

C.J. - CONSTRUCTION JOINT
F.F. - EACH FACE
N.F. - NEAR FACE

* TYPICAL BETWEEN BLOCKING

** TYPE B WATERPROOFING 3'-0" WIDE SHOULD EXTEND FROM BOTTOM OF APPROACH SLAB TO TOP OF FOOTING ACROSS THE CONSTRUCTION JOINT.

DESIGN AGENCY: ODOT CENTRAL OFFICE, OFFICE OF PRODUCTION
REVISED: DFT | DATE: 12-17-99 | STRUCTURE FILE NUMBER: 5203589L
DRAWN: TAA | REVISED:
DESIGNED: TAA | CHECKED: BRC

REAR ABUTMENT DETAILS
MED-71-1685 L
I-71 OVER S.R. 18

MED-71-15.78

11/34

697/940

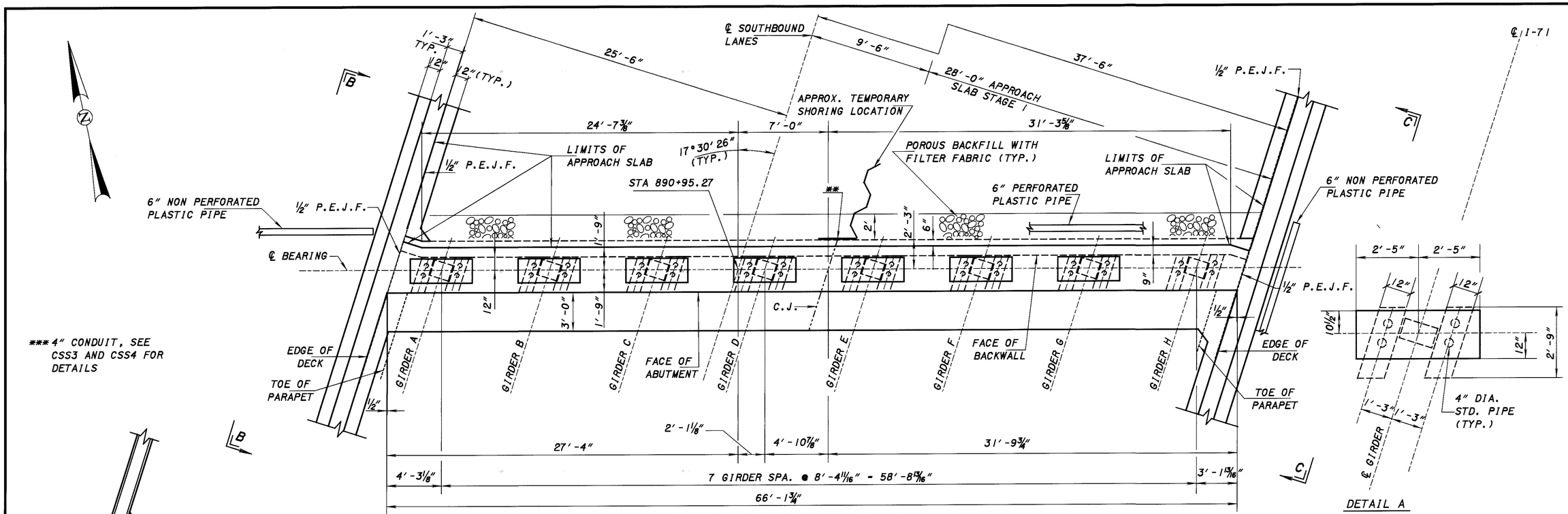

LOCATION	ELEVATION
GIRDER A	1111.48
GIRDER B	1111.66
GIRDER C	1111.84
GIRDER D	1112.02
GIRDER E	1112.20
GIRDER F	1112.37
GIRDER G	1112.43
GIRDER H	1112.13

BEAM SEAT ELEVATIONS ARE GIVEN AT TOP OF CONCRETE STEP.

NOTES

ELEVATIONS SHOWN ARE MEASURED ALONG THE BRIDGE LIMITS. BEAM SEAT ELEVATIONS ARE MEASURED ALONG ℄ OF BEARING.

FOR SECTION A-A SEE SHEET 16 & 17 / 34

FOR VIEW B-B & C-C SEE SHEET 16 / 34

DRILLED SHAFTS ARE NOT SHOWN IN PLAN VIEW FOR CLARITY

POLYSTYRENE IS NOT SHOWN IN STAGE I CONSTRUCTION FOR CLARITY

LEGEND

C.J. - CONSTRUCTION JOINT
F.F. - EACH FACE
N.F. - NEAR FACE

** TYPE B WATERPROOFING 3'-0" WIDE SHOULD EXTEND FROM BOTTOM OF APPROACH SLAB TO TOP OF FOOTING ACROSS THE CONSTRUCTION JOINT.

DESIGN AGENCY: ODOT CENTRAL OFFICE OFFICE OF PRODUCTION
REVISED: DFT
DATE: 12-17-99
STRUCTURE FILE NUMBER: 5203589L
DRAWN: TAA
REVISED:
DESIGNED: TAA
CHECKED: BRC

FORWARD ABUTMENT DETAILS
MED-71-1685 L
I-71 OVER S.R. 18

MED-71-15.78

12 / 34

698 / 940

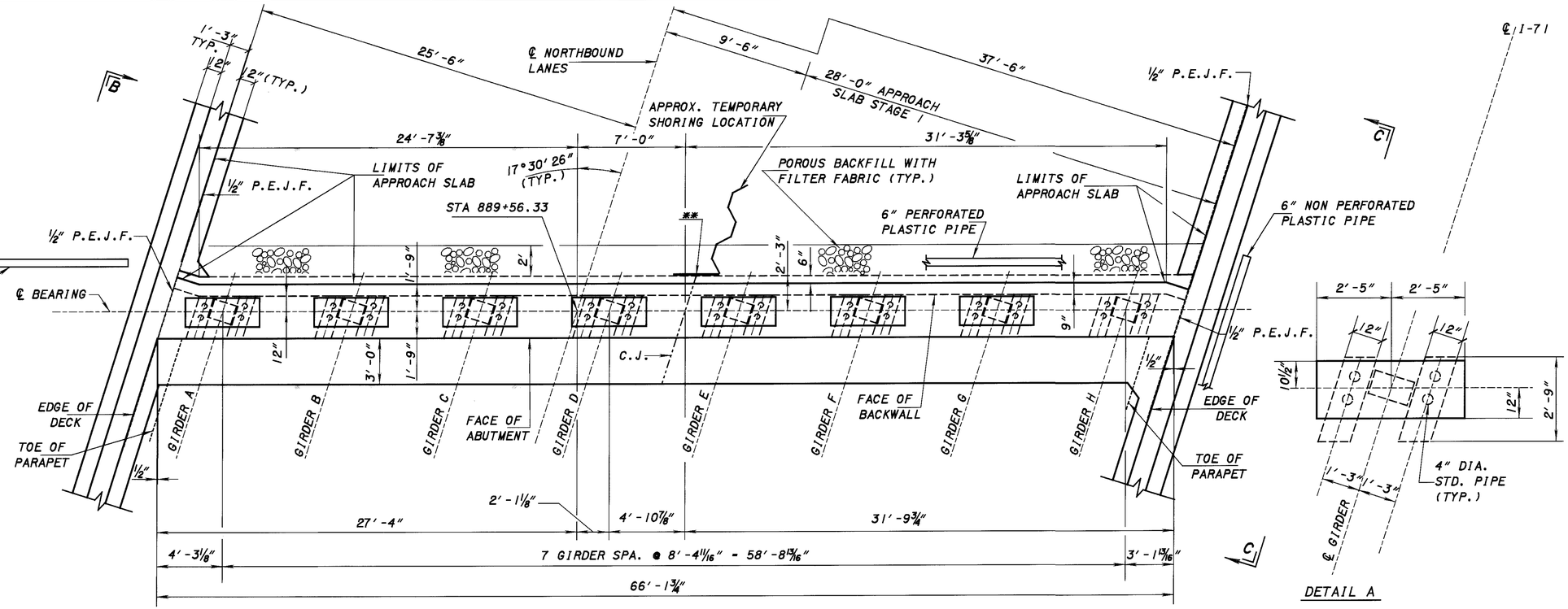

REAR ABUTMENT- PLAN

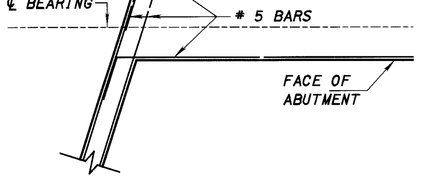

TYPICAL REINFORCING STEEL AT CORNER
(VIEW AS SEEN IS BELOW BEAM SEAT)

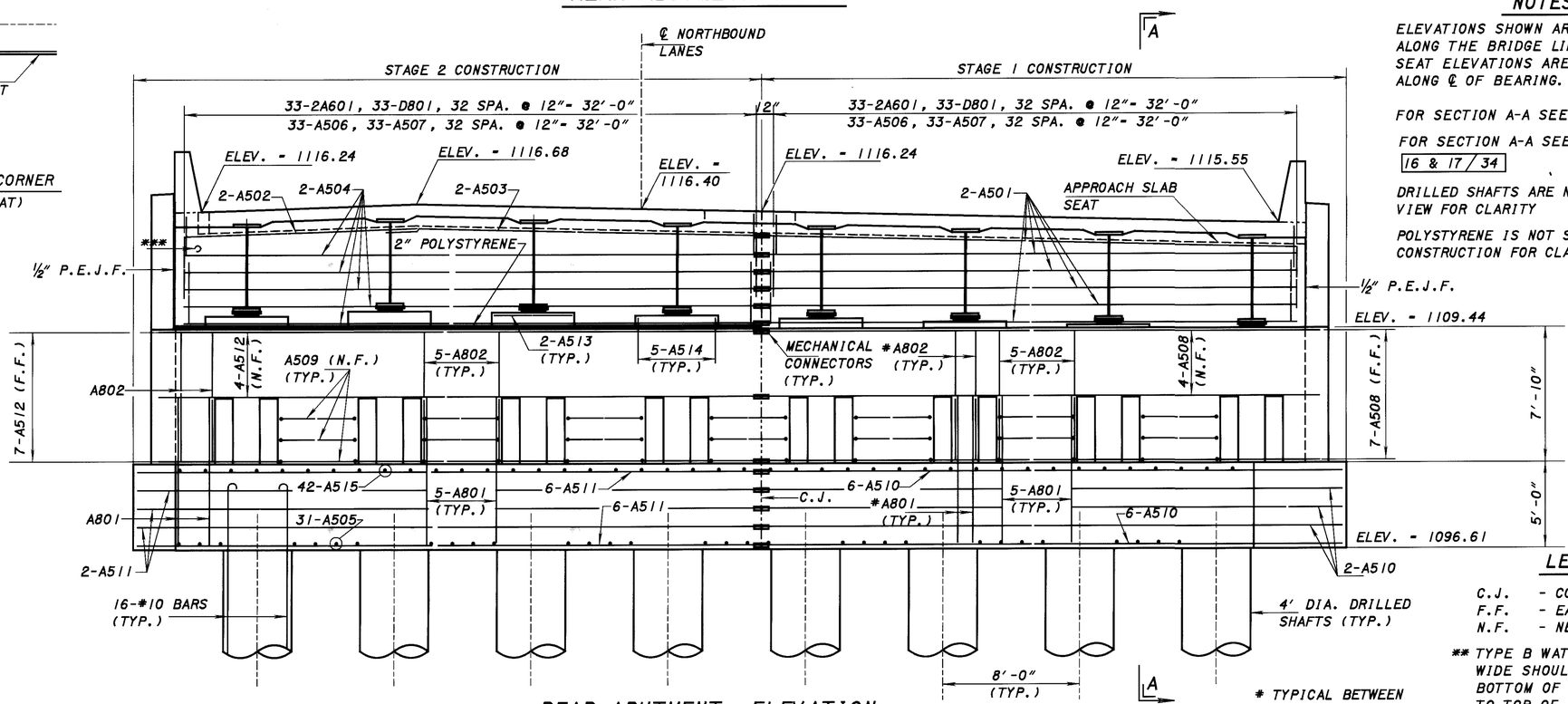

REAR ABUTMENT- ELEVATION

LOCATION	ELEVATION
GIRDER A	1110.16
GIRDER B	1110.45
GIRDER C	1110.38
GIRDER D	1110.19
GIRDER E	1110.01
GIRDER F	1109.82
GIRDER G	1109.63
GIRDER H	1109.44

BEAM SEAT ELEVATIONS ARE GIVEN AT TOP OF CONCRETE STEP.

NOTES

ELEVATIONS SHOWN ARE MEASURED ALONG THE BRIDGE LIMITS. BEAM SEAT ELEVATIONS ARE MEASURED ALONG ℄ OF BEARING.

FOR SECTION A-A SEE SHEET 15/34

FOR SECTION A-A SEE SHEET 16 & 17/34

DRILLED SHAFTS ARE NOT SHOWN IN PLAN VIEW FOR CLARITY

POLYSTYRENE IS NOT SHOWN IN STAGE 2 CONSTRUCTION FOR CLARITY

LEGEND

C.J. - CONSTRUCTION JOINT
F.F. - EACH FACE
N.F. - NEAR FACE

** TYPE B WATERPROOFING 3'-0" WIDE SHOULD EXTEND FROM BOTTOM OF APPROACH SLAB TO TOP OF FOOTING ACROSS THE CONSTRUCTION JOINT.

* TYPICAL BETWEEN BLOCKING

DESIGN AGENCY: ODOT CENTRAL OFFICE, OFFICE OF PRODUCTION
DESIGNED: TAA
DRAWN: TAA
REVIEWED: DFT
DATE: 12-17-99
CHECKED: BRC
REVISED:
REVISED:
STRUCTURE FILE NUMBER: 5203619R

REAR ABUTMENT DETAILS
MED-71-1685 R
I-71 OVER S.R. 18

MED-71-15.78

13/34

699/940

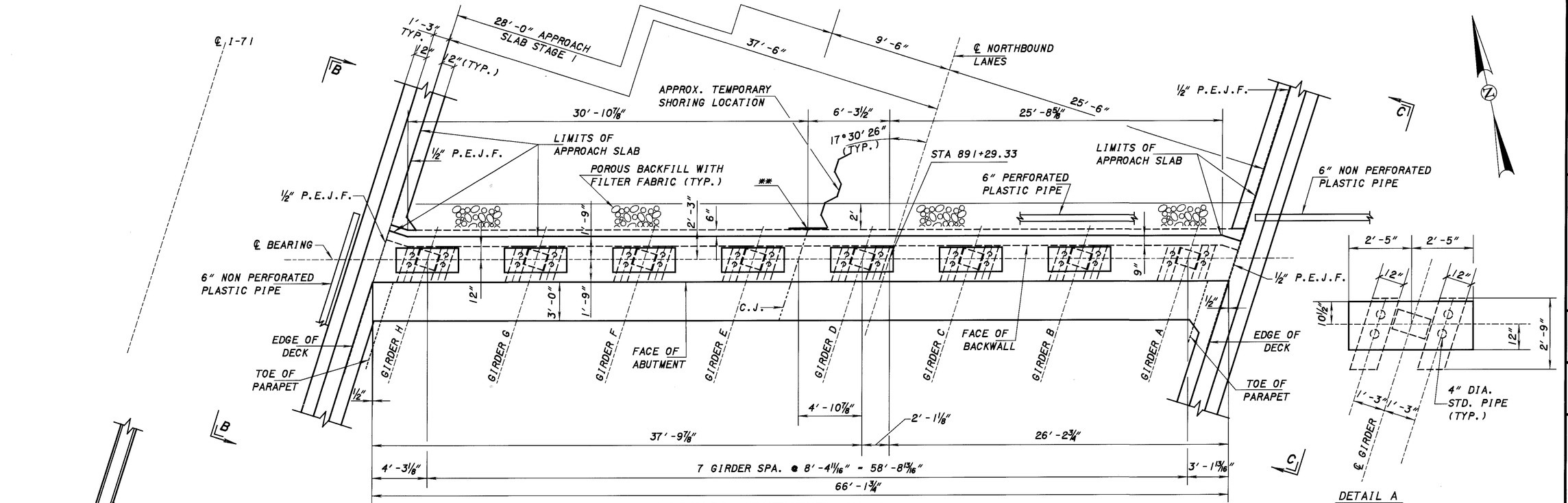

FORWARD ABUTMENT- PLAN

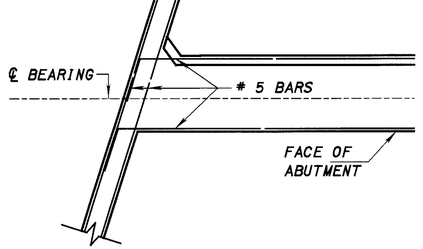

TYPICAL REINFORCING STEEL AT CORNER
(VIEW AS SEEN IS BELOW BEAM SEAT)

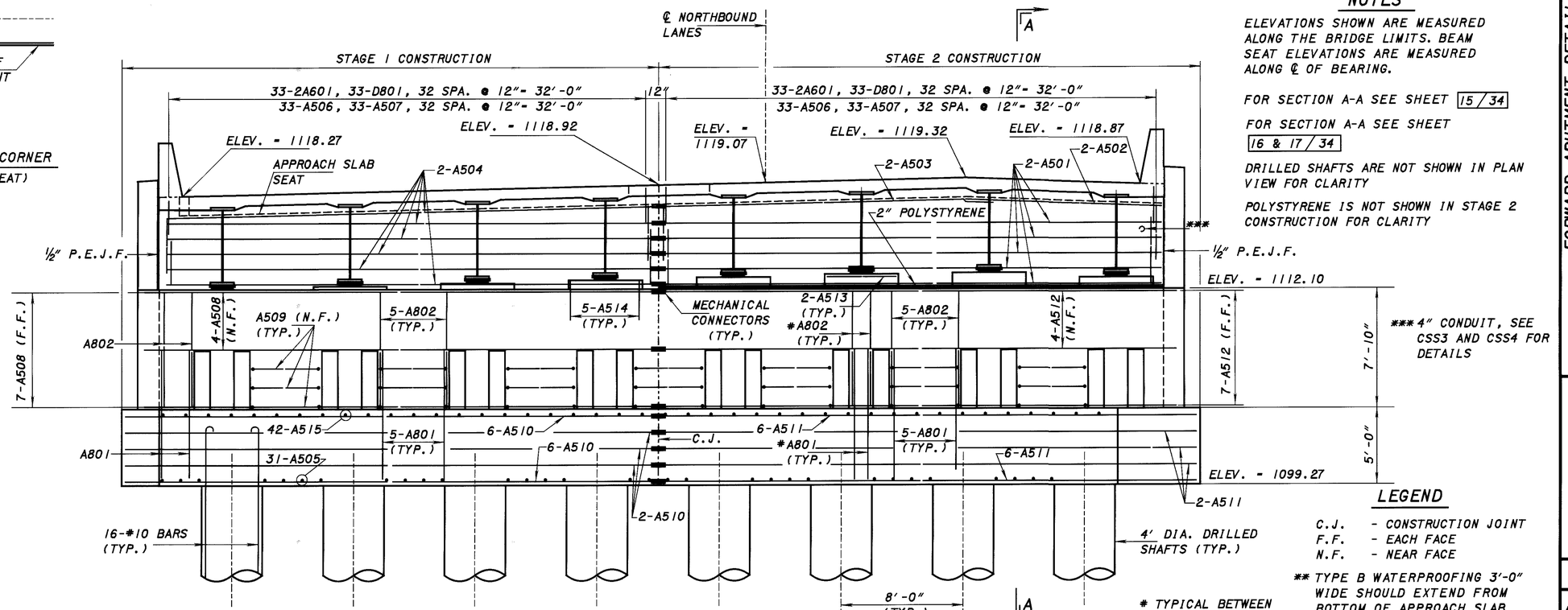

FORWARD ABUTMENT- ELEVATION

LOCATION	ELEVATION
GIRDER A	1112.74
GIRDER B	1113.04
GIRDER C	1112.99
GIRDER D	1112.81
GIRDER E	1112.64
GIRDER F	1112.46
GIRDER G	1112.28
GIRDER H	1112.10

BEAM SEAT ELEVATIONS ARE GIVEN AT TOP OF CONCRETE STEP.

NOTES

ELEVATIONS SHOWN ARE MEASURED ALONG THE BRIDGE LIMITS. BEAM SEAT ELEVATIONS ARE MEASURED ALONG ℄ OF BEARING.

FOR SECTION A-A SEE SHEET 15/34

FOR SECTION A-A SEE SHEET 16 & 17/34

DRILLED SHAFTS ARE NOT SHOWN IN PLAN VIEW FOR CLARITY

POLYSTYRENE IS NOT SHOWN IN STAGE 2 CONSTRUCTION FOR CLARITY

*** 4" CONDUIT, SEE CSS3 AND CSS4 FOR DETAILS

LEGEND

C.J. - CONSTRUCTION JOINT
F.F. - EACH FACE
N.F. - NEAR FACE

** TYPE B WATERPROOFING 3'-0" WIDE SHOULD EXTEND FROM BOTTOM OF APPROACH SLAB TO TOP OF FOOTING ACROSS THE CONSTRUCTION JOINT.

FORWARD ABUTMENT DETAILS

MED-71-1685 R
I-71 OVER S.R. 18

DESIGN AGENCY: ODOT CENTRAL OFFICE OFFICE OF PRODUCTION
REVIEWED: DFT
DATE: 12-17-99
STRUCTURE FILE NUMBER: 5203619R
DRAWN: TAA
REVISED:
DESIGNED: TAA
CHECKED: BRC

MED-71-15.78

14/34

700/940

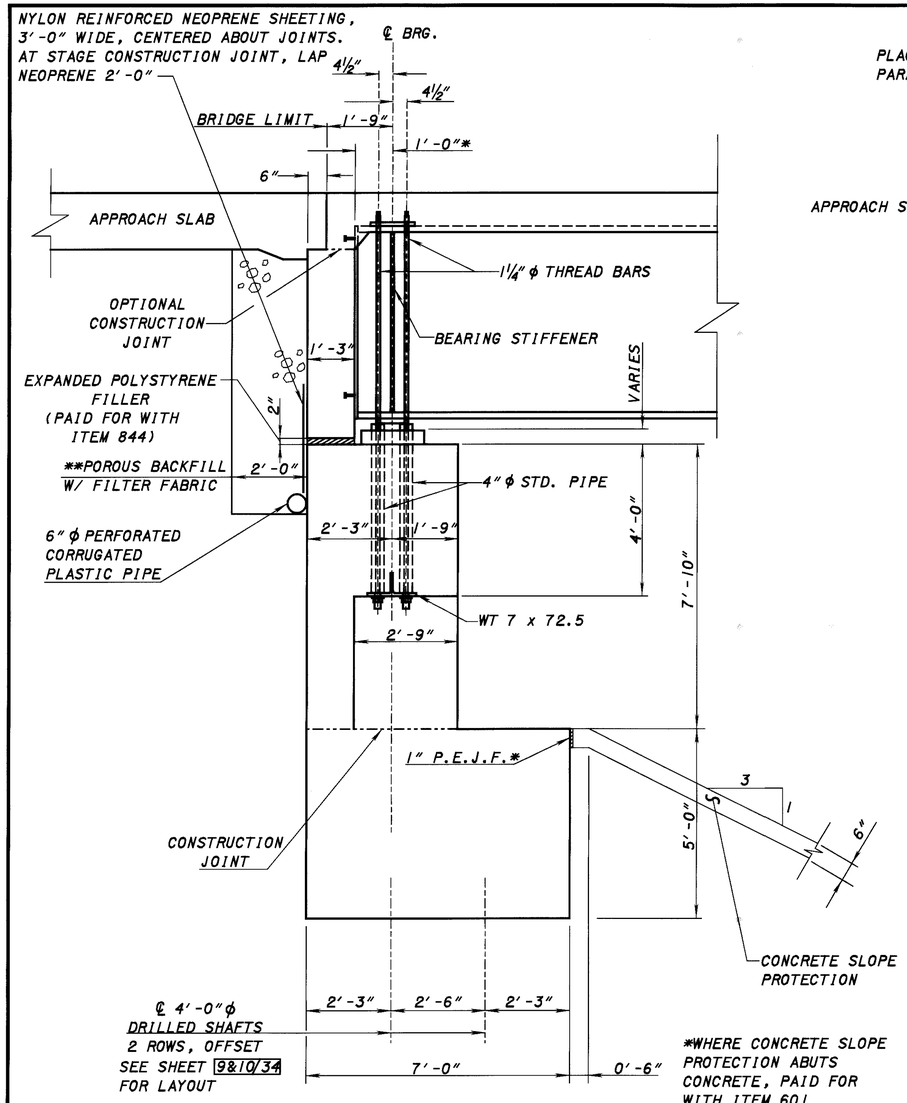

*WHERE CONCRETE SLOPE PROTECTION ABUTS CONCRETE, PAID FOR WITH ITEM 601

ABUTMENT TYPICAL SECTION

@ 60° F

** BOTTOM OF POROUS BACKFILL APPROXIMATELY AT EXISTING ABUTMENT BRIDGE SEAT, FIELD VERIFY.

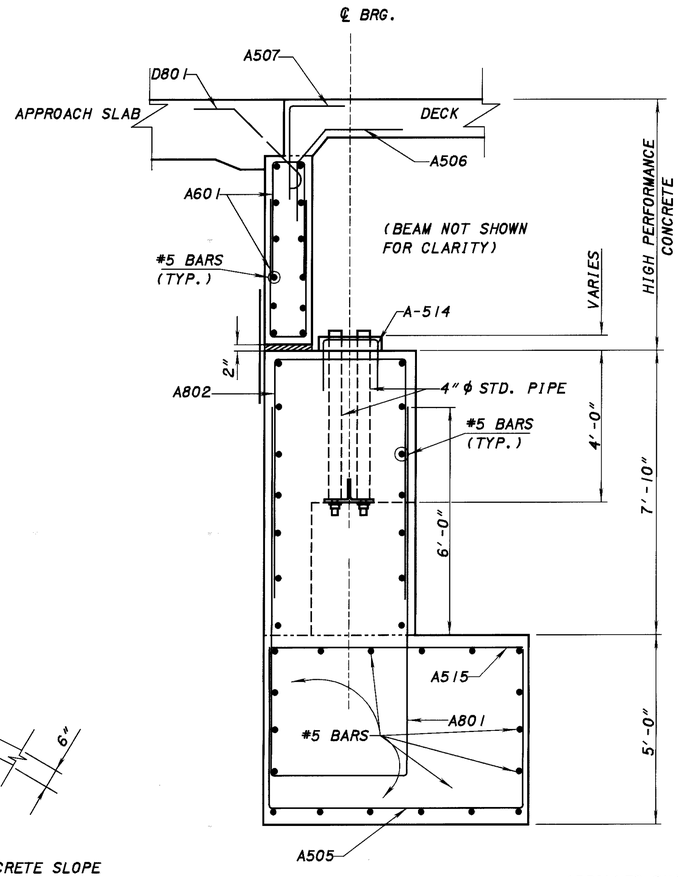

SECTION Ⓐ-Ⓐ

(SEE REAR AND FORWARD ABUTMENT SHEETS FOR LOCATION OF Ⓐ-Ⓐ)

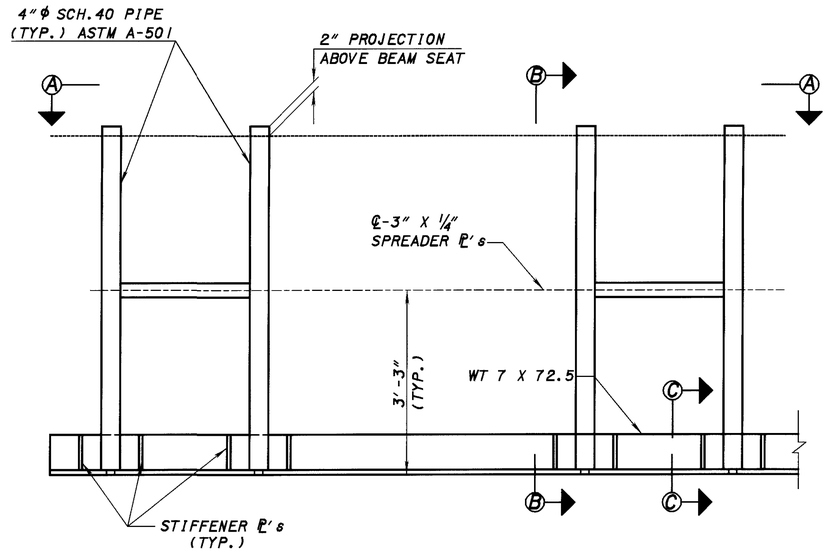

WT 7 X 72.5 ASSEMBLY ELEVATION

(FRONT VIEW ONLY SHOWN)

NOTE: ALL SURFACES SHALL BE GALVANIZED AFTER FABRICATION. THE WT 7 X 72.5 AND PIPE ASSEMBLY IS INCLUDED WITH THE STRUCTURAL STEEL FOR PAYMENT. SPLICE LOCATIONS SHALL BE APPROVED BY PROJECT ENGINEER AND SHALL HAVE COMPLETE PENETRATION BUTT WELDS

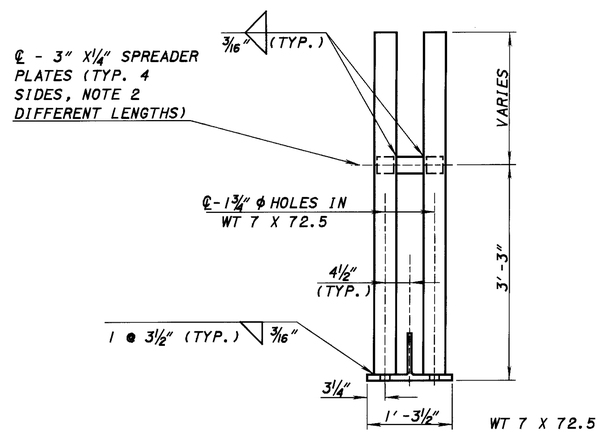

SECT Ⓑ-Ⓑ

(STIFFENERS NOT SHOWN FOR CLARITY)

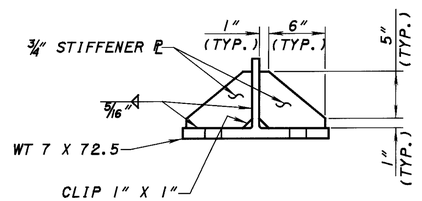

SECT Ⓒ-Ⓒ

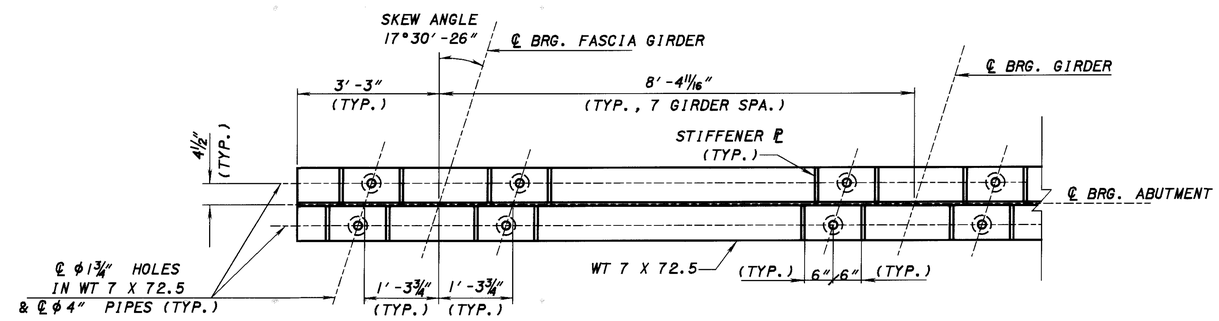

VIEW Ⓐ-Ⓐ

DESIGN AGENCY: ODOT CENTRAL OFFICE, OFFICE OF PRODUCTION

REVIEWED: DFT | DATE: 12-10-99 | STRUCTURE FILE NUMBER: 5203589L/5203619R

DRAWN: HLG | REVIEWED:

DESIGNED: TAA | CHECKED: TAA

ABUTMENT DETAILS

MED-71-1685 L/R
I-71 OVER S.R. 18

MED-71-15.78

15 / 34

701 / 940

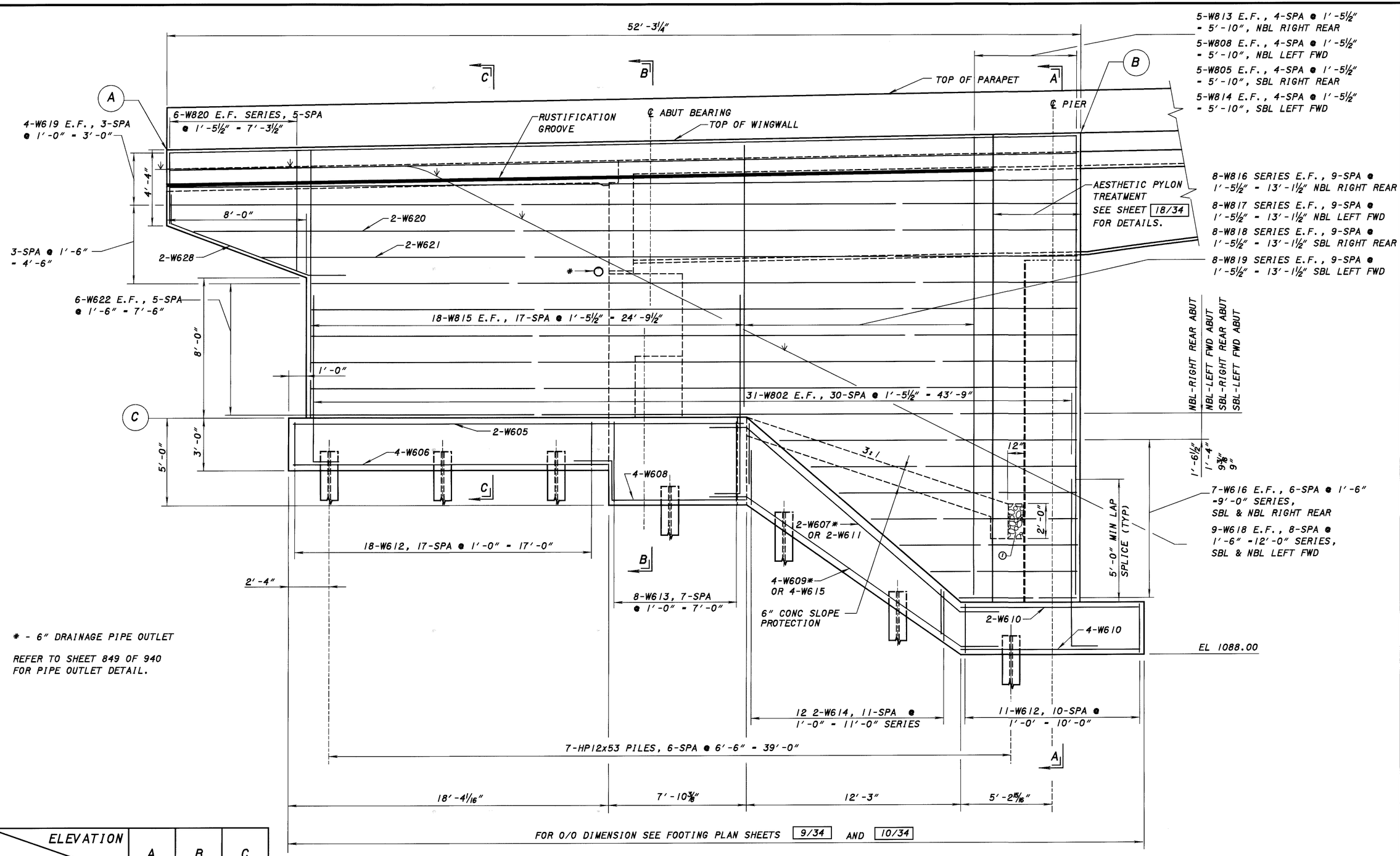

\# - 6" DRAINAGE PIPE OUTLET

REFER TO SHEET 849 OF 940 FOR PIPE OUTLET DETAIL.

ELEVATION / LOCATION	A	B	C
NBL-RIGHT REAR ABUTMENT	1116.88	1117.78	1101.61
NBL-LEFT FWD ABUTMENT	1119.67	1118.99	1104.27
SBL-RIGHT REAR ABUTMENT	1116.11	1117.05	1100.85
SBL-LEFT FWD ABUTMENT	1119.07	1118.34	1103.65

FOR SECTIONS, SEE SHEET 18/34

ABUTMENT WINGWALL ELEVATION

(1) 12"x2'-0" FRENCH DRAIN AT BASE OF CONCRETE SLOPE PROTECTION, TOE IN SLOPE PROTECTION 2'-0" AS SHOWN. DRAIN TO BE INCLUDED WITH 518 POROUS BACKFILL FOR PAYMENT, NO FILTER FABRIC REQUIRED.

NOTE: CONTRACTOR MAY PROPOSE ADDITIONAL CONSTRUCTION JOINTS.

E.F. - EACH FACE

* RIGHT REAR ABUTMENT ONLY (BOTH BRIDGES)

DESIGN AGENCY: ODOT CENTRAL OFFICE, OFFICE OF PRODUCTION

REVISED: DFT 12-10-99 | DATE | STRUCTURE FILE NUMBER: 5203689L/5203619R

DESIGNED: BRC | DRAWN: BRC | CHECKED: TAA | REVISED

WINGWALL ELEVATIONS
MED-71-1685 L/R
I-71 OVER S.R. 18

MED-71-15.78

16/34

702/940

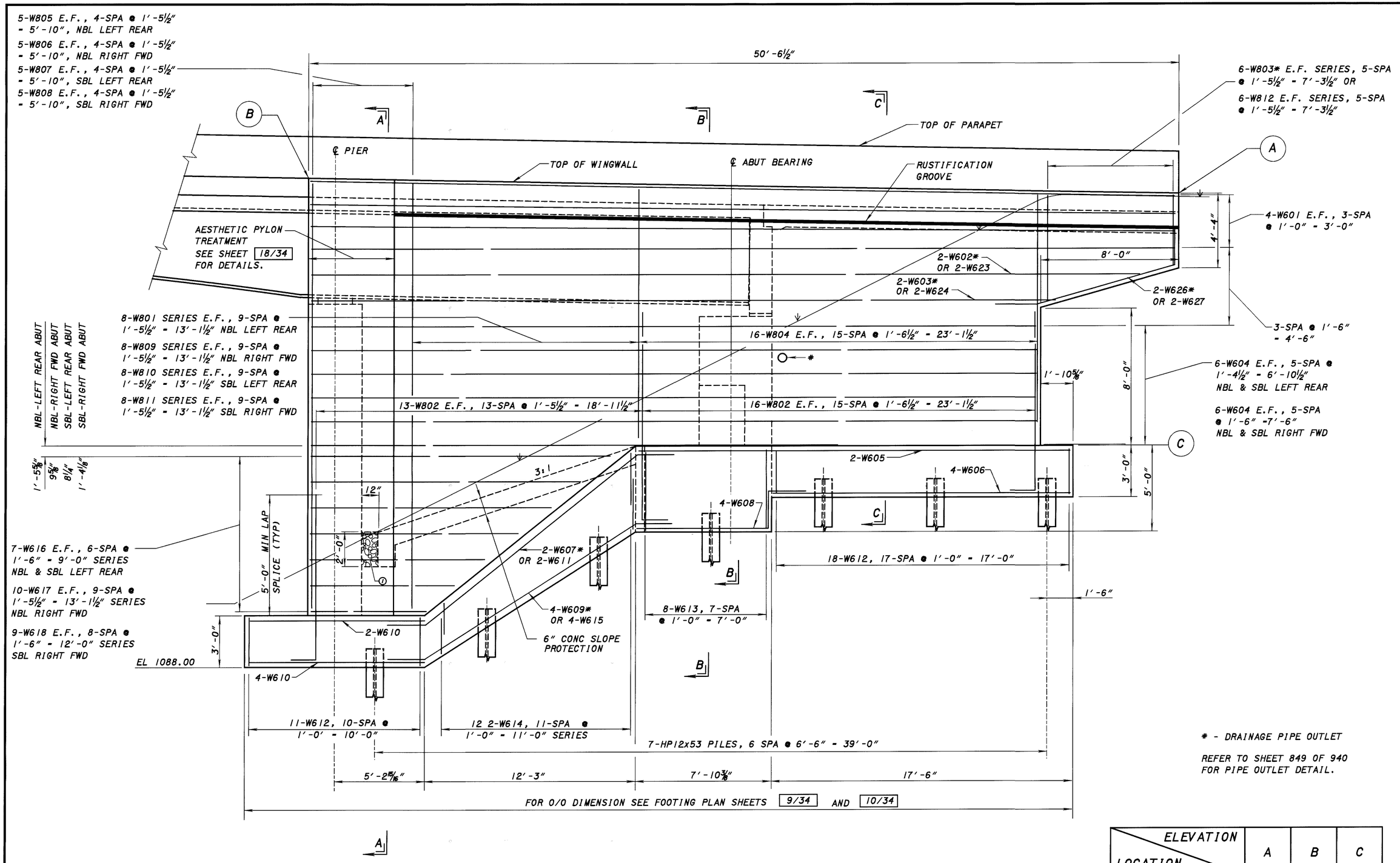

ABUTMENT WINGWALL ELEVATION

LOCATION \ ELEVATION	A	B	C
NBL-LEFT REAR ABUTMENT	1116.18	1117.07	1101.61
NBL-RIGHT FWD ABUTMENT	1120.26	1119.63	1104.27
SBL-LEFT REAR ABUTMENT	1115.39	1116.33	1100.85
SBL-RIGHT FWD ABUTMENT	1119.67	1119.00	1103.65

FOR SECTIONS, SEE SHEET 18/34

\# - DRAINAGE PIPE OUTLET

REFER TO SHEET 849 OF 940 FOR PIPE OUTLET DETAIL.

NOTE: CONTRACTOR MAY PROPOSE ADDITIONAL CONSTRUCTION JOINTS.

* - LEFT REAR ABUTMENTS ONLY (BOTH BRIDGES)

E.F. - EACH FACE

(1) 12"x2'-0" FRENCH DRAIN AT BASE OF CONCRETE SLOPE PROTECTION, TOE IN SLOPE PROTECTION 2'-0" AS SHOWN. DRAIN TO BE INCLUDED WITH 518 POROUS BACKFILL FOR PAYMENT, NO FILTER FABRIC REQUIRED.

DESIGN AGENCY: ODOT CENTRAL OFFICE OFFICE OF PRODUCTION

REVISED: DFT | DATE: 12-10-99 | STRUCTURE FILE NUMBER: 5203589L/5203619R

DRAWN: BRC | REVISED:

DESIGNED: BRC | CHECKED: TAA

WINGWALL ELEVATIONS
MED-71-1685 L/R
I-71 OVER S.R. 18

MED-71-15.78

17/34

703/940

* - PEJF TO BE SECURED TO WINGWALL SIMILAR TO NEOPRENE ANCHORS OR AS APPROVED BY PROJECT ENGINEER, INCIDENTAL TO 516, SPACED @ 5'-0".

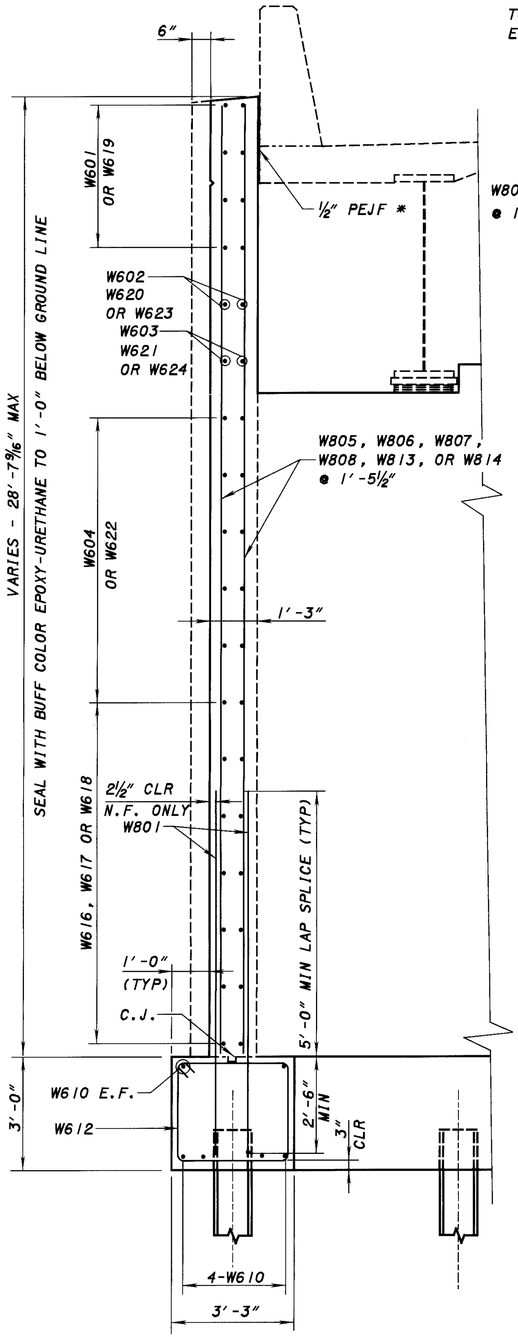

SECTION A-A

(PIER)

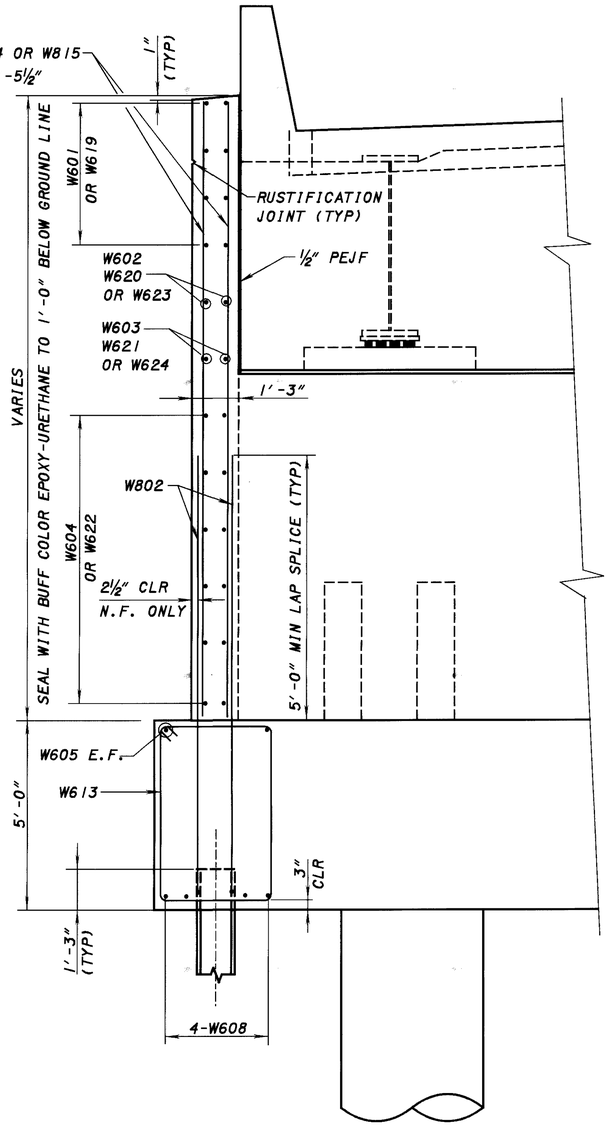

SECTION B-B

(ABUTMENT)

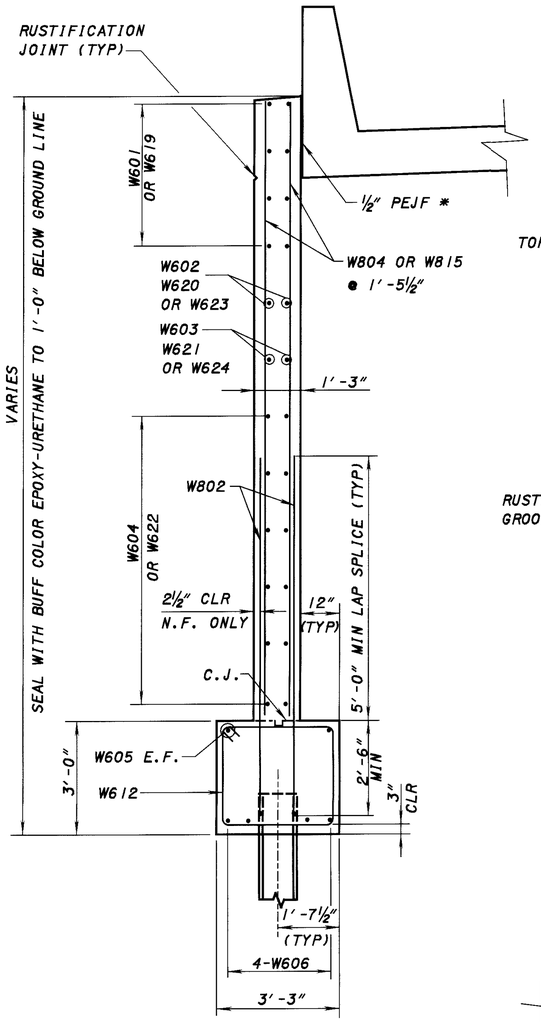

SECTION C-C

CONSTRUCTION JOINT

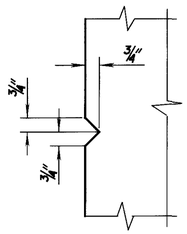

RUSTIFICATION GROOVE DETAIL

ELEVATION TO COINCIDE WITH BOTTOM OF CONCRETE DECK

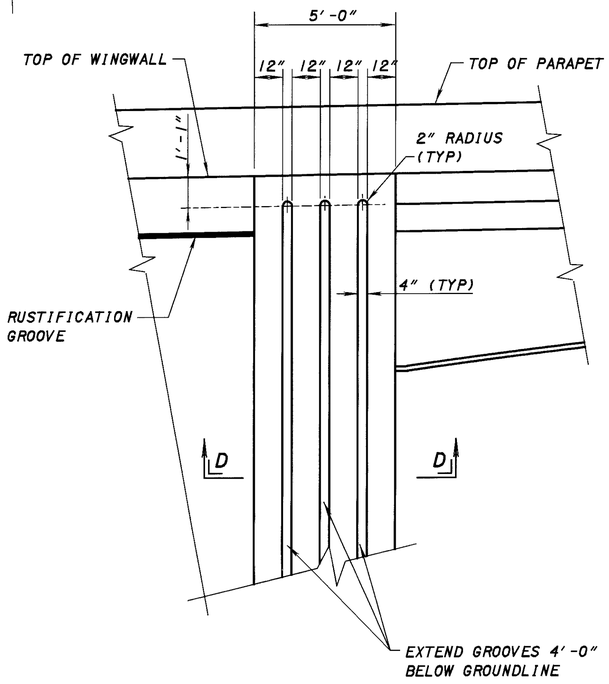

AESTHETIC PYLON TREATMENT DETAIL

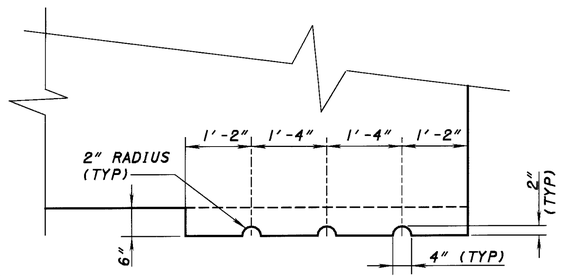

SECTION D-D

FOR SECTION CUT LOCATIONS, SEE SHEETS 16/34 AND 17/34.
N.F. - NEAR FACE
E.F. - EACH FACE

DESIGN AGENCY: ODOT CENTRAL OFFICE, OFFICE OF PRODUCTION

DESIGNED	DRAWN	REVIEWED	DATE
BRC	BRC	DFT	12-10-99
CHECKED	REVISED	STRUCTURE FILE NUMBER	
TAA		52035891/52036191R	

WINGWALL DETAILS
MED-71-1685 L
I-71 OVER S.R. 18

MED-71-15.78

18/34

704/940

NOTES

* LADDER RUNGS SHALL BE CENTERED BETWEEN GIRDERS F AND E. SEE STD. CONST. DWGS. MH-1.1M FOR FURTHER DETAILS ON LADDER RUNGS. LADDER RUNGS SHALL BE INCLUDED WITH PIER CONCRETE FOR PAYMENT ITEM NO. 842.

REBARS SHALL BE ADJUSTED LOCALLY TO CLEAR LADDER RUNGS.

THE VERTICAL SURFACE OF THE PIER FROM THE TOP OF GROUND TO BRIDGE SEAT SHALL BE SEALED WITH AN EPOXY URETHANE SEALER. BRIDGE SEAT NEED NOT BE SEALED.

FOR LOCATION OF VIEW B-B AND C-C SEE SHEET 15/34

PILES ARE NOT SHOWN IN PLAN VIEW FOR CLARITY. FOR ADDITIONAL INFORMATION SEE SHEET 9/34

5 BAR MINIMUM LAP - 3'-0"
8 BAR MINIMUℳ LAP - 5'-2"

F.F.- FRONT FACE

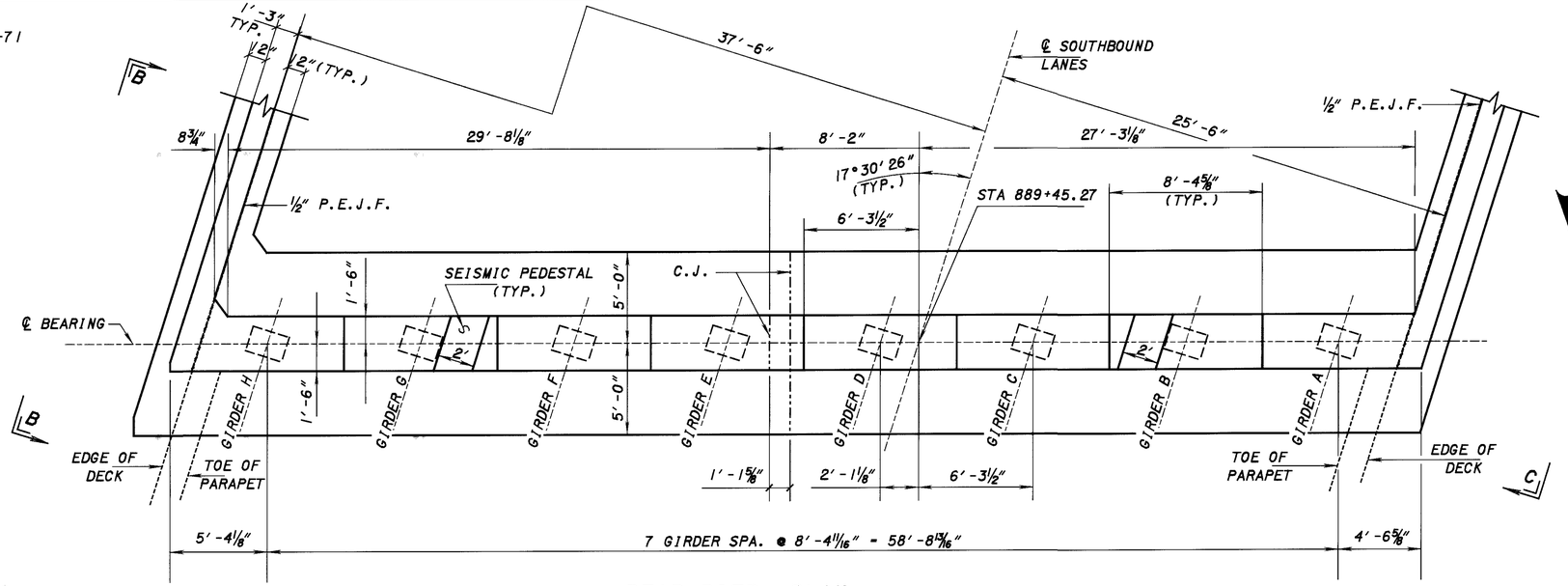

REAR PIER- PLAN

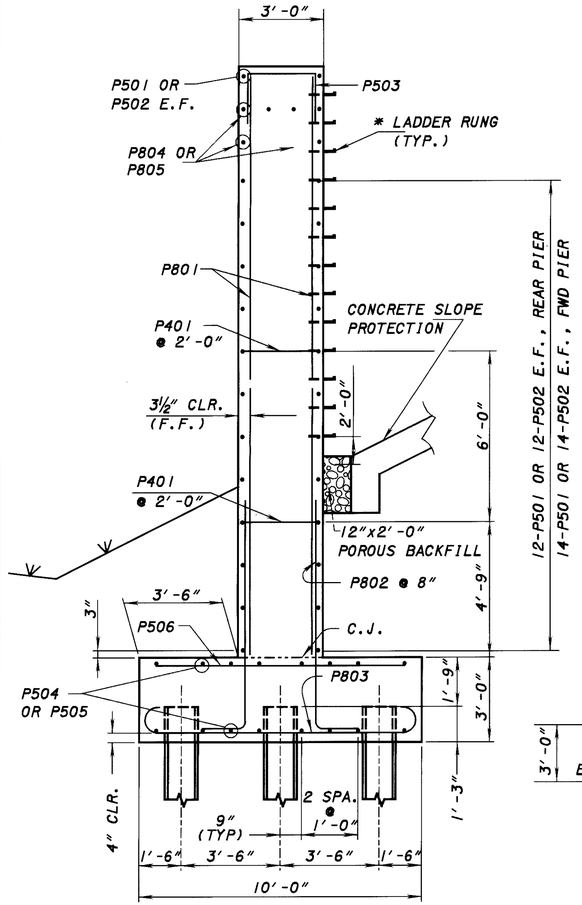

SECTION A-A

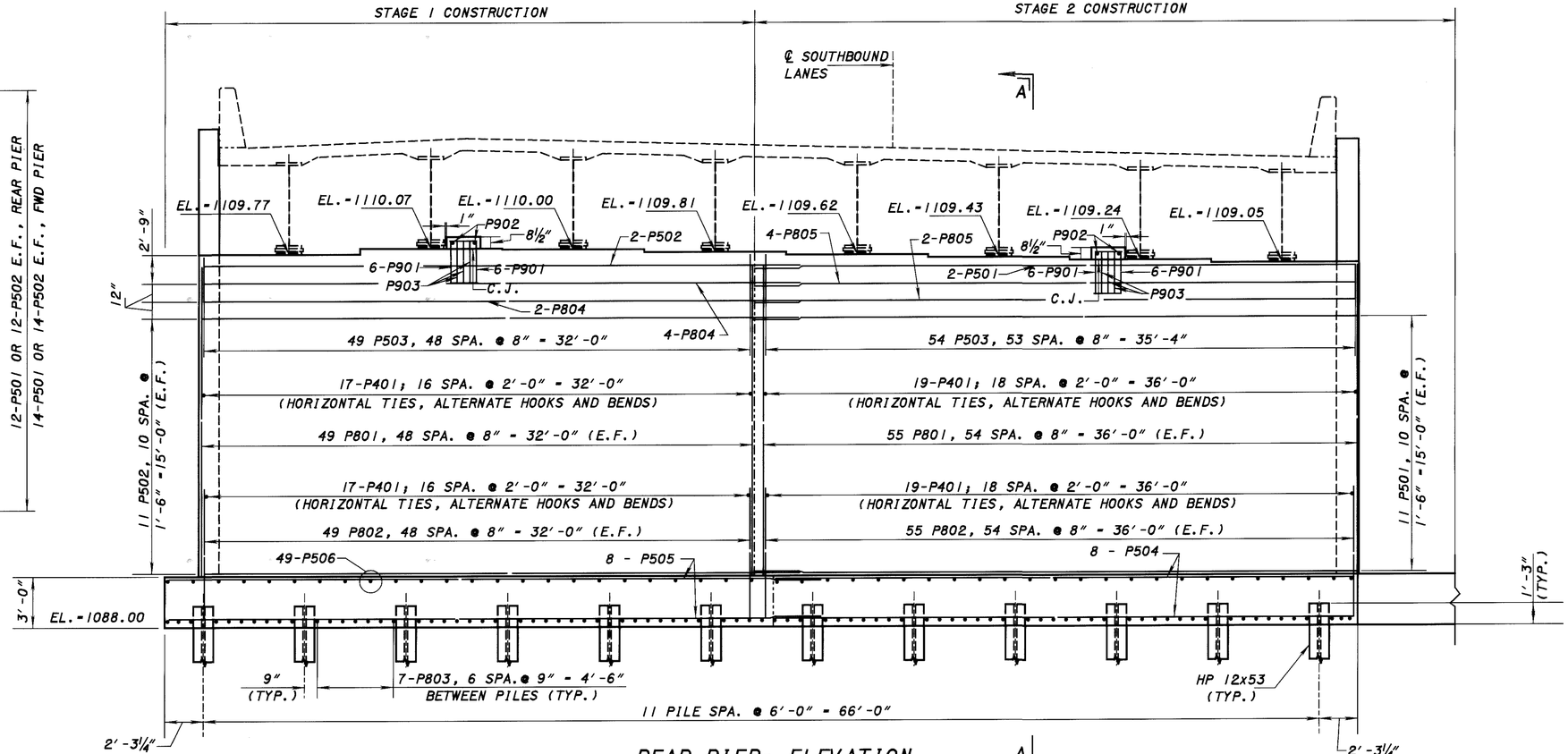

REAR PIER- ELEVATION

DESIGN AGENCY	ODOT CENTRAL OFFICE OFFICE OF PRODUCTION
REVIEWED DFT	DATE 12-10-99
STRUCTURE FILE NUMBER	5203589L
DRAWN TAA	REVISED
DESIGNED TAA	CHECKED BRC

PIER DETAILS
MED-71-1685 L
I-71 OVER S.R. 18

MED-71-15.78

19/34

705/940

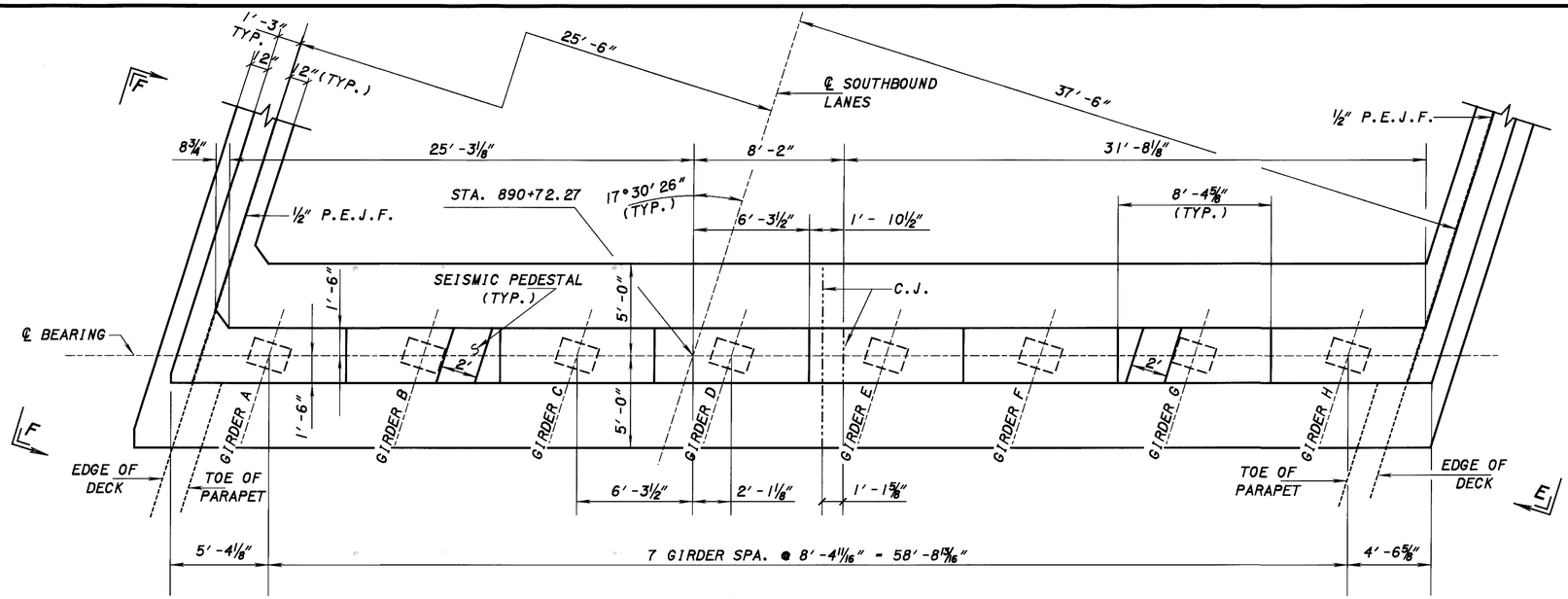

FORWARD PIER- PLAN

NOTES

THE VERTICAL SURFACE OF THE PIER FROM THE TOP OF GROUND TO BRIDGE SEAT SHALL BE SEALED WITH AN EPOXY URETHANE SEALER. BRIDGE SEAT NEED NOT BE SEALED.

FOR LOCATION OF SECTION A-A SEE SHEET 19/34

FOR LOCATION OF VIEW E-E AND F-F SEE SHEET 15/34

PILES ARE NOT SHOWN IN PLAN VIEW FOR CLARITY. FOR ADDITIONAL INFORMATION SEE SHEET 9/34

5 BAR MINIMUM LAP - 3'-0"
8 BAR MINIMUM LAP - 5'-2"

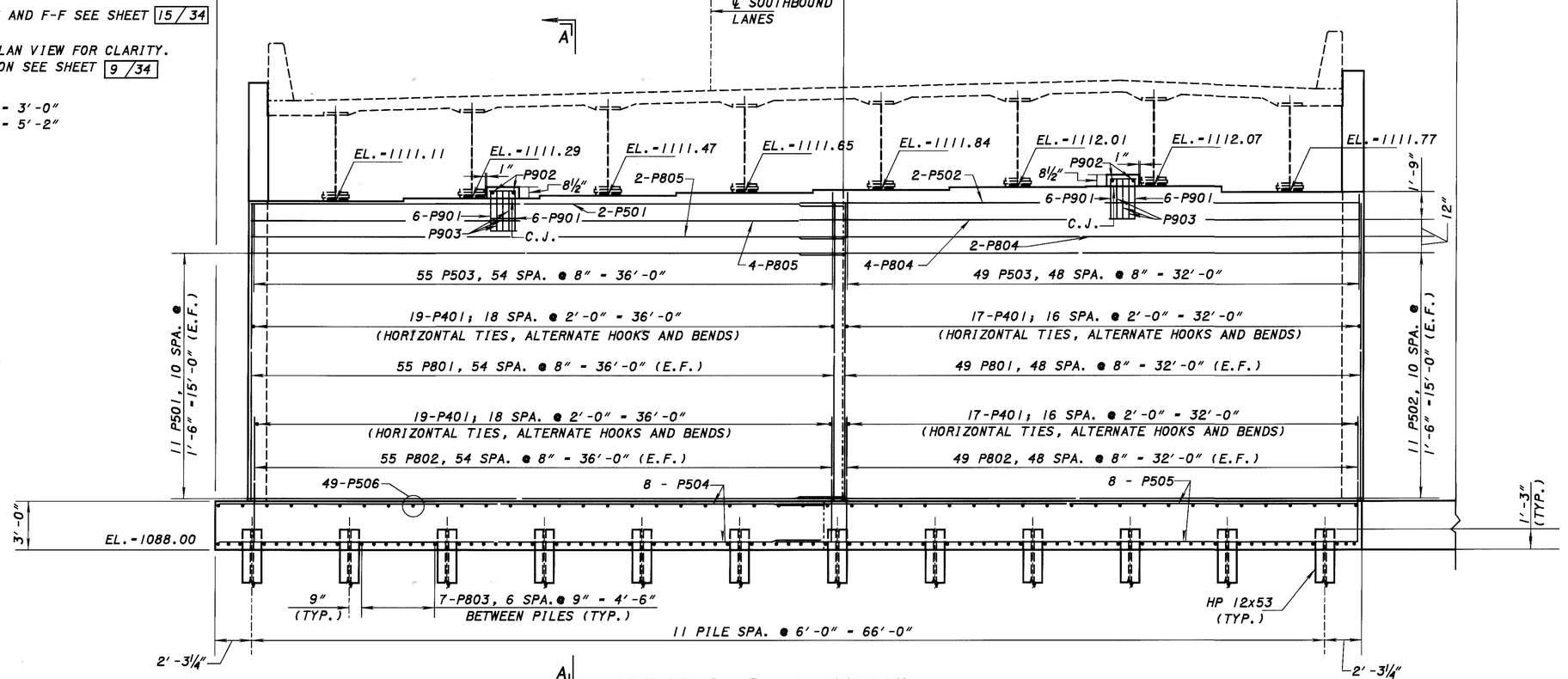

FORWARD PIER- ELEVATION

DESIGN AGENCY: ODOT CENTRAL OFFICE OFFICE OF PRODUCTION
REVISED: DFT DATE: 12-10-99
STRUCTURE FILE NUMBER: 5203589L
DRAWN: TAA REVISED:
DESIGNED: TAA CHECKED: BRC

PIER DETAILS
MED-71-1685 L
I-71 OVER S.R. 18

MED-71-15.78

20/34

706/940

NOTES

THE VERTICAL SURFACE OF THE PIER FROM THE TOP OF GROUND TO BRIDGE SEAT SHALL BE SEALED WITH AN EPOXY URETHANE SEALER. BRIDGE SEAT NEED NOT BE SEALED.

FOR LOCATION OF SECTION A-A SEE SHEET 19/34

FOR LOCATION OF VIEW E-E AND F-F SEE SHEET 15/34

PILES ARE NOT SHOWN IN PLAN VIEW FOR CLARITY.
FOR ADDITIONAL INFORMATION SEE SHEET 10/34

5 BAR MINIMUM LAP = 3'-0"
8 BAR MINIMUM LAP = 5'-2"

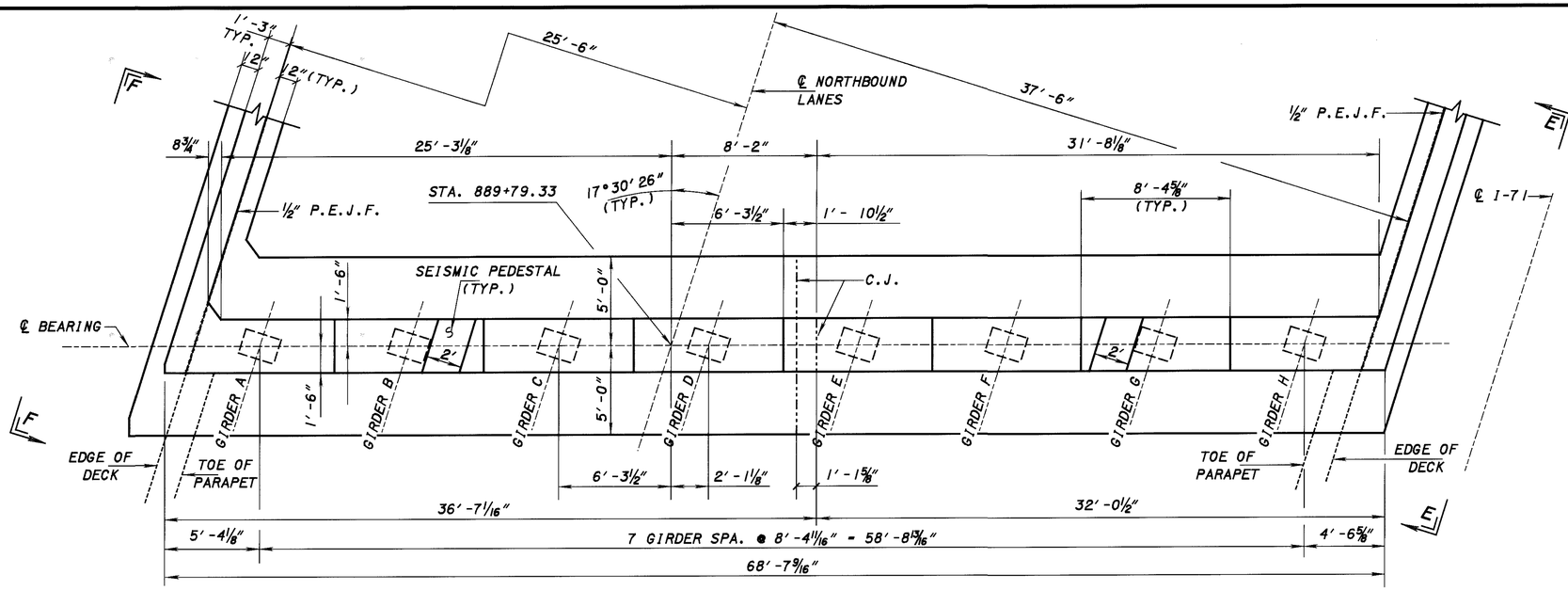

REAR PIER- PLAN

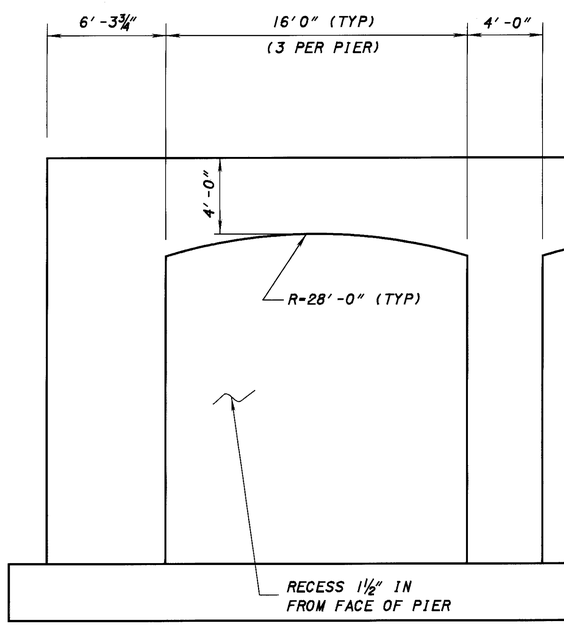

RECESSED ARCH DETAIL

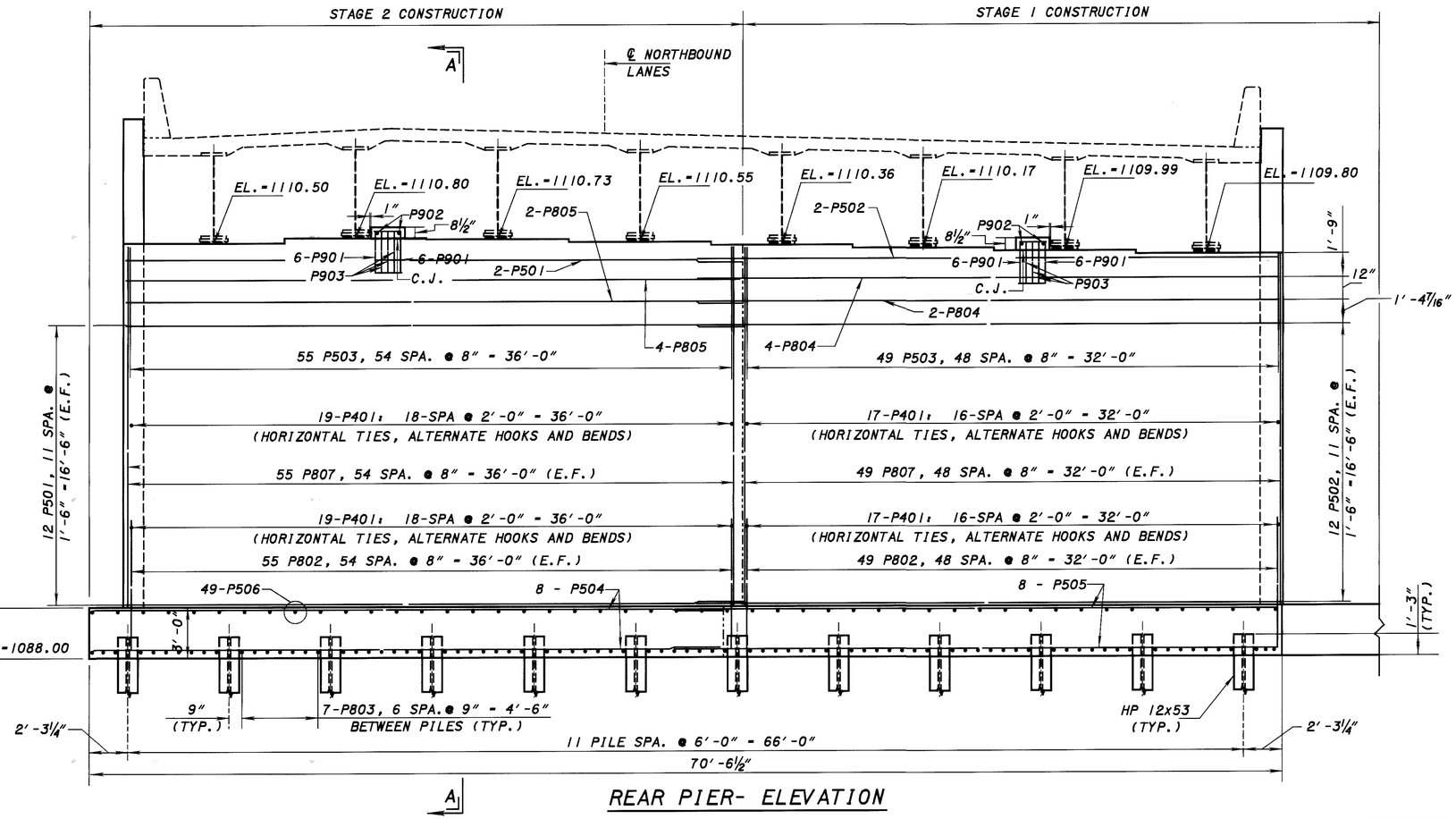

REAR PIER- ELEVATION

DESIGN AGENCY: ODOT CENTRAL OFFICE, OFFICE OF PRODUCTION

DESIGNED	DRAWN	REVIEWED	DATE
TAA	BRC	DFT	12-10-99
CHECKED	REVISED	STRUCTURE FILE NUMBER	
BRC		5203619R	

PIER DETAILS
MED-71-1685 R
I-71 OVER S.R. 18

MED-71-15.78

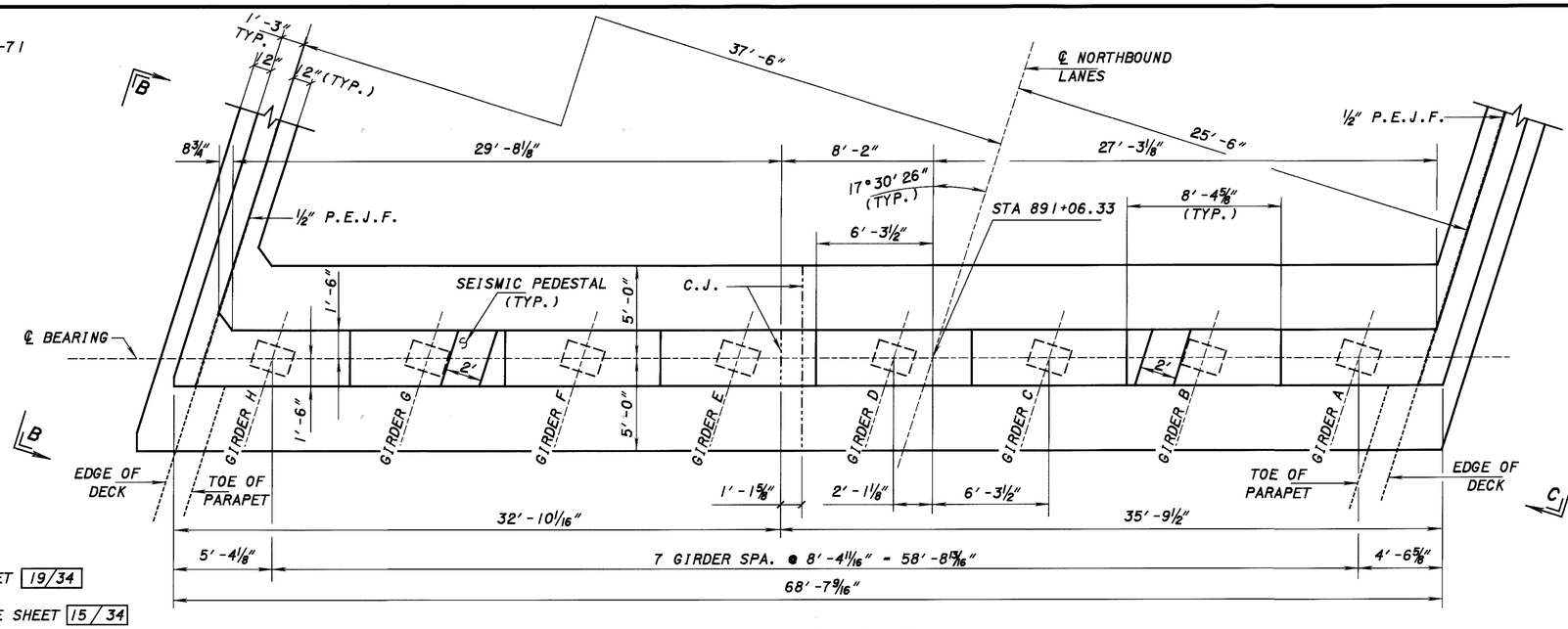

NOTES

THE VERTICAL SURFACE OF THE PIER FROM THE TOP OF GROUND TO BRIDGE SEAT SHALL BE SEALED WITH AN EPOXY URETHANE SEALER. BRIDGE SEAT NEED NOT BE SEALED.

FOR LOCATION OF SECTION A-A SEE SHEET 19/34

FOR LOCATION OF VIEW E-E AND F-F SEE SHEET 15/34

PILES ARE NOT SHOWN IN PLAN VIEW FOR CLARITY. FOR ADDITIONAL INFORMATION SEE SHEET 10/34

* 5 BAR MINIMUM LAP - 3'-0"
* 8 BAR MINIMUM LAP - 5'-2"

FORWARD PIER- PLAN

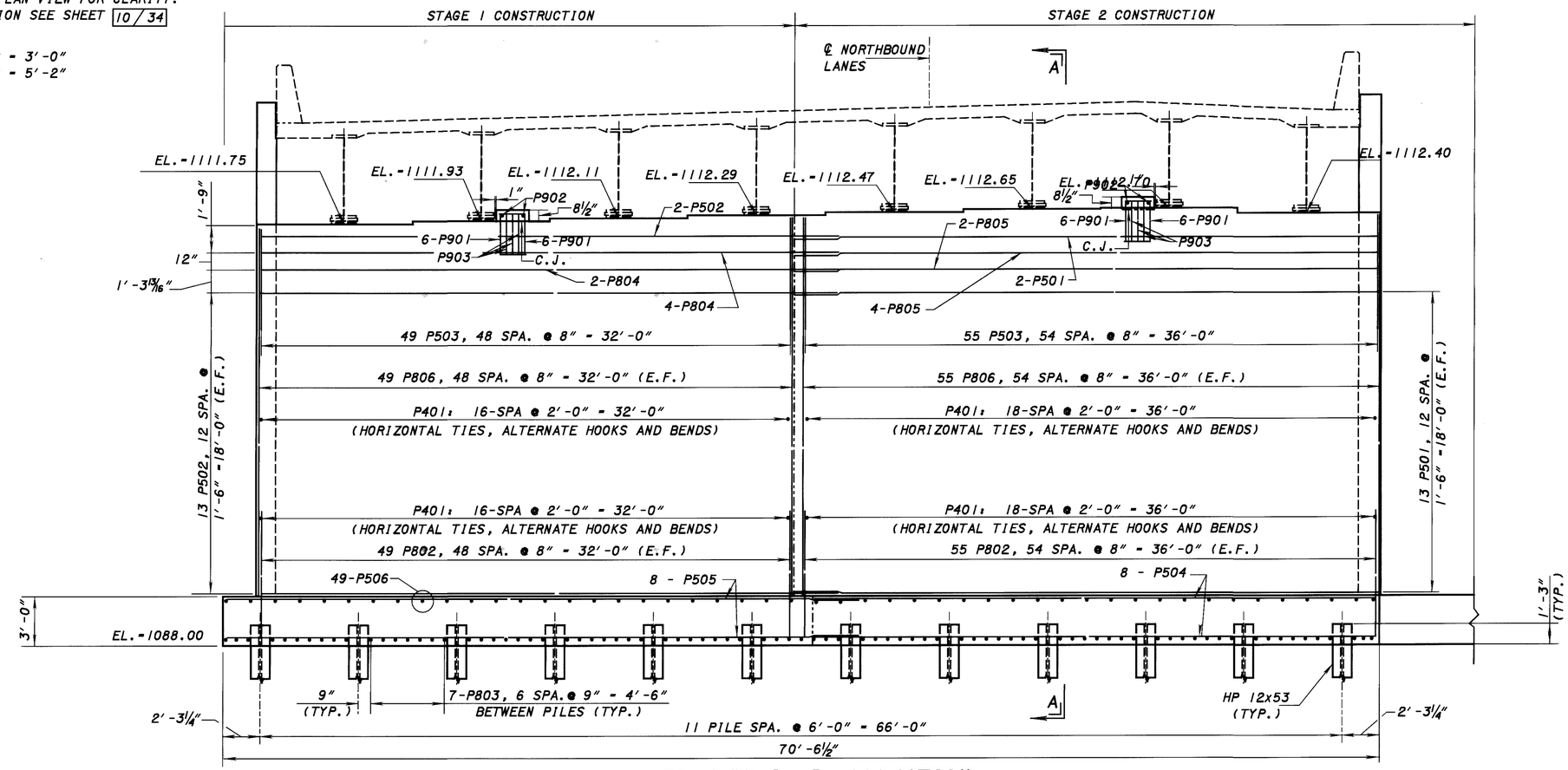

FORWARD PIER- ELEVATION

DESIGN AGENCY: ODOT CENTRAL OFFICE, OFFICE OF PRODUCTION
DESIGNED: TAA
DRAWN: BRC
CHECKED: BRC
REVIEWED: DFT
DATE: 12-10-99
REVISED:
STRUCTURE FILE NUMBER: 5203619R

PIER DETAILS
MED-71-1685 R
I-71 OVER S.R. 18

MED-71-15.78

22/34

708/940

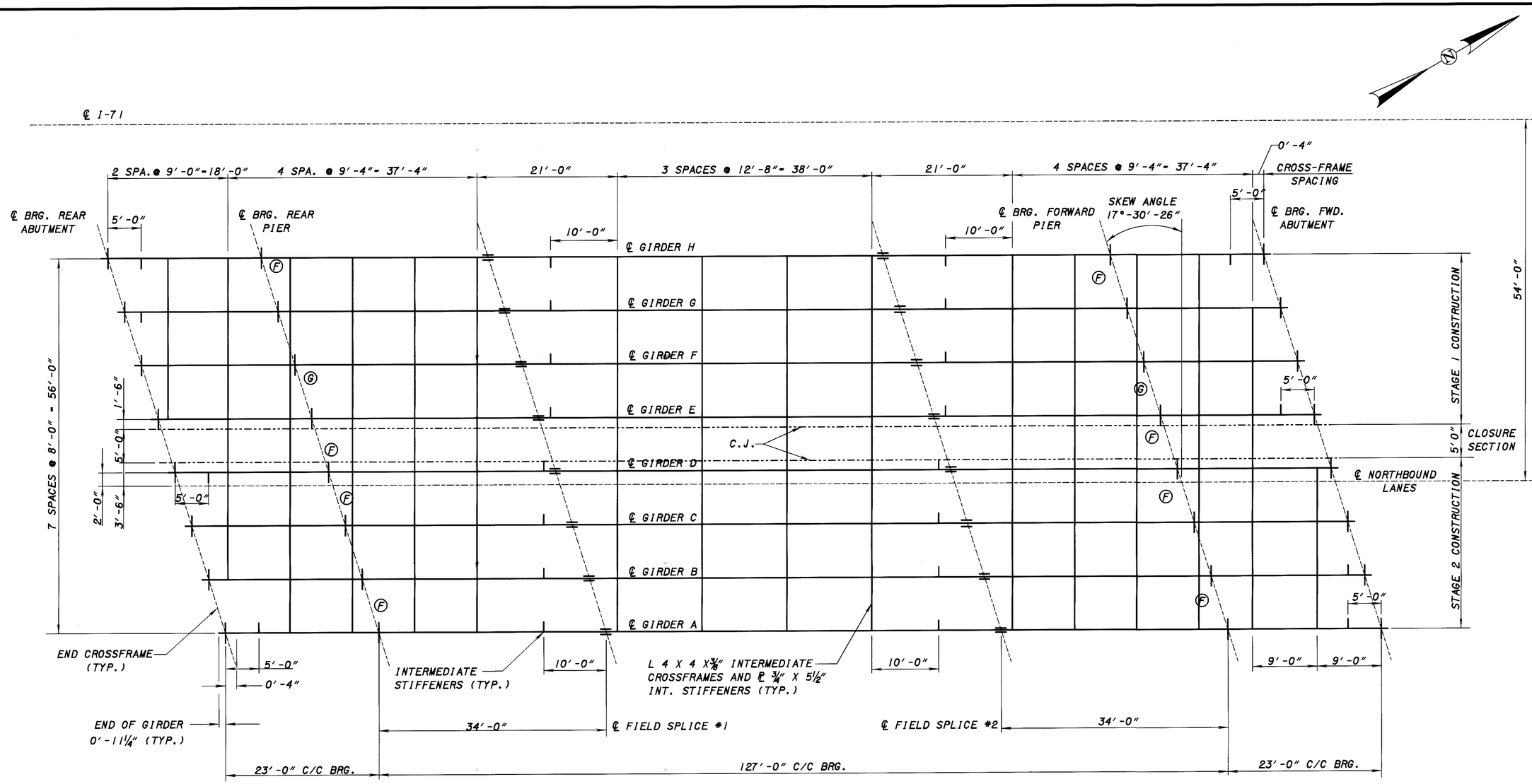

FRAMING PLAN

(NORTHBOUND LANES ONLY SHOWN)

NOTES:

STRUCTURAL STEEL:
WHERE A SHAPE OR PLATE IS DESIGNATED (CVN) THE MATERIAL SHALL MEET SPECIFIED MINIMUM NOTCH TOUGHNESS REQUIREMENTS AS SPECIFIED IN 711.0

ALL MATERIAL TO BE ASTM A-572, GRADE 50.

BEARING STIFFENERS AND ENDS OF BEAM TO BE VERTICAL. BEARING STIFFENERS LOCATED AT ℄ BRGS.

ALL BEAM LENGTH DIMENSIONS ARE AT 60 °F

LOCATION OF FENCE PANELS:

Ⓖ - GATE PANEL

Ⓕ - FIXED PANELS

SEE SHEET 33/34 FOR DETAILS

DESIGN AGENCY: ODOT CENTRAL OFFICE, OFFICE OF PRODUCTION

DESIGNED	DRAWN	REVIEWED	DATE
TAA	HLG	HLG	12-10-99
CHECKED	REVISED	STRUCTURE FILE NUMBER	
DFT		5203589L/5203619R	

SUPERSTRUCTURE DETAILS

MED-71-1685 L/R
I-71 OVER S.R. 18

MED-71-15.78

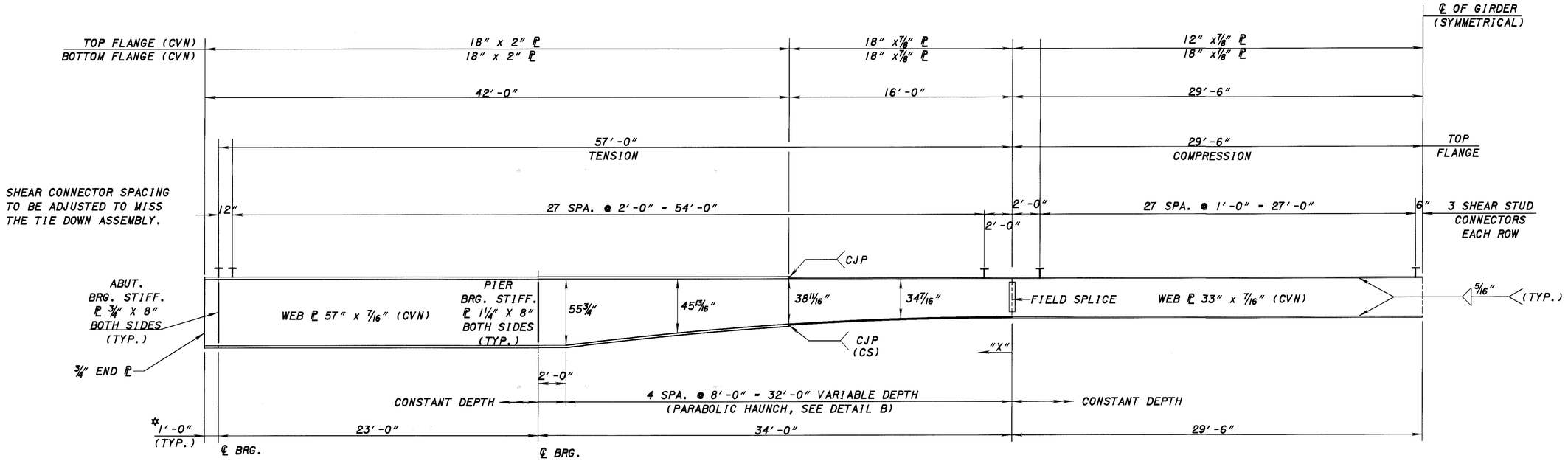

HALF GIRDER ELEVATION

*INCLUDES 3/4" ℙ

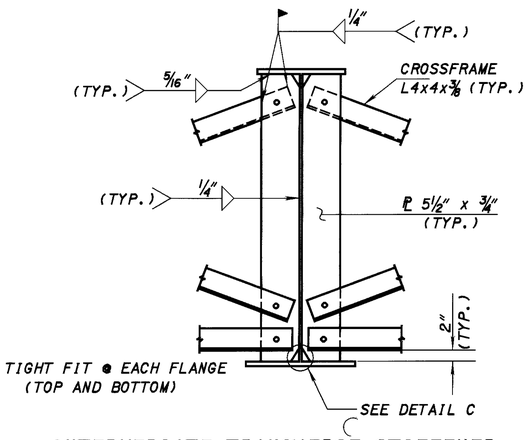

INTERMEDIATE TRANSVERSE STIFFENER @ CROSS-FRAME LOCATIONS

SEE STD. DRWG. GSD-1-96 FOR ADDITIONAL DETAILS (TYPE 3 CROSSFRAMES SHOWN)

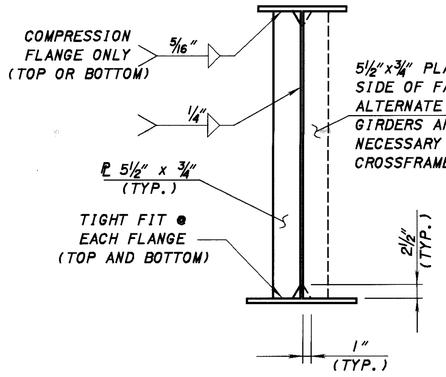

TYPICAL INTERMEDIATE TRANSVERSE STIFFENER

STRUCTURAL STEEL:

WHERE A SHAPE OR PLATE IS DESIGNATED (CVN) THE MATERIAL SHALL MEET SPECIFIED MINIMUM NOTCH TOUGHNESS REQUIREMENTS AS SPECIFIED IN 711.0

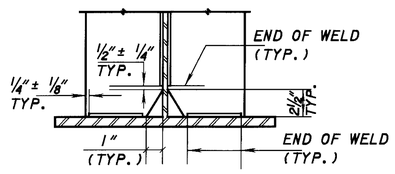

DETAIL C

WELD TERMINATION AND STIFFENER PLATE CLIPPING DETAIL

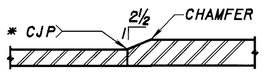

FLANGE WELD DETAIL

* COMPLETE JOINT PENETRATION WELDS SHALL BE GROUND SMOOTH IN A LONGITUDINAL DIRECTION TO REMOVE WELD REINFORCEMENT.

CS - BUTT WELD SUBJECT TO COMPRESSIVE STRESSES ONLY

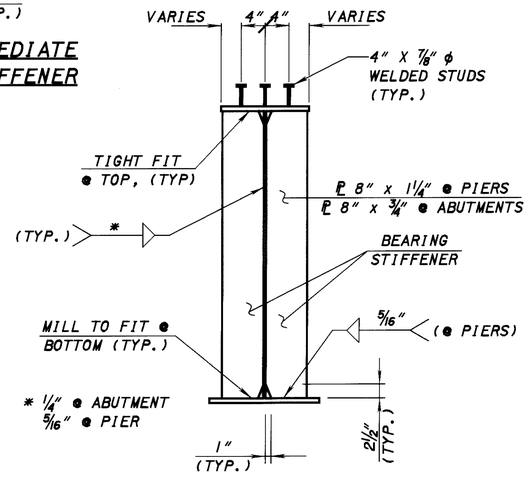

BEARING STIFFENER

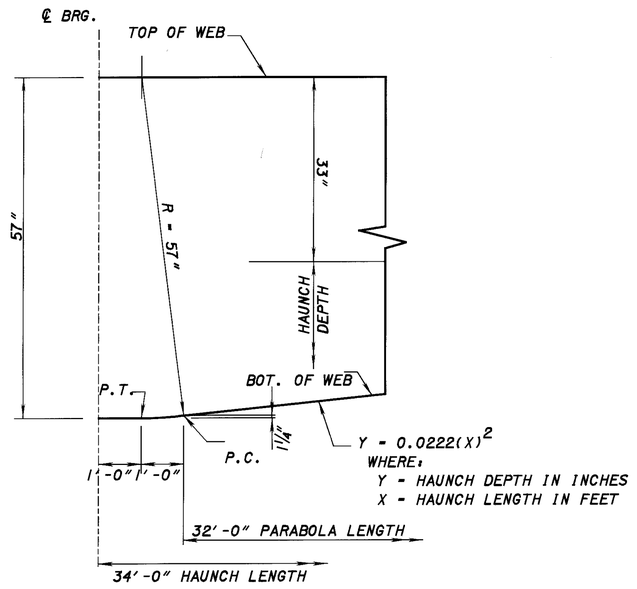

DETAIL B

TYPICAL HAUNCH GEOMETRY

DESIGN AGENCY: ODOT CENTRAL OFFICE, OFFICE OF PRODUCTION

REVISED HLG DATE 12-10-99

STRUCTURE FILE NUMBER 5203589L/5203619R

DESIGNED DFT | DRAWN HLG | REVISED

CHECKED TAA

SUPERSTRUCTURE DETAILS

MED-71-1685 L/R

I-71 OVER S.R. 18

MED-71-15.78

24 | 34

710 / 940

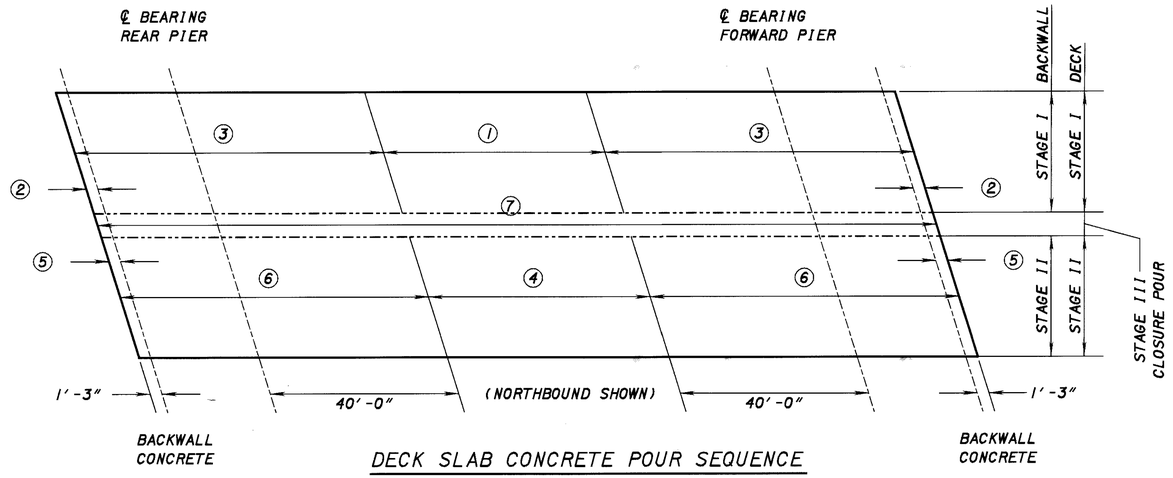

DECK SLAB CONCRETE POUR SEQUENCE

NORTHBOUND LANES			
BLOCKING DIAGRAM DIMENSIONS			
BEAMLINE	A	B	C
A	9/16"	11/16"	2'-7 1/8"
B	9/16"	11/16"	2'-7 1/4"
C	9/16"	11/16"	2'-7 7/16"
D	9/16"	11/16"	2'-7 9/16"
E	9/16"	9/16"	2'-7 9/16"
F	9/16"	9/16"	2'-7 11/16"
G	9/16"	9/16"	2'-7 13/16"
H	9/16"	9/16"	2'-8"

SOUTHBOUND LANES			
BLOCKING DIAGRAM DIMENSIONS			
BEAMLINE	A	B	C
A	9/16"	1/2"	2'-9 5/8"
B	9/16"	9/16"	2'-9 1/2"
C	9/16"	9/16"	2'-9 3/8"
D	9/16"	9/16"	2'-9 3/16"
E	9/16"	9/16"	2'-9 1/16"
F	9/16"	5/8"	2'-9 1/16"
G	9/16"	11/16"	2'-8 15/16"
H	9/16"	11/16"	2'-8 13/16"

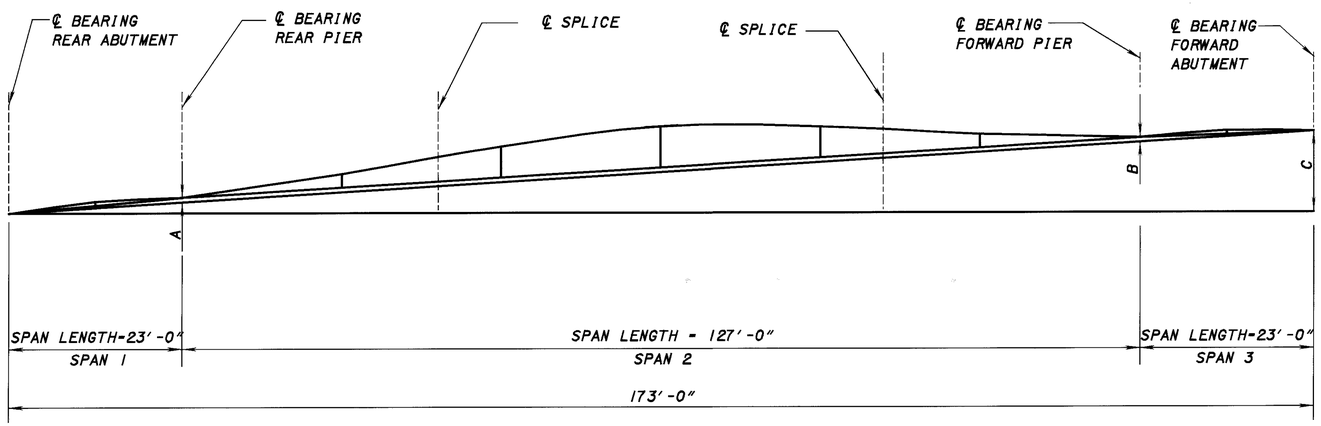

BLOCKING AND CAMBER DIAGRAM

VERTICAL DIMENSIONS EXAGGERATE FOR CLARITY

NOTES & LEGEND:

STRUCTURAL STEEL:
WHERE A SHAPE OR PLATE IS DESIGNATED (CVN) THE MATERIAL SHALL MEET SPECIFIED MINIMUM NOTCH TOUGHNESS REQUIREMENTS AS SPECIFIED IN 711.01.

FOR SCREED DIAGRAM AND TABLE SEE SHEET 27/34

WELDED ATTACHMENT:
WELDED ATTACHMENT OF SUPPORTS FOR CONCRETE DECK FINISHING MACHINE MAY BE MADE TO AREAS OF THE FACIA STRINGER FLANGES DESIGNATED "COMPRESSION". ATTACHMENTS SHALL NOT BE MADE TO AREAS DESIGNATED "TENSION". FILLET WELDS TO COMPRESSION FLANGES SHALL BE NOT CLOSER THAN 1" FROM EDGE OF FLANGE, BE NOT MORE THAN 2" LONG, AND BE NOT SMALLER THAN THE MINIMUM SIZE REQUIRED BY AASHTO.

STRUCTURAL STEEL SHALL BE ASTM A572.

ALL BEAM LENGTH DIMENSION ARE AT 60 °F

POUR SEQUENCE ACCORDING TO NUMERICAL ORDER.

BACKWALL CONCRETE (POURS 2 & 5, UP TO THE APPROACH SLAB SEAT LEVEL) SHALL BE PLACED AT LEAST 48 HOURS BEFORE ADJACENT DECK CONCRETE IS PLACED. THIS WORK SHALL ALSO BE COMPLETED WHEN SUDDEN TEMPERATURE CHANGES ARE UNLIKELY AND AT LEAST 4 HOURS PRIOR TO THE DAY'S PEAK AMBIENT TEMPERATURE.

STAGE II BACKWALL CONCRETE (POUR 5) SHALL EXTEND TO ADJOIN STAGE I CONSTRUCTION.

STAGE III DECK CLOSURE (POUR 7) MAY BE MADE IN A SINGLE POUR, END-TO-END OF STRUCTURE.

NORTHBOUND AND SOUTHBOUND BEAM DEFLECTION AND CAMBER TABLE									
	SPAN 1	SPAN 2							SPAN 3
LOCATION OF POINT	1/2	1/6	SPL	1/3	1/2	2/3	SPL	5/6	1/2
BEAM DEFLECTION	0"	1/8"	1/4"	3/8"	1/2"	3/8"	1/4"	1/8"	0"
REMAINING DL DEFLECTION	1/16"	9/16"	1 3/16"	1 1/2"	2 1/8"	1 1/2"	1 3/16"	9/16"	1/16"
CORRECTION FOR VERTICAL CURVE	0"	3/8"	1/2"	9/16"	5/8"	9/16"	1/2"	3/8"	0"
SHOP CAMBER	1/16"	1 1/16"	1 15/16"	2 7/16"	3 1/4"	2 7/16"	1 15/16"	1 1/16"	1/16"

DESIGN AGENCY: ODOT CENTRAL OFFICE OFFICE OF PRODUCTION

DESIGNED DB | DRAWN DB | CHECKED BRC | REVISED | REVIEWED DFT | DATE 12-10-99

STRUCTURE FILE NUMBER 5203589L/5203619R

BLOCKING AND CAMBER DIAGRAM
MED-71-1685 L/R
I-71 OVER S.R. 18

MED-71-15.78

25/34

711/940

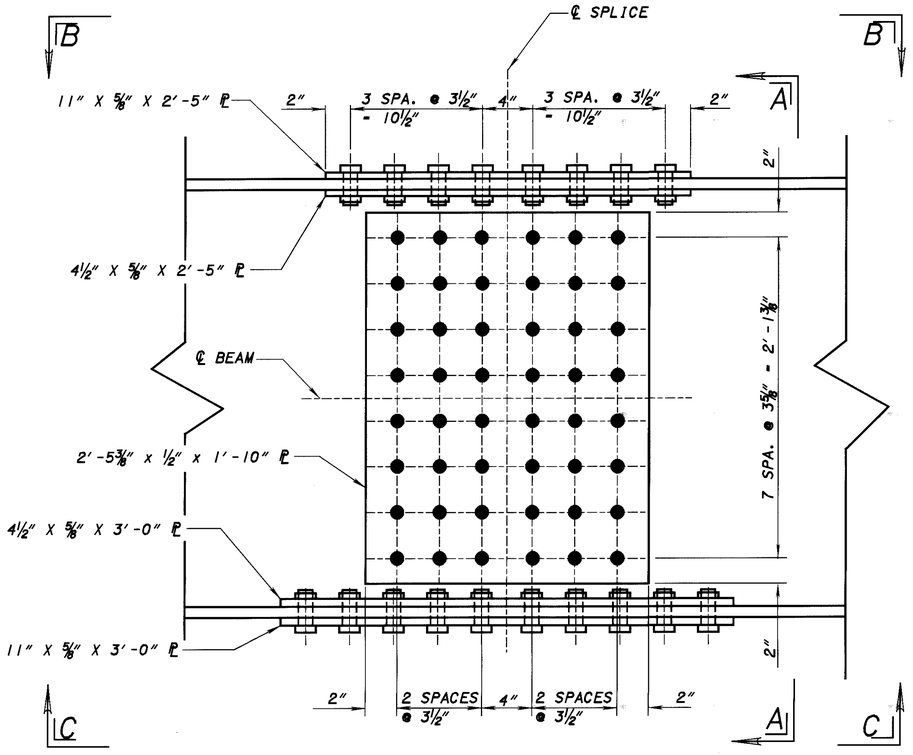

SPLICE DETAILS

STRUCTURAL STEEL:
WHERE A SHAPE OR PLATE IS DESIGNATED (CVN) THE MATERIAL SHALL MEET SPECIFIED MINIMUM NOTCH TOUGHNESS REQUIREMENTS AS SPECIFIED IN 711.0.

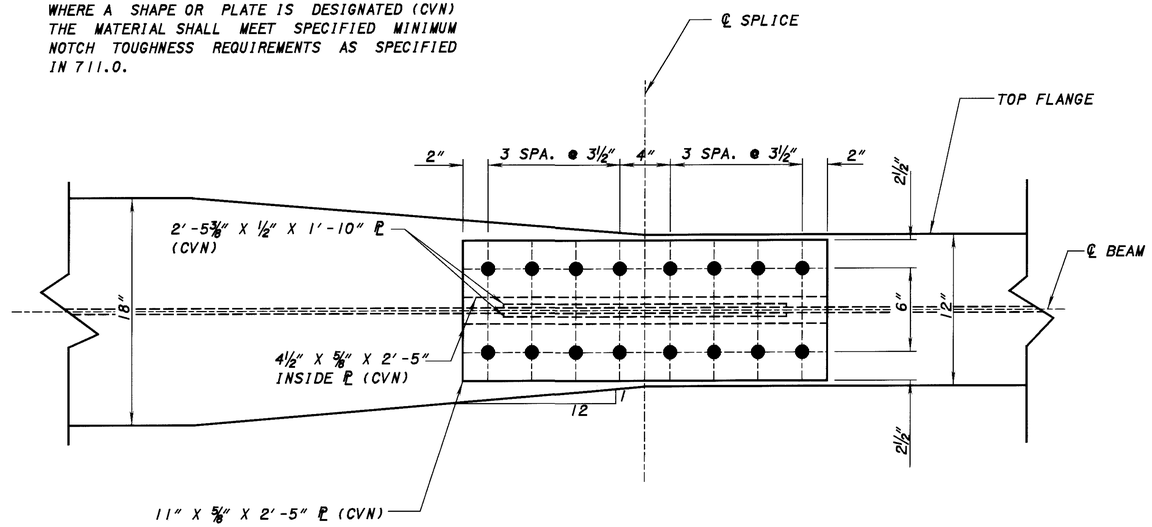

VIEW B-B

ALL BOLTS SHALL BE HIGH STRENGTH 1" DIAMETER, A325 GALVANIZED BOLTS, UNLESS OTHERWISE NOTED. WEB BOLTS OF FIELD SPLICES SHALL BE PLACED WITH THE HEADS ON THE OUTSIDE FACE OF EXTERIOR GIRDERS. FLANGE BOLTS FOR THE BOTTOM FLANGES OF THE FIELD SPLICES OF ALL GIRDERS SHALL BE PLACED WITH HEADS ON THE BOTTOM FACE. THREADS SHALL BE EXCLUDED FROM THE SHEAR PLANE. BOLTED SPLICES SHALL HAVE FRICTION TYPE CONNECTORS.

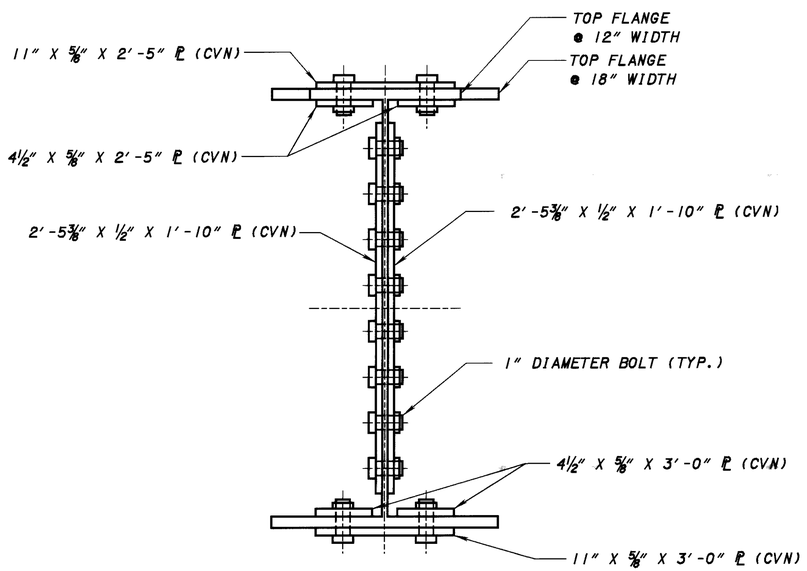

SECTION A-A

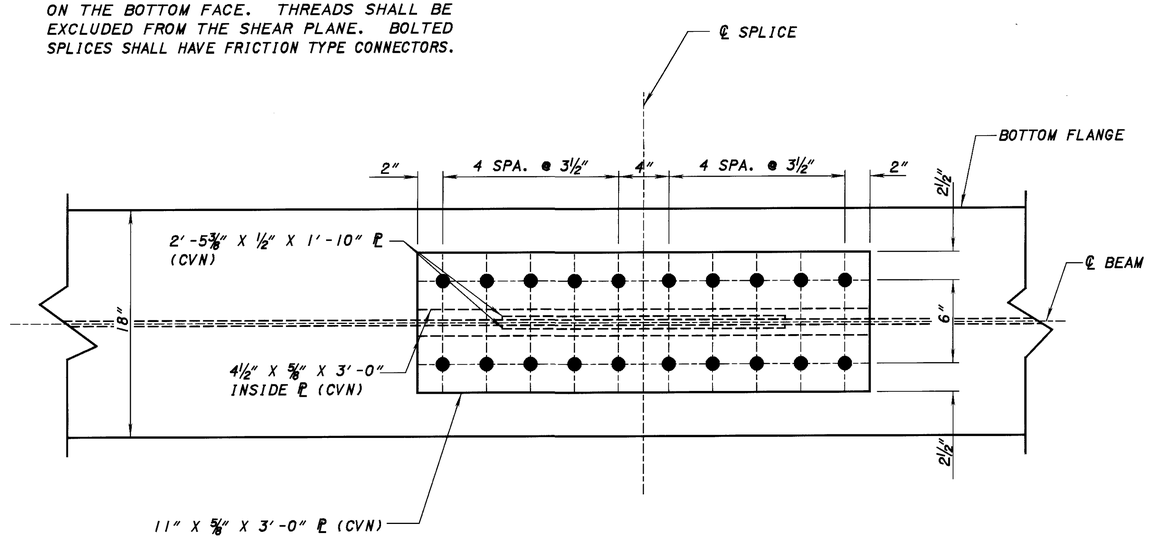

VIEW C-C

DESIGN AGENCY: ODOT CENTRAL OFFICE, OFFICE OF PRODUCTION
REVISED: TAA — DATE: 12-10-99
STRUCTURE FILE NUMBER: 5203589L/5203619R
DRAWN: DB — REVISED:
DESIGNED: DB — CHECKED: DFT

SPLICE DETAILS
MED-71-1685 L/R
I-71 OVER S.R. 18

MED-71-15.78

26 / 34

712 / 940

SCREED ELEVATION - SOUTHBOUND BRIDGE

LOCATION	LEFT TOE OF PARAPET		SOUTHBOUND LANE ℄		LEFT CONSTR JT		RIGHT CONSTR JT		PROFILE GRADE		RIGHT TOE OF PARAPET	
	STATION	ELEVATION	STATION	ELEVATION	STATION	ELEVATION	STATION	ELEVATION	STATION	ELEVATION	STATION	ELEVATION
℄ REAR ABUTMENT	889+14.70	1114.82	889+22.27	1115.39	889+23.37	1115.47	889+24.95	1115.59	889+26.06	1115.67	889+33.63	1115.52
MIDSPAN	889+26.20	1115.02	889+33.77	1115.59	889+34.87	1115.68	889+36.45	1115.80	889+37.56	1115.88	889+45.13	1115.72
℄ PIER # 1	889+37.70	1115.24	889+45.27	1115.80	889+46.37	1115.88	889+47.95	1116.00	889+49.06	1116.09	889+56.63	1115.93
1/6 SPAN	889+58.87	1115.65	889+66.44	1116.21	889+67.54	1116.29	889+69.12	1116.41	889+70.22	1116.49	889+77.79	1116.33
FIELD SPLICE #1	889+71.70	1115.92	889+79.27	1116.48	889+80.37	1116.56	889+81.95	1116.68	889+83.06	1116.76	889+90.63	1116.60
1/3 SPAN	889+80.03	1116.10	889+87.60	1116.65	889+88.71	1116.73	889+90.28	1116.85	889+91.39	1116.93	889+98.96	1116.77
MIDSPAN	890+01.20	1116.50	890+08.77	1117.05	890+09.87	1117.13	890+11.45	1117.25	890+12.56	1117.33	890+20.13	1117.16
2/3 SPAN	890+22.37	1116.78	890+29.94	1117.33	890+31.04	1117.41	890+32.62	1117.53	890+33.72	1117.61	890+41.29	1117.43
FIELD SPLICE #2	890+30.70	1116.87	890+38.27	1117.42	890+39.37	1117.50	890+40.95	1117.61	890+42.06	1117.69	890+49.63	1117.52
5/6 SPAN	890+43.53	1117.02	890+51.10	1117.57	890+52.21	1117.65	890+53.78	1117.76	890+54.89	1117.84	890+62.46	1117.66
℄ PIER # 2	890+64.70	1117.30	890+72.27	1117.84	890+73.37	1117.92	890+74.95	1118.03	890+76.06	1118.11	890+83.63	1117.93
MIDSPAN	890+76.20	1117.46	890+83.77	1118.00	890+84.87	1118.08	890+86.45	1118.19	890+87.56	1118.27	890+95.13	1118.08
℄ FORWARD ABUTMENT	890+87.70	1117.62	890+95.27	1118.16	890+96.37	1118.24	890+97.95	1118.35	890+99.06	1118.43	891+06.63	1118.24

SCREED ELEVATION - NORTHBOUND BRIDGE

LOCATION	LEFT TOE OF PARAPET		PROFILE GRADE		LEFT CONSTR JT		RIGHT CONSTR JT		NORTHBOUND LANE ℄		RIGHT TOE OF PARAPET	
	STATION	ELEVATION	STATION	ELEVATION	STATION	ELEVATION	STATION	ELEVATION	STATION	ELEVATION	STATION	ELEVATION
℄ REAR ABUTMENT	889+44.97	1115.58	889+52.54	1116.15	889+53.65	1116.23	889+55.23	1116.35	889+56.33	1116.43	889+63.90	1116.27
MIDSPAN	889+56.47	1115.78	889+64.04	1116.34	889+65.15	1116.42	889+66.73	1116.54	889+67.83	1116.62	889+75.40	1116.46
℄ PIER # 1	889+67.97	1115.98	889+75.54	1116.54	889+76.65	1116.62	889+78.23	1116.74	889+79.33	1116.82	889+86.90	1116.66
1/6 SPAN	889+89.14	1116.38	889+96.71	1116.93	889+97.82	1117.02	889+99.39	1117.13	890+00.50	1117.21	890+08.07	1117.05
FIELD SPLICE #1	890+01.97	1116.64	890+09.54	1117.19	890+10.65	1117.27	890+12.23	1117.39	890+13.33	1117.47	890+20.90	1117.30
1/3 SPAN	890+10.31	1116.81	890+17.88	1117.36	890+18.98	1117.44	890+20.56	1117.55	890+21.66	1117.63	890+29.23	1117.46
MIDSPAN	890+31.47	1117.19	890+39.04	1117.74	890+40.15	1117.82	890+41.73	1117.93	890+42.83	1118.01	890+50.40	1117.84
2/3 SPAN	890+52.64	1117.46	890+60.21	1118.00	890+61.32	1118.08	890+62.89	1118.19	890+64.00	1118.27	890+71.57	1118.10
FIELD SPLICE #2	890+60.97	1117.55	890+68.54	1118.09	890+69.65	1118.17	890+71.23	1118.28	890+72.33	1118.36	890+79.90	1118.18
5/6 SPAN	890+73.81	1117.68	890+81.38	1118.22	890+82.48	1118.30	890+84.06	1118.41	890+85.16	1118.49	890+92.73	1118.31
℄ PIER # 2	890+94.97	1117.94	891+02.54	1118.47	891+03.65	1118.55	891+05.23	1118.66	891+06.33	1118.74	891+13.90	1118.55
MIDSPAN	891+06.47	1118.09	891+14.04	1118.63	891+15.15	1118.70	891+16.73	1118.81	891+17.83	1118.89	891+25.40	1118.70
℄ FORWARD ABUTMENT	891+17.97	1118.25	891+25.54	1118.78	891+26.65	1118.86	891+28.23	1118.97	891+29.33	1119.04	891+36.90	1118.85

SCREED SETTING ELEVATIONS GIVEN ARE TO THE TOP OF CONCRETE DECK AND ARE REQUIRED PRIOR TO PLACEMENT OF CONCRETE. THEY INCLUDE AN ALLOWANCE FOR THE DEAD LOAD DEFLECTION CAUSED BY THE WEIGHT OF THE CONCRETE.

℄ I-71

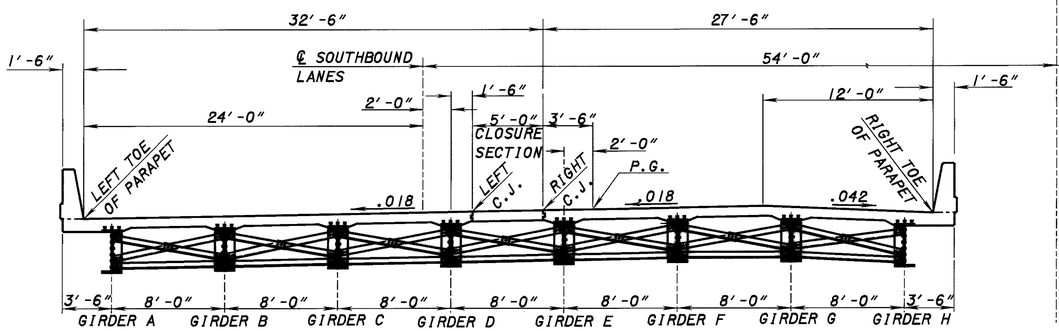

SOUTHBOUND LANE BRIDGE

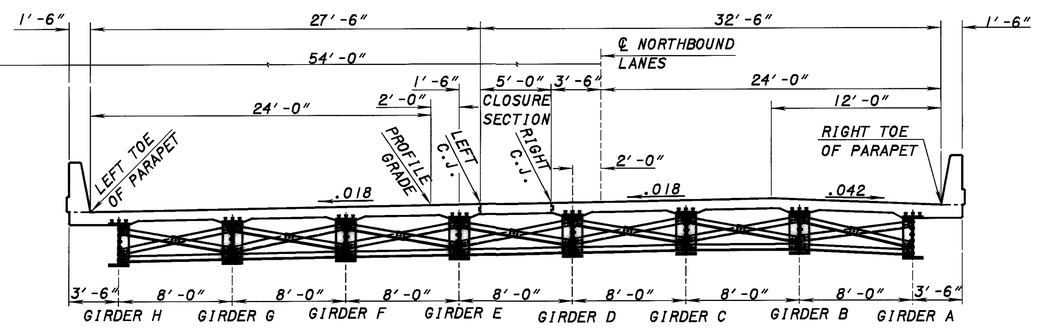

NORTHBOUND LANE BRIDGE

DESIGN AGENCY
ODOT CENTRAL OFFICE
OFFICE OF PRODUCTION

REVIEWED DFT
DATE 12-10-99
STRUCTURE FILE NUMBER 5203589L/5203619R

DRAWN BRC
REVISED

DESIGNED BRC
CHECKED DB

SCREED TABLES
MED-71-1685 L/R
I-71 OVER S.R. 18

MED-71-15.78

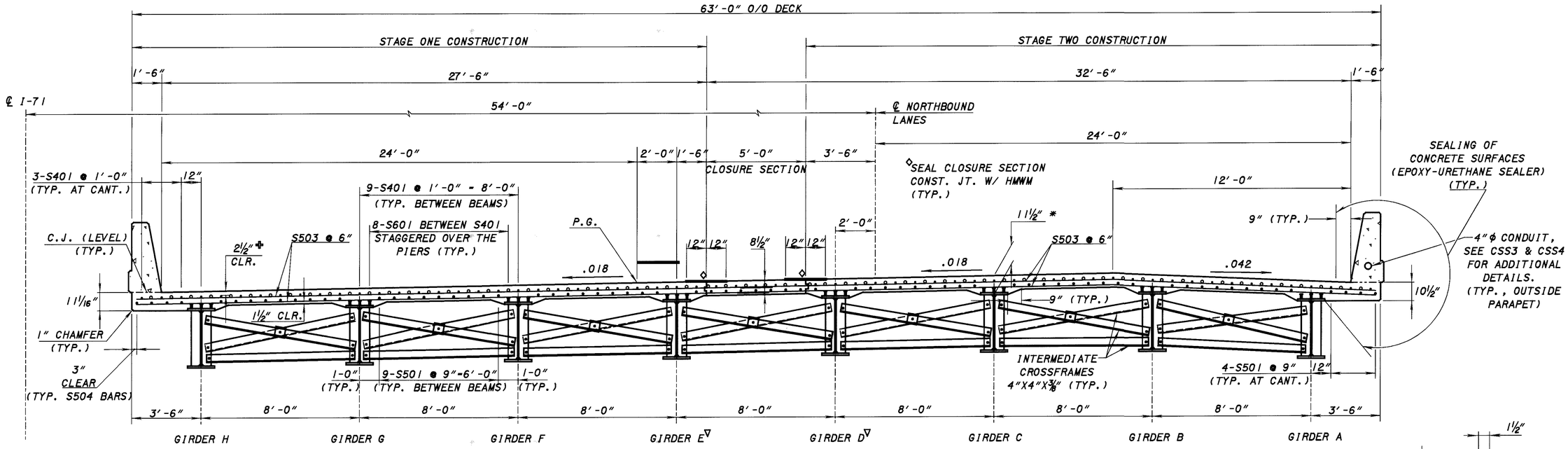

▽CROSSFRAMES BETWEEN GIRDERS D & E SHALL BE PLACED AFTER STAGE TWO DECK POUR.

TRANSVERSE SECTION
(NORTHBOUND LANES SHOWN)

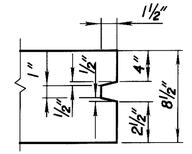

KEYWAY DETAILS AT CLOSURE SECTION

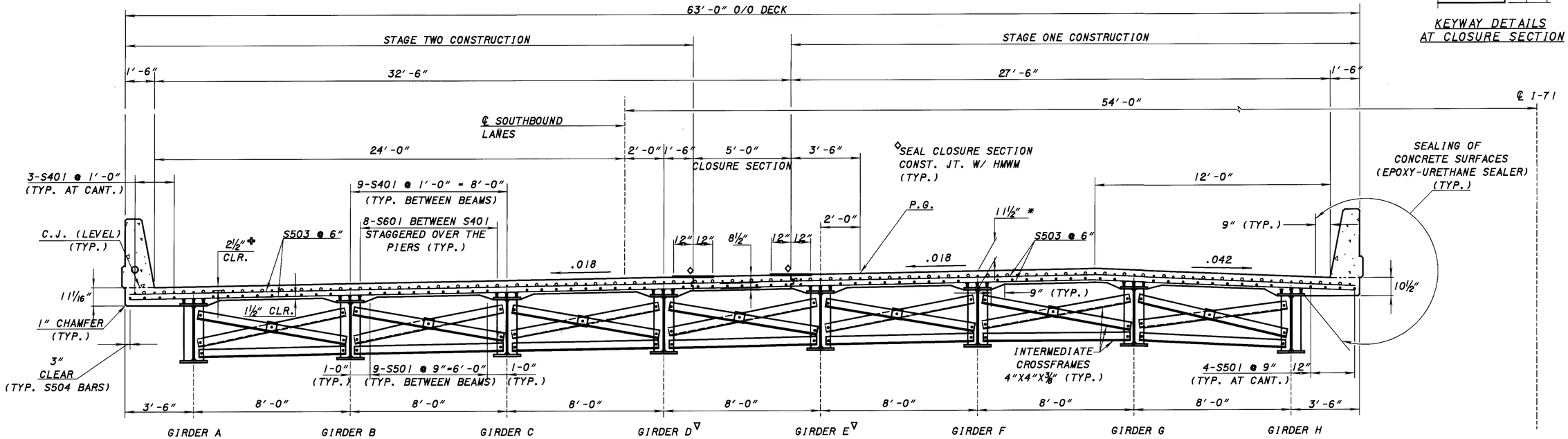

TRANSVERSE SECTION
(SOUTHBOUND LANES SHOWN)

NOTES AND LEGEND:

✣THE 2½" CLEARANCE SHALL BE TO THE #4 BARS.

HMWM - HIGH MOLECULAR WEIGHT METHACRYLATE. SEE SUPPLEMENTAL SPECIFICATION.

*THE DISTANCE FROM THE BOTTOM OF THE DECK TO THE BOTTOM OF THE TOP FLANGE REMAINS 3" AT ALL LOCATIONS ON THE BRIDGE. THE HAUNCH DEPTH WILL VARY BECAUSE OF THE DIFFERENCE IN TOP FLANGE THICKNESS.

HAUNCH WIDTHS:
HAUNCH WIDTH OF 9" SHALL BE USED FOR COMPUTING QUANTITY OF CONCRETE. HOWEVER, THE HAUNCH WIDTH MAY VARY BETWEEN 6" AND 12".

REINFORCING STEEL MAY BE FIELD BENT OR SHOP BENT TO ACCOMODATE THE CROWN OF THE DECK. PAYMENT SHALL BE INCLUDED WITH ITEM 844 HIGH PERFORMANCE CONCRETE, SUPERSTRUCTURE.

DESIGN AGENCY: ODOT CENTRAL OFFICE OFFICE OF PRODUCTION
DESIGNED: TAA
DRAWN: HLG
CHECKED: DFT
REVISED: HLG
DATE: 12-10-99
REVISED:
STRUCTURE FILE NUMBER: 5203589L/5203619R

TRANSVERSE SECTIONS
MED-71-1685 L/R
I-71 OVER S.R. 18

MED-71-15.78

28 / 34

714 / 940

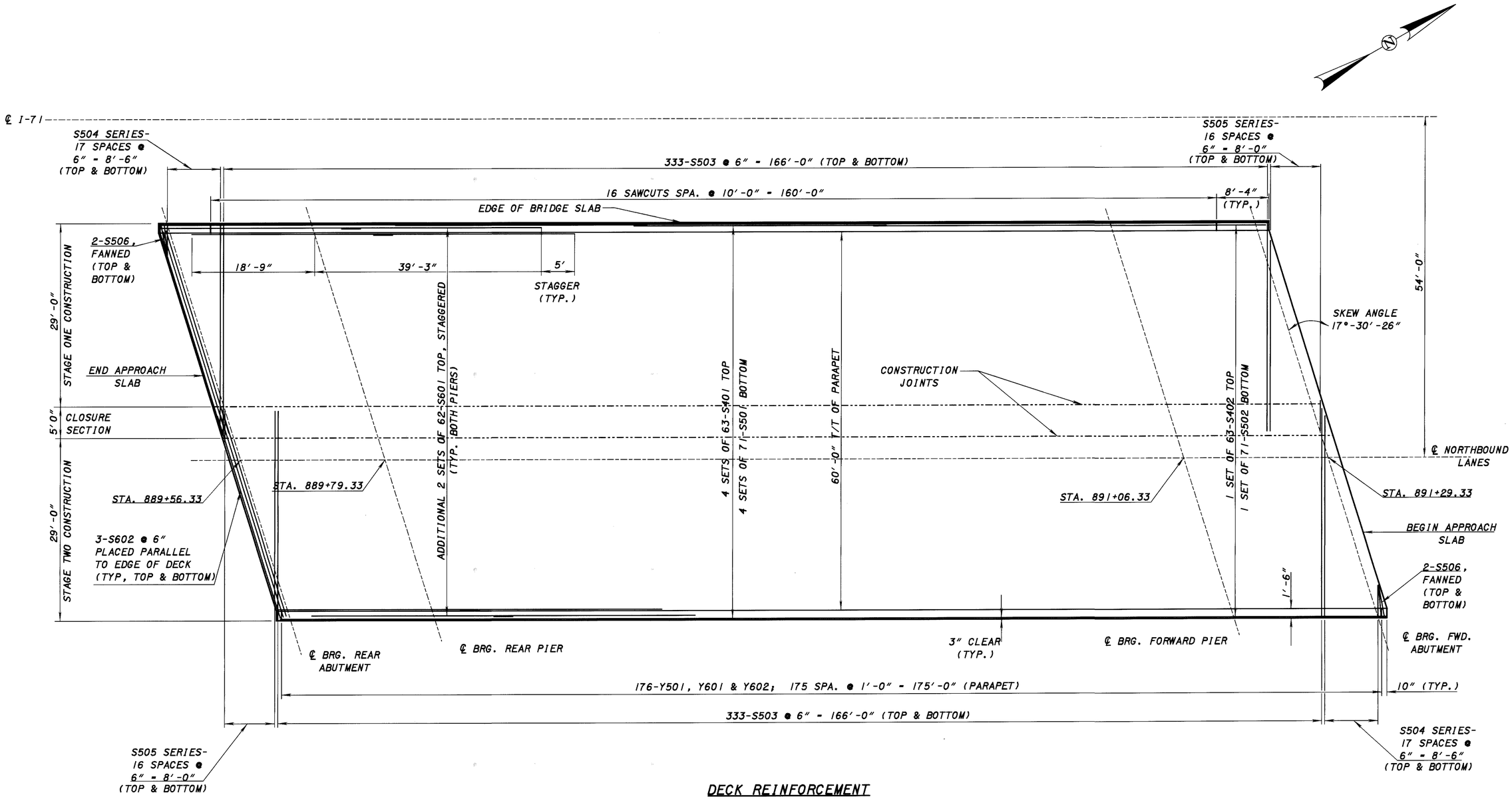

DECK REINFORCEMENT

NORTHBOUND LANES ONLY SHOWN

NOTES AND LEGEND:

DECK SLAB DEPTH:
THE DISTANCE SHOWN FROM THE TOP OF THE DECK SLAB TO THE BOTTOM OF THE FLANGE IS THE CONCRETE DECK DESIGN DIMENSION, PLUS THE DESIGN HAUNCH THICKNESS OF 3″. THE QUANTITY OF DECK CONCRETE TO BE PAID FOR SHALL BE BASED UPON THIS DIMENSION EVEN THOUGH DEVIATION FROM IT MAY BE NECESSARY BECAUSE THE TOP FLANGE OF THE GIRDER MAY NOT HAVE THE EXACT CAMBER OR CONFORMATION REQUIRED TO PLACE IT PARALLEL TO THE FINISHED GRADE. DEDUCTION SHALL BE MADE FOR VOLUME OF ENCASED STEEL PLATES AS PER 863.31.

MINIMUM LAP SPLICES: #4 BARS = 2′-0″
#5 BARS = 2′-6″
#6 BARS = 3′-0″

REINFORCING STEEL MAY BE FIELD OR SHOP BENT TO ACCOMODATE THE CROWN OF THE DECK. PAYMENT SHALL BE INCLUDED WITH ITEM 844 HIGH PERFORMANCE CONCRETE, SUPERSTRUCTURE.

ALL REINFORCING STEEL IS EPOXY COATED.

SEE SHEET 32/34 FOR PARAPET TRANSITION DETAILS.

SEE SHEET 25/34 FOR DECK SLAB CONCRETE POUR SEQUENCE.

DESIGN AGENCY: ODOT CENTRAL OFFICE OFFICE OF PRODUCTION

DESIGNED	DRAWN	REVIEWED	DATE
TAA	HLG	DFT	12-10-99
CHECKED	REVISED	STRUCTURE FILE NUMBER	
HLG		5203589L/5203619R	

SUPERSTRUCTURE DETAILS
MED-71-1685 L/R
I-71 OVER S.R. 18

MED-71-15.78

29 / 34

715 / 940

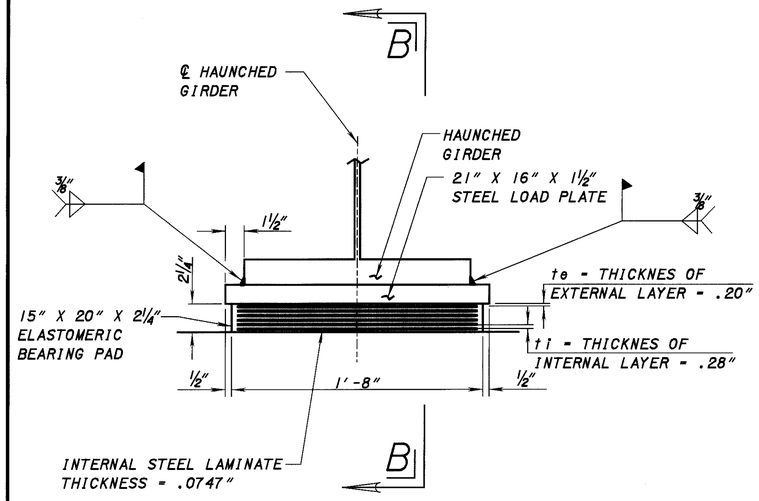

REAR AND FORWARD ABUTMENT LAMINATED ELATOMERIC EXPANSION BEARING

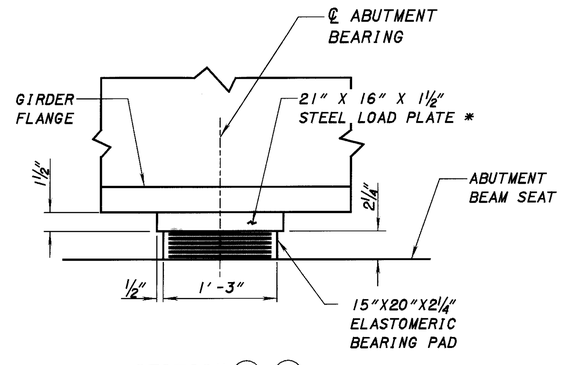

SECTION (B)–(B)

* LOAD PLATE BEVELED IN THIS VIEW

BEARING TABLE												
BEARING LOCATION	TYPE	L	W	t_i In.	t_e In.	n_1	n_2	STEEL LOAD PL	TOTAL HEIGHT*	DL, Kips	LL, Kips	TOTAL, Kips
REAR & FORWARD ABUTMENT	EXP	15"	20"	.28"	.20"	5	6	16"x21"x1½"	3¾"	260	35	295
PIER 1 & 2	EXP	16"	24"	.44"	.31"	3	4	17"x25"x2"	4¼"	264	107	371

n_1 - NUMBER OF INTERNAL ELASTOMER LAYERS, t_i ELASTOMER LAYERS ARE 50 DUROMETERS
n_2 - NUMBER OF STEEL LAMINATES, 0.0747" THICKNESS * TOTAL HEIGHT INCLUDES LOAD PLATE

NOTES:

MATERIALS: STEEL PLATES SHALL BE THE SAME GRADE OF THE STEEL AS THE PROPOSED STEEL BEAM. THE STEEL PLATES SHALL HAVE THE SAME PROTECTIVE COATING AS MAIN STRUCTURAL STEEL.

PAYMENT FOR MATERIALS, LABOR, FABRICATION, PROTECTIVE COATING, AND AND STEEL PLATE SHALL BE INCLUDED WITH ITEM 516 ABUTMENT ELASTOMERIC BEARINGS FOR PAYMENT.

WELDING: WELDING OF THE LOAD PLATE TO THE SUPERSTRUCTURE SHALL BE CONTROLLED SO THAT THE PLATE TEMPERATURE AT THE ELASTOMER BONDED SURFACE SHALL NOT EXCEED 300° F AS DETERMINED BY THE USE OF PYROMETRIC STICKS OR OTHER TEMPERATURE MONITORING DEVICES. THE STEEL LOAD PLATE SHALL BE BONDED BY VULCANIZATION TO THE ELASTOMER DURING THE MOLDING PROCESS.

ELASTOMERIC BEARINGS SHALL COMPLY WITH ITEM 516 AND AASHTO STANDARD SPECIFICATION FOR HIGHWAY BRIDGES, SECTION 18, BEARING DEVICES, DIVISION II, CONSTRUCTION ARTICLES 18.4.5.1 AND 18.5.6.2. BEARINGS SHALL BE GRADE 3, 50 DUROMETER ELASTOMER AND SHALL BE SUBJECTED TO THE LOAD TESTING REQUIREMENTS DEFINED IN ARTICLE 18.7.4.5 OF THE AASHTO DOCUMENT LISTED ABOVE. THE UNIT BID PRICE SHALL INCLUDE ALL MATERIALS, LABOR, TESTING, STEEL LOAD PLATES AND INCIDENTALS NECESSARY TO FURNISH AND INSTALL LAMINATED ELASTOMERIC BEARINGS. PAYMENT WILL BE MADE AT THE CONTRACT PRICE FOR ITEM 516, EACH, ELASTOMERIC BEARINGS WITH INTERNAL LAMINATES AND LOAD PLATE (NEOPRENE).

BEARING REPOSITIONING: IF DECK CONCRETE IS PLACED AT AN AMBIENT TEMPERATURE HIGHER THAN 80°F OR LOWER THAN 40°F AND THE BEARING SHEAR DEFLECTION EXCEEDS ONE-SIXTH OF THE BEARING HEIGHT AT 60°F ± 10°F, THE BEAMS SHALL BE RAISED TO ALLOW THE BEARING TO RETURN TO THEIR UNDERFORMED SHAPE AT 60° F +/- 10° F.

BASIS OF PAYMENT: THE UNIT BID PRICE SHALL INCLUDE ALL MATERIALS, LABOR, TESTING, STEEL PLATES AND INCIDENTALS NECESSARY TO FURNISH AND INSTALL LAMINATED ELASTOMERIC EXPANSION BEARINGS. PAYMENT WILL BE MADE AT THE CONTRACT PRICE FOR ITEM 516, EACH, ELATOMERIC BEARINGS WITH INTERNAL LAMINATES AND LOAD PLATE (NEOPRENE):

16" x 24" x 2¼" WITH 17" x 25" x 2" LOAD PLATE
15"x20"x 2¼" WITH 16"x21"x1½" LOAD PLATE.

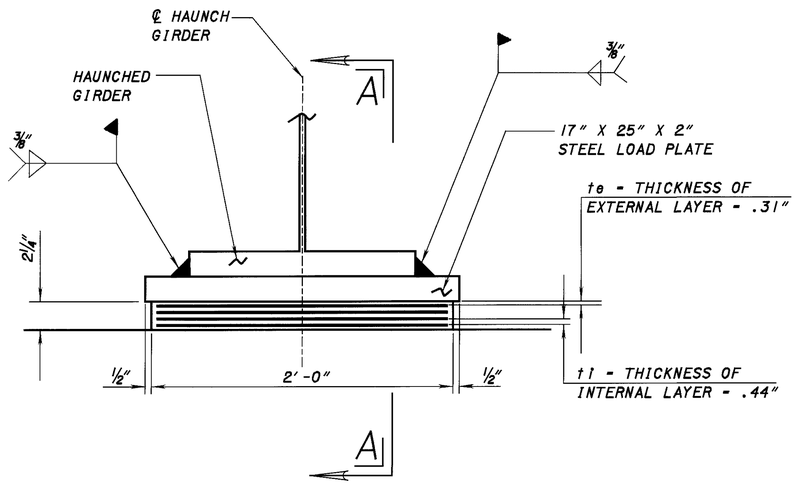

REAR AND FORWARD PIER LAMINATED ELATOMERIC EXPANSION BEARING

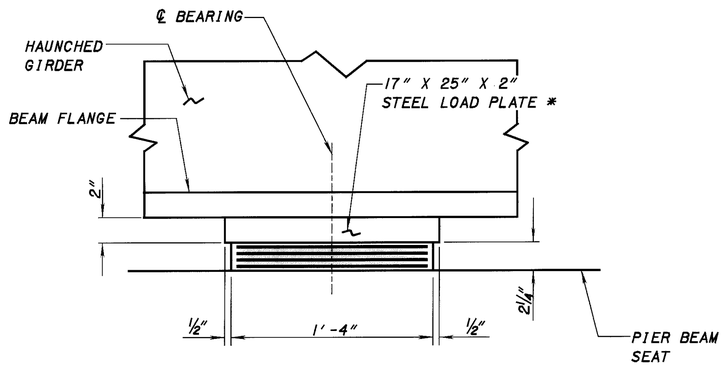

SECTION (A)–(A)

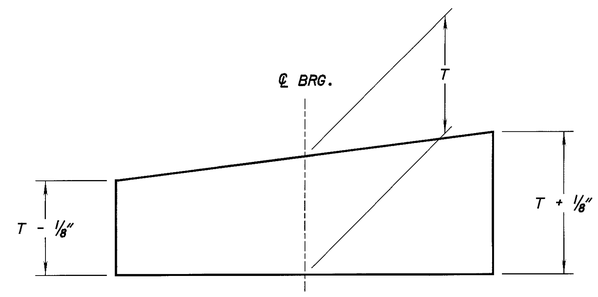

BEVELED LOAD PLATE

ALL LOAD PLATES SHALL BE BEVELED TO ACCOMODATE THE ROADWAY GRADE. T IS THE THICKNESS OF THE LOAD PLATE GIVEN IN THE PLANS.

DESIGN AGENCY: ODOT CENTRAL OFFICE, OFFICE OF PRODUCTION
REVIEWED TAA DATE 12-10-99
STRUCTURE FILE NUMBER 52035891/52036191R
DRAWN DB REVISED
DESIGNED DB CHECKED DFT

BEARING PAD DETAILS
MED-71-1685 L/R
I-71 OVER S.R. 18

MED-71-15.78

30/34

716/940

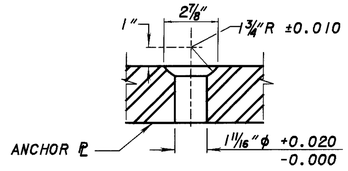

HOLE DETAIL

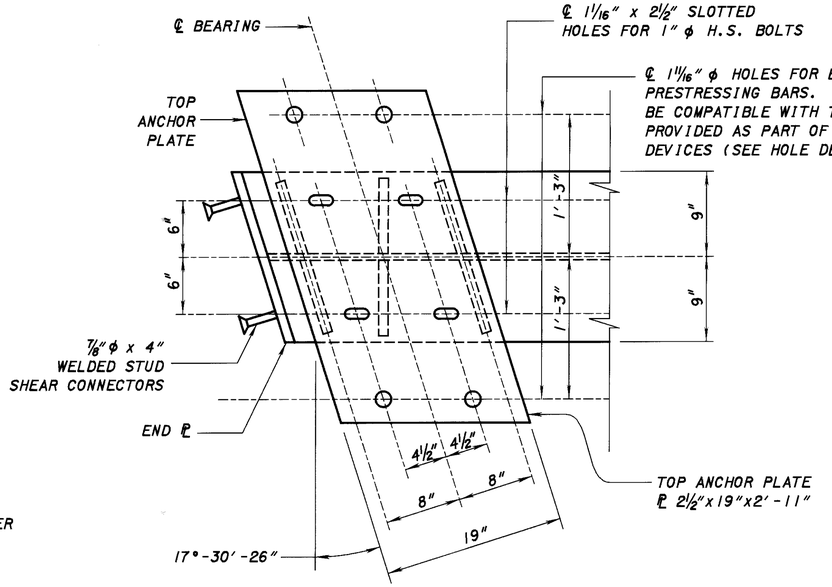

VIEW C-C

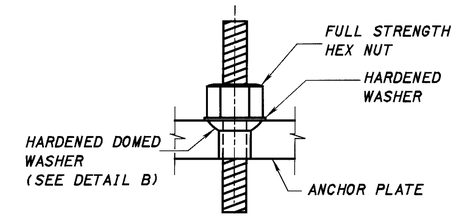

ANCHOR DETAIL

(TYP. TOP & BOTTOM)

SEE HOLE DETAIL IN ANCHOR PLATE

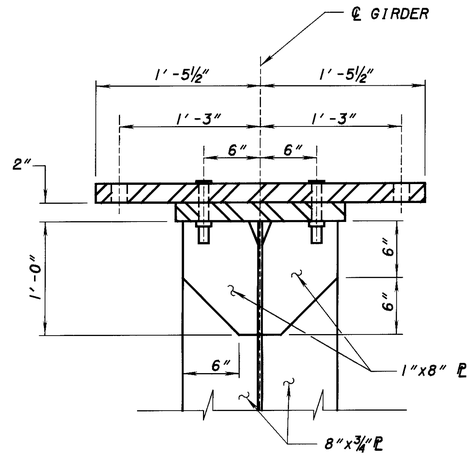

SECTION A-A

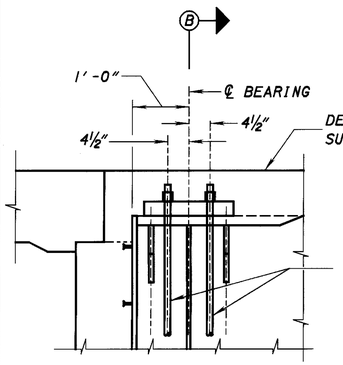

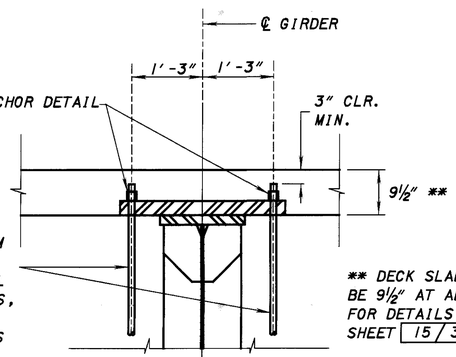

1¼" THREADBARS AASHTO M275-79 (TYPE 2) OR ASTM A722 GRADE 150 WITH 2 EACH FULL STRENGTH HEX NUTS, FLAT AND DOMED HARDENED WASHERS

** DECK SLAB SHALL BE 9½" AT ABUTMENT. FOR DETAILS SEE SHEET 15/34.

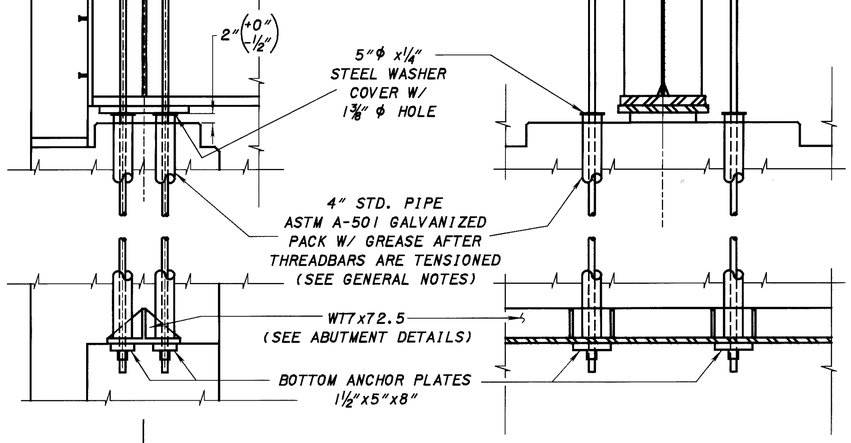

TIE DOWN DEVICE

STRESS EACH THREADBAR TO 65 KIPS AFTER ANCHORAGE IS SET.

SECTION B-B

THREADBARS AND HARDWARE CONNECTIONS SHALL HAVE A SAFE WORKING LOAD CAPAPCITY OF 110 KIPS PER BAR. THREADBARS SHALL BE EPOXY COATED PER ASTM A755. ALL OTHER TIE DOWN APPURTENANCES SHALL BE GALVANIZED PER 711.02.

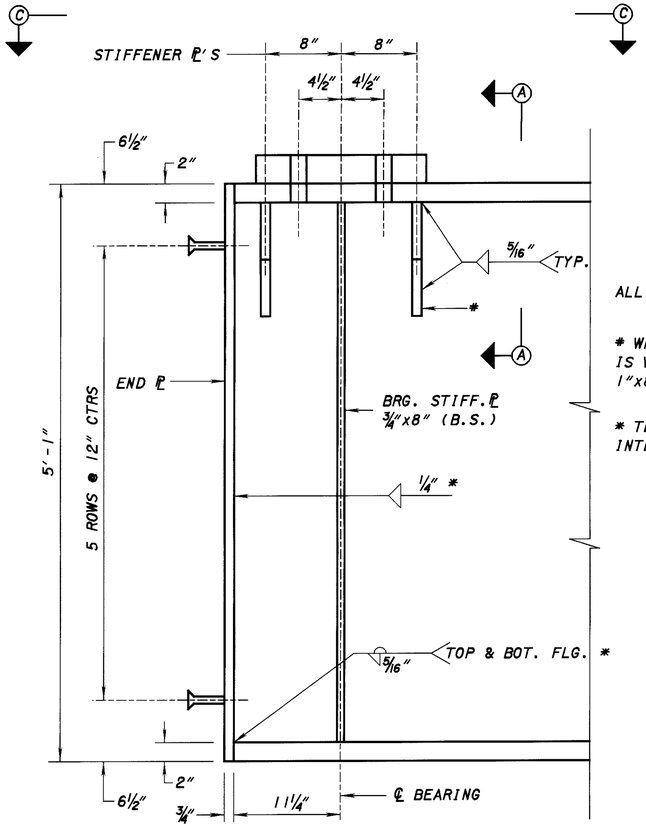

DETAIL A

ALL STEEL SHALL BE A572.

* WHERE INTERMEDIATE STIFFENER IS WITHIN 12" OF BRG. STIFFENER 1"x8" ℄ NOT REQUIRED.

* TERMINATE WELD 1" FROM INTERSECTION OF WELDS.

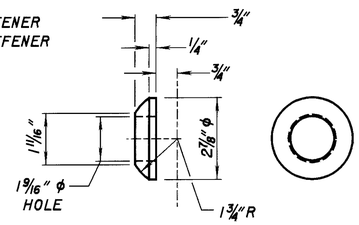

DETAIL B

NOTE: MATERIAL TO MEET THE CHEMICAL AND MECHANICAL REQUIREMENTS OF ASTM F436 FOR "HARDENED STEEL WASHERS"

TIE DOWN DEVICE: SEE GENERAL NOTES FOR ADDITIONAL REQUIREMENTS. THE BOTTOM AND TOP ANCHOR PLATES, WT7x72.5 AND 4" PIPE ARE INCLUDED WITH STRUCTURAL STEEL FOR PAYMENT. THE THREADBARS, WASHERS, NUTS & INCIDENTALS ARE INCLUDED WITH TIE-DOWN DEVICE FOR PAYMENT.

DESIGN AGENCY: ODOT CENTRAL OFFICE OFFICE OF PRODUCTION

REVIEWED RJH | DATE 12-10-99 | STRUCTURE FILE NUMBER 5203589L/5203619R

DRAWN RJH | REVISED

DESIGNED TAA | CHECKED DFT

TIE DOWN DEVICE DETAILS

MED-71-1685 L/R
I-71 OVER S.R. 18

MED-71-15.78

31/34

717/940

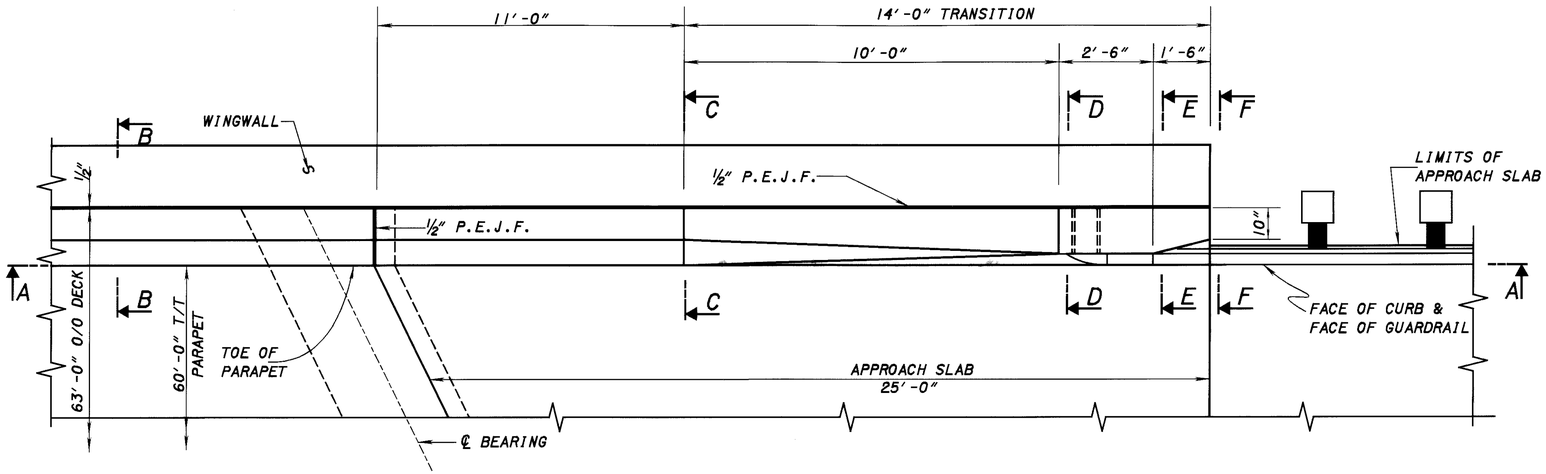

PART PLAN AT ABUTMENT

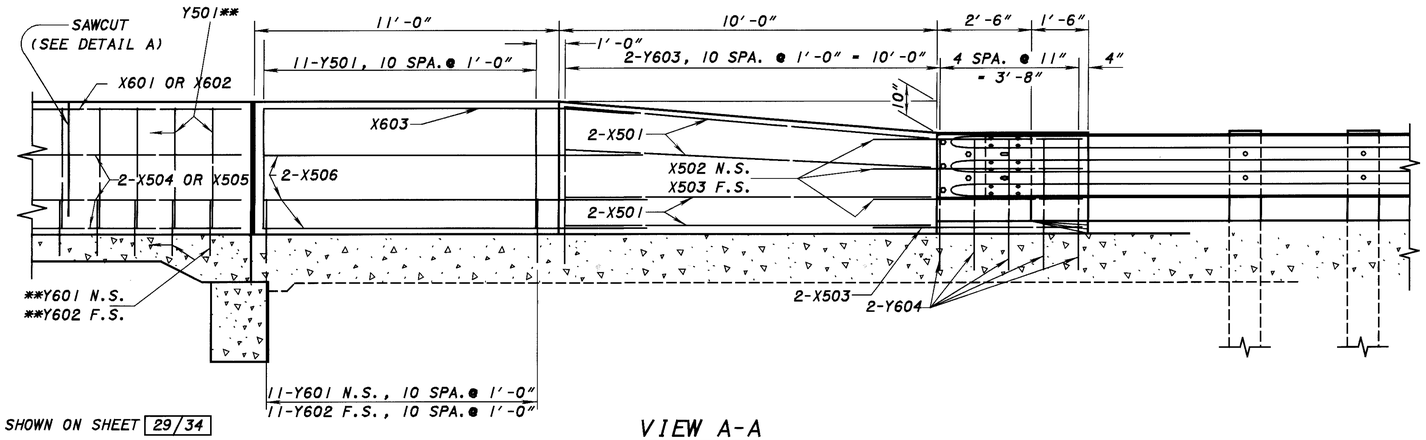

**SPACING SHOWN ON SHEET 29/34

VIEW A-A

DETAIL A

(Section through sawcut)
Sawcut Perimeter = 7'-6"

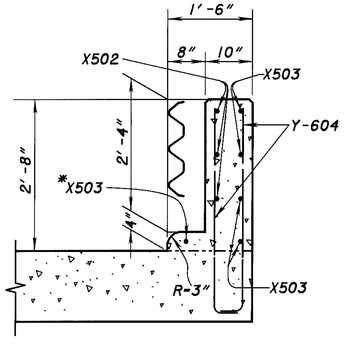

SECTION F-F

* FIELD BEND IF NECESSARY

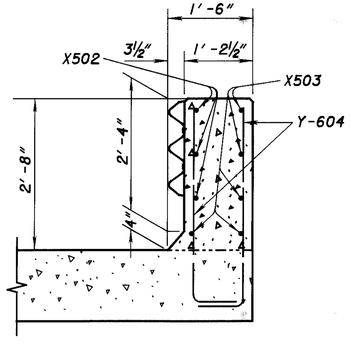

SECTION E-E

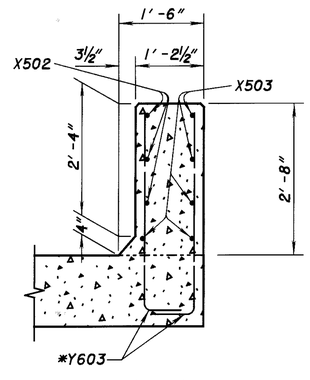

SECTION D-D

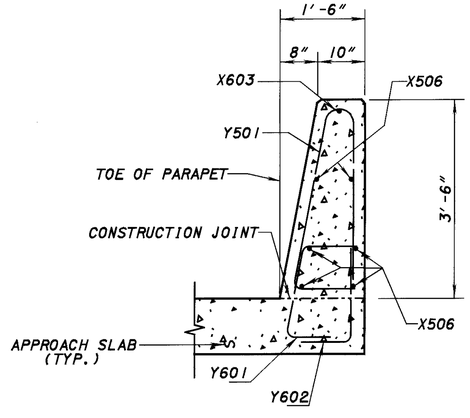

SECTION C-C

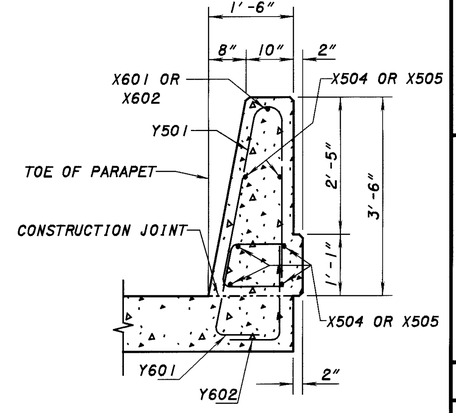

SECTION B-B

Area = 4.26 ft²

NOTES

CONTROL JOINTS FOR CONCRETE PARAPETS: THE JOINTS SHALL BE CONSTRUCTED BY SAWING 1¼ INCH DEEP ALONG THE PERIMETER OF THE PARAPET AS SOON AS THE SAW CAN BE OPERATED WITHOUT DAMAGING THE CONCRETE.

THE USE OF AN EDGE GUIDE, FENCE, OR JIG IS REQUIRED TO ENSURE THAT THE CUT JOINT IS STRAIGHT, TRUE, AND ALIGNED ON ALL FACES OF THE PARAPET. THE JOINT WIDTH SHALL BE THE WIDTH OF THE SAW BLADE, A NOMINAL WIDTH OF ¼ INCH.

THE PERIMETER OF THE DEFLECTION CONTROL JOINT SHALL BE SEALED WITH A CAULKING MATERIAL TO A MINIMUM DEPTH OF ONE INCH CONFORMING TO FEDERAL SPECIFICATION TT-S-00227E. THE BOTTOM ONE-HALF INCH OF THE OUTSIDE FACE OF THE PARAPET SHOULD BE LEFT UNSEALED TO ALLOW ANY WATER WHICH MAY ENTER THE JOINT TO ESCAPE.

QUANTITIES OF CONCRETE, REINFORCING STEEL, DEFLECTION JOINT SAWCUT AND CAULKING MATERIAL FOR PARAPET ARE INCLUDED WITH ITEM 844 HIGH PERFORMANCE CONCRETE, SUPERSTRUCTURE (PARAPET).

FOR BRIDGE TERMINAL ASSEMBLY SEE STANDARD CONSTRUCTION DRAWING GR-3.1 AND GR-3.2.

MIN. LAP SPLICES: #5 BAR - 2'-6"
#6 BAR - 3'-0"

LEGEND: N.S. - NEAR SIDE
F.S. - FAR SIDE

DESIGN AGENCY: ODOT CENTRAL OFFICE OFFICE OF PRODUCTION
REVISED: TAA DATE: 12-10-99
STRUCTURE FILE NUMBER: 5203589L/5203619R
DRAWN: HLG REVISED:
DESIGNED: HLG CHECKED: DFT

PARAPET TRANSITION DETAILS

MED-71-1685 L/R
I-71 OVER S.R. 18

MED-71-15.78

32/34

718/940

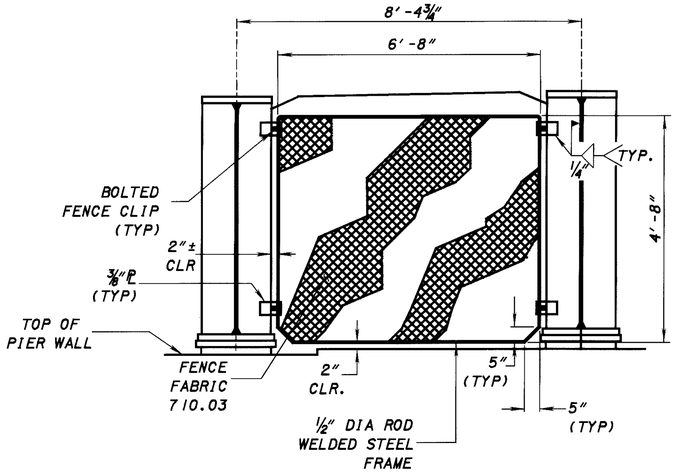

FIXED PANEL ELEVATION

(16 REQUIRED)
(AT PIER LOOKING TOWARD ABUTMENT)

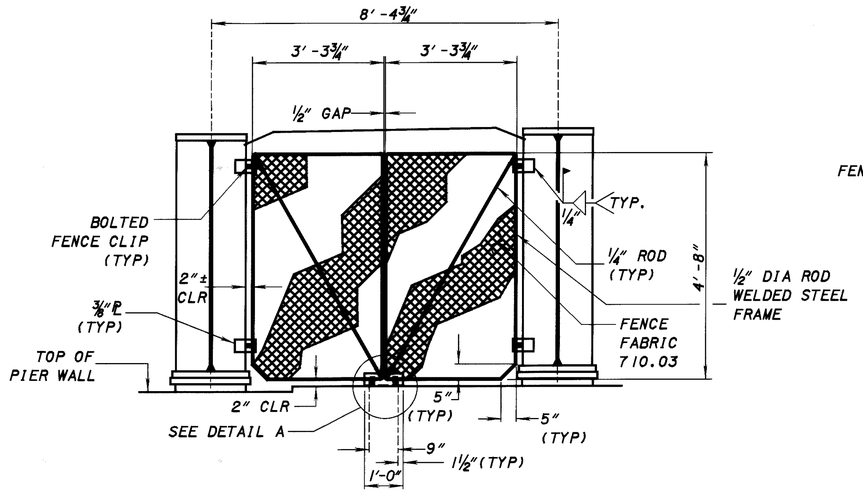

GATE PANEL ELEVATION

(REQUIRED BETWEEN GIRDERS F & E)

SEE SHEET 23/34 FOR LOCATION OF FENCE PANELS.

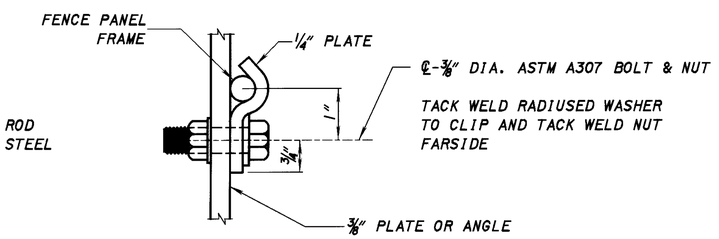

BOLTED FENCE CLIP

(4 REQUIRED ON FIXED PANEL)
(6 REQUIRED ON GATE PANEL)

BEFORE SPOILING THE THREADS THE CONTRACTOR SHALL VERIFY THAT THE SIDE CLIPS ON THE GATE PANEL WILL ACT AS HINGES. BOTTOM CLIPS ON THE GATE PANEL SHALL BE REMOVABLE. BOLTED FENCE CLIP AND MISC. DETAILS TO BE BENT TO ACCOMODATE THE OFFSET OF THE BEARING STIFFENERS.

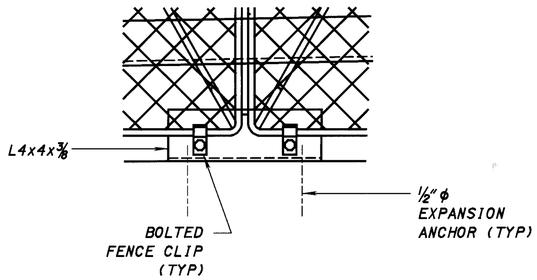

DETAIL A

ANCHORS TO BE SET INTO BRIDGE SEAT

ITEM 607-FENCE, MISC.: SCREEN FENCE

DESCRIPTION: THIS ITEM SHALL CONSIST OF FURNISHING ALL MATERIALS, LABOR AND EQUIPMENT NECESSARY TO FABRICATE AND INSTALL CHAIN LINK FENCE PANELS BETWEEN GIRDERS AS SHOWN ON THE PLANS AND AS SPECIFIED HEREIN.

MATERIALS: FENCE FABRIC AND INCIDENTALS SHALL BE PER 710.03 EXCEPT THE VINYL COVERING SHALL BE FEDERAL COLOR STANDARD NO. 16440 (LIGHT GRAY). THE FRAME SHALL BE FABRICATED FROM WELDED ½ INCH DIAMETER STEEL RODS. BOLTS SHALL BE ASTM A307. THE FRAME, LATCH AND HINGE TABS, AND HARDWARE SHALL BE GALVANIZED PER 711.02 AFTER FABRICATION AND POWDER POLYESTER COATED TO MANUFACTURER'S RECOMMENDATIONS USING FEDERAL COLOR STANDARD NO. 16440 (LIGHT GRAY).

CONSTRUCTION REQUIREMENTS: TWO WIRE-MESHED FRAMES SHALL BE PROVIDED FOR THE GATE SCREEN PANEL IN THE CENTER GIRDER BAY. SINGLE WIRE-MESHED FRAMES SHALL BE PROVIDED FOR THE SCREEN PANEL IN ALL OTHER BAYS, FIELD DRILL HOLES AT THE CONNECTION PLATES AND ANGLES TO MATCH THE LOCATION OF THE LATCH AND HINGE TABS. THE BOLTS FOR THE TABS SHALL BE DRAWN UP TIGHT. BOLTS THROUGH HINGE TABS (LOCATED ON VERTICAL SIDE OF GATE FRAMES) SHALL HAVE THREADS BURRED AT THE FACE OF THE NUT.

BASIS OF PAYMENT: THIS WORK SHALL BE PAID FOR AT THE CONTRACT UNIT PRICE LUMP SUM WHICH PRICE SHALL INCLUDE ALL COSTS FOR PERFORMING THE WORK AS SHOWN ON THE PLANS AND AS SPECIFIED HEREIN.

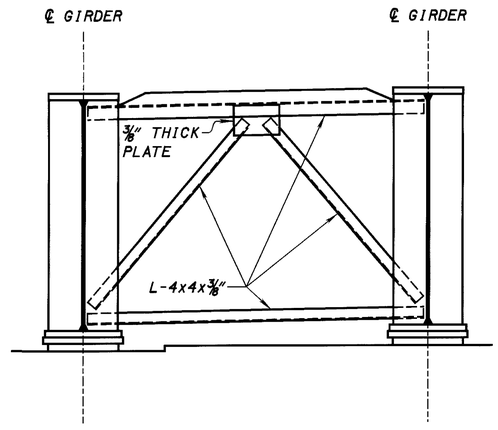

END CROSSFRAME LAYOUT

SEE GSD-1-96 FOR ADDITIONAL DETAILS

DESIGN AGENCY: ODOT CENTRAL OFFICE OFFICE OF PRODUCTION
DESIGNED: DFT
DRAWN: RJH
CHECKED: RJH
REVISED: REVISED
REVIEWED: TAA
DATE: 12-10-99
STRUCTURE FILE NUMBER: 5203589L/5203619R

FENCE AND END CROSS FRAME DETAILS
MED-71-1685 L/R
I-71 OVER S.R. 18

MED-71-15.78

33/34

719/940

MARK	NUMBER RIGHT	NUMBER LEFT	NUMBER TOTAL	LENGTH	WEIGHT LB	TYPE	DIMENSIONS A	B	C	D	E	R	INC
PARAPET													
X501	32	32	64	10'-0"	668	ST							
X502	9	9	18	5'-6"	103	25	1'-8"	2'-5"	1'-4"	0'-1½"	0'-5"		
X503	23	23	46	5'-6"	264	ST							
X504	72	72	144	30'-0"	4506	ST							
X505	12	12	24	11'-2"	280	ST							
X506	24	24	48	13'-6"	676	ST							
X601	12	12	24	30'-0"	1081	ST							
X602	2	2	4	14'-2"	85	ST							
X603	4	4	8	14'-0"	168	ST							
Y501	396	396	792	7'-5"	6127	23	1'-1"	3'-2"	3'-0"			2¾"	
Y601	396	396	792	3'-9"	4461	33	1'-9"	1'-1"	1'-1"				
Y602	396	396	792	2'-8"	3172	1	1'-1"	1'-9"					
Y603	8 SERIES OF 11	8 SERIES OF 11	16 SERIES OF 11	4'-3" TO 5'-1"	1234	1	10½"	3'-6" TO 4'-4"					1"
Y604	40	40	80	4'-3"	511	1	10½"	3'-6"					
SUPERSTRUCTURE (DECK)													
S401	252	252	504	40'-0"	13467	ST							
S402	63	63	126	24'-4"	2048	ST							
S501	284	284	568	40'-0"	23697	ST							
S502	71	71	142	26'-4"	3900	ST							
S503	1332	1332	2664	33'-0"	91692	ST							
S504	4 SERIES OF 18	4 SERIES OF 18	8 SERIES OF 18	4'-10" TO 31'-9"	2747	ST							1'-7"
S505	4 SERIES OF 17	4 SERIES OF 17	8 SERIES OF 17	4'-9" TO 30'-1"	2470	ST							1'-7"
S506	8	8	16	5'-0"	84	ST							
S601	248	248	496	33'-0"	24585	ST							
S602	24	24	48	33'-6"	2415	ST							

MARK	NUMBER REAR ABUT. RIGHT	REAR ABUT. LEFT	FWD. ABUT. RIGHT	FWD. ABUT. LEFT	TOTAL	LENGTH	WEIGHT LB	TYPE	DIMENSIONS A	B	C	D
A501	12	10	10	10	43	31'-11"	1432	STR				
A502	2	2	2	2	8	13'-7"	113	STR				
A503	2	2	2	2	8	22'-0"	184	STR				
A504	10	12	12	12	45	33'-4"	1565	STR				
A505	31	31	31	31	124	15'-8"	2027	2	4'-7"	6'-8"	4'-7"	
A506	66	66	66	66	264	4'-6"	1239	13	1'-2"	1'-1"	1'-1"	1'-2"
A507	66	66	66	66	264	4'-5"	1217	1	1'-6"	3'-0"		
A508	11	11	11	11	44	35'-4"	1621	19	33'-4"	7¼"	1'-11"	
A509	21	21	21	21	84	10'-5"	913	100	1'-3"	3'-8"		
A510	18	18	18	18	72	34'-4"	2578	STR				
A511	18	18	18	18	72	35'-9"	2685	STR				
A512	11	11	11	11	44	36'-9"	1686	19	34'-9"	7¼"	1'-11"	
A513	14	14	14	14	56	4'-6"	263	STR				
A514	35	35	35	35	140	6'-3"	913	2	2'-6"	1'-6"	2'-6"	
A515	42	42	42	42	168	6'-8"	1169	STR				
A601	132	132	132	132	528	8'-8"	6875	2	4'-0"	11"	4'-0"	
A801	53	53	53	53	212	25'-4"	14338	2	11'-0"	3'-8"	11'-0"	
A802	53	53	53	53	212	17'-4"	9809	2	7'-0"	3'-8"	7'-0"	
D801	66	66	66	66	264	4'-3"	2996	18	2'-7"	1'-0"	2'-7"	

MARK	PIER1 RIGHT	PIER1 LEFT	PIER2 RIGHT	PIER2 LEFT	TOTAL	LENGTH	WEIGHT	TYPE	DIMENSIONS A	B	C	D
P401	72	72	72	72	288	3'-9"	721	31	2'-8"			
P501	24	24	24	24	96	35'-5"	3547	STR				
P502	24	24	24	24	96	34'-9"	3479	STR				
P503	103	103	103	103	412	8'-0"	3438	2	2'-9"	2'-8"	2'-9"	
P504	16	16	16	16	64	34'-3"	2286	STR				
P505	16	16	16	16	64	38'-6"	2570	STR				
P506	49	49	49	49	196	9'-8"	1977	STR				
P801		208			208	17'-10"	9902	STR				
P802	208	208	208	208	832	10'-0"	22214	1	1'-2"	9'-0"		
P803	83	83	83	83	332	11'-6"	10194	17	9'-8"			
P804	6	6	6	6	24	37'-7"	2408	STR				
P805	6	6	6	6	24	35'-5"	2270	STR				
P806			208	208	416	19'-10"	11013	STR				
P807	208				208	18'-10"	10457	STR				
P901	24	24	24	24	96	3'-6"	1142	1	1'-3"	2'-4"		
P902	4	4	4	4	16	2'-8"	145	STR				
P903	6	6	6	6	24	2'-4"	190	STR				

DESIGN AGENCY
ODOT CENTRAL OFFICE
OFFICE OF PRODUCTION

REVIEWED DFT DATE 12-10-99
STRUCTURE FILE NUMBER 5203589L/5203619R

DRAWN TAA REVISED
DESIGNED TAA CHECKED HLG

REINFORCING STEEL LIST

MED-71-1685 L/R
I-71 OVER S.R. 18

MED-71-15.78

34/34

720
940

MARK	NUMBER REAR ABUT. RIGHT	NUMBER REAR ABUT. LEFT	NUMBER FWD. ABUT. RIGHT	NUMBER FWD. ABUT. LEFT	NUMBER TOTAL	LENGTH	WEIGHT LB	TYPE	DIMENSIONS A	B	C	D	INC
W601	--	16	16	--	32	50'-2"	2412	STR					
W602	--	4	--	--	4	49'-0"	295	STR					
W603	--	4	--	--	4	43'-8"	263	STR					
W604	--	24	24	--	48	42'-2"	3040	STR					
W605	4	4	4	4	16	25'-2"	606	STR					
W606	8	8	8	8	32	17'-4"	834	STR					
W607	4	4	--	--	8	22'-2"	266	101	3'-0"	16'-2"	1.15		
W608	8	8	8	8	32	12'-4"	593	8	7'-8"	2'-0"	3'-0"		
W609	8	8	--	--	16	21'-0"	505	101	3'-0"	15'-0"	1.43		
W610	12	12	12	12	48	10'-4"	745	STR					
W611	--	--	4	4	8	23'-10"	288	101	3'-0"	18'-0"	0.92		
W612	58	58	58	58	232	12'-2"	4240	3	2'-11"	2'-7"			
W613	16	16	16	16	64	16'-2"	1554	3	2'-11"	4'-7"			
	4	4	4	4		11'-5"			4'-5"		4'-5"		
W614	SETS	SETS	SETS	SETS	192	TO	2764	2	TO	2'-11"	TO		2"
	OF 12	OF 12	OF 12	OF 12		7'-9"			2'-7"		2'-7"		
W615	--	--	8	8	16	22'-5"	540	101	3'-0"	16'-5"	1.09		
	4	4				17'-2"							
W616	SETS	SETS	--	--	56	TO	1003	STR					1'-9"
	OF 7	OF 7				6'-8"							
			2			18'-8"							
W617	--	--	SETS	--	20	TO	381	STR					1'-4"
			OF 10			6'-8"							
			2	4		18'-0"							
W618	--	--	SETS	SETS	54	TO	1001	STR					1'-5"
			OF 9	OF 9		6'-8"							
W619	16	--	--	16	32	51'-10"	2491	STR					
W620	4	--	--	4	8	51'-1"	614	STR					
W621	4	--	--	4	8	47'-1"	566	STR					
W622	24	--	--	24	48	43'-11"	3167	STR					
W623	--	--	4	--	4	49'-6"	297	STR					
W624	--	--	4	--	4	46'-2"	278	STR					
W626	--	4	--	--	4	14'-9"	89	13	3'-0"	8'-0"	3'-8"	3'-0"	
W627	--	--	4	--	4	14'-3"	86	13	3'-0"	8'-0"	2'-3"	3'-0"	
W628	4	--	--	4	8	14'-6"	175	13	3'-0"	8'-0"	3'-0"	3'-0"	
		2				25'-3"							
W801	--	SETS	--	--	16	TO	887	STR					1'-3½"
		OF 8				16'-3"							
W802	124	116	116	124	480	11'-7"	14845	1	1'-2"	10'-8"			
		4				6'-4"							
W803	--	SETS	--	--	24	TO	331	STR					5½"
		OF 6				4'-0"							
W804	--	64	64	--	128	14'-5"	4927	STR					
W805	10	10	--	--	20	25'-10"	1380	STR					
W806	--	--	10	--	10	28'-6"	761	STR					
W807	--	10	--	--	10	25'-1"	669	STR					
W808	--	--	10	10	20	27'-10"	1487	STR					
			2			27'-9"							
W809	--	--	SETS	--	16	TO	954	STR					1'-6½"
			OF 8			16'-11"							
		2				24'-5"							
W810	--	SETS	--	--	16	TO	860	STR					1'-2½"
		OF 8				16'-0"							
			2			27'-1"							
W811	--	--	SETS	--	16	TO	938	STR					1'-5½"
			OF 8			16'-10"							

MARK	NUMBER REAR ABUT. RIGHT	NUMBER REAR ABUT. LEFT	NUMBER FWD. ABUT. RIGHT	NUMBER FWD. ABUT. LEFT	NUMBER TOTAL	LENGTH	WEIGHT LB	TYPE	DIMENSIONS A	B	C	D	INC
			4			7'-7"							
W812	--	--	SETS	--	24	TO	372	STR					8½"
			OF 6			4'-0"							
W813	10	--	--	--	10	26'-7"	710	STR					
W814	--	--	--	10	10	27'-2"	725	STR					
W815	72	--	--	72	144	14'-9"	5671	STR					
	2					26'-0"							
W816	SETS	--	--	--	16	TO	918	STR					1'-3½"
	OF 8					17'-0"							
				2		27'-1"							
W817	--	--	--	SETS	16	TO	926	STR					1'-6½"
				OF 8		16'-3"							
	2					25'-4"							
W818	SETS	--	--	--	16	TO	903	STR					1'-2½"
	OF 8					16'-11"							
				2		26'-5"							
W819	--	--	--	SETS	16	TO	910	STR					1'-5½"
				OF 8		16'-2"							
	4			4		6'-11"							
W820	SETS	--	--	SETS	48	TO	700	STR					7"
	OF 6			OF 6		4'-0"							

THIS REINFORCING STEEL LIST IS FOR INFORMATION PURPOSES ONLY

NOTES

NOTE: ALL REINFORCING STEEL SHALL BE EPOXY COATED.

THE BAR SIZE IS INDICATED IN THE BAR MARK. THE FIRST DIGIT INIDICATES THE BAR SIZE. FOR EXAMPLE, AN W601 IS A #5 BAR. BAR DIMENSIONS SHOWN ARE OUT TO OUT UNLESS OTHERWISE NOTED. "R" INDICATES INSIDE RADIUS.

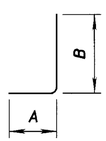

TYPE-1

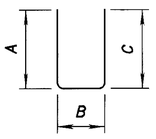

TYPE-2

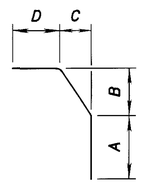

TYPE-13

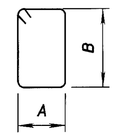

TYPE-3

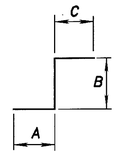

TYPE 8



TYPE-17

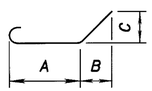

TYPE-18

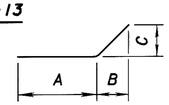

TYPE-19

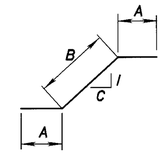

TYPE 101

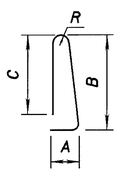

TYPE-23

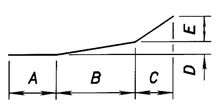

TYPE-25



TYPE-31

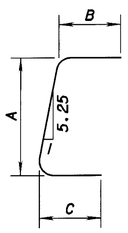

TYPE 33

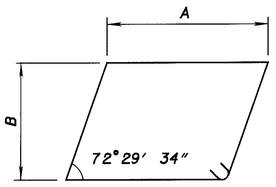

TYPE 100

DESIGN AGENCY: ODOT CENTRAL OFFICE OFFICE OF PRODUCTION

REVISED DFT DATE 12-10-99

STRUCTURE FILE NUMBER 52035891/52036191R

DRAWN BRC REVISED

DESIGNED BRC CHECKED BH

REINFORCING STEEL LIST

MED-71-1685 L/R
I-71 OVER S.R. 18

MED-71-15.78

34a/34

720a/940

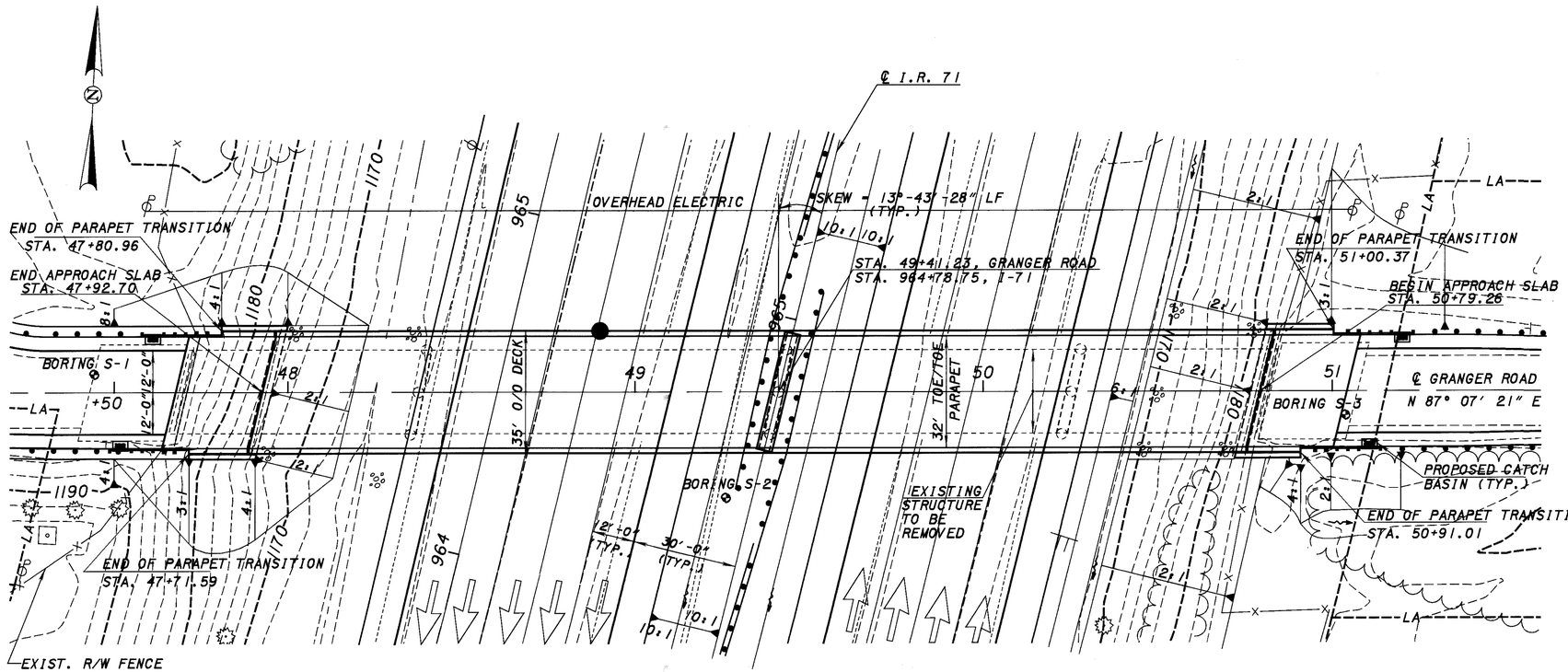

PLAN VIEW

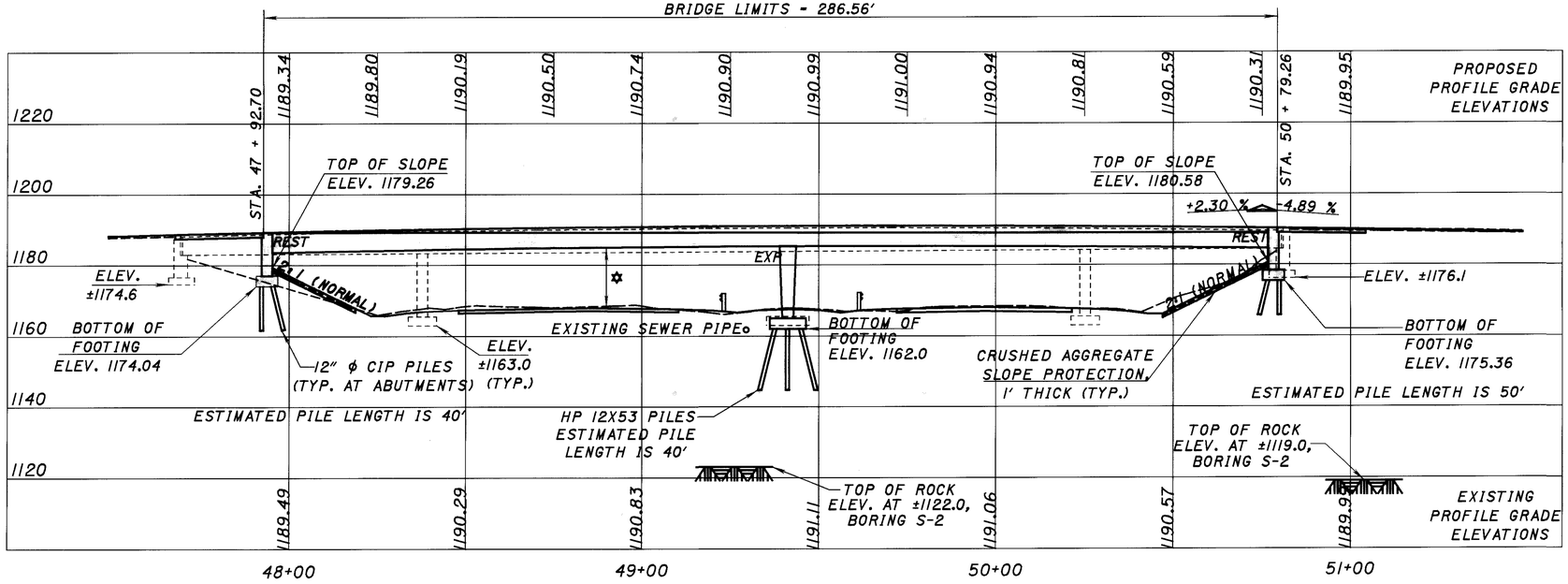

PROFILE ALONG ℄ SURVEY & CONSTRUCTION GRANGER ROAD

BENCHMARK DATA

STA. 954+80.07 ELEVATION - 1157.18
ODOT DISC IN HEADWALL, STAMPED

NOTES:

EARTHWORK LIMITS SHOWN ARE APPROXIMATE. ACTUAL SLOPES SHALL CONFORM TO PLAN CROSS SECTIONS. TRANSITION THE GRADING TO MATCH EXISTING CONDITION.

CURRENT YEAR ADT (2000) - 3330
DESIGN YEAR ADT (2020) - 4680
DESIGN YEAR ADTT (2020) - 610

LEGEND:

REST - RESTRAINED ABUTMENT, EXP. BRG.
EXP - EXPANSION BRG.

✡ REQUIRED MINIMUM VERTICAL CLEARANCE - 16'-6"
ACTUAL MINIMUM VERTICAL CLEARANCE - 16'-10"

● LOCATION OF MINIMUM VERTICAL CLEARANCE

VERTICAL CURVE DATA, GRANGER ROAD

V.P.I. STATION - 50+75.00
VPI ELEV. - 1,195.70
LVC - 600'
g_1 - +2.30 %
g_2 - -4.89 %

EXISTING STRUCTURE

TYPE: CONTINUOUS STEEL GIRDER WITH REINFORCED CONCRETE DECK AND SUBSTRUCTURE

SPANS: 67'-6", 103'-6", 84'-0", 54'-9"

ROADWAY: 24'-0" FACE TO FACE OF 2'-3" SAFETY CURBS

LOADING: CF - 130 (57)

SKEW: 13°-42'-30" LF

WEARING SURFACE: 3/4" MONOLITHIC CONCRETE

APPROACH SLABS: AS-1-54 (25' LONG)

ALIGNMENT: TANGENT

CROWN: 3/16"/FT

DATE BUILT: 1964

SFN: 5203635

PROPOSED STRUCTURE

TYPE: CONTINUOUS A572 STEEL COMPOSITE GIRDER WITH REINFORCED CONCRETE DECK AND SUBSTRUCTURES

SPANS: 147'-6", 137'-0" ℄ BEARING

ROADWAY: 32'-0" TOE/TOE CONCRETE PARAPET

LOADING: HS20-44 CASE II AND ALTERNATE MILITARY LOADING

SKEW: 13°-43'-28" LF

WEARING SURFACE: 1" MONOLITHIC CONCRETE

APPROACH SLABS: AS-1-81 (25' LONG), 32'-0" T/T CURB

ALIGNMENT: TANGENT

CROWN: 3/16"/FT

COORDINATES: LATITUDE: 41°-9'-22"
LONGITUDE: 81°-47'-10"

DESIGN AGENCY: ODOT CENTRAL OFFICE, OFFICE OF PRODUCTION
REVIEWED: DFT
DATE: 6-1-99
STRUCTURE FILE NUMBER: 5203643
DRAWN: HLG
REVISED:
DESIGNED: HLG
CHECKED: RJH

MEDINA COUNTY
STA. 47+92.70
STA. 50+79.26

SITE PLAN
BRIDGE NO. MED-71-1828
IR-71 UNDER GRANGER ROAD CH-21

MED-71-15.78

1/16

721/940

ESTIMATED QUANTITIES					ABUTMENTS		PIER	SUPER	GEN.	SEE SHEET NO.
ITEM	EXTENSION	TOTAL	UNIT	DESCRIPTION	REAR	FORWARD				
202	11002	LUMP		STRUCTURE REMOVED, OVER 20 FOOT SPAN					LUMP	
503	11100	LUMP		COFFERDAMS, CRIBS AND SHEETING					LUMP	
503	21301	LUMP		UNCLASSIFIED EXCAVATION, AS PER PLAN					LUMP	3
505	11100	LUMP		PILE DRIVING EQUIPMENT MOBILIZATION					LUMP	
507	00200	885	LF	STEEL PILES HP12X53, FURNISHED			885			
507	00250	885	LF	STEEL PILES HP12X53, DRIVEN			885			
507	00500	1170	LF	12" CAST-IN-PLACE REINFORCED CONCRETE PILES, DRIVEN	520	650				
507	00550	1170	LF	12" CAST-IN-PLACE REINFORCED CONCRETE PILES, FURNISHED	520	650				
507	50500	24	EACH	STEEL PILE SPLICES	6	7	11			
SPECIAL	51267510	1090	SY	SEALING OF CONCRETE SURFACES (EPOXY-URETHANE)	94	94	168	734		3
516	13600	18	SF	1" PREFORMED EXPANSION JOINT FILLER	9	9				
516	13900	160	SF	2" PREFORMED EXPANSION JOINT FILLER	80	80				
516	44100	5	EACH	ELASTOMERIC BEARING WITH INTERNAL LAMINATES AND LOAD PLATE (NEOPRENE)(18"X24"X2¼" PAD & 19"X25"X2" PLATE)			5			
516	44201	10	EACH	ELASTOMERIC BEARING WITH INTERNAL LAMINATES AND LOAD PLATE (NEOPRENE), AS PER PLAN(12"X18"X3½" PAD & 13"X19"X1½" PLATE)	5	5				13
518	21231	LUMP		POROUS BACKFILL WITH FILTER FABRIC, AS PER PLAN	LUMP	LUMP				3
518	40000	104	LF	6" PERFORATED CORRUGATED PLASTIC PIPE	52	52				
518	40010	44	LF	6" NON-PERFORATED CORRUGATED PLASTIC PIPE, INCLUDING SPECIALS	22	22				
601	20500	90	CY	CRUSHED AGGREGATE SLOPE PROTECTION	45	45				
816	00600	LUMP		FIELD PAINTING OF NEW STEEL, INTERMEDIATE AND FINISH COAT, SYSTEM IZEU				LUMP		
842	40501	95	CY	CLASS C CONCRETE, PIER ABOVE FOOTINGS, AS PER PLAN			95			3
842	44101	66	CY	CLASS C CONCRETE, ABUTMENT NOT INCLUDING FOOTING, AS PER PLAN	33	33				3
842	46501	108	CY	CLASS C CONCRETE, FOOTING, AS PER PLAN	34	34	40			3
844	48001	291	CY	HIGH PERFORMANCE CONCRETE SUPERSTRUCTURE (DECK), AS PER PLAN (MIX 4)				291		3
844	48021	101	CY	HIGH PERFORMANCE CONCRETE SUPERSTRUCTURE (PARAPET*), AS PER PLAN (MIX 4)				101		3
844	48041	42	CY	HIGH PERFORMANCE CONCRETE SUBSTRUCTURE, AS PER PLAN (MIX 4)	21	21				3
844	49000	LUMP		HIGH PERFORMANCE CONCRETE TRIAL MIX					LUMP	
844	49010	LUMP		HIGH PERFORMANCE CONCRETE TESTING					LUMP	
863	10080	LUMP		STRUCTURAL STEEL MEMBERS, LEVEL FOUR (4) FABRICATION, A572				LUMP		
863	20000	1590	EACH	WELDED STUD SHEAR CONNECTORS				1590		

*PARAPET ON THE APPROACH SLAB IS INCLUDED WITH THIS PAY ITEM.

DESIGN AGENCY
ODOT CENTRAL OFFICE
OFFICE OF PRODUCTION

DESIGNED HLG | DRAWN HLG | REVIEWED RJH | DATE 8-27-99
CHECKED DFT | REVISED | STRUCTURE FILE NUMBER 5203643

ESTIMATED QUANTITIES
BRIDGE NO. MED-71-1828
IR-71 UNDER GRANGER ROAD (CH 21)

MED-71-15.78

722
940

STANDARD DRAWINGS AND SPECIFICATIONS:

REFERENCE SHALL BE MADE TO STANDARD DRAWINGS:

AS-1-81	REVISED 09-15-94
SBR-1-99	DATED 01-12-99
GSD-1-96	DATED 02-12-97

AND TO SUPPLEMENTAL SPECIFICATIONS:

816	DATED 04-21-97
842	DATED 01-06-99
844	DATED 01-06-99
863	DATED 10-12-99
899	DATED 10-21-98
910	DATED 07-28-98
911	DATED 07-10-97
954	DATED 09-09-97

DESIGN SPECIFICATIONS:

THIS STRUCTURE CONFORMS TO "STANDARD SPECIFICATIONS FOR HIGHWAY BRIDGES" ADOPTED BY THE AMERICAN ASSOCIATION OF STATE HIGHWAY AND TRANSPORTATION OFFICIALS, 1996 INCLUDING THE 1997 AND 1998 INTERIM SPECIFICATIONS AND THE ODOT BRIDGE DESIGN MANUAL.

DESIGN LOADING:

HS20-44, CASE II AND THE ALTERNATE MILITARY LOADING.

DESIGN DATA:

HIGH PERFORMANCE CONCRETE - COMPRESSIVE STRENGTH 4500 PSI (SUPERSTRUCTURE)

HIGH PERFORMANCE CONCRETE - COMPRESSIVE STRENGTH 4000 PSI (SUBSTRUCTURE)

ITEM 842 CONCRETE - COMPRESSIVE STRENGTH 4000 PSI (SUBSTRUCTURE)

REINFORCING STEEL - ASTM A615, A616 OR A617
GRADE 60 MINIMUM YIELD STRENGTH 60 Ksi. SPIRAL REINFORCEMENT MAY BE PLAIN BARS, ASTM A82 OR A615

STRUCTURAL STEEL - A572 - YIELD STRENGTH 50 Ksi

DECK PROTECTION METHOD - EPOXY COATED REINFORCING STEEL AND 2½" CONCRETE COVER AND HIGH PERFORMANCE CONCRETE.

MONOLITHIC WEARING SURFACE IS ASSUMED, FOR DESIGN PURPOSES, TO BE 1" THICK.

REMOVAL OF EXISTING STRUCTURE:

WHEN NO LONGER NEEDED TO MAINTAIN TRAFFIC THE EXISTING STRUCTURE SHALL BE REMOVED UPON RECEIVING PERMISSION FROM THE ENGINEER.

EXISTING BRIDGE PLANS MAY BE INSPECTED IN THE OFFICE OF STRUCTURAL ENGINEERING IN COLUMBUS, OHIO OR AT THE ODOT DISTRICT THREE OFFICE IN ASHLAND, OHIO.

SEALING OF CONCRETE SURFACES (EPOXY-URETHANE)

EPOXY-URETHANE SHALL BE THE "BUFF" COLOR MEETING FEDERAL COLOR STANDARD NO. 37722. FOR ADDITIONAL NOTES SEE THE NOTE IN THE PROPOSAL "ITEM SPECIAL - SEALING OF CONCRETE SURFACES."

ITEM 842, CLASS C CONCRETE, ABUTMENT NOT INCLUDING FOOTING, AS PER PLAN

INSTALL A 3 FOOT WIDE STRIP, 3/32 INCH THICK, GENERAL PURPOSE, HEAVY DUTY NEOPRENE SHEET WITH NYLON FABRIC REINFORCEMENT AT LOCATIONS SHOWN IN THE PLANS. SECURE THE 3 FOOT WIDE NEOPRENE SHEETING TO THE CONCRETE WITH 1¼" X 3/32" (LENGTH X SHANK DIAMETER) #10 GALVANIZED BUTTON HEAD SPIKE THROUGH A 1 INCH OUTSIDE DIAMETER, #10 GAGE GALVANIZED WASHER. MAXIMUM FASTENER SPACING IS 9 INCHES. OTHER SIMILAR GALVANIZED DEVICES WHICH WILL NOT DAMAGE EITHER THE NEOPRENE OR THE CONCRETE MAY BE USED SUBJECT TO THE APPROVAL OF THE ENGINEER.

CENTER THE NEOPRENE STRIPS ON ALL JOINTS. FOR HORIZONTAL JOINTS, SECURE THE HORIZONTAL NEOPRENE STRIP BY USING A SINGLE LINE OF FASTENERS, STARTING AT 6 INCHES (+/-) FROM THE TOP OF THE NEOPRENE STRIP. FOR THE VERTICAL JOINTS SECURE THE VERTICAL NEOPRENE STRIP BY USING A SINGLE VERTICAL LINE OF FASTENERS, STARTING AT 6 INCHES (+/-) FROM THE VERTICAL EDGE OF THE NEOPRENE STRIP NEAREST TO THE CENTERLINE OF ROADWAY. FOR VERTICAL JOINTS, INSTALL 2 ADDITIONAL FASTENERS, AT 6 INCHES CENTER TO CENTER, ACROSS THE TOP OF THE NEOPRENE STRIP ON THE SAME SIDE OF THE VERTICAL JOINT AS WHERE THE SINGLE VERTICAL ROW OF FASTENERS IS LOCATED.

THE VERTICAL NEOPRENE STRIPS SHOULD COMPLETELY OVERLAP THE HORIZONTAL STRIPS. LAPS IN THE LENGTH OF THE HORIZONTAL STRIPS DUE TO MATERIAL MANUFACTURING SHALL BE AT LEAST ONE FOOT IN LENGTH, IF NOT VULCANIZED OR ADHESIVE BONDED, OR 6 INCHES IN LENGTH IF THE LAP IS VULCANIZED OR ADHESIVE BONDED. NO LAPS ARE ACCEPTABLE IN VERTICALLY INSTALLED NEOPRENE STRIPS.

THE NEOPRENE SHEETING SHALL BE 3/32 INCH THICK GENERAL PURPOSE, HEAVY DUTY NEOPRENE SHEET WITH NYLON FABRIC REINFORCEMENT. THE SHEETING SHALL BE "FAIRPRENE NUMBER NN-0003", BY E. I. DUPONT DE NEMOURS AND COMPANY, INC., "WINGPRENE" BY THE GOODYEAR TIRE AND RUBBER COMPANY, OR AN APPROVED ALTERNATE. THE NEOPRENE SHEETING SHALL CONFORM TO THE FOLLOWING:

DESCRIPTION OF TEST	ASTM METHOD	REQUIREMENT
THICKNESS, INCHES	D 751	0.094 ± .01
BREAKING STRENGTH, GRAB WXF, LBS, MINIMUM	D 751	700 X 700
ADHESIVE 1" STRIP, 2" MINIMUM, LBS, MINIMUM	D 751	9
BURST STRENGTH (MULLEN) PSI, MINIMUM	D 751	1400
HEAT AGING 70 HOURS T 212 F, 180 BEND WITHOUT CRACKING	D 2136	NO CRACKING OF COATING
LOW TEMPERATURE BRITTLENESS 1 HOUR AT -40 F, BEND AROUND ¼ INCH MANDREL	D 2136	NO CRACKING OF COATING

PAYMENT FOR LABOR, MATERIALS AND INSTALLATION OF THESE ITEMS SHALL BE INCLUDED IN ITEM 842, CLASS C CONCRETE, ABUTMENT NOT INCLUDING FOOTING, AS PER PLAN.

ITEM 503, UNCLASSIFIED EXCAVATION, AS PER PLAN:

UNCLASSIFIED EXCAVATION SHALL BE IN ACCORDANCE WITH 503 EXCEPT THAT THE BACKFILL MATERIAL BEHIND THE ABUTMENTS SHALL BE 203 MATERIAL PLACED IN 6" LIFTS. EXCAVATION AT ABUTMENTS IN ADDITION TO THAT NECESSARY TO REMOVE PORTION OF THE EXISTING STRUCTURE SHALL BE INCLUDED IN THE LUMP SUM PRICE BID FOR ITEM 503, UNCLASSIFIED EXCAVATION FOR PAYMENT.

ITEM 842 CLASS C CONCRETE, (FOOTINGS, PIERS AND ABUTMENTS) AS PER PLAN

THE COARSE AGGREGATE SHALL BE NO. 8 LIMESTONE. THESE ITEMS SHALL INCLUDE THE COST OF THE REINFORCING STEEL.

ITEM 844 HIGH PERFORMANCE CONCRETE, AS PER PLAN

THE DESIGN MIX SHALL BE MIX NO. 4 LIMESTONE. THE OPTION OF SLIPFORM CONSTRUCTION OF THE BRIDGE PARAPET IS NOT PERMITTED. THESE ITEMS SHALL INCLUDE THE COST OF THE REINFORCING STEEL.

REINFORCING STEEL:

NEW REINFORCING STEEL MAY REQUIRE BENDING TO BE PROPERLY FITTED. PAYMENT SHALL BE INCLUDED UNER ITEM 844 HIGH PERFORMANCE CONCRETE OR ITEM 842, CLASS C CONCRETE.

ITEM 518 - POROUS BACKFILL WITH FILTER FABRIC, AS PER PLAN

POROUS BACKFILL SHALL BE #57 GRAVEL ONLY.

PILE DRIVING CONSTRAINTS:

PRIOR TO DRIVING PILES, THE SPILL THROUGH SLOPES AND THE BRIDGE APPROACH EMBANKMENT BEHIND THE REAR ABUTMENT SHALL BE CONSTRUCTED UP TO THE LEVEL OF THE SUBGRADE ELEVATION FOR A MINIMUM DISTANCE OF 25 FEET BEHIND THE REAR ABUTMENT. THE EXCAVATION FOR THE ABUTMENT FOOTINGS AND THE INSTALLATION OF THE ABUTMENT PILES SHALL NOT BEGIN UNTIL AFTER THE ABOVE REQUIRED EMBANKMENT HAS BEEN CONSTRUCTED.

ITEM 507 12" CAST-IN PLACE REINFORCED CONCRETE PILES

THE DESIGN LOAD IS 53 TONS PER PILE FOR THE ABUTMENT PILES. THE ULTIMATE BEARING VALUE IS 106 TONS PER PILE. THE ULTIMATE BEARING VALUE IS TWO TIMES THE ACTUAL DESIGN LOAD. THE ABUTMENT PILES SHALL BE DRIVEN TO THE ULTIMATE BEARING VALUE.

ITEM 507 STEEL PILES HP12X53

THE DESIGN LOAD IS 65 TONS PER PILE FOR THE PIER PILES. THE ULTIMATE BEARING VALUE IS 130 TONS PER PILE. THE PIER PILES SHALL BE DRIVEN TO REFUSAL ON THE BEDROCK. REFUSAL SHALL BE CONSIDERED AS OBTAINED BY PENETRATING SOFT BEDROCK FOR SEVERAL INCHES WITH A MINIMUM RESISTANCE OF 20 BLOWS PER ONE INCH OR REFUSAL SHALL BE CONSIDERED AS OBTAINED AFTER THE PILE HAS CONTACTED HARD BEDROCK AND THE PILE HAS THEN RECEIVED AT LEAST 20 BLOWS.

SURVEY DISC ON STRUCTURE:

THE CONTRACTOR SHALL NOTIFY THE ENGINEER AT LEAST ONE (1) WEEK IN ADVANCE OF POURING THE CONCRETE FOR COMPLETION OF THE ABUTMENT. THE ENGINEER WILL PROVIDE THE CONTRACTOR ONE (1) SURVEY DISC FOR EACH STRUCTURE (OBTAINED FROM THE DISTRICT SURVEYOR) WHICH THE CONTRACTOR SHALL PLACE IN THE SURFACE OF THE FRESH CONCRETE. THE LOCATION OF THE DISC SHALL BE ON THE ABUTMENT, AND ON A FLAT, HORIZONTAL SURFACE BEYOND THE EDGE OF DECK AND PARAPET. THE BENCHMARK SHALL BE ACCESSIBLE TO A SURVEYOR'S ROD WITHOUT ANY OBSTRUCTIONS. COST OF THIS WORK IS CONSIDERED INCIDENTAL TO THE CONCRETE BID ITEM.

PAINTING OF 863 STEEL

THE COLOR OF THE FINISH COAT SHALL BE A LIGHT GRAY COLOR MEETING FEDERAL STANDARD NUMBER 16440. IN ADDITION TO THE SURFACE AREA OF THE STEEL STRINGERS TO BE PAINTED SHALL INCLUDE INCIDENTALS SUCH AS CROSS FRAMES, STIFFENERS AND BEARINGS.

DESIGN AGENCY: ODOT CENTRAL OFFICE, OFFICE OF PRODUCTION

DESIGNED	DRAWN	REVIEWED	DATE
HLG	HLG	RJH	8-27-99

CHECKED: DFT — REVISED — STRUCTURE FILE NUMBER 5203643

GENERAL NOTES

BRIDGE NO. MED-71-1828
IR-71 UNDER GRANGER ROAD (CH 21)

MED-71-15.78

723/940

REAR ABUTMENT (N)

FORWARD ABUTMENT (N)

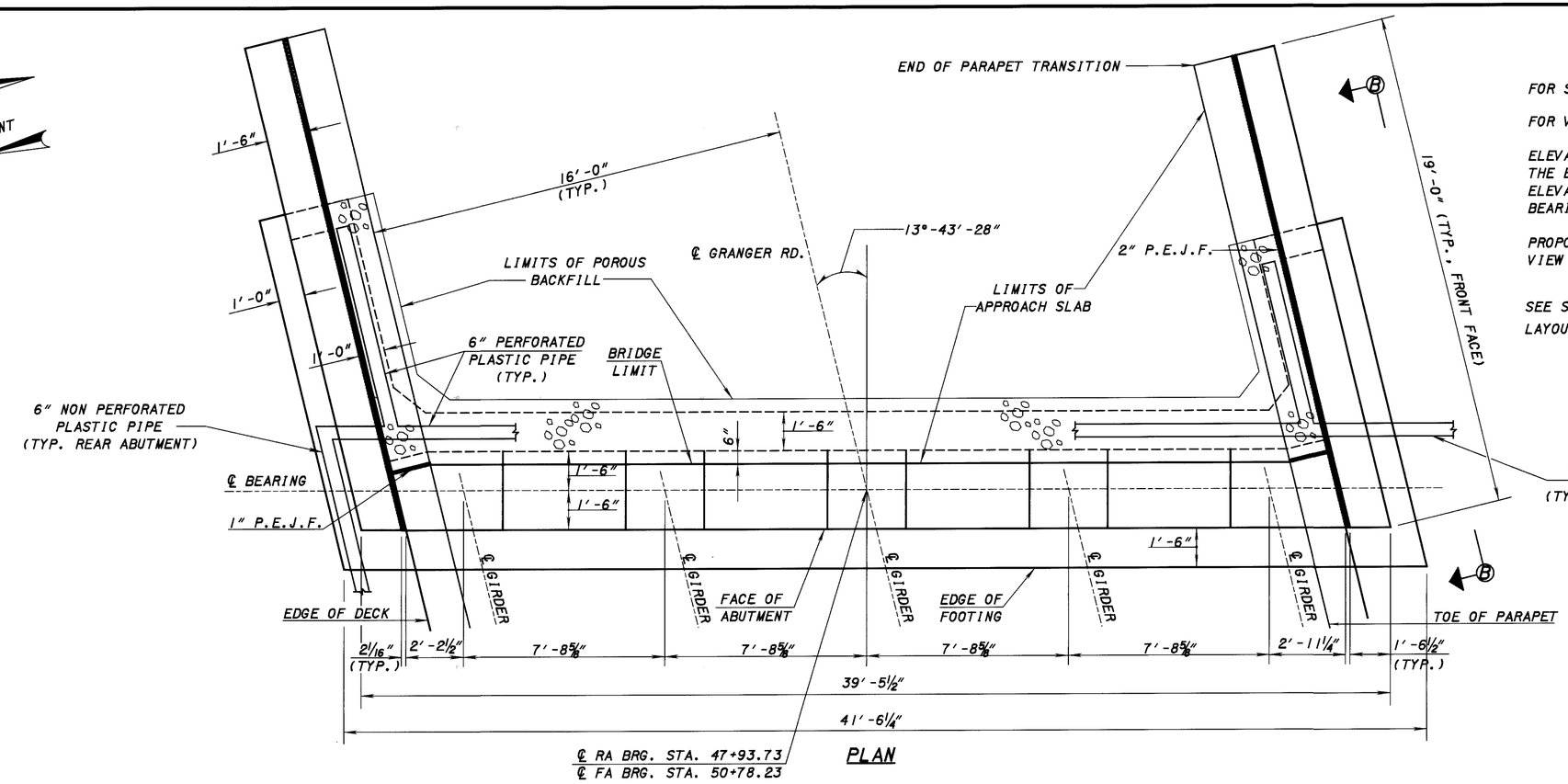

PLAN

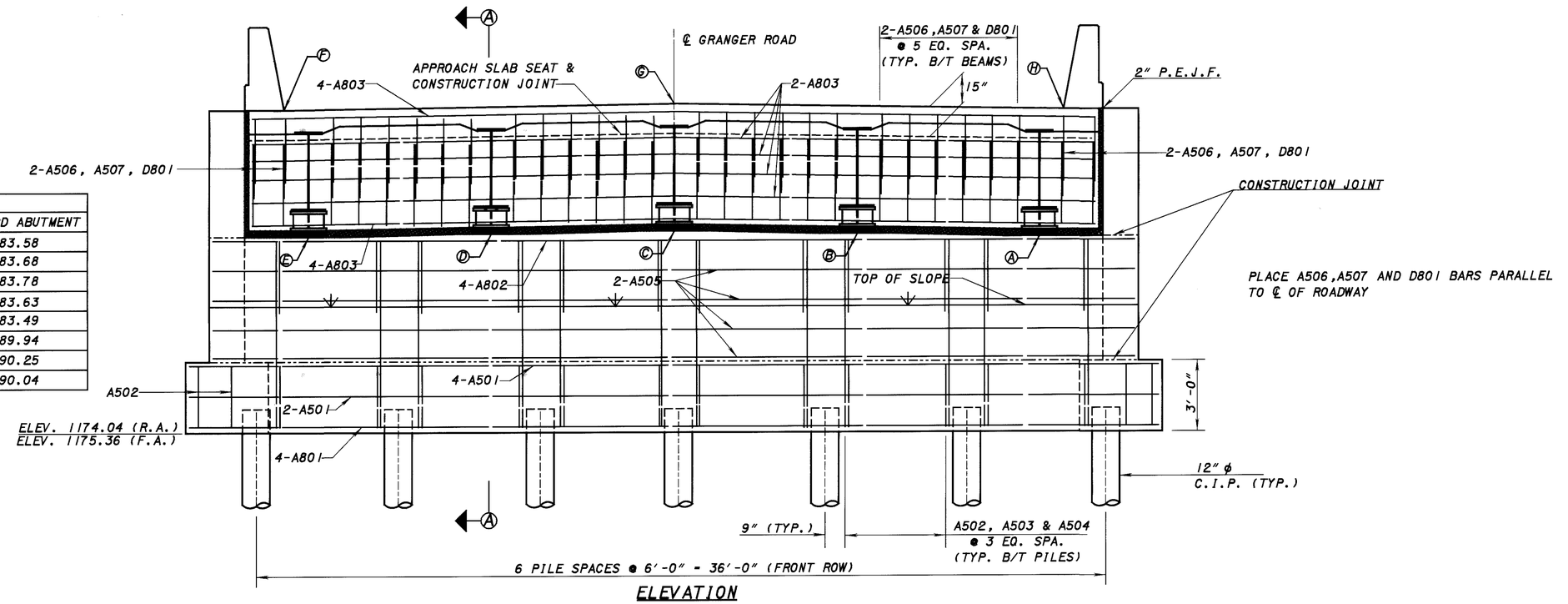

ELEVATION

LOCATION	ELEVATION	
	REAR ABUTMENT	FORWARD ABUTMENT
A	1182.55	1183.58
B	1182.64	1183.68
C	1182.72	1183.78
D	1182.56	1183.63
E	1182.40	1183.49
F	1188.85	1189.94
G	1189.19	1190.25
H	1189.01	1190.04

NOTES:

FOR SECTION (A)-(A) SEE SHEET 5/16

FOR VIEW (B)-(B) SEE SHEET 5/16

ELEVATIONS SHOWN ARE MEASURED ALONG THE BRIDGE LIMITS. BEAM SEAT ELEVATIONS ARE MEASURED ALONG ℄ OF BEARING.

PROPOSED PILES ARE NOT SHOWN IN PLAN VIEW FOR CLARITY.

SEE SHEET 6/16 FOR ABUTMENT PILE LAYOUT PLAN

DESIGN AGENCY: ODOT CENTRAL OFFICE, OFFICE OF PRODUCTION

DESIGNED HLG | DRAWN HLG | REVIEWED RJH | DATE 8-27-99

CHECKED | REVISED | STRUCTURE FILE NUMBER 5203643

ABUTMENT PLAN & ELEVATION

BRIDGE NO. MED-71-1828

IR-71 UNDER GRANGER ROAD (CH 21)

MED-71-15.78

4/16

724/940

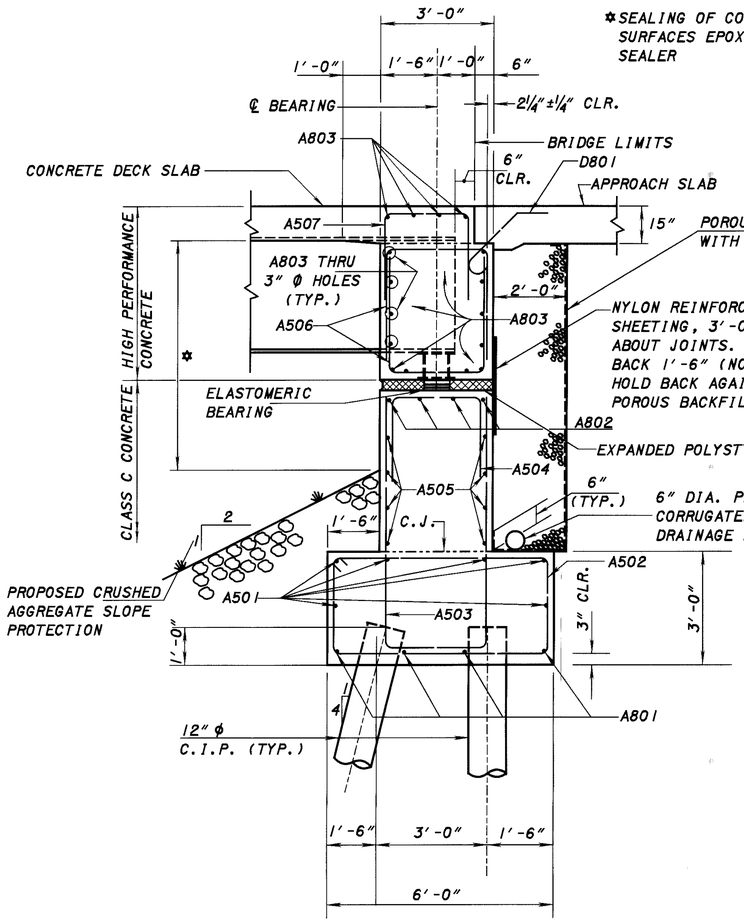

SECTION A-A

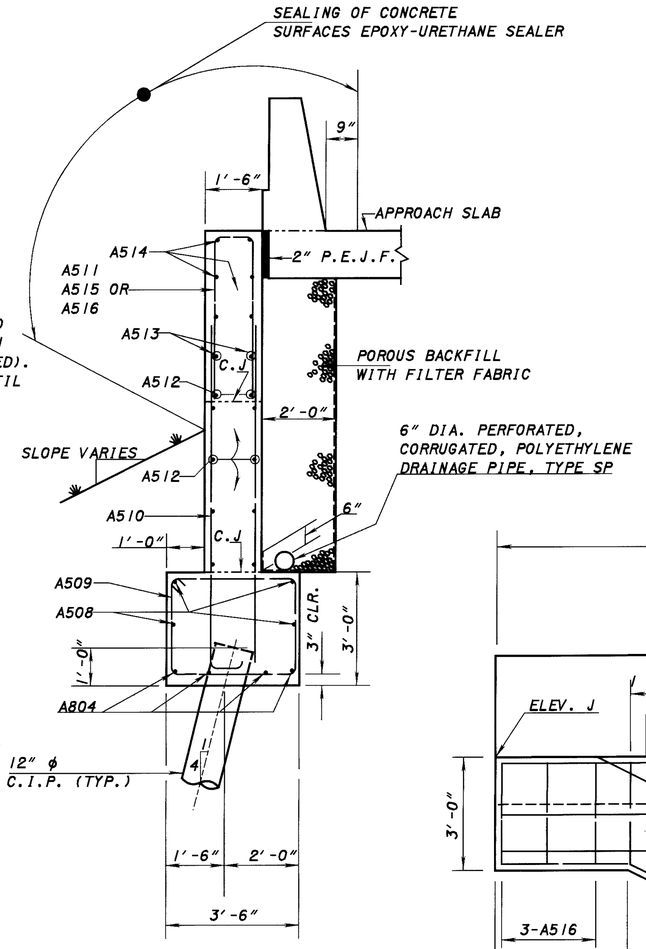

SECTION C-C

NOTES

POROUS BACKFILL:
POROUS BACKFILL WITH FILTER FABRIC, 2′-0″ THICK SHALL EXTEND UP TO THE PLANE OF THE SUBGRADE, TO 12″ BELOW THE EMBANKMENT SURFACE, AND LATERALLY TO THE ENDS OF THE WINGWALL FOOTINGS.

DIAPHRAGM CONCRETE ENCASING THE STEEL BEAMS SUPPORTED IN THE SEMI INTEGRAL ABUTMENT SHALL BE PLACED AT LEAST 48 HOURS BEFORE THE ACTUAL DECK CONCRETE IS PLACED.

PROVIDE 3″ Ø HOLE THRU WEB AS NOTED, PAYMENT TO BE INCLUDED AS INCIDENTAL WITH ITEM 863 STRUCTURAL STEEL. PAYMENT FOR THE EXPANDED POLYSTYRENE FILLER TO BE INCLUDED WITH ITEM 844 HIGH PERFORMANCE CONCRETE AS INCIDENTAL.

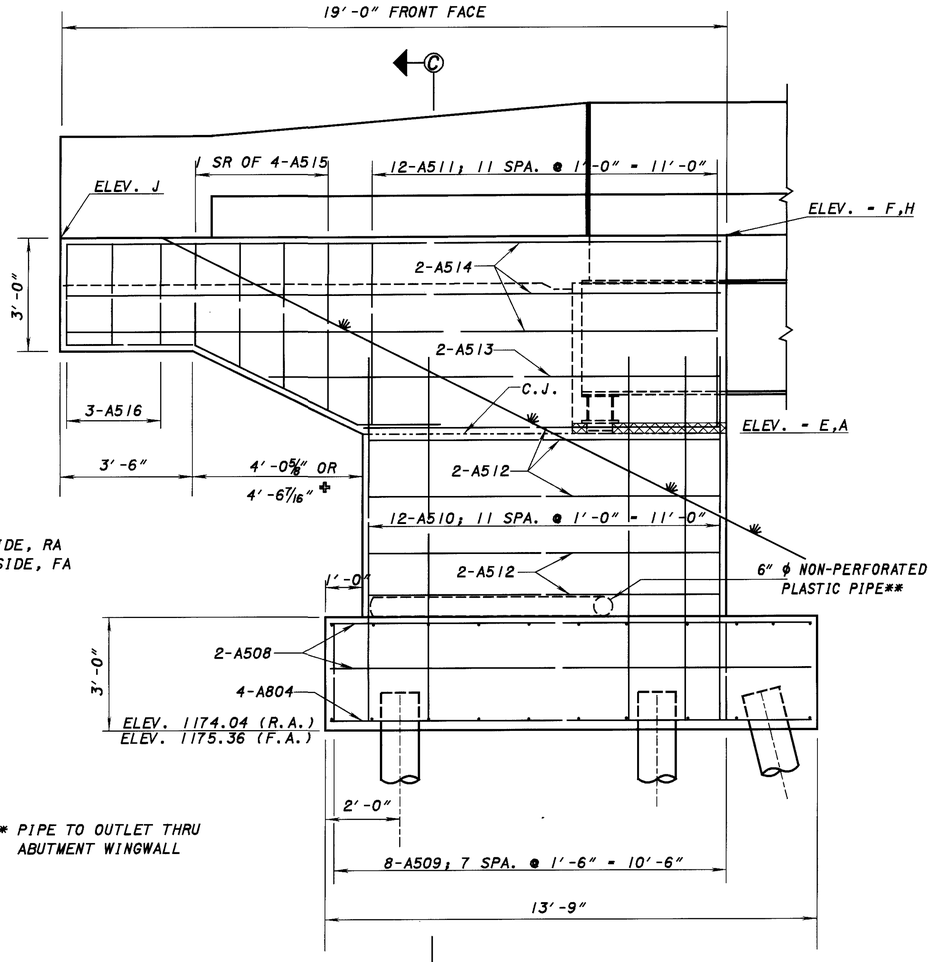

	ELEV. J	STATION
R.A., RT	1188.46	47+71.59
R.A., LT	1188.67	47+80.96
F.A., RT	1189.82	50+91.01
F.A., LT	1189.68	51+00.37

** PIPE TO OUTLET THRU ABUTMENT WINGWALL

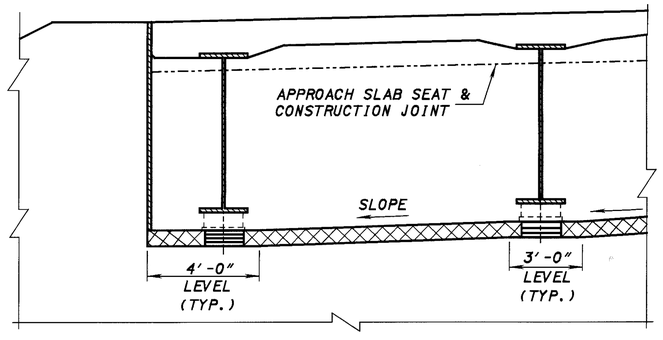

PART ELEVATION OF BEAM SEAT

DESIGN AGENCY: ODOT CENTRAL OFFICE, OFFICE OF PRODUCTION

DESIGNED	DRAWN	REVIEWED	DATE
HLG	HLG	RJH	8-27-99
CHECKED	REVISED	STRUCTURE FILE NUMBER	
DFT		5203643	

ABUTMENT DETAILS

BRIDGE NO. MED-71-1828
IR-71 UNDER GRANGER ROAD (CH 21)

MED-71-15.78

5/16

725/940

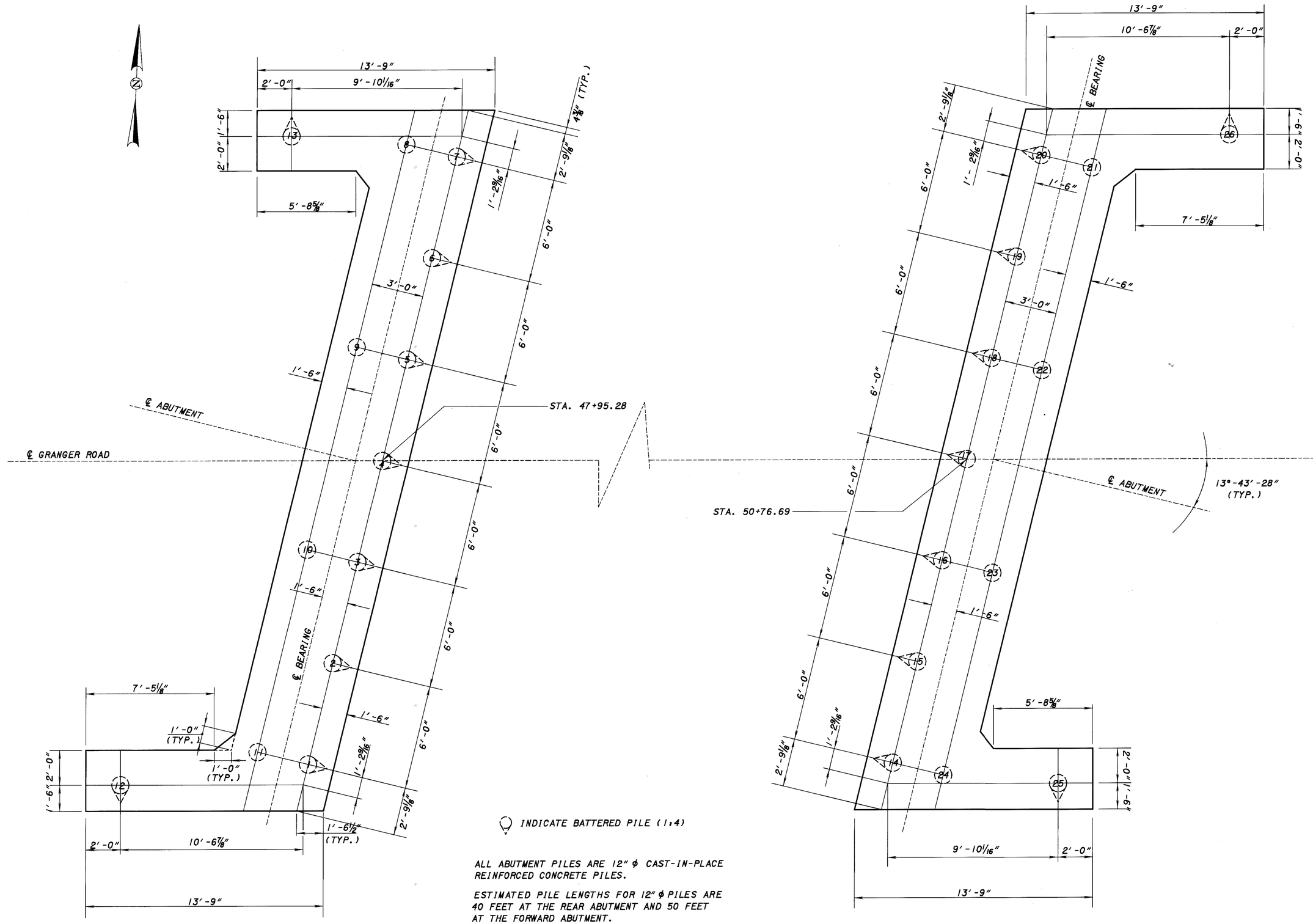

INDICATE BATTERED PILE (1:4)

ALL ABUTMENT PILES ARE 12" ϕ CAST-IN-PLACE REINFORCED CONCRETE PILES.

ESTIMATED PILE LENGTHS FOR 12" ϕ PILES ARE 40 FEET AT THE REAR ABUTMENT AND 50 FEET AT THE FORWARD ABUTMENT.

DESIGN AGENCY
ODOT CENTRAL OFFICE
OFFICE OF PRODUCTION

DESIGNED	DRAWN	REVISED	DATE
HLG	HLG	RJH	8-27-99
CHECKED	REVISED	STRUCTURE FILE NUMBER	
DFT		5203643	

ABUTMENT PILING LAYOUT

BRIDGE NO. MED-71-1828
IR-71 UNDER GRANGER ROAD (CH 21)

MED-71-15.78

6/16

726/940

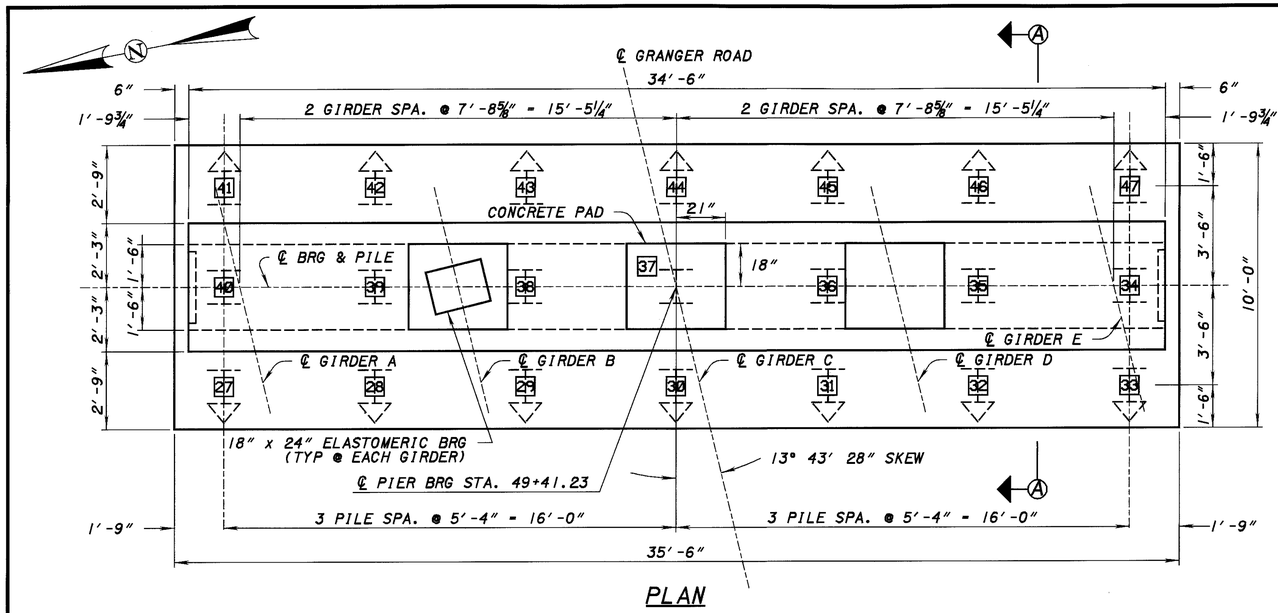

PLAN

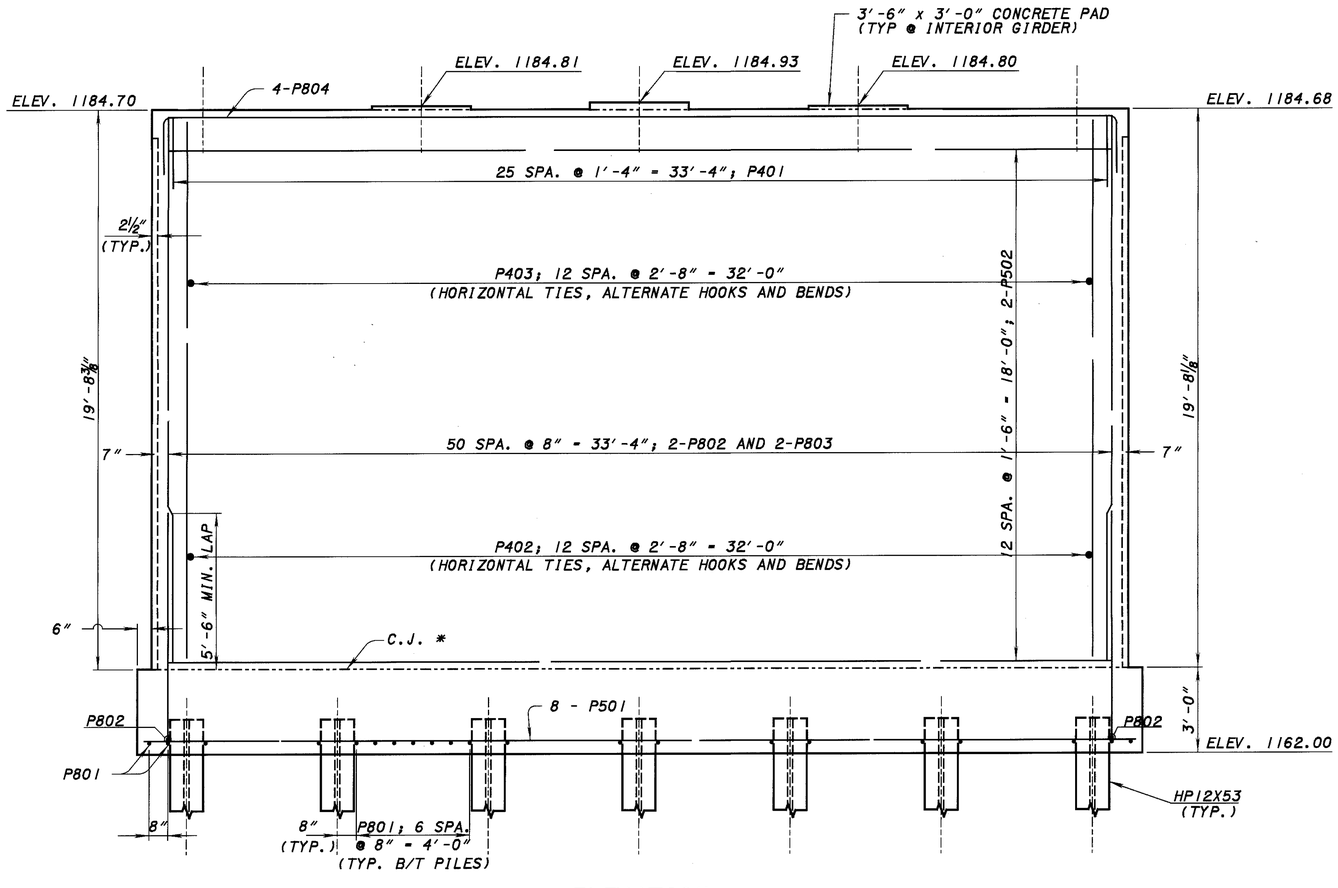

ELEVATION

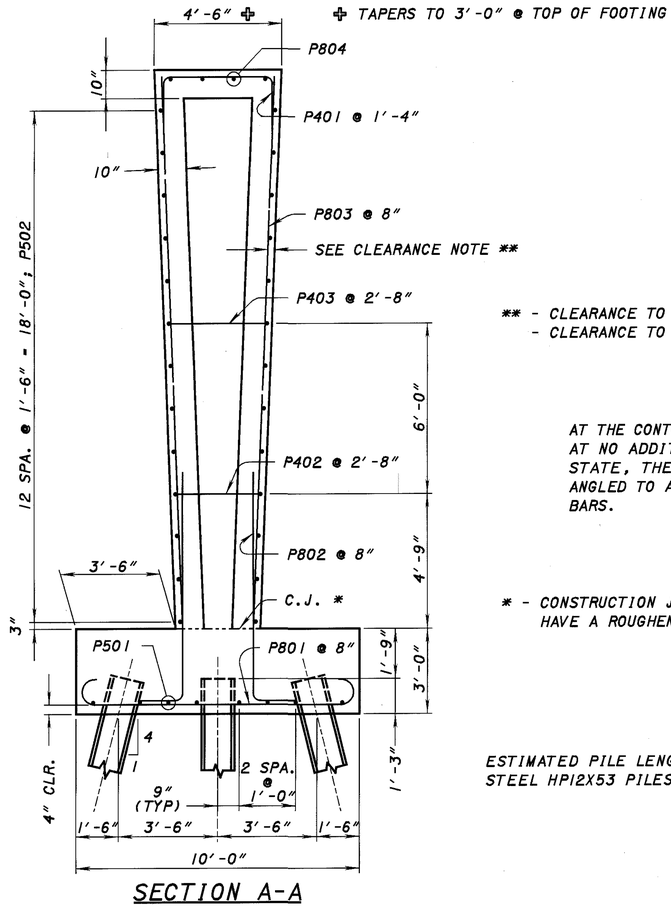

SECTION A-A

NOTES

THE VERTICAL SURFACE OF THE PIER FROM THE TOP OF FOOTING TO BRIDGE SEAT SHALL BE SEALED WITH AN EPOXY URETHANE SEALER. BRIDGE SEAT NEED NOT BE SEALED.

LEGEND

INDICATES STEEL HP12X53 PILES

INDICATES BATTERED PILE (1:4)

43 INDICATES PILE NUMBERING

** - CLEARANCE TO P803 - 3″
- CLEARANCE TO P502 - 2⅜″

AT THE CONTRACTOR'S OPTION AND AT NO ADDITIONAL COST TO THE STATE, THE P802 BARS MAY BE ANGLED TO ALIGN WITH THE P803 BARS.

* - CONSTRUCTION JOINT SHALL HAVE A ROUGHENED FINISH

ESTIMATED PILE LENGTH FOR STEEL HP12X53 PILES IS 40′.

DESIGN AGENCY
ODOT CENTRAL OFFICE
OFFICE OF PRODUCTION

DESIGNED	DRAWN	REVIEWED	DATE
DFT	D W		
CHECKED	REVISED	STRUCTURE FILE NUMBER	
HLG		5203643	

PIER DETAILS
MED-71-1828
1-71 UNDER GRANGER ROAD (CH 21)

MED-71-15.94

7 / 16

727
940

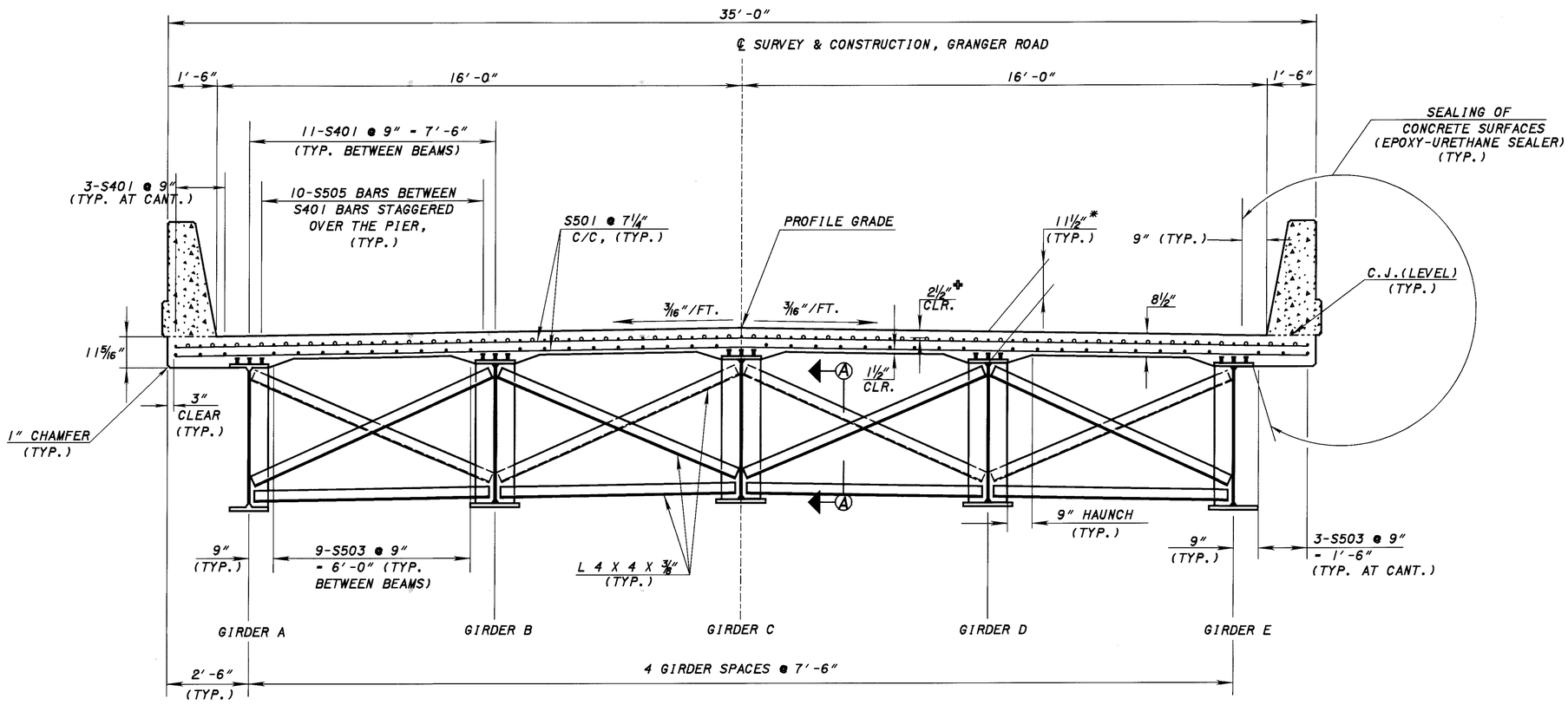

TRANSVERSE SECTION

NOTES AND LEGEND:

ALL REINFORCING STEEL IS EPOXY COATED.

DECK SLAB DEPTH:
THE DISTANCE SHOWN FROM THE TOP OF THE DECK SLAB TO THE BOTTOM OF THE FLANGE IS THE CONCRETE DECK DESIGN DIMENSION, PLUS THE DESIGN HAUNCH THICKNESS OF 3″. THE QUANTITY OF DECK CONCRETE TO BE PAID FOR SHALL BE BASED UPON THIS DIMENSION EVEN THOUGH DEVIATION FROM IT MAY BE NECESSARY BECAUSE THE TOP FLANGE OF THE GIRDER MAY NOT HAVE THE EXACT CAMBER OR CONFORMATION REQUIRED TO PLACE IT PARALLEL TO THE FINISHED GRADE. DEDUCTION SHALL BE MADE FOR VOLUME OF ENCASED STEEL PLATES AS PER 863.31.

*THE DISTANCE FROM THE BOTTOM OF THE DECK TO THE BOTTOM OF THE TOP FLANGE REMAINS 3″ AT ALL LOCATIONS ON THE BRIDGE. THE HAUNCH DEPTH WILL VARY BECAUSE OF THE DIFFERENCE IN TOP FLANGE THICKNESS.

✤THE 2½″ CLEARANCE SHALL BE TO THE #4 BARS.

REINFORCING STEEL MAY BE FIELD OR SHOP BENT TO ACCOMODATE THE CROWN OF THE DECK. PAYMENT SHALL BE INCLUDED WITH ITEM 844 HIGH PERFORMANCE CONCRETE, SUPERSTRUCTURE.

MINIMUM LAP SPLICES: #4 BARS = 2′-0″
#5 BARS = 2′-6″
#6 BARS = 3′-0″

SEE STANDARD DRAWING GSD-1-96 FOR CROSS FRAME CONNECTION DETAILS. TYPE 3 OR 4 MAY BE USED AT THE CONTRACTOR'S OPTION AT NO ADDITIONAL COST TO THE STATE.

SEE SHEET 14/16 FOR PARAPET TRANSITION DETAILS.

SEE SHEET 9/16 FOR PARAPET REINFORCEMENT ON DECK.

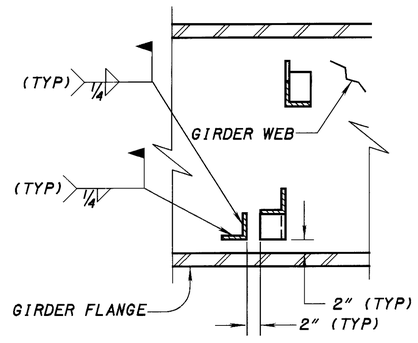

SECTION A-A

DESIGN AGENCY
ODOT CENTRAL OFFICE
OFFICE OF PRODUCTION

DESIGNED	DRAWN	REVIEWED	DATE
HLG	HLG	DFT	8-27-99
CHECKED	REVISED	STRUCTURE FILE NUMBER	
RJH		5203643	

TRANSVERSE SECTION
BRIDGE NO. MED-71-1828
IR-71 UNDER GRANGER ROAD (CH 21)

MED-71-15.78

8/16

728
940

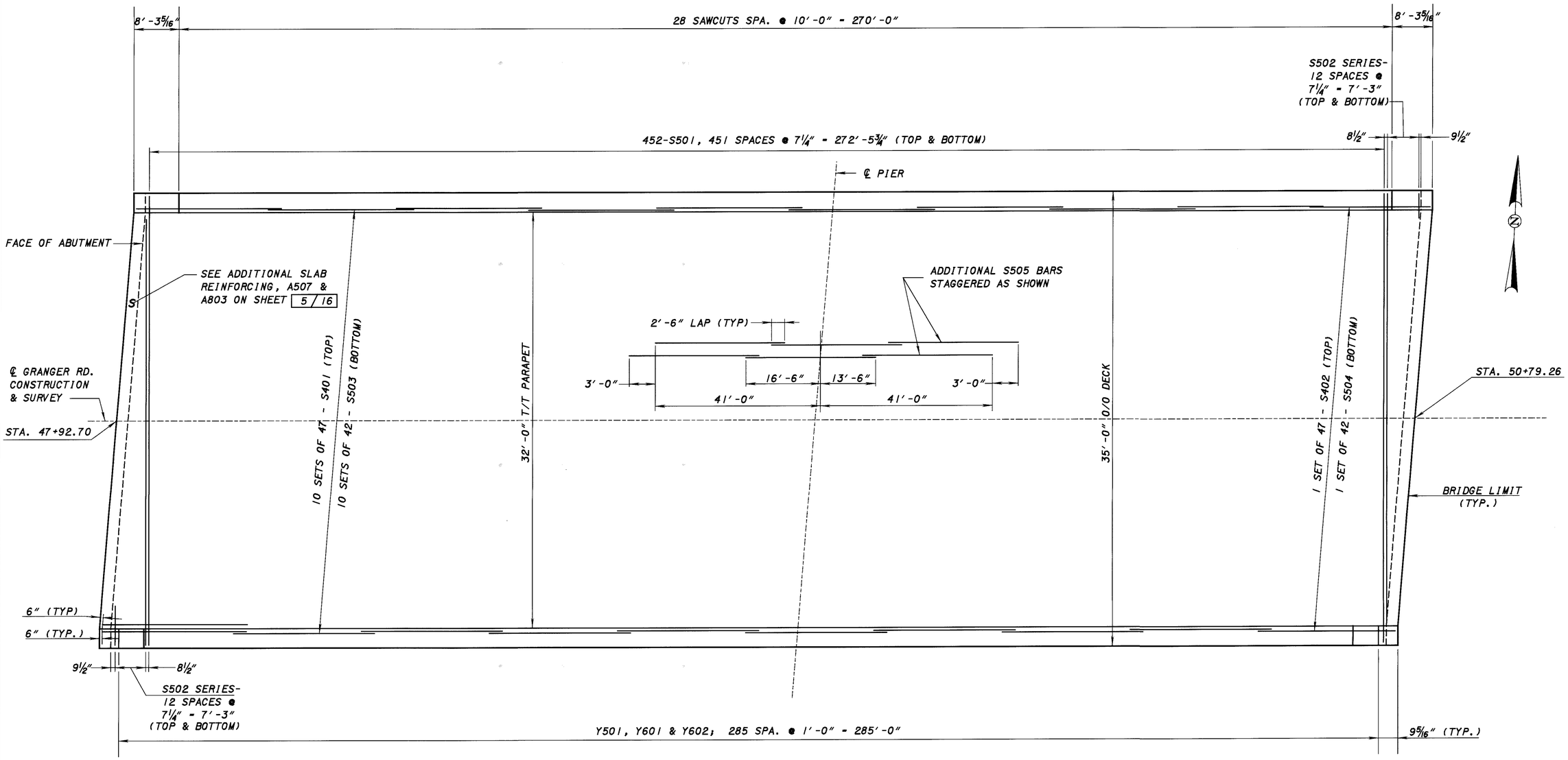

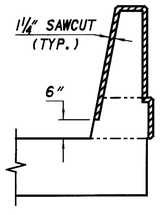

SAWCUT DETAIL

Sawcut Perimeter = 7′-6″

DECK SLAB PLAN AND PARAPET DETAILS

DESIGN AGENCY
ODOT CENTRAL OFFICE
OFFICE OF PRODUCTION

DESIGNED	DRAWN	REVISED	DATE
HLG	RJH		8-27-99
CHECKED	REVISED	STRUCTURE FILE NUMBER	
RJH	DFT	5203643	

DECK SLAB PLAN
BRIDGE NO. MED-71-1828
IR-71 UNDER GRANGER ROAD CH 21

MED-71-15.78

9/16

729
940

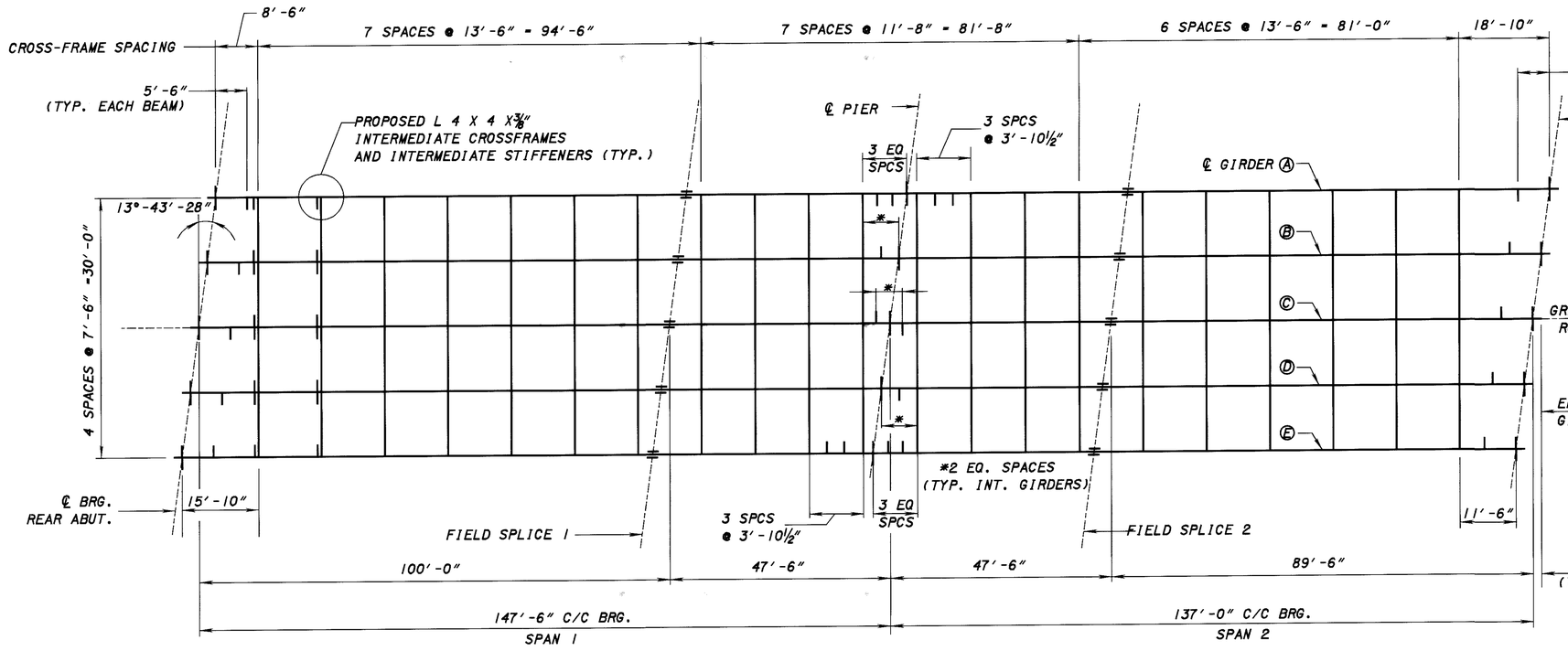

FRAMING PLAN

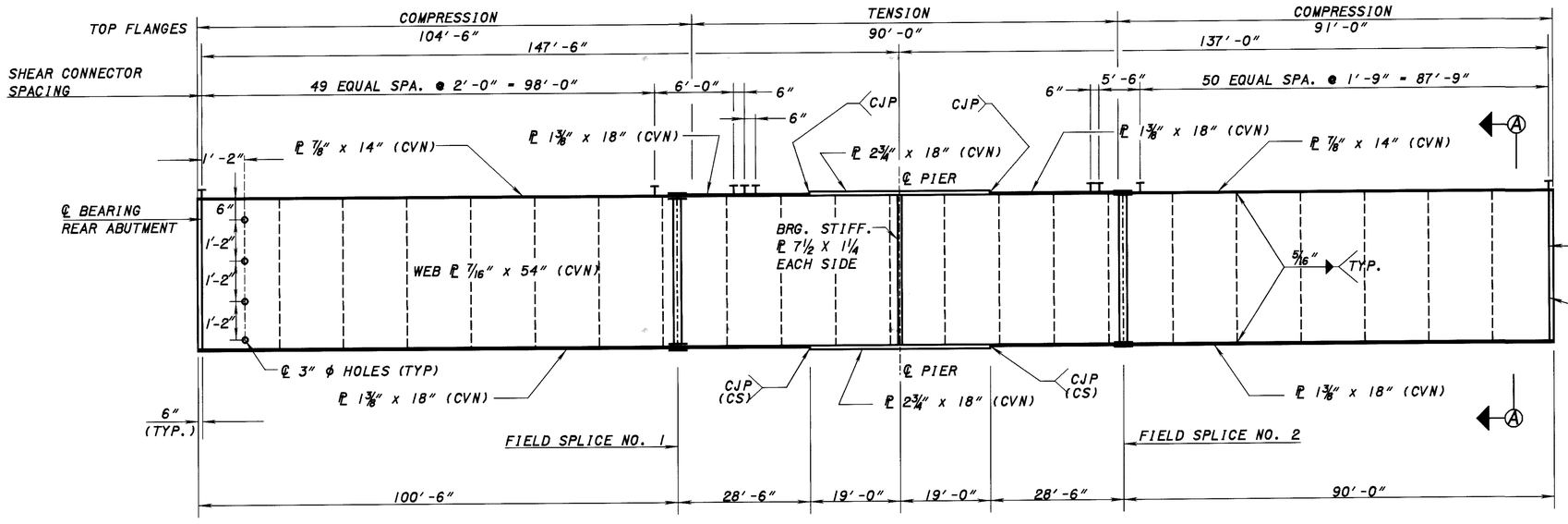

GIRDER ELEVATION

(NOTE: NOT DRAWN TO SCALE)

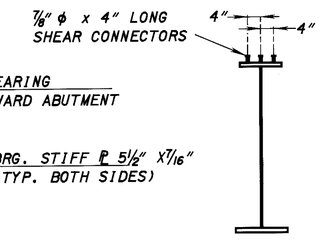

SECTION Ⓐ-Ⓐ

CJP - COMPLETE JOINT PENETRATION
CS - BUTT WELD SUBJECT TO COMPRESSIVE STRESSES ONLY

NOTES:

WHERE A SHAPE OR PLATE IS DESIGNATED (CVN) THE MATERIAL SHALL MEET SPECIFIED MINIMUM NOTCH TOUGHNESS REQUIREMENTS AS SPECIFIED IN 711.01 OF THE CMS.

WELDED ATTACHMENT OF SUPPORTS FOR CONCRETE DECK FINISHING MACHINE MAY BE MADE TO THE AREA OF THE FASCIA STRINGER FLANGES DESIGNATED "COMPRESSION." ATTACHMENTS SHALL NOT BE MADE TO AREAS DESIGNATED "TENSION." FILLET WELDS TO COMPRESSION FLANGES SHALL NOT BE CLOSER THAN 1" FROM EDGE OF FLANGE, BE NOT MORE THAN 2" LONG, AND BE NOT SMALLER THAN THE MINIMUM SIZE REQUIRED BY AASHTO.

ALL STRUCTURAL STEEL TO BE A572 PAINTED.

INTERMEDIATE STIFFENERS SHALL BE SPACED EVENLY BETWEEN INTERMEDIATE CROSSFRAMES, AS SHOWN ON THE FRAMING PLAN.

STEEL ERECTION: DURING THE ERECTION OF CROSSFRAMES, CARE SHALL BE TAKEN TO ENSURE THAT GIRDERS, BEARING PARTS AND BRIDGE SEATS REMAIN IN BEARING CONTACT.

ALL GIRDER LENGTH DIMENSIONS ARE AT 60°F, AND ALL DIMENSIONS ARE MEASURED ALONG THE ℄ OF THE GIRDER.

TRANSVERSE STIFFENERS SHALL BE PLACED ON THE INSIDE FACE OF EXTERIOR GIRDERS AND ON ALTERNATE SIDES OF THE INTERIOR GIRDERS. ALL TRANSVERSE STIFFENERS ARE SET NORMAL TO THE GIRDER WEBS.

FOR ADDITIONAL STRUCTURAL STEEL DETAILS SEE STANDARD DRAWING GSD-1-96.

BEARING STIFFENERS AND ENDS OF BEAMS TO BE VERTICAL. BEARING STIFFENERS LOCATED AT ℄ BRGS.

DESIGN AGENCY: ODOT CENTRAL OFFICE OFFICE OF PRODUCTION

DESIGNED RJH | DRAWN RJH | REVIEWED DFT | DATE 8-27-99 | STRUCTURE FILE NUMBER 5203643 | REVISED | CHECKED HLG

FRAMING PLAN
BRIDGE NO. MED-71-1828
IR-71 UNDER GRANGER ROAD CH 21

MED-71-15.78

10 / 16

730
940

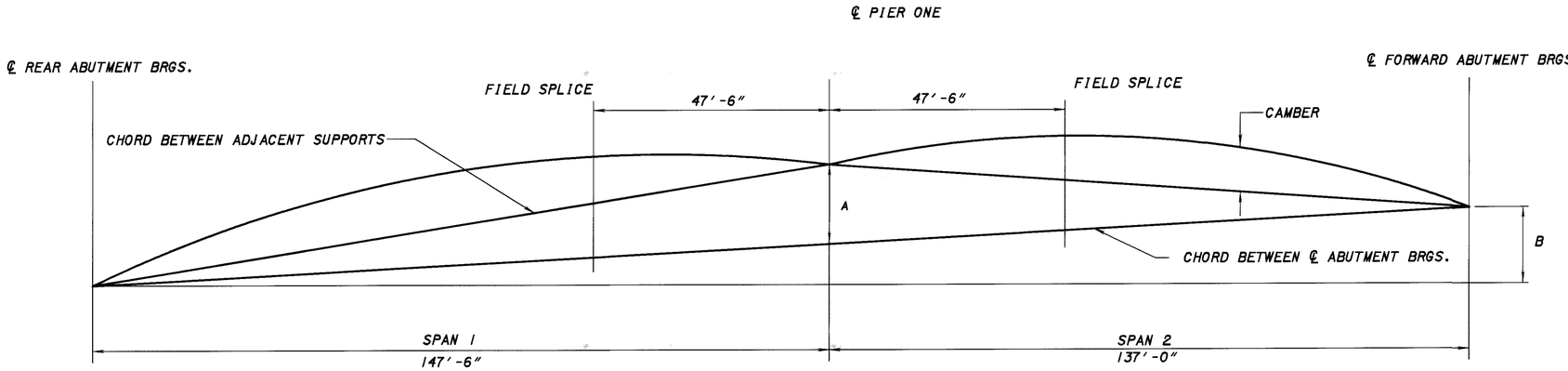

LOCATION	A	B
GIRDER A	1.21	0.94
GIRDER B	1.21	0.99
GIRDER C	1.21	1.06
GIRDER D	1.21	1.12
GIRDER E	1.22	1.18

DIMENSIONS GIVEN IN FEET

BLOCKING AND CAMBER DIAGRAM

DEFLECTION & CAMBER TABLE, IN.								
	SPAN 1				SPAN 2			
LOCATION	1/4	1/2	SPL	3/4	1/4	SPL	1/2	3/4
DEFLECTION DUE TO WEIGHT OF STEEL	15/16	1	5/8	7/16	3/16	5/16	9/16	9/16
*REMAINING DL DEFLECTION	3 5/16	3 13/16	2 7/16	1 11/16	9/16	1 3/16	2 1/16	1 15/16
VERTICAL CURVE CORRECTION	2 7/8	3 15/16	3 1/2	2 7/8	2 3/8	3	3 3/8	2 1/2
SHOP CAMBER	7 1/8	8 3/4	6 9/16	5	3 1/8	4 1/2	6	5

SCREED ELEVATIONS						
LOCATION	LEFT TOE OF PARAPET		℄ GRANGER RD.		RIGHT TOE OF PARAPET	
	STATION	ELEVATION	STATION	ELEVATION	STATION	ELEVATION
℄ REAR ABUTMENT	47+97.64	1189.03	47+93.73	1189.21	47+89.82	1188.87
1/4 SPAN	48+34.51	1189.98	48+30.61	1190.17	48+26.70	1189.85
MIDSPAN	48+71.39	1190.52	48+67.48	1190.73	48+63.57	1190.43
SPLICE	48+97.64	1190.66	48+93.73	1190.89	48+89.82	1190.59
3/4 SPAN	49+08.26	1190.68	49+04.36	1190.91	49+00.45	1190.62
℄ PIER	49+45.14	1190.72	49+41.23	1190.97	49+37.32	1190.69
1/4 SPAN	49+79.39	1190.79	49+75.48	1191.05	49+71.57	1190.80
SPLICE	49+92.64	1190.81	49+88.73	1191.08	49+84.82	1190.83
MIDSPAN	50+13.64	1190.79	50+09.73	1191.07	50+05.82	1190.83
3/4 SPAN	50+47.89	1190.51	50+43.98	1190.81	50+40.07	1190.59
℄ FORWARD ABUTMENT	50+82.14	1189.95	50+78.23	1190.27	50+74.32	1190.06

SCREED SETTING ELEVATIONS GIVEN ARE TO THE TOP OF CONCRETE DECK AND ARE REQUIRED PRIOR TO PLACEMENT OF CONCRETE. THEY INCLUDE AN ALLOWANCE FOR THE DEAD LOAD DEFLECTION CAUSED BY THE WEIGHT OF THE CONCRETE SLAB AND PARAPET*.

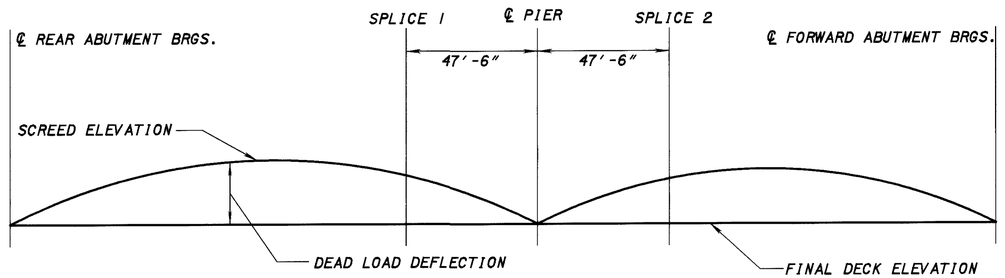

DIAGRAM FOR SCREED ELEVATIONS

DESIGN AGENCY: ODOT CENTRAL OFFICE, OFFICE OF PRODUCTION
DESIGNED HLG | DRAWN HLG | REVIEWED DFT | DATE 8-27-99
CHECKED RJH | REVISED | STRUCTURE FILE NUMBER 5203643

SUPERSTRUCTURE DETAILS
BRIDGE NO. MED-71-1828
IR-71 UNDER GRANGER ROAD (CH 21)

MED-71-15.78

11 / 16

731
940

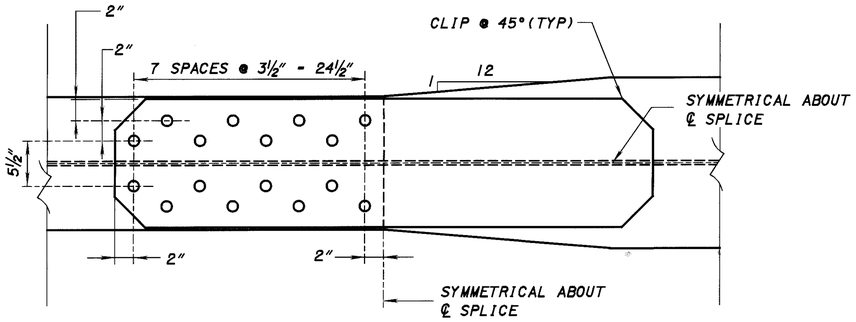

PLAN - TOP FLANGE
(32 BOLTS)

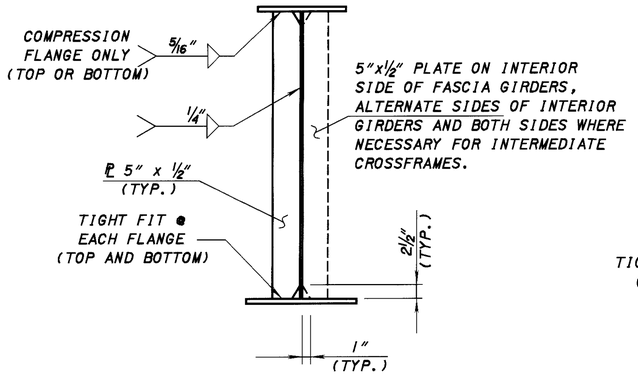

TYPICAL INTERMEDIATE
TRANSVERSE STIFFENER

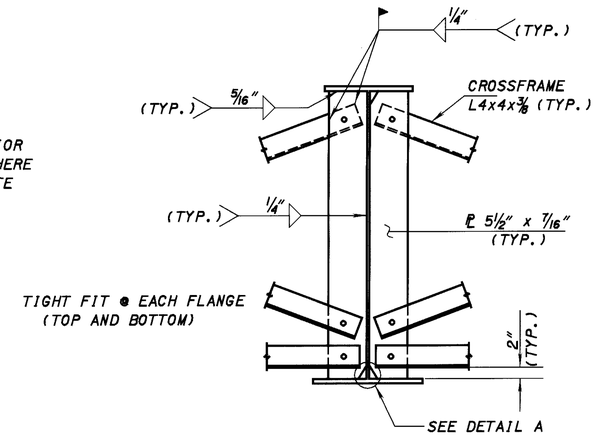

INTERMEDIATE TRANSVERSE STIFFENER
@ CROSS-FRAME LOCATIONS

SEE STD. DRWG. GSD-1-96 FOR ADDITIONAL DETAILS
(TYPE 3 CROSSFRAMES SHOWN)

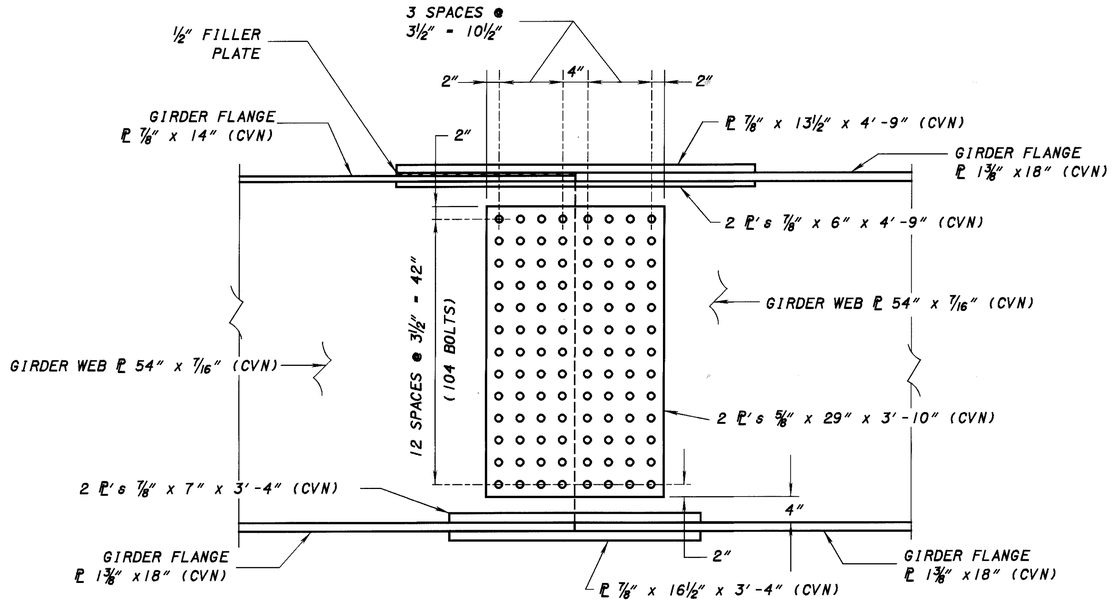

GIRDER FIELD SPLICE

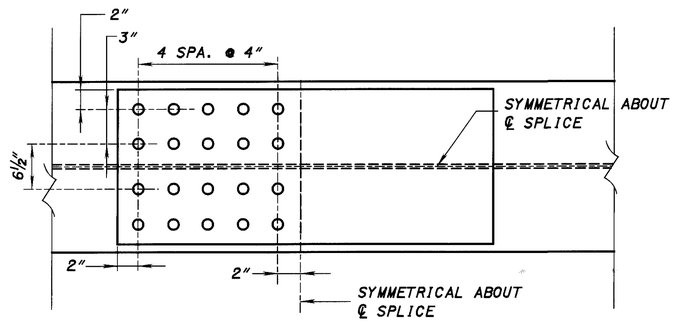

PLAN - BOTTOM FLANGE
(40 BOLTS)

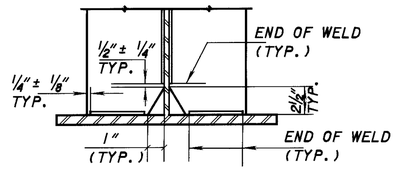

DETAIL A
WELD TERMINATION AND STIFFENER
PLATE CLIPPING DETAIL

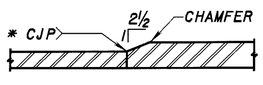

FLANGE WELD DETAIL

* COMPLETE JOINT PENETRATION WELDS SHALL BE GROUND SMOOTH IN A LONGITUDINAL DIRECTION TO REMOVE WELD REINFORCEMENT.

NOTES:

WHERE A SHAPE OR PLATE IS DESIGNATED (CVN) THE MATERIAL SHALL MEET SPECIFIED MINIMUM NOTCH TOUGHNESS REQUIREMENTS AS SPECIFIED IN 711.01.

ALL BOLTS SHALL BE HIGH STRENGTH 1" DIAMETER, A325 GALVANIZED BOLTS, UNLESS OTHERWISE NOTED. WEB BOLTS OF FIELD SPLICES SHALL BE PLACED WITH THE HEADS ON THE OUTSIDE FACE OF EXTERIOR GIRDERS. FLANGE BOLTS FOR THE BOTTOM FLANGES OF THE FIELD SPLICES OF ALL GIRDERS SHALL BE PLACED WITH HEADS ON THE BOTTOM FACE. THREADS SHALL BE EXCLUDED FROM THE SHEAR PLANE. BOLTED SPLICES SHALL HAVE FRICTION TYPE CONNECTORS.

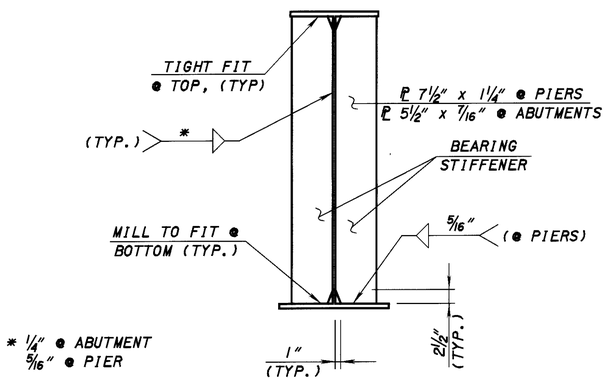

BEARING STIFFENER

DESIGN AGENCY
ODOT CENTRAL OFFICE
OFFICE OF PRODUCTION

REVISED	DATE	STRUCTURE FILE NUMBER
DFT	8-27-99	5203643
DRAWN	REVISED	
RJH		
DESIGNED	CHECKED	
RJH	HLG	

BOLTED SPLICE AND MISC. DETAILS
BRIDGE NO. MED-71-1828
IR-71 UNDER GRANGER ROAD (CH 21)

MED-71-15.78

12/16

732
940

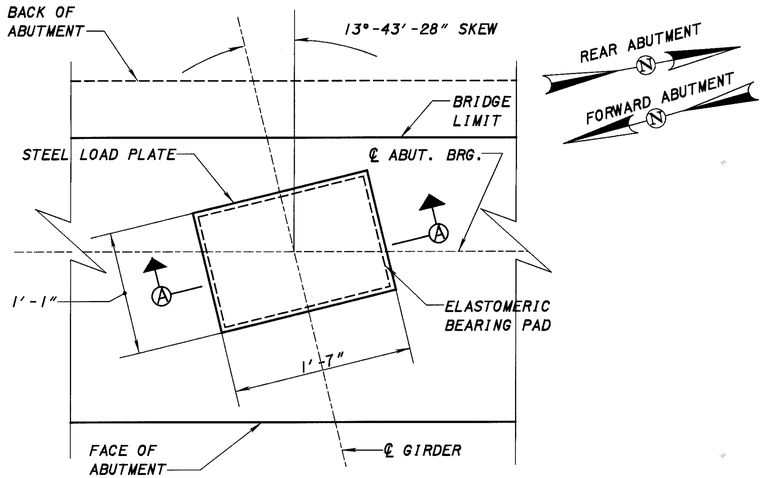

PART PLAN AT ABUTMENT

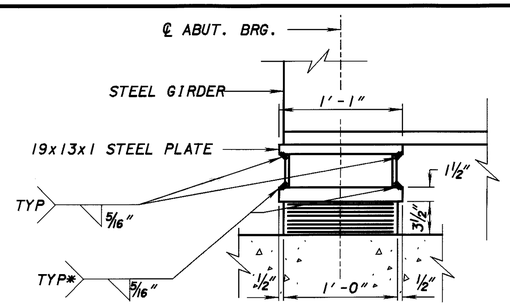

*FIELD WELD OPTIONAL

SECTION Ⓒ-Ⓒ

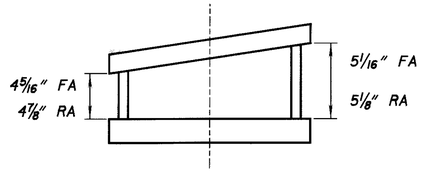

TOP OF HP 12X53 TO BE SLOPED TO ACCOMMODATE ROADWAY GRADE OF 2.2% AT REAR ABUT. AND 1.3% AT FWD ABUT.

DETAIL A

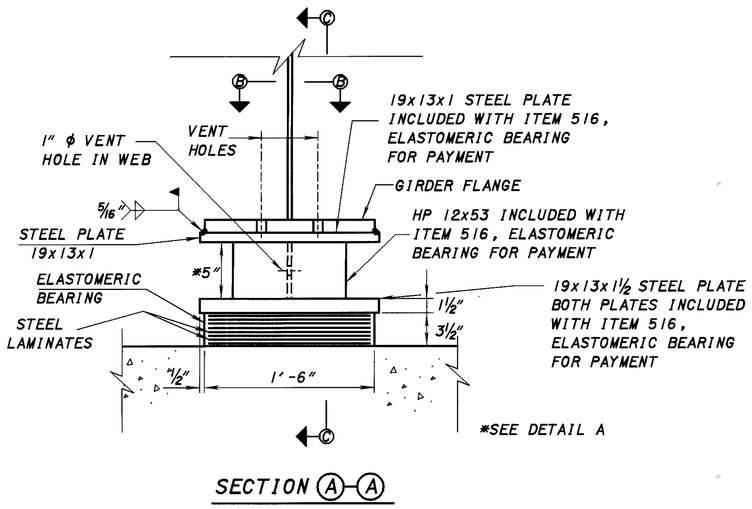

SECTION Ⓐ-Ⓐ

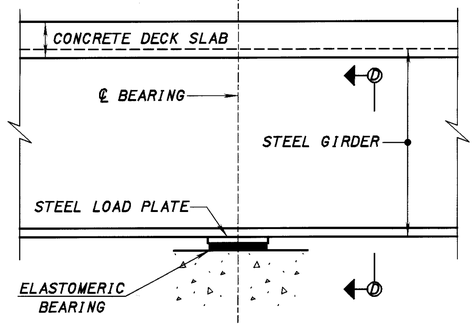

SECTION THRU PIER

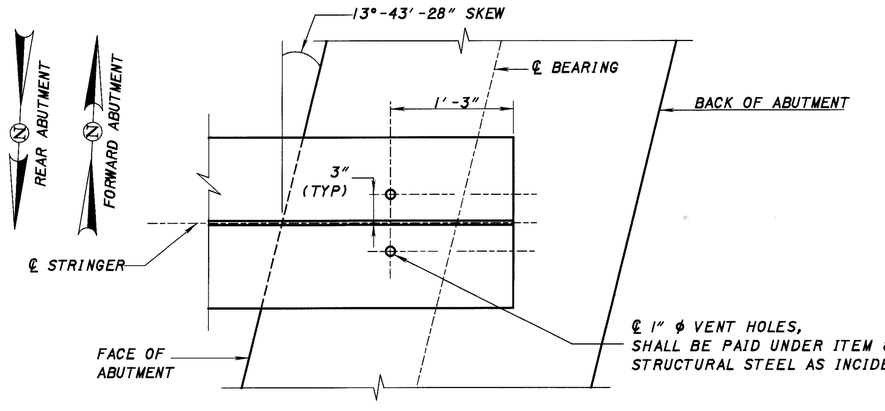

SECTION Ⓑ-Ⓑ

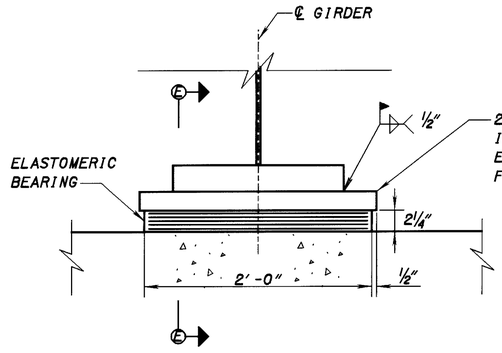

SECTION Ⓓ-Ⓓ

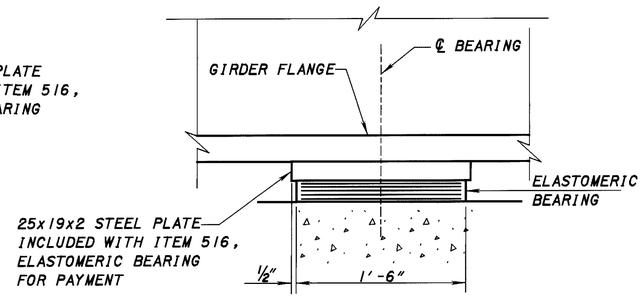

SECTION Ⓔ-Ⓔ

BEARING TABLE

BEARING LOCATION	TYPE	L	W	t_1	t_e	n_1	n_2	STEEL LOAD PL	TOTAL HEIGHT*	DL, KIPS	LL, KIPS	TOTAL, KIPS
ABUTMENT	REST	12	18	.401	.286	6	7	19x13x1½	5	119	50	169
PIER	EXP	18	24	0.441	0.315	3	4	25x19x2	4¼	325	96	421

n_1 - NUMBER OF INTERNAL ELASTOMER LAYERS, t_1
n_2 - NUMBER OF STEEL LAMINATES, 0.0747 THICKNESS
EXP - EXPANSION

ELASTOMER LAYERS ARE 50 DUROMETERS
* TOTAL HEIGHT INCLUDES LOAD PLATE
REST - RESTRAINT

NOTES:

MATERIALS: THE HP SHAPE (SUPPORT MEMBER) AND STEEL PLATES MAY BE GRADE 36 STEEL. THE HP SHAPE AND STEEL PLATES SHALL HAVE THE SAME PROTECTIVE COATING AS THE MAIN STRUCTURAL STEEL.

PAYMENT FOR MATERIALS, LABOR, FABRICATION, VENT HOLES, PROTECTIVE COATING AND INSTALLATION OF THE HP SHAPE AND STEEL PLATE SHALL BE INCLUDED WITH ITEM 516 ABUTMENT ELASTOMERIC BEARINGS, AS PER PLAN, FOR PAYMENT.

WELDING: WELDING OF THE LOAD PLATE TO THE SUPERSTRUCTURE SHALL BE CONTROLLED SO THAT THE PLATE TEMPERATURE AT THE ELASTOMER BONDED SURFACE SHALL NOT EXCEED 300°F AS DETERMINED BY THE USE OF PYROMETRIC STICKS OR OTHER TEMPERATURE MONITORING DEVICES. THE STEEL LOAD PLATE SHALL BE BONDED BY VULCANIZATION TO THE ELASTOMER DURING THE MOLDING PROCESS. STEEL LOAD PLATE MAY BE A36 OR A572 WITH PAYMENT INCLUDED IN ITEM 516.

BEARING REPOSITIONING: IF DECK CONCRETE IS PLACED AT AN AMBIENT TEMPERATURE HIGHER THAN 80°F OR LOWER THAN 40°F AND THE BEARING SHEAR DEFLECTION EXCEEDS ONE SIXTH OF THE BEARING HEIGHT AT 60°F ± 10°F, THE BEAMS SHALL BE RAISED TO ALLOW THE BEARING TO RETURN TO THEIR UNDEFORMED SHAPE AT 60°F ± 10°F.

ELASTOMERIC BEARINGS SHALL COMPLY WITH ITEM 516 AND AASHTO STANDARD SPECIFICATIONS FOR HIGHWAY BRIDGES, SECTION 18, BEARINGS, DIVISION II, CONSTRUCTION ARTICLES 18.4.5.1 AND 18.5.6.2. BEARINGS SHALL BE GRADE 3, 50 DUROMETER ELASTOMER AND SHALL BE SUBJECTED TO THE LOAD TESTING REQUIREMENTS DEFINED IN ARTICLE 18.7.4.5 (DIVISION II) OF THE AASHTO DOCUMENT LISTED ABOVE. THE UNIT BID PRICE SHALL INCLUDE ALL MATERIALS, LABOR, TESTING, STEEL LOAD PLATES AND INCIDENTALS NECESSARY TO FURNISH AND INSTALL LAMINATED ELASTOMERIC BEARINGS. PAYMENT WILL BE MADE AT THE CONTRACT PRICE FOR ITEM 516, EACH, ELASTOMERIC BEARINGS WITH INTERNAL LAMINATES AND LOAD PLATE (NEOPRENE), AS PER PLAN.

BASIS OF PAYMENT: THE UNIT BID PRICE SHALL INCLUDE ALL MATERIALS, LABOR, TESTING, ANCHOR RODS, HP10x42, STEEL PLATES AND INCIDENTALS NECESSARY TO FURNISH AND INSTALL LAMINATED ELASTOMERIC BEARINGS, EITHER FIXED OR EXPANSION. PAYMENT WILL BE MADE AT THE CONTRACT PRICE FOR ITEM 516, EACH, ELASTOMERIC BEARINGS WITH INTERNAL LAMINATES AND LOAD PLATE (NEOPRENE):

12"x18"x3½" WITH 19"x13"x1½" LOAD PLATE, AS PER PLAN (ABUTMENT)
18"x24"x2¼" WITH 25"x19"x2" LOAD PLATE (PIER)

DESIGN AGENCY
ODOT CENTRAL OFFICE
OFFICE OF PRODUCTION

DESIGNED	DRAWN	REVIEWED	DATE
RJH	RJH	DFT	8-27-99
CHECKED	REVISED	STRUCTURE FILE NUMBER	
HLG		5203643	

BEARING DETAILS
BRIDGE NO. MED-71-1828
IR-71 UNDER GRANGER ROAD (CH 21.28)

MED-71-15.78

13 / 16

733
940

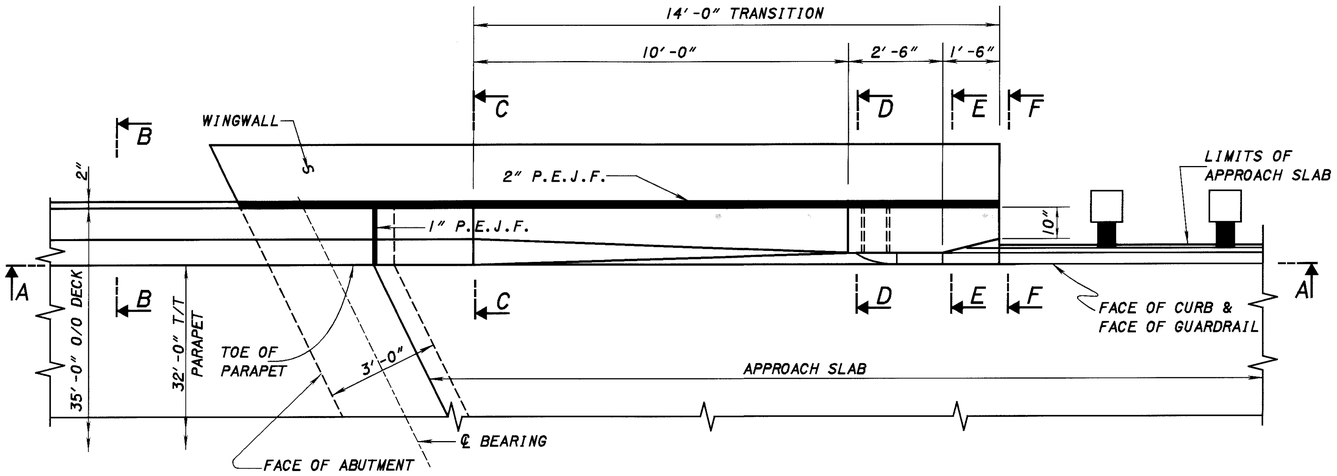

PART PLAN AT ABUTMENT

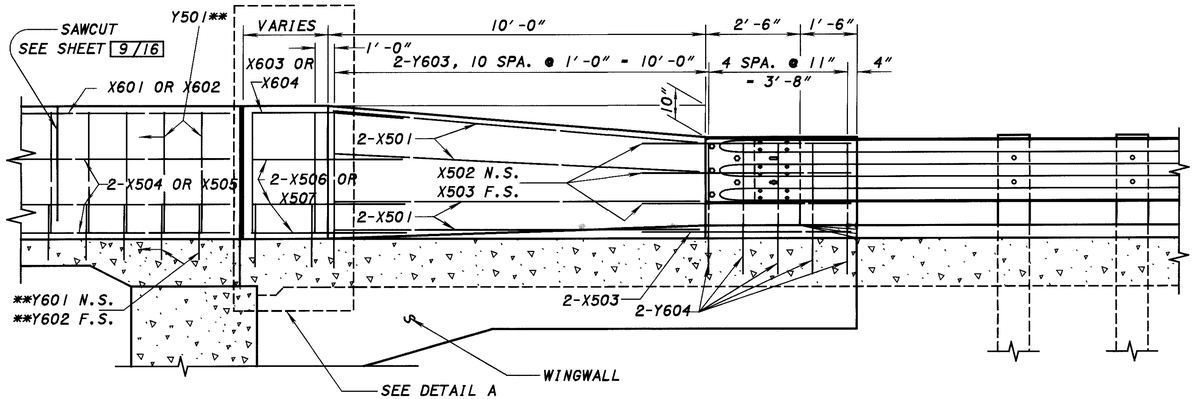

**SPACING SHOWN ON SHEET 9/16

VIEW A-A

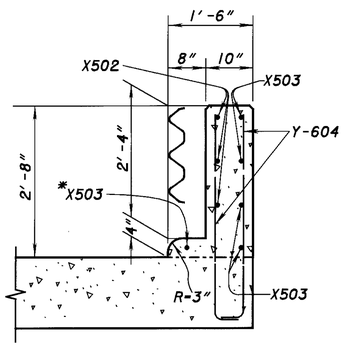

SECTION F-F

* FIELD BEND IF NECESSARY

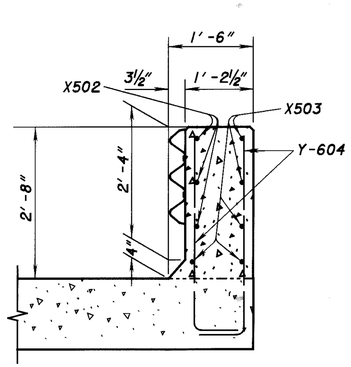

SECTION E-E

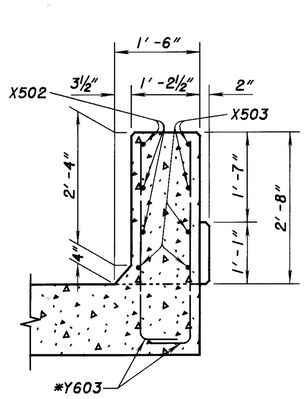

SECTION D-D

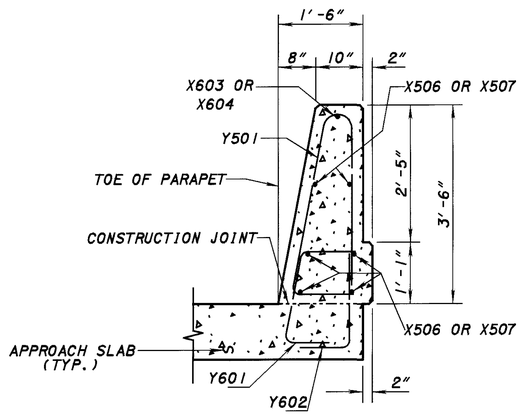

SECTION C-C

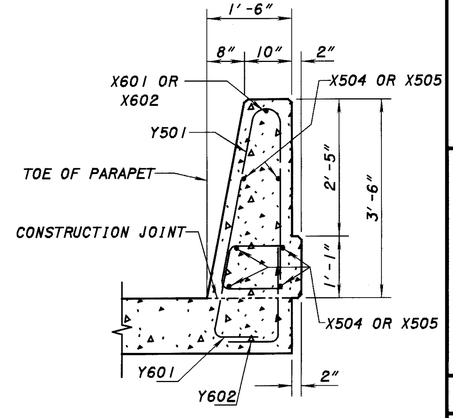

SECTION B-B

Area = 4.26 ft²

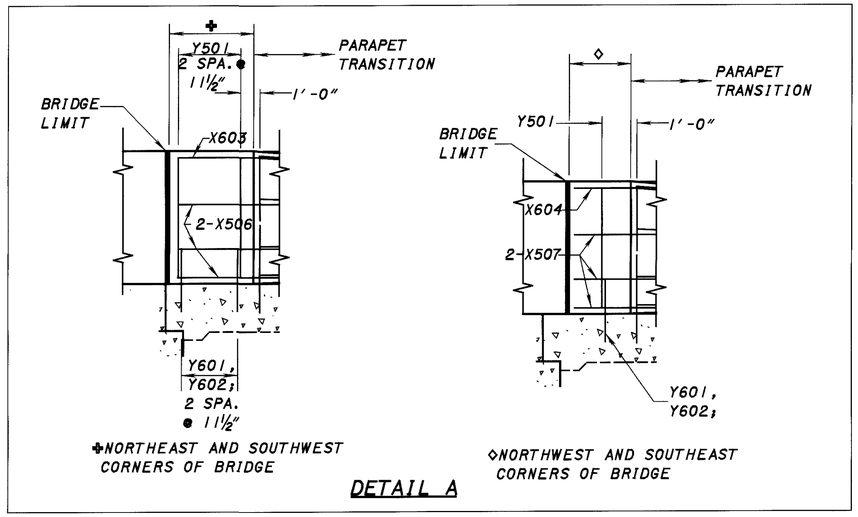

DETAIL A

NOTES

CONTROL JOINTS FOR CONCRETE PARAPETS: THE JOINTS SHALL BE CONSTRUCTED BY SAWING 1¼ INCH DEEP ALONG THE PERIMETER OF THE PARAPET AS SOON AS THE SAW CAN BE OPERATED WITHOUT DAMAGING THE CONCRETE.

THE USE OF AN EDGE GUIDE, FENCE, OR JIG IS REQUIRED TO ENSURE THAT THE CUT JOINT IS STRAIGHT, TRUE, AND ALIGNED ON ALL FACES OF THE PARAPET. THE JOINT WIDTH SHALL BE THE WIDTH OF THE SAW BLADE, A NOMINAL WIDTH OF ¼ INCH.

THE PERIMETER OF THE DEFLECTION CONTROL JOINT SHALL BE SEALED WITH A CAULKING MATERIAL TO A MINIMUM DEPTH OF ONE INCH CONFORMING TO FEDERAL SPECIFICATION TT-S-00227E. THE BOTTOM ONE-HALF INCH OF THE OUTSIDE FACE OF THE PARAPET SHOULD BE LEFT UNSEALED TO ALLOW ANY WATER WHICH MAY ENTER THE JOINT TO ESCAPE.

QUANTITIES OF CONCRETE, REINFORCING STEEL, DEFLECTION JOINT SAWCUT AND CAULKING MATERIAL FOR PARAPET ARE INCLUDED WITH ITEM 844 HIGH PERFORMANCE CONCRETE, SUPERSTRUCTURE (PARAPET).

FOR BRIDGE TERMINAL ASSEMBLY SEE STANDARD CONSTRUCTION DRAWING GR-3.1 AND GR-3.2.

MIN. LAP SPLICES: #5 BAR - 2'-6"
#6 BAR - 3'-0"

LEGEND: N.S. - NEAR SIDE
F.S. - FAR SIDE

DESIGN AGENCY: ODOT CENTRAL OFFICE OFFICE OF PRODUCTION

DESIGNED	DRAWN	REVIEWED	DATE	STRUCTURE FILE NUMBER
HLG	HLG	RJH	8-27-99	5203643
CHECKED	REVISED			
DFT				

PARAPET TRANSITION DETAILS

BRIDGE NO. MED-71-1828
IR-71 UNDER GRANGER ROAD (CH 21)

MED-71.15.78

14/16

734/940

MARK	NUMBER			LENGTH	WEIGHT LB	TYPE	DIMENSIONS						
	REAR ABUT.	FORWD. ABUT.	TOTAL				A	B	C	D	E	R	INC
REAR AND FORWARD ABUTMENTS													
A501	6	6	12	41'-2"	515	ST							
A502	28	28	56	17'-1"	998	3	5'-8"	2'-7"					
A503	24	24	48	17'-10"	893	2	7'-8½"	2'-8"	7'-8½"				
A504	24	24	48	8'-7"	430	2	3'-1"	2'-8"	3'-1"				
A505	8	8	16	39'-0"	651	ST							
A506	56	56	112	9'-5"	1100	2	3'-6"	2'-8"	3'-6"				
A507	28	28	56	8'-11"	521	2	3'-6"	2'-2"	3'-6"				
A508	8	8	16	13'-5"	224	ST							
A509	16	16	32	12'-1"	403	3	3'-2"	2'-8"					
A510	24	24	48	22'-5"	1122	2	10'-9"	1'-2"	10'-9"				
A511	24	24	48	12'-11"	647	2	6'-0"	1'-2"	6'-0"				
A512	20	20	40	11'-0"	459	ST							
A513	4	4	8	12'-8"	106	ST							
A514	12	12	24	18'-3"	457	ST							
A515	2 SERIES OF 4	2 SERIES OF 4	4 SERIES OF 4	6'-3" TO 10'-9"	142	2	2'-8" TO 4'-11"	1'-2"	2'-8" TO 4'-11"				9"
A516	6	6	12	6'-3"	78	2	2'-8"	1'-2"	2'-8"				
A801	4	4	8	41'-2"	879	ST							
A802	4	4	8	39'-0"	833	ST							
A803	16	16	32	35'-6"	3033	ST							
A804	8	8	16	13-5"	573	ST							
D801	28	28	56	4'-11"	735	18	2'-7"	1'-0"	1'-0"				

MARK	NUMBER			LENGTH	WEIGHT LB	TYPE	DIMENSIONS						
	SLAB	PIER	TOTAL				A	B	C	D	E	R	INC
SLAB													
S401	470		470	30'-0"	9419	ST							
S402	47		47	5'-7"	175	ST							
S501	904		904	34'-6"	32,529	ST							
S502			4 SERIES OF 13	3'-0" TO 33'-0"	976	ST							2'-6"
S503	420		420	30'-0"	13,142	ST							
S504	42		42	10'-7"	464	ST							
S505	138		138	30'-0"	4318	ST							
PIER													
P401		26	26	9-0"	156	2	2'-8"	3'-10"	2'-8"				
P402		13	13	4'-0"	35	31	2'-11"						
P403		13	13	4'-5"	38	31	3'-4"						
P501		8	8	35'-0"	292	ST							
P502		26	26	34'-0"	922	ST							
P801		46	46	11'-4"	1392	17	9'-6"						
P802		102	102	9'-9"	2655	1	1'-6"	8'-6"					
P803		102	102	19'-5"	5288	ST							
P804		4	4	37'-7"	401	2	2'-0"	34'-0"	2'-0"				

THIS REINFORCING STEEL LIST IS FOR INFORMATION PURPOSES ONLY

DESIGN AGENCY
ODOT CENTRAL OFFICE
OFFICE OF PRODUCTION

DESIGNED HLG | DRAWN HLG | REVIEWED RJH | DATE 8-27-99
CHECKED DFT | REVISED | STRUCTURE FILE NUMBER 5203643

REINFORCING STEEL LIST

BRIDGE NO. MED-71-1828
IR-71 UNDER GRANGER ROAD (CH 21)

MED-71-15.78

735/940

MARK	NUMBER	LENGTH	WEIGHT LB	TYPE	DIMENSIONS						
					A	B	C	D	E	R	INC
	PARAPET										
X501	32	10'-0"	334	ST							
X502	12	5'-6"	69	25	1'-8"	2'-5"	1'-4"	0'-1½"	0'-5"		
X503	20	5'-6"	115	ST							
X504	120	30'-0"	3755	ST							
X505	12	13'-6"	169	ST							
X506	12	5'-3"	66	ST							
X507	12	3'-9"	47	ST							
X601	20	30'-0"	901	ST							
X602	2	19'-0"	57	ST							
X603	2	5'-9"	17	ST							
X604	2	4'-3"	13	ST							
Y501	580	7'-5"	4487	23	1'-1"	3'-2"	3'-0"			2¾"	
Y601	580	3'-9"	3267	33	1'-9"	1'-1"	1'-1"				
Y602	580	2'-8"	2323	1	1'-1"	1'-9"					
	8	4'-3"				3'-6"					
Y603	SERIES OF	TO	615	1	10½"	TO					1"
	11	5'-1"				4'-4"					
Y604	40	4'-3"	255	1	10½"	3'-6"					

NOTES

NOTE: ALL REINFORCING STEEL SHALL BE EPOXY COATED.

THE BAR SIZE IS INDICATED IN THE BAR MARK. THE FIRST DIGIT INIDICATES THE BAR SIZE. FOR EXAMPLE, AN A501 IS A #5 BAR. BAR DIMENSIONS SHOWN ARE OUT TO OUT UNLESS OTHERWISE NOTED. "R" INDICATES INSIDE RADIUS.

MIN. LAP SPLICES: #4 BAR - 2'-0"
#5 BAR - 2'-6"
#6 BAR - 3'-0"

THIS REINFORCING STEEL LIST IS FOR INFORMATION PURPOSES ONLY

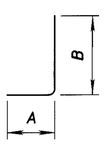

TYPE-1

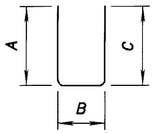

TYPE-2

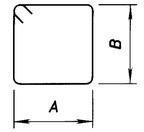

TYPE-3



TYPE-17

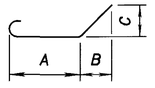

TYPE-18

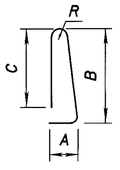

TYPE-23

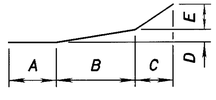

TYPE-25



TYPE-31

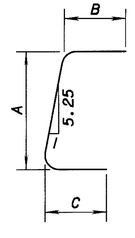

TYPE 33

DESIGN AGENCY: ODOT CENTRAL OFFICE, OFFICE OF PRODUCTION
DESIGNED: HLG
DRAWN: HLG
REVISED: DFT
CHECKED:
REVIEWED: RJH
DATE: 8-27-99
STRUCTURE FILE NUMBER: 5203643

REINFORCING STEEL LIST
BRIDGE NO. MED-71-1828
IR-71 UNDER GRANGER ROAD (CH 21)

MED-71-15.78

16/16

736
940

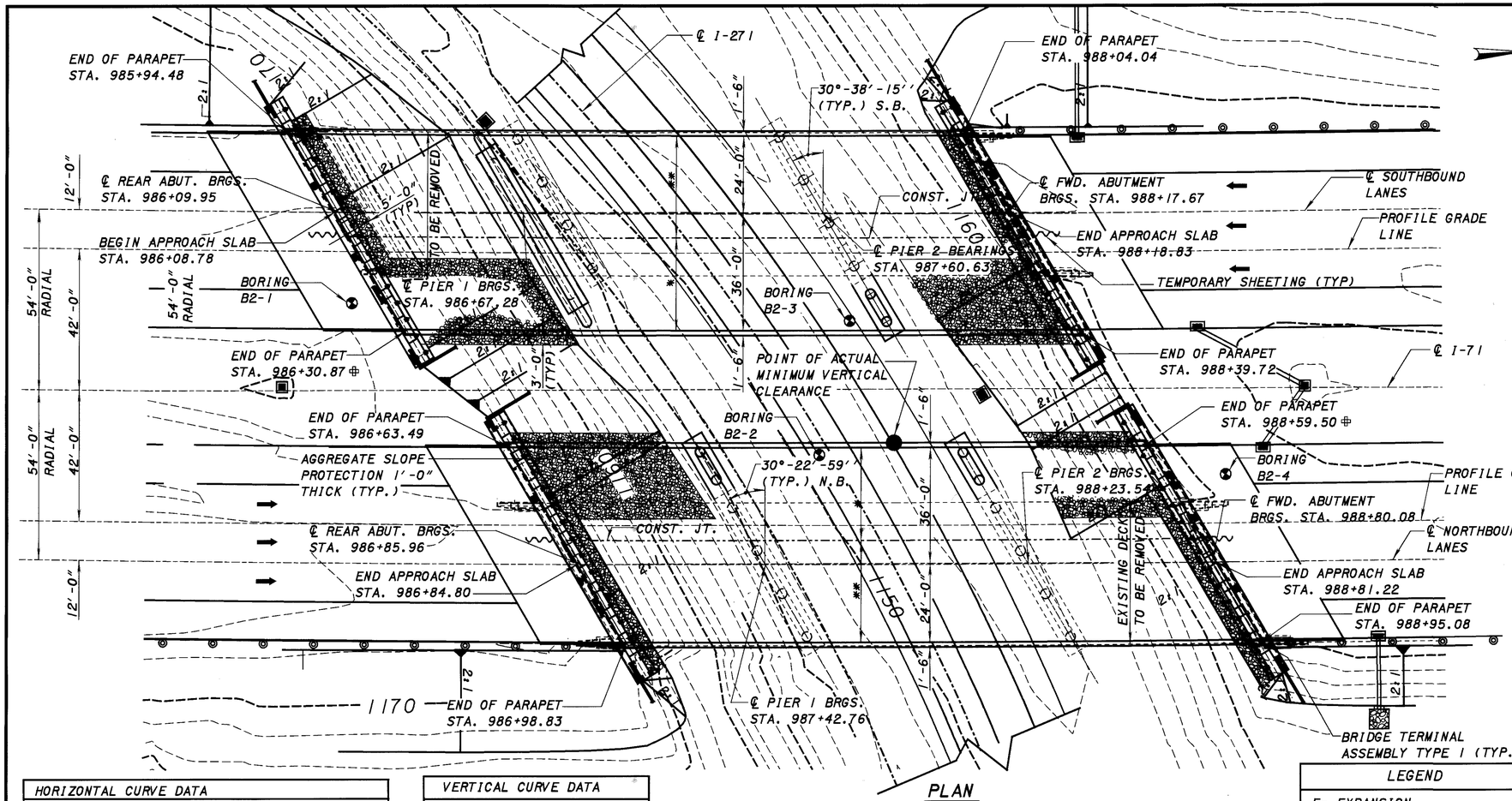

NOTES:

- ⊕ - SOIL BORINGS
- EARTHWORK LIMITS SHOWN ARE APPROXIMATE. ACTUAL SLOPES SHALL CONFORM TO PLAN CROSS SECTIONS.
- THE BRIDGE LIMITS ARE MEASURED ALONG THE ℄ I-71.
- PILES ARE HP 10 X 42 FOR THE ABUTMENTS AND HP 12 X 53 FOR THE PIERS. THE ESTIMATED PAY LENGTH ARE:
- SOUTHBOUND LANES:
- REAR ABUTMENT - 35 FT.
- PIER 1 AND PIER 2 - 35 FT.
- FORWARD ABUTMENT - 50 FT.
- NORTHBOUND LANES:
- REAR ABUTMENT - 35 FT.
- PIER 1 AND PIER 2 - 35 FT.
- FORWARD ABUTMENT - 50 FT.

BENCHMARK DATA

BM #4 - STATION 990+93.07 ELEVATION - 1149.65 ODOT DISC IN HEADWALL STAMPED

DESIGN TRAFFIC

CURRENT YEAR (2000) ADT - 54,430
CURRENT YEAR (2000) ADTT - 8,709
DESIGN YEAR (2020) ADT - 74,300
DESIGN YEAR (2020) ADTT - 11,888

EXISTING STRUCTURE

TYPE: CONTINUOUS STEEL BEAM WITH REINFORCED CONCRETE DECK AND SUBSTRUCTURE

SPANS: 57'-0",81'-3",57'-0"

ROADWAY: 39'-8" FACE TO FACE OF SAFETY CURB

LOADING:CF 2000 (57) AND A.A.S.H.O. ALTERNATE LOADING

SKEW: 30°-24'-42'' RIGHT FORWARD TO LOCAL TANGENT

WEARING SURFACE: ASPHALT

APROACH SLABS:AS-1-54 (25'-0" LONG)

ALIGNMENT: HORIZONTAL CURVE

CROWN:3/16" PER FOOT

DATE BUILT: 1963

PROPOSED STRUCTURE

TYPE: CONTINUOUS A572 STEEL COMPOSITE BEAM WITH REINFORCED CONCRETE DECK ON REINFORCED CONCRETE SUBSTRUCTURES (SEE SHEET 5 / 39 FOR LIST OF PROPOSED WORK)

SPANS: 57'-0",81'-3",57'-0" C/C BRGS. N.B.
57'-0",93'-0",57'-0" C/C BRGS. S.B.
(MEASURED ALONG THE REFERENCE CHORD)

ROADWAY: 60'-0" T/T PARAPET WITH 1'-6" PARAPET EACH SIDE

LOADING: HS20-44 CASE I AND ALTERNATE MILITARY LOADING

SKEW: 30°22'59'' N.B. , 30°38'15'' S.B. RIGHT FORWARD TO LOCAL TANGENT

WEARING SURFACE: MONOLITHIC CONCRETE

APPROACH SLABS: AS-1-81, 25' LONG, 60'-0" T/T CURB

ALIGNMENT: HORIZONTAL AND VERTICAL CURVE

CROWN:3/16"/FT. FROM C.L. N.B. AND S.B. LANES

COORDINATES: LAT. N 41°-09'-41'', LONG. W 81°-47'-06"

HORIZONTAL CURVE DATA

℄ I.R.-71	℄ I.R.-271
P.I. STA. - 984+41.65	P.I. STA. - 986+92.26
Δ - 26°45'35''	Δ - 83°24'37''
R - 15,626.07 FT.	R - 716.20 FT.
L - 7,298.08 FT.	L - 1.042.63 FT.
T - 3,716.85 FT.	T - 638.23 FT.

VERTICAL CURVE DATA

V.P.I. STA. - 987+50.00
V.P.I. ELEVATION - 1174.31
L.V.C. - 500 FT.
G1 - -.23%
G2 - -.98%

PLAN

- ● 16'-6" REQUIRED MINIMUM VERTICAL CLEARANCE 17'-0" ACTUAL MINIMUM VERTICAL CLEARANCE
- ⊕ NO BRIDGE TERMINAL ASSEMBLY, SEE CSS2 FOR ADDITIONAL DETAILS

LEGEND

E- EXPANSION
F - FIXED
N.B. - NORTHBOUND
S.B. - SOUTHBOUND
EL. - ELEVATION
* - STAGE 1 CONSTRUCTION
** - STAGE 2 CONSTRUCTION

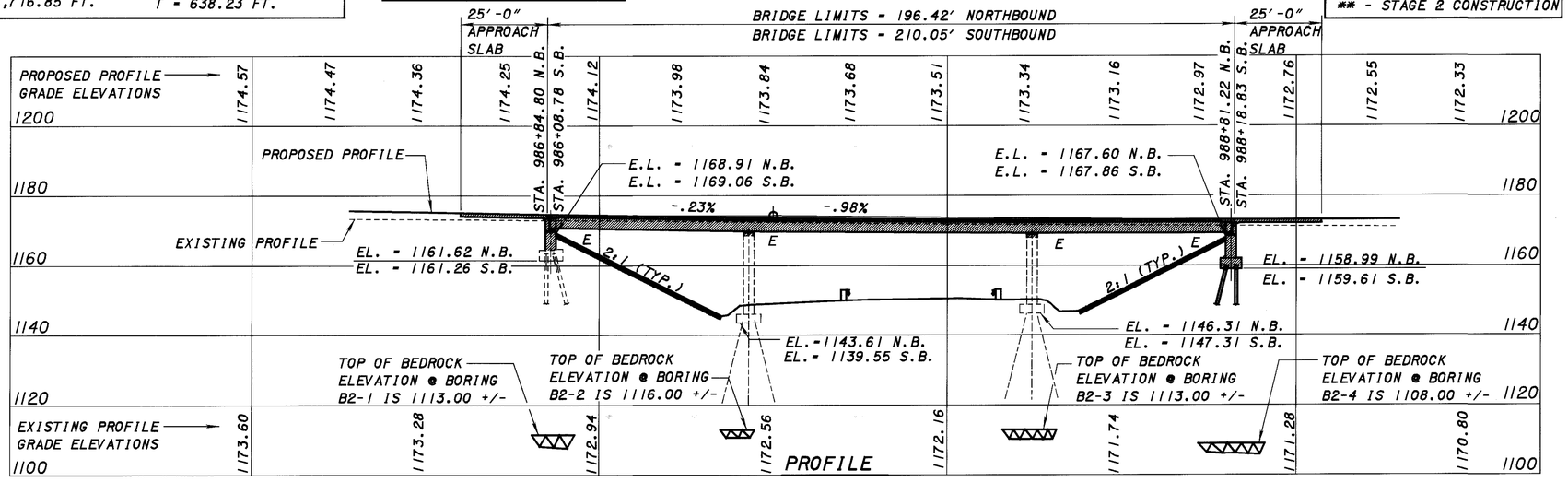

ODOT CENTRAL OFFICE
OFFICE OF PRODUCTION
DESIGN AGENCY

REVISED	DATE
DFT	10-22-99

STRUCTURE FILE NUMBER 5203694L/5203724R

DRAWN	REVISED
DB	

DESIGNED	CHECKED
DB	TAA

MEDINA COUNTY
STA. 986+08.78L
STA. 988+18.83L

MEDINA COUNTY
STA. 986+84.80 R
STA. 988+81.22 R

SITE PLAN
MED-71-1870 L/R
I-71 OVER I.R.-271

MED-71-15.78

1 / 39

737 / 940

		MED-71-1870 L	MED-71-1870 R		ESTIMATED QUANTITIES	MED-71-1870 L (SOUTHBOUND)				MED-71-1870 R (NORTHBOUND)			
ITEM	EXTENSION	TOTAL	TOTAL	UNIT	DESCRIPTION	ABUT.	PIERS	SUPER.	GEN.	ABUT.	PIERS	SUPER.	GEN.
202	11203	LUMP	LUMP		PORTIONS OF STRUCTURE REMOVED, OVER 20 FOOT SPAN, AS PER PLAN	LUMP	LUMP	LUMP		LUMP	LUMP	LUMP	
503	11100	LUMP	LUMP		COFFERDAMS, CRIBS AND SHEETING				LUMP				LUMP
503	21301	LUMP	LUMP		UNCLASSIFIED EXCAVATION, AS PER PLAN				LUMP				LUMP
505	11100	LUMP	LUMP		PILE DRIVING EQUIPMENT MOBILIZATION	LUMP				LUMP			
507	00100	2160	1720	LF	STEEL PILES HP10x42, FURNISHED	2160				1720			
507	00150	2160	1720	LF	STEEL PILES HP10x42, DRIVEN	2160				1720			
507	00200	1400	700	LF	STEEL PILES HP12x53, FURNISHED		1400				700		
507	00250	1400	700	LF	STEEL PILES HP12x53, DRIVEN		1400				700		
507	50500	44	29	EACH	STEEL PILE SPLICES	24	20			19	10		
512	44400	11	11	SY	TYPE B WATERPROOFING	11				11			
SPECIAL	51267200	51	48	SY	WATERPROOFING, MISC.: SEMI-INTEGRAL ABUTMENT JOINT WATERPROOFING	51				48			
SPECIAL	51267510	1126	1040	SY	SEALING OF CONCRETE SURFACES (EPOXY-URETHANE)	116	539	471		118	477	445	
516	13900	76	76	SF	2" PREFORMED EXPANSION JOINT FILLER	76				76			
516	44000	16	16	EACH	ELASTOMERIC BEARING WITH INTERNAL LAMINATES AND LOAD PLATE (NEOPRENE), (12"x19"x1 7/8" PAD AND 13"x20"x2" PLATE)		16				16		
516	44101	16	16	EACH	ELASTOMERIC BEARING WITH INTERNAL LAMINATES AND LOAD PLATE (NEOPRENE), AS PER PLAN (9"x14"x2 7/16" PAD AND 12"x15"x1 1/2" PLATE)	16				16			
518	21231	LUMP	LUMP		POROUS BACKFILL WITH FILTER FABRIC, AS PER PLAN	LUMP				LUMP			
518	40000	187	190	LF	6" PERFORATED CORRUGATED PLASTIC PIPE	187				190			
518	40010	48	48	LF	6" NON-PERFORATED CORRUGATED PLASTIC PIPE, INCLUDING SPECIALS	48				48			
519	11101	8	15	SF	PATCHING CONCRETE STRUCTURE, AS PER PLAN **		8				15		
601	20500	110	112	CY	CRUSHED AGGREGATE SLOPE PROTECTION				110				112
816	00600	LUMP	LUMP		FIELD PAINTING NEW STEEL, INTERMEDIATE AND FINISH COAT, SYSTEMS IZEU			LUMP				LUMP	
842	41001	23	47	CY	CLASS C CONCRETE, PIER ABOVE FOOTINGS, AS PER PLAN		23				47		
842	40501	164		CY	CLASS C CONCRETE, PIER ABOVE FOOTINGS, AS PER PLAN		164						
842	44101	149	129	CY	CLASS C CONCRETE, ABUTMENT NOT INCLUDING FOOTING, AS PER PLAN	149				129			
842	46501	212	131	CY	CLASS C CONCRETE, FOOTING, AS PER PLAN	137	75			109	22		
844	48001	375	354	CY	HIGH PERFORMANCE CONCRETE SUPERSTRUCTURE (DECK), AS PER PLAN, MIX 4			375				354	
844	48021	65	61	CY	HIGH PERFORMANCE CONCRETE SUPERSTRUCTURE (PARAPET), AS PER PLAN, MIX 4				65				61
844	48041	81	72	CY	HIGH PERFORMANCE CONCRETE SUBSTRUCTURE, AS PER PLAN	81				72			
844	49000	LUMP	LUMP		HIGH PERFORMANCE CONCRETE TRIAL MIX			LUMP				LUMP	
863	10060	LUMP	LUMP		STRUCTURAL STEEL MEMBERS, LEVEL THREE (3) FABRICATION, A572			LUMP				LUMP	
863	20000	4248	4056	EACH	WELDED STUD SHEAR CONNECTORS			4248				4056	

** ESTIMATED QUANTITY IS 3x MEASURED VALUE

DESIGN AGENCY
ODOT CENTRAL OFFICE
OFFICE OF PRODUCTION

DESIGNED BRC
DRAWN BRC
CHECKED DB
REVIEWED DFT
DATE 10-22-99
REVISED
STRUCTURE FILE NUMBER 5203694L/5203742R

ESTIMATED QUANTITIES
MED-71-1870 L/R
I-71 OVER I-271

MED-71-15.78

GENERAL NOTES

STANDARD DRAWINGS AND SPECIFICATIONS:

REFERENCE SHALL BE MADE TO STANDARD DRAWINGS:

AS-1-81	REVISED 09-15-94
SBR-1-99	DATED 01-12-99
PCB-1-91	REVISED 07-06-99
BS-1-93	DATED 12-19-94
GSD-1-96	DATED 02-12-97

AND TO SUPPLEMENTAL SPECIFICATIONS:

816	DATED 04-21-97
842	DATED 01-06-99
844	DATED 01-06-99
863	DATED 10-12-99
899	DATED 10-21-98
910	DATED 07-28-98
911	DATED 07-10-97
954	DATED 09-09-97

DESIGN SPECIFICATIONS:

THIS STRUCTURE CONFORMS TO "STANDARD SPECIFICATIONS FOR HIGHWAY BRIDGES" ADOPTED BY THE AMERICAN ASSOCIATION OF STATE HIGHWAY AND TRANSPORTATION OFFICIALS, 1996 INCLUDING THE 1997 AND 1998 INTERIM SPECIFICATIONS AND THE ODOT DESIGN MANUAL.

DESIGN LOADING:

HS20-44, CASE I AND THE ALTERNATE MILITARY LOADING.

DESIGN DATA:

HIGH PERFORMANCE CONCRETE - COMPRESSIVE STRENGTH 4500 PSI (SUPERSTRUCTURE)

HIGH PERFORMANCE CONCRETE - COMPRESSIVE STRENGTH 4000 PSI (SUBSTRUCTURE)

ITEM 842 CONCRETE - COMPRESSIVE STRENGTH 4000 PSI (SUBSTRUCTURE)

REINFORCING STEEL - ASTM A615, A616 OR A617 GRADE 60 MINIMUM YIELD STRENGTH 60 Ksi. SPIRAL REINFORCEMENT MAY BE PLAIN BARS, ASTM A82 OR A615

STRUCTURAL STEEL - A572 - YIELD STRENGTH 50 Ksi

DECK PROTECTION METHOD - EPOXY COATED REINFORCING STEEL AND 2½" CONCRETE COVER AND HIGH PERFORMANCE CONCRETE.

MONOLITHIC WEARING SURFACE IS ASSUMED, FOR DESIGN PURPOSES, TO BE 1" THICK.

EXISTING STRUCTURE VERIFICATION:

DETAILS AND DIMENSIONS SHOWN ON THESE PLANS PERTAINING TO THE EXISTING STRUCTURE HAVE BEEN OBTAINED FROM PLANS OF THE EXISTING STRUCTURE AND FROM FIELD OBSERVATIONS AND MEASUREMENTS. CONSEQUENTLY, THEY ARE INDICATIVE OF THE EXISTING STRUCTURE AND THE PROPOSED WORK BUT THEY SHALL BE CONSIDERED TENTATIVE AND APPROXIMATE. THE CONTRACTOR IS REFERRED TO CMS SECTIONS 102.05, 105.02 AND 513.02.

CONTRACT BID PRICES SHALL BE BASED UPON A RECOGNITION OF THE UNCERTAINTIES DESCRIBED ABOVE AND UPON A PREBID EXAMINATION OF THE EXISTING STRUCTURE BY THE CONTRACTOR. HOWEVER, ALL PROJECT WORK SHALL BE BASED UPON ACTUAL DETAILS AND DIMENSIONS WHICH HAVE BEEN VERIFIED BY THE CONTRACTOR IN THE FIELD.

EXISTING BRIDGE PLANS MAY BE INSPECTED IN THE OFFICE OF STRUCTURAL ENGINEERING IN COLUMBUS, OHIO OR AT THE ODOT DISTRICT THREE OFFICE IN ASHLAND, OHIO.

DOWEL HOLES WITH NON-SHRINK, NON METALLIC GROUT

ALL DOWEL HOLES SHALL BE CORE DRILLED AND GROUTED WITH AN EPOXY MORTAR MEETING THE REQUIREMENTS OF CMS 510. PAYMENT FOR ALL OF THE ABOVE SHALL BE INCLUDED WITH THE ASSOCIATED CONCRETE ITEM.

ITEM 202 PORTIONS OF STRUCTURE REMOVED OVER 20 FOOT SPAN, AS PER PLAN:

PORTION OF THE STRUCTURE REMOVED, AS PER PLAN, SHALL INCLUDE THE ELEMENTS INDICATED IN THE PLANS AND GENERAL NOTES AND ARE NOT SEPARATELY LISTED FOR PAYMENT, EXCEPT FOR WEARING COURSE REMOVAL. ITEMS TO BE REMOVED INCLUDE ALL EXISTING MATERIALS BEING REPLACED BY NEW CONSTRUCTION AND MISCELLANEOUS ITEMS THAT ARE NOT SHOWN TO BE INCORPORATED INTO THE FINAL CONSTRUCTION AND ARE DIRECTED TO BE REMOVED BY THE ENGINEER. THE USE OF EXPLOSIVES, HEADACHE BALLS AND/OR HOE-RAMS WILL NOT BE PERMITTED. THE METHOD OF REMOVAL AND THE WEIGHT OF HAMMER SHALL BE APPROVED BY THE ENGINEER. ALL WORK SHALL BE DONE IN A MANNER THAT WILL NOT CUT, ELONGATE OR DAMAGE THE EXISTING REINFORCING STEEL TO BE PRESERVED.

PROTECTION OF TRAFFIC:
PRIOR TO DEMOLITION OF ANY PORTIONS OF THE EXISTING SUPERSTRUCTURE, THE CONTRACTOR SHALL SUBMIT PLANS FOR THE PROTECTION OF TRAFFIC (VEHICULAR, PEDESTRIAN, ETC.) ADJACENT TO AND/OR UNDER THE STRUCTURE TO THE ENGINEER FOR APPROVAL. THESE PLANS SHALL INCLUDE PROVISIONS FOR ANY DEVICES AND STRUCTURES THAT MAY BE NECESSARY TO ENSURE SUCH PROTECTION. TEMPORARY VERTICAL CLEARANCES SPECIFIED IN THE PROPOSAL SHALL BE MAINTAINED AT ALL TIMES EXCEPT AS OTHERWISE APPROVED BY THE ENGINEER.

CUT LINE CONSTRUCTION JOINT PREPARATION:

SAW CUT BOUNDARIES OF PROPOSED CONCRETE REMOVALS 1" DEEP. REMOVE CONCRETE TO A ROUGH SURFACE. WHERE PRACTICABLE, THE EXISTING REINFORCING STEEL WHERE REQUIRED IN THE PLANS SHALL BE LEFT IN PLACE. INSTALL DOWEL BARS IF SPECIFIED. PRIOR TO CONCRETE PLACEMENT ABRASIVELY CLEAN JOINT SURFACE AND EXPOSED REINFORCEMENT TO REMOVE LOOSE AND DISINTEGRATED CONCRETE AND LOOSE RUST. THE JOINT SURFACE AND EXPOSED REINFORCEMENT SHALL BE THOROUGHLY CLEANED OF ALL DIRT, DUST, OR OTHER FOREIGN MATERIAL BY THE USE OF WATER, AIR UNDER PRESSURE, OR OTHER METHODS THAT PRODUCE SATISFACTORY RESULTS. CONCRETE BONDING SURFACES SHALL BE WET WITHOUT FREE WATER AS CONCRETE IS PLACED.

SUBSTRUCTURE CONCRETE REMOVAL:
SUBSTRUCTURE CONCRETE REMOVAL SHALL BE BY MEANS OF APPROVED PNEUMATIC HAMMERS EMPLOYING POINTED AND BLUNT CHISEL TOOLS. HYDRAULIC HOE-RAM TYPE HAMMERS WILL NOT BE PERMITTED. THE WEIGHT OF THE HAMMER SHALL NOT BE MORE THAN 35 POUNDS FOR REMOVAL WITHIN 18 INCHES OF PORTIONS TO BE PRESERVED. OUTSIDE THE 18 INCH LIMIT, A HAMMER HEAVIER THAN 35 POUNDS, BUT NOT TO EXCEED 90 POUNDS, MAY BE USED AT THE APPROVAL OF THE ENGINEER. PNEUMATIC HAMMERS SHALL NOT BE PLACED IN DIRECT CONTACT WITH REINFORCING STEEL THAT IS TO BE RETAINED IN THE REBUILT STRUCTURE.

¼ INCH SCARIFICATION: THE EXISTING PIER BRIDGE SEAT SURFACE SHALL BE SCARIFIED ¼ INCH INTO SOUND CONCRETE PRIOR TO PLACEMENT OF THE CONCRETE. THE SURFACE SHALL BE THOROUGHLY CLEANED OF ALL DIRT, DUST, OR OTHER FOREIGN MATERIALS BY THE USE OF WATER, AIR UNDER PRESSURE, OR ANOTHER METHOD THAT PRODUCES RESULTS SATISFACTORY TO THE ENGINEER. THE CONCRETE BONDING SURFACE SHALL BE WET WITHOUT FREE WATER AS CONCRETE IS PLACED.

PAYMENT
ALL WORK SHALL BE PAID FOR UNDER ITEM 202 PORTIONS OF STRUCTURES REMOVED, AS PER PLAN

TRAFFIC MAINTENANCE:

SEE ROADWAY PLANS FOR ADDITIONAL TRAFFIC NOTES AND DETAILS.

SEALING OF CONCRETE SURFACES (EPOXY-URETHANE)

EPOXY-URETHANE SHALL BE THE "BUFF" COLOR MEETING FEDERAL COLOR STANDARD NO. 37722 AS PER THE DETAILS IN THE PLAN.

ITEM SPECIAL - WATERPROOFING, MISC.: SEMI-INTEGRAL ABUTMENT JOINT WATERPROOFING

INSTALL A 3 FOOT WIDE STRIP, 3/32 INCH THICK, GENERAL PURPOSE, HEAVY DUTY NEOPRENE SHEET WITH NYLON FABRIC REINFORCEMENT AT LOCATIONS SHOWN IN THE PLANS. SECURE THE 3 FOOT WIDE NEOPRENE SHEETING TO THE CONCRETE WITH 1¼" X 3/32" (LENGTH X SHANK DIAMETER) #10 GALVANIZED BUTTON HEAD SPIKE THROUGH A 1 INCH OUTSIDE DIAMETER, #10 GAGE GALVANIZED WASHER. MAXIMUM FASTENER SPACING IS 9 INCHES. OTHER SIMILAR GALVANIZED DEVICES WHICH WILL NOT DAMAGE EITHER THE NEOPRENE OR THE CONCRETE MAY BE USED SUBJECT TO THE APPROVAL OF THE ENGINEER.

CENTER THE NEOPRENE STRIPS ON ALL JOINTS. FOR HORIZONTAL JOINTS, SECURE THE HORIZONTAL NEOPRENE STRIP BY USING A SINGLE LINE OF FASTENERS, STARTING AT 6 INCHES (+/-) FROM THE TOP OF THE NEOPRENE STRIP. FOR THE VERTICAL JOINTS SECURE THE VERTICAL NEOPRENE STRIP BY USING A SINGLE VERTICAL LINE OF FASTENERS, STARTING AT 6 INCHES (+/-) FROM THE VERTICAL EDGE OF THE NEOPRENE STRIP NEAREST TO THE CENTERLINE OF ROADWAY. FOR VERTICAL JOINTS, INSTALL 2 ADDITIONAL FASTENERS, AT 6 INCHES CENTER TO CENTER, ACROSS THE TOP OF THE NEOPRENE STRIP ON THE SAME SIDE OF THE VERTICAL JOINT AS WHERE THE SINGLE VERTICAL ROW OF FASTENERS IS LOCATED.

THE VERTICAL NEOPRENE STRIPS SHOULD COMPLETELY OVERLAP THE HORIZONTAL STRIPS. LAPS IN THE LENGTH OF THE HORIZONTAL STRIPS DUE TO MATERIAL MANUFACTURING SHALL BE AT LEAST ONE FOOT IN LENGTH, IF NOT VULCANIZED OR ADHESIVE BONDED, OR 6 INCHES IN LENGTH IF THE LAP IS VULCANIZED OR ADHESIVE BONDED. NO LAPS ARE ACCEPTABLE IN VERTICALLY INSTALLED NEOPRENE STRIPS.

THE NEOPRENE SHEETING SHALL BE 3/32 INCH THICK GENERAL PURPOSE, HEAVY DUTY NEOPRENE SHEET WITH NYLON FABRIC REINFORCEMENT. THE SHEETING SHALL BE "FAIRPRENE NUMBER NN-0003", BY E. I. DUPONT DE NEMOURS AND COMPANY, INC., "WINGPRENE" BY THE GOODYEAR TIRE AND RUBBER COMPANY, OR AN APPROVED ALTERNATE. THE NEOPRENE SHEETING SHALL CONFORM TO THE FOLLOWING:

DESCRIPTION OF TEST	ASTM METHOD	REQUIREMENT
THICKNESS, INCHES	D 751	0.094 ± .01
BREAKING STRENGTH, GRAB WXF, LBS, MINIMUM	D 751	700 X 700
ADHESIVE 1" STRIP, 2" MINIMUM, LBS, MINIMUM	D 751	9
BURST STRENGTH (MULLEN) PSI, MINIMUM	D 751	1400
HEAT AGING 70 HOURS T 212 F, 180 BEND WITHOUT CRACKING	D 2136	NO CRACKING OF COATING
LOW TEMPERATURE BRITTLENESS 1 HOUR AT -40 F, BEND AROUND ¼ INCH MANDREL	D 2136	NO CRACKING OF COATING

PAYMENT FOR LABOR MATERIALS AND INSTALLATION OF THESE ITEMS SHALL BE INCLUDED IN INTEM SPECIAL- WATERPROOFING, MISC. : SEMI-INTEGRAL ABUTMENT JOINT WATERPROOFING.

PAINTING OF 863 STEEL

THE COLOR OF THE FINISH COAT SHALL BE A LIGHT GRAY COLOR MEETING FEDERAL STANDARD NUMBER 16440. IN ADDITION TO THE STEEL STRINGER TO BE PAINTED INCIDENTALS SUCH AS CROSSFRAMES AND BEARINGS SHALL BE INCLUDED FOR PAYMENT.

ITS CONDUIT

THE CONDUIT SHALL BE PLACED WITHIN THE OUTSIDE PARAPET OF L & R STRUCTURES. SEE CSS3 & CSS4 FOR DETAILS.

ITEM 503, UNCLASSIFIED EXCAVATION, AS PER PLAN:

UNCLASSIFIED EXCAVATION SHALL BE IN ACCORDANCE WITH 503 EXCEPT THAT THE BACKFILL MATERIAL BEHIND THE ABUTMENTS SHALL BE 203 MATERIAL PLACED IN 6" LIFTS. EXCAVATION AT ABUTMENTS IN ADDITION TO THAT NECESSARY TO REMOVE PORTION OF THE EXISTING STRUCTURE SHALL BE INCLUDED IN THE LUMP SUM PRICE BID FOR ITEM 503, UNCLASSIFIED EXCAVATION FOR PAYMENT.

ITEM 842 CLASS C CONCRETE, (FOOTINGS, PIERS AND ABUTMENTS) AS PER PLAN

THE COARSE AGGREGATE SHALL BE NO. 8 LIMESTONE. THESE ITEMS SHALL INCLUDE THE COST OF THE REINFORCING STEEL.

ITEM 844 HIGH PERFORMANCE CONCRETE, AS PER PLAN

THE DESIGN MIX SHALL BE MIX NO. 4 LIMESTONE. THE OPTION OF SLIPFORM CONSTRUCTION OF THE BRIDGE PARAPET IS NOT PERMITTED. THESE ITEMS SHALL INCLUDE THE COST OF THE REINFORCING STEEL.

REINFORCING STEEL:

NEW REINFORCING STEEL MAY REQUIRE FIELD CUTTING OR BENDING TO BE PROPERLY FITTED. PAYMENT SHALL BE INCLUDED UNDER ITEM 844 HIGH PERFORMANCE CONCRETE.

ITEM 518 - POROUS BACKFILL WITH FILTER FABRIC, AS PER PLAN

POROUS BACKFILL SHALL BE #57 GRAVEL ONLY.

ITEM 507 STEEL PILES HP 10X42 (REAR ABUTMENT PILES)

THE DESIGN LOAD IS 40 TONS PER PILE FOR THE REAR ABUTMENT PILES. THE ULTIMATE BEARING VALUE IS 80 TONS PER PILE. THE ULTIMATE BEARING VALUE IS TWO TIMES THE ACTUAL DESIGN LOAD. THE ABUTMENT PILES SHALL BE DRIVEN TO THE ULTIMATE BEARING VALUE.

ITEM 507 STEEL PILES HP 12X53 (PIER PILES) AND HP 10X42 (FORWARD ABUTMENT PILES) :

THE DESIGN LOAD IS 65 TONS PER PILE FOR THE PIER PILES AND 40 TONS PER PILE OF THE FORWARD ABUTMENT PILES. THE PILE SHALL BE DRIVEN TO REFUSAL ON THE BEDROCK. REFUSAL SHALL BE CONSIDERED AS OBTAINED BY PENETRATING SOFT BEDROCK FOR SEVERAL INCHES WITH A MINIMUM RESISTANCE OF 20 BLOWS PER ONE INCH OR REFUSAL SHALL BE CONSIDERED AS OBTAINED AFTER THE PILE HAS CONTACTED HARD BEDROCK AND THE PILE HAS THEN RECEIVED AT LEAST 20 BLOWS.

SURVEY DISC ON STRUCTURE:

THE CONTRACTOR SHALL NOTIFY THE ENGINEER AT LEAST ONE (1) WEEK IN ADVANCE OF POURING THE CONCRETE FOR COMPLETION OF THE ABUTMENT. THE ENGINEER WILL PROVIDE THE CONTRACTOR ONE (1) SURVEY DISC FOR EACH STRUCTURE (OBTAINED FROM THE DISTRICT SURVEYOR) WHICH THE CONTRACTOR SHALL PLACE IN THE SURFACE OF THE FRESH CONCRETE. THE LOCATION OF THE DISC SHALL BE ON THE ABUTMENT, AND ON A FLAT, HORIZONTAL SURFACE BEYOND THE EDGE OF DECK AND PARAPET. THE BENCHMARK SHALL BE ACCESSIBLE TO A SURVEYOR'S ROD WITHOUT ANY OBSTRUCTIONS. COST OF THIS WORK IS CONSIDERED INCIDENTAL TO THE CONCRETE BID ITEM.

ITEM 601 CRUSHED AGGREGATE SLOPE PROTECTION

THE QUANTITIES INCLUDES 10 % OF THE EXISTING AGGREGATE SLOPE PROTECTION SURFACE AREA IN ADDITION TO WHAT IT IS DETAILED ON THE PLANS. THE SLOPE PROTECTION TO BE PLACED UNDER WIDENED STRUCTURE AND MATCH EXISTING.

DESIGN AGENCY
ODOT CENTRAL OFFICE
OFFICE OF PRODUCTION

DESIGNED	DRAWN	REVIEWED	DATE
DB	DB	SER	8-27-99
CHECKED	REVISED	STRUCTURE FILE NUMBER	
DFT		5203694 L/5203724 R	

GENERAL NOTES
MED-71-1870 L/R
I-71 OVER I-271

MED-71-15.78

739
940

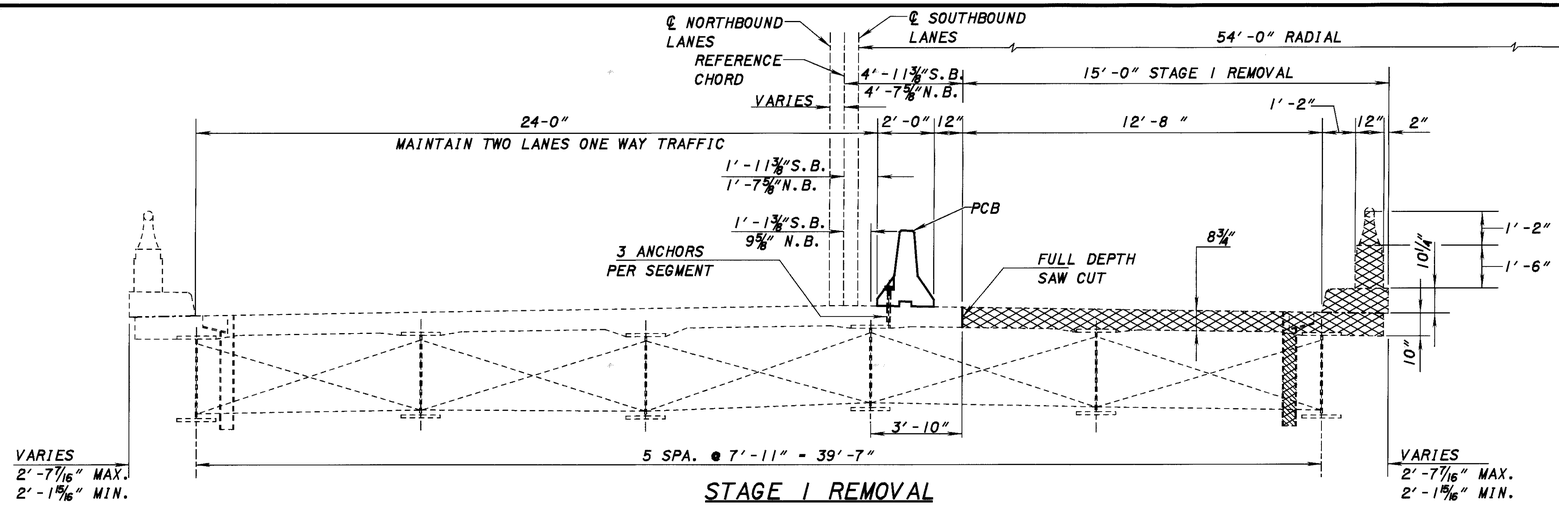

STAGE 1 REMOVAL

(SOUTHBOUND LANES SHOWN, NORTHBOUND LANES MIRROR IMAGE)

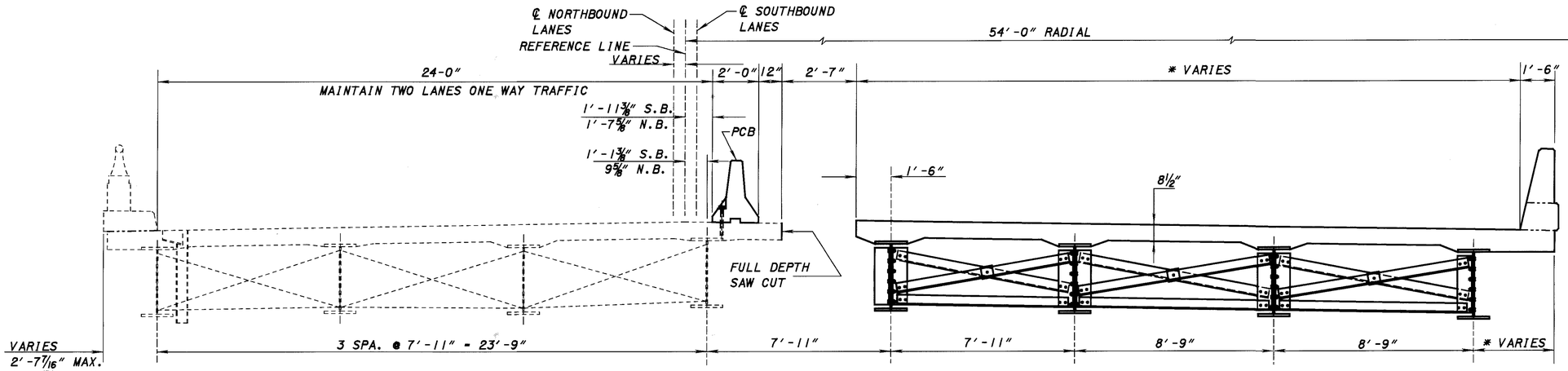

STAGE 1 CONSTRUCTION

(SOUTHBOUND LANES SHOWN, NORTHBOUND LANES MIRROR IMAGE)

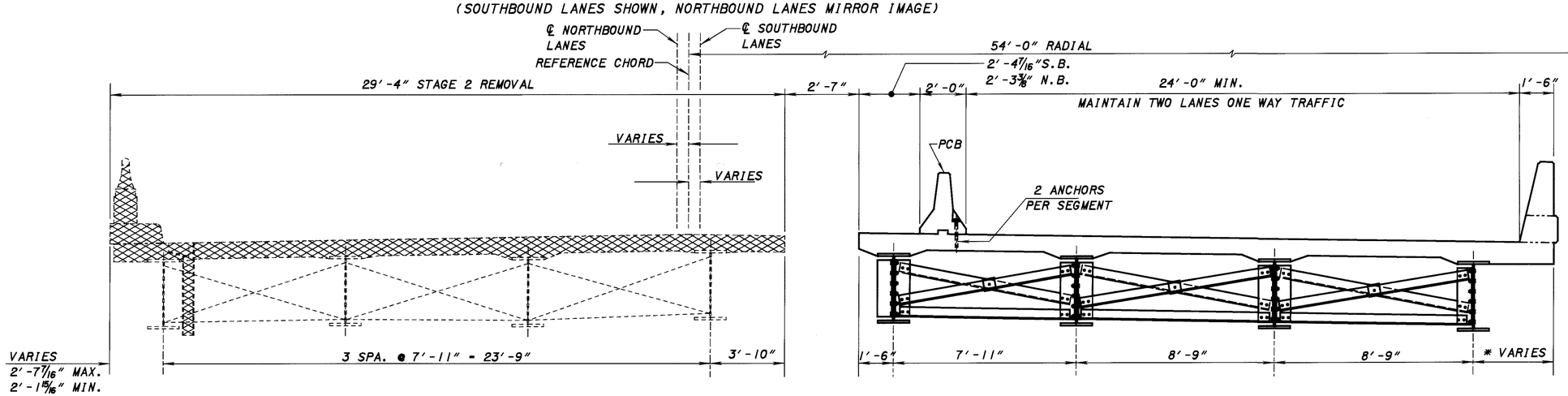

STAGE 2 REMOVAL

(SOUTHBOUND LANES SHOWN, NORTHBOUND LANES MIRROR IMAGE)

* FOR THE DIMENSIONS THAT VARY SEE SHEET 24/39 .

DESIGN AGENCY
ODOT CENTRAL OFFICE
OFFICE OF PRODUCTION

REVISED DFT DATE 10-22-94
STRUCTURE FILE NUMBER 5203694L & 5203724R

DRAWN DB REVISED

DESIGNED DB CHECKED TAA

STAGE CONSTRUCTION DETAILS

MED-71-1.870 L/R
I-71 OVER 127

MED-71-15.78

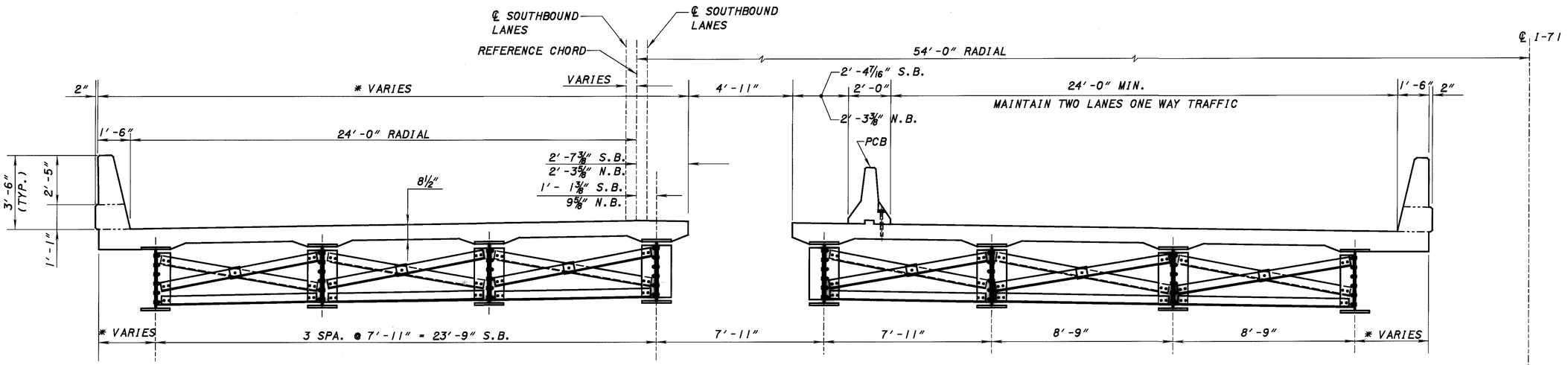

STAGE 2 CONSTRUCTION

(SOUTHBOUND LANES SHOWN, NORTHBOUND LANES MIRROR IMAGE)

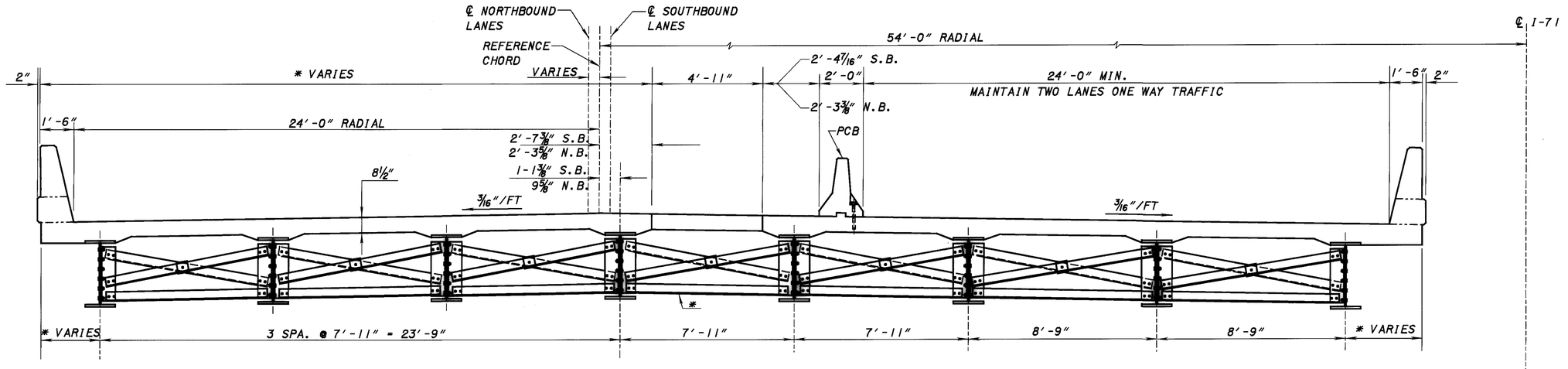

CLOSURE SECTION CONSTRUCTION

(SOUTHBOUND LANES SHOWN, NORTHBOUND LANES MIRROR IMAGE)

* PLACE CROSSFRAMES IN POSITION PRIOR TO POURING OF THE CLOSURE POUR

NOTES AND LEGEND

TEMPORARY BARRIERS SHALL BE ANCHORED TO EXISTING AND PROPOSED BRIDGE DECK. TWO (2) OR THREE (3) ANCHORS PER TEMPORARY BARRIER SEGMENT ARE REQUIRED ON THE TRAFFIC SIDE OF THE BARRIER. THE ANCHOR BOLT PATTERN SHALL BE SYMMETRICAL ABOUT THE CENTER OF EACH SEGMENT. SEE STD. DWG. PCB-91 FOR ADDITIONAL DETAILS.

PCB - INDICATES PORTABLE CONCRETE BARRIER.

* FOR THE DIMENSIONS THAT VARY SEE SHEET 24/39.

PROPOSED WORK

1. MAINTAIN TRAFFIC BY USE OF STAGE CONSTRUCTION.
2. REPLACE CONCRETE DECK AND STEEL BEAMS.
3. WIDEN AND MODIFY EXISTING SUBSTRUCTURE UNITS.

DESIGN AGENCY: ODOT CENTRAL OFFICE OFFICE OF PRODUCTION
REVIEWED: DFT
DATE: 10-22-94
STRUCTURE FILE NUMBER: 5203694L & 5203724R
DRAWN: DB
REVISED:
DESIGNED: DB
CHECKED: TAA

STAGE CONSTRUCTION DETAILS
MED-71-1870 L/R
I-71 OVER I-271

MED-71-15.78

5/39

741/940

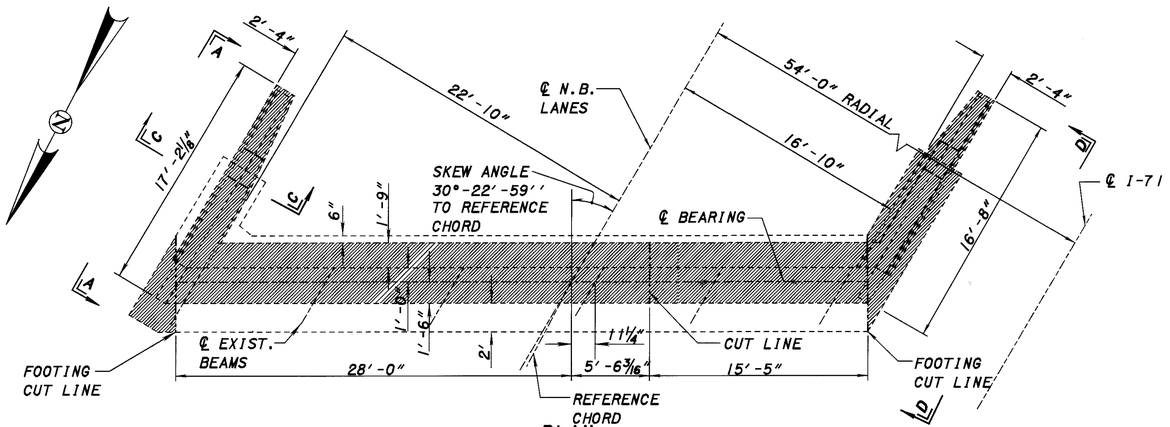

PLAN

(REAR ABUTMENT NORTHBOUND)

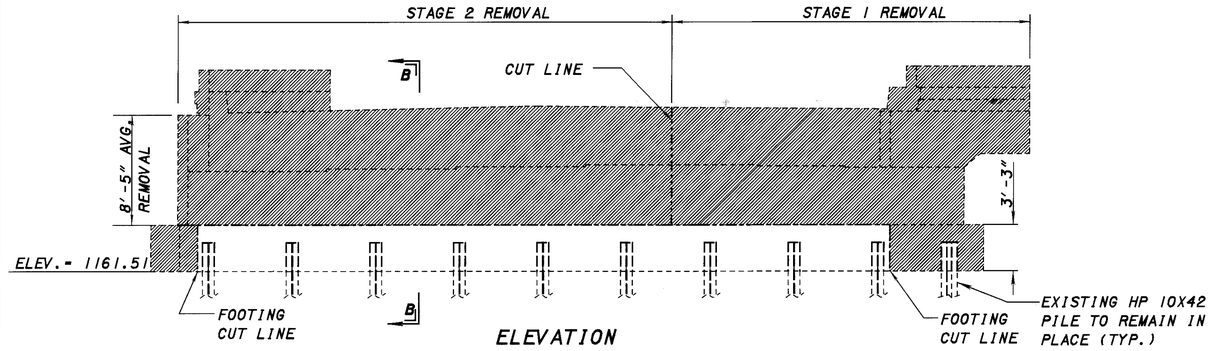

ELEVATION

(REAR ABUTMENT NORTHBOUND)

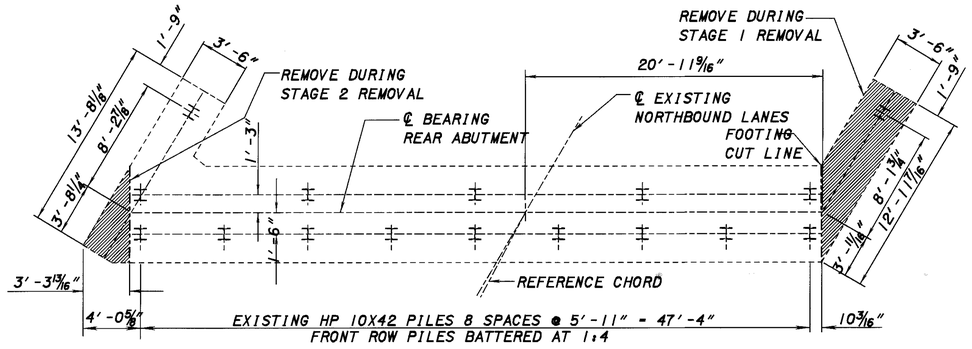

FOOTING PLAN

(REAR ABUTMENT NORTHBOUND)

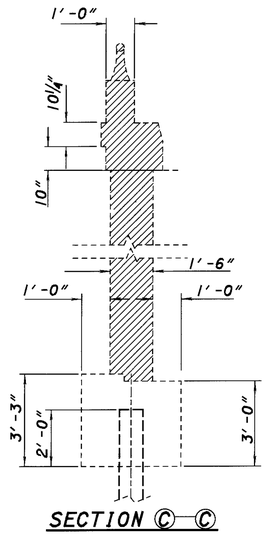

SECTION Ⓒ—Ⓒ

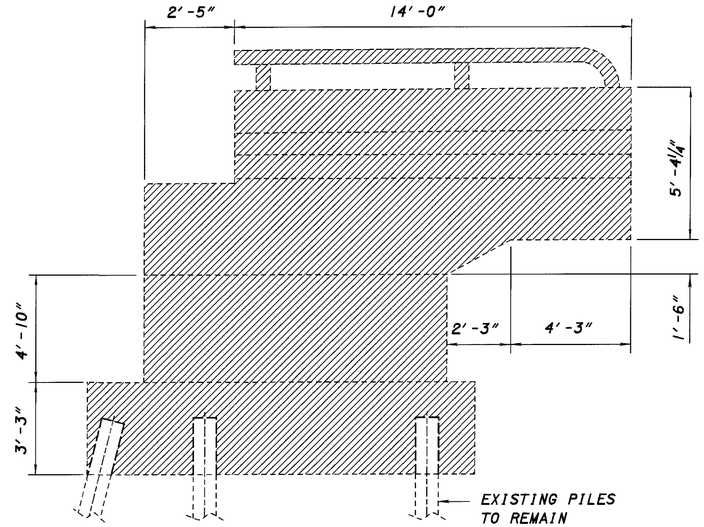

VIEW Ⓓ—Ⓓ

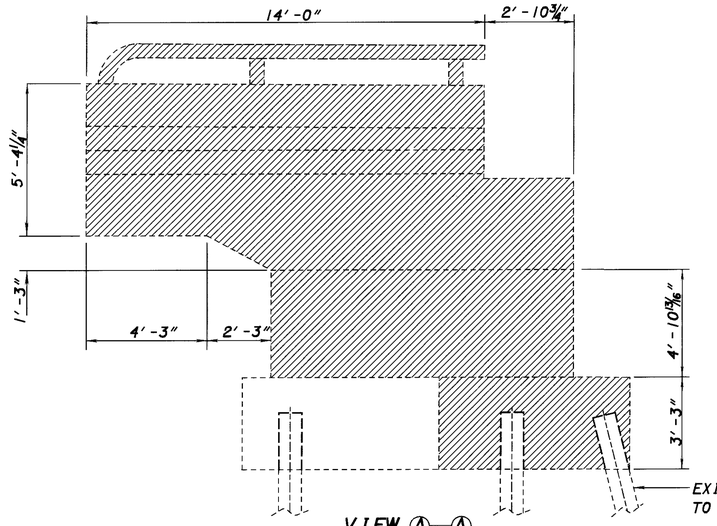

VIEW Ⓐ—Ⓐ

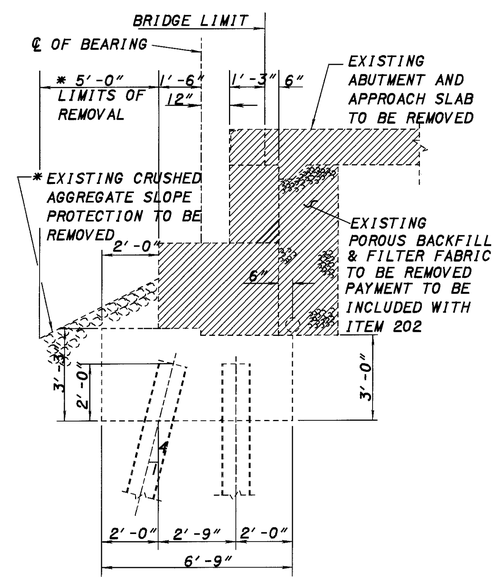

SECTION Ⓑ—Ⓑ

LEGEND

▨ - PORTION OF STRUCTURE TO BE REMOVED

DESIGN AGENCY
ODOT CENTRAL OFFICE
OFFICE OF PRODUCTION

DESIGNED	DRAWN	REVISED	DATE
DB	DB	DFT	10-22-94
CHECKED	REVISED	STRUCTURE FILE NUMBER	
TAA		5203724R	

REAR ABUTMENT NORTHBOUND REMOVALS
MED-71-1870 R
I-71 OVER I-271

MED-71-15.78

6 / 39

742 / 940

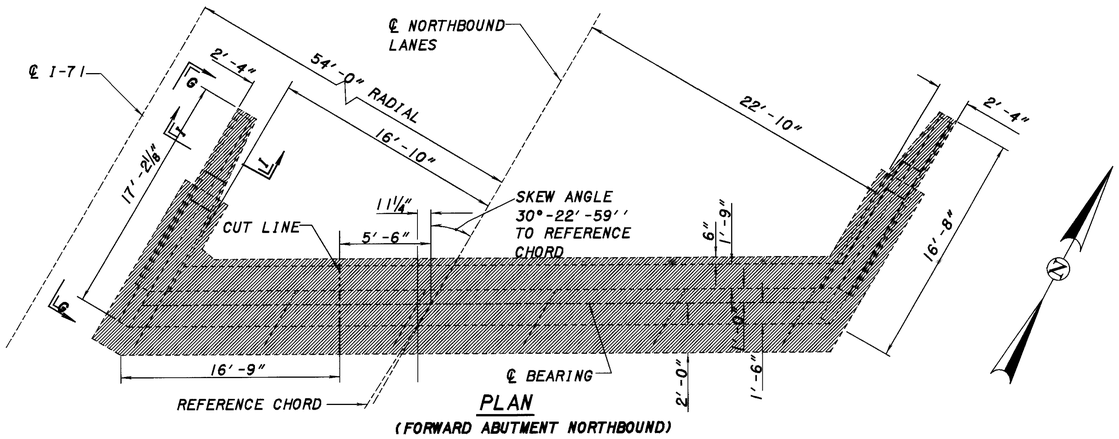

PLAN
(FORWARD ABUTMENT NORTHBOUND)

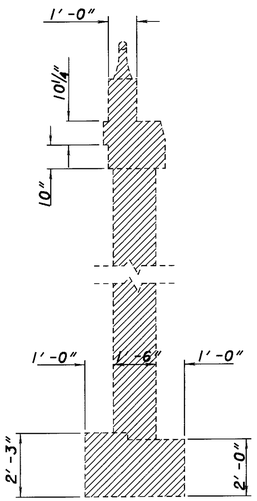

SECTION Ⓘ—Ⓘ

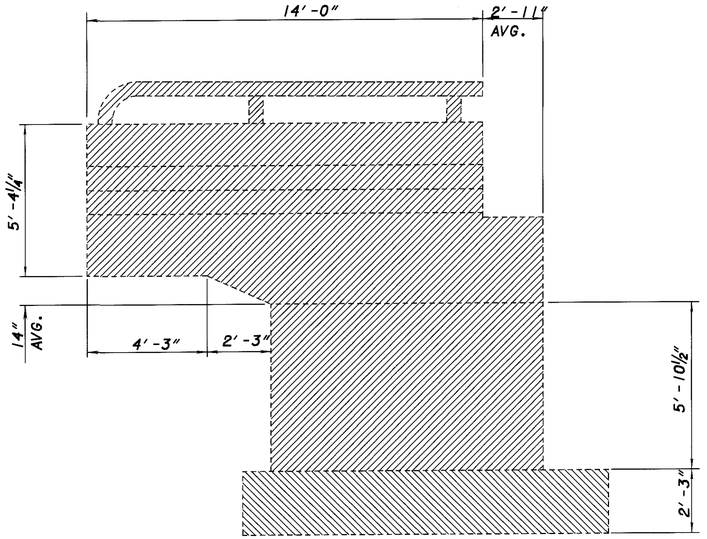

VIEW Ⓖ—Ⓖ

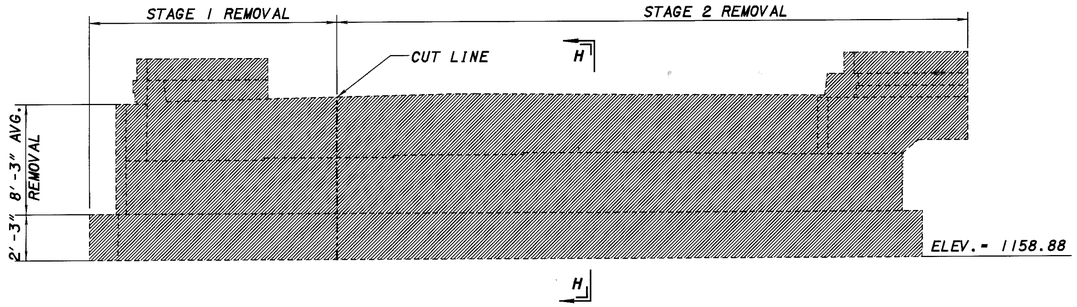

ELEVATION
(FORWARD ABUTMENT NORTHBOUND)

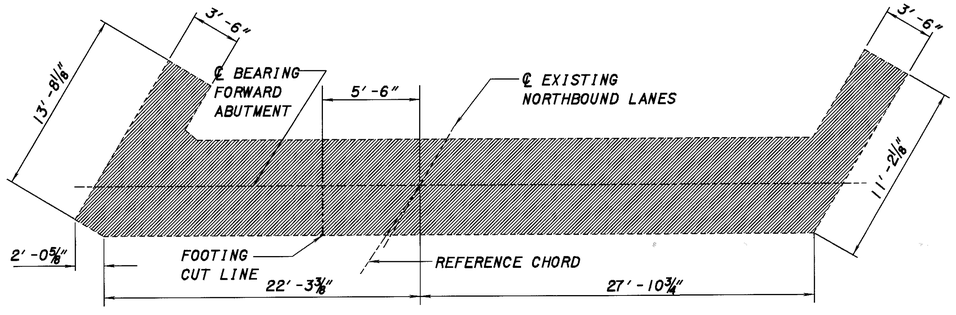

FOOTING PLAN
(FORWARD ABUTMENT NORTHBOUND)

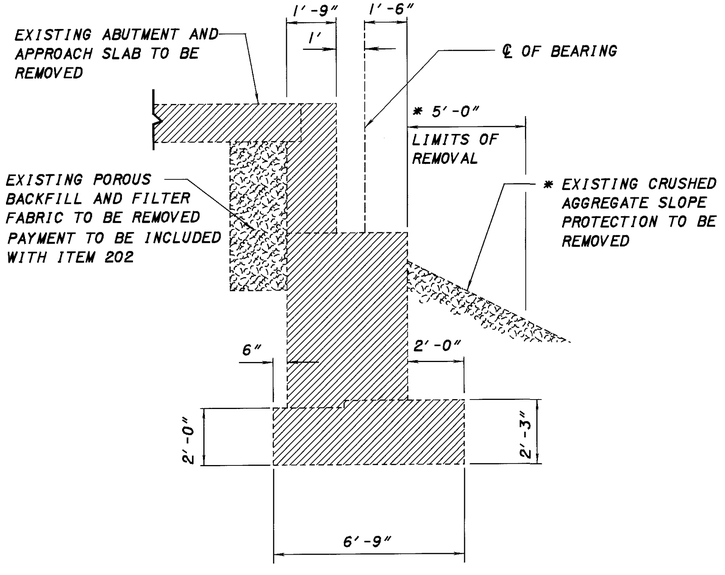

SECTION Ⓗ—Ⓗ

NOTES

THE ENTIRE NORTHBOUND FORWARD ABUTMENT TO BE REMOVED

LEGEND

▨ - PORTION OF STRUCTURE TO BE REMOVED

DESIGN AGENCY
ODOT CENTRAL OFFICE
OFFICE OF PRODUCTION

DESIGNED	DRAWN	REVISED	DATE	STRUCTURE FILE NUMBER
DB	DB		10-22-99	5203724R
CHECKED				
TAA				

FORWARD ABUTMENT NORTHBOUND REMOVALS
MED-71-1870 R
I-71 OVER I-271

MED-71-15.78

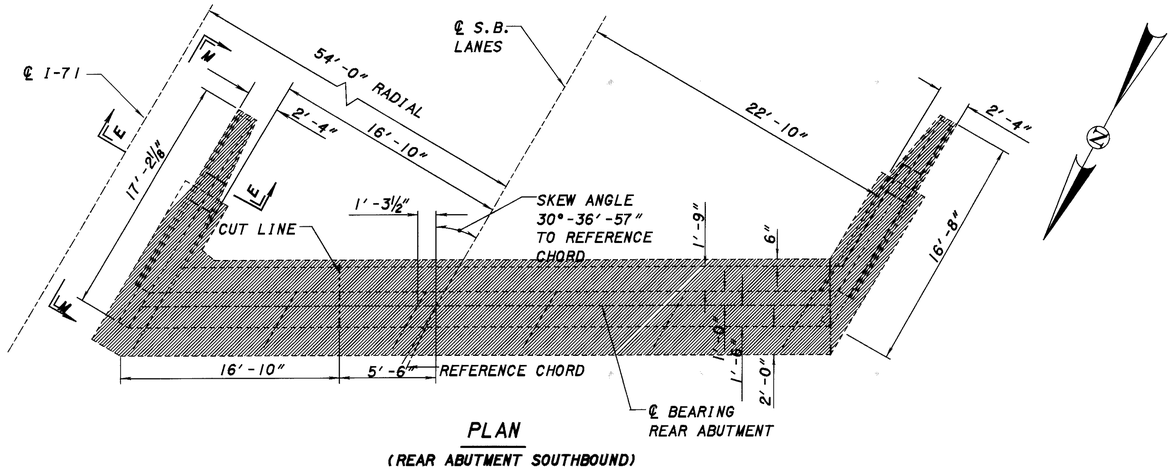

PLAN
(REAR ABUTMENT SOUTHBOUND)

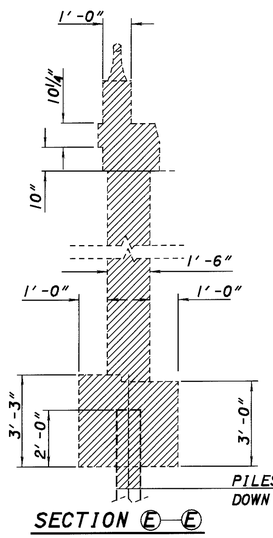

SECTION Ⓔ—Ⓔ

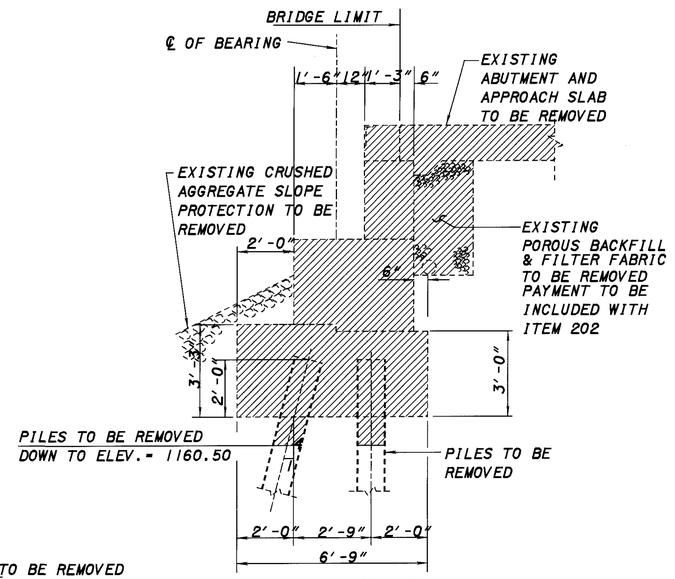

SECTION Ⓕ—Ⓕ

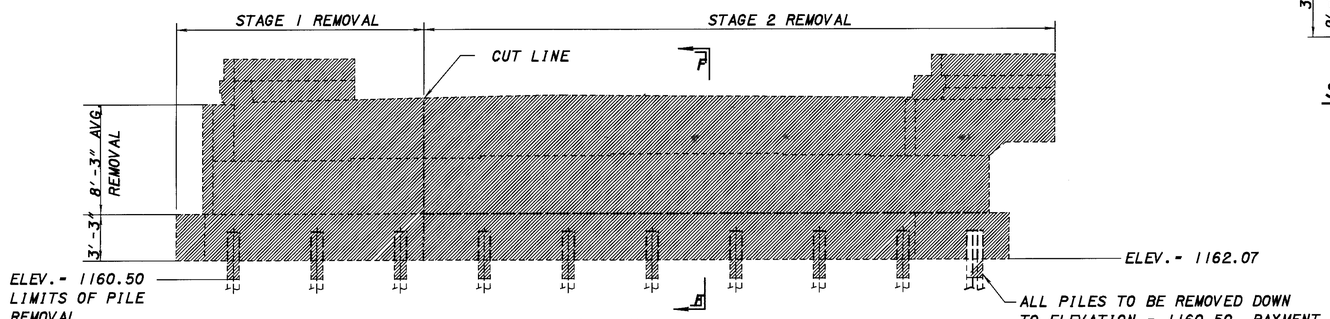

ELEVATION
(REAR ABUTMENT SOUTHBOUND)

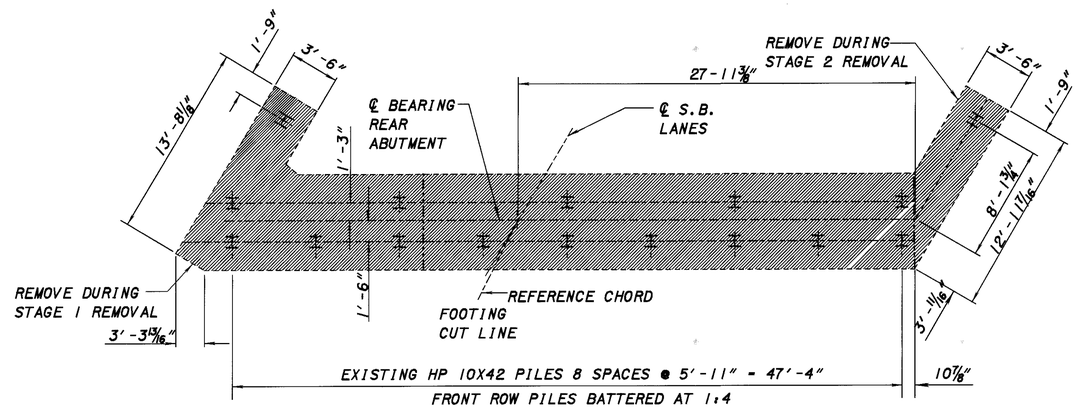

FOOTING PLAN
(REAR ABUTMENT SOUTHBOUND)

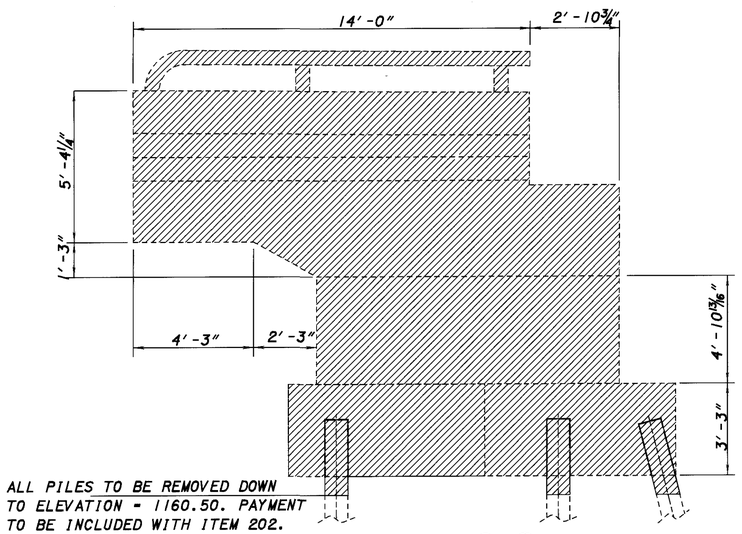

VIEW Ⓜ—Ⓜ

NOTES

THE ENTIRE SOUTHBOUND REAR ABUTMENT TO BE REMOVED

LEGEND

▨ - PORTION OF STRUCTURE TO BE REMOVED

DESIGN AGENCY: ODOT CENTRAL OFFICE, OFFICE OF PRODUCTION
REVISED DFT DATE 10-22-99
STRUCTURE FILE NUMBER 5203694L
DRAWN DB REVISED
DESIGNED DB CHECKED TAA

REAR ABUTMENT SOUTHBOUND REMOVALS
MED-71-1870 L
I-71 OVER I-271

MED-71-15.78

8 / 39

744 / 940

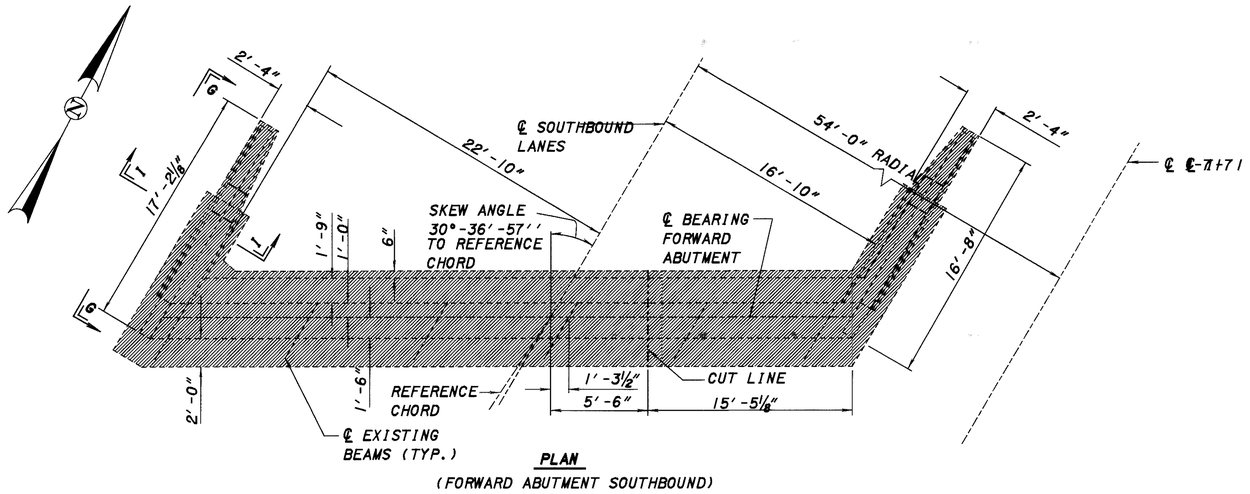

PLAN

(FORWARD ABUTMENT SOUTHBOUND)

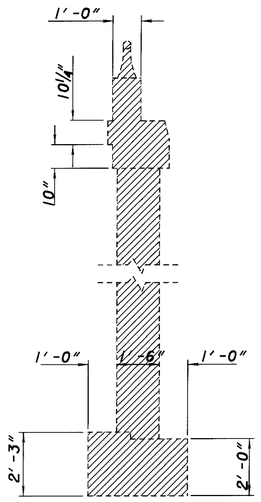

SECTION Ⓘ—Ⓘ

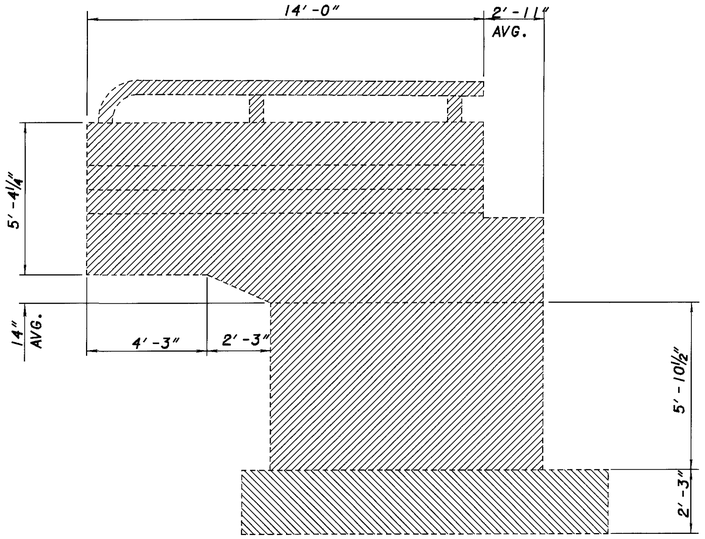

VIEW Ⓖ—Ⓖ

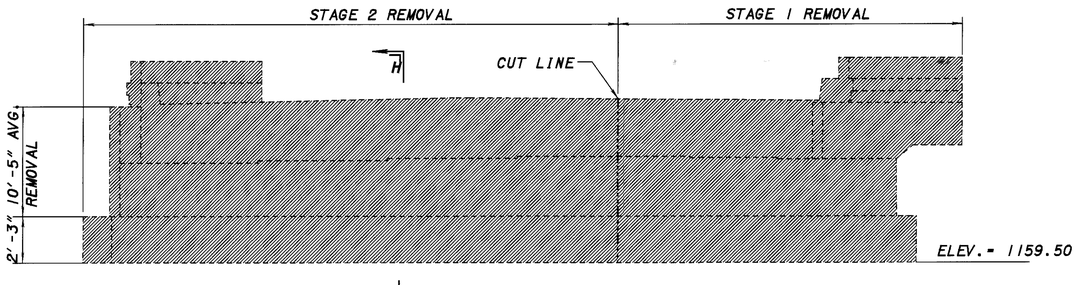

ELEVATION

(FORWARD ABUTMENT SOUTHBOUND)

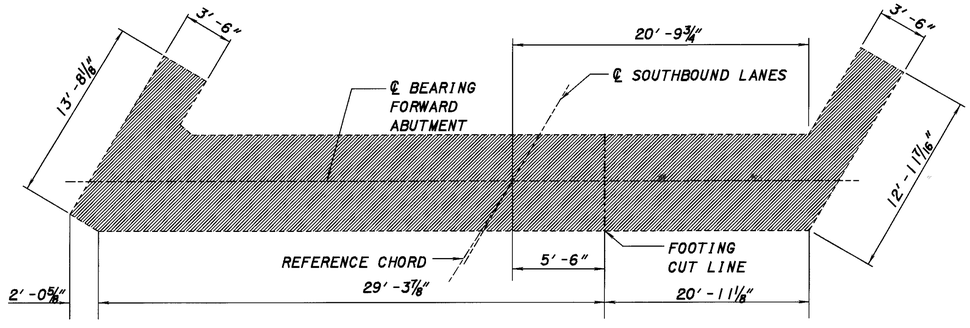

FOOTING PLAN

(FORWARD ABUTMENT SOUTHBOUND)

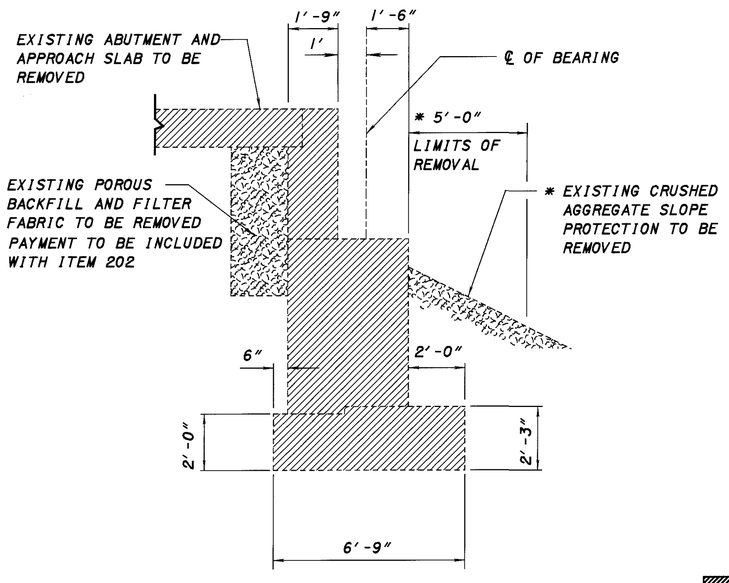

SECTION Ⓗ—Ⓗ

NOTES

THE ENTIRE SOUTHBOUND FORWARD ABUTMENT TO BE REMOVED.

LEGEND

▨ - PORTION OF STRUCTURE TO BE REMOVED

DESIGN AGENCY: ODOT CENTRAL OFFICE, OFFICE OF PRODUCTION

REVISED	DATE	STRUCTURE FILE NUMBER
DFT	10-22-99	5203694L

DRAWN	REVISED
DB	

DESIGNED	CHECKED
DB	TAA

FORWARD ABUTMENT SOUTHBOUND REMOVALS

MED-71-1870 L

I-71 OVER I-271

MED-71-15.78

9 / 39

745 / 940

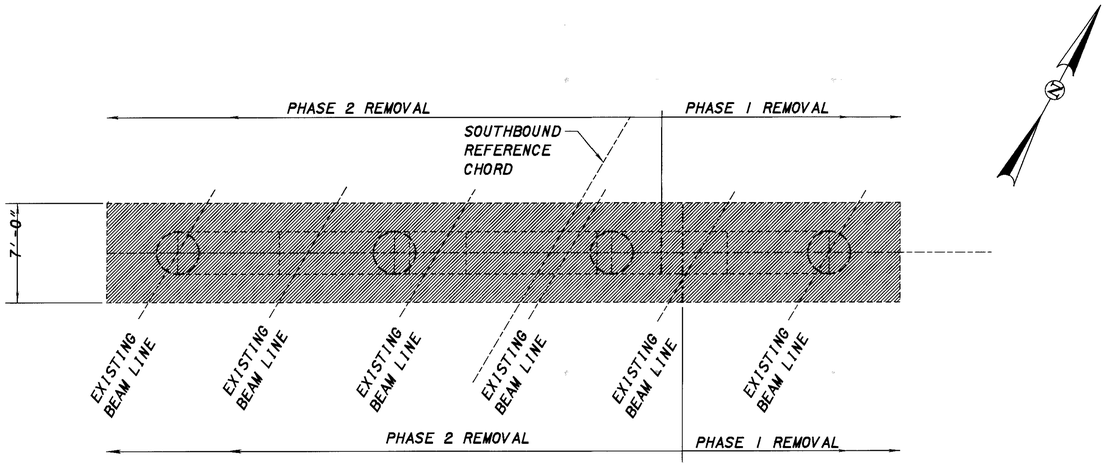

PLAN

PIER 1 SOUTHBOUND LANES REMOVAL

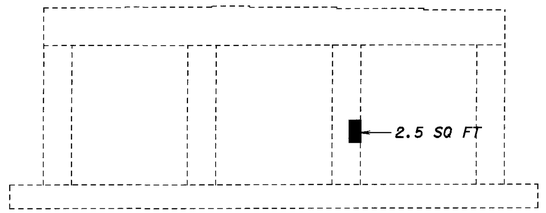

NORTH FACE/PIER 2 - NORTHBOUND BRIDGE

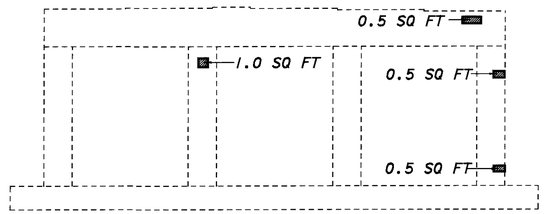

SOUTH FACE/ PIER 2 - SOUTHBOUND BRIDGE

ELEVATIONS	
A	1168.75
B	1168.91
C	1169.06
D	1169.00
E	1168.91
F	1168.82
G	1144.61

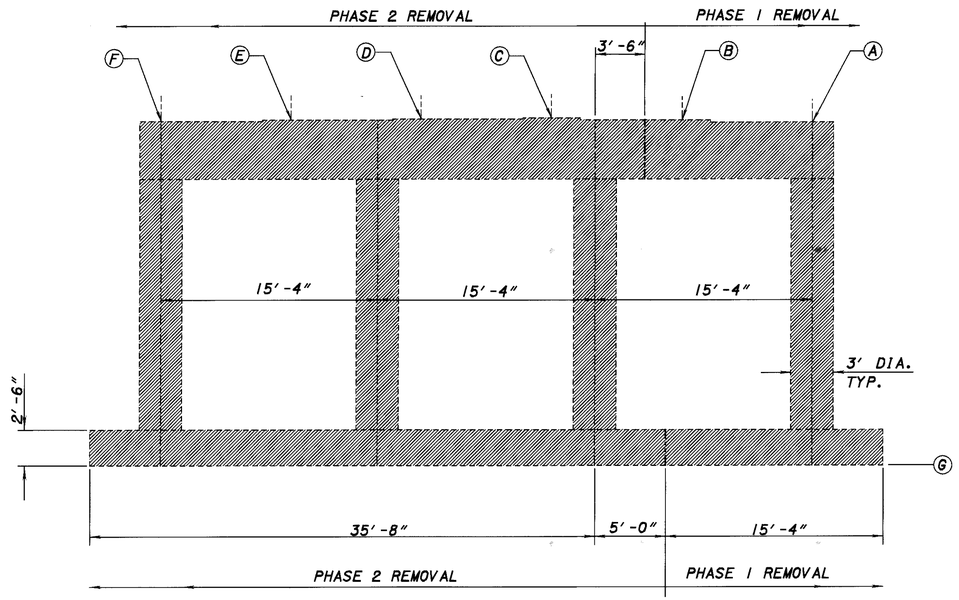

ELEVATION

PIER 1 SOUTHBOUND LANES REMOVAL

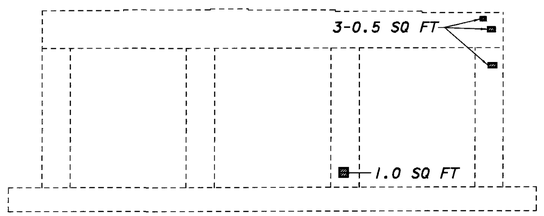

SOUTH FACE/ PIER 2 - NORTHBOUND BRIDGE

ALL SURFACES TO BE PATCHED AND THE EXPOSED REINFORCING STEEL WITHIN SHALL BE THOROUGHLY CLEANED BY ABRASIVE BLASTING PRIOR TO THE CLEANING SPECIFIED BY 519.04. CLEANING SHALL PRECEDE APPLICATION OF THE PATCHING MATERIAL OR ERECTION OF THE FORMS BY NOT MORE THAN 24 HOURS.

- AREA TO BE PATCHED

DESIGN AGENCY
ODOT CENTRAL OFFICE
OFFICE OF PRODUCTION

REVIEWED DFT DATE 10-22-99
STRUCTURE FILE NUMBER 5203724 R

DRAWN DB REVISED
DESIGNED DB CHECKED TAA

PIER REMOVAL AND PATCHING DETAILS
MED-71-1870 R
I-71 OVER I-271

MED-71-15.78

10 / 39

746
940

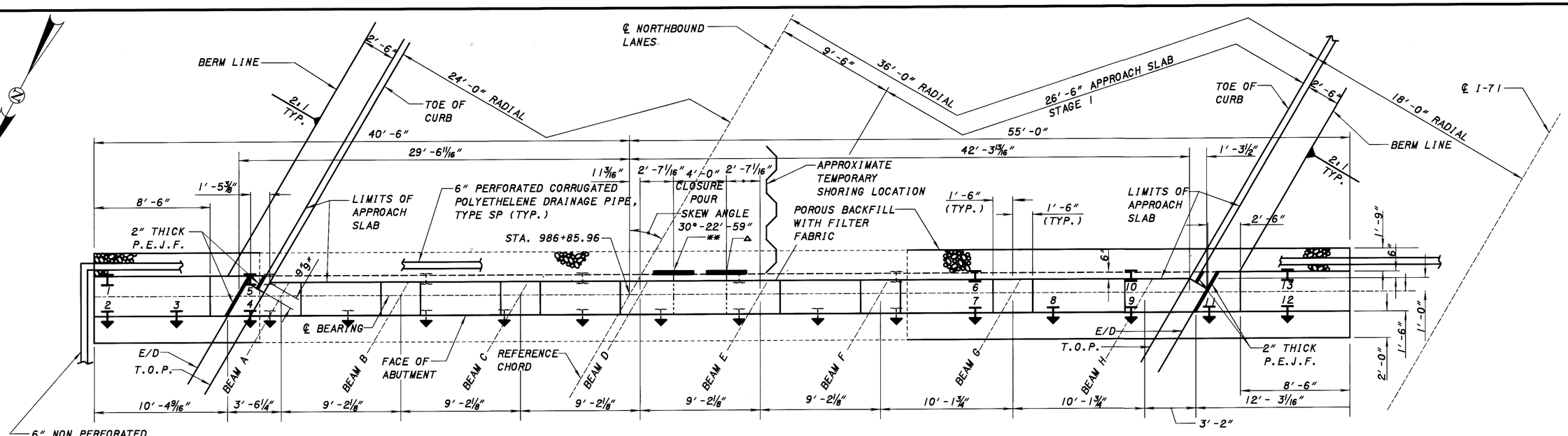

6" NON PERFORATED CORRUGATED POLYETHYLENE DRAINAGE PIPE, TYPE S (TYP.)

*** - 4" CONDUIT, SEE CSS3 AND CSS4 FOR DETAILS

PLAN
(REAR ABUTMENT NORTHBOUND LANES)

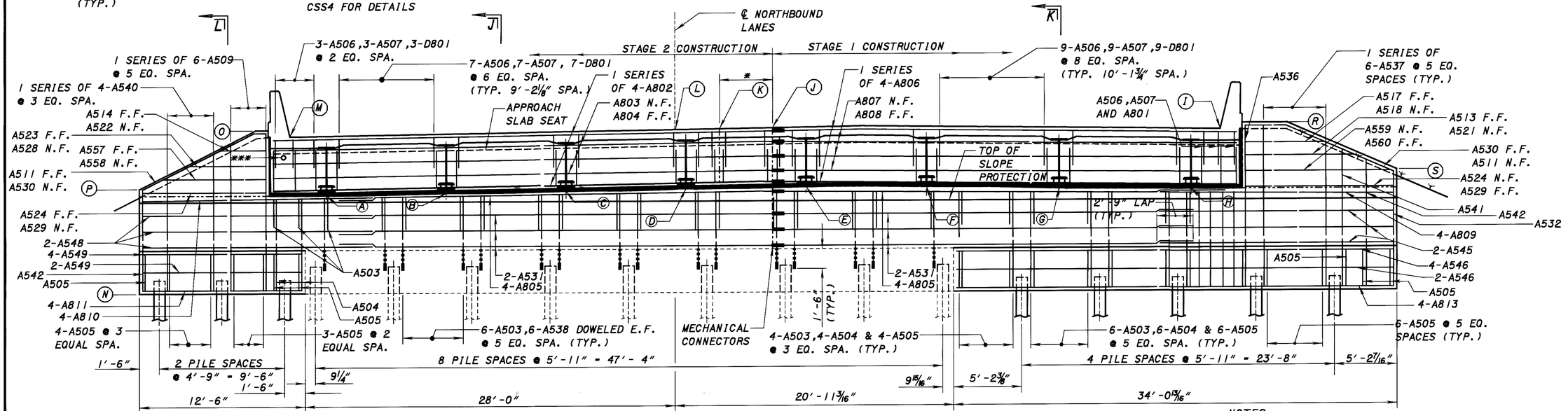

ELEVATION
(REAR ABUTMENT NORTHBOUND LANES)

LOCATION / ELEVATION	A	B	C	D	E	F	G	H	I	J	K	L	M	N	O	P	R	S
NORTHBOUND LANE FWD. ABUTMENT	1169.41	1169.57	1169.71	1169.84	1169.74	1169.64	1169.53	1169.42	1173.93	1174.30	1174.35	1174.39	1173.94	1161.62	1174.44	1170.90	1174.43	1170.90

NOTES

FOR SECTIONS AND DETAILS SEE SHEET 15/39 AND 16/39.

ELEVATIONS SHOWN ARE MEASURED ALONG THE BRIDGE LIMITS. BEAM SEAT ELEVATIONS ARE MEASURED ALONG ℄ OF BEARING.

△ TYPE B WATERPROOFING 3'-0" WIDE SHOULD EXTEND FROM BOTTOM OF APPROACH SLAB TO TOP OF FOOTING ACROSS THE CONSTRUCTION JOINT.

** TYPE B WATERPROOFING 3'-0" WIDE SHOULD EXTEND FROM BOTTOM OF APPROACH SLAB 1'-0" BELOW BEAM SEAT ACROSS THE CONSTRUCTION JOINT.

ALL ABUTMENT PILES ARE HP 10X42.

MINIMUM LAP FOR A #8 BAR - 3'-8"

LEGEND

- INDICATES BATTERED PILE.
- E/D - EDGE OF DECK
- C.J. - CONSTRUCTION JOINT
- E.F. TO - EACH FACE
- T.O.P. - TOE OF PARAPET
- * - CLOSURE POUR IN THE BACKWALL

DESIGN AGENCY: ODOT CENTRAL OFFICE, OFFICE OF PRODUCTION
REVISED: DFT | DATE: 10-22-99 | STRUCTURE FILE NUMBER: 5203724 R
DRAWN: DB | REVISED:
DESIGNED: DB | CHECKED: TAA

ABUTMENT DETAILS
MED-71-1870 R
I-71 OVER I-271

MED-71-15.78

11/39

747/940

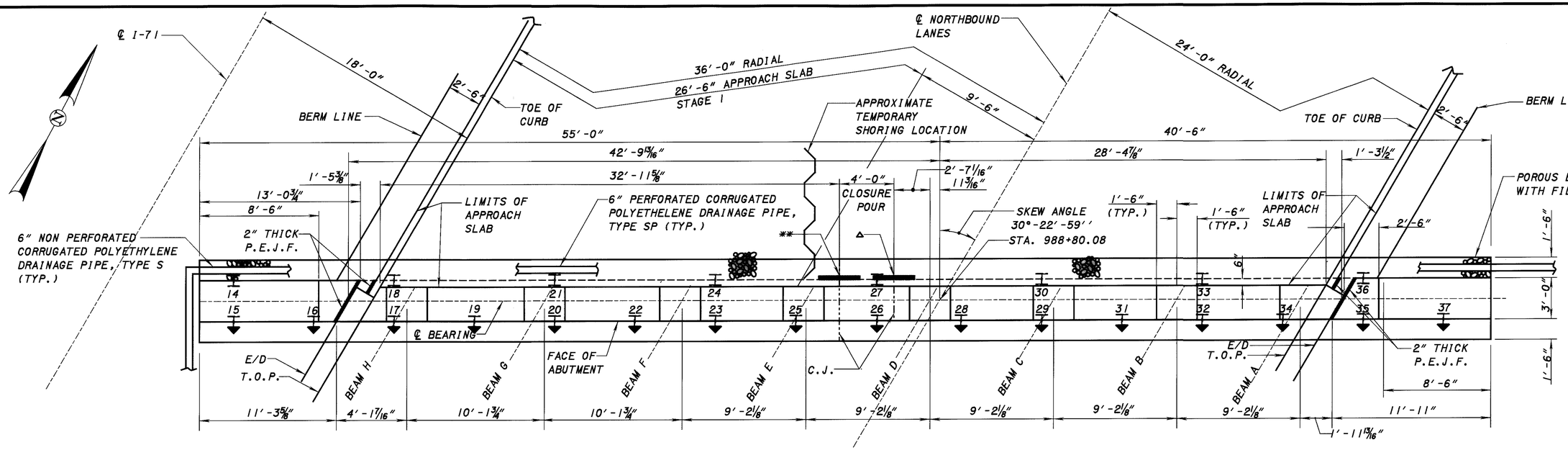

PLAN

(FORWARD ABUTMENT NORTHBOUND LANES)

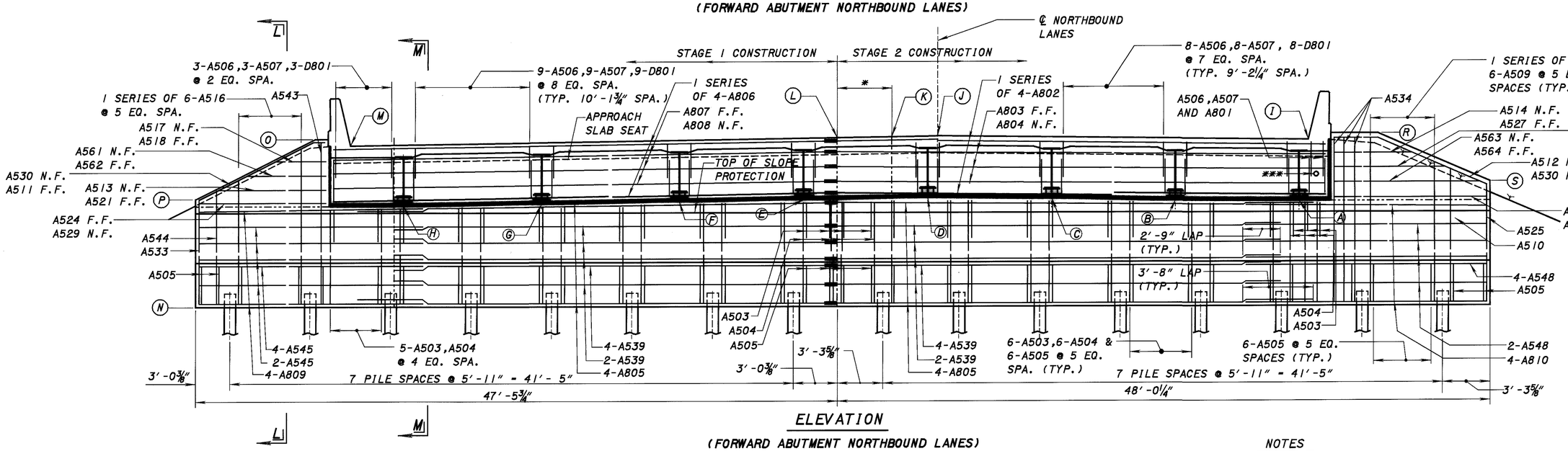

ELEVATION

(FORWARD ABUTMENT NORTHBOUND LANES)

*** - 4" CONDUIT, SEE CSS3 AND CSS4 FOR DETAILS

LOCATION / ELEVATION	A	B	C	D	E	F	G	H	I	J	K	L	M	N	O	P	R	S
NORTHBOUND LANE FWD. ABUTMENT	1168.10	1168.27	1168.43	1168.56	1168.48	1168.39	1168.28	1168.19	1172.62	1173.10	1173.07	1173.03	1172.70	1158.99	1173.20	1169.70	1173.12	1169.70

NOTES

FOR SECTIONS AND DETAILS SEE SHEET 16/39.

ELEVATIONS SHOWN ARE MEASURED ALONG THE BRIDGE LIMITS. BEAM SEAT ELEVATIONS ARE MEASURED ALONG ℄ OF BEARING.

** TYPE B WATERPROOFING 3'-0" WIDE SHOULD EXTEND FROM BOTTOM OF APPROACH SLAB TO TOP OF FOOTING ACROSS THE CONSTRUCTION JOINT.

△ TYPE B WATERPROOFING 3'-0" WIDE SHOULD EXTEND FROM BOTTOM OF APPROACH SLAB TO 1'-0" BELOW BEAM SEAT ACROSS THE CONSTRUCTION JOINT.

ALL ABUTMENT PILES ARE HP 10X42

LEGEND

- INDICATES BATTERED PILE.
E/D - EDGE OF DECK
C.J. - CONSTRUCTION JOINT
E.F. - EACH FACE
T.O.P. - TOE OF PARAPET

DESIGN AGENCY: ODOT CENTRAL OFFICE OFFICE OF PRODUCTION
DATE: 10-22-99
REVIEWED: DFT
STRUCTURE FILE NUMBER: 5203724 R
DRAWN: DB
REVISED:
DESIGNED: DB
CHECKED: TAA

ABUTMENT DETAILS
MED-71-1870 R
I-71 OVER I-271

MED-71-15.78

12/39

748/940

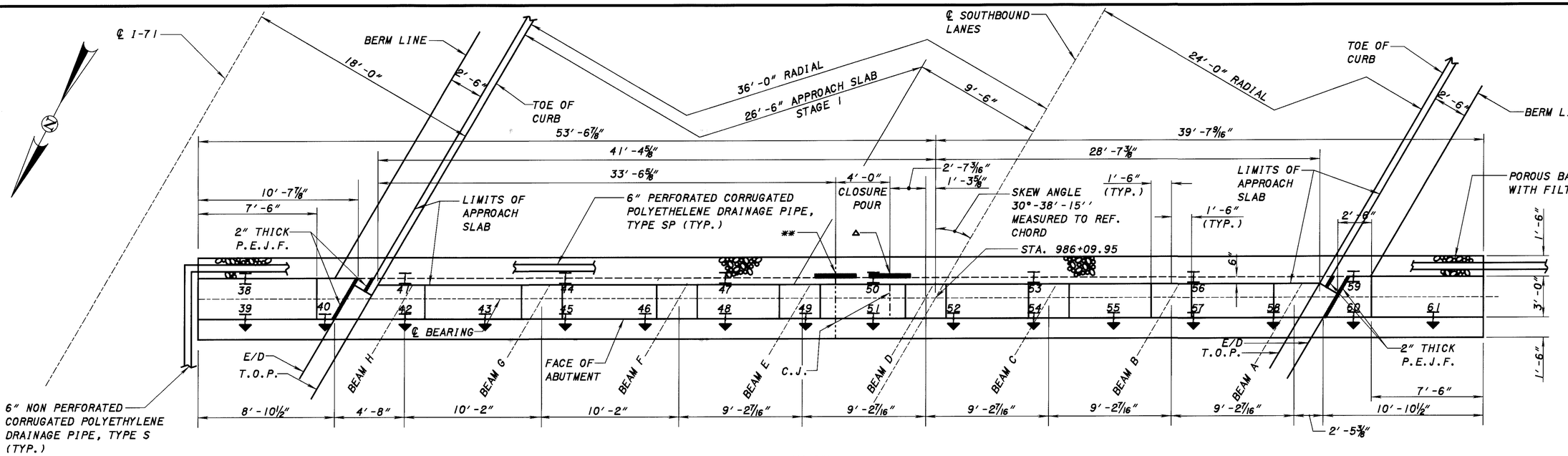

PLAN
(REAR ABUTMENT SOUTHBOUND LANES)

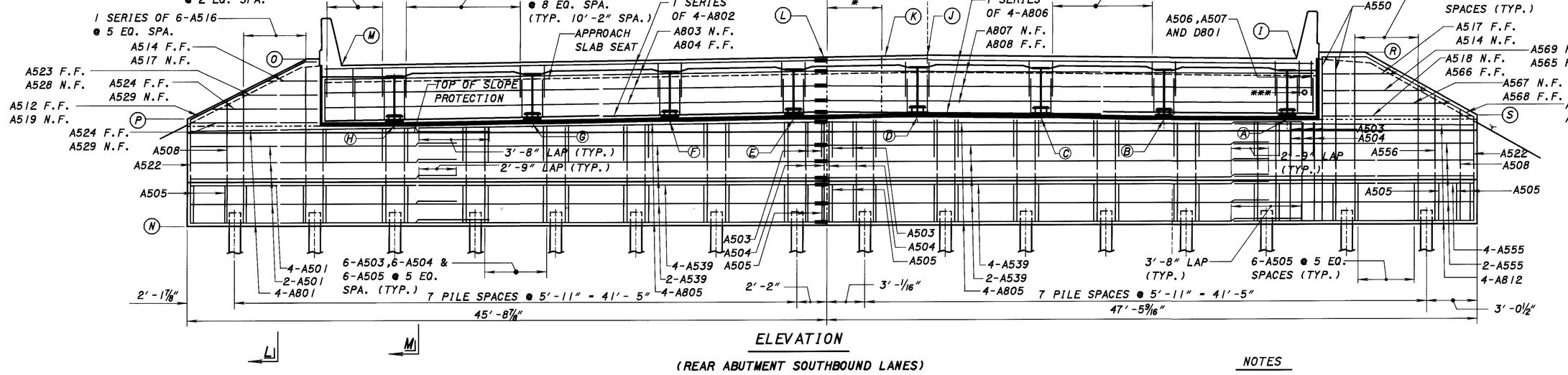

ELEVATION
(REAR ABUTMENT SOUTHBOUND LANES)

*** - 4" CONDUIT, SEE CSS3 AND CSS4 FOR DETAILS

LOCATION / ELEVATION	ELEVATIONS																	
	A	B	C	D	E	F	G	H	I	J	K	L	M	N	O	P	R	S
SOUTHBOUND LANE REAR ABUTMENT	1169.89	1169.99	1170.10	1170.17	1170.03	1169.89	1169.73	1169.56	1174.41	1174.73	1174.68	1174.59	1174.08	1161.26	1174.58	1171.06	1174.91	1171.06

NOTES

FOR SECTIONS AND DETAILS SEE SHEET 16/39

ELEVATIONS SHOWN ARE MEASURED ALONG THE BRIDGE LIMITS. BEAM SEAT ELEVATIONS ARE MEASURED ALONG ℄ OF BEARING.

** TYPE B WATERPROOFING 3'-0" WIDE SHOULD EXTEND FROM BOTTOM OF APPROACH SLAB TO TOP OF FOOTING ACROSS THE CONSTRUCTION JOINT.

△ TYPE B WATERPROOFING 3'-0" WIDE SHOULD EXTEND FROM BOTTOM OF APPROACH SLAB TO 1'-0" BELOW BEAM SEAT ACROSS THE CONSTRUCTION JOINT.

ALL ABUTMENT PILES ARE HP 10X42

LEGEND

▼ - INDICATES BATTERED PILE.

E/D - EDGE OF DECK

C.J. - CONSTRUCTION JOINT

E.F. - EACH FACE

T.O.P. - TOE OF PARAPET

* - CLOSURE POUR IN THE BACKWALL

DESIGN AGENCY: ODOT CENTRAL OFFICE OFFICE OF PRODUCTION
REVIEWED: DFT
DATE: 10-22-99
STRUCTURE FILE NUMBER: 5203694 L
DRAWN: DB
REVISED:
DESIGNED: DB
CHECKED: TAA

ABUTMENT DETAILS
MED-71-1870 L
I-71 OVER I-271

MED-71-15.78

13/39

749/940

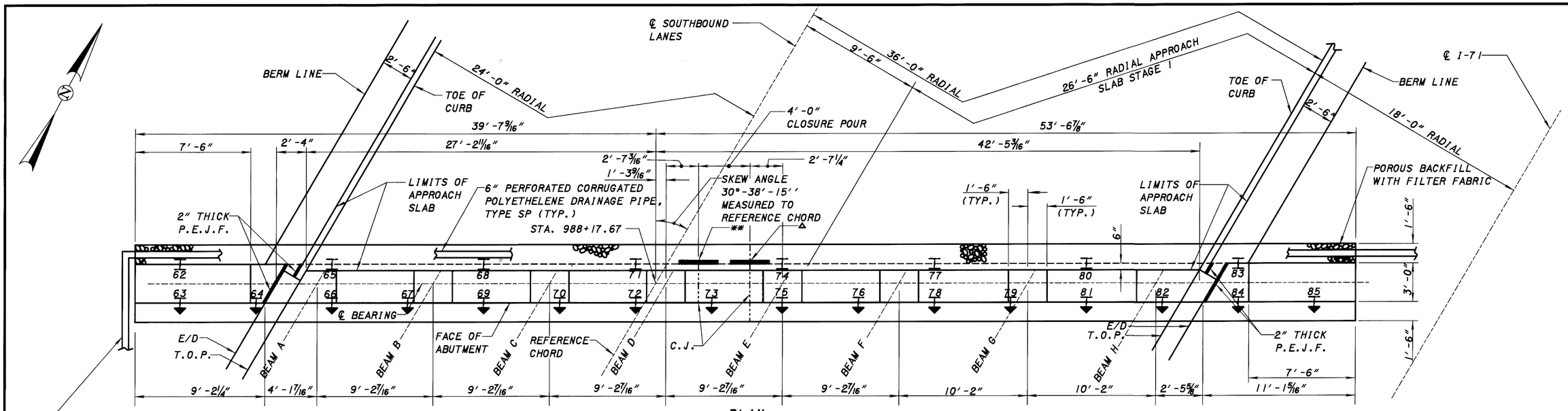

PLAN

(FORWARD ABUTMENT SOUTHBOUND LANES)

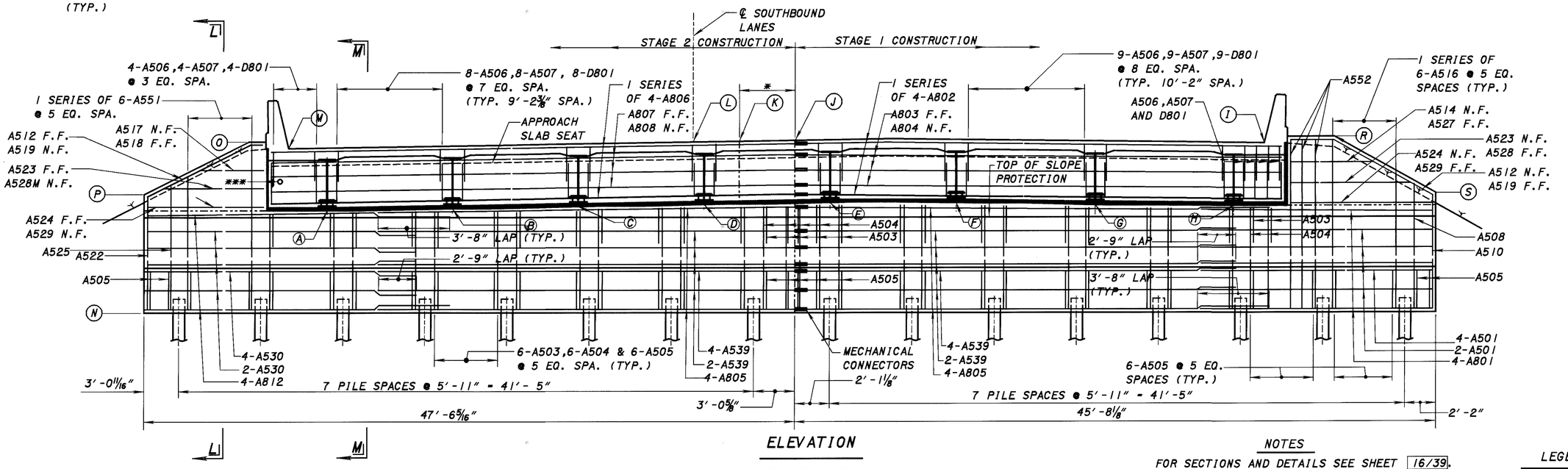

ELEVATION

(FORWARD ABUTMENT SOUTHBOUND LANES)

LOCATION / ELEVATION	ELEVATIONS																	
	A	B	C	D	E	F	G	H	I	J	K	L	M	N	O	P	R	S
NORTHBOUND LANE FWD. ABUTMENT	1168.78	1168.88	1168.97	1169.02	1168.87	1168.71	1168.53	1168.36	1172.86	1173.45	1173.52	1173.57	1173.30	1159.61	1173.80	1169.86	1173.36	1169.86

NOTES

FOR SECTIONS AND DETAILS SEE SHEET 16/39.

ELEVATIONS SHOWN ARE MEASURED ALONG THE BRIDGE LIMITS. BEAM SEAT ELEVATIONS ARE MEASURED ALONG ℄ OF BEARING.

△ TYPE B WATERPROOFING 3'-0" WIDE SHOULD EXTEND FROM BOTTOM OF APPROACH SLAB TO TOP OF FOOTING ACROSS THE CONSTRUCTION JOINT.

** TYPE B WATERPROOFING 3'-0" WIDE SHOULD EXTEND FROM BOTTOM OF APPROACH SLAB TO 1'-0" BELOW BEAM SEAT ACROSS THE CONSTRUCTION JOINT.
ALL ABUTMENT PILES ARE HP 10X42

LEGEND

*** - 4" CONDUIT, SEE CSS3 AND CSS4 FOR DETAILS

▼ - INDICATES BATTERED PILE.

E/D - EDGE OF DECK

C.J. - CONSTRUCTION JOINT

E.F. - EACH FACE

T.O.P. - TOE OF PARAPET

* - CLOSURE POUR IN THE BACKWALL

DESIGN AGENCY
ODOT CENTRAL OFFICE
OFFICE OF PRODUCTION

REVISED	DATE	STRUCTURE FILE NUMBER
DFT	10-22-99	5203694 L

DRAWN	REVISED
DB	

DESIGNED	CHECKED
DB	TAA

ABUTMENT DETAILS
MED-71-1870 L
I-71 OVER I-271

MED-71-15.78

14/39

750/940

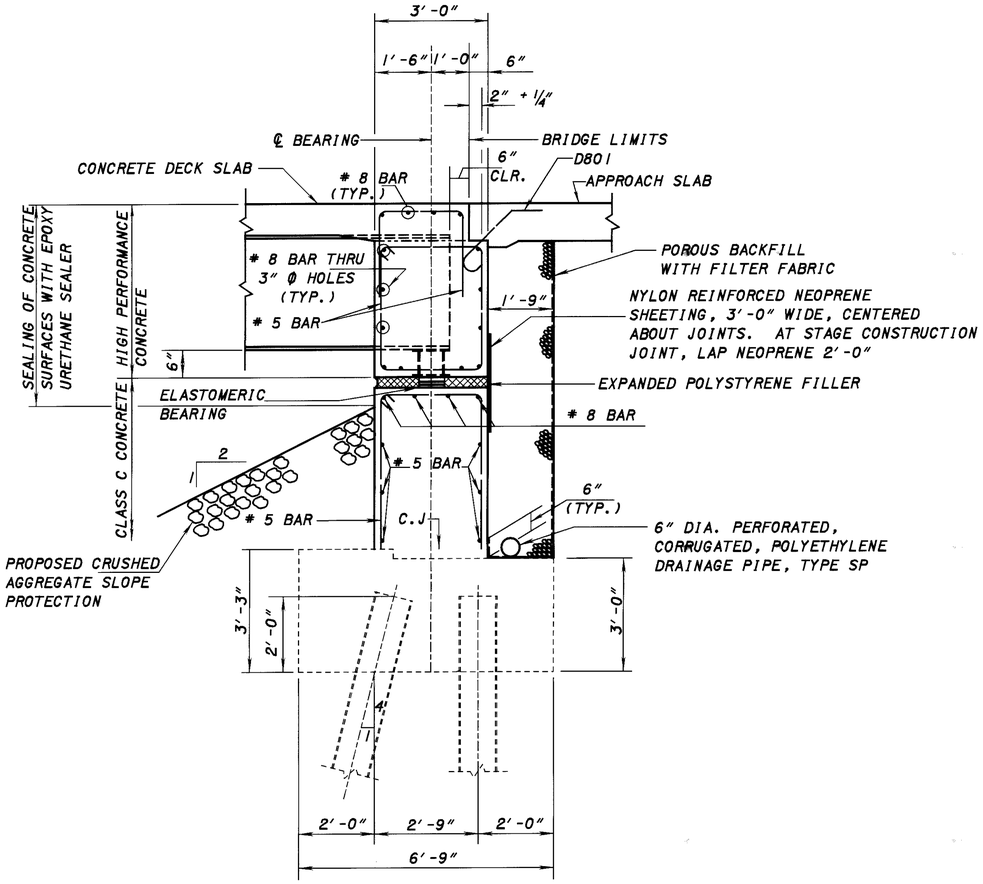

SECTION (J)–(J)

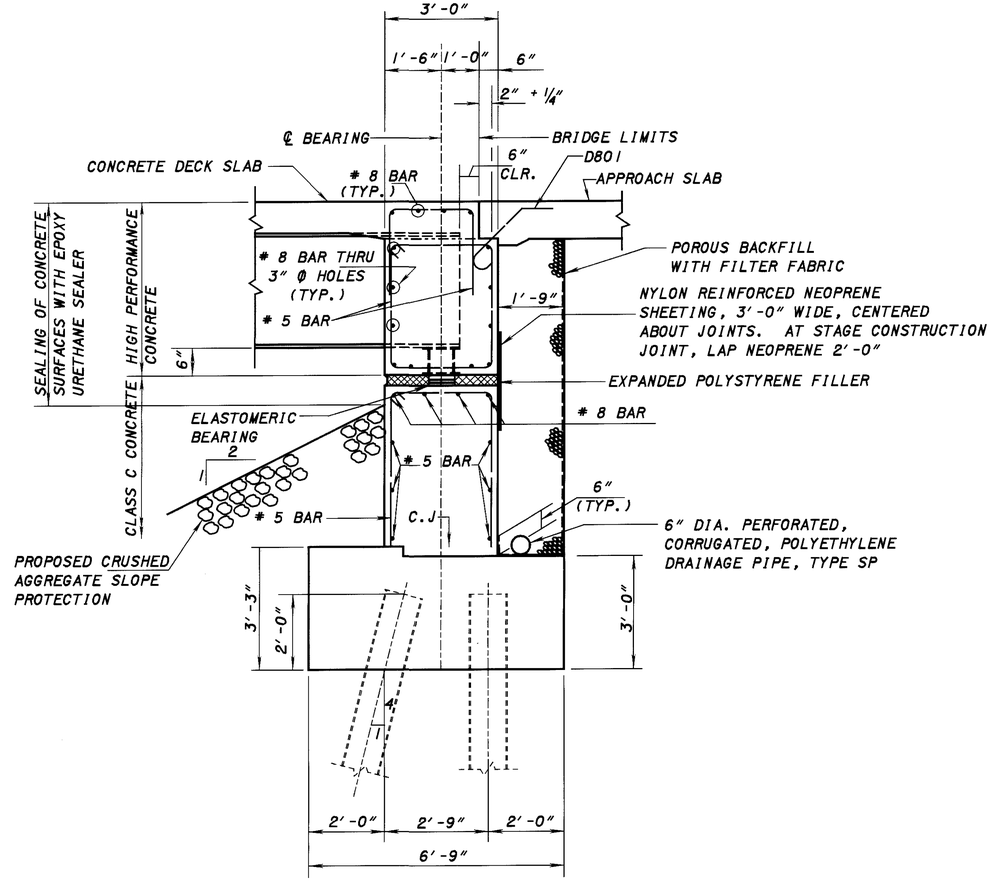

SECTION (K)–(K)

DESIGN AGENCY
ODOT CENTRAL OFFICE
OFFICE OF PRODUCTION

DESIGNED	DRAWN	REVISED	DATE
DB	DB		10-22-99
CHECKED	REVISED		STRUCTURE FILE NUMBER
TAA			5203694 L&S203724 R

ABUTMENT DETAILS
MED-71-1870 L/R
I-71 OVER I-271

MED-71-15.78

15/39

751/940

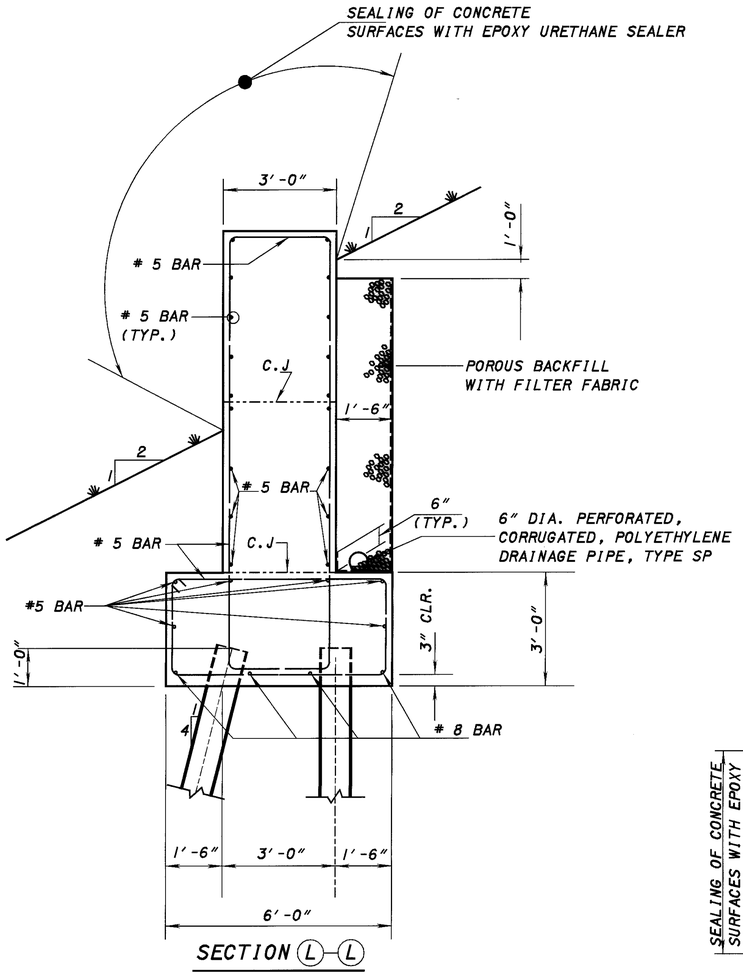

SECTION (L)-(L)

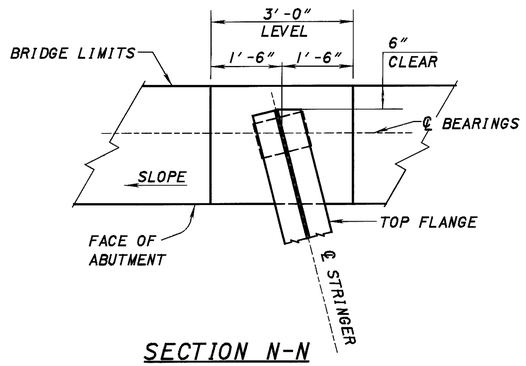

SECTION N-N
(CLIP TOP FLANGE ONLY)

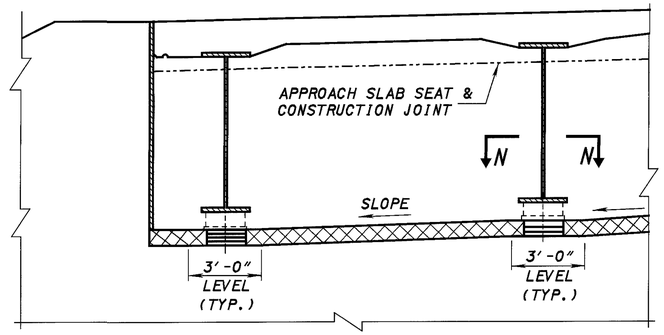

PART ELEVATION OF BEAM SEAT

NOTES

DIAPHRAGM *CONCRETE ENCASING THE STEEL BEAMS SUPPORTED IN THE SEMI INTEGRAL ABUTMENT SHALL BE PLACED AT LEAST 48 HOURS BEFORE THE ACTUAL DECK CONCRETE IS PLACED.*

PROVIDE 3" O HOLE THRU WEB AS NOTED, PAYMENT TO BE INCLUDED AS INCIDENTAL WITH ITEM 863 STRUCTURAL STEEL. PAYMENT FOR THE EXPANDED POLYSTYRENE FILLER TO BE INCLUDED WITH ITEM 844 HIGH PERFORMANCE CONCRETE AS INCIDENTAL.

POROUS BACKFILL:
POROUS BACKFILL WITH FILTER FABRIC, 1'-6" OR 1'-9" THICK SHALL EXTEND UP TO THE PLANE OF THE SUBGRADE, TO 12" BELOW THE EMBANKMENT SURFACE, AND LATERALLY TO THE ENDS OF THE WINGWALLS.

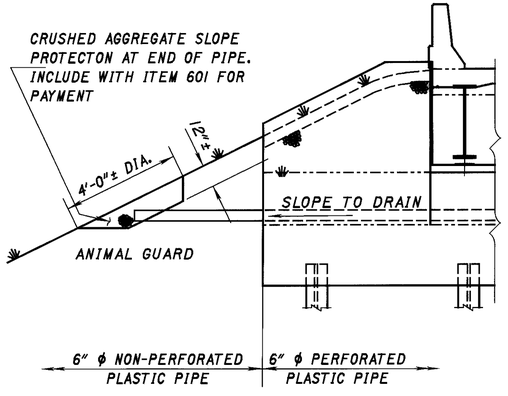

PIPE OUTLET DETAIL

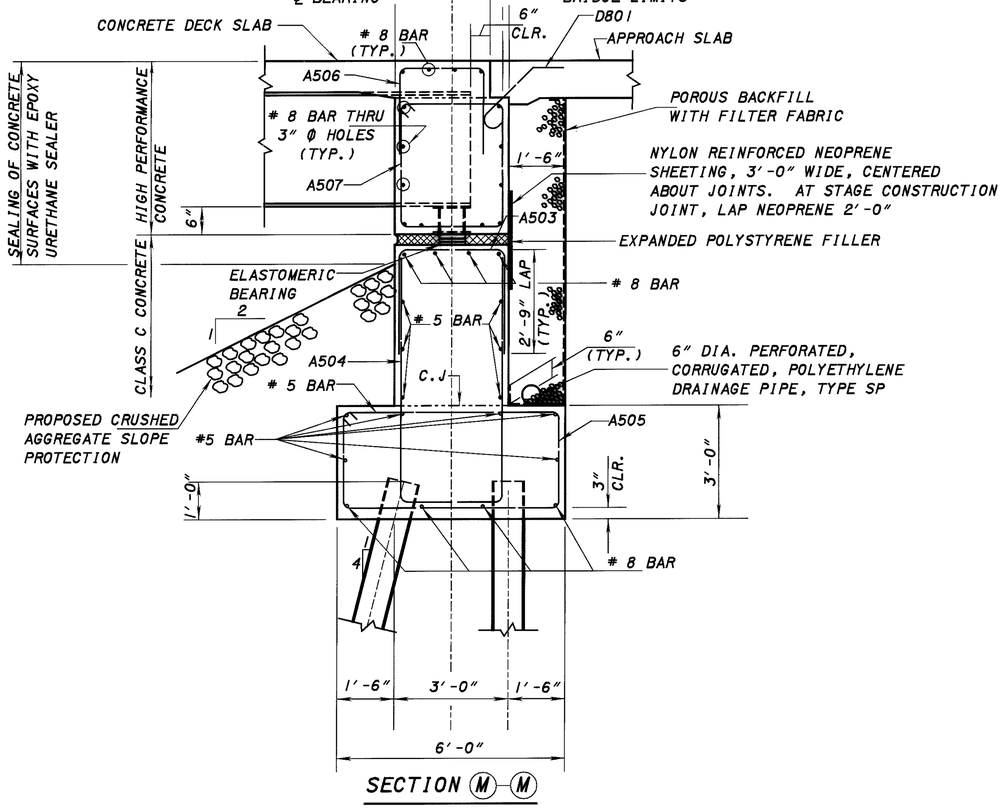

SECTION (M)-(M)

DESIGN AGENCY: ODOT CENTRAL OFFICE OFFICE OF PRODUCTION

DESIGNED	DRAWN	REVIEWED	DATE
DB	DB	DFT	10-22-99
CHECKED	REVISED	STRUCTURE FILE NUMBER	
TAA		5203694L & 5203724R	

ABUTMENT DETAILS
MED-71-1870 L/R
I-71 OVER I-271

MED-71-15.78

16 / 39

752
940

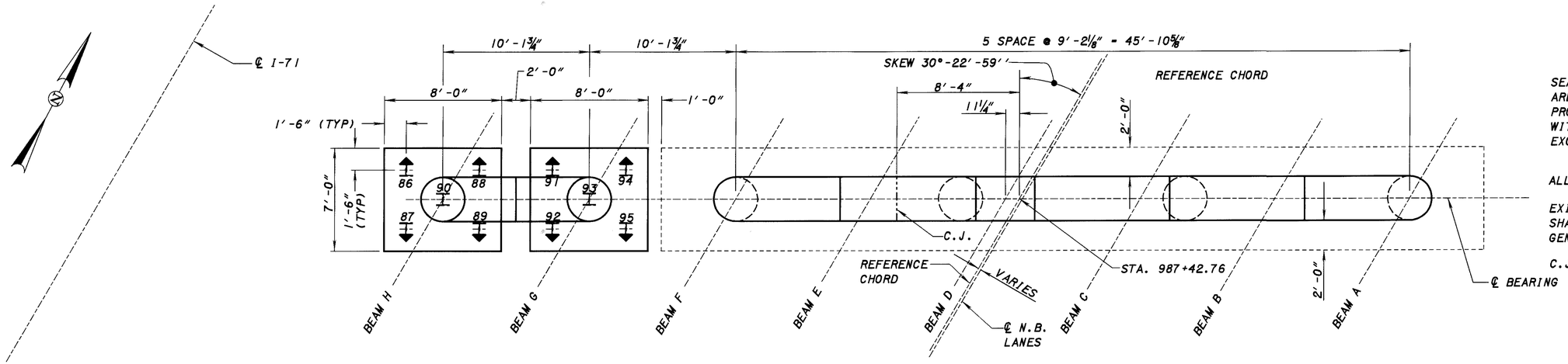

PLAN

PIER 1 NORTHBOUND LANES

NOTES:

SEAL THE ENITRE SURFACE AREA OF THE EXISTING AND PROPOSED PIER ABOVE GROUND WITH EPOXY URETHANE SEALER EXCEPT BRIDGE SEAT.

ALL PIER PILES ARE HP 12X53

EXISTING PIER BRIDGE SEATS SHALL BE SCARIFIED ¼″ SEE GENERAL NOTES

C.J.-CONSTRUCTION JOINT

ELEVATIONS		
	EXISTING	PROPOSED
A	1168.16	1169.40
B	1168.32	1169.55
C	1168.48	1169.70
D	1168.60	1169.81
E	1168.51	1169.72
F	1168.43	1169.62
G	N.A.	1169.52
H	N.A.	1169.41
I	1143.61	1143.61
J	1164.16	1164.16

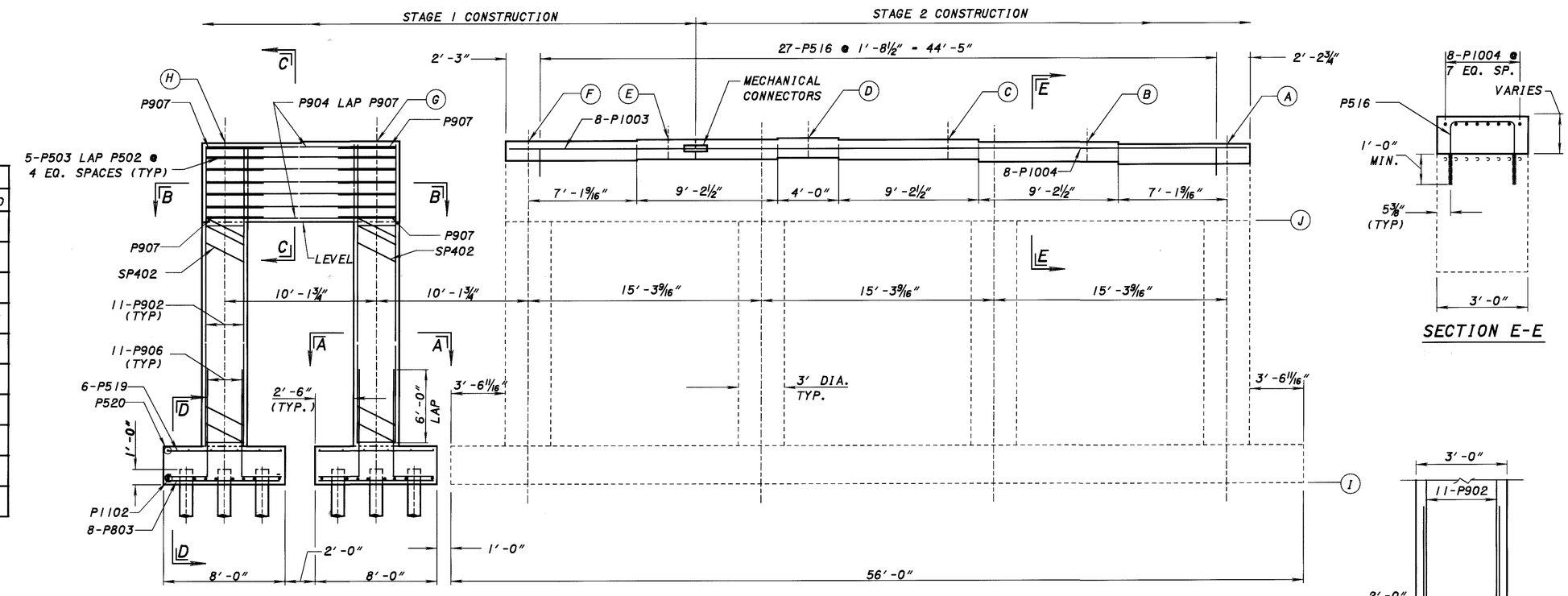

ELEVATION

PIER 1 NORTHBOUND LANES

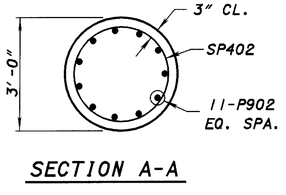

SECTION A-A

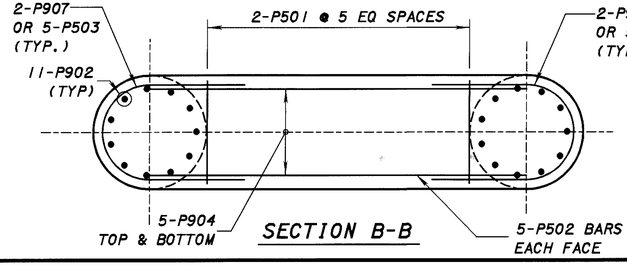

SECTION B-B

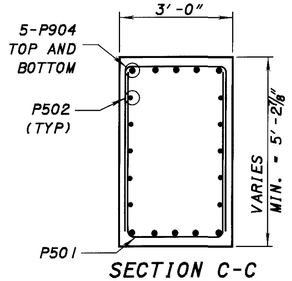

SECTION C-C

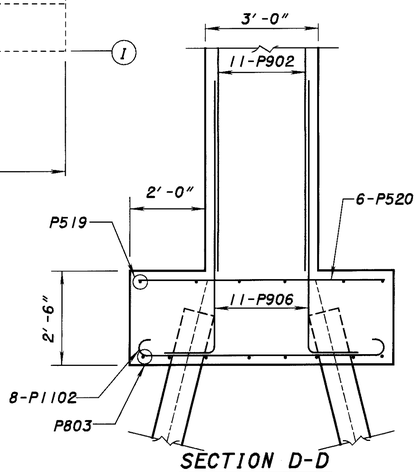

SECTION D-D

SECTION E-E

DESIGN AGENCY: ODOT CENTRAL OFFICE, OFFICE OF PRODUCTION

REVISED	DATE
DFT	10-22-99

STRUCTURE FILE NUMBER: 5203724 R

DESIGNED	DRAWN	CHECKED	REVISED
DB	DB	TAA	

NORTHBOUND PIER 1 DETAILS

MED-71-1870 R

I-71 OVER I-271

MED-71-15.78

17 / 39

753 / 940

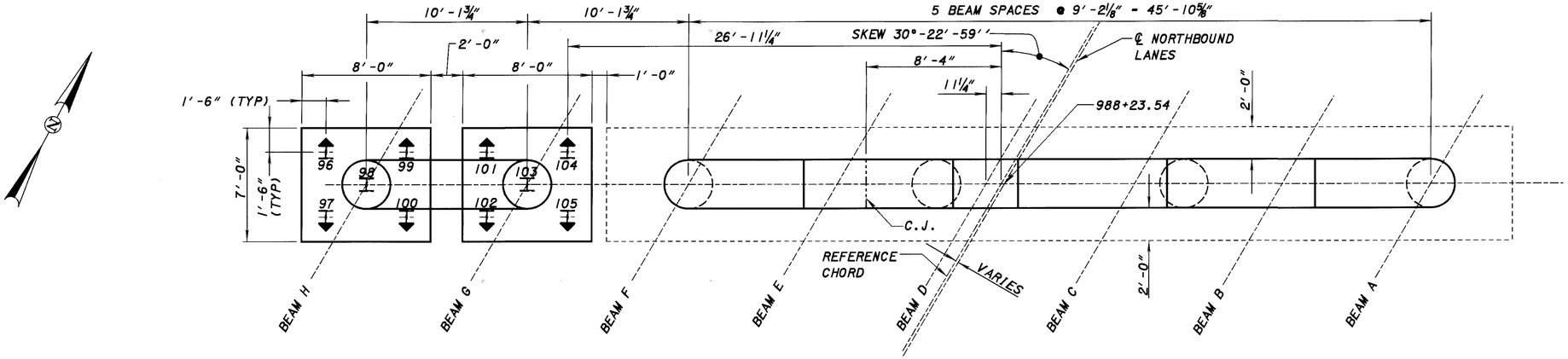

PLAN
PIER 2 NORTHBOUND LANES

NOTES:

SEAL THE ENITRE SURFACE AREA OF THE EXISTING AND PROPOSED PIER ABOVE GROUND WITH EPOXY URETHANE SEALER EXCEPT BRIDGE SEAT.

ALL PIER PILES ARE HP 12X53

EXISTING PIER BRIDGE SEATS SHALL BE SCARIFIED ¼" SEE GENERAL NOTES

ELEVATIONS		
	EXISTING	PROPOSED
A	1167.22	1168.86
B	1167.38	1169.02
C	1167.54	1169.17
D	1167.67	1169.29
E	1167.58	1169.20
F	1167.50	1169.11
G	N.A.	1169.01
H	N.A.	1168.91
I	1146.31	1146.31
J	1163.50	1163.50

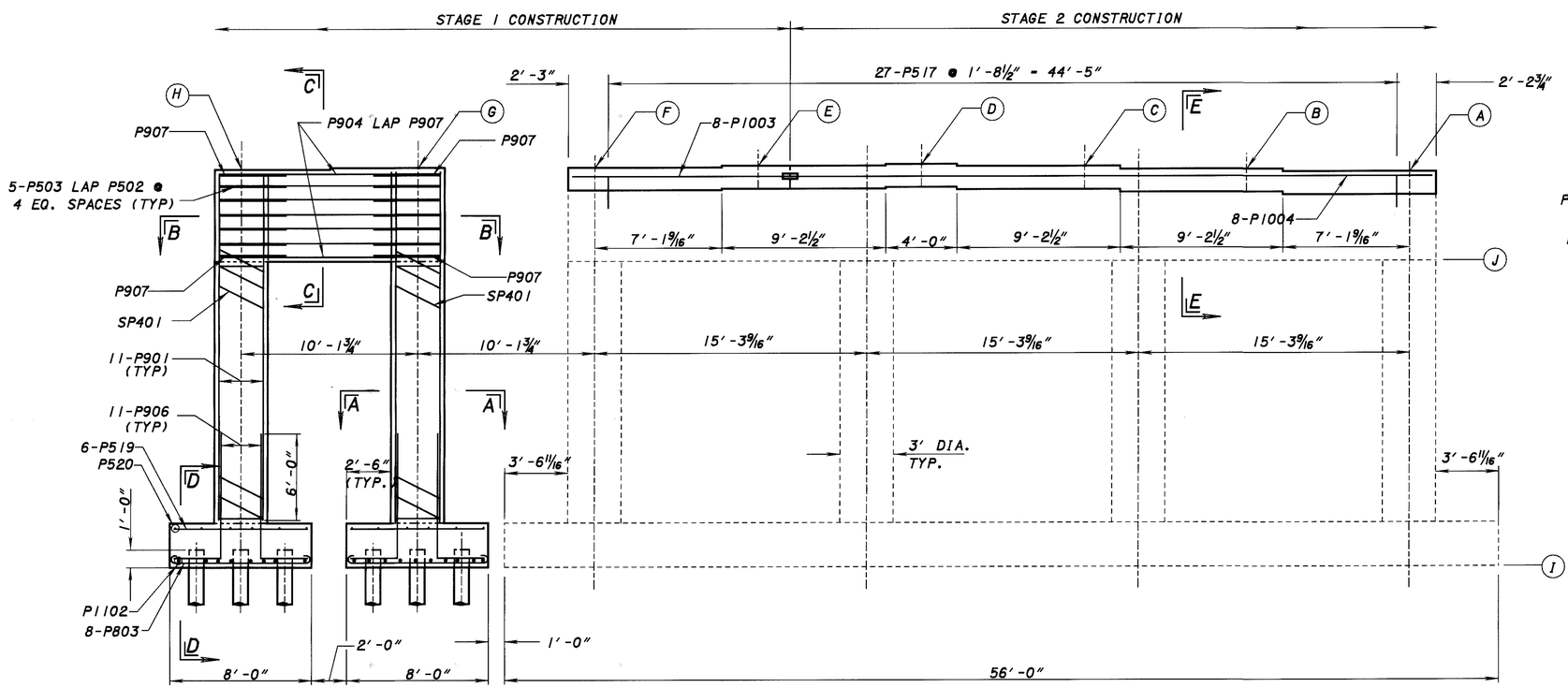

ELEVATION
PIER 2 NORTHBOUND LANES

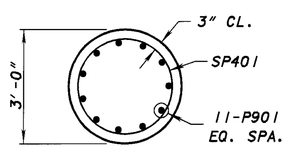

SECTION A-A

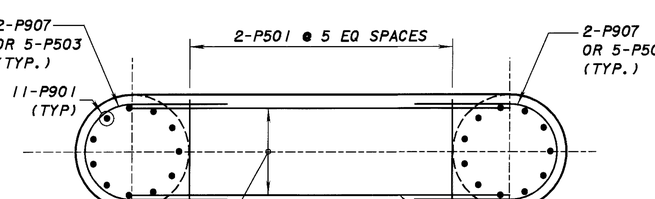

SECTION B-B

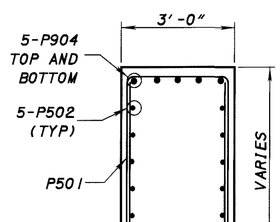

SECTION C-C

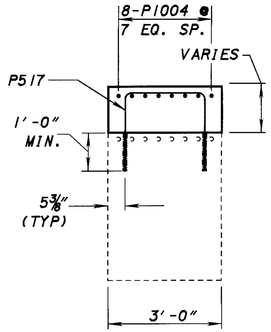

SECTION E-E

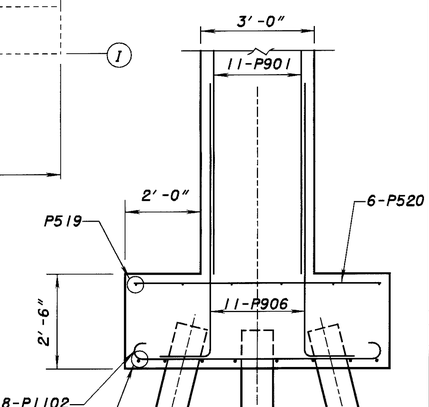

SECTION D-D

DESIGN AGENCY
ODOT CENTRAL OFFICE
OFFICE OF PRODUCTION

REVISED DFT DATE 10-22-99
STRUCTURE FILE NUMBER 5203724 R

DRAWN DB REVISED

DESIGNED DB CHECKED TAA

NORTHBOUND PIER 2 DETAILS
MED-71-1870 R
I-71 OVER I-271

MED-71-15.78

18 / 39

754 / 940

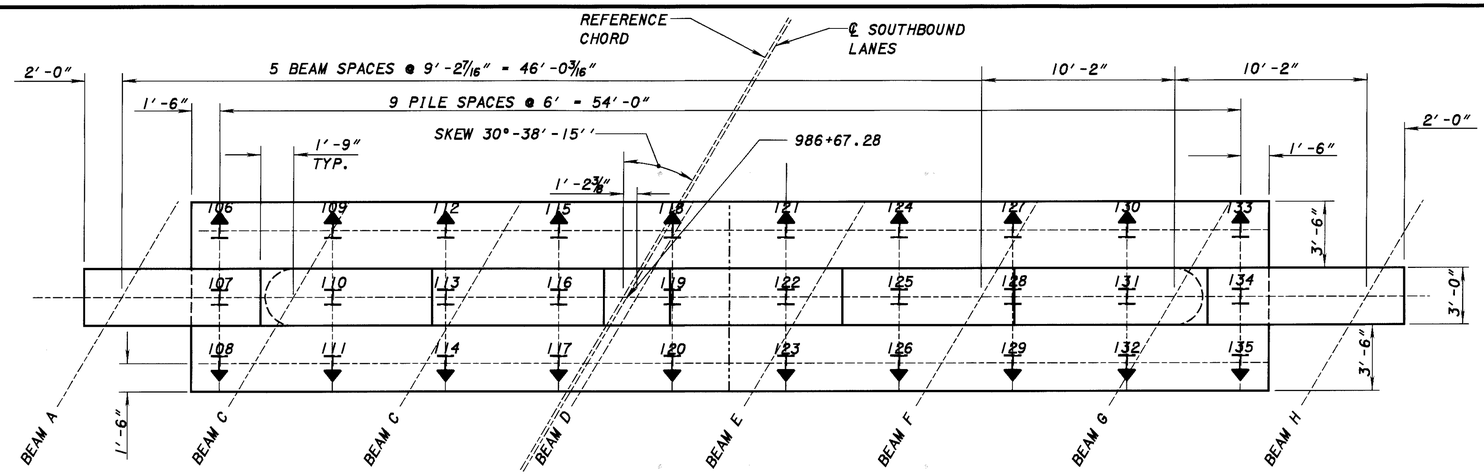

PLAN

PIER 1 SOUTHBOUND LANES

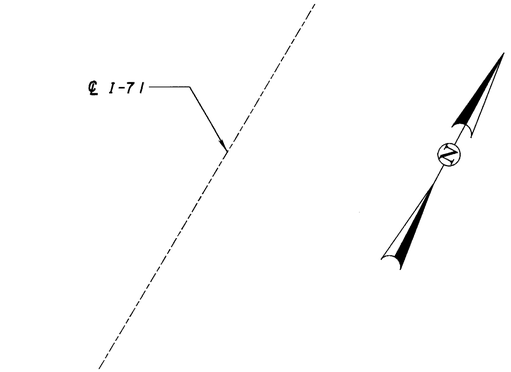

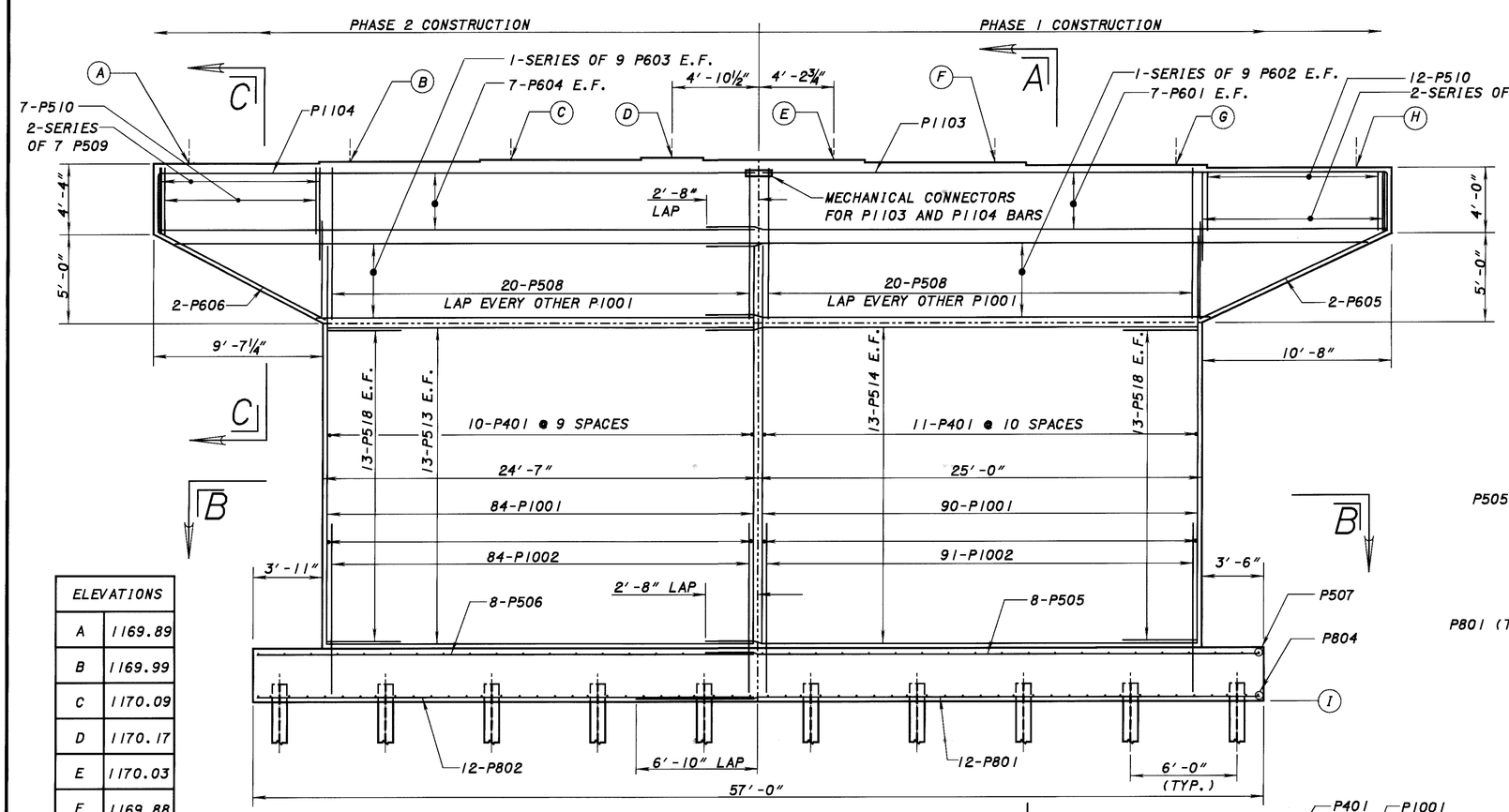

ELEVATIONS	
A	1169.89
B	1169.99
C	1170.09
D	1170.17
E	1170.03
F	1169.88
G	1169.72
H	1169.56
I	1139.55

ELEVATION

PIER 1 SOUTHBOUND LANES

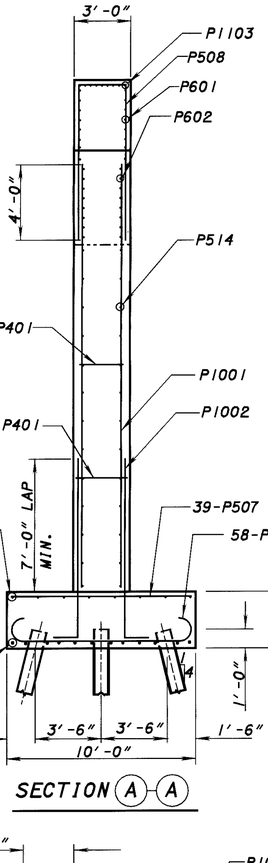

SECTION (A)-(A)

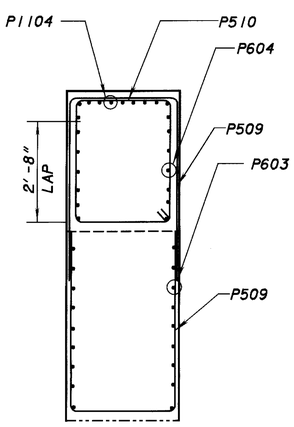

SECTION (C)-(C)

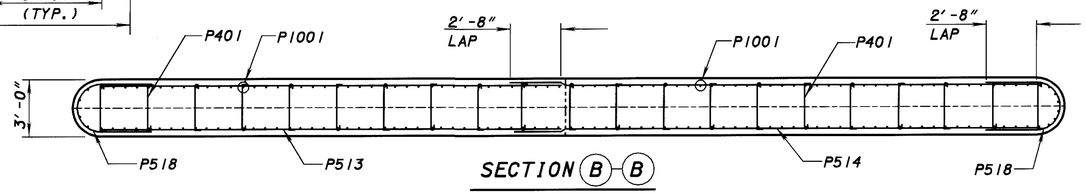

SECTION (B)-(B)

DESIGN AGENCY
ODOT CENTRAL OFFICE
OFFICE OF PRODUCTION

REVIEWED DFT
DATE 10-22-99
STRUCTURE FILE NUMBER 5203694 L

DRAWN DB
REVISED

DESIGNED DB
CHECKED TAA

SOUTHBOUND PIER 1 DETAILS
MED-71-1870 L
I-71 OVER I-271

MED-71-15.78

19 / 39

755 / 940

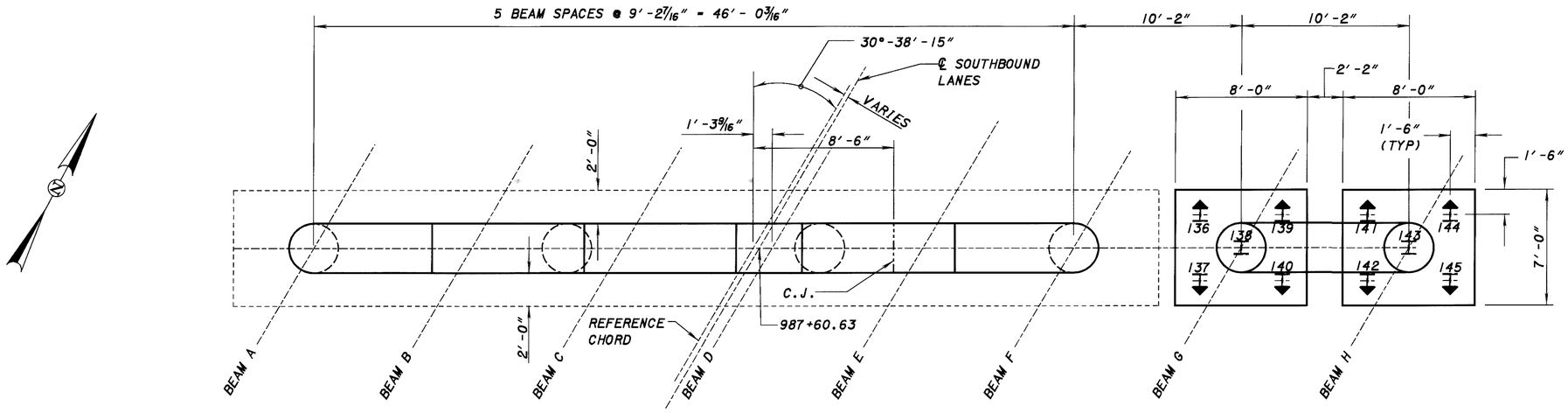

PLAN

PIER 2 SOUTHBOUND LANES

ELEVATIONS		
	EXISTING	PROPOSED
A	1167.93	1169.40
B	1168.02	1169.49
C	1168.11	1169.58
D	1168.17	1169.66
E	1168.01	1169.51
F	1167.85	1169.36
G	N.A.	1169.19
H	N.A.	1169.02
I	1147.31	1147.31
J	1163.85	1163.85

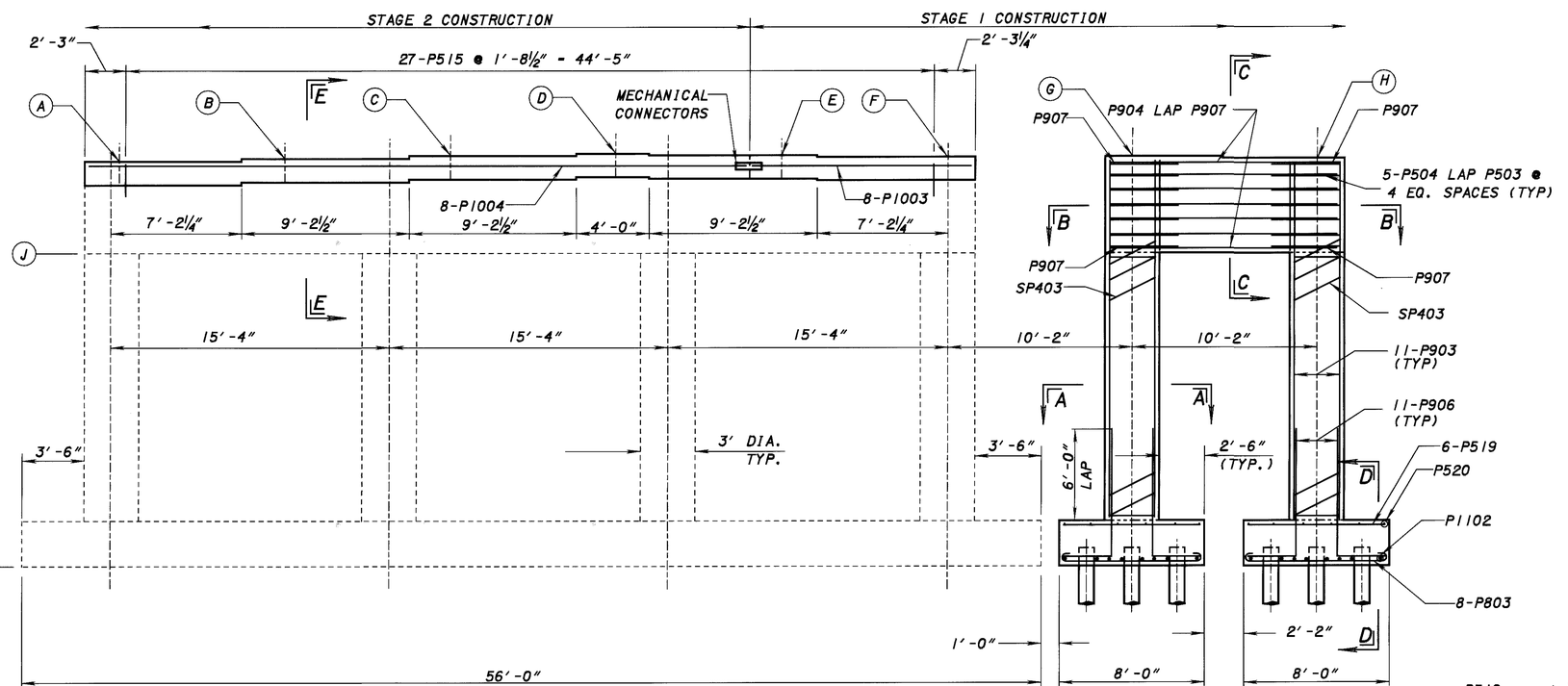

ELEVATION

PIER 2 SOUTHBOUND LANES

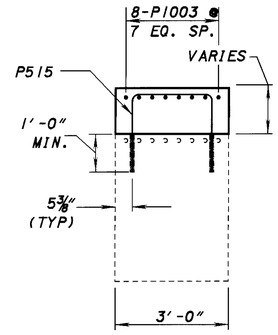

SECTION E-E

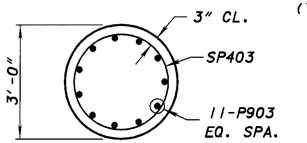

SECTION A-A

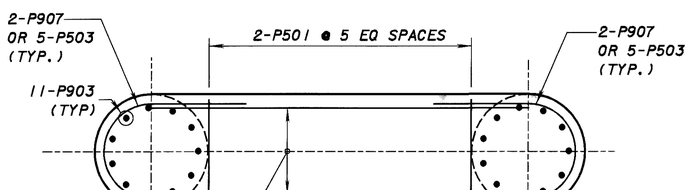

SECTION B-B

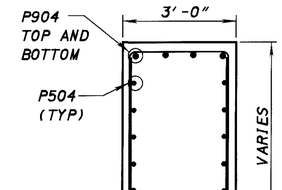

SECTION C-C

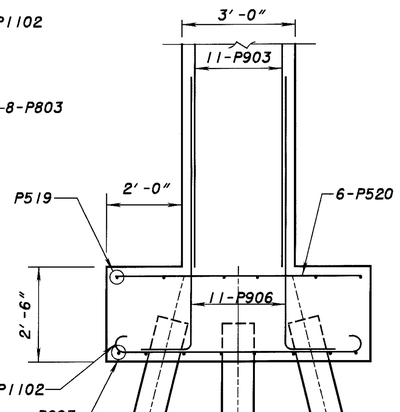

SECTION D-D

NOTES:

SEAL THE ENTIRE SURFACE AREA OF THE EXISTING AND PROPOSED PIER ABOVE GROUND WITH EPOXY URETHANE SEALER

ALL PILES ARE HP 12X53

EXISTING PIER BRIDGE SEATS SHALL BE SCARIFIED 1/4" SEE GENERAL NOTES

DESIGN AGENCY: ODOT CENTRAL OFFICE OFFICE OF PRODUCTION

REVIEWED: DFT DATE: 10-22-99 STRUCTURE FILE NUMBER: 5203694 L

DRAWN: DB REVISED:

DESIGNED: DB CHECKED: TAA

SOUTHBOUND PIER 2 DETAIL

MED-71-1870 L
I-71 OVER I-271

MED-71-15.78

20 / 39

756 / 940

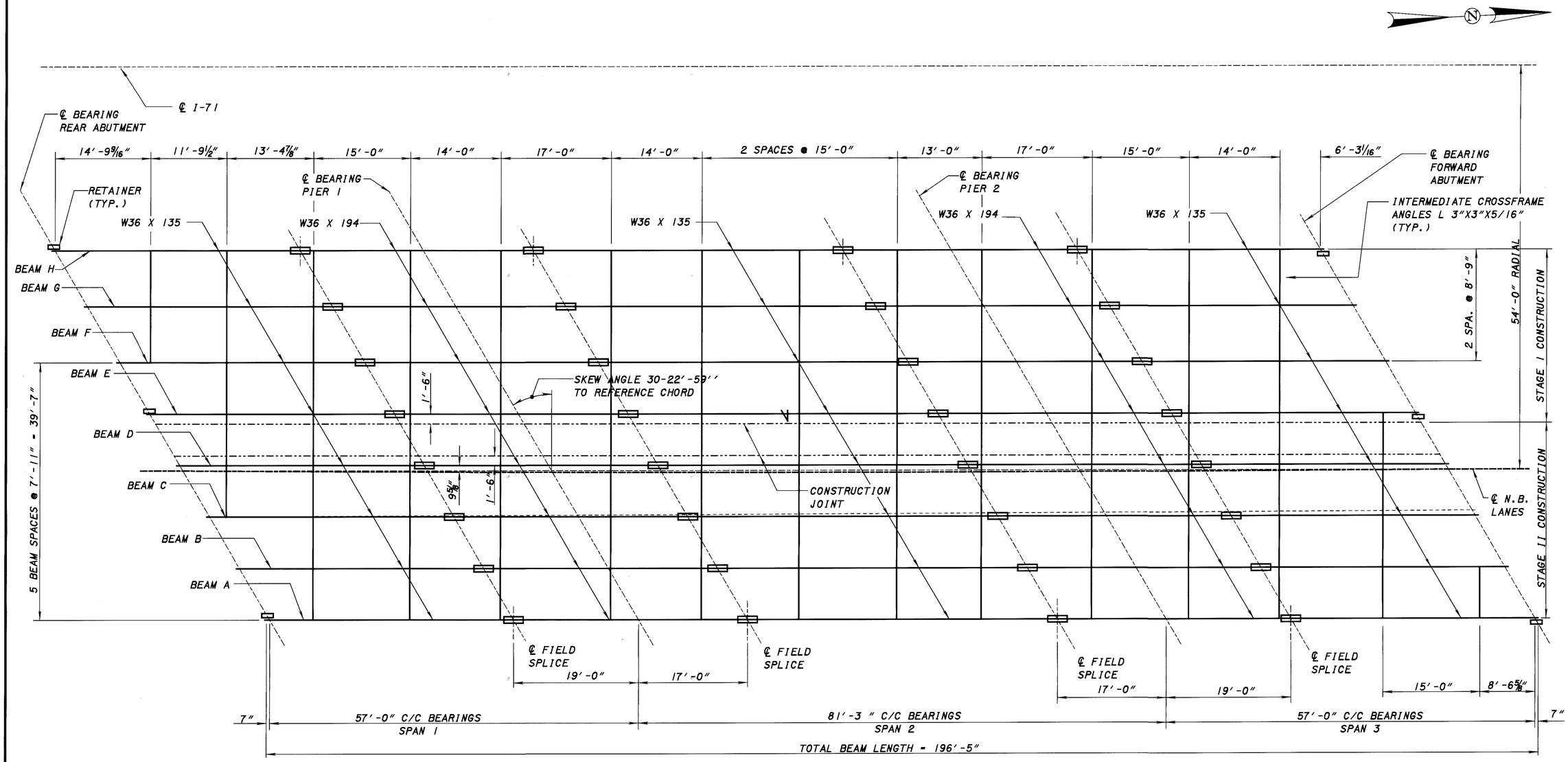

FRAMING PLAN

NORTHBOUND LANES SHOWN

NOTES:

FOR INTERMEDIATE CROSSFRAME DETAILS SEE STANDARD DRAWING GSD-1-96 TYPE 2 CROSSFRAME DETAIL

SEE ADDITIONAL NOTES ON SHEET 22/39 .

BEAM LINES ARE PARALLEL TO REFERENCE CHORD.

DESIGN AGENCY
ODOT CENTRAL OFFICE
OFFICE OF PRODUCTION

DESIGNED	DRAWN	REVIEWED	DATE
DB	DB	DFT	10-22-99
CHECKED	REVISED	STRUCTURE FILE NUMBER	
TAA		5203724 R	

FRAMING PLAN
MED-71-1870 R
I-71 OVER I-271

MED-71-15.78

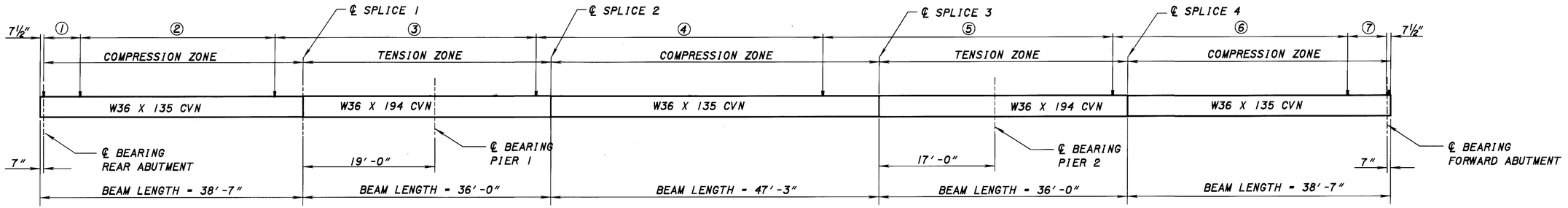

PROPOSED BEAM LINE LAYOUT
NORTHBOUND BRIDGE

SHEAR CONNECTOR SPACING
FOR ALL BEAM LINES
CONNECTORS REQUIRED PER BEAM = 507
① - 4 SPACES @ 9" = 3'-0"
② - 34 SPACES @ 12" = 34'-0"
③ - 19 SPACES @ 24" = 38'-0"
④ - 54 SPACES @ 10" = 45'-0"
⑤ - 19 SPACES @ 24" = 38'-0"
⑥ - 34 SPACES @ 12" = 34'-0"
⑦ - 4 SPACES @ 9" = 3'-0"

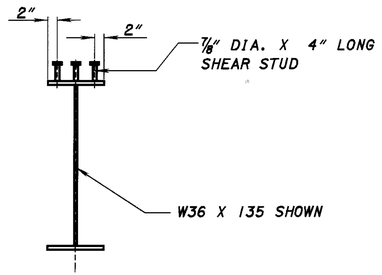

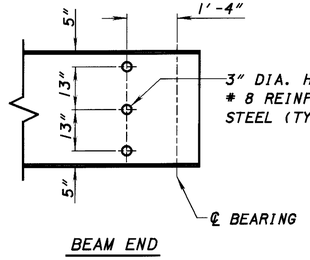

BEAM END

BEAMLINE	A	B	C
A	11/16"	11/16"	1'-2 9/16"
B	11/16"	11/16"	1'-2 11/16"
C	11/16"	11/16"	1'-2 7/8"
D	11/16"	11/16"	1'-3"
E	11/16"	11/16"	1'-3"
F	11/16"	11/16"	1'-3 5/16"
G	11/16"	11/16"	1'-3 1/2"
H	11/16"	11/16"	1'-3 5/8"

DEFLECTION AND CAMBER

	SPAN 1				SPAN 2					SPAN 3			
LOCATION OF POINT	1/4	1/2	SPL	3/4	SPL	1/4	1/2	3/4	SPL	1/4	SPL	1/2	3/4
BEAM DEFLECTION	1/16"	1/16"	1/16"	1/16"	1/8"	1/8"	3/16"	1/8"	1/8"	1/16"	1/16"	1/16"	1/16"
REMAINING DL DEFLECTION	1/4"	1/4"	1/8"	1/16"	7/16"	1/2"	7/8"	1/2"	7/16"	1/16"	1/8"	1/4"	1/4"
CORRECTION FOR VERT. & HORIZONTAL CURVE	1/16"	1/16"	1/16"	1/16"	1/8"	1/8"	1/8"	1/8"	1/8"	1/16"	1/16"	1/16"	1/16"
SHOP CAMBER	3/8"	3/8"	1/4"	3/16"	11/16"	3/4"	1 3/16"	3/4"	11/16"	3/16"	1/4"	3/8"	3/8"

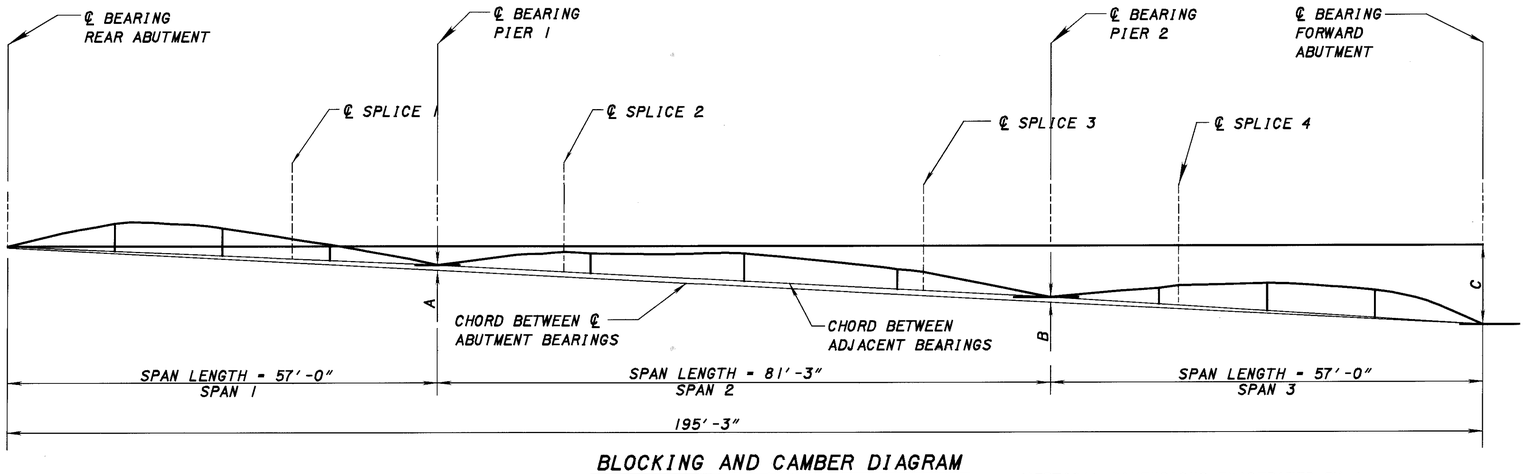

BLOCKING AND CAMBER DIAGRAM
NORTHBOUND LANES

VERTICAL DIMENSIONS EXAGERATED BY A FACTOR OF 10 FOR CLARITY

NOTES & LEGEND:

STRUCTURAL STEEL:
WHERE A SHAPE OR PLATE IS DESIGNATED (CVN) THE MATERIAL SHALL MEET SPECIFIED MINIMUM NOTCH TOUGHNESS REQUIREMENTS AS SPECIFIED IN 711.01.

ALL BOLTED FIELD SPLICES ARE OPTIONAL, THE CONTRACTOR MAY OMIT THE SPLICES AS DETAILED IN THE PLANS. WHERE SPLICES ARE OMITED, THE LARGER OF THE ADJACENT BEAM TO THE SPLICE SHALL BE REQUIRED. IN ADDITION THE BEAM SIZES AS DETAILED MAY BE SUBSTITUTED FOR LARGER BEAM SIZES WITH THE SAME DEPTH. THE CONTRACTOR SHALL SUBMIT ALL OPTIONS TO THE PROJECT ENGINEER FOR APPROVAL PRIOR TO ORDERING ANY STRUCTURAL STEEL.

PENDING ANY CHANGES AS DESCRIBED ABOVE AND TYPE OF CROSSFRAME USED, THE SPACING OF THE INTERMEDIATE CROSSFRAMES SHALL BE ADJUSTED TO AVOID CONFLICT WITH THE SPLICES. THE NUMBER OF CROSSFRAMES SHALL REMAIN THE SAME, A MAXIMUM SPACING OF 18'-0" WILL BE ALLOWED AND SHALL REMAIN IN LINE ACROSS THE WIDTH OF THE STRUCTURE.

FOR SCREED DIAGRAM AND TABLE SEE SHEET 24/39

WELDED ATTACHMENT:
WELDED ATTACHMENT OF SUPPORTS FOR CONCRETE DECK FINISHING MACHINE MAY BE MADE TO AREAS OF THE FACIA STRINGER FLANGES DESIGNATED "COMPRESSION". ATTACHMENTS SHALL NOT BE MADE TO AREAS DESIGNATED "TENSION". FILLET WELDS TO COMPRESSION FLANGES SHALL BE NOT CLOSER THAN 1" FROM EDGE OF FLANGE, BE NOT MORE THAN 2" LONG, AND BE NOT SMALLER THAN THE MINIMUM SIZE REQUIRED BY AASHTO.

3"ϕ HOLES DRILLED IN THE PROPOSED BEAM SHALL BE PAID UNDER ITEM 863 STRUCTURAL STEEL. THIS PAYMENT IS INCIDENTAL TO THE PAY ITEM.

LATERAL AND LONGITUDINAL SPACING OF WELDED STUD CONNECTORS MAY BE ALTERED AT FIELD SPLICE LOCATIONS TO AVOID INTERFERENCE WITH FLANGE SPLICE BOLTS PROVIDED THAT AT LEAST THE NUMBER OF STUDS SPECIFIED IN THE BEAM ELEVATION ARE PROVIDED.

STRUCTURAL STEEL SHALL BE ASTM A572.

ALL BEAM LENGTH DIMENSION ARE AT 60 °F

DESIGN AGENCY: ODOT CENTRAL OFFICE, OFFICE OF PRODUCTION
REVIEWED: DFT | DATE: 10-22-99 | STRUCTURE FILE NUMBER: 5203724 R
DRAWN: DB | REVISED:
DESIGNED: DB | CHECKED: TAA

N.B. SUPERSTRUCTURE DETAILS
MED-71-1870 R
I-71 OVER I-271

MED-71-15.78

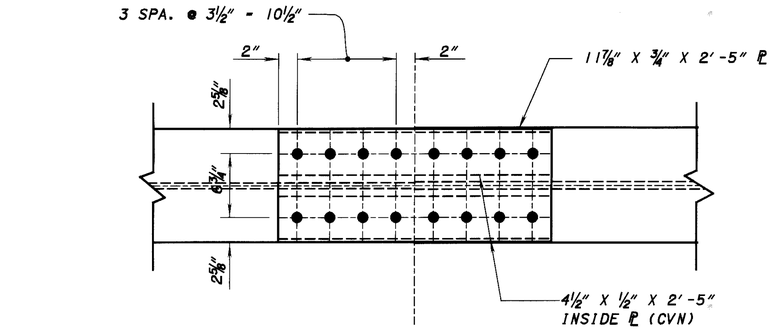

VIEW B-B

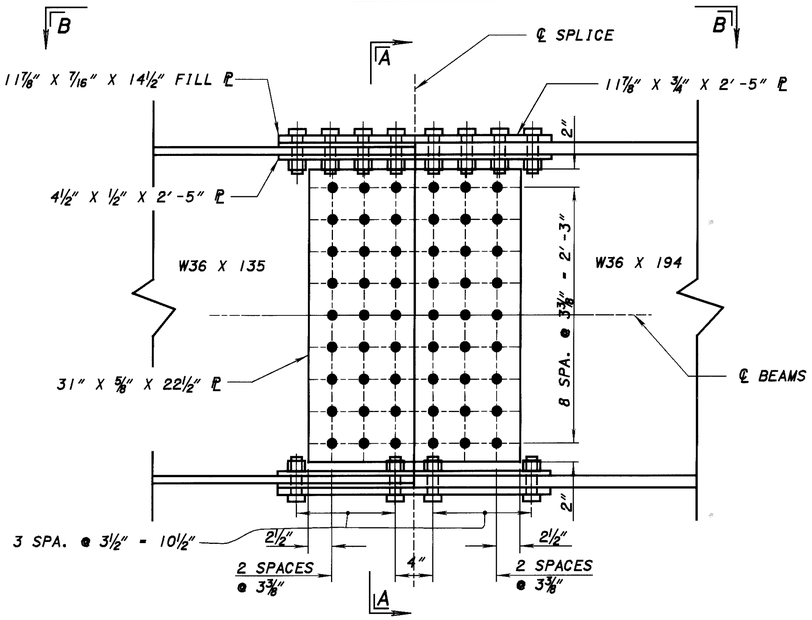

SPLICE 1 & 4 DETAILS

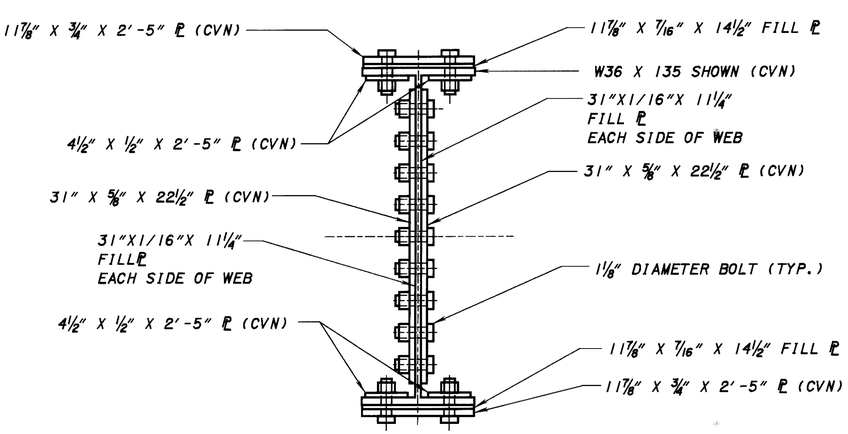

SECTION A-A

NOTES

WHERE A SHAPE OR PLATE IS DESIGNATED (CVN) THE MATERIAL SHALL MEET SPECIFIED MINIMUM TOUGHNESS REQUIREMENTS AS SPECIFIED IN 711.01.

SEE STANDARD DRAWINGS BS-1-93 FOR ADDITIONAL DETAILS AND NOTES NOT SHOWN.

HIGH STRENGTH BOLTS SHALL BE 1⅛" DIAMETER ASTM A-325 UNLESS OTHERWISE NOTED.

ALL BOLT LAYOUTS FOR BOTH SPLICE 1 AND SPLICE 2 ARE SYMMETRICAL ABOUT THE ℄ OF THE SPLICE AND THE ℄ OF THE BEAMS.

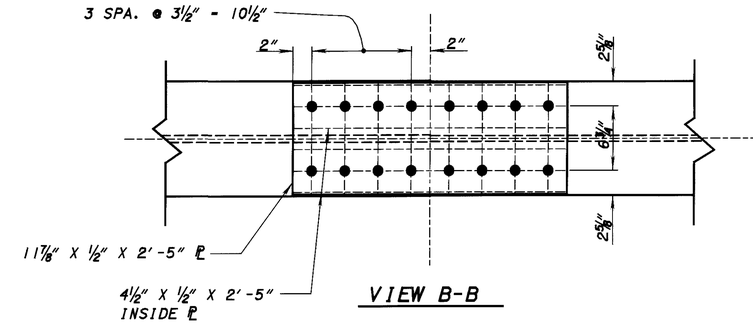

VIEW B-B

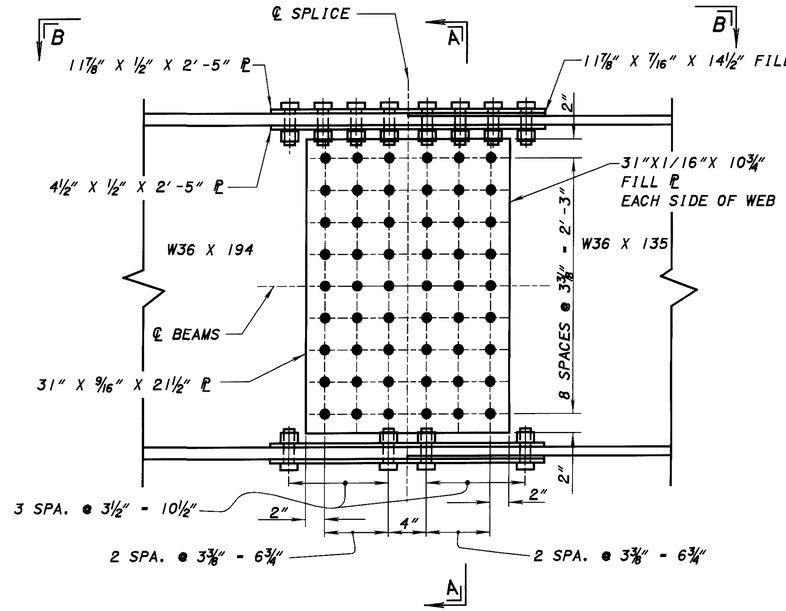

SPLICE 2 & 3 DETAILS

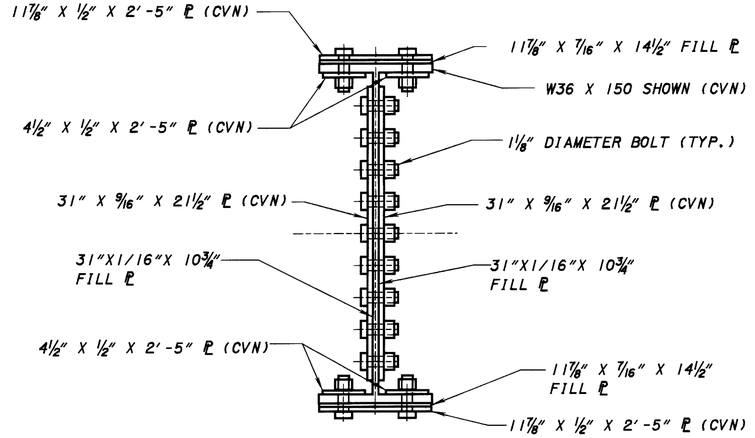

SECTION A-A

DESIGN AGENCY
ODOT CENTRAL OFFICE
OFFICE OF PRODUCTION

REVISED	DATE	STRUCTURE FILE NUMBER
DFT	10-22-99	5203724 R
DRAWN	REVISED	
DB		
DESIGNED	CHECKED	
DB	TAA	

SPLICE DETAILS FOR N.B. BEAMS
MED-71-1870 R
I-71 OVER I-271

MED-71-15.78

23 / 39

759 / 940

SCREED ELEVATION - SOUTHBOUND BRIDGE

LOCATION	RIGHT TOE OF PARAPET		PROFILE GRADE		RIGHT CONSTR JT		CLOSURE POUR C.J.		SOUTHBOUND LANE ℄		LEFT TOE OF PARAPET	
	STATION	ELEVATION	STATION	ELEVATION	STATION	ELEVATION	STATION	ELEVATION	STATION	ELEVATION	STATION	ELEVATION
℄ REAR ABUTMENT	986+31.61	1174.07	986+17.19	1174.51	986+14.40	1174.59	986+11.43	1174.68	986+09.95	1174.72	985+95.44	1174.40
1/4 SPAN	986+45.88	1174.02	986+31.49	1174.46	986+28.71	1174.55	986+25.75	1174.63	986+24.27	1174.68	986+09.80	1174.36
MIDSPAN	986+60.18	1173.96	986+45.82	1174.40	986+43.04	1174.49	986+40.09	1174.57	986+38.61	1174.62	986+24.17	1174.30
FIELD SPLICE #1	986+63.94	1173.94	986+49.34	1174.38	986+46.81	1174.46	986+44.62	1174.55	986+42.28	1174.60	986+27.95	1174.28
3/4 SPAN	986+74.47	1173.86	986+59.14	1174.31	986+57.37	1174.40	986+54.42	1174.48	986+52.95	1174.53	986+38.54	1174.22
℄ PIER # 1	986+88.76	1173.80	986+74.45	1174.25	986+71.69	1174.34	986+68.75	1174.43	986+67.28	1174.47	986+52.90	1174.16
FIELD SPLICE #2	987+07.81	1173.72	986+93.54	1174.17	986+90.79	1174.26	986+87.86	1174.35	986+86.39	1174.40	986+72.05	1174.09
1/4 SPAN	987+12.05	1173.71	986+97.64	1174.16	986+95.04	1174.25	986+92.11	1174.34	986+90.64	1174.38	986+76.31	1174.08
MIDSPAN	987+35.31	1173.59	987+21.11	1174.05	987+18.36	1174.14	987+15.44	1174.23	987+13.98	1174.27	986+99.70	1173.99
3/4 SPAN	987+58.56	1173.44	987+44.40	1173.90	987+41.67	1173.99	987+38.76	1174.08	987+37.30	1174.13	987+23.07	1173.83
FIELD SPLICE #3	987+62.84	1173.40	987+48.69	1173.87	987+45.96	1173.96	987+43.05	1174.05	987+41.60	1174.09	987+27.37	1173.80
℄ PIER # 2	987+81.82	1173.26	987+67.70	1173.73	987+64.98	1173.82	987+62.08	1173.91	987+60.63	1173.96	987+46.43	1173.67
1/4 SPAN	987+96.05	1173.16	987+81.96	1173.63	987+79.24	1173.72	987+76.34	1173.81	987+74.90	1173.86	987+60.73	1173.57
FIELD SPLICE #4	988+06.54	1173.11	987+91.71	1173.58	987+89.76	1173.67	987+86.87	1173.76	987+85.30	1173.81	987+71.28	1173.53
MIDSPAN	988+10.27	1173.09	987+96.21	1173.56	987+93.49	1173.65	987+90.61	1173.74	987+89.16	1173.79	987+74.94	1173.51
3/4 SPAN	988+24.48	1172.99	988+10.45	1173.46	988+07.74	1173.55	988+04.86	1173.65	988+03.42	1173.70	987+89.32	1173.42
℄ FORWARD ABUTMENT	988+38.69	1172.87	988+24.69	1173.34	988+21.99	1173.40	988+19.11	1173.50	988+17.67	1173.58	988+03.60	1173.30

SCREED ELEVATION - NORTHBOUND BRIDGE

LOCATION	RIGHT TOE OF PARAPET		NORTHBOUND LANE ℄		CLOSURE POUR C.J.		LEFT CONSTR JT		PROFILE GRADE		LEFT TOE OF PARAPET	
	STATION	ELEVATION	STATION	ELEVATION	STATION	ELEVATION	STATION	ELEVATION	STATION	ELEVATION	STATION	ELEVATION
℄ REAR ABUTMENT	987+00.02	1173.93	986+85.96	1174.38	986+84.51	1174.35	986+81.62	1174.29	986+78.90	1174.23	986+64.76	1173.92
1/4 SPAN	987+14.24	1173.88	987+00.20	1174.33	986+98.76	1174.30	986+95.88	1174.24	986+93.17	1174.18	986+79.05	1173.88
MIDSPAN	987+28.55	1173.80	987+14.54	1174.25	987+13.10	1174.22	987+10.23	1174.16	987+07.52	1174.11	986+93.43	1173.81
FIELD SPLICE #1	987+37.79	1173.74	987+23.80	1174.19	987+22.36	1174.16	987+19.49	1174.10	987+16.79	1174.05	987+02.72	1173.75
3/4 SPAN	987+42.66	1173.70	987+28.68	1174.16	987+27.24	1174.13	987+24.37	1174.07	987+21.67	1174.01	987+07.61	1173.71
℄ PIER # 1	987+56.72	1173.61	987+42.77	1174.07	987+41.34	1174.03	987+38.47	1173.98	987+35.78	1173.92	987+21.76	1173.63
FIELD SPLICE #2	987+73.65	1173.51	987+59.74	1173.97	987+58.31	1173.94	987+55.45	1173.88	987+52.76	1173.83	987+38.96	1173.53
1/4 SPAN	987+76.94	1173.49	987+63.04	1173.95	987+61.61	1173.92	987+58.75	1173.86	987+56.06	1173.81	987+42.08	1173.51
MIDSPAN	987+97.15	1173.36	987+83.29	1173.83	987+81.86	1173.79	987+79.02	1173.74	987+76.34	1173.68	987+62.40	1173.40
3/4 SPAN	988+17.34	1173.21	988+03.52	1173.68	988+02.10	1173.65	987+99.26	1173.60	987+96.59	1173.54	987+82.69	1173.26
FIELD SPLICE #3	988+20.43	1173.19	988+06.62	1173.66	988+05.20	1173.63	988+02.36	1173.58	987+99.69	1173.52	987+85.80	1173.24
℄ PIER # 2	988+37.33	1173.07	988+23.54	1173.54	988+22.13	1173.51	988+19.30	1173.45	988+16.63	1173.40	988+02.77	1173.12
1/4 SPAN	988+51.47	1172.97	988+37.72	1173.45	988+36.31	1173.42	988+33.48	1173.36	988+30.82	1173.31	988+16.99	1173.04
FIELD SPLICE #4	988+56.19	1172.94	988+42.44	1173.42	988+41.03	1173.39	988+38.21	1173.33	988+35.45	1173.28	988+21.73	1173.01
MIDSPAN	988+65.61	1172.88	988+51.89	1173.36	988+50.48	1173.33	988+47.66	1173.27	988+45.01	1173.22	988+31.21	1172.95
3/4 SPAN	988+79.75	1172.77	988+66.05	1173.25	988+64.64	1173.22	988+61.83	1173.17	988+59.18	1173.11	988+45.41	1172.84
℄ FORWARD ABUTMENT	988+93.75	1172.63	988+80.08	1173.11	988+78.67	1173.08	988+75.87	1173.03	988+73.72	1172.98	988+59.48	1172.71

NOTES

SCREED SETTING ELEVATIONS GIVEN ARE TO THE TOP OF CONCRETE DECK AND ARE REQUIRED PRIOR TO PLACEMENT OF CONCRETE. THEY INCLUDE AN ALLOWANCE FOR THE DEAD LOAD DEFLECTION CAUSED BY THE WEIGHT OF THE CONCRETE.

	C.L. REAR ABUT.	MID-SPAN	C.L. PIER 1	MID-SPAN	C.L. PIER 2	MID-SPAN	C.L. FORWARD ABUT.
L1	2'-7 11/16"	2'-9 1/8"	2'-10 1/16"	2'-10 5/16"	2'-9 1/4"	2'-7 11/16"	2'-5 5/8"
L2	3'-5 5/8"	3'-3 5/8"	3'-2 1/16"	3'-1 5/16"	3'-1 5/16"	3'-1 9/16"	3'-2 7/8"
L3	3'-3"	3'-4 7/16"	3'-5 3/16"	3'-4 15/16"	3'-3 1/8"	3'-1 3/16"	2'-10 11/16"
L4	2'-10 5/16"	2'-8 1/4"	2'-6 3/4"	2'-5 3/4"	2'-6 3/8"	2'-7 9/16"	2'-9 3/8"

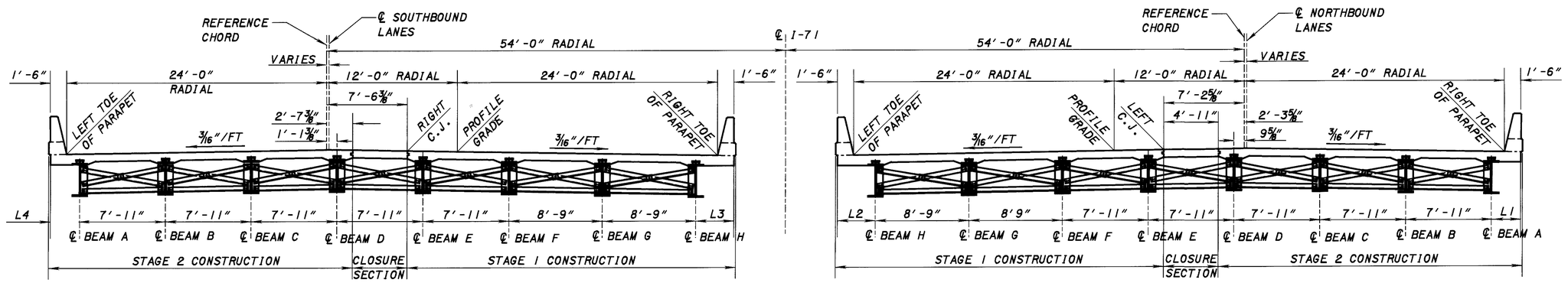

SOUTHBOUND LANE BRIDGE

TRANSVERSE SECTION

NORTHBOUND LANE BRIDGE

DESIGN AGENCY: ODOT CENTRAL OFFICE, OFFICE OF PRODUCTION
REVIEWED: DFT
DATE: 10-22-99
STRUCTURE FILE NUMBER: 5203694L & 5203724R
DRAWN: DB
REVISED:
DESIGNED: DB
CHECKED: TAA

SCREED ELEVATIONS
MED-71-1870 L/R
I-71 OVER I-271

MED-71-15.78

24 / 39

760 / 940

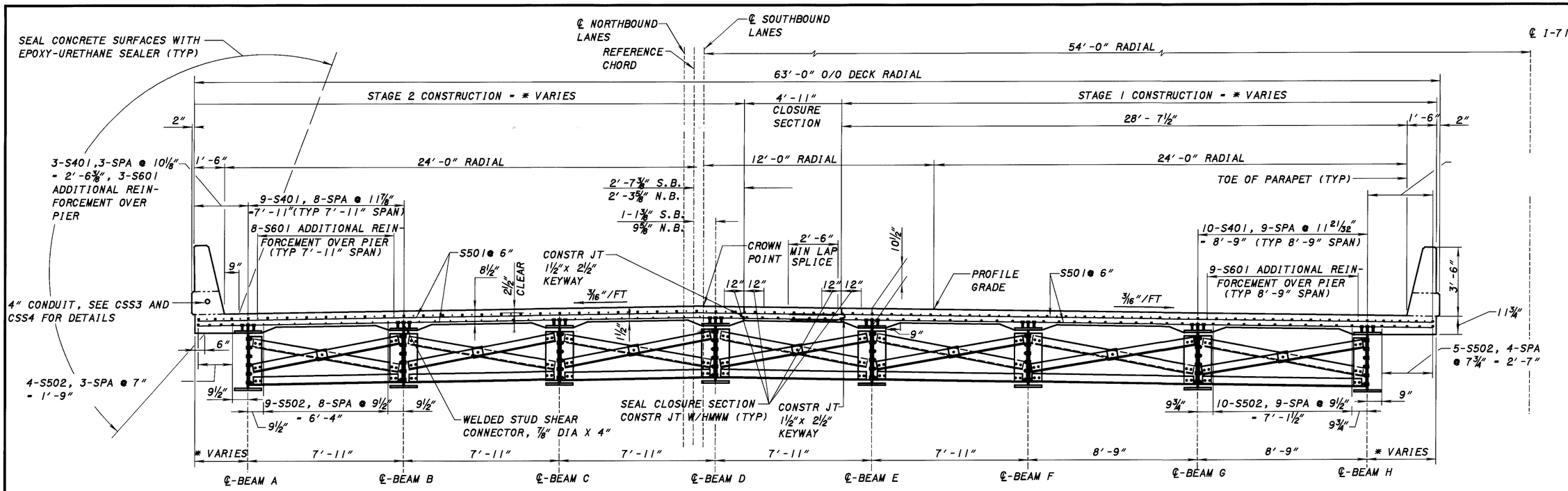

TRANSVERSE SECTION

(SOUTHBOUND LANES SHOWN, NORTHBOUND MIRROR IMAGE)

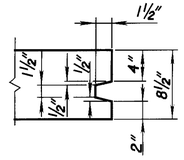

KEYWAY DETAILS AT CLOSURE SECTION

NOTES:

1. HMWM: HIGH MOLECULAR WEIGHT METHACRYLATE, SEE SUPPLEMENTAL SPEC.
2. ALL REINFORCING STEEL IS EPOXY COATED.
3. FOR PARAPET DETAILS, SEE SHEET 33/39 .
4. REINFORCING STEEL MAY BE FIELD OR SHOP BENT TO ACCOMMODATE THE CROWN OF THE DECK. PAYMENT SHALL BE INCLUDED WITH HIGH PERFORMANCE CONCRETE.
5. FOR CROSS-FRAME CONNECTION DETAILS SEE STD DWG GSD-1-96, GENERAL STEEL DETAILS.
6. DECK SLAB DEPTH: THE THEORETICAL DESIGN THICKNESS FOR THE SLAB IS 8½". THE QUANTITY OF DECK CONCRETE TO BE PAID FOR SHALL BE BASED ON THIS DIMENSION, EVEN THOUGH DEVIATION FROM IT MAY BE NECESSARY BECAUSE THE TOP FLANGE OF THE BEAM MAY NOT HAVE THE EXACT CAMBER OR CONFIGURATION REQUIRED TO PLACE IT PARALLEL TO THE FINISHED GRADE. A HAUNCH WIDTH OF 9" SHALL BE USED FOR COMPUTING QUANTITY OF CONCRETE. HOWEVER, THE HAUNCH WIDTH MAY VARY BETWEEN 6" AND 12".
7. * - FOR DIMENSIONS THAT VARY SEE SHEET 24/39 .

DESIGN AGENCY: ODOT CENTRAL OFFICE, OFFICE OF PRODUCTION

DESIGNED	DRAWN	REVIEWED	DATE
DB	DB	DFT	10-22-99
CHECKED	REVISED	STRUCTURE FILE NUMBER	
TAA		5203694L & 5203724R	

SUPERSTRUCTURE DETAILS

MED-71-1870 L/R
I-71 OVER I-271

MED-71-15.78

25/39

761/940

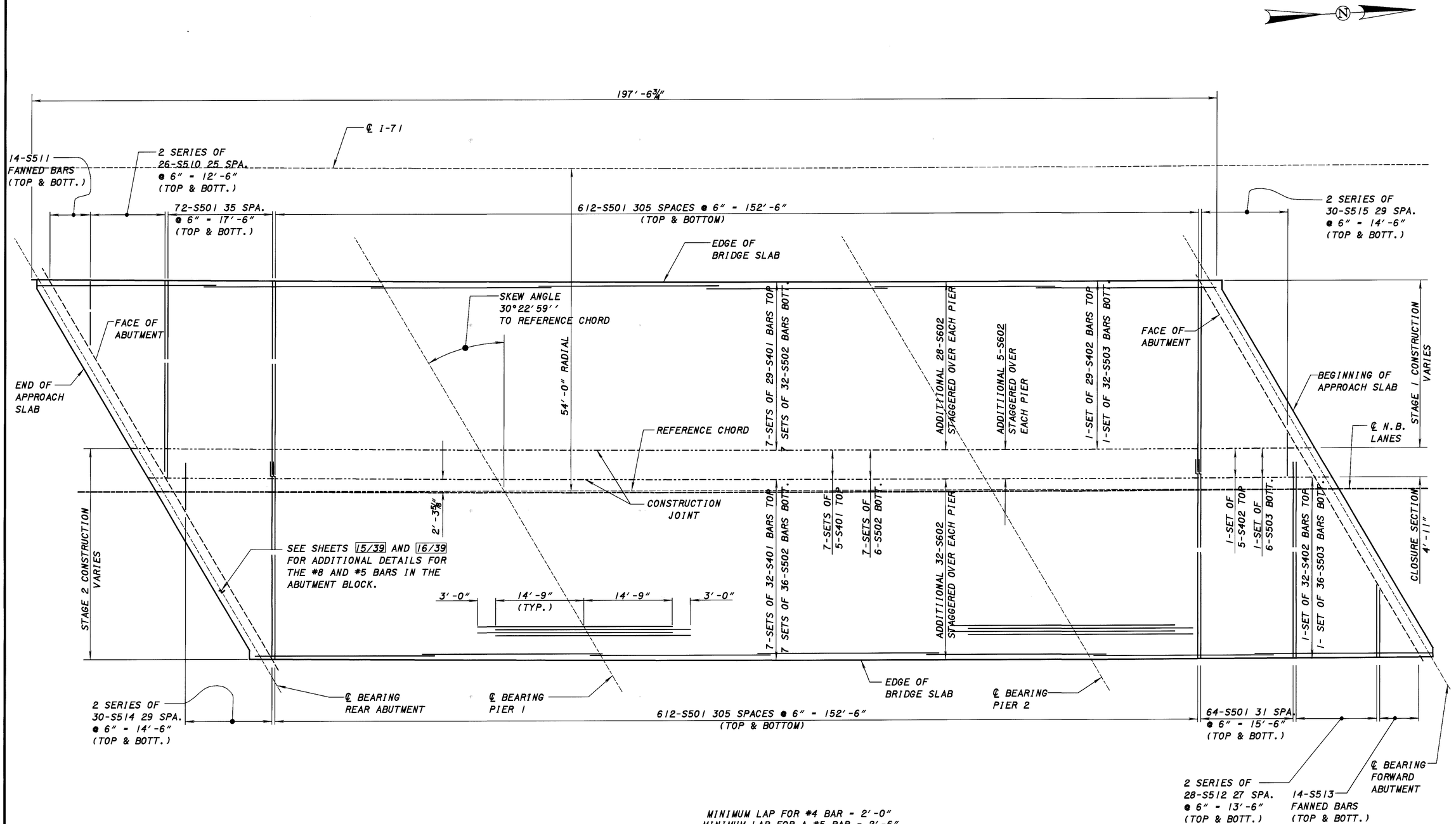

MINIMUM LAP FOR #4 BAR = 2′-0″
MINIMUM LAP FOR A #5 BAR = 2′-6″

DECK REINFORCEMENT PLAN
NORTHBOUND LANES

NOTES

HORIZONTAL REINFORCING STEEL TO BE PLACE PARALLEL TO REFERENCE CHORD. TRANSVERSE REINFORCING STEEL TO BE PLACED PERPINDICULAR TO REFERENCE CHORD.

REFERENCE CHORD IS A CHORD BETWEEN ℄ ABUTMENT BEARING.

DESIGN AGENCY: ODOT CENTRAL OFFICE OFFICE OF PRODUCTION

DESIGNED	DRAWN	REVISED	DATE
DB	DB	DFT	10-22-99
CHECKED	REVISED	STRUCTURE FILE NUMBER	
TAA		5203724 R	

SUPERSTRUCTURE DETAILS
MED-71-1870 R
I-71 OVER I-271

MED-71-15.78

26/39

762/940

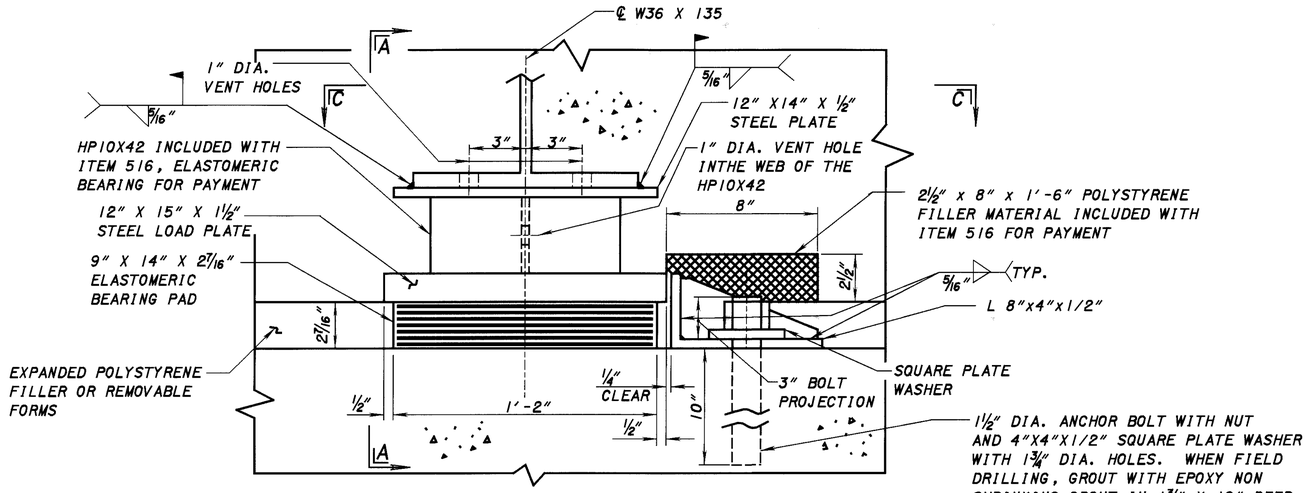

REAR AND FORWARD ABUTMENT
LAMINATED ELASTOMERIC EXPANSION BEARING

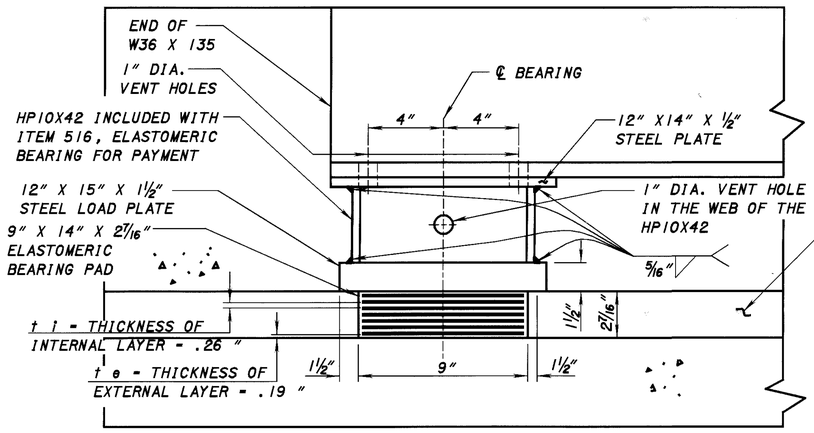

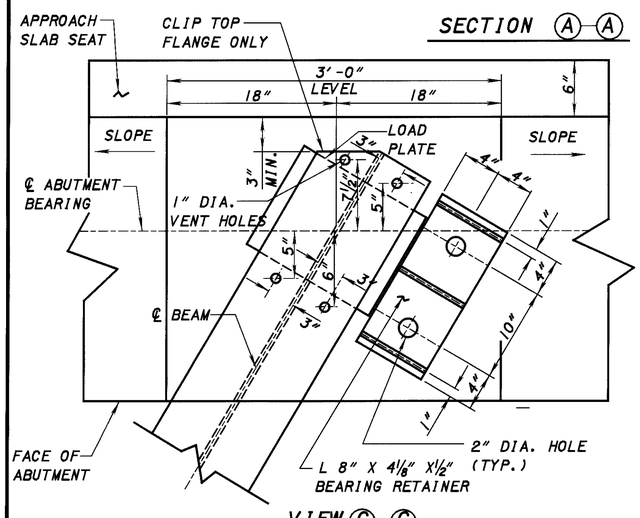

SECTION (A)–(A)

VIEW (C)–(C)

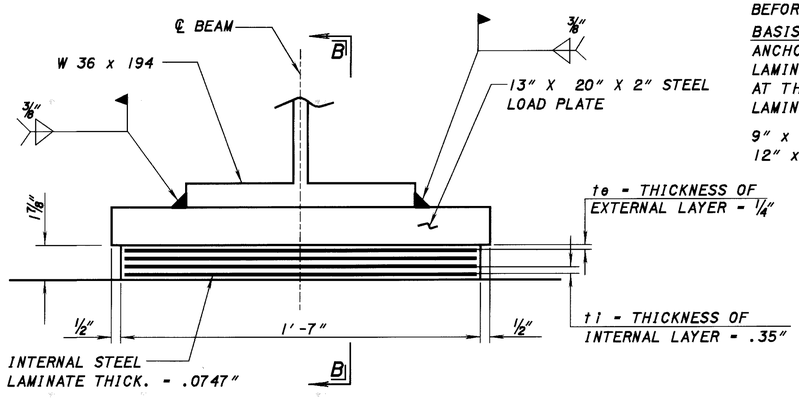

PIER 1 AND 2
LAMINATED ELASTOMERIC EXPANSION BEARING

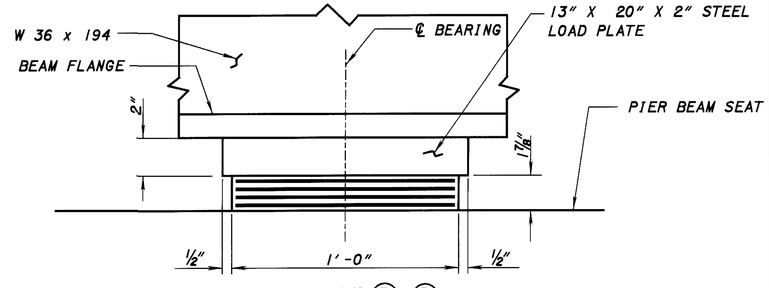

SECTION (B)–(B)

BEARING TABLE

BEARING LOCATION	TYPE	L	W	t_i in.	t_e in.	n_1	n_2	STEEL LOAD ℄	TOTAL HEIGHT*	DL, Kips	LL, Kips	TOTAL, Kips
REAR & FORWARD ABUTMENT	EXP	9"	14"	.26"	.19"	6	7	12"x15"x1½"	3 5/16"	68	50	118
PIER 1 & 2	EXP	12"	19"	.35"	.25"	3	4	13"x20"x2"	3⅞"	147	62	209

n_1 - NUMBER OF INTERNAL ELASTOMER LAYERS, t_i ELASTOMER LAYERS ARE 50 DUROMETERS
n_2 - NUMBER OF STEEL LAMINATES, 0.0747" THICKNESS * TOTAL HEIGHT INCLUDES LOAD PLATE

NOTES:

INSTALLATION PROCEDURE: ANCHOR BOLTS SHALL BE EITHER CAST IN PLACE BY USE OF A TEMPLATE OR FIELD DRILLED AND GROUTED AT THE CONTRACTOR'S OPTION. CARE SHALL BE TAKEN TO ASSURE THAT THE ANCHOR BOLTS DO NOT INTERFERE WITH REINFORCING STEEL.

MATERIALS: THE HP SHAPE (SUPPORT MEMBER) SHALL BE A36 STEEL. STEEL PLATES SHALL BE THE SAME GRADE OF THE STEEL AS THE PROPOSED STEEL BEAM. THE HP SHAPE AND STEEL PLATES SHALL HAVE THE SAME PROTECTIVE COATING AS THE MAIN STRUCTURAL STEEL.

PAYMENT FOR MATERIALS, LABOR, FABRICATION, PROTECTIVE COATING, VENT HOLES AND INSTALLATION OF THE HP SHAPE AND STEEL PLATE SHALL BE INCLUDED WITH ITEM 516 ABUTMENT ELASTOMERIC BEARINGS, AS PER PLAN, FOR PAYMENT.

WELDING: WELDING OF THE LOAD PLATE TO THE SUPERSTRUCTURE SHALL BE CONTROLLED SO THAT THE PLATE TEMPERATURE AT THE ELASTOMER BONDED SURFACE SHALL NOT EXCEED 300° F AS DETERMINED BY THE USE OF PYROMETRIC STICKS OR OTHER TEMPERATURE MONITORING DEVICES. THE STEEL LOAD PLATE SHALL BE BONDED BY VULCANIZATION TO THE ELASTOMER DURING THE MOLDING PROCESS.

BRIDGE SEAT REINFORCING:
REINFORCING STEEL IN THE VICINITY OF BRIDGE RETAINER SHALL BE ACCURATELY PLACED TO AVOID INTERFERENCE WITH THE DRILLING OF BEARING RETAINER ANCHOR HOLES OR THE PRE-SETTING OF BEARING RETAINING ANCHORS.

ELASTOMERIC BEARINGS SHALL COMPLY WITH ITEM 516 AND AASHTO STANDARD SPECIFICATION FOR HIGHWAY BRIDGES, SECTION 18, BEARING DEVICES, DIVISION II, CONSTRUCTION ARTICLES 18.4.5.1 AND 18.5.6.2. BEARINGS SHALL BE GRADE 3, 50 DUROMETER ELASTOMER AND SHALL BE SUBJECTED TO THE LOAD TESTING REQUIREMENTS DEFINED IN ARTICLE 18.7.4.5 OF THE AASHTO DOCUMENT LISTED ABOVE. THE UNIT BID PRICE SHALL INCLUDE ALL MATERIALS, LABOR, TESTING, STEEL LOAD PLATES AND INCIDENTALS NECESSARY TO FURNISH AND INSTALL LAMINATED ELASTOMERIC BEARINGS. PAYMENT WILL BE MADE AT THE CONTRACT PRICE FOR ITEM 516, EACH, ELASTOMERIC BEARINGS WITH INTERNAL LAMINATES AND LOAD PLATE (NEOPRENE).

BEARING REPOSITIONING: IF DECK CONCRETE IS PLACED AT AN AMBIENT TEMPERATURE HIGHER THAN 80°F OR LOWER THAN 40°F AND THE BEARING SHEAR DEFLECTION EXCEEDS ONE-SIXTH OF THE BEARING HEIGHT AT 60°F + 10°F, THE BEAMS SHALL BE RAISED TO ALLOW THE BEARING TO RETURN TO THEIR UNDERFORMED SHAPE AT 60°F +/- 10°F.

BEARING RETAINERS SHALL BE INSTALLED AS SHOWN ON SHEET 21/39 .

CONSTRUCTION PROCEDURE: ANCHOR BOLTS SHALL BE EITHER CAST IN PLACE BY USE OF A TEMPLATE OR FIELD DRILLED AND EPOXY GROUTED AFTER THE ERECTION OF THE STRUCTURAL STEEL BEAMS. CARE SHALL BE TAKEN TO ASSURE THAT THE ANCHOR BOLTS DO NOT INTEFERE WITH REINFORCING STEEL. THE RETAINER SHALL BE POSITIONED AND TIGHTENED BEFORE THE CONCRETE IS POURED FOR THE BEAM END ENCASEMENT. A BLOCK OF POLYSTYRENE FILLER MATERIAL, 8" IN WIDTH AND THE HEIGHT AS REQUIRED BY THE PLANS SHALL BE INSTALLED OVER THE TOP OF THE RETAINER ASSEMBLY BEFORE THE CONCRETE PLACEMENT.

BASIS OF PAYMENT: THE UNIT BID PRICE SHALL INCLUDE ALL MATERIALS, LABOR, TESTING, ANCHOR RODS, HP10x42, STEEL PLATES AND INCIDENTALS NECESSARY TO FURNISH AND INSTALL LAMINATED ELASTOMERIC BEARINGS, EITHER FIXED OR EXPANSION. PAYMENT WILL BE MADE AT THE CONTRACT PRICE FOR ITEM 516, EACH, ELASTOMERIC BEARINGS WITH INTERNAL LAMINATES AND LOAD PLATE (NEOPRENE):

9" x 14" x 2 7/16" WITH 12" x 15" x 1½" LOAD PLATE, AS PER PLAN
12" x 19" x 1⅞" WITH 13" x 20" x 2" LOAD PLATE.

DESIGN AGENCY
ODOT CENTRAL OFFICE
OFFICE OF PRODUCTION

DESIGNED	DRAWN	REVIEWED	DATE
DB	DB	DFT	10-22-99
CHECKED	REVISED	STRUCTURE FILE NUMBER	
TAA		5203724 R	

N.B. BEARING PAD DETAILS

MED-71-1870 R
I-71 OVER I-271

MED-71-15.78

27 / 39

763
940

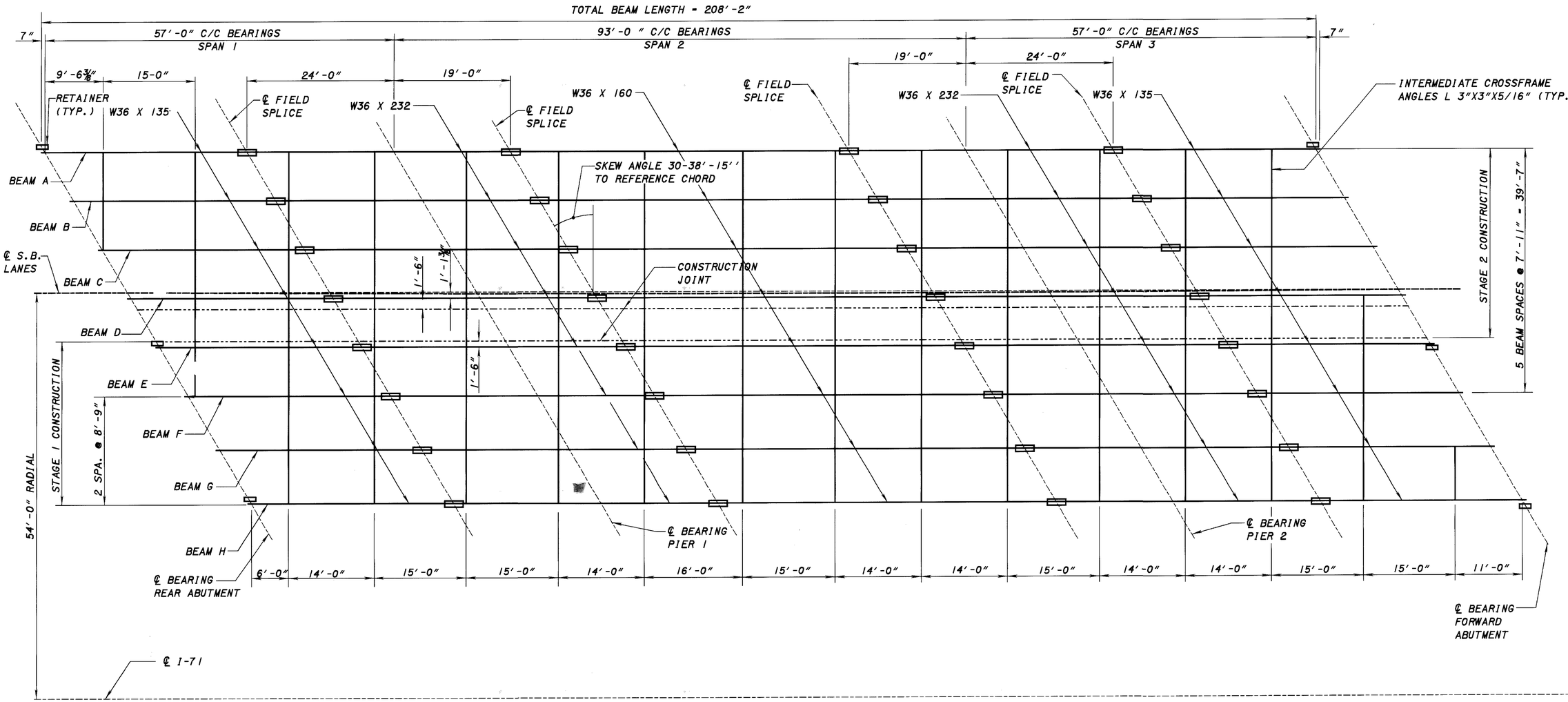

FRAMING PLAN

SOUTHBOUND LANES SHOWN

NOTES:

FOR INTERMEDIATE CROSSFRAME DETAILS SEE STANDARD DRAWING GSD-1-96 TYPE 2 CROSSFRAME DETAIL

FOR ADDITIONAL NOTES SEE SHEET 29/39 .

DESIGN AGENCY
ODOT CENTRAL OFFICE
OFFICE OF PRODUCTION

REVISED DFT DATE 10-22-99
STRUCTURE FILE NUMBER 5203694 L

DRAWN DB REVISED
DESIGNED DB CHECKED TAA

FRAMING PLAN
MED-71-1870 L
I-71 OVER I-271

MED-71-15.78

28/39

764/940

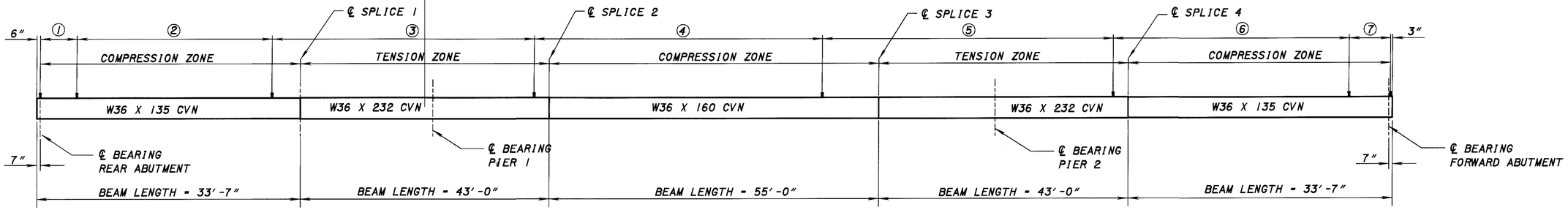

PROPOSED BEAM LINE LAYOUT
SOUTHBOUND BRIDGE

SHEAR CONNECTOR SPACING
FOR ALL BEAM LINES
CONNECTORS REQUIRED PER BEAM = 531
① - 8 SPACES @ 9" = 6'-0"
② - 24 SPACES @ 12" = 24'-0"
③ - 23 SPACES @ 24" = 46'-0"
④ - 66 SPACES @ 10" = 55'-0"
⑤ - 23 SPACES @ 24" = 46'-0"
⑥ - 24 SPACES @ 12" = 24'-0"
⑦ - 8 SPACES @ 9" = 6'-0"

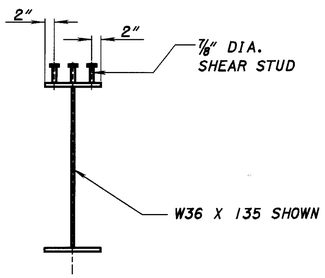

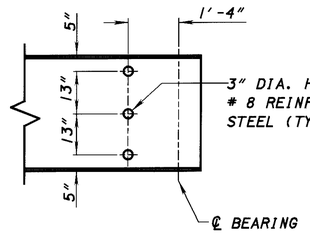

BEAM END

BEAMLINE	A	B	C
A	3/4"	3/4"	1'-2 3/4"
B	3/4"	3/4"	1'-2 13/16"
C	3/4"	3/4"	1'-2"
D	3/4"	3/4"	1'-1 7/8"
E	3/4"	3/4"	1'-1 11/16"
F	3/4"	3/4"	1'-1 1/2"
G	3/4"	3/4"	1'-1 5/16"
H	3/4"	3/4"	1'-1 3/16"

DEFLECTION AND CAMBER

	SPAN 1				SPAN 2					SPAN 3			
LOCATION OF POINT	1/4	1/2	SPL	3/4	SPL	1/4	1/2	3/4	SPL	1/4	SPL	1/2	3/4
BEAM DEFLECTION	1/16"	1/16"	-1/16"	-1/16"	3/16"	3/16"	5/16"	3/16"	3/16"	-1/16"	-1/16"	1/16"	1/16"
REMAINING DL DEFLECTION	1/8"	1/8"	0"	0"	7/8"	1 1/8"	1 7/8"	1 1/8"	7/8"	0"	0"	1/8"	1/8"
CORRECTION FOR VERT. & HORIZONTAL CURVE	1/16"	1/16"	1/8"	1/16"	1/8"	3/16"	1/4"	3/16"	1/8"	1/16"	1/8"	1/8"	1/16"
SHOP CAMBER	1/4"	5/16"	1/16"	0"	1 3/16"	1 1/2"	2 7/16"	1 1/2"	1 3/16"	0"	1/16"	5/16"	1/4"

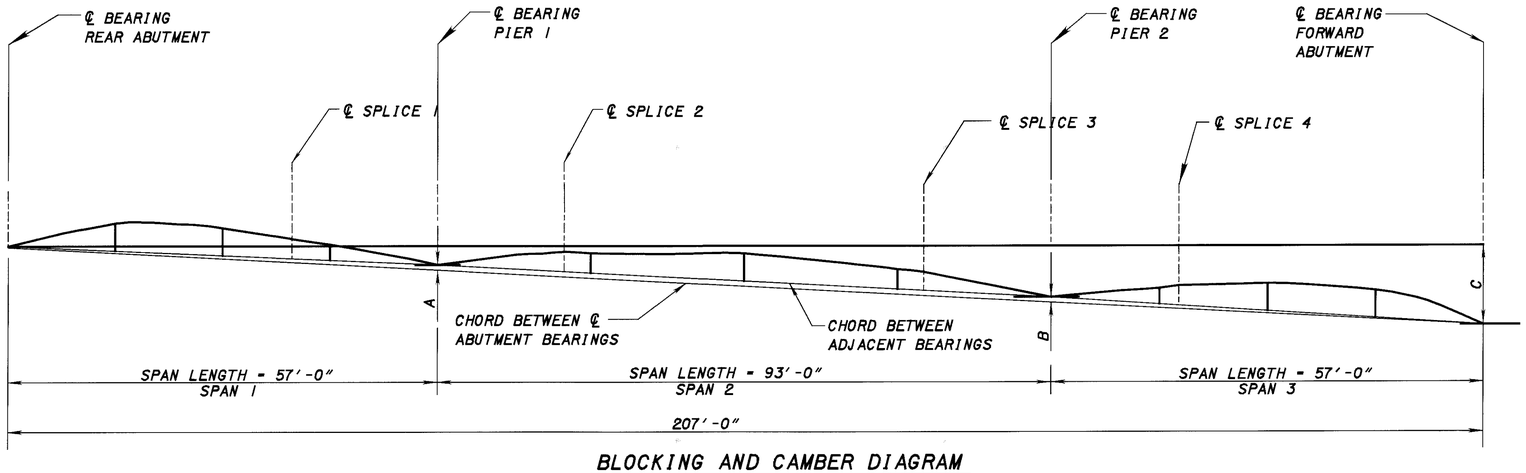

BLOCKING AND CAMBER DIAGRAM
SOUTHBOUND LANES

VERTICAL DIMENSIONS EXAGGERATED BY A FACTOR OF 10 FOR CLARITY

NOTES & LEGEND:

STRUCTURAL STEEL:
WHERE A SHAPE OR PLATE IS DESIGNATED (CVN) THE MATERIAL SHALL MEET SPECIFIED MINIMUM NOTCH TOUGHNESS REQUIREMENTS AS SPECIFIED IN 711.01.

ALL BOLTED FIELD SPLICES ARE OPTIONAL, THE CONTRACTOR MAY OMIT THE SPLICES AS DETAILED IN THE PLANS. WHERE SPLICES ARE OMITED, THE LARGER OF THE ADJACENT BEAM TO THE SPLICE SHALL BE REQUIRED. IN ADDITION THE BEAM SIZES AS DETAILED MAY BE SUBSTITUTED FOR LARGER BEAM SIZES WITH THE SAME DEPTH. THE CONTRACTOR SHALL SUBMIT ALL OPTIONS TO THE PROJECT ENGINEER FOR APPROVAL PRIOR TO ORDERING ANY STRUCTURAL STEEL.

PENDING ANY CHANGES AS DESCRIBED ABOVE AND TYPE OF CROSSFRAME USED, THE SPACING OF THE INTERMEDIATE CROSSFRAMES SHALL BE ADJUSTED TO AVOID CONFLICT WITH THE SPLICES. THE NUMBER OF CROSSFRAMES SHALL REMAIN THE SAME, A MAXIMUM SPACING OF 18'-0" WILL BE ALLOWED AND SHALL REMAIN IN LINE ACROSS THE WIDTH OF THE STRUCTURE.

FOR SCREED DIAGRAM AND TABLE SEE SHEET 24/39

WELDED ATTACHMENT:
WELDED ATTACHMENT OF SUPPORTS FOR CONCRETE DECK FINISHING MACHINE MAY BE MADE TO AREAS OF THE FACIA STRINGER FLANGES DESIGNATED "COMPRESSION". ATTACHMENTS SHALL NOT BE MADE TO AREAS DESIGNATED "TENSION". FILLET WELDS TO COMPRESSION FLANGES SHALL BE NOT CLOSER THAN 1" FROM EDGE OF FLANGE, BE NOT MORE THAN 2" LONG, AND BE NOT SMALLER THAN THE MINIMUM SIZE REQUIRED BY AASHTO.

3"ϕ HOLES DRILLED IN THE PROPOSED BEAM SHALL BE PAID UNDER ITEM 863 STRUCTURAL STEEL. THIS PAYMENT IS INCIDENTAL TO THE PAY ITEM.

LATERAL AND LONGITUDINAL SPACING OF WELDED STUD CONNECTORS MAY BE ALTERED AT FIELD SPLICE LOCATIONS TO AVOID INTERFERENCE WITH FLANGE SPLICE BOLTS PROVIDED THAT AT LEAST THE NUMBER OF STUDS SPECIFIED IN THE BEAM ELEVATION ARE PROVIDED.

STRUCTURAL STEEL SHALL BE ASTM A572.

ALL BEAM LENGTH DIMENSION ARE AT 60 °F

DESIGN AGENCY: ODOT CENTRAL OFFICE, OFFICE OF PRODUCTION
REVIEWED: DFT DATE: 10-22-99
STRUCTURE FILE NUMBER: 5203694 L
DRAWN: DB REVISED:
DESIGNED: DB CHECKED: TAA

S.B. SUPERSTRUCTURE DETAILS
MED-71-1870 L
I-71 OVER I-271

MED-71-15.78

29/39

765/940

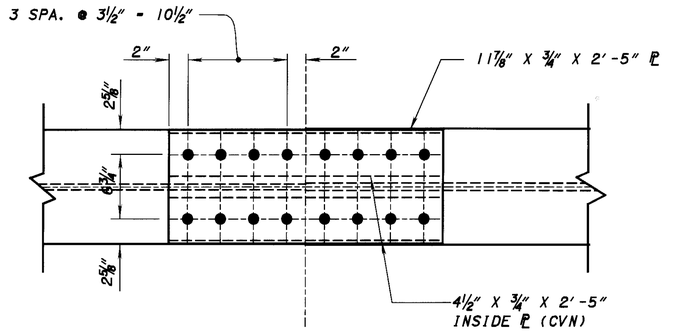

VIEW B-B

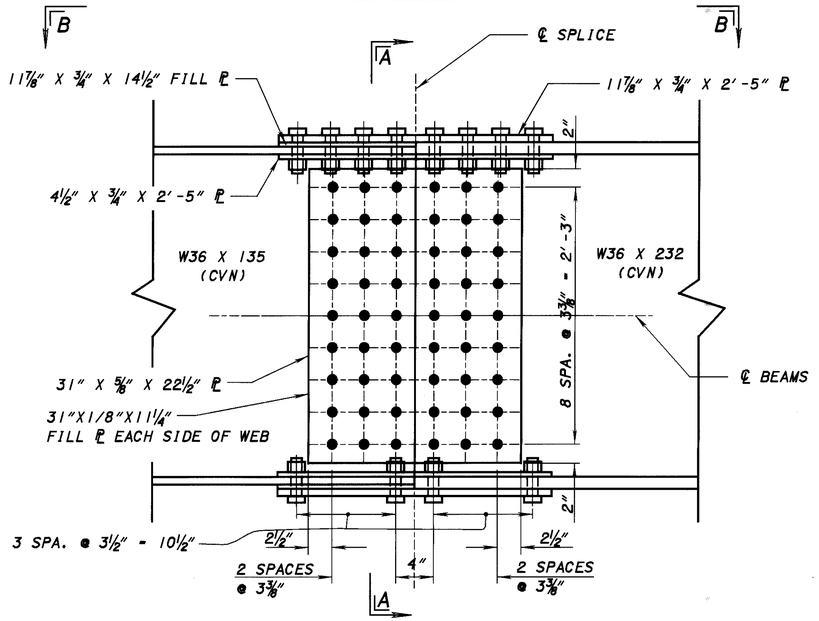

SPLICE 1 & 4 DETAILS

FOR SOUTHBOUND LANES

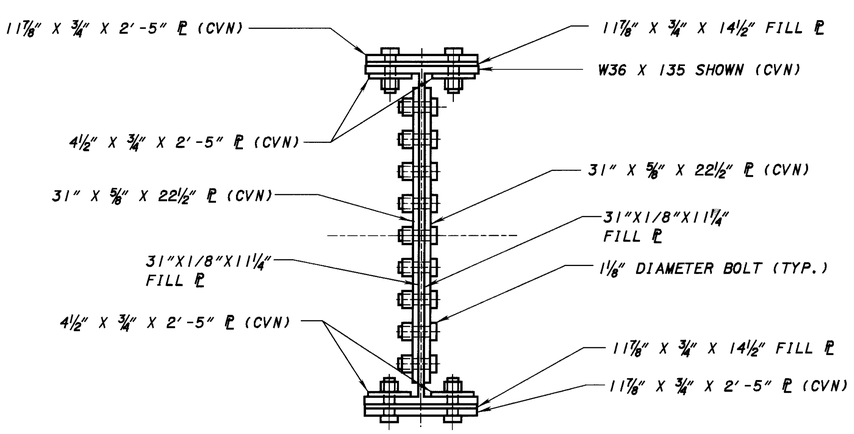

SECTION A-A

NOTES

WHERE A SHAPE OR PLATE IS DESIGNATED (CVN) THE MATERIAL SHALL MEET SPECIFIED MINIMUM TOUGHNESS REQUIREMENTS AS SPECIFIED IN 711.01.

SEE STANDARD DRAWINGS BS-1-93 FOR ADDITIONAL DETAILS AND NOTES NOT SHOWN.

HIGH STRENGTH BOLTS SHALL BE 1⅛" DIAMETER ASTM A-325 UNLESS OTHERWISE NOTED.

ALL BOLT LAYOUTS FOR BOTH SPLICE 1 AND SPLICE 2 ARE SYMMETRICAL ABOUT THE ℄ OF THE SPLICE AND THE ℄ OF THE BEAMS.

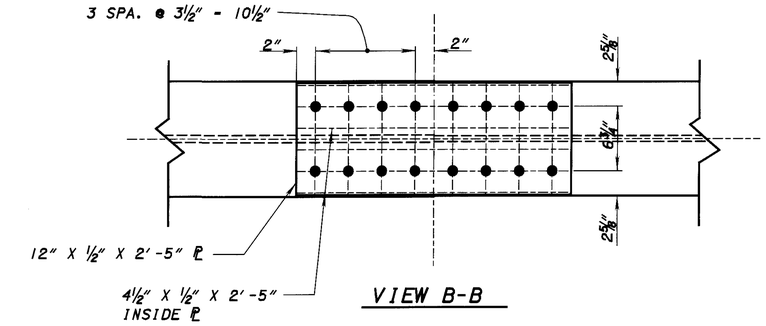

VIEW B-B

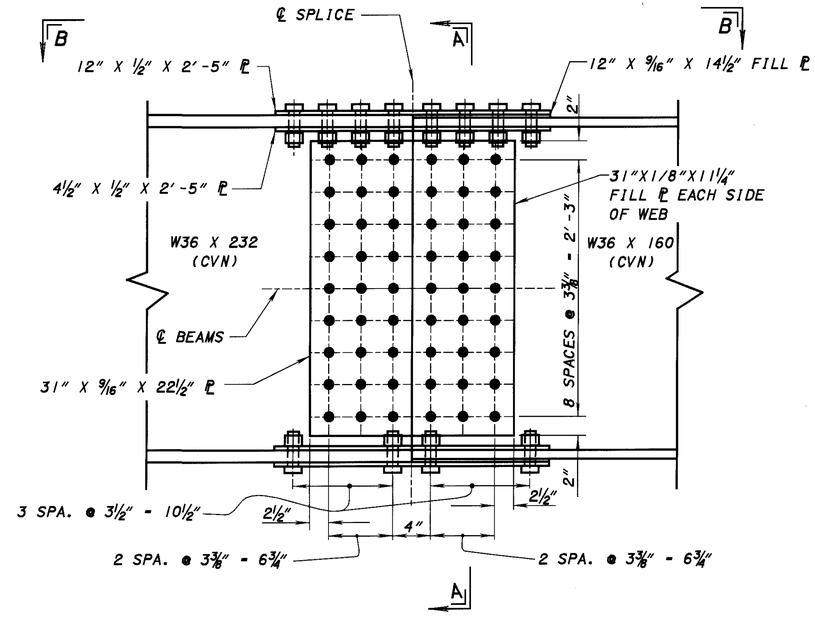

SPLICE 2 & 3 DETAILS

FOR SOUTHBOUND LANES

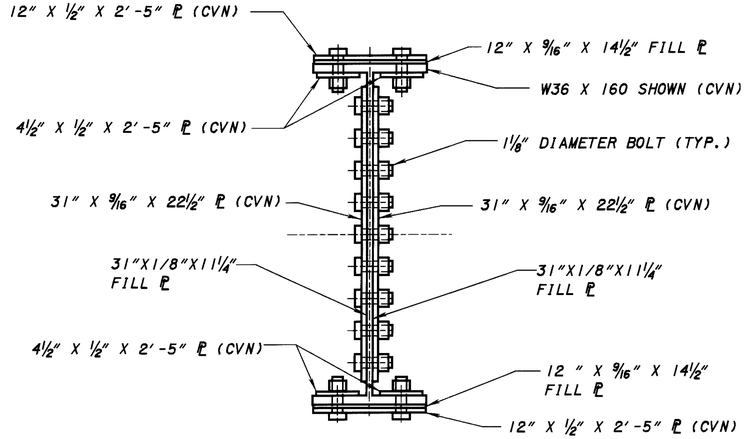

SECTION A-A

DESIGN AGENCY
ODOT CENTRAL OFFICE
OFFICE OF PRODUCTION

DESIGNED	DRAWN	REVISED	DATE
DB	DB	DFT	10-22-99
CHECKED	REVISED	STRUCTURE FILE NUMBER	
TAA		5203694 L	

SPLICE DETAILS S.B. BEAMS

MED-71-1870 L
I-71 OVER I-271

MED-71-15.78

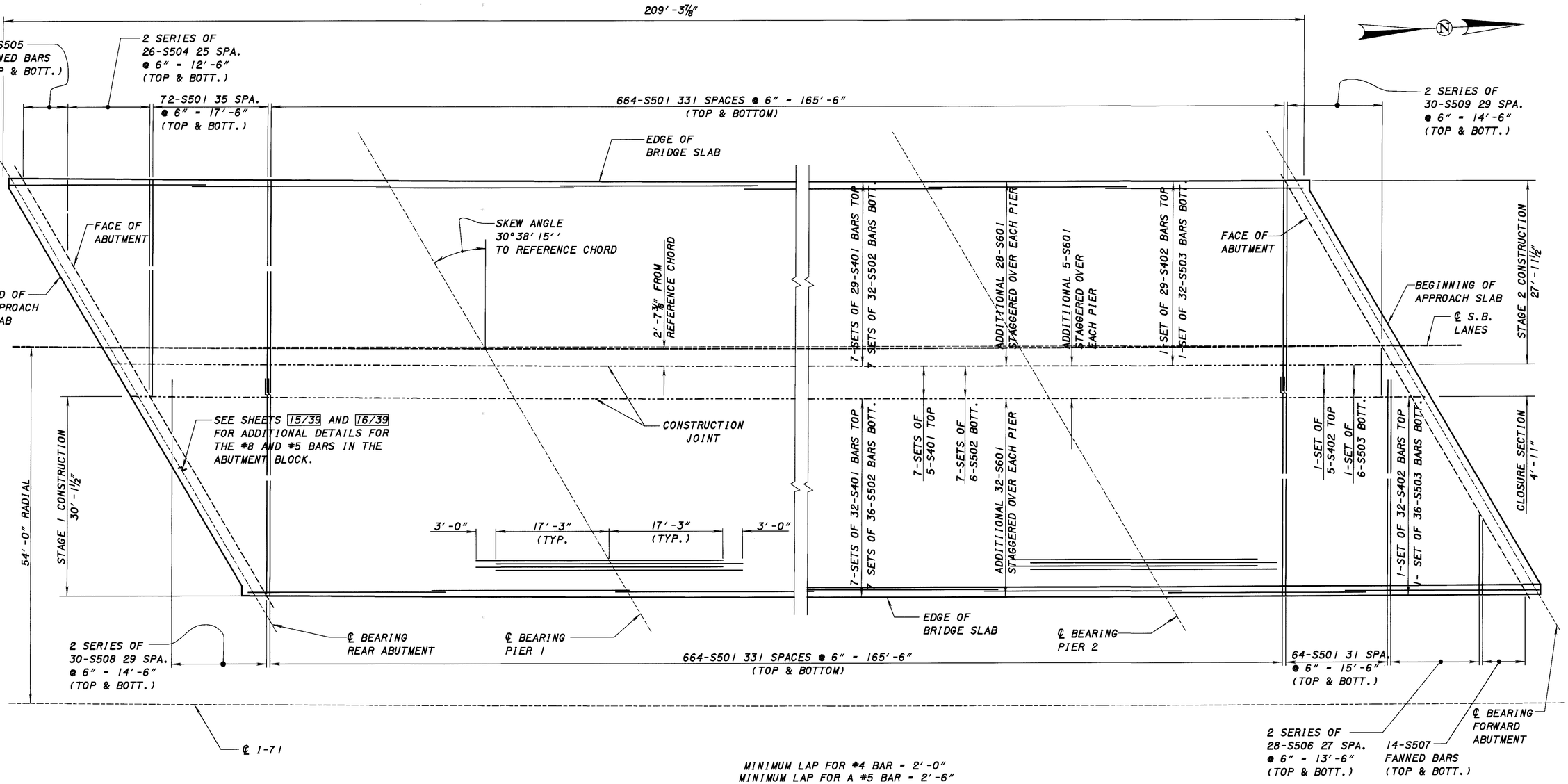

MINIMUM LAP FOR #4 BAR - 2′-0″
MINIMUM LAP FOR A #5 BAR - 2′-6″

DECK REINFORCEMENT PLAN

SOUTHBOUND LANES

NOTES

HORIZONTAL REINFORCING STEEL TO BE PLACE PARALLEL TO REFERENCE CHORD. TRANSVERSE REINFORCING STEEL TO BE PLACED PERPINDICULAR TO REFERENCE CHORD.

REFERENCE CHORD IS A CHORD BETWEEN ℄ ABUTMENT BEARING.

DESIGN AGENCY: ODOT CENTRAL OFFICE OFFICE OF PRODUCTION

DESIGNED	DRAWN	REVISED	DATE	STRUCTURE FILE NUMBER
DB	DB	DFT	10-22-99	5203694 L
CHECKED	REVISED			
TAA				

SUPERSTRUCTURE DETAILS
MED-71-1870 L
I-71 OVER I-271

MED-71-15.78

31 / 39

767 / 940

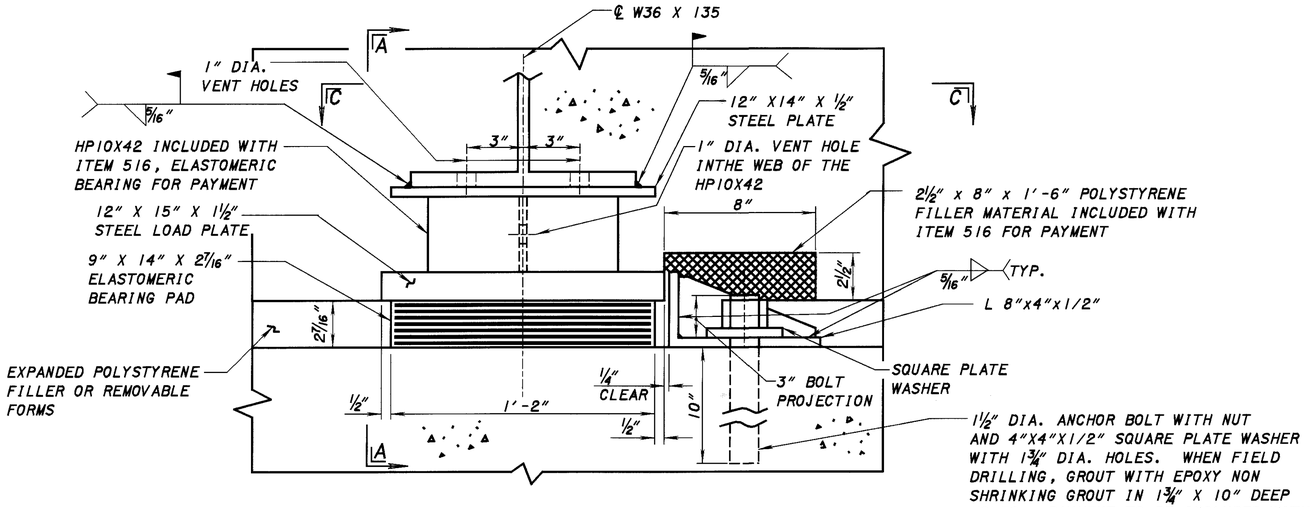

REAR AND FORWARD ABUTMENT
LAMINATED ELASTOMERIC EXPANSION BEARING

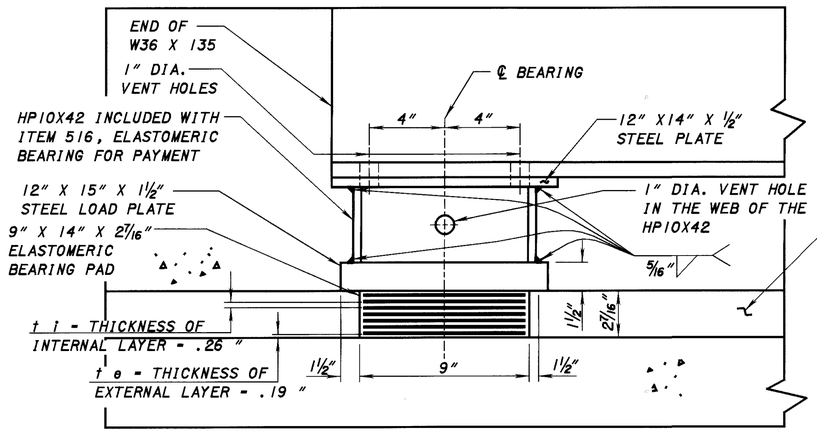

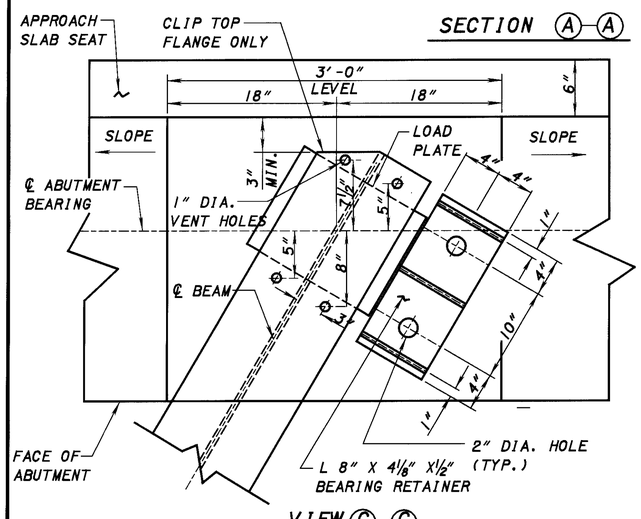

VIEW (C)–(C)

SECTION (A)–(A)

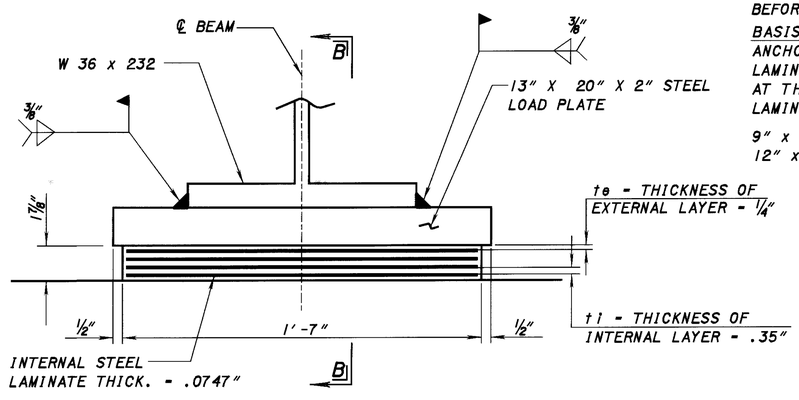

PIER 1 AND 2
LAMINATED ELASTOMERIC EXPANSION BEARING

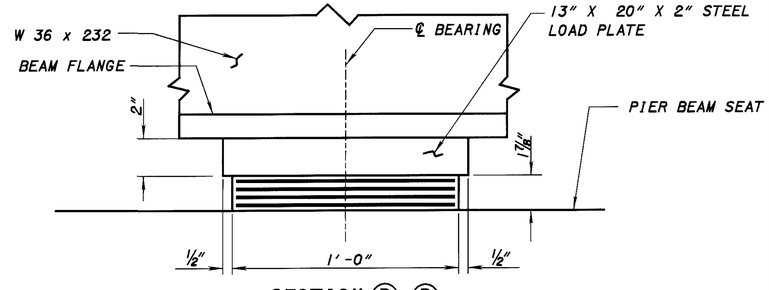

SECTION (B)–(B)

BEARING TABLE

BEARING LOCATION	TYPE	L	W	t_1 In.	t_e In.	n_1	n_2	STEEL LOAD ℄	TOTAL HEIGHT*	DL, Kips	LL, Kips	TOTAL, Kips
REAR & FORWARD ABUTMENT	EXP	9"	14"	.26"	.19"	6	7	12"x15"x1 1/2"	3 5/16"	61	50	111
PIER 1 & 2	EXP	12"	19"	.35"	.25"	3	4	13"x20"x2"	3 7/16"	157	66	223

n_1 - NUMBER OF INTERNAL ELASTOMER LAYERS, t_1 ELASTOMER LAYERS ARE 50 DUROMETERS
n_2 - NUMBER OF STEEL LAMINATES, 0.0747" THICKNESS * TOTAL HEIGHT INCLUDES LOAD PLATE

NOTES:

INSTALLATION PROCEDURE: ANCHOR BOLTS SHALL BE EITHER CAST IN PLACE BY USE OF A TEMPLATE OR FIELD DRILLED AND GROUTED AT THE CONTRACTOR'S OPTION. CARE SHALL BE TAKEN TO ASSURE THAT THE ANCHOR BOLTS DO NOT INTERFERE WITH REINFORCING STEEL.

MATERIALS: THE HP SHAPE (SUPPORT MEMBER) SHALL BE A36 STEEL. STEEL PLATES SHALL BE THE SAME GRADE OF THE STEEL AS THE PROPOSED STEEL BEAM. THE HP SHAPE AND STEEL PLATES SHALL HAVE THE SAME PROTECTIVE COATING AS THE MAIN STRUCTURAL STEEL.

PAYMENT FOR MATERIALS, LABOR, FABRICATION, PROTECTIVE COATING, VENT HOLES AND INSTALLATION OF THE HP SHAPE AND STEEL PLATE SHALL BE INCLUDED WITH ITEM 516 ABUTMENT ELASTOMERIC BEARINGS, AS PER PLAN, FOR PAYMENT.

WELDING: WELDING OF THE LOAD PLATE TO THE SUPERSTRUCTURE SHALL BE CONTROLLED SO THAT THE PLATE TEMPERATURE AT THE ELASTOMER BONDED SURFACE SHALL NOT EXCEED 300° F AS DETERMINED BY THE USE OF PYROMETRIC STICKS OR OTHER TEMPERATURE MONITORING DEVICES. THE STEEL LOAD PLATE SHALL BE BONDED BY VULCANIZATION TO THE ELASTOMER DURING THE MOLDING PROCESS.

BRIDGE SEAT REINFORCING:
REINFORCING STEEL IN THE VICINITY OF BRIDGE RETAINER SHALL BE ACCURATELY PLACED TO AVOID INTERFERENCE WITH THE DRILLING OF BEARING RETAINER ANCHOR HOLES OR THE PRE-SETTING OF BEARING RETAINING ANCHORS.

ELASTOMERIC BEARINGS SHALL COMPLY WITH ITEM 516 AND AASHTO STANDARD SPECIFICATION FOR HIGHWAY BRIDGES, SECTION 18, BEARING DEVICES, DIVISION II, CONSTRUCTION ARTICLES 18.4.5.1 AND 18.5.6.2. BEARINGS SHALL BE GRADE 3, 50 DUROMETER ELASTOMER AND SHALL BE SUBJECTED TO THE LOAD TESTING REQUIREMENTS DEFINED IN ARTICLE 18.7.4.5 OF THE AASHTO DOCUMENT LISTED ABOVE. THE UNIT BID PRICE SHALL INCLUDE ALL MATERIALS, LABOR, TESTING, STEEL LOAD PLATES AND INCIDENTALS NECESSARY TO FURNISH AND INSTALL LAMINATED ELASTOMERIC BEARINGS. PAYMENT WILL BE MADE AT THE CONTRACT PRICE FOR ITEM 516, EACH, ELASTOMERIC BEARINGS WITH INTERNAL LAMINATES AND LOAD PLATE (NEOPRENE).

BEARING REPOSITIONING: IF DECK CONCRETE IS PLACED AT AN AMBIENT TEMPERATURE HIGHER THAN 80°F OR LOWER THAN 40°F AND THE BEARING SHEAR DEFLECTION EXCEEDS ONE-SIXTH OF THE BEARING HEIGHT AT 60°F + 10°F, THE BEAMS SHALL BE RAISED TO ALLOW THE BEARING TO RETURN TO THEIR UNDERFORMED SHAPE AT 60° F +/- 10° F.

BEARING RETAINERS SHALL BE INSTALLED AS SHOWN ON SHEET 28/39 .

CONSTRUCTION PROCEDURE: ANCHOR BOLTS SHALL BE EITHER CAST IN PLACE BY USE OF A TEMPLATE OR FIELD DRILLED AND EPOXY GROUTED AFTER THE ERECTION OF THE STRUCTURAL STEEL BEAMS. CARE SHALL BE TAKEN TO ASSURE THAT THE ANCHOR BOLTS DO NOT INTEFERE WITH REINFORCING STEEL. THE RETAINER SHALL BE POSITIONED AND TIGHTENED BEFORE THE CONCRETE IS POURED FOR THE BEAM END ENCASEMENT. A BLOCK OF POLYSTYRENE FILLER MATERIAL, 8" IN WIDTH AND THE HEIGHT AS REQUIRED BY THE PLANS SHALL BE INSTALLED OVER THE TOP OF THE RETAINER ASSEMBLY BEFORE THE CONCRETE PLACEMENT.

BASIS OF PAYMENT: THE UNIT BID PRICE SHALL INCLUDE ALL MATERIALS, LABOR, TESTING, ANCHOR RODS, HP10x42, STEEL PLATES AND INCIDENTALS NECESSARY TO FURNISH AND INSTALL LAMINATED ELASTOMERIC BEARINGS, EITHER FIXED OR EXPANSION. PAYMENT WILL BE MADE AT THE CONTRACT PRICE FOR ITEM 516, EACH, ELASTOMERIC BEARINGS WITH INTERNAL LAMINATES AND LOAD PLATE (NEOPRENE):

9" x 14" x 2 7/16" WITH 12" x 15" x 1 1/2" LOAD PLATE, AS PER PLAN
12" x 19" x 1 7/8" WITH 13" x 20" x 2" LOAD PLATE.

DESIGN AGENCY: ODOT CENTRAL OFFICE, OFFICE OF PRODUCTION

DESIGNED	DRAWN	REVIEWED	DATE
DB	DB	DFT	10-22-99
CHECKED	REVISED	STRUCTURE FILE NUMBER	
TAA		5203694 L	

S.B. BEARING PAD DETAILS
MED-71-1870 R
I-71 OVER I-271

MED-71-15.78

32/39

768/940

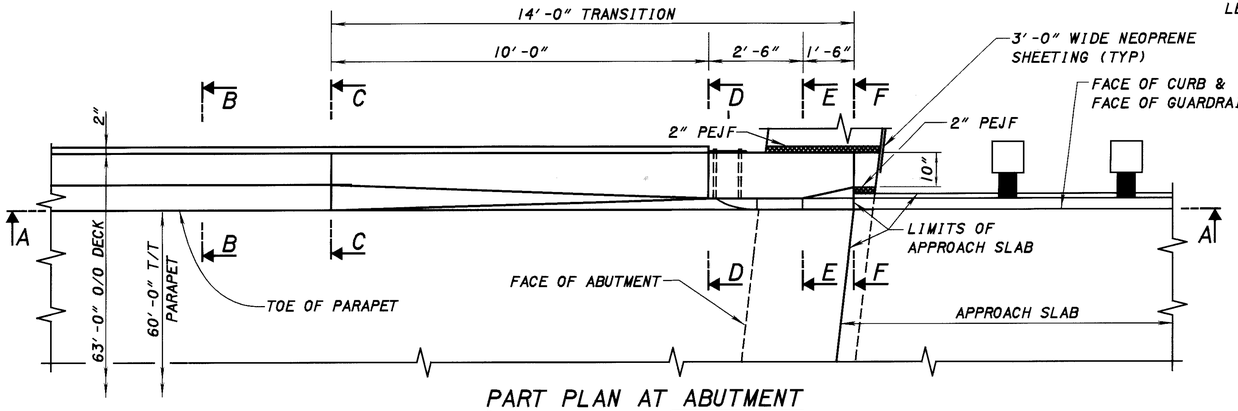

PART PLAN AT ABUTMENT

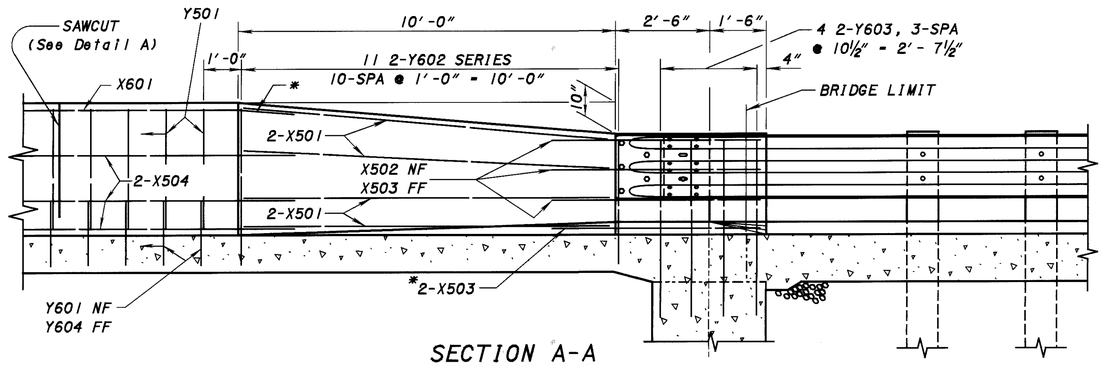

SECTION A-A

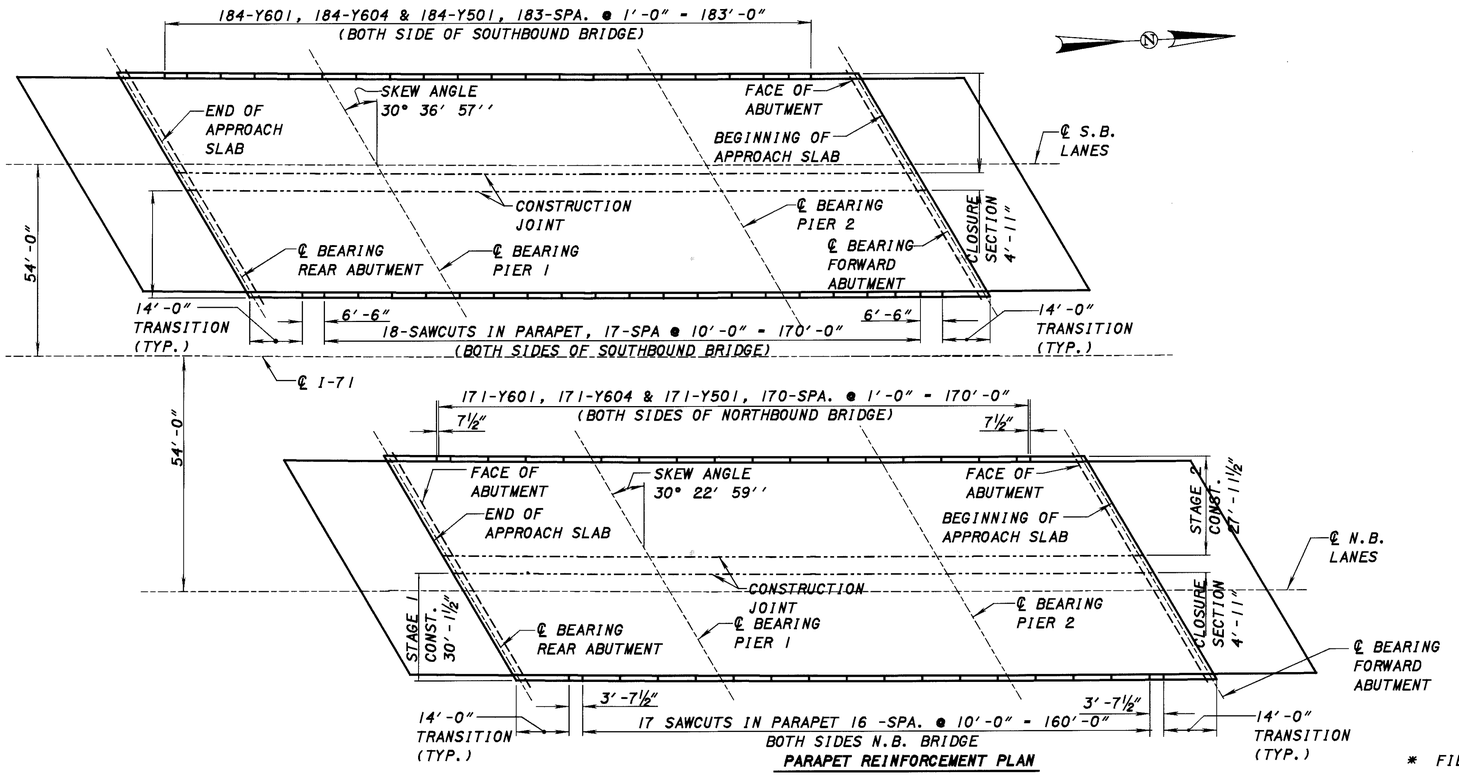

PARAPET REINFORCEMENT PLAN

LEGEND: NF - NEAR FACE
FF - FAR FACE
* FIELD BEND IF NECESSARY

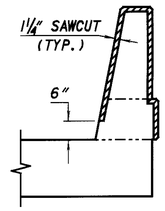

DETAIL A

(Section through sawcut)
Sawcut Perimeter = 7′-6″

CONTROL JOINTS FOR CONCRETE PARAPETS: THE JOINTS SHALL BE CONSTRUCTED BY SAWING 1¼ INCH DEEP ALONG THE PERIMETER OF THE PARAPET AS SOON AS THE SAW CAN BE OPERATED WITHOUT DAMAGING THE CONCRETE.

THE USE OF AN EDGE GUIDE, FENCE, OR JIG IS REQUIRED TO ENSURE THAT THE CUT JOINT IS STRAIGHT, TRUE, AND ALIGNED ON ALL FACES OF THE PARAPET. THE JOINT WIDTH SHALL BE THE WIDTH OF THE SAW BLADE, A NOMINAL WIDTH OF ¼ INCH.

THE PERIMETER OF THE DEFLECTION CONTROL JOINT SHALL BE SEALED WITH A CAULKING MATERIAL TO A MINIMUM DEPTH OF ONE INCH CONFORMING TO FEDERAL SPECIFICATION TT-S-00227E. THE BOTTOM ONE-HALF INCH OF THE OUTSIDE FACE OF THE PARAPET SHOULD BE LEFT UNSEALED TO ALLOW ANY WATER WHICH MAY ENTER THE JOINT TO ESCAPE.

QUANTITIES OF CONCRETE, REINFORCING STEEL, DEFLECTION JOINT SAWCUT AND CAULKING MATERIAL FOR PARAPET ARE INCLUDED WITH ITEM 844 HIGH PERFORMANCE CONCRETE, SUPERSTRUCTURE (PARAPET).

FOR BRIDGE TERMINAL ASSEMBLY SEE STANDARD CONSTRUCTION DRAWING GR-3.1 AND GR-3.2.

MIN LAP SPLICE LENGTH: #5 BAR - 2′-6″
#6 BAR - 3′-0″

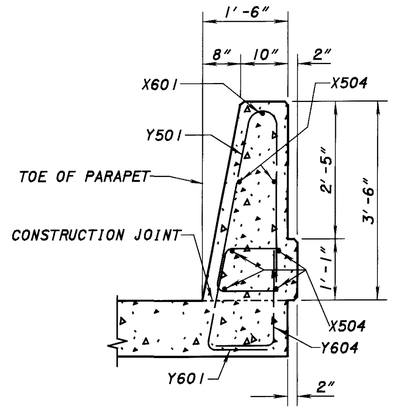

SECTION B-B & C-C

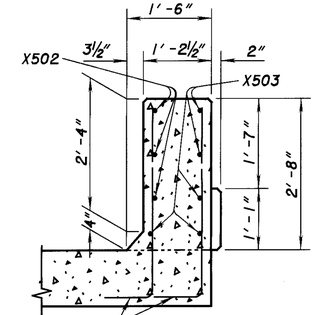

SECTION D-D

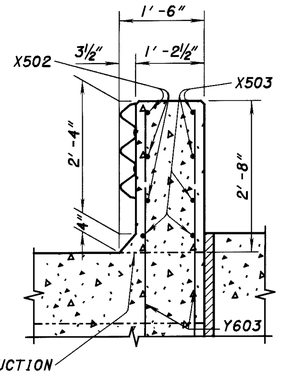

SECTION E-E

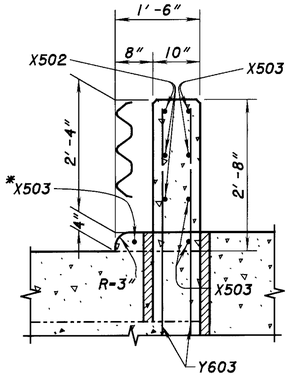

SECTION F-F

* FIELD BEND IF NECESSARY

DESIGN AGENCY: ODOT CENTRAL OFFICE, OFFICE OF PRODUCTION
REVISED: DFT | DATE: 10-22-99 | STRUCTURE FILE NUMBER: 5203694L/5203724R
DRAWN: DB | REVISED:
DESIGNED: DB | CHECKED: TAA

SUPERSTRUCTURE DETAILS
MED-71-1870 L/R
I-71 OVER I-271

MED-71-15.78

33 / 39

769
940

MARK	NUMBER					LENGTH	WEIGHT	TYPE	DIMENSIONS			
	REAR ABUT. STAGE I	REAR ABUT. STAGE II	FWD. ABUT. STAGE I	FWD. ABUT. STAGE II	TOTAL		LB		A	B	C	INC
ABUTMENTS - MED-71-1870 L												
A501	12		12		24	18'-9"	469	STR				
A502					0							
A503	38	36	34	38	146	12-1"	1840	2	4'-10"	2'-8"	4'-10"	
A504	38	36	34	38	146	17'-1"	2601	2	7'-4"	2'-8"	7'-4"	
A505	46	47	46	46	185	17'-1"	3296	3	5'-8"	2'-7"		
A506	31	32	34	32	129	8'-7"	1155	2	3'-4"	2'-2"	3'-4"	
A507	31	32	34	32	129	10'-11"	1469	3	2'-8"	2'-6"		
A508	1				1	22'-5"	24	2	10'-0"	2'-8"	10'-0"	
A509					0							
A510					0							
A511					0							
A512	1			1	3	10'-8"	41	19	8'-2"	2'-3"	1'-0"	
A513					0							
A514	1	1	1	1	4	5'-1"	27	STR				
A515					0							
A516	1 SERIES OF 6				1 SERIES OF 6	22'-9" TO 27'-11"	160	2	10'-8" TO 12'-9"	2'-8"	10'-8" TO 12'-9"	5"
A517	1	1	1	1	4	3'-6"	15	STR				
A518		1				9'-8"	11	STR				
A519	1			1	2	11'-3"	20	19	8'-2"	0'-11"	0'-5"	
A520				1	1	21'-9"	23	2	9'-8"	2'-8"	9'-8"	
A521				1	1	23'-11"	25	2	10'-9"	2'-8"	10'-9"	
A522	1	1			2	20'-5"	43	2	9'-5"	2'-8"	9'-5"	
A523	1		1	1	3	7'-7"	24	STR				
A524	2	1	1	1	4	9'-11"	42	STR				
A525					0							
A526			1		1	21'-9"	23	2	9'-8"	2'-8"	9'-8"	
A527			1	1	2	4'-4"	9	STR				
A528	1		1	1	3	6'-0"	19	STR				
A529	1		1	1	3	8'-4"	27	STR				
A530			1		1	11'-3"	12	19	9'-10"	1'-2"	0'-9"	
A531			1		1	23'-2"	24	2	10'-4½"	2'-8"	10'-4½"	
A532					0							
A533					0							
A534					0							
A535			1 SERIES OF 6		1 SERIES OF 6	24'-8" TO 28'-9"	167	2	11'-1½" TO 13'-2"	2'-8"	11'-1½" TO 13'-2"	9½"
A536						0						
A537						0						
A538						0						
A539	12	12	12	12	48	30'-0"	1502	STR				
A540						0						
A541						0						
A542						0						
A543						0						
A544						0						
A545						0						

MARK	NUMBER					LENGTH	WEIGHT	TYPE	DIMENSIONS			
	REAR ABUT. STAGE I	REAR ABUT. STAGE II	FWD. ABUT. STAGE I	FWD. ABUT. STAGE II	TOTAL		LB		A	B	C	INC
ABUTMENTS - MED-71-1870 L												
A546					0							
A547			1		1	12'-11"	13	19	9'-10"	2'-6½"	1'-8"	
A548					0							
A549					0							
A550		2			2	28'-7"	60	2	13'-1"	2'-8"	13'-1"	
A551		1 SERIES OF 6			1 SERIES OF 6	24'-11" TO 28'-8"	167	2	11'-3" TO 13'-1½"	2'-8"	11'-3" TO 13'-1½"	4½"
A552			3		3	28'-9"	90	2	13'-2"	2'-8"	13'-2"	
A553		1			1	11'-2"	12	24	8'-3"	2'-6"	1'-3"	
A554		1			1	9'-7"	11	24	8'-3"	1'-2"	0'-7"	
A555		12			12	20'-4"	254	STR				
A556		1			1	23'-5"	25	2	10'-6"	2'-8"	10'-6"	
A557		1			1	22'-7"	24	2	10-1"	2'-8"	10'-1"	
A558		1			1	24'-1"	25	2	10-10"	2'-8"	10'-10"	
A559			1	1	2	9'6"	20	STR				
A560			1	1	2	7'-11"	17	STR				
A565		1			1	5'-10"	6	STR				
A566		1			1	8'-11"	9	STR				
A567		1			1	10'-2"	11	STR				
A568		1			1	8'-7"	9	STR				
A569		1			1	7'-5"	8	STR				
A801	8		8		16	19'-4"	826	STR				
A802	2 SERIES OF 4		2 SERIES OF 4		4 SERIES OF 4	33'-5" TO 34'-8"	1590	STR				5"
A803	3		3		6	34'-8"	554	STR				
A804	3		3		6	33'-5"	536	STR				
A805	8	8	8	8	32	30'-0"	2563	STR				
A806		2 SERIES OF 4		2 SERIES OF 4	4 SERIES OF 4	34'-10" TO 35'-1"	1493	STR				5"
A807		3		3	6	34'-10"	558	STR				
A808		3		3	6	36'-1"	578	STR				
A809					0							
A810					0							
A811					0							
A812		8		8	16	21'-0"	897	STR				
D801	31	32	34	32	129	4'-10"	1665	18	2'-7"	1'-0"	1'-0"	

NOTES:

1. THIS REINFORCING SCHEDULE IS FOR INFORMATION ONLY.
2. ALL REINFORCING STEEL SHALL BE EPOXY COATED.
3. THE BAR SIZE IS INDICATED IN THE BAR MARK. THE FIRST DIGIT INDICATES THE BAR SIZE. FOR EXAMPLE, AN A501 IS A #5 BAR. THE DIMENSIONS SHOWN ARE OUT TO OUT UNLESS OTHERWISE INDICATED. "R" INDICATES THE INSIDE RADIUS.

DESIGN AGENCY
ODOT CENTRAL OFFICE
OFFICE OF PRODUCTION

DESIGNED	DRAWN	REVIEWED	DATE
DB	DB	DFT	10-22-99

CHECKED	REVISED	STRUCTURE FILE NUMBER
TAA		52036?4 & 52037?4

REINFORCING LIST
MED-71-1870 L/R
I-71 OVER I-271

MED-71-15.78

770
940

MARK	NUMBER					LENGTH	WEIGHT	TYPE	DIMENSIONS			
	REAR ABUT. STAGE I	REAR ABUT. STAGE II	FWD. ABUT. STAGE I	FWD. ABUT. STAGE II	TOTAL		LB		A	B	C	INC
ABUTMENTS - MED-71-1870 R												
A501					0							
A502		1	1		2	11'-1"	23	19	10'-3"	0'-9"	0'-5½"	
A503	35	38	37	35	145	12'-1"	1827	2	4'-10"	2'-8"	4'-10"	
A504	21	2	37	35	95	17'-1"	1693	2	7'-4"	2'-8"	7'-4"	
A505	31	10	46	46	133	17'-1"	2370	3	5'-8"	2'-7"		
A506	30	29	31	32	122	8'-7"	1092	2	3'-4"	2'-2"	3'-4"	
A507	30	29	31	32	122	10'-11"	1389	3	2'-8"	2'-6"		
A508					0							
A509				1 SERIES OF 6	1 SERIES OF 6	25'-11" TO 29'-7"	174	2	11'-9" TO 13'-7"	2'-8"	11'-9" TO 13'-7"	8½"
A510				1	1	24'-11"	26	2	11'-3"	2'-8"	11'-3"	
A511		1	1		2	13'-1"	27	19	10'-3"	2'-3"	1'-5"	
A512					0							
A513		1 SERIES OF 6			1 SERIES OF 6	25'-5" TO 26'-11"	164	2	11'-6" TO 12'-3"	2'-8"	11'-6" TO 12'-3"	3½"
A514	1	1	1	1	4	5'-11"	25	STR				
A515			1 SERIES OF 6		1 SERIES OF 6	24'-9" TO 27'-8"	164	2	11'-2" TO 12'-7½"	2'-8"	11'-2" TO 12'-7½"	7"
A516					0							
A517					0							
A518					0							
A519					0							
A520					0							
A521					0							
A522					0							
A523	1	1	1	1	4	7'-8"	32	STR				
A524	1	1	1	1	4	11'-3"	47	STR				
A525				1	1	22'-5"	23	2	10'-0"	2'-8"	10'-0"	
A526					0							
A527	1	1	1	1	4	4'-4	18	STR				
A528	1	1	1	1	4	6'-1"	25	STR				
A529	1	1	1	1	4	9'-8"	40	STR				
A530	1			1	2	11'-3"	23	19	9'-10"	1'-2"	0'-9"	
A531					0							
A532	1	1			2	19'-10"	41	2	8'-8½"	2'-8"	8'-8½"	
A533			1		1	22'-8"	24	2	10'-1½"	2'-8"	10'-1½"	
A534				3	3	29'-7"	93	2	13'-7"	2'-8"	13'-7"	
A535					0							
A536	1				1	26'-11"	28	2	12'-3"	2'-8"	12'-3"	
A537	1 SERIES OF 6				1 SERIES OF 6	24'-5" TO 26'-11"	161	2	11'-0" TO 12'-3"	2'-8"	11'-0" TO 12'-3"	6"
A538	26	70			96	10'-6"	1051	STR				
A539	12	12	12	12	48	30'-0"	1502	STR				
A540		1 SERIES OF 4			1 SERIES OF 4	21'-7" TO 24'-4"	96	2	9'-7" TO 10'-11½"	2'-8"	9'-7" TO 10'-11½"	11"
A541	1				1	23'-4"	24	2	10'-5½"	2'-8"	10'-5½"	
A542	1				1	21'-8"	23	2	9'-7½"	2'-8"	9'-7½"	
A543			1		1	29'-8"	31	2	13'-7½"	2'-8"	13'-7½"	

MARK	NUMBER					LENGTH	WEIGHT	TYPE	DIMENSIONS			
	REAR ABUT. STAGE I	REAR ABUT. STAGE II	FWD. ABUT. STAGE I	FWD. ABUT. STAGE II	TOTAL		LB		A	B	C	INC
ABUTMENTS - MED-71-1870 R												
A544			1		1	24'-4"	25	2	10-11½"	2'-8"	10'-11½"	
A545	6		12		18	18'-10"	354	STR				
A546	6				6	30'-8"	192	STR				
A547	1			1	2	12'-11"	27	19	9'-10"	2'-6½"	1'-8"	
A548		6		12	18	20'-10"	391	STR				
A549		6			6	12'-1"	76	STR				
A550					0							
A551					0							
A552					0							
A553					0							
A554					0							
A555					0							
A556					0							
A557					0							
A558					0							
A559	1	1	1	1	4	9'-6"	40	STR				
A560	1	1	1	1	4	7'-11"	33	STR				
A801					0							
A802		2 SERIES OF 4		2 SERIES OF 4	4SERIES OF 4	36'-7" TO 37'-10"	1590	STR				
A803		3		3	6	37'-10"	606	STR				
A804		3		3	6	36'-4"	582	STR				
A805	4	4	8	8	24	30'-0"	1922	STR				
A806	2 SERIES OF 4		2 SERIES OF 4		4SERIES OF 4	34'-4" TO 35'-7"	1493	STR				
A807	3		3		6	34'-4"	550	STR				
A808	3		3		6	35'-10"	574	STR				
A809	4		8		12	21'-3"	681	STR				
A810		4		8	12	23'-3"	745	STR				
A811		4			4	12'-1"	129	STR				
A812					0							
A813	4				4	30'-8"	328	STR				
D801	30	29	31	32	122	4'-10"	1574	18	2'-7"	1'-0"	1'-0"	

DESIGN AGENCY
ODOT CENTRAL OFFICE
OFFICE OF PRODUCTION

REVIEWED DFT
DATE 10-22-99
STRUCTURE FILE NUMBER 5203694 & 5203724

DRAWN DB
REVISED

DESIGNED DB
CHECKED TAA

REINFORCING LIST
MED-71-1870 L/R
I-71 OVER I-271

MED-71-15.78

35 / 39

771 / 940

PIERS - MED-71-1870 L

MARK	NUMBER PIER 1	NUMBER PIER 2	NUMBER TOTAL	LENGTH	WEIGHT LB	TYPE	DIMENSIONS A	B	C	D	R	INC
P501		12	12	12'-5"	155	2	5'1"	2'-6"	5'1"			
P502			0									
P503		10	10	8'-11"	93	24	2'-6"	2'-6"			1'-3"	
P504		10	10	10'-2"	106	STR						
P505	8		8	31'-0"	259	STR						
P506	8		8	28'-2"	235	STR						
P507	39		39	9'-6"	386	STR						
P508	40		40	19'-3"	803	2	8'-6"	2'-6"	8'-6"			
P509	2 SERIES OF 7		2 SERIES OF 7	8'-9" TO 13'-9"	126	2	3'-2" TO 5'-8"	2'-8"				5"
P510	19		19	13'-0"	258	3	3'-8"	2'-8"				
P511	2 SERIES OF 12		2 SERIES OF 12	8'-9" TO 14'-3"	231	2	3'-2" TO 5'-11"	2'-8"	3'-2" TO 5'-11"			3"
P512	8		8	8'-11"	74	2	3'-4"	2'-6"	3'-4"			
P513	26		26	24'-5"	662	STR						
P514	26		26	27'-6"	746	STR						
P515		27	27	6'-8"	188	2	2'-5"	2'-1"	2'-5"			
P516			0									
P517			0									
P518	26		26	9'-6"	258	24	2'-8"	2'-8"			1'-4"	
P519		12	12	7'-8"	96	STR						
P520		12	12	6'-8"	83	STR						
P601	14		14	38'-4"	806	STR						
P602	2 SERIES OF 9		2 SERIES OF 9	27'-8" TO 38'-4"	892	STR						1'-4"
P603	2 SERIES OF 9		2 SERIES OF 9	24'-4" TO 34'-0"	789	STR						1'-2½"
P604	14		14	33'-10"	711	STR						
P605	2		2	11'-9"	36	STR						
P606	2		2	10'-10"	33	STR						
P801	12		12	35'-4"	1132	STR						
P802	12		12	28'-2"	902	STR						
P803		16	16	7'-8"	328	STR						
P804	58		58	11'-4"	1755	17	10'-0"					
P903		22	22	19'-0"	1421	STR						
P904		8	8	10'-0"	272	STR						
P905			0									
P906		22	22	10'-8"	798	1	1'-8"	9'-4"				
P907		4	4	13'-11"	189	24	2'-6"	5'-0"			1'-3"	
P1001	174		174	22'-4"	16271	STR						
P1002	175		175	11'-3"	8472	1	1'-11"	9'-8"				
P1003		8	8	11'-5"	245	STR						
P1004		8	8	37'-4"	798	STR						
P1101	133		133	12'-10"	9068	17	9'-8"					
P1102		16	16	9'-10"	836	17	6'-8"					
P1103	9		9	35'-5"	1695	STR						
P1102	9		9	34'-2"	1634	STR						
SP401			0									
SP402			0									
SP403		2	2	14'0"	416	27	4½"	2'-6"				

PIERS - MED-71-1870 R

MARK	NUMBER PIER 1	NUMBER PIER 2	NUMBER TOTAL	LENGTH	WEIGHT LB	TYPE	DIMENSIONS A	B	C	D	R	INC
P501	12	12	24	12'-5"	311	2	5'1"	2'-6"	5'1"			
P502	10	10	20	10'-0"	209	STR						
P503	10	10	20	8'-11"	186	24	2'-6"	2'-6"			1'-3"	
P504			0									
P505			0									
P506			0									
P507			0									
P508			0									
P509			0									
P510			0									
P511			0									
P512			0									
P513			0									
P514			0									
P515			0									
P516	27		27	6'-2"	174	2	2'-2"	2'-1"	2'-2"			
P517		27	27	7'-0"	197	2	2'-7"	2'-1"	2'-7"			
P518			0									
P519	12	12	24	7'-8"	192	STR						
P520	12	12	24	6'-8"	167	STR						
P601			0									
P602			0									
P603			0									
P604			0									
P801			0									
P802			0									
P803	16	16	32	7'-8"	655	STR						
P901		22	22	19'-11"	1490	STR						
P902	22		22	23'-1"	1727	STR						
P903			0									
P904	10	10	20	10'-0"	680	STR						
P905			0									
P906	22	22	44	10'-8"	1596	1	1'-8"	9'-4"				
P907	4	4	8	13'-11"	379	24	2'-6"	5'-0"			1'-3"	
P1003	8	8	16	11'-5"	490	STR						
P1004	8	8	16	37'-4"	1596	STR						
P1101			0									
P1102	16	16	32	9'-10"	1672	17	6'-8"					
SP401		2	2	14'-8"	434	27	4½"	2'-6"				
SP402	2		2	17'-4"	508	27	4½"	2'-6"				

DESIGN AGENCY
ODOT CENTRAL OFFICE
OFFICE OF PRODUCTION

DESIGNED BRH
DRAWN BRH
CHECKED TAA
REVISED
REVIEWED DFT
DATE 10-22-99
STRUCTURE FILE NUMBER 5203694 & 5203724

REINFORCING LIST

MED-71-1870 L/R
I-71 OVER I-271

MED-71-15.78

MARK	NUMBER			LENGTH	WEIGHT	TYPE	DIMENSIONS					
	SUPER STAGE I	SUPER STAGE II	TOTAL		LB		A	B	C	D	R	INC
SUPERSTRUCTURE - MED-71-1870 L												
S401	224	238	462	30'-0"	9259	STR						
S402	32	34	66	41'-0"	1808	STR						
S501	1456	1472	2928	18'-6"	56497	STR						
S502	252	266	518	30'-0"	17109	STR						
S503	36	38	74	44'-0"	3396	STR						
S504		2 SERIES OF 26	2 SERIES OF 26	11'-6" TO 32'-4"	1189	STR						10"
S505		14	14	10'-8"	156	STR						
S506	2 SERIES OF 28		2 SERIES OF 28	9'-6" TO 32'-0"	1212	STR						10"
S507	14		14	8'-8"	127	STR						
S508	2 SERIES OF 30		2 SERIES OF 30	7'-10" TO 32'-0"	1246	STR						10"
S509		2 SERIES OF 30	2 SERIES OF 30	8'-2" TO 32'-4"	1267	STR						10"
S601	64	66	130	37'-6"	7322	STR						

MARK	NUMBER			LENGTH	WEIGHT	TYPE	DIMENSIONS					
	SUPER STAGE I	SUPER STAGE II	TOTAL		LB		A	B	C	D	R	INC
SUPERSTRUCTURE - MED-71-1870 R												
S401	203	259	462	30'-0"	9258	STR						
S402	29	37	66	41'-0"	1808	STR						
S501	1368	1352	2720	18'-6"	52484	STR						
S502	224	294	518	30'-0"	16208	STR						
S503	32	42	74	44'-0"	3396	STR						
S504			0									
S505			0									
S506			0									
S507			0									
S508			0									
S509			0									
S510	2 SERIES OF 26		2 SERIES OF 26	13'-6" TO 34'-4"	1297	STR						10"
S511	14		14	12'-8"	185	STR						
S512		2 SERIES OF 28	2 SERIES OF 28	7'-3" TO 29'-9"	1081	STR						10"
S513		14	14	6'-5"	94	STR						
S514		2 SERIES OF 30	2 SERIES OF 30	5'-6" TO 29'-8"	1100	STR						10"
S515	2 SERIES OF 30		2 SERIES OF 30	10'-1" TO 34'-3"	1387	STR						10"
S601			0									
S602	56	74	130	32'-6"	6346	STR						

DESIGN AGENCY
ODOT CENTRAL OFFICE
OFFICE OF PRODUCTION

DESIGNED	DRAWN	REVIEWED	DATE
DB	DB	DFT	10-22-99
CHECKED	REVISED	STRUCTURE FILE NUMBER	
TAA		5203694 & 5203724	

REINFORCING LIST
MED-71-1870 L/R
I-71 OVER I-271

MED-71-15.78

773/940

MARK	NUMBER			LENGTH	WEIGHT	TYPE	DIMENSIONS						
	SUPER STAGE I	SUPER STAGE II	TOTAL		LB		A	B	C	D	E	R	INC
PARAPETS - MED-71-1870 L													
X501	16	16	32	10'-0"	334	STR							
X502	3	6	9	5'-6"	52	25	1'-8"	2'-5"	1'-4"	1½"	5"		
X503	13	10	23	6'-6"	132	STR							
X504	48	48	96	33'-5"	2795	STR							
Y501	184	184	368	7'-5"	2847	23	1'-1"	3'-2"	3'-0"			2¾"	
X601	8	8	16	26'-4"	695	STR							
Y601	184	184	368	3'-5"	1889	33	1'-1"	1'-5½"	1'-1"				
Y602	4 SERIES OF 11	4 SERIES OF 11	8 SERIES OF 11	3'-11" TO 4'-9"	573	1	1'-1"	3'-0½" TO 3'-10½"					1"
Y603	16	16	32	5'-4"	256	STR							
Y604	184	184	368	2'-4"	1290	1	1'-1"	1'-5½"					
PARAPETS - MED-71-1870 R													
X501	16	16	32	10'-0"	334	STR							
X502	3	6	9	5'-6"	52	25	1'-8"	2'-5"	1'-4"	1½"	5"		
X503	13	10	23	6'-6"	132	STR							
X504	48	48	96	31'-3"	2628	STR							
Y501	171	171	342	7'-5"	2646	23	1'-1"	3'-2"	3'-0"			2¾"	
X601	8	8	16	24'-8"	655	STR							
Y601	171	171	342	3'-5"	1755	33	1'-1"	1'-5½"	1'-1"				
Y602	4 SERIES OF 11	4 SERIES OF 11	8 SERIES OF 11	3'-11" TO 4'-9"	573	1	1'-1"	3'-0½" TO 3'-10½"					1"
Y603	16	16	32	5'-4"	256	STR							
Y604	171	171	342	2'-4"	1199	1	1'-1"	1'-5½"					

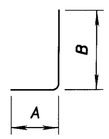

TYPE-1

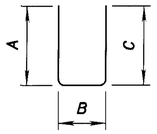

TYPE-2

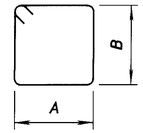

TYPE-3



TYPE-17

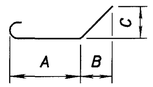

TYPE-18

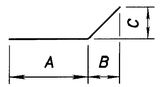

TYPE-19

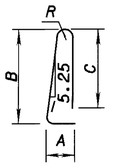

TYPE-23

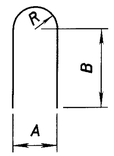

TYPE-24

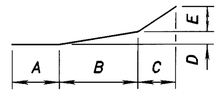

TYPE-25

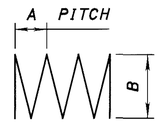

TYPE-27

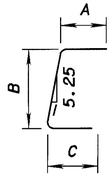

TYPE-33

DESIGN AGENCY
ODOT CENTRAL OFFICE
OFFICE OF PRODUCTION

REVISED DFT DATE 10-22-99
STRUCTURE FILE NUMBER 5203694 & 5203724

DRAWN DB REVISED
DESIGNED DB CHECKED TAA

REINFORCING LIST
MED-71-1870 L/R
I-71 OVER I-271

MED-71-15.78

38/39

774/940

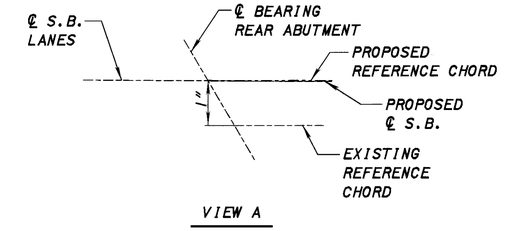

VIEW A

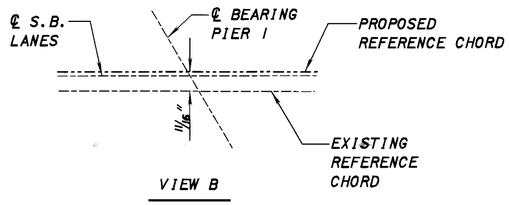

VIEW B

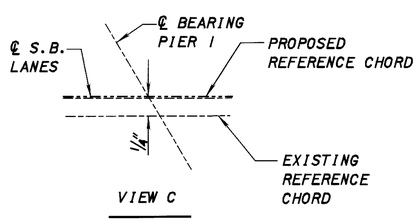

VIEW C

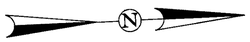

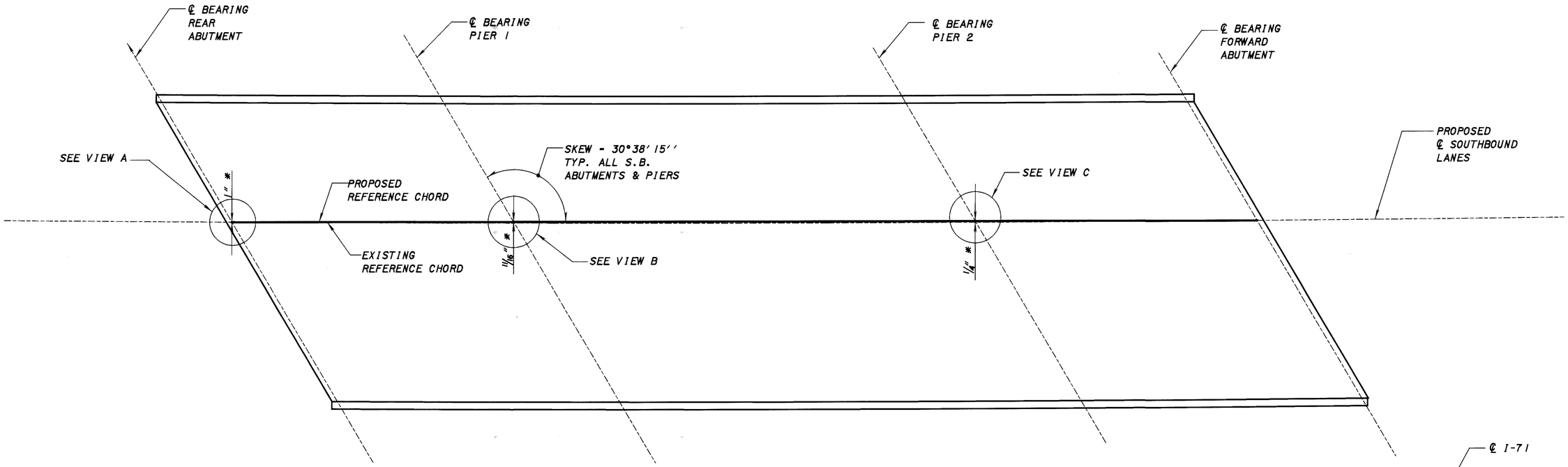

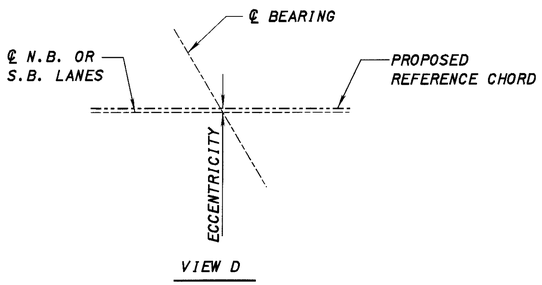

VIEW D

(SEE TABLE OF ECCENTRICITIES)

TABLE OF ECCENTRICITIES			
SOUTHBOUND			
REAR ABUT.	PIER 1	PIER 2	FORWARD ABUT.
0'-0"	3 3/16"	3 1/4"	0'-0"
NORTHBOUND			
REAR ABUT.	PIER 1	PIER 2	FORWARD ABUT.
0'-0"	3 1/16"	3 1/16"	0'-0"

(SEE VIEW D FOR CLARIFICATION)

NOTES

1. THE REAR ABUTMENT AND PIER 1 OF THE SOUTHBOUND STRUCTURE WERE MOVED FROM THE ORIGINAL LOCATION FROM THE EXISTING PLANS. BECAUSE OF THIS THE EXISTING AND PROPOSED REFERENCE CHORDS ARE NOT IN THE SAME LOCATION. BOTH REFERENCE CHORDS INTERSECT AT THE SAME POINT AT THE FORWARD ABUTMENT BUT AT THE OTHER S.B. SUBSTRUCTURE UNITS WE HAVE GIVEN DIMENSIONS BETWEEN THE EXISTING AND PROPOSED REFERENCE CHORDS.
2. THE BEAMS ARE LAYED OUT PARALLEL TO THE EXISTING REFERENCE CHORD.
3. THE SKEWS ARE MEASURE BETWEEEN THE PROPOSED REFERENCE CHORD AND THE ℄ BEARINGS
4. * - THE DIMENSION GIVEN IS BETWEEN THE EXISTING AND PROPOSED REFERENCE CHORD MEASURED PERPINDICULAR TO THE PROPOSED REFERENCE CHORD.

DESIGN AGENCY
ODOT CENTRAL OFFICE
OFFICE OF PRODUCTION

REVISED DFT | DATE 10-22-99
STRUCTURE FILE NUMBER 5203694L&5203724R

DRAWN DB | REVISED
DESIGNED DB | CHECKED TAA

SUPERSTRUCTURE DETAILS
MED-71-1870 L/R
I-71 OVER I-271

MED-71-15.78

39 / 39

775
940

CURVE I DATA

P.I. STA. = 984+41.65
D = 26° 45′ 35″ (LT.)
Dc = 0° 22′ 00″
R = 15,626.07′
T = 3,716.85′
L = 7,298.08′
E = 435.97′

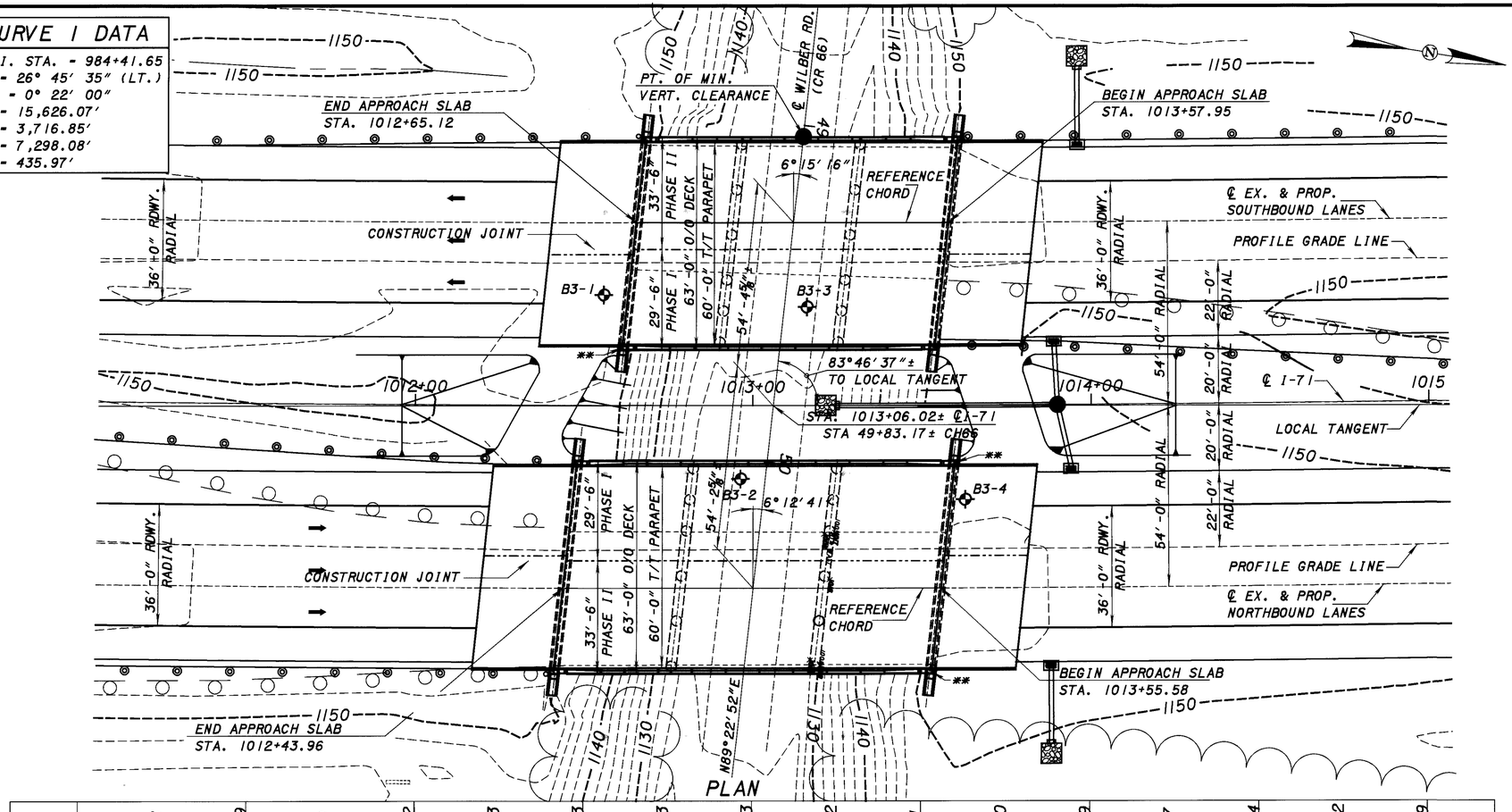

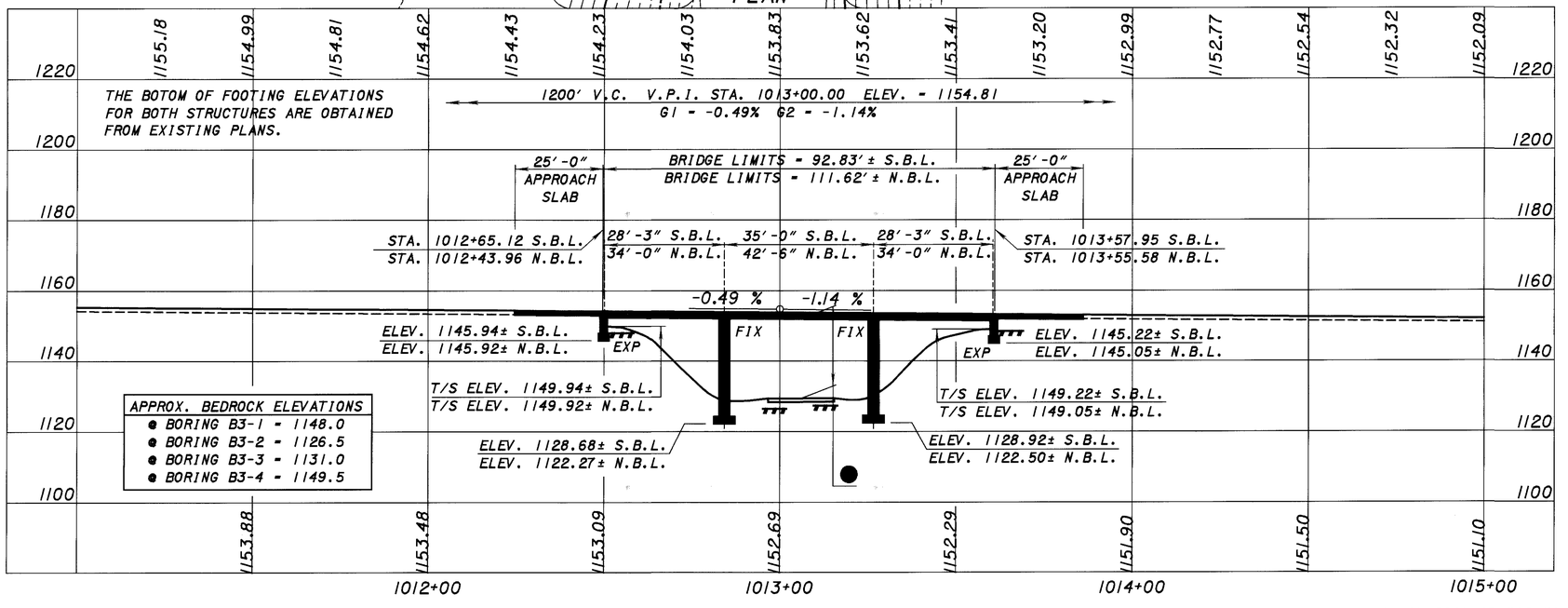

** - PARAPET TRANSITION AT THIS LOCATION IS DIFFERENT FROM STANDARD TRANSITION. SEE SHEET CSS2 FOR DETAILS.

PROFILE

▮▮▮ - APPROXIMATE TOP OF ROCK AT BORING

(ALONG ℄ NORTHBOUND SHOWN, SOUTHBOUND LANE IS SIMILAR)

BENCHMARK DATA

BM # 6 - STATION 1007+13.07 ELEVATION = 1146.97
ODOT DISC IN HEADWALL, STAMPED

NOTES

1. EARTHWORK LIMITS SHOWN ARE APPROXIMATE. ACTUAL SLOPES SHALL CONFORM TO PLAN CROSS-SECTIONS.
2. REFERENCE CHORDS ARE MEASURED FROM THE INTERSECTIONS OF THE CENTERLINES OF LANES AND THE CENTERLINES OF ABUTMENTS BEARINGS. SPAN LENGTHS AND BRIDGE LIMITS ARE MEASURED ALONG REFERENCE CHORDS. SEE SCHEMATIC SHEET 2/22.
3. PROPOSED PROFILE ELEVATIONS ARE ALONG THE PROFILE GRADE LINE.

TRAFFIC DATA

2000 ADT	= 34010	2000 ADTT	= 4081
2020 ADT	= 46690	2020 ADTT	= 5603

⌖ - ORIGINAL SOIL BORING LOCATION

● 14′-6″ REQUIRED MINIMUM VERTICAL CLEARANCE
15′-3″ ACTUAL MINIMUM VERTICAL CLEARANCE

EXISTING STRUCTURE

TYPE: CONTINUOUS SLAB BRIDGE WITH REINFORCED CONCRETE SUBSTRUCTURES

SPANS: S.B. LANES; 28′-0″±, 35′-0″±, 28′-0″±
N.B. LANES; 34′-0″±, 42′-6″±, 34′-0″±

ROADWAY: 2 @ 39′-8″ F/F SAFETY CURBS

LOADING: CF-2000(57) AND AASHO ALTERNATE LOADING

SKEW: 6°-13′-23″± (LF) TO LOCAL TANGENT

WEARING SURFACE: ASPHALT

APPROACH SLABS: 25′-0″ LONG AS-1-54

ALIGNMENT: 0°-22′± CURVE LEFT

CROWN: 3/16″± PER FOOT

DATE BUILT: 1964

SFN: 5203759 (LEFT), 5203783 (RIGHT)

PROPOSED STRUCTURE

PROPOSED WORK: NEW SUPERSTRUCTURE ON NEW ABUTMENTS AND WIDENED PIERS

TYPE: CONTINUOUS SLAB BRIDGE WITH REINFORCED CONCRETE SUBSTRUCTURES

SPANS: S.B. LANES: 28′-3″, 35′-0″, 28′-3″ C/C BRGS.
N.B. LANES: 34′-0″, 42′-6″, 34′-0″ C/C BRGS.

ROADWAY: 60′-0″ TOE/TOE OF PARAPETS

LOADING: HS20-44 AND ALTERNATE MILITARY LOADING

SKEW: SEE PLAN VIEW

WEARING SURFACE: MONOLITHIC CONCRETE

APPROACH SLABS: 25′ LONG, AS-1-81, 60′-0″ TOE/TOE CURB

ALIGNMENT: 0°-22′ CURVE LEFT

CROWN: 3/16″ PER FOOT

COORDINATES: LAT. N 39°-56′-07″, LONG. W 82°-0′-24″

DESIGN AGENCY: ODOT CENTRAL OFFICE OFFICE OF PRODUCTION
REVIEWED: DFT DATE: 10-8-99
STRUCTURE FILE NUMBER: 5203759L & 5203783R
DRAWN: TDB REVISED:
DESIGNED: TDB CHECKED: TAA

STA. 1012+65.12 SBL
STA. 1013+57.95 SBL
STA. 1012+43.96 NBL
STA. 1013+55.58 NBL

SITE PLAN
BRIDGE NO. MED-71-1918 L&R
I-71 OVER WILBER ROAD (CR66)

MED-71-15.78

1/22

776/940

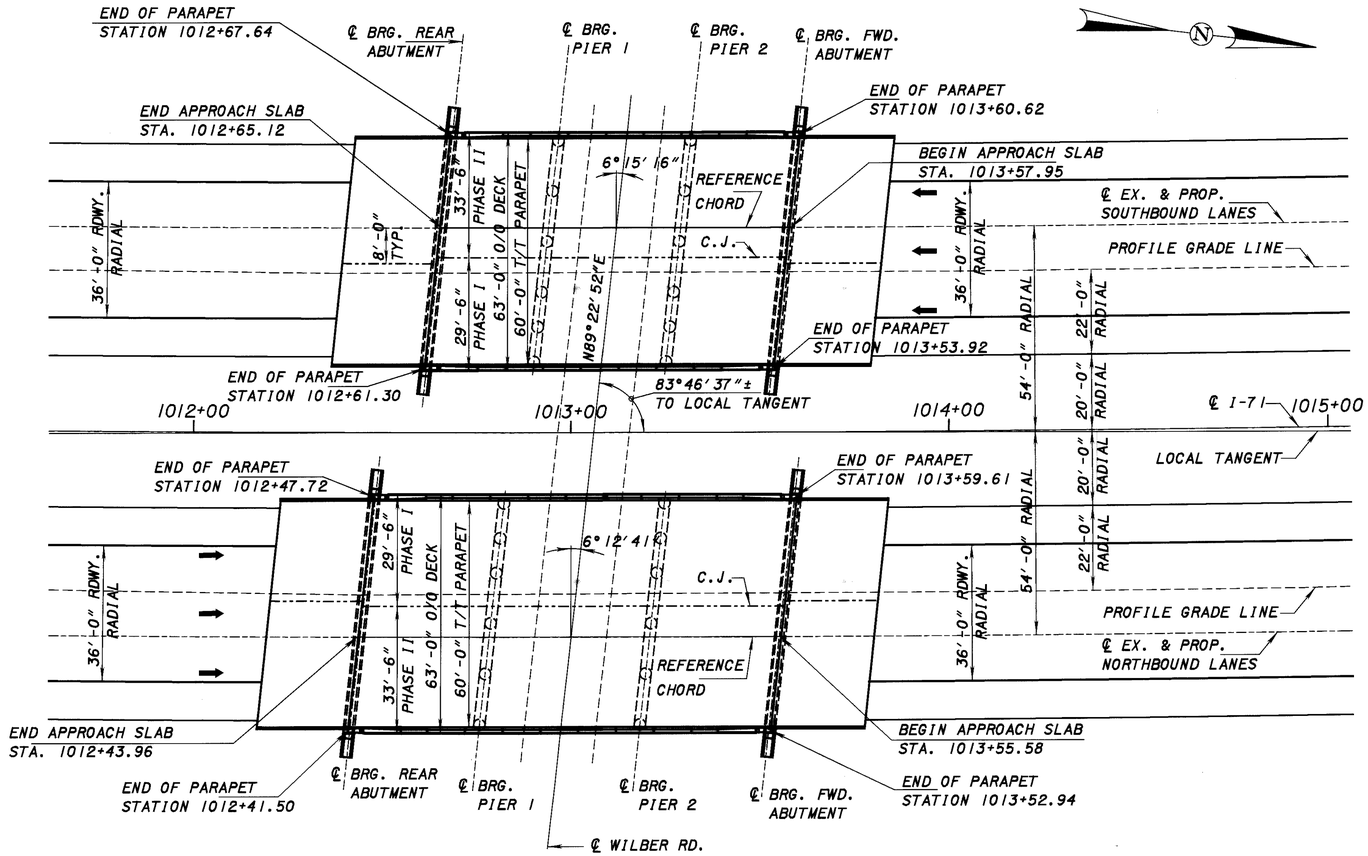

PLAN

NOTES AND LEGEND

\# - STATIONS ARE ALONG ℄ I-71. STATIONS ARE LOCATED AT THE INTERSECTION OF THE REFERENCE CHORD AND ℄ OF THE LANES.

THE SPANS ARE MEASURED ALONG THE REFERENCE CHORD.

REFERENCE CHORD IS A CHORD BETWEEN ℄ OF ABUTMENTS BEARINGS

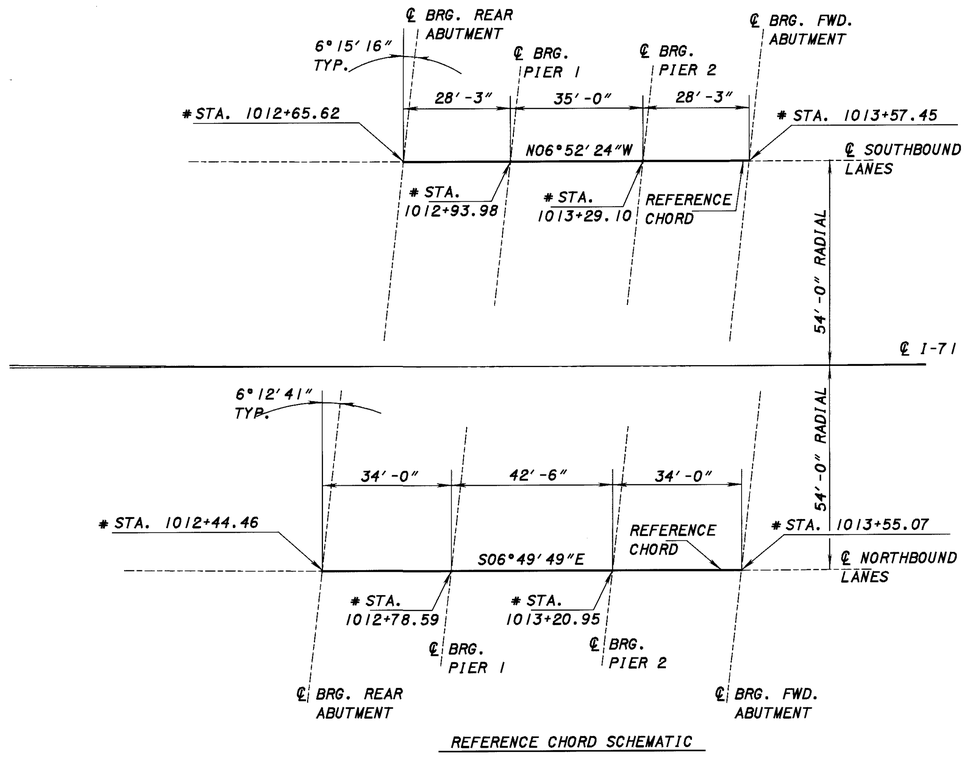

REFERENCE CHORD SCHEMATIC

DESIGN AGENCY: ODOT CENTRAL OFFICE, OFFICE OF PRODUCTION

DESIGNED	DRAWN	REVIEWED	DATE
TDB	TDB	DFT	10-8-99

CHECKED: TAA — REVISED: — STRUCTURE FILE NUMBER: 5203759L & 5203783R

GENERAL PLAN
MED-71-19.18 L/R
I-71 OVER WILBER RD. (CR66)

MED-71-15.78

GENERAL NOTES

STANDARD DRAWINGS AND SPECIFICATIONS:

REFERENCE SHALL BE MADE TO STANDARD DRAWINGS:

AS-1-81	REVISED 09-15-94
SBR-1-99	DATED 01-12-99
PCB-91	REVISED 07-06-99
CS-1-93	REVISED 06-30-95

AND TO SUPPLEMENTAL SPECIFICATIONS:

842	DATED 01-06-99
844	DATED 01-06-99
899	DATED 10-21-98
954	DATED 09-09-97
911	DATED 07-10-97

DESIGN SPECIFICATIONS:

THIS STRUCTURE CONFORMS TO "STANDARD SPECIFICATIONS FOR HIGHWAY BRIDGES" ADOPTED BY THE AMERICAN ASSOCIATION OF STATE HIGHWAY AND TRANSPORTATION OFFICIALS, 1996 INCLUDING THE 1997 AND 1998 INTERIM SPECIFICATIONS AND THE ODOT DESIGN MANUAL.

DESIGN LOADING:

HS20-44, AND THE ALTERNATE MILITARY LOADING.

DESIGN DATA:

HIGH PERFORMANCE CONCRETE - COMPRESSIVE STRENGTH 4500 PSI (SUPERSTRUCTURE)

ITEM 842 CONCRETE - COMPRESSIVE STRENGTH 4000 PSI (SUBSTRUCTURE)

REINFORCING STEEL - ASTM A615, A616 OR A617 GRADE 60 MINIMUM YIELD STRENGTH 60 Ksi. SPIRAL REINFORCEMENT MAY BE PLAIN BARS, ASTM A82 OR A615

DECK PROTECTION METHOD - EPOXY COATED REINFORCING STEEL AND 2½" CONCRETE COVER AND HIGH PERFORMANCE CONCRETE.

MONOLITHIC WEARING SURFACE IS ASSUMED, FOR DESIGN PURPOSES, TO BE 1" THICK.

EXISTING STRUCTURE VERIFICATION:

DETAILS AND DIMENSIONS SHOWN ON THESE PLANS PERTAINING TO THE EXISTING STRUCTURE HAVE BEEN OBTAINED FROM PLANS OF THE EXISTING STRUCTURE AND FROM FIELD OBSERVATIONS AND MEASUREMENTS. CONSEQUENTLY, THEY ARE INDICATIVE OF THE EXISTING STRUCTURE AND THE PROPOSED WORK BUT THEY SHALL BE CONSIDERED TENTATIVE AND APPROXIMATE. THE CONTRACTOR IS REFERRED TO CMS SECTIONS 102.05 AND 105.02.

CONTRACT BID PRICES SHALL BE BASED UPON A RECOGNITION OF THE UNCERTAINTIES DESCRIBED ABOVE AND UPON A PREBID EXAMINATION OF THE EXISTING STRUCTURE BY THE CONTRACTOR. HOWEVER, ALL PROJECT WORK SHALL BE BASED UPON ACTUAL DETAILS AND DIMENSIONS WHICH HAVE BEEN VERIFIED BY THE CONTRACTOR IN THE FIELD.

EXISTING BRIDGE PLANS MAY BE INSPECTED IN THE OFFICE OF STRUCTURAL ENGINEERING IN COLUMBUS, OHIO OR AT THE ODOT DISTRICT THREE OFFICE IN ASHLAND, OHIO.

DOWEL HOLES WITH NON-SHRINK, NON METALLIC GROUT

ALL DOWEL HOLES SHALL BE CORE DRILLED AND GROUTED WITH AN EPOXY MORTAR MEETING THE REQUIREMENTS OF CMS 510. PAYMENT FOR ALL OF THE ABOVE SHALL BE INCLUDED WITH THE ASSOCIATED CONCRETE ITEM.

ITEM 202 PORTIONS OF STRUCTURE REMOVED OVER 20 FEET SPAN, AS PER PLAN:

PORTION OF THE STRUCTURE REMOVED, AS PER PLAN, SHALL INCLUDE THE ELEMENTS INDICATED IN THE PLANS AND GENERAL NOTES AND ARE NOT SEPARATELY LISTED FOR PAYMENT, EXCEPT FOR WEARING COURSE REMOVAL. ITEMS TO BE REMOVED INCLUDE ALL EXISTING MATERIALS BEING REPLACED BY NEW CONSTRUCTION AND MISCELLANEOUS ITEMS THAT ARE NOT SHOWN TO BE INCORPORATED INTO THE FINAL CONSTRUCTION AND ARE DIRECTED TO BE REMOVED BY THE ENGINEER. THE USE OF EXPLOSIVES, HEADACHE BALLS AND/OR HOE-RAMS WILL NOT BE PERMITTED. THE METHOD OF REMOVAL AND THE WEIGHT OF HAMMER SHALL BE APPROVED BY THE ENGINEER. ALL WORK SHALL BE DONE IN A MANNER THAT WILL NOT CUT, ELONGATE OR DAMAGE THE EXISTING REINFORCING STEEL TO BE PRESERVED.

PROTECTION OF TRAFFIC:
PRIOR TO DEMOLITION OF ANY PORTIONS OF THE EXISTING SUPERSTRUCTURE, THE CONTRACTOR SHALL SUBMIT PLANS FOR THE PROTECTION OF TRAFFIC (VEHICULAR, PEDESTRIAN, ETC.) ADJACENT TO AND/OR UNDER THE STRUCTURE TO THE ENGINEER FOR APPROVAL. THESE PLANS SHALL INCLUDE PROVISIONS FOR ANY DEVICES AND STRUCTURES THAT MAY BE NECESSARY TO ENSURE SUCH PROTECTION. TEMPORARY VERTICAL CLEARANCES SPECIFIED IN THE PROPOSAL SHALL BE MAINTAINED AT ALL TIMES EXCEPT AS OTHERWISE APPROVED BY THE ENGINEER.

CUT LINE CONSTRUCTION JOINT PREPARATION:

SAW CUT BOUNDARIES OF PROPOSED CONCRETE REMOVALS 1" DEEP. REMOVE CONCRETE TO A ROUGH SURFACE. WHERE PRACTICABLE, THE EXISTING REINFORCING STEEL WHERE REQUIRED IN THE PLANS SHALL BE LEFT IN PLACE. INSTALL DOWEL BARS IF SPECIFIED. PRIOR TO CONCRETE PLACEMENT ABRASIVELY CLEAN JOINT SURFACE AND EXPOSED REINFORCEMENT TO REMOVE LOOSE AND DISINTEGRATED CONCRETE AND LOOSE RUST. THE JOINT SURFACE AND EXPOSED REINFORCEMENT SHALL BE THOROUGHLY CLEANED OF ALL DIRT, DUST, OR OTHER FOREIGN MATERIAL BY THE USE OF WATER, AIR UNDER PRESSURE, OR OTHER METHODS THAT PRODUCE SATISFACTORY RESULTS. CONCRETE BONDING SURFACES SHALL BE WET WITHOUT FREE WATER AS CONCRETE IS PLACED.

SUBSTRUCTURE CONCRETE REMOVAL:
SUBSTRUCTURE CONCRETE REMOVAL SHALL BE BY MEANS OF APPROVED PNEUMATIC HAMMERS EMPLOYING POINTED AND BLUNT CHISEL TOOLS. HYDRAULIC HOE-RAM TYPE HAMMERS WILL NOT BE PERMITTED. THE WEIGHT OF THE HAMMER SHALL NOT BE MORE THAN 35 POUNDS FOR REMOVAL WITHIN 18 INCHES OF PORTIONS TO BE PRESERVED. OUTSIDE THE 18 INCH LIMIT, A HAMMER HEAVIER THAN 35 POUNDS, BUT NOT TO EXCEED 90 POUNDS, MAY BE USED AT THE APPROVAL OF THE ENGINEER. PNEUMATIC HAMMERS SHALL NOT BE PLACED IN DIRECT CONTACT WITH REINFORCING STEEL THAT IS TO BE RETAINED IN THE REBUILT STRUCTURE.

¼ INCH SCARIFICATION: THE EXISTING PIER BRIDGE SEAT SURFACE SHALL BE SCARIFIED ¼ INCH INTO SOUND CONCRETE PRIOR TO PLACEMENT OF THE CONCRETE. THE SURFACE SHALL BE THOROUGHLY CLEANED OF ALL DIRT, DUST, OR OTHER FOREIGN MATERIALS BY THE USE OF WATER, AIR UNDER PRESSURE, OR ANOTHER METHOD THAT PRODUCES RESULTS SATISFACTORY TO THE ENGINEER. THE CONCRETE BONDING SURFACE SHALL BE WET WITHOUT FREE WATER AS CONCRETE IS PLACED.

PAYMENT
ALL WORK SHALL BE PAID FOR UNDER ITEM 202 PORTIONS OF STRUCTURES REMOVED, AS PER PLAN

TRAFFIC MAINTENANCE:

SEE ROADWAY PLANS FOR ADDITIONAL TRAFFIC NOTES AND DETAILS.

SEALING OF CONCRETE SURFACES (EPOXY-URETHANE)

EPOXY-URETHANE SHALL BE THE "BUFF" COLOR MEETING FEDERAL COLOR STANDARD NO. 37722 AS PER THE DETAILS IN THE PLAN.

ITEM SPECIAL - WATERPROOFING, MISC.: SEMI-INTEGRAL ABUTMENT JOINT WATERPROOFING

INSTALL A 3 FOOT WIDE STRIP, 3/32 INCH THICK, GENERAL PURPOSE, HEAVY DUTY NEOPRENE SHEET WITH NYLON FABRIC REINFORCEMENT AT LOCATIONS SHOWN IN THE PLANS. SECURE THE 3 FOOT WIDE NEOPRENE SHEETING TO THE CONCRETE WITH 1¼" X 3/32" (LENGTH X SHANK DIAMETER) #10 GALVANIZED BUTTON HEAD SPIKE THROUGH A 1 INCH OUTSIDE DIAMETER, #10 GAGE GALVANIZED WASHER. MAXIMUM FASTENER SPACING IS 9 INCHES. OTHER SIMILAR GALVANIZED DEVICES WHICH WILL NOT DAMAGE EITHER THE NEOPRENE OR THE CONCRETE MAY BE USED SUBJECT TO THE APPROVAL OF THE ENGINEER.

CENTER THE NEOPRENE STRIPS ON ALL JOINTS. FOR HORIZONTAL JOINTS, SECURE THE HORIZONTAL NEOPRENE STRIP BY USING A SINGLE LINE OF FASTENERS, STARTING AT 6 INCHES (+/-) FROM THE TOP OF THE NEOPRENE STRIP. FOR THE VERTICAL JOINTS SECURE THE VERTICAL NEOPRENE STRIP BY USING A SINGLE VERTICAL LINE OF FASTENERS, STARTING AT 6 INCHES (+/-) FROM THE VERTICAL EDGE OF THE NEOPRENE STRIP NEAREST TO THE CENTERLINE OF ROADWAY. FOR VERTICAL JOINTS, INSTALL 2 ADDITIONAL FASTENERS, AT 6 INCHES CENTER TO CENTER, ACROSS THE TOP OF THE NEOPRENE STRIP ON THE SAME SIDE OF THE VERTICAL JOINT AS WHERE THE SINGLE VERTICAL ROW OF FASTENERS IS LOCATED.

THE VERTICAL NEOPRENE STRIPS SHOULD COMPLETELY OVERLAP THE HORIZONTAL STRIPS. LAPS IN THE LENGTH OF THE HORIZONTAL STRIPS DUE TO MATERIAL MANUFACTURING SHALL BE AT LEAST ONE FOOT IN LENGTH, IF NOT VULCANIZED OR ADHESIVE BONDED, OR 6 INCHES IN LENGTH IF THE LAP IS VULCANIZED OR ADHESIVE BONDED. NO LAPS ARE ACCEPTABLE IN VERTICALLY INSTALLED NEOPRENE STRIPS.

THE NEOPRENE SHEETING SHALL BE 3/32 INCH THICK GENERAL PURPOSE, HEAVY DUTY NEOPRENE SHEET WITH NYLON FABRIC REINFORCEMENT. THE SHEETING SHALL BE "FAIRPRENE NUMBER NN-0003", BY E. I. DUPONT DE NEMOURS AND COMPANY, INC., "WINGPRENE" BY THE GOODYEAR TIRE AND RUBBER COMPANY, OR AN APPROVED ALTERNATE. THE NEOPRENE SHEETING SHALL CONFORM TO THE FOLLOWING:

DESCRIPTION OF TEST	ASTM METHOD	REQUIREMENT
THICKNESS, INCHES	D 751	0.094 ± .01
BREAKING STRENGTH, GRAB WXF, LBS, MINIMUM	D 751	700 X 700
ADHESIVE 1" STRIP, 2" MINIMUM, LBS, MINIMUM	D 751	9
BURST STRENGTH (MULLEN) PSI, MINIMUM	D 751	1400
HEAT AGING 70 HOURS T 212 F, 180 BEND WITHOUT CRACKING	D 2136	NO CRACKING OF COATING
LOW TEMPERATURE BRITTLENESS 1 HOUR AT -40 F, BEND AROUND ¼ INCH MANDREL	D 2136	NO CRACKING OF COATING

PAYMENT FOR LABOR MATERIALS AND INSTALLATION OF THESE ITEMS SHALL BE INCLUDED IN INTEM SPECIAL- WATERPROOFING, MISC. : SEMI-INTEGRAL ABUTMENT JOINT WATERPROOFING.

ITEM 503, UNCLASSIFIED EXCAVATION, INCLUDING ROCK AND SHALE, AS PER PLAN:

PROPOSED BOTTOM OF FOOTINGS IN THE WIDENED PORTION SHALL MATCH THE PLAN ELEVATION AS SHOWN OR THE ACTUAL FOOTING ELEVATION DETERMINED AFTER STAGE 1 REMOVAL. IN ADDITION, THE FOOTINGS SHALL EXTEND A MINIMUM OF 3 INCHES INTO BED-ROCK IN THE WIDENED PORTION AT THE ABUTMENT.

PIER FOOTING SHALL EXTEND A MINIMUM OF 3 INCHES INTO BED-ROCK OR THE ELEVATION SHOWN IN THE PLANS.

DETAILS SHALL BE ADJUSTED AS NECESSARY BASED ON THE FOOTING ELEVATION. ALL EXCAVATION NECESSARY SHALL BE INCLUDED IN LUMP SUM PRICE UNDER THIS PAY ITEM.

ITEM 503, UNCLASSIFIED EXCAVATION, AS PER PLAN:

UNCLASSIFIED EXCAVATION SHALL BE IN ACCORDANCE WITH 503 EXCEPT THAT THE BACKFILL MATERIAL BEHIND THE ABUTMENTS SHALL BE 203 MATERIAL PLACED IN 6" LIFTS. EXCAVATION AT ABUTMENTS IN ADDITION TO THAT NECESSARY TO REMOVE PORTION OF THE EXISTING STRUCTURE SHALL BE INCLUDED IN THE LUMP SUM PRICE BID FOR ITEM 503, UNCLASSIFIED EXCAVATION FOR PAYMENT.

ITEM 842 CLASS C CONCRETE, (FOOTINGS, PIERS AND ABUTMENTS) AS PER PLAN

THE COARSE AGGREGATE SHALL BE NO. 8 LIMESTONE. THESE ITEMS SHALL INCLUDE THE COST OF THE REINFORCING STEEL.

ITEM 844 HIGH PERFORMANCE CONCRETE, AS PER PLAN

THE DESIGN MIX SHALL BE MIX NO. 4 LIMESTONE. THE OPTION OF SLIPFORM CONSTRUCTION OF THE BRIDGE PARAPET IS NOT PERMITTED. THESE ITEMS SHALL INCLUDE THE COST OF THE REINFORCING STEEL.

REINFORCING STEEL:

NEW REINFORCING STEEL MAY REQUIRE FIELD CUTTING OR BENDING TO BE PROPERLY FITTED. PAYMENT SHALL BE INCLUDED UNDER ITEM 844 HIGH PERFORMANCE CONCRETE.

ITEM 518 - POROUS BACKFILL WITH FILTER FABRIC, AS PER PLAN

POROUS BACKFILL SHALL BE #57 GRAVEL ONLY.

FOUNDATION BEARING PRESSURE:

ABUTMENT FOOTINGS, AS DESIGNED, PRODUCE A MAXIMUM BEARING PRESSURE OF 4.0 TONS PER SQUARE FEET. THE ALLOWABLE BEARING PRESSURE IS 8.0 TONS PER SQUARE FOOT.

PIER FOOTINGS, AS DESIGNED, PRODUCE A MAXIMUM BEARING PRESSURE OF 4.0 TONS PER SQUARE FEET. THE ALLOWABLE BEARING PRESSURE IS 8.0 TONS PER SQUARE FOOT.

SURVEY DISC ON STRUCTURE:

THE CONTRACTOR SHALL NOTIFY THE ENGINEER AT LEAST ONE (1) WEEK IN ADVANCE OF POURING THE CONCRETE FOR COMPLETION OF THE ABUTMENT. THE ENGINEER WILL PROVIDE THE CONTRACTOR ONE (1) SURVEY DISC FOR EACH STRUCTURE (OBTAINED FROM THE DISTRICT SURVEYOR) WHICH THE CONTRACTOR SHALL PLACE IN THE SURFACE OF THE FRESH CONCRETE. THE LOCATION OF THE DISC SHALL BE ON THE ABUTMENT, AND ON A FLAT, HORIZONTAL SURFACE BEYOND THE EDGE OF DECK AND PARAPET. THE BENCHMARK SHALL BE ACCESSIBLE TO A SURVEYOR'S ROD WITHOUT ANY OBSTRUCTIONS. COST OF THIS WORK IS CONSIDERED INCIDENTAL TO THE CONCRETE BID ITEM.

ITS CONDUIT:

ITS CONDUIT SHALL BE PLACED WITHIN OUTSIDE PARAPET OF LEFT AND RIGHT STRUCTURES. SEE SHEETS CSS3 AND CSS4 FOR DETAILS.

DESIGN AGENCY
ODOT CENTRAL OFFICE
OFFICE OF PRODUCTION

DESIGNED	DRAWN	REVIEWED	DATE
TDB	TDB	DFT	10-8-99
CHECKED	REVISED	STRUCTURE FILE NUMBER	
TAA		5203759L & 5203783R	

GENERAL NOTES
MED-71-19.18 L/R
I-71 OVER WILBER RD. (CR66)

MED-71-15.78

3 / 22

778
940

		MED-71-1918 L	MED-71-1918 R		ESTIMATED QUANTITIES	MED-71-1918 L				MED-71-1918 R			
ITEM	EXTENSION	TOTAL	TOTAL	UNIT	DESCRIPTION	ABUT.	PIERS	SUPER.	GEN.	ABUT.	PIERS	SUPER.	GEN.
202	11203	LUMP	LUMP		PORTIONS OF STRUCTURE, REMOVED OVER 20 FOOT SPAN, AS PER PLAN	LUMP		LUMP		LUMP		LUMP	
503	11100	LUMP	LUMP		COFFERDAMS, CRIBS AND SHEETING				LUMP				LUMP
503	21301	LUMP	LUMP		UNCLASSIFIED EXCAVATION, AS PER PLAN	LUMP	LUMP			LUMP	LUMP		
503	21331	LUMP	LUMP		UNCLASSIFIED EXCAVATION, INCLUDING ROCK AND SHALE, AS PER PLAN	LUMP	LUMP			LUMP	LUMP		
512	44400	5	5	SY	TYPE B WATERPROOFING	5				5			
SPECIAL	51267200	44	44	SY	WATERPROOFING, MISC.: SEMI-INTEGRAL ABUTMENT JOINT WATERPROOFING	44				44			
SPECIAL	51267510	592	739	SY	SEALING OF CONCRETE SURFACES (EPOXY-URETHANE)	54	311	227		54	405	280	
516	13900	27	27	SF	2" PREFORMED EXPANSION JOINT FILLER	27				27			
516	43101	30	30	EACH	ELASTOMERIC BEARING WITH INTERNAL LAMINATES ONLY (NEOPRENE), AS PER PLAN (9"x48"x1" PAD)	30				30			
518	21231	LUMP	LUMP		POROUS BACKFILL WITH FILTER FABRIC, AS PER PLAN	LUMP				LUMP			
519	11101	7	14	SF	PATCHING CONCRETE STRUCTURE, AS PER PLAN		7				14		
842	41001	48	54	CY	CLASS C CONCRETE, PIER ABOVE FOOTINGS, AS PER PLAN		48				54		
842	44101	45	45	CY	CLASS C CONCRETE, ABUTMENT NOT INCLUDING FOOTING, AS PER PLAN	45				45			
842	46501	46	46	CY	CLASS C CONCRETE, FOOTING, AS PER PLAN	35	11			35	11		
844	48001	339	474	CY	HIGH PERFORMANCE CONCRETE SUPERSTRUCTURE (DECK), AS PER PLAN, MIX 4			339				474	
844	48021	29	35	CY	HIGH PERFORMANCE CONCRETE SUPERSTRUCTURE (PARAPET), AS PER PLAN, MIX 4			29				35	
844	49000	LUMP	LUMP		HIGH PERFORMANCE CONCRETE TRIAL MIX			LUMP				LUMP	
844	49010	LUMP	LUMP		HIGH PERFORMANCE CONCRETE TESTING			LUMP				LUMP	

DESIGN AGENCY
ODOT CENTRAL OFFICE
OFFICE OF PRODUCTION

REVIEWED DFT | DATE 10-8-99 | STRUCTURE FILE NUMBER 5203759L & 5203783R

DRAWN TDB | REVISED

DESIGNED TDB | CHECKED TAA

ESTIMATED QUANTITIES
MED-71-1918 L/R
I-71 OVER WILBER RD. (CR66)

MED-71-15.78

779
940

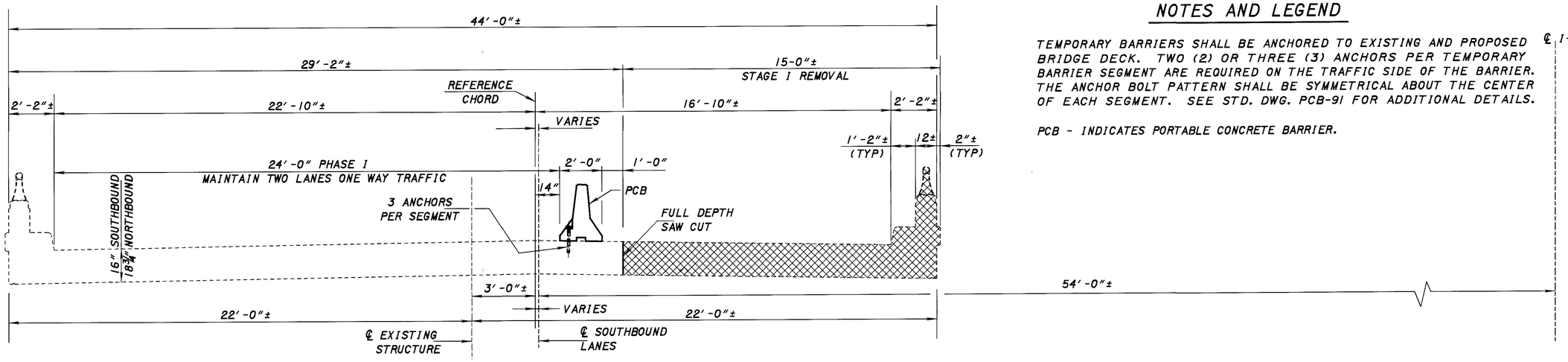

NOTES AND LEGEND

TEMPORARY BARRIERS SHALL BE ANCHORED TO EXISTING AND PROPOSED BRIDGE DECK. TWO (2) OR THREE (3) ANCHORS PER TEMPORARY BARRIER SEGMENT ARE REQUIRED ON THE TRAFFIC SIDE OF THE BARRIER. THE ANCHOR BOLT PATTERN SHALL BE SYMMETRICAL ABOUT THE CENTER OF EACH SEGMENT. SEE STD. DWG. PCB-91 FOR ADDITIONAL DETAILS.

PCB - INDICATES PORTABLE CONCRETE BARRIER.

STAGE I REMOVAL

(SOUTHBOUND LANES SHOWN, NORTHBOUND SIMILAR)

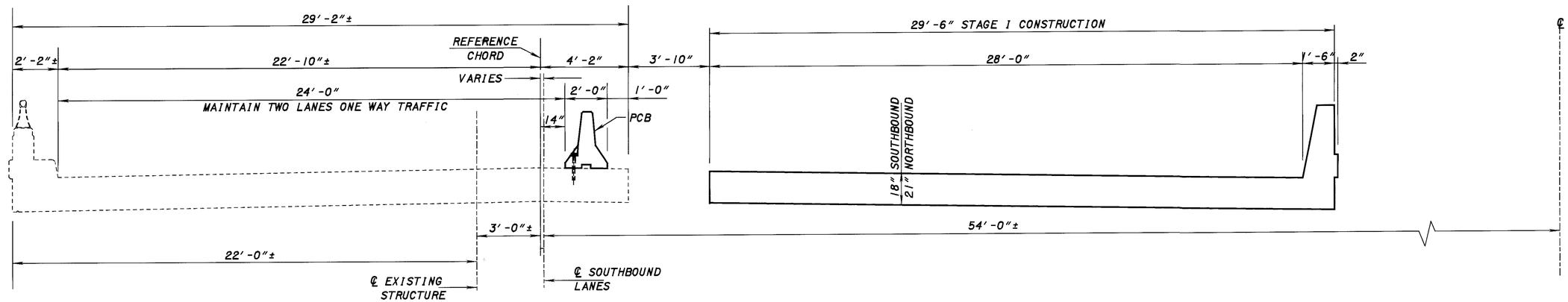

STAGE I CONSTRUCTION

(SOUTHBOUND LANES SHOWN, NORTHBOUND SIMILAR)

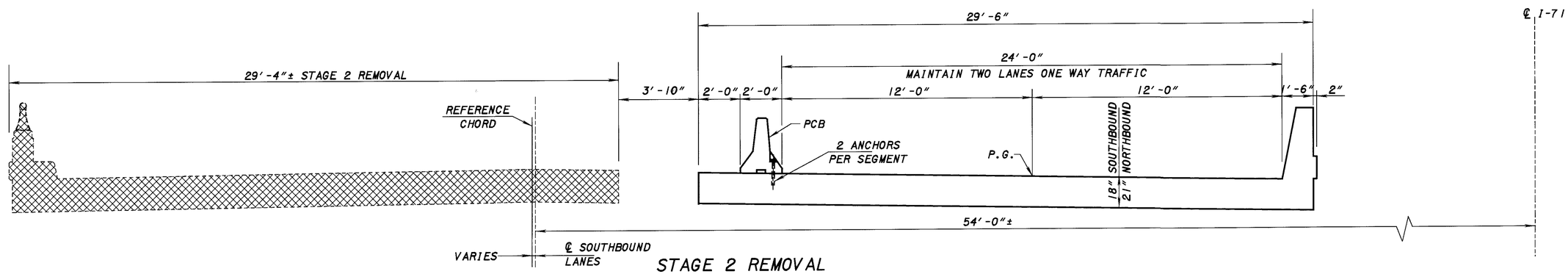

STAGE 2 REMOVAL

(SOUTHBOUND LANES SHOWN, NORTHBOUND SIMILAR)

DESIGN AGENCY: ODOT CENTRAL OFFICE, OFFICE OF PRODUCTION

DESIGNED TDB | DRAWN TDB | REVIEWED DFT | DATE 10-8-99 | CHECKED TAA | REVISED | STRUCTURE FILE NUMBER 5203759L & 5203783R

STAGE CONSTRUCTION DETAILS

MED-71-1918 L/R

I-71 OVER WILBER RD. (CR66)

MED-71-15.78

5 / 22

780 / 940

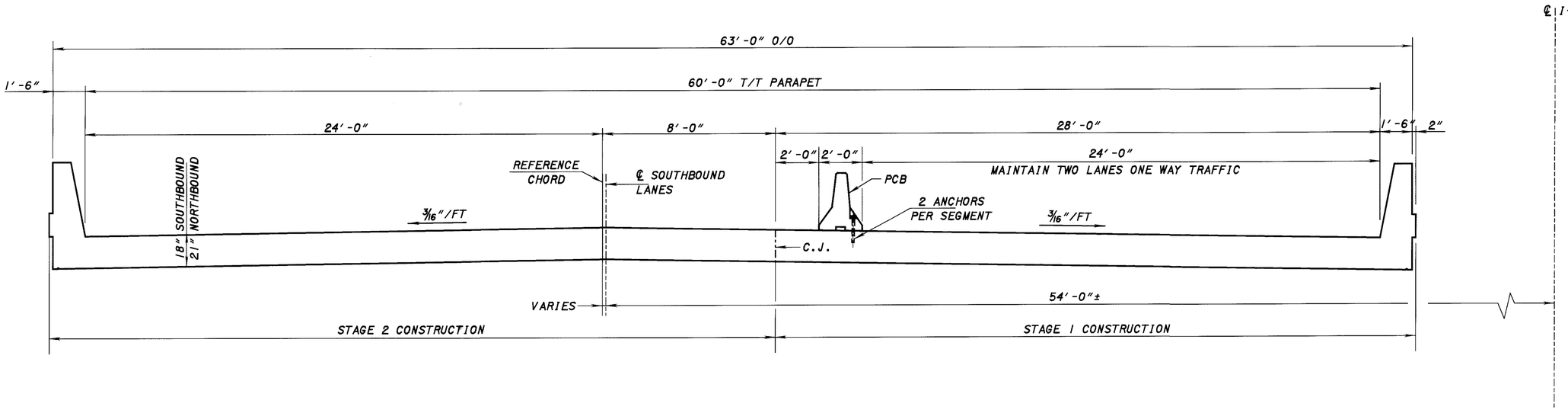

STAGE 2 CONSTRUCTION

(SOUTHBOUND LANES SHOWN, NORTHBOUND SIMILAR)

PROPOSED WORK

1. MAINTAIN TRAFFIC BY USE OF STAGE CONSTRUCTION
2. REPLACE CONCRETE DECK
3. WIDEN AND MODIFIED EXISTING SUBSTRUCTURE UNITS

DESIGN AGENCY
ODOT CENTRAL OFFICE
OFFICE OF PRODUCTION

REVIEWED DFT
DATE 10-8-99
STRUCTURE FILE NUMBER 5203759L & 5203783R

DRAWN TDB
REVISED

DESIGNED TDB
CHECKED TAA

PHASE CONSTRUCTION DETAILS
MED-71-19.18 L/R
I-71 OVER WILBER RD.(CR66)

MED-71-15.78

6 / 22

781
940

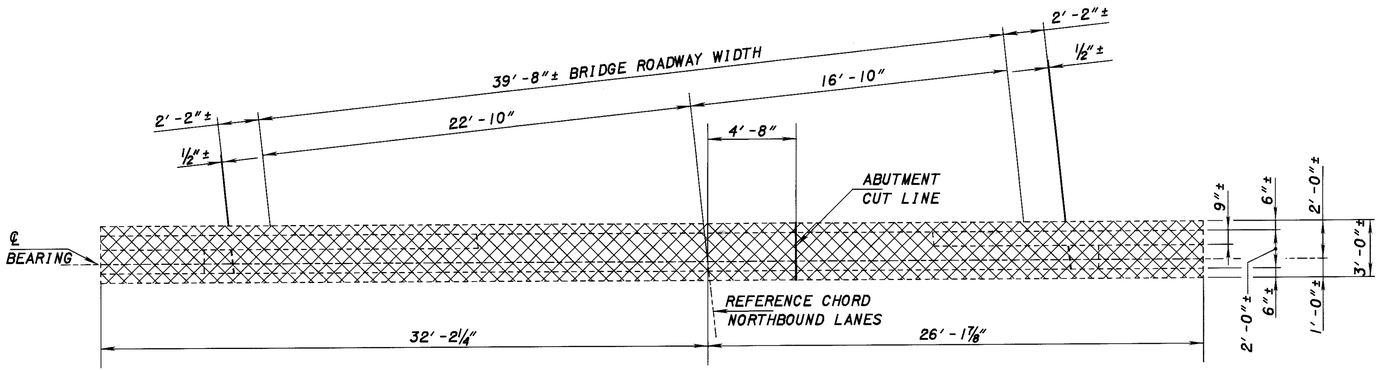

PLAN

(REAR ABUTMENT NORTHBOUND LANES SHOWN,)
(FORWARD ABUTMENT SOUTHBOUND LANES SIMILAR)

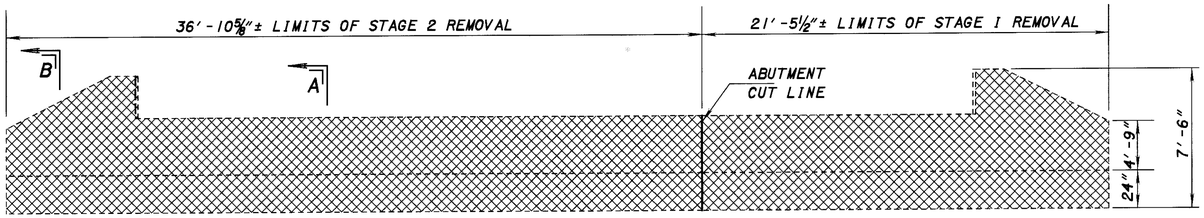

ELEVATION

(REAR ABUTMENT NORTHBOUND LANES SHOWN,)
(FORWARD ABUTMENT SOUTHBOUND LANES SIMILAR)

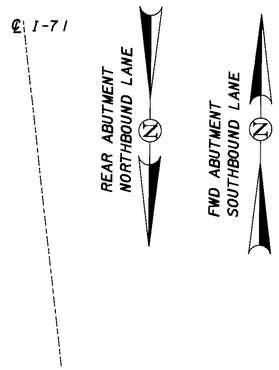

LEGEND

PORTION OF STRUCTURE TO BE REMOVED

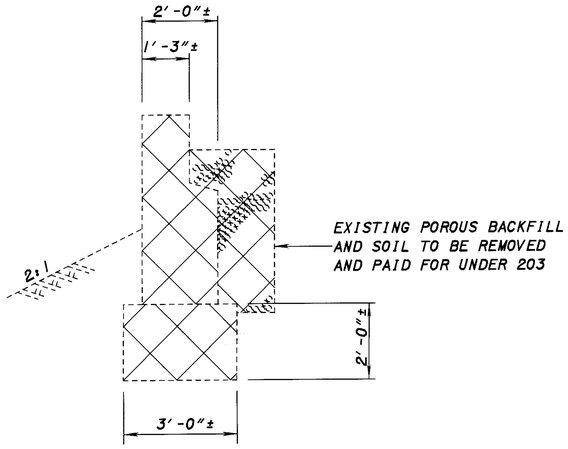

SECTION B-B

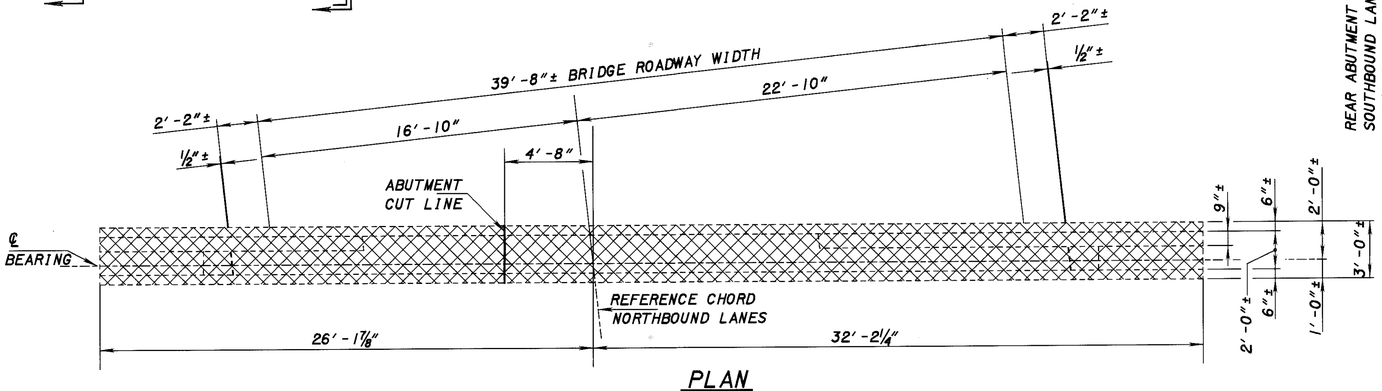

PLAN

(REAR ABUTMENT SOUTHBOUND LANES SHOWN,)
(FORWARD ABUTMENT NORTHBOUND LANES SIMILAR)

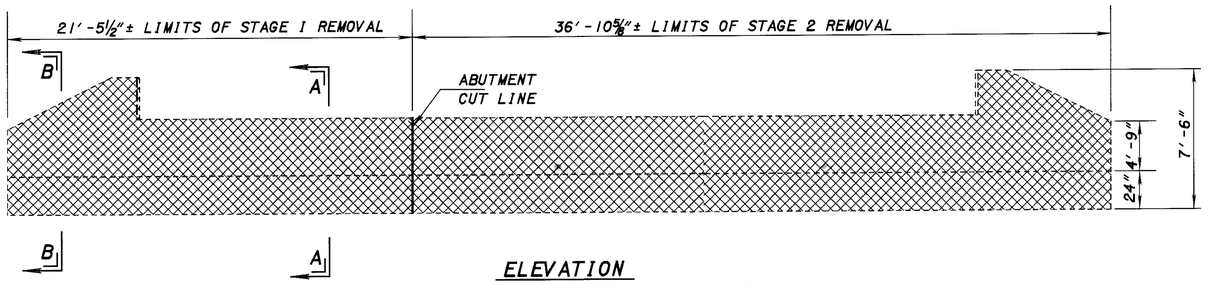

ELEVATION

(REAR ABUTMENT SOUTHBOUND LANES SHOWN,)
(FORWARD ABUTMENT NORTHBOUND LANES SIMILAR)

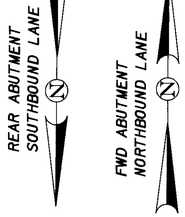

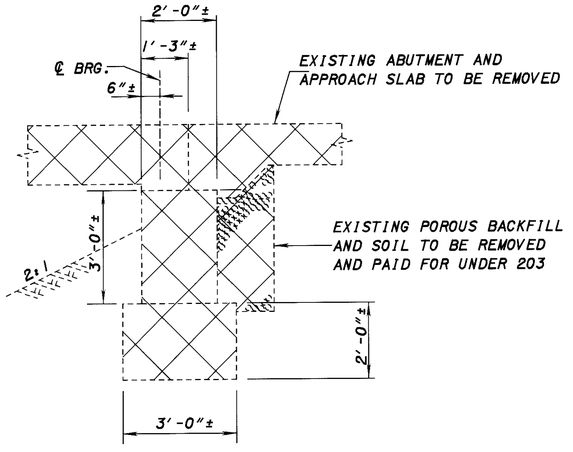

SECTION A-A

DESIGN AGENCY
ODOT CENTRAL OFFICE
OFFICE OF PRODUCTION

REVISED	DATE
DFT	10-8-99

STRUCTURE FILE NUMBER
5203759L & 5203783R

DRAWN	REVISED
TDB	

DESIGNED	
TDB	

CHECKED	
TAA	

EXISTING ABUTMENT PLAN AND ELEVATION

MED-71-1918 L/R
I-71 OVER WILBER RD. (CR66)

MED-71-15.78

7 / 22

782
940

ALL SURFACES TO BE PATCHED AND THE EXPOSED REINFORCING STEEL WITHIN SHALL BE THROROUGHLY CLEANED BY ABRASIVE BLASTING PRIOR TO THE CLEANING SPECIFIED BY 519.04. CLEANING SHALL PRECEDE APPLICATION OF THE PATCHING MATERIAL OR ERECTION OF THE FORMS BY NOT MORE THAN 24 HOURS.

QUANTITY SUMMARY

	LEFT	RIGHT
SOUTH PIER		8.0 SQ. FT
NORTH PIER	7.0 SQ. FT.	6.0 SQ. FT.
TOTAL	7.0 SQ. FT.	14.0 SQ. FT.

▨ - DENOTES AREA TO BE PATCHED. REPAIRS SHALL BE PAID FOR UNDER ITEM 519 - PATCHING CONCRETE STRUCTURE. THE AREAS SHOWN ARE APPROXIMATE. FINAL DETERMINATION OF THE AREA TO BE REPAIRED WILL BE MADE BY THE ENGINEER AT THE TIME OF CONSTRUCTION.

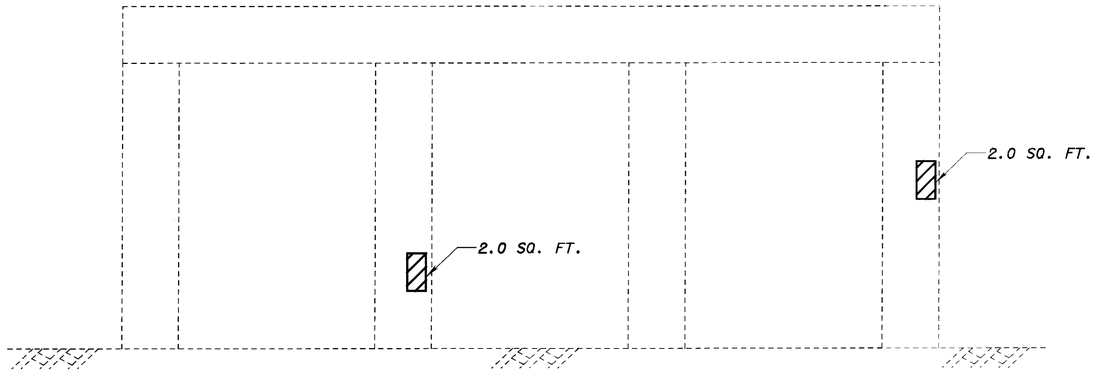

SOUTH FACE/PIER 2 - RIGHT STRUCTURE

TOTAL - 4.0 SQ. FT.

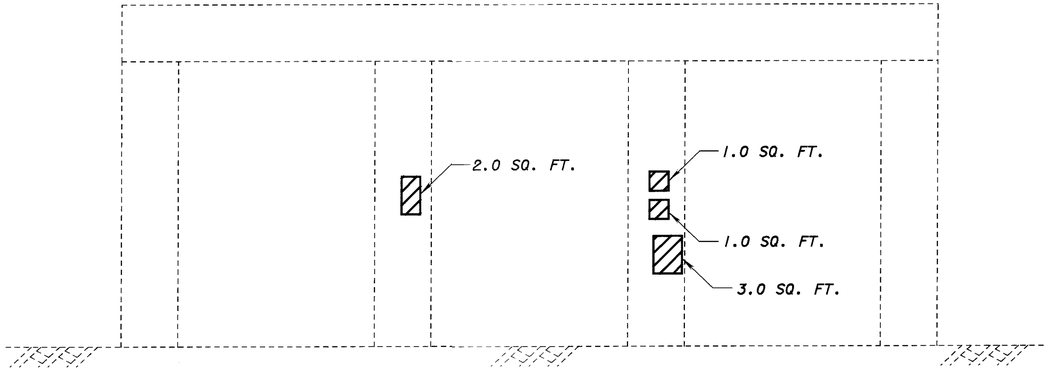

SOUTH FACE/PIER 2 - LEFT STRUCTURE

TOTAL - 7.0 SQ. FT.

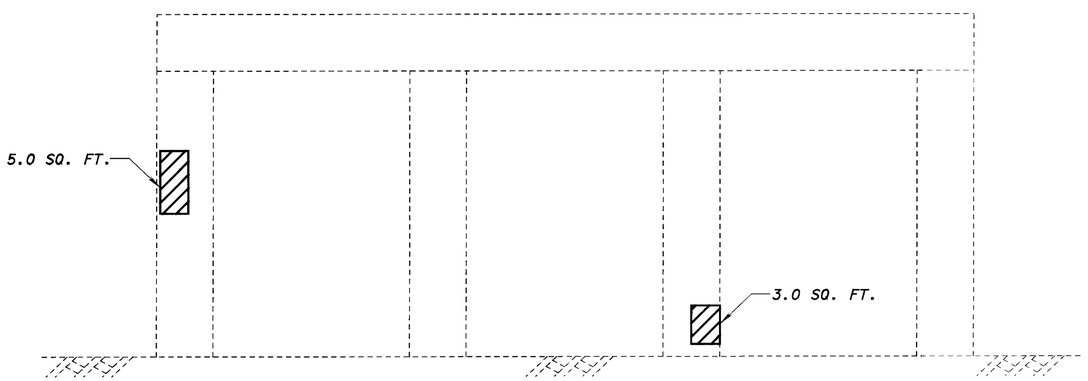

NORTH FACE/PIER 1 - RIGHT STRUCTURE

TOTAL - 8.0 SQ. FT.

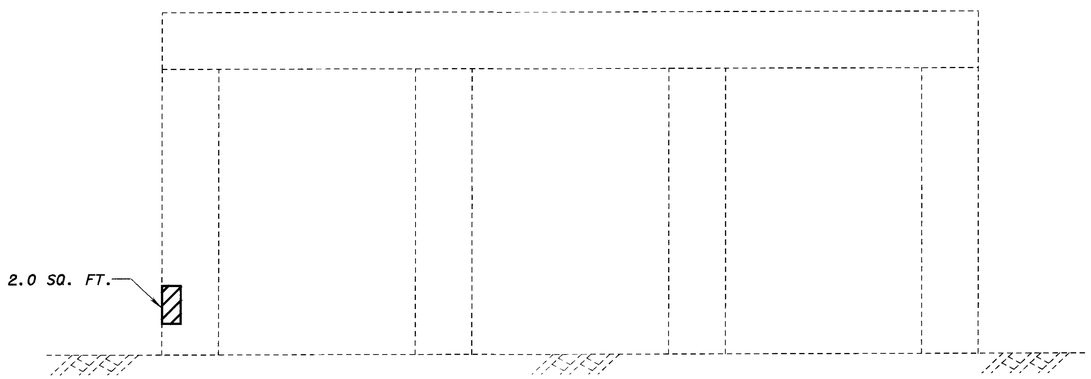

NORTH FACE/PIER 2 - RIGHT STRUCTURE

TOTAL - 2.0 SQ. FT.

DESIGN AGENCY: ODOT CENTRAL OFFICE OFFICE OF PRODUCTION

REVIEWED: DFT DATE: 10-8-99

DRAWN: TDB REVISED:

DESIGNED: TDB CHECKED: TAA

STRUCTURE FILE NUMBER: 5203759L & 5203783R

SUBSTRUCTURE REPAIRS
MED-71-1918 L/R
I-71 OVER WILBER RD. (CR66)

MED-71-15.78

8 / 22

783
940

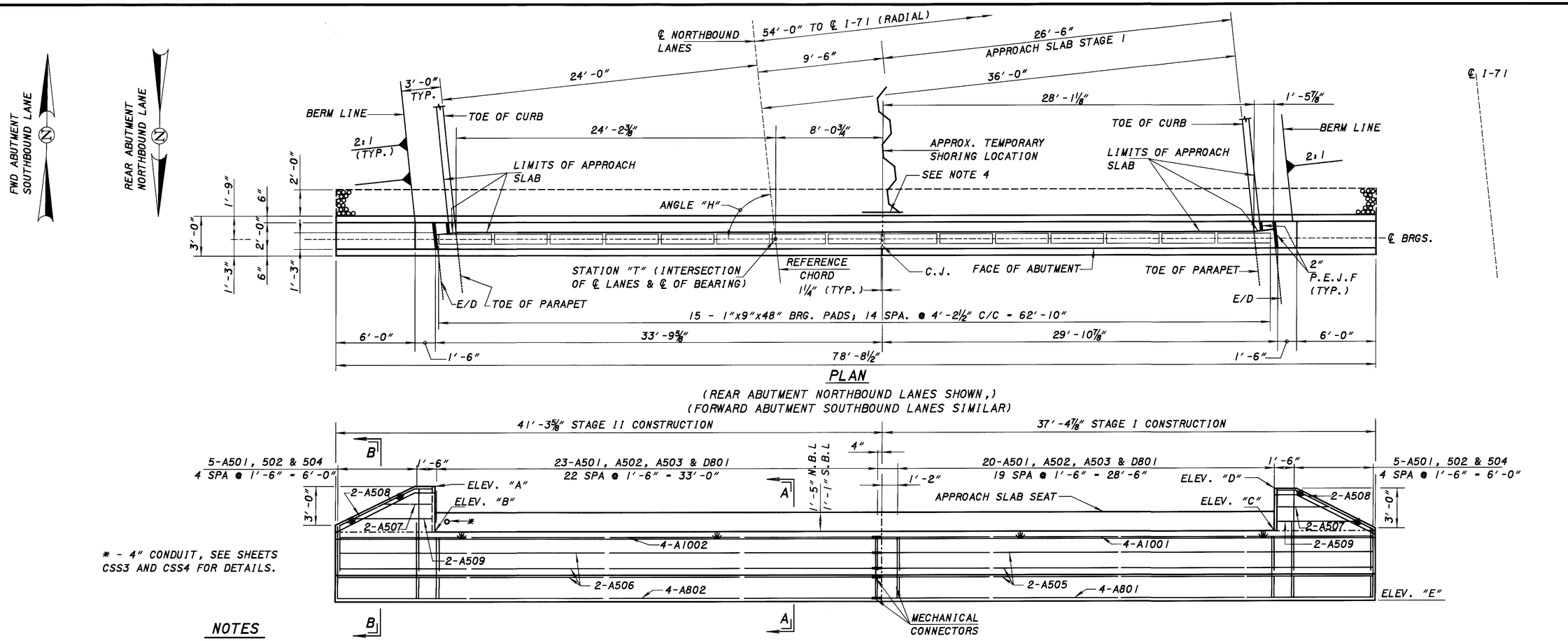

PLAN

(REAR ABUTMENT NORTHBOUND LANES SHOWN,)
(FORWARD ABUTMENT SOUTHBOUND LANES SIMILAR)

* - 4" CONDUIT, SEE SHEETS CSS3 AND CSS4 FOR DETAILS.

NOTES

1. ALL ELEVATIONS ARE MEASURED ALONG THE BRIDGE LIMITS.
2. NYLON REINFORCED NEOPRENE SHEETING 3'-0" WIDE, CENTERED ABOUT JOINTS. AT STAGE CONSTRUCTION JOINT, LAP NEOPRENE 2'-0".
3. UPON REMOVAL OF THE EXISTING ABUTMENT, SHOULD IT BE FOUND THAT INSITU ROCK CUT VERTICALLY A DISTANCE LESS THAN 2'-0" BEHIND THE ABUTMENT, POROUS BACKFILL NEED ONLY BE PLACED BETWEEN THE ABUTMENT AND THE INSITU ROCK. THIS DOES NOT RELIEVE THE CONTRACTOR FROM THE REQUIREMENTS OF THE FILTER FABRIC OR NEOPRENE PLACEMENT. THE POROUS BACKFILL AND FILTER FABRIC SHALL EXTEND TO THE PLANE OF THE SUBGRADE, TO ONE FOOT BELOW THE EMBANKMENT SURFACE AND LATERALLY TO THE ENDS OF THE WINGWALLS.
4. TYPE B WATERPROOFING, 3'-0" WIDE. EXTEND FROM THE BOTTOM OF APPROACH SLAB TO THE BOTTOM OF THE FOOTING. NEOPRENE SHEETING MAY BE USED IN LIEU OF TYPE B WATERPROOFING.
5. THE EXPANDED POLYSTYRENE SHEET MATERIAL IS INCIDENTAL TO ITEM 842 - CLASS C CONCRETE, ABUTMENT NOT INCLUDING FOOTING, AS PER PLAN.

LEGEND

CJ - CONSTRUCTION JOINT
BRIDGE SEAT IS LEVEL ACROSS ABUTMENT ELEV. B & C. (TYP.)

- ALONG ℄ I-71

	ELEVATION					ANGLE	STATION
	A	B	C	D	E	H	# T
S.B.L. FWD ABUT.	1153.64	1150.62	1150.62	1153.51	1145.22	83°44'44"	1013+57.45
N.B.L. REAR ABUT.	1154.62	1151.22	1151.22	1154.38	1145.92	83°47'19"	1012+44.46

ELEVATION

(REAR ABUTMENT NORTHBOUND LANES SHOWN,)
(FORWARD ABUTMENT SOUTHBOUND LANES SIMILAR)

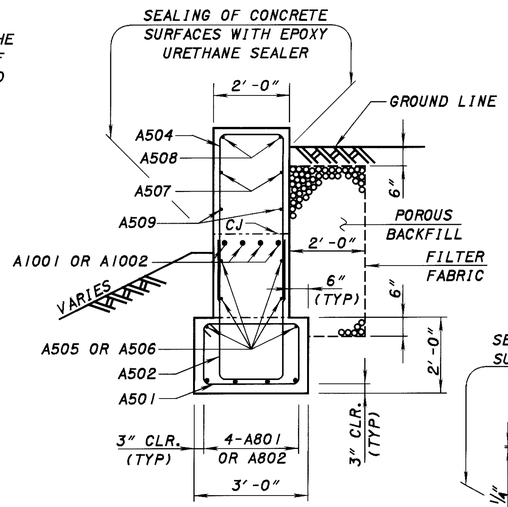

SECTION B-B

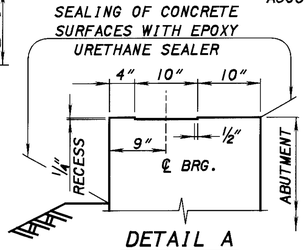

DETAIL A

* THIS DIMENSION WILL VARY (TYP.)

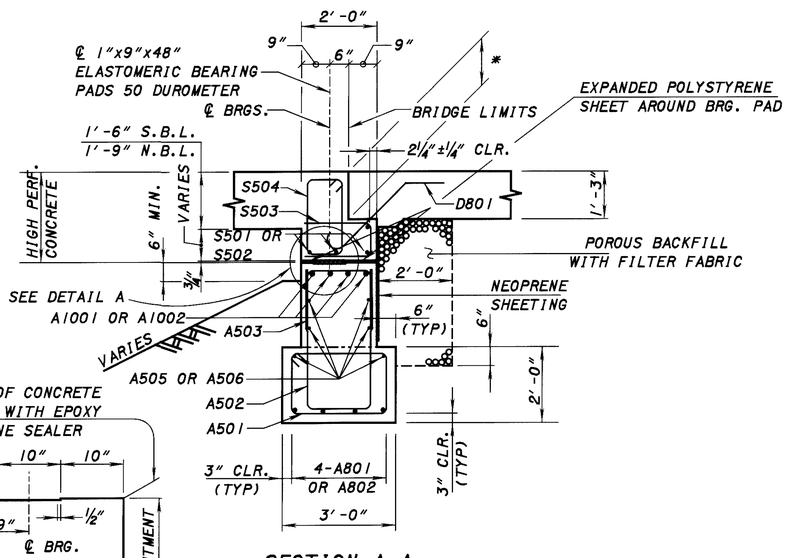

SECTION A-A

DESIGNED	TDB
DRAWN	TDB
CHECKED	TAA
REVISED	
REVISED	DFT
DATE	10-8-99
STRUCTURE FILE NUMBER	5203759L & 5203783R
DESIGN AGENCY	ODOT CENTRAL OFFICE OFFICE OF PRODUCTION

ABUTMENT DETAILS
MED-71-1918 L/R
I-71 OVER WILBER RD. (CR66)

MED-71-15.78

9 / 22

784 / 940

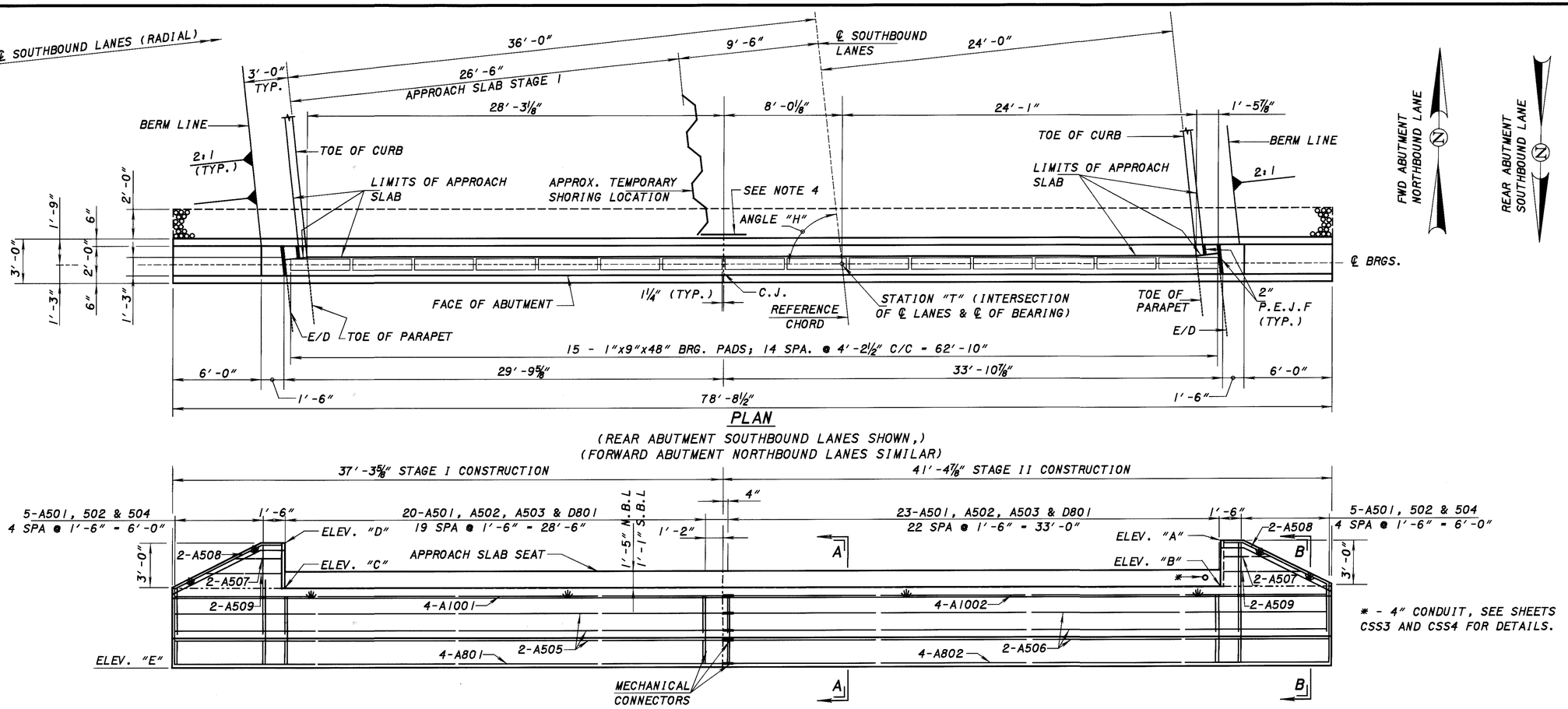

PLAN

(REAR ABUTMENT SOUTHBOUND LANES SHOWN,)
(FORWARD ABUTMENT NORTHBOUND LANES SIMILAR)

NOTES

1. ALL ELEVATIONS ARE MEASURED ALONG THE BRIDGE LIMITS.
2. NYLON REINFORCED NEOPRENE SHEETING 3'-0" WIDE, CENTERED ABOUT JOINTS. AT STAGE CONSTRUCTION JOINT, LAP NEOPRENE 2'-0".
3. UPON REMOVAL OF THE EXISTING ABUTMENT, SHOULD IT BE FOUND THAT INSITU ROCK CUT VERTICALLY A DISTANCE LESS THAN 2'-0" BEHIND THE ABUTMENT, POROUS BACKFILL NEED ONLY BE PLACED BETWEEN THE ABUTMENT AND THE INSITU ROCK. THIS DOES NOT RELIEVE THE CONTRACTOR FROM THE REQUIREMENTS OF THE FILTER FABRIC OR NEOPRENE PLACEMENT. THE POROUS BACKFILL AND FILTER FABRIC SHALL EXTEND TO THE PLANE OF THE SUBGRADE, TO ONE FOOT BELOW THE EMBANKMENT SURFACE AND LATERALLY TO THE ENDS OF THE WINGWALLS.
4. TYPE B WATERPROOFING, 3'-0" WIDE. EXTEND FROM THE BOTTOM OF APPROACH SLAB TO THE BOTTOM OF THE FOOTING. NEOPRENE SHEETING MAY BE USED IN LIEU OF TYPE B WATERPROOFING.
5. THE EXPANDED POLYSTYRENE SHEET MATERIAL IS INCIDENTAL TO ITEM 842 - CLASS C CONCRETE, ABUTMENT NOT INCLUDING FOOTING, AS PER PLAN.

LEGEND

CJ - CONSTRUCTION JOINT

\# - ALONG ℄ I-71

	ELEVATION					ANGLE	STATION
	A	B	C	D	E	H	#T
S.B.L. REAR ABUT.	1154.40	1151.38	1151.38	1154.27	1145.94	83°44'44"	1012+65.62
N.B.L. FWD. ABUT.	1153.71	1150.32	1150.32	1153.47	1145.05	83°47'19"	1013+55.07

ELEVATION

(REAR ABUTMENT SOUTHBOUND LANES SHOWN,)
(FORWARD ABUTMENT NORTHBOUND LANES SIMILAR)

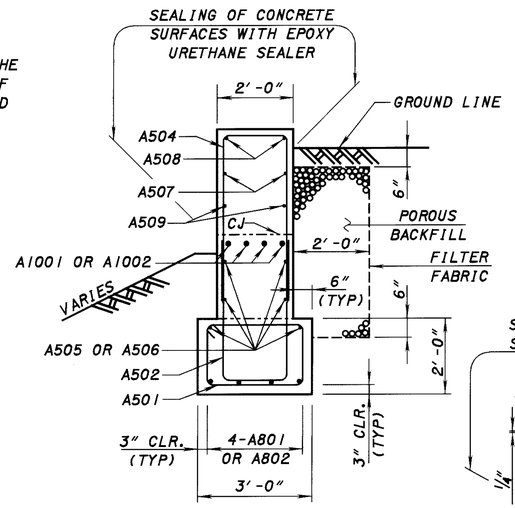

SECTION B-B

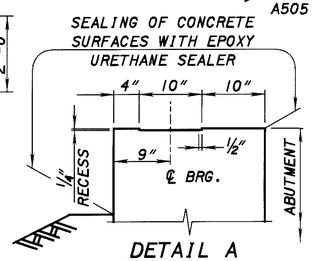

DETAIL A

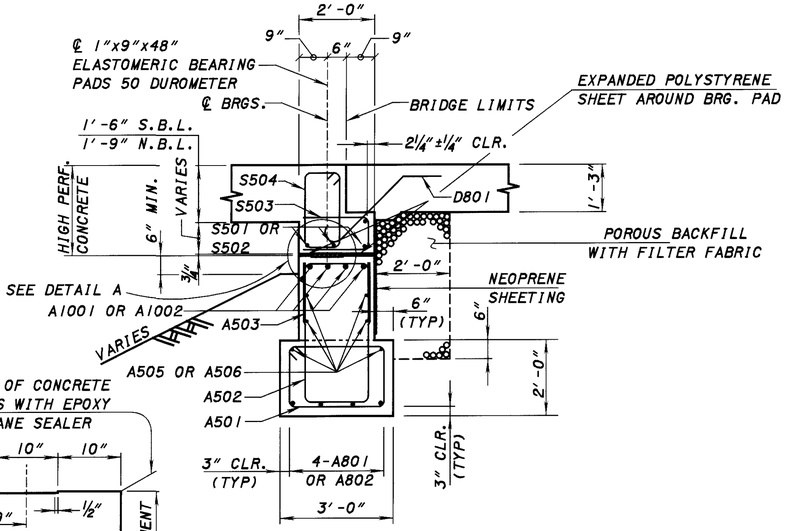

SECTION A-A

DESIGN AGENCY
ODOT CENTRAL OFFICE
OFFICE OF PRODUCTION

REVIEWED DFT
DATE 10-8-99
STRUCTURE FILE NUMBER 5203759L & 5203783R

DRAWN TDB
REVISED

DESIGNED TDB
CHECKED TAA

ABUTMENT DETAILS

MED-71-1918 L/R
I-71 OVER WILBER RD. (CR66)

MED-71-15.78

10/22

785/940

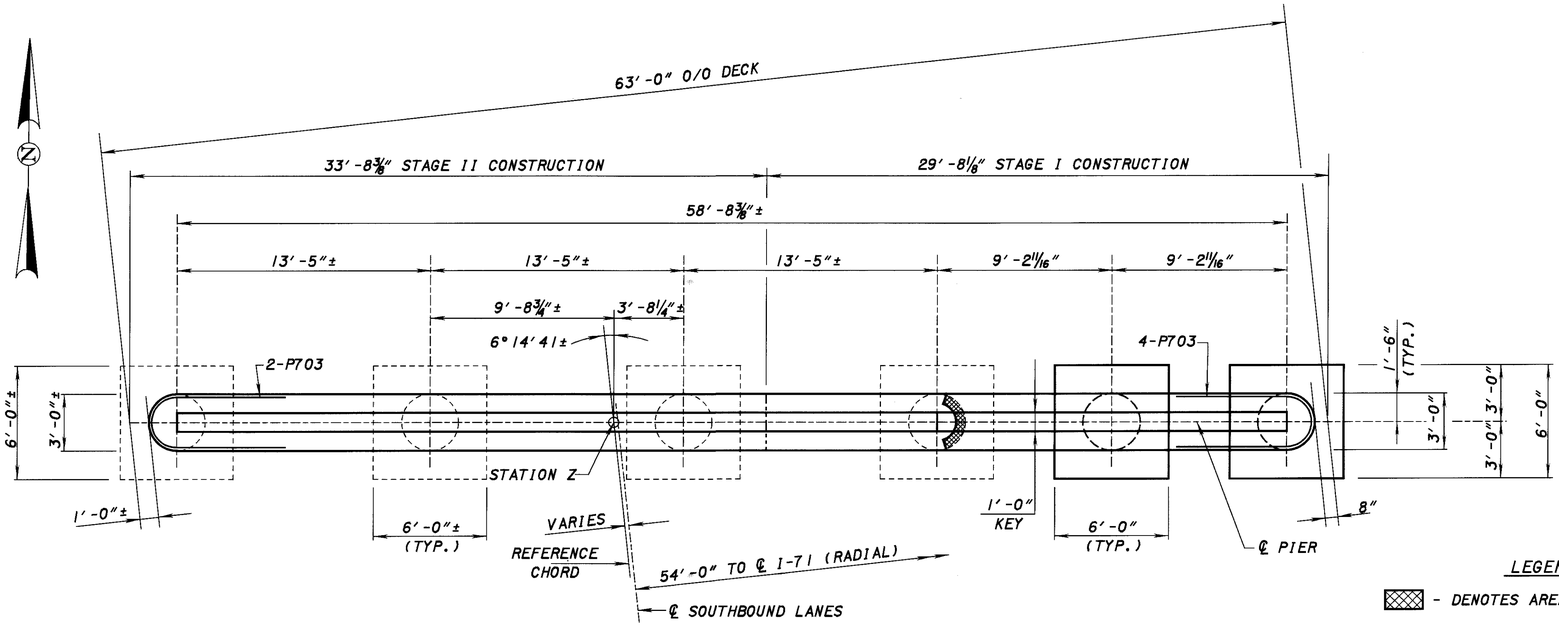

PLAN

(SOUTHBOUND LANES PIERS 1 & 2)

℄ I-71

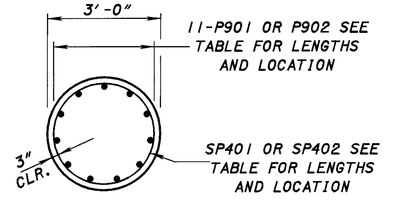

SECTION B-B

LEGEND

▨ - DENOTES AREA TO BE REMOVED

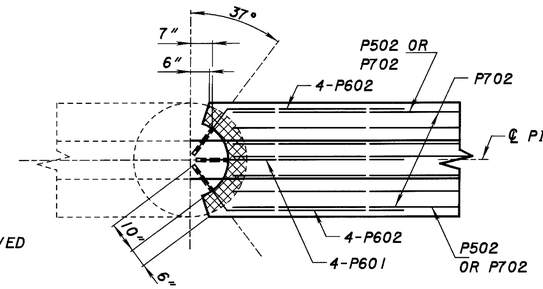

VIEW C-C

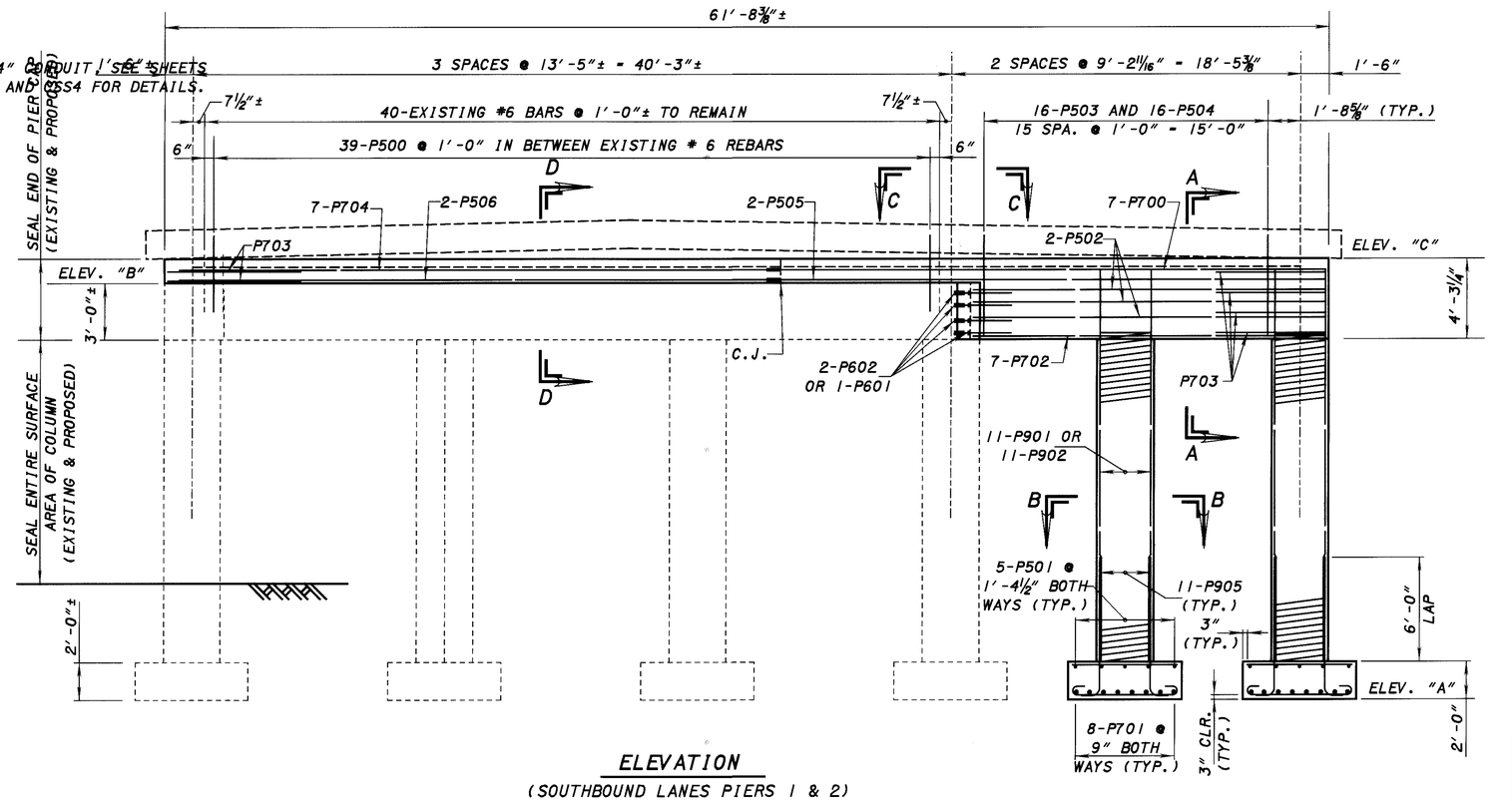

ELEVATION

(SOUTHBOUND LANES PIERS 1 & 2)

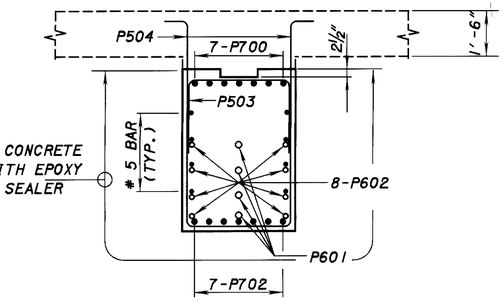

SECTION A-A

P500 SHALL BE DOWELED INTO THE EXISTING CONCRETE IN A MANNER THAT DOES NOT INTERFERE WITH THE #8 & #6 EXISTING REBARS.

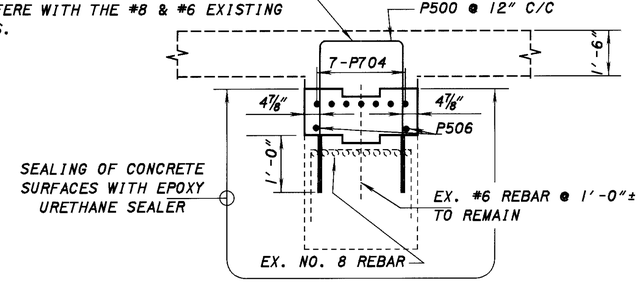

SECTION D-D

* ALONG ℄ I71

	ELEVATION A (MATCH EX.)	ELEVATION B (MATCH EX.)	ELEVATION C	* STATION Z	COLUMN REINFORCING	
					VERTICALS	TIES
PIER 1	1128.68 (±)	1150.74 (±)	1152.02	1012+93.98	22-P901	2-SP401
PIER 2	1128.92 (±)	1150.46 (±)	1151.73	1013+29.10	22-P902	2-SP402

DESIGN AGENCY: ODOT CENTRAL OFFICE, OFFICE OF PRODUCTION

REVISED: DFT — DATE: 10-8-99 — STRUCTURE FILE NUMBER: 5203759L & 5203783R

DRAWN: TDB — REVISED:

DESIGNED: TDB — CHECKED: TAA

PIER DETAILS

MED-71-1918 L/R

I-71 OVER WILBER RD. (CR66)

MED-71-15.78

11 / 22

786 / 940

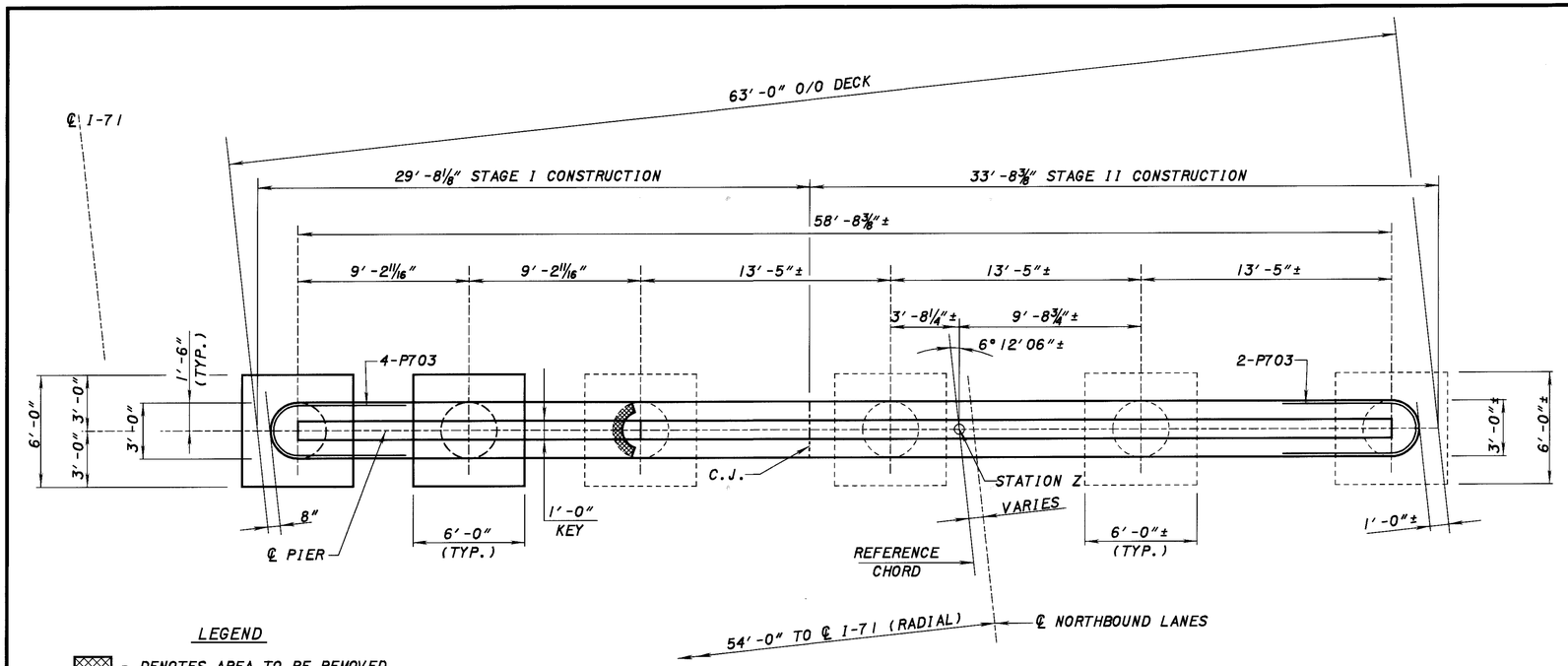

PLAN

(NORTHBOUND LANES PIERS 1 & 2)

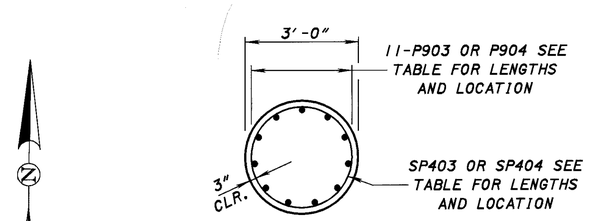

SECTION B-B

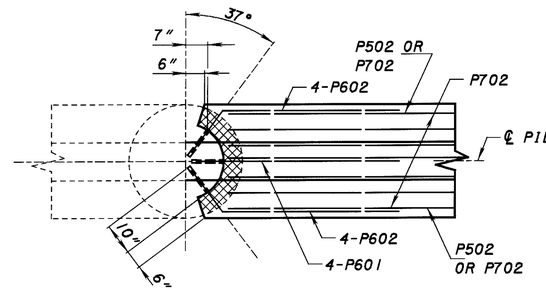

VIEW C-C

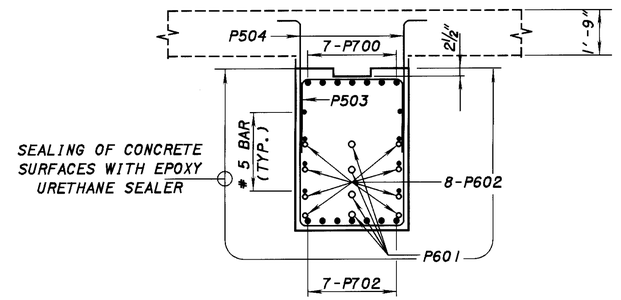

SECTION A-A

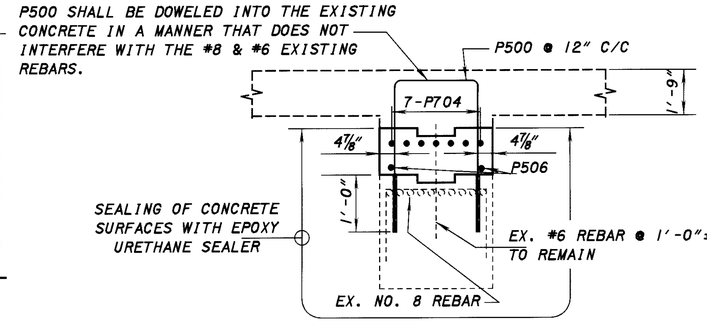

SECTION D-D

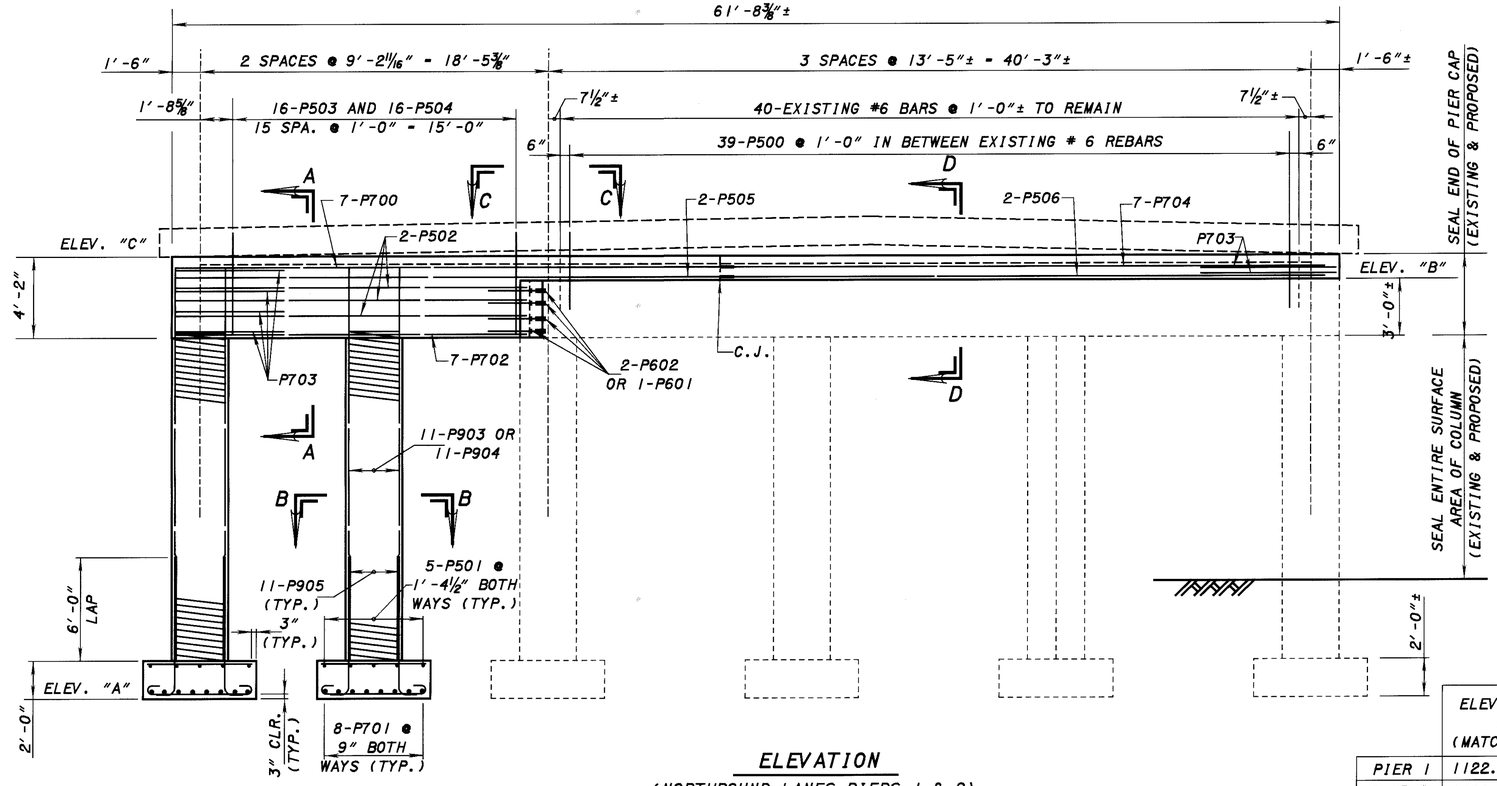

ELEVATION

(NORTHBOUND LANES PIERS 1 & 2)

	ELEVATION A (MATCH EX.)	ELEVATION B (MATCH EX.)	ELEVATION C	# STATION Z	COLUMN REINFORCING	
					VERTICALS	TIES
PIER 1	1122.27 (±)	1150.67 (±)	1151.83	1012+78.59	22-P903	2-SP403
PIER 2	1122.50 (±)	1150.34 (±)	1151.48	1013+20.95	22-P904	2-SP404

ALONG ℄ I71

DESIGN AGENCY: ODOT CENTRAL OFFICE, OFFICE OF PRODUCTION

REVISED	DATE
DFT	10-8-99
DRAWN	REVISED
TDB	
DESIGNED	CHECKED
TDB	TAA

STRUCTURE FILE NUMBER: 5203759L & 5203783R

PIER DETAILS

MED-71-19.18 L/R

I-71 OVER WILBER RD. (CR66)

MED-71-15.78

12/22

787/940

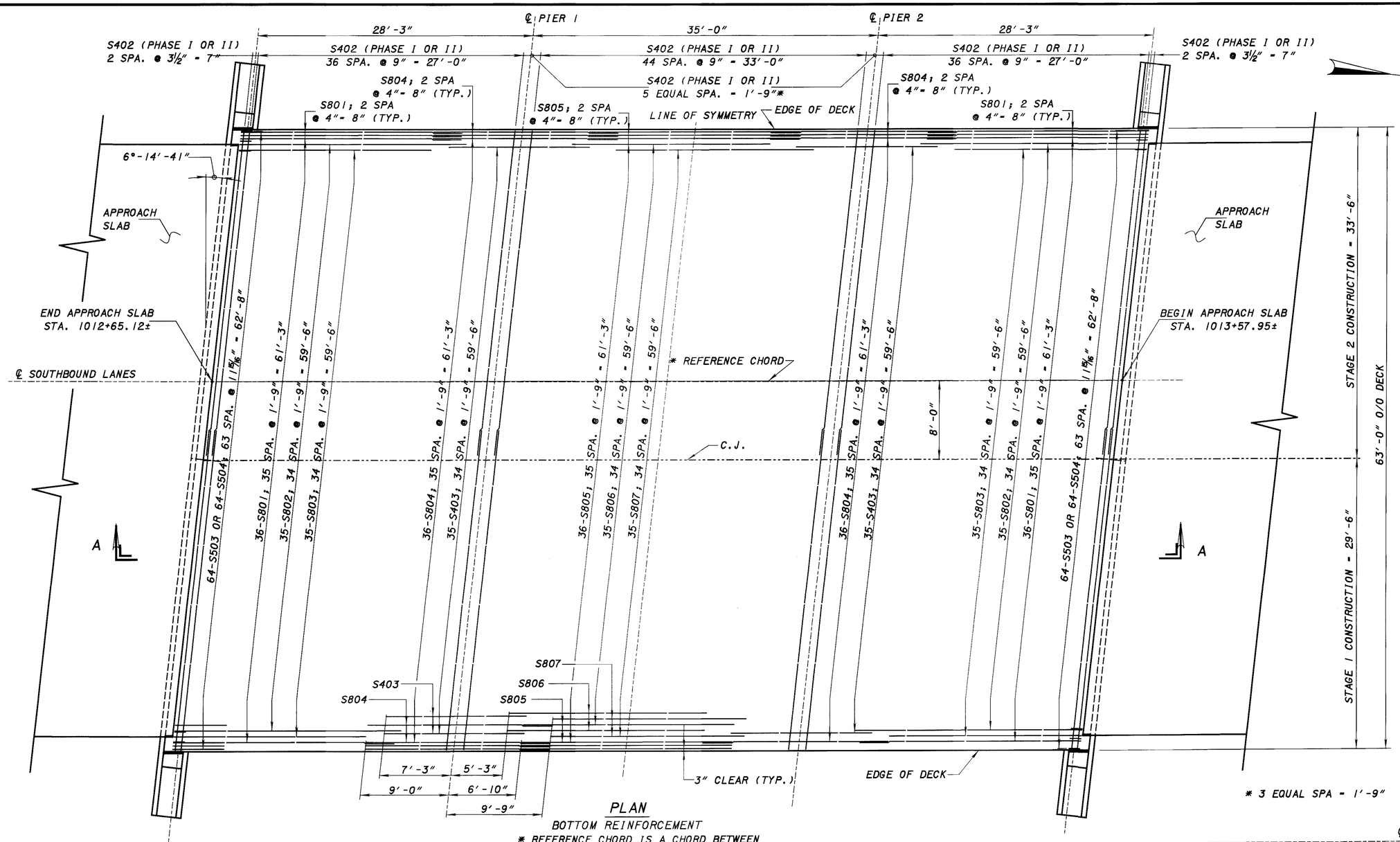

PLAN

BOTTOM REINFORCEMENT

* REFERENCE CHORD IS A CHORD BETWEEN ℄ OF ABUTMENTS BEARINGS

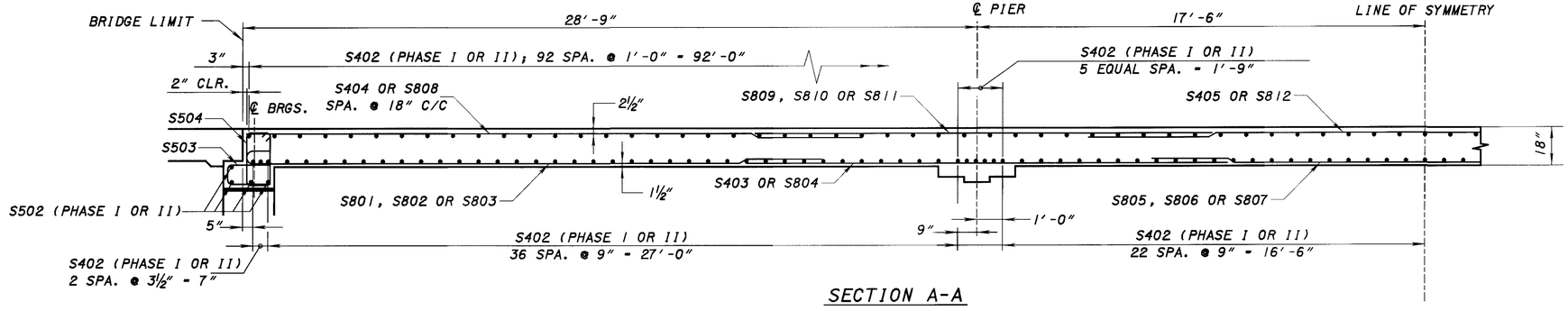

SECTION A-A

NOTE

CONSTRUCTION JOINT AND LONGITUDINAL RE-STEEL ARE PARALELL TO REFERENCE CHORD

ADJUST TO FIT REBAR AT CONSTRUCTION JOINT

DESIGN AGENCY: ODOT CENTRAL OFFICE, OFFICE OF PRODUCTION

DESIGNED	DRAWN	REVIEWED	DATE
TDB	TDB	DFT	10-8-99
CHECKED	REVISED	STRUCTURE FILE NUMBER	
TAA		5203759L & 5203783R	

SUPERSTRUCTURE DETAILS

MED-71-1918 L

I-71 OVER WILBER RD. (CR66)

MED-71-15.78

13/22

788/940

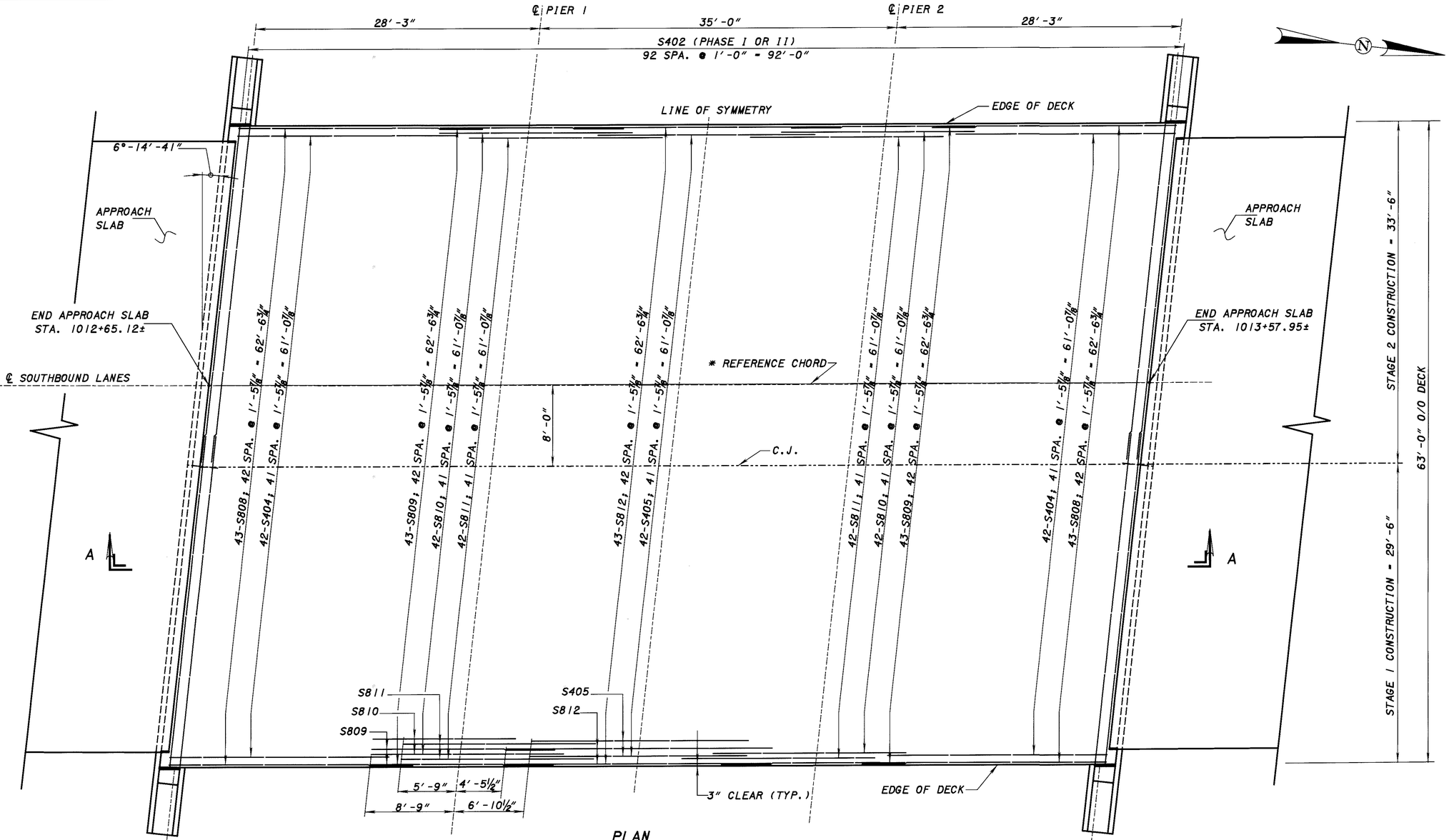

PLAN

TOP REINFORCEMENT

* REFERENCE CHORD IS A CHORD BETWEEN ℄ OF ABUTMENTS BEARINGS

℄ I-71

NOTE

CONSTRUCTION JOINT AND LONGITUDINAL RE-STEEL ARE PARALELL TO REFERENCE CHORD

ADJUST TO FIT REBAR AT CONSTRUCTION JOINT

FOR SECTION A-A SEE SHEET 13 / 22

DESIGN AGENCY: ODOT CENTRAL OFFICE OFFICE OF PRODUCTION

DESIGNED	DRAWN	REVISED	DATE
TDB	TDB	DFT	10-8-99
CHECKED	REVISED	STRUCTURE FILE NUMBER	
TAA		5203759L & 5203783R	

SUPERSTRUCTURE DETAILS

MED-71-1918 L

I-71 OVER WILBER RD. (CR66)

MED-71-15.78

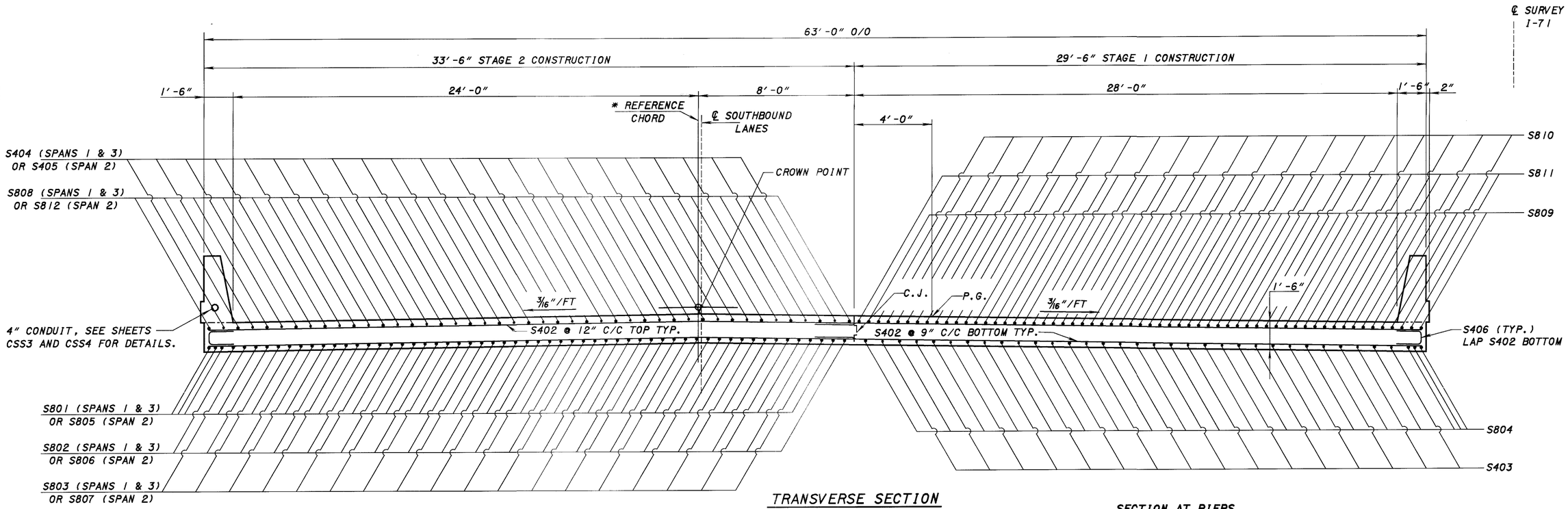

SECTION AT MIDSPAN

TRANSVERSE SECTION

* REFERENCE CHORD IS A CHORD BETWEEN ℄ OF ABUTMENTS BEARINGS

SECTION AT PIERS

DECK SLAB NOTES:

1. HIGH MOLECULAR WEIGHT METHACRYLATE SHALL BE INCLUDED IN THE COST OF THE CONCRETE AND NO SEPARATE PAYMENT WILL BE MADE.
2. CAMBER: CAMBER OF 1/4" AT MIDSPAN OF SPANS 1 & 3 AND 1/2" AT MIDSPAN OF SPAN 2 SHALL BE PROVIDED TO COMPENSATE FOR DEAD LOAD DEFLECTIONS, IN ADDITION TO ANY CAMBER REQUIRED FOR CONFORMANCE WITH PROFILE OF THE ROADWAY. ALLOWANCE SHALL BE MADE FOR THE DEFLECTION OF ANY FALSEWORK MEMBERS SUPPORTING THE ACTUAL CONCRETE DURING PLACEMENT.
3. SEE STD. DWG. CS-1-93 FOR MORE DETAILS.
4. DRIP GROOVES, AS DETAILED IN CS-1-93 SHALL NOT BE PLACED ON THIS STRUCTURE.
5. MIN. LAP SPLICES: #4 BAR = 2'-0", #6 BAR = 3'-0"
6. ALL REINFORCING STEEL IS EPOXY COATED.
7. FOR PARAPET DETAILS, SEE SHEET 19/22
8. REINFORCING STEEL MAY BE FIELD OR SHOP BENT TO ACCOMMODATE THE CROWN OF THE DECK. PAYMENT SHALL BE INCLUDED WITH HIGH PERFORMANCE CONCRETE.

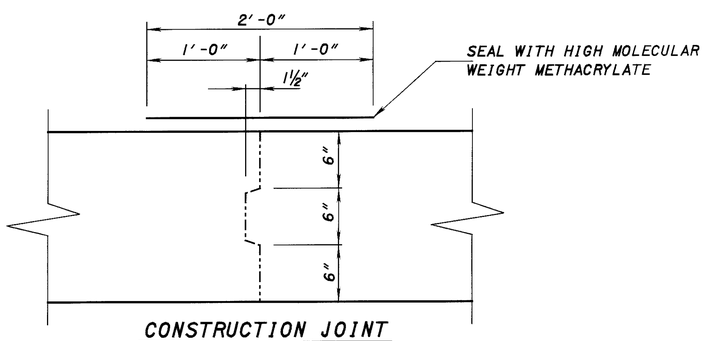

CONSTRUCTION JOINT

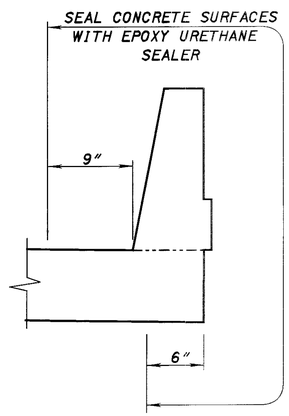

LIMITS OF SEALING CONCRETE

ELASTOMERIC BEARING PAD NOTES:

1. ALL ELASTOMER FOR BEARINGS TO BE 50 DUROMETER
2. ELASTOMERIC BEARINGS SHALL COMPLY WITH ITEM 516 AND AASHTO STANDARD SPECIFICATION FOR HIGHWAY BRIDGES, SECTION 18, BEARING DEVICES, DIVISION II, CONSTRUCTION ARTICLES 18.4.5.1 AND 18.5.6.2. BEARINGS SHALL BE GRADE 3, 50 DUROMETER ELASTOMER AND SHALL BE SUBJECTED TO THE LOAD TESTING REQUIREMENTS DEFINED IN ARTICLE 18.7 (DESIGN METHOD B). THE UNIT BID PRICE SHALL INCLUDE ALL MATERIALS, LABOR, TESTING, AND INCIDENTALS NECESSARY TO FURNISH AND INSTALL LAMINATED ELASTOMERIC BEARINGS. PAYMENT WILL BE MADE AT THE CONTRACT UNIT PRICE FOR ITEM 516, EACH, ELASTOMERIC BEARING WITH INTERNAL LAMINATES ONLY (NEOPRENE).
3. AT THE CONTRACTORS OPTION, BEARING PADS OF A DIFFERENT WIDTH MAY BE PROVIDED. THE CLEAR DISTANCE BETWEEN BEARING PADS SHALL NOT BE GREATER THAN 3".
4. BEARINGS HAVE BEEN DESIGNED FOR THE FOLLOWING REACTIONS:

DEAD LOAD	LIVE LOAD	TOTAL
18.0 K	18.5 K	36.5 K

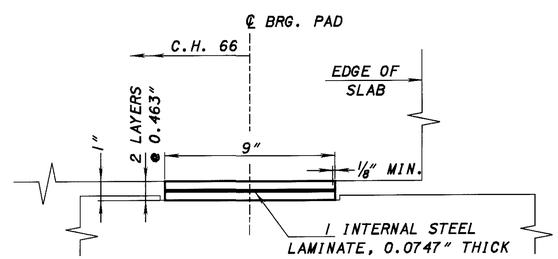

SECTION A-A
LAMINATED ELASTOMERIC BEARING 9"x48"x1"

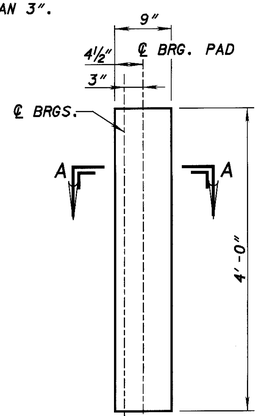

PLAN
LAMINATED ELASTOMERIC BEARING 9"x48"x1"

DESIGN AGENCY: ODOT CENTRAL OFFICE, OFFICE OF PRODUCTION
REVISED DFT DATE 10-8-99
STRUCTURE FILE NUMBER 5203759L & 5203783R
DRAWN TDB REVISED
DESIGNED TDB CHECKED TAA

SUPERSTRUCTURE DETAILS
MED-71-1918 L
I-71 OVER WILBER RD. (CR66)

MED-71-15.78

15/22

790
940

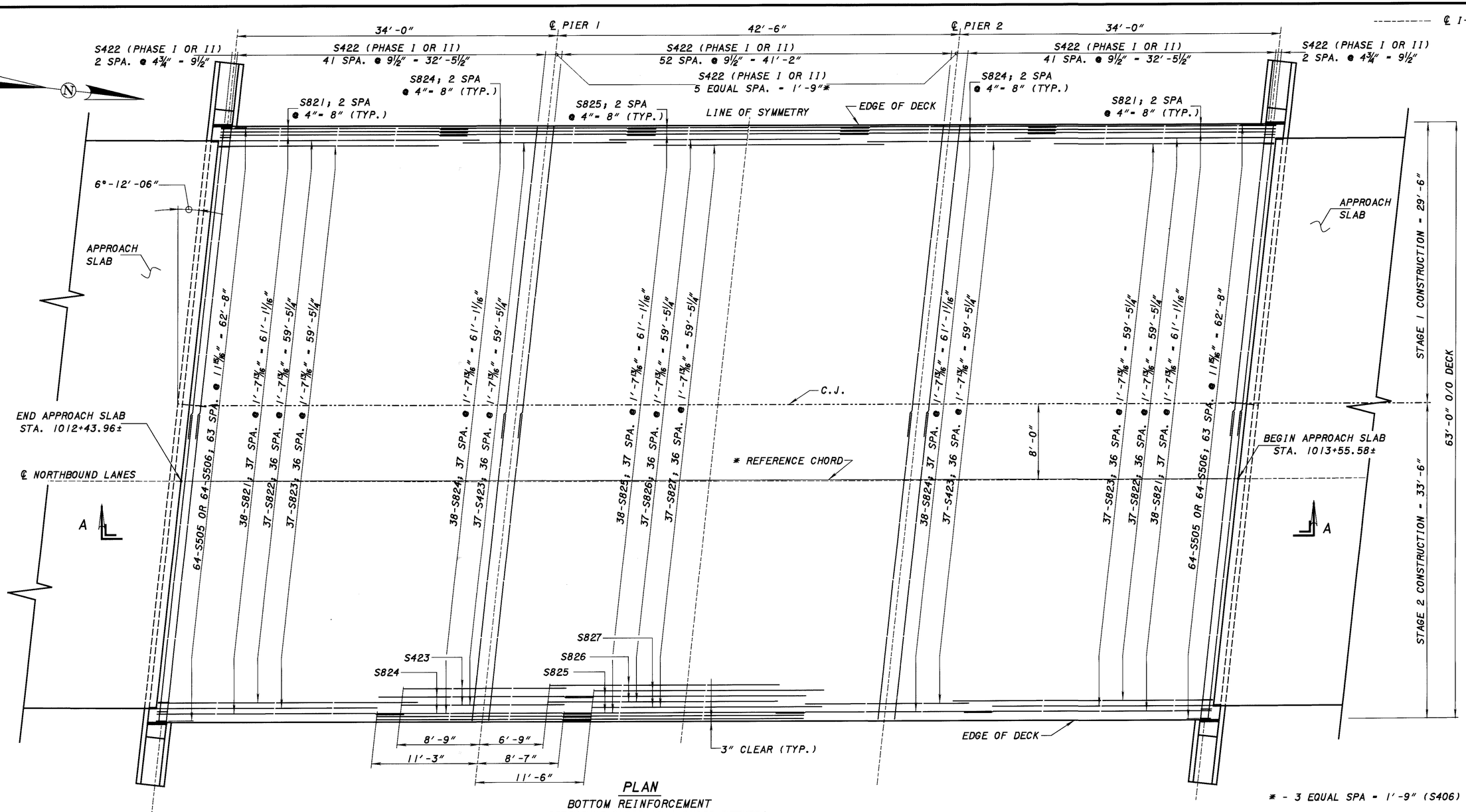

PLAN

BOTTOM REINFORCEMENT

* REFERENCE CHORD IS A CHORD BETWEEN ℄ OF ABUTMENTS BEARINGS

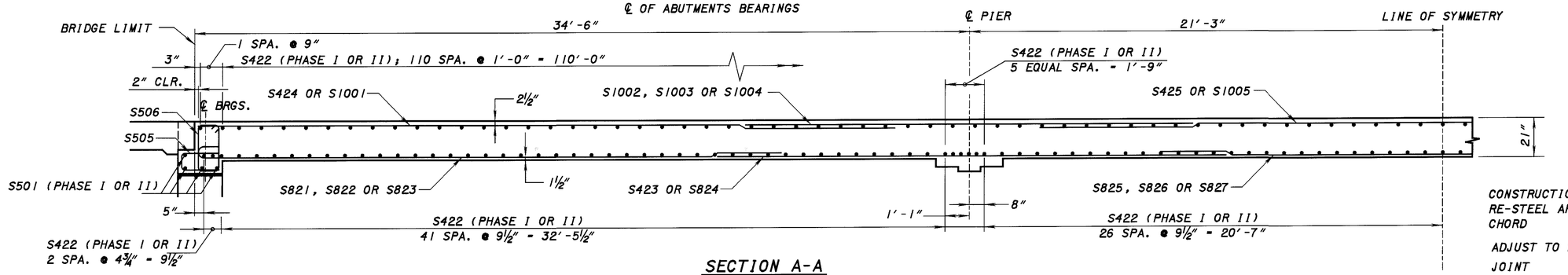

SECTION A-A

NOTE

CONSTRUCTION JOINT AND LONGITUDINAL RE-STEEL ARE PARALELL TO REFERENCE CHORD

ADJUST TO FIT REBAR AT CONSTRUCTION JOINT

DESIGN AGENCY
ODOT CENTRAL OFFICE
OFFICE OF PRODUCTION

DESIGNED TDB | DRAWN TDB | REVIEWED DFT | DATE 10-8-99
CHECKED TAA | REVISED | STRUCTURE FILE NUMBER 5203759L & 5203783R

SUPERSTRUCTURE DETAILS

MED-71-1918 R
I-71 OVER WILBER RD. (CR66)

MED-71-15.78

16 / 22

791
340

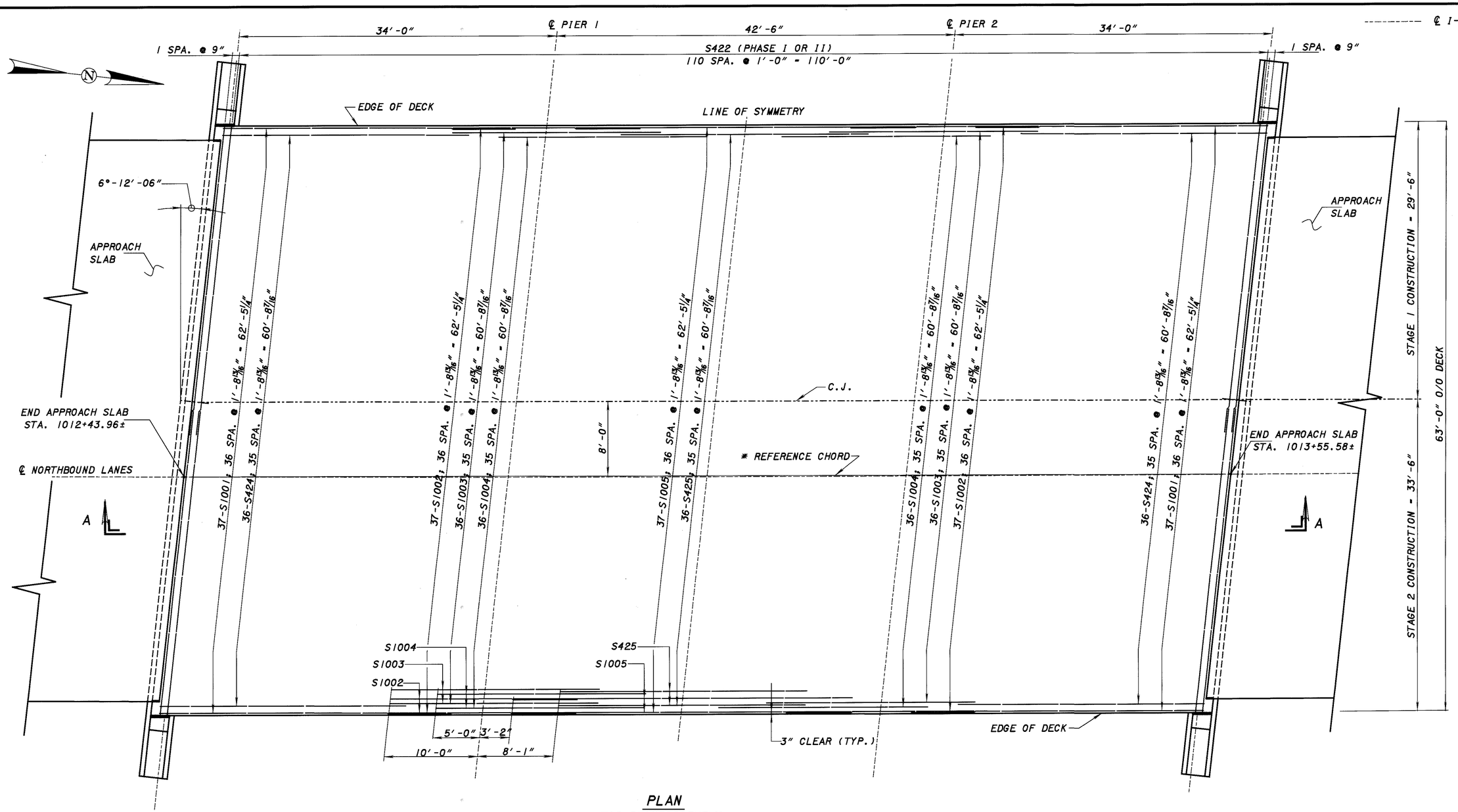

PLAN

TOP REINFORCEMENT

* REFERENCE CHORD IS A CHORD BETWEEN ℄ OF ABUTMENTS BEARINGS

NOTE

CONSTRUCTION JOINT AND LONGITUDINAL RE-STEEL ARE PARALELL TO REFERENCE CHORD

ADJUST TO FIT REBAR AT CONSTRUCTION JOINT

FOR SECTION A-A SEE SHEET 16 / 22

DESIGN AGENCY
ODOT CENTRAL OFFICE
OFFICE OF PRODUCTION

DESIGNED	DRAWN	REVIEWED	DATE
TDB	TDB	DFT	10-8-99
CHECKED	REVISED	STRUCTURE FILE NUMBER	
TAA		5203759L & 5203783R	

SUPERSTRUCTURE DETAILS

MED-71-1918 R
I-71 OVER WILBER RD. (CR66)

MED-71-15.78

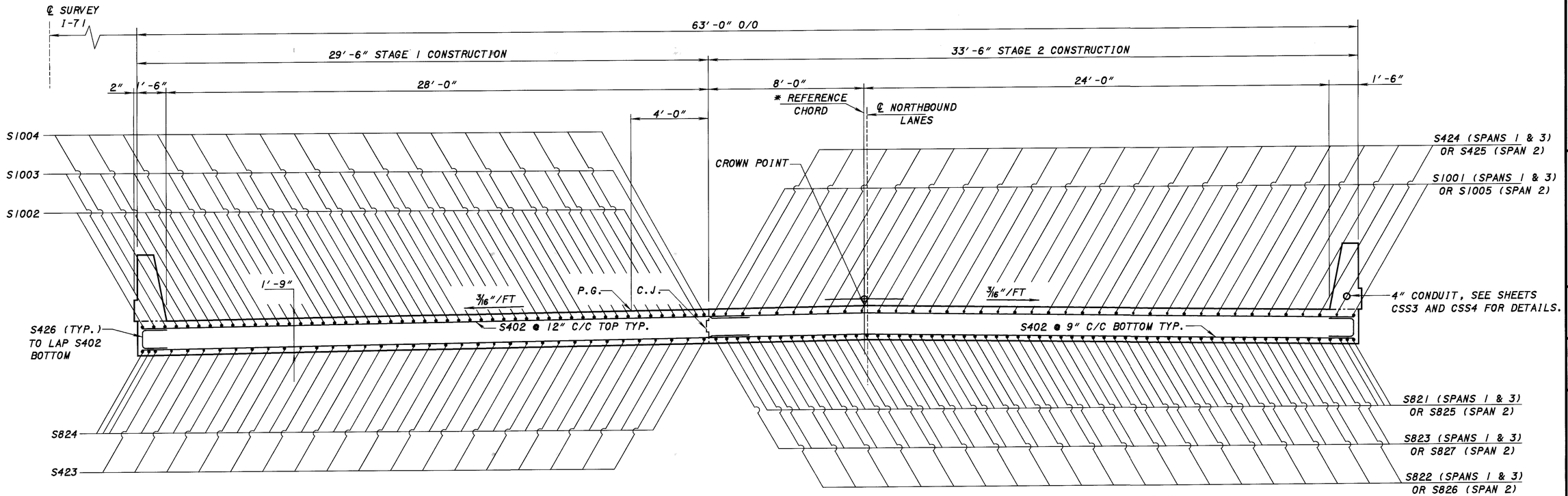

SECTION AT PIERS

SECTION AT MIDSPAN

TRANSVERSE SECTION

* REFERENCE CHORD IS A CHORD BETWEEN ℄ OF ABUTMENTS BEARINGS

DECK SLAB NOTES:

1. HIGH MOLECULAR WEIGHT METHACRYLATE SHALL BE INCLUDED IN THE COST OF THE CONCRETE AND NO SEPARATE PAYMENT WILL BE MADE.
2. CAMBER: CAMBER OF 1/4" AT MIDSPAN OF SPANS 1 & 3 AND 1/2" AT MIDSPAN OF SPAN 2 SHALL BE PROVIDED TO COMPENSATE FOR DEAD LOAD DEFLECTIONS, IN ADDITION TO ANY CAMBER REQUIRED FOR CONFORMANCE WITH PROFILE OF THE ROADWAY. ALLOWANCE SHALL BE MADE FOR THE DEFLECTION OF ANY FALSEWORK MEMBERS SUPPORTING THE ACTUAL CONCRETE DURING PLACEMENT.
3. SEE STD. DWG. CS-1-93 FOR MORE DETAILS.
4. DRIP GROOVES, AS DETAILED IN CS-1-93 SHALL NOT BE PLACED ON THIS STRUCTURE.
5. MIN. LAP SPLICES: #4 BAR - 2'-0", #6 BAR - 3'-0"
6. ALL REINFORCING STEEL IS EPOXY COATED.
7. FOR PARAPET DETAILS, SEE SHEET 19/22
8. REINFORCING STEEL MAY BE FIELD OR SHOP BENT TO ACCOMMODATE THE CROWN OF THE DECK. PAYMENT SHALL BE INCLUDED WITH HIGH PERFORMANCE CONCRETE.

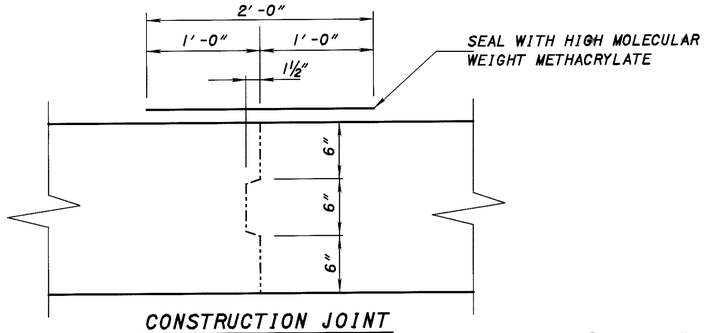

CONSTRUCTION JOINT

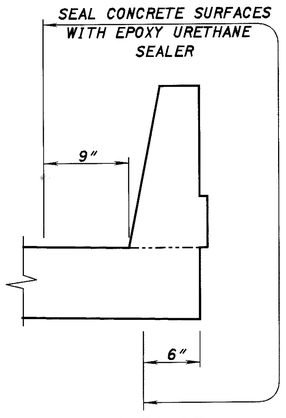

LIMITS OF SEALING CONCRETE

ELASTOMERIC BEARING PAD NOTES:

1. ALL ELASTOMER FOR BEARINGS TO BE 50 DUROMETER
2. ELASTOMERIC BEARINGS SHALL COMPLY WITH ITEM 516 AND AASHTO STANDARD SPECIFICATION FOR HIGHWAY BRIDGES, SECTION 18, BEARING DEVICES, DIVISION II, CONSTRUCTION ARTICLES 18.4.5.1 AND 18.5.6.2. BEARINGS SHALL BE GRADE 3, 50 DUROMETER ELASTOMER AND SHALL BE SUBJECTED TO THE LOAD TESTING REQUIREMENTS DEFINED IN ARTICLE 18.7 (DESIGN METHOD B). THE UNIT BID PRICE SHALL INCLUDE ALL MATERIALS, LABOR, TESTING, AND INCIDENTALS NECESSARY TO FURNISH AND INSTALL LAMINATED ELASTOMERIC BEARINGS. PAYMENT WILL BE MADE AT THE CONTRACT UNIT PRICE FOR ITEM 516, EACH, ELASTOMERIC BEARING WITH INTERNAL LAMINATES ONLY (NEOPRENE).
3. AT THE CONTRACTORS OPTION, BEARING PADS OF A DIFFERENT WIDTH MAY BE PROVIDED. THE CLEAR DISTANCE BETWEEN BEARING PADS SHALL NOT BE GREATER THAN 3".
4. BEARINGS HAVE BEEN DESIGNED FOR THE FOLLOWING REACTIONS:

DEAD LOAD	LIVE LOAD	TOTAL
18.0 K	18.5 K	36.5 K

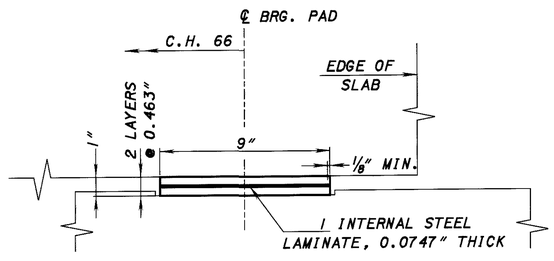

SECTION A-A

LAMINATED ELASTOMERIC BEARING 9"x48"x3/4"

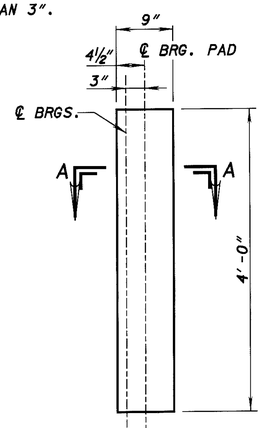

PLAN

LAMINATED ELASTOMERIC BEARING 9"x48"x3/4"

DESIGN AGENCY: ODOT CENTRAL OFFICE OFFICE OF PRODUCTION

REVIEWED: DFT | DATE: 10-8-99 | STRUCTURE FILE NUMBER: 5203759L & 5203783R

DRAWN: TDB | REVISED:

DESIGNED: TDB | CHECKED: TAA

SUPERSTRUCTURE DETAILS

MED-71-1918 R

I-71 OVER WILBER RD. (CR66)

MED-71-15.78

18/22

793/940

LEGEND: N.S. - NEAR SIDE
F.S. - FAR SIDE

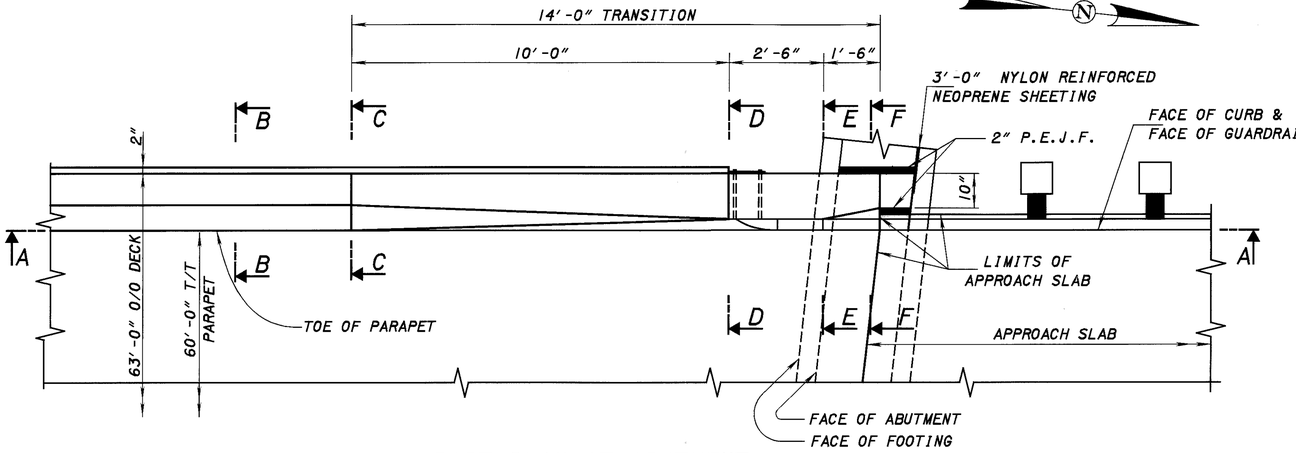

PART PLAN AT ABUTMENT

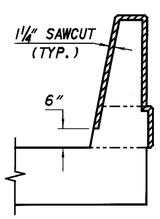

DETAIL A

(Section through sawcut)
Sawcut Perimeter = 7′-6″

CONTROL JOINTS FOR CONCRETE PARAPETS: THE JOINTS SHALL BE CONSTRUCTED BY SAWING 1¼ INCH DEEP ALONG THE PERIMETER OF THE PARAPET AS SOON AS THE SAW CAN BE OPERATED WITHOUT DAMAGING THE CONCRETE.

THE USE OF AN EDGE GUIDE, FENCE, OR JIG IS REQUIRED TO ENSURE THAT THE CUT JOINT IS STRAIGHT, TRUE, AND ALIGNED ON ALL FACES OF THE PARAPET. THE JOINT WIDTH SHALL BE THE WIDTH OF THE SAW BLADE, A NOMINAL WIDTH OF ¼ INCH.

THE PERIMETER OF THE DEFLECTION CONTROL JOINT SHALL BE SEALED WITH A CAULKING MATERIAL TO A MINIMUM DEPTH OF ONE INCH CONFORMING TO FEDERAL SPECIFICATION TT-S-00227E. THE BOTTOM ONE-HALF INCH OF THE OUTSIDE FACE OF THE PARAPET SHOULD BE LEFT UNSEALED TO ALLOW ANY WATER WHICH MAY ENTER THE JOINT TO ESCAPE.

QUANTITIES OF CONCRETE, REINFORCING STEEL, DEFLECTION JOINT SAWCUT AND CAULKING MATERIAL FOR PARAPET ARE INCLUDED WITH ITEM 844 HIGH PERFORMANCE CONCRETE, SUPERSTRUCTURE (PARAPET).

FOR BRIDGE TERMINAL ASSEMBLY SEE STANDARD CONSTRUCTION DRAWING GR-3.1 AND GR-3.2.

MIN. LAP SPLICES: #5 BAR - 2′-6″
#6 BAR - 3′-0″

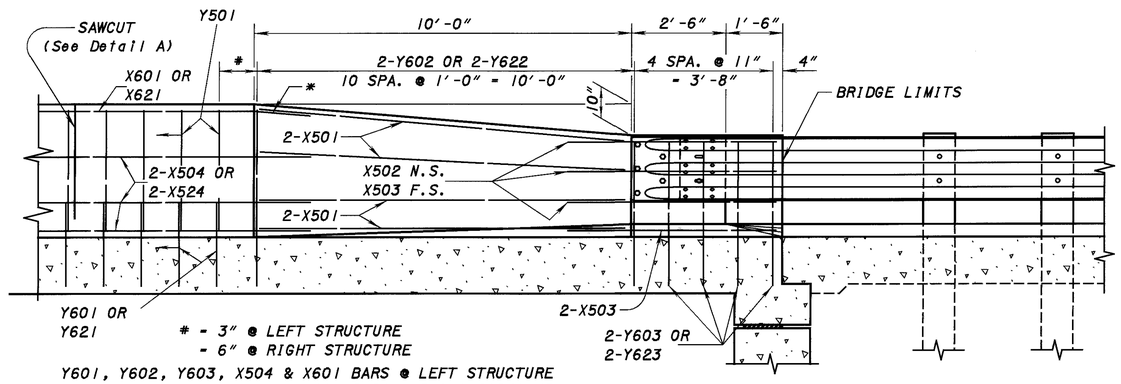

SECTION A-A

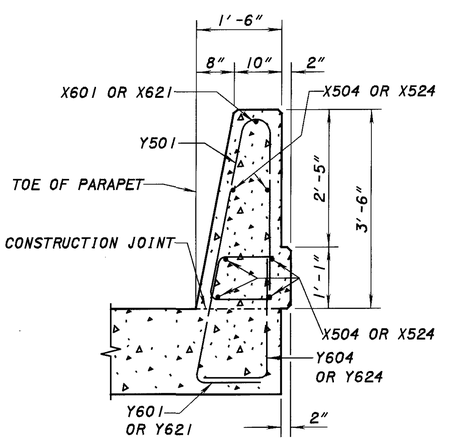

SECTION B-B & C-C

Area = 4.26 ft²

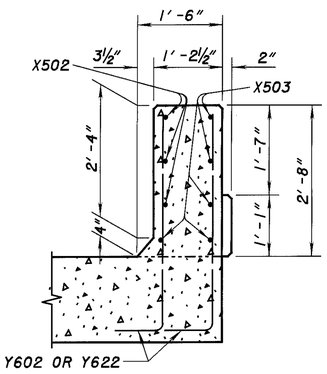

SECTION D-D

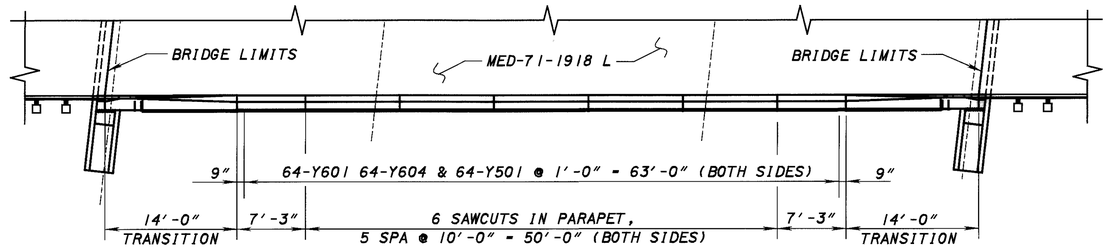

PART PLAN

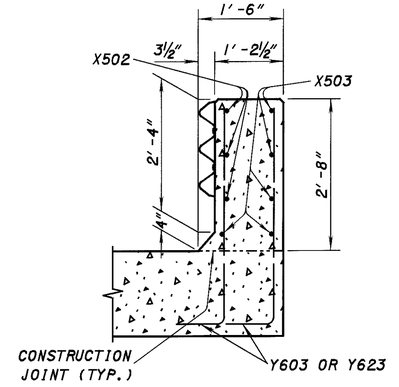

SECTION E-E

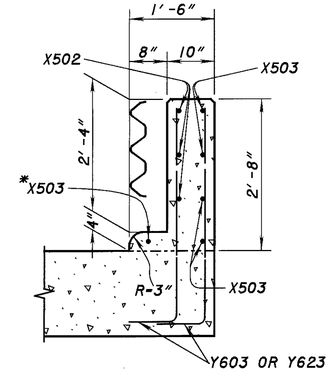

SECTION F-F

* FIELD BEND IF NECESSARY

DESIGN AGENCY: ODOT CENTRAL OFFICE OFFICE OF PRODUCTION
REVIEWED: DFT
DATE: 10-8-99
STRUCTURE FILE NUMBER: 5203759L & 5203783R
DRAWN: TDB
REVISED
DESIGNED: TDB
CHECKED: TAA

PARAPET DETAILS
MED-71-1918 L/R
I-71 OVER WILBER RD. (CR66)

MED-71-15.78

19/22

794
340

MARK	NUMBER					LENGTH	WEIGHT	TYPE	DIMENSIONS					
	REAR ABUT. STAGE I	REAR ABUT. STAGE II	FWD. ABUT. STAGE I	FWD. ABUT. STAGE II	TOTAL		LB		A	B	C	D	R	INC
ABUTMENTS - MED-71-1918 L														
A501	25	28	25	28	106	8'-8"	958	3	2'-6"	1'-7"				
A502	25	28	25	28	106	10'-11"	1207	2	4'-9"	1'-8"	4'-9"			
A503	20	23	20	23	86	6'-11"	621	2	2'-9"	1'-8"	2'-9"			
A504	1 SERIES OF 5	1 SERIES OF 5	1 SERIES OF 5	1 SERIES OF 5	4 SERIES OF 5	7'-7" TO 13'-5"	219	2	3'-1" TO 6'-0"	1'-8"	3'-1" TO 6'-0"			8¾"
A505	6		6		12	37'-2"	466	STR						
A506		6		6	12	41'-0"	514	STR						
A507	2	2	2	2	8	3'-8"	31	STR						
A508	2	2	2	2	8	7'-7"	64	19	6'-5"	1'-2"	7"			
A509	2	2	2	2	8	6'-0"	50	STR						
A801	4		4		8	37'-2"	794	STR						
A802		4		4	8	41'-0"	876	STR						
A1001	4		4		8	37'-2"	1280	STR						
A1002		4		4	8	41'-0"	1412	STR						
D801	20	23	20	23	86	4'-11"	1129	34	2'-7"	1'-5"				
ABUTMENTS - MED-71-1918 R														
A501	25	28	25	28	106	8'-8"	958	3	2'-6"	1'-7"				
A502	25	28	25	28	106	10'-11"	1207	2	4'-9"	1'-8"	4'-9"			
A503	20	23	20	23	86	6'-11"	621	2	2'-9"	1'-8"	2'-9"			
A504	1 SERIES OF 5	1 SERIES OF 5	1 SERIES OF 5	1 SERIES OF 5	4 SERIES OF 5	7'-7" TO 13'-5"	219	2	3'-1" TO 6'-0"	1'-8"	3'-1" TO 6'-0"			8¾"
A505	6		6		12	37'-2"	466	STR						
A506		6		6	12	41'-0"	514	STR						
A507	2	2	2	2	8	3'-8"	31	STR						
A508	2	2	2	2	8	7'-7"	63	19	6'-5"	1'-2"	7"			
A509	2	2	2	2	8	6'-0"	50	STR						
A801	4		4		8	37'-2"	794	STR						
A802		4		4	8	41'-0"	876	STR						
A1001	4		4		8	37'-2"	1280	STR						
A1002		4		4	8	41'-0"	1412	STR						
D801	20	23	20	23	86	4'-11"	1129	34	2'-7"	1'-5"				

MARK	NUMBER			LENGTH	WEIGHT	TYPE	DIMENSIONS					
	PIER 1	PIER 2	TOTAL		LB		A	B	C	D	R	INC
PIERS - MED-71-1918 L												
SP401	2		2	17'-2"	503	27	4½"	2'-6"				
SP402		2	2	16'-8"	488	27	4½"	2'-6"				
P500	39	39	78	8'-11"	725	2	3'-6"	2'-2"	3'-6"			
P501	20	20	40	5'-6"	229	STR						
P502	6	6	12	17'-5"	218	STR						
P503	16	16	32	6'-5"	214	2	2'-0"	2'-8"	2'-0"			
P504	16	16	32	14'-4"	478	6	2'-8"	5'-3"	10"			
P505	2	2	4	27'-6"	115	STR						
P506	2	2	4	31'-2"	130	STR						
P601	4	4	8	4'-9"	57	STR						
P602	8	8	16	5'-5"	130	19	4'-0"	11"	1'-1"			
P700	7	7	14	27'-6"	787	STR						
P701	32	32	64	7'-2"	938	17	5'-6"					
P702	7	7	14	17'-5"	499	STR						
P703	6	6	12	10'-7"	260	24	2'-7"	3'-3"			1'-3½"	
P704	7	7	14	31'-2"	892	STR						
P901	22		22	20'-11"	1565	STR						
P902		22	22	20'-5"	1527	STR						
P905	22	22	44	9'-0"	1347	1	1'-6"	7'-9"				
PIERS - MED-71-1918 R												
SP403	2		2	23'-6"	676	27	4½"	2'-6"				
SP404		2	2	22'-11"	660	27	4½"	2'-6"				
P500	39	39	78	9'-11"	807	2	4'-0"	2'-2"	4'-0"			
P501	20	20	40	5'-6"	229	STR						
P502	6	6	12	17'-5"	218	STR						
P503	16	16	32	6'-5"	214	2	2'-0"	2'-8"	2'-0"			
P504	16	16	32	14'-4"	478	6	2'-8"	5'-3"	10"			
P505	2	2	4	27'-6"	115	STR						
P506	2	2	4	31'-2"	130	STR						
P601	4	4	8	4'-9"	57	STR						
P602	8	8	16	5'-5"	130	19	4'-0"	11"	1'-1"			
P700	7	7	14	27'-6"	787	STR					1'-3½"	
P701	32	32	64	7'-2"	938	17	5'-6"					
P702	7	7	14	17'-5"	499	STR						
P703	6	6	12	10'-7"	260	24	2'-7"	3'-3"			1'-3½"	
P704	7	7	14	31'-2"	892	STR						
P903	22		22	27'-0"	2020	STR						
P904		22	22	26'-7"	1988	STR						
P905	22	22	44	9'-0"	1347	1	1'-6"	7'-9"				

NOTES:

1. THIS REINFORCING SCHEDULE IS FOR INFORMATION ONLY.
2. ALL REINFORCING STEEL SHALL BE EPOXY CODED.
3. THE BAR SIZE IS INDICATED IN THE BAR MARK. THE FIRST DIGIT INDICATES THE BAR SIZE. FOR EXAMPLE, AN A501 IS A #5 BAR. THE DIMENSIONS SHOWN ARE OUT TO OUT UNLESS OTHERWISE INDICATED. "R" INDICATES THE INSIDE RADIUS.

DESIGN AGENCY: ODOT CENTRAL OFFICE, OFFICE OF PRODUCTION

REVIEWED: DFT | DATE: 10-8-99 | STRUCTURE FILE NUMBER: 5203759L & 5203783R

DRAWN: TDB | REVISED:

DESIGNED: TDB | CHECKED: TAA

REINFORCING SCHEDULE

MED-71-1918 L/R

I-71 OVER WILBER RD. (CR66)

MED-71-15.78

795/940

MARK	NUMBER SUPER STAGE I	NUMBER SUPER STAGE II	NUMBER TOTAL	LENGTH	WEIGHT LB	TYPE	DIMENSIONS A	B	C	D	R	INC
SUPERSTRUCTURE - MED-71-1918 L												
S402	224	224	448	32'-6"	9726	STR						
S403	32	38	70	14'-3"	666	STR						
S404	40	44	84	21'-7"	1211	STR						
S405	20	22	42	21'-3"	596	STR						
S406	125	125	250	3'-4"	557	2	1'-3"	1'-0"	1'-3"			
S502	8	8	16	33'-0"	551	STR						
S503	60	68	128	3'-10"	512	2	1'-8"	9"	1'-8"			
S504	60	68	128	6'-5"	857	3	2'-0"	11"				
S801	38	42	80	22'-5"	4789	STR						
S802	32	38	70	20'-8"	3863	16	19'-6"					
S803	34	36	70	23'-0"	4299	STR						
S804	38	42	80	18'-9"	4005	STR						
S805	19	21	40	21'-4"	2278	STR						
S806	16	19	35	20'-0"	1869	STR						
S807	17	18	35	20'-0"	1869	STR						
S808	40	46	86	24'-0"	5511	STR						
S809	40	46	86	18'-0"	4133	STR						
S810	38	46	84	18'-11"	4243	STR						
S811	40	44	84	18'-11"	4243	STR						
S812	20	23	43	26'-1"	2994	STR						
SUPERSTRUCTURE - MED-71-1918 R												
S422	262	262	524	32'-6"	11376	STR						
S423	34	40	74	17'-3"	853	STR						
S424	34	38	72	26'-4"	1266	STR						
S425	17	19	36	26'-4"	633	STR						
S426	143	143	286	3'-7"	685	2	1'-3"	1'-3"	1'-3"			
S501	8	8	16	33'-0"	551	STR						
S505	60	68	128	4'-2"	557	2	1'-8"	1'-1"	1'-8"			
S506	60	68	128	7'-0"	935	3	2'-4"	11"				
S821	40	44	84	26'-2"	5869	STR						
S822	34	40	74	24'-5"	4825	16	23'-3"					
S823	36	38	74	27'-6"	5433	STR						
S824	40	44	84	22'-9"	5102	STR						
S825	20	22	42	25'-4"	2841	STR						
S826	17	20	37	24'-3"	2396	STR						
S827	17	20	37	24'-3"	2396	STR						
S1001	34	40	74	31'-3"	9951	STR						
S1002	34	40	74	20'-0"	6368	STR						
S1003	34	38	72	22'-3"	6893	STR						
S1004	34	38	72	22'-3"	6893	STR						
S1005	17	20	37	36'-2"	5759	STR						

MARK	NUMBER SUPER STAGE I	NUMBER SUPER STAGE II	NUMBER TOTAL	LENGTH	WEIGHT LB	TYPE	DIMENSIONS A	B	C	D	E	R	INC
PARAPETS - MED-71-1918 L													
X501	16	16	32	10'-0"	334	STR							
X502	3	6	9	5'-6"	52	25	1'-8"	2'-5"	1'-4"	1½"	5"		
X503	13	10	23	5'-6"	132	STR							
X504	18	18	36	24'-11"	936	STR							
Y501	64	64	128	7'-5"	991	23	1'-1"	3'-2"	3'-0"			2¾"	
X601	3	3	6	25'-6"	230	STR							
Y601	64	64	128	4'-2"	801	33	1'-1"	2'-2"	1'-1"				
Y602	4 SERIES OF 11	4 SERIES OF 11	8 SERIES OF 11	4'-8" TO 5'-6"	672	1	1'-1"	3'-9" TO 4'-7"					1"
Y603	16	16	32	4'-8"	224	1	1'-1"	3'-9"					
Y604	64	64	128	3'-2"	609	1	1'-1"	2'-2"					
PARAPETS - MED-71-1918 R													
X501	16	16	32	10'-0"	334	STR							
X502	3	3	6	5'-6"	35	25	1'-8"	2'-5"	1'-4"	1½"	5"		
X503	13	13	26	5'-6"	150	STR							
X524	18	18	36	31'-6"	1183	STR							
Y501	84	84	168	7'-5"	1300	23	1'-1"	3'-2"	3'-0"			2¾"	
X621	3	3	6	32'-0"	288	STR							
Y621	84	84	168	4'-5"	1115	33	1'-1"	2'-5"	1'-1"				
Y622	4 SERIES OF 11	4 SERIES OF 11	8 SERIES OF 11	4'-11" TO 5'-9"	705	1	1'-1"	4'-0" TO 4'-10"					1"
Y623	16	16	32	4'-11"	236	1	1'-1"	4'-0"					
Y624	84	84	168	3'-5"	863	1	1'-1"	2'-5"					

1. THIS REINFORCING SCHEDULE IS FOR INFORMATION ONLY.
2. ALL REINFORCING STEEL SHALL BE EPOXY COATED.

NOTES:

3. THE BAR SIZE IS INDICATED IN THE BAR MARK. THE FIRST DIGIT INDICATES THE BAR SIZE. FOR EXAMPLE, AN A501 IS A #5 BAR. THE DIMENSIONS SHOWN ARE OUT TO OUT UNLESS OTHERWISE INDICATED. "R" INDICATES THE INSIDE RADIUS.

DESIGN AGENCY: ODOT CENTRAL OFFICE, OFFICE OF PRODUCTION
REVISED DFT | DATE 10-8-99 | STRUCTURE FILE NUMBER 52037591 & 52037831R
DRAWN TDB | REVISED
DESIGNED TDB | CHECKED TAA

REINFORCING SCHEDULE

MED-71-1918 L/R
I-71 OVER WILBER RD. (CR66)

MED-71-15.78

21/22

796/940

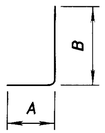

TYPE-1

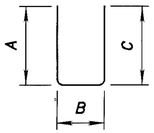

TYPE-2

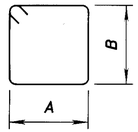

TYPE-3

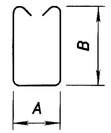

TYPE-4

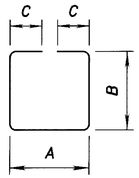

TYPE-5

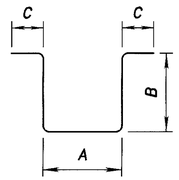

TYPE-6

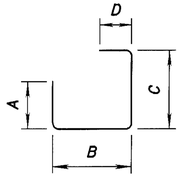

TYPE-7

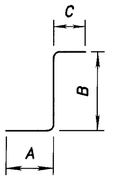

TYPE-8

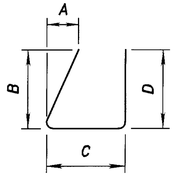

TYPE-9

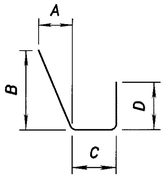

TYPE-10

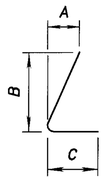

TYPE-11

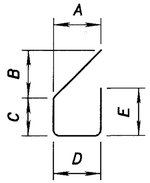

TYPE-12

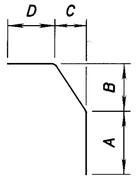

TYPE-13

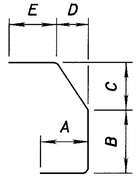

TYPE-14

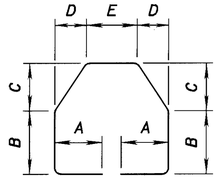

TYPE-15



TYPE-16



TYPE-17

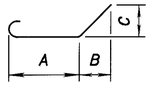

TYPE-18

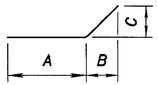

TYPE-19

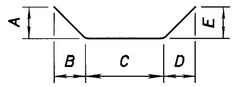

TYPE-20

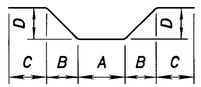

TYPE-21

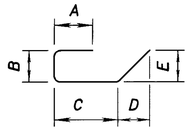

TYPE-22

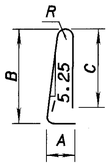

TYPE-23

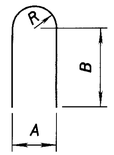

TYPE-24

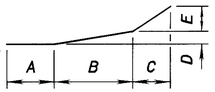

TYPE-25

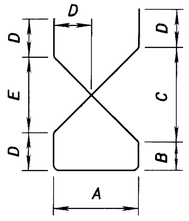

TYPE-26

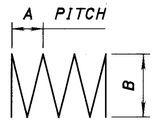

TYPE-27

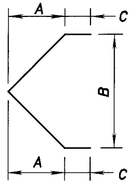

TYPE-28

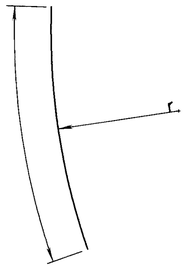

TYPE-29

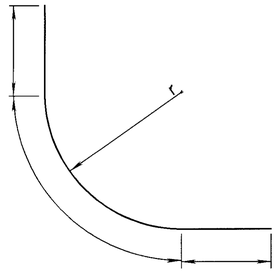

TYPE-30



TYPE-31

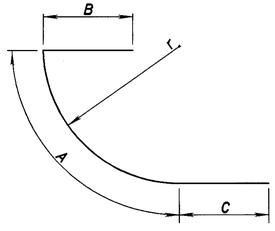

TYPE-32

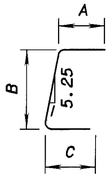

TYPE-33

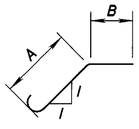

TYPE-34

NOTES

NOTE: ALL REINFORCING STEEL SHALL BE EPOXY COATED.

THE BAR SIZE IS INDICATED IN THE BAR MARK. THE FIRST DIGIT INIDCATES THE BAR SIZE. FOR EXAMPLE, AN A501 IS A #5 BAR. BAR DIMENSIONS SHOWN ARE OUT TO OUT UNLESS OTHERWISE NOTED. "R" INDICATES INSIDE RADIUS.

DESIGN AGENCY
ODOT CENTRAL OFFICE
OFFICE OF PRODUCTION

REVIEWED DFT
DATE 10-8-99
STRUCTURE FILE NUMBER 5203759L & 5203783R

DRAWN TDB
REVISED

DESIGNED TDB
CHECKED TAA

GENERAL PLAN
MED-71-1918 L/R
I-71 OVER WILBER RD. (CR66)

MED-71-15.78

22/22

797
940

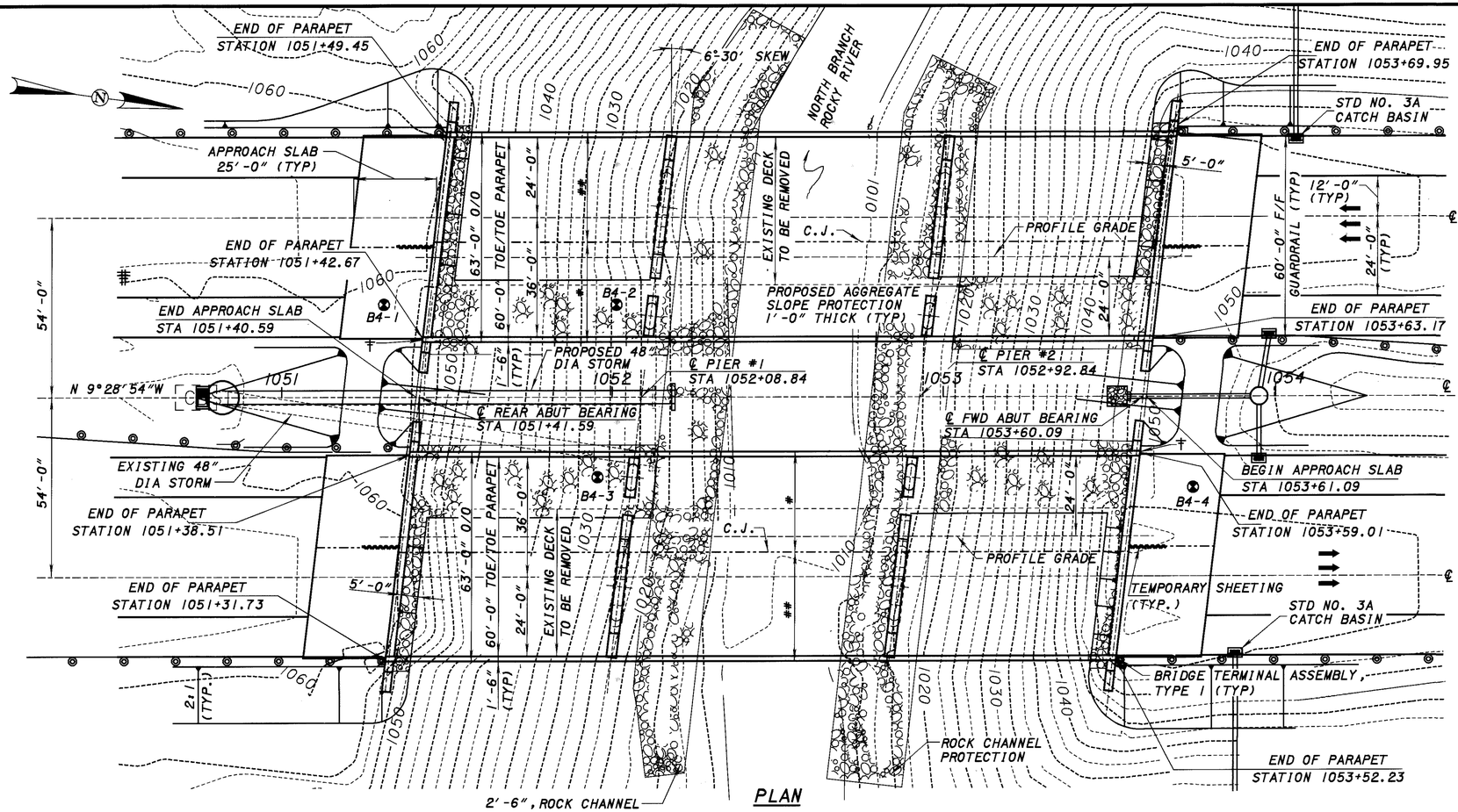

PLAN

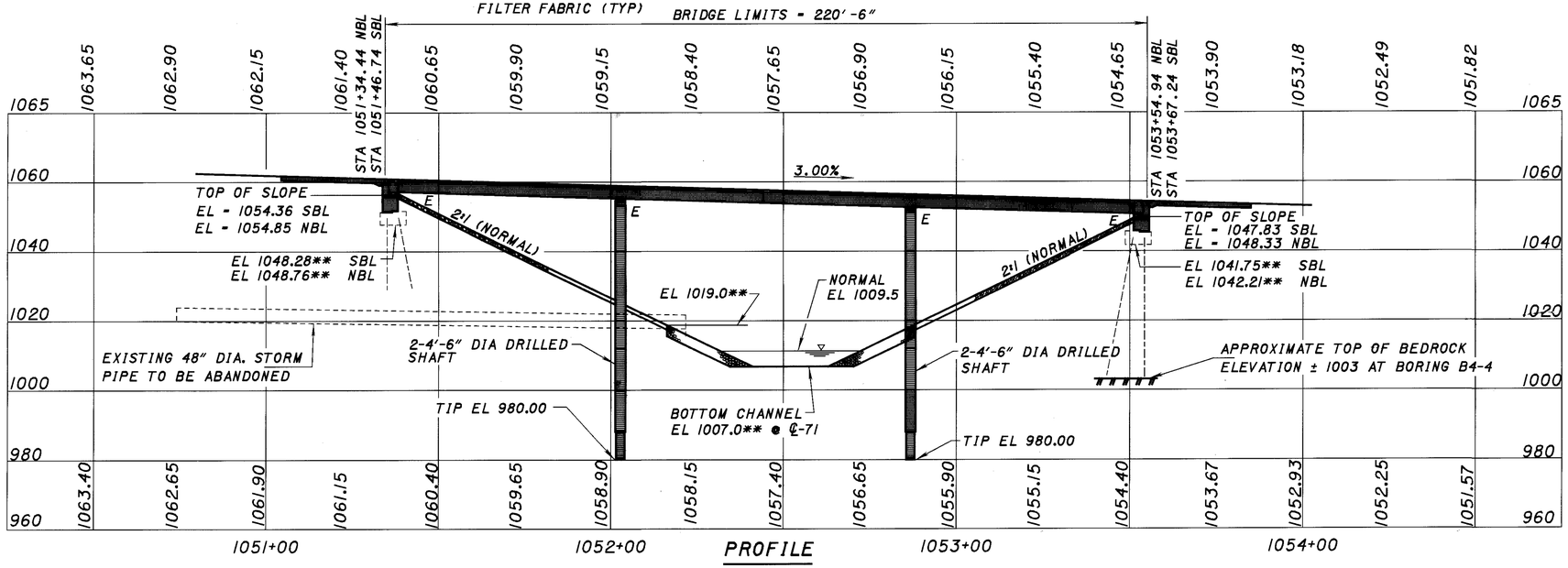

PROFILE

(PROFILE ALONG ℄ NORTHBOUND BRIDGE SHOWN, SOUTHBOUND BRIDGES IS SIMILAR)

BENCHMARK DATA

BM #9 - STATION 1058+98.99, ODOT GEODETIC MONUMENT STAMPED, ELEV. - 1041.83

NOTES

EARTHWORK LIMITS SHOWN ARE APPROXIMATE. ACTUAL SLOPES SHALL CONFORM TO PLAN CROSS SECTIONS.

PROPOSED PROFILE ELEVATIONS ARE ALONG THE PROFILE GRADE LINE.

PILES ARE HP10x42. THE ESTIMATED PAY LENGTHS ARE:

REAR ABUTMENT- 50'
FORWARD ABUTMENT - 45'

LEGEND:

E - EXPANSION

** FROM EXISTING PLANS

⊠ ORIGINAL SOIL BORING LOCATION

\# - PHASE 1
- PHASE 2

† - NO BRIDGE TERMINAL ASSEMBLY, SEE CSS2 FOR ADDITIONAL DETAILS.

DESIGN TRAFFIC:

2000 ADT - 3401O 2000 ADTT - 4082
2020 ADT - 46690 2020 ADTT - 5603

EXISTING STRUCTURE

TYPE: CONTINUOUS STEEL BEAM WITH REINFORCED CONCRETE DECK AND SUBSTRUCTURE

SPANS: 67'-3"±, 84'-0"±, 67'-3"± C/C BEARINGS

ROADWAY: 2 @ 39'-8"± FACE TO FACE OF SAFETY CURB

LOADING: CF 2000(57) AND AASHO ALTERNATE LOADING

SKEW: 6°-30'± LF

WEARING SURFACE: ASPHALT SOUTHBOUND BRIDGE
WEARING SURFACE: CONCRETE NORTHBOUND BRIDGE

APPROACH SLABS: 25'-0"± LONG (AS-1-54)

ALIGNMENT: TANGENT

CROWN: 3/16" PER FOOT

STRUCTURAL FILE NUMBER: 5203813L/5203848R

DATE BUILT: 1964

PROPOSED STRUCTURE

TYPE: REPLACE ALL BEAMS AND WIDEN SUPERSTRUCTURE BY ADDING TWO BEAM LINES TO ACCOMMODATE A ROADWAY WIDTH OF 60'-0" T/T PARAPET. REHABILITATE THE ABUTMENTS TO SEMI-INTEGRAL. NEW COMPOSITE CONCRETE DECK. A588 WEATHERING STEEL BEAMS.

SPANS: 67'-3", 84'-0", 67'-3" C/C BEARINGS

ROADWAY: 60'-0" T/T PARAPET

LOADING: HS20-44 CASE I AND ALTERNATE MILITARY

SKEW: 6°-30'± LF

WEARING SURFACE: MONOLITHIC CONCRETE

APPROACH SLABS: 25'-0" LONG (AS-1-81)
60'-0" TOE/TOE CURB

ALIGNMENT: TANGENT

CROWN: 3/16" PER FOOT

COORDINATES: LAT. N 41°-10'-48", LONG. W 81°-47'-13"

DESIGN AGENCY: ODOT CENTRAL OFFICE OFFICE OF PRODUCTION

DESIGNED	CHECKED	DRAWN	REVISED	REVIEWED	DATE	STRUCTURE FILE NUMBER
BRC	TAA	BRC		DFT	10-4-99	5203813L/5203848R

MEDINA COUNTY
STA. 1051+40.59
STA. 1053+61.09

SITE PLAN
MED-71-1992 L/R
I-71 OVER ROCKY RIVER

MED-71-15.78

1 / 23

798
940

GENERAL NOTES

STANDARD DRAWINGS AND SPECIFICATIONS:

REFERENCE SHALL BE MADE TO STANDARD DRAWINGS:

AS-1-81	REVISED 09-15-94
SBR-1-99	DATED 01-12-99
PCB-1-91	REVISED 07-06-99
BS-1-93	DATED 12-19-94
GSD-1-96	DATED 02-12-97

AND TO SUPPLEMENTAL SPECIFICATIONS:

816	DATED 04-21-97
842	DATED 01-06-99
844	DATED 01-06-99
863	DATED 10-12-99
899	DATED 10-21-98
910	DATED 07-28-98
911	DATED 07-10-97
954	DATED 09-09-97

DESIGN SPECIFICATIONS:

THIS STRUCTURE CONFORMS TO "STANDARD SPECIFICATIONS FOR HIGHWAY BRIDGES" ADOPTED BY THE AMERICAN ASSOCIATION OF STATE HIGHWAY AND TRANSPORTATION OFFICIALS, 1996 INCLUDING THE 1997 AND 1998 INTERIM SPECIFICATIONS AND THE ODOT DESIGN MANUAL.

DESIGN LOADING:

HS20-44, CASE I AND THE ALTERNATE MILITARY LOADING.

DESIGN DATA:

HIGH PERFORMANCE CONCRETE - COMPRESSIVE STRENGTH 4500 PSI (SUPERSTRUCTURE)

CONCRETE CLASS C - COMPRESSIVE STRENGTH 4000 PSI (SUBSTRUCTURE)

HIGH PERFORMANCE CONCRETE - COMPRESSIVE STRENGTH 4000 PSI (SUBSTRUCTURE)

REINFORCING STEEL - ASTM A615, A616 OR A617 GRADE 60 MINIMUM YIELD STRENGTH 60 Ksi. SPIRAL REINFORCEMENT MAY BE PLAIN BARS, ASTM A82 OR A615

STRUCTURAL STEEL ASTM A588 - YIELD STRENGTH 50 KSI (WEATHERING)

DECK PROTECTION METHOD - EPOXY COATED REINFORCING STEEL AND 2½" CONCRETE COVER AND HIGH PERFORMANCE CONCRETE.

MONOLITHIC WEARING SURFACE IS ASSUMED, FOR DESIGN PURPOSES, TO BE 1" THICK.

EXISTING STRUCTURE VERIFICATION:

DETAILS AND DIMENSIONS SHOWN ON THESE PLANS PERTAINING TO THE EXISTING STRUCTURE HAVE BEEN OBTAINED FROM PLANS OF THE EXISTING STRUCTURE AND FROM FIELD OBSERVATIONS AND MEASUREMENTS. CONSEQUENTLY, THEY ARE INDICATIVE OF THE EXISTING STRUCTURE AND THE PROPOSED WORK BUT THEY SHALL BE CONSIDERED TENTATIVE AND APPROXIMATE. THE CONTRACTOR IS REFERRED TO CMS SECTIONS 102.05, 105.02 AND 513.02.

CONTRACT BID PRICES SHALL BE BASED UPON A RECOGNITION OF THE UNCERTAINTIES DESCRIBED ABOVE AND UPON A PREBID EXAMINATION OF THE EXISTING STRUCTURE BY THE CONTRACTOR. HOWEVER, ALL PROJECT WORK SHALL BE BASED UPON ACTUAL DETAILS AND DIMENSIONS WHICH HAVE BEEN VERIFIED BY THE CONTRACTOR IN THE FIELD.

EXISTING BRIDGE PLANS MAY BE INSPECTED IN THE OFFICE OF STRUCTURAL ENGINEERING IN COLUMBUS, OHIO OR AT THE ODOT DISTRICT THREE OFFICE IN ASHLAND, OHIO.

DOWEL HOLES WITH NON-SHRINK, NON METALLIC GROUT

ALL DOWEL HOLES SHALL BE CORE DRILLED AND GROUTED WITH AN EPOXY MORTAR MEETING THE REQUIREMENTS OF CMS 510. PAYMENT FOR ALL OF THE ABOVE SHALL BE INCLUDED WITH THE ASSOCIATED CONCRETE ITEM.

ITEM 202 PORTIONS OF STRUCTURE REMOVED OVER 20 FOOT SPAN, AS PER PLAN:

PORTION OF THE STRUCTURE REMOVED, AS PER PLAN, SHALL INCLUDE THE ELEMENTS INDICATED IN THE PLANS AND GENERAL NOTES AND ARE NOT SEPARATELY LISTED FOR PAYMENT, EXCEPT FOR WEARING COURSE REMOVAL. ITEMS TO BE REMOVED INCLUDE ALL EXISTING MATERIALS BEING REPLACED BY NEW CONSTRUCTION AND MISCELLANEOUS ITEMS THAT ARE NOT SHOWN TO BE INCORPORATED INTO THE FINAL CONSTRUCTION AND ARE DIRECTED TO BE REMOVED BY THE ENGINEER. THE USE OF EXPLOSIVES, HEADACHE BALLS AND/OR HOE-RAMS WILL NOT BE PERMITTED. THE METHOD OF REMOVAL AND THE WEIGHT OF HAMMER SHALL BE APPROVED BY THE ENGINEER. ALL WORK SHALL BE DONE IN A MANNER THAT WILL NOT CUT, ELONGATE OR DAMAGE THE EXISTING REINFORCING STEEL TO BE PRESERVED.

PROTECTION OF TRAFFIC:
PRIOR TO DEMOLITION OF ANY PORTIONS OF THE EXISTING SUPERSTRUCTURE, THE CONTRACTOR SHALL SUBMIT PLANS FOR THE PROTECTION OF TRAFFIC (VEHICULAR, PEDESTRIAN, ETC.) ADJACENT TO AND/OR UNDER THE STRUCTURE TO THE ENGINEER FOR APPROVAL. THESE PLANS SHALL INCLUDE PROVISIONS FOR ANY DEVICES AND STRUCTURES THAT MAY BE NECESSARY TO ENSURE SUCH PROTECTION. TEMPORARY VERTICAL CLEARANCES SPECIFIED IN THE PROPOSAL SHALL BE MAINTAINED AT ALL TIMES EXCEPT AS OTHERWISE APPROVED BY THE ENGINEER.

CUT LINE CONSTRUCTION JOINT PREPARATION:
SAW CUT BOUNDARIES OF PROPOSED CONCRETE REMOVALS 1" DEEP. REMOVE CONCRETE TO A ROUGH SURFACE. WHERE PRACTICABLE, THE EXISTING REINFORCING STEEL WHERE REQUIRED IN THE PLANS SHALL BE LEFT IN PLACE. INSTALL DOWEL BARS IF SPECIFIED. PRIOR TO CONCRETE PLACEMENT ABRASIVELY CLEAN JOINT SURFACE AND EXPOSED REINFORCEMENT TO REMOVE LOOSE AND DISINTEGRATED CONCRETE AND LOOSE RUST. THE JOINT SURFACE AND EXPOSED REINFORCEMENT SHALL BE THOROUGHLY CLEANED OF ALL DIRT, DUST, OR OTHER FOREIGN MATERIAL BY THE USE OF WATER, AIR UNDER PRESSURE, OR OTHER METHODS THAT PRODUCE SATISFACTORY RESULTS. CONCRETE BONDING SURFACES SHALL BE WET WITHOUT FREE WATER AS CONCRETE IS PLACED.

SUBSTRUCTURE CONCRETE REMOVAL:
SUBSTRUCTURE CONCRETE REMOVAL SHALL BE BY MEANS OF APPROVED PNEUMATIC HAMMERS EMPLOYING POINTED AND BLUNT CHISEL TOOLS. HYDRAULIC HOE-RAM TYPE HAMMERS WILL NOT BE PERMITTED. THE WEIGHT OF THE HAMMER SHALL NOT BE MORE THAN 35 POUNDS FOR REMOVAL WITHIN 18 INCHES OF PORTIONS TO BE PRESERVED. OUTSIDE THE 18 INCH LIMIT, A HAMMER HEAVIER THAN 35 POUNDS, BUT NOT TO EXCEED 90 POUNDS, MAY BE USED AT THE APPROVAL OF THE ENGINEER. PNEUMATIC HAMMERS SHALL NOT BE PLACED IN DIRECT CONTACT WITH REINFORCING STEEL THAT IS TO BE RETAINED IN THE REBUILT STRUCTURE.

¼ INCH SCARIFICATION: THE EXISTING PIER BRIDGE SEAT SURFACE SHALL BE SCARIFIED ¼ INCH INTO SOUND CONCRETE PRIOR TO PLACEMENT OF THE CONCRETE. THE SURFACE SHALL BE THOROUGHLY CLEANED OF ALL DIRT, DUST, OR OTHER FOREIGN MATERIALS BY THE USE OF WATER, AIR UNDER PRESSURE, OR ANOTHER METHOD THAT PRODUCES RESULTS SATISFACTORY TO THE ENGINEER. THE CONCRETE BONDING SURFACE SHALL BE WET WITHOUT FREE WATER AS CONCRETE IS PLACED.

PAYMENT
ALL WORK SHALL BE PAID FOR UNDER ITEM 202 PORTIONS OF STRUCTURES REMOVED, AS PER PLAN

TRAFFIC MAINTENANCE:

SEE ROADWAY PLANS FOR ADDITIONAL TRAFFIC NOTES AND DETAILS.

SEALING OF CONCRETE SURFACES (EPOXY-URETHANE)

EPOXY-URETHANE SHALL BE THE "BUFF" COLOR MEETING FEDERAL COLOR STANDARD NO. 37722 AS PER THE DETAILS IN THE PLAN.

DRILLED SHAFT CONSTRUCTION METHOD

CONSTRUCTION ON THIS PROJECT SHALL PROCEED PER 524.04(D) PERMANENT CASING CONSTRUCTION METHOD.

ITEM SPECIAL - WATERPROOFING, MISC.: SEMI-INTEGRAL ABUTMENT JOINT WATERPROOFING

INSTALL A 3 FOOT WIDE STRIP, 3/32 INCH THICK, GENERAL PURPOSE, HEAVY DUTY NEOPRENE SHEET WITH NYLON FABRIC REINFORCEMENT AT LOCATIONS SHOWN IN THE PLANS. SECURE THE 3 FOOT WIDE NEOPRENE SHEETING TO THE CONCRETE WITH 1¼" X 3/32" (LENGTH X SHANK DIAMETER) #10 GALVANIZED BUTTON HEAD SPIKE THROUGH A 1 INCH OUTSIDE DIAMETER, #10 GAGE GALVANIZED WASHER. MAXIMUM FASTENER SPACING IS 9 INCHES. OTHER SIMILAR GALVANIZED DEVICES WHICH WILL NOT DAMAGE EITHER THE NEOPRENE OR THE CONCRETE MAY BE USED SUBJECT TO THE APPROVAL OF THE ENGINEER.

CENTER THE NEOPRENE STRIPS ON ALL JOINTS. FOR HORIZONTAL JOINTS, SECURE THE HORIZONTAL NEOPRENE STRIP BY USING A SINGLE LINE OF FASTENERS, STARTING AT 6 INCHES (+/-) FROM THE TOP OF THE NEOPRENE STRIP. FOR THE VERTICAL JOINTS SECURE THE VERTICAL NEOPRENE STRIP BY USING A SINGLE VERTICAL LINE OF FASTENERS, STARTING AT 6 INCHES (+/-) FROM THE VERTICAL EDGE OF THE NEOPRENE STRIP NEAREST TO THE CENTERLINE OF ROADWAY. FOR VERTICAL JOINTS, INSTALL 2 ADDITIONAL FASTENERS, AT 6 INCHES CENTER TO CENTER, ACROSS THE TOP OF THE NEOPRENE STRIP ON THE SAME SIDE OF THE VERTICAL JOINT AS WHERE THE SINGLE VERTICAL ROW OF FASTENERS IS LOCATED.

THE VERTICAL NEOPRENE STRIPS SHOULD COMPLETELY OVERLAP THE HORIZONTAL STRIPS. LAPS IN THE LENGTH OF THE HORIZONTAL STRIPS DUE TO MATERIAL MANUFACTURING SHALL BE AT LEAST ONE FOOT IN LENGTH, IF NOT VULCANIZED OR ADHESIVE BONDED, OR 6 INCHES IN LENGTH IF THE LAP IS VULCANIZED OR ADHESIVE BONDED. NO LAPS ARE ACCEPTABLE IN VERTICALLY INSTALLED NEOPRENE STRIPS.

THE NEOPRENE SHEETING SHALL BE 3/32 INCH THICK GENERAL PURPOSE, HEAVY DUTY NEOPRENE SHEET WITH NYLON FABRIC REINFORCEMENT. THE SHEETING SHALL BE "FAIRPRENE NUMBER NN-0003", BY E. I. DUPONT DE NEMOURS AND COMPANY, INC., "WINGPRENE" BY THE GOODYEAR TIRE AND RUBBER COMPANY, OR AN APPROVED ALTERNATE. THE NEOPRENE SHEETING SHALL CONFORM TO THE FOLLOWING:

DESCRIPTION OF TEST	ASTM METHOD	REQUIREMENT
THICKNESS, INCHES	D 751	0.094 ± .01
BREAKING STRENGTH, GRAB WXF, LBS, MINIMUM	D 751	700 X 700
ADHESIVE 1" STRIP, 2" MINIMUM, LBS, MINIMUM	D 751	9
BURST STRENGTH (MULLEN) PSI, MINIMUM	D 751	1400
HEAT AGING 70 HOURS T 212 F, 180 BEND WITHOUT CRACKING	D 2136	NO CRACKING OF COATING
LOW TEMPERATURE BRITTLENESS 1 HOUR AT -40 F, BEND AROUND ¼ INCH MANDREL	D 2136	NO CRACKING OF COATING

PAYMENT FOR LABOR MATERIALS AND INSTALLATION OF THESE ITEMS SHALL BE INCLUDED IN INTEM SPECIAL- WATERPROOFING, MISC. : SEMI-INTEGRAL ABUTMENT JOINT WATERPROOFING.

ITEM 524 DRILLED SHAFTS, 54" DIAMETER, AS PER PLAN

THE EXISTING 48" STORM CORRUGATED PIPE WILL CONFLICT WITH THE CONSTRUCTION OF THE DRILLED SHAFT AT THE REAR PIER. THE CONTRACTOR WILL BE REQUIRED TO DRILL THEM THRU THE EXISTING PIPE AND ALSO PROVIDE A CASING TO CONFINE THE CONCRETE IN THE SHAFT. THESE REQUIREMENTS ARE IN ADDITION TO ANY OTHER REQUIREMENT FOR THIS PAY ITEM.

ITEM 601 - ROCK CHANNEL PROTECTION

DUMPED ROCK CHANNEL PROTECTION SHALL BE USED TO REPAIR EXISTING CHANNEL PROTECTION BY MIXING IT IN WITH EXISTING AND REPLACING ERODED ROCK CHANNEL PROTECTION. QUANTITIES INCLUDE A 20% CONTINGENCY FACTOR.

ITEM 503, UNCLASSIFIED EXCAVATION, AS PER PLAN:

UNCLASSIFIED EXCAVATION SHALL BE IN ACCORDANCE WITH 503 EXCEPT THAT THE BACKFILL MATERIAL BEHIND THE ABUTMENTS SHALL BE 203 MATERIAL PLACED IN 6" LIFTS. EXCAVATION AT ABUTMENTS IN ADDITION TO THAT NECESSARY TO REMOVE PORTION OF THE EXISTING STRUCTURE SHALL BE INCLUDED IN THE LUMP SUM PRICE BID FOR ITEM 503, UNCLASSIFIED EXCAVATION FOR PAYMENT.

ITEM 842 CLASS C CONCRETE, (FOOTINGS, PIERS AND ABUTMENTS) AS PER PLAN

THE COARSE AGGREGATE SHALL BE NO. 8 LIMESTONE. THESE ITEMS SHALL INCLUDE THE COST OF THE REINFORCING STEEL.

ITEM 844 HIGH PERFORMANCE CONCRETE, AS PER PLAN

THE DESIGN MIX SHALL BE MIX NO. 4 LIMESTONE. THE OPTION OF SLIPFORM CONSTRUCTION OF THE BRIDGE PARAPET IS NOT PERMITTED. THESE ITEMS SHALL INCLUDE THE COST OF THE REINFORCING STEEL.

ITS CONDUIT:

THE CONDUIT WILL BE PLACED WITHIN THE OUTSIDE PARAPET OF LEFT AND RIGHT STRUCTURES. SEE CSS3 &CSS4 FOR DETAILS.

REINFORCING STEEL:

NEW REINFORCING STEEL MAY REQUIRE FIELD CUTTING OR BENDING TO BE PROPERLY FITTED. PAYMENT SHALL BE INCLUDED UNDER ITEM 844 HIGH PERFORMANCE CONCRETE.

ITEM 518 - POROUS BACKFILL WITH FILTER FABRIC, AS PER PLAN

POROUS BACKFILL SHALL BE #57 GRAVEL ONLY.

PILE DESIGN LOADS (ULTIMATE BEARING VALUE):

THE ULTIMATE BEARING VALUE IS 70 TONS. FOR REAR AND FORWARD ABUTMENTS THE PILES ARE HP10x42.

24 PILES, 50' LONG, ESTIMATED LENGTH (REAR ABUTMENT)
24 PILES, 45' LONG, ESTIMATED LENGTH (FORWARD ABUTMENT)
24 PILES OF ORDER LENGTH 50' (REAR ABUTMENT)
24 PILES OF ORDER LENGTH 45' (FORWARD ABUTMENT)
24 SPLICES

THE ULTIMATE BEARING VALUE IS TWO TIMES THE ACTUAL DESIGN LOAD.

DRILLED SHAFT DESIGN VALUE:

THE ALLOWABLE END BEARING PRESSURE ASSUMED IS 15 TONS/SQ FT. THE ALLOWABLE SIDE ADHESION PRESSURE IS 0.5 TONS/SQ FT.

SURVEY DISC ON STRUCTURE:

THE CONTRACTOR SHALL NOTIFY THE ENGINEER AT LEAST ONE (1) WEEK IN ADVANCE OF POURING THE CONCRETE FOR COMPLETION OF THE ABUTMENT. THE ENGINEER WILL PROVIDE THE CONTRACTOR ONE (1) SURVEY DISC FOR EACH STRUCTURE (OBTAINED FROM THE DISTRICT SURVEYOR) WHICH THE CONTRACTOR SHALL PLACE IN THE SURFACE OF THE FRESH CONCRETE. THE LOCATION OF THE DISC SHALL BE ON THE ABUTMENT, AND ON A FLAT, HORIZONTAL SURFACE BEYOND THE EDGE OF DECK AND PARAPET. THE BENCHMARK SHALL BE ACCESSIBLE TO A SURVEYOR'S ROD WITHOUT ANY OBSTRUCTIONS. COST OF THIS WORK IS CONSIDERED INCIDENTAL TO THE CONCRETE BID ITEM.

ITEM 601 - CRUSHED AGGREGATE SLOPE PROTECTION

THE QUANTITIES GIVEN ARE FOR ADDING SLOPE PROTECTION TO WIDENED SIDES, FOR REPAIR OF EXISTING SLOPE PROTECTION AND FOR MIXING IN/REPAIR OF SLOPE PROTECTION. QUANTITIES INCLUDE A 20% CONTINGENCY FACTOR.

ITEM 507 - PILES

ABUTMENT PILES SHALL BE DRIVEN TO REFUSAL ON BEDROCK. REFUSAL SHALL BE CONSIDERED AS OBTAINED BY PENETRATING SOFT BEDROCK FOR ⅛" WITH A MINIMUM RESISTANCE OF 20 BLOWS PER 1" OR REFUSAL SHALL BE CONSIDERED AS OBTAINED AFTER THE PILE HAS CONTACTED HARD BEDROCK AND THE PILE HAS THEN RECEIVED AT LEAST 20 BLOWS.
SEE REAR ABUT PILE NOTE ON SHEET 8 23.

DESIGN AGENCY: ODOT CENTRAL OFFICE, OFFICE OF PRODUCTION
DESIGNED: TAA | DRAWN: TAA | CHECKED: DFT
REVIEWED: BRC | DATE: 10-4-99
REVISED | REVISED
STRUCTURE FILE NUMBER: 5203813L/5203848R

GENERAL NOTES
MED-71-1992 L/R
I-71 OVER ROCKY RIVER

MED-71-15.78

2 / 23

799
940

		MED-71-1992 L	MED-71-1992 R		ESTIMATED QUANTITIES	MED-71-1992 L (SOUTHBOUND)				MED-71-1992 R (NORTHBOUND)			
ITEM	EXTENSION	TOTAL	TOTAL	UNIT	DESCRIPTION	ABUT.	PIERS	SUPER.	GEN.	ABUT.	PIERS	SUPER.	GEN.
202	11203	LUMP	LUMP		PORTIONS OF STRUCTURE REMOVED, OVER 20 FOOT SPAN, AS PER PLAN	LUMP	LUMP	LUMP		LUMP	LUMP	LUMP	
503	11100	LUMP	LUMP		COFFERDAMS, CRIBS AND SHEETING				LUMP				LUMP
503	21301	LUMP	LUMP		UNCLASSIFIED EXCAVATION, AS PER PLAN	LUMP				LUMP			
505	11100	LUMP	LUMP		PILE DRIVING EQUIPMENT MOBILIZATION	LUMP				LUMP			
507	00100	1140	1140	LF	STEEL PILES HP10x42, FURNISHED	1140				1140			
507	00150	1140	1140	LF	STEEL PILES HP10x42, DRIVEN	1140				1140			
507	50500	12	12	EACH	STEEL PILE SPLICES	12				12			
512	44400	9	9	SY	TYPE B WATERPROOFING	9				9			
SPECIAL	51267200	50	50	SY	WATERPROOFING, MISC.: SEMI-INTEGRAL ABUTMENT JOINT WATERPROOFING	50				50			
SPECIAL	51267510	640	640	SY	SEALING OF CONCRETE SURFACES (EPOXY-URETHANE)	125	515			125	515		
516	13900	58	58	SF	2" PREFORMED EXPANSION JOINT FILLER	58				58			
516	44000	16	16	EACH	ELASTOMERIC BEARING WITH INTERNAL LAMINATES AND LOAD PLATE (NEOPRENE), (12"x20"x1 15/16" PAD		16				16		
					AND 13"x21"x2 1/4" BEVELED PLATE)								
516	44101	16	16	EACH	ELASTOMERIC BEARING WITH INTERNAL LAMINATES AND LOAD PLATE	16				16			
					(NEOPRENE), AS PER PLAN (9"x14"x2 3/4" PAD AND 11"x15"x1 5/8" PLATE)								
518	21231	LUMP	LUMP		POROUS BACKFILL WITH FILTER FABRIC, AS PER PLAN	LUMP				LUMP			
518	40000	164	164	LF	6" PERFORATED CORRUGATED PLASTIC PIPE	164				164			
518	40010	39	39	LF	6" NON-PERFORATED CORRUGATED PLASTIC PIPE, INCLUDING SPECIALS	39				39			
519	11101	28	49	SF	PATCHING CONCRETE STRUCTURE, AS PER PLAN **		28				49		
524	94804	32	32	LF	DRILLED SHAFTS, 42" DIAMETER, INTO BEDROCK		32				32		
524	94906	96	96	LF	DRILLED SHAFTS, 54" DIAMETER, ABOVE BEDROCK, AS PER PLAN		96				96		
601	20500	164	164	CY	CRUSHED AGGREGATE SLOPE PROTECTION				164				164
601	32100	529	530	CY	ROCK CHANNEL PROTECTION, TYPE B WITH FILTER				529				530
842	40501	132	132	CY	CLASS C CONCRETE, PIER ABOVE FOOTINGS, AS PER PLAN		132				132		
842	44101	104	104	CY	CLASS C CONCRETE, ABUTMENT NOT INCLUDING FOOTING, AS PER PLAN	104				104			
842	46501	52	52	CY	CLASS C CONCRETE, FOOTING, AS PER PLAN	52				52			
844	48001	381	381	CY	HIGH PERFORMANCE CONCRETE SUPERSTRUCTURE (DECK), AS PER PLAN, MIX 4			381				381	
844	48021	69	69	CY	HIGH PERFORMANCE CONCRETE SUPERSTRUCTURE (PARAPET), AS PER PLAN, MIX 4			69				69	
844	48041	56	56	CY	HIGH PERFORMANCE CONCRETE SUBSTRUCTURE, AS PER PLAN	56				56			
844	49000	LUMP	LUMP		HIGH PERFORMANCE CONCRETE TRIAL MIX			LUMP				LUMP	
863	10060	LUMP	LUMP		STRUCTURAL STEEL MEMBERS, LEVEL THREE (3) FABRICATION, A588			LUMP				LUMP	
863	20000	5040	5040	EACH	WELDED STUD SHEAR CONNECTORS			5040				5040	

** ESTIMATED QUANTITY IS 3x MEASURED VALUE.

DESIGN AGENCY: ODOT CENTRAL OFFICE, OFFICE OF PRODUCTION

REVIEWED: DFT | DATE: 10-4-99 | STRUCTURE FILE NUMBER: 5203813L/5203848R

DRAWN: TAA | REVISED:

DESIGNED: TAA | CHECKED: BKL

ESTIMATED QUANTITIES
MED-71-1992 L/R
I-71 OVER ROCKY RIVER

MED-71-15.78

800
940

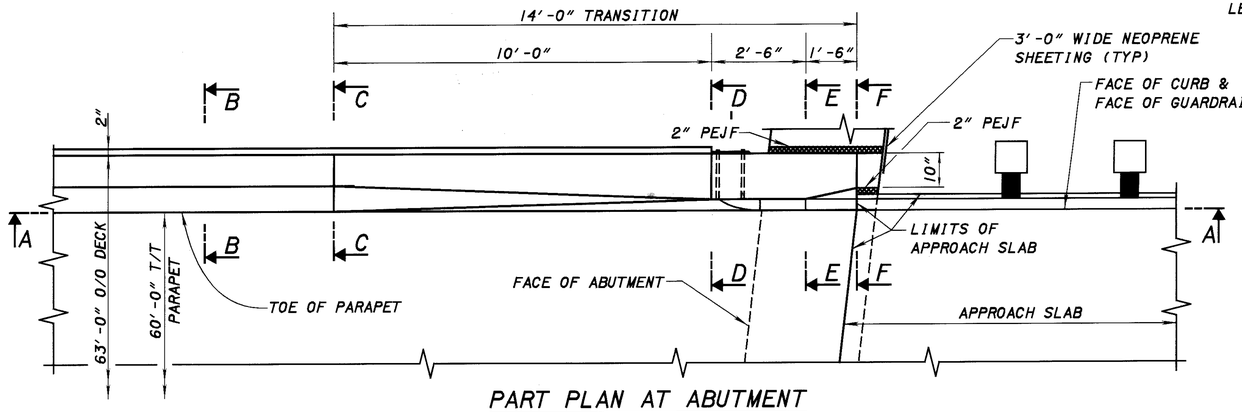

PART PLAN AT ABUTMENT

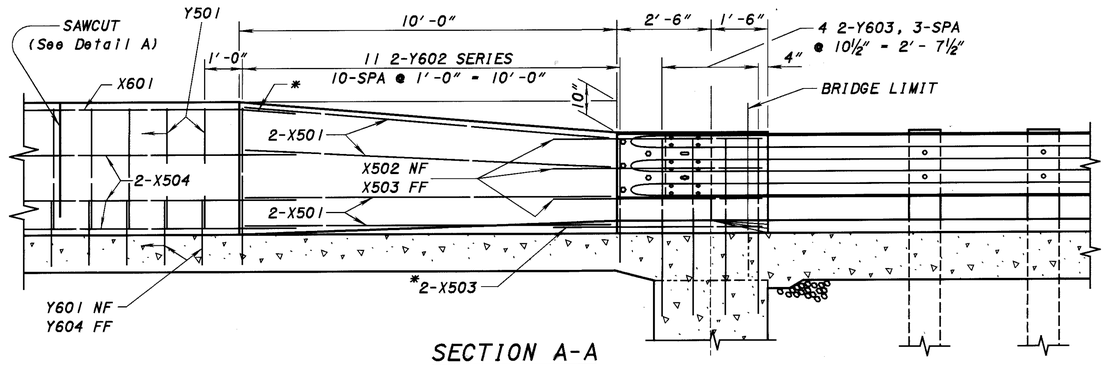

SECTION A-A

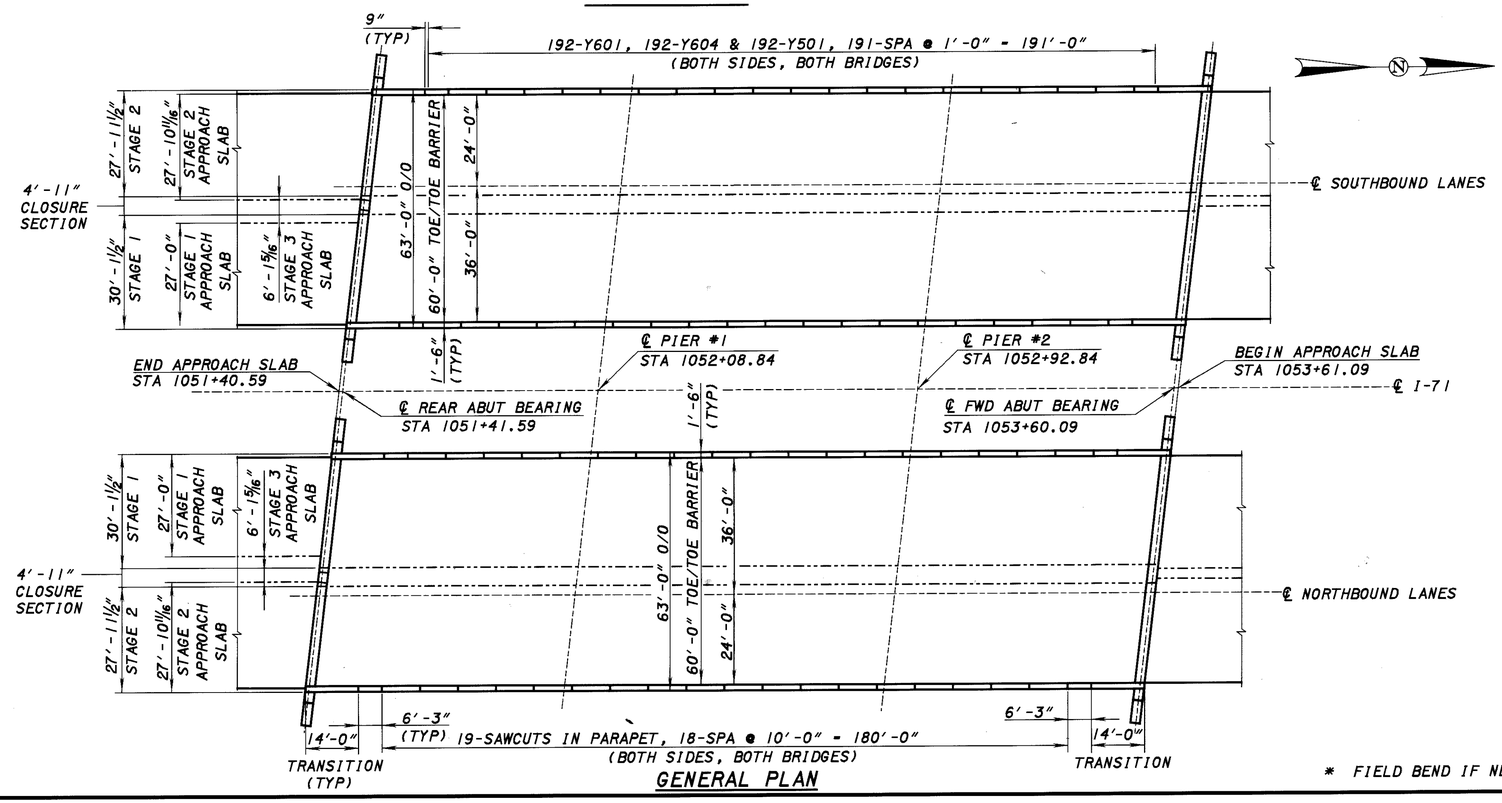

GENERAL PLAN

LEGEND: NF - NEAR FACE
FF - FAR FACE
* FIELD BEND IF NECESSARY

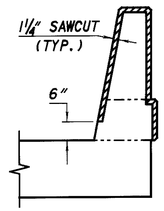

DETAIL A

(Section through sawcut)
Sawcut Perimeter = 7′-6″

CONTROL JOINTS FOR CONCRETE PARAPETS: THE JOINTS SHALL BE CONSTRUCTED BY SAWING 1¼ INCH DEEP ALONG THE PERIMETER OF THE PARAPET AS SOON AS THE SAW CAN BE OPERATED WITHOUT DAMAGING THE CONCRETE.

THE USE OF AN EDGE GUIDE, FENCE, OR JIG IS REQUIRED TO ENSURE THAT THE CUT JOINT IS STRAIGHT, TRUE, AND ALIGNED ON ALL FACES OF THE PARAPET. THE JOINT WIDTH SHALL BE THE WIDTH OF THE SAW BLADE, A NOMINAL WIDTH OF ¼ INCH.

THE PERIMETER OF THE DEFLECTION CONTROL JOINT SHALL BE SEALED WITH A CAULKING MATERIAL TO A MINIMUM DEPTH OF ONE INCH CONFORMING TO FEDERAL SPECIFICATION TT-S-00227E. THE BOTTOM ONE-HALF INCH OF THE OUTSIDE FACE OF THE PARAPET SHOULD BE LEFT UNSEALED TO ALLOW ANY WATER WHICH MAY ENTER THE JOINT TO ESCAPE.

QUANTITIES OF CONCRETE, REINFORCING STEEL, DEFLECTION JOINT SAWCUT AND CAULKING MATERIAL FOR PARAPET ARE INCLUDED WITH ITEM 844 HIGH PERFORMANCE CONCRETE, SUPERSTRUCTURE (PARAPET).

FOR BRIDGE TERMINAL ASSEMBLY SEE STANDARD CONSTRUCTION DRAWING GR-3.1 AND GR-3.2.

MIN LAP SPLICE LENGTH: #5 BAR - 2′-6″
#6 BAR - 3′-0″

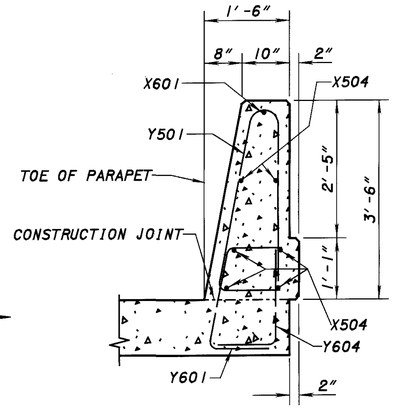

SECTION B-B & C-C

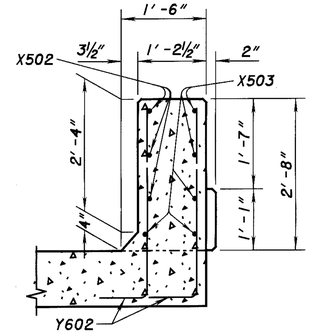

SECTION D-D

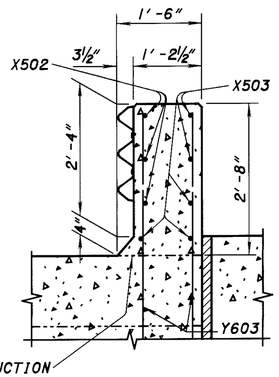

SECTION E-E

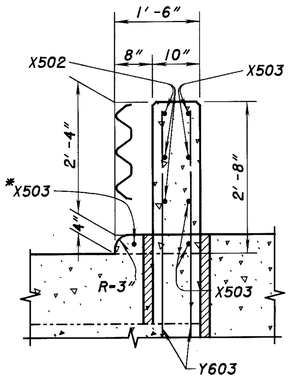

SECTION F-F

* FIELD BEND IF NECESSARY

DESIGN AGENCY: ODOT CENTRAL OFFICE, OFFICE OF PRODUCTION
REVIEWED: DFT | DATE: 10-4-99 | STRUCTURE FILE NUMBER: 5203813L/5203848R
DRAWN: TDB | REVISED:
DESIGNED: TDB | CHECKED: TAA

SUPERSTRUCTURE DETAILS

MED-71-1992 L/R
I-71 OVER ROCKY RIVER

MED-71-15.78

4 / 23

801
340

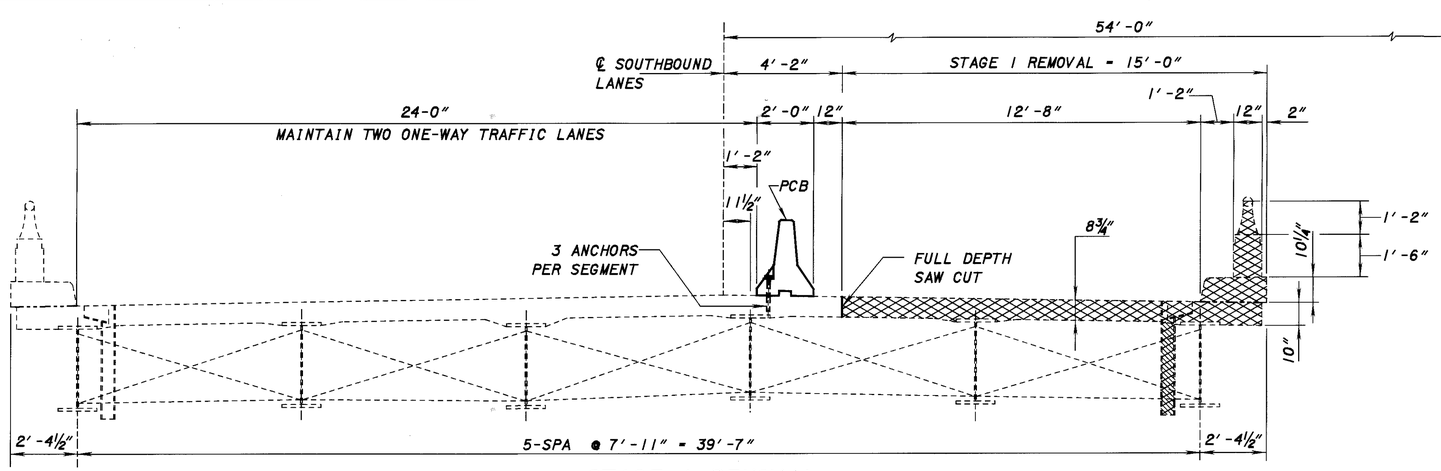

STAGE I REMOVAL

(SOUTHBOUND LANES SHOWN, NORTHBOUND MIRROR IMAGE)

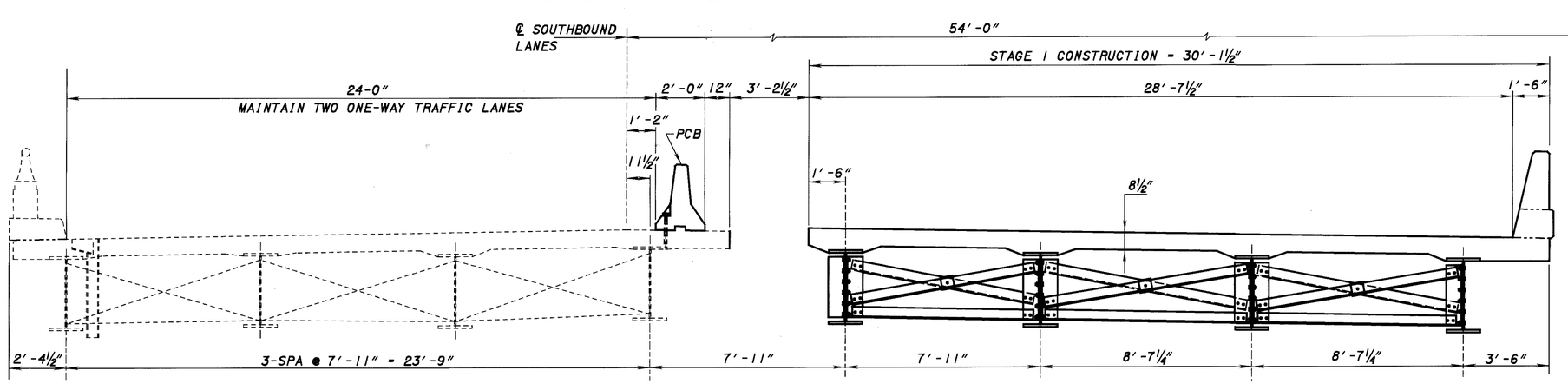

STAGE I CONSTRUCTION

(SOUTHBOUND LANES SHOWN, NORTHBOUND MIRROR IMAGE)

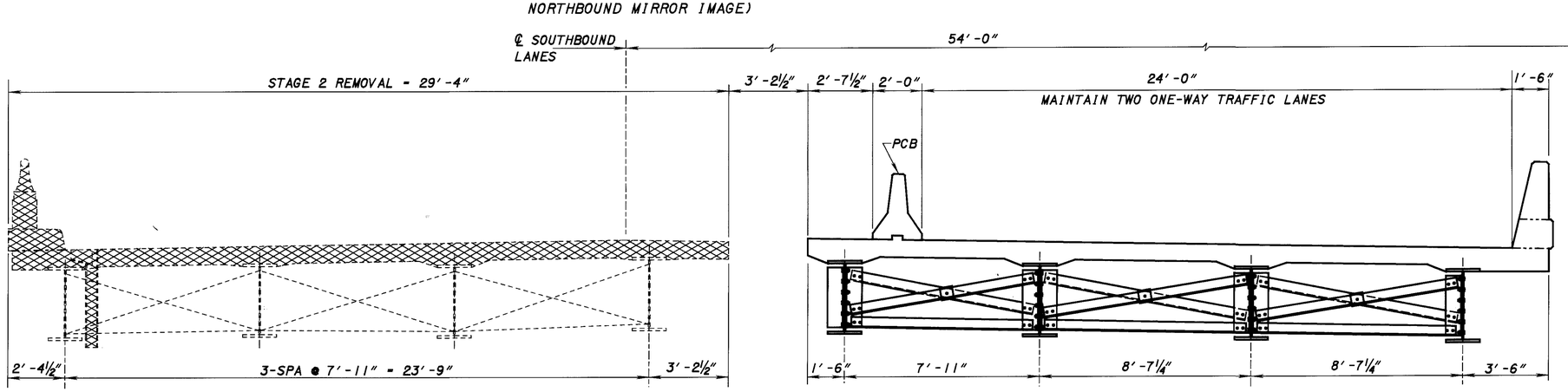

STAGE 2 REMOVAL

(SOUTHBOUND LANES SHOWN, NORTHBOUND MIRROR IMAGE)

LEGEND

PCB - PORTABLE CONCRETE BARRIER.

PORTION OF STRUCTURE TO BE REMOVED

DESIGN AGENCY: ODOT CENTRAL OFFICE, OFFICE OF PRODUCTION

REVIEWED: DFT | DATE: 10-4-99 | STRUCTURE FILE NUMBER: 5203813L/5203848R

DRAWN: TAA | REVISED:

DESIGNED: TAA | CHECKED: TDB

STAGE CONSTRUCTION DETAILS

MED-71-1992 L/R

I-71 OVER ROCKY RIVER

MED-71-15.78

5/23

802/940

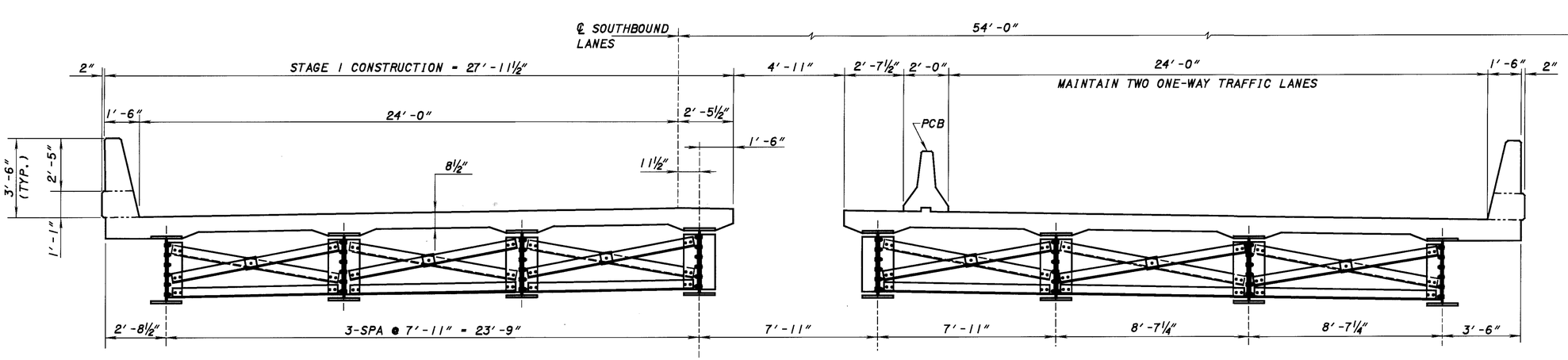

STAGE 2 CONSTRUCTION

(SOUTHBOUND LANES SHOWN, NORTHBOUND MIRROR IMAGE)

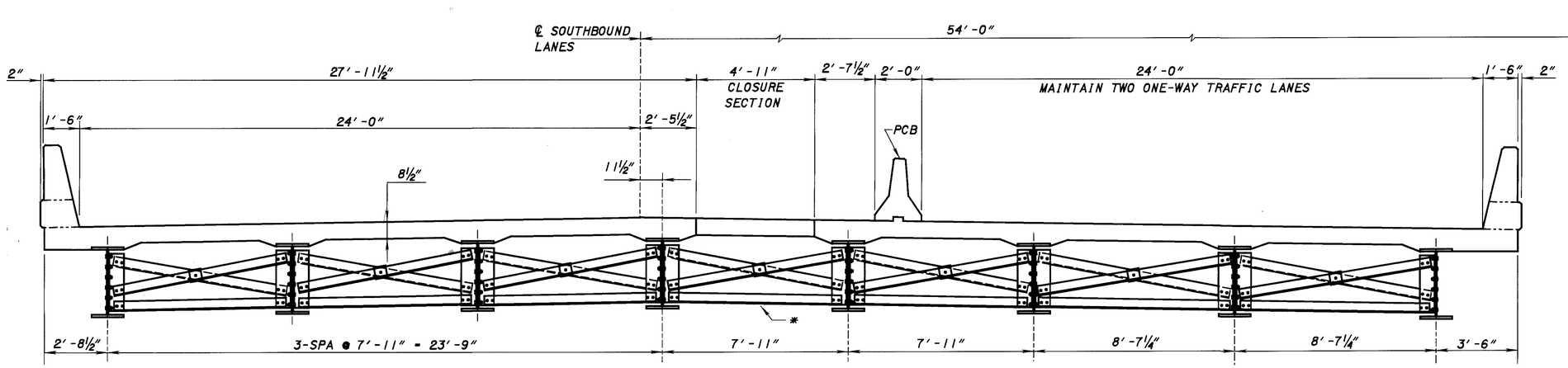

CLOSURE SECTION CONSTRUCTION

(SOUTHBOUND LANES SHOWN, NORTHBOUND MIRROR IMAGE)

NOTES AND LEGEND

TEMPORARY BARRIERS SHALL BE ANCHORED TO EXISTING BRIDGE DECK. THREE (3) ANCHORS PER TEMPORARY BARRIER SEGMENT ARE REQUIRED ON THE TRAFFIC SIDE OF THE BARRIER. THE ANCHOR BOLT PATTERN SHALL BE SYMMETRICAL ABOUT THE CENTER OF EACH SEGMENT. SEE STD. DWG. PCB-91 FOR ADDITIONAL DETAILS.

* PLACE CROSSFRAMES IN POSITION PRIOR TO POURING OF THE CLOSURE POUR.

PCB - PORTABLE CONCRETE BARRIER.

PROPOSED WORK

1. MAINTAIN TRAFFIC BY USE OF STAGE CONSTRUCTION
2. REPLACE CONCRETE DECK AND STEEL BEAMS
3. WIDEN AND MODIFY EXISTING SUBSTRUCTURE UNITS

DESIGN AGENCY: ODOT CENTRAL OFFICE, OFFICE OF PRODUCTION
REVIEWED: DFT — DATE: 10-4-99
STRUCTURE FILE NUMBER: 5203813L/5203848R
DRAWN: TAA — REVISED:
DESIGNED: TAA — CHECKED: TDB

STAGE CONSTRUCTION DETAILS

MED-71-1992 L/R
I-71 OVER ROCKY RIVER

MED-71-15.78

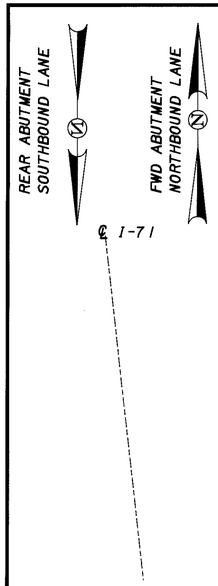

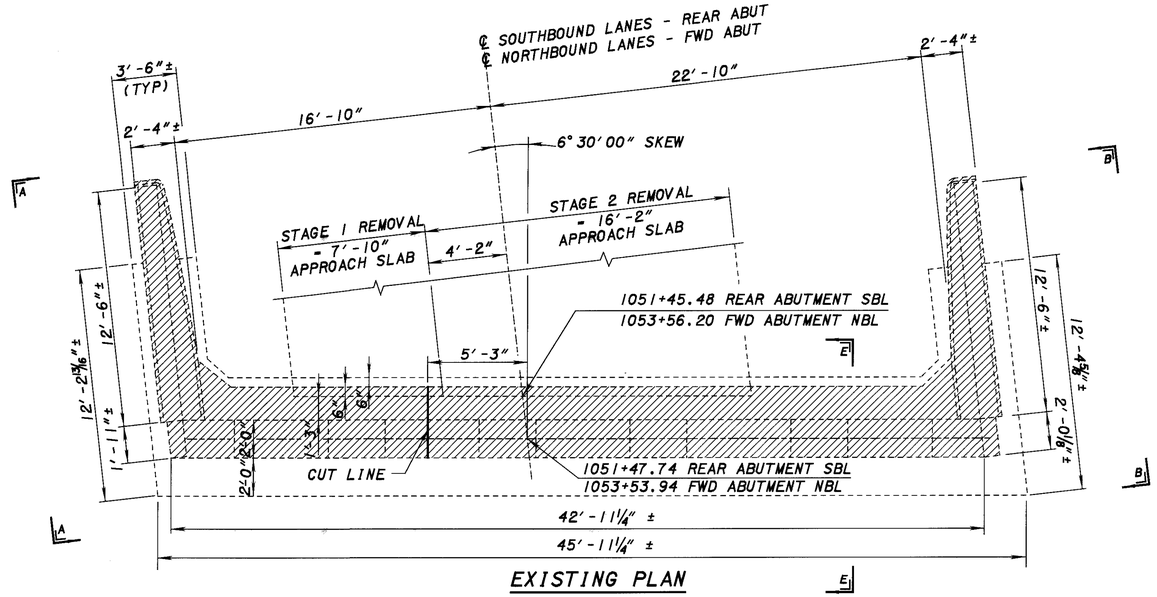

EXISTING PLAN

REAR ABUTMENT SOUTHBOUND LANES
FWD ABUTMENT NORTHBOUND LANES
EXISTING PILES NOT SHOWN FOR CLARITY

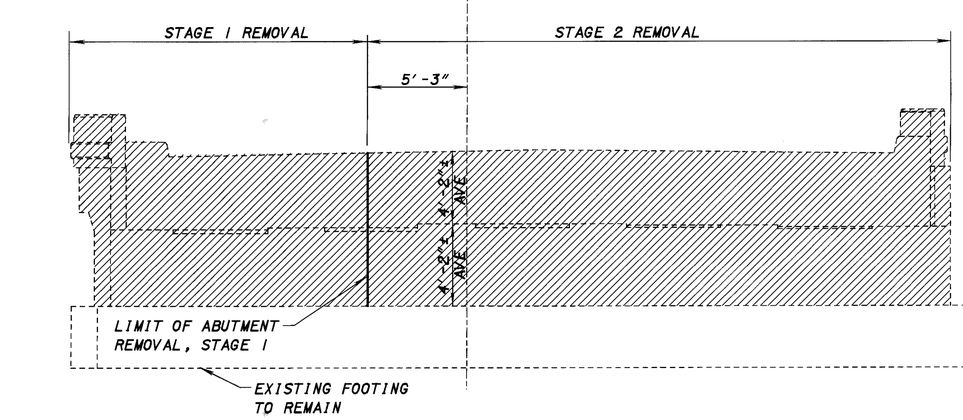

LEGEND

PORTION OF STRUCTURE TO BE REMOVED

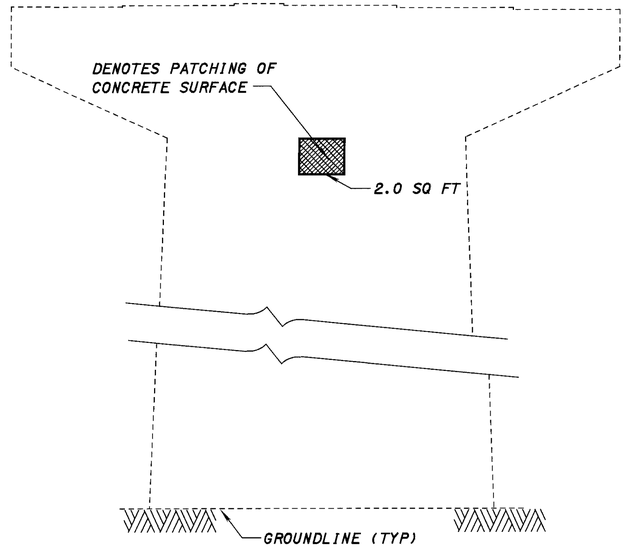

PIER #2 - LEFT/SOUTH FACE

FOR REST OF PIER PATCHING DETAILS, SEE SHEET 9/23.

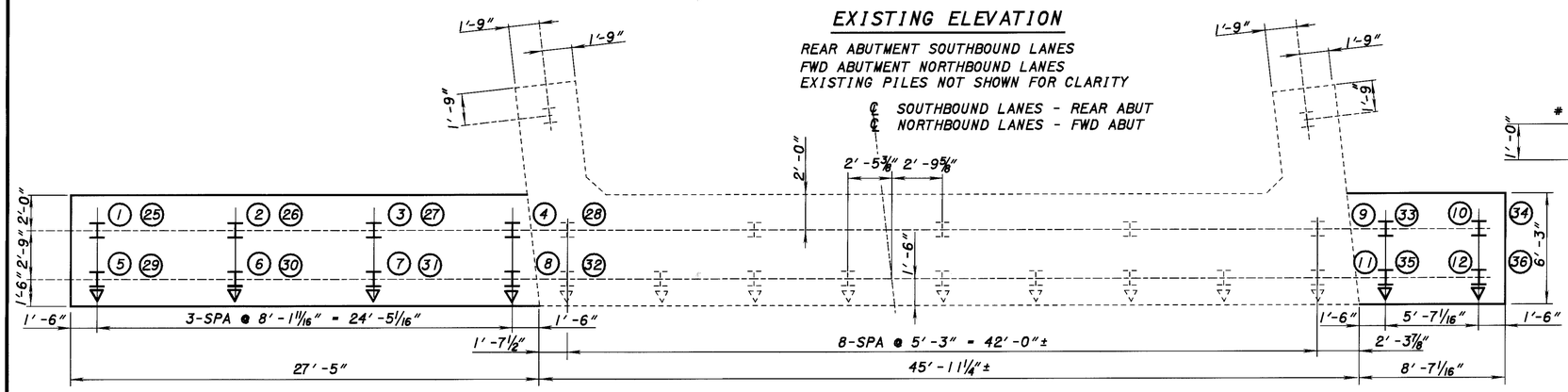

FOOTING PLAN

FOR SECTIONS AND DETAILS SEE SHEET 8/23.

EXISTING ELEVATION

REAR ABUTMENT SOUTHBOUND LANES
FWD ABUTMENT NORTHBOUND LANES
EXISTING PILES NOT SHOWN FOR CLARITY

℄ SOUTHBOUND LANES - REAR ABUT
℄ NORTHBOUND LANES - FWD ABUT

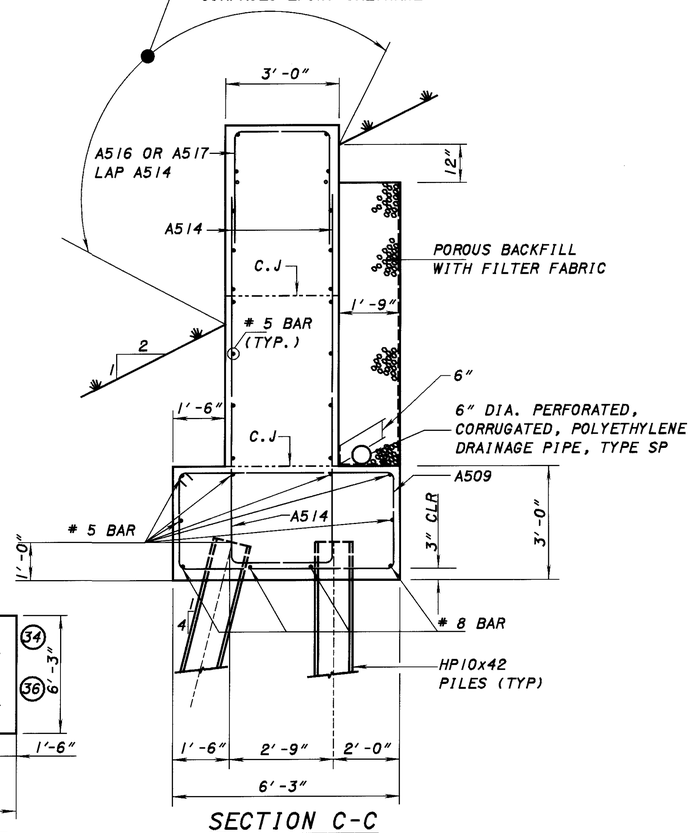

SECTION C-C

FOR SECTION CUT, SEE SHEETS 10/23 AND 11/23.

ODOT CENTRAL OFFICE
OFFICE OF PRODUCTION

DESIGN AGENCY

DESIGNED	DRAWN	REVIEWED	DATE
BRC	BRC	DFT	10-4-99
CHECKED	REVISED	STRUCTURE FILE NUMBER	
TAA		52038I3L/5203848R	

EXISTING ABUTMENT PLAN AND ELEVATION
MED-71-1992 L/R
I-71 OVER ROCKY RIVER

MED-71-15.78

7/23

804
940

REAR ABUTMENT SOUTHBOUND LANE

FWD ABUTMENT NORTHBOUND LANE

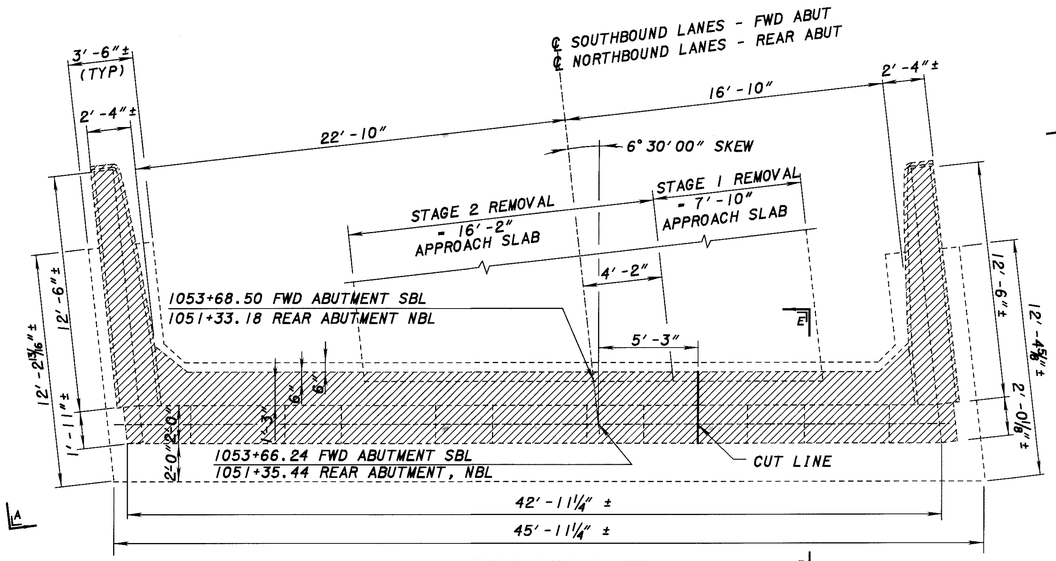

EXISTING PLAN

FWD ABUTMENT SOUTHBOUND LANES
REAR ABUTMENT NORTHBOUND LANES
EXISTING PILES NOT SHOWN FOR CLARITY

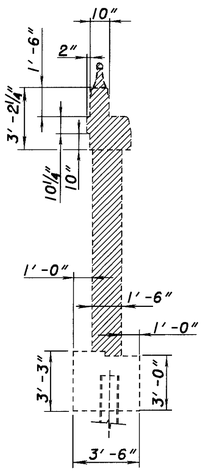

SECTION D-D

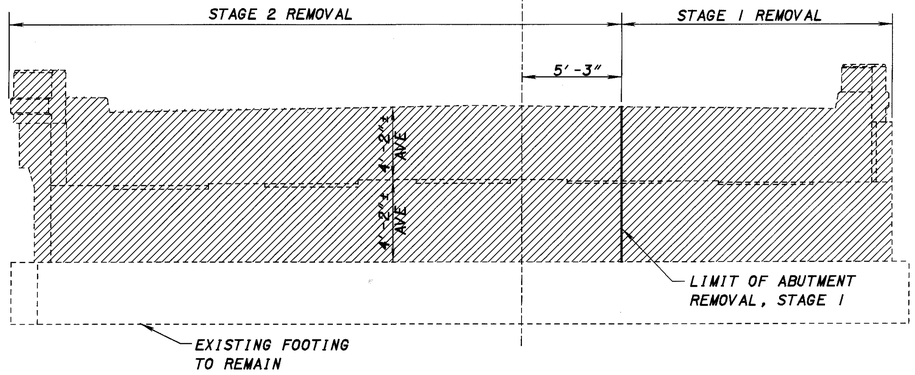

EXISTING ELEVATION

FWD ABUTMENT SOUTHBOUND LANES
REAR ABUTMENT NORTHBOUND LANES
EXISTING PILES NOT SHOWN FOR CLARITY

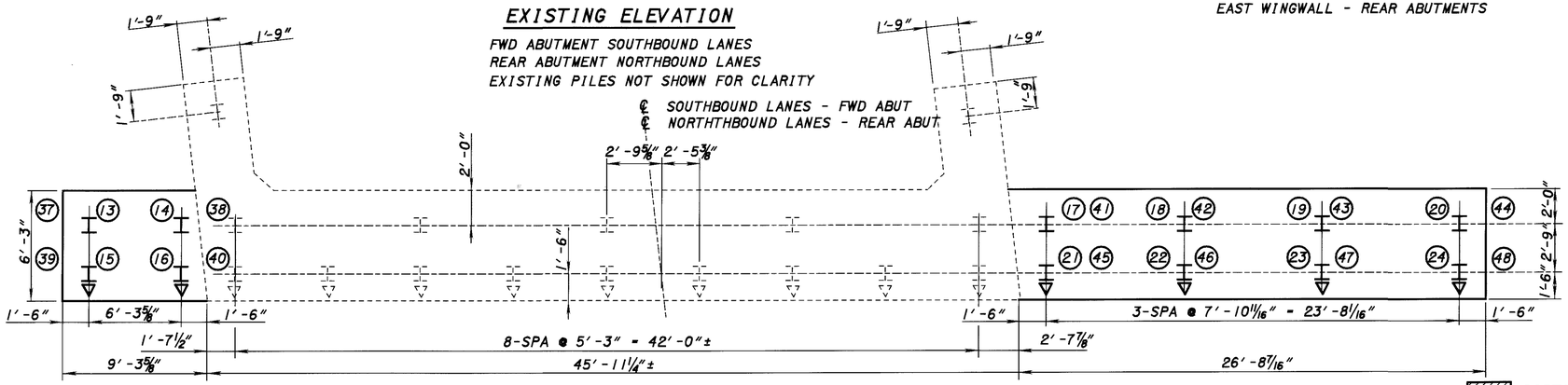

FOOTING PLAN

AT REAR ABUTMENT NORTHBOUND BRIDGE, STOP PILES #20 & #24 SHORT OF 48" DIAMETER STORM PIPE.

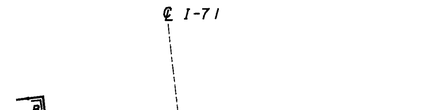

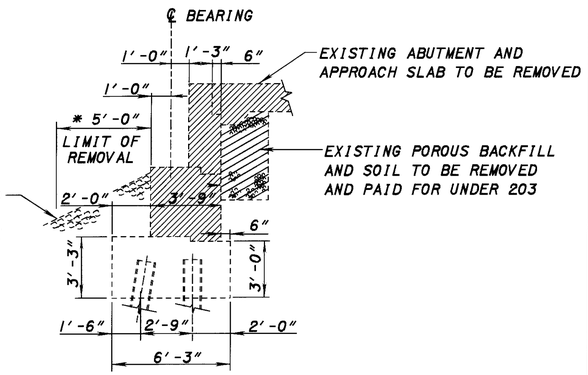

SECTION E-E

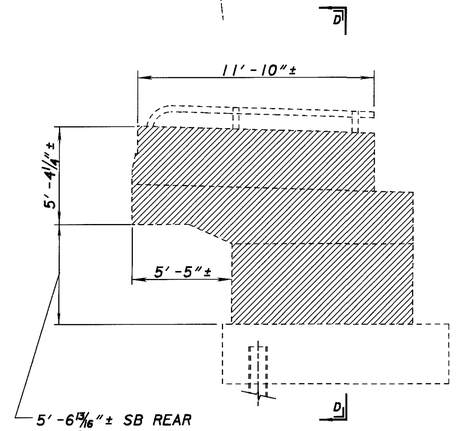

5'-6 13/16"± SB REAR
4'-6 7/16"± SB FWD
5'-4 5/8"± NB REAR
4'-6 7/16"± NB FWD

VIEW A-A

WEST WINGWALL - FWD ABUTMENTS
EAST WINGWALL - REAR ABUTMENTS

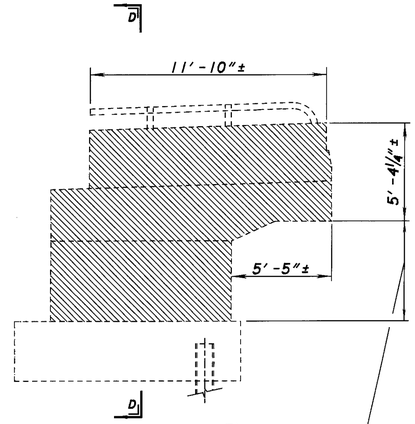

5'-3 15/16"± SB REAR
4'-9 3/16"± SB FWD
5'-4"± NB REAR
4'-7"± NB FWD

VIEW B-B

WEST WINGWALL - REAR ABUTMENTS
EAST WINGWALL - FWD ABUTMENTS

LEGEND

PORTION OF STRUCTURE TO BE REMOVED

DESIGN AGENCY: ODOT CENTRAL OFFICE, OFFICE OF PRODUCTION

REVISED: DFT — DATE: 10-4-99

DRAWN: BRC — REVISED:

DESIGNED: BRC — CHECKED: TAA

STRUCTURE FILE NUMBER: 5203813L/5203848R

EXISTING ABUTMENT PLAN AND ELEVATION

MED-71-1992 L/R
I-71 OVER ROCKY RIVER

MED-71-15.78

8 / 23

805/940

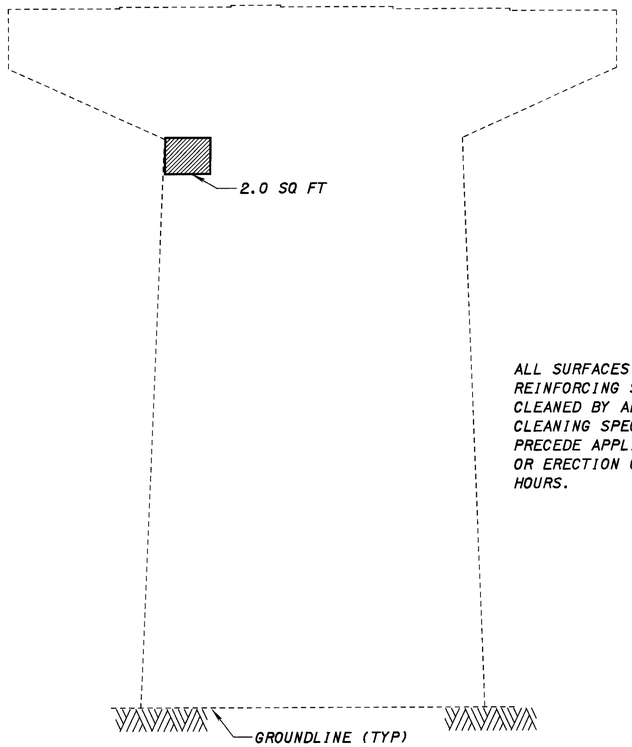

PIER #1 - LEFT/NORTH FACE

ALL SURFACES TO BE PATCHED AND THE EXPOSED REINFORCING STEEL WITHIN SHALL BE THOROUGHLY CLEANED BY ABRASIVE BLASTING PRIOR TO THE CLEANING SPECIFIED BY 519.04. CLEANING SHALL PRECEDE APPLICATION OF THE PATCHING MATERIAL OR ERECTION OF THE FORMS BY NOT MORE THAN 24 HOURS.

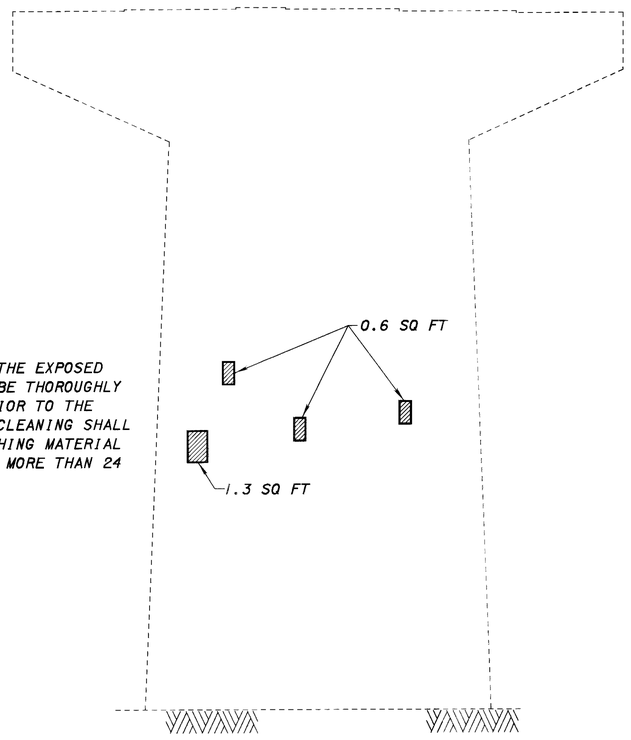

PIER #1 - RIGHT/NORTH FACE

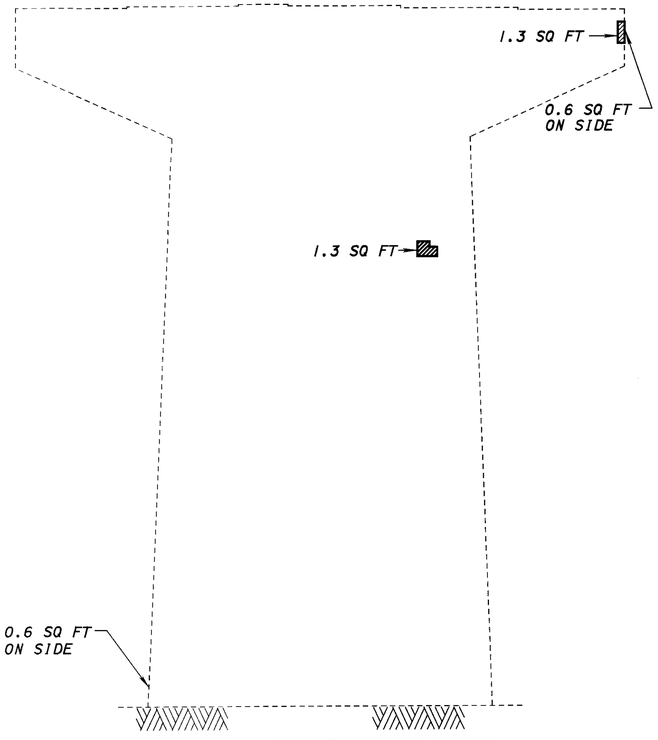

PIER #2 - RIGHT/NORTH FACE

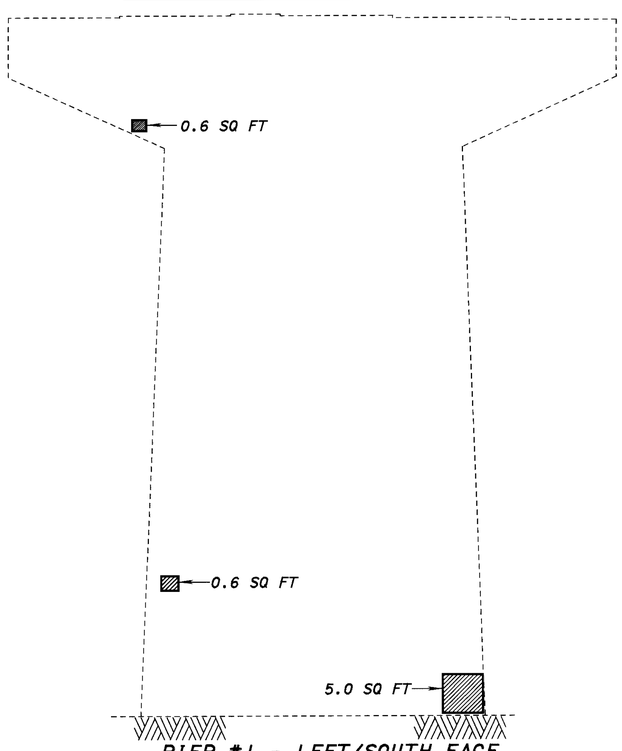

PIER #1 - LEFT/SOUTH FACE

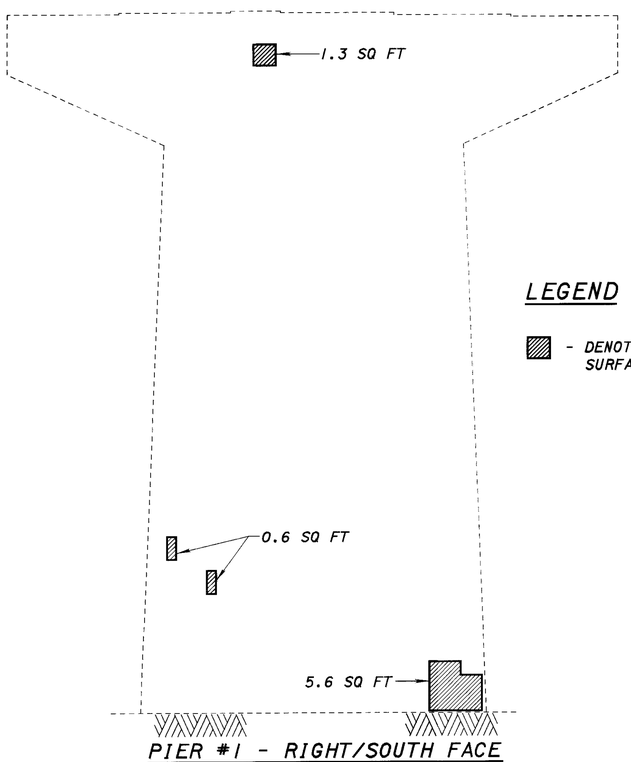

PIER #1 - RIGHT/SOUTH FACE

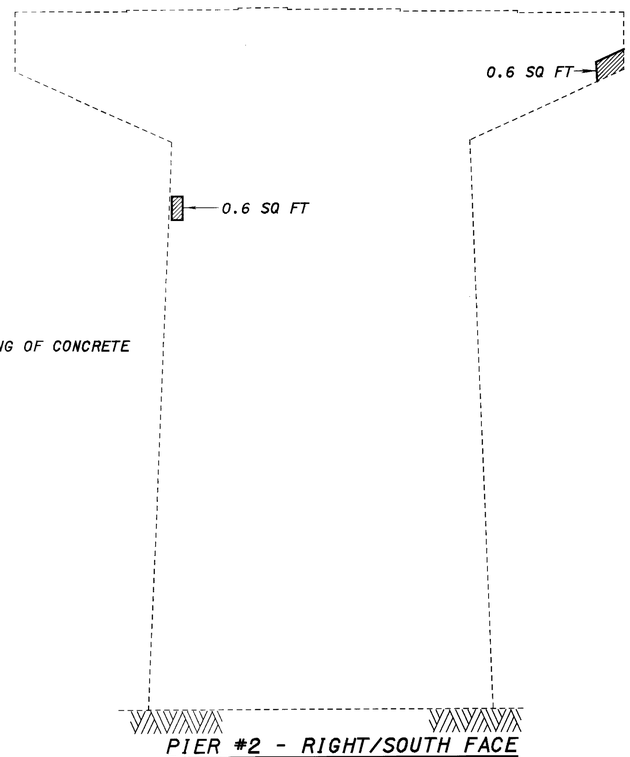

PIER #2 - RIGHT/SOUTH FACE

LEGEND

▨ - DENOTES PATCHING OF CONCRETE SURFACES

DESIGN AGENCY
ODOT CENTRAL OFFICE
OFFICE OF PRODUCTION

DESIGNED	DRAWN	REVISED	DATE
BRC	BRC	DFT	10-4-99
CHECKED	REVISED	STRUCTURE FILE NUMBER	
TAA		5203813L/5203848R	

PIER PATCHING DETAILS
MED-71-1992 L/R
I-71 OVER ROCKY RIVER

MED-71-15.78

9 / 23

806
940

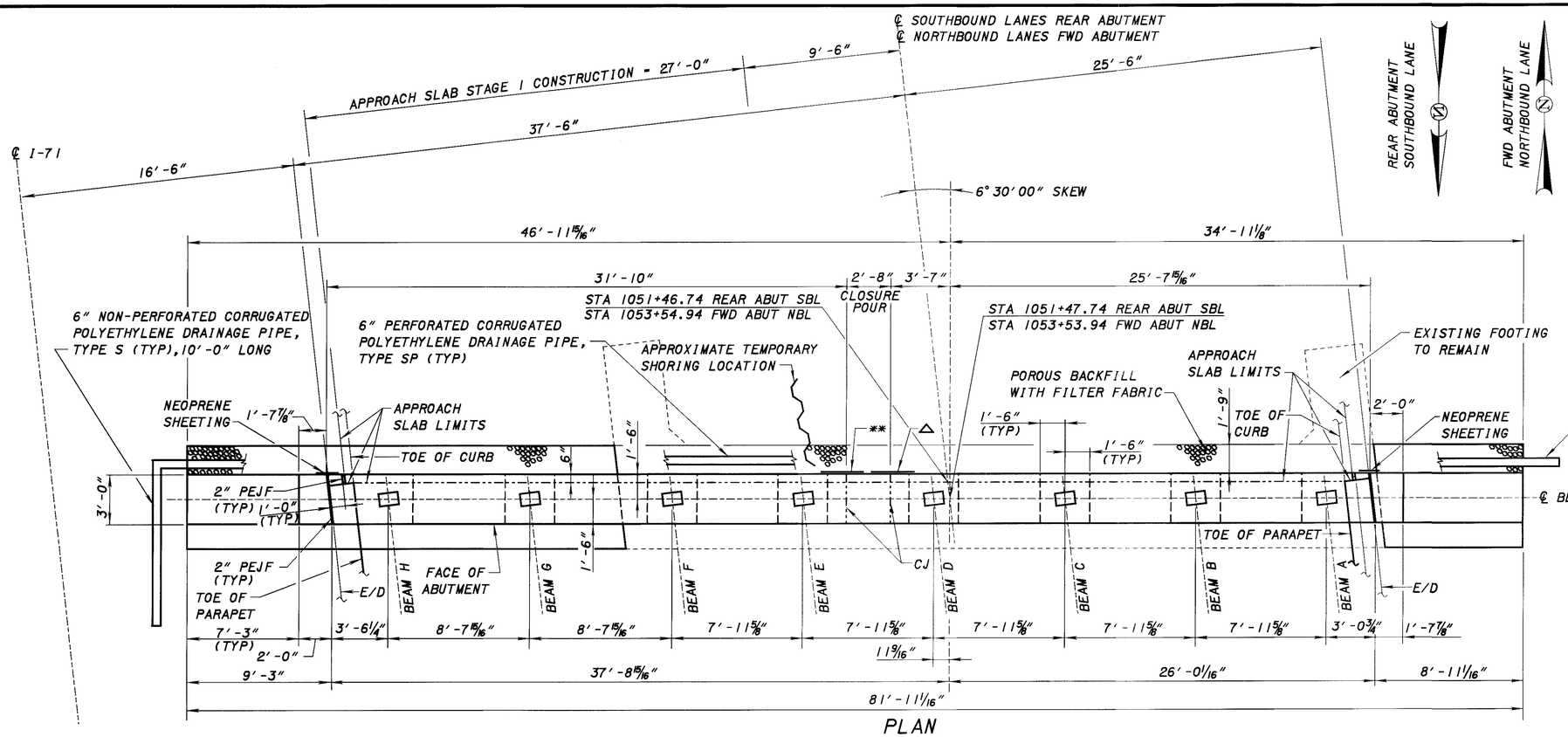

PLAN

REAR ABUTMENT SOUTHBOUND LANE AND FWD ABUTMENT NORTHBOUND LANE SHOWN

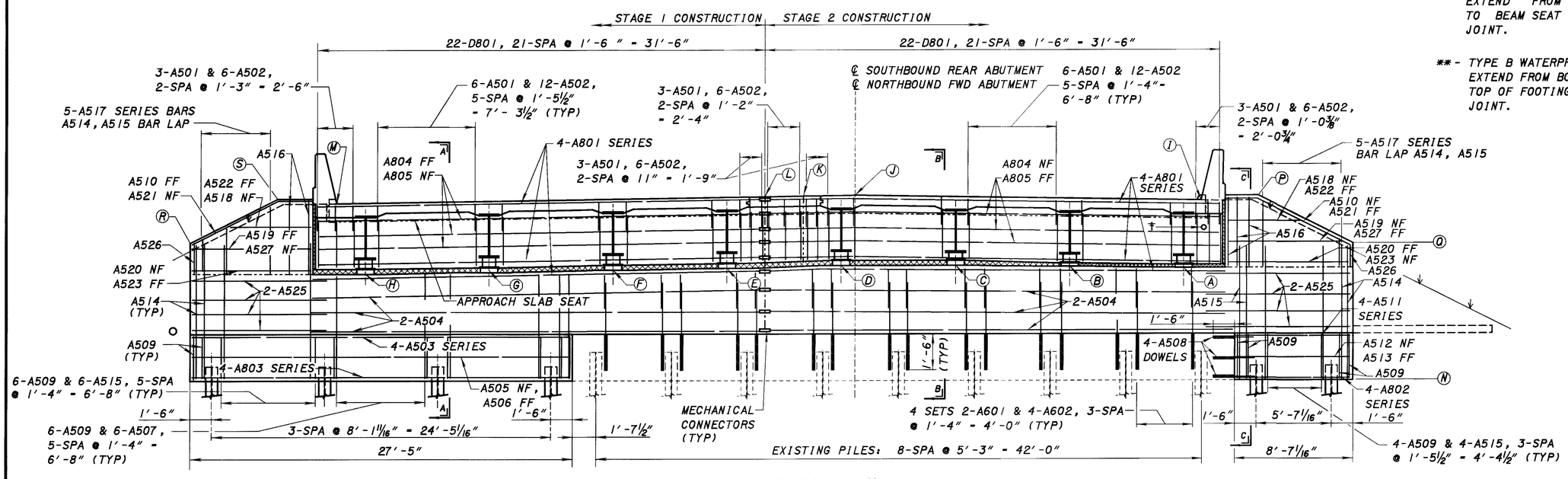

ELEVATION

REAR ABUTMENT SOUTHBOUND LANE AND FWD ABUTMENT NORTHBOUND LANE SHOWN

SEE SHEET 12/23 FOR PIPE DETAIL

NOTES

1. FOR SECTIONS AND DETAILS SEE SHEETS 7/23 AND 12/23.
2. FOOTING ELEVATION SHOULD MATCH EXISTING FOOTING.
3. MINIMUM LAP FOR #5 BAR - 2'-6".
4. ELEVATIONS SHOWN ARE MEASURED ALONG THE BRIDGE LIMITS. BEAM SEAT ELEVATIONS ARE MEASURED ALONG ℄ OF BEARING.
5. EXISTING AND PROPOSED PILES ARE NOT SHOWN IN PLAN VIEW FOR CLARITY.
6. A602 TO BE DOWELED 1'-6" INTO EXISTING CONCRETE.

LEGEND

EF - EACH FACE
NF - NEAR FACE
FF - FAR FACE
PEJF - PREFORMED EXPANSION JOINT FILLER
CJ - CONSTRUCTION JOINT
E/D - EDGE OF DECK

† - 4" CONDUIT. SEE CSS3 AND CSS4 FOR DETAILS

△ - TYPE B WATERPROOFING 3'-0" WIDE SHOULD EXTEND FROM BOTTOM OF APPROACH SLAB TO BEAM SEAT ACROSS THE CONSTRUCTION JOINT.

** - TYPE B WATERPROOFING 3'-0" WIDE SHOULD EXTEND FROM BOTTOM OF APPROACH SLAB TO TOP OF FOOTING ACROSS THE CONSTRUCTION JOINT.

DESIGN AGENCY: ODOT CENTRAL OFFICE OFFICE OF PRODUCTION
REVIEWED: DFT
DATE: 10-4-99
STRUCTURE FILE NUMBER: 5203813L/5203848R
DRAWN: BRC
REVISED:
DESIGNED: BRC
CHECKED: TAA

ABUTMENT DETAILS

MED-71-1992 L/R
I-71 OVER ROCKY RIVER

MED-71-15.78

10/23

807
940

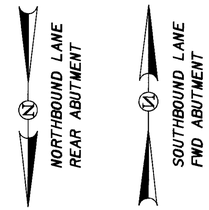

NOTES

1. FOR SECTIONS AND DETAILS SEE SHEETS 7 123 AND 12123 .
2. FOOTING ELEVATION SHOULD MATCH EXISTING FOOTING.
3. MINIMUM LAP FOR #5 BAR = 2'-6".
4. ELEVATIONS SHOWN ARE MEASURED ALONG THE BRIDGE LIMITS. BEAM SEAT ELEVATIONS ARE MEASURED ALONG ℄ OF BEARING.
5. EXISTING AND PROPOSED PILES ARE NOT SHOWN FOR CLARITY.
6. A602 TO BE DOWELED 1'-6" INTO EXISTING CONCRETE.

LEGEND

EF - EACH FACE
NF - NEAR FACE
FF - FAR FACE
PEJF - PREFORMED EXPANSION JOINT FILLER
CJ - CONSTRUCTION JOINT
E/D - EDGE OF DECK

† - 4" CONDUIT. SEE CSS3 AND CSS4 FOR DETAILS

△ - TYPE B WATERPROOFING 3'-0" WIDE SHOULD EXTEND FROM BOTTOM OF APPROACH SLAB TO BEAM SEAT ACROSS THE CONSTRUCTION JOINT.

** - TYPE B WATERPROOFING 3'-0" WIDE SHOULD EXTEND FROM BOTTOM OF APPROACH SLAB TO TOP OF FOOTING ACROSS THE CONSTRUCTION JOINT.

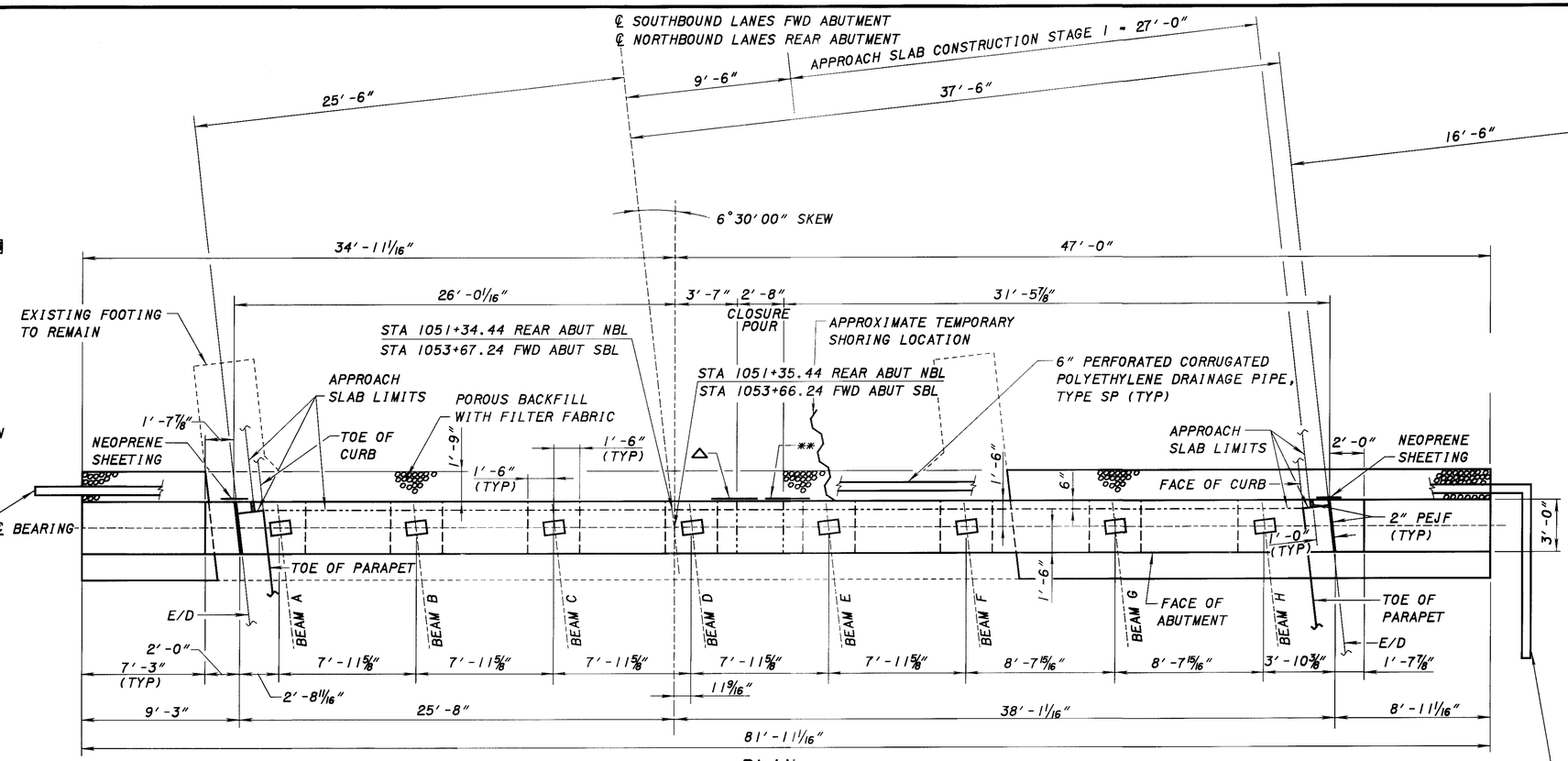

PLAN

FWD ABUTMENT SOUTHBOUND LANE AND REAR ABUTMENT NORTHBOUND LANE SHOWN

6" NON-PERFORATED CORRUGATED POLYETHYLENE DRAINAGE PIPE, TYPE S (TYP), 10'-0" LONG

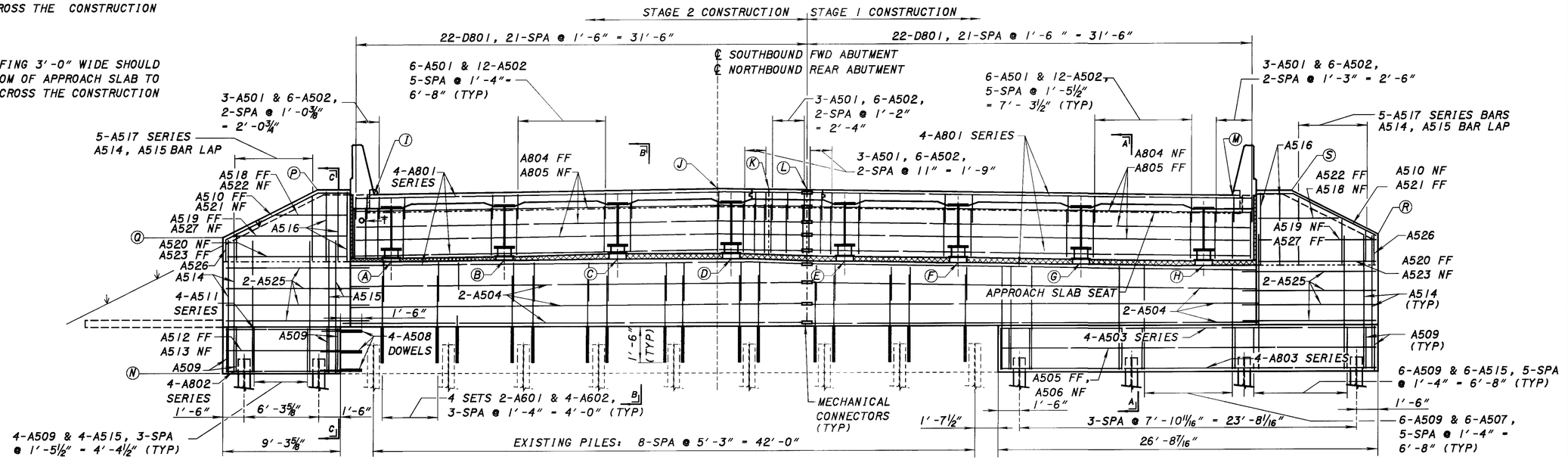

ELEVATION

FWD ABUTMENT SOUTHBOUND LANE AND REAR ABUTMENT NORTHBOUND LANE SHOWN

SEE SHEET 12123 FOR PIPE DETAIL

DESIGN AGENCY: ODOT CENTRAL OFFICE, OFFICE OF PRODUCTION
REVIEWED: DFT
DATE: 10-4-99
STRUCTURE FILE NUMBER: 5203813L/5203848R
DRAWN: BRC
REVISED:
DESIGNED: BRC
CHECKED: TAA

ABUTMENT DETAILS
MED-71-1992 L/R
I-71 OVER ROCKY RIVER

MED-71-15.78

11/23

808/940

SOUTHBOUND ABUTMENT ELEVATIONS

ABUTMENT		A	B	C	D	E	F	G	H	I	J	K	L	M	N	P	Q	R	S
REAR	ELEVATION	1055.90	1056.05	1056.20	1056.31	1056.22	1056.12	1056.02	1055.92	1060.48	1060.94	1060.88	1060.85	1060.50	1048.28	1060.81	1057.18	1057.21	1060.83
FORWARD	ELEVATION	1049.34	1049.49	1049.64	1049.76	1049.67	1049.57	1049.46	1049.36	1053.86	1054.32	1054.29	1054.23	1053.88	1041.75	1054.19	1050.57	1050.58	1054.21

NORTHBOUND ABUTMENT ELEVATIONS

ABUTMENT		A	B	C	D	E	F	G	H	I	J	K	L	M	N	P	Q	R	S
REAR	ELEVATION	1056.42	1056.52	1056.61	1056.68	1056.53	1056.38	1056.22	1056.05	1061.01	1061.31	1061.26	1061.22	1060.62	1048.76	1061.34	1057.72	1057.32	1060.95
FORWARD	ELEVATION	1049.87	1049.96	1050.06	1050.12	1049.97	1049.82	1049.66	1049.50	1054.40	1054.69	1054.64	1054.60	1054.01	1042.21	1054.73	1051.10	1050.72	1054.34

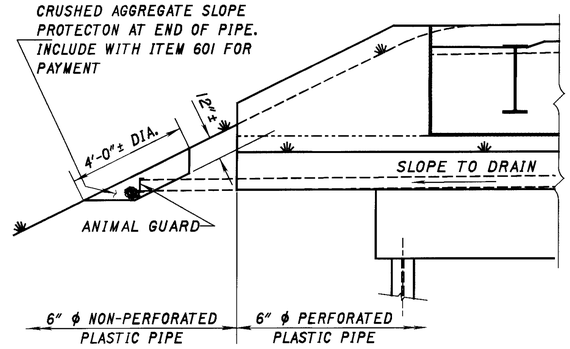

PIPE OUTLET DETAIL

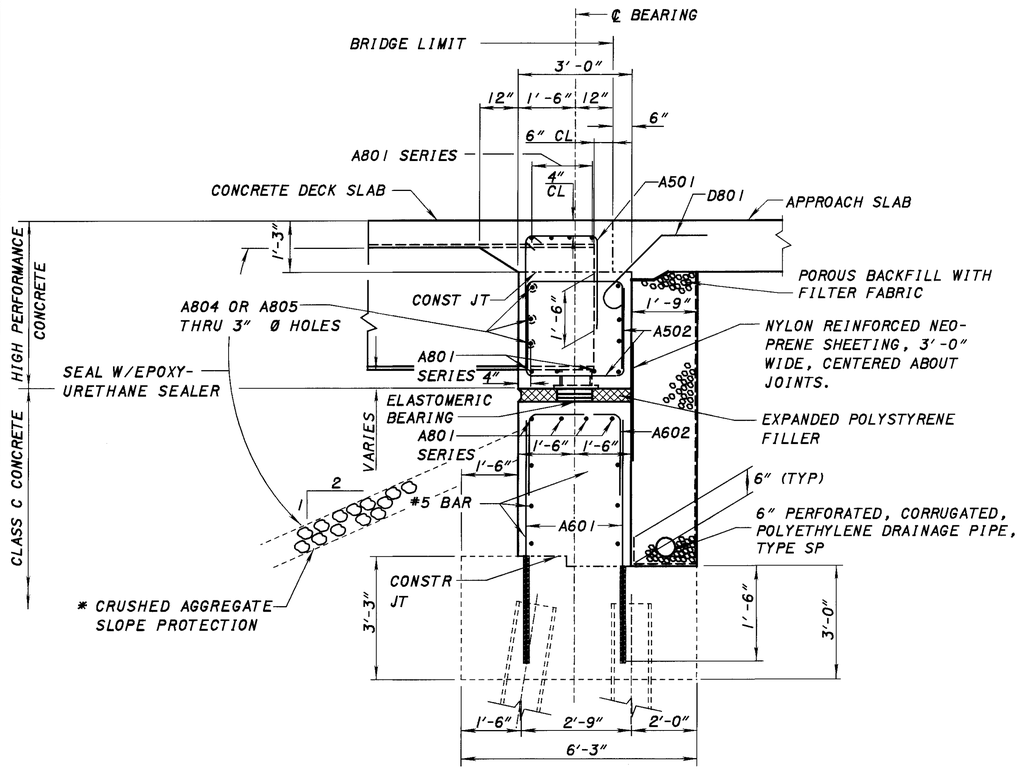

SECTION B-B

FOR SECTION CUT B-B, SEE SHEETS 10/23 AND 11/23

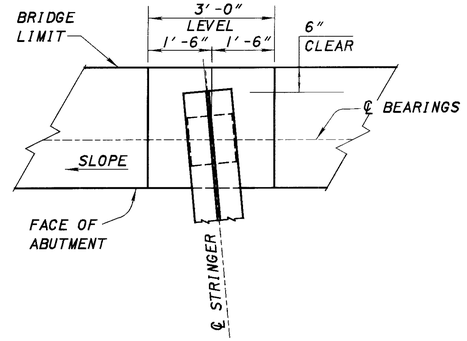

SECTION C-C

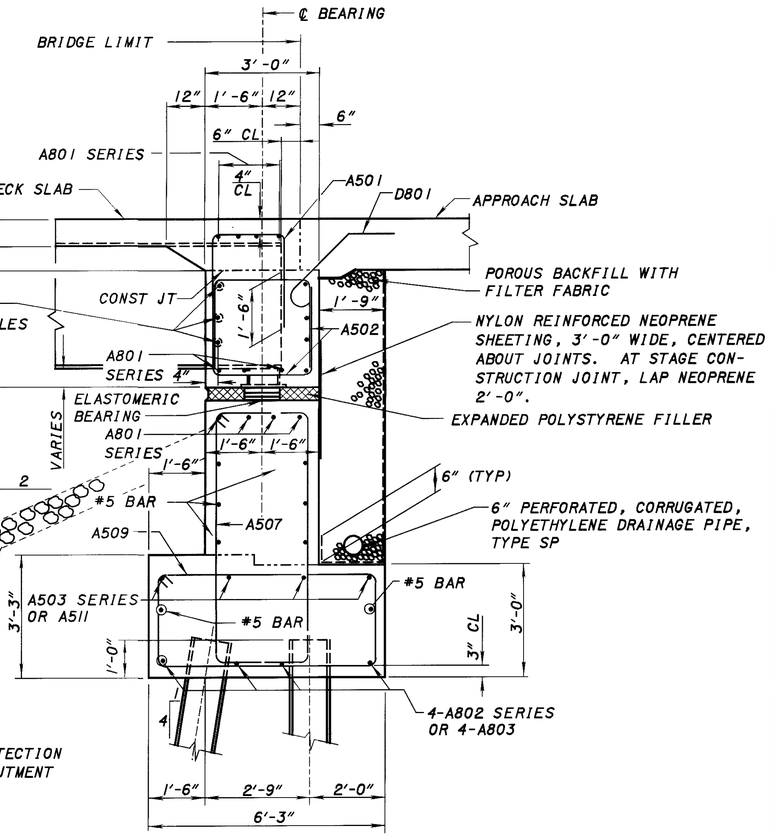

SECTION A-A

FOR SECTION CUT A-A, SEE SHEETS 10/23 AND 11/23 .

NOTES:

POROUS BACKFILL:
POROUS BACKFILL WITH FILTER FABRIC, 1'-9" THICK SHALL EXTEND UP TO THE PLANE OF THE SUBGRADE, TO 12" BELOW THE EMBANKMENT SURFACE, AND LATERALLY TO THE FACE OF THE WINGWALLS.

DIAPHRAGM CONCRETE ENCASING THE STEEL BEAMS SUPPORTED IN THE SEMI INTEGRAL ABUTMENT SHALL BE PLACED AT LEAST 48 HOURS BEFORE THE ACTUAL DECK CONCRETE IS PLACED.

PROVIDE 3" Ø HOLE THRU WEB AS NOTED, PAYMENT TO BE INCLUDED AS INCIDENTAL WITH ITEM 863 STRUCTURAL STEEL. PAYMENT FOR THE EXPANDED POLYSTYRENE FILLER TO BE INCLUDED WITH ITEM 844 HIGH PERFORMANCE CONCRETE AS INCIDENTAL.

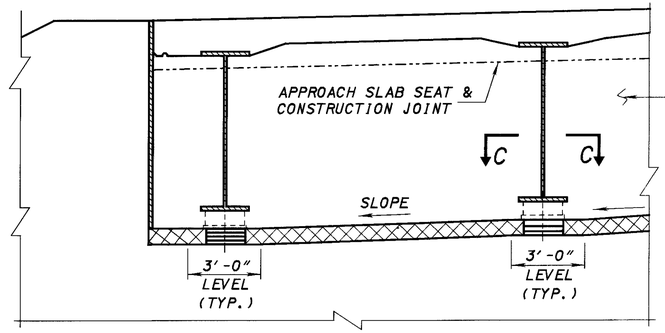

PART ELEVATION OF BEAM SEAT

* PROVIDE NEW SLOPE PROTECTION AT T/S AT EXISTING ABUTMENT FOR 5'-0".

DESIGN AGENCY: ODOT CENTRAL OFFICE, OFFICE OF PRODUCTION
DATE REVIEWED: 10-4-99 DFT
STRUCTURE FILE NUMBER: 5203813L/5203848R
DRAWN: BRC
REVISED:
DESIGNED: BRC
CHECKED: TAA

ABUTMENT DETAILS

MED-71-1992 L/R
I-71 OVER ROCKY RIVER

MED-71-15.78

12/23

809
940

SOUTHBOUND PIER SEAT ELEVATIONS									
	A	B	C	D	E	F	G	H	Z
PIER #1	1054.14	1054.29	1054.44	1054.61	1054.46	1054.36	1054.26	1054.15	1052+14.99
PIER #2	1051.62	1051.77	1051.92	1052.09	1051.94	1051.84	1051.74	1051.63	1052+98.99

NORTHBOUND PIER SEAT ELEVATIONS									
	A	B	C	D	E	F	G	H	Z
PIER #1	1054.66	1054.76	1054.85	1054.92	1054.77	1054.62	1054.45	1054.29	1052+02.69
PIER #2	1052.14	1052.24	1052.33	1052.40	1052.25	1052.10	1051.93	1051.77	1052+86.69

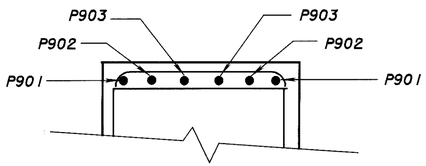

DETAIL A

NOTES:

EXISTING PIER BRIDGE SEATS SHALL BE SCARIFIED 1/4", SEE GENERAL NOTES.

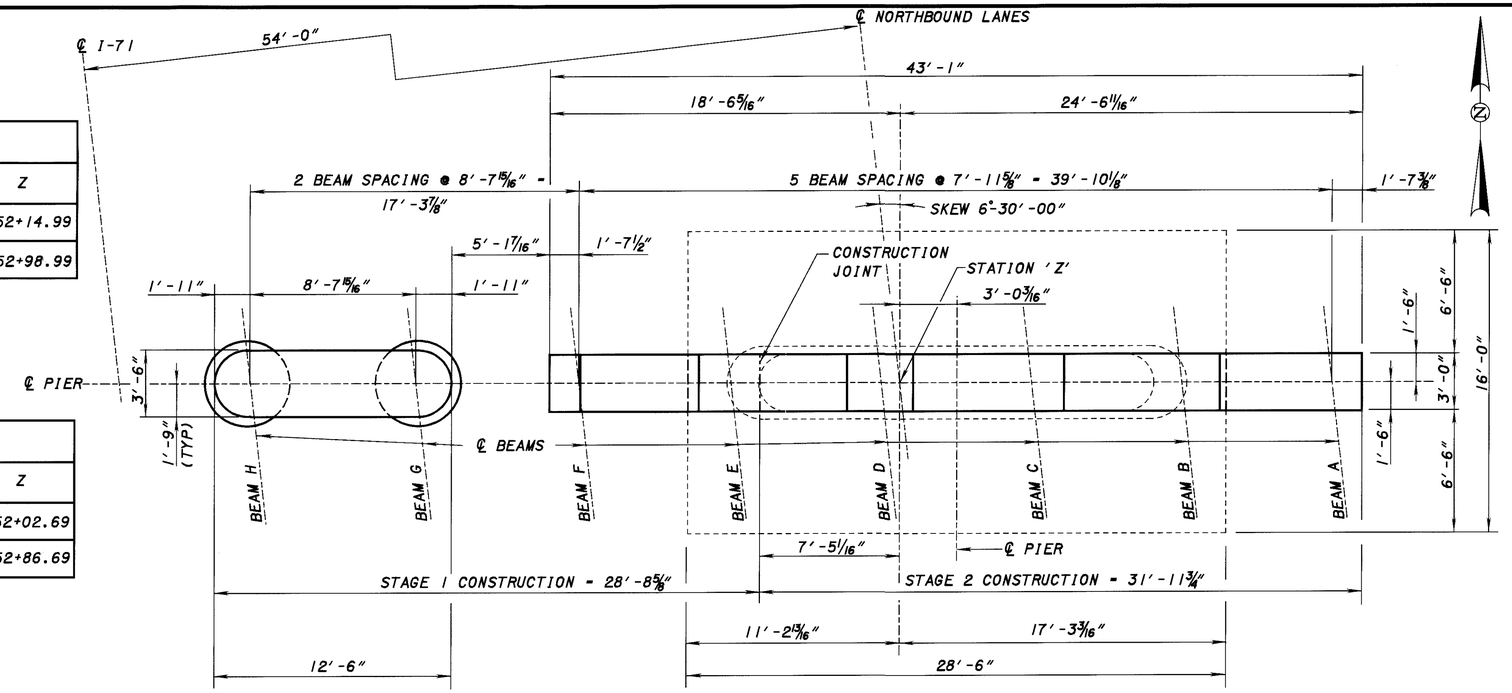

PLAN

PIERS #1 & #2 NORTHBOUND LANES SHOWN
PIERS #1 & #2 SOUTHBOUND LANES MIRROR IMAGE

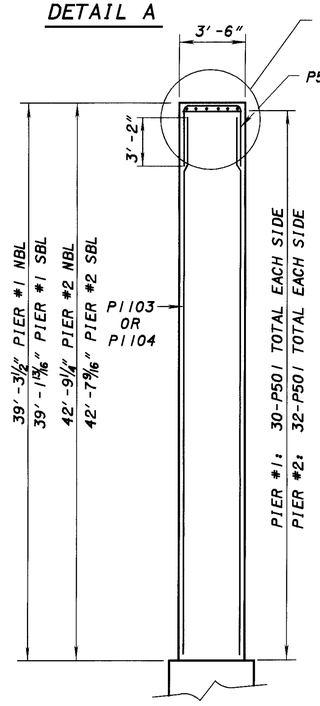

SECTION C-C

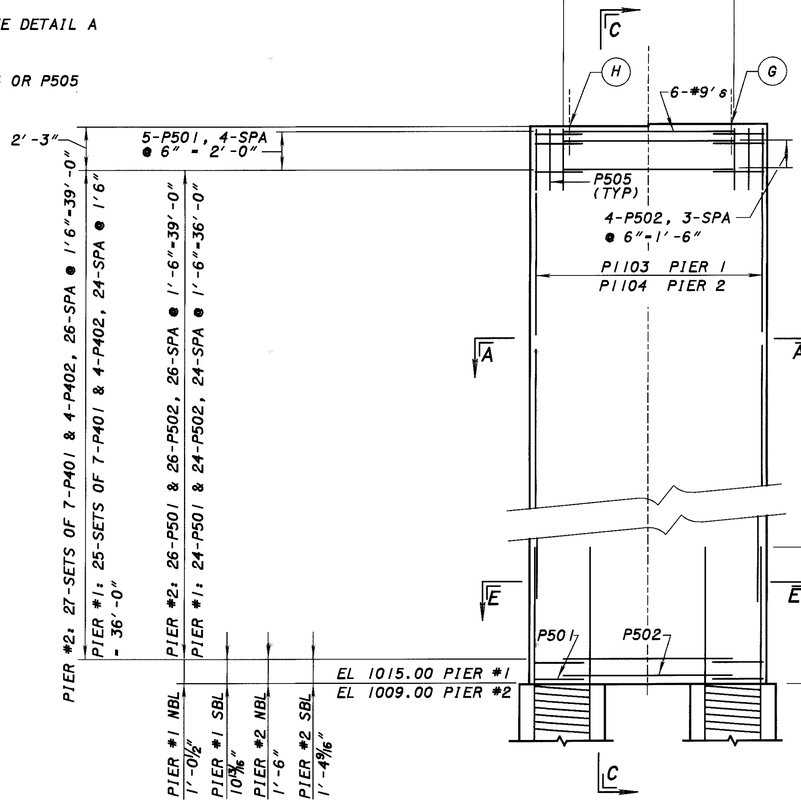

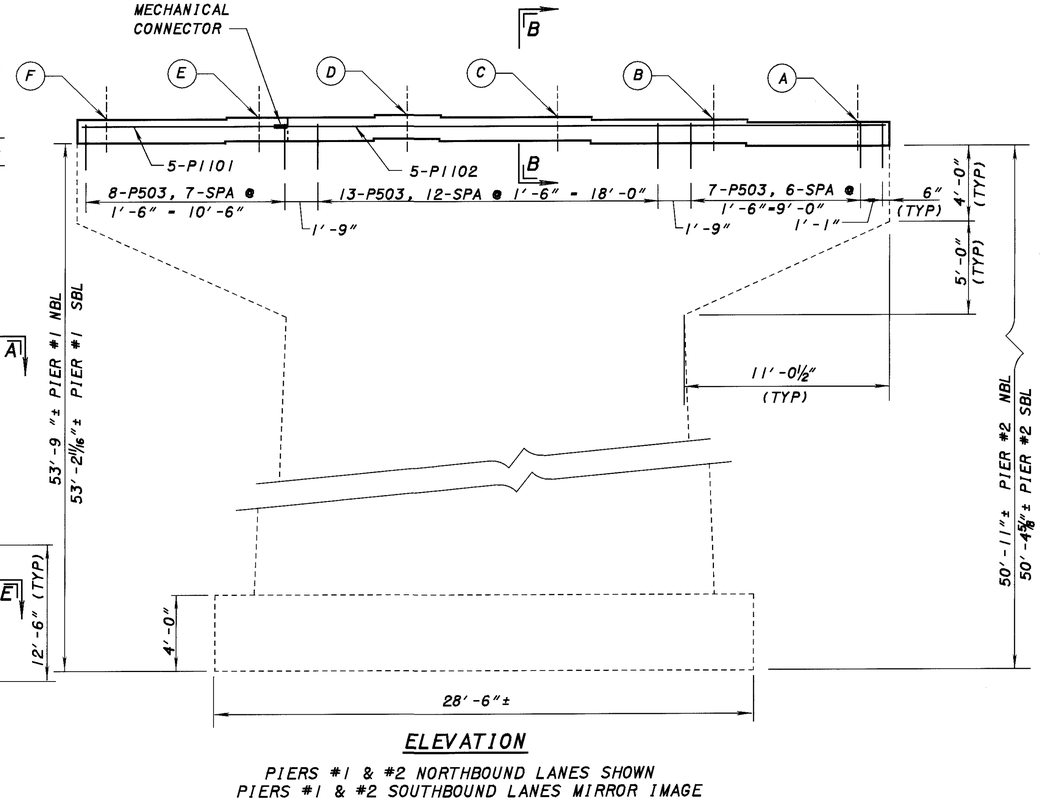

ELEVATION

PIERS #1 & #2 NORTHBOUND LANES SHOWN
PIERS #1 & #2 SOUTHBOUND LANES MIRROR IMAGE

FOR SECTIONS A-A, B-B & E-E, SEE SHEET 14 23.

DESIGN AGENCY: ODOT CENTRAL OFFICE, OFFICE OF PRODUCTION

DESIGNED	DRAWN	REVISED	DATE	STRUCTURE FILE NUMBER
BRC	BRC	DFT	10-4-99	5203813L/5203848R

DESIGNED BRC
DRAWN BRC
CHECKED JS
REVISED DFT
DATE 10-4-99
STRUCTURE FILE NUMBER 5203813L/5203848R

PIER DETAILS
MED-71-1992 L/R
I-71 OVER ROCKY RIVER

MED-71-15.78

13/23

810
940

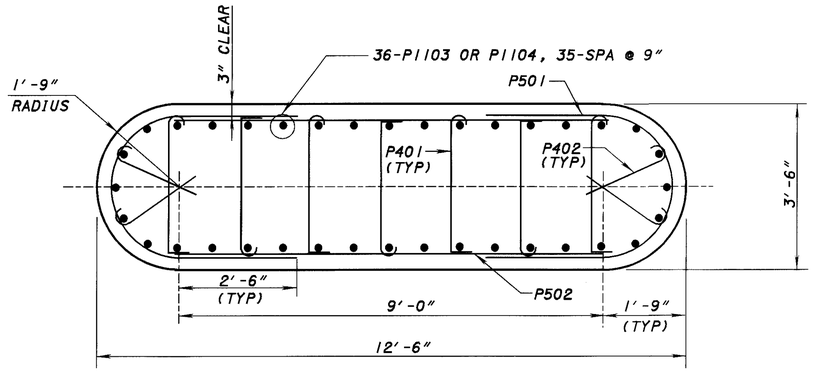

SECTION A-A

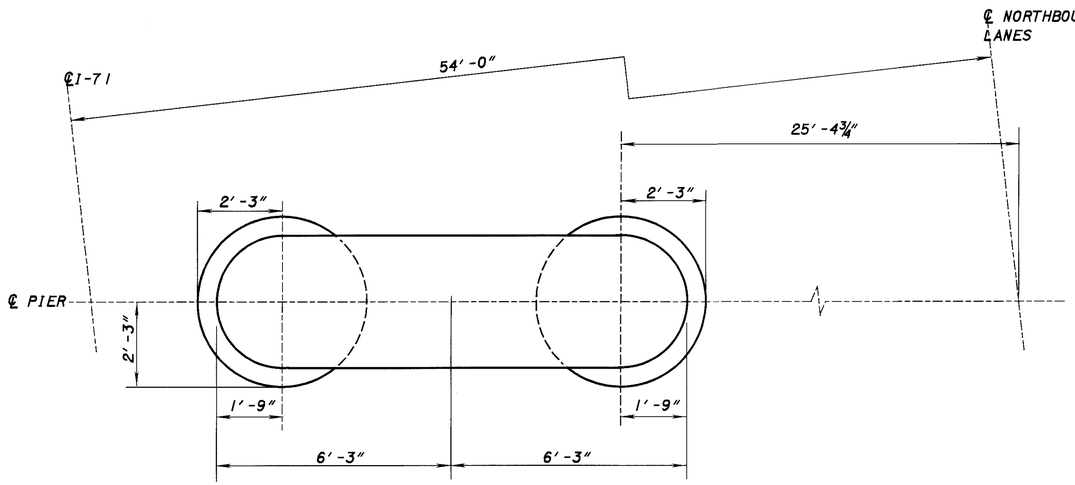

DRILLED SHAFT LAYOUT

NORTHBOUND LANES SHOWN
SOUTHBOUND LANES MIRROR IMAGE

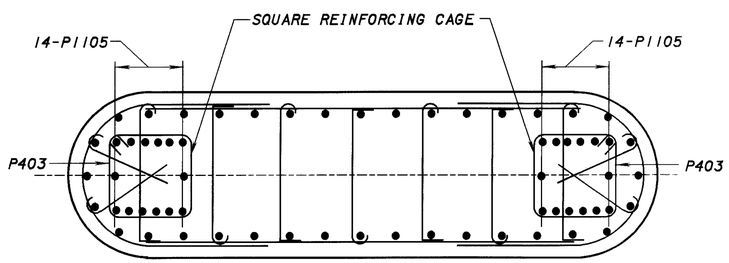

SECTION E-E

RE-STEEL IN THE PIER IS NOT SHOWN. SEE SHEETS 13 / 23 FOR MORE DETAILS.

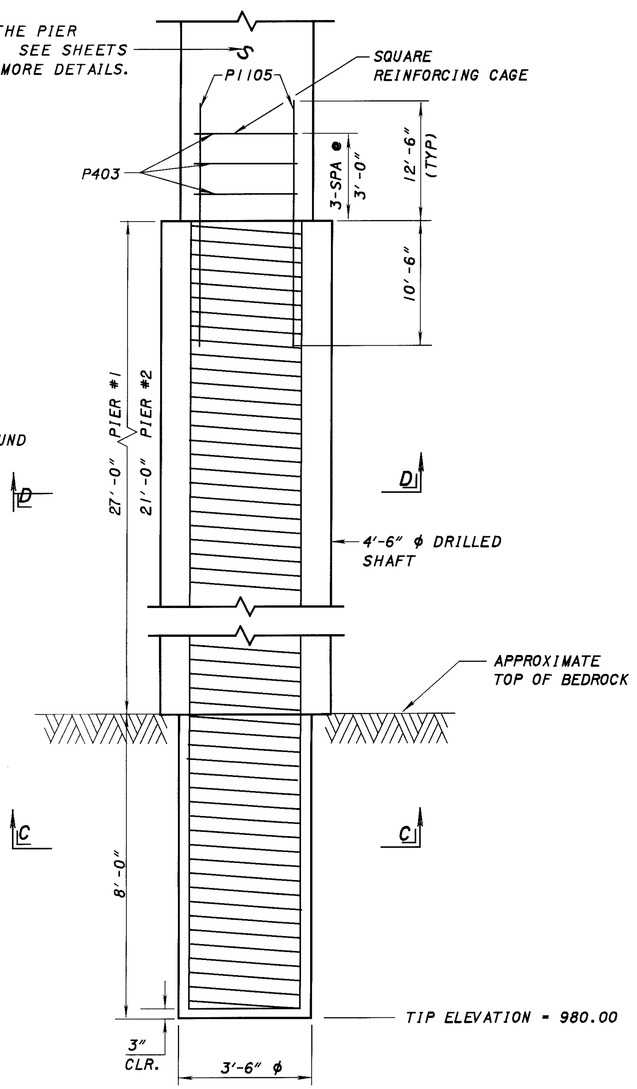

DRILLED SHAFT DETAIL

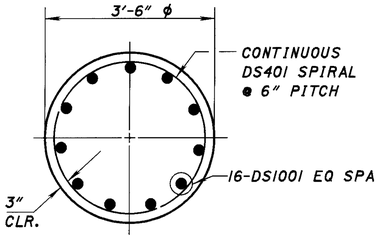

SECTION C-C

DRILLED SHAFT REINFORCING DETAIL

DRILLED SHAFT REINFORCING PAID WITH ITEM 524.

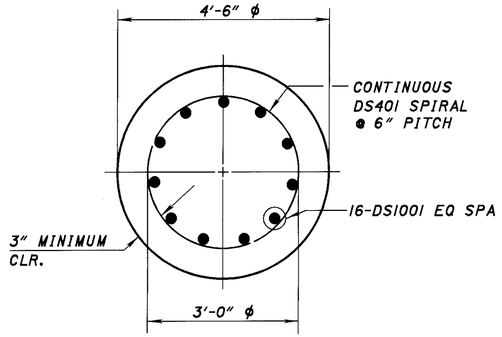

SECTION D-D

DRILLED SHAFT REINFORCING DETAIL

DRILLED SHAFT REINFORCING PAID WITH ITEM 524.

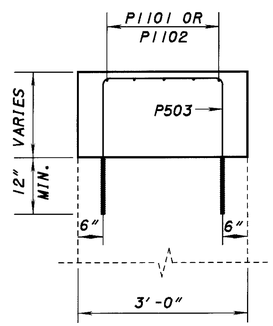

SECTION B-B

FOR SECTION CUT AND DETAILS SEE SHEET 13/23.

DESIGN AGENCY: ODOT CENTRAL OFFICE OFFICE OF PRODUCTION
DESIGNED: BRC
DRAWN: BRC
CHECKED: JS
REVIEWED: DFT
DATE: 10-4-99
REVISED:
STRUCTURE FILE NUMBER: 5203813L/5203848R

PIER DETAILS
MED-71-1992 L/R
I-71 OVER ROCKY RIVER

MED-71-15.78

811
940

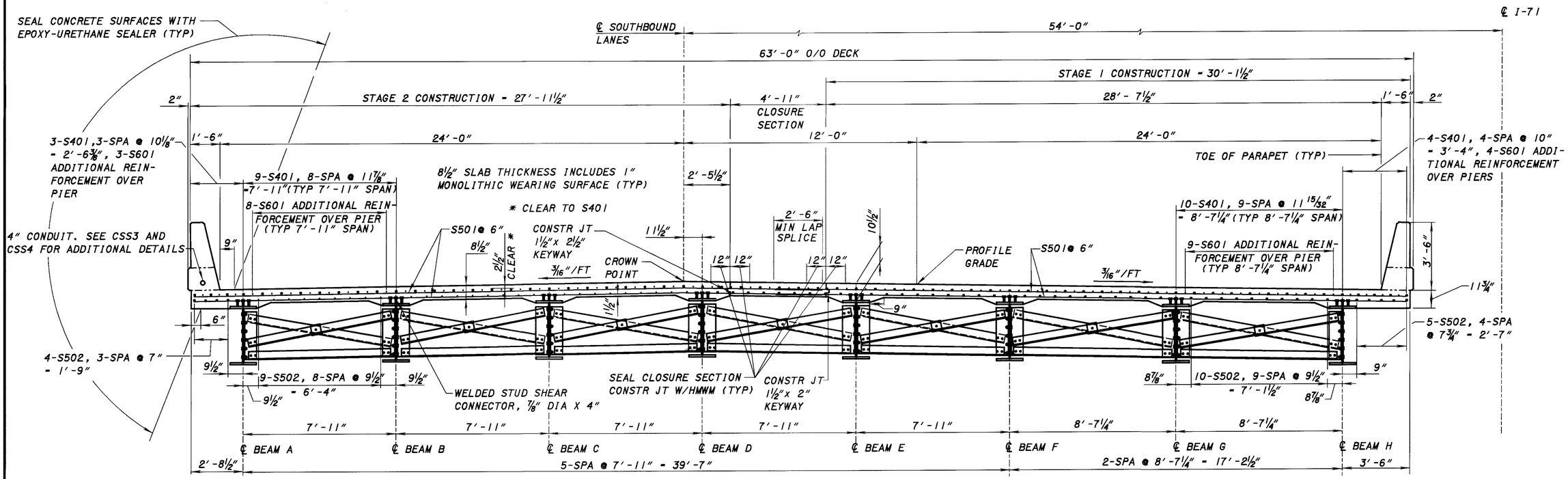

TRANSVERSE SECTION

(SOUTHBOUND LANES SHOWN, NORTHBOUND MIRROR IMAGE)

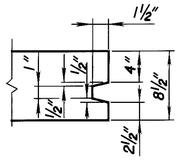

KEYWAY DETAILS AT CLOSURE SECTION

NOTES:

1. HMWM: HIGH MOLECULAR WEIGHT METHACRYLATE, SEE SUPPLEMENTAL SPECIFICATION.
2. ALL REINFORCING STEEL IS EPOXY COATED.
3. FOR PARAPET DETAILS, SEE SHEET 4/23 .
4. REINFORCING STEEL MAY BE FIELD OR SHOP BENT TO ACCOMMODATE THE CROWN OF THE DECK. PAYMENT SHALL BE INCLUDED WITH HIGH PERFORMANCE CONCRETE.
5. FOR CROSS-FRAME CONNECTION DETAILS SEE STD DWG GSD-1-96, GENERAL STEEL DETAILS.
6. DECK SLAB DEPTH: THE THEORETICAL DESIGN THICKNESS FOR THE SLAB IS 8½". THE QUANTITY OF DECK CONCRETE TO BE PAID FOR SHALL BE BASED ON THIS DIMENSION, EVEN THOUGH DEVIATION FROM IT MAY BE NECESSARY BECAUSE THE TOP FLANGE OF THE BEAM MAY NOT HAVE THE EXACT CAMBER OR CONFIGURATION REQUIRED TO PLACE IT PARALLEL TO THE FINISHED GRADE. A HAUNCH WIDTH OF 9" SHALL BE USED FOR COMPUTING QUANTITY OF CONCRETE. HOWEVER, THE HAUNCH WIDTH MAY VARY BETWEEN 6" AND 12".
7. LONGITUDINAL REINFORCEMENTS IN PARAPET ARE 7-SETS OF 6-X504, 7-SETS OF 1-X601, 1-SET OF 6-X505 AND 1-SET OF 1-X602.

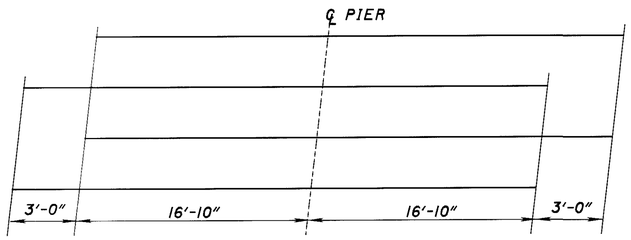

STAGGER OF S601 BARS OVER PIERS

DESIGN AGENCY: ODOT CENTRAL OFFICE, OFFICE OF PRODUCTION
REVIEWED: DFT — DATE: 10-4-99 — STRUCTURE FILE NUMBER: 5203813L/5203848R
DRAWN: TAA — REVISED:
DESIGNED: BRC — CHECKED: TAA

TRANSVERSE SECTION
MED-71-1992 L/R
I-71 OVER ROCKY RIVER

MED-71-15.78

15/23

812
940

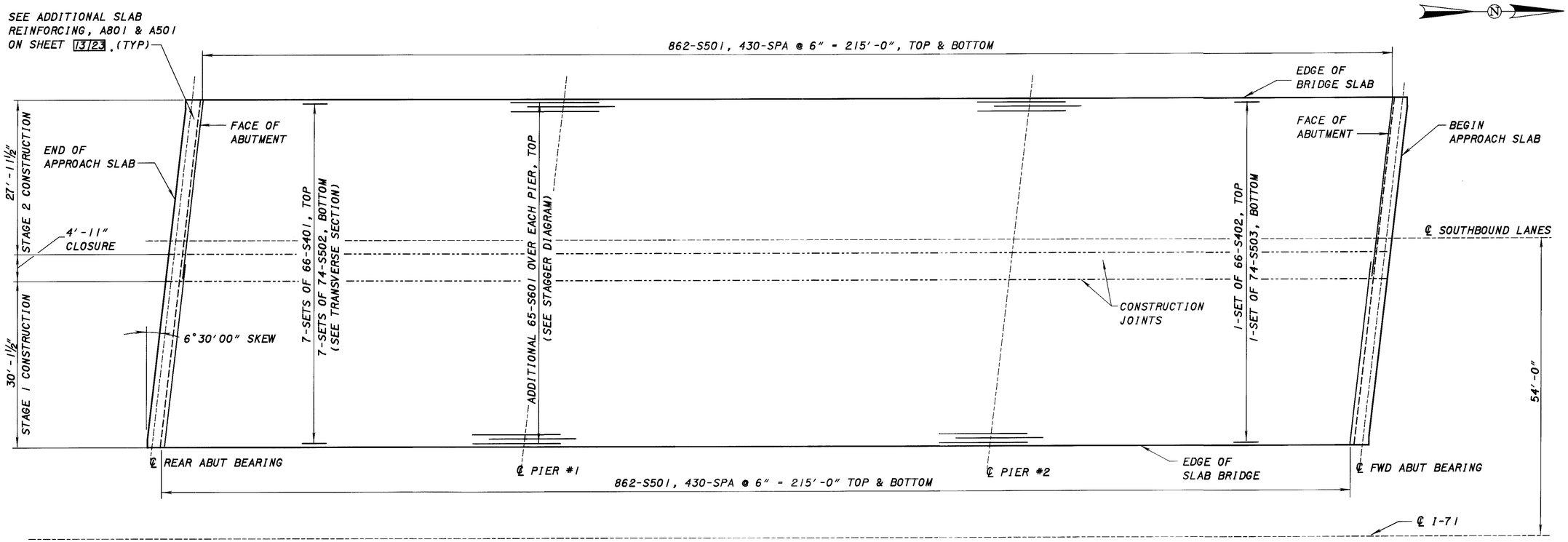

DECK REINFORCEMENT

(SOUTHBOUND DECK SHOWN, NORTHBOUND DECK MIRROR IMAGE AND OPPOSITE HAND)

MINIMUM LAP FOR S401 = 2'-0"
MINIMUM LAP FOR S501 = 2'-6"

SCREED ELEVATION - NORTHBOUND BRIDGE

LOCATION	LEFT TOE OF PARAPET		PROFILE GRADE		LEFT CONSTR JT		CLOSURE POUR CJ		NORTHBOUND LANE ℄		RIGHT TOE OF PARAPET	
	STATION	ELEVATION	STATION	ELEVATION	STATION	ELEVATION	STATION	ELEVATION	STATION	ELEVATION	STATION	ELEVATION
℄ REAR ABUTMENT	1051+39.54	1060.59	1051+36.81	1061.05	1051+36.28	1061.13	1051+35.72	1061.23	1051+35.44	1061.28	1051+32.70	1060.98
¼ SPAN	1051+56.35	1060.13	1051+53.62	1060.59	1051+53.09	1060.63	1051+52.53	1060.77	1051+52.25	1060.82	1051+49.51	1060.53
MIDSPAN	1051+73.17	1059.63	1051+70.44	1060.09	1051+69.91	1060.18	1051+69.35	1060.27	1051+69.07	1060.32	1051+66.33	1060.03
FIELD SPLICE #1	1051+86.71	1059.21	1051+83.98	1059.66	1051+83.45	1059.75	1051+82.89	1059.84	1051+82.61	1059.89	1051+79.87	1059.60
¾ SPAN	1051+89.98	1059.10	1051+87.25	1059.56	1051+86.72	1059.64	1051+86.16	1059.74	1051+85.88	1059.79	1051+83.14	1059.49
℄ PIER # 1	1052+06.79	1058.57	1052+04.06	1059.03	1052+03.53	1059.12	1052+02.97	1059.21	1052+02.69	1059.26	1051+99.95	1058.97
¼ SPAN	1052+27.79	1057.97	1052+25.06	1058.43	1052+24.53	1058.51	1052+23.97	1058.61	1052+23.69	1058.65	1052+20.95	1058.36
FIELD SPLICE #2	1052+27.87	1057.97	1052+25.14	1058.42	1052+24.61	1058.51	1052+24.05	1058.60	1052+23.77	1058.65	1052+21.03	1058.36
MIDSPAN	1052+48.79	1057.36	1052+46.06	1057.82	1052+45.53	1057.91	1052+44.97	1058.00	1052+44.69	1058.05	1052+41.95	1057.75
FIELD SPLICE #3	1052+69.70	1056.71	1052+66.97	1057.17	1052+66.44	1057.25	1052+65.88	1057.35	1052+65.60	1057.39	1052+62.86	1057.10
¾ SPAN	1052+69.79	1056.71	1052+67.06	1057.17	1052+66.53	1057.25	1052+65.97	1057.35	1052+65.69	1057.39	1052+62.95	1057.10
℄ PIER # 2	1052+90.79	1056.05	1052+88.06	1056.51	1052+87.53	1056.60	1052+86.97	1056.69	1052+86.69	1056.74	1052+83.95	1056.45
¼ SPAN	1053+07.60	1055.57	1053+04.87	1056.03	1053+04.34	1056.12	1053+03.78	1056.21	1053+03.50	1056.26	1053+00.76	1055.96
FIELD SPLICE #4	1053+10.87	1055.48	1053+08.14	1055.94	1053+07.61	1056.03	1053+07.05	1056.12	1053+06.77	1056.16	1053+04.03	1055.87
MIDSPAN	1053+24.42	1055.10	1053+21.69	1055.56	1053+21.16	1055.64	1053+20.60	1055.74	1053+20.32	1055.78	1053+17.58	1055.49
¾ SPAN	1053+41.23	1054.59	1053+38.50	1055.05	1053+37.97	1055.13	1053+37.41	1055.22	1053+37.13	1055.27	1053+34.39	1054.98
℄ FORWARD ABUTMENT	1053+58.04	1054.04	1053+55.31	1054.49	1053+54.78	1054.58	1053+54.22	1054.67	1053+53.94	1054.72	1053+51.20	1054.43

SCREED SETTING ELEVATIONS GIVEN ARE TO THE TOP OF CONCRETE DECK AND ARE REQUIRED PRIOR TO PLACEMENT OF CONCRETE. THEY INCLUDE AN ALLOWANCE FOR THE DEAD LOAD DEFLECTION CAUSED BY THE WEIGHT OF THE CONCRETE.

CONCRETE PARAPET NOT SHOWN. FOR DETAILS, SEE SHEET 4/23.

DESIGN AGENCY: ODOT CENTRAL OFFICE, OFFICE OF PRODUCTION
DESIGNED BRC | DRAWN BRC | CHECKED TAA | REVISED | REVIEWED DFT | DATE 10-4-99
STRUCTURE FILE NUMBER 52038|3L/52038|48R

SUPERSTRUCTURE DETAILS
MED-71-1992 L/R
I-71 OVER ROCKY RIVER

MED-71-15.78

16/23

813
940

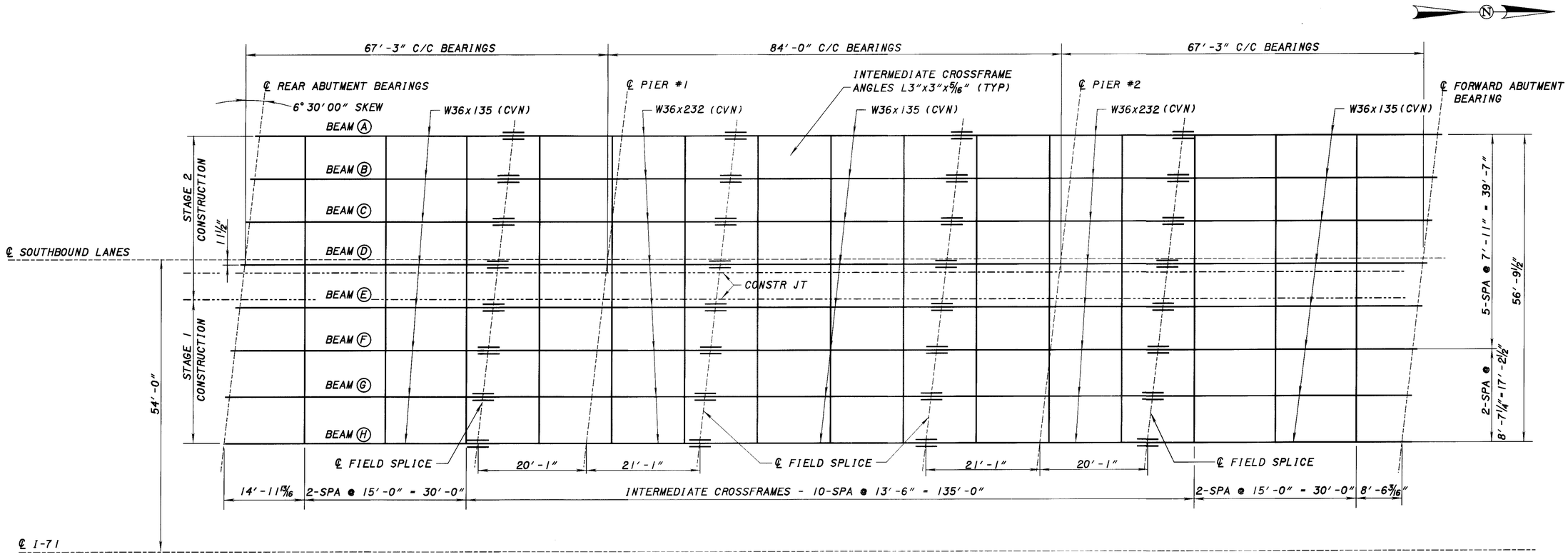

FRAMING PLAN

NORTHBOUND MIRROR IMAGE, OPPOSITE HAND

SCREED ELEVATION - SOUTHBOUND BRIDGE

LOCATION	RIGHT TOE OF PARAPET		PROFILE GRADE		RIGHT CONSTR JT		CLOSURE POUR CJ		SOUTHBOUND LANE ℄		LEFT TOE OF PARAPET	
	STATION	ELEVATION	STATION	ELEVATION	STATION	ELEVATION	STATION	ELEVATION	STATION	ELEVATION	STATION	ELEVATION
℄ REAR ABUTMENT	1051+43.64	1060.47	1051+46.37	1060.76	1051+46.90	1060.82	1051+47.46	1060.88	1051+47.74	1060.91	1051+50.48	1060.45
1/4 SPAN	1051+60.45	1060.01	1051+63.18	1060.30	1051+63.71	1060.36	1051+64.27	1060.42	1051+64.55	1060.45	1051+67.29	1059.99
MIDSPAN	1051+77.27	1059.51	1051+80.00	1059.80	1051+80.53	1059.86	1051+81.09	1059.92	1051+81.37	1059.95	1051+84.11	1059.49
FIELD SPLICE #1	1051+90.81	1059.08	1051+93.54	1059.37	1051+94.07	1059.43	1051+94.63	1059.49	1051+94.91	1059.52	1051+97.65	1059.07
3/4 SPAN	1051+94.08	1058.98	1051+96.81	1059.27	1051+97.34	1059.33	1051+97.90	1059.39	1051+98.18	1059.42	1052+00.92	1058.96
℄ PIER # 1	1052+10.89	1058.45	1052+13.62	1058.74	1052+14.15	1058.80	1052+14.71	1058.86	1052+14.99	1058.89	1052+17.73	1058.43
1/4 SPAN	1052+31.89	1057.84	1052+34.62	1058.14	1052+35.15	1058.19	1052+35.71	1058.25	1052+35.99	1058.29	1052+38.73	1057.83
FIELD SPLICE #2	1052+31.97	1057.84	1052+34.70	1058.13	1052+35.23	1058.19	1052+35.79	1058.25	1052+36.07	1058.28	1052+38.81	1057.82
MIDSPAN	1052+52.89	1057.24	1052+55.62	1057.53	1052+56.15	1057.59	1052+56.71	1057.65	1052+56.99	1057.68	1052+59.73	1057.22
FIELD SPLICE #3	1052+73.80	1056.59	1052+76.53	1056.88	1052+77.06	1056.94	1052+77.62	1057.00	1052+77.90	1057.02	1052+80.64	1056.57
3/4 SPAN	1052+73.89	1056.58	1052+76.62	1056.88	1052+77.15	1056.93	1052+77.71	1056.99	1052+77.99	1057.03	1052+80.73	1056.57
℄ PIER # 2	1052+94.89	1055.93	1052+97.62	1056.22	1052+98.15	1056.28	1052+98.71	1056.34	1052+98.99	1056.37	1053+01.73	1055.91
1/4 SPAN	1053+11.70	1055.45	1053+14.43	1055.74	1053+14.96	1055.80	1053+15.52	1055.86	1053+15.80	1055.89	1053+18.54	1055.43
FIELD SPLICE #4	1053+14.97	1055.36	1053+17.70	1055.65	1053+18.23	1055.71	1053+18.79	1055.77	1053+19.07	1055.80	1053+21.81	1055.34
MIDSPAN	1053+28.52	1054.97	1053+31.25	1055.27	1053+31.78	1055.32	1053+32.34	1055.38	1053+32.62	1055.42	1053+35.36	1054.96
3/4 SPAN	1053+45.33	1054.46	1053+48.06	1054.76	1053+48.59	1054.81	1053+49.15	1054.87	1053+49.43	1054.91	1053+52.17	1054.45
℄ FORWARD ABUTMENT	1053+62.14	1053.91	1053+64.87	1054.20	1053+65.40	1054.26	1053+65.96	1054.32	1053+66.24	1054.35	1053+68.98	1053.89

SCREED SETTING ELEVATIONS GIVEN ARE TO THE TOP OF CONCRETE DECK AND ARE REQUIRED PRIOR TO PLACEMENT OF CONCRETE. THEY INCLUDE AN ALLOWANCE FOR THE DEAD LOAD DEFLECTION CAUSED BY THE WEIGHT OF THE CONCRETE.

DESIGN AGENCY: ODOT CENTRAL OFFICE, OFFICE OF PRODUCTION
DESIGNED: BRC | DRAWN: BRC | CHECKED: TAA | REVISED: DFT | DATE: 10-4-99 | REVISED | STRUCTURE FILE NUMBER: 5203813L/5203848R

SUPERSTRUCTURE DETAILS
MED-71-1992 L/R
I-71 OVER ROCKY RIVER

MED-71-15.78

17 / 23

814 / 940

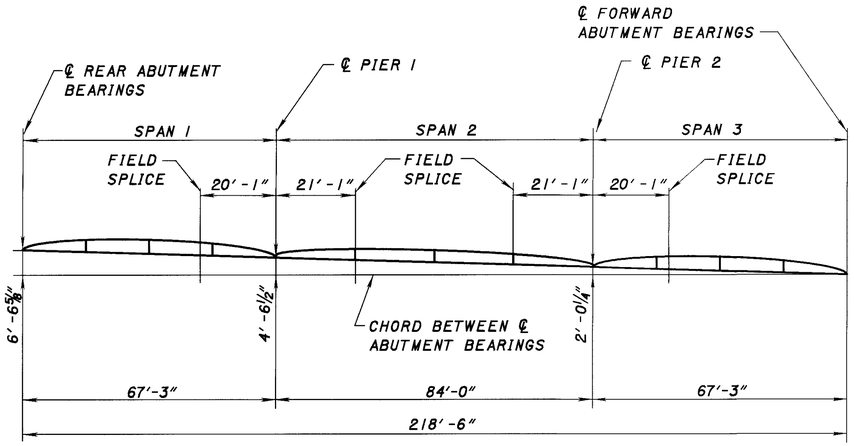

BLOCKING AND CAMBER DIAGRAM

STEEL IN UNLOADED POSITION

DEFLECTION AND CAMBER, INCHES													
	SPAN 1				SPAN 2					SPAN 3			
LOCATION OF POINT	¼	½	SPL	¾	¼	SPL	½	SPL	¾	¼	SPL	½	¾
BEAM DEFLECTION	⅛	⅛	⅛	0	⅛	⅛	⅛	⅛	⅛	0	⅛	⅛	⅛
REMAINING DL DEFLECTION	⅝	11/16	½	5/16	⅜	⅜	⅝	⅜	⅜	5/16	½	11/16	⅝
SHOP CAMBER	¾	⅞	⅝	⅜	½	½	¾	½	½	⅜	⅝	⅞	¾

NOTES

STRUCTURAL STEEL:
WHERE A SHAPE OR PLATE IS DESIGNATED (CVN) THE MATERIAL SHALL MEET SPECIFIED MINIMUM NOTCH TOUGHNESS REQUIREMENTS AS SPECIFIED IN 711.01.

ALL BOLTED FIELD SPLICES ARE OPTIONAL, THE CONTRACTOR MAY OMIT THE SPLICES AS DETAILED IN THE PLANS. WHERE SPLICES ARE OMITTED, THE LARGER OF THE ADJACENT BEAM TO THE SPLICE SHALL BE REQUIRED. IN ADDITION THE BEAM SIZES AS DETAILED MAY BE SUBSTITUTED FOR LARGER BEAM SIZES WITH THE SAME DEPTH. THE CONTRACTOR SHALL SUBMIT ALL OPTIONS TO THE PROJECT ENGINEER FOR APPROVAL PRIOR TO ORDERING ANY STRUCTURAL STEEL.

PENDING ANY CHANGES AS DESCRIBED ABOVE AND TYPE OF CROSSFRAME USED, THE SPACING OF THE INTERMEDIATE CROSSFRAMES SHALL BE ADJUSTED TO AVOID CONFLICT WITH THE SPLICES. THE NUMBER OF CROSSFRAMES SHALL REMAIN THE SAME, A MAXIMUM SPACING OF 18'-0" WILL BE ALLOWED AND SHALL REMAIN IN LINE ACROSS THE WIDTH OF THE STRUCTURE.

BOLTED SPLICES:

FOR FIELD SPLICE DETAILS SEE STD. DWG. BS-1-93 (50 KSI) EXCEPT AS MODIFIED HEREIN. THE INSIDE AND OUTSIDE FLANGE PLATES FOR THE BOLTED SPLICE SHALL BE 9/16" THICK (⅛" THICKER THAN GIVEN IN THE STANDARD).

¾" FILL PLATES ARE REQUIRED BETWEEN OUTSIDE FLANGE SPLICE PLATES AND W36x135 BEAM FLANGE. SIZE TO MATCH OUTSIDE FLANGE SPLICE PLATE WIDTH AND ½ FLANGE PLATE LENGTH.

⅛" FILL PLATES ARE REQUIRED BETWEEN THE WEB SPLICE PLATES AND W36x135 BEAM WEB. SIZE TO MATCH HEIGHT OF THE WEB SPLICE PLATE AND ½ THE WEB SPLICE PLATE WIDTH.

FOR SCREED TABLE SEE SHEETS 16/23 AND 17/23 .

WELDED ATTACHMENT:
WELDED ATTACHMENT OF SUPPORTS FOR CONCRETE DECK FINISHING MACHINE MAY BE MADE TO AREAS OF THE FACIA STRINGER FLANGES DESIGNATED "COMPRESSION". ATTACHMENTS SHALL NOT BE MADE TO AREAS DESIGNATED "TENSION". FILLET WELDS TO COMPRESSION FLANGES SHALL BE NOT CLOSER THAN 1" FROM EDGE OF FLANGE, BE NOT MORE THAN 2" LONG, AND BE NOT SMALLER THAN THE MINIMUM SIZE REQUIRED BY AASHTO.

3"ϕ HOLES DRILLED IN THE PROPOSED BEAM SHALL BE PAID UNDER ITEM 863 STRUCTURAL STEEL. THIS PAYMENT IS INCIDENTAL TO THE PAY ITEM.

LATERAL AND LONGITUDINAL SPACING OF WELDED STUD CONNECTORS MAY BE ALTERED AT FIELD SPLICE LOCATIONS TO AVOID INTERFERENCE WITH FLANGE SPLICE BOLTS PROVIDED THAT AT LEAST THE NUMBER OF STUDS SPECIFIED IN THE BEAM ELEVATION ARE PROVIDED.

STRUCTURAL STEEL SHALL BE ASTM A588, WEATHERING STEEL.

ALL BEAM LENGTH DIMENSIONS ARE AT 60 °F.

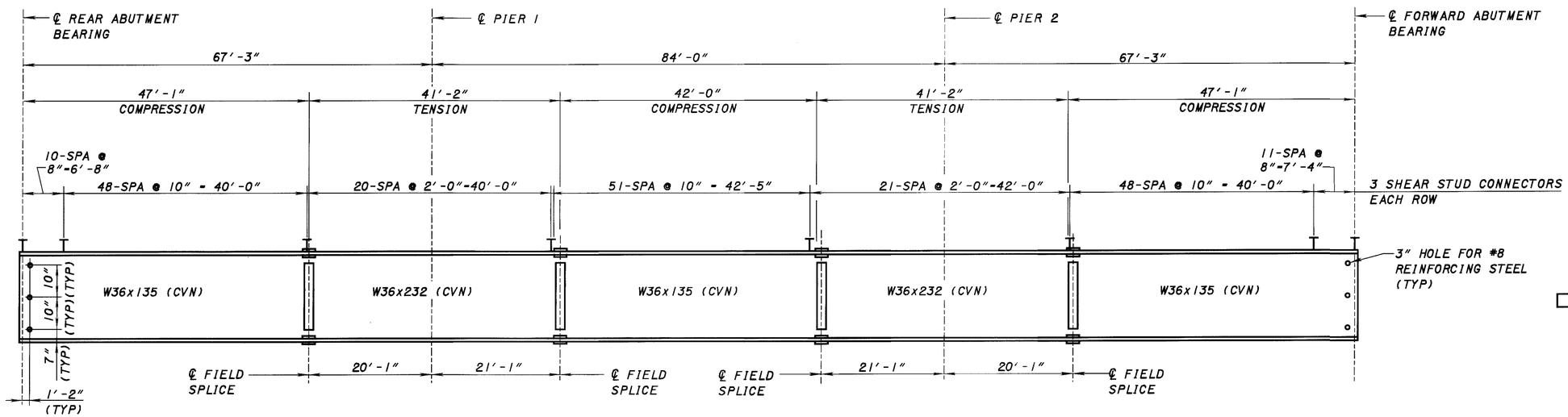

BEAM ELEVATION

EXAGGERATED VERTICAL SCALE

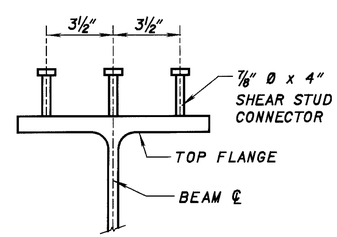

TYPICAL SECTION SHEAR CONNECTOR DETAIL

DESIGN AGENCY: ODOT CENTRAL OFFICE, OFFICE OF PRODUCTION
REVIEWED: DFT
DATE: 10-4-99
STRUCTURE FILE NUMBER: 5203813L/5203848R
DRAWN: BRC
REVISED:
DESIGNED: BRC
CHECKED: TAA

SUPERSTRUCTURE DETAILS

MED-71-1992 L/R
I-71 OVER ROCKY RIVER

MED-71-15.78

815/940

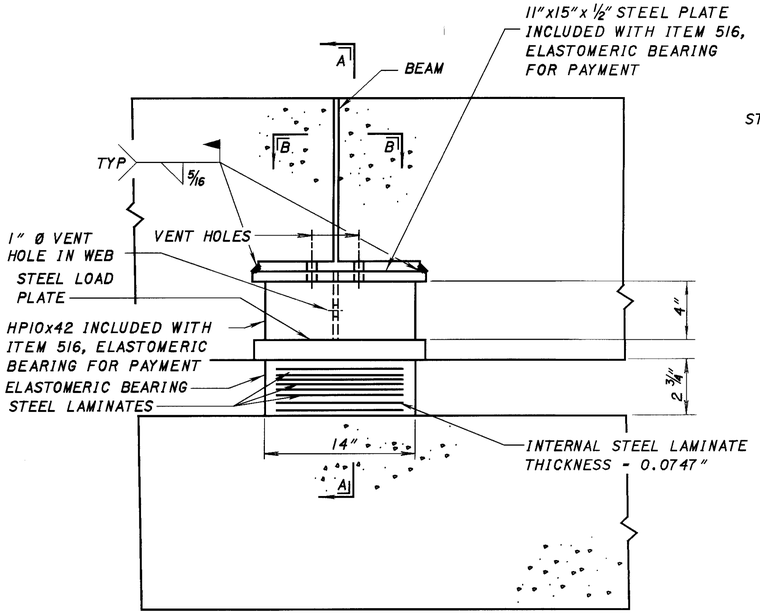

ABUTMENT BEARING ELEVATION

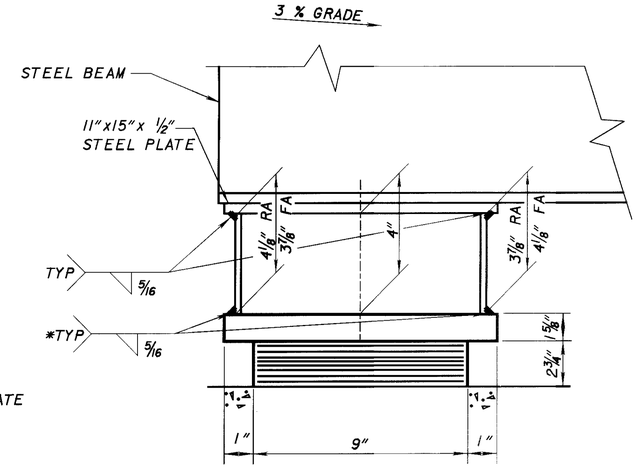

* FIELD WELD OPTIONAL

SECTION A-A
LAMINATED ELASTOMERIC EXPANSION ABUTMENT BEARING
REAR ABUTMENT SHOWN

BEARING TABLE											
BEARING LOCATION	TYPE	L	W	t_i	t_e	n_1	n_2	STEEL LOAD PL	TOTAL HEIGHT*	DL, KIPS	LL, KIPS	TOTAL, KIPS
ABUTMENT	EXP	9"	14"	1/4"	3/16"	7	8	11"x15"x1 5/8"	4 3/8"	70	51	121
PIER 1	EXP	12"	20"	3/8"	1/4"	3	4	13"x21"x2 1/4" (BEVELED) **	4 3/16"	156	66	222
PIER 2	EXP	12"	20"	3/8"	1/4"	3	4	13"x21"x2 1/4" (BEVELED) **	4 3/16"	156	66	222

n_1 - NUMBER OF INTERNAL ELASTOMER LAYERS, t_1
n_2 - NUMBER OF STEEL LAMINATES, 0.0747" THICKNESS

ELASTOMER LAYERS ARE 50 DUROMETERS
* TOTAL HEIGHT INCLUDES LOAD PLATE
** LOAD PLATE MINIMUM THICKNESS BECAUSE IT IS BEVELED.

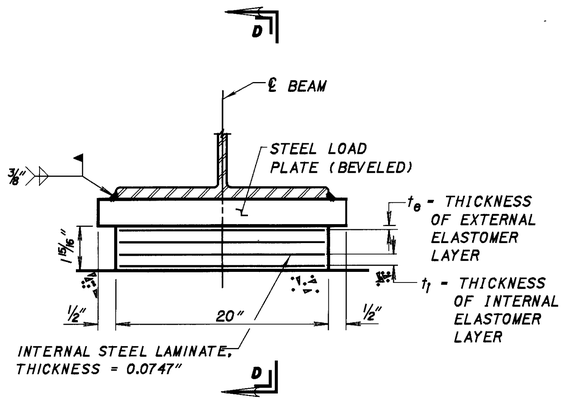

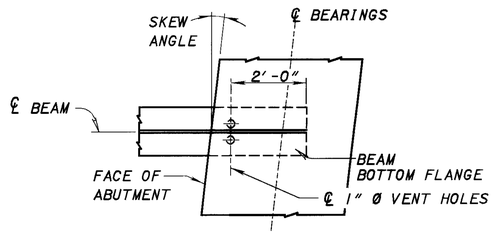

SECTION B-B

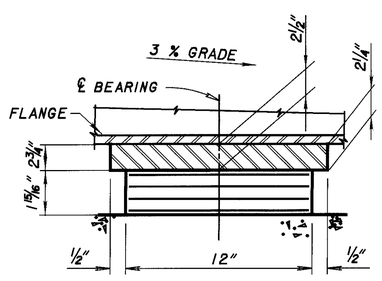

SECTION D-D
LAMINATED ELASTOMERIC EXPANSION PIER BEARING

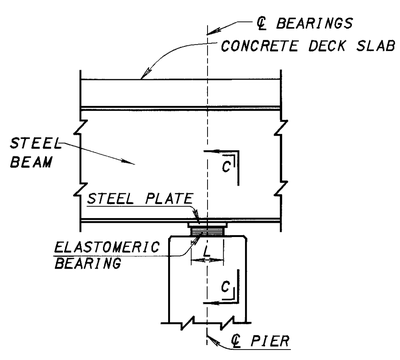

SECTION THRU PIER

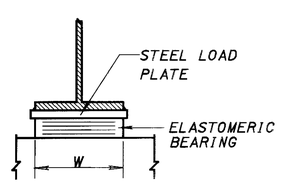

SECTION C-C

NOTES:

MATERIALS: THE HP SHAPE (SUPPORT MEMBER) SHALL BE GRADE 36 AND STEEL PLATES SHALL BE GRADE 50 STEEL, A 588.

WELDING: WELDING OF THE LOAD PLATE TO THE SUPERSTRUCTURE SHALL BE CONTROLLED SO THAT THE PLATE TEMPERATURE AT THE ELASTOMER BONDED SURFACE SHALL NOT EXCEED 300°F AS DETERMINED BY THE USE OF PYROMETRIC STICKS OR OTHER TEMPERATURE MONITORING DEVICES. THE STEEL LOAD PLATE SHALL BE BONDED BY VULCANIZATION TO THE ELASTOMER DURING THE MOLDING PROCESS.

BEARING REPOSITIONING: IF DECK CONCRETE IS PLACED AT AN AMBIENT TEMPERATURE HIGHER THAN 80°F OR LOWER THAN 40°F AND THE BEARING SHEAR DEFLECTION EXCEEDS ONE-SIXTH OF THE BEARING HEIGHT AT 60°F ± 10°F, THE BEAMS SHALL BE RAISED TO ALLOW THE BEARING TO RETURN TO THEIR UNDERFORMED SHAPE AT 60°F ± 10°F.

ELASTOMERIC BEARINGS SHALL COMPLY WITH ITEM 516 AND AASHTO STANDARD SPECIFICATION FOR HIGHWAY BRIDGES, SECTION 18, BEARING DEVICES, DIVISION II, CONSTRUCTION ARTICLES 18.4.5.1 AND 18.5.6.2. BEARINGS SHALL BE GRADE 3, 50 DUROMETER ELASTOMER AND SHALL BE SUBJECTED TO THE LOAD TESTING REQUIREMENTS DEFINED IN ARTICLE 18.7.4.5 OF THE AASHTO DOCUMENT LISTED ABOVE. THE UNIT BID PRICE SHALL INCLUDE ALL MATERIALS, LABOR, TESTING, STEEL LOAD PLATES AND INCIDENTALS NECESSARY TO FURNISH AND INSTALL LAMINATED ELASTOMERIC BEARINGS. PAYMENT WILL BE MADE AT THE CONTRACT PRICE FOR ITEM 516, EACH, ELASTOMERIC BEARINGS WITH INTERNAL LAMINATES AND LOAD PLATE (NEOPRENE).

BASIS OF PAYMENT: THE UNIT BID PRICE SHALL INCLUDE ALL MATERIALS, LABOR, TESTING, HP10x42, STEEL PLATES AND INCIDENTALS NECESSARY TO FURNISH AND INSTALL LAMINATED ELASTOMERIC EXPANSION BEARINGS. PAYMENT WILL BE MADE AT THE CONTRACT PRICE FOR ITEM 516, EACH, ELASTOMERIC BEARINGS WITH INTERNAL LAMINATES AND LOAD PLATE (NEOPRENE):

9" x 14" x 2 3/4" WITH 11" x 15" x 1 5/8" LOAD PLATE, AS PER PLAN.
12" x 20" x 1 5/16" WITH 13" x 21" x 2 1/4" LOAD PLATE.

DESIGN AGENCY: ODOT CENTRAL OFFICE, OFFICE OF PRODUCTION
DATE: 10-4-99
REVISED: DFT
STRUCTURE FILE NUMBER: 5203813L/5203848R
DRAWN: BRC
REVISED:
DESIGNED: BRC
CHECKED: TAA

BEARING DETAILS
MED-71-1992 L/R
I-71 OVER ROCKY RIVER

MED-71-15.78

MARK	NUMBER REAR ABUT. STAGE I	REAR ABUT. STAGE II	FWD. ABUT. STAGE I	FWD. ABUT. STAGE II	TOTAL	LENGTH	WEIGHT LB	TYPE	DIMENSIONS A	B	C	D	R	INC
ABUTMENTS - MED-71-1992 L (SOUTHBOUND LANES)														
A501	24	27	24	27	102	6'-5"	683	2	2'-5"	1'-10"	2'-5"			
A502	48	54	48	54	204	7'-9"	1649	2	2'-8"	2'-8"	2'-8"			
	1		1			27'-1"								
A503	SET OF	--	SET OF	--	8	TO	223.4	STR						2½"
	4		4			26'-5½"								
A504	6	6	6	6	24	31'-11"	799.0	STR						
A505	1	--	1	--	2	27'-1"	56.5	STR						
A506	1	--	1	--	2	26'-5"	55.2	STR						
A507	18	--	18	--	36	19'-4"	726	3	2'-8"	6'-8½"				
A508	--	12	--	12	24	3'-0"	75.1	STR						
A509	22	8	22	8	60	17'-7"	1101	3	5'-11"	2'-7"				
A510	1	1	1	1	4	9'-4"	38.9	19	7'-10"	1'-6"				
		1		1		8'-11"								
A511	--	SET OF	--	SET OF	8	TO	71.8	STR						2½"
		4		4		8'-3½"								
A512	--	1	--	1	2	8'-3"	17.3	STR						
A513	--	1	--	1	2	8'-11"	18.6	STR						
A514	2	2	2	2	8	18'-11"	158	2	8'-3"	2'-8"	8'-3"			
A515	6	6	6	6	24	21'-7"	541	2	9'-7"	2'-8"	9'-7"			
A516	2	3	2	3	10	11'-9"	123	2	4'-8"	2'-8"	4'-8"			
	1	1	1	1		10'-11"			4'-3"		4'-3"			
A517	SET OF	SET OF	SET OF	SET OF	20	TO	172	2	TO	2'-8"	TO			8½"
	5	5	5	5		5'-6"			1'-5"		1'-5"			
A518	1	1	1	1	4	4'-7"	19.1	STR						
A519	1	1	1	1	4	7'-9"	33.0	STR						
A520	1	1	1	1	4	8'-10"	36.9	STR						
A521	1	1	1	1	4	9'-8"	40.3	19	7'-10"	1'-10"				
A522	1	1	1	1	4	4'-11"	20.5	STR						
A523	1	1	1	1	4	8'-6"	35.5	STR						
A524					2	9'-0"	18.8	STR						
A525	8	8	8	8	32	11'-7"	386.6	STR						
A526	1	1	1	1	4	4'-7"	19	2	1'-1"	2'-8"	1'-1"			
A527	1	1	1	1	4	8'-1"	34	STR						
A601	18	46	18	46	128	5'-7"	1074	STR						
A602	9	23	9	23	64	9-'9"	938	2	3'-8"	2'-8"	3'-8"			
	3	3	3	3		31'-6"								
A801	SETS OF	SETS OF	SETS OF	SETS OF	48	TO	4017.0	STR						1¼"
	4	4	4	4		31'-2¼"								
		1		1		8'-11"								
A802	--	SET OF	--	SET OF	8	TO	183.8	STR						2½"
		4		4		8'-3½"								
	1		1			27'-1"								
A803	SET OF	--	SET OF	--	8	TO	571.8	STR						2½"
	4		4			26'-5"								
A804	3	3	3	3	12	31'-2"	999.2	STR						
A805	3	3	3	3	12	31'-6"	1009.2	STR						
D801	22	22	22	22	88	4'-11"	1155.2	18	2'-7"	1'-0"	1'-0"			

MARK	NUMBER PIER 1	PIER 2	TOTAL	LENGTH	WEIGHT LB	TYPE	DIMENSIONS A	B	C	D	R	INC
PIERS - MED-71-1992 L (SOUTHBOUND LANES)												
P401	175	189	364	4'-1"	993	31	3'-0"					
P402	100	108	208	2'-6"	347	16	2'-0"					
P403	6	6	12	9'-2"	74	3	2'-2"	2'-2"				
P501	60	64	124	9'-7"	1239	24	3'-0"	2'-6"	2'-6"		1'-5⅜"	
P502	58	62	120	9'-0"	1126	STR						
P503			58	6'-9"	409	2	2'-6"	2'-0"	2'-6"			
P504	13	13	26	10'-1"	274	2	3'-8"	3'-0"	3'-8"			
P505	2	2	4	9'-7"	40	2	3'-8"	2'-6"	3'-8"			
P901	2	2	4	9'-1"	123.5	STR						
P902	2	2	4	11'-1"	150.7	STR						
P903	2	2	4	11'-8"	158.7	STR						
P1101			10	10'-10"	575.6	STR						
P1102			10	31'-9"	1686.9	STR						
P1103	36	--	36	38'-10"	7428	STR						
P1104	--	36	36	42'-3"	8081	STR						
P1105	28	28	56	23'-0"	6843	STR						
PIERS - MED-71-1992 R (NORTHBOUND LANES)												
P401	175	189	364	4'-1"	993	31	3'-0"					
P402	100	108	208	2'-6"	347	16	2'-0"					
P403	6	6	12	9'-2"	74	3	2'-2"	2'-2"				
P501	60	64	124	9'-7"	1239	24	3'-0"	2'-6"	2'-6"		1'-5⅜"	
P502	58	62	120	9'-0"	1126	STR						
P503			58	6'-9"	409	2	2'-6"	2'-0"	2'-6"			
P504	13	13	26	10'-1"	274	2	3'-8"	3'-0"	3'-8"			
P505	2	2	4	9'-7"	40	2	3'-8"	2'-6"	3'-8"			
P901	2	2	4	9'-1"	123.5	STR						
P902	2	2	4	11'-1"	150.7	STR						
P903	2	2	4	11'-8"	158.7	STR						
P1101			10	10'-10"	575.6	STR						
P1102			10	31'-9"	1686.9	STR						
P1103	36	--	36	38'-10"	7428	STR						
P1104	--	36	36	42'-3"	8081	STR						
P1105	28	28	56	23'-0"	6843	STR						

DESIGN AGENCY
ODOT CENTRAL OFFICE
OFFICE OF PRODUCTION

REVIEWED DFT
DATE 10-4-99
STRUCTURE FILE NUMBER 5203813L/5203848R

DRAWN BRC
REVISED

DESIGNED BRC
CHECKED JFF

REINFORCING SCHEDULE

MED-71-1992 L/R
OVER ROCKY RIVER

MED-71-15.78

MARK	NUMBER SUPER STAGE I	NUMBER SUPER STAGE II	NUMBER TOTAL	LENGTH	WEIGHT LB	TYPE	DIMENSIONS A	B	C	D	E	R	INC
PARAPETS - MED-71-1992 L (SOUTHBOUND LANES)													
X501	16	16	32	10'-0"	333.8	STR							
X502	3	6	9	5'-6"	52	25	1'-8"	2'-5"	1'-4"	1½"	5"		
X503	13	10	23	5'-6"	132	STR							
X504	42	42	84	30'-0"	2628.4	STR							
X505	6	6	12	6'-0"	75.1	STR							
X601	7	7	14	30'-0"	630.9	STR							
X602	1	1	2	10'-6"	31.5	STR							
Y501	192	192	384	7'-5"	3156.1	23	1'-1"	3'-2"	3'-0"			2¾"	
Y601	192	192	384	3'-9"	2163	33	1'-1"	1'-8½"	1'-1"	0			
	4	4		5'-2"				4'-1½"					
Y602	SETS OF	SETS OF	88	TO	617	1	1'-1"	TO					1"
	11	11		4'-2"				3'-4½"					
Y603	16	16	32	4'-3"	204	1	1'-1"	3'-3½"					
Y604	192	192	384	2'-8"	1634.4	1	1'-1"	1'-8½"					
PARAPETS - MED-71-1992 R (NORTHBOUND LANES)													
X501	16	16	32	10'-0"	333.8	STR							
X502	3	6	9	5'-6"	52	25	1'-8"	2'-5"	1'-4"	1½"	5"		
X503	13	10	23	5'-6"	132	STR							
X504	42	42	84	30'-0"	2628.4	STR							
X505	6	6	12	6'-0"	75.1	STR							
X601	7	7	14	30'-0"	630.9	STR							
X602	1	1	2	10'-6"	31.5	STR							
Y501	192	192	384	7'-5"	3156.1	23	1'-1"	3'-2"	3'-0"			2¾"	
Y601	192	192	384	3'-9"	2163	33	1'-1"	1'-8½"	1'-1"	0			
	4	4		5'-2"				4'-1½"					
Y602	SETS OF	SETS OF	88	TO	617	1	1'-1"	TO					1"
	11	11		4'-2"				3'-4½"					
Y603	16	16	32	4'-3"	204	1	1'-1"	3'-3½"					
Y604	192	192	384	2'-8"	1634.4	1	1'-1"	1'-8½"					

MARK	NUMBER SUPER STAGE I	NUMBER SUPER STAGE II	NUMBER TOTAL	LENGTH	WEIGHT LB	TYPE	DIMENSIONS A	B	C	D	R	INC
SUPERSTRUCTURE - MED-71-1992 L (SOUTHBOUND LANES)												
S401	224	238	462	30'-0"	9258.5	STR						
S402	32	34	66	24'-0"	1058.1	STR						
S501	862	862	1724	32'-10"	59038.7	STR						
S502	245	273	518	30'-0"	16208.2	STR						
S503	35	39	74	27'-6"	2122.5	STR						
S601	64	66	130	36'-8"	7159.4	STR						
SUPERSTRUCTURE - MED-71-1992 R (NORTHBOUND LANES)												
S401	224	238	462	30'-0"	9258.5	STR						
S402	32	34	66	24'-0"	1058.1	STR						
S501	862	862	1724	32'-10"	59038.7	STR						
S502	245	273	518	30'-0"	16208.2	STR						
S503	35	39	74	27'-6"	2122.5	STR						
S601	64	66	130	36'-8"	7159.4	STR						

NOTES:

1. THIS REINFORCING SCHEDULE IS FOR INFORMATION ONLY.
2. ALL REINFORCING STEEL SHALL BE EPOXY COATED.
3. THE BAR SIZE IS INDICATED IN THE BAR MARK. THE FIRST DIGIT INDICATES THE BAR SIZE. FOR EXAMPLE, AN A501 IS A #5 BAR. THE DIMENSIONS SHOWN ARE OUT TO OUT UNLESS OTHERWISE INDICATED. "R" INDICATES THE INSIDE RADIUS.

DESIGN AGENCY: ODOT CENTRAL OFFICE, OFFICE OF PRODUCTION
REVIEWED: DFT
DATE: 10-4-99
STRUCTURE FILE NUMBER: 5203813L/5203848R
DRAWN: BRC
REVIEWED:
DESIGNED: BRC
CHECKED: JFF

REINFORCING SCHEDULE

MED-71-1992 L/R
I-71 OVER ROCKY RIVER

MED-71-15.78

818/940

MARK	NUMBER					LENGTH	WEIGHT	TYPE	DIMENSIONS					
	REAR ABUT. STAGE I	REAR ABUT. STAGE II	FWD. ABUT. STAGE I	FWD. ABUT. STAGE II	TOTAL		LB		A	B	C	D	R	INC
ABUTMENTS - MED-71-1992 R (NORTHBOUND LANES)														
A501	24	27	24	27	102	6'-5"	683	2	2'-5"	1'-10"	2'-5"			
A502	48	54	48	54	204	7'-9"	1649	2	2'-8"	2'-8"	2'-8"			
	1		1			27'-1"								
A503	SET OF	--	SET OF	--	8	TO	223.4	STR						2½"
	4		4			26'-5½"								
A504	6	6	6	6	24	31'-11"	799.0	STR						
A505	1	--	1	--	2	27'-1"	56.5	STR						
A506	1	--	1	--	2	26'-5"	55.2	STR						
A507	18	--	18	--	36	19'-4"	726	3	2'-8"	6'-8½"				
A508	--	12	--	12	24	3'-0"	75.1	STR						
A509	22	8	22	8	60	17'-7"	1101	3	5'-11"	2'-7"				
A510	1	1	1	1	4	9'-4"	38.9	19	7'-10"	1'-6"				
		1		1		8'-11"								
A511	--	SET OF	--	SET OF	8	TO	71.8	STR						2½"
		4		4		8'-3½"								
A512	--	1	--	1	2	8'-3"	17.3	STR						
A513	--	1	--	1	2	8'-11"	18.6	STR						
A514	2	2	2	2	8	18'-11"	158	2	8'-3"	2'-8"	8'-3"			
A515	6	6	6	6	24	21'-7"	541	2	9'-7"	2'-8"	9'-7"			
A516	2	3	2	3	10	11'-9"	123	2	4'-8"	2'-8"	4'-8"			
	1	1	1	1		10'-11"			4'-3"		4'-3"			
A517	SET OF	SET OF	SET OF	SET OF	20	TO	172	2	TO	2'-8"	TO			8½"
	5	5	5	5		5'-6"			1'-5"		1'-5"			
A518	1	1	1	1	4	4'-7"	19.1	STR						
A519	1	1	1	1	4	7'-9"	33.0	STR						
A520	1	1	1	1	4	8'-10"	36.9	STR						
A521	1	1	1	1	4	9'-8"	40.3	19	7'-10"	1'-10"				
A522	1	1	1	1	4	4'-11"	20.5	STR						
A523	1	1	1	1	4	8'-6"	35.5	STR						
A524					2	9'-0"	18.8	STR						
A525	8	8	8	8	32	11'-7"	386.6	STR						
A526	1	1	1	1	4	4'-7"	19	2	1'-1"	2'-8"	1'-1"			
A527	1	1	1	1	4	8'-1"	34	STR						
A601	18	46	18	46	128	5'-7"	1074	STR						
A602	9	23	9	23	64	9-'9"	938	2	3'-8"	2'-8"	3'-8"			
	3	3	3	3		31'-6"								
A801	SETS OF	SETS OF	SETS OF	SETS OF	48	TO	4017.0	STR						1¼"
	4	4	4	4		31'-2¼"								
		1		1		8'-11"								
A802	--	SET OF	--	SET OF	8	TO	183.8	STR						2½"
		4		4		8'-3½"								
	1		1			27'-1"								
A803	SET OF	--	SET OF	--	8	TO	571.8	STR						2½"
	4		4			26'-5"								
A804	3	3	3	3	12	31'-2"	999.2	STR						
A805	3	3	3	3	12	31'-6"	1009.2	STR						
D801	22	22	22	22	88	4'-11"	1155.2	18	2'-7"	1'-0"	1'-0"			

DESIGN AGENCY
ODOT CENTRAL OFFICE
OFFICE OF PRODUCTION

REVIEWED DFT DATE 10-4-99
STRUCTURE FILE NUMBER 5203813L/5203848R

DRAWN BRC REVIEWED
DESIGNED BRC CHECKED JFF

REINFORCING SCHEDULE

MED-71-1992 L/R
I-71 OVER ROCKY RIVER

MED-71-15.78

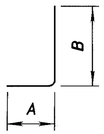

TYPE-1

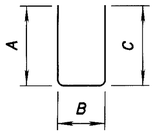

TYPE-2

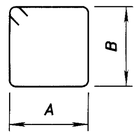

TYPE-3

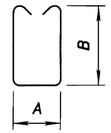

TYPE-4

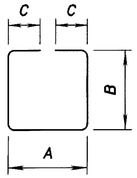

TYPE-5

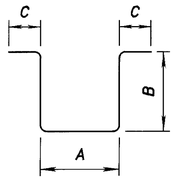

TYPE-6

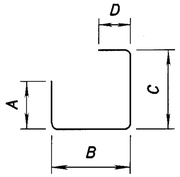

TYPE-7

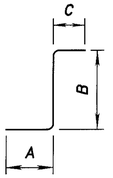

TYPE-8

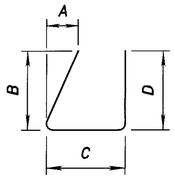

TYPE-9

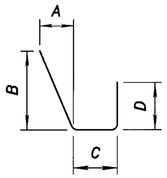

TYPE-10

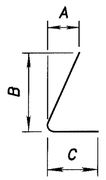

TYPE-11

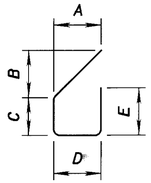

TYPE-12

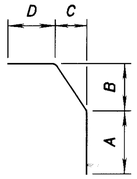

TYPE-13

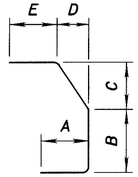

TYPE-14

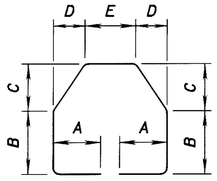

TYPE-15



TYPE-16



TYPE-17

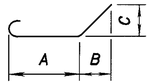

TYPE-18

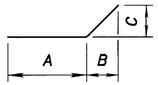

TYPE-19

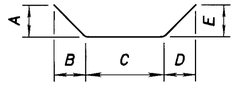

TYPE-20

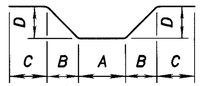

TYPE-21

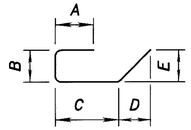

TYPE-22

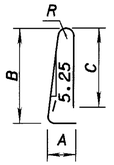

TYPE-23

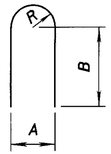

TYPE-24

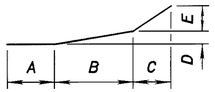

TYPE-25

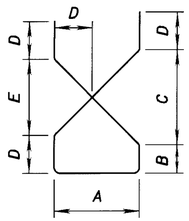

TYPE-26

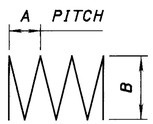

TYPE-27

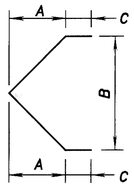

TYPE-28

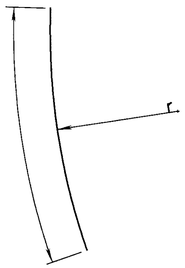

TYPE-29

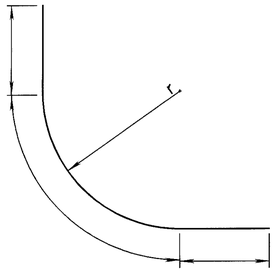

TYPE-30



TYPE-31

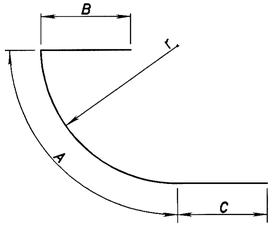

TYPE-32

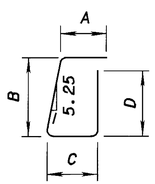

TYPE-33

NOTES

NOTE: ALL REINFORCING STEEL SHALL BE EPOXY COATED.

THE BAR SIZE IS INDICATED IN THE BAR MARK. THE FIRST DIGIT INIDCATES THE BAR SIZE. FOR EXAMPLE, AN A501 IS A #5 BAR. BAR DIMENSIONS SHOWN ARE OUT TO OUT UNLESS OTHERWISE NOTED. "R" INDICATES INSIDE RADIUS.

DESIGN AGENCY
ODOT CENTRAL OFFICE
OFFICE OF PRODUCTION

REVIEWED DFT DATE 10-4-99
STRUCTURE FILE NUMBER 5203813L/5203848R

DRAWN TDB REVIEWED

DESIGNED TDB CHECKED JFF

GENERAL PLAN
MED-71-1992 L/R
I-71 OVER ROCKY RIVER

MED-71-15.78

23/23

820
940

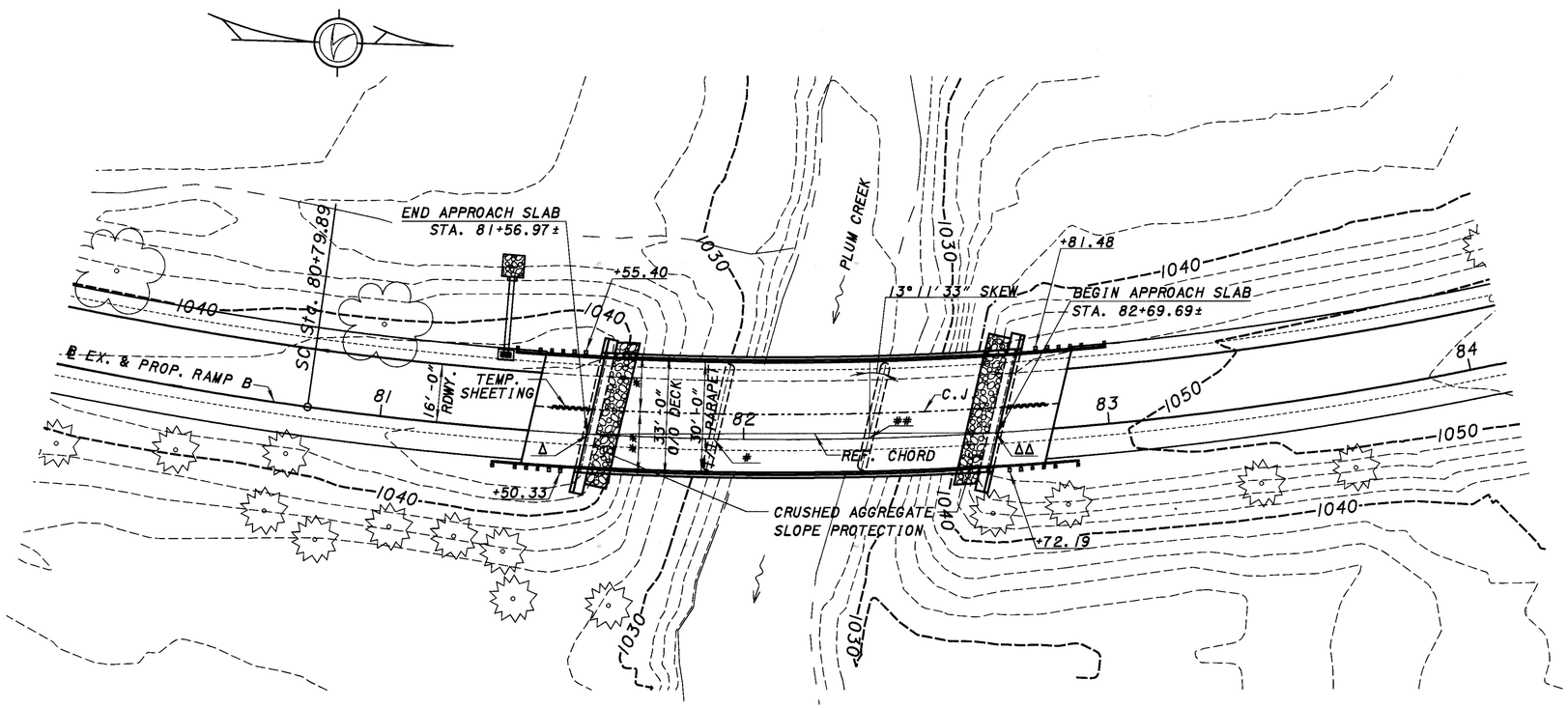

LEGEND

* 15'-8"; STAGE I CONSTRUCTION
** 17'-4"; STAGE II CONSTRUCTION
Δ ℄ BRG. REAR ABUTMENT; STA.81+57.61
ΔΔ ℄ BRG. FWD. ABUTMENT; STA.82+69.03
\# ℄ BRG. PIER 1; STA.81+91.73
\#\# ℄ BRG. PIER 2; STA.82+34.25

CURVE DATA

P.I. Sta - 82+14.54
Δ - 27° 59' 10" (LT)
Dc - 6° 00' 00"
R - 954.93'
Δc - 21° 59' 10" (LT)
Lc - 366.44'
Es - 30.11'

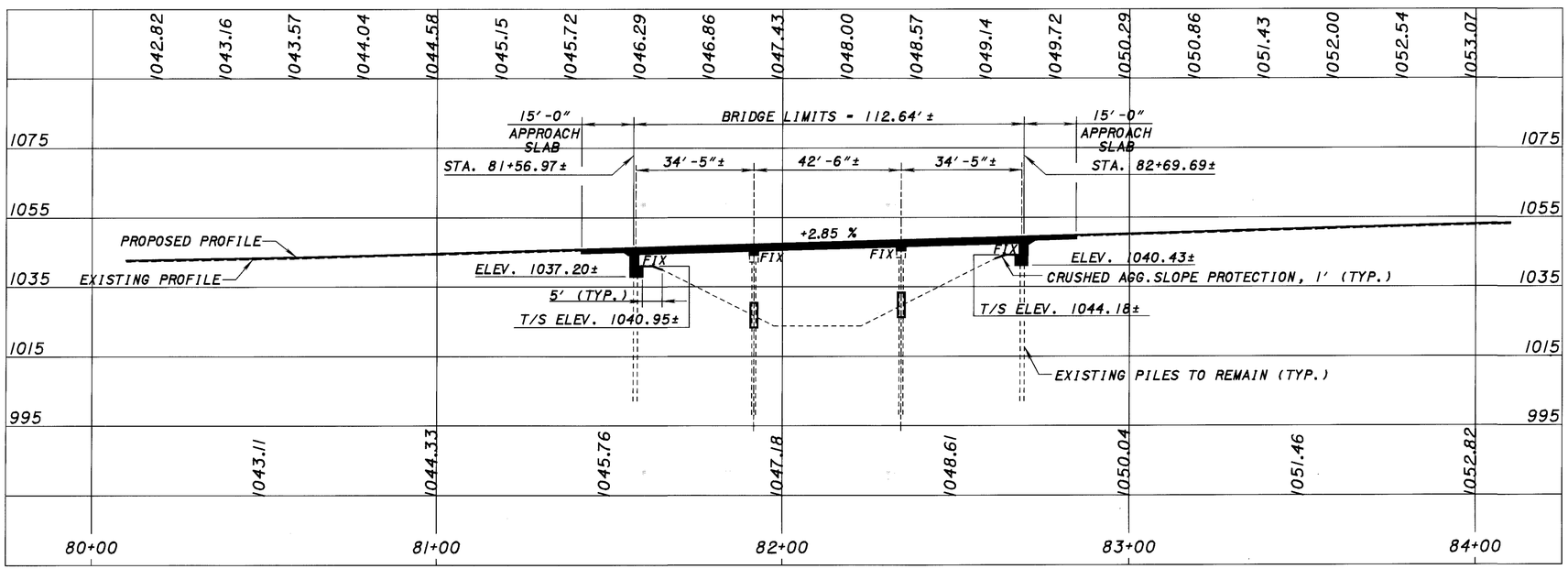

BENCHMARK DATA

BM#1 - STATION 1110+35.99 IR-71 ELEVATION - 1069.77
ODOT DISC IN HEADWALL, STAMPED

TRAFFIC DATA

CURRENT YEAR ADT (2000) - 890
DESIGN YEAR ADT (2020) - 1290
DESIGN YEAR ADTT (2020) - 90

NOTES:

1. EARTHWORK LIMITS SHOWN ARE APPROXIMATE. ACTUAL SLOPES SHALL CONFORM TO PLAN CROSS-SECTIONS.
2. REFERENCE CHORD IS MEASURED FROM THE INTERSECTION OF THE BASELINE OF THE RAMP AND THE FACE OF THE ABUTMENTS. SPAN LENGTHS ARE MEASURED ALONG REFERENCE CHORD.

EXISTING STRUCTURE

TYPE: CONTINUOUS SLAB BRIDGE WITH CAPPED PILE PIERS AND ABUTMENTS

SPANS: 34'-0"; 42'-6"; 34'-0"

ROADWAY: 28'-0" FACE TO FACE OF PARAPETS

LOADING: CF-400(57)

SKEW: 12°-59'-36" (L.F.) TO LOCAL TANGENT

WEARING SURFACE: ASPHALT CONCRETE

APPROACH SLABS: 25'-0"± LONG (AS-1-54)

ALIGNMENT: 6°-00' CURVE LEFT

SUPERELEVATION : ¾" PER FOOT

DATE BUILT: 1964

SFN: 5203902

PROPOSED STRUCTURE

PROPOSED WORK: NEW SUPERSTRUCTURE ON NEW ABUTMENTS AND EXISTING PIERS

TYPE: CONTINUOUS SLAB BRIDGE WITH REINFORCED CONCRETE SUBSTRUCTURES

SPANS: 34'-5", 42'-6"±, 34'-5" C/C BRGS. (ALONG REFERENCE CHORD)

ROADWAY: 30'-0" T/T PARAPET

LOADING: HS20-44 AND ALTERNATE MILITARY LOADING

SKEW: 13°-11'-33"± L.F. TO LOCAL TANGENT

WEARING SURFACE: 1" MONOLITHIC CONCRETE

APPROACH SLABS: AS-1-81, 15' LONG; 30'-0" T/T CURB

ALIGNMENT: 6°-00'± CURVE LEFT

SUPERELEVATION: ¾" PER FOOT

LONGITUDE: 81°47'25" LATITUDE 41°11'45"

DESIGN AGENCY: ODOT CENTRAL OFFICE
OFFICE OF PRODUCTION

REVISED DFT DATE 9-7-99
STRUCTURE FILE NUMBER 5203902

DRAWN TKB REVISED
DESIGNED TKB CHECKED RJH

MEDINA COUNTY
STA. 81+56.97
STA. 82+69.69

SITE PLAN
MED-71-2088 E
RAMP "B" OVER PLUM CREEK

MED-71-15.78

1 / 16

821 / 940

ESTIMATED QUANTITIES								
ITEM	EXTENSION	TOTAL	UNIT	DESCRIPTION	ABUT.	PIERS	SUPER.	GEN.
202	11203	LUMP		PORTIONS OF STRUCTURE REMOVED, OVER 20 FOOT SPAN, AS PER PLAN	LUMP		LUMP	
503	11100	LUMP		COFFERDAMS, CRIBS AND SHEETING				LUMP
503	21301	LUMP		UNCLASSIFIED EXCAVATION, AS PER PLAN	LUMP			
SPECIAL	50771200	252	LIN FT	PILE ENCASEMENT		252		
512	44400	4	SY	TYPE B WATERPROOFING	4			
SPECIAL	51267510	390	SY	SEALING OF CONCRETE SURFACES (EPOXY-URETHANE)	50	60*	280	
516	13600	11	SF	1" PREFORMED EXPANSION JOINT FILLER	11			
516	13900	8	SF	2" PREFORMED EXPANSION JOINT FILLER	8			
518	21231	LUMP		POROUS BACKFILL WITH FILTER FABRIC, AS PER PLAN	LUMP			
518	40000	93	LF	6" PERFORATED CORRUGATED PLASTIC PIPE	93			
518	40010	54	LF	6" NON-PERFORATED CORRUGATED PLASTIC PIPE, INCLUDING SPECIALS	54			
601	20500	17	CY	CRUSHED AGGREGATE SLOPE PROTECTION	17			
842	42501	6	CY	CLASS C CONCRETE, PIER CAP, AS PER PLAN		6		
842	43501	66	CY	CLASS C CONCRETE, ABUTMENT INCLUDING FOOTING, AS PER PLAN	66			
844	48001	241	CY	HIGH PERFORMANCE CONCRETE SUPERSTRUCTURE (DECK), AS PER PLAN, MIX 4			241	
844	48021	35	CY	HIGH PERFORMANCE CONCRETE SUPERSTRUCTURE (PARAPET), AS PER PLAN, MIX 4			35	
844	49000	LUMP		HIGH PERFORMANCE CONCRETE TRIAL MIX			LUMP	

* EXPOSED SURFACES OF PIER CAP, NEW AND EXISTING, TO BE SEALED.

DESIGN AGENCY
ODOT CENTRAL OFFICE
OFFICE OF PRODUCTION

DESIGNED TKB | DRAWN TKB | REVIEWED DFT | DATE 9-7-99
CHECKED RJH | REVISED | STRUCTURE FILE NUMBER 5203902

ESTIMATED QUANTITIES
MED-71-2088 E
RAMP "B" OVER PLUM CREEK, S.R. 3 INTERCHANGE

MED-71-15.78

822/940

STANDARD DRAWINGS AND SPECIFICATIONS:

REFERENCE SHALL BE MADE TO STANDARD DRAWINGS:

AS-1-81	REVISED 09-15-94
SBR-1-99	DATED 01-12-99
PCB-1-91	REVISED 07-6-99
CS-1-93	DATED 06-30-95

AND TO SUPPLEMENTAL SPECIFICATIONS:

842	DATED 01-06-99
844	DATED 01-06-99
899	DATED 10-21-98
911	DATED 07-10-97
954	DATED 09-09-97

DESIGN SPECIFICATIONS:

THIS STRUCTURE CONFORMS TO "STANDARD SPECIFICATIONS FOR HIGHWAY BRIDGES" ADOPTED BY THE AMERICAN ASSOCIATION OF STATE HIGHWAY AND TRANSPORTATION OFFICIALS, 1996 INCLUDING THE 1997 AND 1998 INTERIM SPECIFICATIONS AND THE ODOT DESIGN MANUAL.

DESIGN LOADING:

HS20-44 AND THE ALTERNATE MILITARY LOADING.

DESIGN DATA:

HIGH PERFORMANCE CONCRETE - COMPRESSIVE STRENGTH 4500 PSI (SUPERSTRUCTURE)
ITEM 842 CONCRETE - COMPRESSIVE STRENGTH 4000 PSI (SUBSTRUCTURE)

REINFORCING STEEL - ASTM A615, A616 OR A617 GRADE 60 MINIMUM YIELD STRENGTH 60 Ksi.

DECK PROTECTION METHOD - EPOXY COATED REINFORCING STEEL AND 2½" CONCRETE COVER AND HIGH PERFORMANCE CONCRETE.

MONOLITHIC WEARING SURFACE IS ASSUMED, FOR DESIGN PURPOSES, TO BE 1" THICK.

EXISTING STRUCTURE VERIFICATION:

DETAILS AND DIMENSIONS SHOWN ON THESE PLANS PERTAINING TO THE EXISTING STRUCTURE HAVE BEEN OBTAINED FROM PLANS OF THE EXISTING STRUCTURE AND FROM FIELD OBSERVATIONS AND MEASUREMENTS. CONSEQUENTLY, THEY ARE INDICATIVE OF THE EXISTING STRUCTURE AND THE PROPOSED WORK BUT THEY SHALL BE CONSIDERED TENTATIVE AND APPROXIMATE. THE CONTRACTOR IS REFERRED TO CMS SECTIONS 102.05 & 105.02.

CONTRACT BID PRICES SHALL BE BASED UPON A RECOGNITION OF THE UNCERTAINTIES DESCRIBED ABOVE AND UPON A PREBID EXAMINATION OF THE EXISTING STRUCTURE BY THE CONTRACTOR. HOWEVER, ALL PROJECT WORK SHALL BE BASED UPON ACTUAL DETAILS AND DIMENSIONS WHICH HAVE BEEN VERIFIED BY THE CONTRACTOR IN THE FIELD.

EXISTING BRIDGE PLANS MAY BE INSPECTED IN THE OFFICE OF STRUCTURAL ENGINEERING IN COLUMBUS, OHIO OR AT THE ODOT DISTRICT THREE OFFICE IN ASHLAND, OHIO.

TRAFFIC MAINTENANCE:

SEE ROADWAY PLANS FOR ADDITIONAL TRAFFIC NOTES AND DETAILS.

ITEM SPECIAL - SEALING OF CONCRETE SURFACES (EPOXY-URETHANE):

EPOXY-URETHANE SHALL BE THE "BUFF" COLOR MEETING FEDERAL COLOR STANDARD NO. 37722 AS PER THE DETAILS IN THE PLAN. FOR ADDITIONAL NOTES, SEE NOTE IN THE PROPOSAL "ITEM SPECIAL - SEALING OF CONCRETE SURFACES".

ITEM 202 PORTIONS OF STRUCTURE REMOVED OVER 20 FOOT SPAN, AS PER PLAN:

PORTION OF THE STRUCTURE REMOVED, AS PER PLAN, SHALL INCLUDE THE ELEMENTS INDICATED IN THE PLANS AND GENERAL NOTES AND ARE NOT SEPARATELY LISTED FOR PAYMENT, EXCEPT FOR WEARING COURSE REMOVAL. ITEMS TO BE REMOVED INCLUDE ALL EXISTING MATERIALS BEING REPLACED BY NEW CONSTRUCTION AND MISCELLANEOUS ITEMS THAT ARE NOT SHOWN TO BE INCORPORATED INTO THE FINAL CONSTRUCTION AND ARE DIRECTED TO BE REMOVED BY THE ENGINEER. THE USE OF EXPLOSIVES, HEADACHE BALLS AND/OR HOE-RAMS WILL NOT BE PERMITTED. THE METHOD OF REMOVAL AND THE WEIGHT OF HAMMER SHALL BE APPROVED BY THE ENGINEER. ALL WORK SHALL BE DONE IN A MANNER THAT WILL NOT CUT, ELONGATE OR DAMAGE THE EXISTING REINFORCING STEEL TO BE PRESERVED.

PROTECTION OF TRAFFIC:

PRIOR TO DEMOLITION OF ANY PORTIONS OF THE EXISTING SUPERSTRUCTURE, THE CONTRACTOR SHALL SUBMIT PLANS FOR THE PROTECTION OF TRAFFIC (VEHICULAR, PEDESTRIAN, ETC.) ADJACENT TO AND/OR UNDER THE STRUCTURE TO THE ENGINEER FOR APPROVAL. THESE PLANS SHALL INCLUDE PROVISIONS FOR ANY DEVICES AND STRUCTURES THAT MAY BE NECESSARY TO ENSURE SUCH PROTECTION. TEMPORARY VERTICAL CLEARANCES SPECIFIED IN THE PROPOSAL SHALL BE MAINTAINED AT ALL TIMES EXCEPT AS OTHERWISE APPROVED BY THE ENGINEER.

CUT LINE CONSTRUCTION JOINT PREPARATION:

SAW CUT BOUNDARIES OF PROPOSED CONCRETE REMOVALS 1" DEEP. REMOVE CONCRETE TO A ROUGH SURFACE. WHERE PRACTICABLE, THE EXISTING REINFORCING STEEL WHERE REQUIRED IN THE PLANS SHALL BE LEFT IN PLACE. INSTALL DOWEL BARS IF SPECIFIED. PRIOR TO CONCRETE PLACEMENT ABRASIVELY CLEAN JOINT SURFACE AND EXPOSED REINFORCEMENT TO REMOVE LOOSE AND DISINTEGRATED CONCRETE AND LOOSE RUST. THE JOINT SURFACE AND EXPOSED REINFORCEMENT SHALL BE THOROUGHLY CLEANED OF ALL DIRT, DUST, OR OTHER FOREIGN MATERIAL BY THE USE OF WATER, AIR UNDER PRESSURE, OR OTHER METHODS THAT PRODUCE SATISFACTORY RESULTS. CONCRETE BONDING SURFACES SHALL BE WET WITHOUT FREE WATER AS CONCRETE IS PLACED.

SUBSTRUCTURE CONCRETE REMOVAL:

SUBSTRUCTURE CONCRETE REMOVAL SHALL BE BY MEANS OF APPROVED PNEUMATIC HAMMERS EMPLOYING POINTED AND BLUNT CHISEL TOOLS. HYDRAULIC HOE-RAM TYPE HAMMERS WILL NOT BE PERMITTED. THE WEIGHT OF THE HAMMER SHALL NOT BE MORE THAN 35 POUNDS FOR REMOVAL WITHIN 18 INCHES OF PORTIONS TO BE PRESERVED. OUTSIDE THE 18 INCH LIMIT, A HAMMER HEAVIER THAN 35 POUNDS, BUT NOT TO EXCEED 90 POUNDS, MAY BE USED AT THE APPROVAL OF THE ENGINEER. PNEUMATIC HAMMERS SHALL NOT BE PLACED IN DIRECT CONTACT WITH REINFORCING STEEL THAT IS TO BE RETAINED IN THE REBUILT STRUCTURE.

PAYMENT
ALL WORK SHALL BE PAID FOR UNDER ITEM 202 PORTIONS OF STRUCTURES REMOVED, AS PER PLAN

ITEM 503, UNCLASSIFIED EXCAVATION, AS PER PLAN:

UNCLASSIFIED EXCAVATION SHALL BE IN ACCORDANCE WITH 503 EXCEPT THAT THE BACKFILL MATERIAL BEHIND THE ABUTMENTS SHALL BE 203 MATERIAL PLACED IN 6" LIFTS. EXCAVATION AT ABUTMENTS IN ADDITION TO THAT NECESSARY TO REMOVE PORTION OF THE EXISTING STRUCTURE SHALL BE INCLUDED IN THE LUMP SUM PRICE BID FOR ITEM 503, UNCLASSIFIED EXCAVATION FOR PAYMENT.

ITEM 842 CLASS C CONCRETE, (FOOTINGS, PIERS AND ABUTMENTS) AS PER PLAN

THE COARSE AGGREGATE SHALL BE NO. 8 LIMESTONE. THESE ITEMS SHALL INCLUDE THE COST OF THE REINFORCING STEEL.

ITEM 844 HIGH PERFORMANCE CONCRETE, AS PER PLAN

THE DESIGN MIX SHALL BE MIX NO. 4 LIMESTONE. THE OPTION OF SLIPFORM CONSTRUCTION OF THE BRIDGE PARAPET IS NOT PERMITTED. THESE ITEMS SHALL INCLUDE THE COST OF THE REINFORCING STEEL.

REINFORCING STEEL:

NEW REINFORCING STEEL MAY REQUIRE FIELD CUTTING OR BENDING TO BE PROPERLY FITTED. PAYMENT SHALL BE INCLUDED UNDER ITEM 844 HIGH PERFORMANCE CONCRETE.

ITEM 518 - POROUS BACKFILL WITH FILTER FABRIC, AS PER PLAN:

POROUS BACKFILL SHALL BE #57 GRAVEL ONLY.

SURVEY DISC ON STRUCTURE:

THE CONTRACTOR SHALL NOTIFY THE ENGINEER AT LEAST ONE (1) WEEK IN ADVANCE OF POURING THE CONCRETE FOR COMPLETION OF THE ABUTMENT. THE ENGINEER WILL PROVIDE THE CONTRACTOR ONE (1) SURVEY DISC FOR EACH STRUCTURE (OBTAINED FROM THE DISTRICT SURVEYOR) WHICH THE CONTRACTOR SHALL PLACE IN THE SURFACE OF THE FRESH CONCRETE. THE LOCATION OF THE DISC SHALL BE ON THE ABUTMENT, AND ON A FLAT, HORIZONTAL SURFACE BEYOND THE EDGE OF DECK AND PARAPET. THE BENCHMARK SHALL BE ACCESSIBLE TO A SURVEYOR'S ROD WITHOUT ANY OBSTRUCTIONS. COST OF THIS WORK IS CONSIDERED INCIDENTAL TO THE CONCRETE BID ITEM.

ITEM 601 CRUSHED AGGREGATE SLOPE PROTECTION

THE QUANTITIES INCLUDES 10 % OF THE EXISTING AGGREGATE SLOPE PROTECTION SURFACE AREA IN ADDITION TO WHAT IS DETAILED ON THE PLANS.

REPLACEMENT OF EXISTING REINFORCING STEEL

ANY EXISTING REINFORCING BARS WHICH ARE TO BE INCORPORATED INTO THE NEW WORK AND WHICH ARE MADE UNUSABLE BY CONCRETE REMOVAL OPERATIONS SHALL BE REPLACED WITH NEW STEEL AT THE CONTRACTOR'S COST. ANY EXISTING REINFORCING BARS DEEMED BY THE ENGINEER TO BE UNUSABLE BECAUSE OF CORROSION SHALL BE REPLACED WITH NEW STEEL. AN ALLOWANCE OF 200 POUNDS SHALL BE INCLUDED IN THE COST OF THE APPROPRIATE PIER CONCRETE BID ITEM.

DESIGN AGENCY: ODOT CENTRAL OFFICE, OFFICE OF PRODUCTION
DESIGNED: TKB | DRAWN: TKB | CHECKED: RJH | REVISED:
REVISED: DFT | DATE: 9-7-99
STRUCTURE FILE NUMBER: 5203902

GENERAL NOTES
MED-71-2088 E
RAMP "B" OVER PLUM CREEK, S.R. 3 INTERCHANGE

MED-71-15.78

823
940

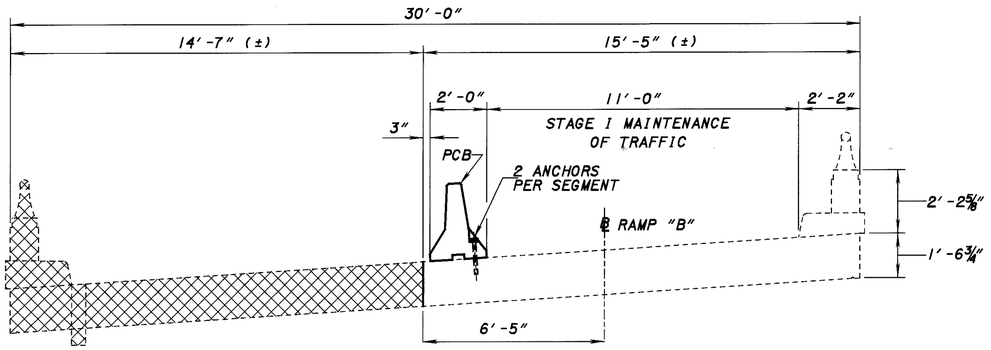

STAGE I REMOVAL

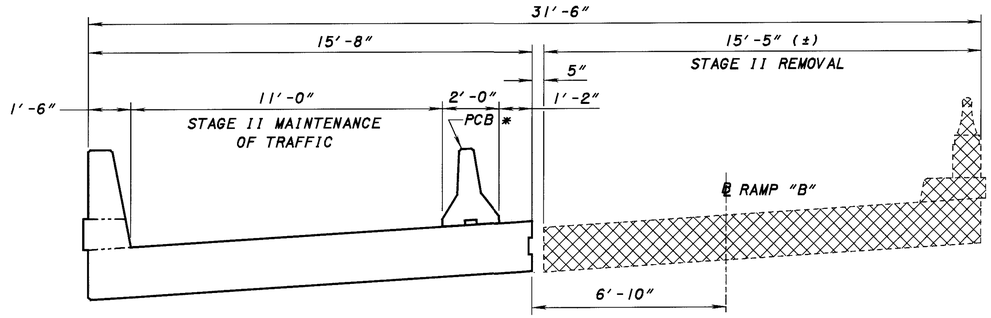

STAGE II REMOVAL

* BARRIER UNANCHORED

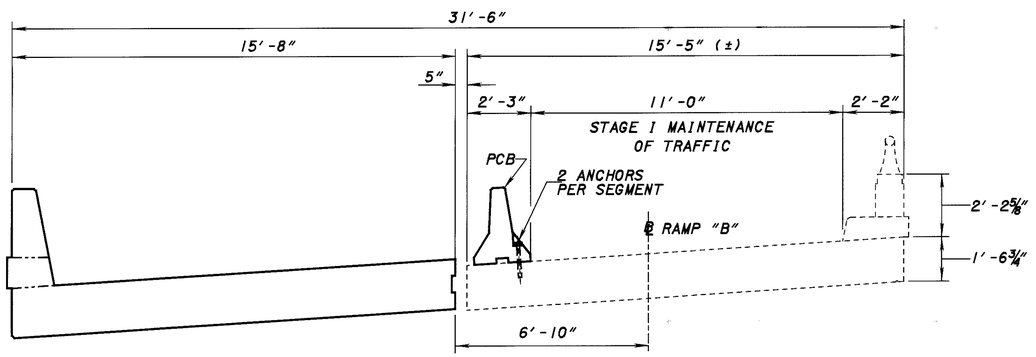

STAGE I CONSTRUCTION

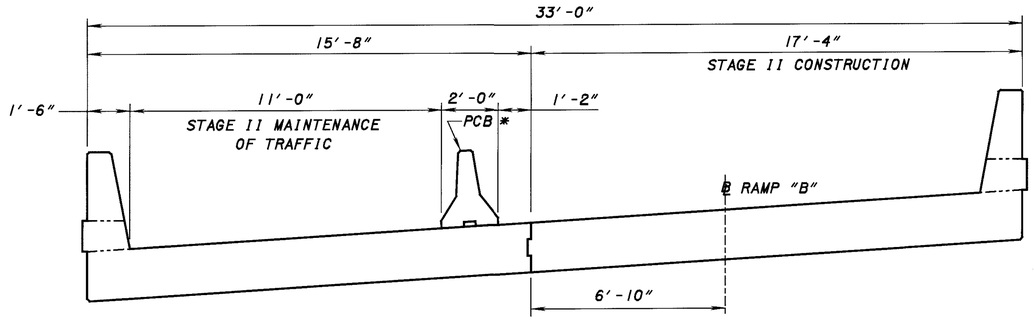

STAGE II CONSTRUCTION

* BARRIER UNANCHORED

▨ - REMOVAL

DESIGN AGENCY: ODOT CENTRAL OFFICE, OFFICE OF PRODUCTION

DESIGNED	DRAWN	REVISED	DATE
TKB	TKB	DFT	9-7-99
CHECKED	REVISED	STRUCTURE FILE NUMBER	
RJH		5203902	

DECK STAGE CONSTRUCTION DETAILS

MED-71-2088 E

RAMP "B" OVER PLUM CREEK, S.R. 3 INTERCHANGE

MED-71-15.78

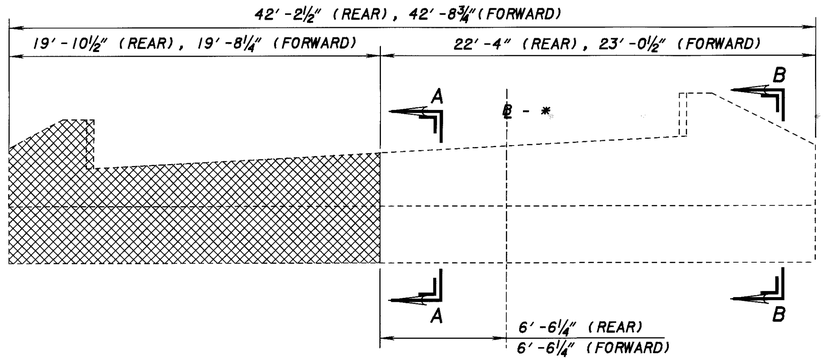

STAGE I REMOVAL

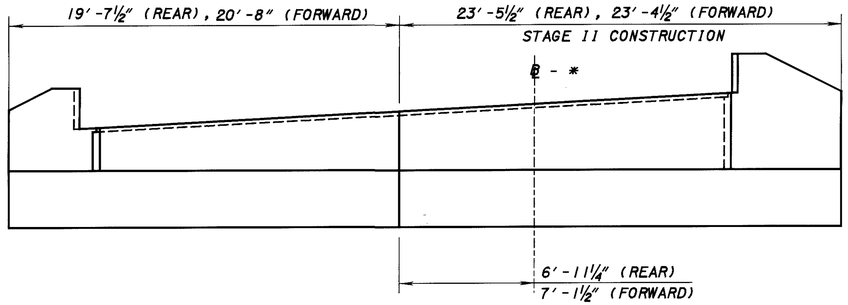

STAGE II CONSTRUCTION

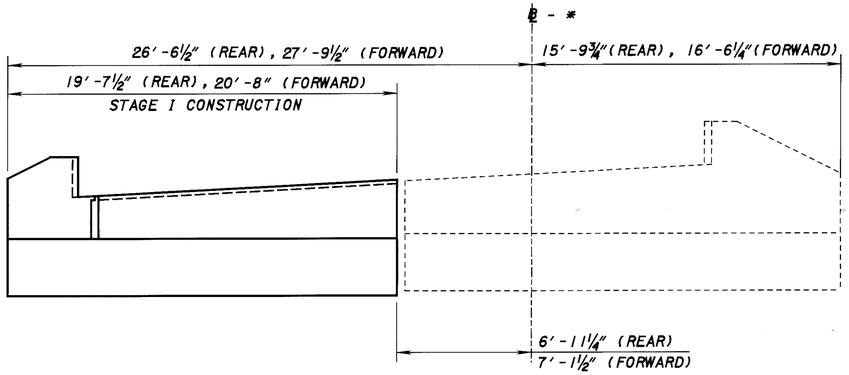

STAGE I CONSTRUCTION

(FORWARD ABUTMENT SHOWN, REAR OPPOSITE HAND)

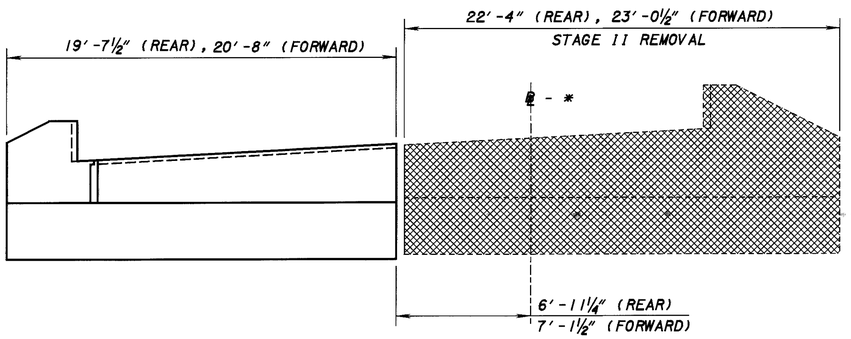

STAGE II REMOVAL

℄ - *

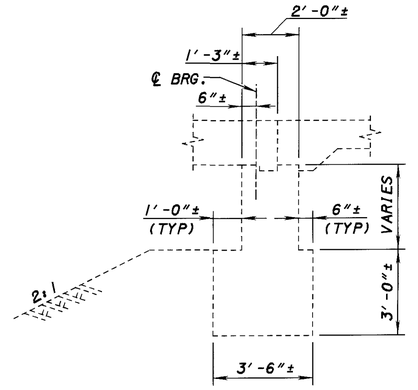

SECTION A-A

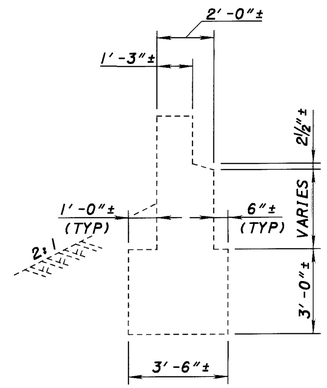

SECTION B-B

*: CONSRUCTION, RAMP B & PROP. STRUCTURE ℄ INTERSECTION REF. CHORD & FACE OF ABUTMENT

- REMOVAL

DESIGN AGENCY
ODOT CENTRAL OFFICE
OFFICE OF PRODUCTION

DESIGNED	DRAWN	REVISED	DATE
TKB	TKB	DFT	9-7-99
CHECKED	REVISED	STRUCTURE FILE NUMBER	
RJH		5203902	

ABUTMENT STAGE CONSTRUCTION DETAILS
MED-71-2088 E
RAMP "B" OVER PLUM CREEK, S.R. 3 INTERCHANGE

MED-71-15.78

5 / 16

825
940

NOTE:
ONLY LOW SIDE OF APPROACH SLAB HAS A CURB SECTION.
P.E.J.F. - PREFORMED EXPANSION JOINT FILLER
C.J. - CONSTRUCTION JOINT

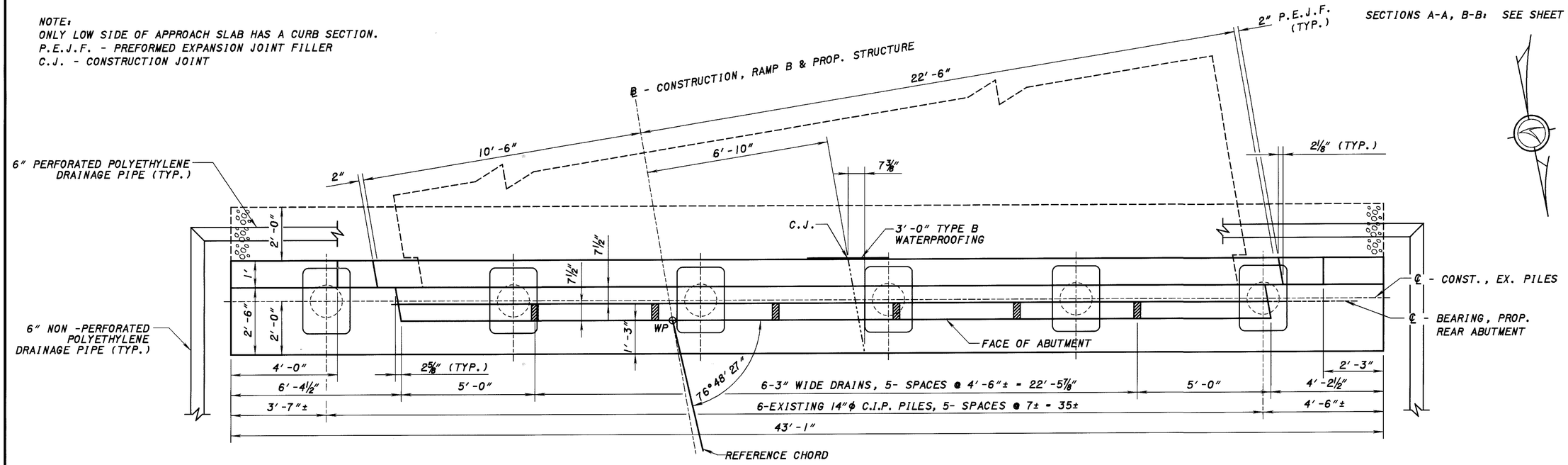

PLAN

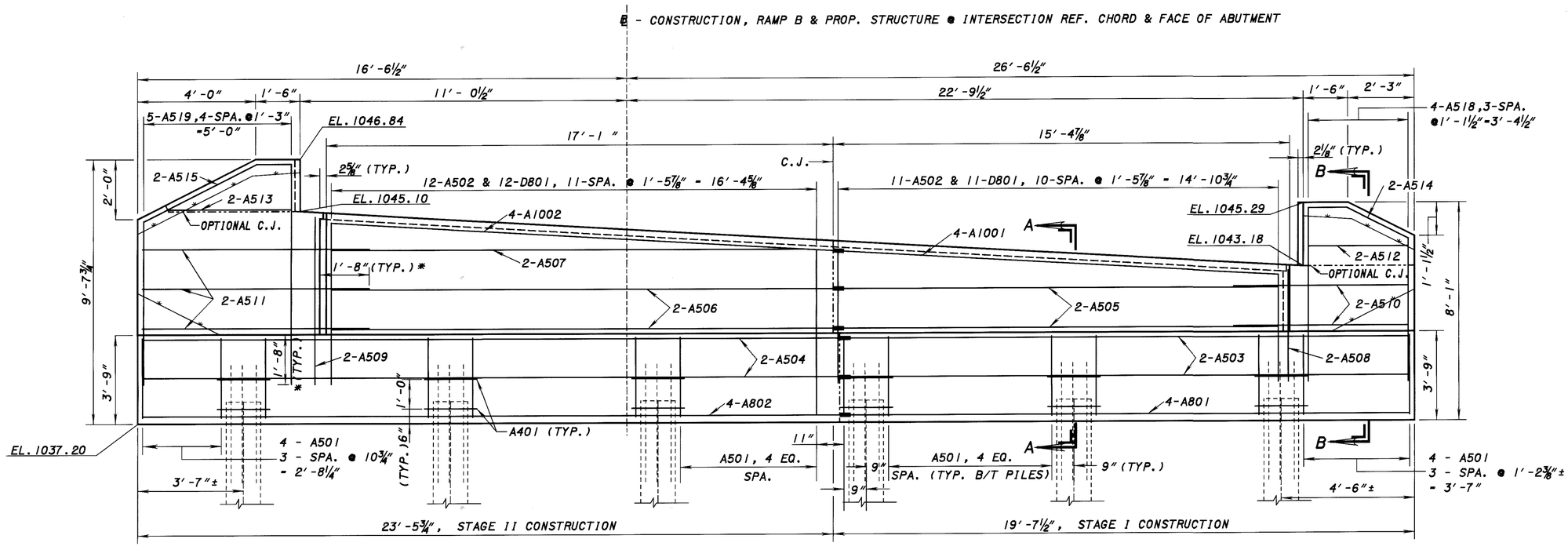

* MIN. DIMENSION

REAR ABUTMENT ELEVATION

DESIGN AGENCY: ODOT CENTRAL OFFICE, OFFICE OF PRODUCTION
REVISED: DFT | DATE: 9-7-99 | STRUCTURE FILE NUMBER: 5203902
DRAWN: TKB | REVISED:
DESIGNED: TKB | CHECKED: RJH

REAR ABUTMENT DETAIL
MED-71-2088 E
RAMP "B" OVER PLUM CREEK, S.R. 3 INTERCHANGE

MED-71-15.78

6 / 16

826 / 940

NOTE:
ONLY LOW SIDE OF APPROACH SLAB HAS A CURB SECTION.
P.E.J.F. - PREFORMED EXPANSION JOINT FILLER
C.J. - CONSTRUCTION JOINT

SECTIONS A-A, B-B: SEE SHEET 8 / 16

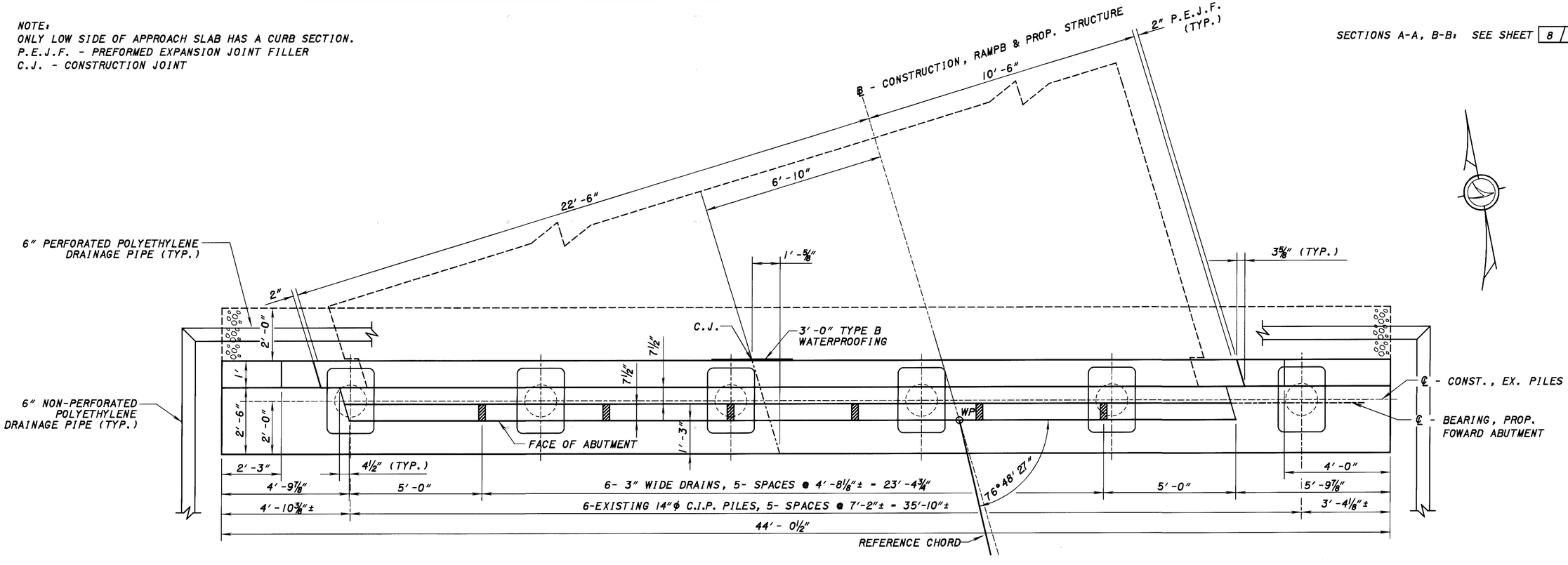

PLAN

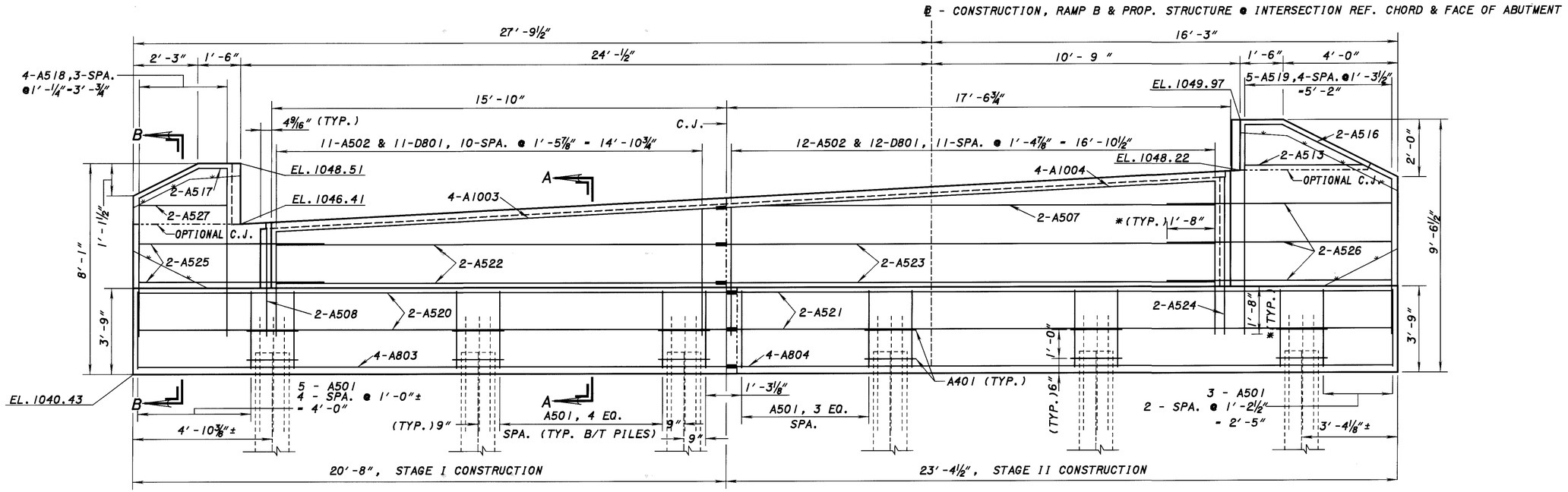

FORWARD ABUTMENT ELEVATION

* MIN. DIMENSION

DESIGN AGENCY
ODOT CENTRAL OFFICE
OFFICE OF PRODUCTION

DESIGNED TKB | DRAWN TKB | REVISED DFT | DATE 9-7-99
CHECKED RJH | REVISED | STRUCTURE FILE NUMBER 5203902

FORWARD ABUTMENT DETAIL
MED-71-2088 E
RAMP "B" OVER PLUM CREEK, S.R. 3 INTERCHANGE

MED-71-15.78

7 / 16

827
940

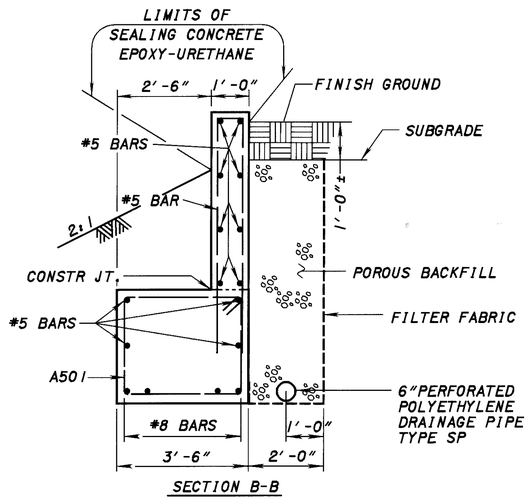

SECTION B-B

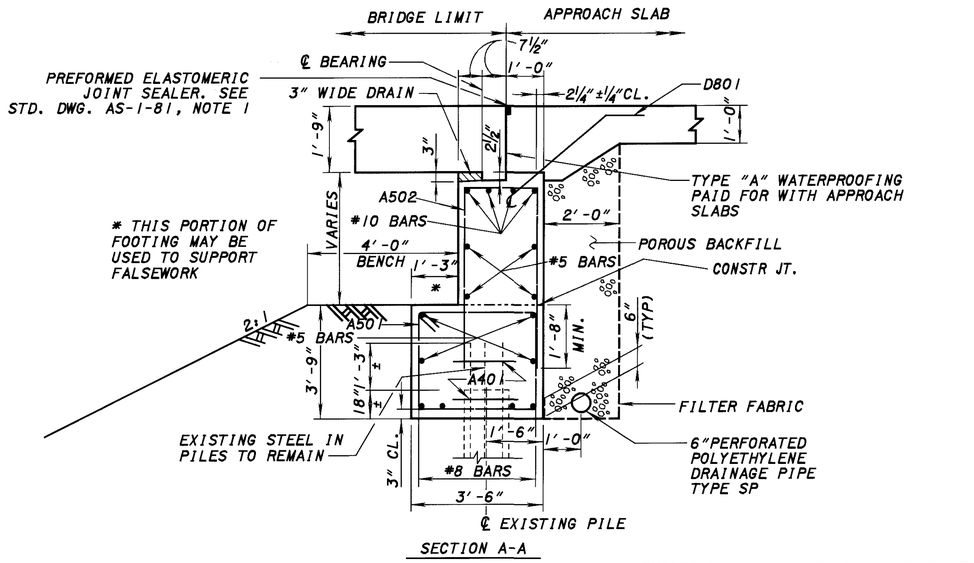

SECTION A-A

EXISTING REBAR TO BE SALVAGED THAT EXTENDS FROM EXISTING PILES.

NOTES

1. ALL ELEVATIONS AND DIMENSIONS MEASURED ALONG THE FACE OF ABUTMENT.

2. MINIMUM SPLICES ARE AS FOLLOWS:
   #5 BAR = 3'-0"
   #6 BAR = 3'-6"
   #8 BAR = 5'-9"

3. TYPE B WATERPROOFING, 3'-0" WIDE. EXTEND FROM THE BOTTOM OF APPROACH SLAB TO THE BOTTOM OF THE FOOTING. NEOPRENE SHEETING MAY BE USED IN LIEU OF TYPE B WATERPROOFING.

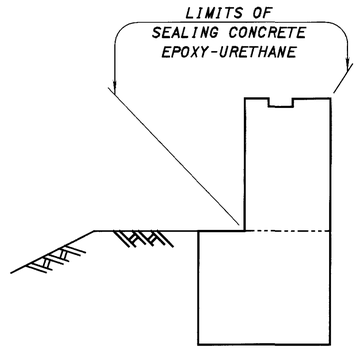

SEALING LIMITS

DESIGN AGENCY: ODOT CENTRAL OFFICE, OFFICE OF PRODUCTION

DESIGNED TKB | DRAWN TKB | REVISED DFT | DATE 9-7-99

CHECKED RJH | REVISED | STRUCTURE FILE NUMBER 5203902

ABUTMENT DETAIL

MED-71-2088 E

RAMP "B" OVER PLUM CREEK, S.R. 3 INTERCHANGE

MED-71-15.78

828/940

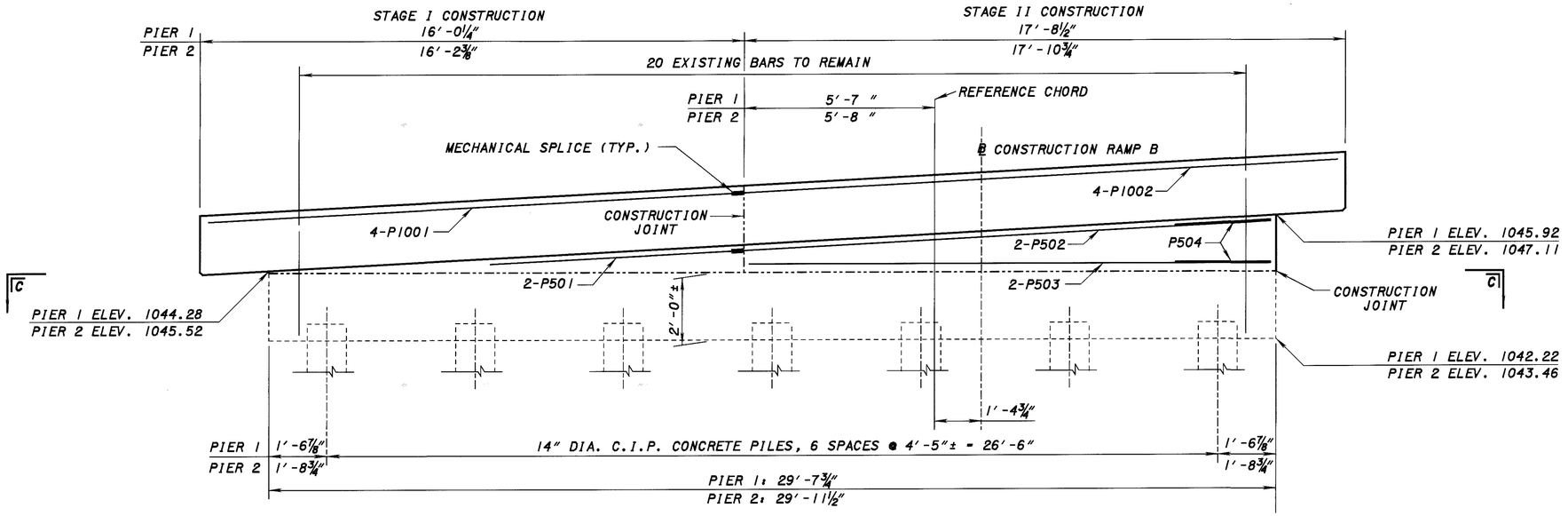

ELEVATION - PIERS 1 & 2

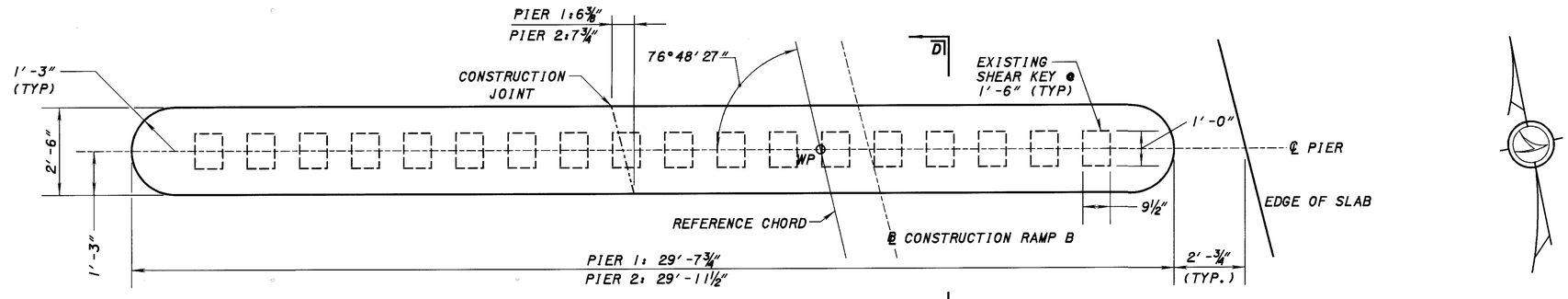

SECTION C-C

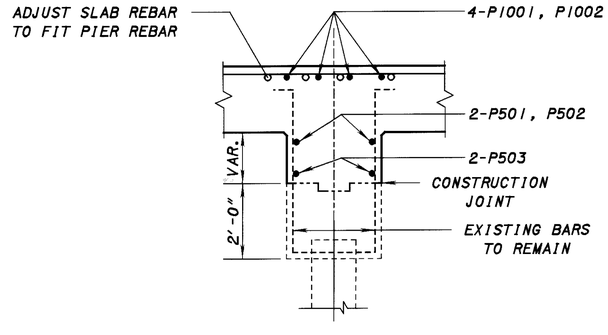

SECTION D-D

NOTES

1. ALL ELEVATIONS AND DIMENSIONS ARE MEASURED ALONG THE ℄ BEARINGS.
2. PIER CAP SHALL BE REMOVED AND REPLACED ABOVE ORIGINAL CONSTRUCTION JOINT AS SHOWN IN THE DETAILS.
3. CONCRETE SHALL BE SUFFICIENTLY REMOVED FROM THE ORIGINAL SHEAR KEYS TO PRODUCE A POSITIVE CONNECTION BETWEEN THE EXISTING AND NEW CONCRETE.
4. VERTICAL REINFORCING STEEL SHALL REMAIN IN PLACE.

DESIGN AGENCY: ODOT CENTRAL OFFICE OFFICE OF PRODUCTION

DESIGNED	DRAWN	REVISED	DATE	STRUCTURE FILE NUMBER
TKB	TKB	DFT	9-7-99	5203902
CHECKED	REVISED			
RJH				

PIER DETAILS

MED-71-2088 E

RAMP "B" OVER PLUM CREEK, S.R. 3 INTERCHANGE

MED-71-15.78

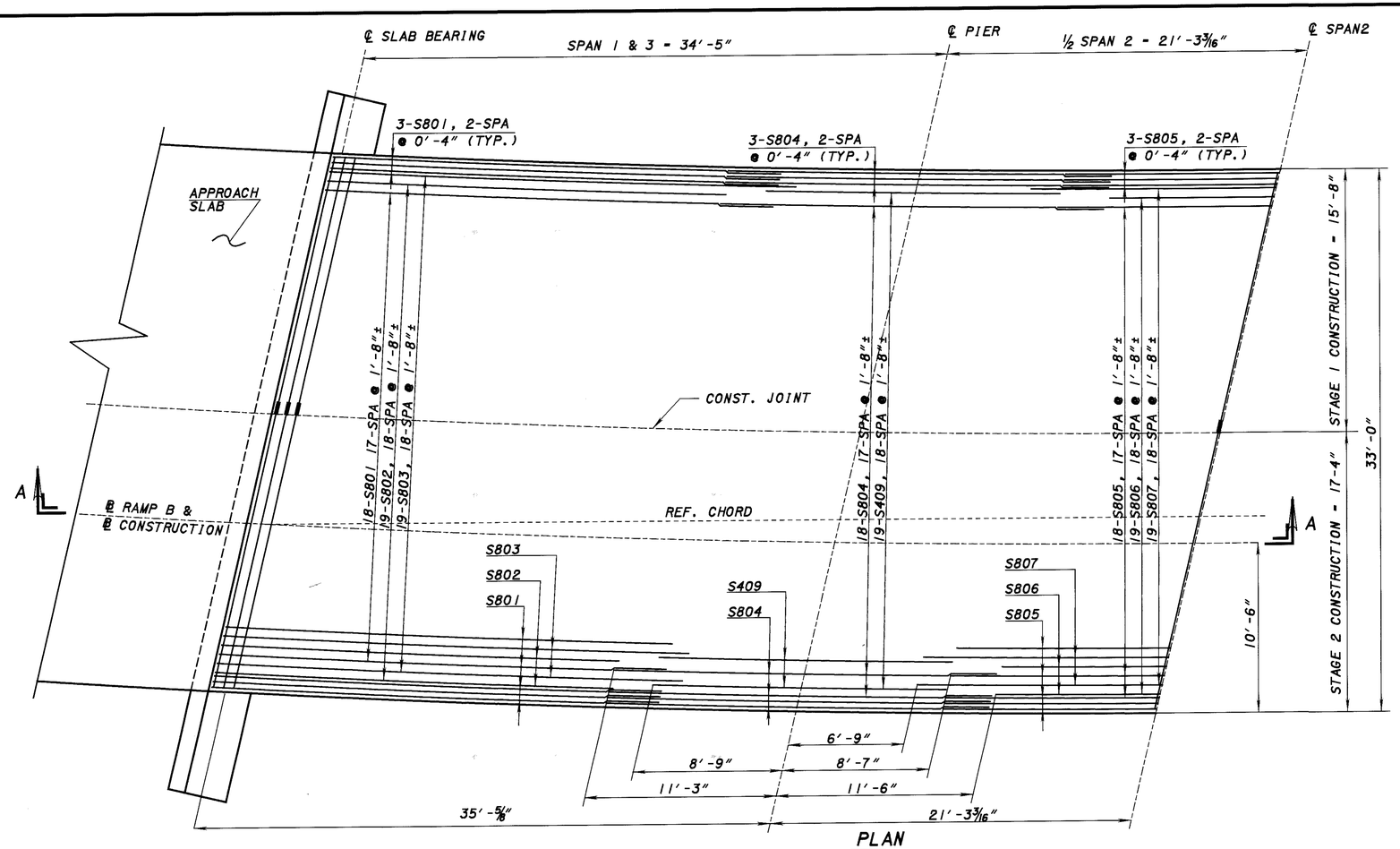

PLAN
BOTTOM REINFORCEMENT

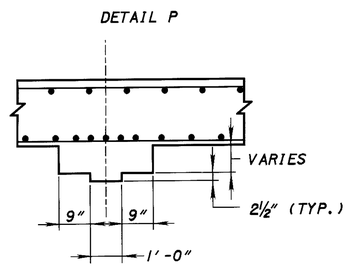

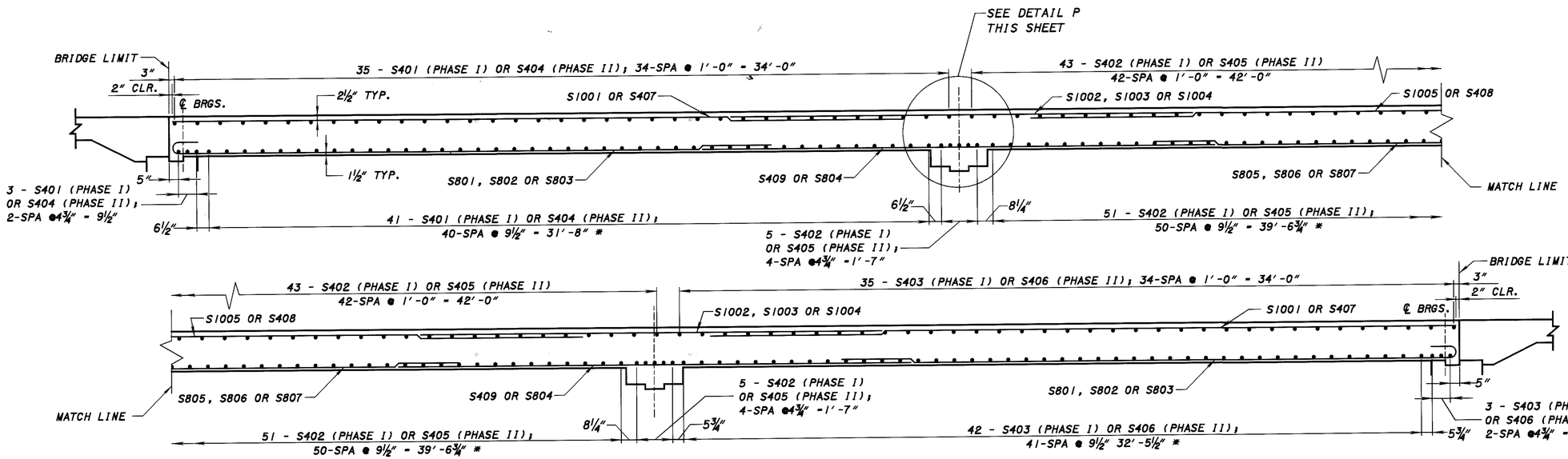

SECTION A-A

* MEASURED AT AND ALONG THE ℄ OF CONSTRUCTION AND SURVEY

DESIGN AGENCY
ODOT CENTRAL OFFICE
OFFICE OF PRODUCTION

DESIGNED	DRAWN	REVIEWED	DATE
TKB	TKB	DFT	9-7-99
CHECKED	REVISED	STRUCTURE FILE NUMBER	
RJH		5203902	

SUPERSTRUCTURE DETAILS

MED-71-2088 E

RAMP "B" OVER PLUM CREEK, S.R. 3 INTERCHANGE

MED-71-15.78

10 / 16

830
940

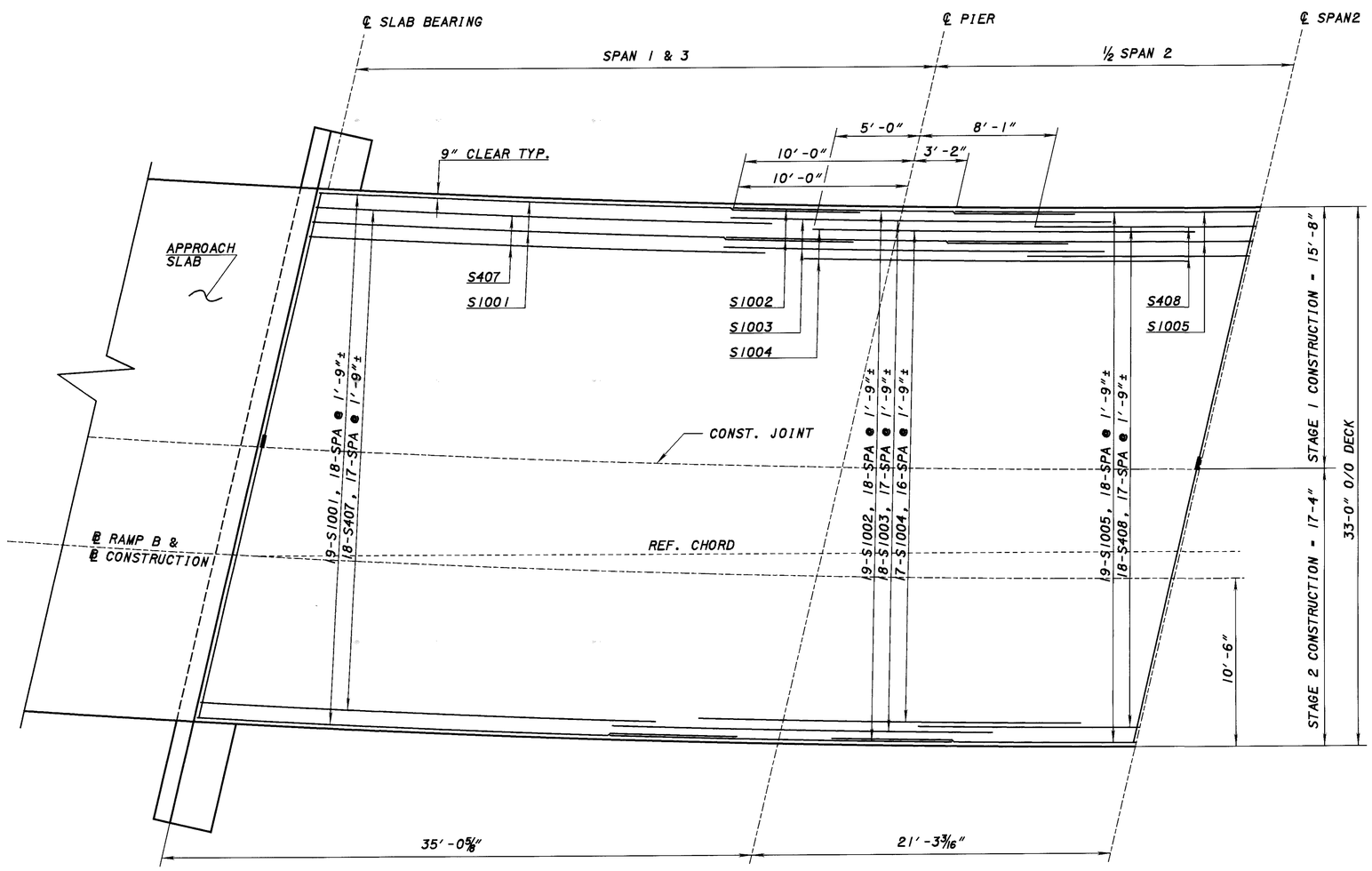

PLAN
TOP REINFORCEMENT

DESIGN AGENCY
ODOT CENTRAL OFFICE
OFFICE OF PRODUCTION

REVISED DFT DATE 9-7-99
STRUCTURE FILE NUMBER 5203902

DRAWN TKB
REVISED

DESIGNED TKB
CHECKED RJH

SUPERSTRUCTURE DETAILS
MED-71-2088 E
RAMP "B" OVER PLUM CREEK, S.R. 3 INTERCHANGE

MED-71-15.78

11 / 16

831
940

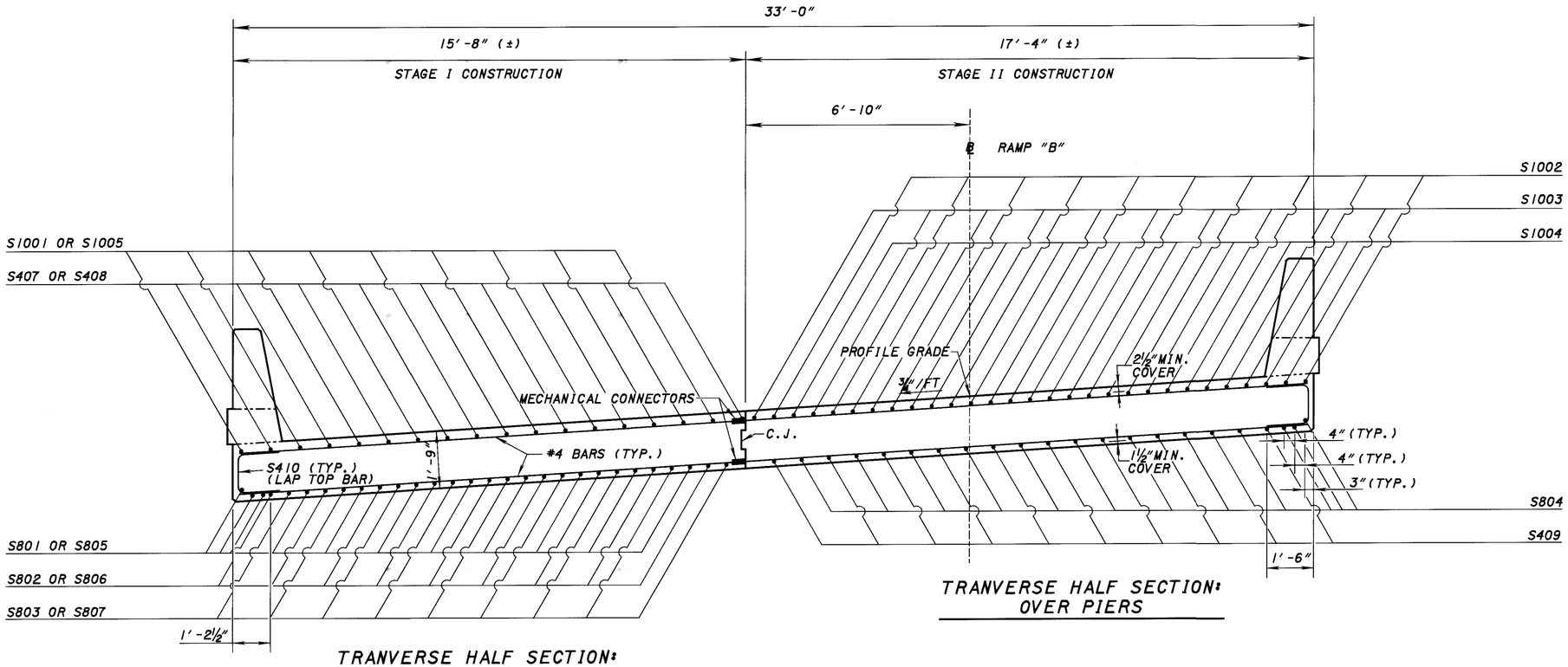

TRANVERSE HALF SECTION:
END SPANS & MID SPAN

TRANVERSE HALF SECTION:
OVER PIERS

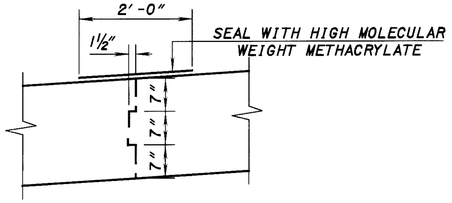

CONSTRUCTION JOINT

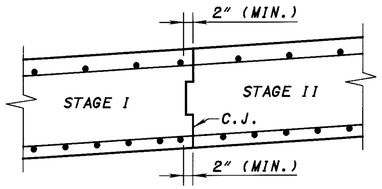

NOTE:
ADJUST REBAR SPACING AT THE CONSTRUCTION JOINT TO MAINTAIN MIN. 2″ CLEAR DISTANCE DURING STAGE I CONSTRUCTION.

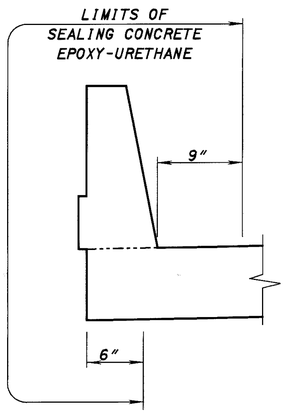

LIMITS OF SEALING CONCRETE

DECK SLAB NOTES:

1. HIGH MOLECULAR WEIGHT METHACRYLATE SHALL BE INCLUDED IN THE COST OF THE CONCRETE AND NO SEPARATE PAYMENT WILL BE MADE.
2. SEE STD. DWG. CS-1-93 FOR MORE DETAILS.
3. DRIP GROOVES, AS DETAILED IN CS-1-93 SHALL NOT BE PLACED ON THIS STRUCTURE.

FINAL DECK ELEVATIONS

LOCATION	STATION	LEFT PARAPET TOE	PROFILE GRADE	RIGHT PARAPET TOE
BEGIN APPROACH SLAB	81+41.97	1044.40	1045.78	1046.34
END APPROACH SLAB	81+56.97	1044.89	1046.20	1046.76
MIDSPAN	81+74.35	1045.39	1046.70	1047.26
PIER #1	81+91.73	1045.89	1047.20	1047.76
MIDSPAN	82+13.00	1046.49	1047.80	1048.36
PIER #2	82+34.26	1047.10	1048.41	1048.97
MIDSPAN	82+51.98	1047.61	1048.92	1049.48
BEGIN APPROACH SLAB	82+69.69	1048.11	1049.42	1049.98
END APPROACH SLAB	82+84.69	1048.54	1049.85	1050.41

DESIGN AGENCY
ODOT CENTRAL OFFICE
OFFICE OF PRODUCTION

DESIGNED	DRAWN	REVISED	DATE
TKB	TKB	DFT	9-7-99

CHECKED RJH — REVISED — STRUCTURE FILE NUMBER 5203902

SUPERSTRUCTURE DETAILS
MED-71-2088 E
RAMP "B" OVER PLUM CREEK, S.R. 3 INTERCHANGE

MED-71-15.78

12/16

832
940

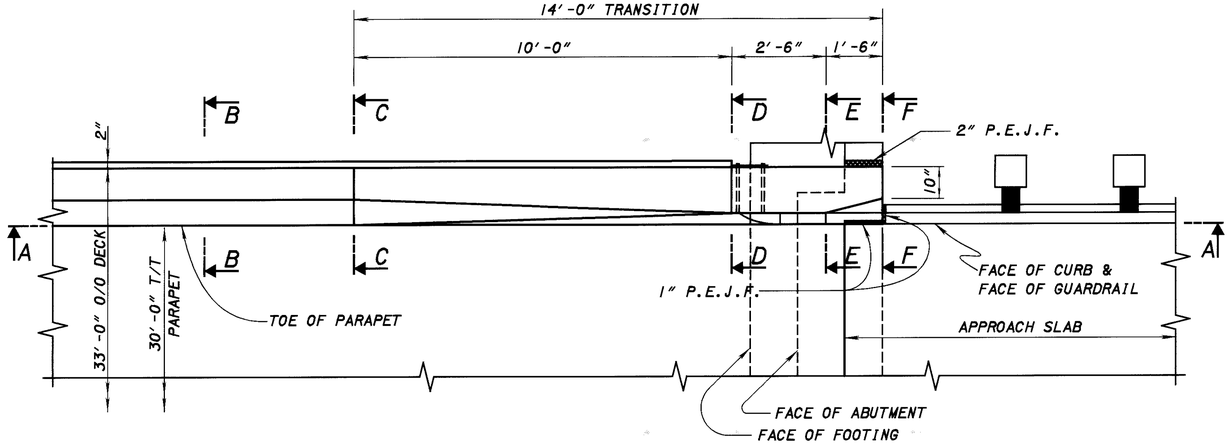

LEGEND: N.S. - NEAR SIDE
F.S. - FAR SIDE

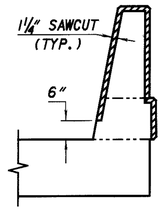

DETAIL A

(Section through sawcut)
Sawcut Perimeter = 7'-6"

CONTROL JOINTS FOR CONCRETE PARAPETS: THE JOINTS SHALL BE CONSTRUCTED BY SAWING 1¼ INCH DEEP ALONG THE PERIMETER OF THE PARAPET AS SOON AS THE SAW CAN BE OPERATED WITHOUT DAMAGING THE CONCRETE.

THE USE OF AN EDGE GUIDE, FENCE, OR JIG IS REQUIRED TO ENSURE THAT THE CUT JOINT IS STRAIGHT, TRUE, AND ALIGNED ON ALL FACES OF THE PARAPET. THE JOINT WIDTH SHALL BE THE WIDTH OF THE SAW BLADE, A NOMINAL WIDTH OF ¼ INCH.

THE PERIMETER OF THE DEFLECTION CONTROL JOINT SHALL BE SEALED WITH A CAULKING MATERIAL TO A MINIMUM DEPTH OF ONE INCH CONFORMING TO FEDERAL SPECIFICATION TT-S-00227E. THE BOTTOM ONE-HALF INCH OF THE OUTSIDE FACE OF THE PARAPET SHOULD BE LEFT UNSEALED TO ALLOW ANY WATER WHICH MAY ENTER THE JOINT TO ESCAPE.

QUANTITIES OF CONCRETE, REINFORCING STEEL, DEFLECTION JOINT SAWCUT AND CAULKING MATERIAL FOR PARAPET ARE INCLUDED WITH ITEM 844 HIGH PERFORMANCE CONCRETE, SUPERSTRUCTURE (PARAPET).

FOR BRIDGE TERMINAL ASSEMBLY SEE STANDARD CONSTRUCTION DRAWING GR-3.1 AND GR-3.2.

MIN. LAP SPLICES: #5 BAR - 2'-6"
#6 BAR - 3'-0"

NOTE
CURB DETAIL APPLIES ONLY TO THE LEFT SIDE (LOW SIDE OF SUPERELEVATION) OF THE APPROACH SLAB. RIGHT SIDE SHALL BE FLUSH WITH FACE OF GUARDRAIL

PART PLAN AT ABUTMENT

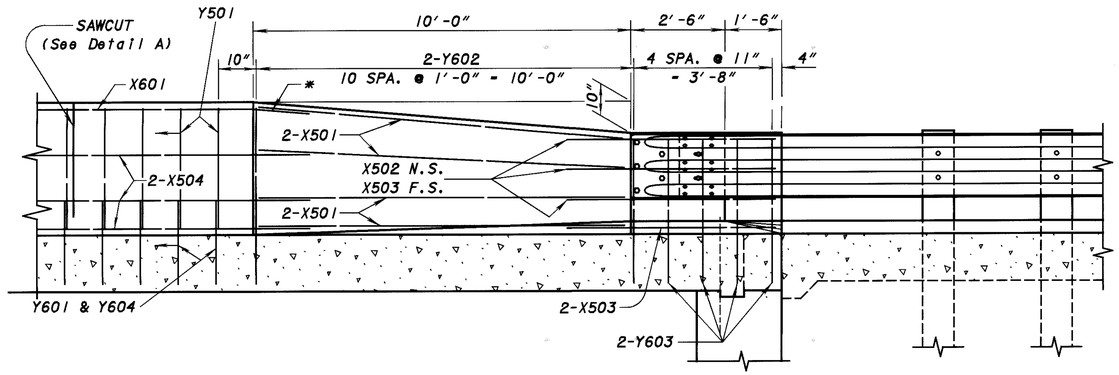

SECTION A-A

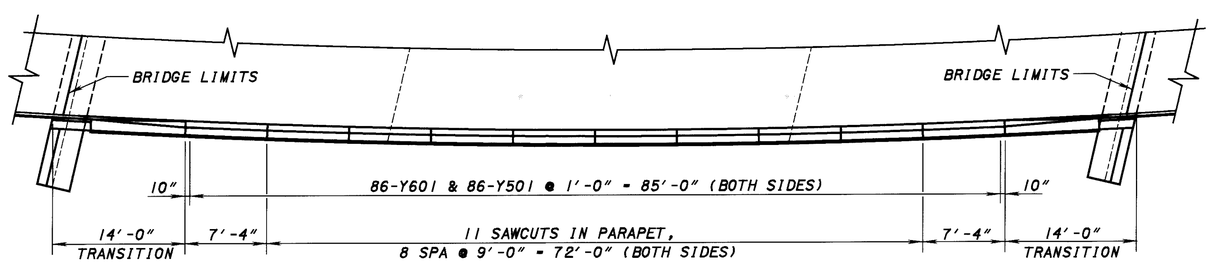

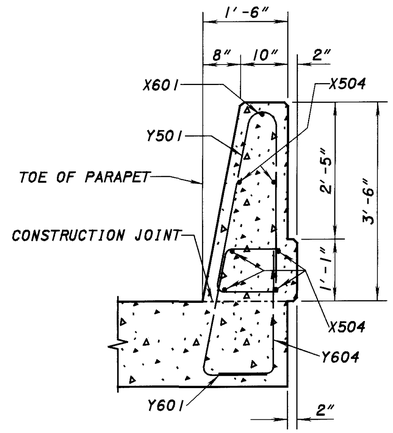

SECTION B-B & C-C

Area = 4.26 ft²

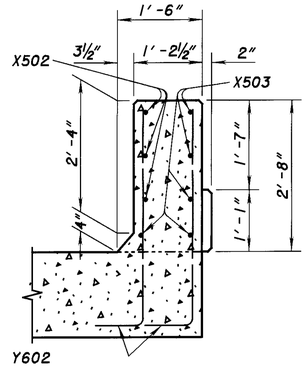

SECTION D-D

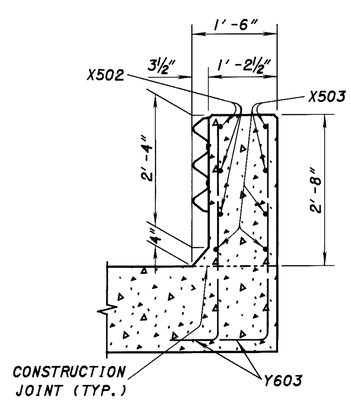

SECTION E-E

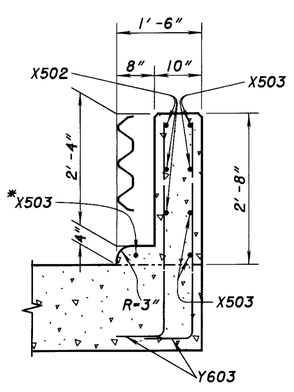

SECTION F-F

* FIELD BEND IF NECESSARY

ODOT CENTRAL OFFICE
OFFICE OF PRODUCTION
DESIGN AGENCY

REVISED	DATE
DFT	9-7-99
STRUCTURE FILE NUMBER	5203902
DRAWN	REVISED
TKB	
DESIGNED	CHECKED
TKB	RJH

SUPERSTRUCTURE DETAILS
MED-71-2088 E
RAMP "B" OVER PLUM CREEK, S.R. 3 INTERCHANGE

MED-71-15.78

13 / 16

833
940

MARK	NUMBER					LENGTH	WEIGHT	TYPE	DIMENSIONS				
	REAR ABUT. STAGE I	REAR ABUT. STAGE II	FWD. ABUT. STAGE I	FWD. ABUT. STAGE II	TOTAL		LB		A	B	C	R	INC
ABUTMENTS - MED-71-2088 E													
A401	6	6	6	6	24	9'-0"	144	3	1'-9"	2'-6"			
A501	14	19	16	17	66	13'-4"	918	3	3'-2"	3'-3"			
A502	11 OF 1 SERIES OF 23	12 OF 1 SERIES OF 23	11 OF 1 SERIES OF 23	12 OF 1 SERIES OF 23	2 SERIES OF 23	8'-9" TO 12'-5"	508	2	3'-7" TO 5'-5"	1'-10"	3'-7" TO 5'-5"		1"
A503	2 SERIES OF 2				2 SERIES OF 2	19'-3" TO 19'-9"	81	STR					6"
A504		2 SERIES OF 2			2 SERIES OF 2	22'-11" TO 23'-5"	97	STR					6"
A505	2 SERIES OF 2				2 SERIES OF 2	15'-1" TO 15'-5"	64	STR					4"
A506		2 SERIES OF 2			2 SERIES OF 2	16'-7" TO 16'-11"	70	STR					4"
A507		2		2	4	16'-1"	67	STR					
A508	2		2		4	3'-9"	16	STR					
A509		2			2	5'-8"	12	STR					
A510	4				4	5'-11"	24	STR					
A511		6			6	7'-8"	48	STR					
A512	2				2	3'-5"	8	STR					
A513		2		2	4	4'-2"	17	STR					
A514	2				2	3'-8"	8	19	2'-4½"	1'-2"	7"		
A515		2			2	5'-5"	11	19	4'-4"	1'-0"	6"		
A516			2		2	5'-7"	12	19	4'-4"	1'-2"	7"		
A517				2	2	3'-4"	7	19	2'-4½"	0'-10½"	5½"		
A518	1 SERIES OF 4		1 SERIES OF 4		2 SERIES OF 4	10'-1" TO 12'-1"	92	2	4'-10" TO 5'-10"	0'-8"	4'-10" TO 5'-10"		4"
A519		1 SERIES OF 5		1 SERIES OF 5	2 SERIES OF 5	11'-5" TO 15'-3"	139	2	5'-6" TO 7'-5"	0'-8"	5'-6" TO 7'-5"		5¾"
A520			2 SERIES OF 2		2 SERIES OF 2	19'-11" TO 20'-8"	85	STR					9"
A521				2 SERIES OF 2	2 SERIES OF 2	22'-9" TO 23'-6"	96	STR					9"
A522			2 SERIES OF 2		2 SERIES OF 2	15'-1" TO 15'-8"	64	STR					7"
A523				2 SERIES OF 2	2 SERIES OF 2	17'-1" TO 17'-8"	73	STR					7"
A524				2	2	5'-6"	12	STR					
A525			4		4	6'-6"	27	STR					
A526				6	6	7'-10"	49	STR					
A527			2		2	3'-1"	6	STR					

MARK	NUMBER					LENGTH	WEIGHT	TYPE	DIMENSIONS				
	REAR ABUT. STAGE I	REAR ABUT. STAGE II	FWD. ABUT. STAGE I	FWD. ABUT. STAGE II	TOTAL		LB		A	B	C	R	INC
ABUTMENTS - MED-71-2088 E (CONT.)													
A801	1 SERIES OF 4				1 SERIES OF 4	19'-3" TO 19'-9"	208	STR					2"
A802		1 SERIES OF 4			1 SERIES OF 4	22'-11" TO 23'-5"	247	STR					2"
A803			1 SERIES OF 4		1 SERIES OF 4	19'-11" TO 20'-8"	217	STR					3"
A804				1 SERIES OF 4	1 SERIES OF 4	22'-9" TO 23'-6"	247	STR					3"
A1001	1 SERIES OF 4				1 SERIES OF 4	15'-1" TO 15'-5"	262	STR					1½"
A1002		1 SERIES OF 4			1 SERIES OF 4	16'-4" TO 16'-8"	284	STR					1½"
A1003			1 SERIES OF 4		1 SERIES OF 4	15'-1" TO 15'-8"	265	STR					2⅜"
A1004				1 SERIES OF 4	1 SERIES OF 4	17'-1" TO 17'-8"	299	STR					2⅜"
D801	11	12	11	12	46	5'-7"	685	18	3'-3"	1'-0"	1'-0"		

MARK	NUMBER					LENGTH	WEIGHT	TYPE	DIMENSIONS				
	PIER 1 STAGE I	PIER 1 STAGE II	PIER 2 STAGE I	PIER 2 STAGE II	TOTAL		LB		A	B	C	R	INC
PIERS - MED-71-2088 E													
P501	2		2		4	7'-4"	31	STR					
P502		2		2	4	14'-2"	59	STR					
P503		2		2	4	14'-2"	59	STR					
P504		2		2	4	8'-0"	33	24	2'-1/4"	2'-6"		11½"	
P1001	4		4		8	15'-10"	545	STR					
P1002		4		4	8	17'-6"	606	STR					

NOTES:

1. THIS REINFORCING SCHEDULE IS FOR INFORMATION ONLY.
2. ALL REINFORCING STEEL SHALL BE EPOXY COATED.
3. THE BAR SIZE IS INDICATED IN THE BAR MARK. THE FIRST DIGIT INDICATES THE BAR SIZE. FOR EXAMPLE, AN A501 IS A #5 BAR. THE DIMENSIONS SHOWN ARE OUT TO OUT UNLESS OTHERWISE INDICATED. "R" INDICATES THE INSIDE RADIUS.
4. REINFORCING STEEL IS INCLUDED WITH THE APPROPRIATE CONCRETE ITEM FOR PAYMENT.

DESIGN AGENCY: ODOT CENTRAL OFFICE, OFFICE OF PRODUCTION

REVISIONED: DFT | DATE: 9-7-99 | STRUCTURE FILE NUMBER: 5203902

DESIGNED: TKB | DRAWN: TKB | REVISED:

CHECKED: RJH

REINFORCING SCHEDULE

MED-71-2088 E

RAMP "B" OVER PLUM CREEK, S.R. 3 INTERCHANGE

MED-71-15.78

14 | 16

834 / 940

MARK	NUMBER			LENGTH	WEIGHT LB	TYPE	DIMENSIONS						
	SUPER STAGE I	SUPER STAGE II	TOTAL				A	B	C	D	E	R	INC
PARAPETS - MED-71-2088 E													
X501	16	16	32	10'-0"	334	STR							
X502	6	6	12	5'-6"	69	25	1'-8"	2'-5"	1'-4"	1½"	5"		
X503	10	10	20	5'-6"	115	STR							
X504	24	24	48	24'-10"	1243	STR							
Y501	86	86	172	7'-5"	1331	23	1'-1"	3'-2"	3'-0"			2¾"	
X601	4	4	8	25'-5"	305	STR							
Y601	86	86	172	4'-5"	1141	33	1'-1"	2'-5"	1'-3"				
Y602	4 SERIES OF 11	4 SERIES OF 11	8 SERIES OF 11	4'-10" TO 5'-8"	694	1	1'-1"	3'-11" TO 4'-9"					1"
Y603	16	16	32	4'-9"	232	1	1'-1"	3'-11"					
Y604	86	86	172	3'-2"	818	1	1'-1"	2'-5"					

MARK	NUMBER			LENGTH	WEIGHT LB	TYPE	DIMENSIONS					
	SUPER STAGE I	SUPER STAGE II	TOTAL				A	B	C	D	R	INC
SUPERSTRUCTURE - MED-71-2088 E												
S401	79		79	15'-8"	827	STR						
S402	104		104	15'-10"	1100	STR						
S403	80		80	16'-0"	855	STR						
S404		79	79	17'-4"	915	STR						
S405		104	104	17'-6"	1216	STR						
S406		80	80	17'-8"	944	STR						
S407	18	18	36	26'-7"	639	STR						
S408	9	9	18	26'-4"	317	STR						
S409	18	20	38	17'-3"	438	STR						
S410	113	113	226	3'-7"	541	2	1'-3"	1'-3"	1'-3"			
S801	22	26	48	26'-5"	3386	STR						
S802	18	20	38	25'-7"	2596	16	24'-8"					
S803	18	20	38	27'-9"	2816	STR						
S804	22	26	48	22'-9"	2916	STR						
S805	11	13	24	25'-4"	1623	STR						
S806	9	10	19	24'-3"	1230	STR						
S807	9	10	19	24'-3"	1230	STR						
S1001	18	20	38	31'-6"	5151	STR						
S1002	18	20	38	20'-0"	3270	STR						
S1003	16	20	36	22'-3"	3447	STR						
S1004	16	18	34	22'-3"	3255	STR						
S1005	9	10	19	36'-2"	2957	STR						

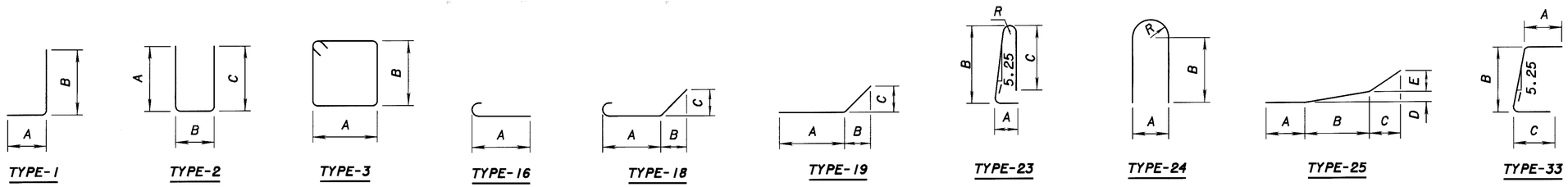

NOTES:

1. THIS REINFORCING SCHEDULE IS FOR INFORMATION ONLY.
2. ALL REINFORCING STEEL SHALL BE EPOXY COATED.
3. THE BAR SIZE IS INDICATED IN THE BAR MARK. THE FIRST DIGIT INDICATES THE BAR SIZE. FOR EXAMPLE, AN A501 IS A #5 BAR. THE DIMENSIONS SHOWN ARE OUT TO OUT UNLESS OTHERWISE INDICATED. "R" INDICATES THE INSIDE RADIUS.
4. REINFORCING STEEL IS INCLUDED WITH THE APPROPRIATE CONCRETE ITEM FOR PAYMENT.

DESIGN AGENCY
ODOT CENTRAL OFFICE
OFFICE OF PRODUCTION

REVIEWED DFT DATE 9-7-99
STRUCTURE FILE NUMBER 5203902

DRAWN TKB REVISED
DESIGNED TKB CHECKED RJH

REINFORCING SCHEDULE

MED-71-2088 E

RAMP "B" OVER PLUM CREEK, S.R. 3 INTERCHANGE

MED-71-15.78

835/940

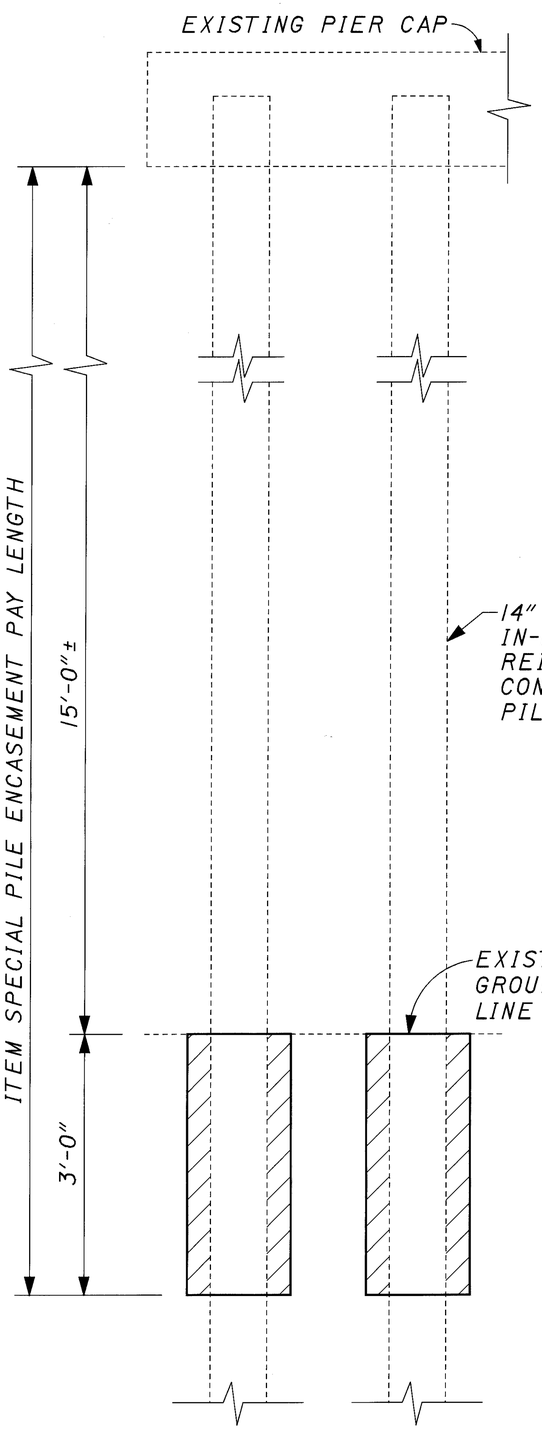

EXISTING PILES

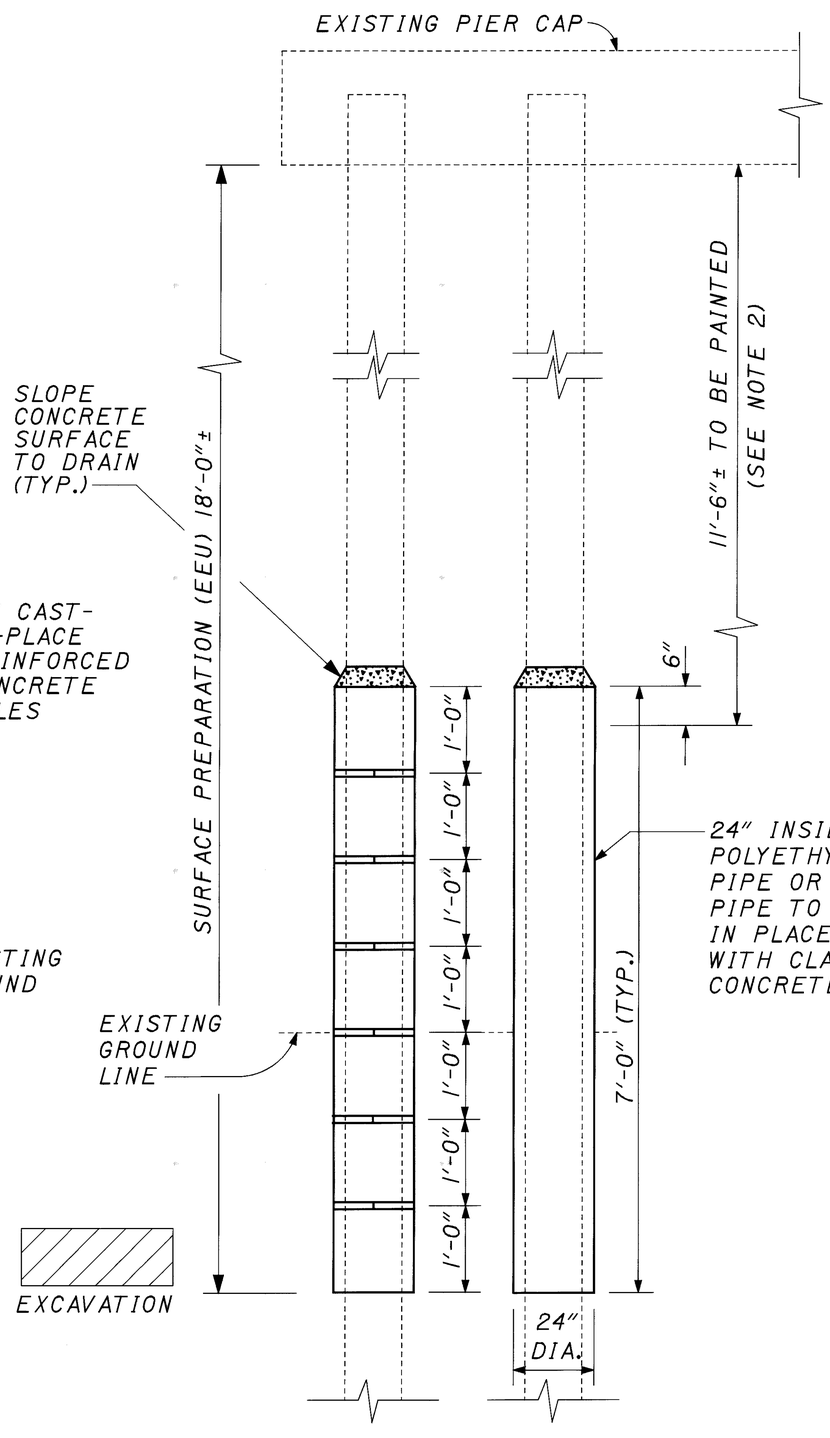

PROPOSED PILES

NOTE:

1. ALL PAINTING AS PER THE FIELD PAINTING OF EXISTING STEEL, USING EPOXY AND URETHANE (EEU) PROPOSAL NOTE OMITTING THE QUALITY CONTROL SPECIALIST AND TEST SECTION.

   THERE ARE 7 (SEVEN) COLUMNS PER PIER.
   THERE ARE 2 (TWO) PIERS ON STRUCTURE.

2. AT THE CONTRACTOR'S OPTION AT NO ADDITIONAL COST TO THE STATE, THE CONTRACTOR MAY EXTEND THE ENCASEMENT TO THE BOTTOM OF THE EXISTING PIER CAP IN LIEU OF PAINTING. SURFACE PREPARATION SHALL STILL BE PERFORMED.

3. STABILITY OF CAPPED PILE PIERS SHALL BE MAINTAINED DURING CONSTRUCTION. THE WORK ON THE EXISTING PIER PILES SHALL TAKE PLACE PRIOR TO STAGE CONSTRUTION OR AFTER ALL WORK IS COMPLETE ON THE SUPERSTRUCTURE.

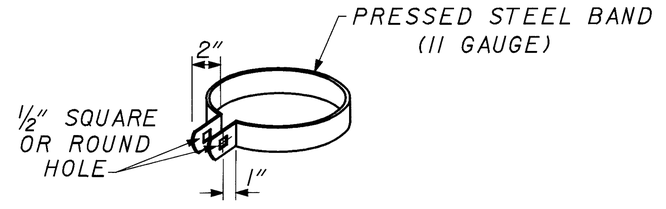

ITEM SPECIAL PILE ENCASEMENT

THIS ITEM SHALL INCLUDE THE FOLLOWING: EXCAVATION AND REPLACEMENT OF THE EMBANKMENT TO ITS NATURAL STATE AT THE EXISTING PILES, POLYETHYLENE OR PVC PIPE, GALVANIZED STEEL BANDS, NUTS AND BOLTS. THE POLYETHYLENE 707.33 OR PVC PIPE (707.45) SHALL BE CUT LENGTHWISE ON ONE SIDE OR IN TWO (2) SECTIONS AS NEEDED TO ENCOMPASS THE EXISTING 14" CAST-IN-PLACE PILES. THE BANDS SHALL BE 1" IN WIDTH AND THICKNESS SHALL NOT BE LESS THAN 11 GAUGE (.1196"). BANDS SHALL BE TIGHTENED SO AS NOT TO ELONGATE WHEN CONCRETE IS PLACED WITHIN THE PIPE. MAXIMUM SPACING OF THE BANDS SHALL BE 1'-0". ALTERNATE METHODS MAY BE USED TO CLAMP THE SECTIONS TOGETHER AS APPROVED BY THE ENGINEER. THE POLYETHYLENE OR PVC PIPE SHALL BE FILLED WITH CLASS C CONCRETE AND INCLUDED WITH ITEM SPECIAL, PILE ENCASEMENT FOR PAYMENT. ALL PAINTING PER PLAN NOTES SHALL BE INCLUDED WITH ITEM SPECIAL, PILE ENCASEMENT FOR PAYMENT.

DESIGN AGENCY
ODOT CENTRAL OFFICE
OFFICE OF PRODUCTION

REVISED DFT DATE 9-7-99
STRUCTURE FILE NUMBER 5203902

DRAWN TKB
REVISED

DESIGNED TKB
CHECKED RJH

PIER ENCASEMENT
MED-71-2088 E
RAMP "B" OVER PLUM CREEK, S.R. 3 INTERCHANGE

MED-71-15.78

16 / 16

836
940

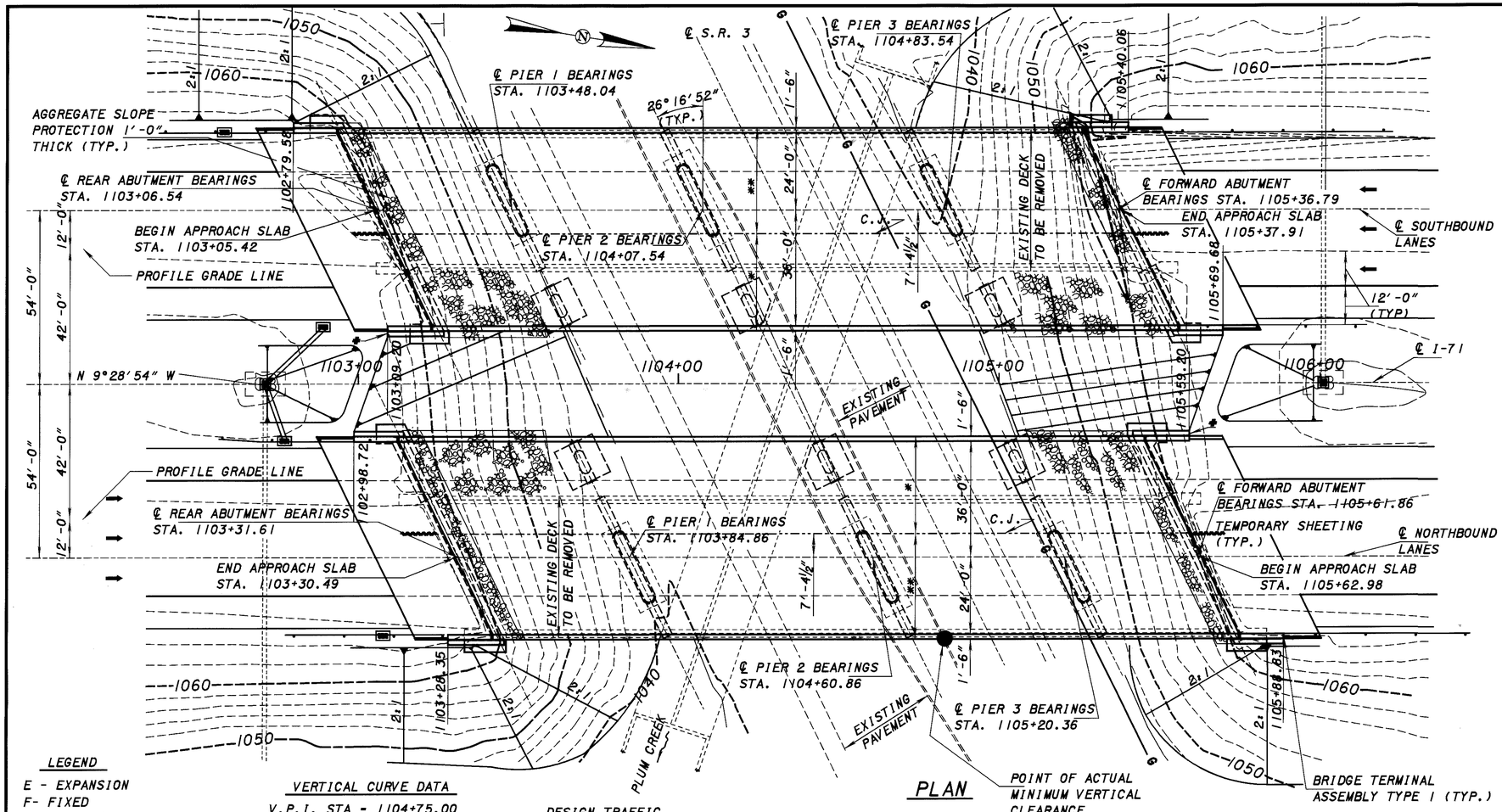

PLAN

LEGEND

E - EXPANSION
F- FIXED
N.B.L. - NORTH BOUND LANE
S.B.L. - SOUTH BOUND LANE
EL. - ELEVATION
* STAGE I CONSTRUCTION
** STAGE 2 CONSTRUCTION

VERTICAL CURVE DATA

V.P.I. STA - 1104+75.00
V.P.I. ELEVATION - 1070.12
L.V.C. - 1400 FEET
g1 - 0.75 %
g2- 0.33%

DESIGN TRAFFIC

2000 ADT - 34010 2000 ADTT - 4082
2020 ADT - 46690 2020 ADTT - 5603

● 15'-6" REQUIRED MINIMUM VERTICAL CLEARANCE
16'-0" ACTUAL MINIMUM VERTICAL CLEARANCE

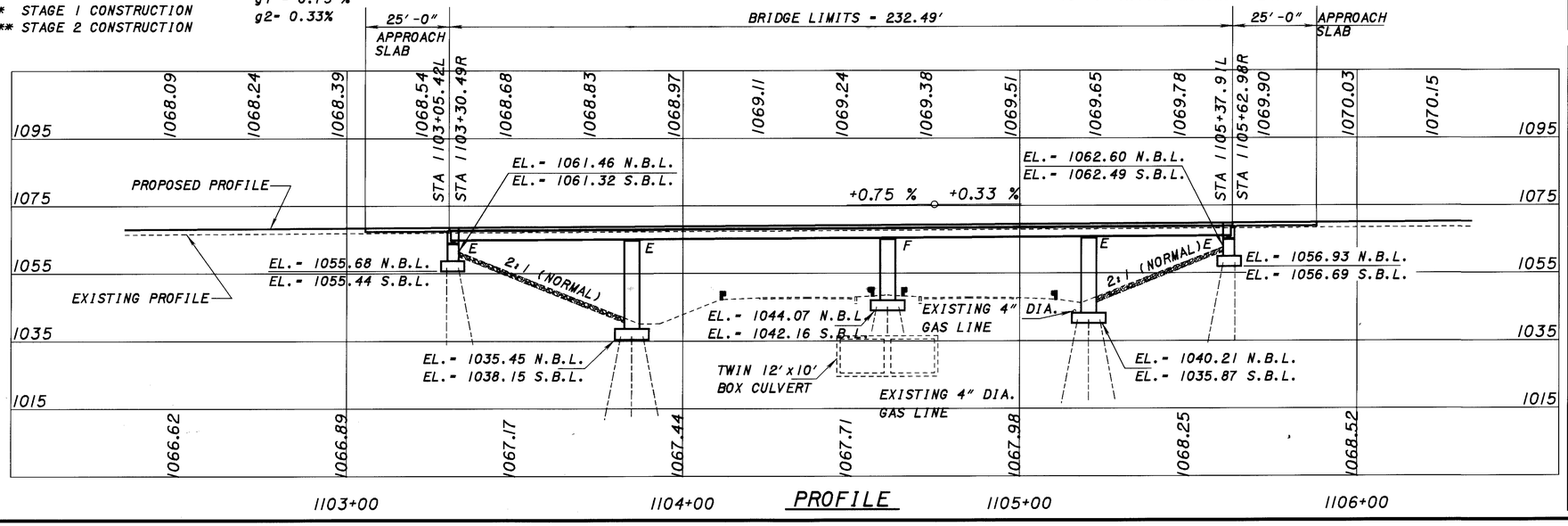

PROFILE

(ALONG ℄ NORTHBOUND SHOWN, SOUTHBOUND PROFILE IS SIMILAR)

NOTES

EARTHWORK LIMITS SHOWN ARE APPROXIMATE. ACTUAL SLOPES SHALL CONFORM TO PLAN CROSS SECTIONS.

PILES ARE 12" REINFORCED CONCRETE PILES FOR THE ABUTMENTS AND 14" REINFORCED CONCRETE PILES FOR THE PIERS. THE ESTIMATED PAY LENGTHS ARE:

REAR ABUTMENT - 40 FEET
PIER 1 AND PIER 2 - 35 FEET
PIER 3 - 50 FEET
FORWARD ABUTMENT - 35 FEET

BENCHMARK DATA

BENCHMARK #12
STATION 1110+35.99 ELEVATION - 1069.77
ODOT DISC IN HEADWALL, STAMPED

*- NO BRIDGE TERMINAL ASSEMBLY
SEE CSS2 FOR ADDITIONAL DETAILS

EXISTING STRUCTURE

TYPE: CONTINUOUS STEEL BEAMS WITH REINFORCED CONCRETE DECK AND SUBSTRUCTURE.

SPANS:
S.B.L.: 41'-6"±, 59'-6"±, 76'-0"±, 53'-3"± C/C BRGS.
N.B.L.: 53'3"±, 76'-0"±, 59'-6"±, 41'-6"± C/C BRGS.

ROADWAY: 2 @ 42'-0"± F/F OF PARAPETS

LOADING: CF 2000 (57) AND A.A.S.H.O. ALTERNATIVE LOADING

SKEW: 26°16'38"± (R.F)

WEARING SURFACE: ASPHALT

APPROACH SLABS: 25'-0" LONG AS-1-54

ALIGNMENT: TANGENT

CROWN: 3/16" PER FOOT

DATE BUILT: 1964

SFN: 5203937 L / 5203961 R

PROPOSED STRUCTURE

TYPE: CONTINUOUS STEEL BEAMS WITH REINFORCED CONCRETE DECK AND SUBSTRUCTURE.
(SEE SHEET 5 / 31 FOR LIST OF PROPOSED WORK)

SPANS:
S.B.L.: 41'-6"±, 59'-6"±, 76'-0"±, 53'-3"± C/C BRGS.
N.B.L.: 53'3"±, 76'-0"±, 59'-6"±, 41'-6"± C/C BRGS.

ROADWAY: 60'-0" TOE/TOE OF PARAPETS

LOADING: HS 20-44 (CASE I) AND ALTERNATE MILITARY LOADING

SKEW: 26°16'52" (R.F)

WEARING SURFACE: MONOLITHIC CONCRETE

APPROACH SLABS: 25'-0" LONG (AS-1-81)
60'-0" TOE/TOE OF CURB

ALIGNMENT: TANGENT

CROWN: 3/16" PER FOOT

LONGITUDE: 81°47'25" LATITUDE 41°11'45"

DESIGN AGENCY: ODOT CENTRAL OFFICE OFFICE OF PRODUCTION
REVIEWED: SER DATE: 8-27-99
STRUCTURE FILE NUMBER: 5203937L/5203961R
DRAWN: TAA REVISED:
DESIGNED: TAA CHECKED: DFT

MEDINA COUNTY STA. 1103+05.42L STA. 1105+37.91L
MEDINA COUNTY STA. 1103+30.49R STA. 1105+62.98R

SITE PLAN
MED-71-2090 L/R
I-71 OVER S.R. 3

MED-71-15.78

1 / 31

837
940

		MED-71-2090 L	MED-71-2090 R		ESTIMATED QUANTITIES	MED-71-2090 L				MED-71-2090 R			
ITEM	EXTENSION	TOTAL	TOTAL	UNIT	DESCRIPTION	ABUT.	PIERS	SUPER.	GEN.	ABUT.	PIERS	SUPER.	GEN.
202	11203	LUMP	LUMP		PORTIONS OF STRUCTURE REMOVED, OVER 20 FOOT SPAN, AS PER PLAN	LUMP		LUMP		LUMP		LUMP	
503	11100	LUMP	LUMP		COFFERDAMS, CRIBS AND SHEETING				LUMP				LUMP
503	21301	LUMP	LUMP		UNCLASSIFIED EXCAVATION, AS PER PLAN	LUMP	LUMP			LUMP	LUMP		
505	11100	LUMP	LUMP		PILE DRIVING EQUIPMENT MOBILIZATION				LUMP				LUMP
507	00500	935	935	LF	12" CAST-IN PLACE REINFORCED CONCRETE PILES, DRIVEN	935				935			
507	00550	935	935	LF	12" CAST-IN PLACE REINFORCED CONCRETE PILES, FURNISHED	935				935			
507	00601	1080	1080	LF	14" CAST-IN PLACE REINFORCED CONCRETE PILES, DRIVEN, AS PER PLAN		1080				1080		
507	00650	1080	1080	LF	14" CAST-IN PLACE REINFORCED CONCRETE PILES, FURNISHED		1080				1080		
507	50500	23	23	EACH	STEEL PILE SPLICES	11	12			11	12		
512	44400	8	8	SY	TYPE B WATERPROOFING	8				8			
SPECIAL	51267200	49	49	SY	WATERPROOFING, MISC.: SEMI-INTEGRAL ABUTMENT JOINT WATERPROOFING	49				49			
SPECIAL	51267510	1257	1257	SY	SEALING OF CONCRETE SURFACES (EPOXY-URETHANE)	90	603	564		90	603	564	
516	13600	21	21	SF	1" PREFORMED EXPANSION JOINT FILLER			21				21	
516	13900	155	155	SF	2" PREFORMED EXPANSION JOINT FILLER	155				155			
516	44101	16	16	EACH	ELASTOMERIC BEARING WITH INTERNAL LAMINATES AND LOAD PLATE	16				16			
					(NEOPRENE), AS PER PLAN (9"x13"x2⅝" PAD AND 12"x14"x1½" PLATE)								
516	44000	16	16	EACH	ELASTOMERIC BEARING WITH INTERNAL LAMINATES AND LOAD PLATE (NEOPRENE), (12"x18"x1¾" PAD		16				16		
					AND 13"x19"x2" PLATE)								
516	44001	8	8	EACH	ELASTOMERIC BEARING WITH INTERNAL LAMINATES AND LOAD PLATE		8				8		
					(NEOPRENE), AS PER PLAN (10½"x18"x1 15/16" PAD AND 11½"x24"x2" PLATE)								
518	21231	LUMP	LUMP		POROUS BACKFILL WITH FILTER FABRIC, AS PER PLAN	LUMP				LUMP			
518	40000	139	139	LF	6" PERFORATED CORRUGATED PLASTIC PIPE	139				139			
518	40010	54	54	LF	6" NON-PERFORATED CORRUGATED PLASTIC PIPE, INCLUDING SPECIALS	54				54			
523	11100	6	6	HOUR	DYNAMIC LOAD TEST *		6				6		
601	20500	130	130	CY	CRUSHED AGGREGATE SLOPE PROTECTION				130				130
816	00600	LUMP	LUMP		FIELD PAINTING NEW STEEL, INTERMEDIATE AND FINISH COAT, SYSTEM IZEU			LUMP				LUMP	
842	42001	91	94	CY	CLASS C CONCRETE, PIER ABOVE FOOTINGS, AS PER PLAN		91				94		
842	44101	102	102	CY	CLASS C CONCRETE, ABUTMENT NOT INCLUDING FOOTING, AS PER PLAN	102				102			
842	46501	113	113	CY	CLASS C CONCRETE, FOOTING, AS PER PLAN	58	55			58	55		
844	48001	425	425	CY	HIGH PERFORMANCE CONCRETE SUPERSTRUCTURE (DECK), AS PER PLAN, MIX 4			425				425	
844	48021	80	80	CY	HIGH PERFORMANCE CONCRETE SUPERSTRUCTURE (PARAPET), AS PER PLAN **, MIX 4			80				80	
844	48041	64	64	CY	HIGH PERFORMANCE CONCRETE SUBSTRUCTURE, AS PER PLAN	64				64			
844	49000	LUMP	LUMP		HIGH PERFORMANCE CONCRETE TRIAL MIX			LUMP				LUMP	
844	49010	LUMP	LUMP		HIGH PERFORMANCE CONCRETE TESTING			LUMP				LUMP	
863	10060	LUMP	LUMP		STRUCTURAL STEEL MEMBERS, LEVEL THREE (3) FABRICATION, A572			LUMP				LUMP	
863	20000	5640	5640	EACH	WELDED STUD SHEAR CONNECTORS			5640				5640	

**PARAPET ON THE APPROACH SLAB IS INCLUDED WITH THIS PAY ITEM.

* SEE CSS1 FOR EXPLANATION

DESIGN AGENCY
ODOT CENTRAL OFFICE
OFFICE OF PRODUCTION

REVIEWED SER
DATE 8-27-99
STRUCTURE FILE NUMBER 5203937L/5203961R

DRAWN TAA
REVISED

DESIGNED TAA
CHECKED DFT

ESTIMATED QUANTITIES
MED-71-2090 L/R
I-71 OVER S.R. 3

MED-71-15.78

GENERAL NOTES

STANDARD DRAWINGS AND SPECIFICATIONS:

REFERENCE SHALL BE MADE TO STANDARD DRAWINGS:

AS-1-81	REVISED 09-15-94
SBR-1-99	DATED 01-12-99
PCB-1-91	REVISED 07-06-99
BS-1-93	DATED 12-19-94
GSD-1-96	DATED 02-12-97

AND TO SUPPLEMENTAL SPECIFICATIONS:

816	DATED 04-21-97
842	DATED 01-06-99
844	DATED 01-06-99
863	DATED 10-12-99
899	DATED 10-21-98
910	DATED 07-28-98
911	DATED 07-10-97
954	DATED 09-09-97

DESIGN SPECIFICATIONS:

THIS STRUCTURE CONFORMS TO "STANDARD SPECIFICATIONS FOR HIGHWAY BRIDGES" ADOPTED BY THE AMERICAN ASSOCIATION OF STATE HIGHWAY AND TRANSPORTATION OFFICIALS, 1996 INCLUDING THE 1997 AND 1998 INTERIM SPECIFICATIONS AND THE ODOT DESIGN MANUAL.

DESIGN LOADING:

HS20-44, CASE I AND THE ALTERNATE MILITARY LOADING.

DESIGN DATA:

HIGH PERFORMANCE CONCRETE - COMPRESSIVE STRENGTH 4500 PSI (SUPERSTRUCTURE)

HIGH PERFORMANCE CONCRETE - COMPRESSIVE STRENGTH 4000 PSI (SUBSTRUCTURE)

ITEM 842 CONCRETE - COMPRESSIVE STRENGTH 4000 PSI (SUBSTRUCTURE)

REINFORCING STEEL - ASTM A615, A616 OR A617 GRADE 60 MINIMUM YIELD STRENGTH 60 Ksi. SPIRAL REINFORCEMENT MAY BE PLAIN BARS, ASTM A82 OR A615

STRUCTURAL STEEL - A572 - YIELD STRENGTH 50 Ksi

DECK PROTECTION METHOD - EPOXY COATED REINFORCING STEEL AND 2½" CONCRETE COVER AND HIGH PERFORMANCE CONCRETE.

MONOLITHIC WEARING SURFACE IS ASSUMED, FOR DESIGN PURPOSES, TO BE 1" THICK.

EXISTING STRUCTURE VERIFICATION:

DETAILS AND DIMENSIONS SHOWN ON THESE PLANS PERTAINING TO THE EXISTING STRUCTURE HAVE BEEN OBTAINED FROM PLANS OF THE EXISTING STRUCTURE AND FROM FIELD OBSERVATIONS AND MEASUREMENTS. CONSEQUENTLY, THEY ARE INDICATIVE OF THE EXISTING STRUCTURE AND THE PROPOSED WORK BUT THEY SHALL BE CONSIDERED TENTATIVE AND APPROXIMATE. THE CONTRACTOR IS REFERRED TO CMS SECTIONS 102.05, 105.02 AND 513.02.

CONTRACT BID PRICES SHALL BE BASED UPON A RECOGNITION OF THE UNCERTAINTIES DESCRIBED ABOVE AND UPON A PREBID EXAMINATION OF THE EXISTING STRUCTURE BY THE CONTRACTOR. HOWEVER, ALL PROJECT WORK SHALL BE BASED UPON ACTUAL DETAILS AND DIMENSIONS WHICH HAVE BEEN VERIFIED BY THE CONTRACTOR IN THE FIELD.

EXISTING BRIDGE PLANS MAY BE INSPECTED IN THE OFFICE OF STRUCTURAL ENGINEERING IN COLUMBUS, OHIO OR AT THE ODOT DISTRICT THREE OFFICE IN ASHLAND, OHIO.

DOWEL HOLES WITH NON-SHRINK, NON METALLIC GROUT

ALL DOWEL HOLES SHALL BE CORE DRILLED AND GROUTED WITH AN EPOXY MORTAR MEETING THE REQUIREMENTS OF CMS 510. PAYMENT FOR ALL OF THE ABOVE SHALL BE INCLUDED WITH THE ASSOCIATED CONCRETE ITEM.

ITEM 202 PORTIONS OF STRUCTURE REMOVED OVER 20 FOOT SPAN, AS PER PLAN:

PORTION OF THE STRUCTURE REMOVED, AS PER PLAN, SHALL INCLUDE THE ELEMENTS INDICATED IN THE PLANS AND GENERAL NOTES AND ARE NOT SEPARATELY LISTED FOR PAYMENT, EXCEPT FOR WEARING COURSE REMOVAL. ITEMS TO BE REMOVED INCLUDE ALL EXISTING MATERIALS BEING REPLACED BY NEW CONSTRUCTION AND MISCELLANEOUS ITEMS THAT ARE NOT SHOWN TO BE INCORPORATED INTO THE FINAL CONSTRUCTION AND ARE DIRECTED TO BE REMOVED BY THE ENGINEER. THE USE OF EXPLOSIVES, HEADACHE BALLS AND/OR HOE-RAMS WILL NOT BE PERMITTED. THE METHOD OF REMOVAL AND THE WEIGHT OF HAMMER SHALL BE APPROVED BY THE ENGINEER. ALL WORK SHALL BE DONE IN A MANNER THAT WILL NOT CUT, ELONGATE OR DAMAGE THE EXISTING REINFORCING STEEL TO BE PRESERVED.

PROTECTION OF TRAFFIC:

PRIOR TO DEMOLITION OF ANY PORTIONS OF THE EXISTING SUPERSTRUCTURE, THE CONTRACTOR SHALL SUBMIT PLANS FOR THE PROTECTION OF TRAFFIC (VEHICULAR, PEDESTRIAN, ETC.) ADJACENT TO AND/OR UNDER THE STRUCTURE TO THE ENGINEER FOR APPROVAL. THESE PLANS SHALL INCLUDE PROVISIONS FOR ANY DEVICES AND STRUCTURES THAT MAY BE NECESSARY TO ENSURE SUCH PROTECTION. TEMPORARY VERTICAL CLEARANCES SPECIFIED IN THE PROPOSAL SHALL BE MAINTAINED AT ALL TIMES EXCEPT AS OTHERWISE APPROVED BY THE ENGINEER.

CUT LINE CONSTRUCTION JOINT PREPARATION:

SAW CUT BOUNDARIES OF PROPOSED CONCRETE REMOVALS 1" DEEP. REMOVE CONCRETE TO A ROUGH SURFACE. WHERE PRACTICABLE, THE EXISTING REINFORCING STEEL WHERE REQUIRED IN THE PLANS SHALL BE LEFT IN PLACE. INSTALL DOWEL BARS IF SPECIFIED. PRIOR TO CONCRETE PLACEMENT ABRASIVELY CLEAN JOINT SURFACE AND EXPOSED REINFORCEMENT TO REMOVE LOOSE AND DISINTEGRATED CONCRETE AND LOOSE RUST. THE JOINT SURFACE AND EXPOSED REINFORCEMENT SHALL BE THOROUGHLY CLEANED OF ALL DIRT, DUST, OR OTHER FOREIGN MATERIAL BY THE USE OF WATER, AIR UNDER PRESSURE, OR OTHER METHODS THAT PRODUCE SATISFACTORY RESULTS. CONCRETE BONDING SURFACES SHALL BE WET WITHOUT FREE WATER AS CONCRETE IS PLACED.

SUBSTRUCTURE CONCRETE REMOVAL:

SUBSTRUCTURE CONCRETE REMOVAL SHALL BE BY MEANS OF APPROVED PNEUMATIC HAMMERS EMPLOYING POINTED AND BLUNT CHISEL TOOLS. HYDRAULIC HOE-RAM TYPE HAMMERS WILL NOT BE PERMITTED. THE WEIGHT OF THE HAMMER SHALL NOT BE MORE THAN 35 POUNDS FOR REMOVAL WITHIN 18 INCHES OF PORTIONS TO BE PRESERVED. OUTSIDE THE 18 INCH LIMIT, A HAMMER HEAVIER THAN 35 POUNDS, BUT NOT TO EXCEED 90 POUNDS, MAY BE USED AT THE APPROVAL OF THE ENGINEER. PNEUMATIC HAMMERS SHALL NOT BE PLACED IN DIRECT CONTACT WITH REINFORCING STEEL THAT IS TO BE RETAINED IN THE REBUILT STRUCTURE.

¼ INCH SCARIFICATION: THE EXISTING PIER BRIDGE SEAT SURFACE SHALL BE SCARIFIED ¼ INCH INTO SOUND CONCRETE PRIOR TO PLACEMENT OF THE CONCRETE. THE SURFACE SHALL BE THOROUGHLY CLEANED OF ALL DIRT, DUST, OR OTHER FOREIGN MATERIALS BY THE USE OF WATER, AIR UNDER PRESSURE, OR ANOTHER METHOD THAT PRODUCES RESULTS SATISFACTORY TO THE ENGINEER. THE CONCRETE BONDING SURFACE SHALL BE WET WITHOUT FREE WATER AS CONCRETE IS PLACED.

PAYMENT

ALL WORK SHALL BE PAID FOR UNDER ITEM 202 PORTIONS OF STRUCTURES REMOVED, AS PER PLAN

TRAFFIC MAINTENANCE:

SEE ROADWAY PLANS FOR ADDITIONAL TRAFFIC NOTES AND DETAILS.

SEALING OF CONCRETE SURFACES (EPOXY-URETHANE)

EPOXY-URETHANE SHALL BE THE "BUFF" COLOR MEETING FEDERAL COLOR STANDARD NO. 37722 AS PER THE DETAILS IN THE PLAN.

ITEM SPECIAL - WATERPROOFING, MISC.: SEMI-INTEGRAL ABUTMENT JOINT WATERPROOFING

INSTALL A 3 FOOT WIDE STRIP, 3/32 INCH THICK, GENERAL PURPOSE, HEAVY DUTY NEOPRENE SHEET WITH NYLON FABRIC REINFORCEMENT AT LOCATIONS SHOWN IN THE PLANS. SECURE THE 3 FOOT WIDE NEOPRENE SHEETING TO THE CONCRETE WITH 1¼" X 3/32" (LENGTH X SHANK DIAMETER) #10 GALVANIZED BUTTON HEAD SPIKE THROUGH A 1 INCH OUTSIDE DIAMETER, #10 GAGE GALVANIZED WASHER. MAXIMUM FASTENER SPACING IS 9 INCHES. OTHER SIMILAR GALVANIZED DEVICES WHICH WILL NOT DAMAGE EITHER THE NEOPRENE OR THE CONCRETE MAY BE USED SUBJECT TO THE APPROVAL OF THE ENGINEER.

CENTER THE NEOPRENE STRIPS ON ALL JOINTS. FOR HORIZONTAL JOINTS, SECURE THE HORIZONTAL NEOPRENE STRIP BY USING A SINGLE LINE OF FASTENERS, STARTING AT 6 INCHES (+/-) FROM THE TOP OF THE NEOPRENE STRIP. FOR THE VERTICAL JOINTS SECURE THE VERTICAL NEOPRENE STRIP BY USING A SINGLE VERTICAL LINE OF FASTENERS, STARTING AT 6 INCHES (+/-) FROM THE VERTICAL EDGE OF THE NEOPRENE STRIP NEAREST TO THE CENTERLINE OF ROADWAY. FOR VERTICAL JOINTS, INSTALL 2 ADDITIONAL FASTENERS, AT 6 INCHES CENTER TO CENTER, ACROSS THE TOP OF THE NEOPRENE STRIP ON THE SAME SIDE OF THE VERTICAL JOINT AS WHERE THE SINGLE VERTICAL ROW OF FASTENERS IS LOCATED.

THE VERTICAL NEOPRENE STRIPS SHOULD COMPLETELY OVERLAP THE HORIZONTAL STRIPS. LAPS IN THE LENGTH OF THE HORIZONTAL STRIPS DUE TO MATERIAL MANUFACTURING SHALL BE AT LEAST ONE FOOT IN LENGTH, IF NOT VULCANIZED OR ADHESIVE BONDED, OR 6 INCHES IN LENGTH IF THE LAP IS VULCANIZED OR ADHESIVE BONDED. NO LAPS ARE ACCEPTABLE IN VERTICALLY INSTALLED NEOPRENE STRIPS.

THE NEOPRENE SHEETING SHALL BE 3/32 INCH THICK GENERAL PURPOSE, HEAVY DUTY NEOPRENE SHEET WITH NYLON FABRIC REINFORCEMENT. THE SHEETING SHALL BE "FAIRPRENE NUMBER NN-0003", BY E. I. DUPONT DE NEMOURS AND COMPANY, INC., "WINGPRENE" BY THE GOODYEAR TIRE AND RUBBER COMPANY, OR AN APPROVED ALTERNATE. THE NEOPRENE SHEETING SHALL CONFORM TO THE FOLLOWING:

DESCRIPTION OF TEST	ASTM METHOD	REQUIREMENT
THICKNESS, INCHES	D 751	0.094 ± .01
BREAKING STRENGTH, GRAB WXF, LBS, MINIMUM	D 751	700 X 700
ADHESIVE 1" STRIP, 2" MINIMUM, LBS, MINIMUM	D 751	9
BURST STRENGTH (MULLEN) PSI, MINIMUM	D 751	1400
HEAT AGING 70 HOURS T 212 F, 180 BEND WITHOUT CRACKING	D 2136	NO CRACKING OF COATING
LOW TEMPERATURE BRITTLENESS 1 HOUR AT -40 F, BEND AROUND ¼ INCH MANDREL	D 2136	NO CRACKING OF COATING

PAYMENT FOR LABOR MATERIALS AND INSTALLATION OF THESE ITEMS SHALL BE INCLUDED IN INTEM SPECIAL- WATERPROOFING, MISC. : SEMI-INTEGRAL ABUTMENT JOINT WATERPROOFING.

PAINTING OF 863 STEEL

THE COLOR OF THE FINISH COAT SHALL BE A LIGHT GRAY COLOR MEETING FEDERAL STANDARD NUMBER 16440. IN ADDITION TO THE STEEL STRINGER TO BE PAINTED INCIDENTALS SUCH AS CROSSFRAMES AND BEARINGS SHALL BE INCLUDED FOR PAYMENT.

ITS CONDUIT

THE CONDUIT SHALL BE PLACED WITHIN THE OUTSIDE PARAPET OF L & R STRUCTURES. SEE CSS3 & CSS4 FOR DETAILS.

ITEM 503, UNCLASSIFIED EXCAVATION, AS PER PLAN:

UNCLASSIFIED EXCAVATION SHALL BE IN ACCORDANCE WITH 503 EXCEPT THAT THE BACKFILL MATERIAL BEHIND THE ABUTMENTS SHALL BE 203 MATERIAL PLACED IN 6" LIFTS. EXCAVATION AT ABUTMENTS IN ADDITION TO THAT NECESSARY TO REMOVE PORTION OF THE EXISTING STRUCTURE SHALL BE INCLUDED IN THE LUMP SUM PRICE BID FOR ITEM 503, UNCLASSIFIED EXCAVATION FOR PAYMENT.

ITEM 842 CLASS C CONCRETE, (FOOTINGS, PIERS AND ABUTMENTS) AS PER PLAN

THE COARSE AGGREGATE SHALL BE NO. 8 LIMESTONE. THESE ITEMS SHALL INCLUDE THE COST OF THE REINFORCING STEEL.

ITEM 844 HIGH PERFORMANCE CONCRETE, AS PER PLAN

THE DESIGN MIX SHALL BE MIX NO. 4 LIMESTONE. THE OPTION OF SLIPFORM CONSTRUCTION OF THE BRIDGE PARAPET IS NOT PERMITTED. THESE ITEMS SHALL INCLUDE THE COST OF THE REINFORCING STEEL.

UTILITY LINES:

ALL EXPENSE INVOLVED IN RELOCATION (INSTALLING) THE AFFECTED UTILITY LINES SHALL BE BORNE BY THE UTILITY(IES). THE CONTRACTOR AND UTILITY(IES) ARE TO COOPERATE BY ARRANGING THEIR WORK IN SUCH A MANNER THAT INCONVENIENCE TO EITHER WILL BE HELD TO A MINIMUM.

REINFORCING STEEL:

NEW REINFORCING STEEL MAY REQUIRE FIELD CUTTING OR BENDING TO BE PROPERLY FITTED. PAYMENT SHALL BE INCLUDED UNDER ITEM 844 HIGH PERFORMANCE CONCRETE.

ITEM 518 - POROUS BACKFILL WITH FILTER FABRIC, AS PER PLAN

POROUS BACKFILL SHALL BE #57 GRAVEL ONLY.

ITEM 507 14" CAST-IN PLACE REINFORCED CONCRETE PILES, AS PER PLAN

PRIOR TO DRIVING PILES FOR PIER #2 THE LOCATION OF THE BOX CULVERT SHALL BE VERIFIED BY PREBORING AUGUERED HOLES. CARE SHALL BE TAKEN TO AVOID DAMAGE TO THE CULVERT DURING PILE INSTALLATION. THE PREBORED HOLES SHALL BE DONE IN ACCORDANCE WITH CMS 507.13. PAYMENT TO BE INCLUDED WITH ITEM 507.

THE DESIGN LOAD IS 44 TONS PER PILE FOR THE ABUTMENT PILES AND 55 TONS PER PILE FOR THE PIER PILES. THE ULTIMATE BEARING VALUE IS 88 TONS PER PILE FOR THE ABUTMENTS AND 110 TONS PER PILE FOR THE PIERS. †THE ULTIMATE BEARING VALUE IS TWO TIMES THE ACTUAL DESIGN LOAD.

SURVEY DISC ON STRUCTURE:

THE CONTRACTOR SHALL NOTIFY THE ENGINEER AT LEAST ONE (1) WEEK IN ADVANCE OF POURING THE CONCRETE FOR COMPLETION OF THE ABUTMENT. THE ENGINEER WILL PROVIDE THE CONTRACTOR ONE (1) SURVEY DISC FOR EACH STRUCTURE (OBTAINED FROM THE DISTRICT SURVEYOR) WHICH THE CONTRACTOR SHALL PLACE IN THE SURFACE OF THE FRESH CONCRETE. THE LOCATION OF THE DISC SHALL BE ON THE ABUTMENT, AND ON A FLAT, HORIZONTAL SURFACE BEYOND THE EDGE OF DECK AND PARAPET. THE BENCHMARK SHALL BE ACCESSIBLE TO A SURVEYOR'S ROD WITHOUT ANY OBSTRUCTIONS. COST OF THIS WORK IS CONSIDERED INCIDENTAL TO THE CONCRETE BID ITEM.

ITEM 601 CRUSHED AGGREGATE SLOPE PROTECTION

THE QUANTITIES INCLUDES 10 % OF THE EXISTING AGGREGATE SLOPE PROTECTION SURFACE AREA IN ADDITION TO WHAT IT IS DETAILED ON THE PLANS. THE SLOPE PROTECTION TO BE PLACED UNDER WIDENED STRUCTURE AND MATCH EXISTING.

DESIGN AGENCY: ODOT CENTRAL OFFICE, OFFICE OF PRODUCTION

DESIGNED	DRAWN	REVIEWED	DATE
TAA	TAA	SER	8-27-99
CHECKED	REVISED	STRUCTURE FILE NUMBER	
DFT		5203937L/5203961R	

GENERAL NOTES
MED-71-2090 L/R
I-71 OVER S.R. 3

MED-71-15.78

3 | 31

839
940

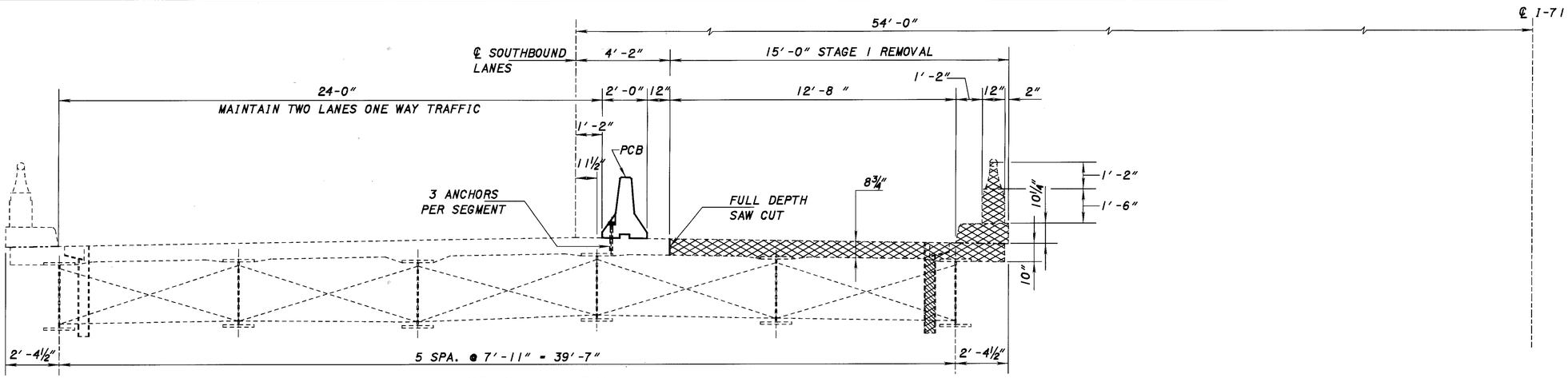

STAGE 1 REMOVAL

(SOUTHBOUND LANES SHOWN, NORTHBOUND SIMILAR)

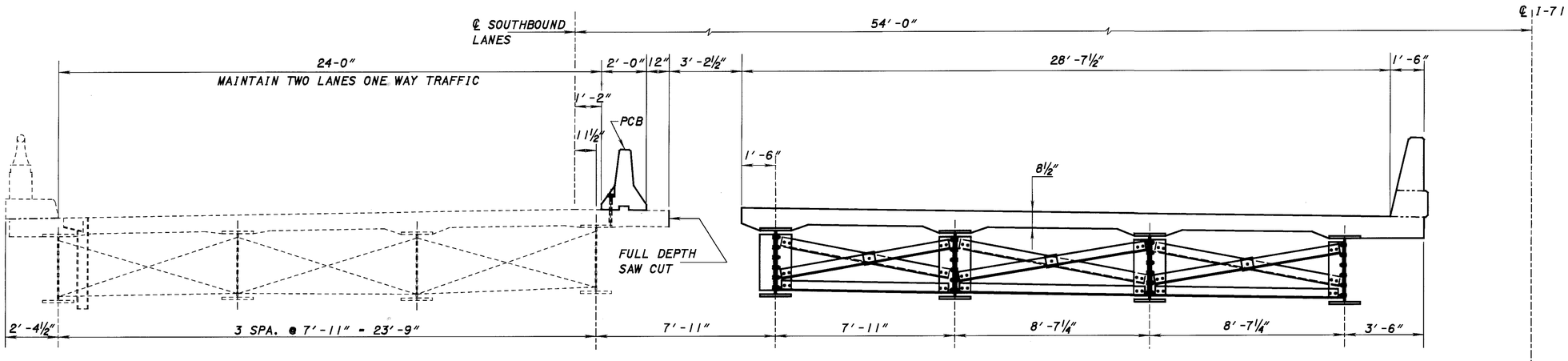

STAGE 1 CONSTRUCTION

(SOUTHBOUND LANES SHOWN, NORTHBOUND SIMILAR)

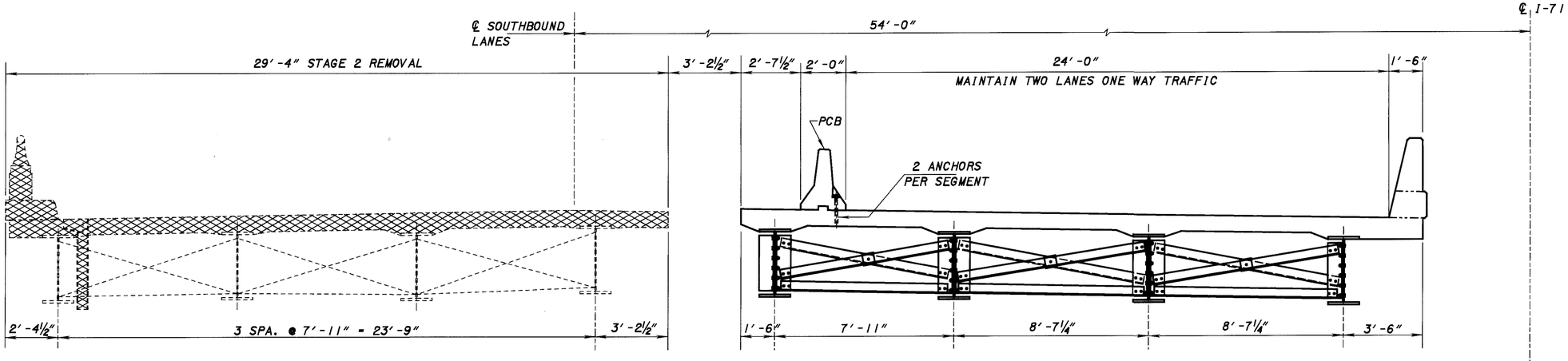

STAGE 2 REMOVAL

(SOUTHBOUND LANES SHOWN, NORTHBOUND SIMILAR)

DESIGN AGENCY
ODOT CENTRAL OFFICE
OFFICE OF PRODUCTION

DESIGNED	DRAWN	REVIEWED	DATE
TAA	TAA	SER	8-27-99
CHECKED	REVISED	STRUCTURE FILE NUMBER	
DFT		5203937L/5203961R	

STAGE CONSTRUCTION
MED-71-2090 L/R
I-71 OVER S.R. 3

MED-71-15.78

4 / 31

840
940

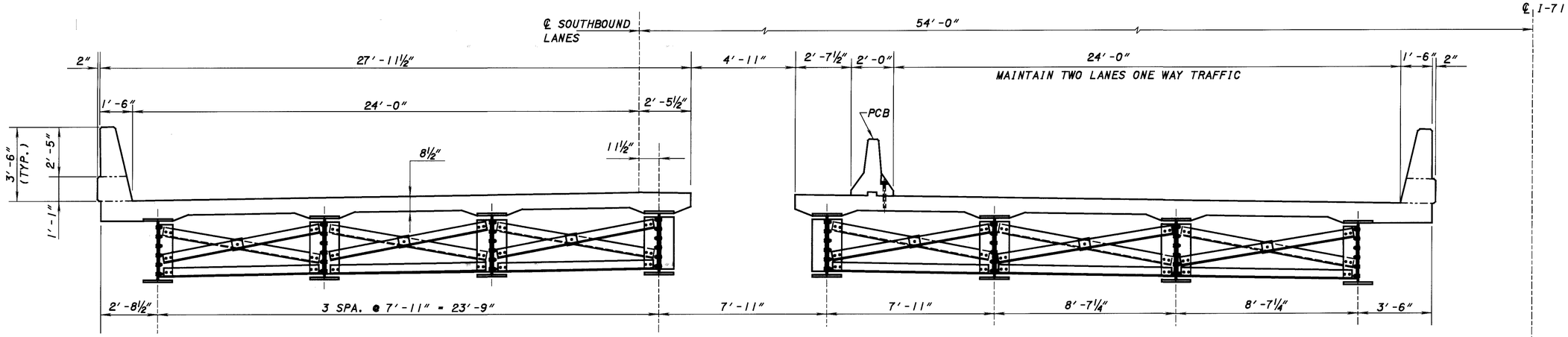

STAGE 2 CONSTRUCTION

(SOUTHBOUND LANES SHOWN, NORTHBOUND SIMILAR)

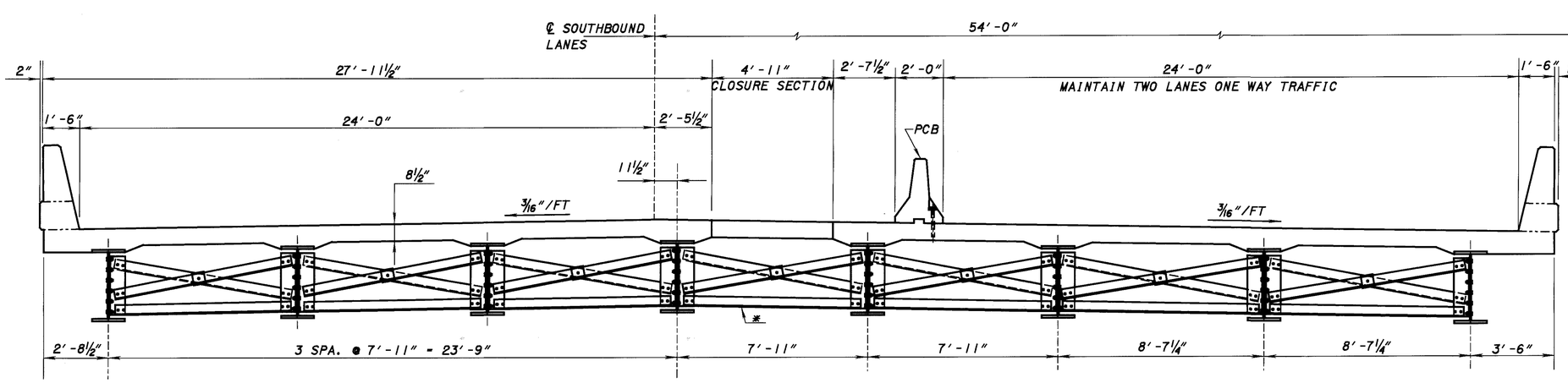

CLOSURE SECTION CONSTRUCTION

(SOUTHBOUND LANES SHOWN, NORTHBOUND SIMILAR)

* PLACE CROSSFRAMES IN POSITION PRIOR TO POURING OF THE CLOSURE POUR

NOTES AND LEGEND

TEMPORARY BARRIERS SHALL BE ANCHORED TO EXISTING AND PROPOSED BRIDGE DECK. TWO (2) OR THREE (3) ANCHORS PER TEMPORARY BARRIER SEGMENT ARE REQUIRED ON THE TRAFFIC SIDE OF THE BARRIER. THE ANCHOR BOLT PATTERN SHALL BE SYMMETRICAL ABOUT THE CENTER OF EACH SEGMENT. SEE STD. DWG. PCB-91 FOR ADDITIONAL DETAILS.

PCB - INDICATES PORTABLE CONCRETE BARRIER.

PROPOSED WORK

1. MAINTAIN TRAFFIC BY USE OF STAGE CONSTRUCTION
2. REPLACE CONCRETE DECK AND STEEL BEAMS
3. WIDEN AND MODIFIED EXISTING SUBSTRUCTURE UNITS

DESIGN AGENCY: ODOT CENTRAL OFFICE, OFFICE OF PRODUCTION
REVIEWED: SER
DATE: 8-27-99
STRUCTURE FILE NUMBER: 5203937L/5203961R
DRAWN: TAA
REVISED:
DESIGNED: TAA
CHECKED: DFT

STAGE CONSTRUCTION
MED-71-2090 L/R
I-71 OVER S.R. 3

MED-71-15.78

841
940

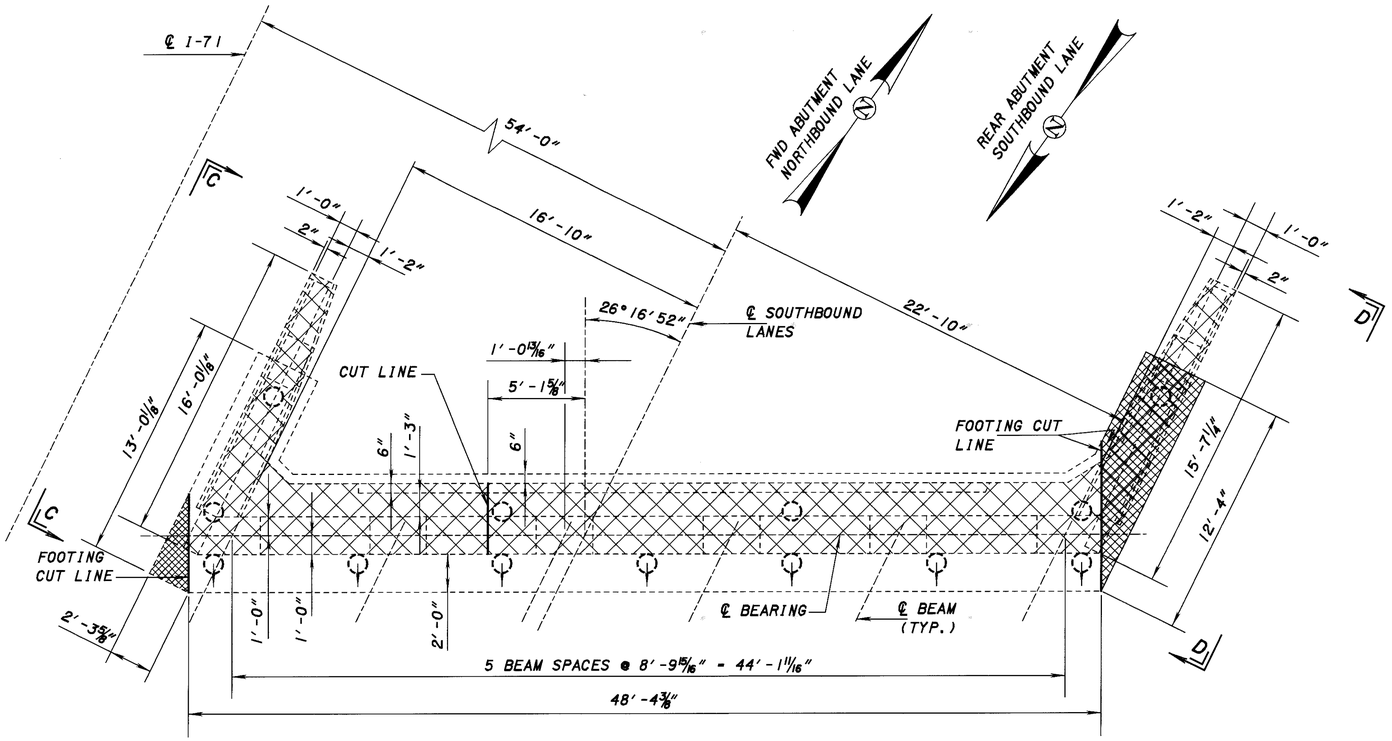

PLAN

(REAR ABUTMENT SOUTHBOUND LANES SHOWN,)
(FORWARD ABUTMENT NORTHBOUND LANES SIMILAR)

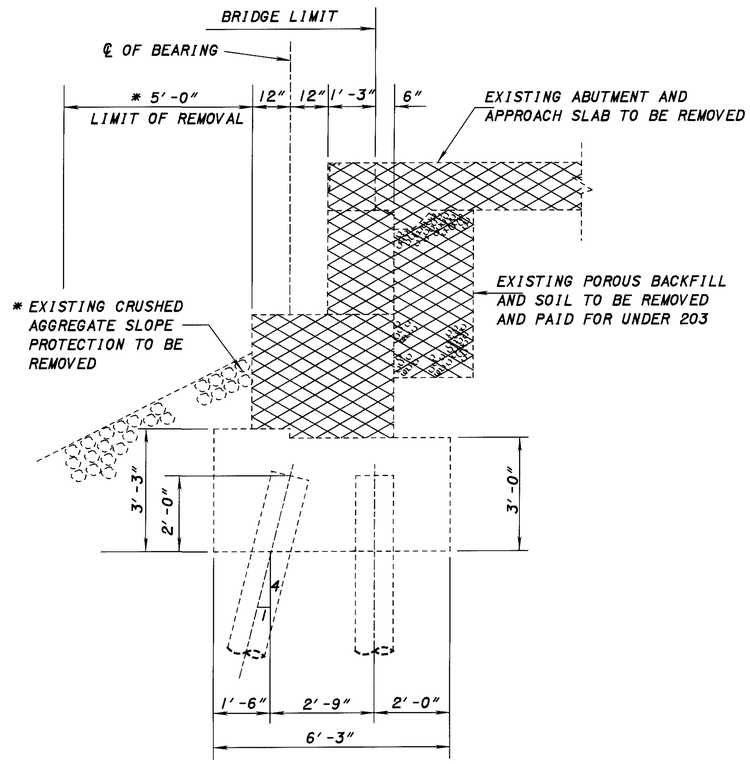

SECTION A-A

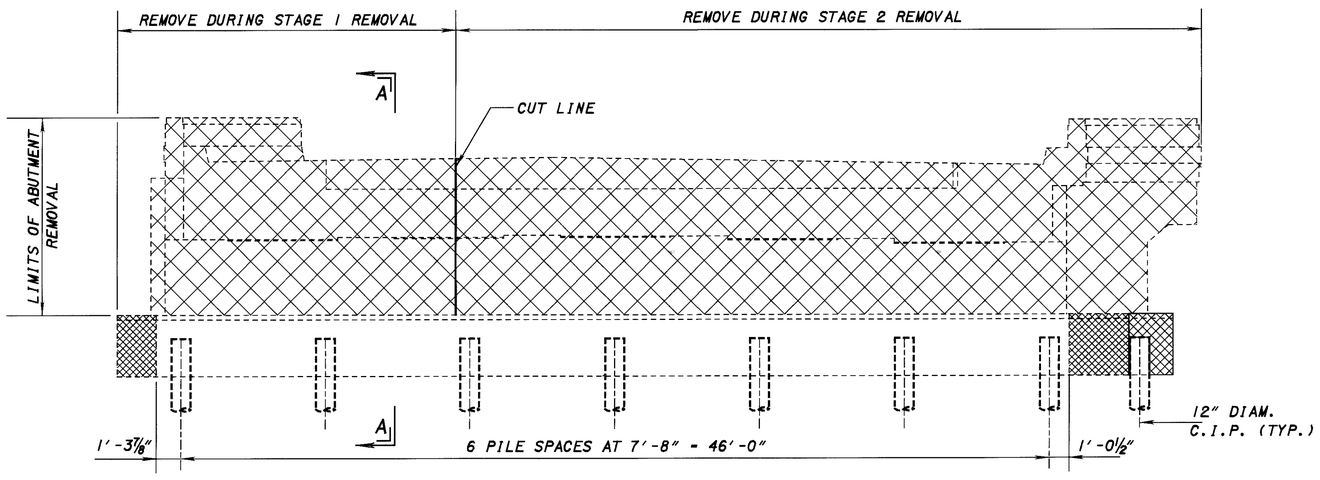

ELEVATION

(REAR ABUTMENT SOUTHBOUND LANES SHOWN,)
(FORWARD ABUTMENT NORTHBOUND LANES SIMILAR)

NOTES

FOR VIEW C-C AND D-D SEE SHEET 7/31

LEGEND

PORTION OF STRUCTURE TO BE REMOVED

INDICATE BATTERED PILE

DESIGN AGENCY
ODOT CENTRAL OFFICE
OFFICE OF PRODUCTION

DESIGNED	DRAWN	REVISED	DATE
TAA	TAA	SER	8-27-99
CHECKED	REVISED	STRUCTURE FILE NUMBER	
DFT		5203937L/5203961R	

EXISTING ABUTMENT PLAN AND ELEVATION
MED-71-2090 L/R
I-71 OVER S.R. 3

MED-71-15.78

6 / 31

842
940

NOTES AND LEGEND

FOR SECTION B-B SEE SHEET 8 / 31

FOR VIEW C-C AND D-D SEE SHEET 6 / 31

PORTION OF STRUCTURE TO BE REMOVED

INDICATE BATTERED PILE

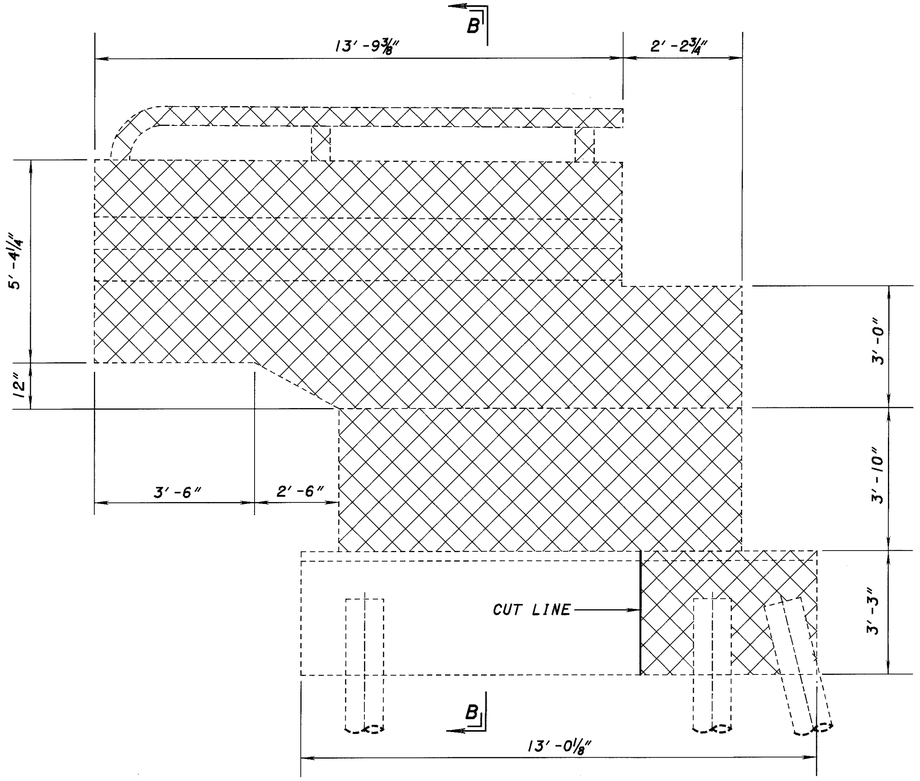

VIEW C-C

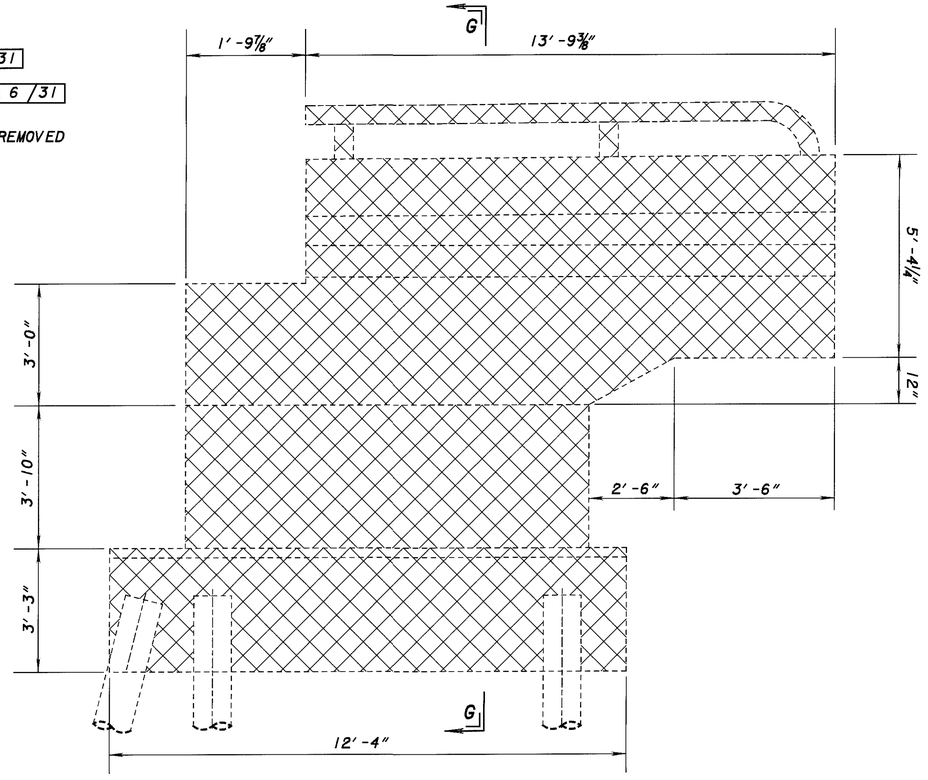

VIEW D-D

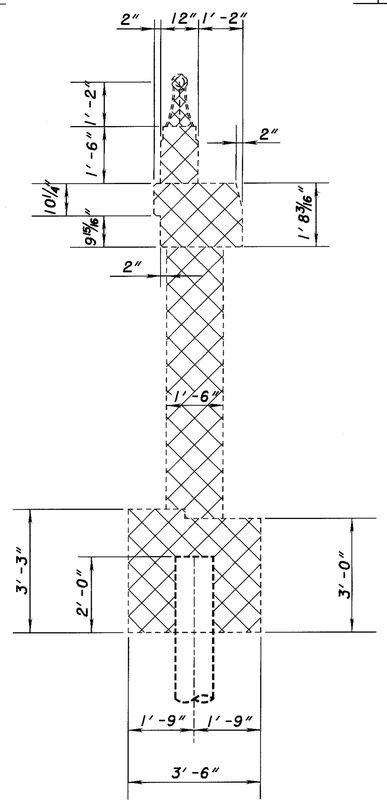

SECTION G-G

DESIGN AGENCY
ODOT CENTRAL OFFICE
OFFICE OF PRODUCTION

DESIGNED	DRAWN	REVIEWED	DATE
TAA	TAA	SER	8-27-99
CHECKED	REVISED	STRUCTURE FILE NUMBER	
DFT		5203937L/5203961R	

EXISTING WINGWALL DETAILS
MED-71-2090 L/R
I-71 OVER S.R. 3

MED-71-15.78

7 / 31

843
940

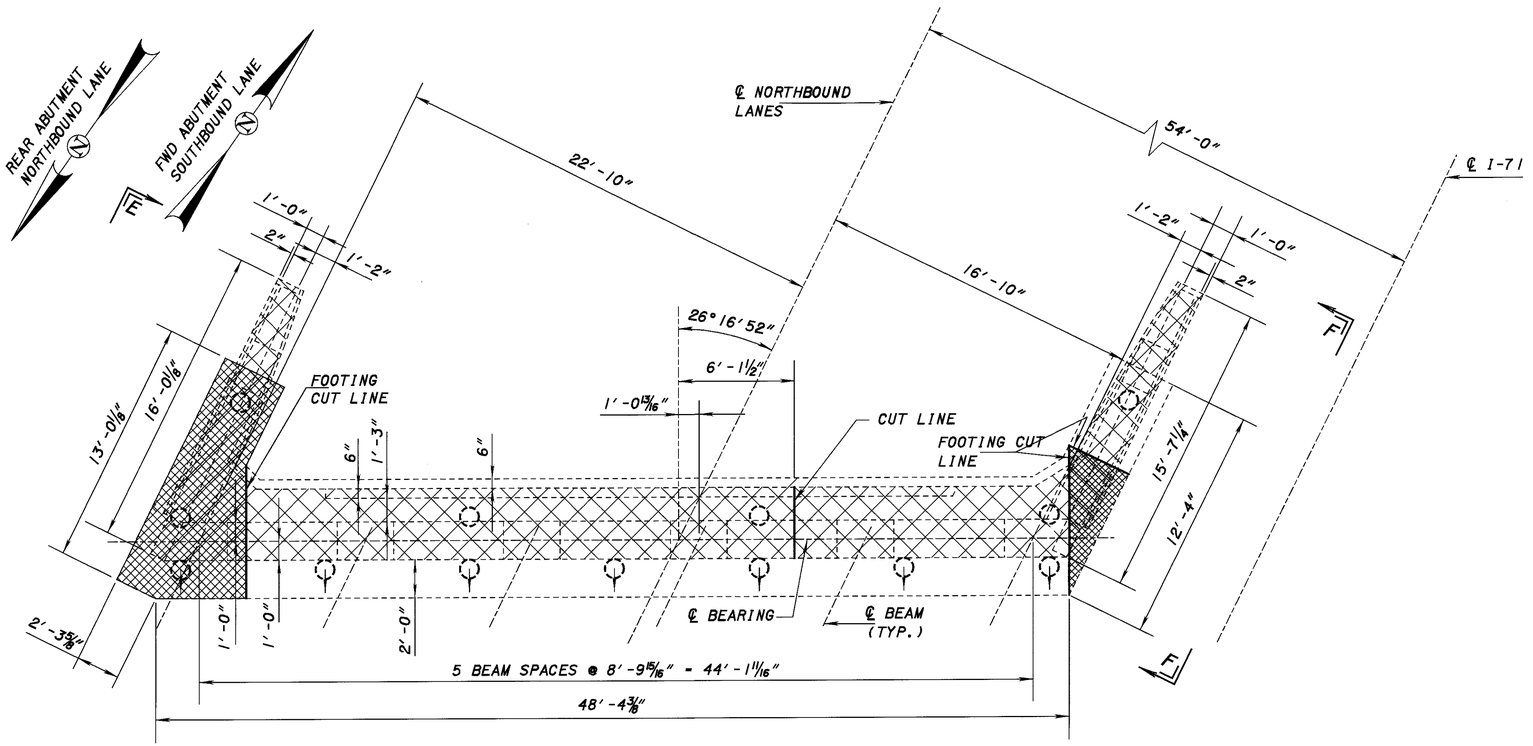

PLAN

(REAR ABUTMENT NORTHBOUND LANES SHOWN,)
(FORWARD ABUTMENT SOUTHBOUND LANES SIMILAR)

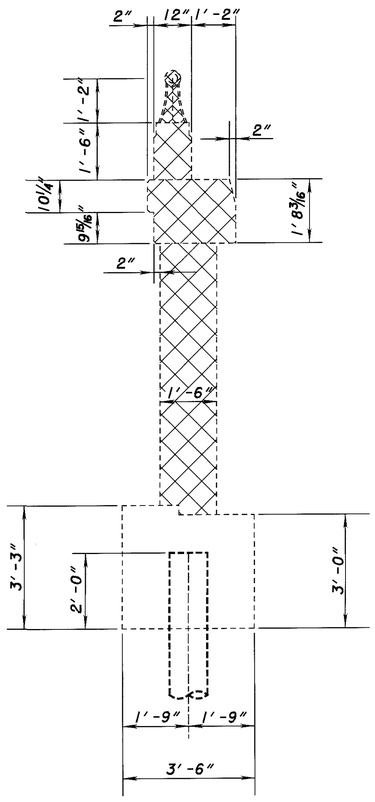

SECTION B-B

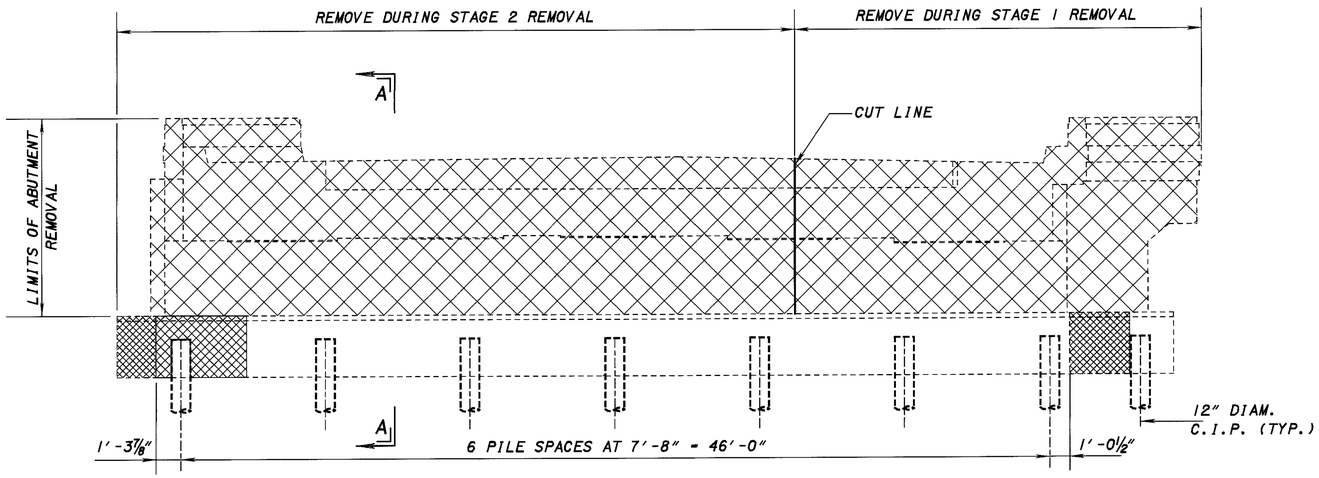

ELEVATION

(REAR ABUTMENT NORTHBOUND LANES SHOWN,)
(FORWARD ABUTMENT SOUTHBOUND LANES SIMILAR)

NOTES

FOR SECTION A-A SEE SHEET 6/31

FOR VIEW E-E AND F-F SEE SHEET 9/31

LEGEND

PORTION OF STRUCTURE TO BE REMOVED

INDICATE BATTERED PILE

DESIGN AGENCY
ODOT CENTRAL OFFICE
OFFICE OF PRODUCTION

REVIEWED SER DATE 8-27-99
STRUCTURE FILE NUMBER 5203937L/5203961R

DESIGNED TAA
DRAWN TAA
REVISED
CHECKED DFT

EXISTING ABUTMENT PLAN AND ELEVATION

MED-71-2090 L/R
I-71 OVER S.R. 3

MED-71-15.78

8/31

844/940

NOTES AND LEGEND

FOR SECTION B-B SEE SHEET 8/31

FOR SECTION G-G SEE SHEET 7/31

FOR VIEW E-E AND F-F SEE SHEET 8/31

PORTION OF STRUCTURE TO BE REMOVED

INDICATE BATTERED PILE

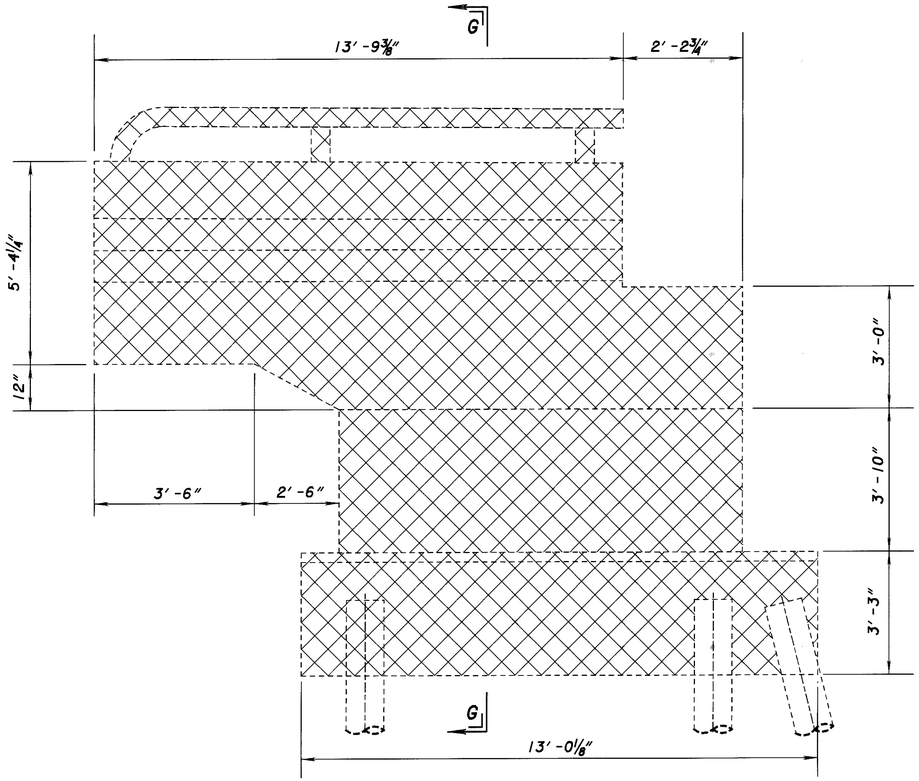

VIEW E-E

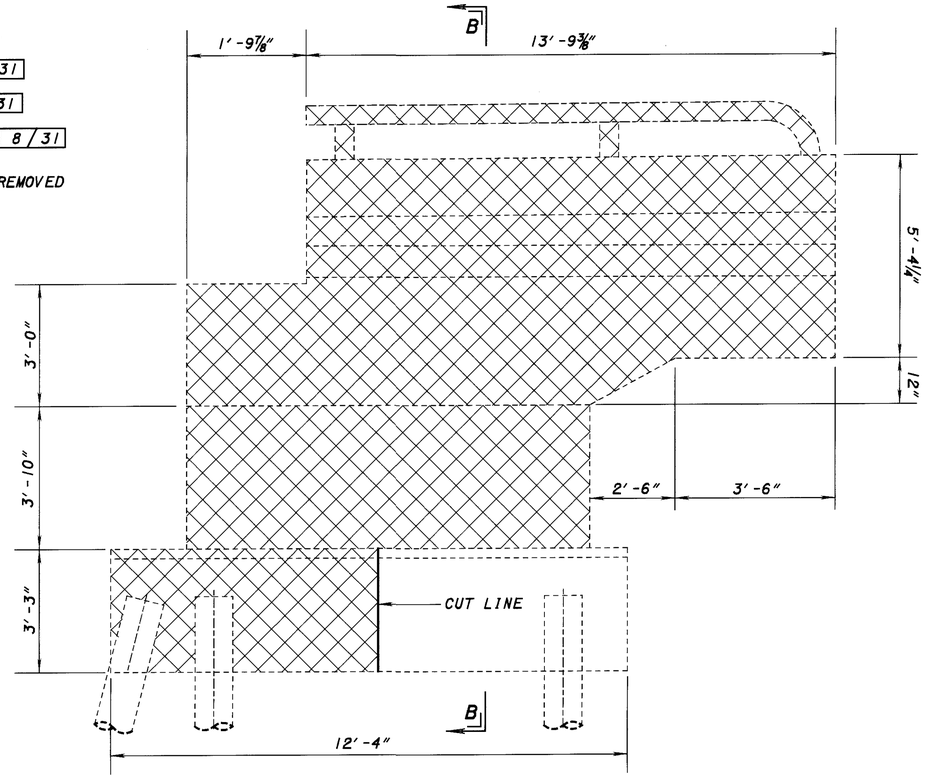

VIEW F-F

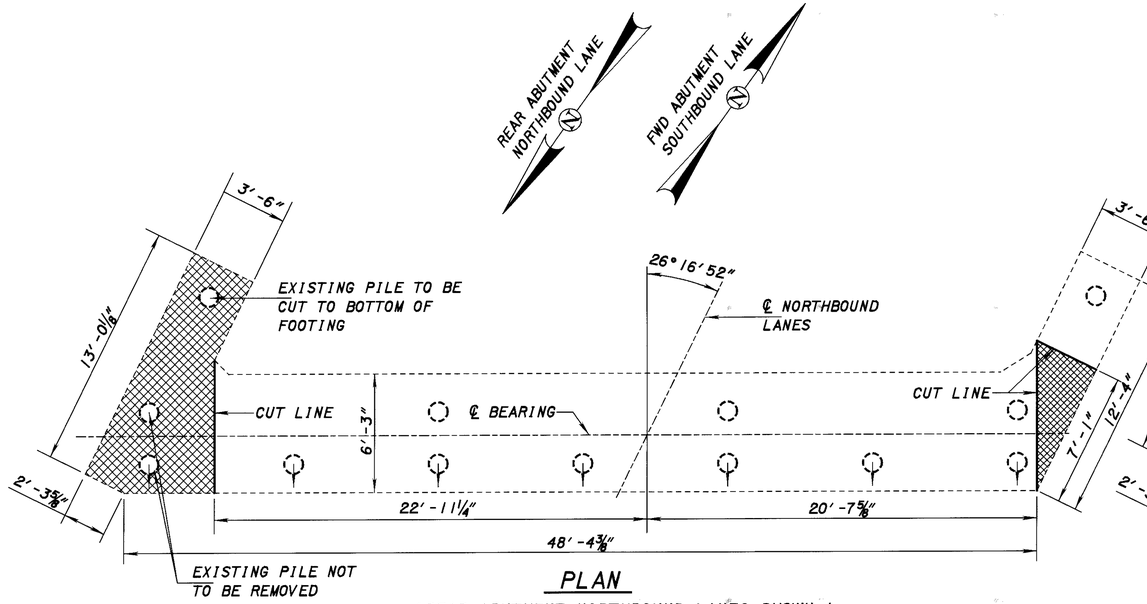

PLAN

(REAR ABUTMENT NORTHBOUND LANES SHOWN,)
(FORWARD ABUTMENT SOUTHBOUND LANES SIMILAR)

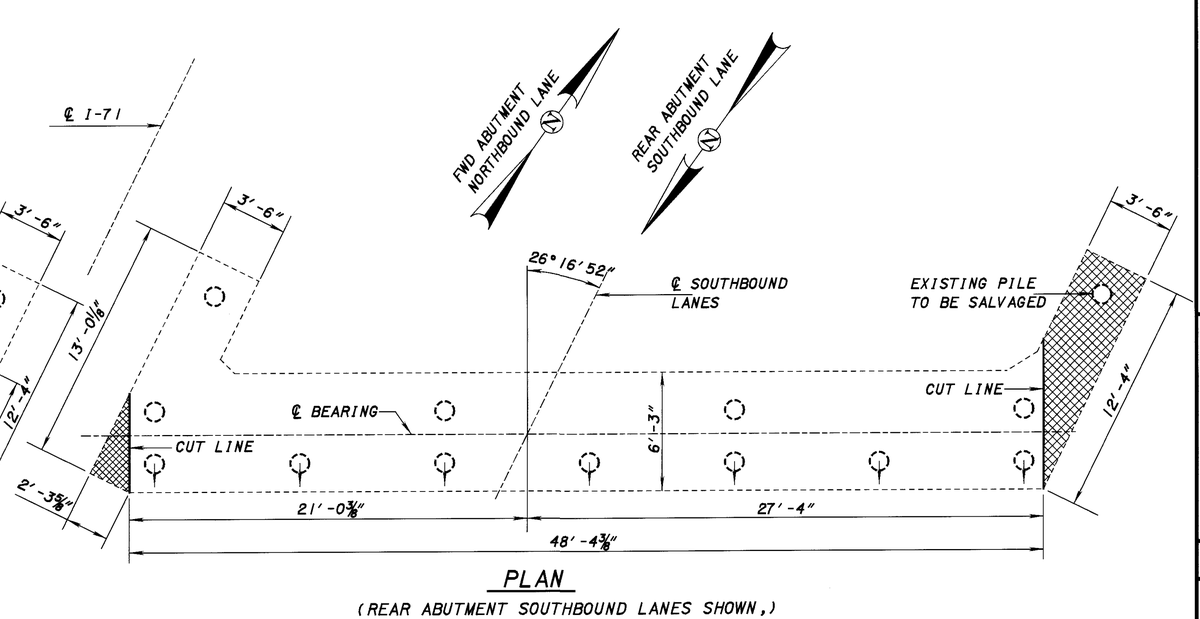

PLAN

(REAR ABUTMENT SOUTHBOUND LANES SHOWN,)
(FORWARD ABUTMENT NORTHBOUND LANES SIMILAR)

DESIGN AGENCY
ODOT CENTRAL OFFICE
OFFICE OF PRODUCTION

DESIGNED	DRAWN	REVISED	DATE
TAA	TAA	SER	8-27-99
CHECKED	REVISED	STRUCTURE FILE NUMBER	
DFT		5203937L/5203961R	

EXISTING FOOTING AND WINGWALL DETAILS

MED-71-2090 L/R
I-71 OVER S.R. 3

MED-71-15.78

9 / 31

845
940

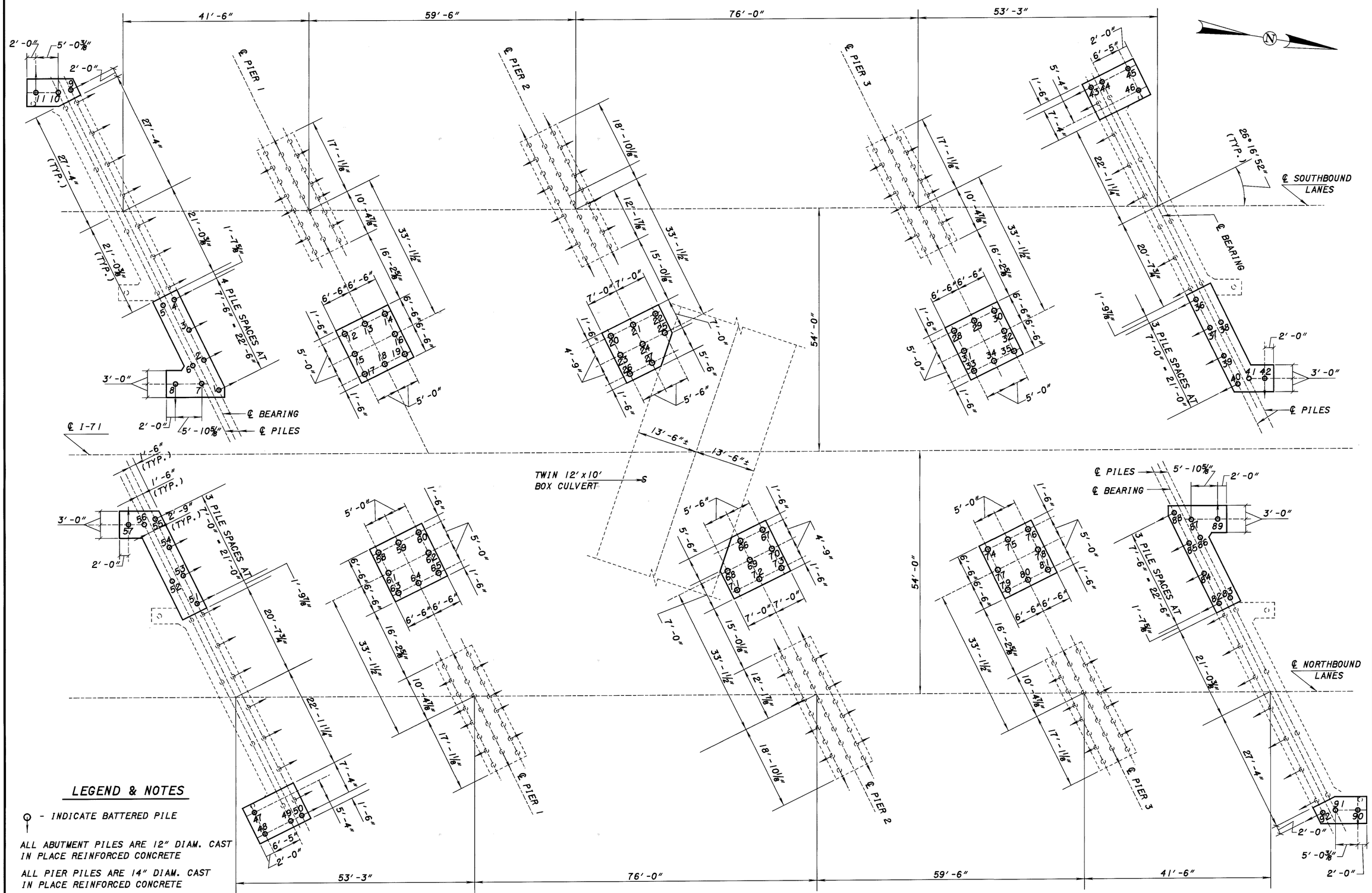

DESIGN AGENCY
ODOT CENTRAL OFFICE
OFFICE OF PRODUCTION

REVISED SER DATE 8-27-99
STRUCTURE FILE NUMBER 5203937L/5203961R

DESIGNED TAA
DRAWN TAA
CHECKED DFT
REVISED

FOUNDATION DETAILS
MED-71-2090 L/R
I-71 OVER S.R. 3

MED-71-15.78

10/31

846/940

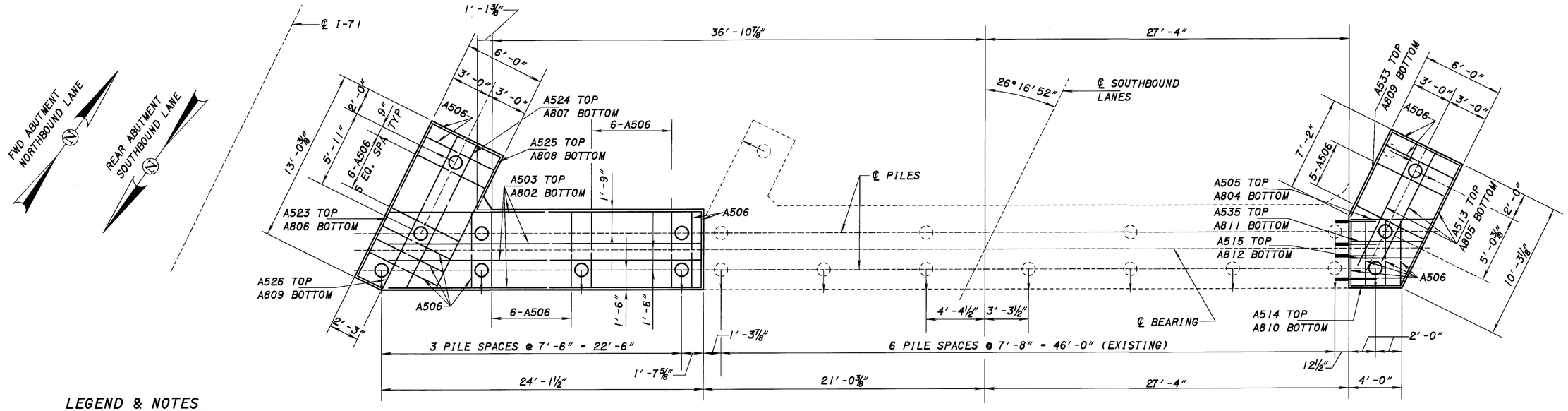

LEGEND & NOTES

⚲ - INDICATE BATTERED PILE

ALL PILES ARE 12" DIAM. CAST IN PLACE REINFORCED CONCRETE

FOOTING PLAN

(REAR ABUTMENT SOUTHBOUND LANES SHOWN,)
(FORWARD ABUTMENT NORTHBOUND LANES SIMILAR)

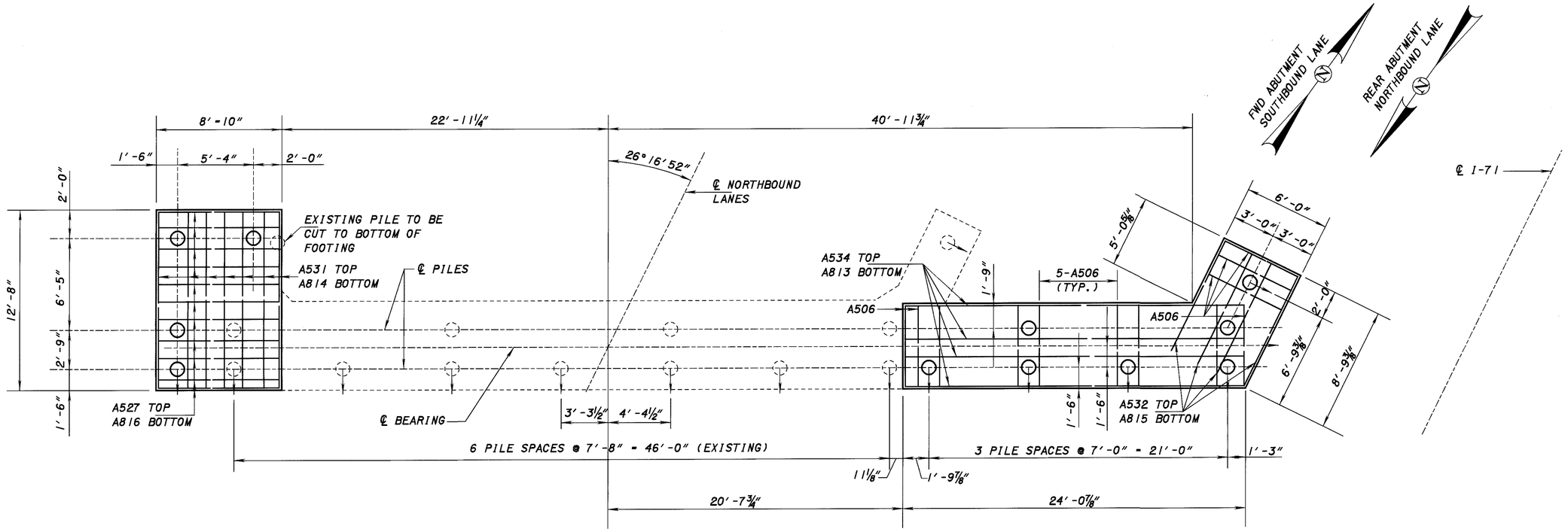

FOOTING PLAN

(REAR ABUTMENT NORTHBOUND LANES SHOWN,)
(FORWARD ABUTMENT SOUTHBOUND LANES SIMILAR)

DESIGN AGENCY: ODOT CENTRAL OFFICE, OFFICE OF PRODUCTION
REVISED | DATE | STRUCTURE FILE NUMBER: 5203937L/5203961R
DRAWN: TAA | REVISED
DESIGNED: TAA | CHECKED: DFT

FOOTING DETAILS

MED-71-2090 L/R
I-71 OVER S.R. 3

MED-71-15.78

11 / 31

847
940

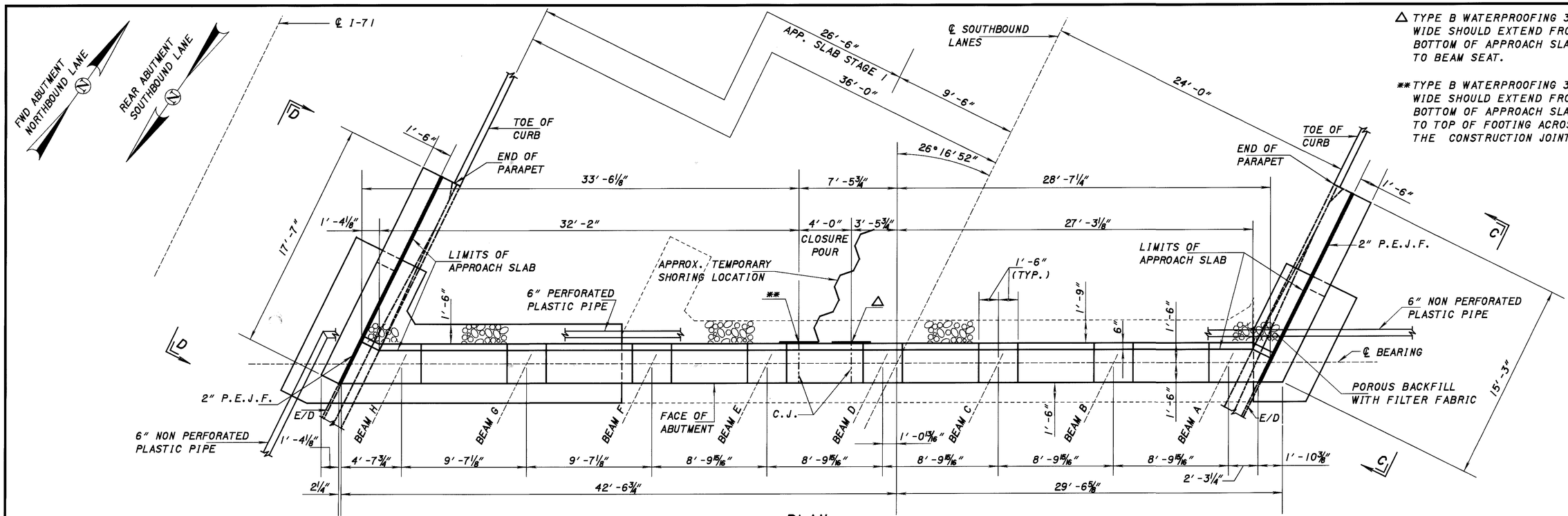

△ TYPE B WATERPROOFING 3'-0" WIDE SHOULD EXTEND FROM BOTTOM OF APPROACH SLAB TO BEAM SEAT.

** TYPE B WATERPROOFING 3'-0" WIDE SHOULD EXTEND FROM BOTTOM OF APPROACH SLAB TO TOP OF FOOTING ACROSS THE CONSTRUCTION JOINT.

PLAN

(REAR ABUTMENT SOUTHBOUND LANES SHOWN,)
(FORWARD ABUTMENT NORTHBOUND LANES SIMILAR)

LOCATION / ELEVATION	ELEVATIONS													
	A	B	C	D	E	F	G	H	I	J	K	L	M	N
SOUTHBOUND LANE REAR ABUTMENT	1063.27	1063.42	1063.57	1063.68	1063.58	1063.48	1063.37	1063.26	1068.17	1068.61	1068.57	1068.53	1068.16	1055.44
NORTHBOUND LANE FWD. ABUTMENT	1064.81	1064.91	1065.01	1065.09	1064.94	1064.80	1064.65	1064.49	1069.72	1070.04	1069.99	1069.95	1069.38	1056.93

NOTES

FOR SECTION A-A & B-B SEE SHEET 16/31

FOR VIEW C-C & D-D SEE SHEET 13/31

ELEVATIONS SHOWN ARE MEASURED ALONG THE BRIDGE LIMITS. BEAM SEAT ELEVATIONS ARE MEASURED ALONG ℄ OF BEARING.

EXISTING & PROPOSED PILES ARE NOT SHOWN IN PLAN VIEW FOR CLARITY.

LEGEND

E/D - EDGE OF DECK
C.J. - CONSTRUCTION JOINT
E.F. - EACH FACE
T.O.P. - TOE OF PARAPET
* - CLOSURE POUR IN THE BACKWALL

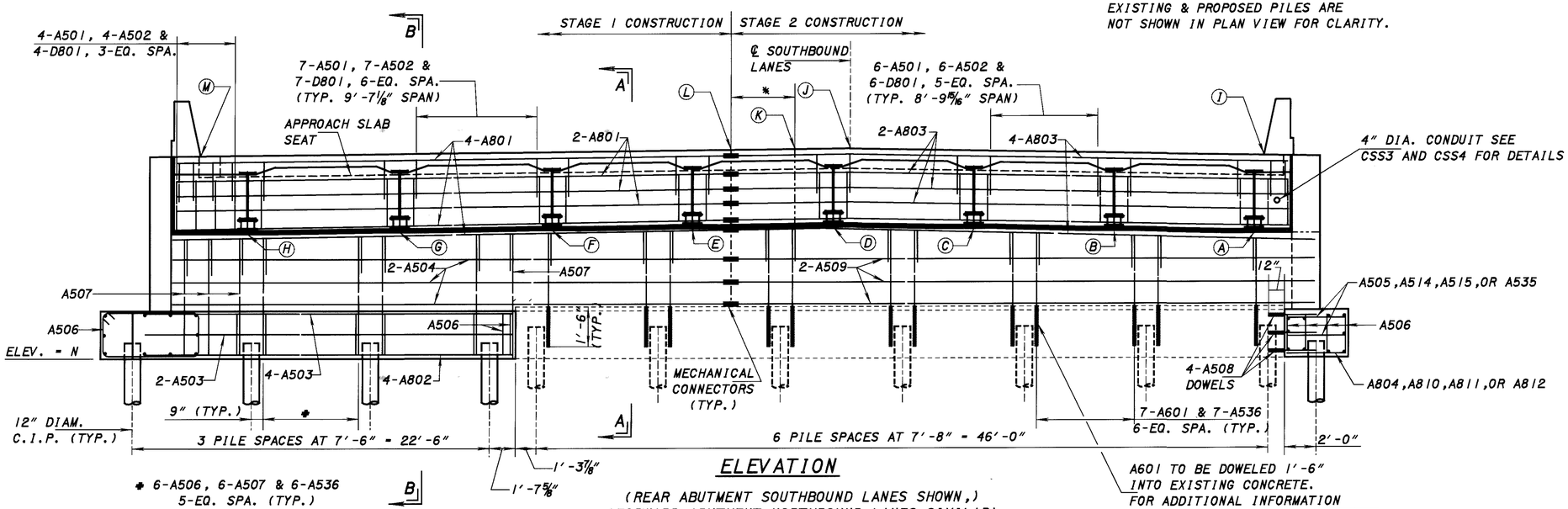

ELEVATION

(REAR ABUTMENT SOUTHBOUND LANES SHOWN,)
(FORWARD ABUTMENT NORTHBOUND LANES SIMILAR)

A601 TO BE DOWELED 1'-6" INTO EXISTING CONCRETE. FOR ADDITIONAL INFORMATION SEE GENERAL NOTES SHEET 3/31

DESIGN AGENCY: ODOT CENTRAL OFFICE OFFICE OF PRODUCTION

DESIGNED TAA | CHECKED DFT | DRAWN TAA | REVISED | REVIEWED SER | DATE 8-27-99 | STRUCTURE FILE NUMBER 5203937L/5203961R

ABUTMENT DETAILS
MED-71-2090 L/R
I-71 OVER S.R. 3

MED-71-15.78

12/31

848/940

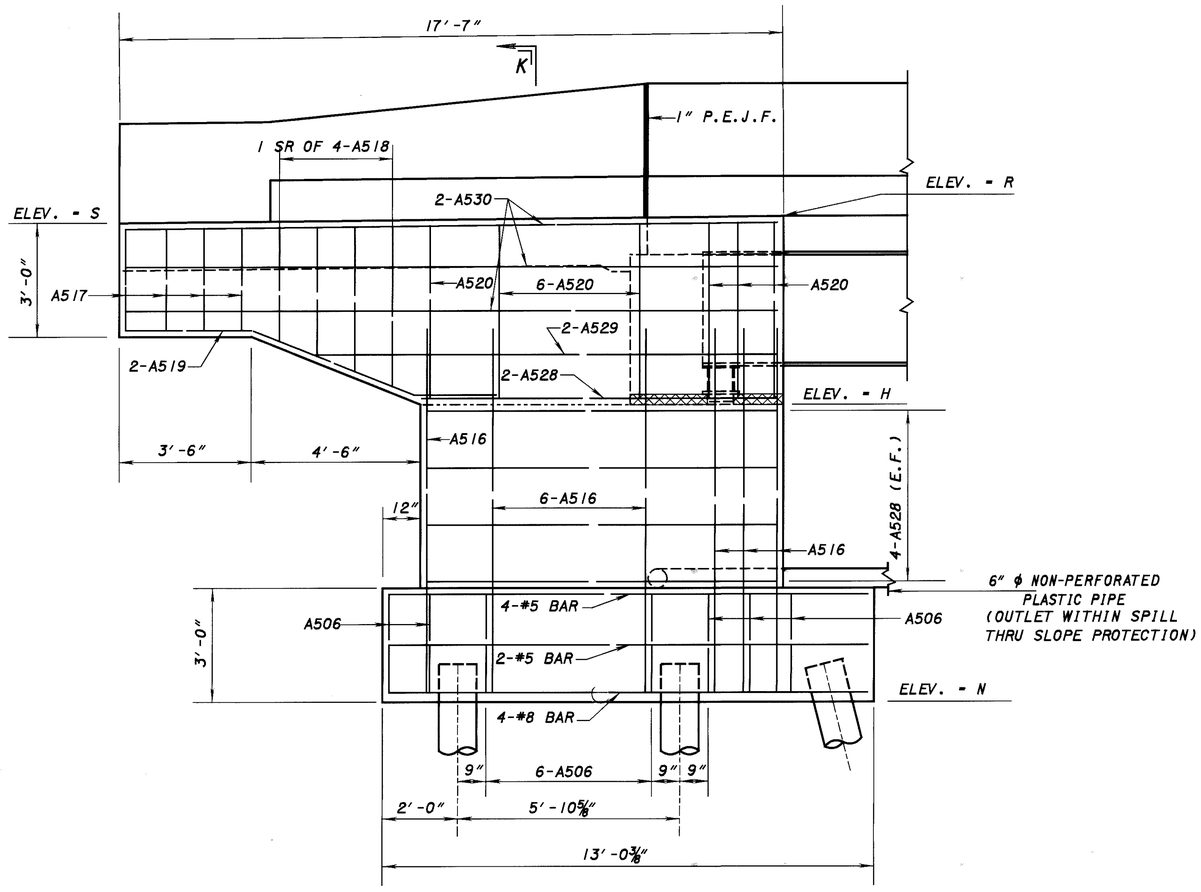

VIEW D-D

(REAR ABUTMENT SOUTHBOUND LANES SHOWN,)
(FORWARD ABUTMENT NORTHBOUND LANES SIMILAR)

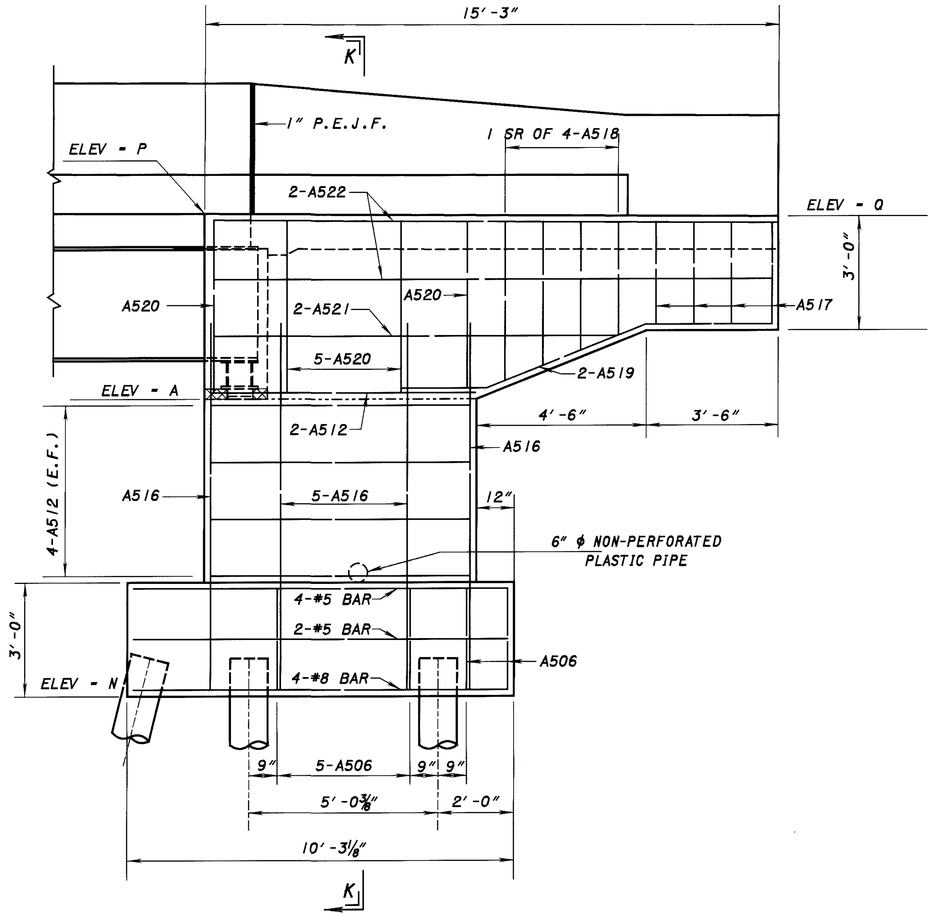

VIEW C-C

(REAR ABUTMENT SOUTHBOUND LANES SHOWN,)
(FORWARD ABUTMENT NORTHBOUND LANES SIMILAR)

LOCATION / ELEVATION	ELEVATIONS			
	N	H	R	S
SOUTHBOUND LANE REAR ABUTMENT	1055.44	1063.26	1068.17	1068.07
NORTHBOUND LANE FWD. ABUTMENT	1056.93	1064.49	1069.33	1069.42

LOCATION / ELEVATION	ELEVATIONS			
	A	N	P	Q
SOUTHBOUND LANE REAR ABUTMENT	1063.27	1055.44	1068.17	1068.08
NORTHBOUND LANE FWD. ABUTMENT	1064.81	1056.93	1069.68	1069.76

NOTES

FOR SECTIONS K-K SEE SHEET 16/31

ALL PILES ARE 12″ DIAM. CAST IN PLACE CONCRETE

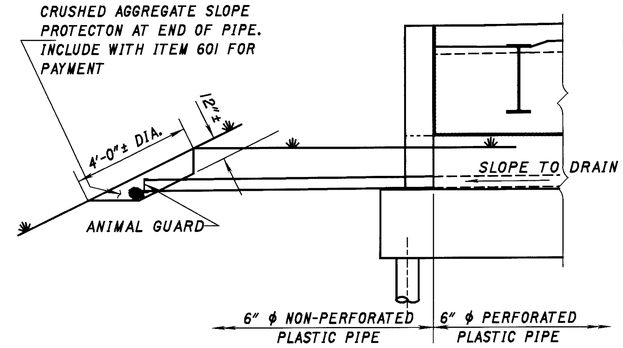

PIPE OUTLET DETAIL
(AT VIEW C-C)

DESIGN AGENCY: ODOT CENTRAL OFFICE OFFICE OF PRODUCTION

DESIGNED	DRAWN	REVIEWED	DATE
TAA	TAA	SER	8-27-99
CHECKED	REVISED	STRUCTURE FILE NUMBER	
DFT		5203937L/5203961R	

WINGWALL DETAILS
MED-71-2090 L/R
I-71 OVER S.R. 3

MED-71-15.78

13/31

849
940

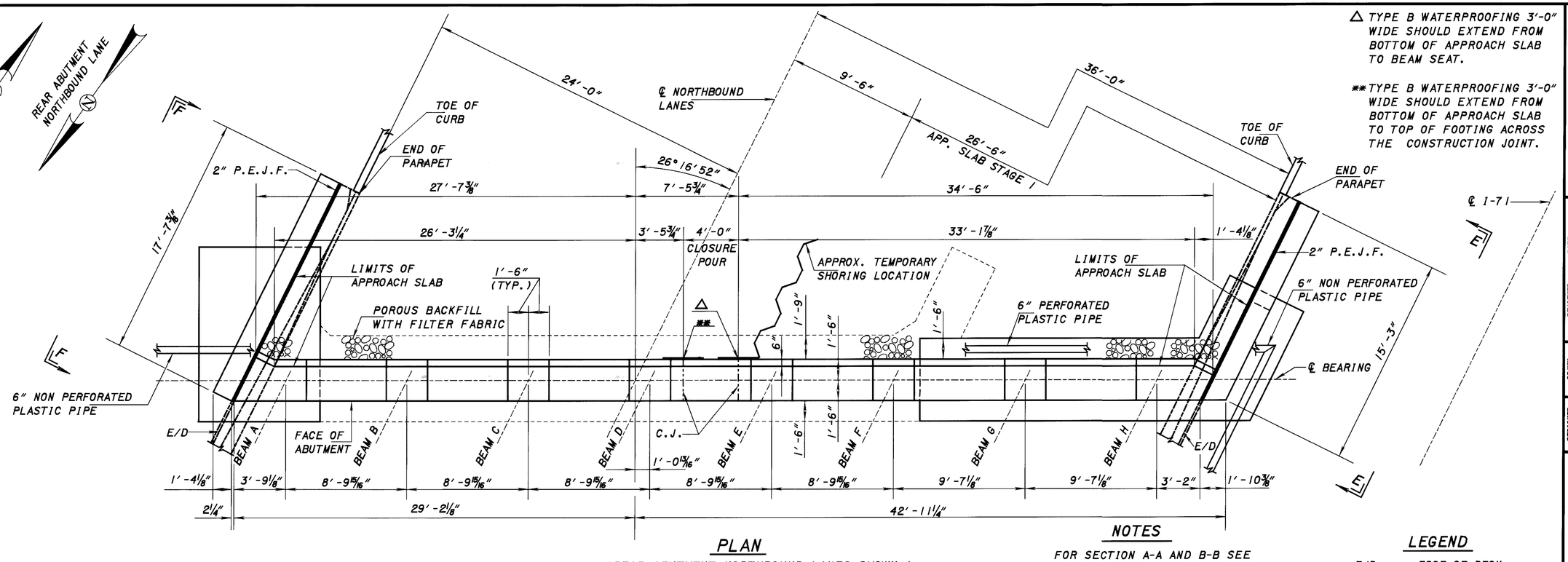

△ TYPE B WATERPROOFING 3'-0" WIDE SHOULD EXTEND FROM BOTTOM OF APPROACH SLAB TO BEAM SEAT.

** TYPE B WATERPROOFING 3'-0" WIDE SHOULD EXTEND FROM BOTTOM OF APPROACH SLAB TO TOP OF FOOTING ACROSS THE CONSTRUCTION JOINT.

PLAN

(REAR ABUTMENT NORTHBOUND LANES SHOWN,)
(FORWARD ABUTMENT SOUTHBOUND LANES SIMILAR)

LOCATION / ELEVATION	ELEVATIONS													
	A	B	C	D	E	F	G	H	I	J	K	L	M	N
NORTHBOUND LANE REAR ABUTMENT	1063.55	1063.65	1063.75	1063.82	1063.68	1063.53	1063.37	1063.22	1068.46	1068.76	1068.72	1068.67	1068.09	1055.68
SOUTHBOUND LANE FWD. ABUTMENT	1064.56	1064.71	1064.85	1064.96	1064.86	1064.76	1064.65	1064.53	1069.47	1069.91	1069.87	1069.82	1069.44	1056.69

NOTES

FOR SECTION A-A AND B-B SEE SHEET 16/31

FOR VIEW E-E & F-F SEE SHEET 15/31

ELEVATIONS SHOWN ARE MEASURED ALONG THE BRIDGE LIMITS. BEAM SEAT ELEVATIONS ARE MEASURED ALONG ℄ OF BEARING.

EXISTING & PROPOSED PILES ARE NOT SHOWN IN PLAN VIEW FOR CLARITY.

LEGEND

E/D	- EDGE OF DECK
C.J.	- CONSTRUCTION JOINT
E.F.	- EACH FACE
T.O.P.	- TOE OF PARAPET
*	- CLOSURE POUR IN THE BACKWALL

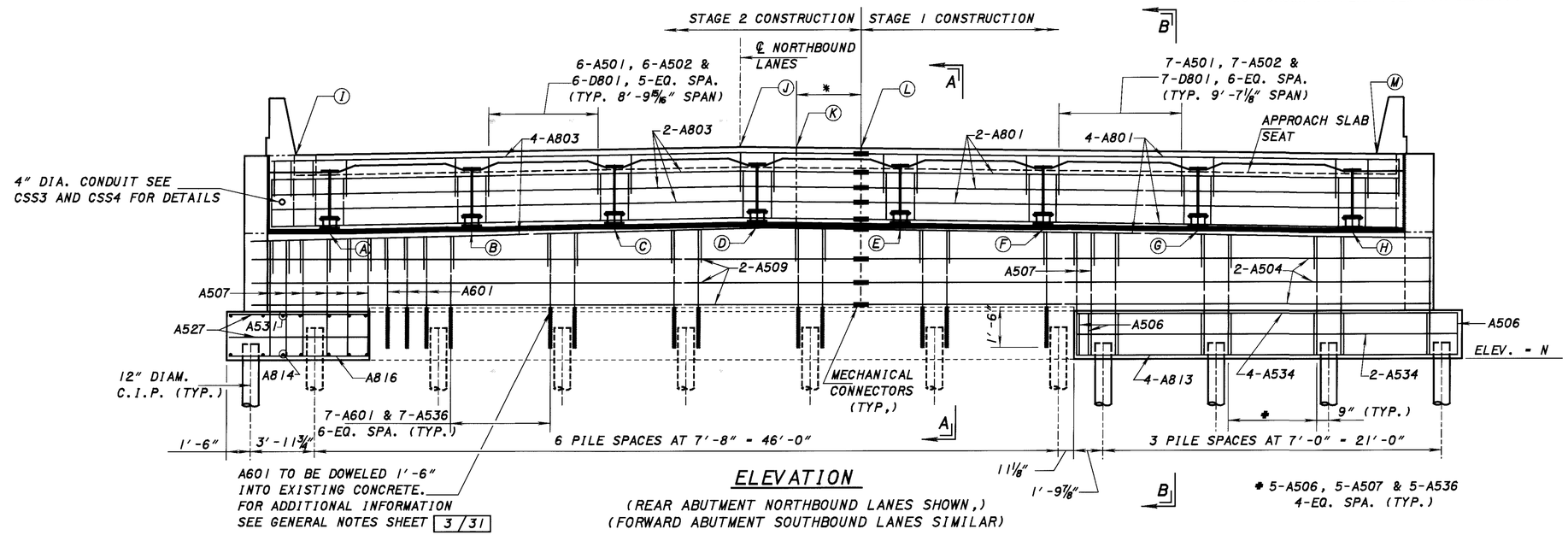

ELEVATION

(REAR ABUTMENT NORTHBOUND LANES SHOWN,)
(FORWARD ABUTMENT SOUTHBOUND LANES SIMILAR)

* 5-A506, 5-A507 & 5-A536 4-EQ. SPA. (TYP.)

ODOT CENTRAL OFFICE
OFFICE OF PRODUCTION

DESIGN AGENCY

REVISED	DATE	STRUCTURE FILE NUMBER
SER	8-27-99	5203937L/5203961R

DRAWN	REVISED
TAA	

DESIGNED	CHECKED
TAA	DFT

ABUTMENT DETAILS
MED-71-2090 L/R
I-71 OVER S.R. 3

MED-71-15.78

14/31

850/940

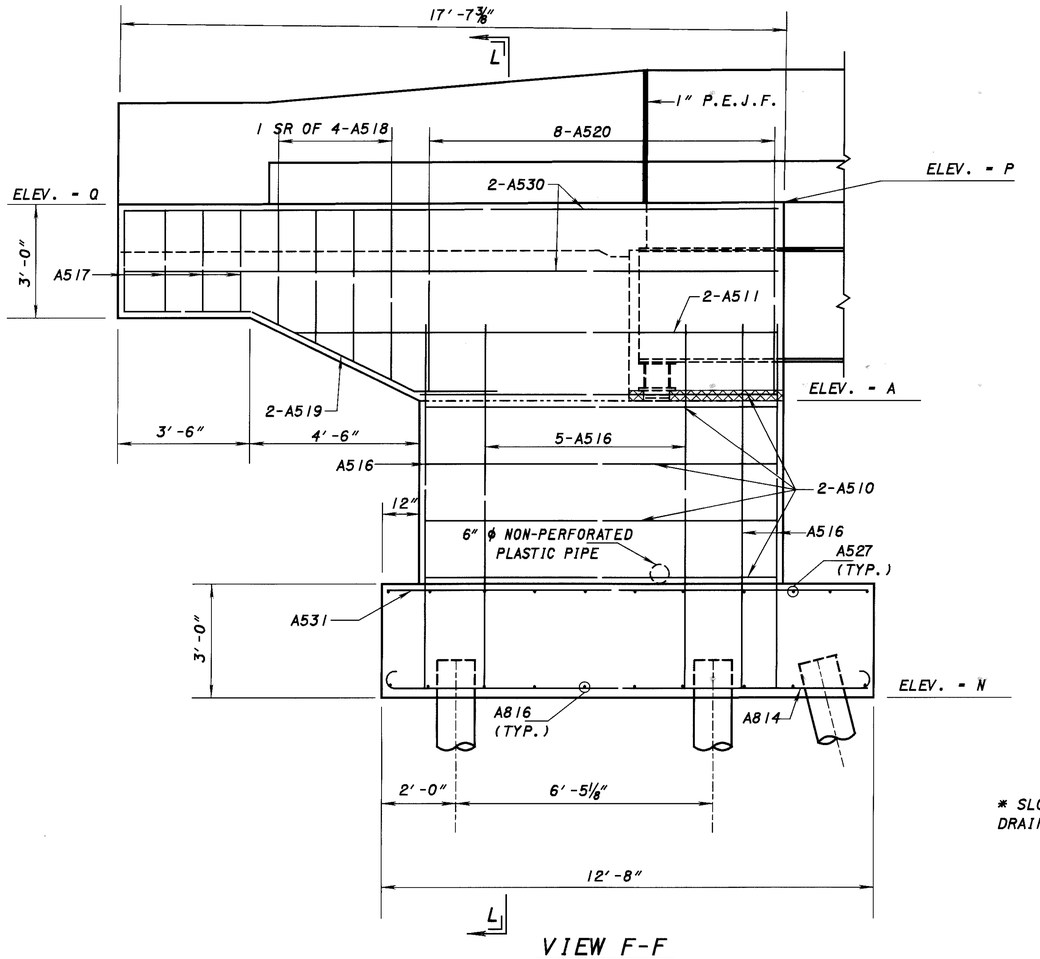

VIEW F-F

(REAR ABUTMENT NORTHBOUND LANES SHOWN,)
(FORWARD ABUTMENT SOUTHBOUND LANES SIMILAR)
(FOOTING ORIENTED PERPENDICULAR TO ℄ BEARING)

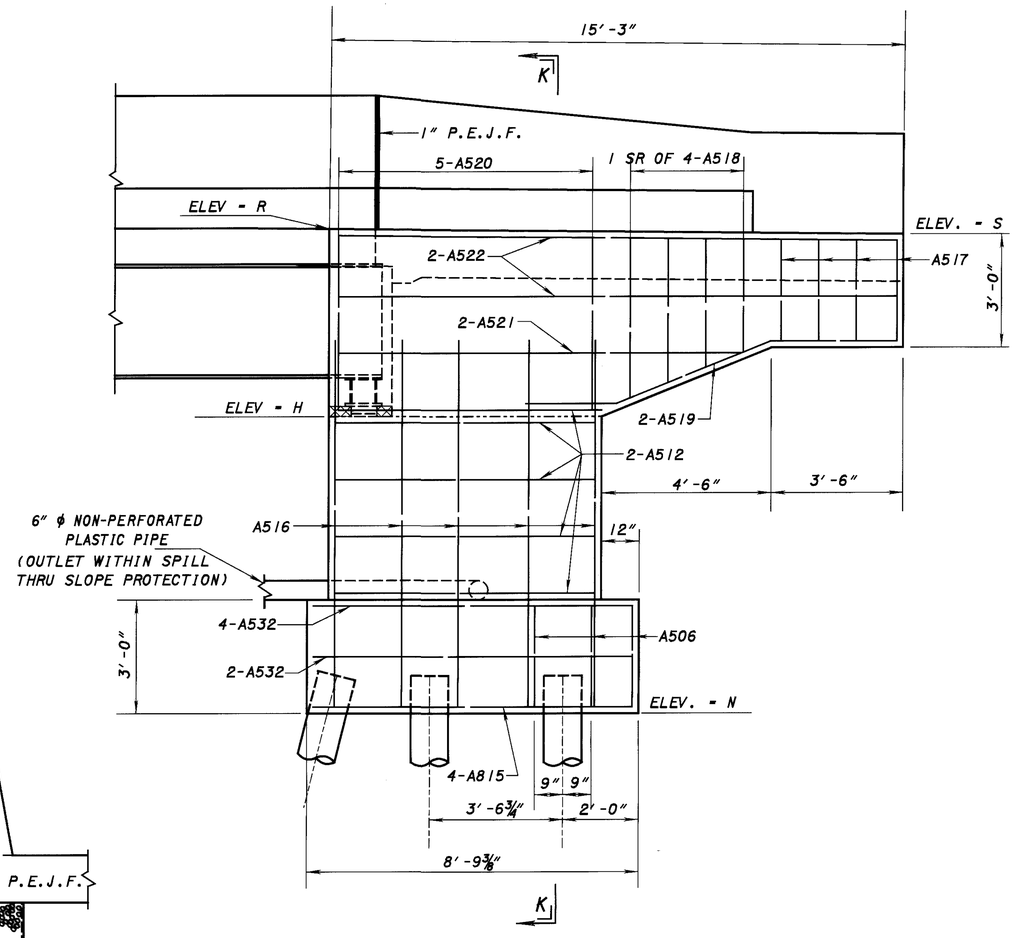

VIEW E-E

(REAR ABUTMENT NORTHBOUND LANES SHOWN,)
(FORWARD ABUTMENT SOUTHBOUND LANES SIMILAR)

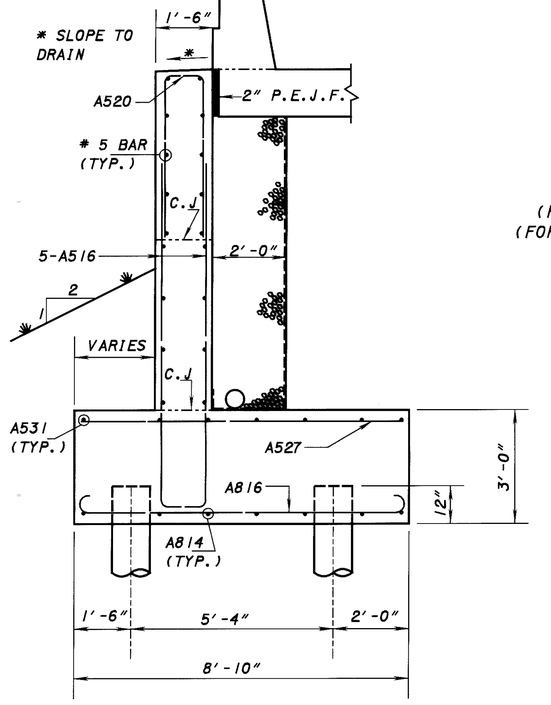

SECTION L-L

LOCATION / ELEVATION	ELEVATIONS			
	N	H	R	S
NORTHBOUND LANE REAR ABUTMENT	1055.68	1063.22	1068.08	1067.99
SOUTHBOUND LANE FWD. ABUTMENT	1056.69	1064.53	1069.40	1069.47

LOCATION / ELEVATION	ELEVATIONS			
	A	N	P	Q
NORTHBOUND LANE REAR ABUTMENT	1063.55	1055.68	1068.46	1068.36
SOUTHBOUND LANE FWD. ABUTMENT	1064.56	1056.69	1069.41	1069.51

NOTES

FOR SECTIONS K-K SEE SHEET 16/31

ALL PILES ARE 12″ DIAM. CAST IN PLACE CONCRETE

FOR ADDITIONAL INFORMATION NOT SHOWN IN SECTION L-L SEE SECTION K-K SHEET 16/31

DESIGN AGENCY
ODOT CENTRAL OFFICE
OFFICE OF PRODUCTION

REVISED SER DATE 8-27-99
STRUCTURE FILE NUMBER 5203937L/5203961R

DRAWN TAA
REVISED

DESIGNED TAA
CHECKED DFT

WINGWALL DETAILS
MED-71-2090 L/R
I-71 OVER S.R. 3

MED-71-15.78

15/31

851
940

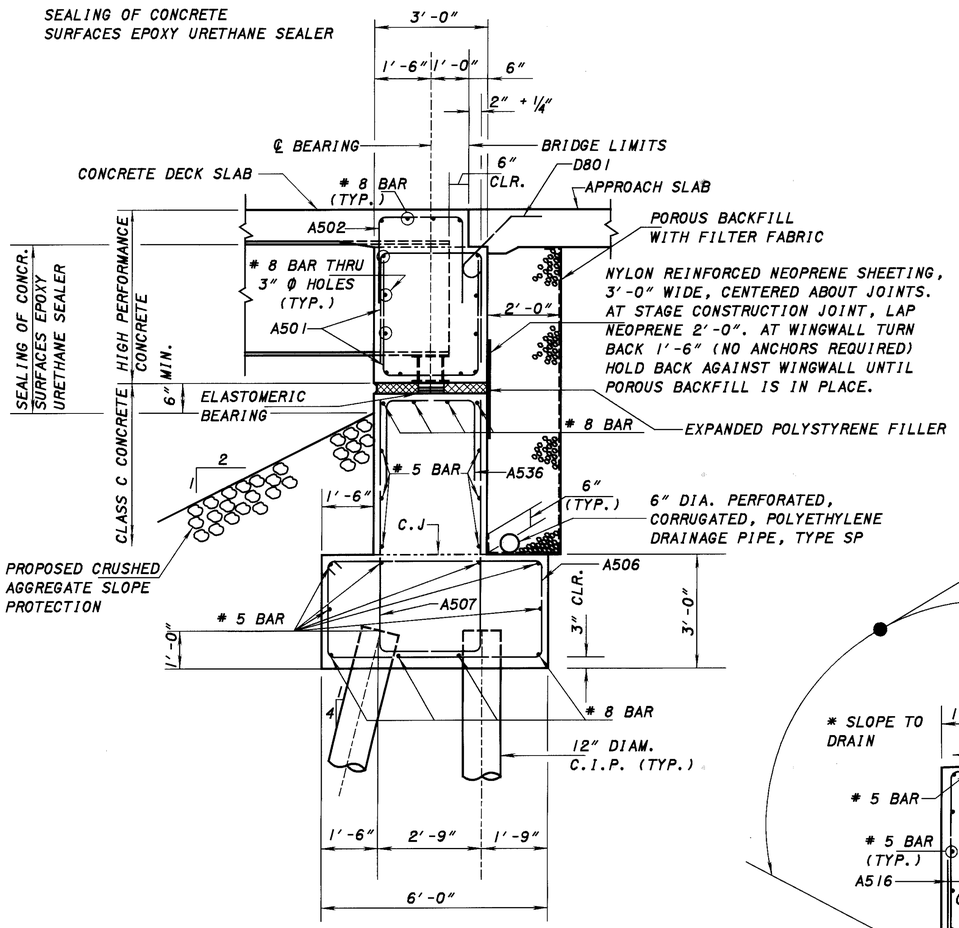

SECTION B-B

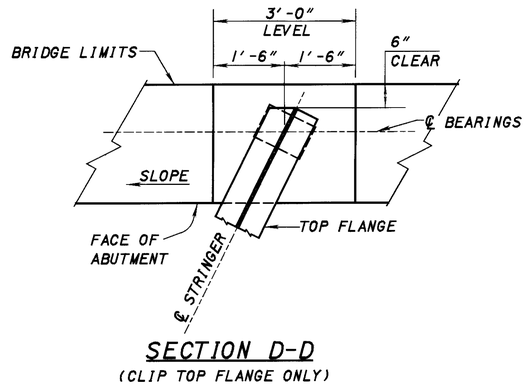

SECTION D-D
(CLIP TOP FLANGE ONLY)

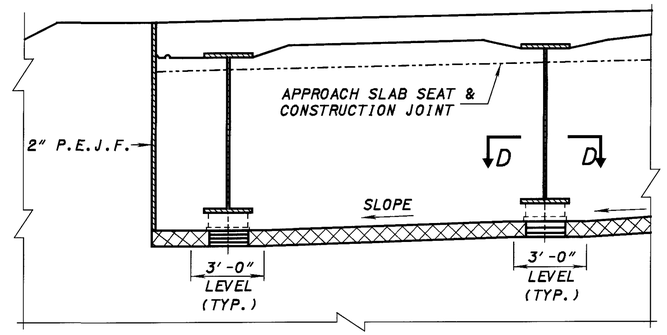

PART ELEVATION OF BEAM SEAT

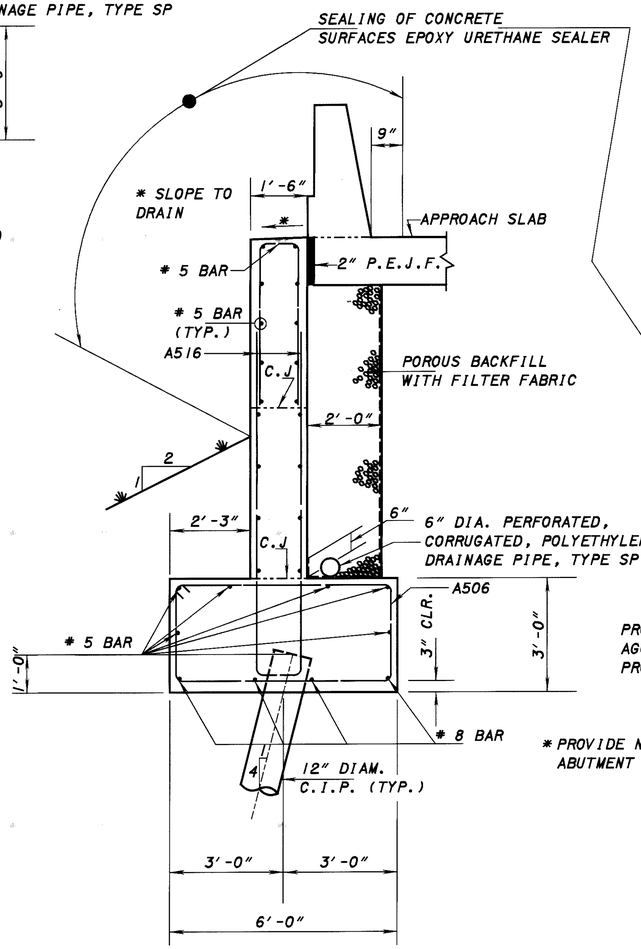

SECTION K-K

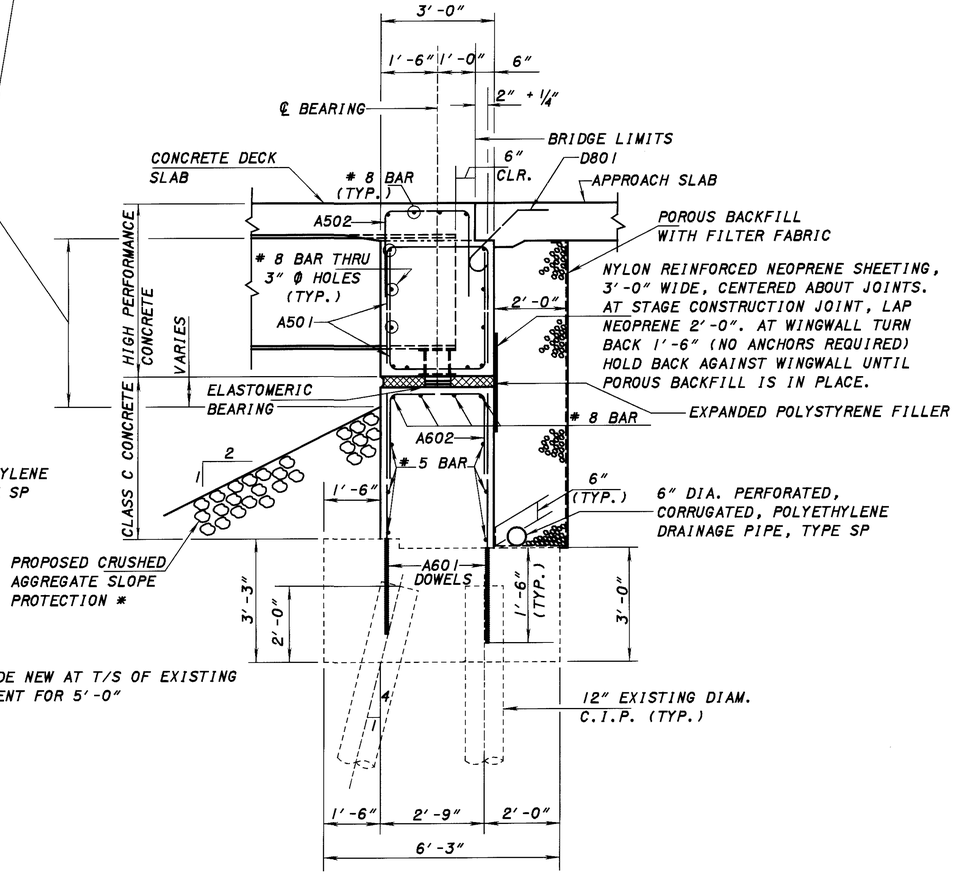

SECTION A-A

* PROVIDE NEW AT T/S OF EXISTING ABUTMENT FOR 5'-0"

NOTES

POROUS BACKFILL:
POROUS BACKFILL WITH FILTER FABRIC, 2'-0" THICK SHALL EXTEND UP TO THE PLANE OF THE SUBGRADE, TO 12" BELOW THE EMBANKMENT SURFACE, AND LATERALLY TO THE FACE OF THE WINGWALLS.

DIAPHRAGM CONCRETE ENCASING THE STEEL BEAMS SUPPORTED IN THE SEMI INTEGRAL ABUTMENT SHALL BE PLACED AT LEAST 48 HOURS BEFORE THE ACTUAL DECK CONCRETE IS PLACED.

PROVIDE 3" Ø HOLE THRU WEB AS NOTED, PAYMENT TO BE INCLUDED AS INCIDENTAL WITH ITEM 863 STRUCTURAL STEEL. PAYMENT FOR THE EXPANDED POLYSTYRENE FILLER TO BE INCLUDED WITH ITEM 844 HIGH PERFORMANCE CONCRETE AS INCIDENTAL.

DESIGN AGENCY: ODOT CENTRAL OFFICE OFFICE OF PRODUCTION

DESIGNED	DRAWN	REVISED	DATE	REVISED
TAA	TAA		8-27-99	SER

STRUCTURE FILE NUMBER: 5203937L/5203961R

CHECKED: DFT

MISCELLANEOUS DETAILS

MED-71-2090 L/R
I-71 OVER S.R. 3

MED-71-15.78

16 / 31

852
940

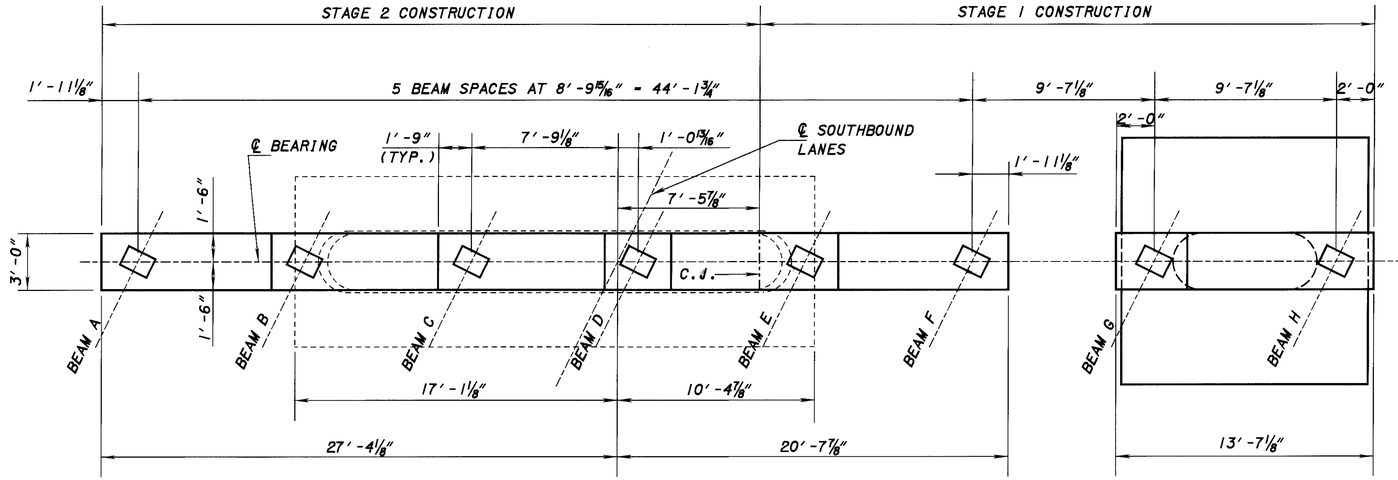

PLAN

PIER 1 AND PIER 3 SOUTHBOUND LANES

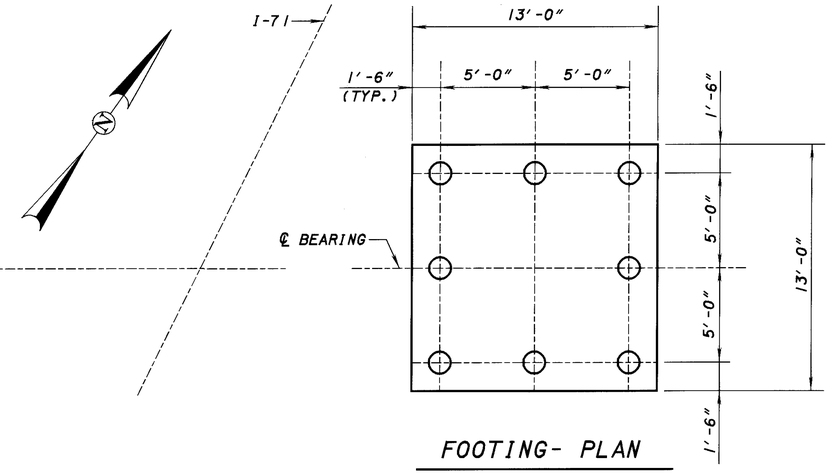

FOOTING- PLAN

LOCATION / ELEVATION	ELEVATIONS								
	A	B	C	D	E	F	G	H	I
SOUTHBOUND LANE PIER 1	1064.27	1064.41	1064.56	1064.68	1064.57	1064.47	1064.36	1064.25	1038.15
SOUTHBOUND LANE PIER 3	1065.02	1065.16	1065.31	1065.42	1065.32	1065.22	1065.10	1064.99	1035.87

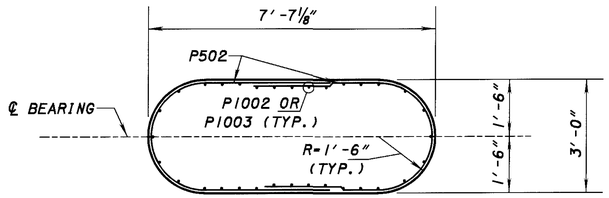

PLAN

(32 #10 BARS EQUALLY SPACED)

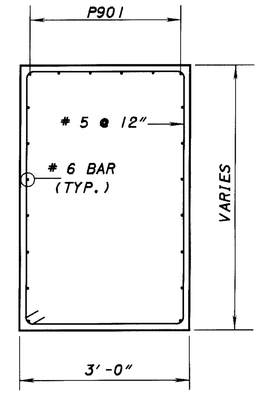

SECTION C-C

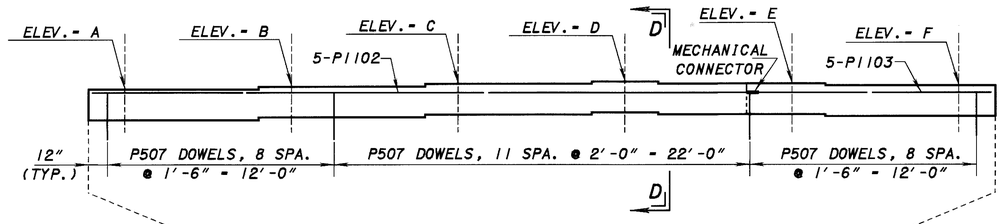

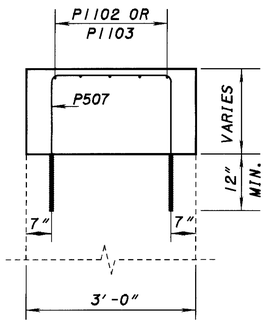

SECTION D-D

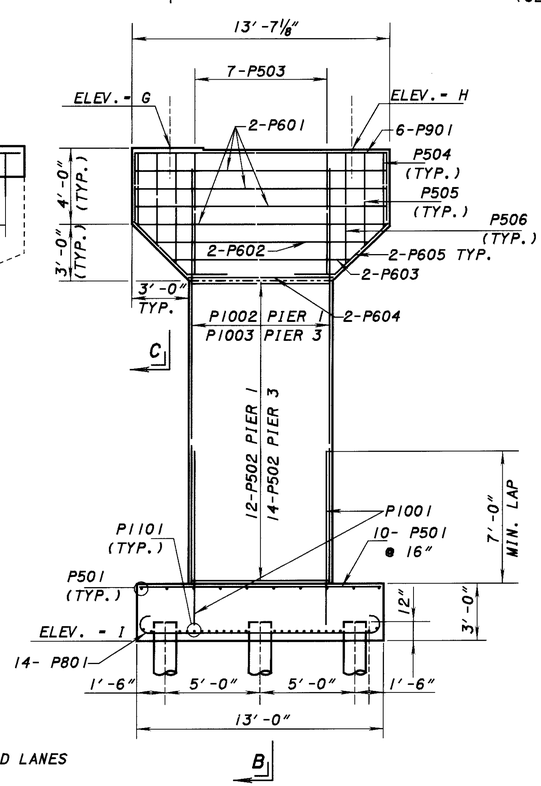

ELEVATION

PIER 1 AND PIER 3 SOUTHBOUND LANES

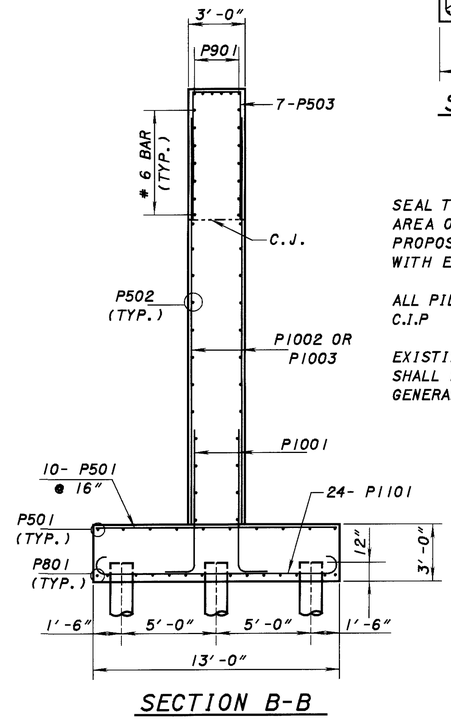

SECTION B-B

NOTES

SEAL THE ENTIRE SURFACE AREA OF THE EXISTING AND PROPOSED PIER ABOVE GROUND WITH EPOXY URETHANE SEALER

ALL PILES ARE 14" DIAMETER C.I.P

EXISTING PIER BRIDGE SEATS SHALL BE SCARIFIED ¼", SEE GENERAL NOTES.

DESIGN AGENCY: ODOT CENTRAL OFFICE, OFFICE OF PRODUCTION
REVISED: SER — DATE: 8-27-99 — STRUCTURE FILE NUMBER: 5203937L/520396IR
DRAWN: TAA — REVISED:
DESIGNED: TAA — CHECKED: DFT

PIER DETAILS
MED-71-2090 L/R
I-71 OVER S.R. 3

MED-71-15.78

17 / 31

853
940

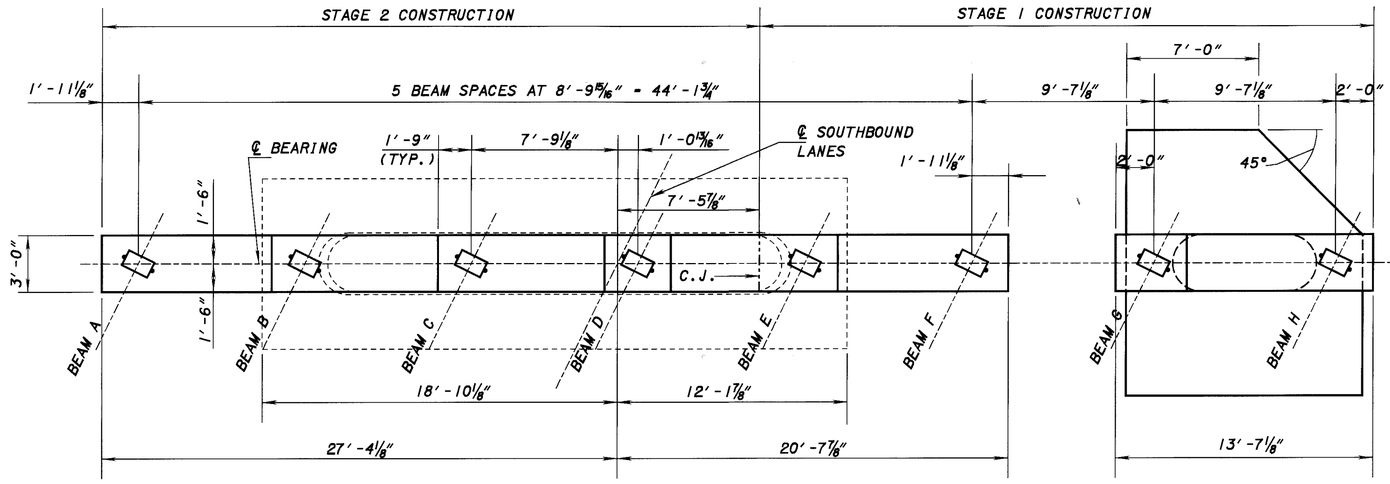

PLAN

PIER 2 SOUTHBOUND LANES

LOCATION / ELEVATION	ELEVATIONS								
	A	B	C	D	E	F	G	H	I
SOUTHBOUND LANE PIER 2	1064.52	1064.67	1064.81	1064.93	1064.83	1064.73	1064.61	1064.50	1042.16

NOTES

REINFORCING STEEL IN THE VICINITY OF THE BRIDGE SEAT SHALL BE ACCURATELY PLACED TO AVOID INTERFERENCE WITH THE DRILLING OF BEARING ANCHOR HOLES OR THE PRESETTING OF BEARING ANCHORS.

AT THE OPTION OF THE CONTRACTOR, BEARING ANCHORS, LOCATED AND SUPPORTED BY TEMPLATES, MAY BE CAST IN PLACE.

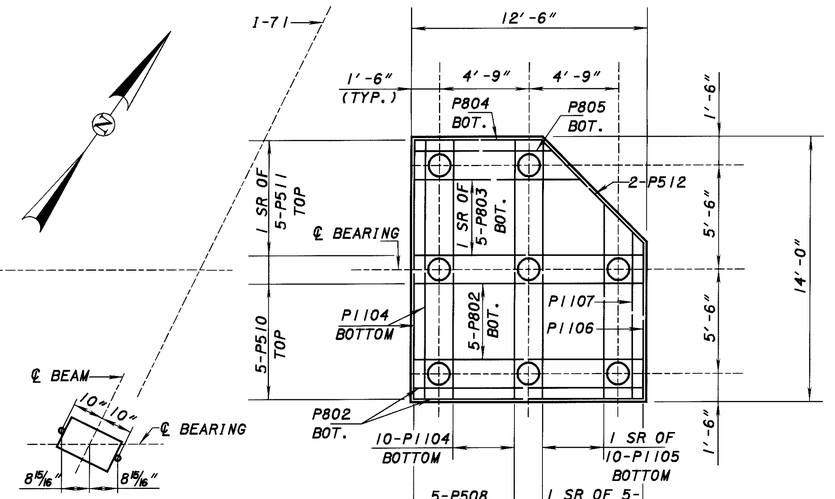

FOOTING- PLAN

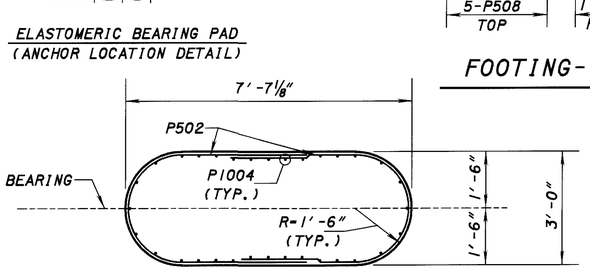

ELASTOMERIC BEARING PAD (ANCHOR LOCATION DETAIL)

PLAN

(32 #10 BARS EQUALLY SPACED)

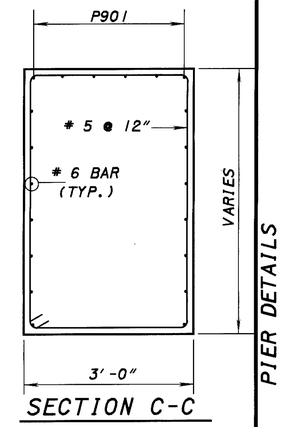

SECTION C-C

NOTES

SEAL THE ENTIRE SURFACE AREA OF THE EXISTING AND PROPOSED PIER ABOVE GROUND WITH EPOXY URETHANE SEALER

ALL PILES ARE 14" DIAMETER C.I.P

EXISTING PIER BRIDGE SEATS SHALL BE SCARIFIED ¼", SEE GENERAL NOTES.

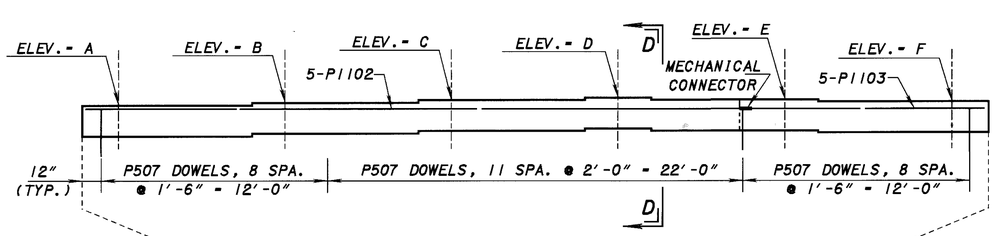

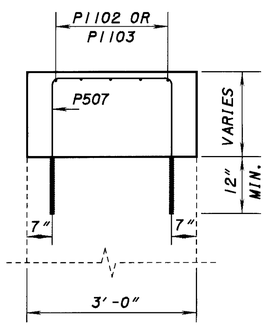

SECTION D-D

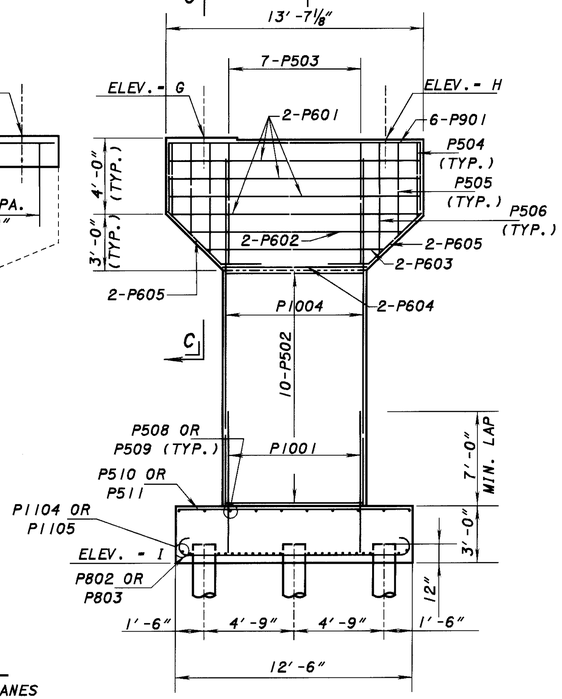

ELEVATION

PIER 2 SOUTHBOUND LANES

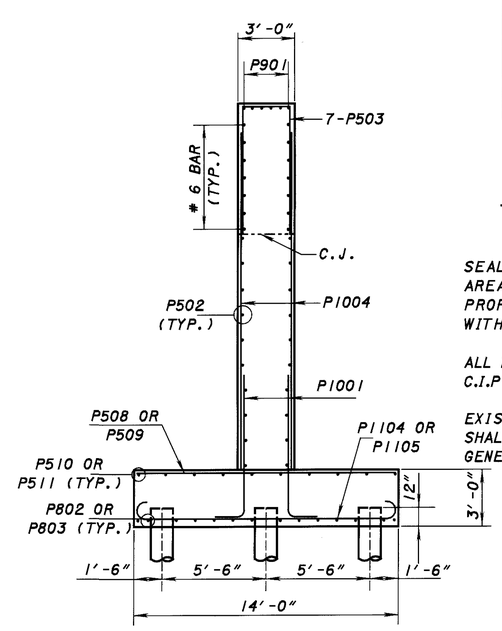

SECTION B-B

DESIGN AGENCY: ODOT CENTRAL OFFICE, OFFICE OF PRODUCTION

DESIGNED	DRAWN	REVIEWED	DATE
TAA	TAA	SER	8-27-99
CHECKED	REVISED	STRUCTURE FILE NUMBER	
DFT		5203937L/5203961R	

PIER DETAILS
MED-71-2090 L/R
I-71 OVER S.R. 3

MED-71-15.78

18/31

854/940

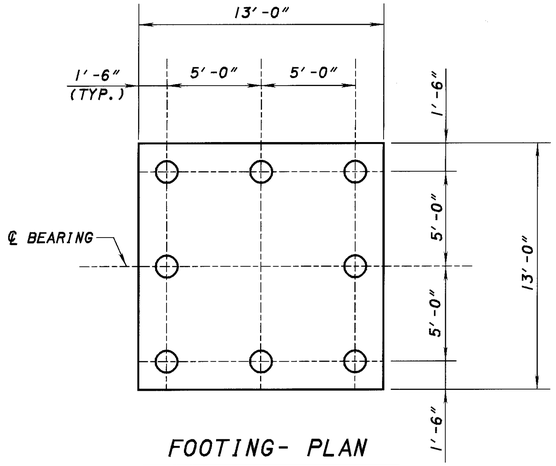

FOOTING- PLAN

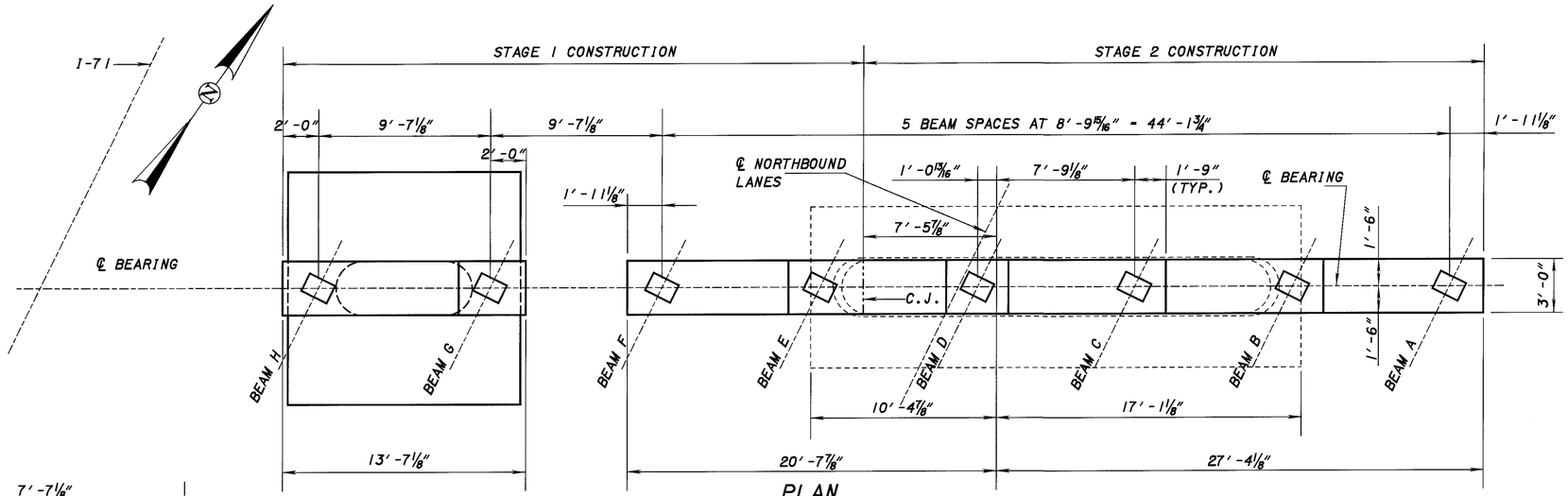

PLAN

PIER 1 AND PIER 3 NORTHBOUND LANES

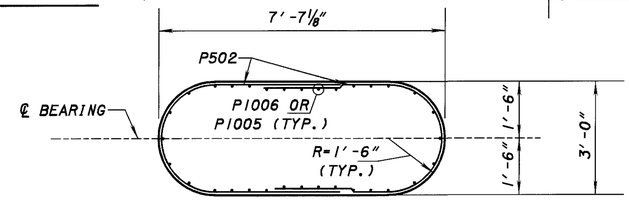

PLAN

(32 #10 BARS EQUALLY SPACED)

LOCATION / ELEVATION	ELEVATIONS								
	A	B	C	D	E	F	G	H	I
NORTHBOUND LANE PIER 1	1064.61	1064.71	1064.81	1064.88	1064.73	1064.59	1064.43	1064.28	1035.45
NORTHBOUND LANE PIER 3	1065.33	1065.44	1065.54	1065.61	1065.47	1065.32	1065.17	1065.01	1040.21

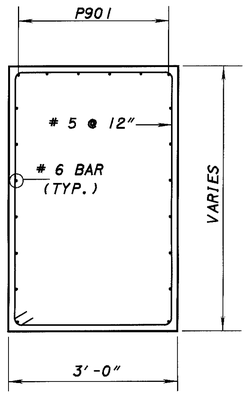

SECTION C-C

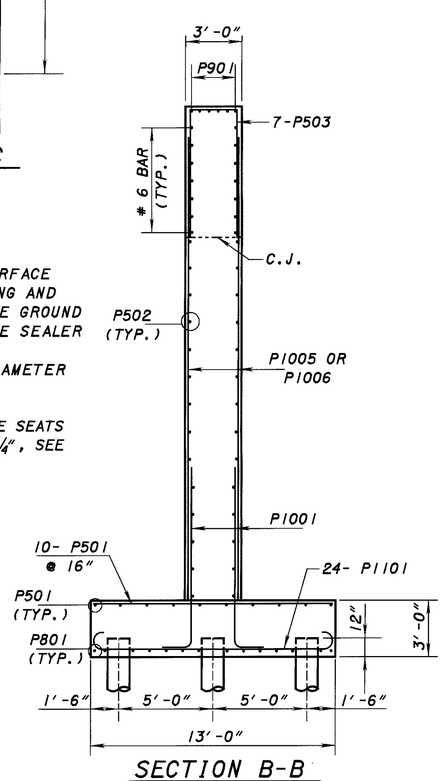

SECTION B-B

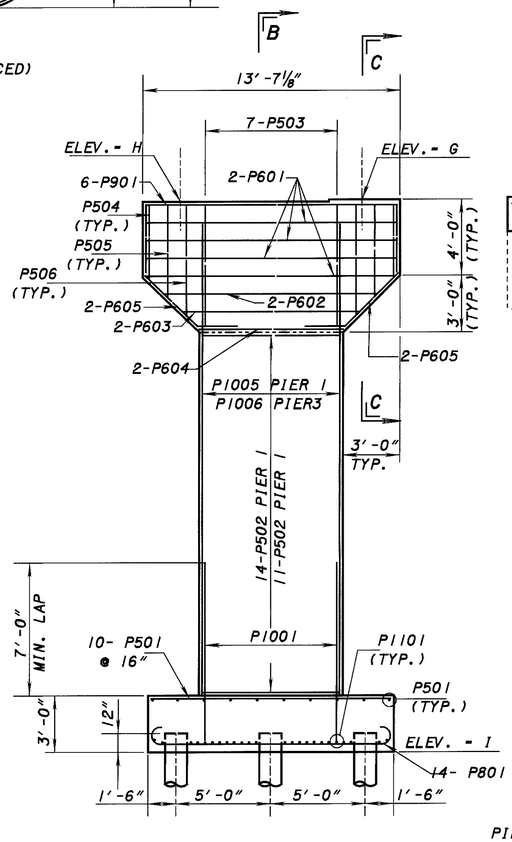

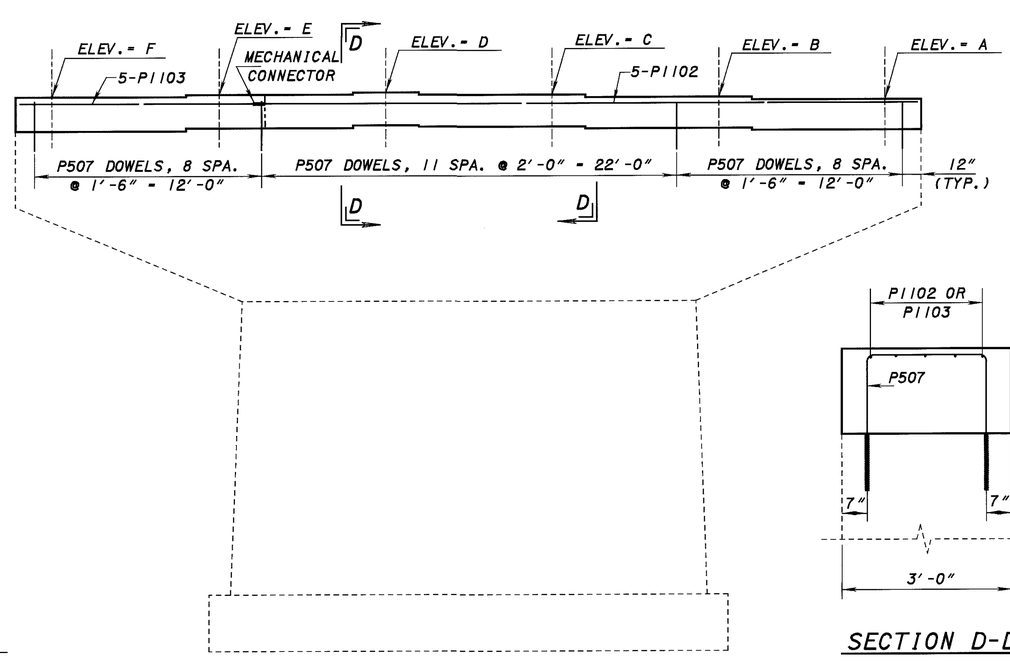

ELEVATION

PIER 1 AND PIER 3 NORTHBOUND LANES

SECTION D-D

NOTES

SEAL THE ENTIRE SURFACE AREA OF THE EXISTING AND PROPOSED PIER ABOVE GROUND WITH EPOXY URETHANE SEALER

ALL PILES ARE 14" DIAMETER C.I.P

EXISTING PIER BRIDGE SEATS SHALL BE SCARIFIED ¼", SEE GENERAL NOTES.

DESIGN AGENCY: ODOT CENTRAL OFFICE OFFICE OF PRODUCTION

REVIEWED SER | DATE 8-27-99 | STRUCTURE FILE NUMBER 5203937L/5203961R

DRAWN TAA | REVISED

DESIGNED TAA | CHECKED DFT

PIER DETAILS

MED-71-2090 L/R
I-71 OVER S.R. 3

MED-71-15.78

19/31

855/940

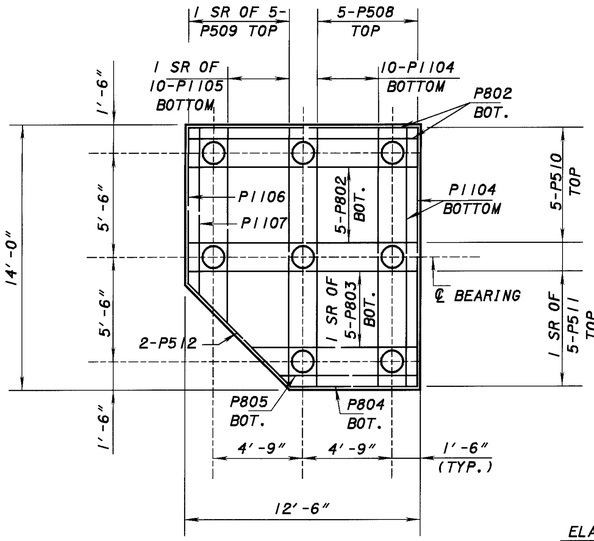

FOOTING- PLAN

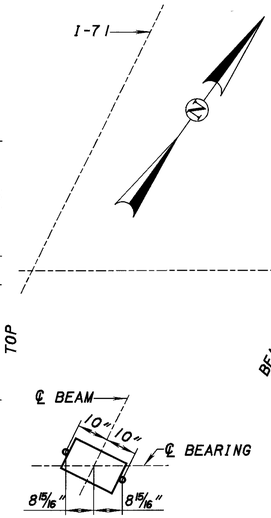

ELASTOMERIC BEARING PAD
(ANCHOR LOCATION DETAIL)

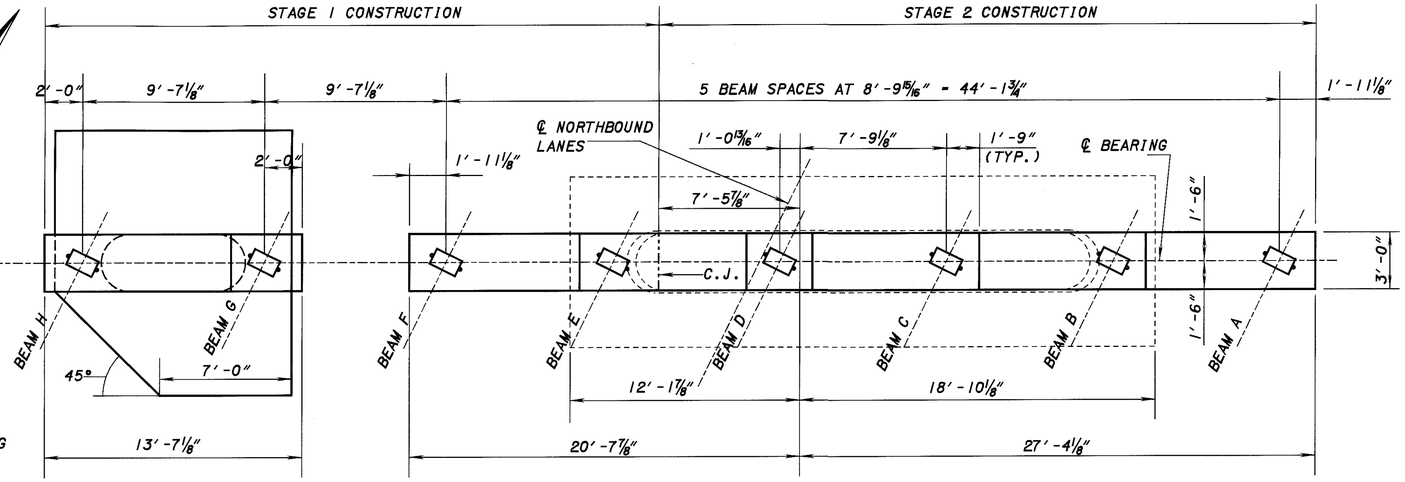

PLAN
PIER 2 NORTHBOUND LANES

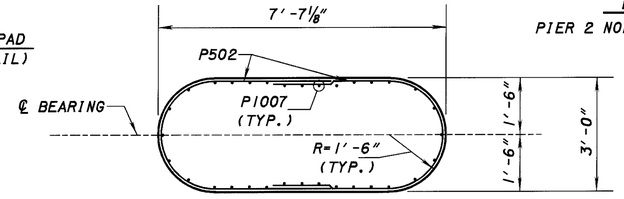

PLAN
(32 #10 BARS EQUALLY SPACED)

LOCATION / ELEVATION	ELEVATIONS								
	A	B	C	D	E	F	G	H	I
NORTHBOUND LANE PIER 2	1064.94	1065.04	1065.15	1065.22	1065.07	1064.93	1064.77	1064.62	1044.07

SECTION C-C

NOTES

SEAL THE ENTIRE SURFACE AREA OF THE EXISTING AND PROPOSED PIER ABOVE GROUND WITH EPOXY URETHANE SEALER

ALL PILES ARE 14" DIAMETER C.I.P

EXISTING PIER BRIDGE SEATS SHALL BE SCARIFIED 1/4", SEE GENERAL NOTES.

NOTES

REINFORCING STEEL IN THE VICINITY OF THE BRIDGE SEAT SHALL BE ACCURATELY PLACED TO AVOID INTERFERENCE WITH THE DRILLING OF BEARING ANCHOR HOLES OR THE PRESETTING OF BEARING ANCHORS.

AT THE OPTION OF THE CONTRACTOR, BEARING ANCHORS, LOCATED AND SUPPORTED BY TEMPLATES, MAY BE CAST IN PLACE.

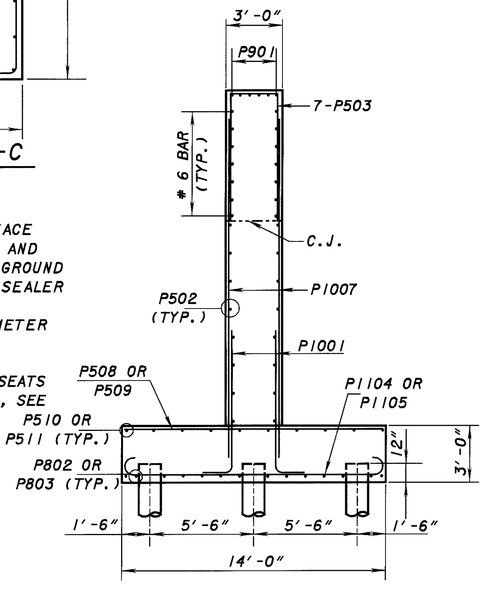

SECTION B-B

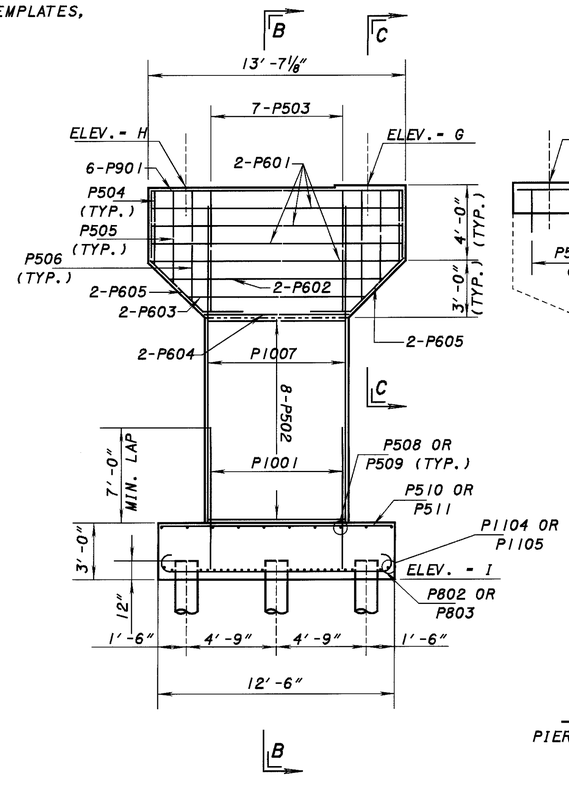

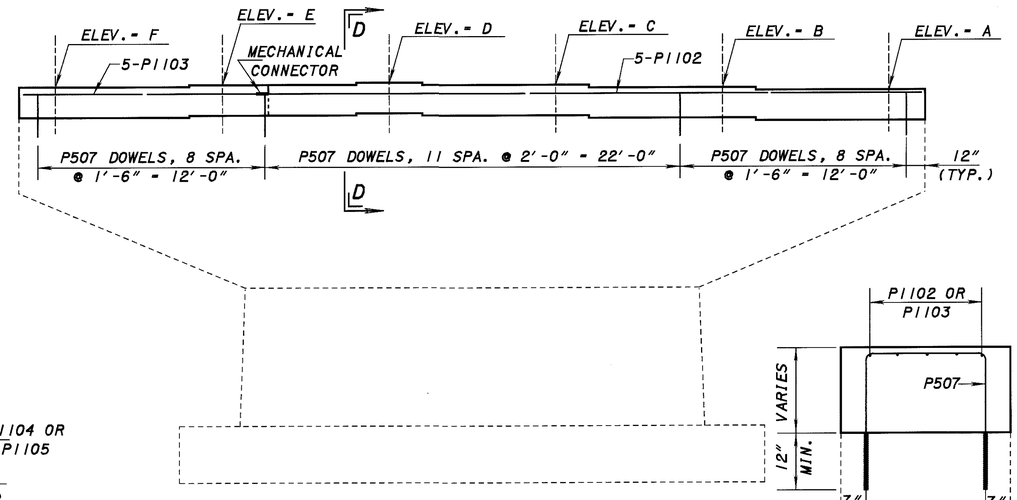

ELEVATION
PIER 2 NORTHBOUND LANES

SECTION D-D

DESIGN AGENCY
ODOT CENTRAL OFFICE
OFFICE OF PRODUCTION

DESIGNED	DRAWN	REVIEWED	DATE
TAA	TAA	SER	8-27-99

CHECKED DFT
REVISED
STRUCTURE FILE NUMBER 5203937L/5203961R

PIER DETAILS
MED-71-2090 L/R
I-71 OVER S.R. 3

MED-71-15.78

20 / 31

856
940

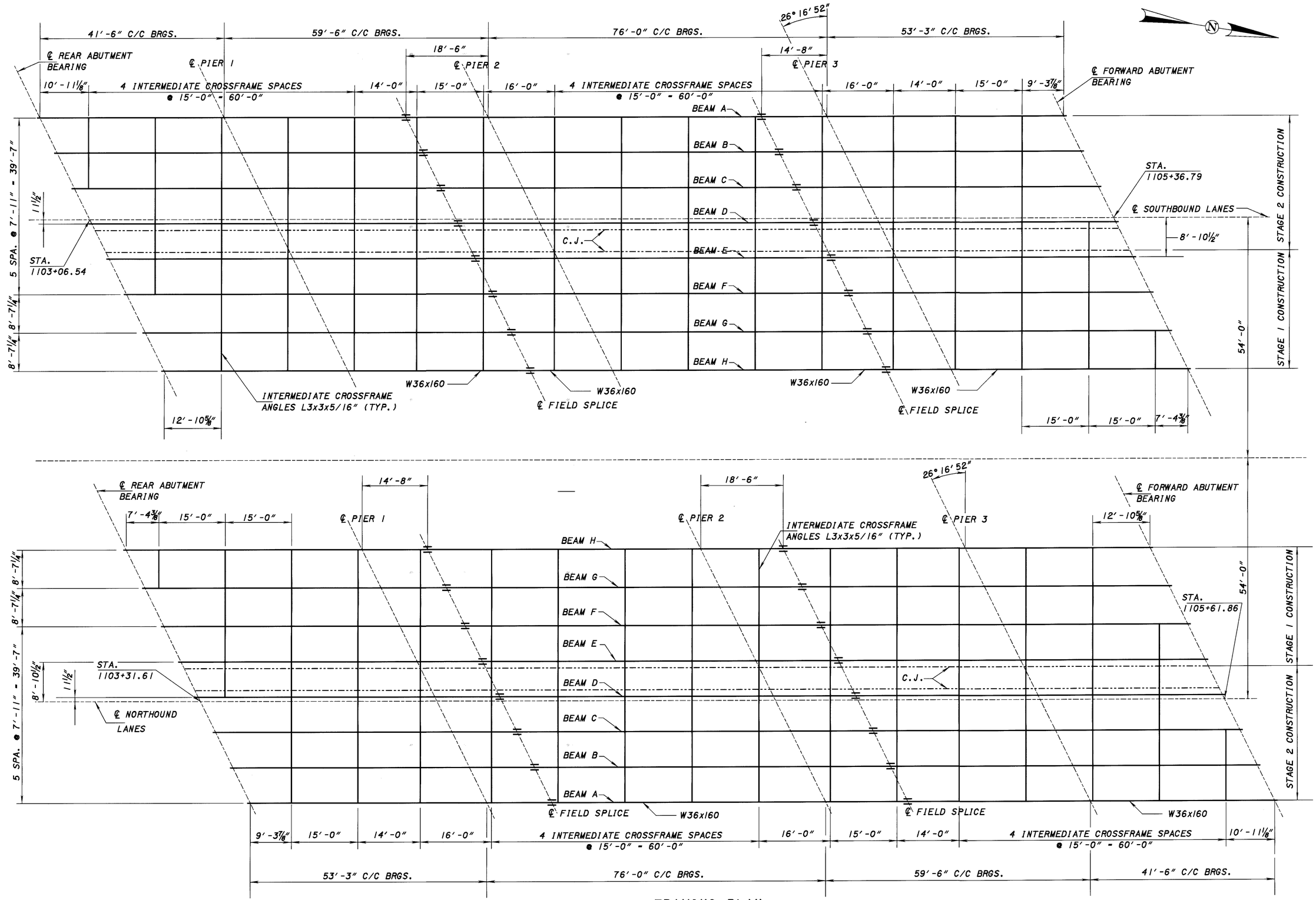

FRAMING PLAN

SEE ADDITIONAL NOTES ON SHEET 22/31

DESIGN AGENCY
ODOT CENTRAL OFFICE
OFFICE OF PRODUCTION

DESIGNED TAA
DRAWN TAA
CHECKED DFT
REVISED
REVISED SER 8-27-99
DATE
STRUCTURE FILE NUMBER 5203937L/5203961R

FRAMING PLAN
MED-71-2090 L/R
I-71 OVER S.R. 3

MED-71-15.78

21/31

857/940

	LOCATION	A	B	C	D
SOUTHBOUND LANE	BEAMLINE A THRU H	1/4"	9/16"	5/8"	15 1/2"
NORTHBOUND LANE	BEAMLINE A THRU H	1/8"	1/4"	1/16"	15 1/8"

DEFLECTION AND CAMBER

	SPAN 1			SPAN 2				SPAN 3					SPAN 4			
LOCATION OF POINT	1/4	1/2	3/4	1/4	1/2	SPL	3/4	SPL	1/4	1/2	3/4	SPL	1/4	SPL	1/2	3/4
BEAM DEFLECTION	1/16"	1/16"	1/16"	1/16"	1/16"	0	0	1/8"	1/8"	3/16"	1/8"	1/8"	0	1/16"	1/16"	1/16"
REMAINING DL DEFLECTION	1/8"	1/8"	1/16"	1/8"	3/16"	1/16"	1/16"	1/4"	1/4"	9/16	1/4"	1/4"	1/8"	1/8"	3/16"	3/16"
CORRECTION FOR VERTICAL CURVE	0	0	0	0	0	0	0	0	0	0	0	0	0	0	0	0
SHOP CAMBER	3/16"	3/16"	1/8"	3/16"	1/4"	1/16"	1/16"	3/8"	3/8"	3/4"	3/8"	3/8"	1/8"	3/16"	1/4"	1/4"

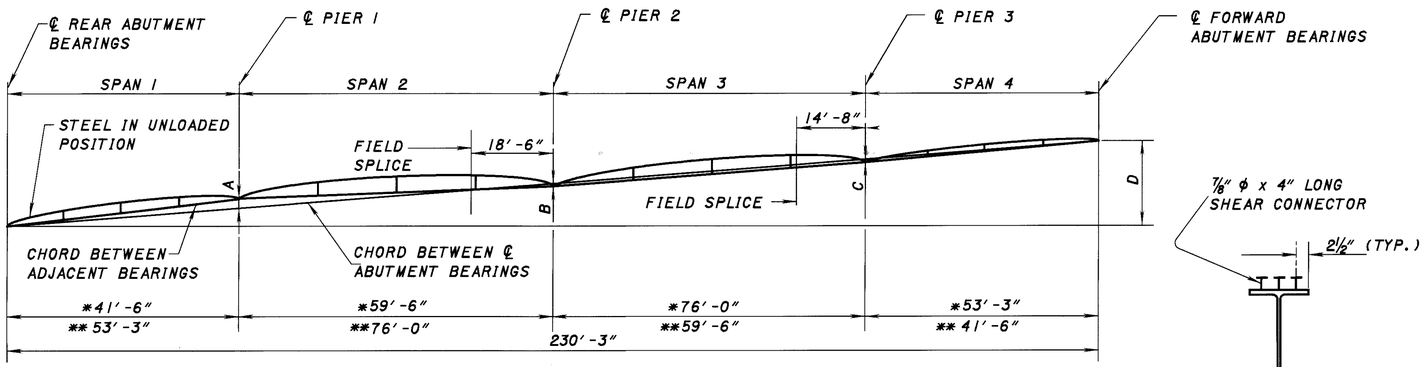

BLOCKING AND CAMBER DIAGRAM

* SOUTHBOUND LANE
** NORTHBOUND LANE

SECTION Ⓐ-Ⓐ

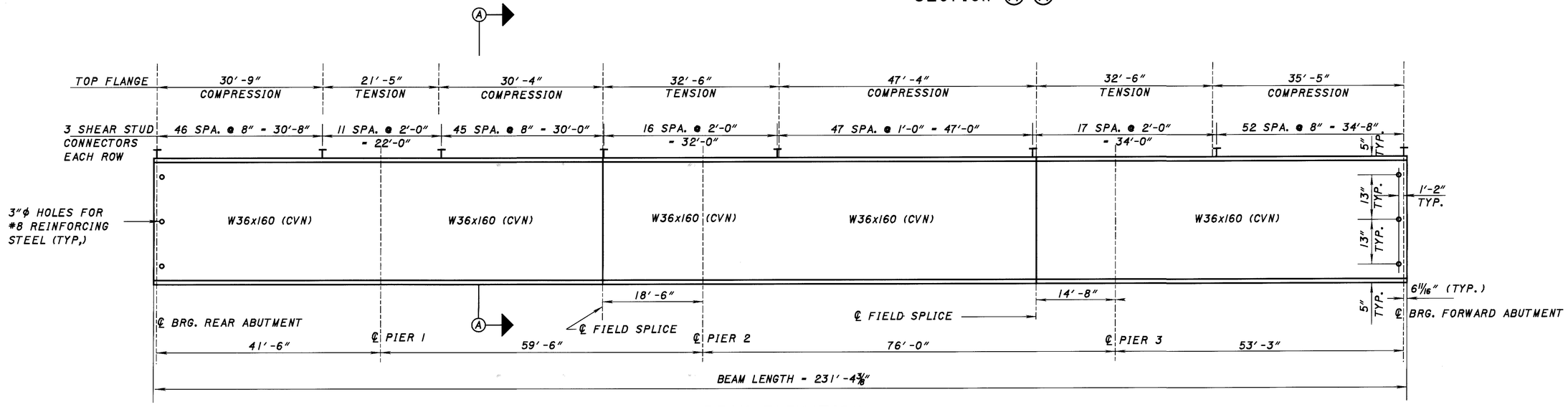

BEAM ELEVATION

(VERTICAL SCALE IS EXAGGERATED)
(SOUTHBOUND LANE SHOWN)

NOTES & LEGEND:

STRUCTURAL STEEL:
WHERE A SHAPE OR PLATE IS DESIGNATED (CVN) THE MATERIAL SHALL MEET SPECIFIED MINIMUM NOTCH TOUGHNESS REQUIREMENTS AS SPECIFIED IN 711.01.

FOR FIELD SPLICE DETAILS SEE STD. DWG. BS-1-93 (50 KSI) NO FILL PLATES REQUIRED.

FOR SCREED DIAGRAM AND TABLE SEE SHEET 23/31

WELDED ATTACHMENT:
WELDED ATTACHMENT OF SUPPORTS FOR CONCRETE DECK FINISHING MACHINE MAY BE MADE TO AREAS OF THE FACIA STRINGER FLANGES DESIGNATED "COMPRESSION". ATTACHMENTS SHALL NOT BE MADE TO AREAS DESIGNATED "TENSION". FILLET WELDS TO COMPRESSION FLANGES SHALL BE NOT CLOSER THAN 1" FROM EDGE OF FLANGE, BE NOT MORE THAN 2" LONG, AND BE NOT SMALLER THAN THE MINIMUM SIZE REQUIRED BY AASHTO.

3"ϕ HOLES DRILLED IN THE PROPOSED BEAM SHALL BE PAID UNDER ITEM 863 STRUCTURAL STEEL. THIS PAYMENT IS INCIDENTAL TO THE PAY ITEM.

LATERAL AND LONGITUDINAL SPACING OF WELDED STUD CONNECTORS MAY BE ALTERED AT FIELD SPLICE LOCATIONS TO AVOID INTERFERENCE WITH FLANGE SPLICE BOLTS PROVIDED THAT AT LEAST THE NUMBER OF STUDS SPECIFIED IN THE BEAM ELEVATION ARE PROVIDED.

STRUCTURAL STEEL SHALL BE ASTM A572.

ALL BEAM LENGTH DIMENSION ARE AT 60 °F

DESIGN AGENCY: ODOT CENTRAL OFFICE OFFICE OF PRODUCTION
REVISED SER DATE 8-27-99
STRUCTURE FILE NUMBER 5203937L/5203961R
DRAWN TAA
REVISED
DESIGNED TAA
CHECKED DFT

SUPERSTRUCTURE DETAILS
MED-71-2090 L/R
I-71 OVER S.R. 3

MED-71-15.78

22/31

858/940

SCREED ELEVATION - SOUTHBOUND BRIDGE

LOCATION	RIGHT TOE OF PARAPET		PROFILE GRADE		RIGHT CONSTR JT		CLOSURE POUR C.J.		SOUTHBOUND LANE ℄		LEFT TOE OF PARAPET	
	STATION	ELEVATION	STATION	ELEVATION	STATION	ELEVATION	STATION	ELEVATION	STATION	ELEVATION	STATION	ELEVATION
℄ REAR ABUTMENT	1103+24.32	1068.16	1103+12.47	1068.47	1103+10.18	1068.53	1103+07.75	1068.59	1103+06.54	1068.62	1102+94.69	1068.18
MIDSPAN	1103+45.07	1068.29	1103+33.22	1068.60	1103+30.93	1068.66	1103+28.50	1068.72	1103+27.29	1068.75	1103+15.44	1068.31
℄ PIER # 1	1103+65.82	1068.40	1103+53.97	1068.71	1103+51.68	1068.77	1103+49.25	1068.83	1103+48.04	1068.86	1103+36.19	1068.42
1/4 SPAN	1103+80.69	1068.50	1103+68.84	1068.81	1103+66.56	1068.86	1103+64.13	1068.93	1103+62.92	1068.96	1103+51.07	1068.52
MIDSPAN	1103+95.57	1068.59	1103+83.72	1068.90	1103+81.43	1068.95	1103+79.00	1069.02	1103+77.79	1069.05	1103+65.94	1068.61
FIELD SPLICE	1104+06.82	1068.64	1103+94.97	1068.95	1103+92.68	1069.01	1103+90.26	1069.07	1103+89.04	1069.10	1103+77.19	1068.66
3/4 SPAN	1104+10.44	1068.66	1103+98.59	1068.97	1103+96.31	1069.03	1103+93.88	1069.09	1103+92.67	1069.12	1103+80.82	1068.68
℄ PIER # 2	1104+25.32	1068.74	1104+13.47	1069.05	1104+11.18	1069.11	1104+08.75	1069.17	1104+07.54	1069.20	1103+95.69	1068.76
FIELD SPLICE	1104+39.31	1068.84	1104+27.46	1069.15	1104+25.18	1069.21	1104+22.75	1069.27	1104+21.54	1069.30	1104+09.69	1068.86
1/4 SPAN	1104+44.32	1068.86	1104+32.47	1069.17	1104+30.18	1069.23	1104+27.75	1069.30	1104+26.54	1069.33	1104+14.69	1068.89
MIDSPAN	1104+63.32	1068.99	1104+51.47	1069.30	1104+49.18	1069.36	1104+46.75	1069.43	1104+45.54	1069.46	1104+33.69	1069.02
3/4 SPAN	1104+82.32	1069.07	1104+70.47	1069.38	1104+68.18	1069.44	1104+65.75	1069.50	1104+64.54	1069.54	1104+52.69	1069.10
FIELD SPLICE	1104+86.64	1069.09	1104+74.80	1069.40	1104+72.51	1069.46	1104+70.08	1069.53	1104+68.87	1069.56	1104+57.02	1069.12
℄ PIER # 3	1105+01.32	1069.15	1104+89.47	1069.46	1104+87.18	1069.52	1104+84.75	1069.59	1104+83.54	1069.62	1104+71.69	1069.18
FIELD SPLICE	1105+19.23	1069.26	1105+07.38	1069.57	1105+05.10	1069.63	1105+02.67	1069.69	1105+01.46	1069.72	1104+89.61	1069.29
MIDSPAN	1105+27.94	1069.31	1105+16.09	1069.62	1105+13.81	1069.68	1105+11.38	1069.74	1105+10.17	1069.78	1104+98.32	1069.34
℄ FORWARD ABUTMENT	1105+54.57	1069.43	1105+42.72	1069.74	1105+40.43	1069.80	1105+38.00	1069.87	1105+36.79	1069.90	1105+24.94	1069.46

SCREED ELEVATION - NORTHBOUND BRIDGE

LOCATION	LEFT TOE OF PARAPET		PROFILE GRADE		LEFT CONSTR JT		CLOSURE POUR C.J.		NORTHBOUND LANE ℄		RIGHT TOE OF PARAPET	
	STATION	ELEVATION	STATION	ELEVATION	STATION	ELEVATION	STATION	ELEVATION	STATION	ELEVATION	STATION	ELEVATION
℄ REAR ABUTMENT	1103+13.84	1068.10	1103+25.69	1068.55	1103+27.97	1068.63	1103+30.40	1068.72	1103+31.61	1068.77	1103+43.46	1068.46
MIDSPAN	1103+40.46	1068.27	1103+52.31	1068.72	1103+54.59	1068.80	1103+57.02	1068.89	1103+58.24	1068.94	1103+70.09	1068.63
FIELD SPLICE	1103+49.17	1068.32	1103+61.02	1068.76	1103+63.30	1068.85	1103+65.73	1068.94	1103+66.94	1068.98	1103+78.79	1068.68
℄ PIER # 1	1103+67.09	1068.41	1103+78.94	1068.85	1103+81.22	1068.94	1103+83.65	1069.03	1103+84.86	1069.07	1103+96.71	1068.77
FIELD SPLICE	1103+81.75	1068.52	1103+93.60	1068.96	1103+95.89	1069.04	1103+98.31	1069.02	1103+99.53	1069.18	1104+11.38	1068.87
1/4 SPAN	1103+86.09	1068.54	1103+97.94	1068.98	1104+00.22	1069.07	1104+02.65	1069.16	1104+03.86	1069.20	1104+15.71	1068.89
MIDSPAN	1104+05.09	1068.67	1104+16.94	1069.11	1104+19.22	1069.20	1104+21.65	1069.29	1104+22.86	1069.33	1104+34.71	1069.03
3/4 SPAN	1104+24.09	1068.75	1104+35.94	1069.19	1104+38.22	1069.28	1104+40.65	1069.37	1104+41.86	1069.41	1104+53.71	1069.10
FIELD SPLICE	1104+29.10	1068.78	1104+40.95	1069.22	1104+43.24	1069.31	1104+45.66	1069.40	1104+46.88	1069.44	1104+58.73	1069.13
℄ PIER # 2	1104+43.09	1068.84	1104+54.94	1069.28	1104+57.22	1069.36	1104+59.65	1069.45	1104+60.86	1069.50	1104+72.71	1069.19
1/4 SPAN	1104+57.96	1068.92	1104+69.81	1069.36	1104+72.09	1069.45	1104+74.52	1069.54	1104+75.74	1069.58	1104+87.59	1069.27
FIELD SPLICE	1104+61.53	1068.94	1104+73.38	1069.38	1104+75.66	1069.47	1104+78.09	1069.56	1104+79.31	1069.60	1104+91.16	1069.29
MIDSPAN	1104+72.84	1069.01	1104+84.69	1069.45	1104+86.97	1069.54	1104+89.40	1069.63	1104+90.61	1069.67	1105+02.46	1069.36
3/4 SPAN	1104+87.71	1069.09	1104+99.56	1069.53	1105+01.84	1069.61	1105+04.27	1069.70	1105+05.49	1069.75	1105+17.34	1069.43
℄ PIER # 3	1105+02.59	1069.16	1105+14.44	1069.60	1105+16.72	1069.68	1105+19.15	1069.77	1105+20.36	1069.81	1105+32.21	1069.50
MIDSPAN	1105+23.34	1069.28	1105+35.19	1069.72	1105+37.47	1069.80	1105+39.90	1069.89	1105+41.11	1069.93	1105+52.96	1069.62
℄ FORWARD ABUTMENT	1105+44.09	1069.38	1105+55.94	1069.81	1105+58.22	1069.90	1105+60.65	1069.99	1105+61.86	1070.03	1105+73.71	1069.72

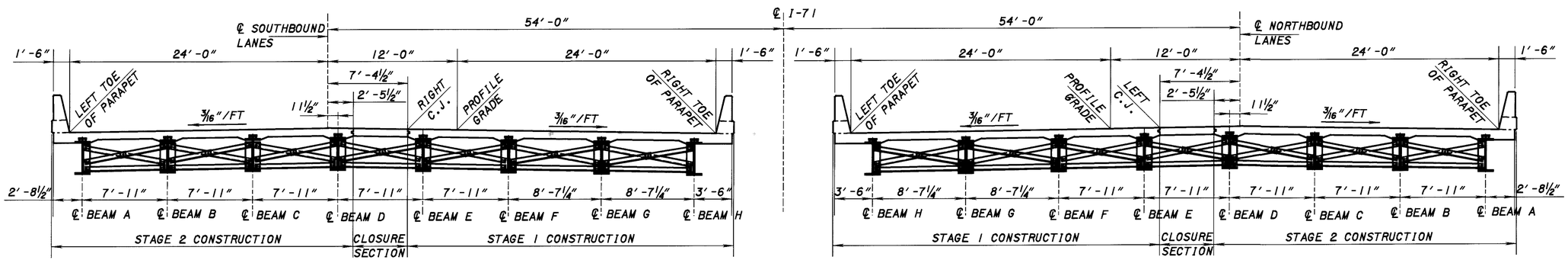

SOUTHBOUND LANE BRIDGE

TRANSVERSE SECTION

NORTHBOUND LANE BRIDGE

NOTES

SCREED SETTING ELEVATIONS GIVEN ARE TO THE TOP OF CONCRETE DECK AND ARE REQUIRED PRIOR TO PLACEMENT OF CONCRETE. THEY INCLUDE AN ALLOWANCE FOR THE DEAD LOAD DEFLECTION CAUSED BY THE WEIGHT OF THE CONCRETE.

DESIGN AGENCY: ODOT CENTRAL OFFICE, OFFICE OF PRODUCTION

REVIEWED: SER | DATE: 8-27-99 | STRUCTURE FILE NUMBER: 5203937L/5203961R

DRAWN: TAA | REVISED:

DESIGNED: TAA | CHECKED: DFT

SCREED TABLES

MED-71-2090 L/R
I-71 OVER S.R. 3

MED-71-15.78

859/940

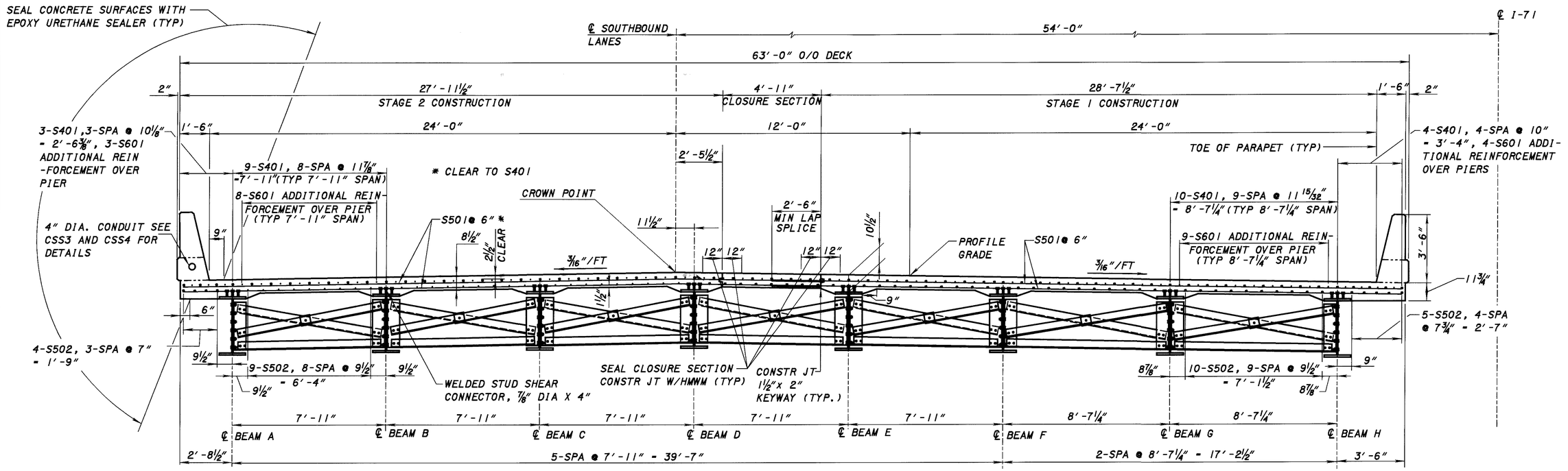

TRANSVERSE SECTION

(SOUTHBOUND LANES SHOWN, NORTHBOUND SIMILAR)

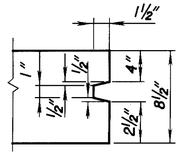

KEYWAY DETAILS AT CLOSURE SECTION

NOTES

1. HMWM: HIGH MOLECULAR WEIGHT METHACRYLATE, SEE SUPPLEMENTAL SPEC.
2. ALL REINFORCING STEEL IS EPOXY COATED.
3. FOR PARAPET DETAILS, SEE SHEET 27 & 28/ 31
4. REINFORCING STEEL MAY BE FIELD OR SHOP BENT TO ACCOMMODATE THE CROWN OF THE DECK. PAYMENT SHALL BE INCLUDED WITH HIGH PERFORMANCE CONCRETE.
5. FOR CROSS-FRAME CONNECTION DETAILS SEE STD DWG GSD-1-96, GENERAL STEEL DETAILS.
6. DECK SLAB DEPTH: THE THEORETICAL DESIGN THICKNESS FOR THE SLAB IS 8½". THE QUANTITY OF DECK CONCRETE TO BE PAID FOR SHALL BE BASED ON THIS DIMENSION, EVEN THOUGH DEVIATION FROM IT MAY BE NECESSARY BECAUSE THE TOP FLANGE OF THE BEAM MAY NOT HAVE THE EXACT CAMBER OR CONFIGURATION REQUIRED TO PLACE IT PARALLEL TO THE FINISHED GRADE. A HAUNCH WIDTH OF 9" SHALL BE USED FOR COMPUTING QUANTITY OF CONCRETE. HOWEVER, THE HAUNCH WIDTH MAY VARY BETWEEN 6" AND 12".

THIS REINFORCING SCHEDULE IS FOR INFORMATION ONLY.

MARK	NUMBER SUPER STAGE I	NUMBER SUPER STAGE II	NUMBER TOTAL	LENGTH	WEIGHT LB	TYPE	DIMENSIONS A	DIMENSIONS B	DIMENSIONS INC
SUPERSTRUCTURE - MED-71-2090 L (SOUTHBOUND LANE)									
S401	256	272	528	30'-10"	10875	STR			
S501	840	840	1680	32'-7"	57094	STR			
S502	280	312	592	31'-3"	19296	STR			
	2 SR	2 SR	4 SR	13'-9"					
S503	OF	OF	OF	TO	1803	STR			1'-0"
	19	19	19	31'-9"					
	2 SR	2 SR	4 SR	6'-0"					
S504	OF	OF	OF	TO	2140	STR			1'-0"
	27	27	27	32'-0"					
S505	24	24	48	13'-6"	676	STR			
S601	93	102	195	33'-6"	9812	STR			
				TOTAL	101696				

MARK	NUMBER SUPER STAGE I	NUMBER SUPER STAGE II	NUMBER TOTAL	LENGTH	WEIGHT LB	TYPE	DIMENSIONS A	DIMENSIONS B	DIMENSIONS INC
SUPERSTRUCTURE - MED-71-2090 R (NORTHBOUND LANE)									
S401	256	272	528	30'-10"	10875	STR			
S501	840	840	1680	32'-7"	57094	STR			
S502	280	312	592	31'-3"	19296	STR			
	2 SR	2 SR	4 SR	13'-9"					
S503	OF	OF	OF	TO	1803	STR			1'-0"
	19	19	19	31'-9"					
	2 SR	2 SR	4 SR	6'-0"					
S504	OF	OF	OF	TO	2140	STR			1'-0"
	27	27	27	32'-0"					
S505	24	24	48	13'-6"	676	STR			
S601	93	102	195	33'-6"	9812	STR			
				TOTAL	101696				

DESIGN AGENCY: ODOT CENTRAL OFFICE OFFICE OF PRODUCTION

DESIGNED TAA | DRAWN TAA | REVIEWED SER | DATE 8-27-99 | STRUCTURE FILE NUMBER 5203937L/5203961R | CHECKED DFT | REVISED

SUPERSTRUCTURE DETAILS

MED-71-2090 L/R
I-71 OVER S.R. 3

MED-71-15.78

24/31

860/940

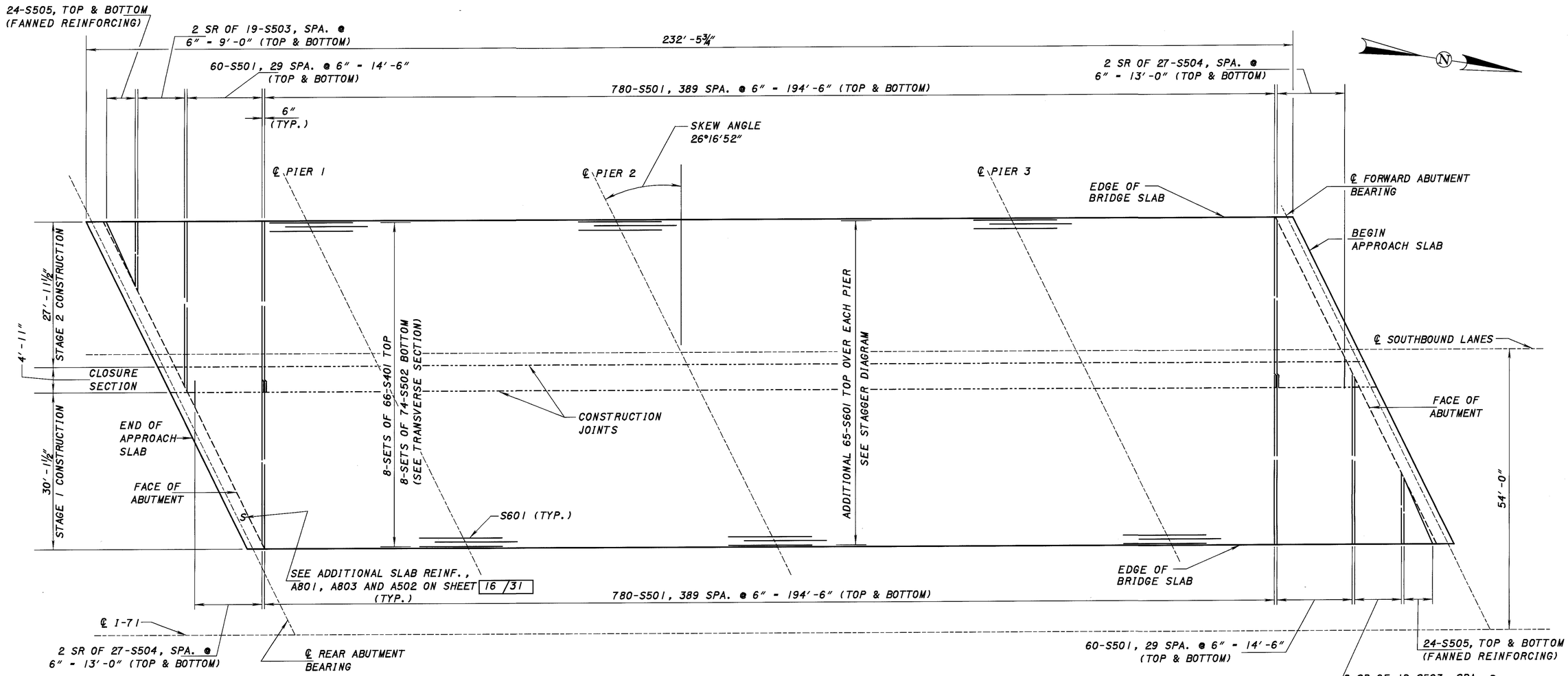

DECK REINFORCEMENT

(SOUTHBOUND LANES SHOWN, NORTHBOUND SIMILAR)
MINIMUM LAP FOR # 4 BAR - 2'-0"
MINIMUM LAP FOR # 5 BAR - 2'-6"

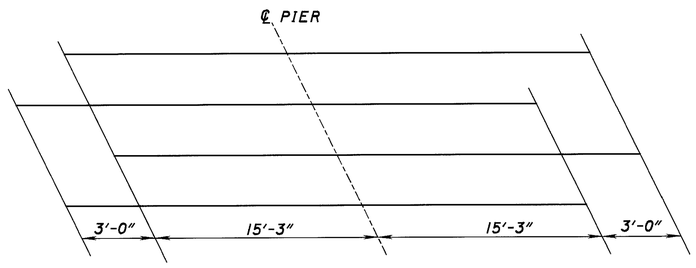

STAGGER OF S601 BARS OVER PIERS

NOTES

CONCRETE PARAPET NOT SHOWN. FOR DETAILS,
SEE SHEET 27 & 28/31

DESIGN AGENCY
ODOT CENTRAL OFFICE
OFFICE OF PRODUCTION

DESIGNED TAA
DRAWN TAA
REVIEWED SER
DATE 8-27-99
CHECKED DFT
REVISED
STRUCTURE FILE NUMBER 5203937L/5203961R

SUPERSTRUCTURE DETAILS
MED-71-2090 L/R
I-71 OVER S.R. 3

MED-71-15.78

25/31

861
940

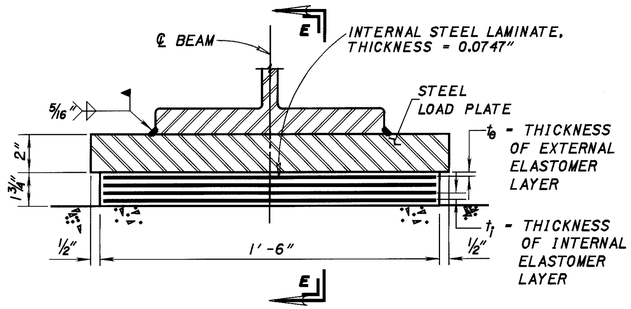

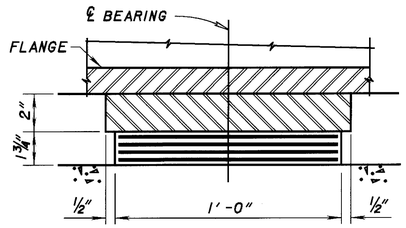

SECTION E-E
LAMINATED ELASTOMERIC EXPANSION PIER BEARING

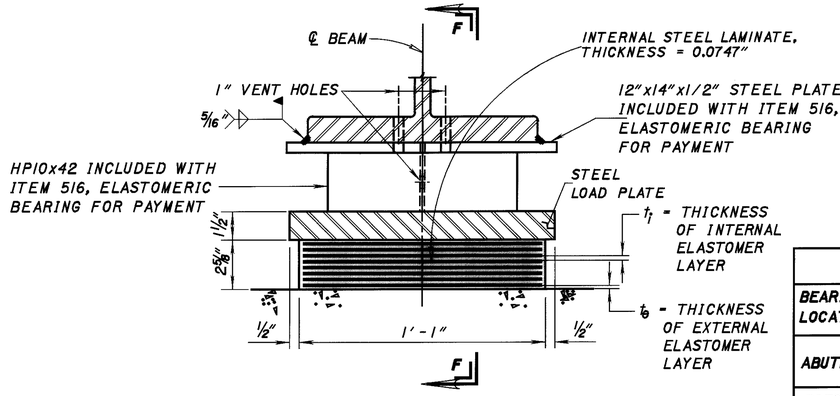

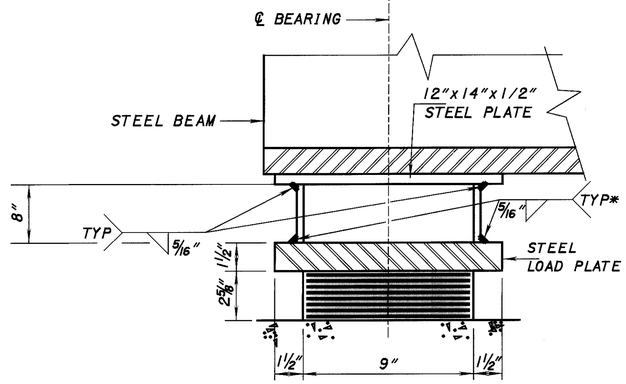

* FIELD WELD OPTIONAL

SECTION F-F
LAMINATED ELASTOMERIC EXPANSION ABUTMENT BEARING

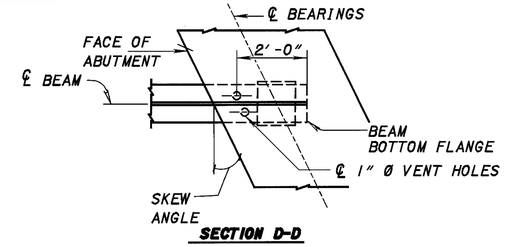

SECTION D-D

LEGEND

EXP - EXPANSION

BEARING TABLE

BEARING LOCATION	TYPE	L	W	t_1 In.	t_0 In.	n_1	n_2	STEEL LOAD ℄	TOTAL HEIGHT*	DL, Kips	LL, Kips	TOTAL, Kips
ABUTMENT	EXP	9"	13"	0.24	0.17	7	8	12"x14"x1 1/2"	4 1/8"	63	49	112
PIER 1 & PIER 3	EXP	12"	18"	0.33	0.24	3	4	13"x19"x2"	3 3/4"	136	59	195
PIER 2	FIXED	10 1/2"	18"	0.29	0.21	4	5	11 1/2"x24"x2"	3 15/16"	131	59	190

n_1 - NUMBER OF INTERNAL ELASTOMER LAYERS, t_1 ELASTOMER LAYERS ARE 50 DUROMETERS
n_2 - NUMBER OF STEEL LAMINATES, 0.0747" THICKNESS * TOTAL HEIGHT INCLUDES LOAD PLATE

NOTES:

INSTALLATION PROCEDURE: ANCHOR BOLTS SHALL BE EITHER CAST IN PLACE BY USE OF A TEMPLATE OR FIELD DRILLED AND GROUTED AT THE CONTRACTOR'S OPTION. CARE SHALL BE TAKEN TO ASSURE THAT THE ANCHOR BOLTS DO NOT INTERFERE WITH REINFORCING STEEL.

MATERIALS: THE HP SHAPE (SUPPORT MEMBER) AND STEEL PLATES MAY BE GRADE 36 STEEL. THE HP SHAPE AND STEEL PLATES SHALL HAVE THE SAME PROTECTIVE COATING AS THE MAIN STRUCTURAL STEEL.

PAYMENT FOR MATERIALS, LABOR, FABRICATION, PROTECTIVE COATING, VENT HOLES AND INSTALLATION OF THE HP SHAPE AND STEEL PLATE SHALL BE INCLUDED WITH ITEM 516 ABUTMENT ELASTOMERIC BEARINGS, AS PER PLAN, FOR PAYMENT.

WELDING: WELDING OF THE LOAD PLATE TO THE SUPERSTRUCTURE SHALL BE CONTROLLED SO THAT THE PLATE TEMPERATURE AT THE ELASTOMER BONDED SURFACE SHALL NOT EXCEED 300° F AS DETERMINED BY THE USE OF PYROMETRIC STICKS OR OTHER TEMPERATURE MONITORING DEVICES. THE STEEL LOAD PLATE SHALL BE BONDED BY VULCANIZATION TO THE ELASTOMER DURING THE MOLDING PROCESS.

BRIDGE SEAT REINFORCING:
REINFORCING STEEL IN THE VICINITY OF BRIDGE SEAT SHALL BE ACCURATELY PLACED TO AVOID INTERFERENCE WITH THE DRILLING OF BEARING ANCHOR HOLES OR THE PRE-SETTING OF BEARING ANCHORS.

BEARING REPOSITIONING: IF DECK CONCRETE IS PLACED AT AN AMBIENT TEMPERATURE HIGHER THAN 80° F OR LOWER THAN 40° F AND THE BEARING SHEAR DEFLECTION EXCEEDS ONE-SIXTH OF THE BEARING HEIGHT AT 60° F ± 10° F, THE BEAMS SHALL BE RAISED TO ALLOW THE BEARING TO RETURN TO THEIR UNDERFORMED SHAPE AT 60° F ± 10° F.

ELASTOMERIC BEARINGS SHALL COMPLY WITH ITEM 516 AND AASHTO STANDARD SPECIFICATION FOR HIGHWAY BRIDGES, SECTION 18, BEARING DEVICES, DIVISION II, CONSTRUCTION ARTICLES 18.4.5.1 AND 18.5.6.2. BEARINGS SHALL BE GRADE 3, 50 DUROMETER ELASTOMER AND SHALL BE SUBJECTED TO THE LOAD TESTING REQUIREMENTS DEFINED IN ARTICLE 18.7.4.5 OF THE AASHTO DOCUMENT LISTED ABOVE. THE UNIT BID PRICE SHALL INCLUDE ALL MATERIALS, LABOR, TESTING, STEEL LOAD PLATES AND INCIDENTALS NECESSARY TO FURNISH AND INSTALL LAMINATED ELASTOMERIC BEARINGS. PAYMENT WILL BE MADE AT THE CONTRACT PRICE FOR ITEM 516, EACH, ELASTOMERIC BEARINGS WITH INTERNAL LAMINATES AND LOAD PLATE (NEOPRENE).

BASIS OF PAYMENT: THE UNIT BID PRICE SHALL INCLUDE ALL MATERIALS, LABOR, TESTING, ANCHOR RODS, HP10x42, STEEL PLATES AND INCIDENTALS NECESSARY TO FURNISH AND INSTALL LAMINATED ELASTOMERIC BEARINGS, EITHER FIXED OR EXPANSION. PAYMENT WILL BE MADE AT THE CONTRACT PRICE FOR ITEM 516, EACH, ELASTOMERIC BEARINGS WITH INTERNAL LAMINATES AND LOAD PLATE (NEOPRENE):

9" x 13" x 2 5/8" WITH 12" x 14" x 1 1/2" LOAD PLATE, AS PER PLAN (ABUTMENT)
10 1/2" x 18" x 1 15/16" WITH 11 1/2" x 24" x 2" LOAD PLATE, AS PER PLAN (PIER #2)
12" x 18" x 1 3/4" WITH 13" x 19" x 2" LOAD PLATE (PIER # 3)

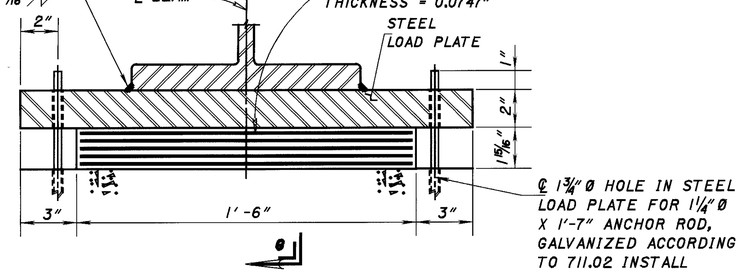

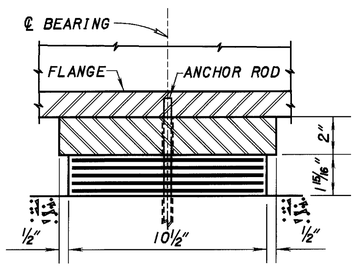

SECTION G-G
LAMINATED ELASTOMERIC FIXED PIER BEARING

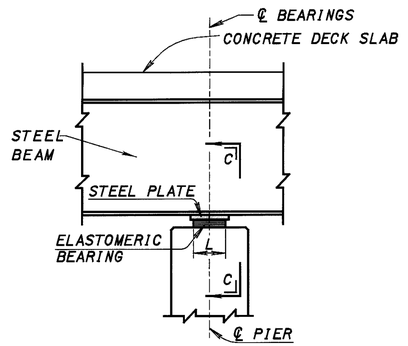

SECTION THRU PIER

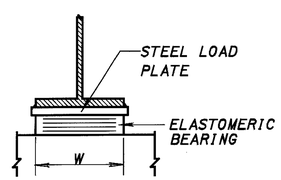

SECTION C-C

ODOT CENTRAL OFFICE
OFFICE OF PRODUCTION

DESIGN AGENCY

REVIEWED SER
DATE 8-27-99
STRUCTURE FILE NUMBER 5203937L/5203961R

DRAWN TAA
REVISED

DESIGNED TAA
CHECKED DFT

BEARING DETAILS
MED-71-2090 L/R
I-71 OVER S.R. 3

MED-71-15.78

26 / 31

862
940

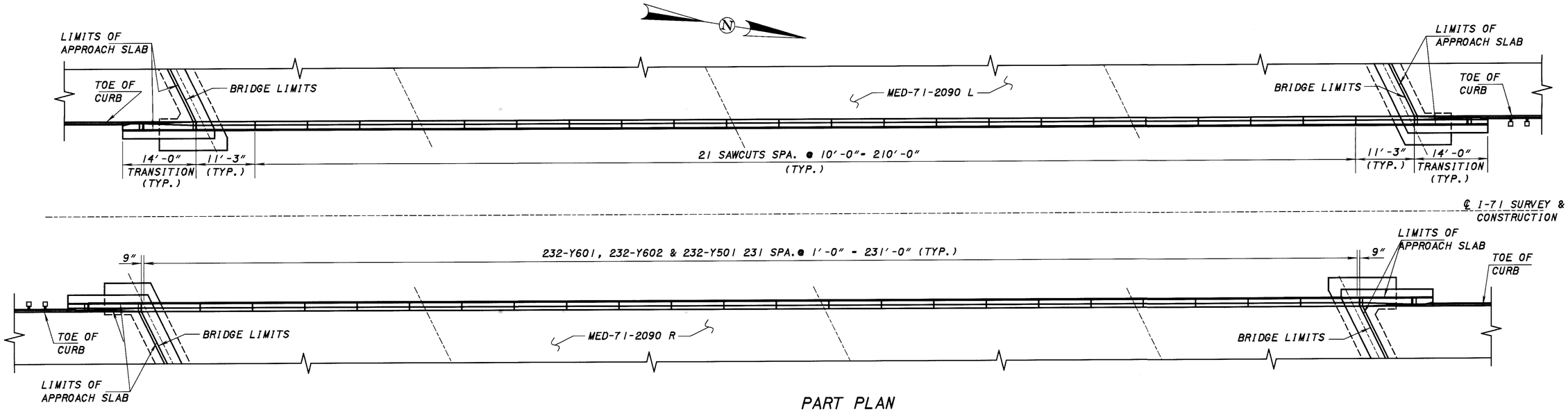

PART PLAN

THIS REINFORCING SCHEDULE IS FOR INFORMATION ONLY.

MARK	NUMBER SUPER STAGE I	NUMBER SUPER STAGE II	NUMBER TOTAL	LENGTH	WEIGHT LB	TYPE	DIMENSIONS A	B	C	D	E	R	INC
PARAPETS - MED-71-2090 L (SOUTHBOUND LANE)													
Y501	232	232	464	7'-5"	3589	23							
Y601	232	232	464	3'-9"	2613	34							
Y602	232	232	464	2'-8"	1858	1	1'-1"	1'-9"					
	4 SR	4 SR	8 SR	4'-4"			3'-7"						
Y603	OF	OF	OF	TO	628	1	TO	10"					1"
	11	11	11	5'-2"			4'-5"						
Y604	16	16	32	4'-3"	204	1	3'-6"	10"					
X501	16	16	32	10'-0"	333	STR							
X502	3	6	9	5'-6"	52	25							
X503	13	10	23	5'-6"	132	STR							
X504	48	48	96	31'-3"	3129	STR							
X601	8	8	16	31'-9"	763	STR							
				TOTAL	13330								

MARK	NUMBER SUPER STAGE I	NUMBER SUPER STAGE II	NUMBER TOTAL	LENGTH	WEIGHT LB	TYPE	DIMENSIONS A	B	C	D	E	R	INC
PARAPETS - MED-71-2090 R (NORTHBOUND LANE)													
Y501	232	232	464	7'-5"	3589	23							
Y601	232	232	464	3'-9"	2613	34							
Y602	232	232	464	2'-8"	1858	1	1'-1"	1'-9"					
	4 SR	4 SR	8 SR	4'-4"			3'-7"						
Y603	OF	OF	OF	TO	628	1	TO	10"					1"
	11	11	11	5'-2"			4'-5"						
Y604	16	16	32	4'-3"	204	1	3'-6"	10"					
X501	16	16	32	10'-0"	333	STR							
X502	3	6	9	5'-6"	52	25							
X503	13	10	23	5'-6"	132	STR							
X504	48	48	96	31'-3"	3129	STR							
X601	8	8	16	31'-9"	763	STR							
				TOTAL	13330								

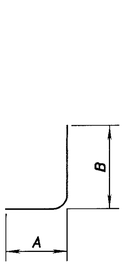

TYPE 1

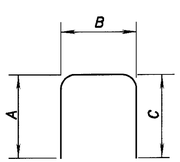

TYPE 2

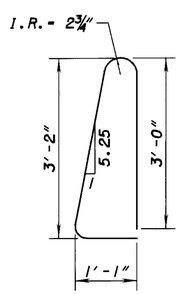

TYPE 23

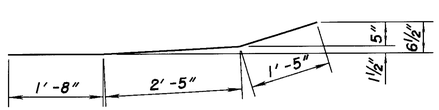

TYPE 25

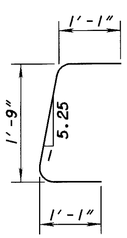

TYPE 34

DESIGN AGENCY: ODOT CENTRAL OFFICE, OFFICE OF PRODUCTION

REVIEWED SER | DATE 8-27-99 | STRUCTURE FILE NUMBER 5203937L/5203961R

DRAWN TAA | REVISED

DESIGNED TAA | CHECKED DFT

PARAPET DETAILS
MED-71-2090 L/R
I-71 OVER S.R. 3

MED-71-15.78

27 / 31

863
940

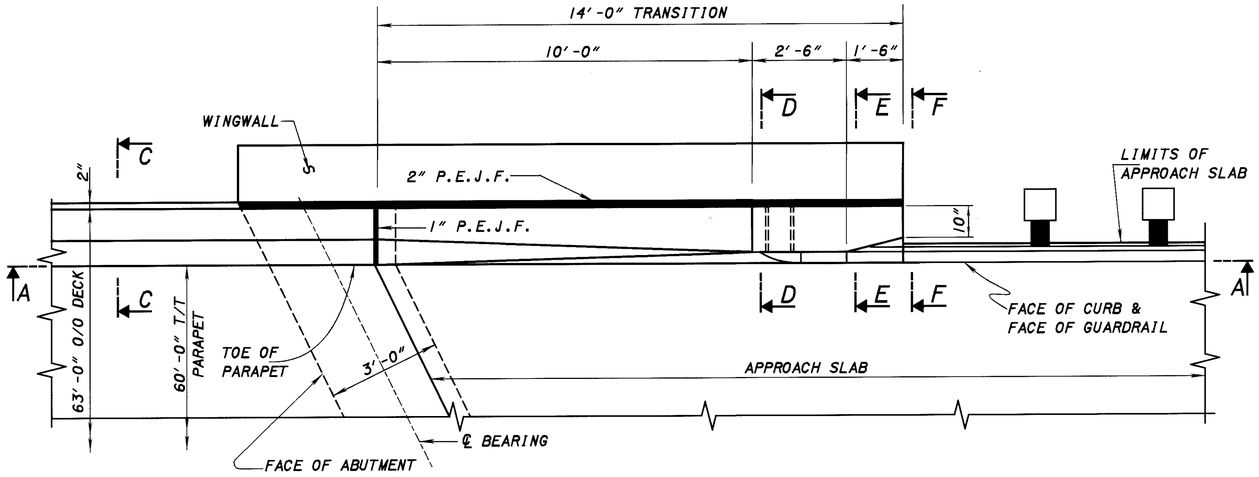

PART PLAN AT ABUTMENT

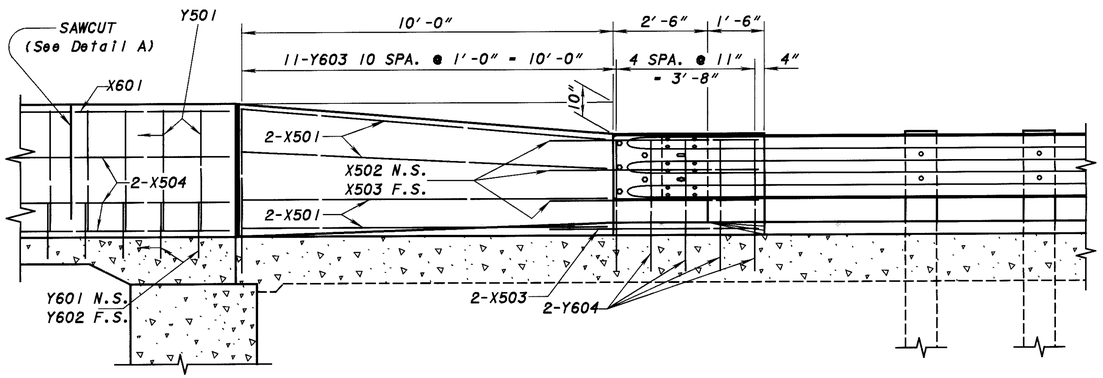

SECTION A-A

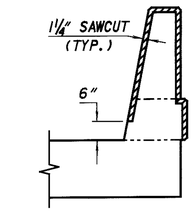

DETAIL A

(Section through sawcut)
Sawcut Perimeter = 7'-6"

NOTES

CONTROL JOINTS FOR CONCRETE PARAPETS: THE JOINTS SHALL BE CONSTRUCTED BY SAWING 1¼ INCH DEEP ALONG THE PERIMETER OF THE PARAPET AS SOON AS THE SAW CAN BE OPERATED WITHOUT DAMAGING THE CONCRETE.

THE USE OF AN EDGE GUIDE, FENCE, OR JIG IS REQUIRED TO ENSURE THAT THE CUT JOINT IS STRAIGHT, TRUE, AND ALIGNED ON ALL FACES OF THE PARAPET. THE JOINT WIDTH SHALL BE THE WIDTH OF THE SAW BLADE, A NOMINAL WIDTH OF ¼ INCH.

THE PERIMETER OF THE DEFLECTION CONTROL JOINT SHALL BE SEALED WITH A CAULKING MATERIAL TO A MINIMUM DEPTH OF ONE INCH CONFORMING TO FEDERAL SPECIFICATION TT-S-00227E. THE BOTTOM ONE-HALF INCH OF THE OUTSIDE FACE OF THE PARAPET SHOULD BE LEFT UNSEALED TO ALLOW ANY WATER WHICH MAY ENTER THE JOINT TO ESCAPE.

QUANTITIES OF CONCRETE, REINFORCING STEEL, DEFLECTION JOINT SAWCUT AND CAULKING MATERIAL FOR PARAPET ARE INCLUDED WITH ITEM 844 HIGH PERFORMANCE CONCRETE, SUPERSTRUCTURE (PARAPET).

FOR BRIDGE TERMINAL ASSEMBLY SEE STANDARD CONSTRUCTION DRAWING GR-3.1 AND GR-3.2.

FOR ADDITIONAL PARAPET DETAILS SEE SHEET 27 / 31

MIN. LAP SPLICES: #5 BAR - 2'-6"
#6 BAR - 3'-0"

LEGEND: N.S. - NEAR SIDE
F.S. - FAR SIDE

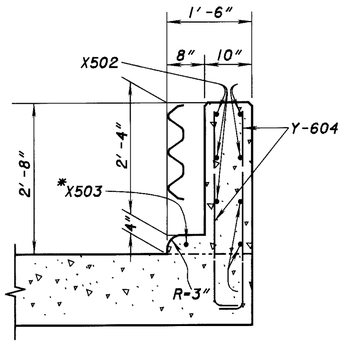

SECTION F-F

* FIELD BEND IF NECESSARY

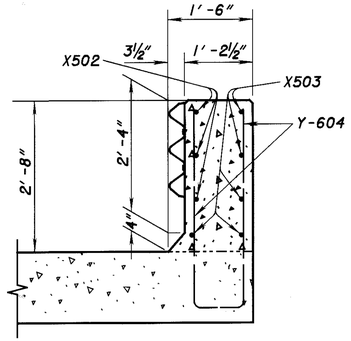

SECTION E-E

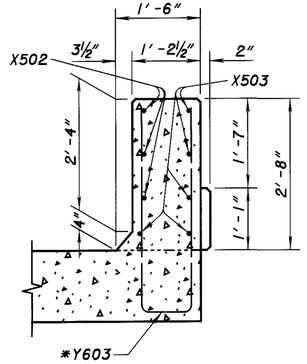

SECTION D-D

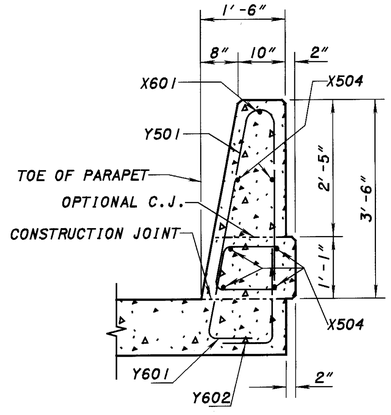

SECTION C-C

Area = 4.26 ft²

DESIGN AGENCY: ODOT CENTRAL OFFICE, OFFICE OF PRODUCTION

DESIGNED	DRAWN	REVIEWED	DATE
TAA	TAA	SER	8-27-99

CHECKED	REVISED	STRUCTURE FILE NUMBER
DFT		5203937L/5203961R

PARAPET DETAILS
MED-71-2090 L/R
I-71 OVER S.R. 3

MED-71-15.78

28 / 31

864 / 940

THIS REINFORCING SCHEDULE IS FOR INFORMATION ONLY.

MARK	NUMBER				LENGTH	WEIGHT	TYPE	DIMENSIONS					
	PIER 1	PIER 2	PIER 3	TOTAL		LB		A	B	C	D	R	INC
	PIERS - MED-71-2090 L (SOUTHBOUND LANE)												
P501	20		20	40	12'-8"	529	STR						
P502	24	20	28	72	12'-4"	926	24	2'-8"	3'-8"			1'-3⅜"	
P503	7	7	7	21	9'-1"	199	2	6'-8"	2'-8"	6'-8"			
P504	2	2	2	6	13'-1"	82	3	2'-8"	3'-9"				
P505	2	2	2	6	15'-3"	95	3	2'-8"	4'-10"				
P506	2	2	2	6	17'-3"	108	3	2'-8"	5'-10"				
P507	39	39	39	117	7'-1"	864	2	2'-9"	1'-10"	2'-9"			
P508		5	5	10	13'-8"	143	STR						
		1 SR		1 SR	8'-3"								
P509		OF		OF	TO	57	STR						1'-4"
		5		5	13'-7"								
P510		5		5	12'-2"	63	STR						
		1 SR		1 SR	6'-8"								
P511		OF		OF	TO	49	STR						1'-4½"
		5		5	12'-2"								
P512		2		2	7'-8"	16	STR						
P601	8	8	8	24	13'-3"	477	STR						
P602	2	2	2	6	11'-3"	101	STR						
P603	2	2	2	6	9'-4"	84	STR						
P604	2	2	2	6	7'-7"	68	STR						
P605	4	4	4	12	5'-10"	105	19	2'-0"	2'-9"	2'-8"			
P801	14		14	28	14'-1"	1053	17	12'-8"					
P802		7		7	13'-7"	253	17	12'-2"					
		1 SR		1 SR	10'-3"			8'-10"					
P803		OF		OF	TO	159	17	TO					10"
		5		5	13'-7"			12'-2"					
P804		1		1	8'-1"	22	17	6'-8"					
P805		1		1	8'-9"	23	17	7'-4"					
P901	6	6	6	18	20'-0"	1224	2	3'-8"	13'-3"	3'-8"			
P1001	32	32	32	96	11'-6"	4751	1	1'-10"	10'-0"				
P1002	32			32	22'-7"	3109	STR						
P1003			32	32	25'-7"	3522	STR						
P1004		32		32	18'-10"	2593	STR						
P1101	22		22	44	15'-2"	3546	17	12'-8"					
P1102	5	5	5	15	34'-8"	2763	STR						
P1103	5	5	5	15	13'-0"	1036	STR						
P1104		12		12	16'-2"	1030	17	13'-8"					
		1 SR		1 SR	12'-9"			10'-3"					
P1105		OF		OF	TO	768	17	TO					4½"
		10		10	16'-2"			13'-8"					
P1106		1		1	10'-8"	57	17	8'-2"					
P1107		1		1	11'-3"	60	17	8'-9"					

MARK	NUMBER				LENGTH	WEIGHT	TYPE	DIMENSIONS					
	PIER 1	PIER 2	PIER 3	TOTAL		LB		A	B	C	D	R	INC
	PIERS - MED-71-2090 R (NORTHBOUND LANE)												
P501	20		20	40	12'-8"	529	STR						
P502	24	20	28	72	12'-4"	926	24	2'-8"	3'-8"			1'-3⅜"	
P503	7	7	7	21	9'-1"	199	2	6'-8"	2'-8"	6'-8"			
P504	2	2	2	6	13'-1"	82	3	2'-8"	3'-9"				
P505	2	2	2	6	15'-3"	95	3	2'-8"	4'-10"				
P506	2	2	2	6	17'-3"	108	3	2'-8"	5'-10"				
P507	39	39	39	117	7'-1"	864	2	2'-9"	1'-10"	2'-9"			
P508		5	5	10	13'-8"	143	STR						
		1 SR		1 SR	8'-3"								
P509		OF		OF	TO	57	STR						1'-4"
		5		5	13'-7"								
P510		5		5	12'-2"	63	STR						
		1 SR		1 SR	6'-8"								
P511		OF		OF	TO	49	STR						1'-4½"
		5		5	12'-2"								
P512		2		2	7'-8"	16	STR						
P601	8	8	8	24	13'-3"	477	STR						
P602	2	2	2	6	11'-3"	101	STR						
P603	2	2	2	6	9'-4"	84	STR						
P604	2	2	2	6	7'-7"	68	STR						
P605	4	4	4	12	5'-10"	105	19	2'-0"	2'-9"	2'-8"			
P801	14		14	28	14'-1"	1053	17	12'-8"					
P802		7		7	13'-7"	253	17	12'-2"					
		1 SR		1 SR	10'-3"			8'-10"					
P803		OF		OF	TO	159	17	TO					10"
		5		5	13'-7"			12'-2"					
P804		1		1	8'-1"	22	17	6'-8"					
P805		1		1	8'-9"	23	17	7'-4"					
P901	6	6	6	18	20'-0"	1224	2	3'-8"	13'-3"	3'-8"			
P1001	32	32	32	96	11'-6"	4751	1	1'-10"	10'-0"				
P1005			32	32	21'-3"	3109	STR						
P1006	32			32	25'-4"	3522	STR						
P1007		32		32	17'-0"	2593	STR						
P1101	22		22	44	15'-2"	3546	17	12'-8"					
P1102	5	5	5	15	34'-8"	2763	STR						
P1103	5	5	5	15	13'-0"	1036	STR						
P1104		12		12	16'-2"	1030	17	13'-8"					
		1 SR		1 SR	12'-9"			10'-3"					
P1105		OF		OF	TO	768	17	TO					4½"
		10		10	16'-2"			13'-8"					
P1106		1		1	10'-8"	57	17	8'-2"					
P1107		1		1	11'-3"	60	17	8'-9"					

DESIGN AGENCY
ODOT CENTRAL OFFICE
OFFICE OF PRODUCTION

DESIGNED TAA
DRAWN TAA
CHECKED DFT
REVISED
REVIEWED SER
DATE 8-27-99
STRUCTURE FILE NUMBER 5203937L/5203961R

REINFORCING STEEL
MED-71-2090 L/R
I-71 OVER S.R. 3

MED-71-15.78

29 / 31

865
940

THIS REINFORCING SCHEDULE IS FOR INFORMATION ONLY.

MARK	NUMBER					LENGTH	WEIGHT	TYPE	DIMENSIONS			
	REAR ABUT. STAGE I	REAR ABUT. STAGE II	FWD. ABUT. STAGE I	FWD. ABUT. STAGE II	TOTAL		LB		A	B	C	INC
ABUTMENTS - MED-71-2090 L (SOUTHBOUND LANE)												
A501	50	58	50	58	216	8'-5"	1897	2	3'-0"	2'-8"	3'-0"	
A502	25	25	25	25	100	7'-11"	826	2	3'-0"	2'-2"	3'-0"	
A503	6				6	23'-5"	146	STR				
A504	6		6		12	34'-9"	435	STR				
A505		2			2	6'-1"	13	STR				
A506	26	11	20		57	16'-9"	996	3	5'-8"	2'-7"		
A507	16		17	6	39	16'-5"	668	2	7'-0"	2'-8"	7'-0"	
A508		12			12	3'-0"	38	STR				
A509		6		6	12	36'-4"	455	STR				
A510				10	10	9'-3"	96	STR				
A511				2	2	12'-9"	27	STR				
A512		10	10		20	7'-6"	156	STR				
A513		4			4	9'-11"	41	STR				
A514		2			2	3'-8"	8	STR				
A515		1			1	4'-9"	5	STR				
A516	10	7	5	8	30	19'-9"	618	2	9'-5"	1'-2"	9'-5"	
A517	4	4	4	4	16	7'-9"	129	3	1'-2"	2'-7"		
	1 SR	1 SR	1 SR	1 SR	4 SR	8'-5"				2'-11"		
A518	OF	OF	OF	OF	OF	TO	161	3	1'-2"	TO		5"
	4	4	4	4	4	10'-11"				4'-2"		
A519	2	2	2	2	8	10'-2"	85	35	2'-0"	3'-4"	4'-10"	
A520	10	7	5	8	30	9'-11"	310	2	4'-6"	1'-2"	4'-6"	
A521		2	2		4	10'-9"	45	STR				
A522		2	4		6	14'-10"	93	STR				
A523	2				2	14'-6"	30	1	2'-0"	12'-8"		
A524	1				1	11'-10"	12	STR				
A525	2				2	10'-10"	24	STR				
A526	1				1	12'-8"	13	STR				
A527				11	11	12'-4"	141	STR				
A528	6				6	9'-3"	58	STR				
A529	2				2	12'-3"	26	STR				
A530	6			4	10	17'-3"	180	STR				
A531				7	7	8'-6"	62	STR				
A532			6		6	8'-5"	53	STR				
A533		2			2	6'-11"	14	STR				
A534			6		6	23'-8"	148	STR				
A535		1			1	5'-4"	6	STR				
A536	27	31	27	31	116	7'-4"	886	2	2'-6"	2'-8"	2'-6"	
A601	26	60	26	60	172	6'-2"	1593	STR				
A801	18		18		36	34'-11"	3357	STR				
A802	4				4	23'-4"	249	STR				
A803		18		18	36	34'-11"	3357	STR				
A804		1			1	4'-0"	11	STR				
A805		3			3	9'-11"	79	STR				
A806	1				1	13'-6"	36	1				
A807	1				1	11'-10"	32	STR				
A808	1				1	10'-10"	29	STR				

MARK	NUMBER					LENGTH	WEIGHT	TYPE	DIMENSIONS			
	REAR ABUT. STAGE I	REAR ABUT. STAGE II	FWD. ABUT. STAGE I	FWD. ABUT. STAGE II	TOTAL		LB		A	B	C	INC
ABUTMENTS - MED-71-2090 L (SOUTHBOUND LANE)												
A809	1				1	12'-8"	34	STR				
A810		1			1	6'-0"	16	STR				
A811		1			1	4'-8"	12	STR				
A812		1			1	5'-4"	14	STR				
A813			4		4	23'-10"	256	STR				
A814				7	7	12'-4"	230	17				
A815			4		4	8'-6"	91	STR				
A816				11	11	8'-7"	252	17				
D801	25	25	25	25	100	4'-3"	1135	18	2'-7"	1'-0"	1'-0"	

DESIGN AGENCY
ODOT CENTRAL OFFICE
OFFICE OF PRODUCTION

REVIEWED SER | DATE 8-27-99 | STRUCTURE FILE NUMBER 5203937L/5203961R

DRAWN TAA | REVISED

DESIGNED TAA | CHECKED DFT

REINFORCING STEEL
MED-71-2090 L/R
I-71 OVER S.R. 3

MED-71-15.78

866/940

THIS REINFORCING SCHEDULE IS FOR INFORMATION ONLY.

MARK	NUMBER REAR ABUT. STAGE I	REAR ABUT. STAGE II	FWD. ABUT. STAGE I	FWD. ABUT. STAGE II	TOTAL	LENGTH	WEIGHT LB	TYPE	DIMENSIONS A	B	C	INC
ABUTMENTS - MED-71-2090 R (NORTHBOUND LANE)												
A501	50	58	50	58	216	8'-5"	1897	2	3'-0"	2'-8"	3'-0"	
A502	25	25	25	25	100	7'-11"	826	2	3'-0"	2'-2"	3'-0"	
A503	6				6	23'-5"	146	STR				
A504	6		6		12	34'-9"	435	STR				
A505		2			2	6'-1"	13	STR				
A506	26	11	20		57	16'-9"	996	3	5'-8"	2'-7"		
A507	16		17	6	39	16'-5"	668	2	7'-0"	2'-8"	7'-0"	
A508				12	12	3'-0"	38	STR				
A509		6		6	12	36'-4"	455	STR				
A510				10	10	9'-3"	96	STR				
A511				2	2	12'-9"	27	STR				
A512		10	10		20	7'-6"	156	STR				
A513		4			4	9'-11"	41	STR				
A514		2			2	3'-8"	8	STR				
A515		1			1	4'-9"	5	STR				
A516	10	7	5	8	30	19'-9"	618	2	9'-5"	1'-2"	9'-5"	
A517	4	4	4	4	16	7'-9"	129	3	1'-2"	2'-7"		
	1 SR	1 SR	1 SR	1 SR	4 SR	8'-5"				2'-11"		
A518	0F	0F	0F	0F	0F	TO	161	3	1'-2"	TO		5"
	4	4	4	4	4	10'-11"				4'-2"		
A519	2	2	2	2	8	10'-2"	85	29	2'-0"	3'-4"	4'-10"	
A520	10	7	5	8	30	9'-11"	310	2	4'-6"	1'-2"	4'-6"	
A521		2	2		4	10'-9"	45	STR				
A522		2	4		6	14'-10"	93	STR				
A523	2				2	14'-6"	30	1	2'-0"	12'-8"		
A524	1				1	11'-10"	12	STR				
A525	2				2	10'-10"	24	STR				
A526	1				1	12'-8"	13	STR				
A527				11	11	12'-4"	141	STR				
A528	6				6	9'-3"	58	STR				
A529	2				2	12'-3"	26	STR				
A530	6			4	10	17'-3"	180	STR				
A531				7	7	8'-6"	62	STR				
A532			6		6	8'-5"	53	STR				
A533		2			2	6'-11"	14	STR				
A534			6		6	23'-8"	148	STR				
A535		1			1	5'-4"	6	STR				
A536	27	31	27	31	116	7'-4"	886	2	2'-6"	2'-8"	2'-6"	
A601	26	60	26	60	172	6'-2"	1593	STR				
A801	18		18		36	34'-11"	3357	STR				
A802	4				4	23'-4"	249	STR				
A803		18		18	36	34'-11"	3357	STR				
A804		1			1	4'-0"	11	STR				
A805		3			3	9'-11"	79	STR				
A806	1				1	13'-6"	36	1				
A807	1				1	11'-10"	32	STR				
A808	1				1	10'-10"	29	STR				

MARK	NUMBER REAR ABUT. STAGE I	REAR ABUT. STAGE II	FWD. ABUT. STAGE I	FWD. ABUT. STAGE II	TOTAL	LENGTH	WEIGHT LB	TYPE	DIMENSIONS A	B	C	INC
ABUTMENTS - MED-71-2090 R (NORTHBOUND LANE)												
A809	1				1	12'-8"	34	STR				
A810		1			1	6'-0"	16	STR				
A811		1			1	4'-8"	12	STR				
A812		1			1	5'-4"	14	STR				
A813			4		4	23'-10"	256	STR				
A814				7	7	13'-4"	230	17	12'-4"			
A815			4		4	8'-6"	91	STR				
A816				11	11	9'-7"	252	17	8'-7"			
D801	25	25	25	25	100	4'-3"	1135	18	2'-7"	1'-0"	1'-0"	

TYPE-1

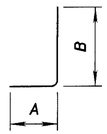

TYPE-2

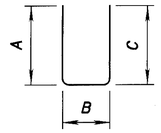

TYPE-3

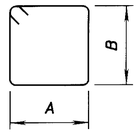

TYPE-18

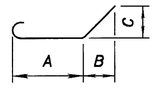

TYPE-17

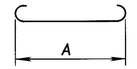

TYPE-19

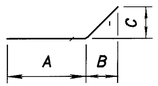

TYPE-24

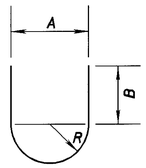

TYPE-35

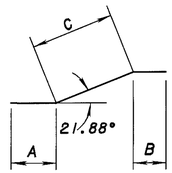

BENDING DIAGRAMS

NOTES

ALL REINFORCING STEEL SHALL BE EPOXY COATED.

THE BAR SIZE IS INDICATED IN THE BAR MARK. THE FIRST DIGIT INDICATES THE BAR SIZE. FOR EXAMPLE, AN A501 IS A #5 BAR. THE DIMENSIONS SHOWN ARE OUT TO OUT UNLESS OTHERWISE INDICATED. "R" INDICATES THE INSIDE RADIUS.

REIFORCING STEEL MAY REQUIRE FIELD CUTTING OR BENDING TO BE PROPERLY FITTED. PAYMENT SHALL BE INCLUDED WITH THE ASSOCIATED CONCRETE ITEM.

DESIGN AGENCY
ODOT CENTRAL OFFICE
OFFICE OF PRODUCTION

REVIEWED SER
DATE 8-27-99
STRUCTURE FILE NUMBER 5203937L/5203961R

DRAWN TAA
REVISED

DESIGNED TAA
CHECKED DFT

REINFORCING STEEL
MED-71-2090 L/R
I-71 OVER S.R. 3

MED-71-15.78

31/31

867
940

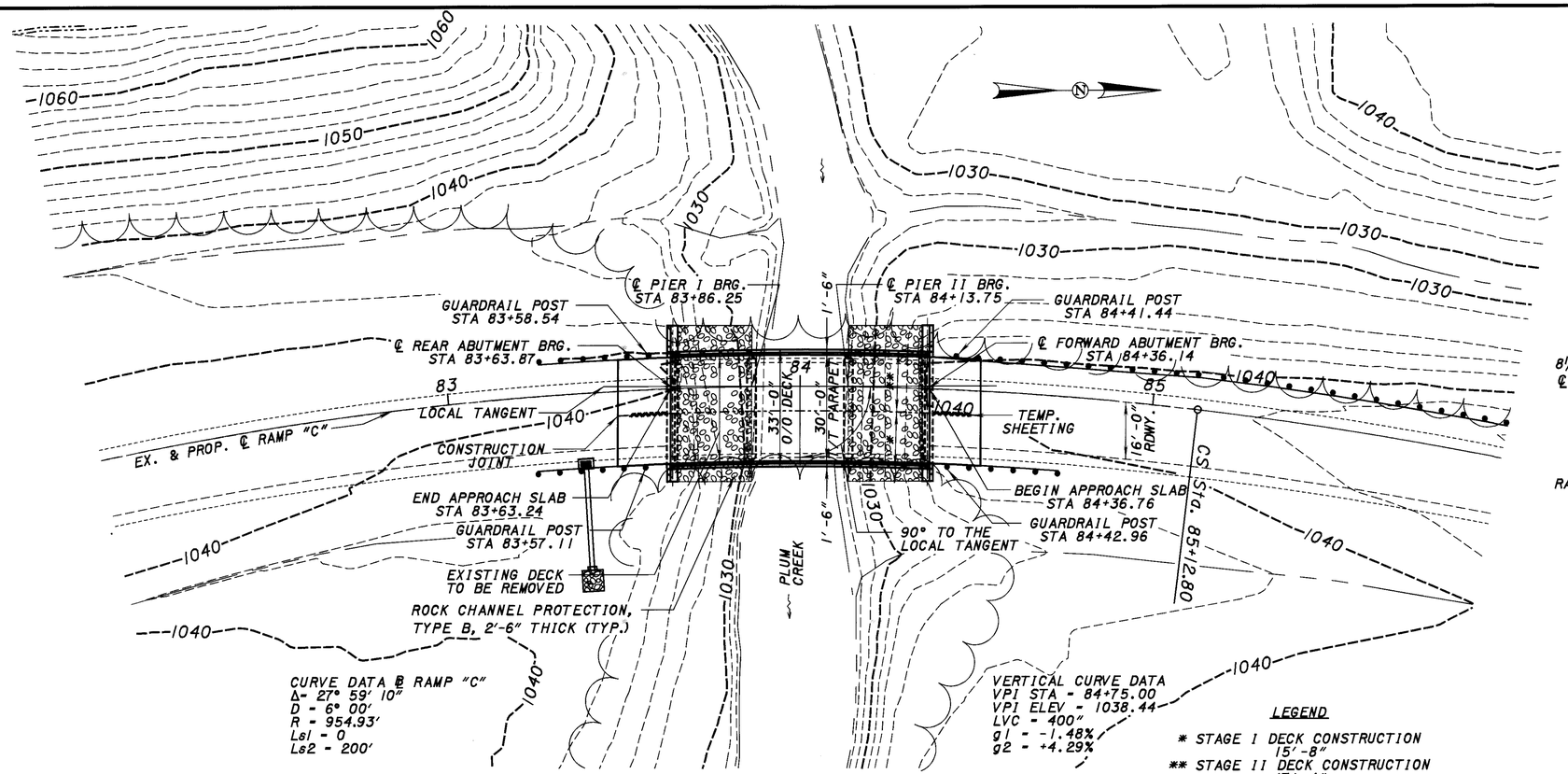

PLAN

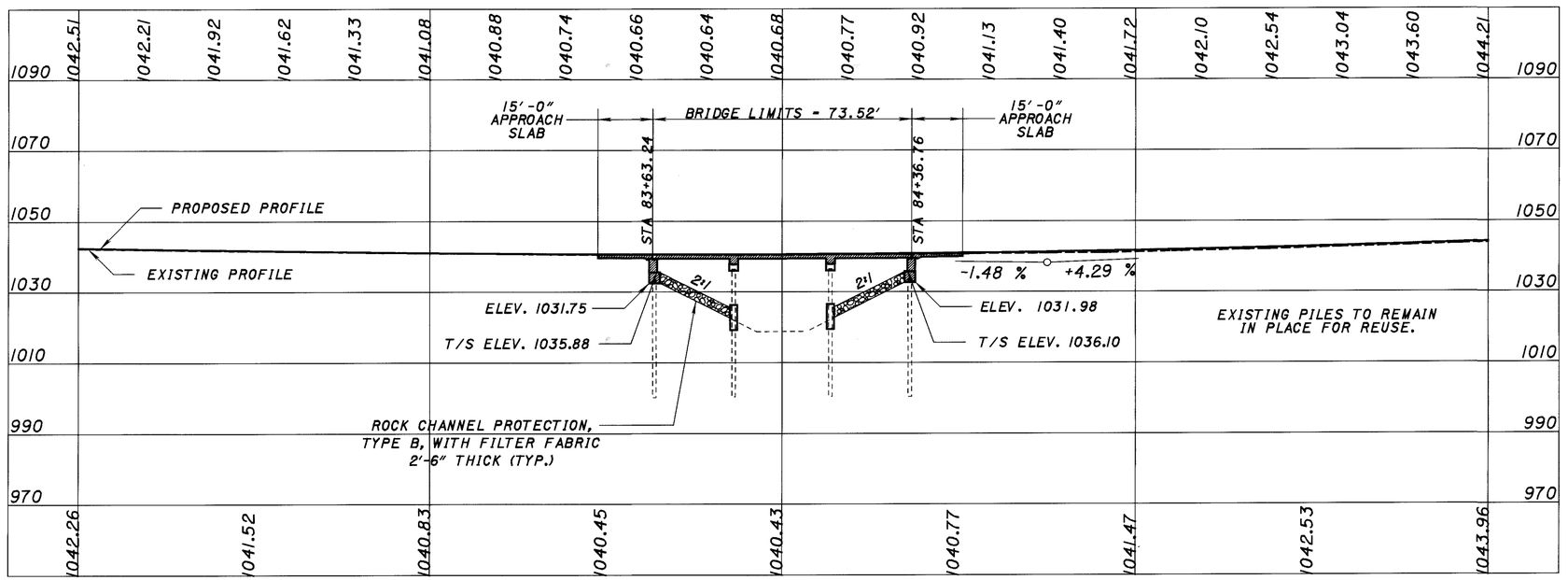

PROFILE

BENCHMARK DATA

BM #1 - STATION 1110+35.99 IR-71 ELEVATION - 1069.77
ODOT DISC IN HEADWALL, STAMPED

TRAFFIC DATA

CURRENT YEAR ADT (2000) - 6180
DESIGN YEAR ADT (2020) - 8960
DESIGN YEAR ADTT (2020) - 450

NOTES:

1. EARTHWORK LIMITS SHOWN ARE APPROXIMATE. ACTUAL SLOPES SHALL CONFORM TO PLAN CROSS-SECTIONS

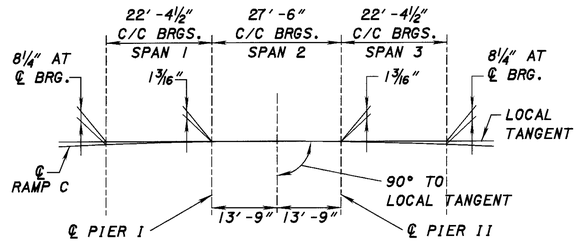

TANGENT SCHEMATIC

EXISTING STRUCTURE

TYPE: CONTINUOUS SLAB BRIDGE WITH CAPPED PILE PIERS

SPANS: 22'-0"±, 27'-6"±, 22'-0"± C/C BRGS.

ROADWAY: 25'-10"± F/F SAFETY CURBS

LOADING: CF-400 (57)

SKEW: NONE

WEARING SURFACE: ASPHALT CONCRETE

APPROACH SLABS: 25'-0"± LONG (AS-1-54)

ALIGNMENT: 6°00'± CURVE RIGHT

SUPERELEVATION: 0.063± FT./FT.

DATE BUILT: 1964

SFN: 5203996

PROPOSED STRUCTURE

TYPE: CONTINUOUS SLAB BRIDGE WITH CAPPED PILE PIERS

SPANS: 22'-4½"±, 27'-6"±, 22'-4½"± C/C BRGS.

ROADWAY: 30'-0"± T/T PARAPETS

LOADING: HS-20-44 AND ALTERNATE MILITARY LOADING

SKEW: NONE

WEARING SURFACE: 1" MONOLITHIC CONCRETE

APPROACH SLABS: 15' LONG, AS-1-81; 30'-0" T/T CURB

ALIGNMENT: 6°00'± CURVE RIGHT

SUPERELEVATION: 0.063± FT./FT.

COORDINATES: LAT. N 41° 11' 39"
LONG. W 81° 47' 35"

DESIGN AGENCY: ODOT CENTRAL OFFICE
OFFICE OF PRODUCTION

DATE: 9-20-99
REVIEWED: DFT
STRUCTURE FILE NUMBER: 5203996

DRAWN: BKL
REVISED:

DESIGNED: BKL
CHECKED: RJH

MEDINA COUNTY
STA. 83+63.24
STA. 84+36.76

SITE PLAN
MED-71-2092 W, RAMP "C"
OVER PLUM CREEK, S.R. 3 INTERCHANGE

MED-71-15.78

1 / 18

868
940

MED-71-2092 W				ESTIMATED QUANTITIES	ABUTMENTS		PIERS	SUPER.	GEN.	SEE SHEET NO.
ITEM	EXTENSION	TOTAL	UNIT	DESCRIPTION	REAR	FORWARD				
202	11203	LUMP		PORTIONS OF STRUCTURE REMOVED, OVER 20 FOOT SPAN, AS PER PLAN	LUMP	LUMP	LUMP	LUMP		3
503	11100	LUMP		COFFERDAMS, CRIBS AND SHEETING					LUMP	
503	21301	LUMP		UNCLASSIFIED EXCAVATION, AS PER PLAN	LUMP	LUMP				3
SPECIAL	50771200	156	LIN FT	PILE ENCASEMENT			156			
512	44400	4	SQ YD	TYPE B WATERPROOFING	2	2				
SPECIAL	51267510	291	SQ YD	SEALING OF CONCRETE SURFACES (EPOXY-URETHANE)	25	25	60*	181		
516	13200	18	SQ FT	1/2" PREFORMED EXPANSION JOINT FILLER	9	9				
518	12200	3	EACH	SCUPPER, INCLUDING SUPPORTS				3		
518	21231	LUMP		POROUS BACKFILL WITH FILTER FABRIC, AS PER PLAN	LUMP	LUMP				3
518	40000	90	LIN FT	6" PERFORATED CORRUGATED PLASTIC PIPE	45	45				
518	40010	60	LIN FT	6" NON-PERFORATED CORRUGATED PLASTIC PIPE, INCLUDING SPECIALS	30	30				
601	32104	195	CU YD	ROCK CHANNEL PROTECTION, TYPE B WITH FABRIC FILTER					195	
842	42501	4	CU YD	CLASS C CONCRETE, PIER CAP, AS PER PLAN			4			3
842	43501	60	CU YD	CLASS C CONCRETE, ABUTMENT INCLUDING FOOTING, AS PER PLAN	30	30				3
844	48001	113	CU YD	HIGH PERFORMANCE CONCRETE SUPERSTRUCTURE (DECK), AS PER PLAN, MIX 4				113		3
844	48021	23	CU YD	HIGH PERFORMANCE CONCRETE SUPERSTRUCTURE (PARAPET), AS PER PLAN, MIX 4			23			3
844	49000	LUMP		HIGH PERFORMANCE CONCRETE TRIAL MIX				LUMP		

* EXPOSED SURFACES OF PIER CAP, NEW AND EXISTING, TO BE SEALED.

DESIGN AGENCY
ODOT CENTRAL OFFICE
OFFICE OF PRODUCTION

REVISED DFT DATE 9-20-99
STRUCTURE FILE NUMBER 5203996

DRAWN BKL REVISED
DESIGNED BKL CHECKED RJH

ESTIMATED QUANTITIES

BRIDGE NO. MED-71-2092 W
RAMP "C" OVER PLUM CREEK, S.R. 3 INTERCHANGE

MED-71-15.78

869/940

GENERAL NOTES

STANDARD DRAWINGS AND SPECIFICATIONS:

REFERENCE SHALL BE MADE TO STANDARD DRAWINGS:

AS-1-81	REVISED 09-15-94
SBR-1-99	DATED 01-12-99
PCB-1-91	REVISED 07-06-99
CS-1-93	DATED 06-30-95

AND TO SUPPLEMENTAL SPECIFICATIONS:

842	DATED 01-06-99
844	DATED 01-06-99
899	DATED 10-21-98
911	DATED 07-10-97
954	DATED 09-09-97

DESIGN SPECIFICATIONS:

THIS STRUCTURE CONFORMS TO "STANDARD SPECIFICATIONS FOR HIGHWAY BRIDGES" ADOPTED BY THE AMERICAN ASSOCIATION OF STATE HIGHWAY AND TRANSPORTATION OFFICIALS, 1996 INCLUDING THE 1997 AND 1998 INTERIM SPECIFICATIONS AND THE ODOT DESIGN MANUAL.

DESIGN LOADING:

HS20-44, CASE I AND THE ALTERNATE MILITARY LOADING.

DESIGN DATA:

HIGH PERFORMANCE CONCRETE - COMPRESSIVE STRENGTH 4500 PSI (SUPERSTRUCTURE)
ITEM 842 CONCRETE - COMPRESSIVE STRENGTH 4000 PSI (SUBSTRUCTURE)

REINFORCING STEEL - ASTM A615, A616 OR A617 GRADE 60 MINIMUM YIELD STRENGTH 60 Ksi. SPIRAL REINFORCEMENT MAY BE PLAIN BARS, ASTM A82 OR A615

DECK PROTECTION METHOD - EPOXY COATED REINFORCING STEEL AND 2½" CONCRETE COVER AND HIGH PERFORMANCE CONCRETE.

MONOLITHIC WEARING SURFACE IS ASSUMED, FOR DESIGN PURPOSES, TO BE 1" THICK.

EXISTING STRUCTURE VERIFICATION:

DETAILS AND DIMENSIONS SHOWN ON THESE PLANS PERTAINING TO THE EXISTING STRUCTURE HAVE BEEN OBTAINED FROM PLANS OF THE EXISTING STRUCTURE AND FROM FIELD OBSERVATIONS AND MEASUREMENTS. CONSEQUENTLY, THEY ARE INDICATIVE OF THE EXISTING STRUCTURE AND THE PROPOSED WORK BUT THEY SHALL BE CONSIDERED TENTATIVE AND APPROXIMATE. THE CONTRACTOR IS REFERRED TO CMS SECTIONS 102.05 AND 105.02.

CONTRACT BID PRICES SHALL BE BASED UPON A RECOGNITION OF THE UNCERTAINTIES DESCRIBED ABOVE AND UPON A PREBID EXAMINATION OF THE EXISTING STRUCTURE BY THE CONTRACTOR. HOWEVER, ALL PROJECT WORK SHALL BE BASED UPON ACTUAL DETAILS AND DIMENSIONS WHICH HAVE BEEN VERIFIED BY THE CONTRACTOR IN THE FIELD.

EXISTING BRIDGE PLANS MAY BE INSPECTED IN THE OFFICE OF STRUCTURAL ENGINEERING IN COLUMBUS, OHIO OR AT THE ODOT DISTRICT THREE OFFICE IN ASHLAND, OHIO.

TRAFFIC MAINTENANCE:

SEE ROADWAY PLANS FOR ADDITIONAL TRAFFIC NOTES AND DETAILS.

ITEM 202 PORTIONS OF STRUCTURE REMOVED OVER 20 FOOT SPAN, AS PER PLAN:

PORTION OF THE STRUCTURE REMOVED, AS PER PLAN, SHALL INCLUDE THE ELEMENTS INDICATED IN THE PLANS AND GENERAL NOTES AND ARE NOT SEPARATELY LISTED FOR PAYMENT, EXCEPT FOR WEARING COURSE REMOVAL. ITEMS TO BE REMOVED INCLUDE ALL EXISTING MATERIALS BEING REPLACED BY NEW CONSTRUCTION AND MISCELLANEOUS ITEMS THAT ARE NOT SHOWN TO BE INCORPORATED INTO THE FINAL CONSTRUCTION AND ARE DIRECTED TO BE REMOVED BY THE ENGINEER. THE USE OF EXPLOSIVES, HEADACHE BALLS AND/OR HOE-RAMS WILL NOT BE PERMITTED. THE METHOD OF REMOVAL AND THE WEIGHT OF HAMMER SHALL BE APPROVED BY THE ENGINEER. ALL WORK SHALL BE DONE IN A MANNER THAT WILL NOT CUT, ELONGATE OR DAMAGE THE EXISTING REINFORCING STEEL TO BE PRESERVED.

PROTECTION OF TRAFFIC:

PRIOR TO DEMOLITION OF ANY PORTIONS OF THE EXISTING SUPERSTRUCTURE, THE CONTRACTOR SHALL SUBMIT PLANS FOR THE PROTECTION OF TRAFFIC (VEHICULAR, PEDESTRIAN, BOAT, ETC.) ADJACENT TO AND/OR UNDER THE STRUCTURE TO THE ENGINEER FOR APPROVAL. THESE PLANS SHALL INCLUDE PROVISIONS FOR ANY DEVICES AND STRUCTURES THAT MAY BE NECESSARY TO ENSURE SUCH PROTECTION. TEMPORARY VERTICAL CLEARANCES SPECIFIED IN THE PROPOSAL SHALL BE MAINTAINED AT ALL TIMES EXCEPT WHERE OTHERWISE APPROVED BY THE ENGINEER.

CUT LINE CONSTRUCTION JOINT PREPARATION:

SAW CUT BOUNDARIES OF PROPOSED CONCRETE REMOVALS 1" DEEP. REMOVE CONCRETE TO A ROUGH SURFACE. WHERE PRACTICABLE, THE EXISTING REINFORCING STEEL REQUIRED IN THE PLANS SHALL BE LEFT IN PLACE. INSTALL DOWEL BARS IF SPECIFIED. PRIOR TO CONCRETE PLACEMENT ABRASIVELY CLEAN JOINT SURFACE AND EXPOSED REINFORCEMENT TO REMOVE LOOSE AND DISINTEGRATED CONCRETE AND LOOSE RUST. THE JOINT SURFACE AND EXPOSED REINFORCEMENT SHALL BE THOROUGHLY CLEANED OF ALL DIRT, DUST OR OTHER FOREIGN MATERIAL BY THE USE OF WATER, AIR UNDER PRESSURE, OR OTHER METHODS THAT PRODUCE SATISFACTORY RESULTS. CONCRETE BONDING SURFACES SHALL BE WET WITHOUT FREE FREE WATER AS CONCRETE IS PLACED.

SUBSTRUCTURE CONCRETE REMOVAL:

SUBSTRUCTURE CONCRETE REMOVAL SHALL BE BY MEANS OF APPROVED PNEUMATIC HAMMERS EMPLOYING POINTED AND BLUNT CHISEL TOOLS. HYDRAULIC HOE-RAM TYPE HAMMERS WILL NOT BE PERMITTED. THE WEIGHT OF THE HAMMER SHALL NOT BE MORE THAN 35 POUNDS FOR REMOVAL WITHIN 18 INCHES OF PORTIONS TO BE PRESERVED. OUTSIDE THE 18 INCH LIMIT, A HAMMER HEAVIER THAN 35 POUNDS, BUT NOT TO EXCEED 90 POUNDS, MAY BE USED AT THE APPROVAL OF THE ENGINEER. PNEUMATIC HAMMERS SHALL NOT BE PLACED IN DIRECT CONTACT WITH REINFORCING STEEL THAT IS TO BE RETAINED IN THE REBUILT STRUCTURE. ALL WORK SHALL BE PAID FOR UNDER ITEM 202 - PORTION OF STRUCTURES REMOVED, AS PER PLAN.

ITEM 503, UNCLASSIFIED EXCAVATION, AS PER PLAN:

UNCLASSIFIED EXCAVATION SHALL BE IN ACCORDANCE WITH 503 EXCEPT THAT THE BACKFILL MATERIAL BEHIND THE ABUTMENTS SHALL BE 203 MATERIAL PLACED IN 6" LIFTS. EXCAVATION AT ABUTMENTS IN ADDITION TO THAT NECESSARY TO REMOVE PORTIONS OF THE EXISTING STRUCTURE SHALL BE INCLUDED IN THE LUMP SUM PRICE BID FOR ITEM 503, UNCLASSIFIED EXCAVATION, AS PER PLAN, FOR PAYMENT.

ITEM 518 - POROUS BACKFILL WITH FILTER FABRIC, AS PER PLAN:

POROUS BACKFILL SHALL BE #57 GRAVEL ONLY.

ITEM 842 CLASS C CONCRETE, FOOTING, PIER AND ABUTMENT, AS PER PLAN:

THE COARSE AGGREGATE SHALL BE NO. 8 LIMESTONE. THESE ITEMS SHALL INCLUDE THE COST OF THE REINFORCING STEEL.

ITEM 844 HIGH PERFORMANCE CONCRETE, SUPERSTRUCTURE (DECK), AS PER PLAN, MIX 4:
ITEM 844 HIGH PERFORMANCE CONCRETE, SUPERSTRUCTURE (PARAPET), AS PER PLAN, MIX 4:

THE DESIGN MIX SHALL BE MIX NO. 4 LIMESTONE. THE OPTION OF SLIPFORM CONSTRUCTION OF THE BRIDGE PARAPET IS NOT PERMITTED. THIS ITEM SHALL INCLUDE THE COST OF THE REINFORCING STEEL.

REPLACEMENT OF EXISTING REINFORCING STEEL:

ANY EXISTING REINFORCING BARS WHICH ARE TO BE INCORPORATED INTO THE NEW WORK AND WHICH ARE MADE UNUSABLE BY THE CONTRACTOR'S CONCRETE REMOVAL OPERATIONS SHALL BE REPLACED WITH NEW STEEL AT THE CONTRACTOR'S COST. ANY EXISTING REINFORCING BARS DEEMED BY THE ENGINEER TO BE UNUSABLE BECAUSE OF CORROSION SHALL BE REPLACED WITH NEW STEEL. AN ALLOWANCE OF 200 POUNDS SHALL BE INCLUDED IN THE COST OF THE APPROPRIATE PIER CONCRETE BID ITEM.

REINFORCING STEEL:

NEW REINFORCING STEEL MAY REQUIRE FIELD CUTTING OR BENDING TO BE PROPERLY FITTED. PAYMENT SHALL BE INCLUDED UNDER ITEM 844 HIGH PERFORMANCE CONCRETE.

ITEM SPECIAL - SEALING OF CONCRETE SURFACES (EPOXY-URETHANE):

EPOXY-URETHANE SHALL BE THE "BUFF" COLOR MEETING FEDERAL COLOR STANDARD NO. 37722 AS PER THE DETAILS IN THE PLAN. FOR ADDITIONAL NOTES SEE THE NOTE IN THE PROPOSAL "ITEM SPECIAL - SEALING OF CONCRETE SURFACES".

SURVEY DISC ON STRUCTURE:

THE CONTRACTOR SHALL NOTIFY THE ENGINEER AT LEAST ONE (1) WEEK IN ADVANCE OF POURING THE CONCRETE FOR COMPLETION OF THE ABUTMENT. THE ENGINEER WILL PROVIDE THE CONTRACTOR ONE (1) SURVEY DISC FOR EACH STRUCTURE (OBTAINED FROM THE DISTRICT SURVEYOR) WHICH THE CONTRACTOR SHALL PLACE IN THE SURFACE OF THE FRESH CONCRETE. THE LOCATION OF THE DISC SHALL BE ON THE ABUTMENT, AND ON A FLAT, HORIZONTAL SURFACE BEYOND THE EDGE OF DECK AND PARAPET. THE BENCHMARK SHALL BE ACCESSIBLE TO A SURVEYOR'S ROD WITHOUT ANY OBSTRUCTIONS. COST OF THIS WORK IS CONSIDERED INCIDENTAL TO THE CONCRETE BID ITEM.

DESIGN AGENCY: ODOT CENTRAL OFFICE, OFFICE OF PRODUCTION
DESIGNED: BKL | DRAWN: BKL | CHECKED: RJH | REVISED: | REVIEWED: DFT | DATE: 9-20-99
STRUCTURE FILE NUMBER: 5203996

GENERAL NOTES
MED-71-2092 W
RAMP "C" OVER PLUM CREEK, S.R. 3 INTERCHANGE

MED-71-15.78

870
940

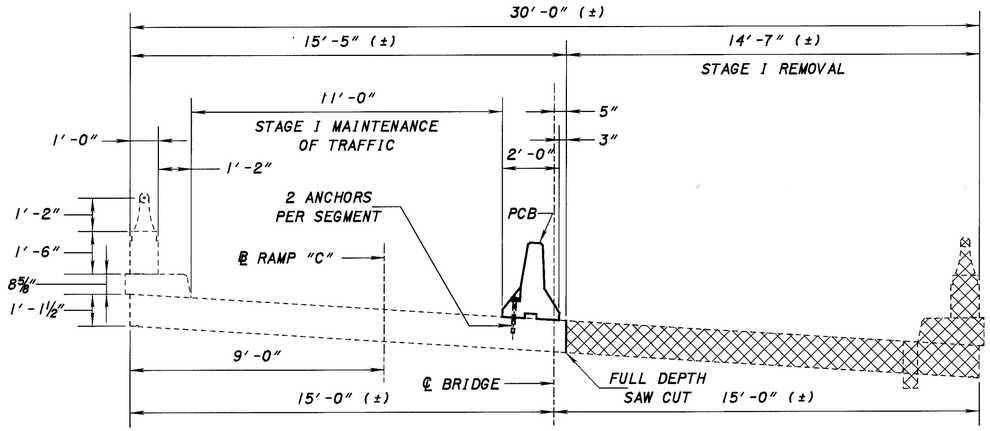

STAGE I REMOVAL

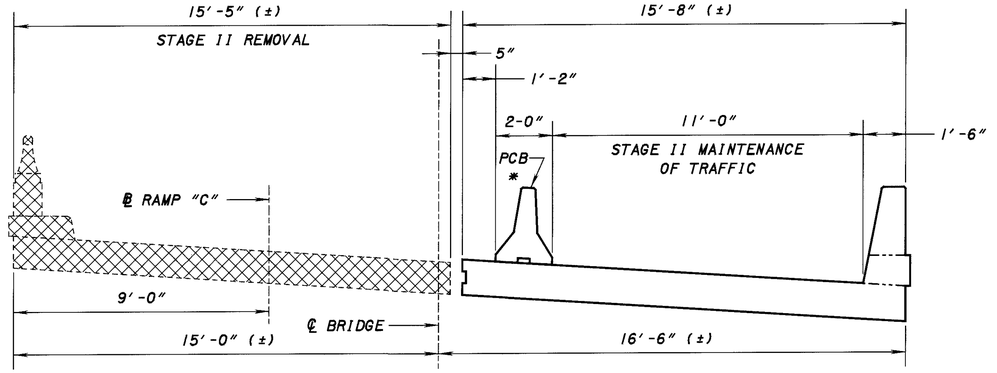

STAGE II REMOVAL

* BARRIER UNANCHORED

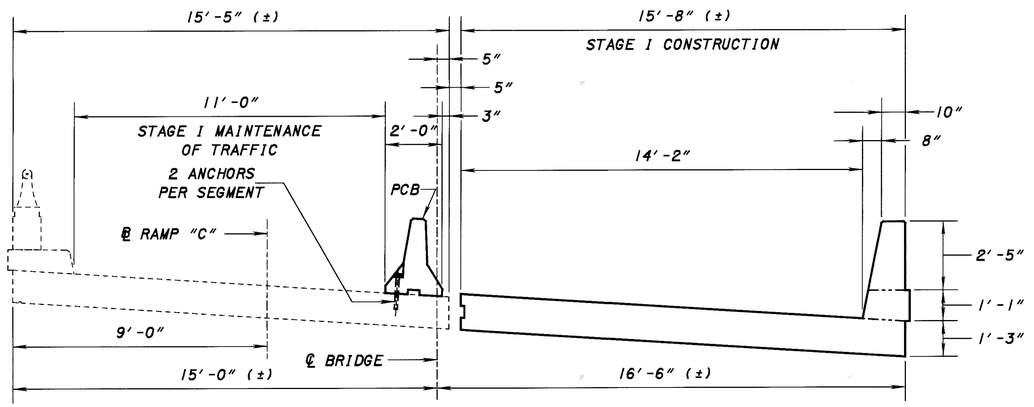

STAGE I CONSTRUCTION

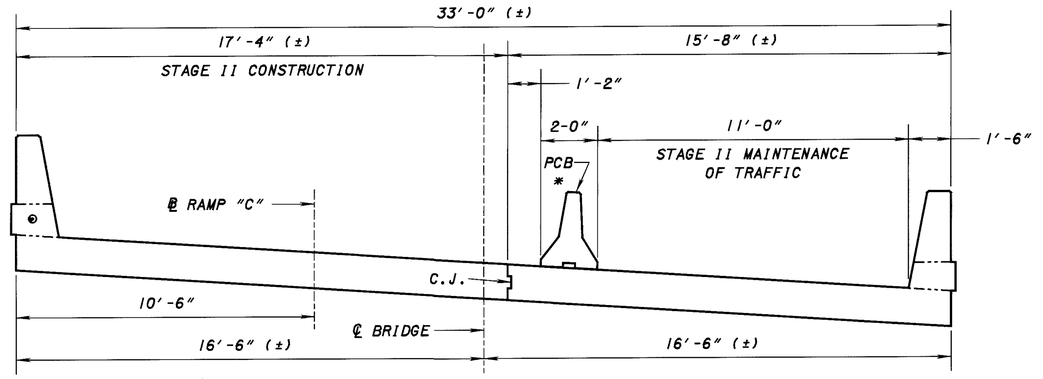

STAGE II CONSTRUCTION

* BARRIER UNANCHORED

PORTION OF STRUCTURE TO BE REMOVED

DESIGN AGENCY
ODOT CENTRAL OFFICE
OFFICE OF PRODUCTION

REVISED DFT DATE 9-20-99
STRUCTURE FILE NUMBER 5203996

DRAWN BKL REVISED
DESIGNED BKL CHECKED RJH

STAGE CONSTRUCTION DETAILS
MED-71-2092 W
RAMP "C" OVER PLUM CREEK, S.R. 3 INTERCHANGE

MED-71-15.78

4 / 18

871
940

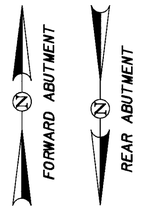

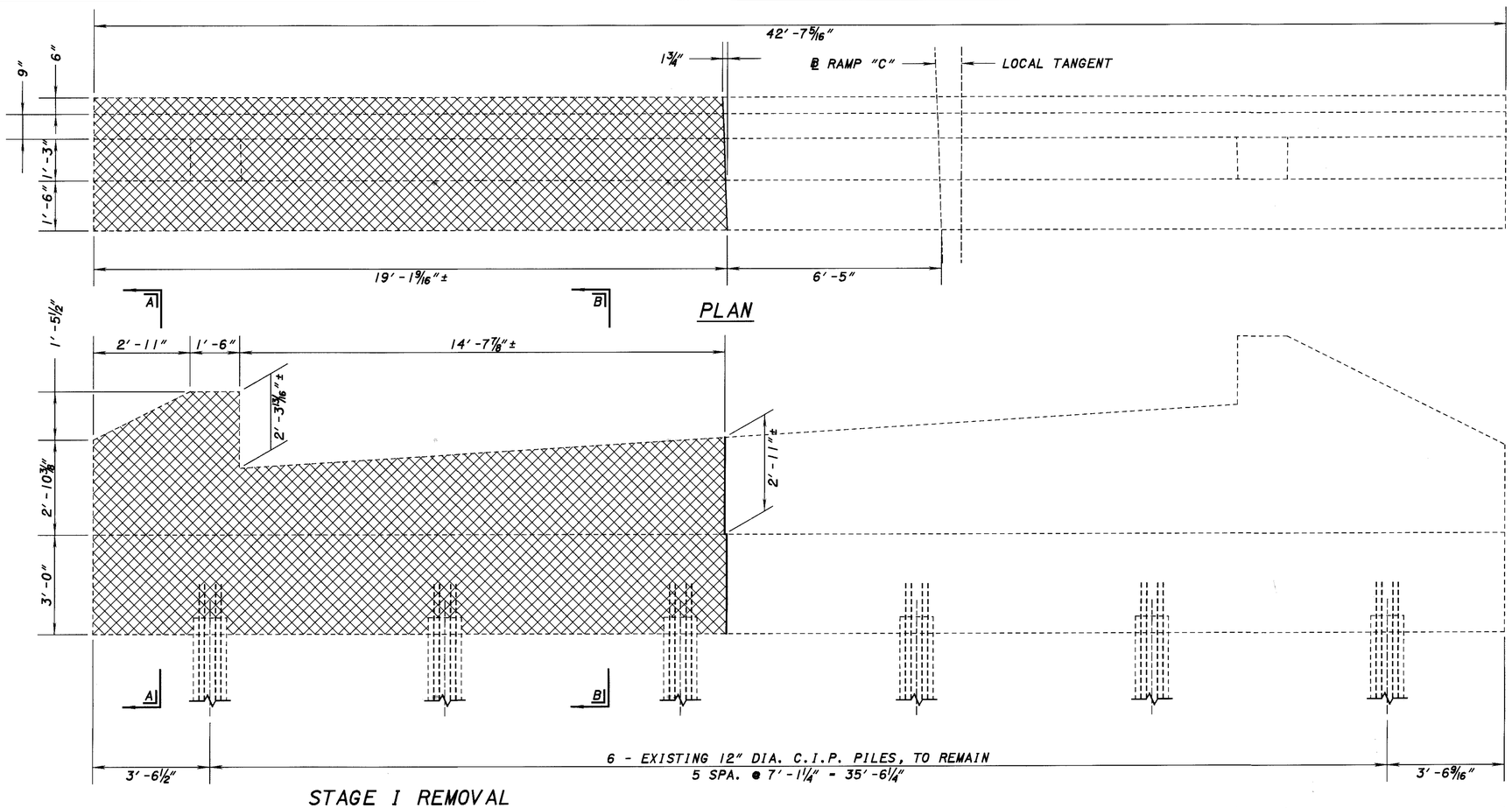

REAR ABUTMENT SHOWN
FORWARD ABUTMENT IS
OPPOSITE HAND

FOR SECTION A-A & B-B
SEE SHEET 7/18

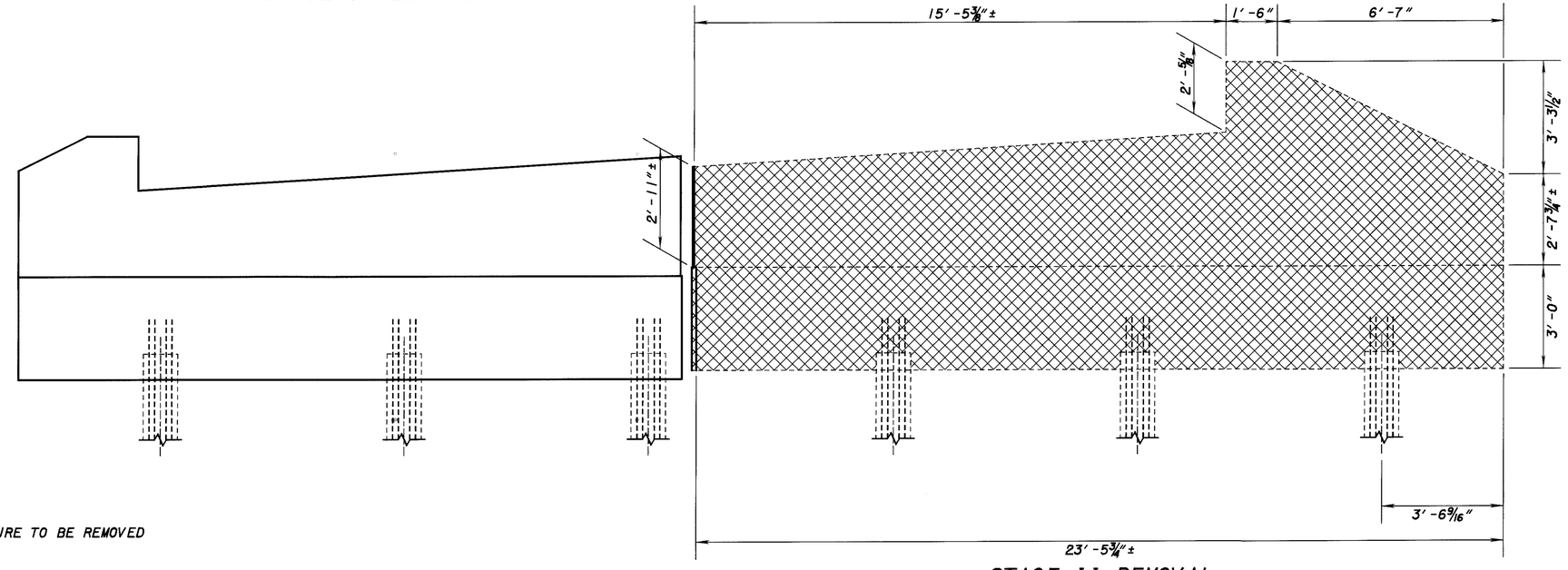

PORTION OF STRUCTURE TO BE REMOVED

ELEVATION

STAGE II REMOVAL

DESIGN AGENCY
ODOT CENTRAL OFFICE
OFFICE OF PRODUCTION

REVISED	DATE
DFT	9-20-99

STRUCTURE FILE NUMBER
5203996

DESIGNED	DRAWN	REVISED
BKL	BKL	
CHECKED	REVISED	
RJH		

ABUTMENT DEMOLITION PLAN

MED-71-2092 W

RAMP "C" OVER PLUM CREEK, S.R. 3 INTERCHANGE

MED-71-15.78

5/18

872
940

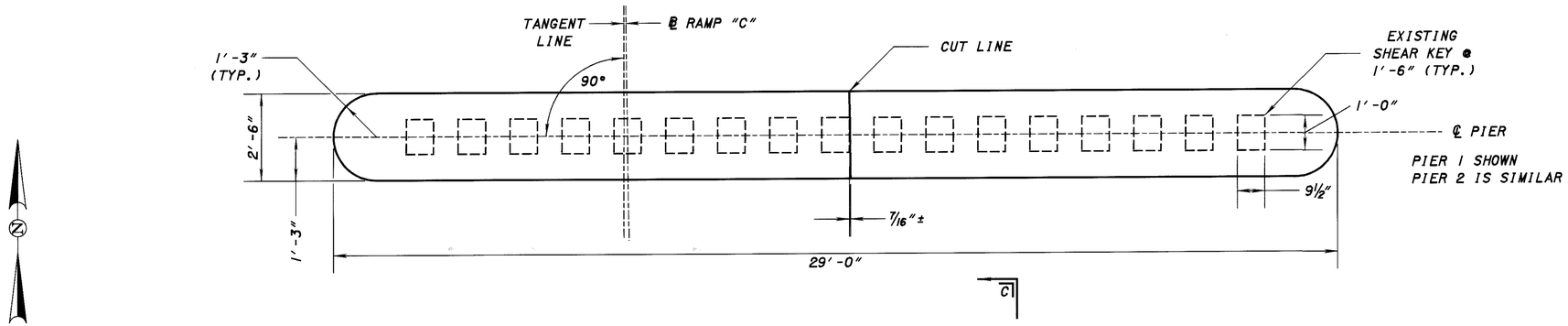

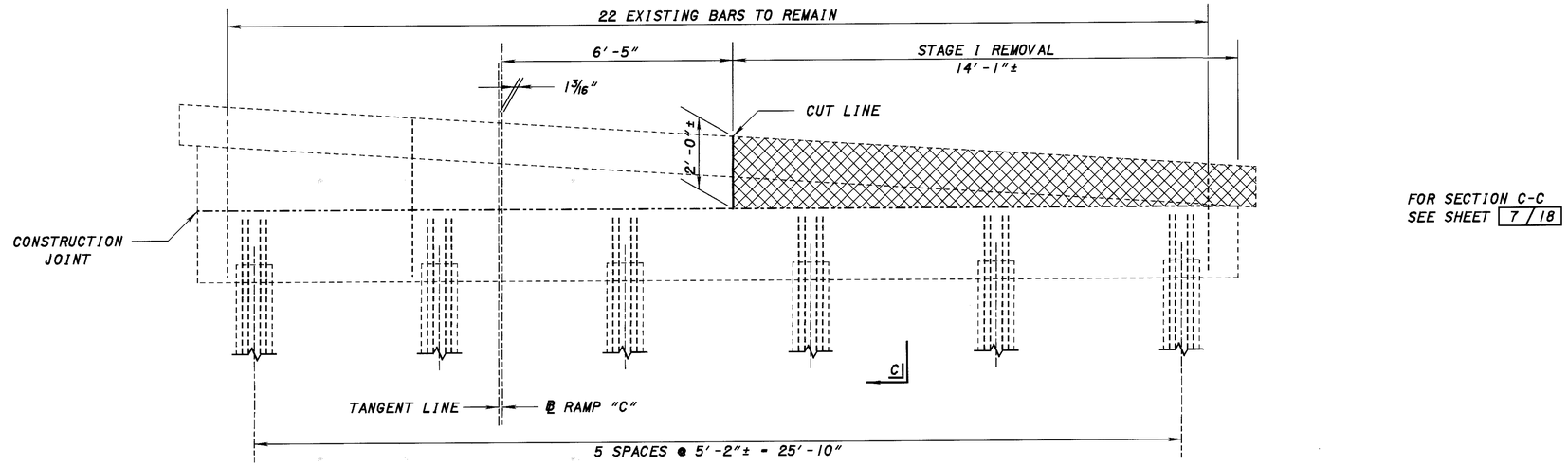

FOR SECTION C-C
SEE SHEET 7/18

STAGE I REMOVAL

PORTION OF STRUCTURE TO BE REMOVED

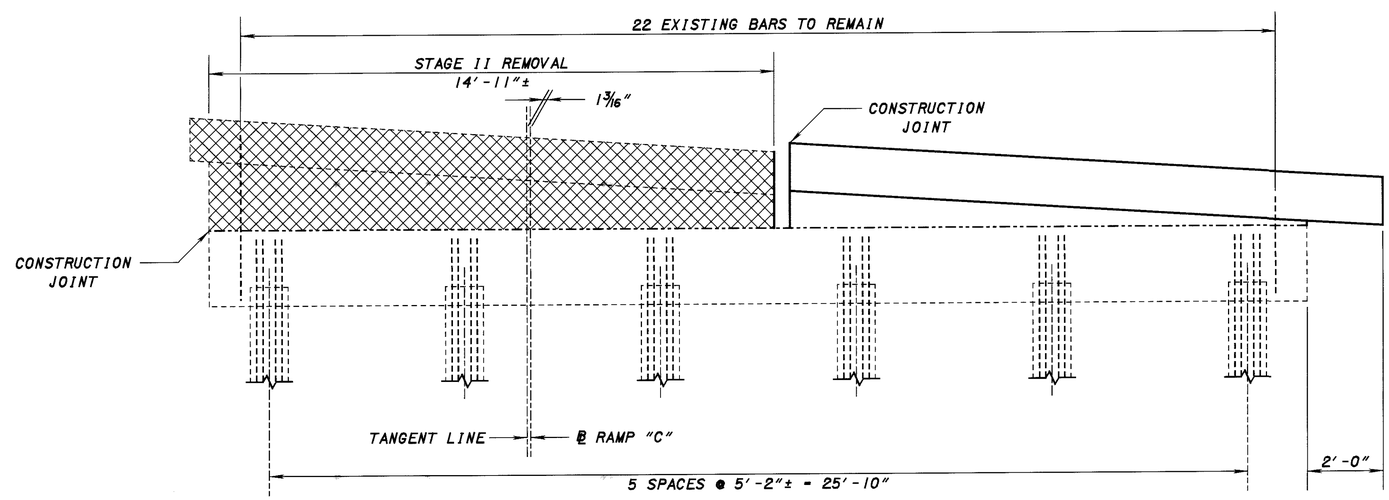

STAGE II REMOVAL

DESIGN AGENCY
ODOT CENTRAL OFFICE
OFFICE OF PRODUCTION

DESIGNED	DRAWN	REVIEWED	DATE
BKL	BKL	DFT	9-20-99
CHECKED	REVISED	STRUCTURE FILE NUMBER	
RJH		5203996	

PIER DEMOLITION PLAN
MED-71-2092 W
RAMP "C" OVER PLUM CREEK, S.R. 3 INTERCHANGE

MED-71-15.78

6/18

873
940

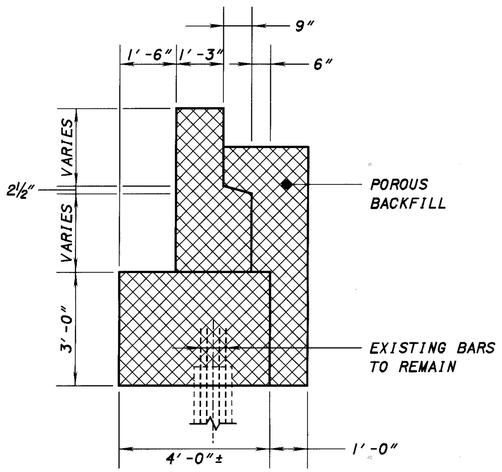

SECTION A-A

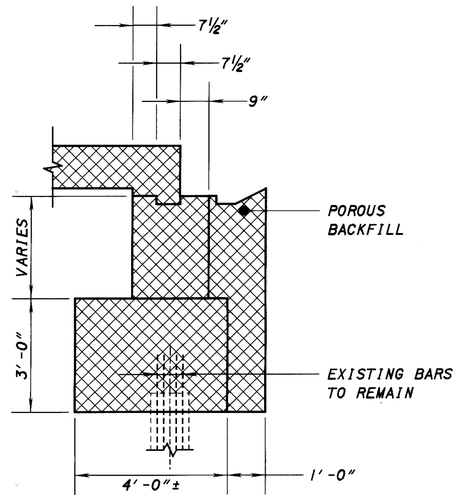

SECTION B-B

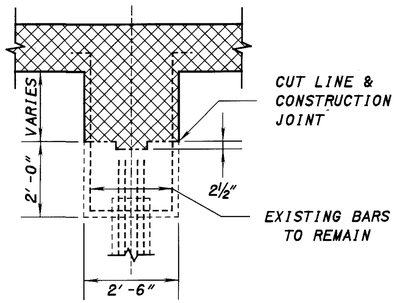

SECTION C-C

PIER REMOVAL NOTES

1. ALL ELEVATIONS AND DIMENSIONS ARE MEASURED ALONG THE ℄ BEARINGS.
2. PIER CAP SHALL BE REMOVED AND REPLACED ABOVE ORIGINAL CONSTRUCTION JOINT AS SHOWN IN THE DETAILS.
3. CONCRETE SHALL BE SUFFICIENTLY REMOVED FROM THE ORIGINAL SHEAR KEYS TO PRODUCE A POSITIVE CONNECTION BETWEEN THE EXISTING AND NEW CONCRETE.
4. VERTICAL REINFORCING STEEL SHALL REMAIN IN PLACE.

DESIGN AGENCY
ODOT CENTRAL OFFICE
OFFICE OF PRODUCTION

REVISED DFT | DATE 9-20-99
STRUCTURE FILE NUMBER 5203996

DESIGNED BKL | DRAWN BKL | REVISED
CHECKED RJH | REVISED

ABUTMENT & PIER DEMOLITION DETAILS
RAMP "C" OVER PLUM CREEK, S.R. 3 INTERCHANGE
MED-71-2092 W

MED-71-15.78

7 | 18

874
940

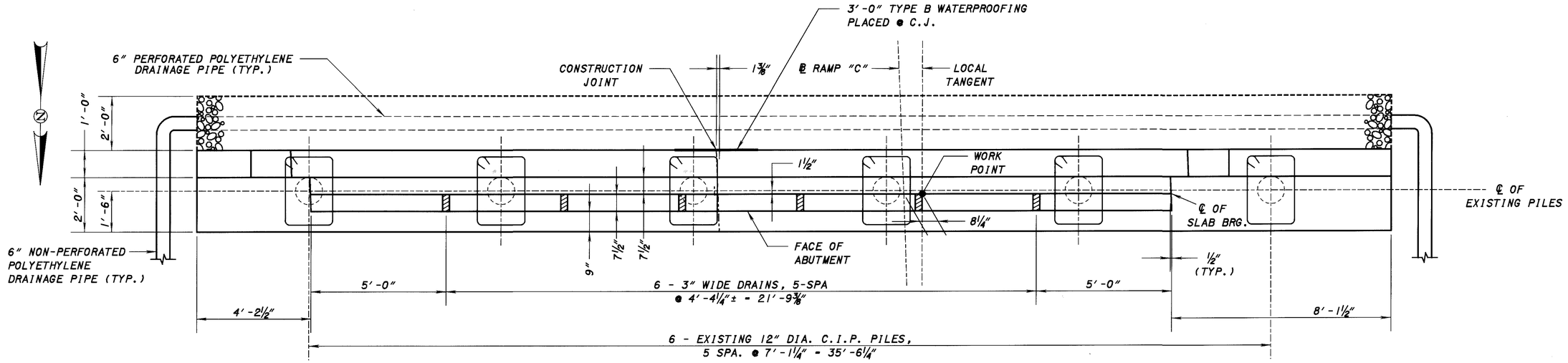

PLAN - REAR ABUTMENT

FOR SECTIONS A-A & B-B SEE SHEET 10/18

NOTE:
ONLY LOW SIDE OF APPROACH SLAB HAS A CURB SECTION.

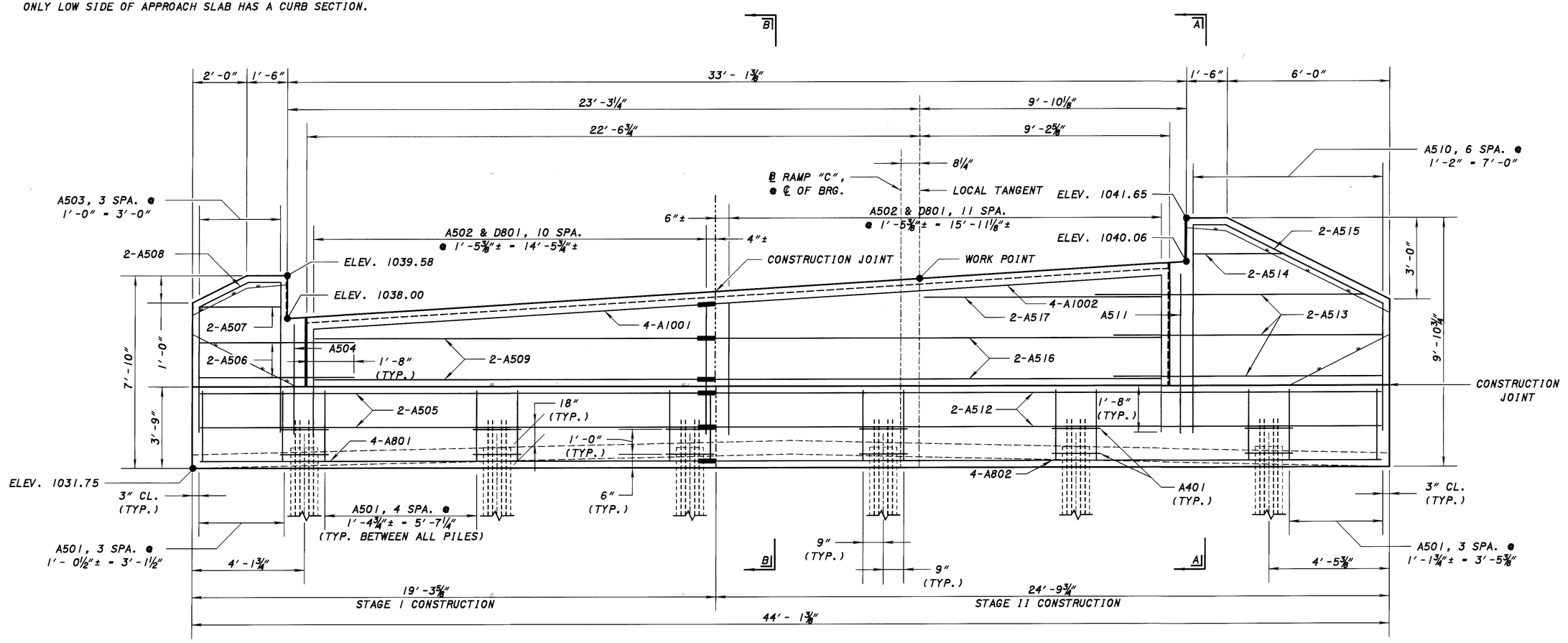

ELEVATION - REAR ABUTMENT

ALL DIMENSIONS AND ELEVATIONS ARE SHOWN ALONG THE FACES OF THE ABUTMENTS.

ADJUST REBAR TO FIT @ CONSTRUCTION JOINT

DESIGN AGENCY: ODOT CENTRAL OFFICE, OFFICE OF PRODUCTION

DESIGNED	DRAWN	REVISED	DATE
BKL	BKL	DFT	9-20-99

CHECKED	REVISED	STRUCTURE FILE NUMBER
RJH		5203996

ABUTMENT DETAILS
MED-71-2092 W
RAMP "C" OVER PLUM CREEK, S.R. 3 INTERCHANGE

MED-71-15.78

8/18

875/940

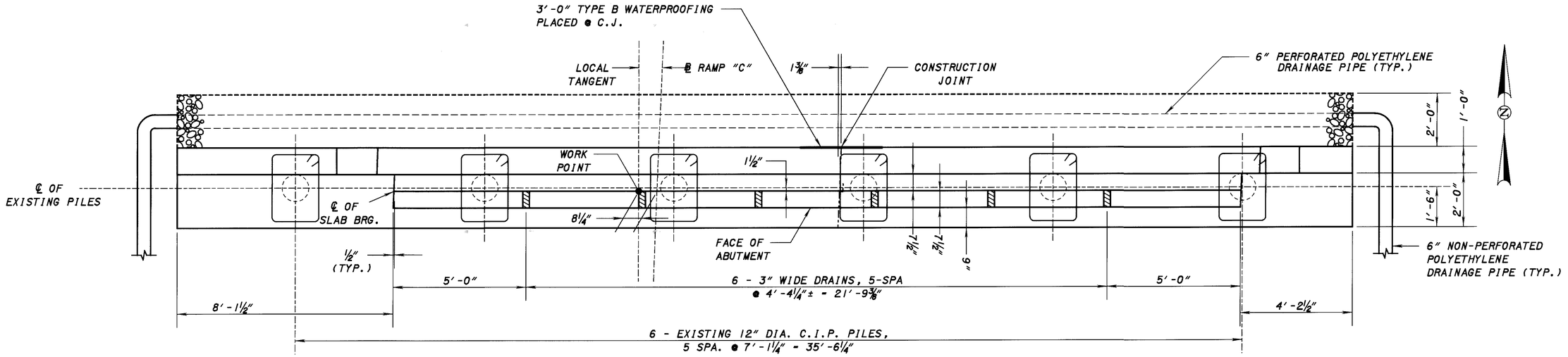

PLAN - FORWARD ABUTMENT

NOTE:
ONLY LOW SIDE OF APPROACH SLAB HAS A CURB SECTION.

FOR SECTIONS A-A & B-B SEE SHEET 10/18

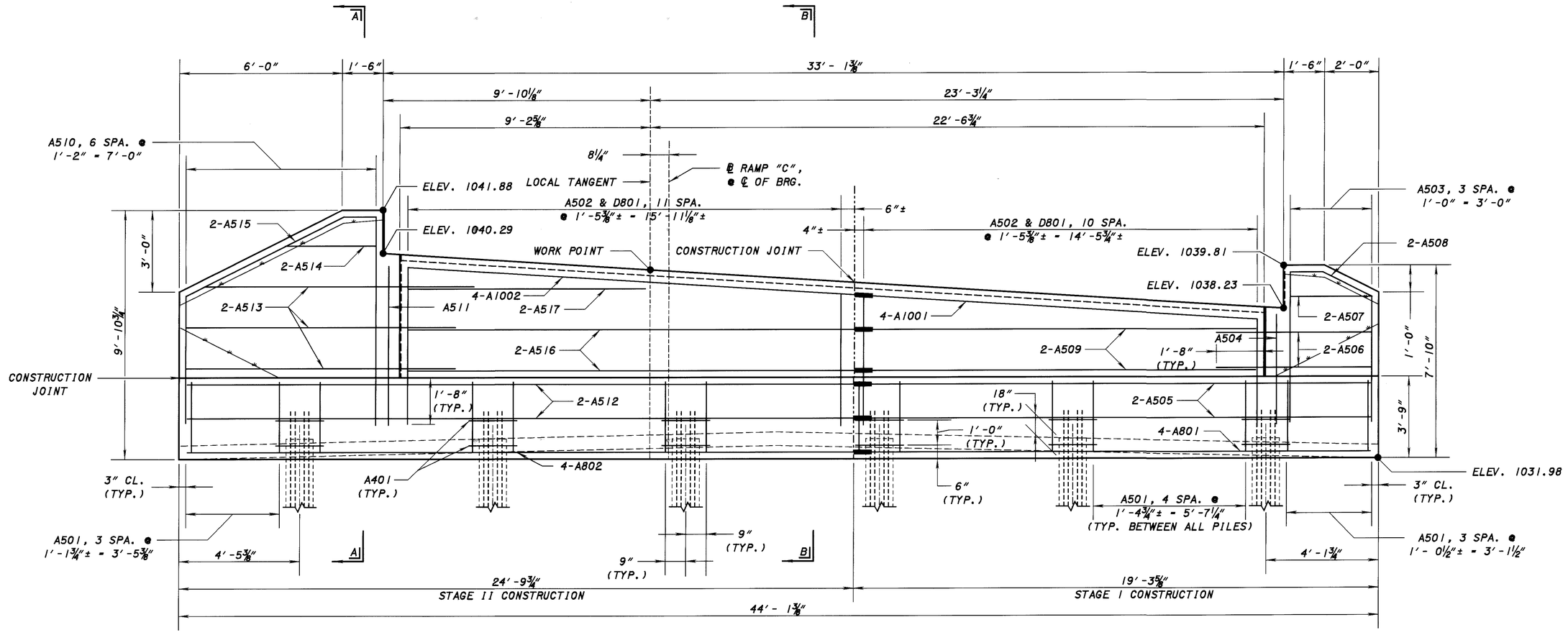

ADJUST REBAR TO FIT @ CONSTRUCTION JOINT

ELEVATION - FORWARD ABUTMENT

ALL DIMENSIONS AND ELEVATIONS ARE SHOWN ALONG THE FACES OF THE ABUTMENTS.

DESIGN AGENCY: ODOT CENTRAL OFFICE, OFFICE OF PRODUCTION
DESIGNED: BKL | DRAWN: BKL | REVISED: DFT | DATE: 9-20-99 | CHECKED: RJH | STRUCTURE FILE NUMBER: 5203996

ABUTMENT DETAILS

MED-71-2092 W

RAMP "C" OVER PLUM CREEK, S.R. 3 INTERCHANGE

MED-71-15.78

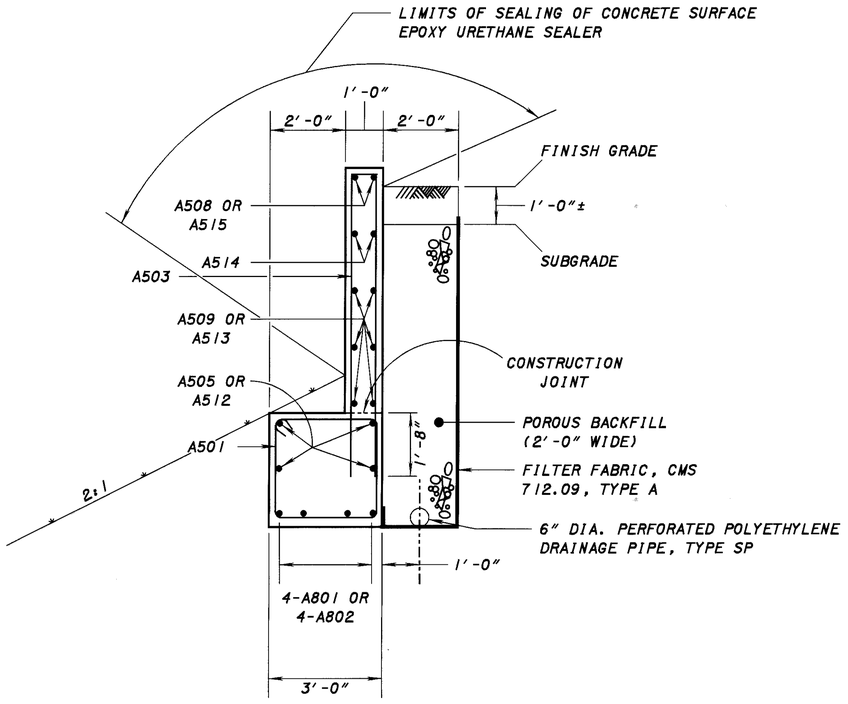

SECTION A-A

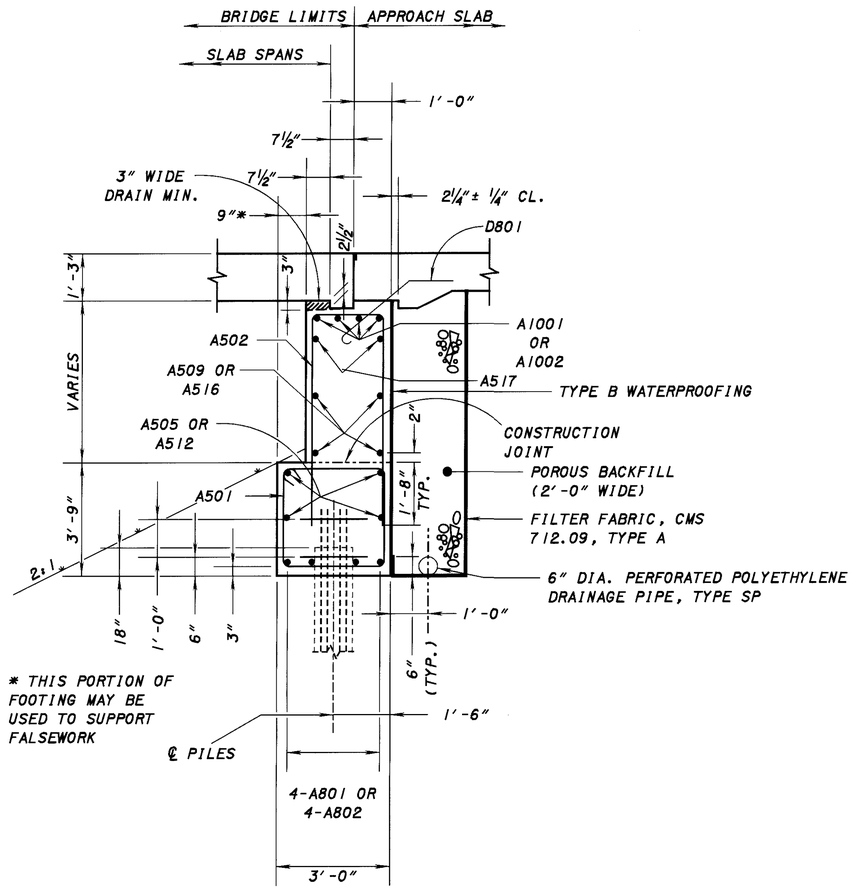

* THIS PORTION OF FOOTING MAY BE USED TO SUPPORT FALSEWORK

SECTION B-B

NOTES

1. ALL ELEVATIONS AND DIMENSIONS MEASURED ALONG THE FACE OF ABUTMENT.

2. MINIMUM SPLICES ARE AS FOLLOWS:
   - #5 BAR - 3'-0"
   - #6 BAR - 3'-6"
   - #8 BAR - 5'-9"

3. TYPE B WATERPROOFING, 3'-0" WIDE, CENTERED AT THE CONSTRUCTION JOINT, SHALL EXTEND FROM THE BOTTOM OF THE APPROACH SLAB TO THE BOTTOM OF THE FOOTING. NEOPRENE SHEETING MAYBE USED IN LIEU OF THE TYPE B WATERPROOFING.

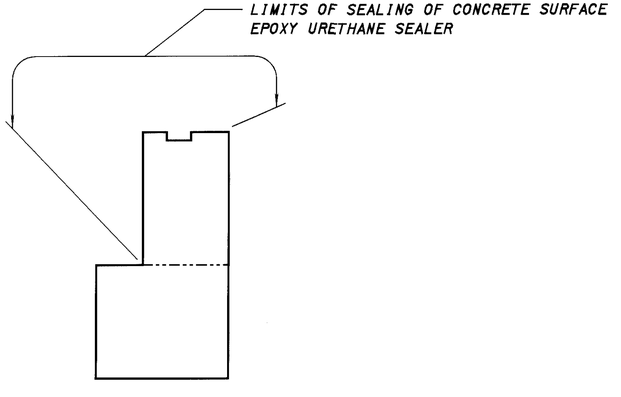

SEALING LIMITS

DESIGN AGENCY
ODOT CENTRAL OFFICE
OFFICE OF PRODUCTION

REVISED DFT DATE 9-20-99
STRUCTURE FILE NUMBER 5203996

DRAWN BKL
REVISED

DESIGNED BKL
CHECKED RJH

ABUTMENT DETAILS

MED-71-2092 W

RAMP "C" OVER PLUM CREEK, S.R. 3 INTERCHANGE

MED-71-15.78

10 / 18

877
940

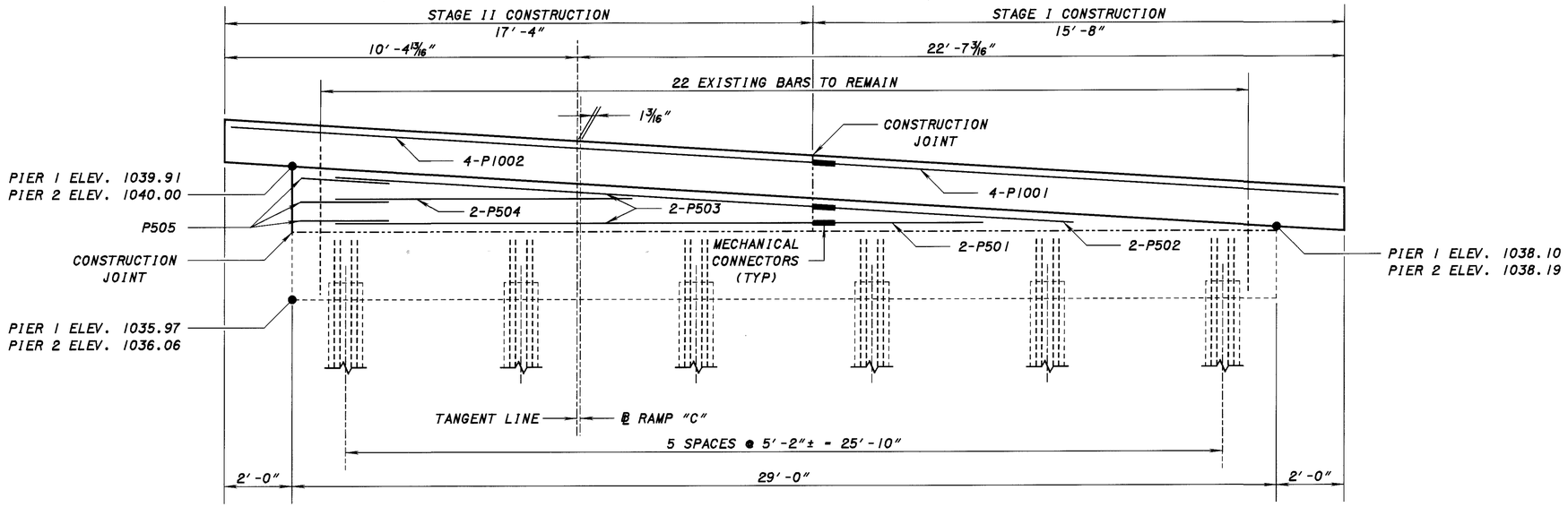

ELEVATION - PIERS 1 & 2

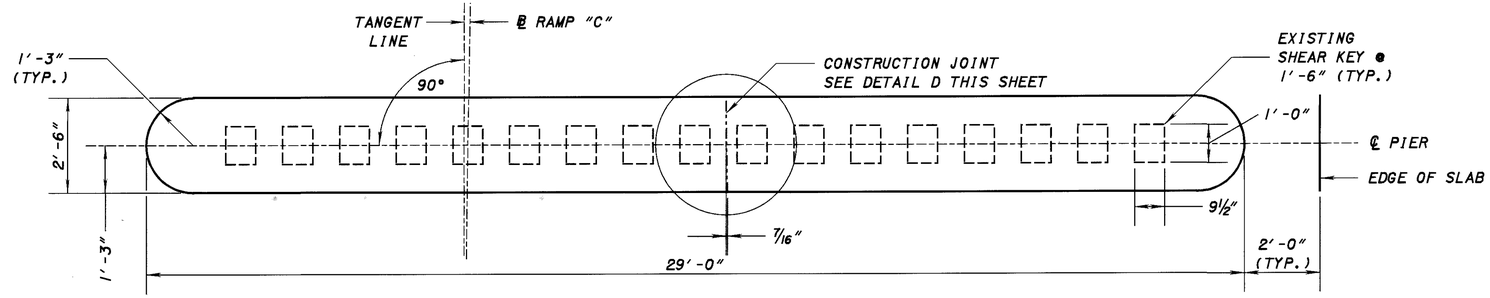

PLAN - PIERS 1 & 2

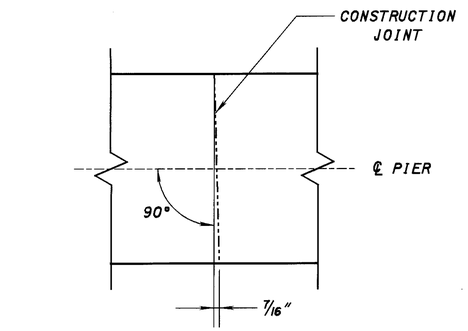

DETAIL D

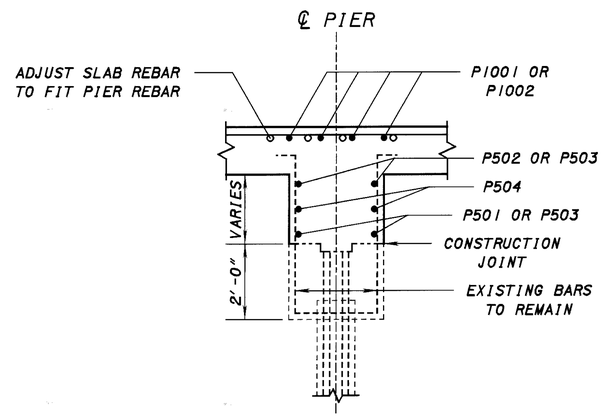

SECTION C-C

NOTES

1. ALL ELEVATIONS AND DIMENSIONS ARE MEASURED ALONG THE ℄ BEARINGS.
2. PIER CAP SHALL BE REMOVED AND REPLACED ABOVE ORIGINAL CONSTRUCTION JOINT AS SHOWN IN THE DETAILS.
3. CONCRETE SHALL BE SUFFICIENTLY REMOVED FROM THE ORIGINAL SHEAR KEYS TO PRODUCE A POSITIVE CONNECTION BETWEEN THE EXISTING AND NEW CONCRETE.
4. VERTICAL REINFORCING STEEL SHALL REMAIN IN PLACE.

DESIGN AGENCY: ODOT CENTRAL OFFICE, OFFICE OF PRODUCTION

DESIGNED	DRAWN	REVIEWED	DATE
BKL	BKL	DFT	9-20-99
CHECKED	REVISED	STRUCTURE FILE NUMBER	
RJH		5203996	

PIER DETAILS

MED-71-2092 W

RAMP "C" OVER PLUM CREEK, S.R. 3 INTERCHANGE

MED-71-15.78

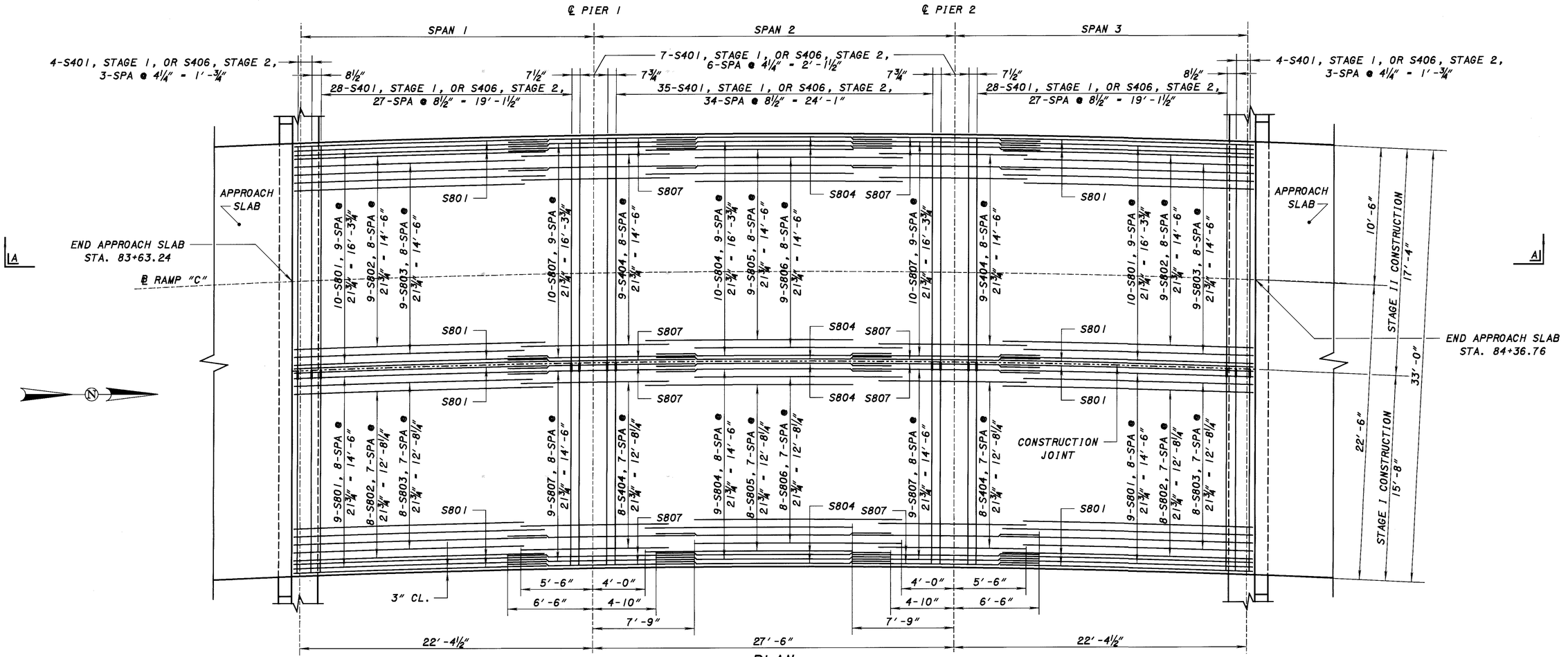

PLAN
BOTTOM REINFORCEMENT

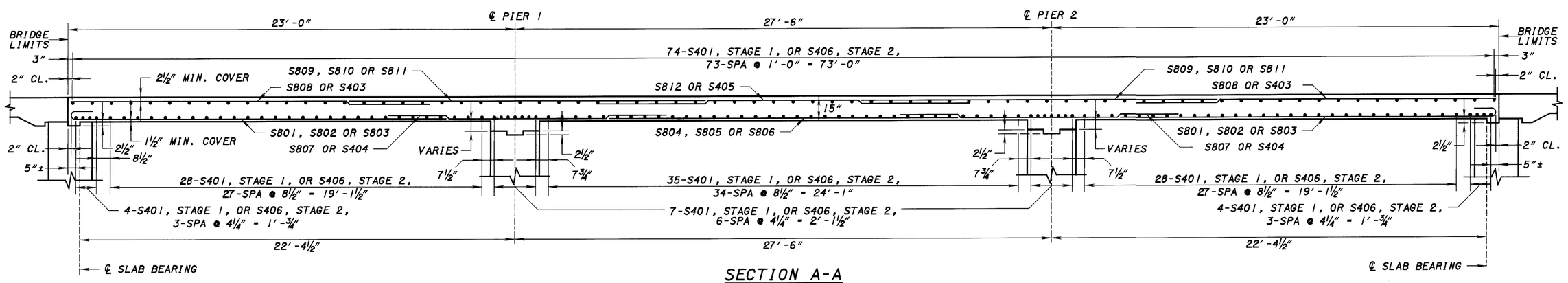

SECTION A-A

DESIGN AGENCY: ODOT CENTRAL OFFICE, OFFICE OF PRODUCTION

DESIGNED	DRAWN	REVIEWED	DATE
BKL	BKL	DFT	9-20-99
CHECKED	REVISED	REVISED	STRUCTURE FILE NUMBER
RJH			5203996

SUPERSTRUCTURE DETAILS

MED-71-2092 W

RAMP "C" OVER PLUM CREEK, S.R. 3 INTERCHANGE

MED-71-15.78

12/18

879/940

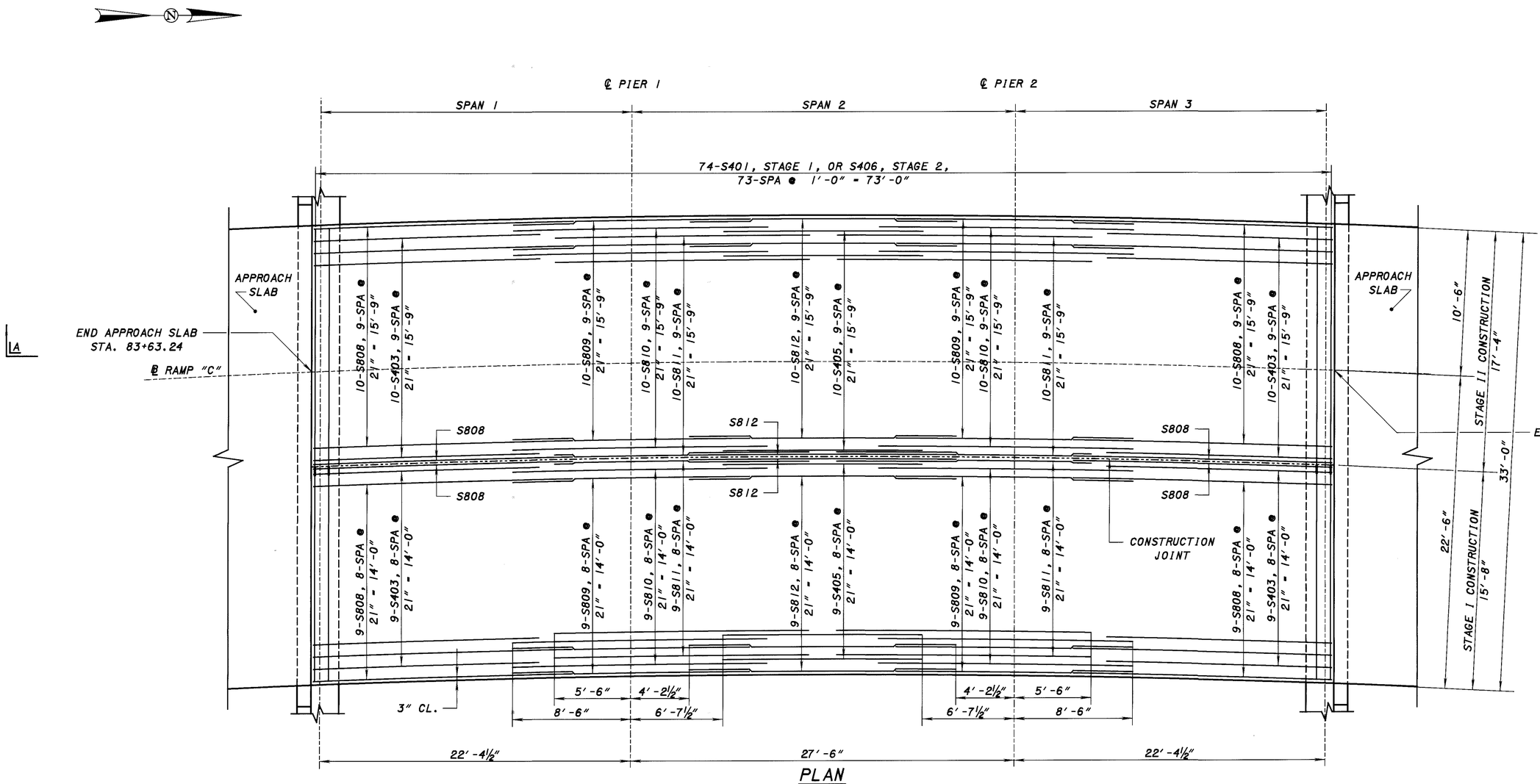

PLAN

TOP REINFORCEMENT

FOR SCUPPER DETAILS
SEE SHEET 17/18

DESIGN AGENCY
ODOT CENTRAL OFFICE
OFFICE OF PRODUCTION

DESIGNED	DRAWN	REVISED	DATE
BKL	BKL	DFT	9-20-99
CHECKED	REVISED	STRUCTURE FILE NUMBER	
RJH		5203996	

SUPERSTRUCTURE DETAILS

MED-71-2092 W

RAMP "C" OVER PLUM CREEK, S.R. 3 INTERCHANGE

MED-71-15.78

880
940

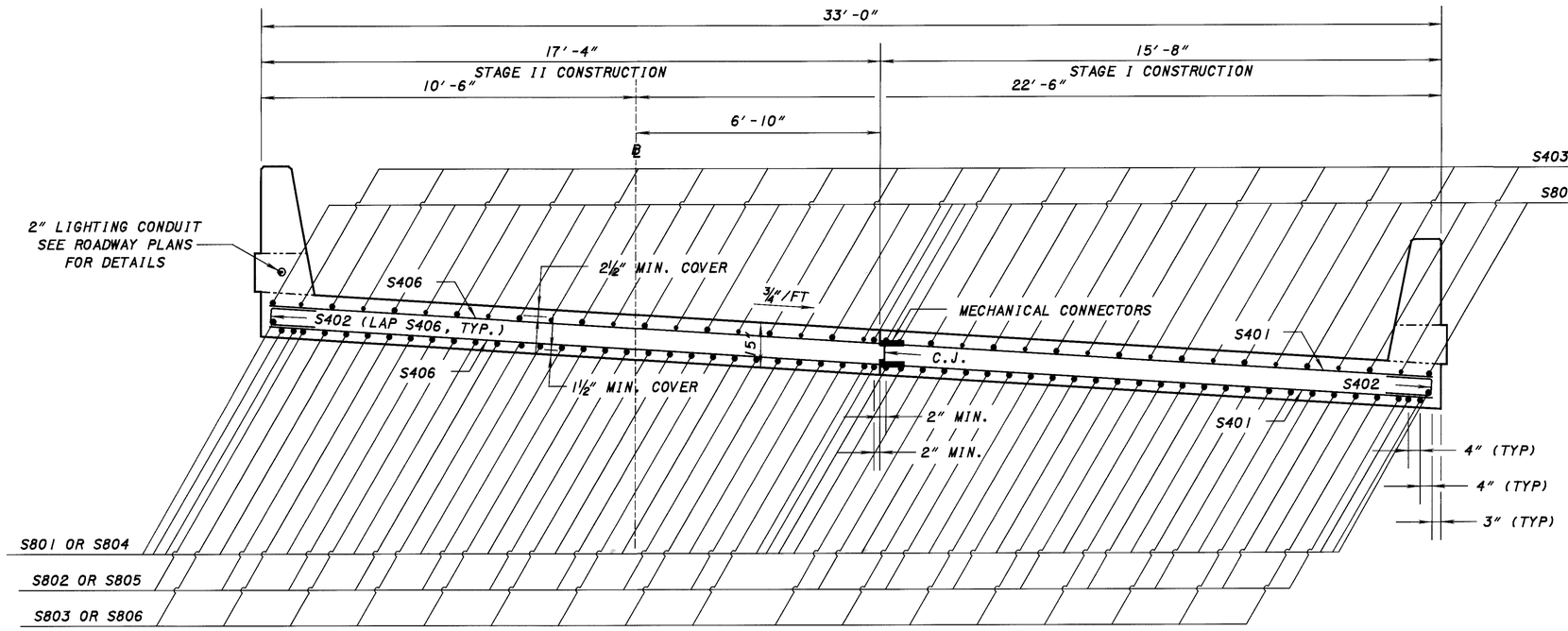

TRANSVERSE SECTION AT SPAN 1, SPAN 2 AND SPAN 3

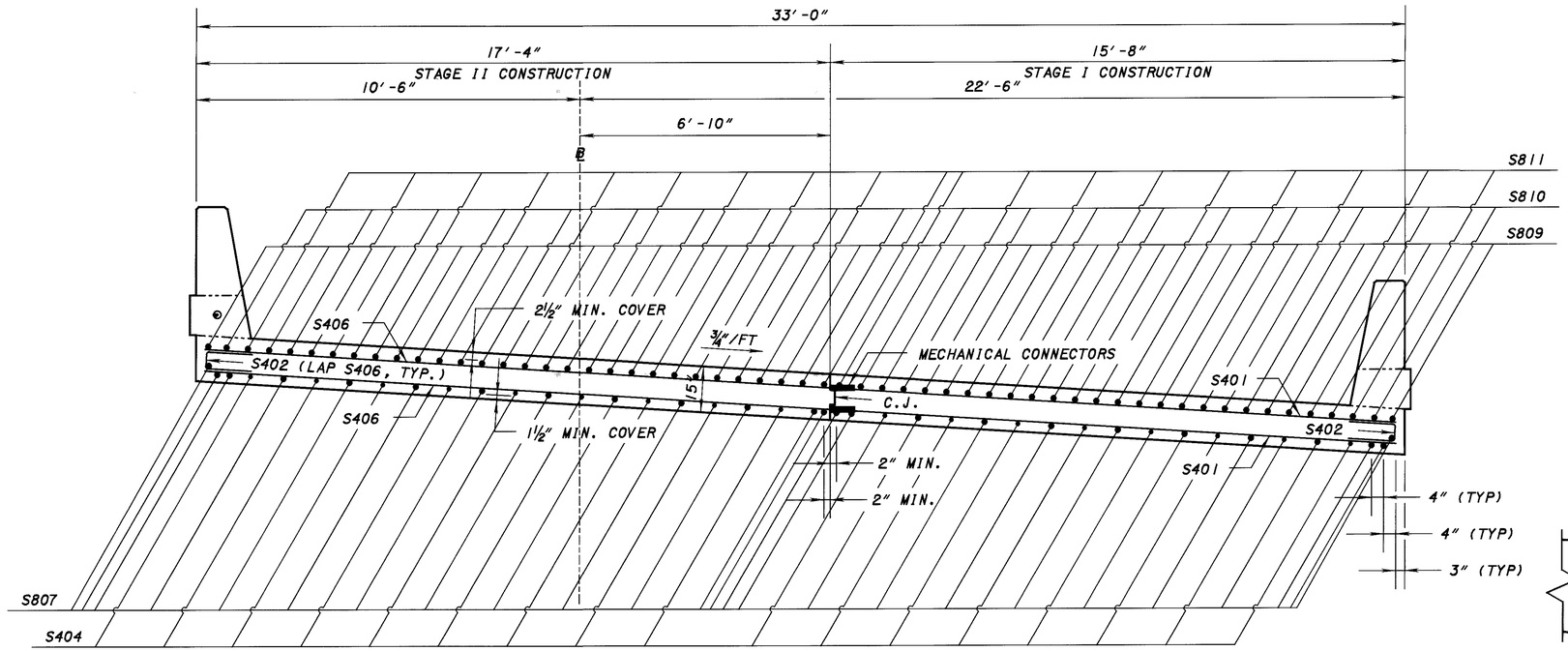

TRANSVERSE SECTION AT THE PIERS

DECK NOTES

1. HIGH MOLECULAR WEIGHT METHACRYLATE SHALL BE INCLUDED IN THE COST OF THE CONCRETE AND NO SEPARATE PAYMENT WILL BE MADE.
2. DRIP GROOVES, AS DETAILED IN CS-1-93 SHALL BE NON-PERFORMED.
3. SEE STD. DRWG. CS-1-93 FOR ADDITIONAL DETAILS.

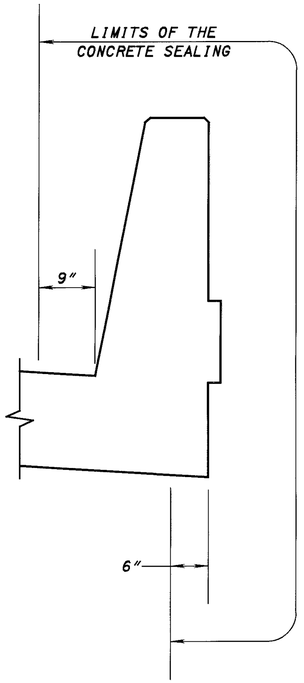

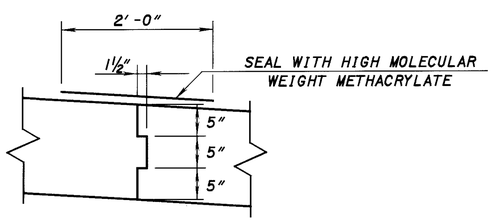

CONSTRUCTION JOINT

DESIGN AGENCY: ODOT CENTRAL OFFICE, OFFICE OF PRODUCTION

REVISED	DATE	STRUCTURE FILE NUMBER
DFT	9-20-99	5203996

DRAWN	REVISED
BKL	

DESIGNED	CHECKED
BKL	RJH

SUPERSTRUCTURE DETAILS

MED-71-2092 W

RAMP "C" OVER PLUM CREEK, S.R. 3 INTERCHANGE

MED-71-15.78

14/18

881
340

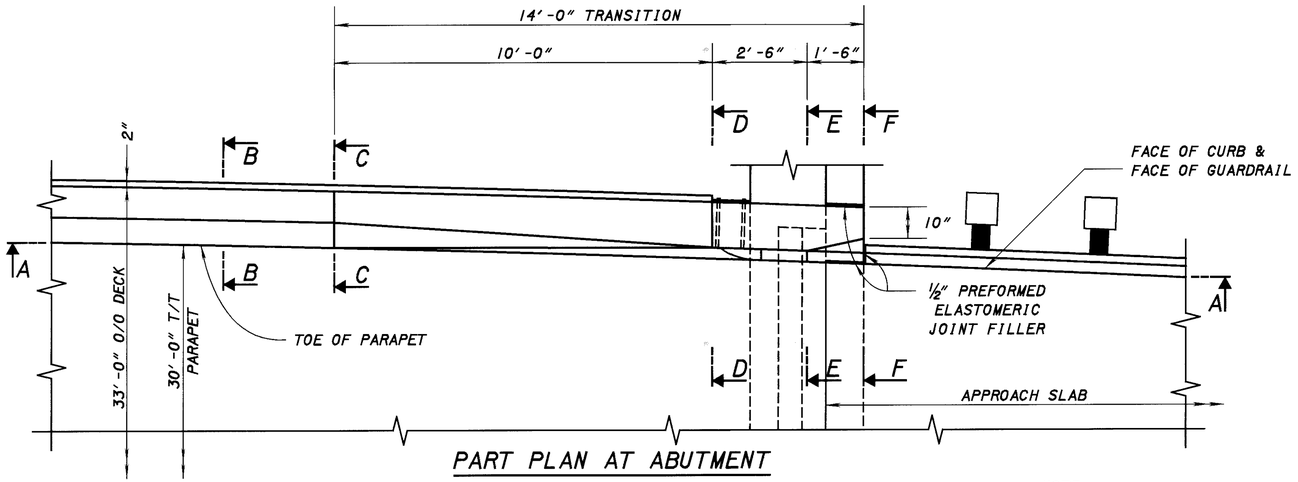

PART PLAN AT ABUTMENT

LEGEND: N.S. - NEAR SIDE
F.S. - FAR SIDE

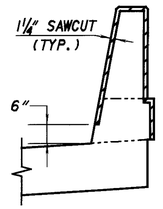

DETAIL A

(Section through sawcut)
Sawcut Perimeter = 7'-6"

CONTROL JOINTS FOR CONCRETE PARAPETS: THE JOINTS SHALL BE CONSTRUCTED BY SAWING 1¼ INCH DEEP ALONG THE PERIMETER OF THE PARAPET AS SOON AS THE SAW CAN BE OPERATED WITHOUT DAMAGING THE CONCRETE.

THE USE OF AN EDGE GUIDE, FENCE, OR JIG IS REQUIRED TO ENSURE THAT THE CUT JOINT IS STRAIGHT, TRUE, AND ALIGNED ON ALL FACES OF THE PARAPET. THE JOINT WIDTH SHALL BE THE WIDTH OF THE SAW BLADE, A NOMINAL WIDTH OF ¼ INCH.

THE PERIMETER OF THE DEFLECTION CONTROL JOINT SHALL BE SEALED WITH A CAULKING MATERIAL TO A MINIMUM DEPTH OF ONE INCH CONFORMING TO FEDERAL SPECIFICATION TT-S-00227E. THE BOTTOM ONE-HALF INCH OF THE OUTSIDE FACE OF THE PARAPET SHOULD BE LEFT UNSEALED TO ALLOW ANY WATER WHICH MAY ENTER THE JOINT TO ESCAPE.

QUANTITIES OF CONCRETE, REINFORCING STEEL, DEFLECTION JOINT SAWCUT AND CAULKING MATERIAL FOR PARAPET ARE INCLUDED WITH ITEM 844 HIGH PERFORMANCE CONCRETE, SUPERSTRUCTURE (PARAPET).

FOR BRIDGE TERMINAL ASSEMBLY SEE STANDARD CONSTRUCTION DRAWING GR-3.1 AND GR-3.2.

MIN. LAP SPLICES: #5 BAR - 2'-6"
#6 BAR - 3'-0"

NOTE
CURB DETAIL APPLIES ONLY TO THE RIGHT SIDE (LOW SIDE OF SUPERELEVATION) OF THE APPROACH SLAB. LEFT SIDE SHALL BE FLUSH WITH FACE OF GUARDRAIL

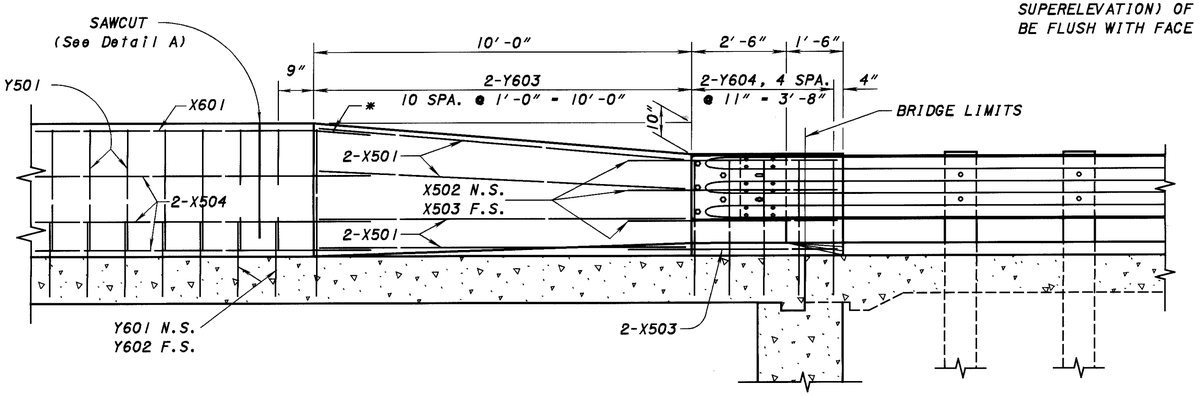

SECTION A-A

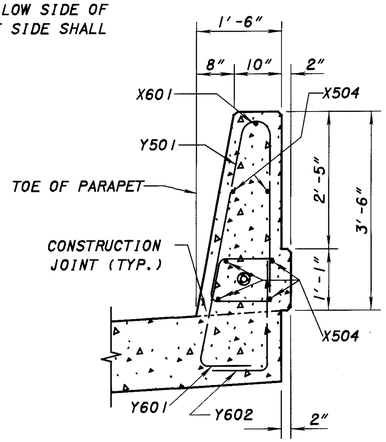

SECTION B-B & C-C

Area = 4.26 ft²

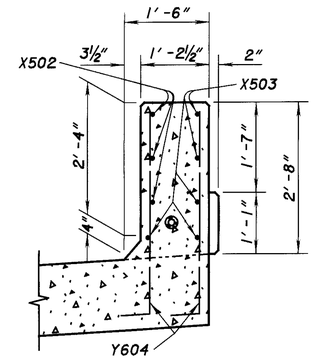

SECTION D-D

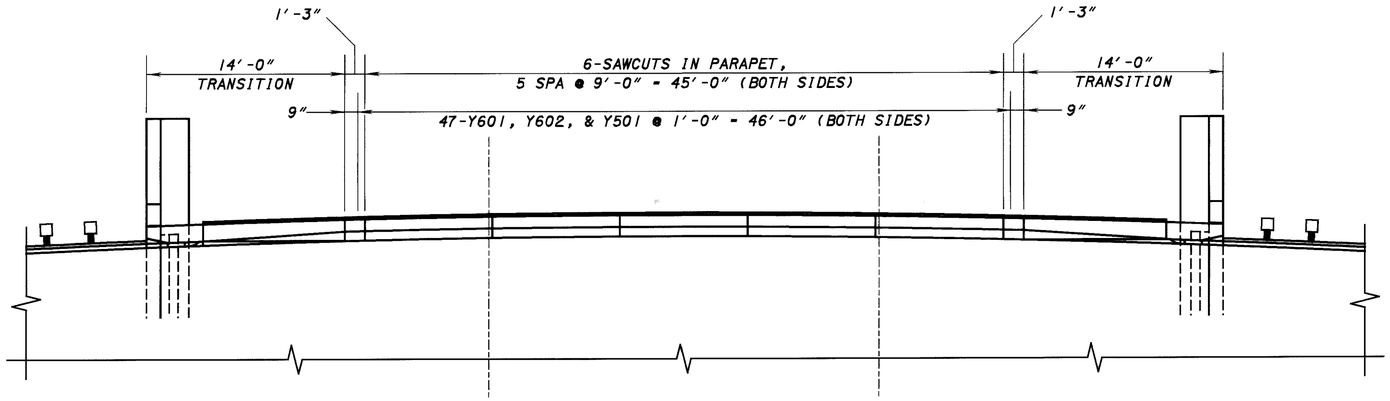

PART PLAN

2" CONDUIT (WEST SIDE ONLY)

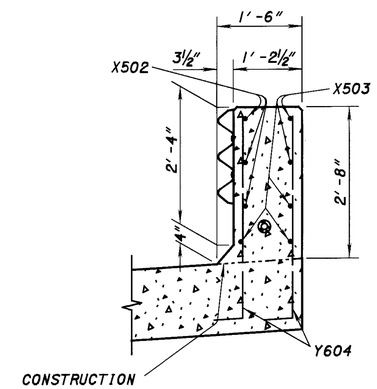

SECTION E-E

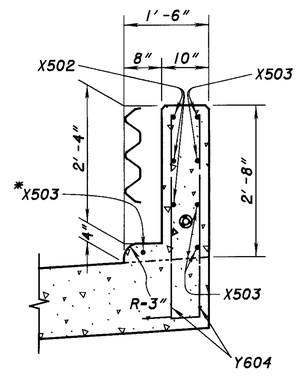

SECTION F-F

* FIELD BEND IF NECESSARY

ODOT CENTRAL OFFICE
OFFICE OF PRODUCTION

DESIGN AGENCY

REVISED	DATE
DFT	9-20-99

STRUCTURE FILE NUMBER 5203996

DRAWN	REVISED
BKL	

DESIGNED	
BKL	
CHECKED	
RJH	

SUPERSTRUCTURE DETAILS
MED-71-2092 W
RAMP "C" OVER PLUM CREEK, S.R. 3 INTERCHANGE

MED-71-15.78

15 / 18

882
942

MARK	NUMBER					LENGTH	WEIGHT	TYPE	DIMENSIONS				
	REAR ABUT. STAGE I	REAR ABUT. STAGE II	FWD. ABUT. STAGE I	FWD. ABUT. STAGE II	TOTAL		LB		A	B	C	R	INC
ABUTMENTS - MED-71-2092 W													
A401	6	6	6	6	24	9'-0"	144	3	1'-9"	2'-6"			
A501	15	18	15	18	66	12'-4	849	3	2'-8"	3'-3"			
A502	11 OF 1 SERIES OF 23	12 OF 1 SERIES OF 23	11 OF 1 SERIES OF 23	12 OF 1 SERIES OF 23	2 SERIES OF 23	9'-6" TO 13'-2"	544	2	3'-11" TO 5'-9"	1'-11"	3'-11" TO 5'-9"		1"
A503	1 SERIES OF 4		1 SERIES OF 4		2 SERIES OF 4	9'-9" TO 12'-3"	92	2	4'-8" TO 5'-11"	8"	4'-8" TO 5'-11"		5"
A504	1		1		2	8'-5"	18	2	4'-0"	8"	4'-0"		
A505	4		4		8	18'-11"	158	STR					
A506	4		4		8	5'-9"	48	STR					
A507	2		2		4	3'-0"	13	STR					
A508	2		2		4	3'-1"	13	19	2'-0"	1'-0"	6"		
A509	4		4		8	14'-9"	123	STR					
A510		1 SERIES OF 7		1 SERIES OF 7	2 SERIES OF 7	9'-9" TO 16'-9"	193	2	4'-8" TO 8'-2"	8"	4'-8" TO 8'-2"		7"
A511		1		1	2	12'-7"	26	2	6'-1"	8"	6'-1"		
A512		4		4	8	24'-6"	205	STR					
A513		6		6	12	9'-11"	124	STR					
A514		2		2	4	3'-4"	14	STR					
A515		2		2	4	7'-7"	32	19	6'-6"	1'-1"	6"		
A516		4		4	8	16'-5"	137	STR					
A517		2		2	4	8'-9"	37	STR					
A801	4		4		8	18'-9"	401	STR					
A802		4		4	8	24'-4"	520	STR					
A1001	4		4		8	14'-9"	508	STR					
A1002		4		4	8	16'-5"	565	STR					
D801	11	12	11	12	46	4'-11"	604	18	2'-7"	1'-0"	1'-0"		

MARK	NUMBER					LENGTH	WEIGHT	TYPE	DIMENSIONS				
	PIER 1 STAGE I	PIER 1 STAGE II	PIER 2 STAGE I	PIER 2 STAGE II	TOTAL		LB		A	B	C	R	INC
PIERS - MED-71-2092 W													
P501	2		2		4	5'-0"	21	STR					
P502	2		2		4	7'-8"	32	STR					
P503		4		4	8	14'-0"	117	STR					
P504		2		2	4	8'-7"	36	STR					
P505		3		3	6	6'-9"	42	24	2'-1/4"	1'-10"		11 1/2"	
P1001	4		4		8	15'-5"	531	STR					
P1002		4		4	8	17'-1"	588	STR					

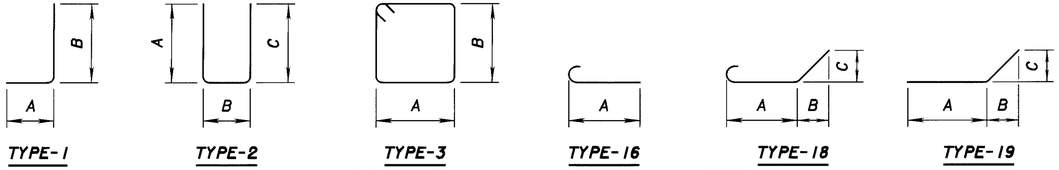

MARK	NUMBER			LENGTH	WEIGHT	TYPE	DIMENSIONS						
	SUPER STAGE I	SUPER STAGE II	TOTAL		LB		A	B	C	D	E	R	INC
SUPERSTRUCTURE - MED-71-2092 W													
S401	187		187	15'-5"	1926	STR							
S402	74	74	148	3'-1"	305	2	1'-3"	9"	1'-3"				
S403	18	20	38	16'-2 1/2"	411	STR							
S404	16	18	34	11'-3"	256	STR							
S405	9	10	19	14'-3"	181	STR							
S406		187	187	17'-1"	2134	STR							
S801	24	26	50	19'-3 1/2"	2575	STR							
S802	16	18	34	19'-1 1/2"	1736	STR							
S803	16	18	34	17'-3 1/2"	1570	16	16'-4 1/2"						
S804	12	13	25	17'-10"	1190	STR							
S805	8	9	17	15'-9"	715	STR							
S806	8	9	17	15'-9"	715	STR							
S807	24	26	50	14'-3"	1902	STR							
S808	20	22	42	18'-7 1/2"	2089	STR							
S809	18	20	38	17'-0"	1725	STR							
S810	18	20	38	18'-3"	1852	STR							
S811	18	20	38	18'-3"	1852	STR							
S812	10	11	21	19'-1"	1070	STR							

MARK	NUMBER			LENGTH	WEIGHT	TYPE	DIMENSIONS						
	SUPER STAGE I	SUPER STAGE II	TOTAL		LB		A	B	C	D	E	R	INC
PARAPETS - MED-71-2092 W													
X501	16	16	32	10'-0"	334	STR							
X502	6	6	12	5'-6"	69	25	1'-8"	2'-5"	1'-4"	1 1/2"	5"		
X503	10	10	20	5'-6"	115	STR							
X504	18	18	36	19'-4"	726	STR							
X601	3	3	6	20'-0"	180	STR							
Y501	47	47	94	7'-5"	727	23	1'-1"	3'-2"	3'-0"			2 3/4"	
Y601	47	47	94	4'-0"	565	33	1'-1"	2'-0"	1'-3"	0"			
Y602	47	47	94	2'-11"	412	1	1'-1"	2'-0"					
Y603	4 SERIES OF 11	4 SERIES OF 11	8 SERIES OF 11	4'-5" TO 5'-3"	639	1	1'-1"	3'-6" TO 4'-4"					1"
Y604	20	20	40	4'-5"	265	1	1'-1"	3'-6"					

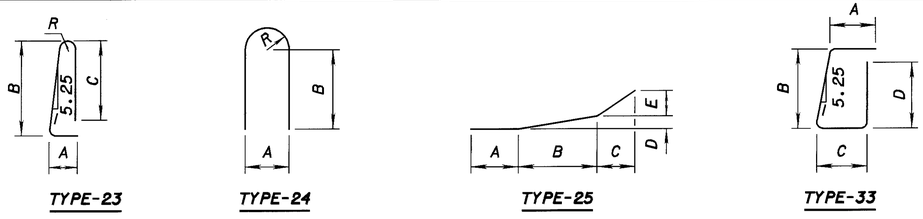

NOTES:
1. THIS REINFORCING SCHEDULE IS FOR INFORMATION ONLY.
2. ALL REINFORCING STEEL SHALL BE EPOXY COATED.
3. THE BAR SIZE IS INDICATED IN THE BAR MARK. THE FIRST DIGIT INDICATES THE BAR SIZE. FOR EXAMPLE, AN A501 IS A #5 BAR. THE DIMENSIONS SHOWN ARE OUT TO OUT UNLESS OTHERWISE INDICATED. "R" INDICATES THE INSIDE RADIUS.

DESIGN AGENCY: ODOT CENTRAL OFFICE, OFFICE OF PRODUCTION
DESIGNED: BKL | DRAWN: BKL | CHECKED: RJH | REVISED: | REVISED: DFT | DATE: 9-20-99
STRUCTURE FILE NUMBER: 5203996

REINFORCING SCHEDULE
MED-71-2092 W
RAMP "C" OVER PLUM CREEK, S.R. 3 INTERCHANGE

MED-71-15.78

16 / 18

883 / 940

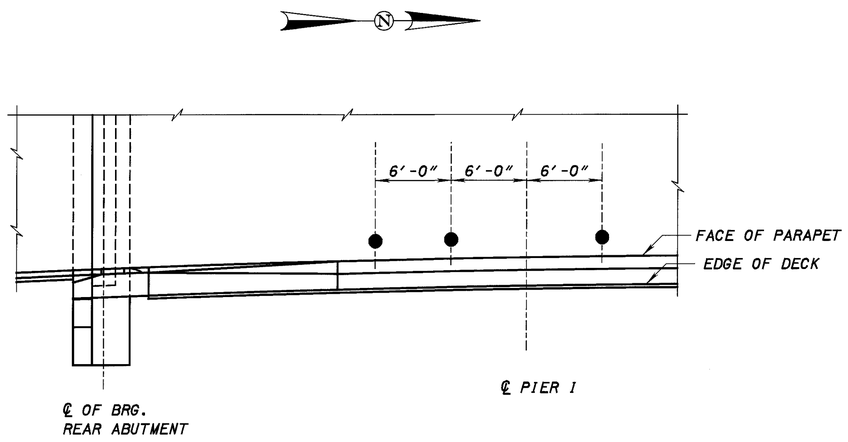

SCUPPER LOCATION

NOTES:

1. THE SUPPORT ANGLES AND BARS ARE INCLUDED WITH SCUPPERS FOR PAYMENT.
2. SCUPPERS INCLUDING SUPPORT ANGLES AND BARS SHALL BE GALVANIZED IN ACCORDANCE WITH CMS 711.02.
3. REARRANGE THE REINFORCING STEEL IN THE DECK TO ACCOMODATE THE PLACEMENT OF THE SCUPPER.
4. PLACE 30° BEND IN SCUPPER, 12" FROM BOTTOM, SLOPE SCUPPER AWAY FROM PIER.

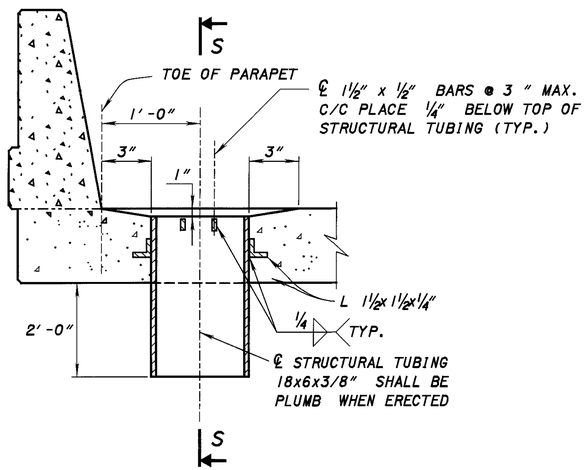

SCUPPER DETAILS

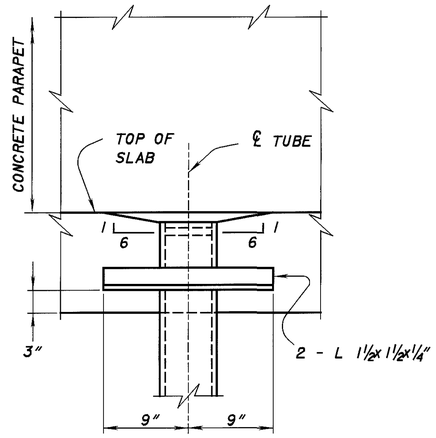

SECTION S-S

DESIGN AGENCY
ODOT CENTRAL OFFICE
OFFICE OF PRODUCTION

DESIGNED BKL | DRAWN BKL | REVIEWED DFT | DATE 9-20-99
CHECKED RJH | REVISED | STRUCTURE FILE NUMBER 5203996

SCUPPER DETAILS
MED-71-2092 W
RAMP "C" OVER PLUM CREEK, S.R. 3 INTERCHANGE

MED-71-15.78

17 / 18

884 / 940

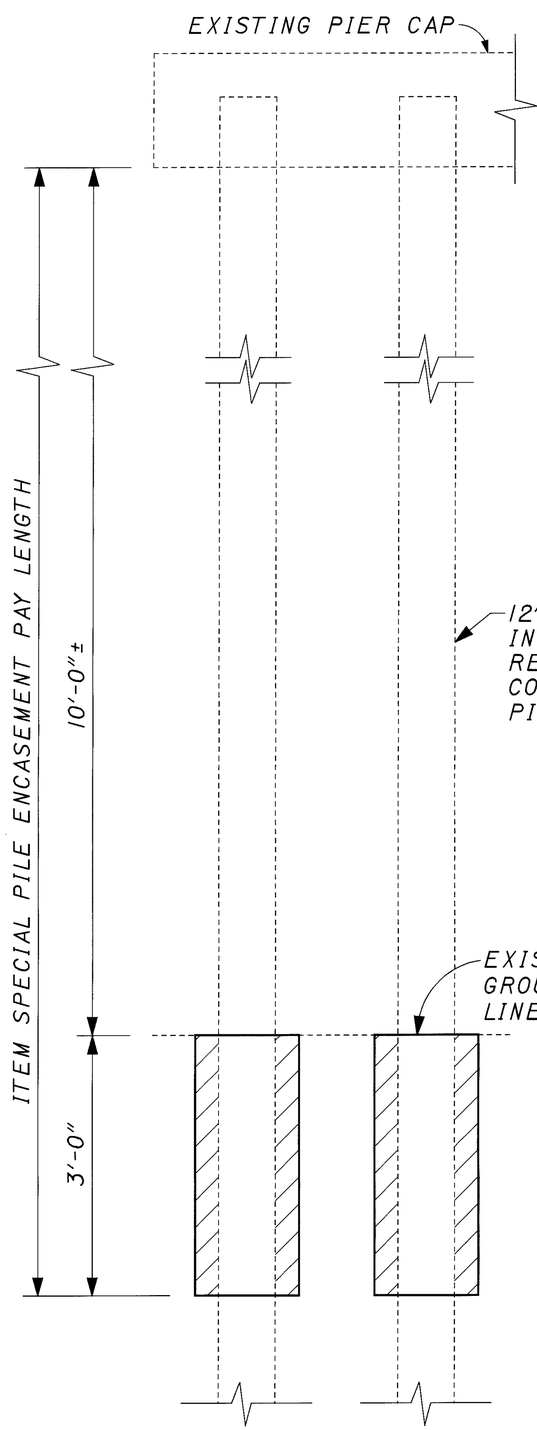

EXISTING PILES

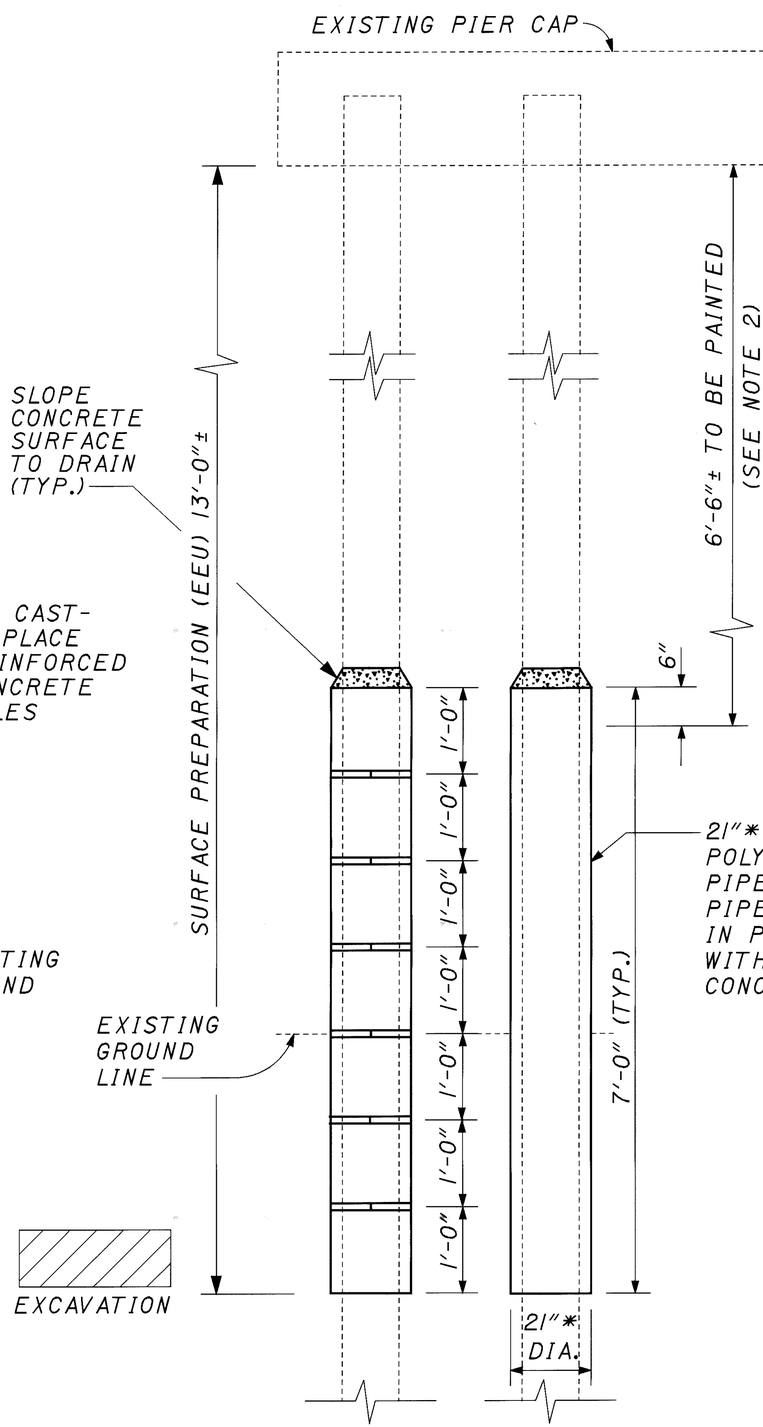

PROPOSED PILES

NOTE:

1. ALL PAINTING AS PER THE FIELD PAINTING OF EXISTING STEEL, USING EPOXY AND URETHANE (EEU) PROPOSAL NOTE OMITTING THE QUALITY CONTROL SPECIALIST AND TEST SECTION.

   THERE ARE 6 (SIX) COLUMNS PER PIER.
   THERE ARE 2 (TWO) PIERS ON STRUCTURE.

2. AT THE CONTRACTOR'S OPTION AT NO ADDITIONAL COST TO THE STATE, THE CONTRACTOR MAY EXTEND THE ENCASEMENT TO THE BOTTOM OF THE EXISTING PIER CAP IN LIEU OF PAINTING. SURFACE PREPARATION SHALL STILL BE PERFORMED.

3. STABILITY OF CAPPED PILE PIERS SHALL BE MAINTAINED DURING CONSTRUCTION. THE WORK ON THE EXISTING PIER PILES SHALL TAKE PLACE PRIOR TO STAGE CONSTRUTION OR AFTER ALL WORK IS COMPLETE ON THE SUPERSTRUCTURE.

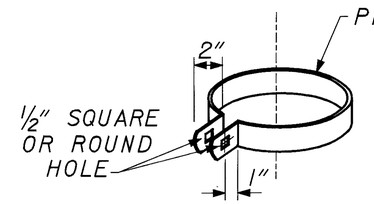

* 24" DIA. PIPE MAY BE USED AT THE CONTRACTOR'S OPTION AT NO ADDITIONAL COST TO THE STATE.

ITEM SPECIAL PILE ENCASEMENT

THIS ITEM SHALL INCLUDE THE FOLLOWING: EXCAVATION AND REPLACEMENT OF THE EMBANKMENT TO ITS NATURAL STATE AT THE EXISTING PILES, POLYETHYLENE OR PVC PIPE, GALVANIZED STEEL BANDS, NUTS AND BOLTS. THE POLYETHYLENE 707.33 OR PVC PIPE (707.45) SHALL BE CUT LENGTHWISE ON ONE SIDE OR IN TWO (2) SECTIONS AS NEEDED TO ENCOMPASS THE EXISTING 12" CAST-IN-PLACE PILES. THE BANDS SHALL BE 1" IN WIDTH AND THICKNESS SHALL NOT BE LESS THAN 11 GAUGE (.1196"). BANDS SHALL BE TIGHTENED SO AS NOT TO ELONGATE WHEN CONCRETE IS PLACED WITHIN THE PIPE. MAXIMUM SPACING OF THE BANDS SHALL BE 1'-0". ALTERNATE METHODS MAY BE USED TO CLAMP THE SECTIONS TOGETHER AS APPROVED BY THE ENGINEER. THE POLYETHYLENE OR PVC PIPE SHALL BE FILLED WITH CLASS C CONCRETE AND INCLUDED WITH ITEM SPECIAL, PILE ENCASEMENT FOR PAYMENT. ALL PAINTING PER PLAN NOTES SHALL BE INCLUDED WITH ITEM SPECIAL, PILE ENCASEMENT FOR PAYMENT.

DESIGN AGENCY: ODOT CENTRAL OFFICE, OFFICE OF PRODUCTION

DESIGNED	DRAWN	REVIEWED	DATE
D5	D5	DFT	9-20-99
CHECKED	REVISED	STRUCTURE FILE NUMBER	
RJH		5203996	

PIER ENCASEMENT

MED-71-2092 W

RAMP "C" OVER PLUM CREEK, S.R. 3 INTERCHANGE

MED-71-15.78

18 / 18

885
940

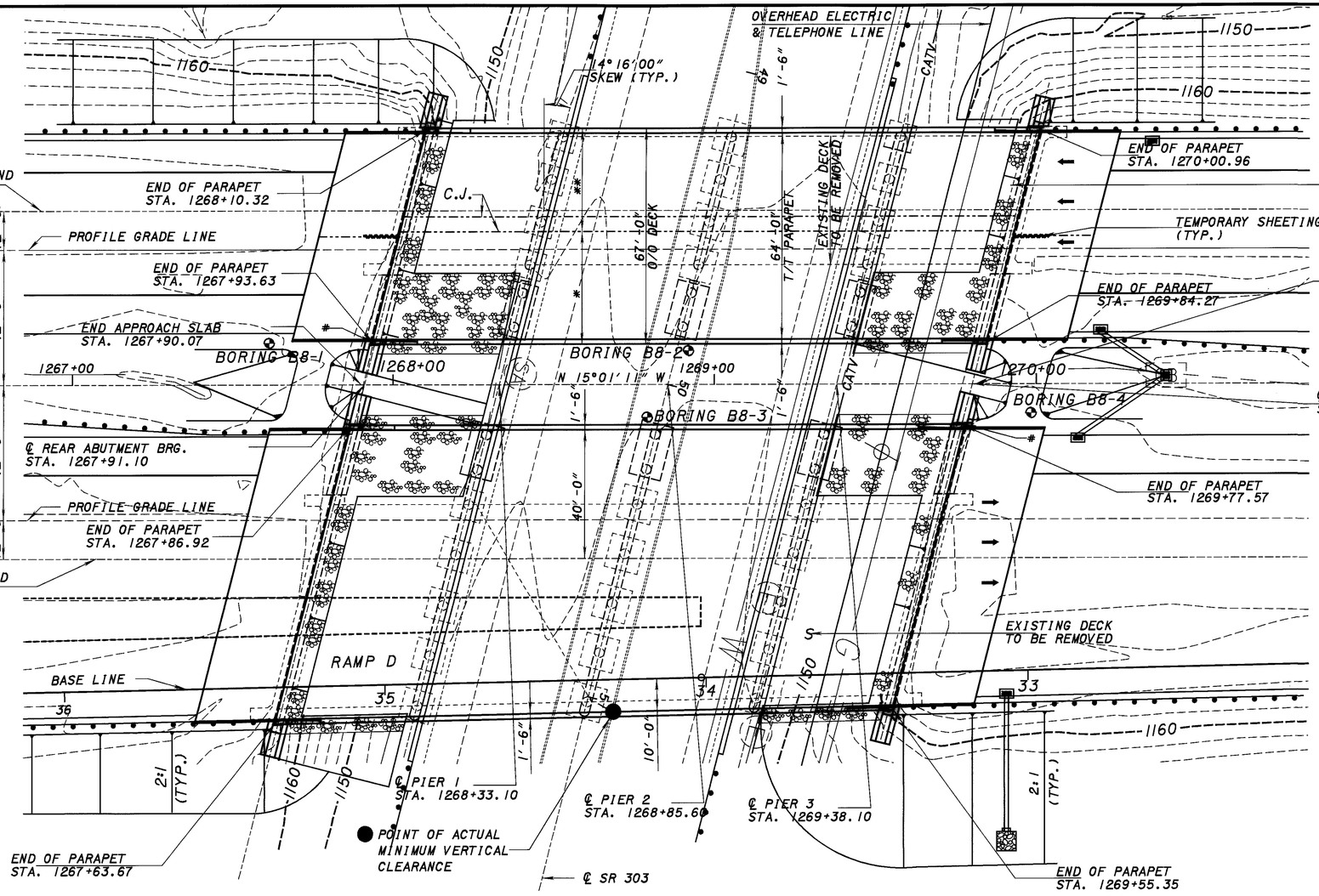

PLAN

DESIGN TRAFFIC

2000 ADT - 44560 2000 ADTT - 4456
2020 ADT - 61280 2020 ADTT - 6128

BENCHMARK DATA

BENCHMARK #21
STATION 1271+68.99 ELEVATION - 1144.04
ODOT DISC IN HEADWALL STAMPED

NOTES AND LEGEND

EARTHWORK LIMITS SHOWN ARE APPROXIMATE. ACTUAL SLOPES SHALL CONFORM TO PLAN CROSS SECTIONS.

FOR PROFILE GRADE INFORMATION SEE SHEET 2 / 46

* STAGE 1 CONSTRUCTION
** STAGE 2 CONSTRUCTION

● 15'-6" REQUIRED MINIMUM VERTICAL CLEARANCE
15'-7" ACTUAL MINIMUM VERTICAL CLEARANCE

(SA) SANITARY SEWER LINE

- NO BRIDGE TERMINAL ASSEMBLY, SEE CSS2 FOR ADDITIONAL DETAILS.

EXISTING STRUCTURE

TYPE: CONTINUOUS STEEL BEAMS WITH REINFORCED CONCRETE DECK AND SUBSTRUCTURE.

SPANS:
S.B.L.: 42'-0"±, 52'-6"±, 52'-6"±, 42'-0"± C/C BRGS.
N.B.L.: 42'0"±, 52'-6"±, 52'-6"±, 42'-0"± C/C BRGS.

ROADWAY: SOUTHBOUND LANE 42'-0"± F/F OF PARAPETS
NORTHBOUND LANE VARIES F/F OF PARAPETS

LOADING: CF 2000 (57) AND A.A.S.H.O. ALTERNATIVE LOADING

SKEW: 14°16'00"± (L.F)

WEARING SURFACE: ASPHALT

APPROACH SLABS: 25'-0" LONG AS-1-54

ALIGNMENT: TANGENT

CROWN: 3/16" PER FOOT

DATE BUILT: 1964

SFN: 5204135 L / 5204143 R

PROPOSED STRUCTURE

TYPE: 4-SPAN CONTINUOUS COMPOSITE STEEL BEAMS WITH REINFORCED CONCRETE DECK AND SUBSTRUCTURE UNITS WITH SEMI-INTEGRAL ABUTMENTS. SEE SHEET 6 / 46 FOR LIST OF PROPOSED WORK

SPANS:
S.B.L.: 42'-0", 52'-6", 52'-6", 42'-0" C/C BRGS.
N.B.L.: 42'0", 52'-6", 52'-6", 42'-0" C/C BRGS.

ROADWAY: SOUTHBOUND LANE 64'-0"± T/T OF PARAPETS
NORTHBOUND LANE VARIES T/T OF PARAPETS

LOADING: HS-20-44 (CASE 1) AND ALTERNATE MILITARY LOADING

SKEW: 14°16'00" (L.F)

WEARING SURFACE: CONCRETE

APPROACH SLABS: 25'-0" LONG AS-1-81, WIDTH VARIES NB 64'-0" T/T CURB SB

ALIGNMENT: TANGENT

CROWN: 3/16" PER FOOT

LONGITUDE: 81°47'25" LATITUDE 41°11'14"

DESIGN AGENCY: ODOT CENTRAL OFFICE OFFICE OF PRODUCTION
REVIEWED: HLG DATE: 10-08-99
STRUCTURE FILE NUMBER: 5204135L/5204143R
DRAWN: TAA REVISED:
DESIGNED: TAA CHECKED: DFT

MEDINA COUNTY
STA. 1267+90.07
STA. 1269+81.13

SITE PLAN
MED-71-2402 L/R
I-71 OVER S.R. 303

MED-71-15.78

1 / 46

886
940

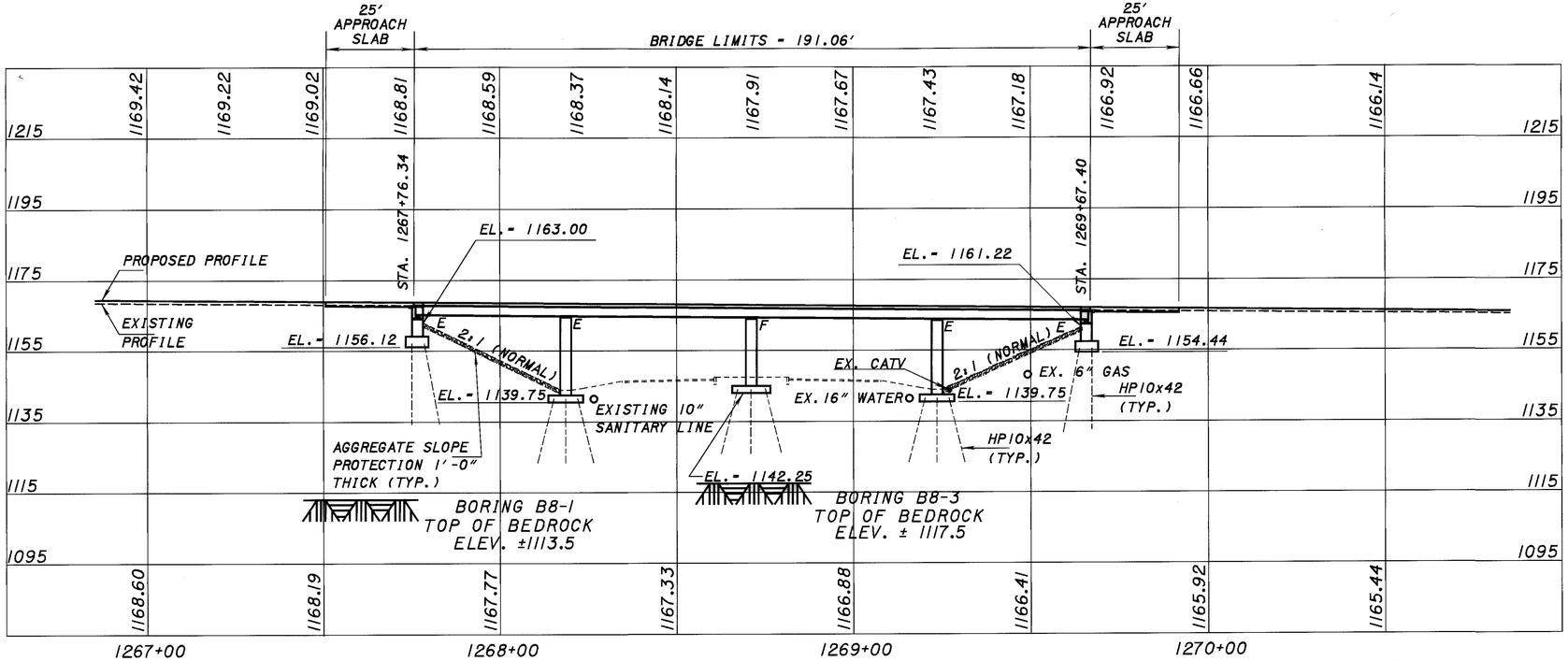

NORTHBOUND LANE STRUCTURE

(ALONG ℄ NORTHBOUND)

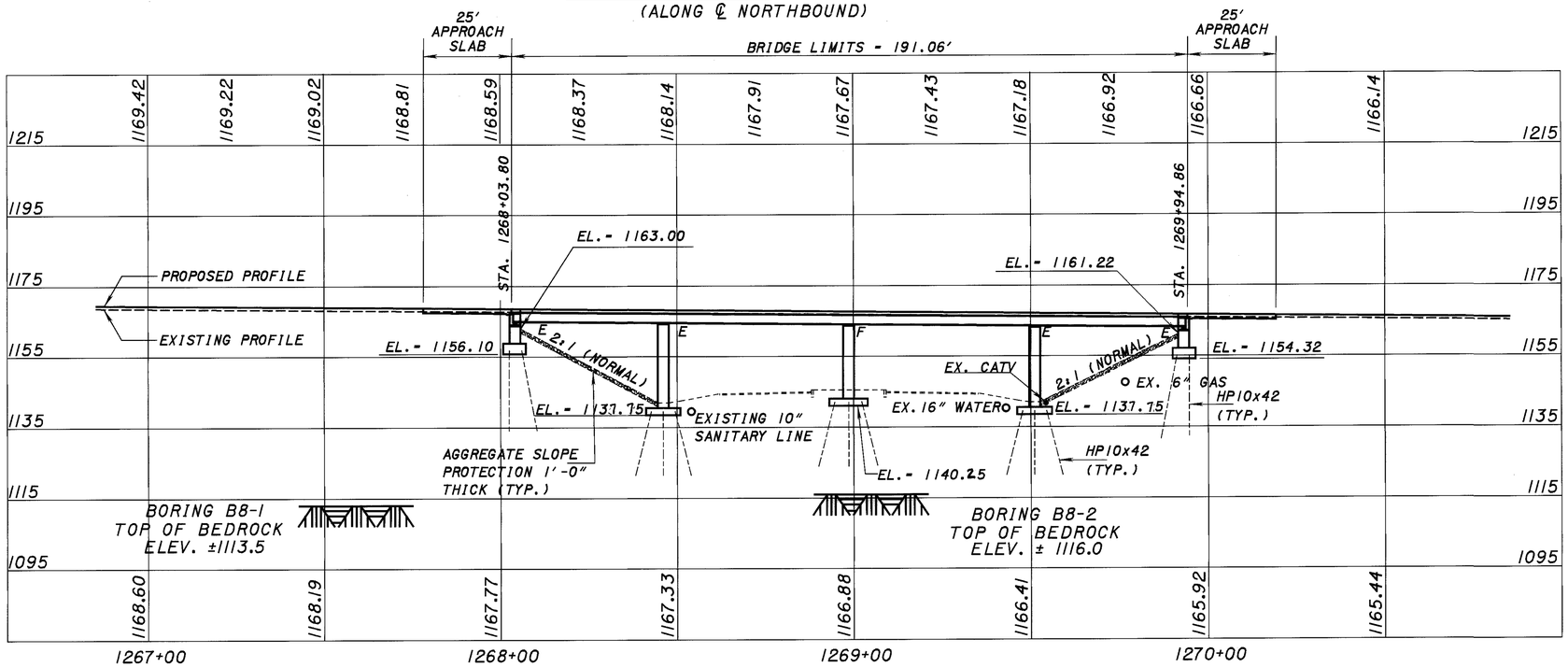

SOUTHBOUND LANE STRUCTURE

(ALONG ℄ SOUTHBOUND)

NOTES AND LEGEND

THE PROPOSED PROFILE ELEVATION SHOWN ARE ALONG THE PROFILE GRADE OF THE STRUCTURE.

PILES ARE HP10x42 FOR THE ABUTMENTS. THE ESTIMATED PAY LENGTHS ARE:

REAR ABUTMENT - 45 FEET
FORWARD ABUTMENT - 45 FEET

PILES ARE HP10x42 FOR THE PIERS. THE ESTIMATED PAY LENGTHS ARE:

PIER 1 - 25 FEET
PIER 2 - 25 FEET
PIER 3 - 25 FEET

E - EXPANSION
F- FIXED
EL. - ELEVATION
CATV - CABLE TELEVISION LINE

VERTICAL CURVE DATA

V.P.I. STA = 1266+00.00
V.P.I. ELEVATION = 1170.87
L.V.C. = 800 FEET
g1 = -0.34 %
g2= -1.05%

DESIGN AGENCY: ODOT CENTRAL OFFICE OFFICE OF PRODUCTION
REVIEWED: HLG
DATE: 10-08-99
STRUCTURE FILE NUMBER: 5204135L/5204143R
DRAWN: TAA
REVISED:
DESIGNED: TAA
CHECKED: DFT

MEDINA COUNTY
STA. 1267+90.07
STA. 1269+81.13

SITE PLAN
MED-71-2402 L/R
I-71 OVER S.R. 303

MED-71-15.78

887/940

				ESTIMATED QUANTITIES				
ITEM	EXTENSION	TOTAL	UNIT	DESCRIPTION	ABUT.	PIERS	SUPER.	GEN.
202	11203	LUMP		PORTIONS OF STRUCTURE REMOVED, OVER 20 FOOT SPAN, AS PER PLAN	LUMP	LUMP	LUMP	
503	11100	LUMP		COFFERDAMS, CRIBS AND SHEETING				LUMP
503	21301	LUMP		UNCLASSIFIED EXCAVATION, AS PER PLAN	LUMP			
505	11100	LUMP		PILE DRIVING EQUIPMENT MOBILIZATION				LUMP
507	00100	1680	LF	STEEL PILES HP10X42, FURNISHED	1080	600		
507	00150	1680	LF	STEEL PILES HP10X42, DRIVEN	1080	600		
507	50500	24	EACH	STEEL PILE SPLICES	12	12		
512	44400	8	SY	TYPE B WATERPROOFING	8			
SPECIAL	51267200	49	SY	WATERPROOFING, MISC.: SEMI-INTEGRAL ABUTMENT JOINT WATERPROOFING	49			
SPECIAL	51267510	1064	SY	SEALING OF CONCRETE SURFACES (EPOXY-URETHANE)	35	588	441	
516	13900	61	SF	2" PREFORMED EXPANSION JOINT FILLER	61			
516	44000	18	EACH	ELASTOMERIC BEARING WITH INTERNAL LAMINATES AND LOAD PLATE		18		
				(NEOPRENE) (10"x16"x1½" PAD AND 11"x17"x1½" PLATE)				
516	44001	9	EACH	ELASTOMERIC BEARING WITH INTERNAL LAMINATES AND LOAD PLATE		9		
				(NEOPRENE), AS PER PLAN (10"x16"x1½" PAD AND 11"x22"x1½" PLATE)				
516	44101	18	EACH	ELASTOMERIC BEARING WITH INTERNAL LAMINATES AND LOAD PLATE	18			
				(NEOPRENE), AS PER PLAN (9"x12"x2" PAD AND 12"x13"x1½" PLATE)				
518	21231	LUMP		POROUS BACKFILL WITH FILTER FABRIC, AS PER PLAN	LUMP			
518	40000	179	LF	6" PERFORATED CORRUGATED PLASTIC PIPE	179			
518	40010	49	LF	6" NON-PERFORATED CORRUGATED PLASTIC PIPE, INCLUDING SPECIALS	49			
519	11101	15	SF	PATCHING CONCRETE STRUCTURE , AS PER PLAN		15		
530	00200	LUMP		STRUCTURE, MISC.: METALLIC COATING SYSTEM			LUMP	
601	20500	65	CY	CRUSHED AGGREGATE SLOPE PROTECTION				65
842	41001	76	CY	CLASS C CONCRETE, PIER ABOVE FOOTINGS, AS PER PLAN		76		
842	44101	105	CY	CLASS C CONCRETE, ABUTMENT NOT INCLUDING FOOTING, AS PER PLAN	105			
842	46501	110	CY	CLASS C CONCRETE, FOOTING, AS PER PLAN	58	52		
844	48001	364	CY	HIGH PERFORMANCE CONCRETE SUPERSTRUCTURE (DECK), AS PER PLAN, MIX 4			364	
844	48021	58	CY	HIGH PERFORMANCE CONCRETE SUPERSTRUCTURE (PARAPET), AS PER PLAN, MIX 4			58	
844	48041	56	CY	HIGH PERFORMANCE CONCRETE SUBSTRUCTURE, AS PER PLAN	56			
844	49000	LUMP		HIGH PERFORMANCE CONCRETE TRIAL MIX			LUMP	
844	49010	LUMP		HIGH PERFORMANCE CONCRETE TESTING *			LUMP	
863	10060	LUMP		STRUCTURAL STEEL MEMBERS, LEVEL THREE (3) FABRICATION, A572			LUMP	
863	20000	5373	EACH	WELDED STUD SHEAR CONNECTORS			5373	

* SEE CSSI FOR FURTHER INFORMATION REGARDING TESTING

ITEM 519 PATCHING CONCRET STRUCTURE, AS PER PLAN

PATCHING SHALL OCCUR ON THE PIER COLUMNS, AS DIRECTED BY THE PROJECT ENGINEER. ALL SURFACES TO BE PATCHED AND THE EXPOSED REINFORCING STEEL WITHIN SHALL BE THOROUGHLY CLEANED BY ABRASIVE BLASTING PRIOR TO THE CLEANING SPECIFIED BY 519.04 CLEANING SHALL PRECEDE APPLICATION OF THE PATCHING MATERIAL OR ERECTION OF THE FORMS BY NO MORE THAN 24 HOURS.

DESIGN AGENCY: ODOT CENTRAL OFFICE, OFFICE OF PRODUCTION

DESIGNED	DRAWN	REVIEWED	DATE
TAA	TAA	DFT	10-8-99
CHECKED	REVISED	STRUCTURE FILE NUMBER	
BLK		5204135	

ESTIMATED QUANTITIES
MED-71-2402 L
I-71 OVER S.R. 303

MED-71-15.78

888
940

GENERAL NOTES

STANDARD DRAWINGS AND SPECIFICATIONS:

REFERENCE SHALL BE MADE TO STANDARD DRAWINGS:

AS-1-81	REVISED 09-15-94
SBR-1-99	DATED 01-12-99
PCB-1-91	REVISED 07-06-99
BS-1-93	DATED 12-19-94
GSD-1-96	DATED 02-12-97

AND TO SUPPLEMENTAL SPECIFICATIONS:

816	DATED 04-21-97
842	DATED 01-06-99
844	DATED 01-06-99
863	DATED 10-12-99
899	DATED 10-21-98
910	DATED 07-28-98
911	DATED 07-10-97
954	DATED 09-09-97

DESIGN SPECIFICATIONS:

THIS STRUCTURE CONFORMS TO "STANDARD SPECIFICATIONS FOR HIGHWAY BRIDGES" ADOPTED BY THE AMERICAN ASSOCIATION OF STATE HIGHWAY AND TRANSPORTATION OFFICIALS, 1996 INCLUDING THE 1997 AND 1998 INTERIM SPECIFICATIONS AND THE ODOT DESIGN MANUAL.

DESIGN LOADING:

HS20-44, CASE I AND THE ALTERNATE MILITARY LOADING.

DESIGN DATA:

HIGH PERFORMANCE CONCRETE - COMPRESSIVE STRENGTH 4500 PSI (SUPERSTRUCTURE)

HIGH PERFORMANCE CONCRETE - COMPRESSIVE STRENGTH 4000 PSI (SUBSTRUCTURE)

ITEM 842 CONCRETE - COMPRESSIVE STRENGTH 4000 PSI (SUBSTRUCTURE)

REINFORCING STEEL - ASTM A615, A616 OR A617 GRADE 60 MINIMUM YIELD STRENGTH 60 Ksi. SPIRAL REINFORCEMENT MAY BE PLAIN BARS, ASTM A82 OR A615

STRUCTURAL STEEL - A572 - YIELD STRENGTH 50 Ksi

DECK PROTECTION METHOD - EPOXY COATED REINFORCING STEEL AND 2½" CONCRETE COVER AND HIGH PERFORMANCE CONCRETE.

MONOLITHIC WEARING SURFACE IS ASSUMED, FOR DESIGN PURPOSES, TO BE 1" THICK.

EXISTING STRUCTURE VERIFICATION:

DETAILS AND DIMENSIONS SHOWN ON THESE PLANS PERTAINING TO THE EXISTING STRUCTURE HAVE BEEN OBTAINED FROM PLANS OF THE EXISTING STRUCTURE AND FROM FIELD OBSERVATIONS AND MEASUREMENTS. CONSEQUENTLY, THEY ARE INDICATIVE OF THE EXISTING STRUCTURE AND THE PROPOSED WORK BUT THEY SHALL BE CONSIDERED TENTATIVE AND APPROXIMATE. THE CONTRACTOR IS REFERRED TO CMS SECTIONS 102.05, 105.02 AND 513.02.

CONTRACT BID PRICES SHALL BE BASED UPON A RECOGNITION OF THE UNCERTAINTIES DESCRIBED ABOVE AND UPON A PREBID EXAMINATION OF THE EXISTING STRUCTURE BY THE CONTRACTOR. HOWEVER, ALL PROJECT WORK SHALL BE BASED UPON ACTUAL DETAILS AND DIMENSIONS WHICH HAVE BEEN VERIFIED BY THE CONTRACTOR IN THE FIELD.

EXISTING BRIDGE PLANS MAY BE INSPECTED IN THE OFFICE OF STRUCTURAL ENGINEERING IN COLUMBUS, OHIO OR AT THE ODOT DISTRICT THREE OFFICE IN ASHLAND, OHIO.

DOWEL HOLES WITH NON-SHRINK, NON METALLIC GROUT

ALL DOWEL HOLES SHALL BE CORE DRILLED AND GROUTED WITH AN EPOXY MORTAR MEETING THE REQUIREMENTS OF CMS 510. PAYMENT FOR ALL OF THE ABOVE SHALL BE INCLUDED WITH THE ASSOCIATED CONCRETE ITEM.

ITEM 202 PORTIONS OF STRUCTURE REMOVED OVER 20 FOOT SPAN, AS PER PLAN:

PORTION OF THE STRUCTURE REMOVED, AS PER PLAN, SHALL INCLUDE THE ELEMENTS INDICATED IN THE PLANS AND GENERAL NOTES AND ARE NOT SEPARATELY LISTED FOR PAYMENT, EXCEPT FOR WEARING COURSE REMOVAL. ITEMS TO BE REMOVED INCLUDE ALL EXISTING MATERIALS BEING REPLACED BY NEW CONSTRUCTION AND MISCELLANEOUS ITEMS THAT ARE NOT SHOWN TO BE INCORPORATED INTO THE FINAL CONSTRUCTION AND ARE DIRECTED TO BE REMOVED BY THE ENGINEER. THE USE OF EXPLOSIVES, HEADACHE BALLS AND/OR HOE-RAMS WILL NOT BE PERMITTED. THE METHOD OF REMOVAL AND THE WEIGHT OF HAMMER SHALL BE APPROVED BY THE ENGINEER. ALL WORK SHALL BE DONE IN A MANNER THAT WILL NOT CUT, ELONGATE OR DAMAGE THE EXISTING REINFORCING STEEL TO BE PRESERVED.

PROTECTION OF TRAFFIC:
PRIOR TO DEMOLITION OF ANY PORTIONS OF THE EXISTING SUPERSTRUCTURE, THE CONTRACTOR SHALL SUBMIT PLANS FOR THE PROTECTION OF TRAFFIC (VEHICULAR, PEDESTRIAN, ETC.) ADJACENT TO AND/OR UNDER THE STRUCTURE TO THE ENGINEER FOR APPROVAL. THESE PLANS SHALL INCLUDE PROVISIONS FOR ANY DEVICES AND STRUCTURES THAT MAY BE NECESSARY TO ENSURE SUCH PROTECTION. TEMPORARY VERTICAL CLEARANCES SPECIFIED IN THE PROPOSAL SHALL BE MAINTAINED AT ALL TIMES EXCEPT AS OTHERWISE APPROVED BY THE ENGINEER.

CUT LINE CONSTRUCTION JOINT PREPARATION:

SAW CUT BOUNDARIES OF PROPOSED CONCRETE REMOVALS 1" DEEP. REMOVE CONCRETE TO A ROUGH SURFACE. WHERE PRACTICABLE, THE EXISTING REINFORCING STEEL WHERE REQUIRED IN THE PLANS SHALL BE LEFT IN PLACE. INSTALL DOWEL BARS IF SPECIFIED. PRIOR TO CONCRETE PLACEMENT ABRASIVELY CLEAN JOINT SURFACE AND EXPOSED REINFORCEMENT TO REMOVE LOOSE AND DISINTEGRATED CONCRETE AND LOOSE RUST. THE JOINT SURFACE AND EXPOSED REINFORCEMENT SHALL BE THOROUGHLY CLEANED OF ALL DIRT, DUST, OR OTHER FOREIGN MATERIAL BY THE USE OF WATER, AIR UNDER PRESSURE, OR OTHER METHODS THAT PRODUCE SATISFACTORY RESULTS. CONCRETE BONDING SURFACES SHALL BE WET WITHOUT FREE WATER AS CONCRETE IS PLACED.

SUBSTRUCTURE CONCRETE REMOVAL:
SUBSTRUCTURE CONCRETE REMOVAL SHALL BE BY MEANS OF APPROVED PNEUMATIC HAMMERS EMPLOYING POINTED AND BLUNT CHISEL TOOLS. HYDRAULIC HOE-RAM TYPE HAMMERS WILL NOT BE PERMITTED. THE WEIGHT OF THE HAMMER SHALL NOT BE MORE THAN 35 POUNDS FOR REMOVAL WITHIN 18 INCHES OF PORTIONS TO BE PRESERVED. OUTSIDE THE 18 INCH LIMIT, A HAMMER HEAVIER THAN 35 POUNDS, BUT NOT TO EXCEED 90 POUNDS, MAY BE USED AT THE APPROVAL OF THE ENGINEER. PNEUMATIC HAMMERS SHALL NOT BE PLACED IN DIRECT CONTACT WITH REINFORCING STEEL THAT IS TO BE RETAINED IN THE REBUILT STRUCTURE.

¼ INCH SCARIFICATION: THE EXISTING PIER BRIDGE SEAT SURFACE SHALL BE SCARIFIED ¼ INCH INTO SOUND CONCRETE PRIOR TO PLACEMENT OF THE CONCRETE. THE SURFACE SHALL BE THOROUGHLY CLEANED OF ALL DIRT, DUST, OR OTHER FOREIGN MATERIALS BY THE USE OF WATER, AIR UNDER PRESSURE, OR ANOTHER METHOD THAT PRODUCES RESULTS SATISFACTORY TO THE ENGINEER. THE CONCRETE BONDING SURFACE SHALL BE WET WITHOUT FREE WATER AS CONCRETE IS PLACED.

PAYMENT
ALL WORK SHALL BE PAID FOR UNDER ITEM 202 PORTIONS OF STRUCTURES REMOVED, AS PER PLAN

TRAFFIC MAINTENANCE:
SEE ROADWAY PLANS FOR ADDITIONAL TRAFFIC NOTES AND DETAILS.

SEALING OF CONCRETE SURFACES (EPOXY-URETHANE)

EPOXY-URETHANE SHALL BE THE "BUFF" COLOR MEETING FEDERAL COLOR STANDARD NO. 37722 AS PER THE DETAILS IN THE PLAN.

ITEM SPECIAL - WATERPROOFING, MISC.: SEMI-INTEGRAL ABUTMENT JOINT WATERPROOFING

INSTALL A 3 FOOT WIDE STRIP, 3/32 INCH THICK, GENERAL PURPOSE, HEAVY DUTY NEOPRENE SHEET WITH NYLON FABRIC REINFORCEMENT AT LOCATIONS SHOWN IN THE PLANS. SECURE THE 3 FOOT WIDE NEOPRENE SHEETING TO THE CONCRETE WITH 1¼" X 3/32" (LENGTH X SHANK DIAMETER) #10 GALVANIZED BUTTON HEAD SPIKE THROUGH A 1 INCH OUTSIDE DIAMETER, #10 GAGE GALVANIZED WASHER. MAXIMUM FASTENER SPACING IS 9 INCHES. OTHER SIMILAR GALVANIZED DEVICES WHICH WILL NOT DAMAGE EITHER THE NEOPRENE OR THE CONCRETE MAY BE USED SUBJECT TO THE APPROVAL OF THE ENGINEER.

CENTER THE NEOPRENE STRIPS ON ALL JOINTS. FOR HORIZONTAL JOINTS, SECURE THE HORIZONTAL NEOPRENE STRIP BY USING A SINGLE LINE OF FASTENERS, STARTING AT 6 INCHES (+/-) FROM THE TOP OF THE NEOPRENE STRIP. FOR THE VERTICAL JOINTS SECURE THE VERTICAL NEOPRENE STRIP BY USING A SINGLE VERTICAL LINE OF FASTENERS, STARTING AT 6 INCHES (+/-) FROM THE VERTICAL EDGE OF THE NEOPRENE STRIP NEAREST TO THE CENTERLINE OF ROADWAY. FOR VERTICAL JOINTS, INSTALL 2 ADDITIONAL FASTENERS, AT 6 INCHES CENTER TO CENTER, ACROSS THE TOP OF THE NEOPRENE STRIP ON THE SAME SIDE OF THE VERTICAL JOINT AS WHERE THE SINGLE VERTICAL ROW OF FASTENERS IS LOCATED.

THE VERTICAL NEOPRENE STRIPS SHOULD COMPLETELY OVERLAP THE HORIZONTAL STRIPS. LAPS IN THE LENGTH OF THE HORIZONTAL STRIPS DUE TO MATERIAL MANUFACTURING SHALL BE AT LEAST ONE FOOT IN LENGTH, IF NOT VULCANIZED OR ADHESIVE BONDED, OR 6 INCHES IN LENGTH IF THE LAP IS VULCANIZED OR ADHESIVE BONDED. NO LAPS ARE ACCEPTABLE IN VERTICALLY INSTALLED NEOPRENE STRIPS.

THE NEOPRENE SHEETING SHALL BE 3/32 INCH THICK GENERAL PURPOSE, HEAVY DUTY NEOPRENE SHEET WITH NYLON FABRIC REINFORCEMENT. THE SHEETING SHALL BE "FAIRPRENE NUMBER NN-0003", BY E. I. DUPONT DE NEMOURS AND COMPANY, INC., "WINGPRENE" BY THE GOODYEAR TIRE AND RUBBER COMPANY, OR AN APPROVED ALTERNATE. THE NEOPRENE SHEETING SHALL CONFORM TO THE FOLLOWING:

DESCRIPTION OF TEST	ASTM METHOD	REQUIREMENT
THICKNESS, INCHES	D 751	0.094 ± .01
BREAKING STRENGTH, GRAB WXF, LBS, MINIMUM	D 751	700 X 700
ADHESIVE 1" STRIP, 2" MINIMUM, LBS, MINIMUM	D 751	9
BURST STRENGTH (MULLEN) PSI, MINIMUM	D 751	1400
HEAT AGING 70 HOURS T 212 F, 180 BEND WITHOUT CRACKING	D 2136	NO CRACKING OF COATING
LOW TEMPERATURE BRITTLENESS 1 HOUR AT -40 F, BEND AROUND ¼ INCH MANDREL	D 2136	NO CRACKING OF COATING

PAYMENT FOR LABOR MATERIALS AND INSTALLATION OF THESE ITEMS SHALL BE INCLUDED IN INTEM SPECIAL- WATERPROOFING, MISC. : SEMI-INTEGRAL ABUTMENT JOINT WATERPROOFING.

ITEM 507 STEEL PILES HP10X42

ALL PILES SHALL BE DRIVEN TO REFUSAL ON THE BEDROCK. REFUSAL SHALL BE CONSIDERED AS OBTAINED BY PENETRATING SOFT BEDROCK FOR SEVERAL INCHES WITH A MINIMUM RESISTANCE OF 20 BLOWS PER ONE INCH OR REFUSAL SHALL BE CONSIDERED AS OBTAINED AFTER THE PILE HAS CONTACTED HARD BEDROCK AND THE PILE HAS THEN RECEIVED AT LEAST 20 BLOWS.

ITEM 503, UNCLASSIFIED EXCAVATION, AS PER PLAN:

UNCLASSIFIED EXCAVATION SHALL BE IN ACCORDANCE WITH 503 EXCEPT THAT THE BACKFILL MATERIAL BEHIND THE ABUTMENTS SHALL BE 203 MATERIAL PLACED IN 6" LIFTS. EXCAVATION AT ABUTMENTS IN ADDITION TO THAT NECESSARY TO REMOVE PORTION OF THE EXISTING STRUCTURE SHALL BE INCLUDED IN THE LUMP SUM PRICE BID FOR ITEM 503, UNCLASSIFIED EXCAVATION FOR PAYMENT.

ITEM 842 CLASS C CONCRETE, (FOOTINGS, PIERS AND ABUTMENTS) AS PER PLAN

THE COARSE AGGREGATE SHALL BE NO. 8 LIMESTONE. THESE ITEMS SHALL INCLUDE THE COST OF THE REINFORCING STEEL.

ITEM 844 HIGH PERFORMANCE CONCRETE, AS PER PLAN

THE DESIGN MIX SHALL BE MIX NO. 4 LIMESTONE. THE OPTION OF SLIPFORM CONSTRUCTION OF THE BRIDGE PARAPET IS NOT PERMITTED. THESE ITEMS SHALL INCLUDE THE COST OF THE REINFORCING STEEL.

ITEM 530 - STRUCTURE MISC.: METALLIC COATING SYSTEM

THE STRUCTURE STEEL FOR BOTH THE LEFT AND RIGHT STRUCTURES SHALL BE COATED AS DESCRIBED IN THE NOTES ON SHEETS CSS5 THRU CSS7. THESE NOTES ARE IN THE COMMON STRUCTURE SHEETS (CSS) AT THE BEGINNING OF THE STRUCTURE SHEETS FOR THIS PROJECT.

REINFORCING STEEL:

NEW REINFORCING STEEL MAY REQUIRE FIELD CUTTING OR BENDING TO BE PROPERLY FITTED. PAYMENT SHALL BE INCLUDED UNDER ITEM 844 HIGH PERFORMANCE CONCRETE.

ITEM 518 - POROUS BACKFILL WITH FILTER FABRIC, AS PER PLAN

POROUS BACKFILL SHALL BE #57 GRAVEL ONLY.

THE DESIGN LOAD IS 44 TONS PER PILE FOR THE ABUTMENT PILES AND 55 TONS PER PILE FOR THE PIER PILES. THE ULTIMATE BEARING VALUE IS 88 TONS PER PILE FOR THE ABUTMENTS AND 110 TONS PER PILE FOR THE PIERS. THE ULTIMATE BEARING VALUE IS TWO TIMES THE ACTUAL DESIGN LOAD. THESE DESIGN LOADS APPLY TO BOTH LEFT AND RIGHT STRUCTURES.

SURVEY DISC ON STRUCTURE:

THE CONTRACTOR SHALL NOTIFY THE ENGINEER AT LEAST ONE (1) WEEK IN ADVANCE OF POURING THE CONCRETE FOR COMPLETION OF THE ABUTMENT. THE ENGINEER WILL PROVIDE THE CONTRACTOR ONE (1) SURVEY DISC FOR EACH STRUCTURE (OBTAINED FROM THE DISTRICT SURVEYOR) WHICH THE CONTRACTOR SHALL PLACE IN THE SURFACE OF THE FRESH CONCRETE. THE LOCATION OF THE DISC SHALL BE ON THE ABUTMENT, AND ON A FLAT, HORIZONTAL SURFACE BEYOND THE EDGE OF DECK AND PARAPET. THE BENCHMARK SHALL BE ACCESSIBLE TO A SURVEYOR'S ROD WITHOUT ANY OBSTRUCTIONS. COST OF THIS WORK IS CONSIDERED INCIDENTAL TO THE CONCRETE BID ITEM.

ITEM 601 CRUSHED AGGREGATE SLOPE PROTECTION

THE QUANTITIES INCLUDES 10 % OF THE EXISTING AGGREGATE SLOPE PROTECTION SURFACE AREA IN ADDITION TO WHAT IT IS DETAILED ON THE PLANS. THE SLOPE PROTECTION TO BE PLACED UNDER WIDENED STRUCTURE AND MATCH EXISTING.

ITEM 863 STRUCTURAL STEEL MEMBERS, LEVEL THREE (3) FABRICATION, A572

THE CONTRACTOR AT HIS OPTION MAY SUBMIT A COST SAVINGS TO THE STATE, TO FURNISH A36 STEEL, (YIELD STRENGTH OF 36 K.S.I.) IN LEUI OF THE A572 STEEL AS SPECIFIED FOR MED-71-2402 ONLY. THE USE OF A36 STEEL WILL ONLY BE ACCEPTABLE IF APPROVED BY THE PROJECT ENGINEER, PENDING THE SUBMITTED AMOUNT OF THE COST SAVINGS. THE LUMP SUM CONTRACT AMOUNT WILL BE ADJUSTED ACCORDINGLY.

ITS CONDUIT

THE CONDUIT SHALL BE PLACED WITHIN THE OUTSIDE PARAPET OF LEFT AND RIGHT STRUCTURES. SEE CSS3 AND CSS4 FOR DETAILS.

ODOT CENTRAL OFFICE
OFFICE OF PRODUCTION
DESIGN AGENCY

DESIGNED	DRAWN	REVIEWED	DATE
TAA	TAA	DRL	10-08-99
CHECKED	REVISED	STRUCTURE FILE NUMBER	
DFT		5204135L/5204143R	

GENERAL NOTES
MED-71-2402 L/R
I-71 OVER S.R. 303

MED-71-15.78

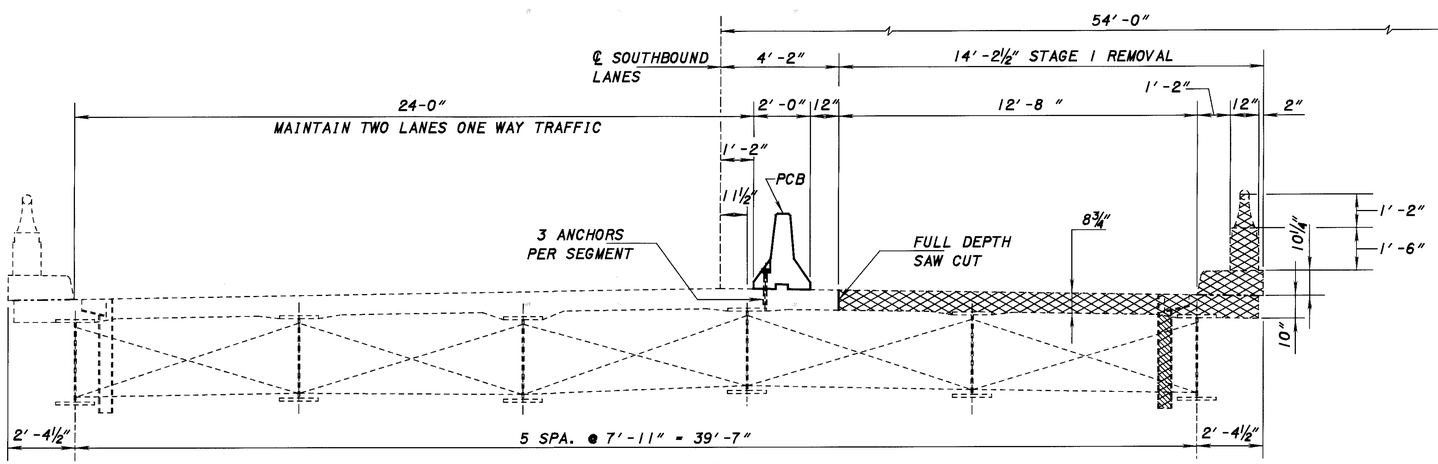

STAGE I REMOVAL

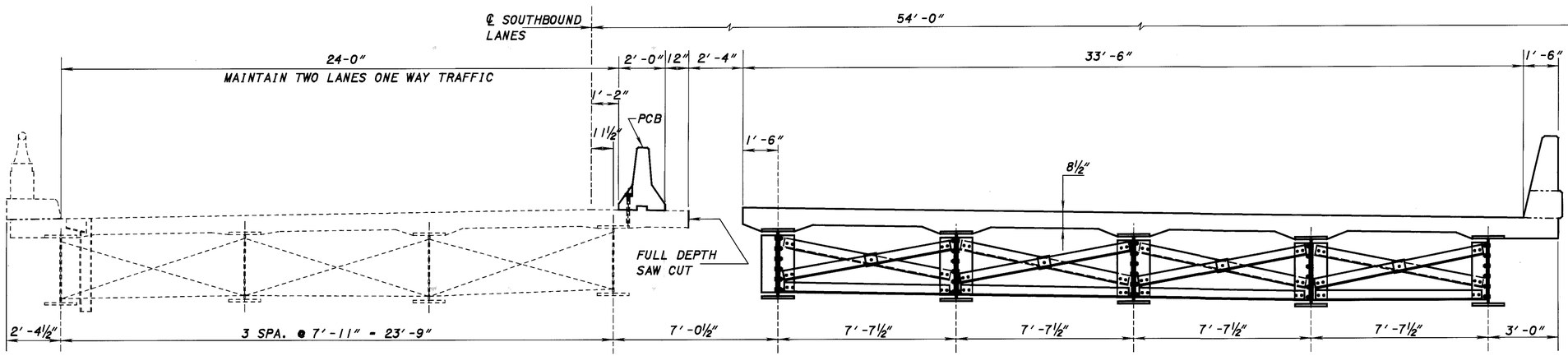

STAGE I CONSTRUCTION

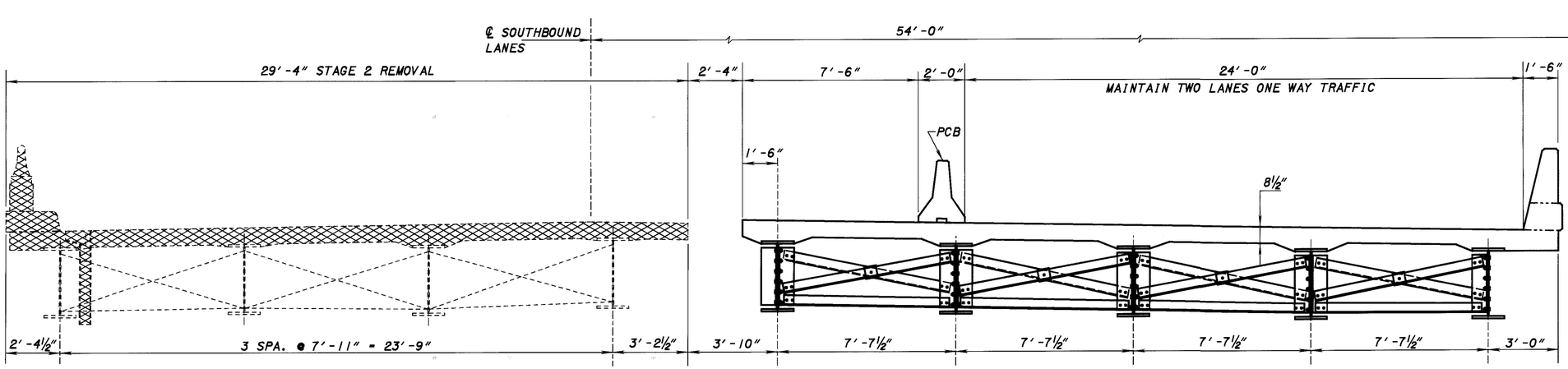

STAGE 2 REMOVAL

DESIGN AGENCY
ODOT CENTRAL OFFICE
OFFICE OF PRODUCTION

REVISED DRL DATE 10-08-99
STRUCTURE FILE NUMBER 5204135

DRAWN TAA REVISED
DESIGNED TAA CHECKED DFT

STAGE CONSTRUCTION
MED-71-2402 L
I-71 OVER S.R. 303

MED-71-15.78

5 / 46

890
940

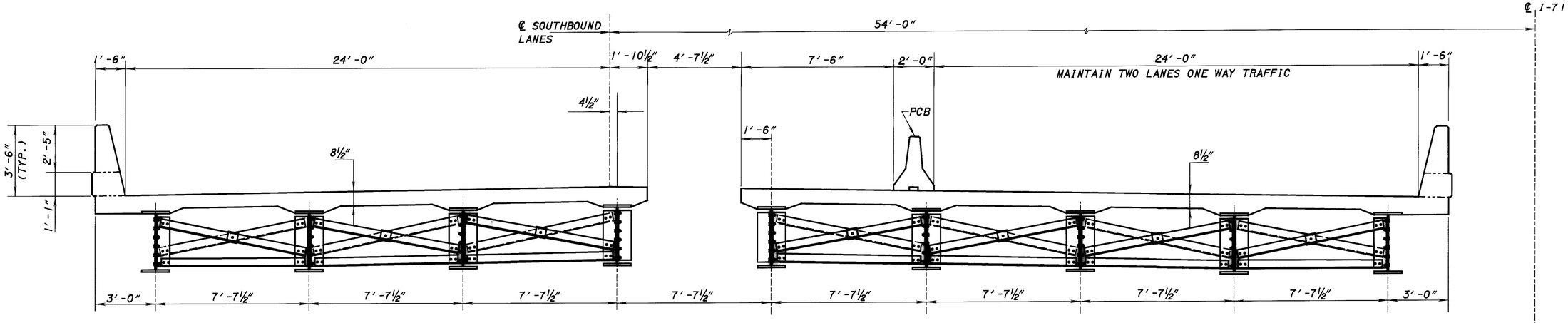

STAGE 2 CONSTRUCTION

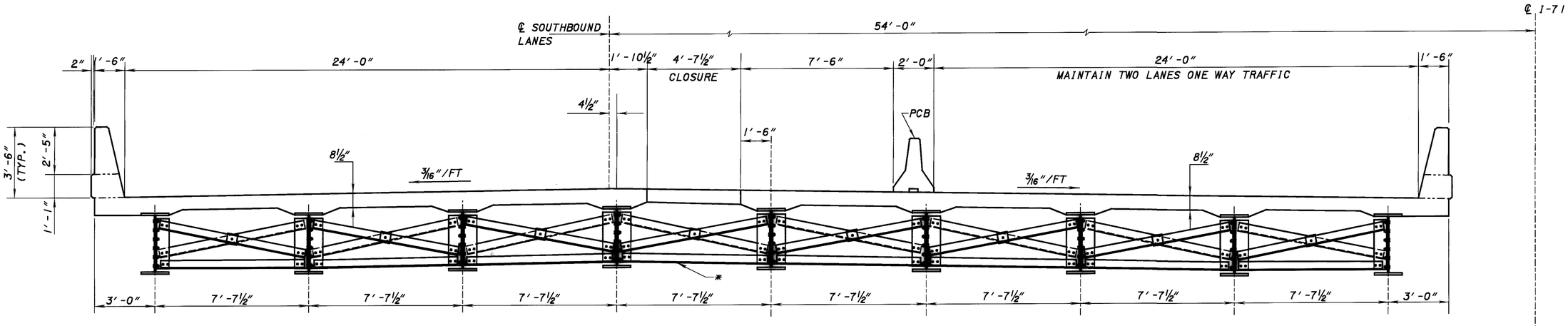

CLOSURE SECTION CONSTRUCTION

NOTES AND LEGEND

TEMPORARY BARRIERS SHALL BE ANCHORED TO THE EXISTING BRIDGE DECK TWO (2) OR THREE (3) ANCHORS PER TEMPORARY BARRIER SEGMENT ARE REQUIRED ON THE TRAFFIC SIDE OF THE BARRIER. THE ANCHOR BOLT PATTERN SHALL BE SYMMETRICAL ABOUT THE CENTER OF EACH SEGMENT. SEE STD. DWG. PCB-91 FOR ADDITIONAL DETAILS.

PCB - INDICATES PORTABLE CONCRETE BARRIER.

* PLACE CROSSFRAMES IN POSITION PRIOR TO POURING OF THE CLOSURE POUR

PROPOSED WORK

1. MAINTAIN TRAFFIC BY USE OF STAGE CONSTRUCTION
2. REPLACE CONCRETE DECK AND STEEL BEAMS
3. WIDEN AND MODIFIED EXISTING SUBSTRUCTURE UNITS

DESIGN AGENCY: ODOT CENTRAL OFFICE OFFICE OF PRODUCTION

DESIGNED	DRAWN	REVIEWED	DATE
TAA	TAA	DRL	10-08-99
CHECKED	REVISED	STRUCTURE FILE NUMBER	
DFT		5204135	

STAGE CONSTRUCTION
MED-71-2402 L
I-71 OVER S.R. 303

MED-71-15.78

6 / 46

891
940

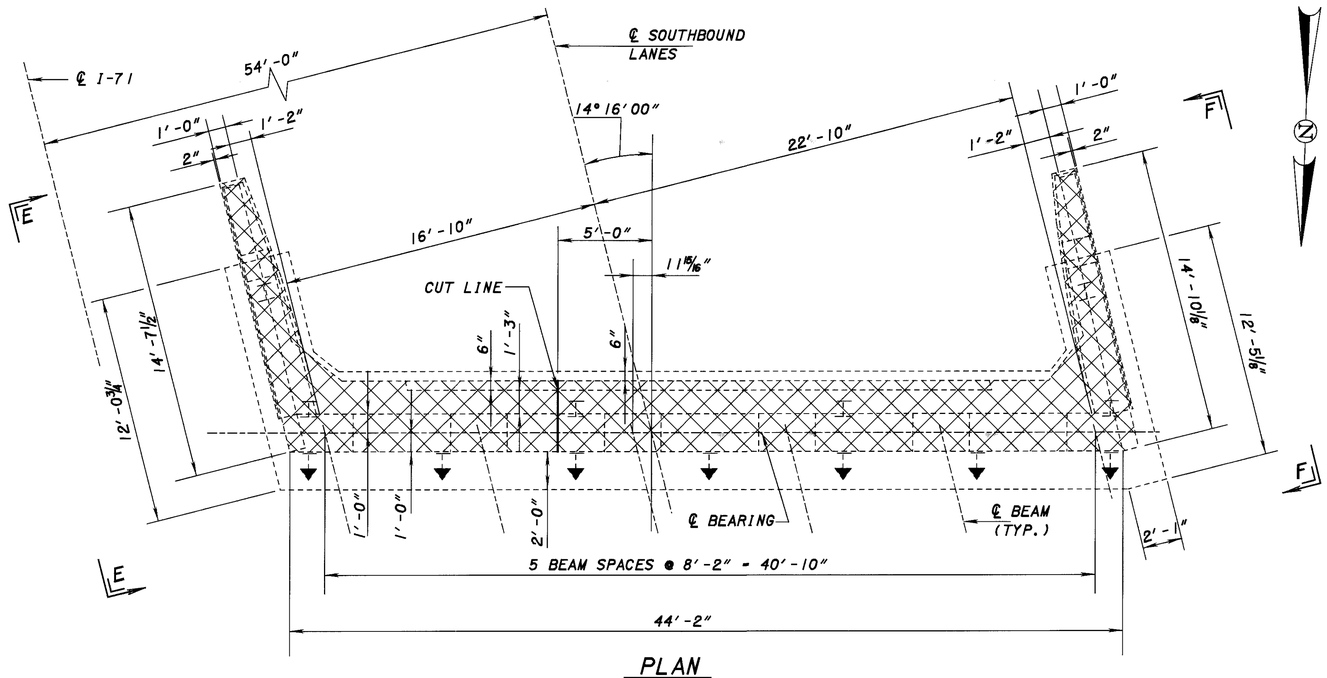

PLAN
(REAR ABUTMENT)

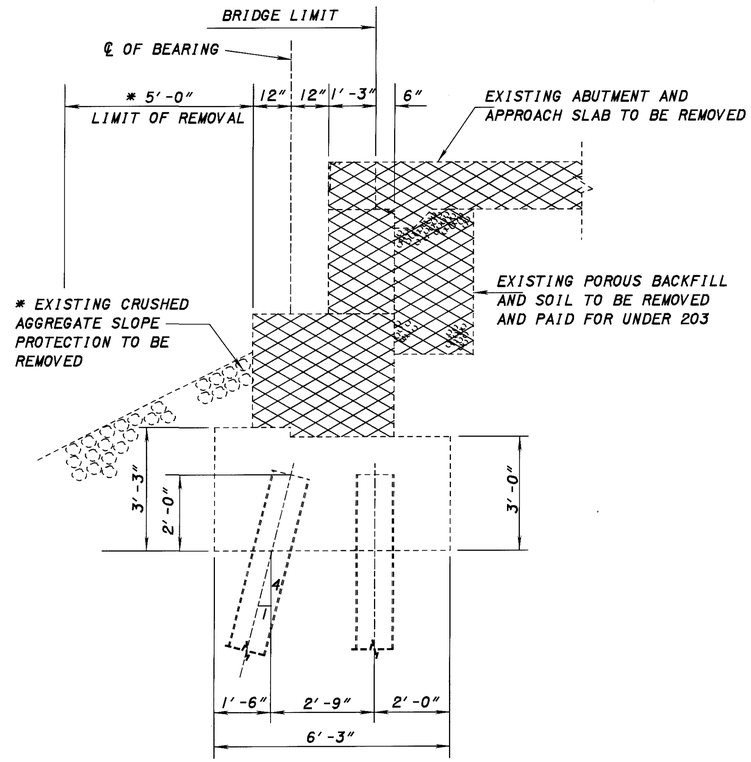

SECTION A-A

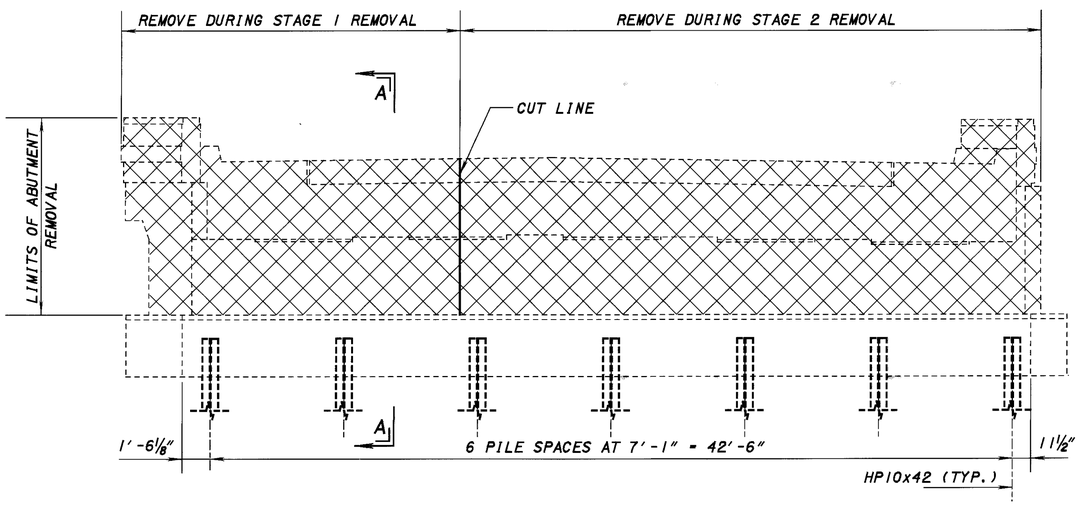

ELEVATION
(REAR ABUTMENT)

NOTES

FOR VIEW E-E AND F-F SEE SHEET 9/46

LEGEND

PORTION OF STRUCTURE TO BE REMOVED

INDICATE BATTERED PILE

DESIGN AGENCY: ODOT CENTRAL OFFICE OFFICE OF PRODUCTION

DESIGNED	DRAWN	REVISED	DATE	STRUCTURE FILE NUMBER
TAA	TAA	DRL	10-8-99	5204135
CHECKED	REVISED			
DFT				

EXISTING ABUTMENT PLAN AND ELEVATION
MED-71-2402 L
I-71 OVER S.R. 303

MED-71-15.78

7 / 46

892
940

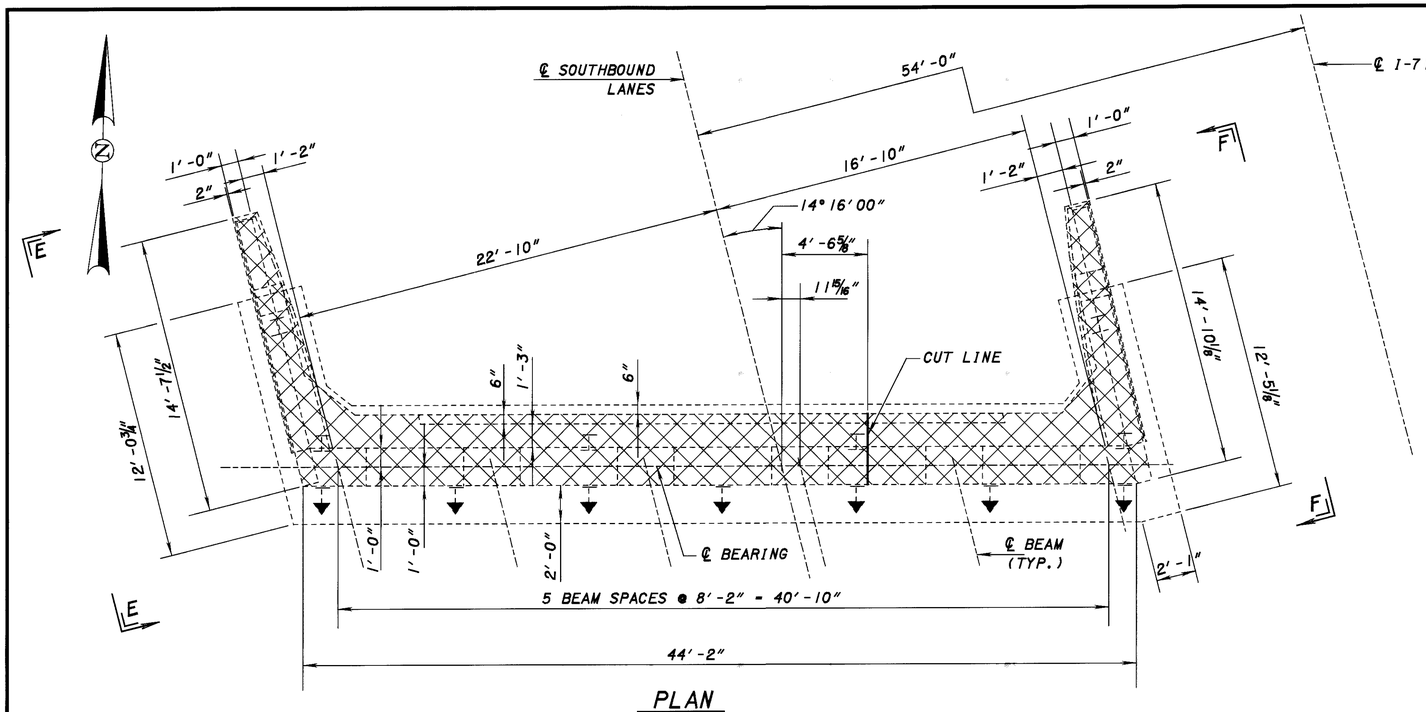

PLAN
(FORWARD ABUTMENT)

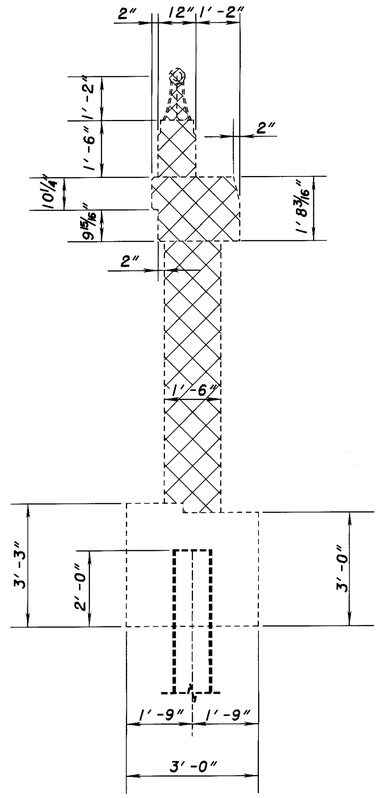

SECTION B-B

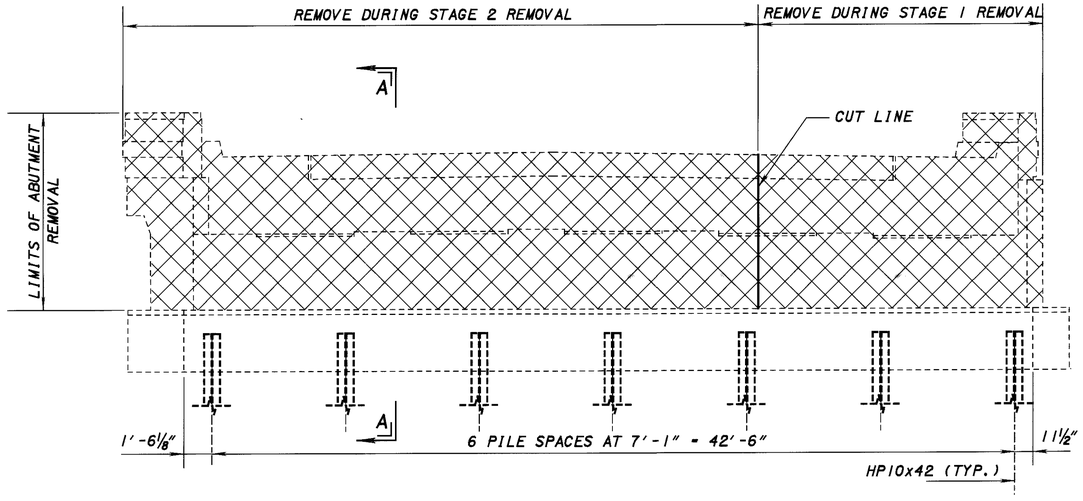

ELEVATION
(FORWARD ABUTMENT)

NOTES

FOR VIEW E-E AND F-F SEE SHEET 9/46

LEGEND

PORTION OF STRUCTURE TO BE REMOVED

INDICATE BATTERED PILE

DESIGN AGENCY
ODOT CENTRAL OFFICE
OFFICE OF PRODUCTION

DESIGNED	DRAWN	REVIEWED	DATE
TAA	TAA	DRL	10-8-99
CHECKED	REVISED	STRUCTURE FILE NUMBER	
DFT		5204135	

EXISTING ABUTMENT PLAN AND ELEVATION
MED-71-2402 L
I-71 OVER S.R. 303

MED-71-15.78

8/46

893
940

NOTES AND LEGEND

FOR SECTION B-B SEE SHEET 8 / 46

FOR VIEW E-E AND F-F SEE SHEET 7 & 8 / 46

PORTION OF STRUCTURE TO BE REMOVED

INDICATE BATTERED PILE

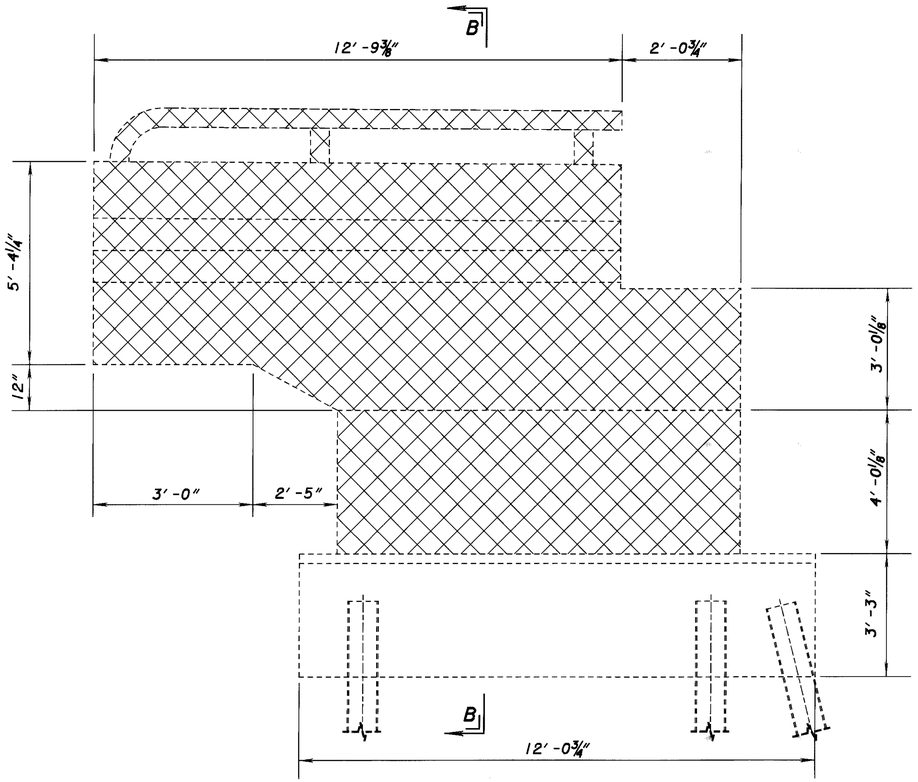

VIEW E-E

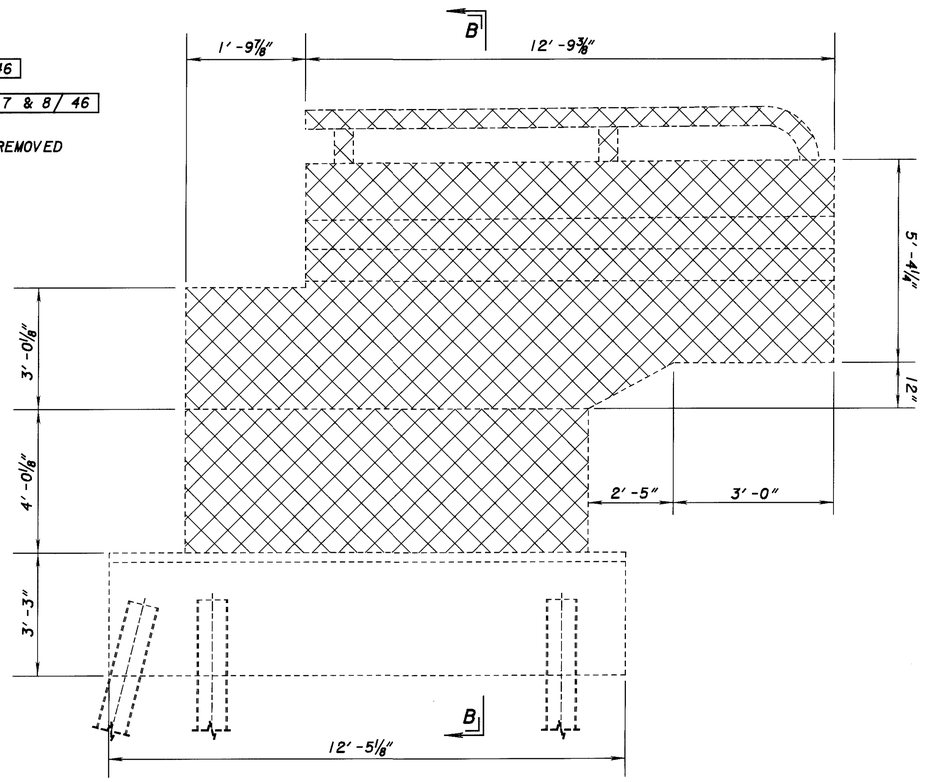

VIEW F-F

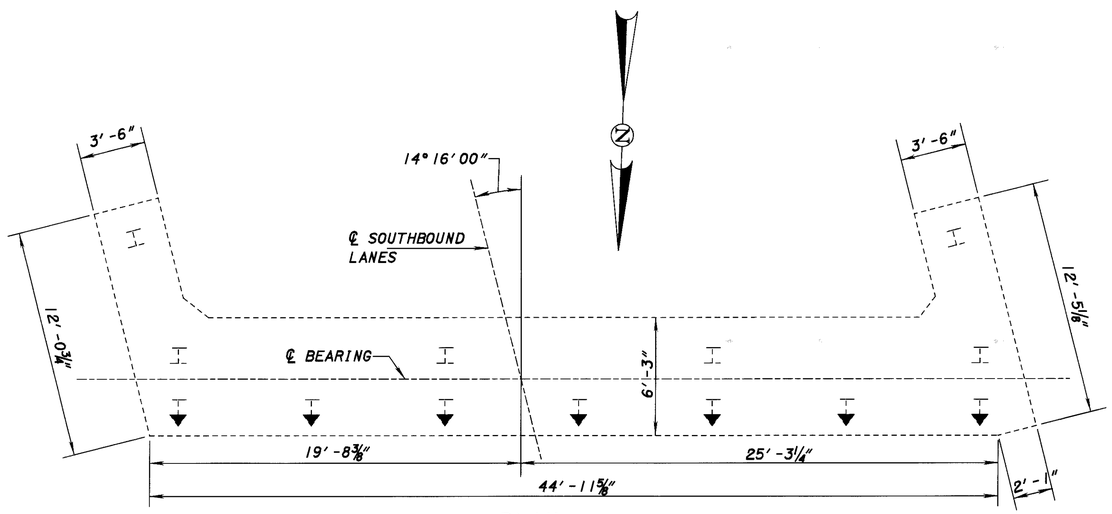

PLAN
(REAR ABUTMENT)

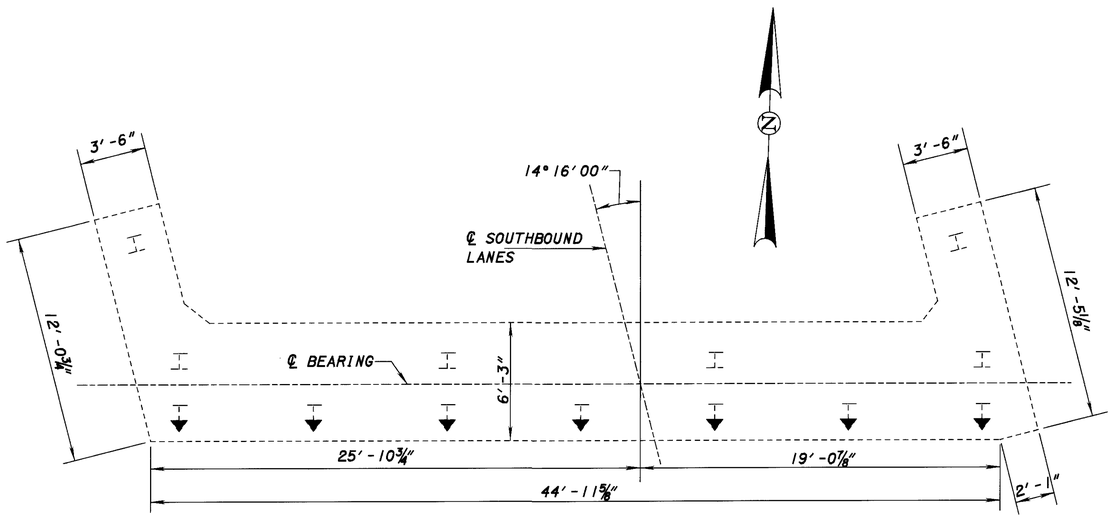

PLAN
(FORWARD ABUTMENT)

DESIGN AGENCY
ODOT CENTRAL OFFICE
OFFICE OF PRODUCTION

DESIGNED	DRAWN	REVIEWED	DATE
TAA	TAA	DRL	10-8-99
CHECKED	REVISED	STRUCTURE FILE NUMBER	
DFT		5204135	

EXISTING FOOTING AND WINGWALL DETAILS

MED-71-2402 L
I-71 OVER S.R. 303

MED-71-15.78

9 / 46

894
940

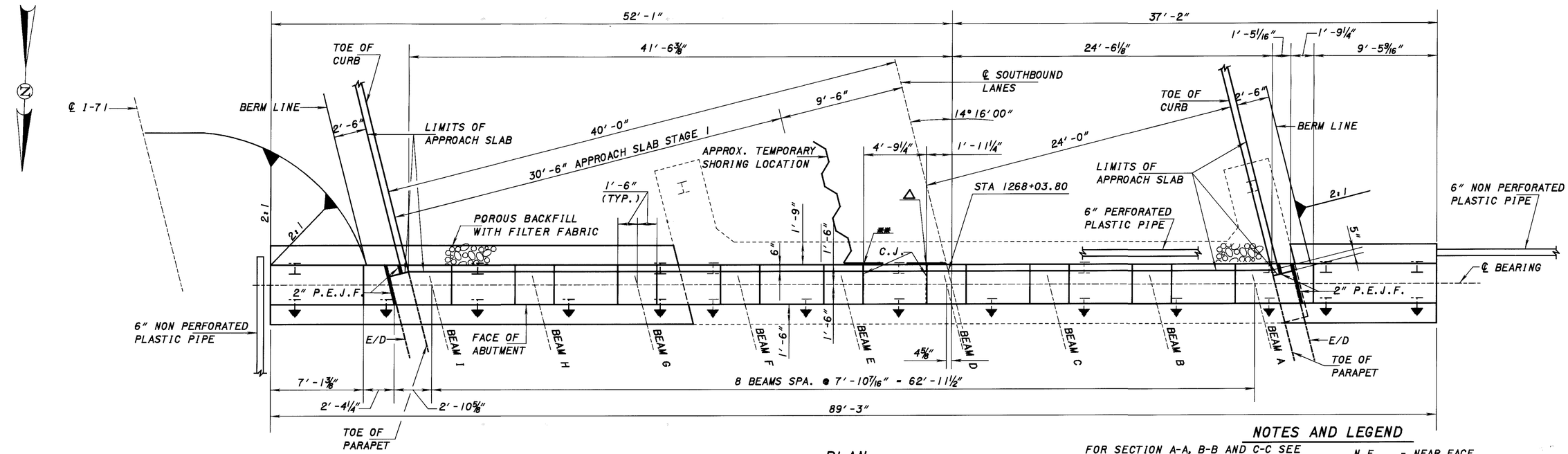

PLAN
(REAR ABUTMENT)

LOCATION	A	B	C	D	E	F	G	H	I
ELEVATIONS	1163.69	1163.83	1163.96	1164.09	1163.99	1163.88	1163.78	1163.68	1163.58

NOTES AND LEGEND

FOR SECTION A-A, B-B AND C-C SEE SHEET 12/46

ELEVATIONS SHOWN ARE MEASURED ALONG THE BRIDGE LIMITS. BEAM SEAT ELEVATIONS ARE MEASURED ALONG ℄ OF BEARING.

▼ INDICATE BATTERED PILE

○ INDICATES FRONT ROW

⬡ INDICATES BACK ROW

N.F. - NEAR FACE
F.F. - FAR FACE
E/D - EDGE OF DECK
C.J. - CONSTRUCTION JOINT

△ TYPE B WATERPROOFING 3'-0" WIDE SHOULD EXTEND FROM BOTTOM OF APPROACH SLAB TO THE BEAM SEAT ACROSS THE CONSTRUCTION JOINT.

** TYPE B WATERPROOFING 3'-0" WIDE SHOULD EXTEND FROM BOTTOM OF APPROACH SLAB TO TOP OF FOOTING ACROSS THE CONSTRUCTION JOINT.

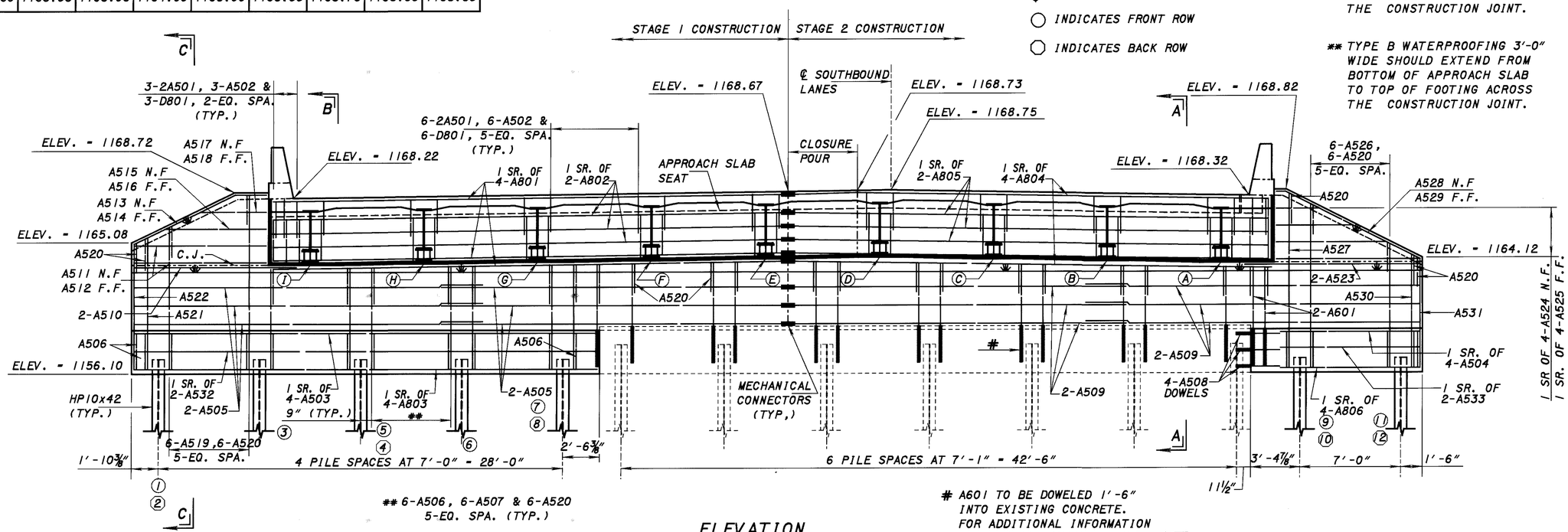

** 6-A506, 6-A507 & 6-A520 5-EQ. SPA. (TYP.)

A601 TO BE DOWELED 1'-6" INTO EXISTING CONCRETE. FOR ADDITIONAL INFORMATION SEE GENERAL NOTES SHEET 4/46

ELEVATION
(REAR ABUTMENT)

DESIGN AGENCY: ODOT CENTRAL OFFICE OFFICE OF PRODUCTION
DATE REVISED: 10-8-99 DRL
STRUCTURE FILE NUMBER: 5204135
DRAWN: TAA
REVISED:
DESIGNED: TAA
CHECKED: DFT

ABUTMENT DETAILS
MED-71-2402 L
I-71 OVER S.R. 303

MED-71-15.78

10/46

895/940

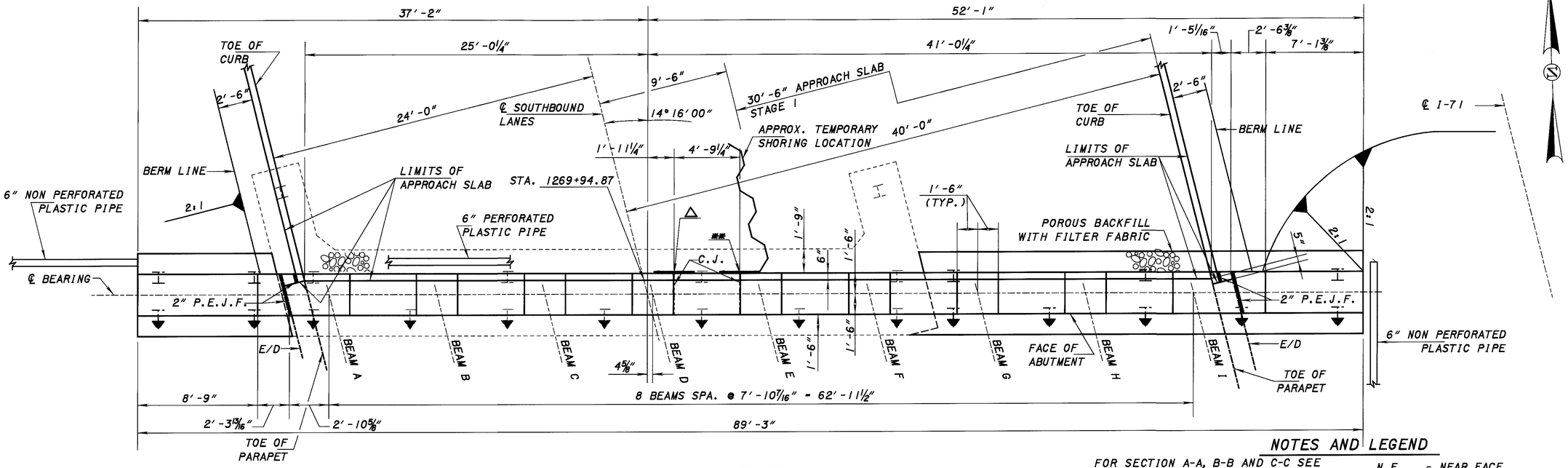

PLAN
(FORWARD ABUTMENT)

LOCATION	A	B	C	D	E	F	G	H	I
ELEVATIONS	1161.86	1162.00	1162.14	1162.27	1162.17	1162.07	1161.97	1161.87	1161.77

NOTES AND LEGEND

FOR SECTION A-A, B-B AND C-C SEE SHEET 12/46

ELEVATIONS SHOWN ARE MEASURED ALONG THE BRIDGE LIMITS. BEAM SEAT ELEVATIONS ARE MEASURED ALONG ℄ OF BEARING.

INDICATE BATTERED PILE

INDICATES FRONT ROW

INDICATES BACK ROW

N.F. - NEAR FACE
F.F. - FAR FACE
E/D - EDGE OF DECK
C.J. - CONSTRUCTION JOINT

△ TYPE B WATERPROOFING 3′-0″ WIDE SHOULD EXTEND FROM BOTTOM OF APPROACH SLAB TO THE BEAM SEAT ACROSS THE CONSTRUCTION JOINT.

** TYPE B WATERPROOFING 3′-0″ WIDE SHOULD EXTEND FROM BOTTOM OF APPROACH SLAB TO TOP OF FOOTING ACROSS THE CONSTRUCTION JOINT.

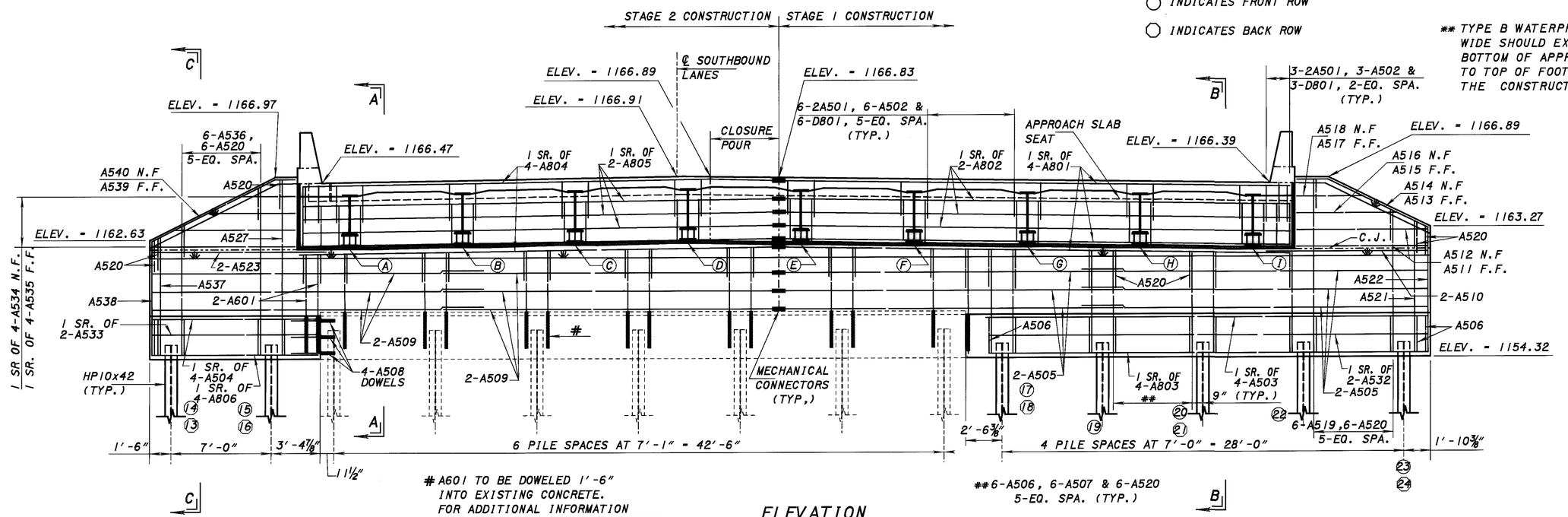

A601 TO BE DOWELED 1′-6″ INTO EXISTING CONCRETE. FOR ADDITIONAL INFORMATION SEE GENERAL NOTES SHEET 4/46

ELEVATION
(FORWARD ABUTMENT)

6-A506, 6-A507 & 6-A520 5-EQ. SPA. (TYP.)

DESIGN AGENCY: ODOT CENTRAL OFFICE OFFICE OF PRODUCTION
REVIEWED: DRL
DATE: 10-8-99
STRUCTURE FILE NUMBER: 5204135
DRAWN: TAA
REVISED:
DESIGNED: TAA
CHECKED: DFT

ABUTMENT DETAILS
MED-71-2402 L
I-71 OVER S.R. 303

MED-71-15.78

11/46

896
940

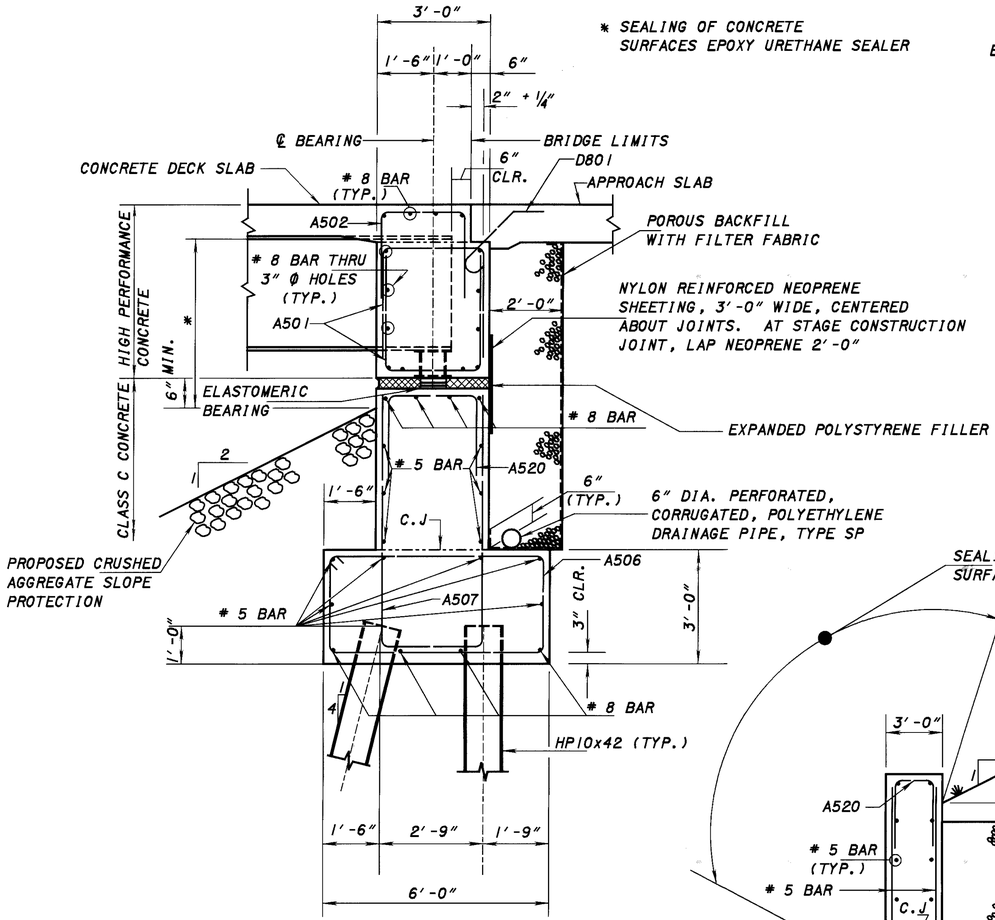

SECTION B-B

* SEALING OF CONCRETE SURFACES EPOXY URETHANE SEALER

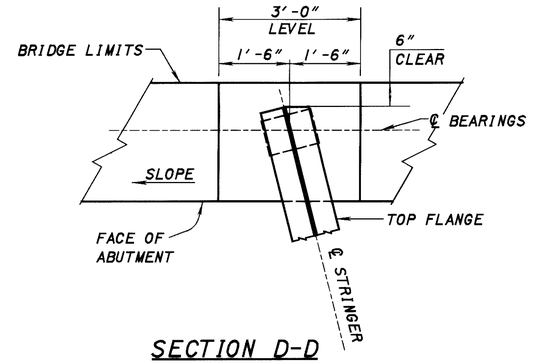

SECTION D-D
(CLIP TOP FLANGE ONLY)

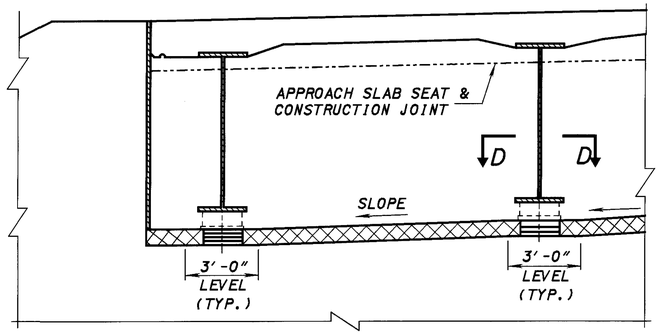

PART ELEVATION OF BEAM SEAT

NOTES

DIAPHRAGM CONCRETE ENCASING THE STEEL BEAMS SUPPORTED IN THE SEMI INTEGRAL ABUTMENT SHALL BE PLACED AT LEAST 48 HOURS BEFORE THE ACTUAL DECK CONCRETE IS PLACED.

PROVIDE 3" Ø HOLE THRU WEB AS NOTED, PAYMENT TO BE INCLUDED AS INCIDENTAL WITH ITEM 863 STRUCTURAL STEEL. PAYMENT FOR THE EXPANDED POLYSTYRENE FILLER TO BE INCLUDED WITH ITEM 844 HIGH PERFORMANCE CONCRETE AS INCIDENTAL.

POROUS BACKFILL:
POROUS BACKFILL WITH FILTER FABRIC, 2'-0" THICK SHALL EXTEND UP TO THE PLANE OF THE SUBGRADE, TO 12" BELOW THE EMBANKMENT SURFACE, AND LATERALLY TO THE ENDS OF THE WINGWALLS.

PIPE OUTLET DETAIL

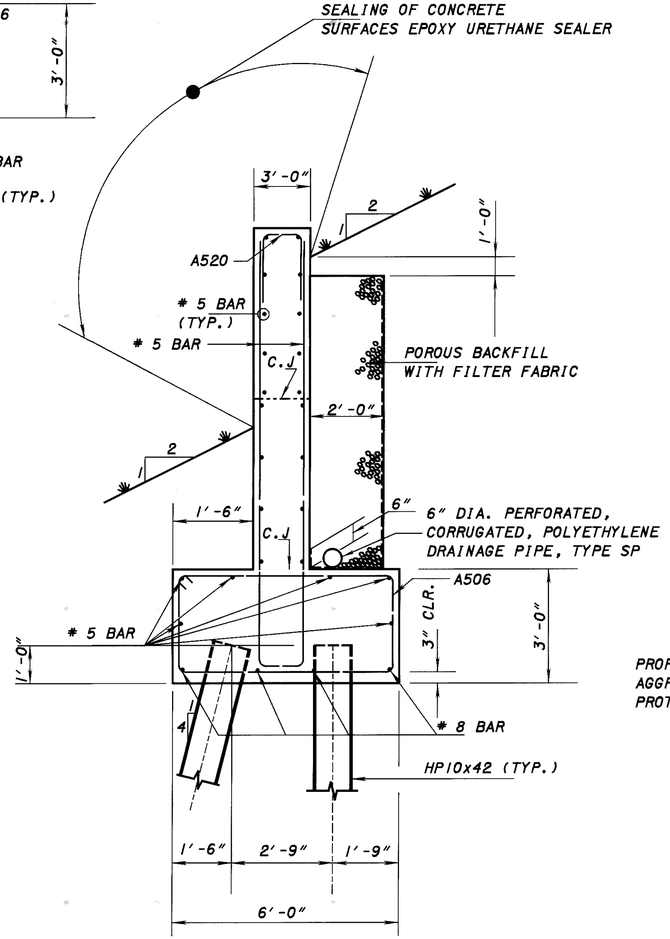

SECTION C-C

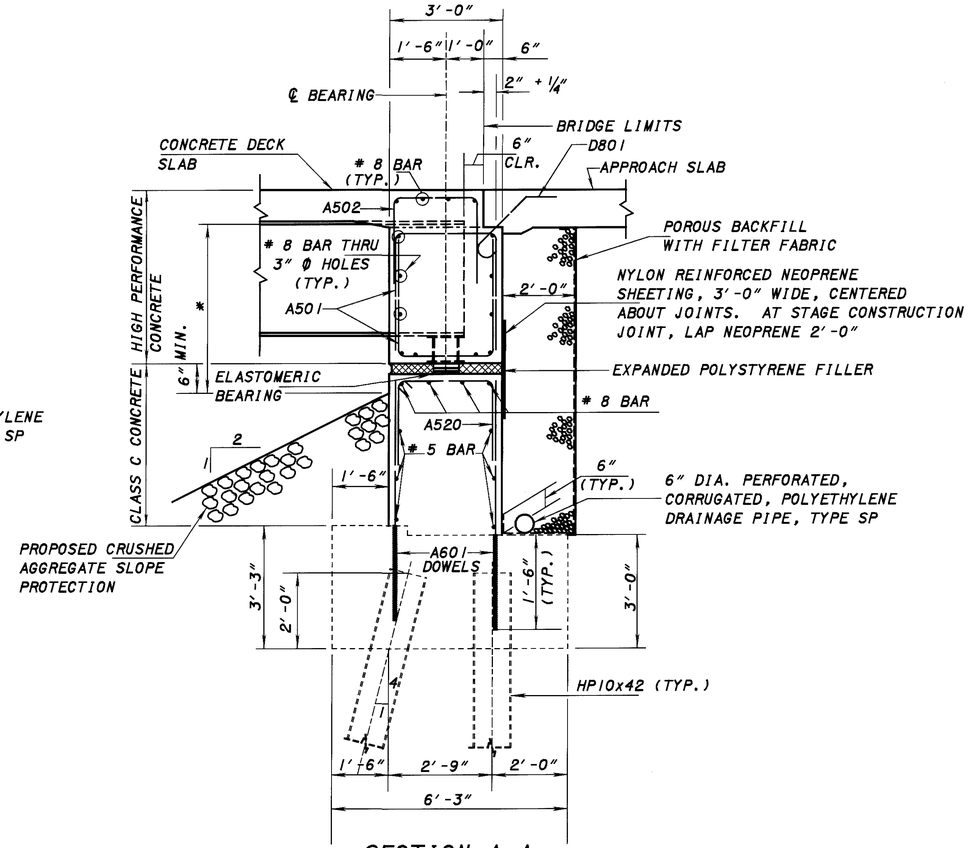

SECTION A-A

DESIGN AGENCY: ODOT CENTRAL OFFICE, OFFICE OF PRODUCTION

REVISED	DATE	STRUCTURE FILE NUMBER
DRL	10-8-99	5204135

DRAWN	REVISED
TAA	

DESIGNED	CHECKED
TAA	DFT

MISCELLANEOUS DETAILS
MED-71-2402 L
I-71 OVER S.R. 303

MED-71-15.78

12/46

897
940

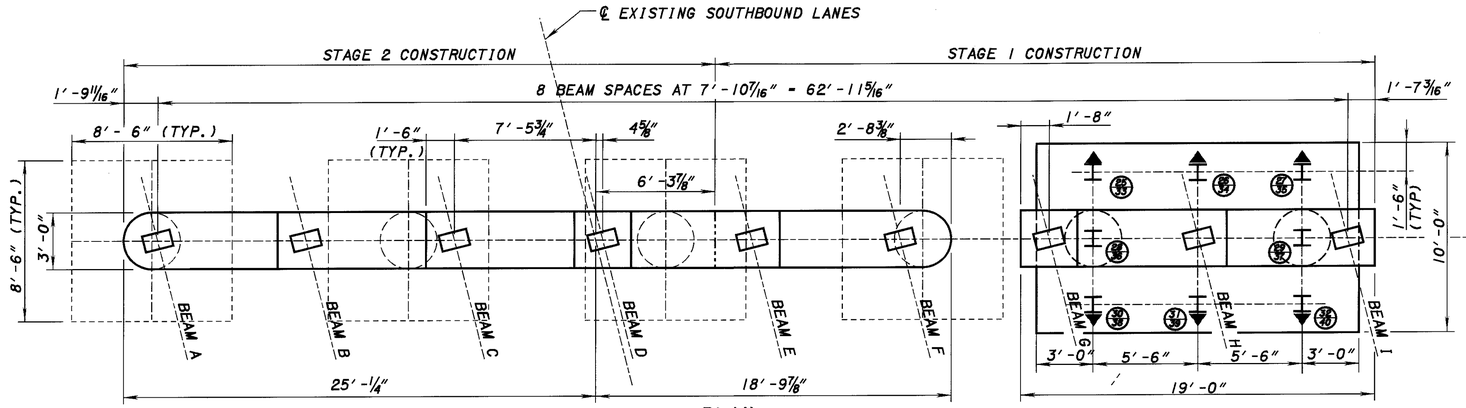

PLAN

PIER 1 & 3 SOUTHBOUND LANES

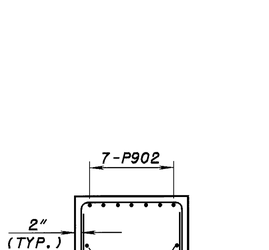

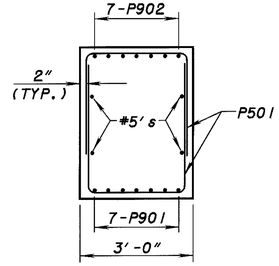

SECTION C-C

LOCATION / ELEVATION	ELEVATIONS										DIMENSION
	A	B	C	D	E	F	G	H	I	J	K
SOUTHBOUND LANE PIER 1	1164.06	1164.20	1164.34	1164.46	1164.36	1164.26	1164.16	1164.06	1163.95	1137.75	19'-5 3/8"
SOUTHBOUND LANE PIER 3	1163.04	1163.18	1163.32	1163.45	1163.35	1163.25	1163.15	1163.05	1162.95	1137.75	18'-5 3/8"

NOTES:

EXISTING PIER BRIDGE SEATS SHALL BE SCARIFIED 1/4", SEE GENERAL NOTES.

LEGEND

⊖ - (P1/P3) PILE NUMBERING

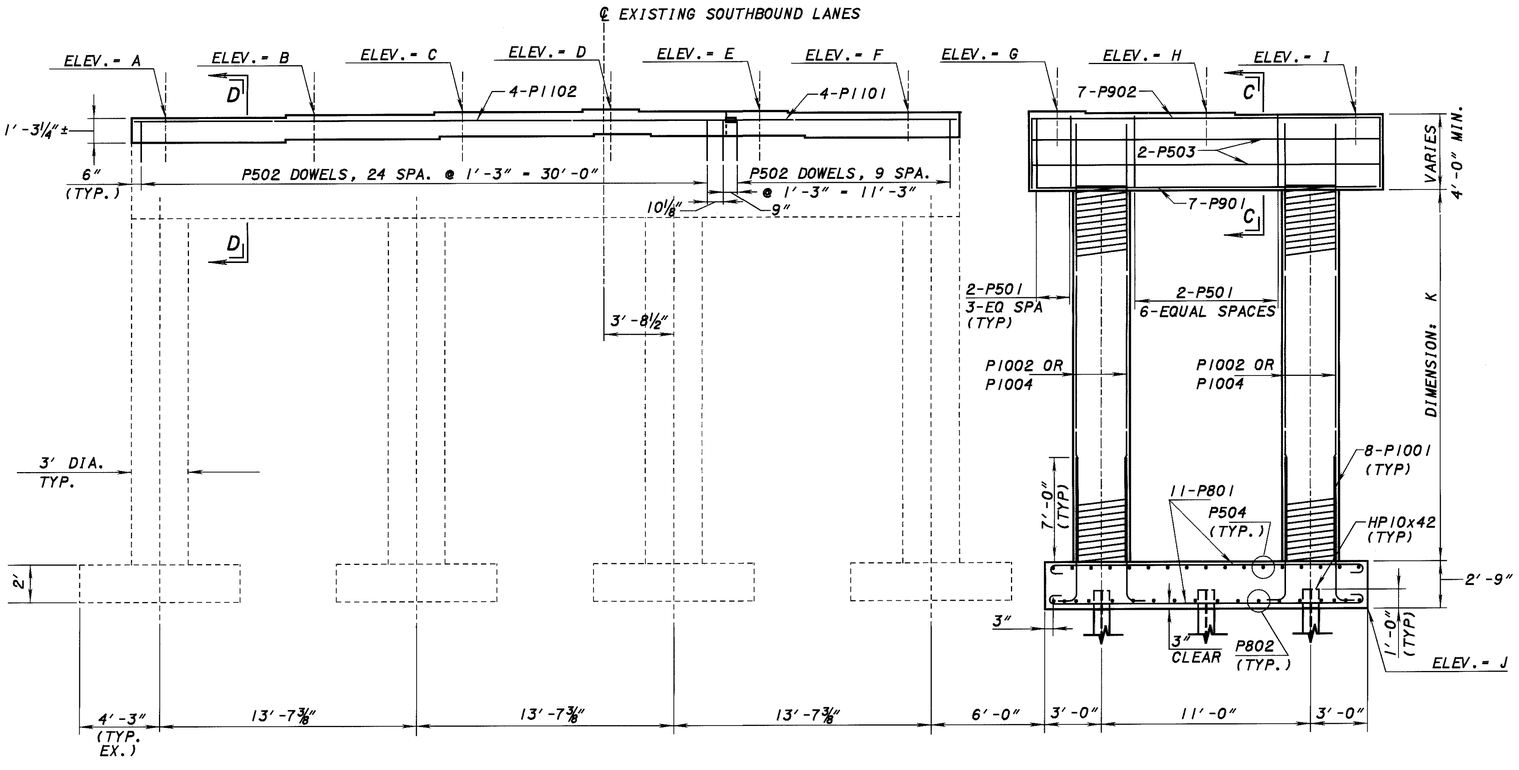

ELEVATION

PIER 1 & 3 SOUTHBOUND LANES

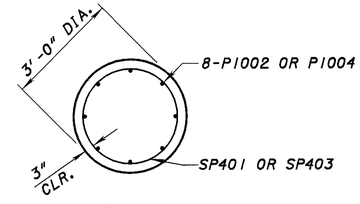

PLAN

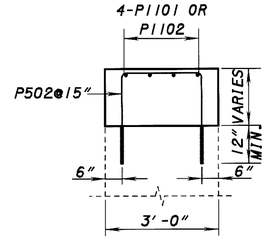

SECTION D-D

DESIGN AGENCY: ODOT CENTRAL OFFICE OFFICE OF PRODUCTION

REVIEWED: DRL DATE: 10-8-99

STRUCTURE FILE NUMBER: 5204135

DRAWN: TAA REVISED:

DESIGNED: TAA CHECKED: DFT

PIER DETAILS

MED-71-2402 L

I-71 OVER S.R. 303

MED-71-15.78

13/46

898/940

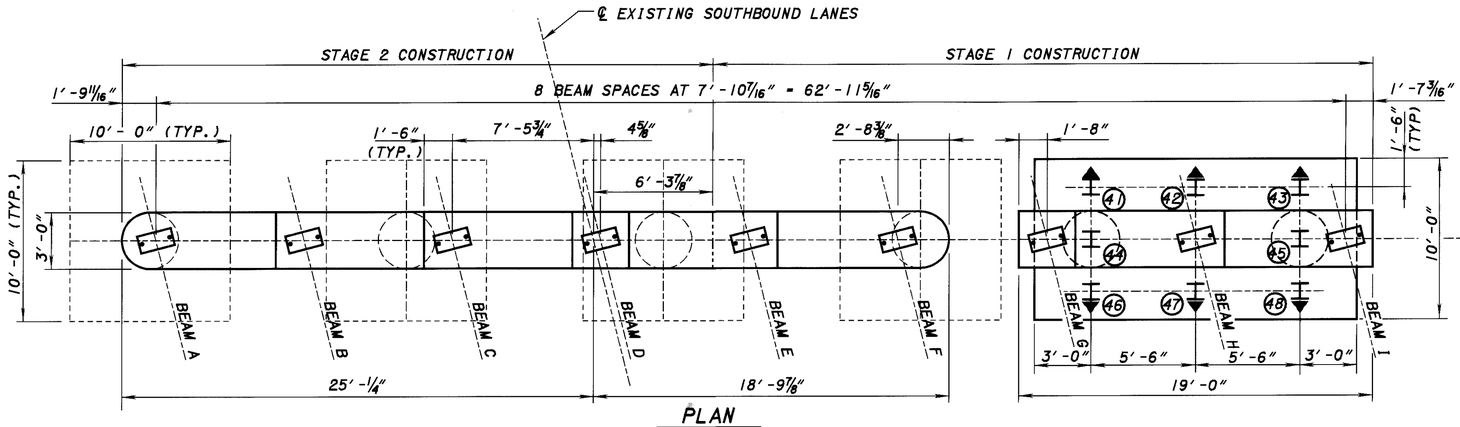

PLAN

PIER 2 SOUTHBOUND LANES

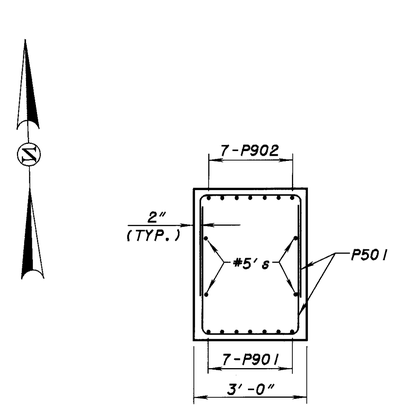

SECTION C-C

LOCATION / ELEVATION	ELEVATIONS										DIMENSION
	A	B	C	D	E	F	G	H	I	J	K
SOUTHBOUND LANE PIER 2	1163.56	1163.70	1163.84	1163.97	1163.87	1163.77	1163.67	1163.57	1163.47	1140.25	16'-5 5/8"

NOTES:

EXISTING PIER BRIDGE SEATS SHALL BE SCARIFIED 1/4", SEE GENERAL NOTES.

LEGEND

○ - (P2) PILE NUMBERING

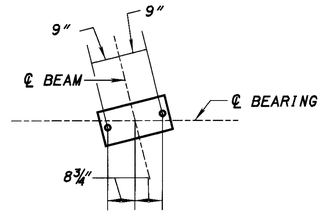

BEARING ANCHOR ROD LOCATION

REINFORCING STEEL IN THE VICINITY OF THE BRIDGE SEAT SHALL BE ACCURATELY PLACED TO AVOID INTERFERENCE WITH THE DRILLING OF BEARING ANCHOR HOLES OR THE PRESETTING OF BEARING ANCHORS.

AT THE OPTION OF THE CONTRACTOR, BEARING ANCHORS, LOCATED AND SUPPORTED BY TEMPLATES, MAY BE CAST IN PLACE.

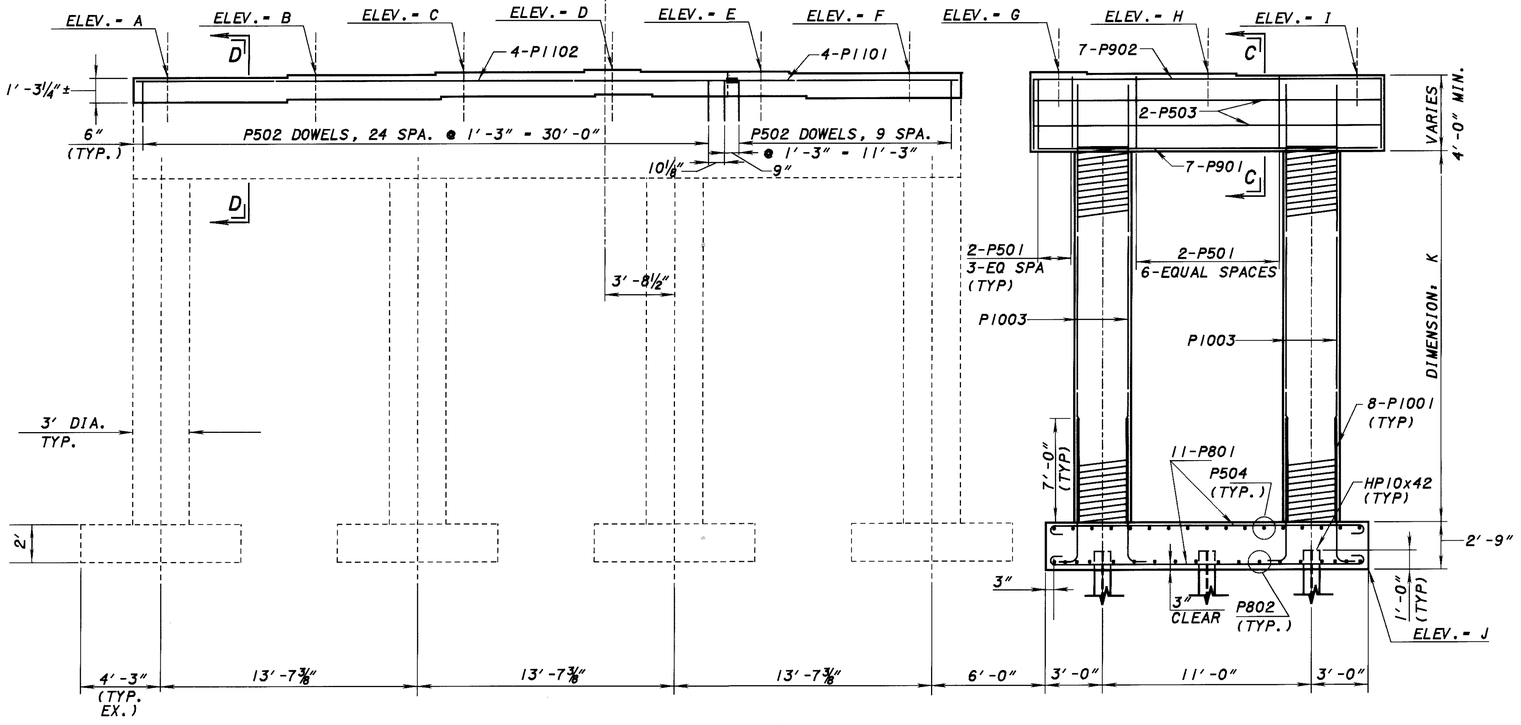

ELEVATION

PIER 2 SOUTHBOUND LANES

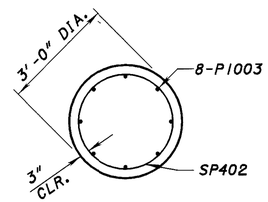

PLAN

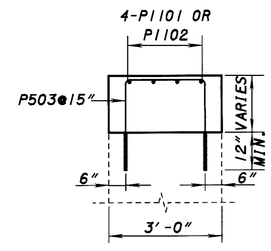

SECTION D-D

DESIGN AGENCY: ODOT CENTRAL OFFICE, OFFICE OF PRODUCTION

REVISED: DRL | DATE: 10-8-99 | STRUCTURE FILE NUMBER: 5204135

DRAWN: TAA | REVISED:

DESIGNED: TAA | CHECKED: DFT

PIER DETAILS

MED-71-2402 L
I-71 OVER S.R. 303

MED-71-15.78

14 / 46

899
940

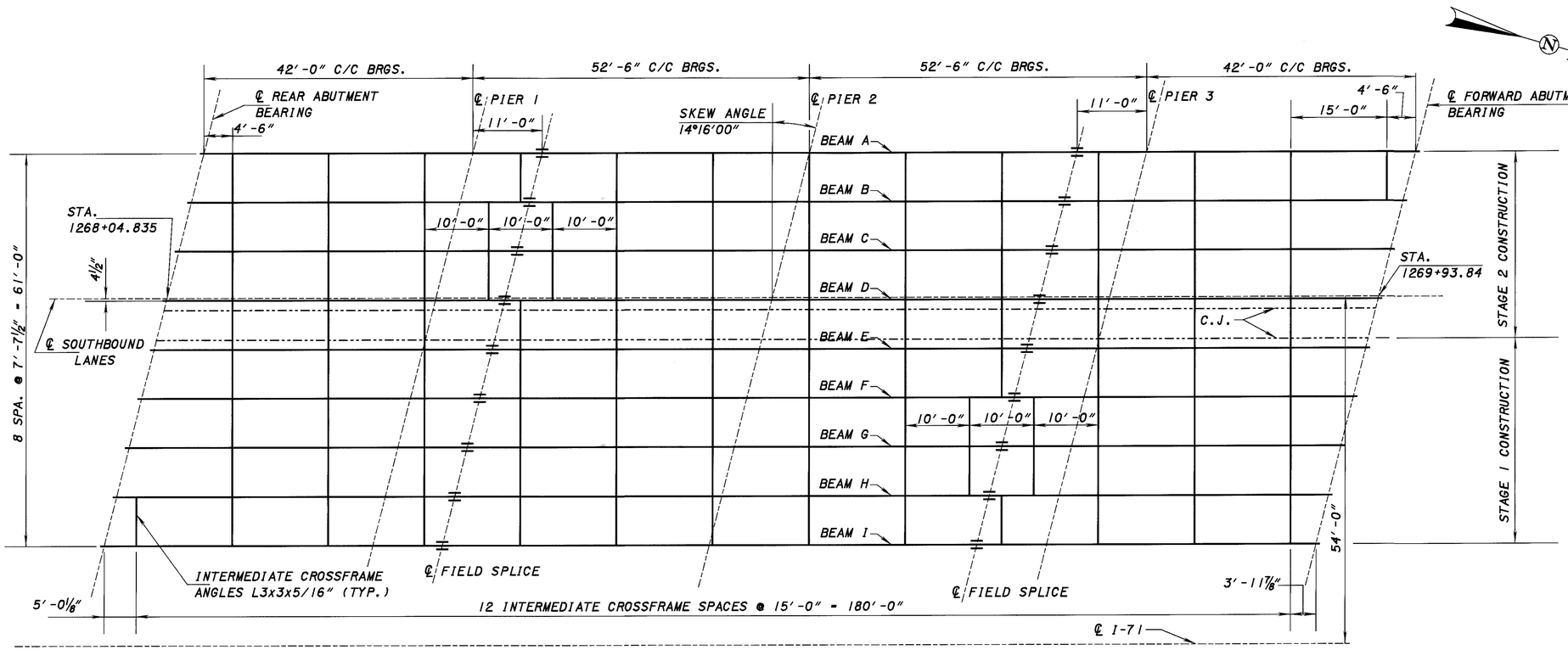

FRAMING PLAN

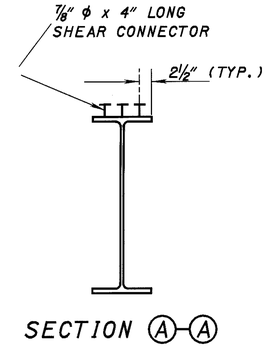

SECTION Ⓐ-Ⓐ

SHOP CAMBER IS NOT REQUIRED. NATURAL CAMBER OF THE BEAM SHALL BE MAINTAINED.

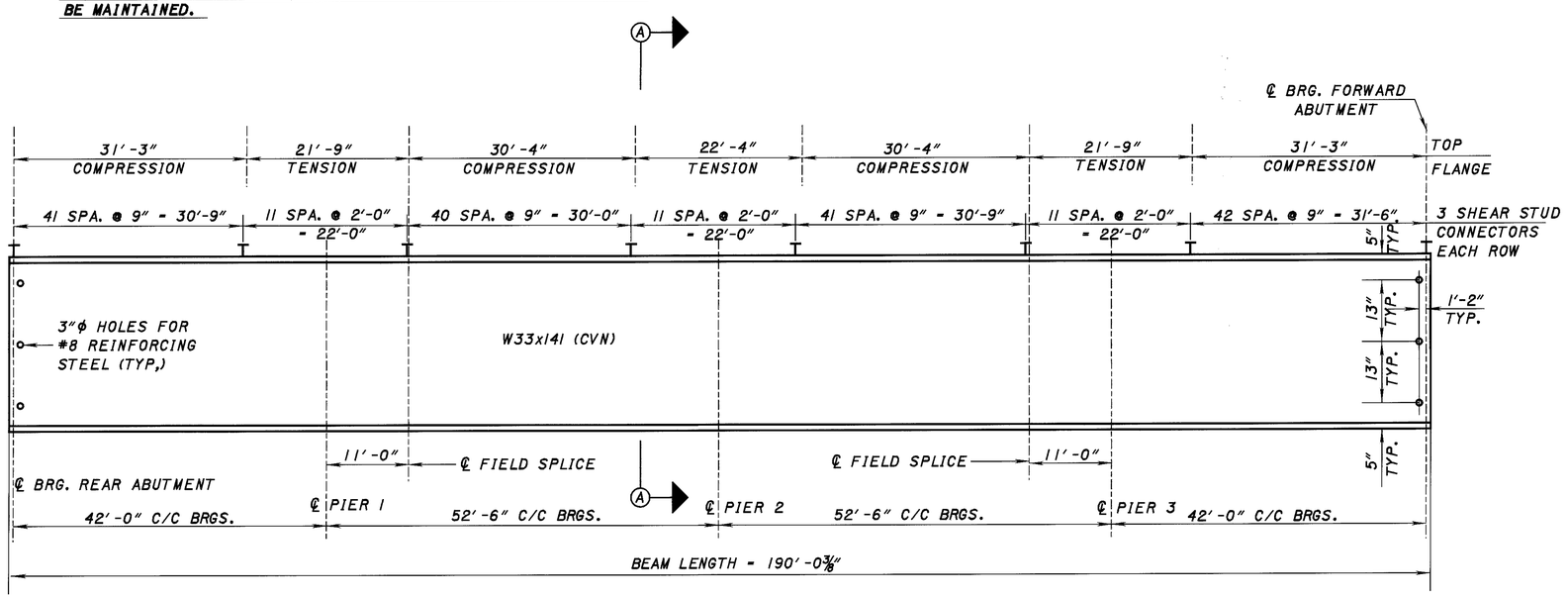

BEAM ELEVATION

(VERTICAL SCALE IS EXAGGERATED)

NOTES

STRUCTURAL STEEL:
WHERE A SHAPE OR PLATE IS DESIGNATED (CVN) THE MATERIAL SHALL MEET SPECIFIED MINIMUM NOTCH TOUGHNESS REQUIREMENTS AS SPECIFIED IN 711.01.

FOR FIELD SPLICE DETAILS SEE STD. DWG. BS-1-93 (50 KSI) NO FILL PLATES REQUIRED.

FOR SCREED DIAGRAM AND TABLE SEE SHEET 16/46

WELDED ATTACHMENT:
WELDED ATTACHMENT OF SUPPORTS FOR CONCRETE DECK FINISHING MACHINE MAY BE MADE TO AREAS OF THE FACIA STRINGER FLANGES DESIGNATED "COMPRESSION". ATTACHMENTS SHALL NOT BE MADE TO AREAS DESIGNATED "TENSION". FILLET WELDS TO COMPRESSION FLANGES SHALL BE NOT CLOSER THAN 1" FROM EDGE OF FLANGE, BE NOT MORE THAN 2" LONG, AND BE NOT SMALLER THAN THE MINIMUM SIZE REQUIRED BY AASHTO.

3"ϕ HOLES DRILLED IN THE PROPOSED BEAM SHALL BE PAID UNDER ITEM 863 STRUCTURAL STEEL. THIS PAYMENT IS INCIDENTAL TO THE PAY ITEM.

LATERAL AND LONGITUDINAL SPACING OF WELDED STUD CONNECTORS MAY BE ALTERED AT FIELD SPLICE LOCATIONS TO AVOID INTERFERENCE WITH FLANGE SPLICE BOLTS PROVIDED THAT AT LEAST THE NUMBER OF STUDS SPECIFIED IN THE BEAM ELEVATION ARE PROVIDED.

STRUCTURAL STEEL SHALL BE ASTM A572.

ALL BEAM LENGTH DIMENSION ARE AT 60 °F

DESIGN AGENCY: ODOT CENTRAL OFFICE, OFFICE OF PRODUCTION

DESIGNED	DRAWN	REVIEWED	DATE
TAA	TAA	DRL	10-8-99
CHECKED	REVISED	STRUCTURE FILE NUMBER	
DFT		5204135	

SUPERSTRUCTURE DETAILS

MED-71-2402 L

I-71 OVER S.R. 303

MED-71-15.78

900/940

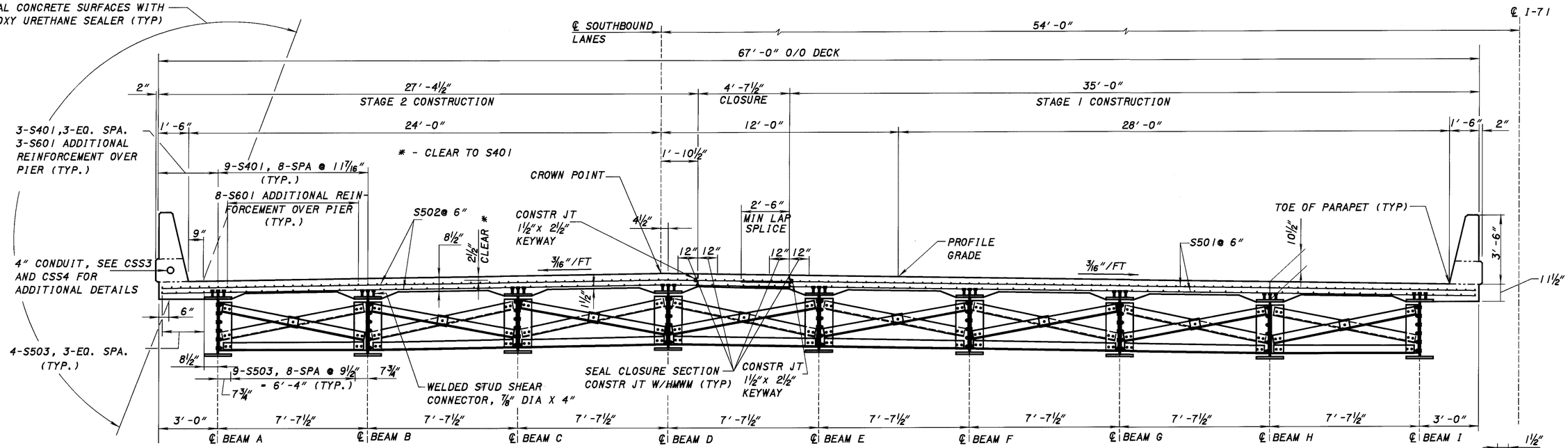

TRANSVERSE SECTION

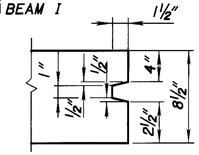

KEYWAY DETAILS AT CLOSURE SECTION

SCREED ELEVATION - SOUTHBOUND BRIDGE

LOCATION	RIGHT TOE OF PARAPET		PROFILE GRADE		RIGHT CONSTR JT		CLOSURE POUR C.J.		SOUTHBOUND LANE ℄		LEFT TOE OF PARAPET	
	STATION	ELEVATION	STATION	ELEVATION	STATION	ELEVATION	STATION	ELEVATION	STATION	ELEVATION	STATION	ELEVATION
℄ REAR ABUTMENT	1267+94.66	1168.21	1268+01.78	1168.58	1268+03.18	1168.66	1268+04.35	1168.72	1268+04.84	1168.74	1268+10.94	1168.31
MIDSPAN	1268+15.66	1168.02	1268+22.78	1168.40	1268+24.18	1168.47	1268+25.35	1168.53	1268+25.84	1168.56	1268+31.94	1168.13
℄ PIER # 1	1268+36.66	1167.83	1268+43.78	1168.21	1268+45.18	1168.28	1268+46.35	1168.34	1268+46.84	1168.37	1268+52.94	1167.93
FIELD SPLICE	1268+47.66	1167.73	1268+54.78	1168.10	1268+56.18	1168.18	1268+57.35	1168.23	1268+57.83	1168.26	1268+63.93	1167.83
MIDSPAN	1268+62.91	1167.59	1268+70.03	1167.96	1268+71.43	1168.04	1268+72.60	1168.10	1268+73.09	1168.12	1268+79.19	1167.69
℄ PIER # 2	1268+89.16	1167.35	1268+96.28	1167.71	1268+97.68	1167.79	1268+98.85	1167.85	1268+99.34	1167.87	1269+05.44	1167.44
MIDSPAN	1269+15.41	1167.09	1269+22.53	1167.46	1269+23.93	1167.53	1269+25.10	1167.59	1269+25.59	1167.62	1269+31.67	1167.18
FIELD SPLICE	1269+30.66	1166.94	1269+37.78	1167.31	1269+39.18	1167.38	1269+40.35	1167.44	1269+40.84	1167.46	1269+46.94	1167.03
℄ PIER # 3	1269+41.66	1166.83	1269+48.78	1167.20	1269+50.18	1167.27	1269+51.35	1167.33	1269+51.84	1167.35	1269+57.94	1166.92
MIDSPAN	1269+62.66	1166.62	1269+69.78	1166.98	1269+71.18	1167.06	1269+72.35	1167.12	1269+72.84	1167.14	1269+78.94	1166.70
℄ FORWARD ABUTMENT	1269+83.66	1166.40	1269+90.78	1166.77	1269+92.18	1166.84	1269+93.35	1166.90	1269+93.84	1166.92	1269+99.94	1166.48

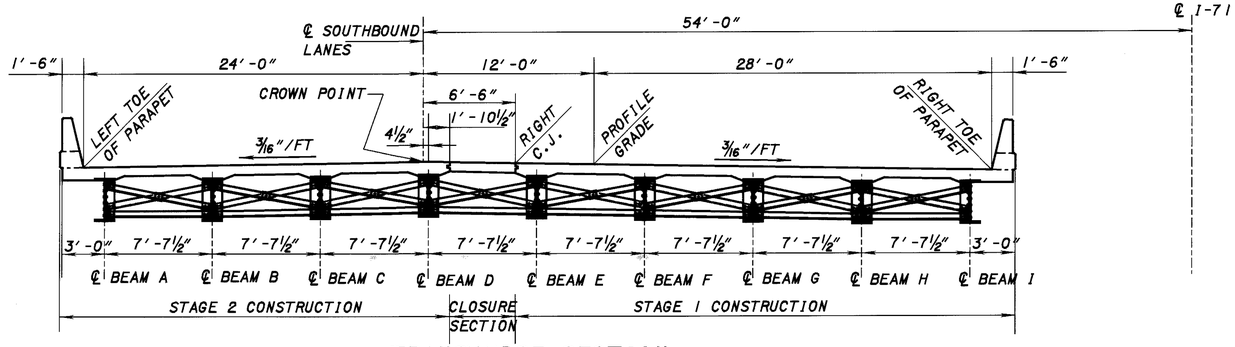

TRANSVERSE SECTION

NOTES

SCREED SETTING ELEVATIONS GIVEN ARE TO THE TOP OF CONCRETE DECK AND ARE REQUIRED PRIOR TO PLACEMENT OF CONCRETE. THEY DO NOT INCLUDE AN ALLOWANCE FOR THE DEAD LOAD DEFLECTION CAUSED BY THE WEIGHT OF THE CONCRETE BECAUSE THE BEAM IS NOT CAMBERED.

NOTES

1. HMWM: HIGH MOLECULAR WEIGHT METHACRYLATE, SEE PROPOSAL NOTE.
2. ALL REINFORCING STEEL IS EPOXY COATED.
3. FOR PARAPET DETAILS, SEE SHEET 17 & 18/46
4. REINFORCING STEEL MAY BE FIELD OR SHOP BENT TO ACCOMMODATE THE CROWN OF THE DECK. PAYMENT SHALL BE INCLUDED WITH HIGH PERFORMANCE CONCRETE.
5. FOR CROSS-FRAME CONNECTION DETAILS SEE STD DWG GSD-1-96, GENERAL STEEL DETAILS.
6. DECK SLAB DEPTH: THE THEORETICAL DESIGN THICKNESS FOR THE SLAB IS 8½". THE QUANTITY OF DECK CONCRETE TO BE PAID FOR SHALL BE BASED ON THIS DIMENSION, EVEN THOUGH DEVIATION FROM IT MAY BE NECESSARY BECAUSE THE TOP FLANGE OF THE BEAM MAY NOT HAVE THE EXACT CAMBER OR CONFIGURATION REQUIRED TO PLACE IT PARALLEL TO THE FINISHED GRADE. A HAUNCH WIDTH OF 9" SHALL BE USED FOR COMPUTING QUANTITY OF CONCRETE. HOWEVER, THE HAUNCH WIDTH MAY VARY BETWEEN 6" AND 12".

DESIGN AGENCY: ODOT CENTRAL OFFICE, OFFICE OF PRODUCTION
REVISED: DRL — DATE: 10-8-99
STRUCTURE FILE NUMBER: 5204135
DRAWN: TAA — REVISED:
DESIGNED: TAA — CHECKED: DFT

SUPERSTRUCTURE DETAILS
MED-71-2402 L
I-71 OVER S.R. 303

MED-71-15.78

16/46

901
940

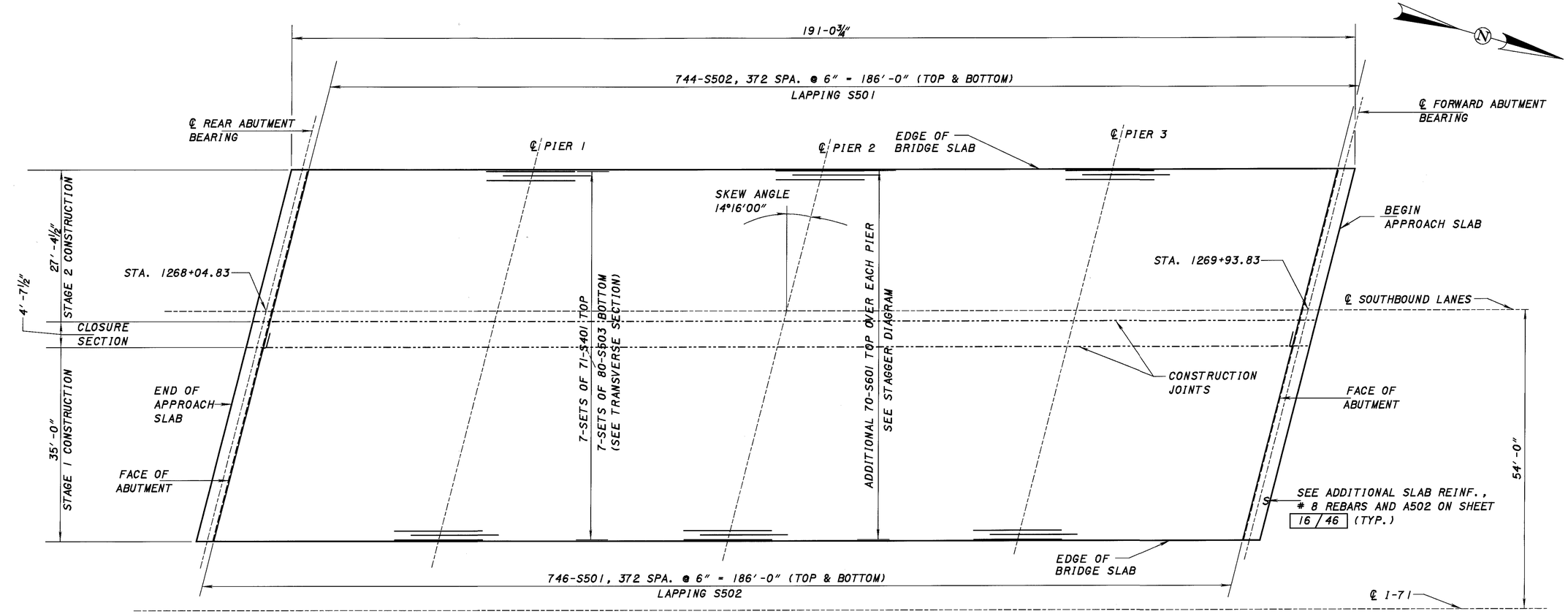

DECK REINFORCEMENT

MINIMUM LAP FOR # 4 BAR = 2'-0"
MINIMUM LAP FOR # 5 BAR = 2'-6"

NOTES

FOR ADDITIONAL INFORMATION ON THE CONCRETE PARAPET SEE SHEET 18/46

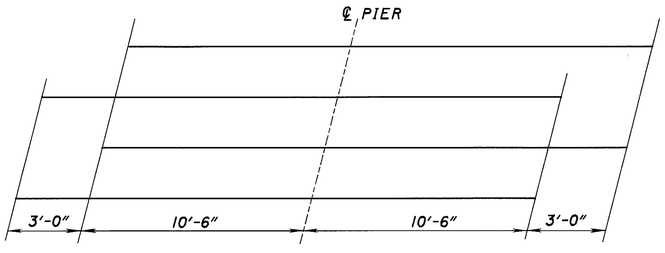

STAGGER OF S601 BARS OVER PIERS

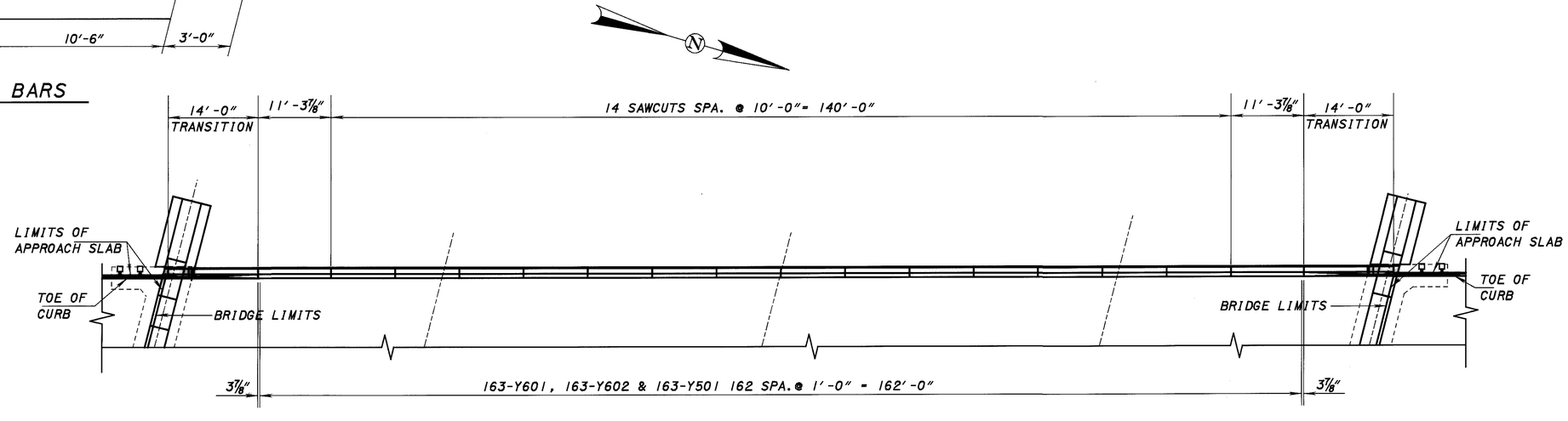

PARAPET- PART PLAN

DESIGN AGENCY: ODOT CENTRAL OFFICE OFFICE OF PRODUCTION
REVIEWED: DRL DATE: 10-8-99
STRUCTURE FILE NUMBER: 5204135
DRAWN: TAA REVISED:
DESIGNED: TAA CHECKED: DFT

SUPERSTRUCTURE DETAILS
MED-71-2402 L
I-71 OVER S.R. 303

MED-71-15.78

17/46

902
940

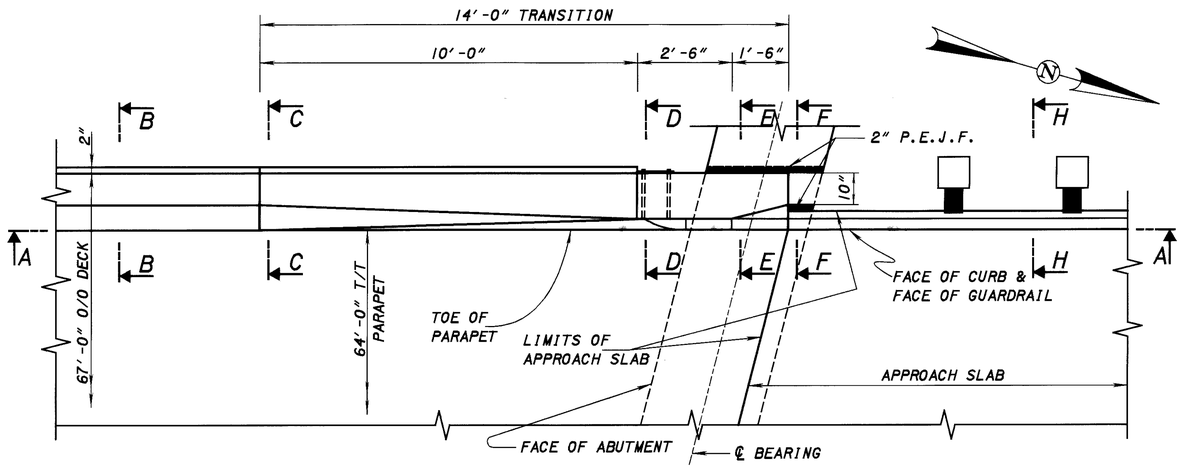

PART PLAN AT ABUTMENT

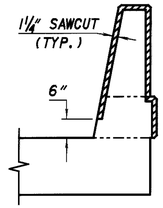

DETAIL A

(Section through sawcut)
Sawcut Perimeter = 7'-6"

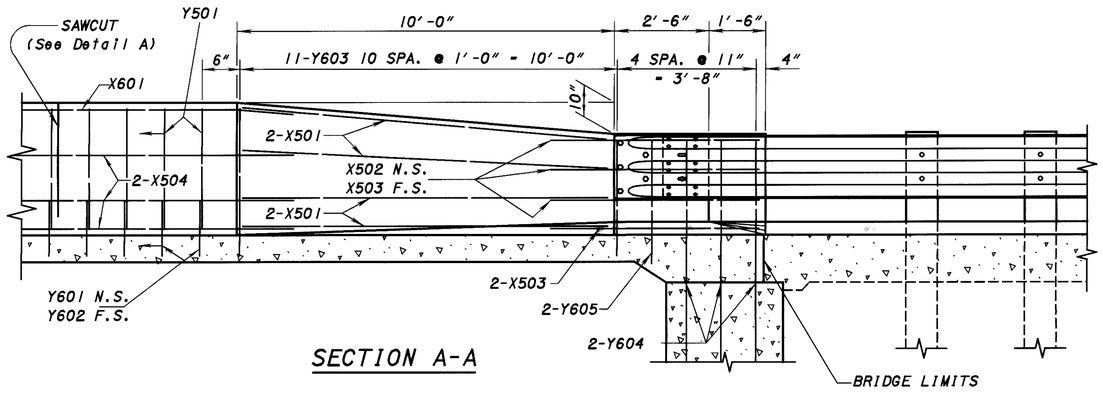

SECTION A-A

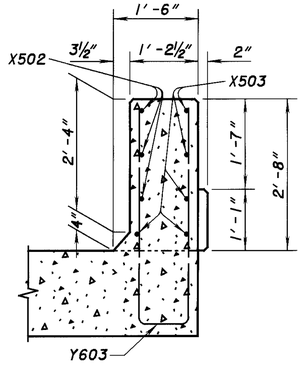

SECTION D-D

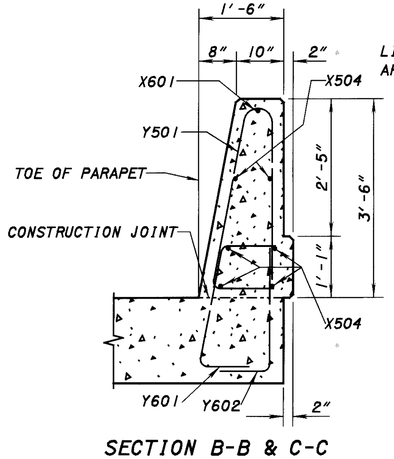

SECTION B-B & C-C

Area = 4.26 ft²

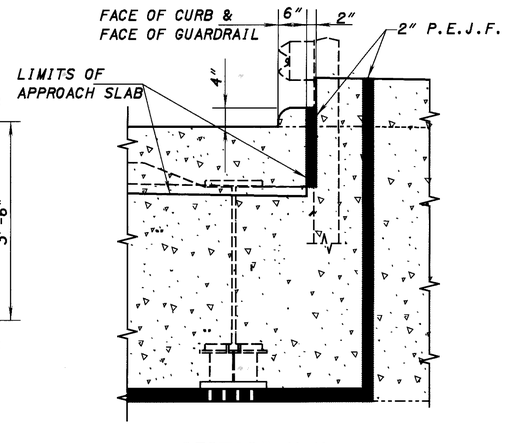

SECTION H-H

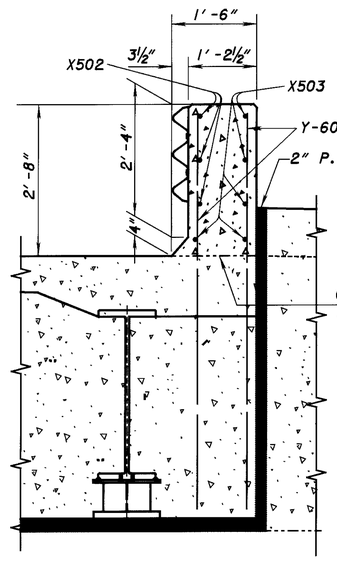

SECTION E-E

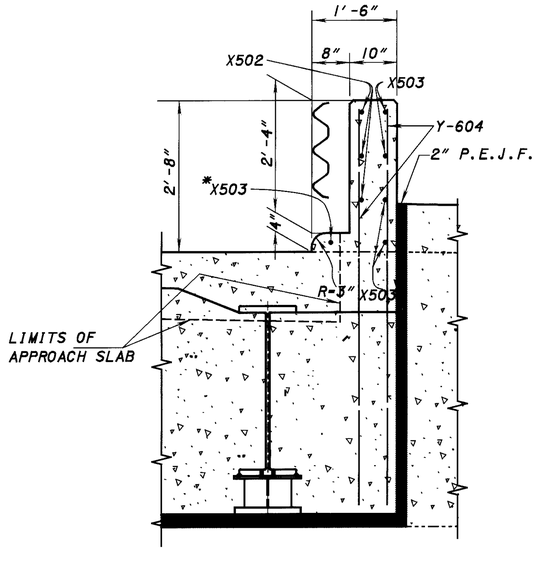

SECTION F-F

* FIELD BEND IF NECESSARY

NOTES

CONTROL JOINTS FOR CONCRETE PARAPETS: THE JOINTS SHALL BE CONSTRUCTED BY SAWING 1¼ INCH DEEP ALONG THE PERIMETER OF THE PARAPET AS SOON AS THE SAW CAN BE OPERATED WITHOUT DAMAGING THE CONCRETE.

THE USE OF AN EDGE GUIDE, FENCE, OR JIG IS REQUIRED TO ENSURE THAT THE CUT JOINT IS STRAIGHT, TRUE, AND ALIGNED ON ALL FACES OF THE PARAPET. THE JOINT WIDTH SHALL BE THE WIDTH OF THE SAW BLADE, A NOMINAL WIDTH OF ¼ INCH.

THE PERIMETER OF THE DEFLECTION CONTROL JOINT SHALL BE SEALED WITH A CAULKING MATERIAL TO A MINIMUM DEPTH OF ONE INCH CONFORMING TO FEDERAL SPECIFICATION TT-S-00227E. THE BOTTOM ONE-HALF INCH OF THE OUTSIDE FACE OF THE PARAPET SHOULD BE LEFT UNSEALED TO ALLOW ANY WATER WHICH MAY ENTER THE JOINT TO ESCAPE.

QUANTITIES OF CONCRETE, REINFORCING STEEL, DEFLECTION JOINT SAWCUT AND CAULKING MATERIAL FOR PARAPET ARE INCLUDED WITH ITEM 844 HIGH PERFORMANCE CONCRETE, SUPERSTRUCTURE (PARAPET).

FOR BRIDGE TERMINAL ASSEMBLY SEE STANDARD CONSTRUCTION DRAWING GR-3.1 AND GR-3.2.

FOR ADDITIONAL INFORMATION ON THE CONCRETE CURB SHOWN IN SECTION H-H SEE STD. CONST. DWG. BP-5.1. THE CURB SHALL BE TYPE 4-A.

MIN. LAP SPLICES: #5 BAR = 2'-6"
#6 BAR = 3'-0"

LEGEND: N.S. = NEAR SIDE
F.S. = FAR SIDE

DESIGN AGENCY: ODOT CENTRAL OFFICE OFFICE OF PRODUCTION

REVIEWED: DRL DATE: 10-8-99
STRUCTURE FILE NUMBER: 5204135

DRAWN: TAA REVISED:
DESIGNED: TAA CHECKED: DFT

PARAPET DETAILS
MED-71-2402 L
I-71 OVER S.R. 303

MED-71-15.78

18 / 46

903
940

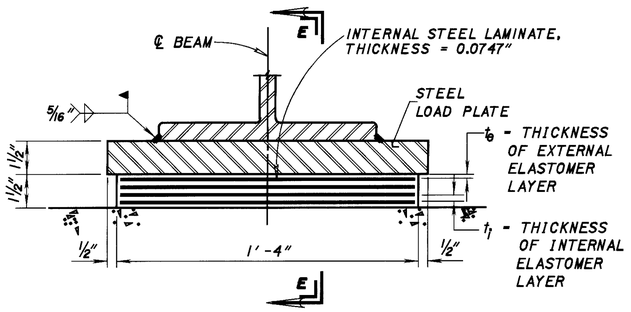

SECTION E-E
LAMINATED ELASTOMERIC EXPANSION PIER BEARING

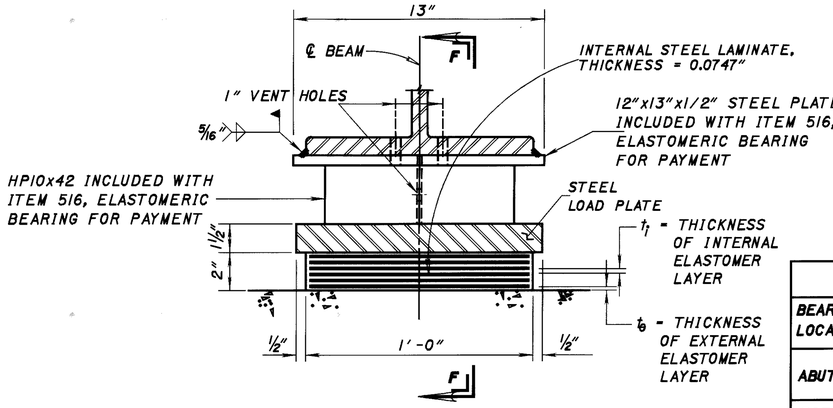

* FIELD WELD OPTIONAL

SECTION F-F
LAMINATED ELASTOMERIC EXPANSION ABUTMENT BEARING

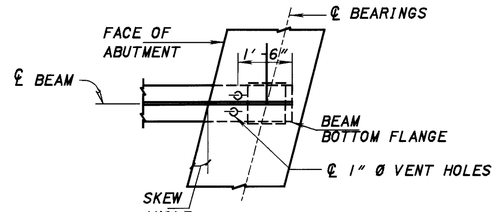

SECTION D-D

LEGEND

EXP - EXPANSION

BEARING TABLE

BEARING LOCATION	TYPE	L	W	t_1 In.	t_o In.	n_1	n_2	STEEL LOAD ℄	TOTAL HEIGHT*	DL, Kips	LL, Kips	TOTAL, Kips
ABUTMENT	EXP	9"	12"	0.24	0.17	5	6	12"x13"x1½"	3½"	56	42	98
PIER 1 & PIER 3	EXP	10"	16"	0.28	0.20	3	4	11"x17"x1½"	3"	85	49	134
PIER 2	FIXED	10"	16"	0.28	0.20	3	4	11"x22"x1½"	3"	85	49	134

n_1 - NUMBER OF INTERNAL ELASTOMER LAYERS, t_1 ELASTOMER LAYERS ARE 50 DUROMETERS
n_2 - NUMBER OF STEEL LAMINATES, 0.0747" THICKNESS * TOTAL HEIGHT INCLUDES LOAD PLATE

NOTES:

INSTALLATION PROCEDURE: ANCHOR BOLTS SHALL BE EITHER CAST IN PLACE BY USE OF A TEMPLATE OR FIELD DRILLED AND GROUTED AT THE CONTRACTOR'S OPTION. CARE SHALL BE TAKEN TO ASSURE THAT THE ANCHOR BOLTS DO NOT INTERFERE WITH REINFORCING STEEL.

MATERIALS: THE HP SHAPE (SUPPORT MEMBER) AND STEEL PLATES MAY BE GRADE 36 STEEL. THE HP SHAPE AND STEEL PLATES SHALL METALIZED.

PAYMENT FOR MATERIALS, LABOR, FABRICATION, PROTECTIVE COATING, VENT HOLES AND INSTALLATION OF THE HP SHAPE AND STEEL PLATE SHALL BE INCLUDED WITH ITEM 516 ABUTMENT ELASTOMERIC BEARINGS, AS PER PLAN, FOR PAYMENT.

WELDING: WELDING OF THE LOAD PLATE TO THE SUPERSTRUCTURE SHALL BE CONTROLLED SO THAT THE PLATE TEMPERATURE AT THE ELASTOMER BONDED SURFACE SHALL NOT EXCEED 300° F AS DETERMINED BY THE USE OF PYROMETRIC STICKS OR OTHER TEMPERATURE MONITORING DEVICES. THE STEEL LOAD PLATE SHALL BE BONDED BY VULCANIZATION TO THE ELASTOMER DURING THE MOLDING PROCESS.

BRIDGE SEAT REINFORCING:
REINFORCING STEEL IN THE VICINITY OF BRIDGE SEAT SHALL BE ACCURATELY PLACED TO AVOID INTERFERENCE WITH THE DRILLING OF BEARING ANCHOR HOLES OR THE PRE-SETTING OF BEARING ANCHORS.

BEARING REPOSITIONING: IF DECK CONCRETE IS PLACED AT AN AMBIENT TEMPERATURE HIGHER THAN 80° F OR LOWER THAN 40° F AND THE BEARING SHEAR DEFLECTION EXCEEDS ONE-SIXTH OF THE BEARING HEIGHT AT 60° F ± 10° F, THE BEAMS SHALL BE RAISED TO ALLOW THE BEARING TO RETURN TO THEIR UNDERFORMED SHAPE AT 60° F ± 10° F.

ELASTOMERIC BEARINGS SHALL COMPLY WITH ITEM 516 AND AASHTO STANDARD SPECIFICATION FOR HIGHWAY BRIDGES, SECTION 18, BEARING DEVICES, DIVISION II, CONSTRUCTION ARTICLES 18.4.5.1 AND 18.5.6.2. BEARINGS SHALL BE GRADE 3, 50 DUROMETER ELASTOMER AND SHALL BE SUBJECTED TO THE LOAD TESTING REQUIREMENTS DEFINED IN ARTICLE 18.7.4.5 OF THE AASHTO DOCUMENT LISTED ABOVE. THE UNIT BID PRICE SHALL INCLUDE ALL MATERIALS, LABOR, TESTING, STEEL LOAD PLATES AND INCIDENTALS NECESSARY TO FURNISH AND INSTALL LAMINATED ELASTOMERIC BEARINGS. PAYMENT WILL BE MADE AT THE CONTRACT PRICE FOR ITEM 516, EACH, ELASTOMERIC BEARINGS WITH INTERNAL LAMINATES AND LOAD PLATE (NEOPRENE).

BASIS OF PAYMENT: THE UNIT BID PRICE SHALL INCLUDE ALL MATERIALS, LABOR, TESTING, ANCHOR RODS, HP10x42, STEEL PLATES AND INCIDENTALS NECESSARY TO FURNISH AND INSTALL LAMINATED ELASTOMERIC BEARINGS, EITHER FIXED OR EXPANSION. PAYMENT WILL BE MADE AT THE CONTRACT PRICE FOR ITEM 516, EACH, ELASTOMERIC BEARINGS WITH INTERNAL LAMINATES AND LOAD PLATE (NEOPRENE):

9" x 12" x 2" WITH 12" x 13" x 1½" LOAD PLATE, AS PER PLAN (ABUTMENT)
10" x 16" x 1½" WITH 11" x 17" x 1½" LOAD PLATE (PIER #1 & #3)
10" x 16" x 1½" WITH 11" x 22" x 1½" LOAD PLATE, AS PER PLAN (PIER # 2)

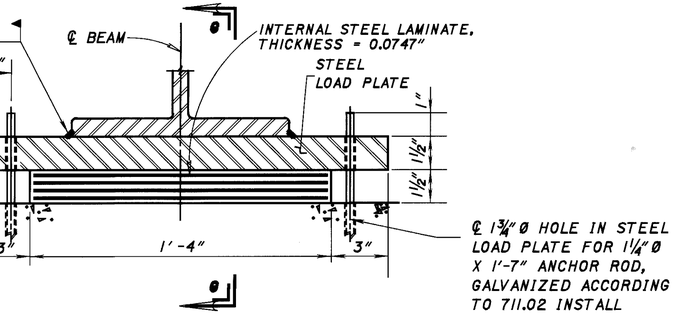

SECTION E-E
LAMINATED ELASTOMERIC FIXED PIER BEARING

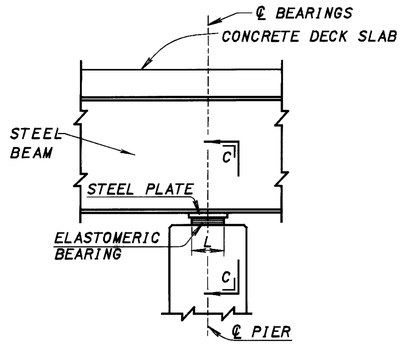

SECTION THRU PIER

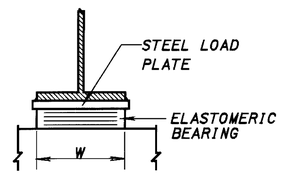

SECTION C-C

ODOT CENTRAL OFFICE
OFFICE OF PRODUCTION

DESIGN AGENCY

DATE 10-8-99
REVIEWED DRL
STRUCTURE FILE NUMBER 5204135

DRAWN TAA
REVISED

DESIGNED TAA
CHECKED DFT

BEARING DETAILS
MED-71-2402 L
I-71 OVER S.R. 303

MED-71-15.78

19/46

304
340

THIS REINFORCING SCHEDULE IS FOR INFORMATION ONLY.

MARK	NUMBER REAR ABUT. STAGE I	NUMBER REAR ABUT. STAGE II	NUMBER FWD. ABUT. STAGE I	NUMBER FWD. ABUT. STAGE II	NUMBER TOTAL	LENGTH	WEIGHT LB	TYPE	DIMENSIONS A	DIMENSIONS B	DIMENSIONS C	DIMENSIONS INC
ABUTMENTS - MED-71-2402 L (SOUTHBOUND LANE)												
A501	56	52	56	52	216	8'-5"	1896	2	3'-0"	2'-8"	3'-0"	
A502	28	26	28	26	108	7'-11"	892	2	3'-0"	2'-2"	3'-0"	
	1 SR		1 SR		2 SR	30'-6"						
A503	0F		0F		0F	TO	261	STR				6"
	4		4		4	32'-0"						
		1 SR		1 SR	2 SR	9'-7"						
A504		0F		0F	0F	TO	86	STR				6"
		4		4	4	11'-1"						
A505	12		12		24	24'-0"	601	STR				
A506	28	9	26	11	74	17'-0"	1312	3	5'-8"	2'-7"		
A507	20		18	2	40	16'-5"	685	2	7'-0"	2'-8"	7'-0"	
A508		12		12	24	3'-0"	75	STR				
A509		12		12	24	23'-4"	584	STR				
A510	2		2		4	11'-3"	47	STR				
A511	2		2		4	9'-1"	38	STR				
A512	2		2		4	8'-5"	35	STR				
A513	1		1		2	9'-11"	21	19	7'-9"	1'-11"	0'-11"	
A514	1		1		2	9'-2"	19	19	7'-9"	1'-3"	0'-7"	
A515	1		1		2	6'-11"	14	STR				
A516	1		1		2	6'-3"	7	STR				
A517	1		1		2	4'-6"	9	STR				
A518	1		1		2	3'-10"	8	STR				
	1 SR		1 SR		2 SR	21'-11"			9'-9"		9'-9"	
A519	0F		0F		0F	TO	302	2	TO	2'-8"	TO	5 3/8"
	6		6		6	26'-5"			12'-0"		12'-0"	
A520	38	37	38	37	150	6'-5"	1004	2	2'-0"	2'-8"	2'-0"	
A521	1		1		2	20'-5"	43	2	9'-0"	2'-8"	9'-0"	
A522	1		1		2	19'-5"	41	2	8'-6"	2'-8"	8'-6"	
A523		2		2	4	12'-2"	51	STR				
		1 SR			1 SR	3'-0"						
A524		0F			0F	TO	27	STR				2'-4"
		4			4	10'-0"						
		1 SR			1 SR	10'-9"						
A525		0F			0F	TO	30	STR				2'-4"
		4			4	3'-9"						
		1 SR			1 SR	19'-5"			8'-6"		8'-6"	
A526		0F			0F	TO	139	2	TO	2'-8"	TO	6 5/8"
		6			6	24'-11"			11'-3"		11'-3"	
A527		1		1	2	26'-7"	55	2	12'-1"	2'-8"	12'-1"	
A528		1			1	11'-0"	11	19	10'-5"	0'-7"	0'-3"	
A529		1			1	12'-6"	13	19	10'-5"	1'-3"	0'-8"	
A530		1			1	17'-11"	19	2	7'-9"	2'-8"	7'-9"	
A531		1			1	17'-5"	18	2	7'-6"	2'-8"	7'-6"	
	1 SR		1 SR		2 SR	30'-6"						
A532	0F		0F		0F	TO	130	STR				1'-6"
	2		2		2	32'-0"						
		1 SR		1 SR	2 SR	9'-7"						
A533		0F		0F	0F	TO	43	STR				1'-6"
		2		2	2	11'-1"						
				1 SR	1 SR	3'-9"						
A534				0F	0F	TO	29	STR				2'-1"
				4	4	10'-0"						
				1 SR	1 SR	4'-4"						
A535				0F	0F	TO	30	STR				2'-1"
				4	4	10'-7"						
					1 SR	1 SR	20'-3"			8'-11"		8'-11"	
A536					0F	0F	TO	144	2	TO	2'-8"	TO	6 5/8"
					6	6	25'-9"			11'-8"		11'-8"	
A537					1	1	18'-9"	20	2	8'-2"	2'-8"	8'-2"	
A538					1	1	18'-3"	19	2	7'-11"	2'-8"	7'-11"	
A539					1	1	10'-7"	11	19	9'-5"	1'-0"	6"	
A540					1	1	11'-5"	12	19	9'-5"	1'-9"	10"	
A601	32	22	32	22	108	6'-8"	1081	STR				
	3 SR		3 SR		6 SR	35'-6"						
A801	0F		0F		0F	TO	2299	STR				3"
	4		4		4	36'-3"						
	3 SR		3 SR		6 SR	35'-6"						
A802	0F		0F		0F	TO	1149	STR				9"
	2		2		2	36'-3"						
	1 SR		1 SR		2 SR	30'-6"						
A803	0F		0F		0F	TO	668	STR				6"
	4		4		4	32'-0"						
		3 SR		3 SR	6 SR	32'-6"						
A804		0F		0F	0F	TO	2107	STR				3"
		4		4	4	33'-3"						
		3 SR		3 SR	6 SR	32'-6"						
A805		0F		0F	0F	TO	1053	STR				9"
		2		2	2	33'-3"						
		1 SR		1 SR	2 SR	9'-7"						
A806		0F		0F	0F	TO	221	STR				6"
		4		4	4	11'-1"						
D801	28	26	28	26	108	4'-3"	1226	18	2'-7"	1'-0"	1'-0"	

MARK	NUMBER SUPER STAGE I	NUMBER SUPER STAGE II	NUMBER TOTAL	LENGTH	WEIGHT LB	TYPE	DIMENSIONS A	DIMENSIONS B	DIMENSIONS C	DIMENSIONS D	DIMENSIONS E	DIMENSIONS R	DIMENSIONS INC
PARAPETS - MED-71-2090 L (SOUTHBOUND LANE)													
Y501	233	233	466	7'-5"	3605	23							
Y601	233	233	466	3'-11"	2741	34							
Y602	233	233	466	2'-8"	1866	1	1'-1"	1'-9"					
	2 SR	2 SR	4 SR	8'-2"			3'-7"		3'-7"				
Y603	0F	0F	0F	TO	595	2	TO	1'-2"	TO				1"
	11	11	11	9'-10"			4'-5"		4'-5"				
Y604	16	16	32	3'-7"	172	STR							
X501	16	16	32	10'-10"	362	STR							
X502	3	3	6	5'-6"	34	25							
X503	13	13	26	5'-6"	149	STR							
X504	42	42	84	31'-3"	2738	STR							
X601	7	7	14	31'-9"	668	STR							

DESIGN AGENCY: ODOT CENTRAL OFFICE, OFFICE OF PRODUCTION

DATE: 10-8-99

REVIEWED: DRL

STRUCTURE FILE NUMBER: 5204135

DRAWN: TAA

REVISED:

DESIGNED: TAA

CHECKED: DFT

REINFORCING STEEL

MED-71-2402 L

I-71 OVER S.R. 303

MED-71-15.78

THIS REINFORCING SCHEDULE IS FOR INFORMATION ONLY.

MARK	NUMBER PIER 1	PIER 2	PIER 3	TOTAL	LENGTH	WEIGHT LB	TYPE	DIMENSIONS A	B	C	D	R	INC
PIERS - MED-71-2402 L (SOUTHBOUND LANE)													
SP401	2			2	19'-7"	570	27	4½"	2'-6"				
SP402		2		2	16'-8"	490	27	4½"	2'-6"				
SP403			2	2	18'-7"	543	27	4½"	2'-6"				
P500	4	4	4	12	18'-6"	232	STR						
P501	32	32	32	96	9'-1"	910	2	3'-4"	2'-8"	3'-4"			
P502	36		36	72	6'-5"	482	2	2'-4"	2'-0⅝"	2'-4"			
P503		36		36	6'-9"	253	2	2'-6"	2'-0⅝"	2'-6"			
P504	17	17	17	51	9'-8"	514	STR						
P1001	16	16	16	48	10'-8"	2203	1	1'-6"	9'-6"				
P1002	16			16	22'-6"	1549	STR						
P1003		16		16	19'-6"	1343	STR						
P1004			16	16	21'-6"	1480	STR						
P1101	4	4	4	12	11'-6"	733	STR						
P1102	4	4	4	12	30'-8"	1955	STR						
P801	22	22	22	66	18'-4"	3231	17	16'-6"					
P802	18	18	18	54	11'-4"	1634	17	9'-6"					
P901	7	7	7	21	18'-6"	1321	STR						
P902	7	7	7	21	23'-6"	1678	2	2'-9"	18'-6"	2'-9"			

MARK	NUMBER SUPER STAGE I	SUPER STAGE II	TOTAL	LENGTH	WEIGHT LB	TYPE	DIMENSIONS A	B	INC
SUPERSTRUCTURE - MED-71-2402 L (SOUTHBOUND LANE)									
S401	259	238	497	29'-0"	9628	STR			
S501	746		746	38'-8"	30086	STR			
S502		746	746	32'-9"	25482	STR			
S503	294	266	560	29'-6"	17230	STR			
S601	108	102	210	24'-0"	7570	STR			

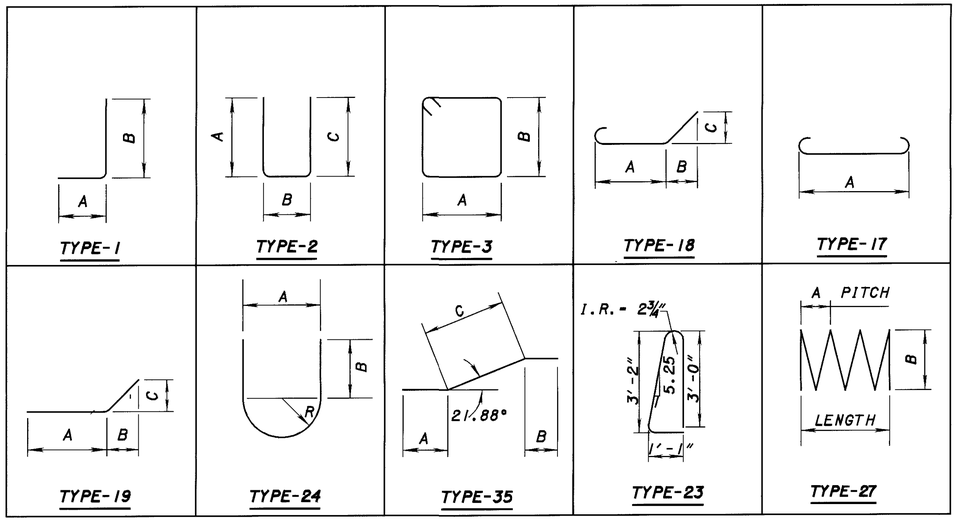

BENDING DIAGRAMS

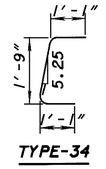

NOTES

ALL REINFORCING STEEL SHALL BE EPOXY COATED.

THE BAR SIZE IS INDICATED IN THE BAR MARK. THE FIRST DIGIT INDICATES THE BAR SIZE. FOR EXAMPLE, AN A501 IS A #5 BAR. THE DIMENSIONS SHOWN ARE OUT TO OUT UNLESS OTHERWISE INDICATED. "R" INDICATES THE INSIDE RADIUS.

REIFORCING STEEL MAY REQUIRE FIELD CUTTING OR BENDING TO BE PROPERLY FITTED. PAYMENT SHALL BE INCLUDED WITH THE ASSOCIATED CONCRETE ITEM.

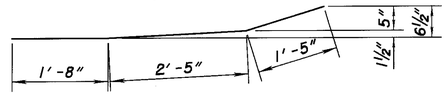

DESIGN AGENCY
ODOT CENTRAL OFFICE
OFFICE OF PRODUCTION

DESIGNED TAA | DRAWN TAA | REVISED DFT | DATE 10-8-99
CHECKED DFT/HLG | REVISED | STRUCTURE FILE NUMBER 5204135

REINFORCING STEEL
MED-71-2402 L
I-71 OVER S.R. 303

MED-71-15.78

21 / 46

906
940

				ESTIMATED QUANTITIES				
ITEM	EXTENSION	TOTAL	UNIT	DESCRIPTION	ABUT.	PIERS	SUPER.	GEN.
202	11203	LUMP		PORTIONS OF STRUCTURE REMOVED OVER 20 FOOT SPAN, AS PER PLAN	LUMP	LUMP	LUMP	
503	11100	LUMP		COFFERDAMS, CRIBS AND SHEETING				LUMP
503	21301	LUMP		UNCLASSIFIED EXCAVATION, AS PER PLAN	LUMP			
505	11100	LUMP		PILE DRIVING EQUIPMENT MOBILIZATION				LUMP
507	00100	1680	LF	STEEL PILES HP10X42, FURNISHED	1080	600		
507	00150	1680	LF	STEEL PILES HP10X42, DRIVEN	1080	600		
507	50500	24	EACH	STEEL PILE SPLICES	12	12		
512	44400	10	SY	TYPE B WATERPROOFING	10			
SPECIAL	51267200	71	SY	WATERPROOFING, MISC.: SEMI-INTEGRAL ABUTMENT JOINT WATERPROOFING	71			
SPECIAL	51267510	1291	SY	SEALING OF CONCRETE SURFACES (EPOXY-URETHANE)	116	712	463	
516	13900	72	SF	2" PREFORMED EXPANSION JOINT FILLER	72			
516	44000	24	EACH	ELASTOMERIC BEARING WITH INTERNAL LAMINATES AND LOAD PLATE		24		
				(NEOPRENE), (10"x16"x1½" PAD AND 11"x17"x1½" PLATE)				
516	44001	12	EACH	ELASTOMERIC BEARING WITH INTERNAL LAMINATES AND LOAD PLATE		12		
				(NEOPRENE), AS PER PLAN (10"x16"x1½" PAD AND 11"x22"x1½" PLATE)				
516	44101	24	EACH	ELASTOMERIC BEARING WITH INTERNAL LAMINATES AND LOAD PLATE	24			
				(NEOPRENE), AS PER PLAN (9"x12"x2" PAD AND 12"x13"x1½" PLATE)				
518	21231	LUMP		POROUS BACKFILL WITH FILTER FABRIC, AS PER PLAN	LUMP			
518	40000	224	LF	6" PERFORATED CORRUGATED PLASTIC PIPE	224			
518	40010	42	LF	6" NON-PERFORATED CORRUGATED PLASTIC PIPE, INCLUDING SPECIALS	42			
519	11101	15	SF	PATCHING CONCRETE STRUCTURE, AS PER PLAN		15		
530	00200	LUMP		STRUCTURE, MISC.: METALLIC COATING SYSTEM			LUMP	
601	20500	65	CY	CRUSHED AGGREGATE SLOPE PROTECTION				65
842	41001	174	CY	CLASS C CONCRETE, PIER ABOVE FOOTINGS, AS PER PLAN		174		
842	44101	134	CY	CLASS C CONCRETE, ABUTMENT NOT INCLUDING FOOTING, AS PER PLAN	134			
842	46501	109	CY	CLASS C CONCRETE, FOOTING, AS PER PLAN	57	52		
844	48001	474	CY	HIGH PERFORMANCE CONCRETE SUPERSTRUCTURE (DECK), AS PER PLAN (MIX 4)			474	
844	48021	60	CY	HIGH PERFORMANCE CONCRETE SUPERSTRUCTURE (PARAPET), AS PER PLAN (MIX 4)			60	
844	48041	63	CY	HIGH PERFORMANCE CONCRETE SUBSTRUCTURE, AS PER PLAN	63			
844	49000	LUMP		HIGH PERFORMANCE CONCRETE TRIAL MIX			LUMP	
863	10060	LUMP		STRUCTURAL STEEL MEMBERS, LEVEL THREE (3) FABRICATION, A572			LUMP	
863	20000	7140	EACH	WELDED STUD SHEAR CONNECTORS			7140	

ITEM 519 PATCHING CONCRET STRUCTURE, AS PER PLAN

PATCHING SHALL OCCUR ON THE PIER COLUMNS, AS DIRECTED BY THE PROJECT ENGINEER. ALL SURFACES TO BE PATCHED AND THE EXPOSED REINFORCING STEEL WITHIN SHALL BE THOROUGHLY CLEANED BY ABRASIVE BLASTING PRIOR TO THE CLEANING SPECIFIED BY 519.04 CLEANING SHALL PRECEDE APPLICATION OF THE PATCHING MATERIAL OR ERECTION OF THE FORMS BY NO MORE THAN 24 HOURS.

DESIGN AGENCY: ODOT CENTRAL OFFICE, OFFICE OF PRODUCTION
REVISED: DFT DATE: 10-08-99
STRUCTURE FILE NUMBER: 5204143
DRAWN: TAA REVISED:
DESIGNED: TAA CHECKED: HLG

ESTIMATED QUANTITIES
MED-71-2402 R
I-71 OVER S.R. 303

MED-71-15.78

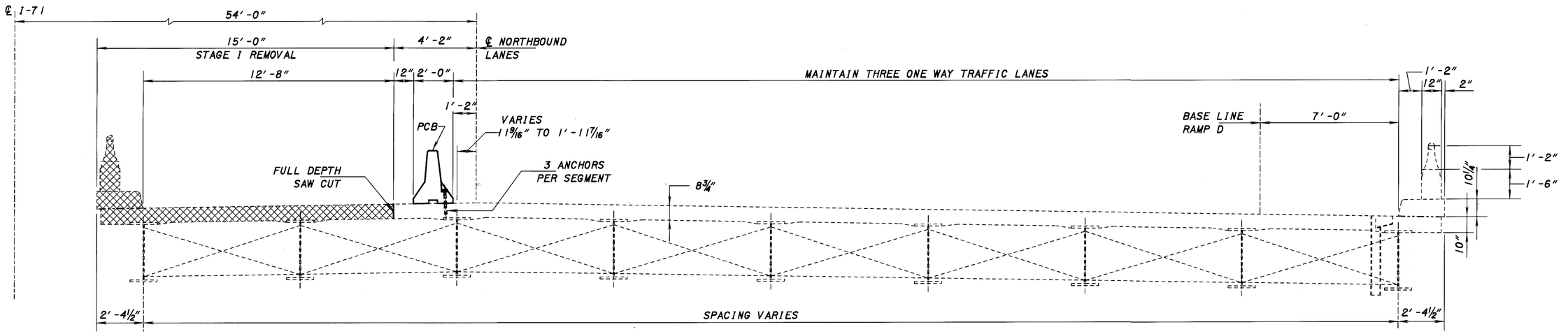

STAGE I REMOVAL

℄ I-71

PROPOSED WORK

1. MAINTAIN TRAFFIC BY USE OF STAGE CONSTRUCTION
2. REPLACE CONCRETE DECK AND STEEL BEAMS
3. WIDEN AND MODIFY EXISTING SUBSTRUCTURE UNITS

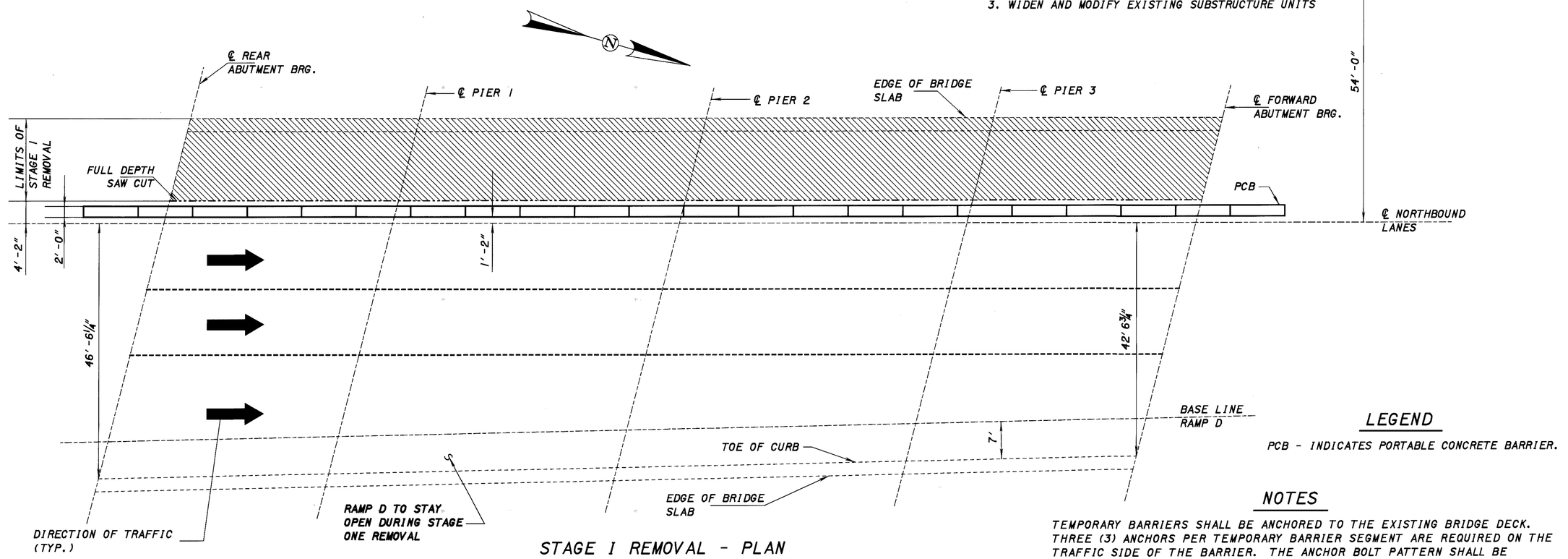

STAGE I REMOVAL - PLAN

LEGEND

PCB - INDICATES PORTABLE CONCRETE BARRIER.

NOTES

TEMPORARY BARRIERS SHALL BE ANCHORED TO THE EXISTING BRIDGE DECK. THREE (3) ANCHORS PER TEMPORARY BARRIER SEGMENT ARE REQUIRED ON THE TRAFFIC SIDE OF THE BARRIER. THE ANCHOR BOLT PATTERN SHALL BE SYMMETRICAL ABOUT THE CENTER OF EACH SEGMENT. SEE STD. DWG PCB-91 FOR ADDITIONAL DETAILS.

DESIGN AGENCY: ODOT CENTRAL OFFICE, OFFICE OF PRODUCTION
REVIEWED: DFT
DATE: 10-8-99
STRUCTURE FILE NUMBER: 5204143
DRAWN: BKL
REVISED:
DESIGNED: BKL
CHECKED: TAA

STAGE CONSTRUCTION
MED-71-2402 R
I-71 OVER S.R. 303

MED-71-15.78

23/46

908/940

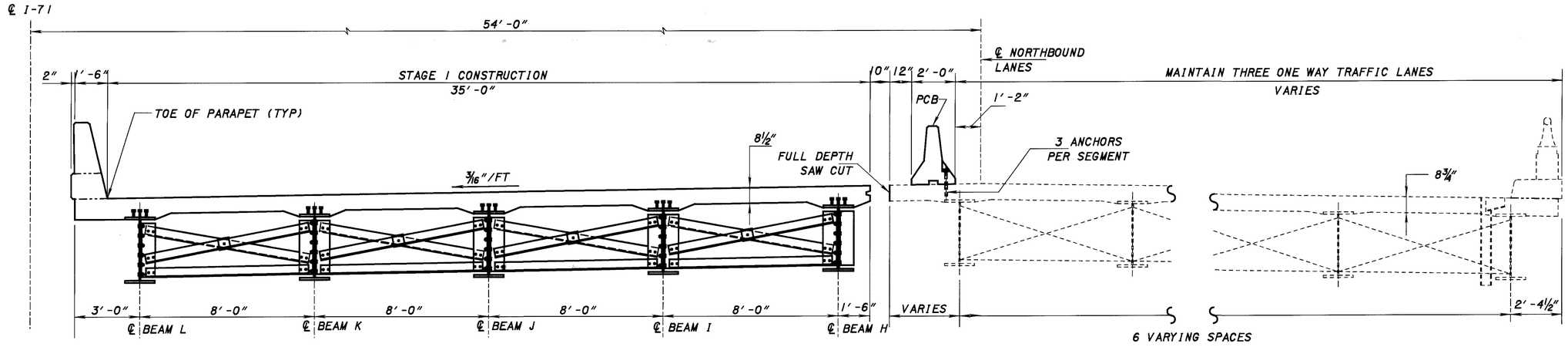

STAGE I CONSTRUCTION

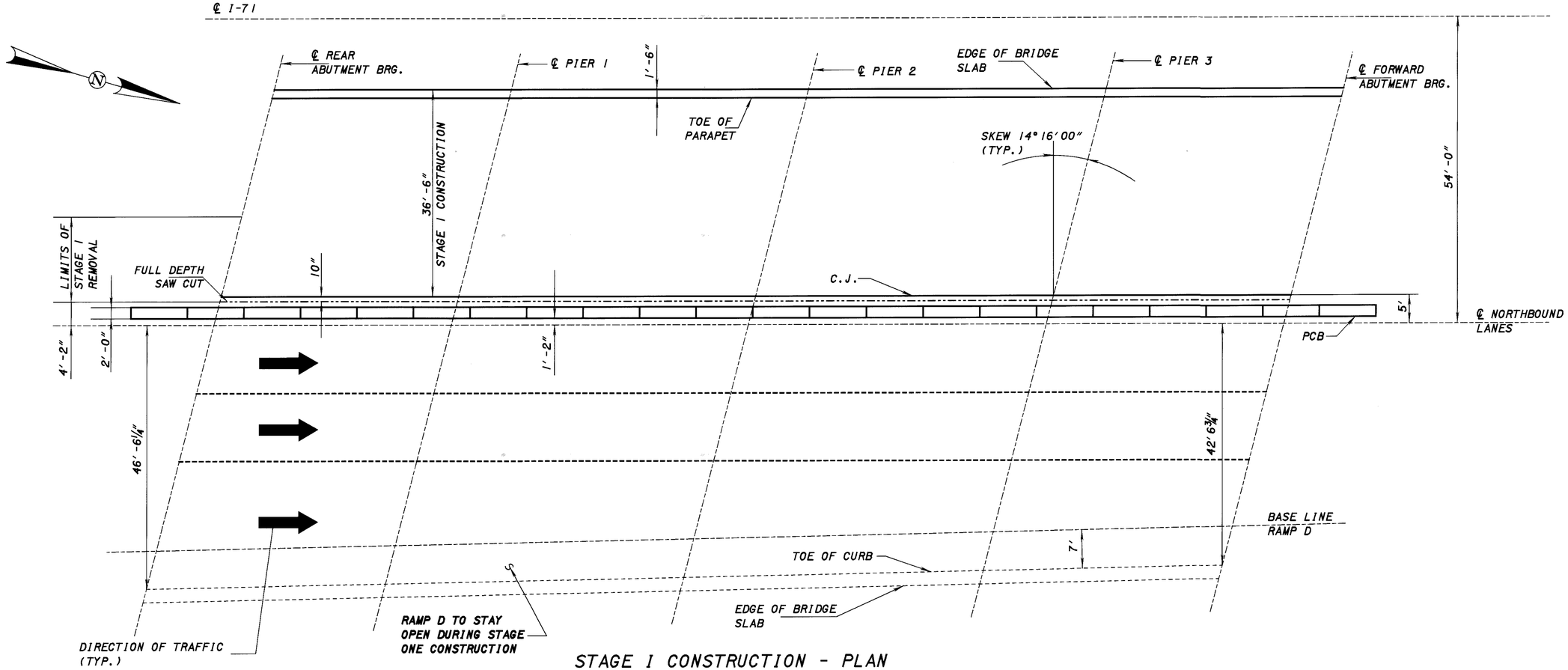

STAGE I CONSTRUCTION - PLAN

DESIGN AGENCY
ODOT CENTRAL OFFICE
OFFICE OF PRODUCTION

REVISED DFT
DATE 10-8-99
STRUCTURE FILE NUMBER 5204143

DRAWN BKL
REVISED

DESIGNED BKL
CHECKED TAA

STAGE CONSTRUCTION
MED-71-2402 R
I-71 OVER S.R. 303

MED-71-15.78

24/46

909/940

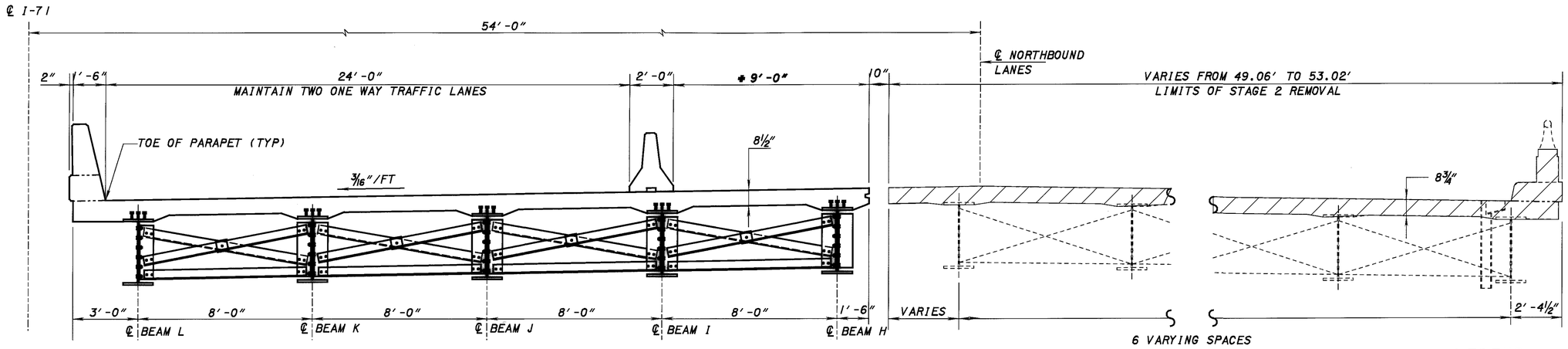

STAGE 2 REMOVAL

LEGEND

#- DURING STAGE 2 REMOVAL AND STAGE 2 CONSTRUCTION ALL LIVE AND DEAD LOADS DUE TO THE CONTRACTOR'S CONSTRUCTION EQUIPMENT EXCEPT FOR THE SCREED RAIL SHALL NOT BE CONTAINED INSIDE THE 7'-6" AREA OF THE DECK.

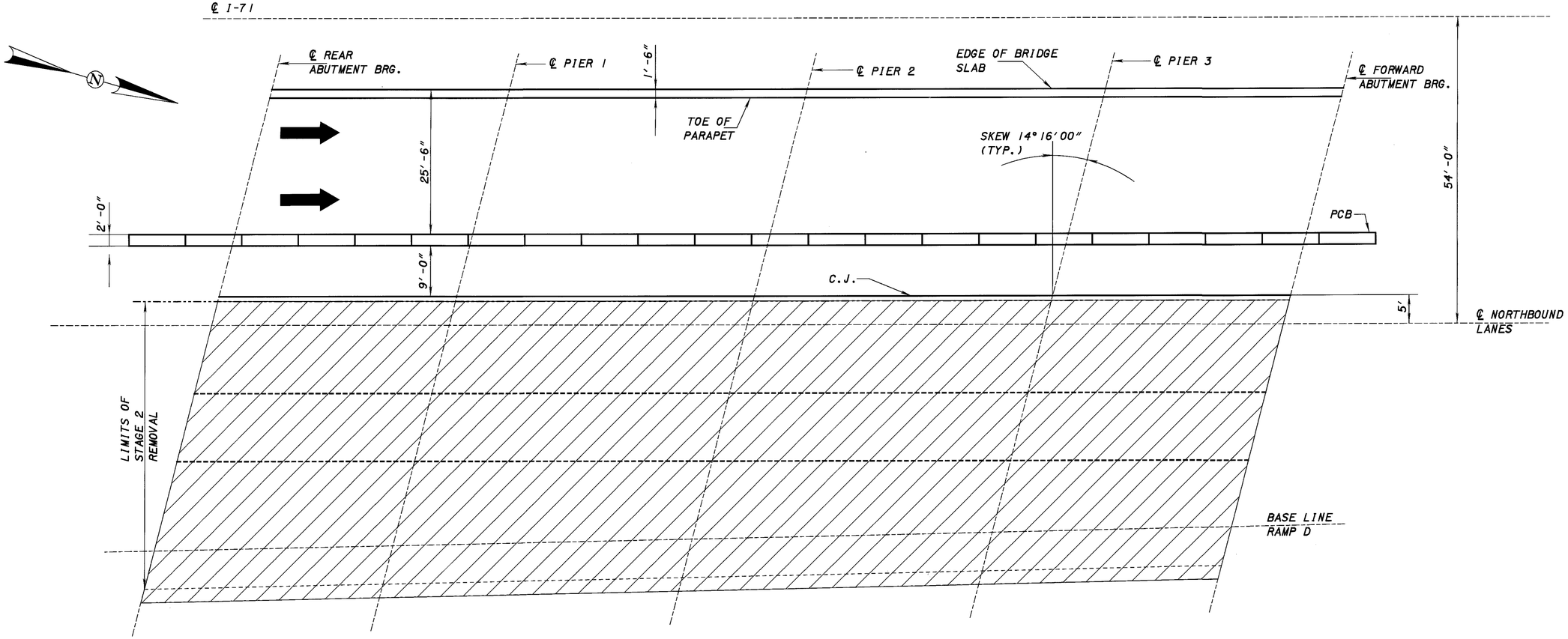

STAGE 2 REMOVAL- PLAN

DESIGN AGENCY
ODOT CENTRAL OFFICE
OFFICE OF PRODUCTION

DESIGNED	DRAWN	REVIEWED	DATE
BKL	BKL	DFT	10-8-99
CHECKED	REVISED	STRUCTURE FILE NUMBER	
TAA		5204143	

STAGE CONSTRUCTION
MED-71-2402 R
I-71 OVER S.R. 303

MED-71-15.78

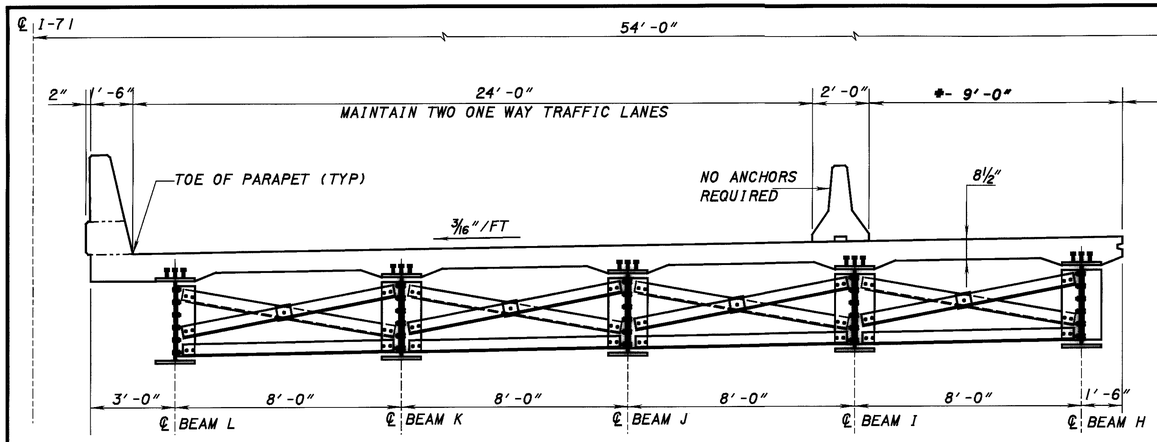

NOTES

PLACE CROSSFRAMES IN POSITION PRIOR TO POURING OF THE CLOSURE POUR

FOR INFORMATION ON THE THE CLOSURE POUR STAGE SEE SHEET 39 & 41 / 46

LEGEND

#- DURING STAGE 2 REMOVAL AND STAGE 2 CONSTRUCTION ALL LIVE AND DEAD LOADS DUE TO THE CONTRACTOR'S CONSTRUCTION EQUIPMENT EXCEPT FOR THE SCREED RAIL SHALL NOT BE CONTAINED INSIDE THE 9'-0" AREA OF THE DECK.

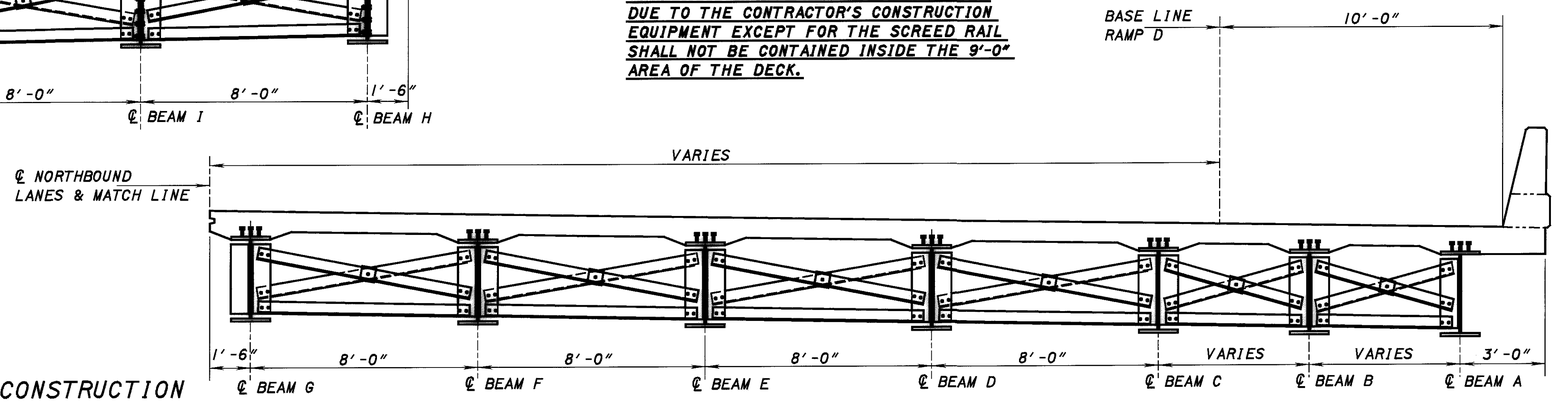

STAGE 2 CONSTRUCTION

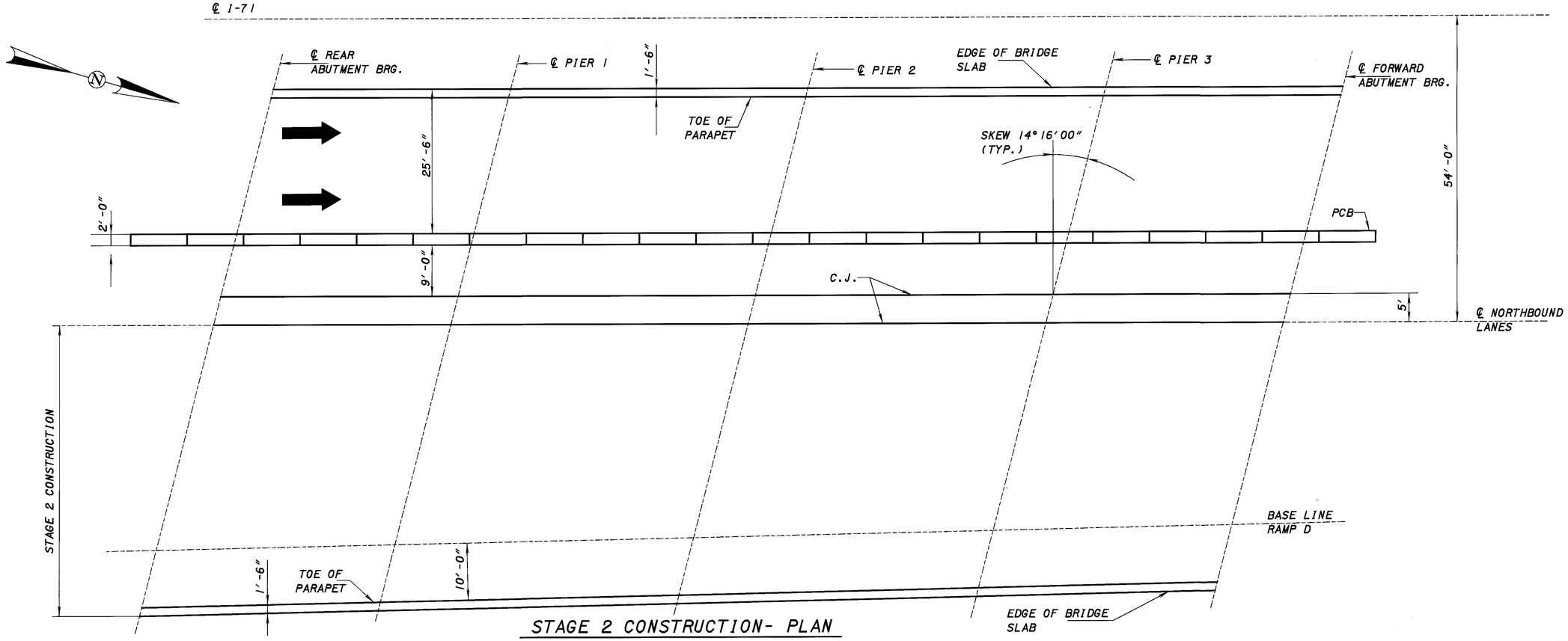

STAGE 2 CONSTRUCTION- PLAN

DESIGN AGENCY: ODOT CENTRAL OFFICE, OFFICE OF PRODUCTION

DESIGNED BKL | DRAWN BKL | CHECKED TAA | REVISED | REVISED DFT | DATE 10-8-99

STRUCTURE FILE NUMBER 5204143

STAGE CONSTRUCTION

MED-71-2402 R

I-71 OVER S.R. 303

MED-71-15.78

26/46

911/940

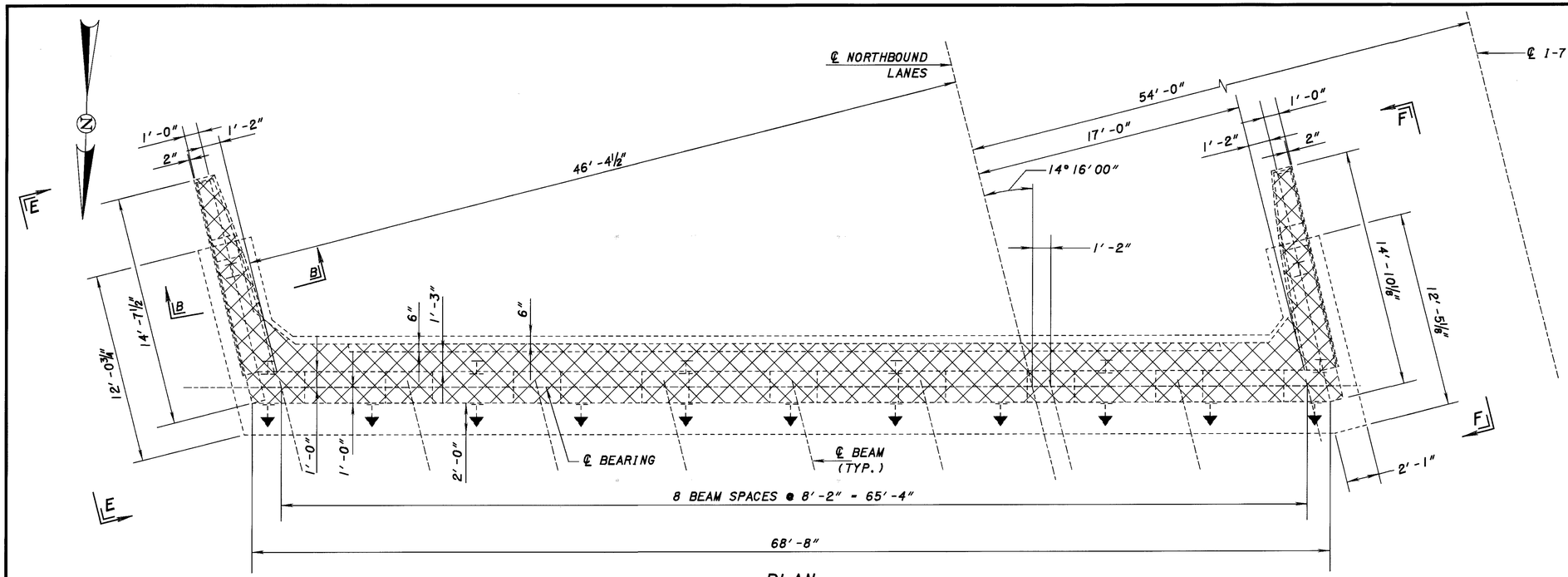

PLAN
(REAR ABUTMENT)

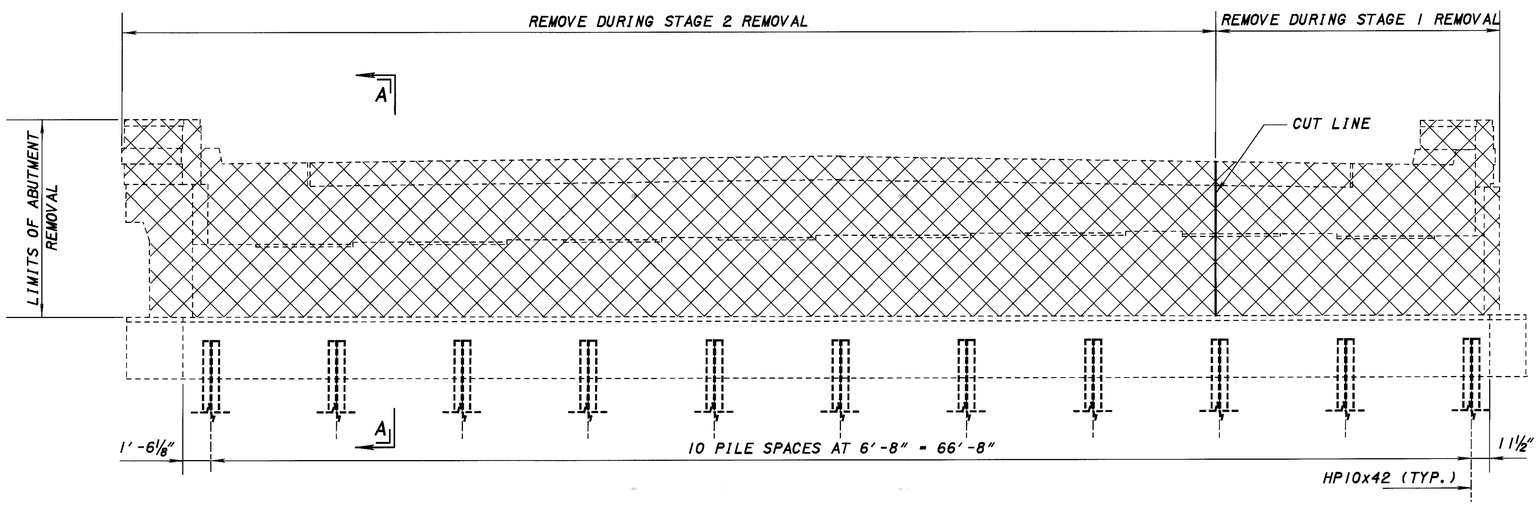

ELEVATION
(REAR ABUTMENT)

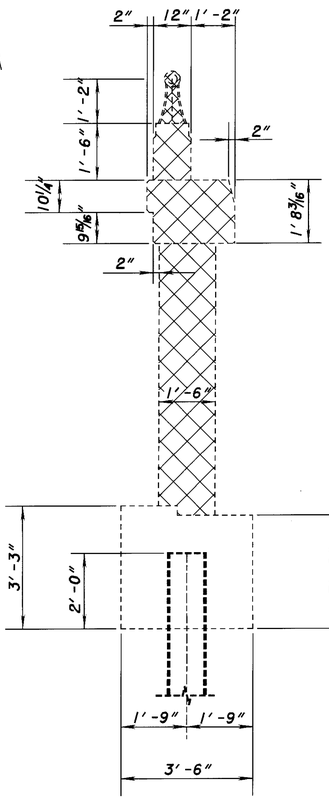

SECTION B-B

NOTES

FOR VIEW E-E AND F-F SEE SHEET 29/46

FOR SECTION A-A SEE SHEET 28/46

LEGEND

PORTION OF STRUCTURE TO BE REMOVED

INDICATE BATTERED PILE

DESIGN AGENCY: ODOT CENTRAL OFFICE OFFICE OF PRODUCTION

DESIGNED: TAA | DRAWN: TAA | REVIEWED: DFT | DATE: 10-08-99

CHECKED: BKL | REVISED: | REVISED: | STRUCTURE FILE NUMBER: 5204143

EXISTING ABUTMENT PLAN AND ELEVATION
MED-71-2402 R
I-71 OVER S.R. 303

MED-71-15.78

27/46

912
940

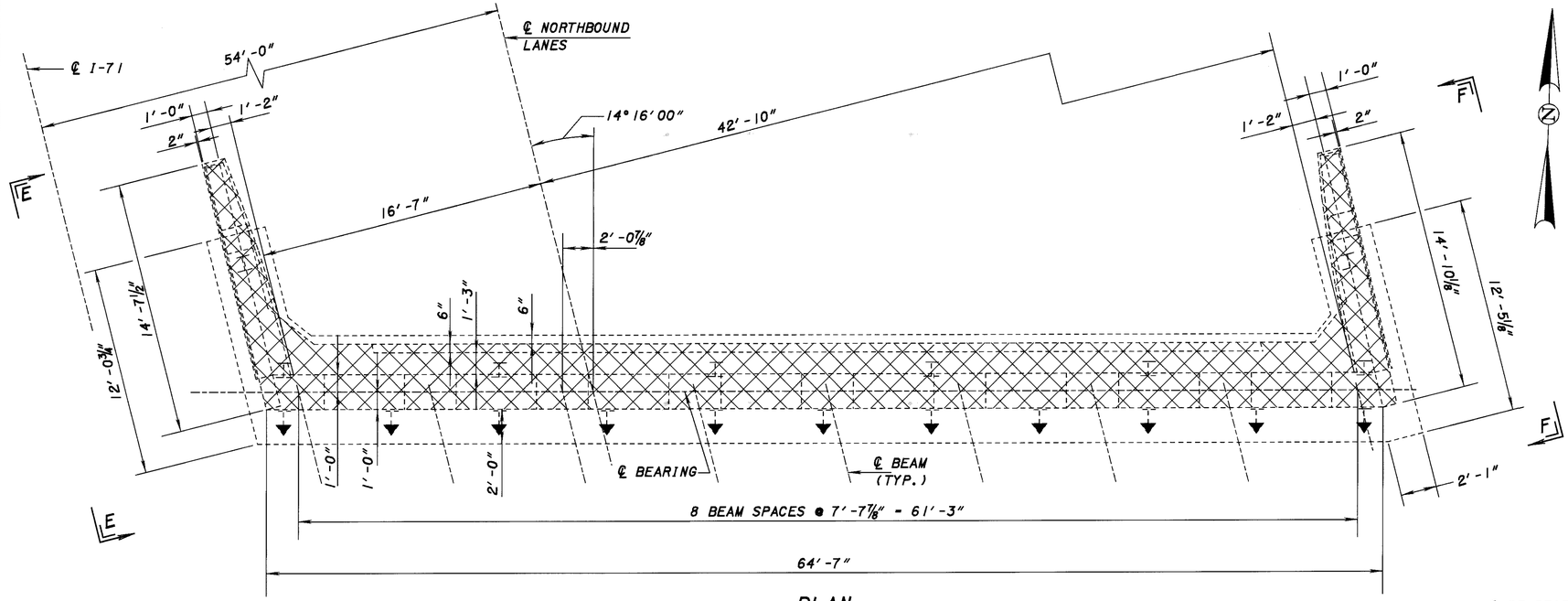

PLAN
(FORWARD ABUTMENT)

NOTES

FOR VIEW E-E AND F-F SEE SHEET 29/46

LEGEND

PORTION OF STRUCTURE TO BE REMOVED

INDICATE BATTERED PILE

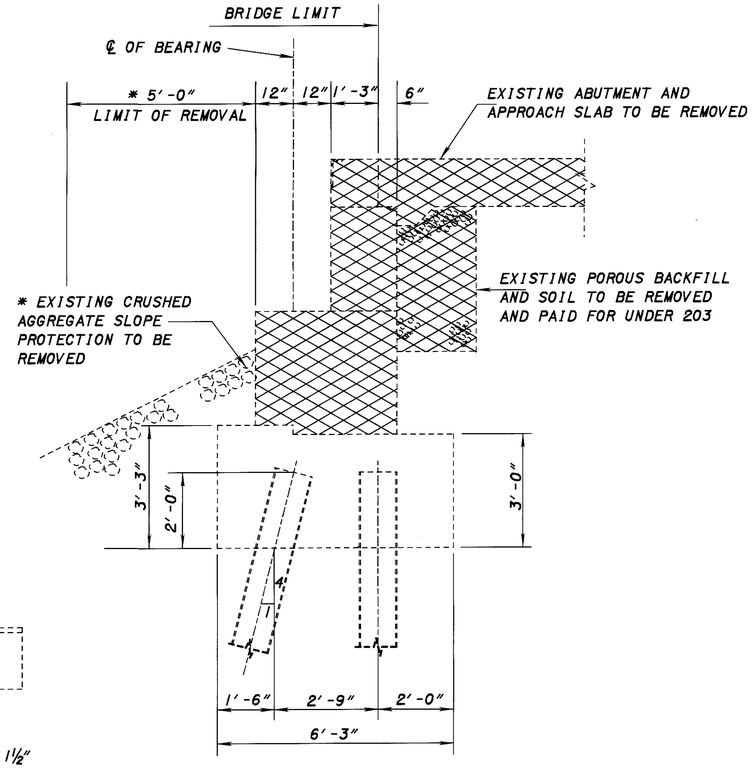

SECTION A-A

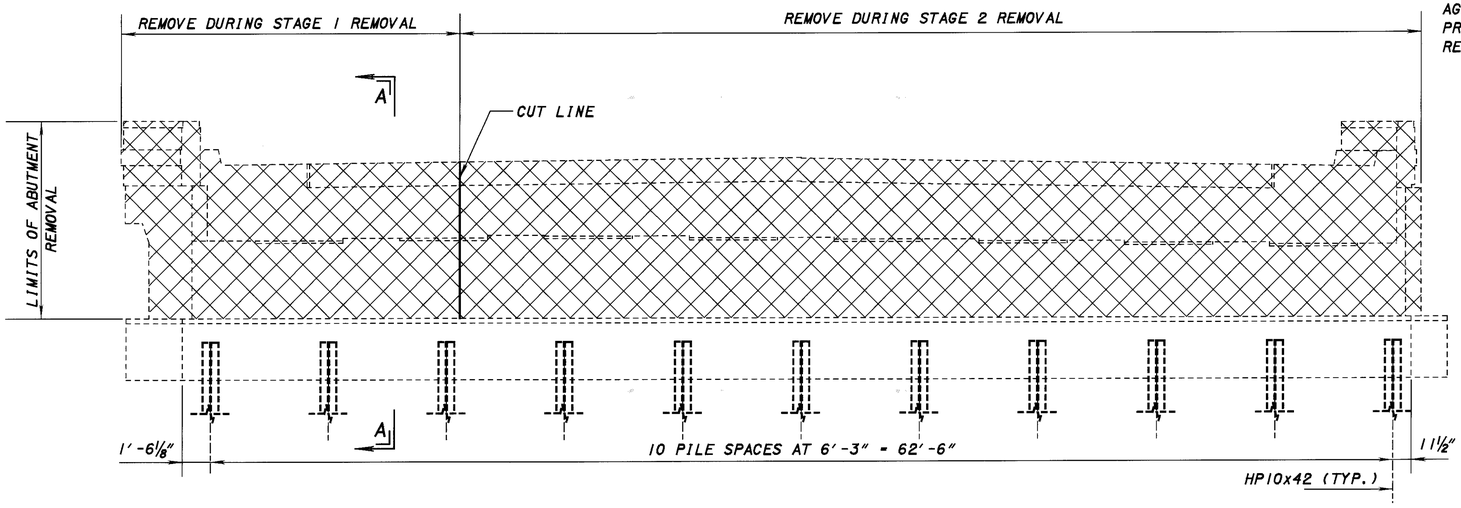

ELEVATION
(FORWARD ABUTMENT)

DESIGN AGENCY: ODOT CENTRAL OFFICE, OFFICE OF PRODUCTION

REVISED DFT DATE 10-08-99

STRUCTURE FILE NUMBER 5204143

DESIGNED TAA | DRAWN TAA | REVISED

CHECKED BKL

EXISTING ABUTMENT PLAN AND ELEVATION

MED-71-2402 R

I-71 OVER S.R. 303

MED-71-15.78

28/46

913/940

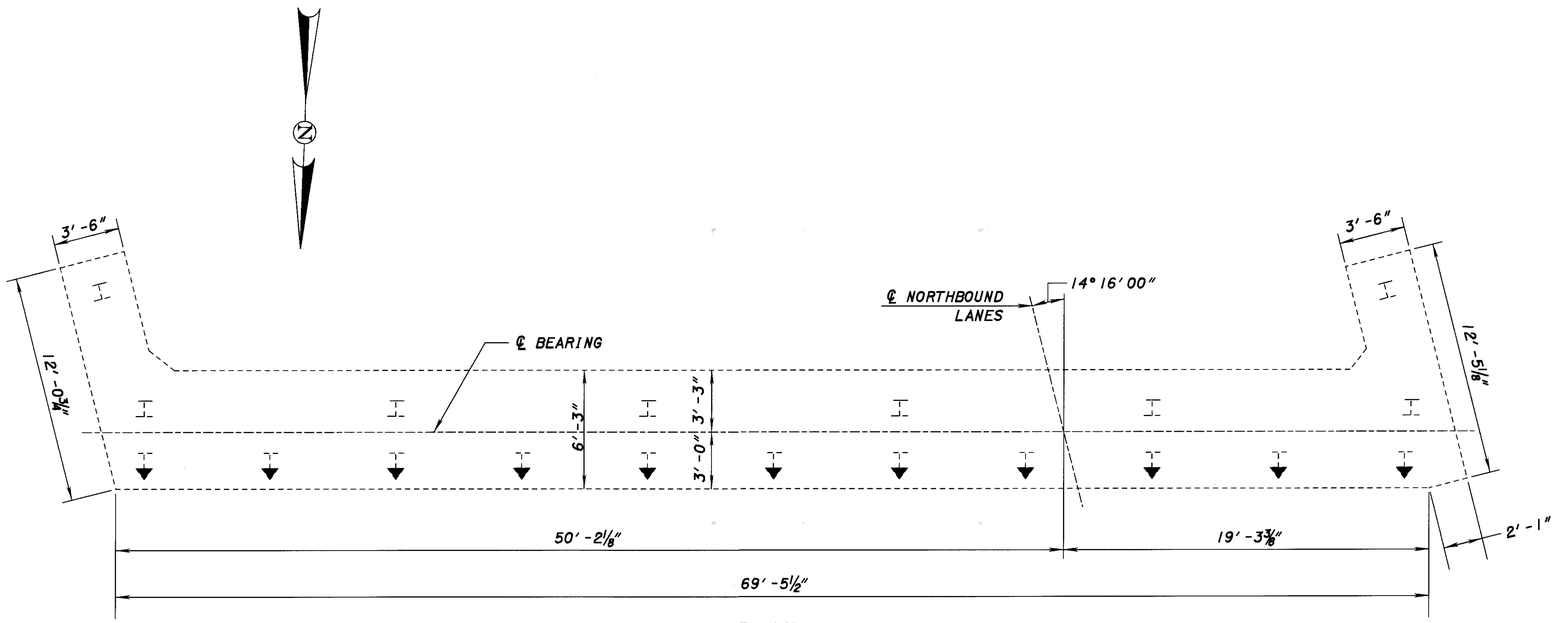

PLAN
(REAR ABUTMENT)

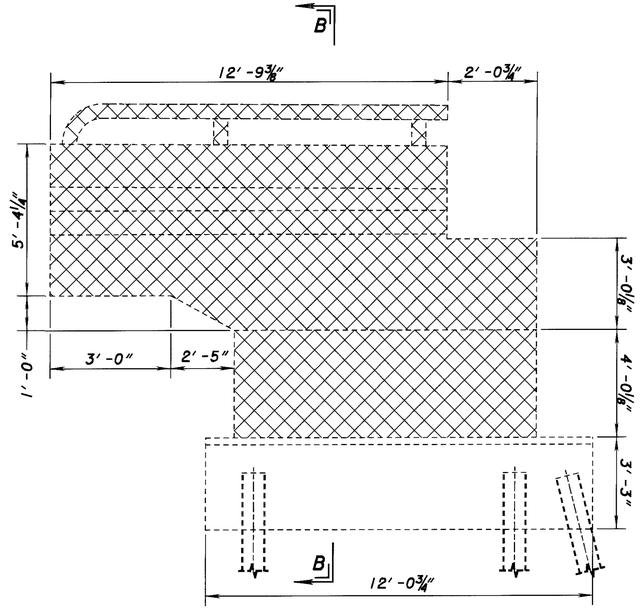

VIEW E-E

NOTES AND LEGEND

FOR SECTION B-B SEE SHEET 27 / 46

FOR VIEW E-E AND F-F SEE SHEET 27 & 28/46

PORTION OF STRUCTURE TO BE REMOVED

INDICATE BATTERED PILE

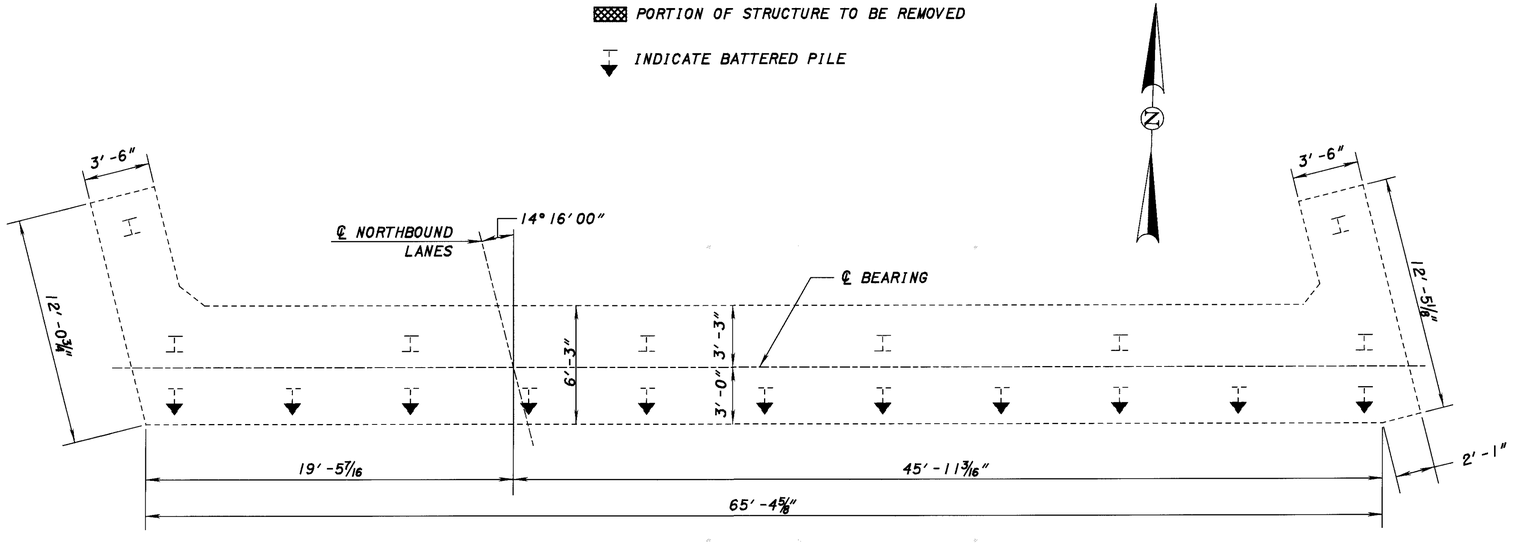

PLAN
(FORWARD ABUTMENT)

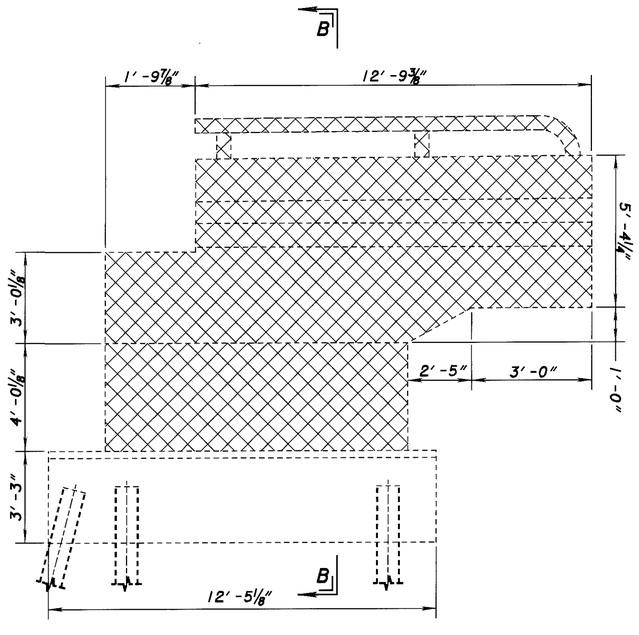

VIEW F-F

DESIGN AGENCY
ODOT CENTRAL OFFICE
OFFICE OF PRODUCTION

REVIEWED DFT
DATE 10-08-99
STRUCTURE FILE NUMBER 5204143

DRAWN TAA
REVISED

DESIGNED TAA
CHECKED BKL

REMOVAL DETAILS
MED-71-2402 R
I-71 OVER S.R. 303

MED-71-15.78

29 / 46

314
940

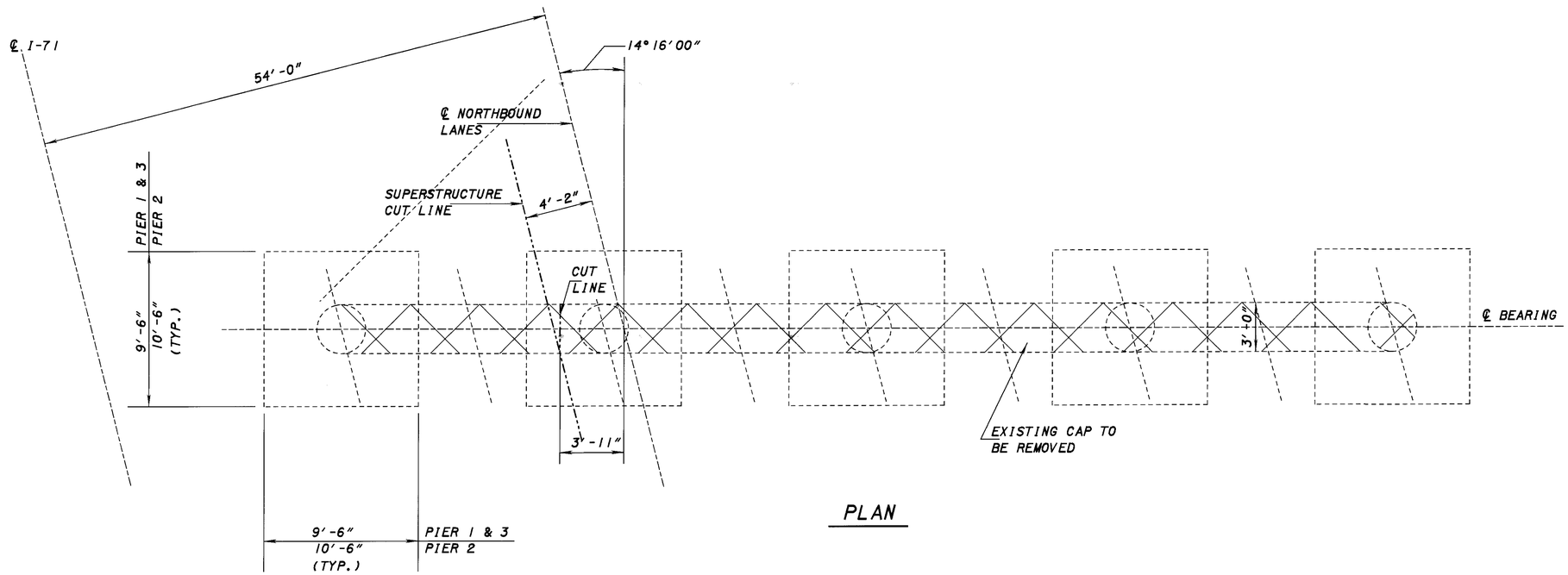

PLAN

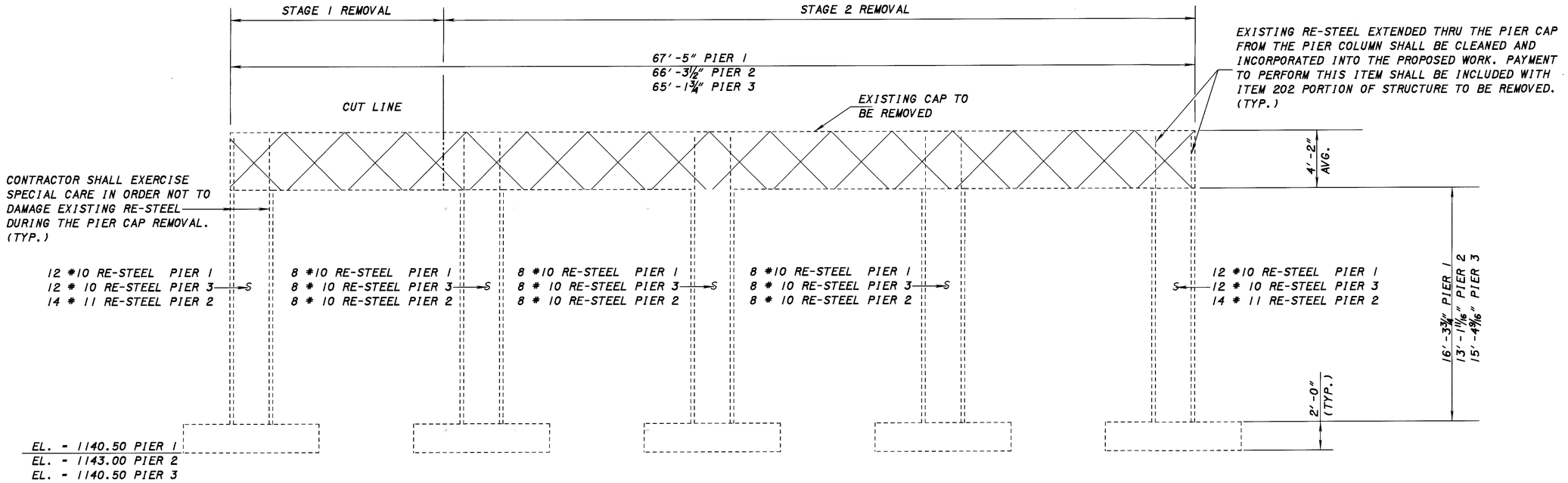

ELEVATION

LEGEND

PORTION OF STRUCTURE TO BE REMOVED

ODOT CENTRAL OFFICE
OFFICE OF PRODUCTION

DESIGNED	DRAWN	REVISED	DATE
TAA	TAA	DRL	10-08-99
CHECKED	REVISED	STRUCTURE FILE NUMBER	
DFT		5204143	

PIER REMOVAL DETAILS
MED-71-2402 R
I-71 OVER S.R. 303

MED-71-15.78

30 / 46

915
940

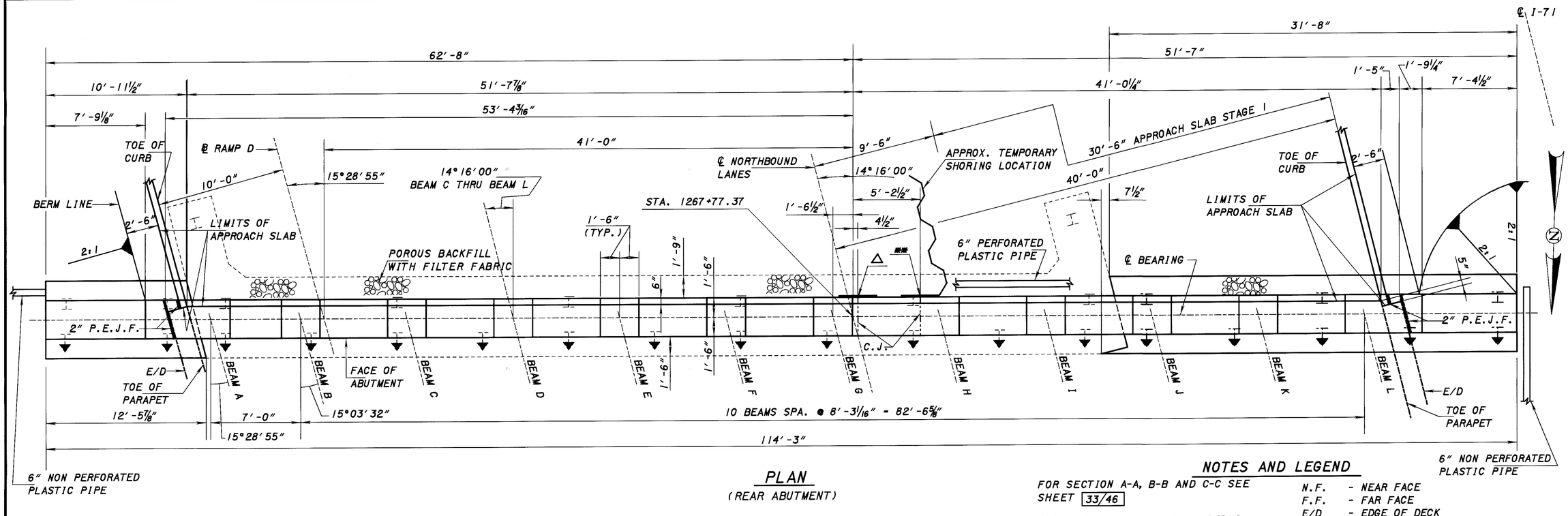

PLAN
(REAR ABUTMENT)

LOCATION	A	B	C	D	E	F	G	H	I	J	K	L
ELEVATIONS	1163.68	1163.77	1163.88	1163.99	1164.10	1164.20	1164.31	1164.21	1164.07	1163.93	1163.79	1163.65

LOCATION	X	Y	V	Z	M
ELEVATIONS	1165.00	1168.82	1168.78	1165.15	1156.12

NOTES AND LEGEND

FOR SECTION A-A, B-B AND C-C SEE SHEET 33/46

ELEVATIONS SHOWN ARE MEASURED ALONG THE BRIDGE LIMITS. BEAM SEAT ELEVATIONS ARE MEASURED ALONG ℄ OF BEARING.

INDICATE BATTERED PILE

INDICATES FRONT ROW

INDICATES BACK ROW

N.F. - NEAR FACE
F.F. - FAR FACE
E/D - EDGE OF DECK
C.J. - CONSTRUCTION JOINT

△ TYPE B WATERPROOFING 3'-0" WIDE SHOULD EXTEND FROM BOTTOM OF APPROACH SLAB TO THE BEAM SEAT ACROSS THE CONSTRUCTION JOINT.

** TYPE B WATERPROOFING 3'-0" WIDE SHOULD EXTEND FROM BOTTOM OF APPROACH SLAB TO TOP OF FOOTING ACROSS THE CONSTRUCTION JOINT.

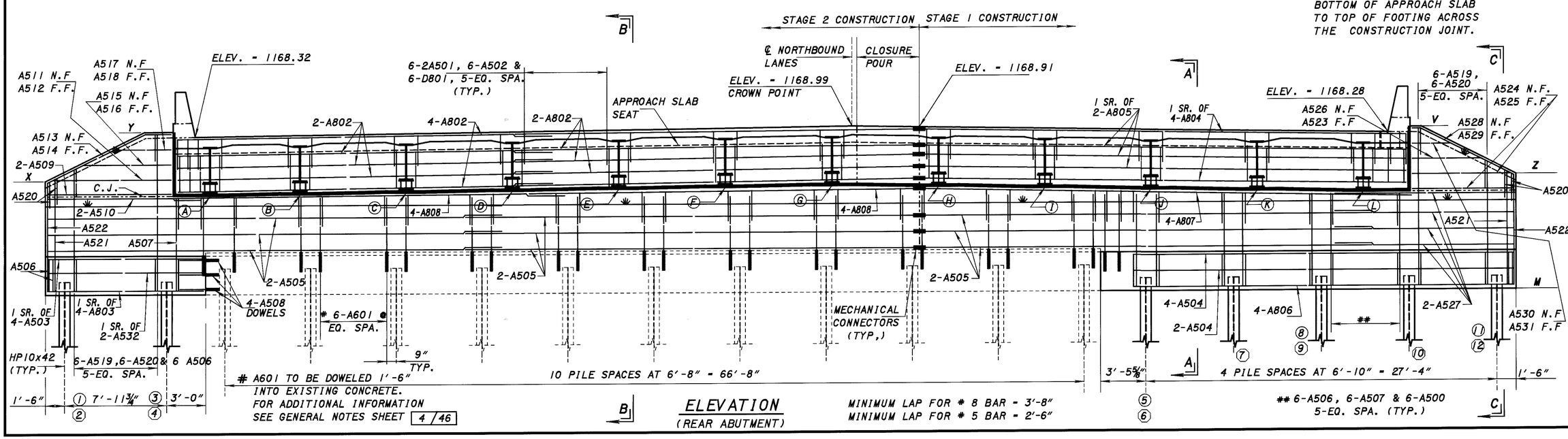

ELEVATION
(REAR ABUTMENT)

DESIGN AGENCY: ODOT CENTRAL OFFICE, OFFICE OF PRODUCTION
DESIGNED: TAA | DRAWN: TAA | CHECKED: DFT | REVISED: DRL | DATE: 10-8-99
STRUCTURE FILE NUMBER: 5204143

ABUTMENT DETAILS
MED-71-2402 R
I-71 OVER S.R. 303

MED-71-15.78

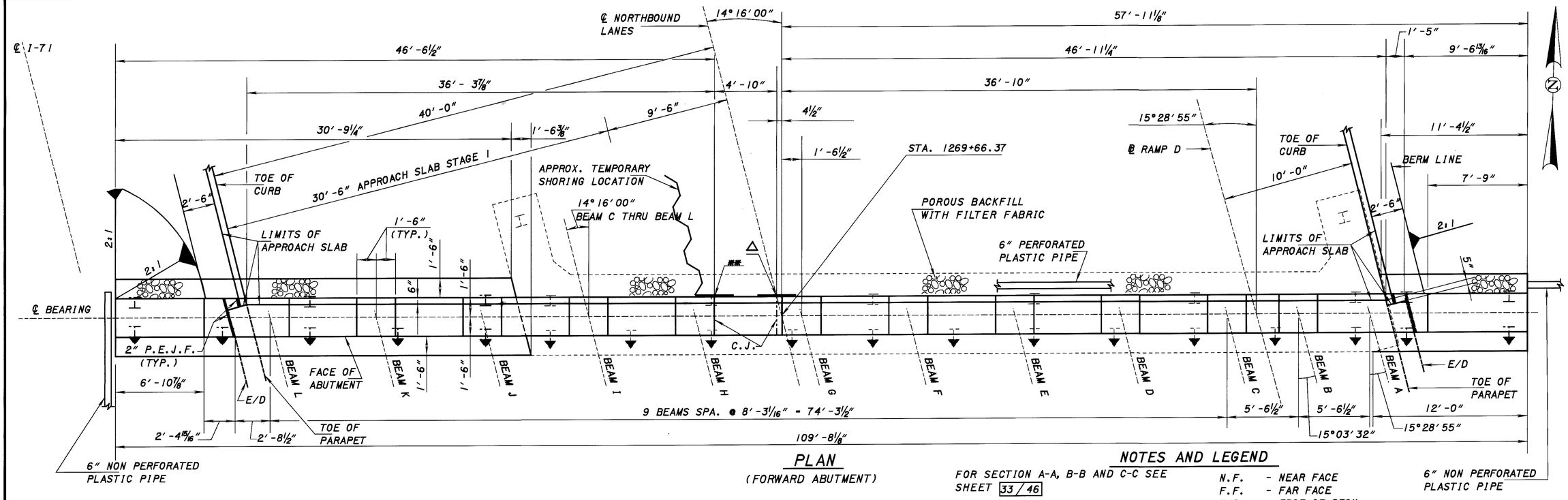

PLAN
(FORWARD ABUTMENT)

LOCATION	A	B	C	D	E	F	G	H	I	J	K	L
ELEVATIONS	1161.98	1162.05	1162.12	1162.23	1162.33	1162.43	1162.54	1162.44	1162.29	1162.15	1162.00	1161.86

LOCATION	X	Y	V	Z	M
ELEVATIONS	1163.25	1167.10	1166.97	1163.50	1154.44

NOTES AND LEGEND

FOR SECTION A-A, B-B AND C-C SEE SHEET 33 / 46

ELEVATIONS SHOWN ARE MEASURED ALONG THE BRIDGE LIMITS. BEAM SEAT ELEVATIONS ARE MEASURED ALONG ℄ OF BEARING.

INDICATE BATTERED PILE

INDICATES FRONT ROW

INDICATES BACK ROW

N.F. - NEAR FACE
F.F. - FAR FACE
E/D - EDGE OF DECK
C.J. - CONSTRUCTION JOINT

△ TYPE B WATERPROOFING 3′-0″ WIDE SHOULD EXTEND FROM BOTTOM OF APPROACH SLAB TO THE BEAM SEAT ACROSS THE CONSTRUCTION JOINT.

** TYPE B WATERPROOFING 3′-0″ WIDE SHOULD EXTEND FROM BOTTOM OF APPROACH SLAB TO TOP OF FOOTING ACROSS THE CONSTRUCTION JOINT.

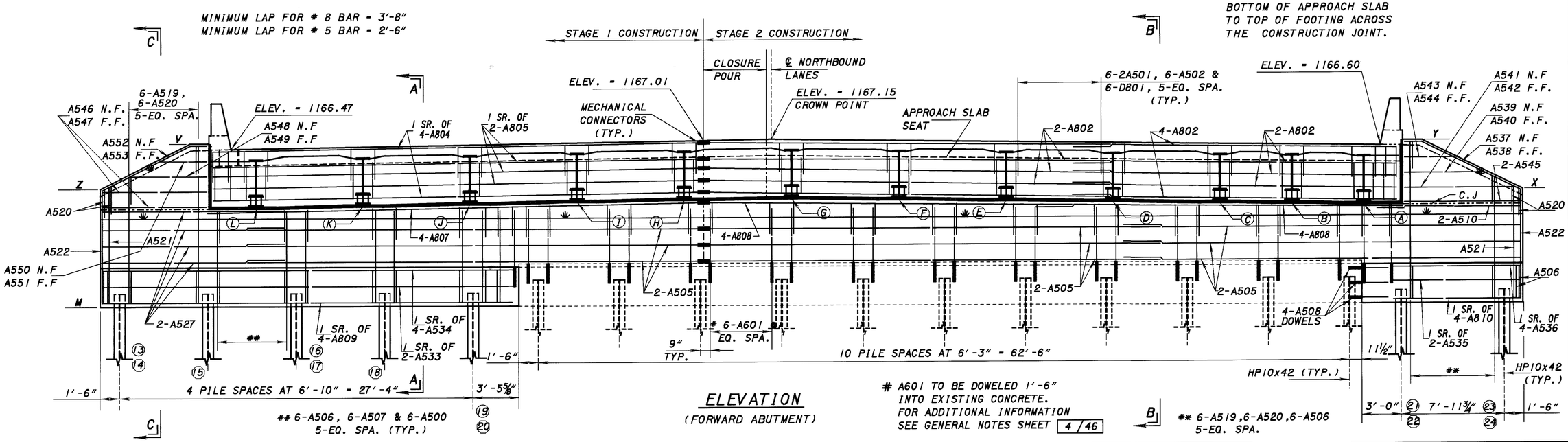

ELEVATION
(FORWARD ABUTMENT)

A601 TO BE DOWELED 1′-6″ INTO EXISTING CONCRETE. FOR ADDITIONAL INFORMATION SEE GENERAL NOTES SHEET 4 / 46

DESIGN AGENCY: ODOT CENTRAL OFFICE OFFICE OF PRODUCTION
DATE REVISED: 10-8-99 DRL
STRUCTURE FILE NUMBER: 5204143
DRAWN: TAA
REVISED:
DESIGNED: TAA
CHECKED: DFT

ABUTMENT DETAILS
MED-71-2402 R
I-71 OVER S.R. 303

MED-71-15.78

32 / 46

917
940

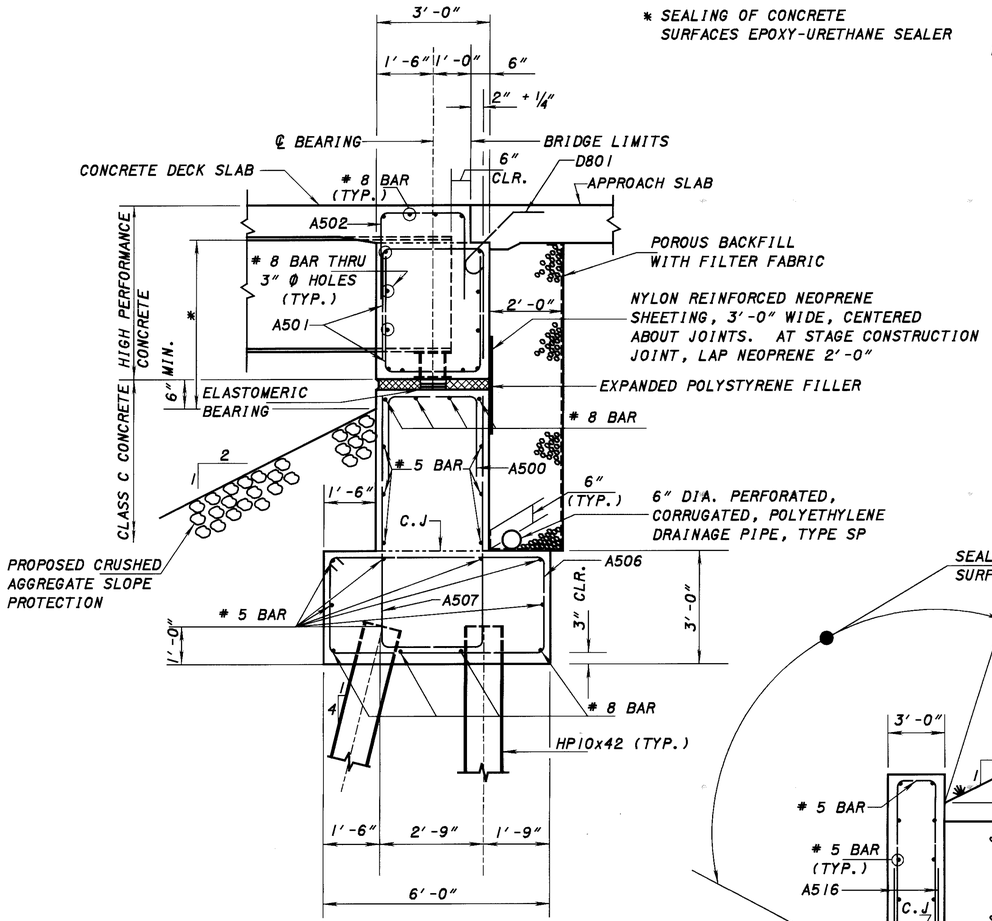

SECTION B-B

* SEALING OF CONCRETE SURFACES EPOXY-URETHANE SEALER

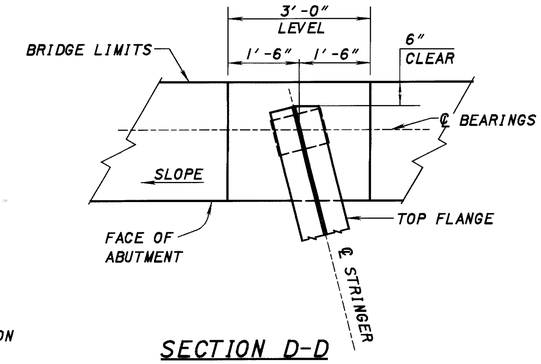

SECTION D-D
(CLIP TOP FLANGE ONLY)

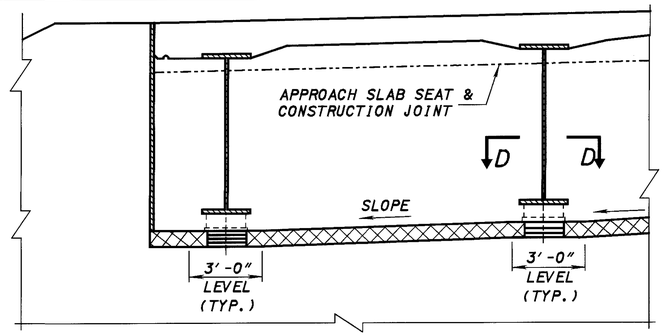

PART ELEVATION OF BEAM SEAT

NOTES

DIAPHRAGM *CONCRETE ENCASING THE STEEL BEAMS SUPPORTED IN THE SEMI INTEGRAL ABUTMENT SHALL BE PLACED AT LEAST 48 HOURS BEFORE THE ACTUAL DECK CONCRETE IS PLACED.*

PROVIDE 3" ∅ HOLE THRU WEB AS NOTED, PAYMENT TO BE INCLUDED AS INCIDENTAL WITH ITEM 863 STRUCTURAL STEEL. PAYMENT FOR THE EXPANDED POLYSTYRENE FILLER TO BE INCLUDED WITH ITEM 844 HIGH PERFORMANCE CONCRETE AS INCIDENTAL.

POROUS BACKFILL:
POROUS BACKFILL WITH FILTER FABRIC, 2'-0" THICK SHALL EXTEND UP TO THE PLANE OF THE SUBGRADE, TO 12" BELOW THE EMBANKMENT SURFACE, AND LATERALLY TO THE ENDS OF THE WINGWALLS.

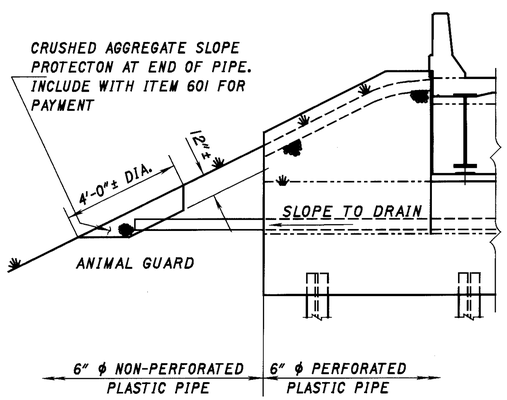

PIPE OUTLET DETAIL

SECTION C-C

SECTION A-A

DESIGN AGENCY
ODOT CENTRAL OFFICE
OFFICE OF PRODUCTION

REVISED	DATE
DRL	10-8-99
STRUCTURE FILE NUMBER	
5204143	
DRAWN	REVISED
TAA	
DESIGNED	CHECKED
TAA	DFT

MISCELLANEOUS DETAILS
MED-71-2402 R
I-71 OVER S.R. 303

MED-71-15.78

33/46

918
940

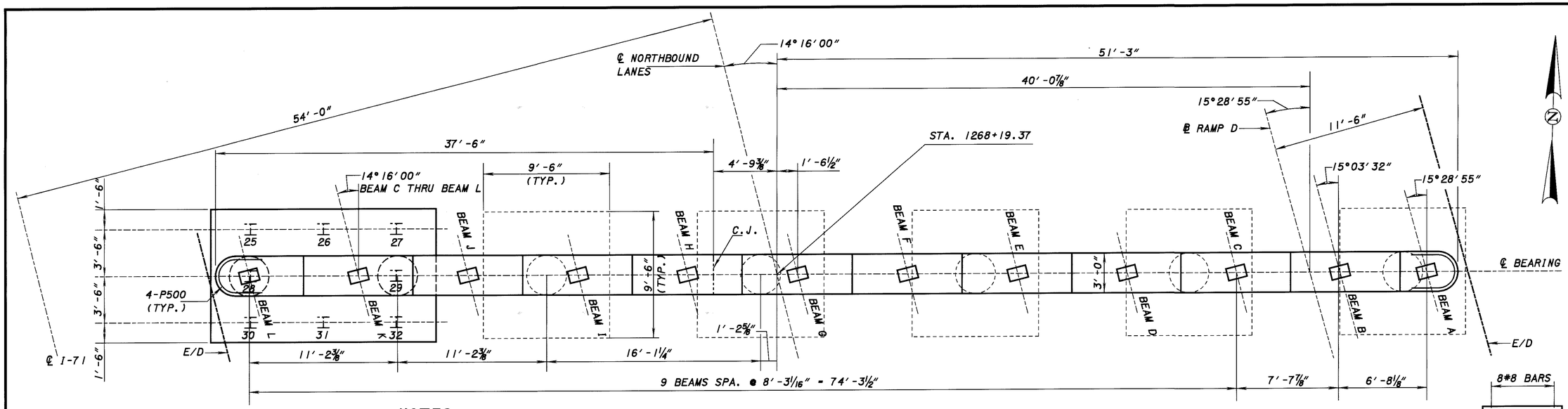

PIER 1 - PLAN

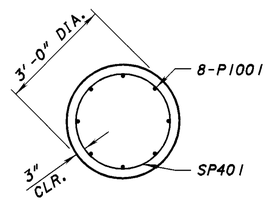

NOTES

SEAL THE ENTIRE SURFACE AREA OF THE EXISTING AND PROPOSED PIER COLUMNS ABOVE THE GROUND WITH EPOXY-URETHANE SEALER.

SEAL THE ENTIRE SURFACE AREA OF THE PROPOSED PIER CAP, WITH THE EXCEPTION OF THE TOP OF PIER CAP, WITH EPOXY-URETHANE SEALER.

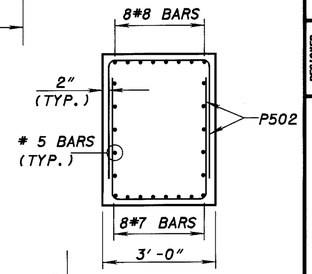

SECTION B-B

PLAN

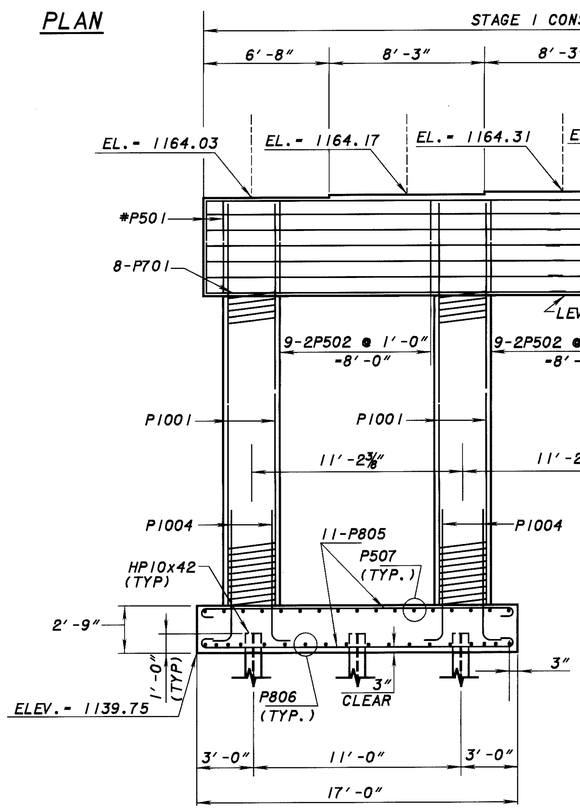

ELEVATION

LEGEND

*- HOOKS FOR P501 SHALL BE PLACED AT BOTTOM OF CAP.

MINIMUM LAP FOR # 5 BAR - 3'-0"
MINIMUM LAP FOR # 7 BAR - 5'-0"
MINIMUM LAP FOR # 8 BAR - 7'-3"

ODOT CENTRAL OFFICE
OFFICE OF PRODUCTION

DESIGNED	DRAWN	REVISED	DATE
TAA	TAA	DRL	10-8-99
CHECKED	REVISED	STRUCTURE FILE NUMBER	
DFT		5204143	

PIER 1 DETAILS
MED-71-2402 R
I-71 OVER S.R. 303

MED-71-15.78

34/46

919/940

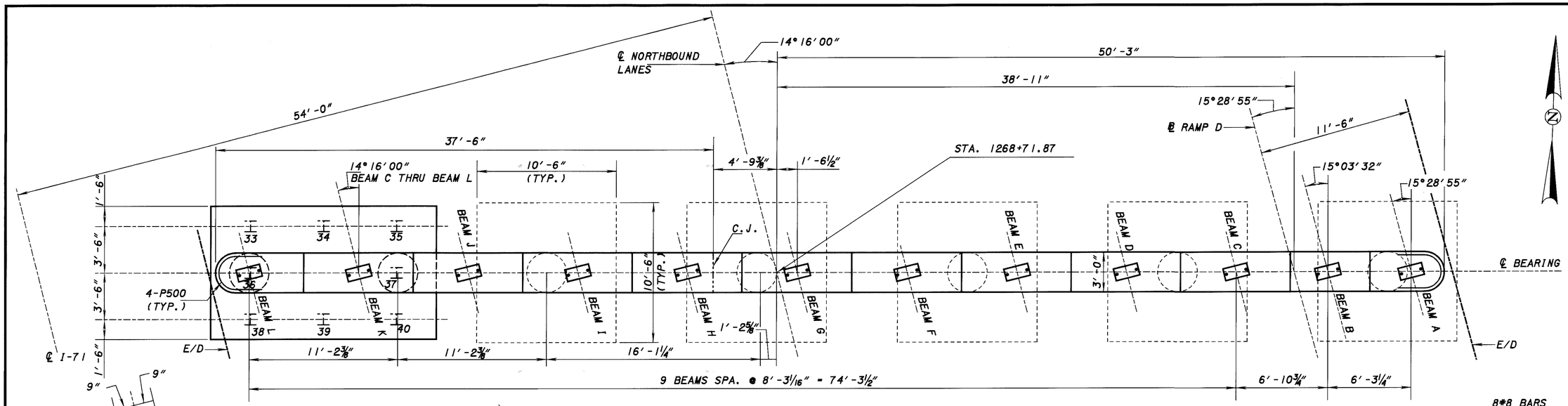

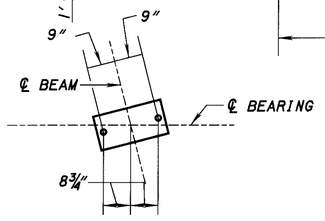

BEARING ANCHOR ROD LOCATION

REINFORCING STEEL IN THE VICINITY OF THE BRIDGE SEAT SHALL BE ACCURATELY PLACED TO AVOID INTERFERENCE WITH THE DRILLING OF BEARING ANCHOR HOLES OR THE PRESETTING OF BEARING ANCHORS.

AT THE OPTION OF THE CONTRACTOR, BEARING ANCHORS, LOCATED AND SUPPORTED BY TEMPLATES, MAY BE CAST IN PLACE.

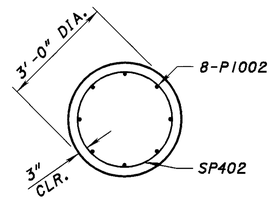

PLAN

PIER 2 - PLAN

NOTES

SEAL THE ENTIRE SURFACE AREA OF THE EXISTING AND PROPOSED PIER COLUMNS ABOVE THE GROUND WITH EPOXY-URETHANE SEALER.

SEAL THE ENTIRE SURFACE AREA OF THE PROPOSED PIER CAP, WITH THE EXCEPTION OF THE TOP OF PIER CAP, WITH EPOXY-URETHANE SEALER.

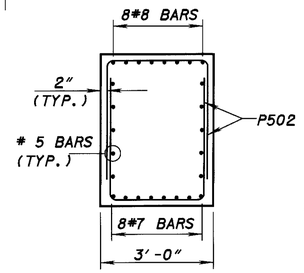

SECTION B-B

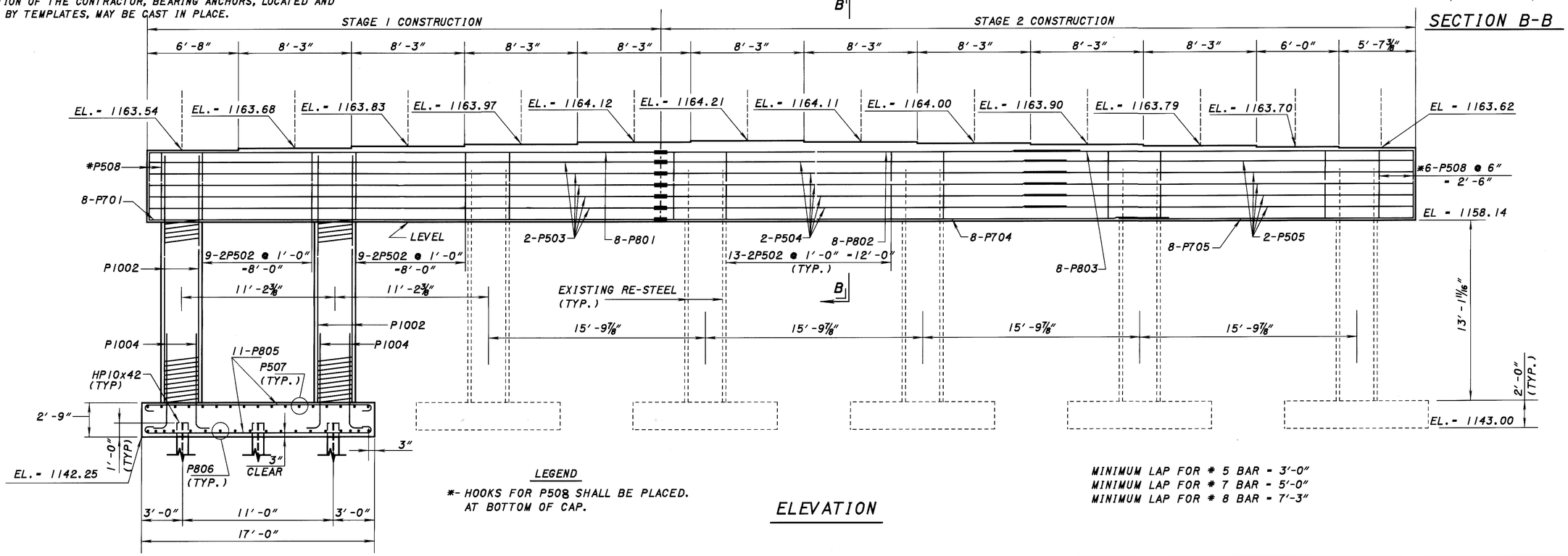

LEGEND

*- HOOKS FOR P508 SHALL BE PLACED AT BOTTOM OF CAP.

MINIMUM LAP FOR # 5 BAR - 3′-0″
MINIMUM LAP FOR # 7 BAR - 5′-0″
MINIMUM LAP FOR # 8 BAR - 7′-3″

ELEVATION

ODOT CENTRAL OFFICE
OFFICE OF PRODUCTION

DESIGNED	DRAWN	CHECKED	REVISED	DATE REVISED	STRUCTURE FILE NUMBER
TAA	TAA	DFT		10-8-99 DRL	5204143

PIER 2 DETAILS
MED-71-2402 R
I-71 OVER S.R. 303

MED-71-15.78

35/46

920
940

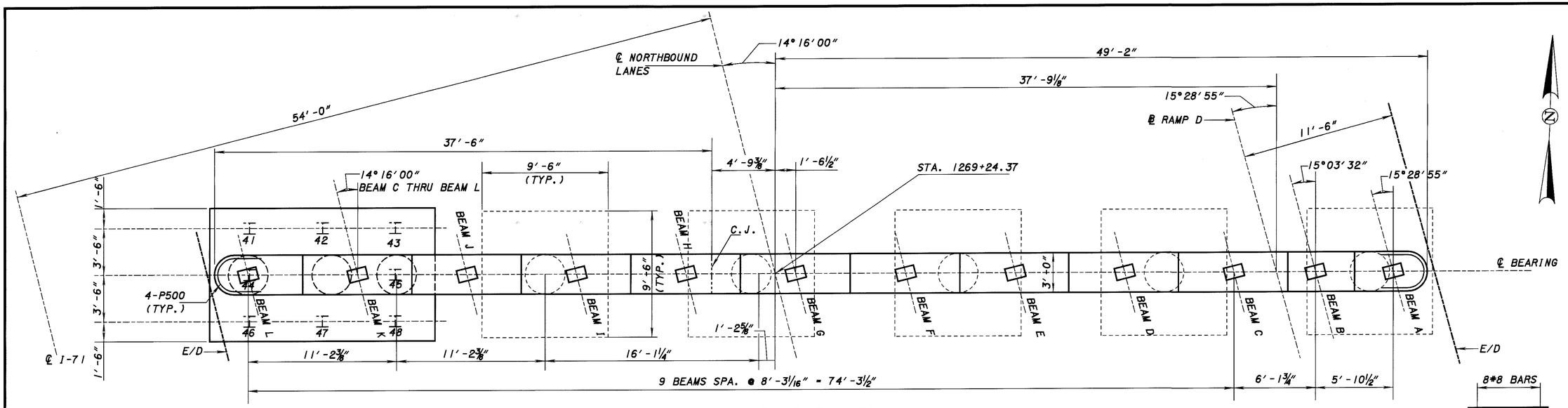

PIER 3 - PLAN

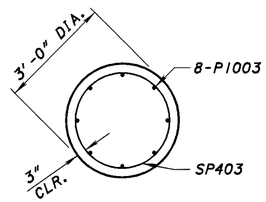

PLAN

NOTES

SEAL THE ENTIRE SURFACE AREA OF THE EXISTING AND PROPOSED PIER COLUMNS ABOVE THE GROUND WITH EPOXY-URETHANE SEALER.

SEAL THE ENTIRE SURFACE AREA OF THE PROPOSED PIER CAP, WITH THE EXCEPTION OF THE TOP OF PIER CAP, WITH EPOXY-URETHANE SEALER.

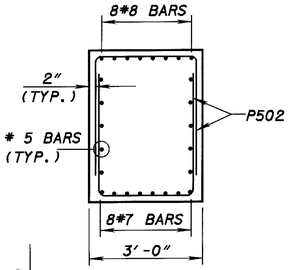

SECTION B-B

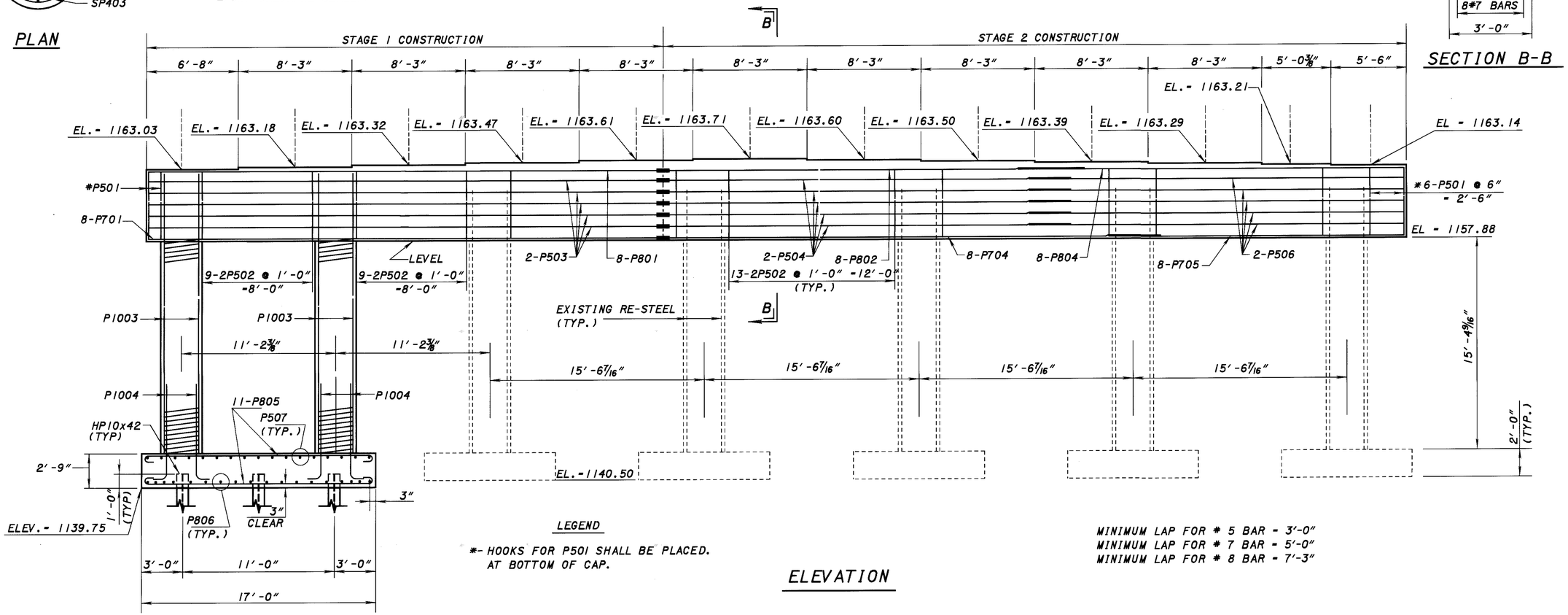

ELEVATION

LEGEND

*- HOOKS FOR P501 SHALL BE PLACED AT BOTTOM OF CAP.

MINIMUM LAP FOR # 5 BAR - 3′-0″
MINIMUM LAP FOR # 7 BAR - 5′-0″
MINIMUM LAP FOR # 8 BAR - 7′-3″

ODOT CENTRAL OFFICE
OFFICE OF PRODUCTION

DESIGNED	DRAWN	CHECKED	REVISED	DATE
TAA	TAA	DFT	DRL	10-8-99

STRUCTURE FILE NUMBER 5204143

PIER 3 DETAILS
MED-71-2402 R
I-71 OVER S.R. 303

MED-71-15.78

36/46

921
940

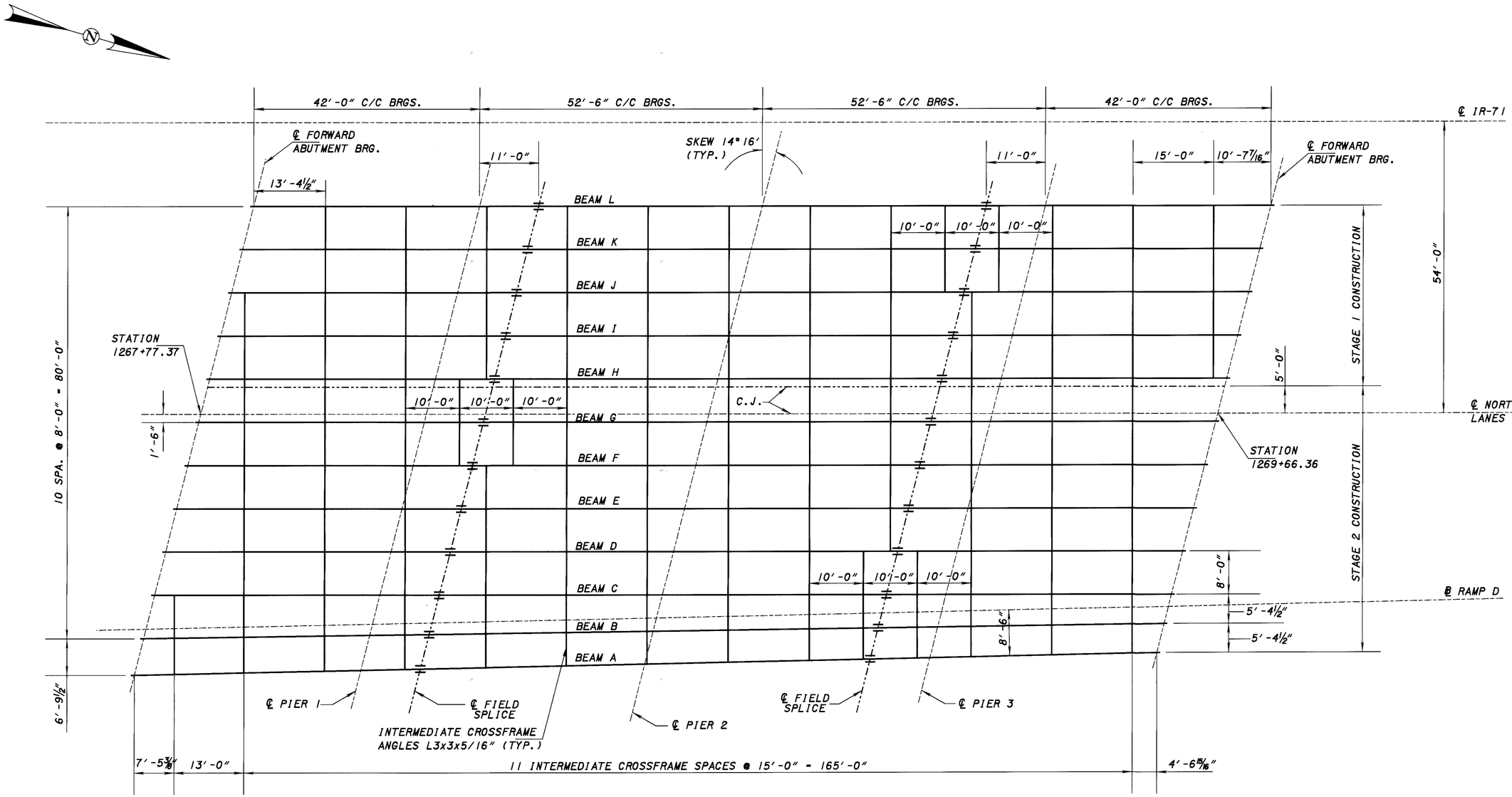

FRAMING PLAN

NOTES

SEE ADDITIONAL NOTES ON SHEET 38/46

FOR BEAM ELEVATION SEE SHEET 38/46

DESIGN AGENCY
ODOT CENTRAL OFFICE
OFFICE OF PRODUCTION

DESIGNED	DRAWN	REVIEWED	DATE
TAA	TAA	DRL	10-8-99
CHECKED	REVISED	STRUCTURE FILE NUMBER	
DFT		5204143	

SUPERSTRUCTURE DETAILS
MED-71-2402 R
I-71 OVER S.R. 303

MED-71-15.78

SHOP CAMBER IS NOT REQUIRED. NATURAL CAMBER OF THE BEAM SHALL BE MAINTAINED.

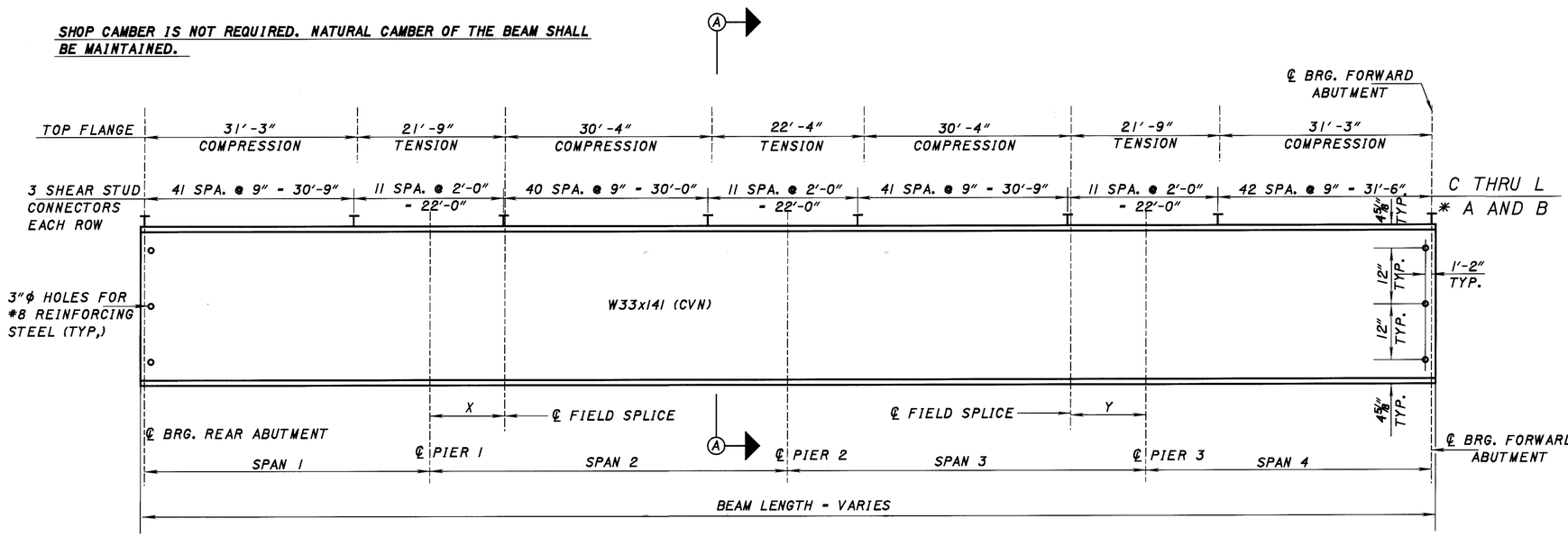

BEAM A THRU L ELEVATION

(VERTICAL SCALE IS EXAGGERATED)

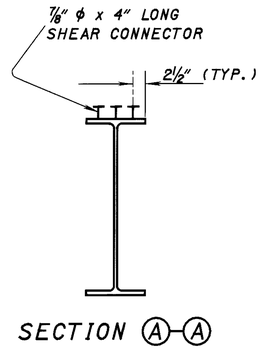

SECTION Ⓐ-Ⓐ

* TWO ROWS CONNECTORS SHALL BE ADDED TO BEAM A AND BEAM B AND THE SPACINGS SHALL BE ADJUSTED ACCORDINGLY

BEAM	SPAN 1	SPAN 2	SPAN 3	SPAN 4	X	Y	TOTAL LENGTH
A	42'-2⅞"	52'-9½"	52'-9½"	42'-2⅞"	11'-0¾"	11'-0¾"	191'-1⅛"
B	42'-1⅞"	52'-8¼"	52'-8¼"	42'-1⅞"	11'-0½"	11'-0½"	190'-8⅝"
C THRU L	42'-0"	52'-6"	52'-6"	42'-0"	11'-0"	11'-0"	190'-0⅜"

NOTES

STRUCTURAL STEEL:
WHERE A SHAPE OR PLATE IS DESIGNATED (CVN) THE MATERIAL SHALL MEET SPECIFIED MINIMUM NOTCH TOUGHNESS REQUIREMENTS AS SPECIFIED IN 711.01.

FOR FIELD SPLICE DETAILS SEE STD. DWG. BS-1-93 (50 KSI) NO FILL PLATES REQUIRED.

FOR SCREED DIAGRAM AND TABLE SEE SHEET 41/46

STRUCTURAL STEEL SHALL BE ASTM A572.

ALL BEAM LENGTH DIMENSION ARE AT 60 °F

WELDED ATTACHMENT:
WELDED ATTACHMENT OF SUPPORTS FOR CONCRETE DECK FINISHING MACHINE MAY BE MADE TO AREAS OF THE FACIA STRINGER FLANGES DESIGNATED "COMPRESSION". ATTACHMENTS SHALL NOT BE MADE TO AREAS DESIGNATED "TENSION". FILLET WELDS TO COMPRESSION FLANGES SHALL BE NOT CLOSER THAN 1" FROM EDGE OF FLANGE, BE NOT MORE THAN 2" LONG, AND BE NOT SMALLER THAN THE MINIMUM SIZE REQUIRED BY AASHTO.

3"ϕ HOLES DRILLED IN THE PROPOSED BEAM SHALL BE PAID UNDER ITEM 863 STRUCTURAL STEEL. THIS PAYMENT IS INCIDENTAL TO THE PAY ITEM.

LATERAL AND LONGITUDINAL SPACING OF WELDED STUD CONNECTORS MAY BE ALTERED AT FIELD SPLICE LOCATIONS TO AVOID INTERFERENCE WITH FLANGE SPLICE BOLTS PROVIDED THAT AT LEAST THE NUMBER OF STUDS SPECIFIED IN THE BEAM ELEVATION ARE PROVIDED.

DESIGN AGENCY
ODOT CENTRAL OFFICE
OFFICE OF PRODUCTION

DESIGNED	DRAWN	REVISED	DATE	STRUCTURE FILE NUMBER
TAA	TAA	DRL	10-8-99	5204143
CHECKED		REVISED		
DFT				

SUPERSTRUCTURE DETAILS
MED-71-2402 R
I-71 OVER S.R. 303

MED-71-15.78

923
940

NOTES

FOR NOTES SEE SHEET 40 / 46

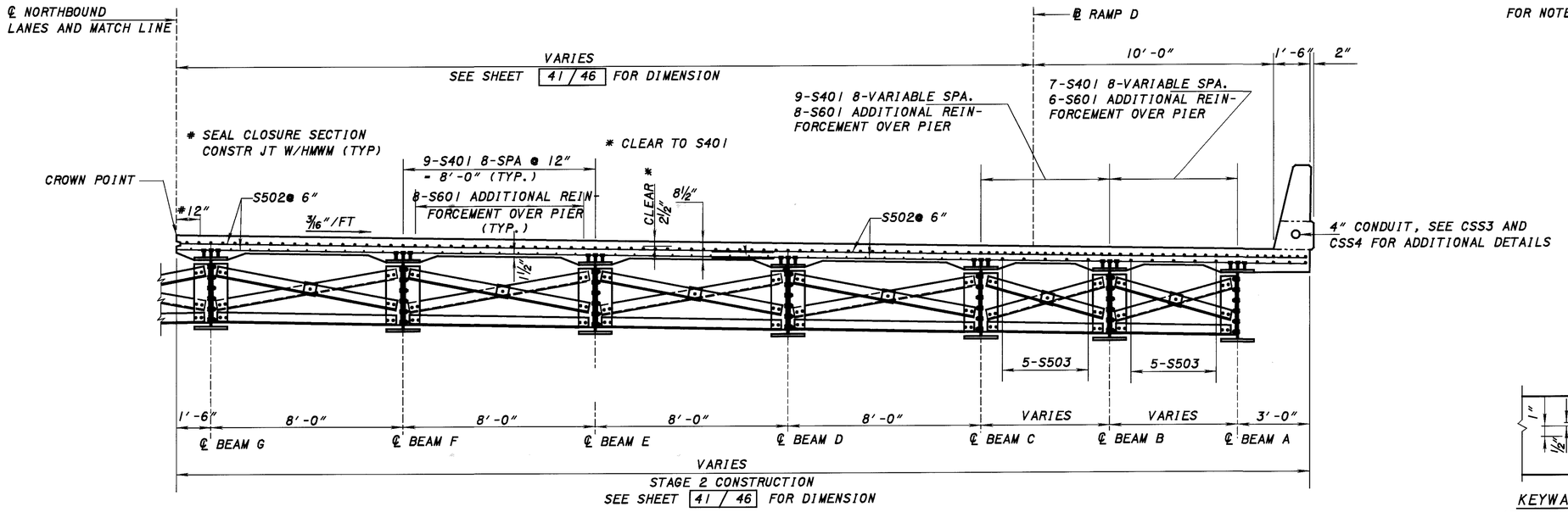

TRANSVERSE SECTION

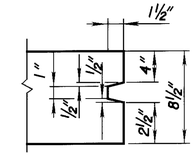

KEYWAY DETAILS AT CLOSURE SECTION

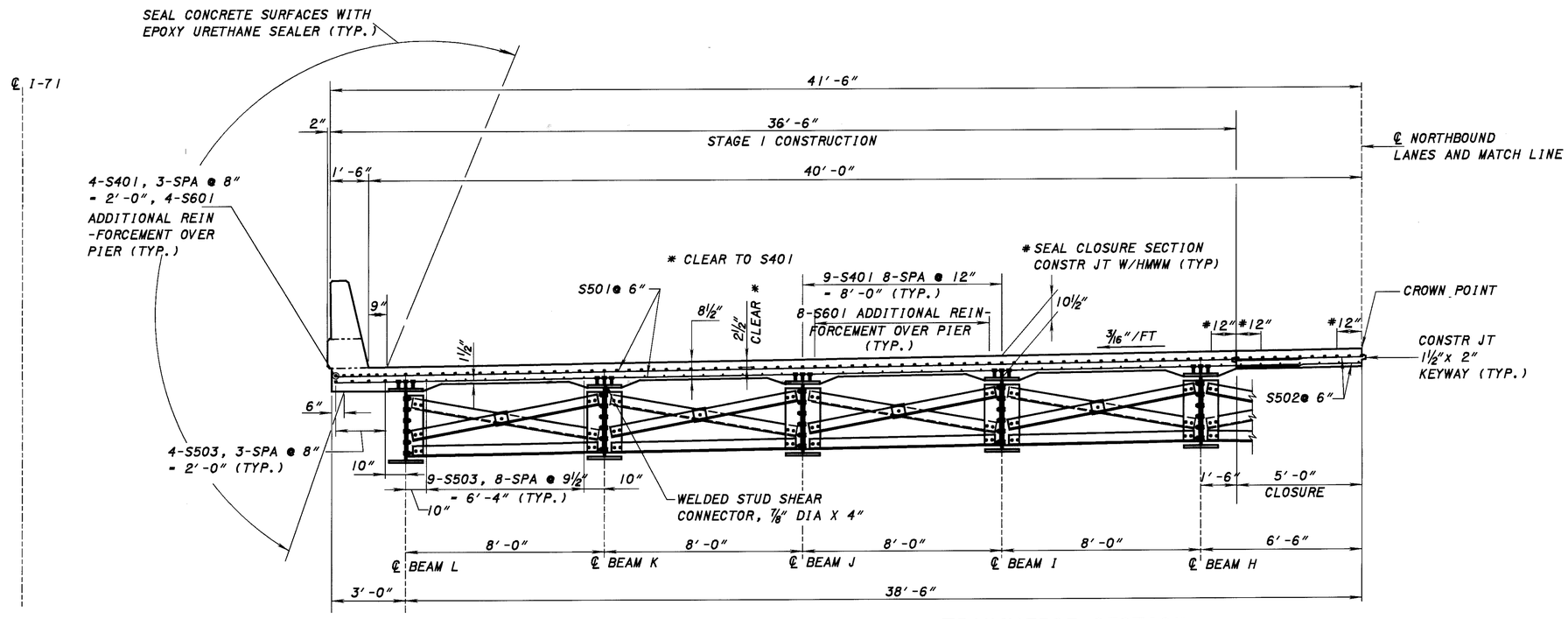

TRANSVERSE SECTION

DESIGN AGENCY: ODOT CENTRAL OFFICE, OFFICE OF PRODUCTION

DESIGNED	DRAWN	REVIEWED	DATE
TAA	TAA	DRL	10-8-99
CHECKED	REVISED	STRUCTURE FILE NUMBER	
DFT/HLG		5204143	

SUPERSTRUCTURE DETAILS

MED-71-2402 R

I-71 OVER S.R. 303

MED-71-15.78

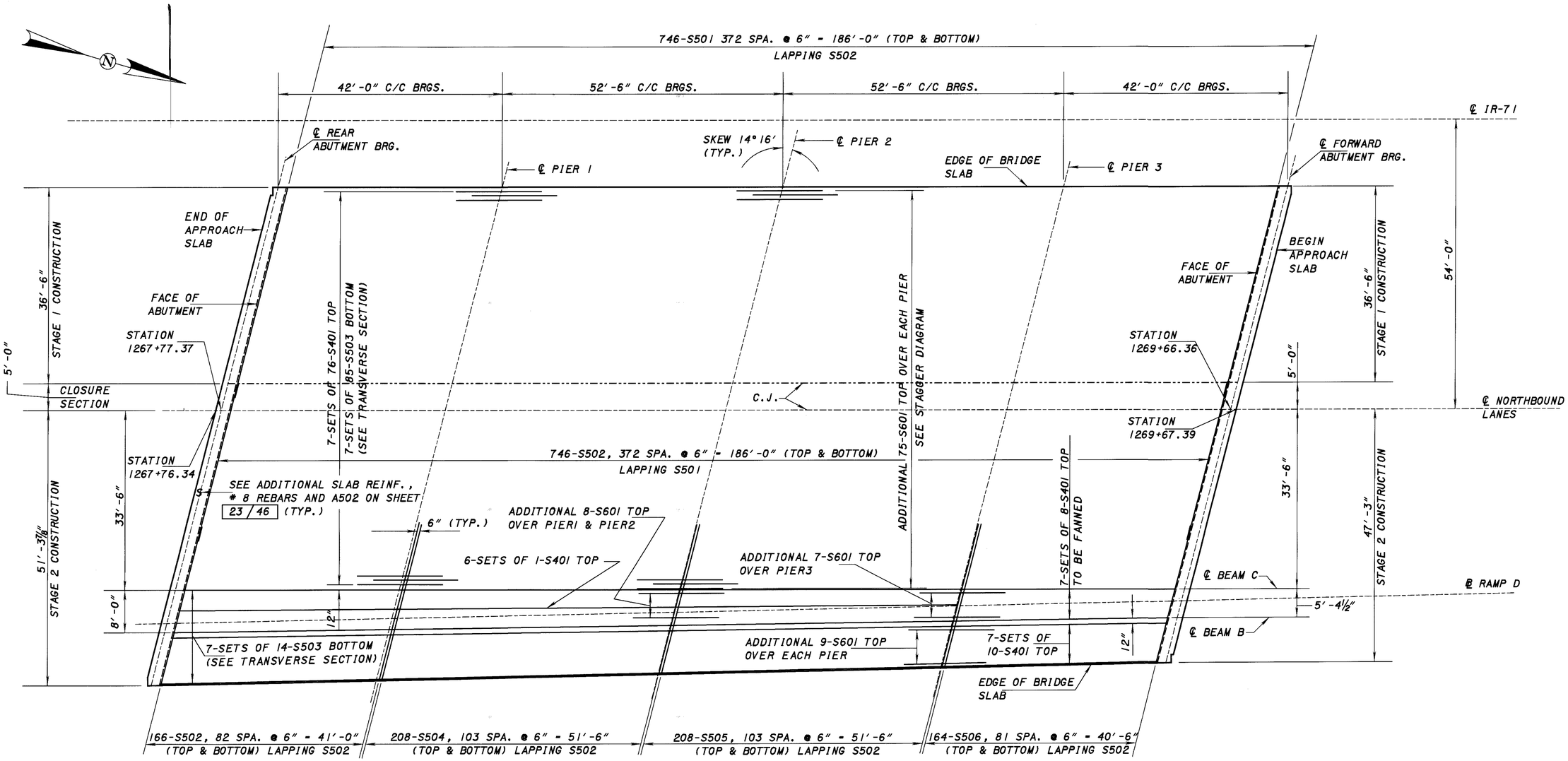

DECK REINFORCEMENT

MINIMUM LAP FOR # 4 BAR - 2'-0"
MINIMUM LAP FOR # 5 BAR - 2'-6"

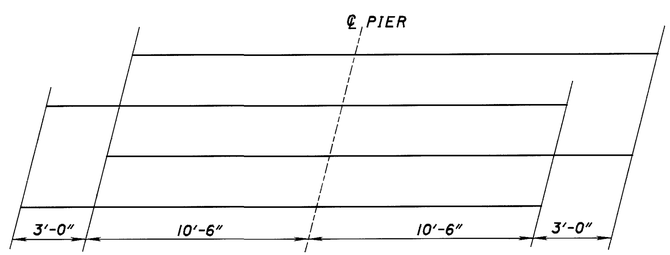

STAGGER OF S601 BARS OVER PIERS

NOTES

1. HMWM: HIGH MOLECULAR WEIGHT METHACRYLATE, SEE SUPPLEMENTAL SPEC.
2. ALL REINFORCING STEEL IS EPOXY COATED.
3. FOR PARAPET DETAILS, SEE SHEET 42 & 43/46
4. REINFORCING STEEL MAY BE FIELD OR SHOP BENT TO ACCOMMODATE THE CROWN OF THE DECK. PAYMENT SHALL BE INCLUDED WITH HIGH PERFORMANCE CONCRETE.
5. FOR CROSS-FRAME CONNECTION DETAILS SEE STD DWG GSD-1-96, GENERAL STEEL DETAILS.
6. DECK SLAB DEPTH: THE THEORETICAL DESIGN THICKNESS FOR THE SLAB IS 8½". THE QUANTITY OF DECK CONCRETE TO BE PAID FOR SHALL BE BASED ON THIS DIMENSION, EVEN THOUGH DEVIATION FROM IT MAY BE NECESSARY BECAUSE THE TOP FLANGE OF THE BEAM MAY NOT HAVE THE EXACT CAMBER OR CONFIGURATION REQUIRED TO PLACE IT PARALLEL TO THE FINISHED GRADE. A HAUNCH WIDTH OF 9" SHALL BE USED FOR COMPUTING QUANTITY OF CONCRETE. HOWEVER, THE HAUNCH WIDTH MAY VARY BETWEEN 6" AND 12".

DESIGN AGENCY: ODOT CENTRAL OFFICE OFFICE OF PRODUCTION
DESIGNED: TAA | DRAWN: TAA | REVIEWED: DRL | DATE: 10-8-99 | REVISED:
CHECKED: DFT/HLG | STRUCTURE FILE NUMBER: 5204143

SUPERSTRUCTURE DETAILS
MED-71-2402 R
I-71 OVER S.R. 303

MED-71-15.78

40/46

925
940

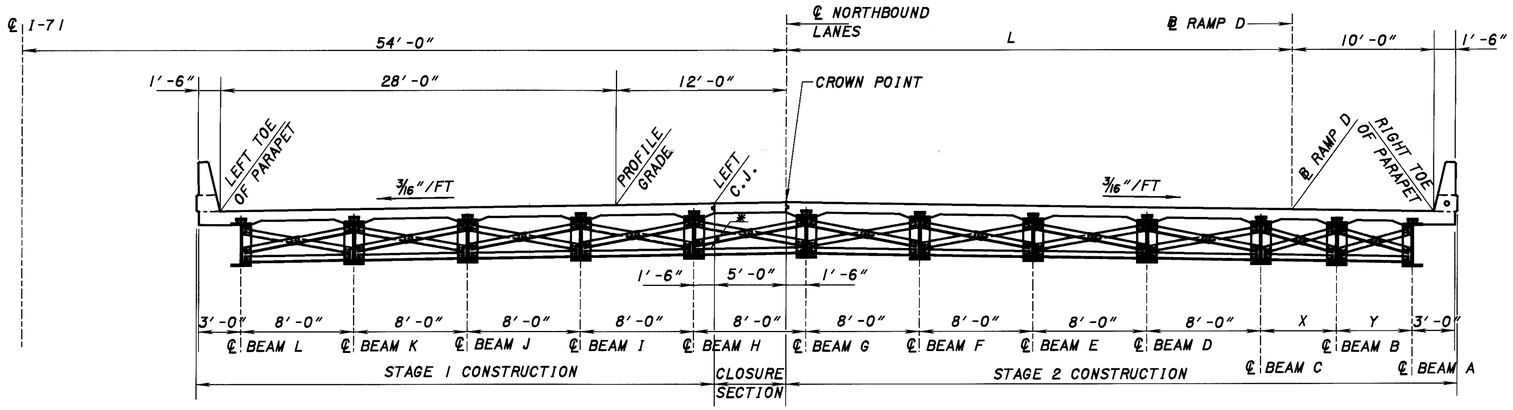

TRANSVERSE SECTION

* PLACE CROSSFRAMES IN POSITION PRIOR TO POURING OF THE CLOSURE POUR

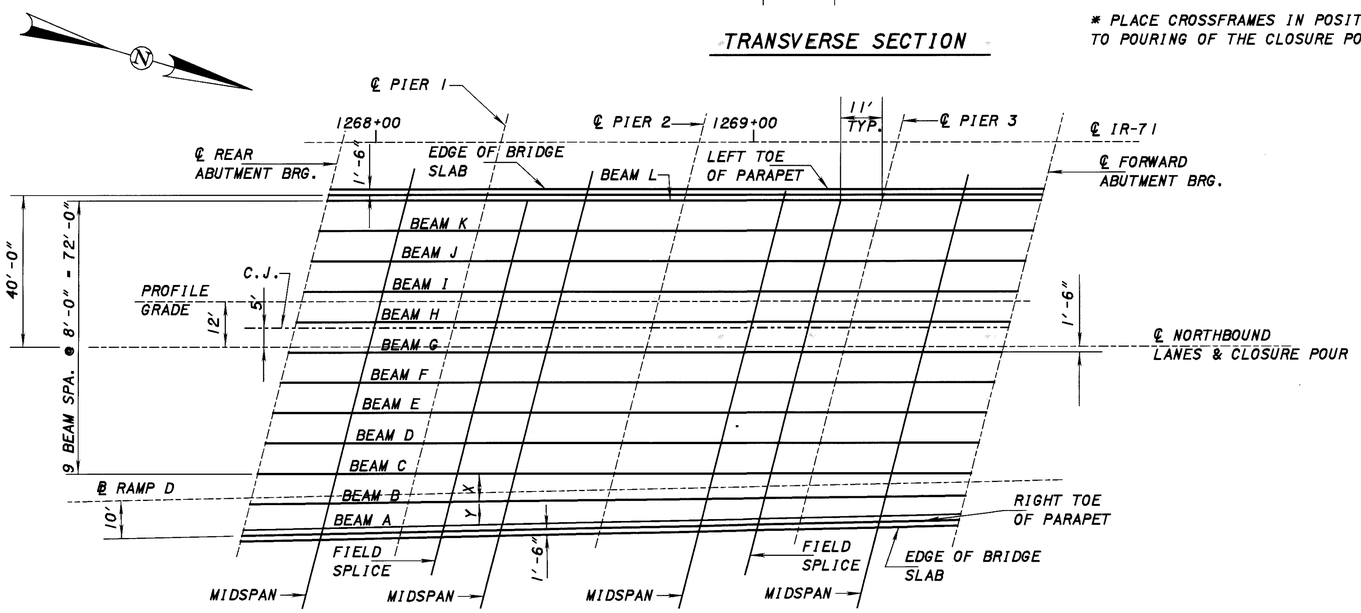

PLAN

NOTES

SCREED SETTING ELEVATIONS GIVEN ARE TO THE TOP OF CONCRETE DECK AND ARE REQUIRED PRIOR TO PLACEMENT OF CONCRETE. THEY DO NOT INCLUDE AN ALLOWANCE FOR THE DEAD LOAD DEFLECTION CAUSED BY THE WEIGHT OF THE CONCRETE BECAUSE THE BEAM IS NOT CAMBERED.

LOCATION	℄ RAMP D	
	STATION	L (FEET)
℄ REAR ABUTMENT	1267+67.26	39.74'
MIDSPAN	1267+88.38	39.29'
℄ PIER # 1	1268+09.49	38.84'
FIELD SPLICE	1268+20.55	38.60'
MIDSPAN	1268+35.88	38.28'
℄ PIER # 2	1268+62.28	37.72'
MIDSPAN	1268+88.67	37.16'
FIELD SPLICE	1269+04.00	36.83'
℄ PIER # 3	1269+15.06	36.60'
MIDSPAN	1269+36.18	36.15'
℄ FORWARD ABUTMENT	1269+57.29	35.70'

STATION	X (FEET)	Y (FEET)
1267+75.00	7.89'	6.68'
1268+00.00	7.54'	6.50'
1268+25.00	7.19'	6.32'
1268+50.00	6.85'	6.13'
1268+75.00	6.50'	5.94'
1269+00.00	6.15'	5.76'
1269+25.00	5.81'	5.58'
1269+50.00	5.46'	5.39'

SCREED ELEVATION - NORTHBOUND BRIDGE

LOCATION	RIGHT TOE OF PARAPET		℄ RAMP D		PROFILE GRADE		LEFT CONSTR JT		NORTHBOUND LANE ℄ & CLOSURE POUR		LEFT TOE OF PARAPET	
	STATION	ELEVATION	STATION	ELEVATION	STATION	ELEVATION	STATION	ELEVATION	STATION	ELEVATION	STATION	ELEVATION
℄ REAR ABUTMENT	1267+64.71	1168.31	1267+67.26	1168.45	1267+80.42	1168.77	1267+78.64	1168.89	1267+77.37	1168.98	1267+87.54	1168.27
MIDSPAN	1267+85.82	1168.14	1267+88.38	1168.27	1268+01.42	1168.58	1267+99.64	1168.71	1267+98.37	1168.80	1268+08.54	1168.09
℄ PIER # 1	1268+06.94	1167.96	1268+09.49	1168.10	1268+22.42	1168.40	1268+20.64	1168.52	1268+19.37	1168.61	1268+29.54	1167.90
FIELD SPLICE	1268+18.00	1167.87	1268+20.55	1168.00	1268+33.42	1168.30	1268+31.64	1168.42	1268+30.37	1168.52	1268+40.54	1167.80
MIDSPAN	1268+33.33	1167.73	1268+35.88	1167.87	1268+48.67	1168.16	1268+46.89	1168.29	1268+45.62	1168.38	1268+55.79	1167.66
℄ PIER # 2	1268+59.72	1167.50	1268+62.28	1167.63	1268+74.92	1167.92	1268+73.14	1168.04	1268+71.87	1168.13	1268+82.04	1167.41
MIDSPAN	1268+86.11	1167.26	1268+88.67	1167.39	1269+01.17	1167.67	1268+99.39	1167.79	1268+98.12	1167.88	1269+08.29	1167.16
FIELD SPLICE	1269+01.45	1167.12	1269+04.00	1167.26	1269+16.42	1167.52	1269+14.64	1167.65	1269+13.37	1167.74	1269+23.54	1167.01
℄ PIER # 3	1269+12.50	1167.02	1269+15.06	1167.15	1269+27.42	1167.41	1269+25.64	1167.54	1269+24.37	1167.63	1269+34.54	1166.90
MIDSPAN	1269+33.62	1166.82	1269+36.18	1166.95	1269+48.42	1167.20	1269+46.64	1167.33	1269+45.37	1167.42	1269+55.54	1166.69
℄ FORWARD ABUTMENT	1269+54.73	1166.61	1269+57.29	1166.74	1269+69.42	1166.99	1269+67.64	1167.12	1269+66.37	1167.21	1269+76.54	1166.48

DESIGN AGENCY: ODOT CENTRAL OFFICE OFFICE OF PRODUCTION

DESIGNED TAA | DRAWN TAA | REVIEWED DRL | DATE 10-8-99 | STRUCTURE FILE NUMBER 5204143

CHECKED DFT/HLG | REVISED | REVISED

SUPERSTRUCTURE DETAILS

MED-71-2402 R

I-71 OVER S.R. 303

MED-71-15.78

41 / 46

926 / 940

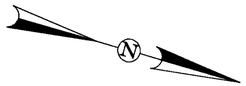

℄ I-71

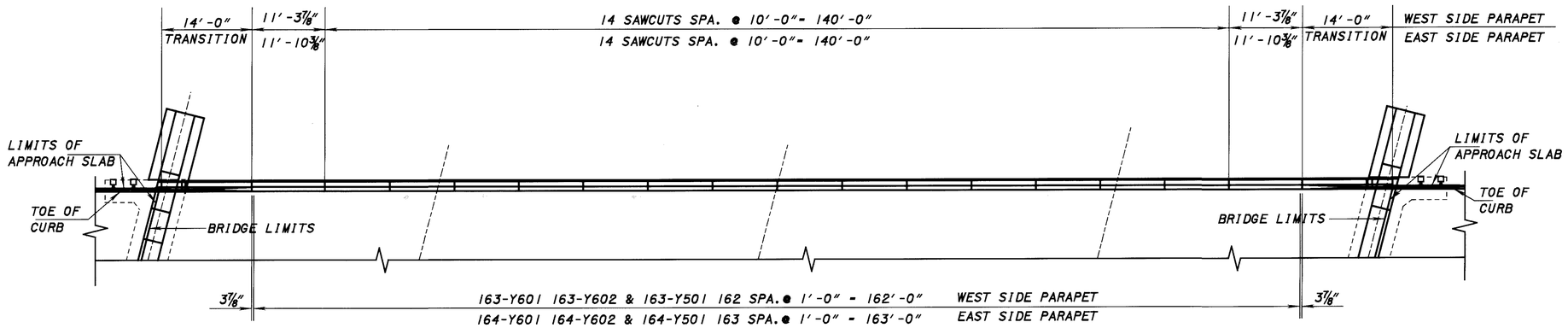

NOTES

ALL REINFORCING STEEL SHALL BE EPOXY COATED.

THE BAR SIZE IS INDICATED IN THE BAR MARK. THE FIRST DIGIT INDICATES THE BAR SIZE. FOR EXAMPLE, AN A501 IS A #5 BAR. THE DIMENSIONS SHOWN ARE OUT TO OUT UNLESS OTHERWISE INDICATED. "R" INDICATES THE INSIDE RADIUS.

REIFORCING STEEL MAY REQUIRE FIELD CUTTING OR BENDING TO BE PROPERLY FITTED. PAYMENT SHALL BE INCLUDED WITH THE ASSOCIATED CONCRETE ITEM.

PARAPET- PART PLAN

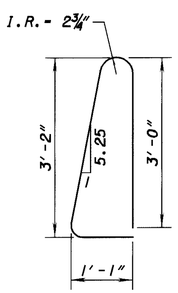

TYPE 23

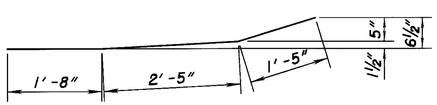

TYPE 25

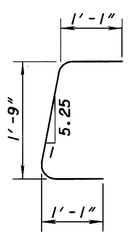

TYPE 34

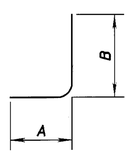

TYPE 1

MARK	NUMBER SUPER STAGE I	NUMBER SUPER STAGE II	NUMBER TOTAL	LENGTH	WEIGHT LB	TYPE	DIMENSIONS A	B	C	D	E	R	INC
PARAPETS - MED-71-2090 R (NORTHBOUND LANE)													
Y501	163	164	327	7'-5"	2531	23							
Y601	163	164	327	3'-11"	1925	34							
Y602	163	164	327	2'-8"	1311	1	1'-1"	1'-9"					
	4 SR	4 SR	8 SR	4'-4"			3'-7"						
Y603	OF	OF	OF	TO	628	1	TO	10"					1"
	11	11	11	5'-2"			4'-5"						
Y604	16	16	32	5'-6"	264	STR							
X501	16	16	32	10'-0"	334	STR							
X502	3	6	9	5'-6"	52	25							
X503	13	10	23	5'-6"	132	STR							
X504	36	36	72	30'-0"	2253	STR							
X601	6	6	12	30'-0"	541	STR							

DESIGN AGENCY: ODOT CENTRAL OFFICE, OFFICE OF PRODUCTION

REVISED DRL DATE 10-8-99 | STRUCTURE FILE NUMBER 5204143

DRAWN TAA | REVISED

DESIGNED TAA | CHECKED DFT

SUPERSTRUCTURE DETAILS

MED-71-2402 R

I-71 OVER S.R. 303

MED-71-15.78

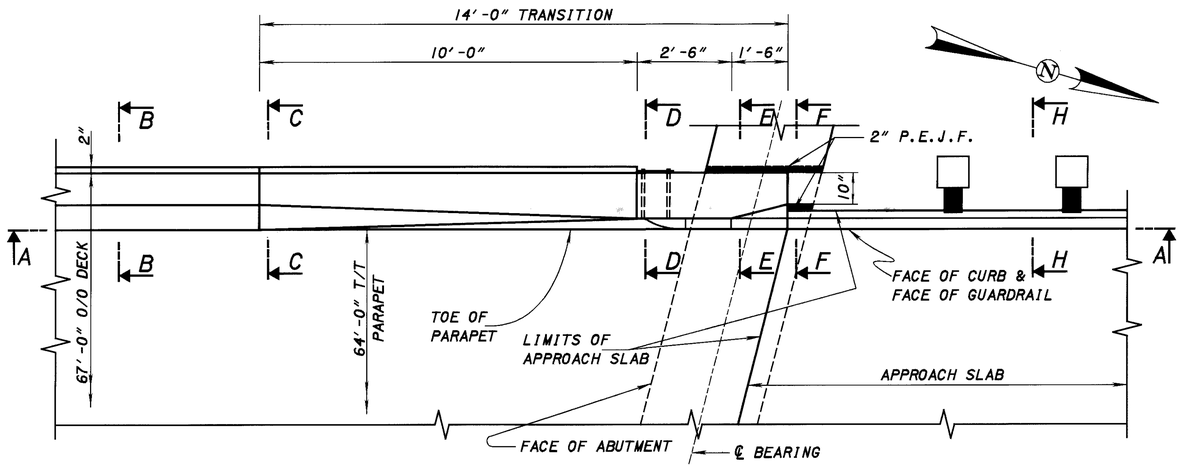

PART PLAN AT ABUTMENT

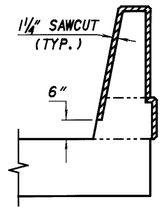

DETAIL A

(Section through sawcut)
Sawcut Perimeter = 7'-6"

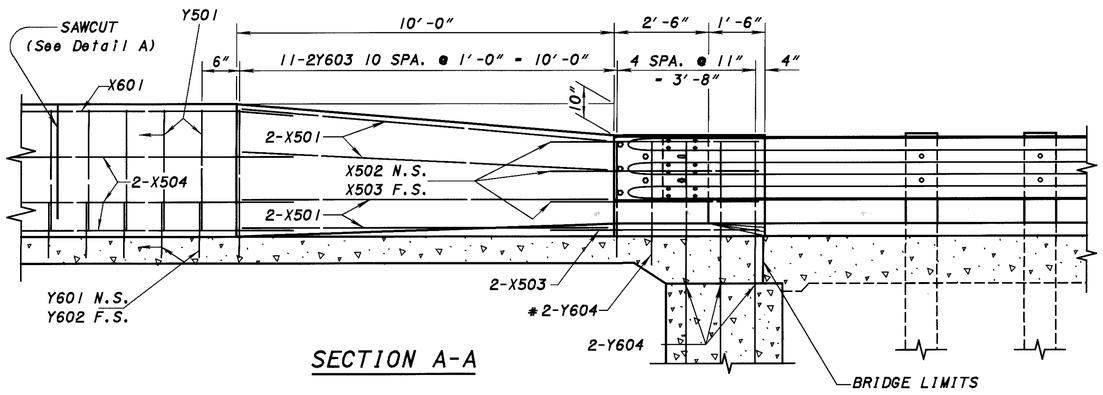

SECTION A-A

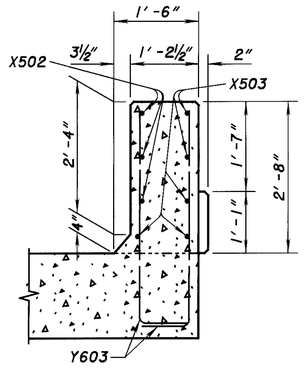

SECTION D-D

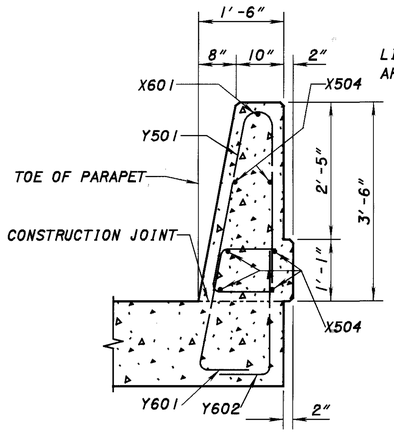

SECTION B-B & C-C

Area = 4.26 ft²

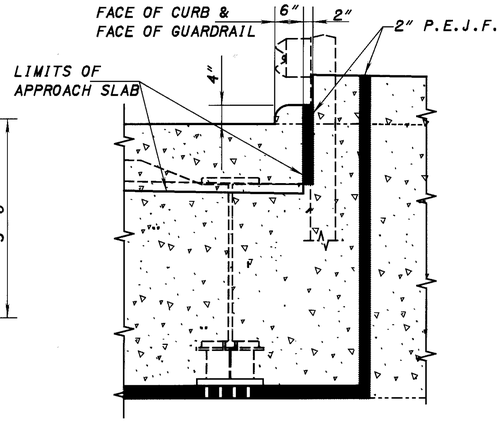

SECTION H-H

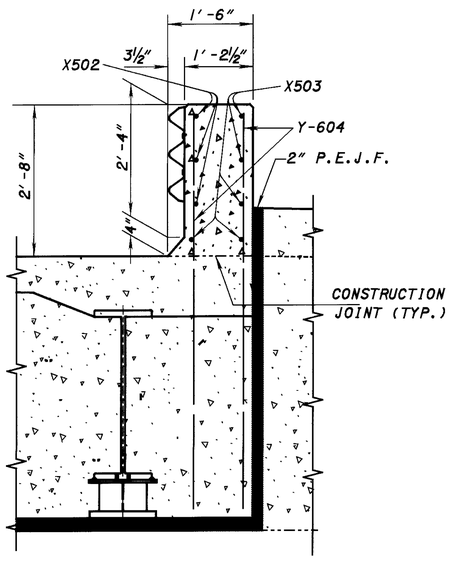

SECTION E-E

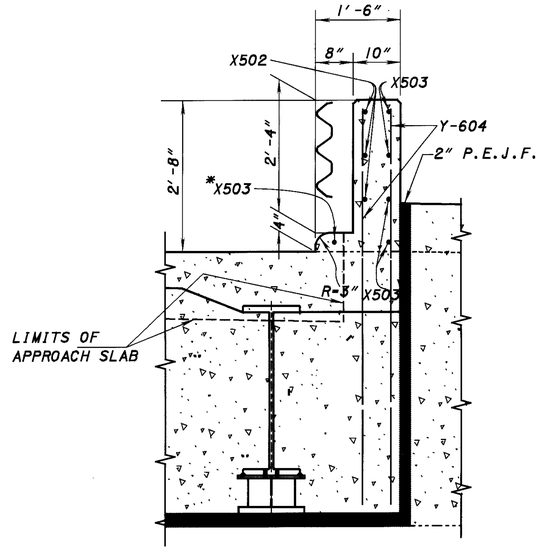

SECTION F-F

* FIELD BEND IF NECESSARY

NOTES

CONTROL JOINTS FOR CONCRETE PARAPETS: THE JOINTS SHALL BE CONSTRUCTED BY SAWING 1¼ INCH DEEP ALONG THE PERIMETER OF THE PARAPET AS SOON AS THE SAW CAN BE OPERATED WITHOUT DAMAGING THE CONCRETE.

THE USE OF AN EDGE GUIDE, FENCE, OR JIG IS REQUIRED TO ENSURE THAT THE CUT JOINT IS STRAIGHT, TRUE, AND ALIGNED ON ALL FACES OF THE PARAPET. THE JOINT WIDTH SHALL BE THE WIDTH OF THE SAW BLADE, A NOMINAL WIDTH OF ¼ INCH.

THE PERIMETER OF THE DEFLECTION CONTROL JOINT SHALL BE SEALED WITH A CAULKING MATERIAL TO A MINIMUM DEPTH OF ONE INCH CONFORMING TO FEDERAL SPECIFICATION TT-S-00227E. THE BOTTOM ONE-HALF INCH OF THE OUTSIDE FACE OF THE PARAPET SHOULD BE LEFT UNSEALED TO ALLOW ANY WATER WHICH MAY ENTER THE JOINT TO ESCAPE.

QUANTITIES OF CONCRETE, REINFORCING STEEL, DEFLECTION JOINT SAWCUT AND CAULKING MATERIAL FOR PARAPET ARE INCLUDED WITH ITEM 844 HIGH PERFORMANCE CONCRETE, SUPERSTRUCTURE (PARAPET).

FOR BRIDGE TERMINAL ASSEMBLY SEE STANDARD CONSTRUCTION DRAWING GR-3.1 AND GR-3.2.

FOR ADDITIONAL INFORMATION ON THE CONCRETE CURB SHOWN IN SECTION H-H SEE STD. CONST. DWG. BP-5.1. THE CURB SHALL BE TYPE 4-A.

MIN. LAP SPLICES: #5 BAR - 2'-6"
#6 BAR - 3'-0"

LEGEND: N.S. - NEAR SIDE
F.S. - FAR SIDE

#- REQUIRE FIELD CUTTING

DESIGN AGENCY
ODOT CENTRAL OFFICE
OFFICE OF PRODUCTION

DESIGNED	DRAWN	REVISED	DATE
TAA	TAA	DRL	10-8-99
CHECKED	REVISED	STRUCTURE FILE NUMBER	
DFT		5204143	

PARAPET DETAILS
MED-71-2402 L
I-71 OVER S.R. 303

MED-71-15.78

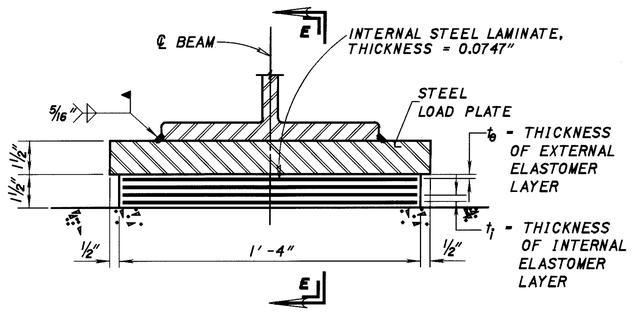

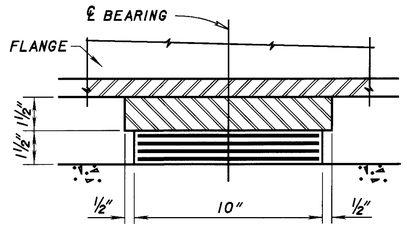

SECTION E-E
LAMINATED ELASTOMERIC EXPANSION PIER BEARING

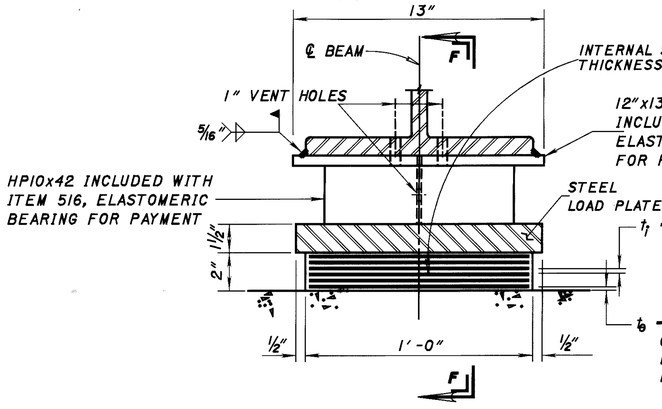

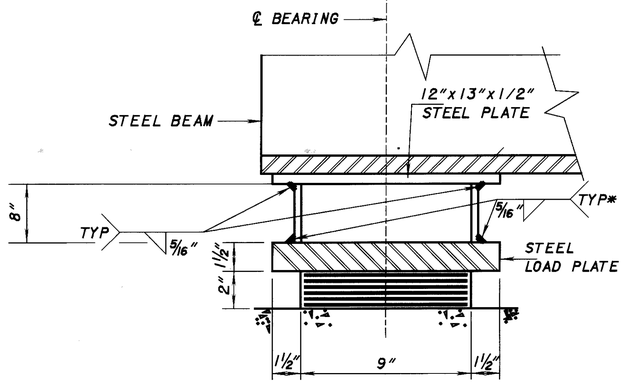

* FIELD WELD OPTIONAL

SECTION F-F
LAMINATED ELASTOMERIC EXPANSION ABUTMENT BEARING

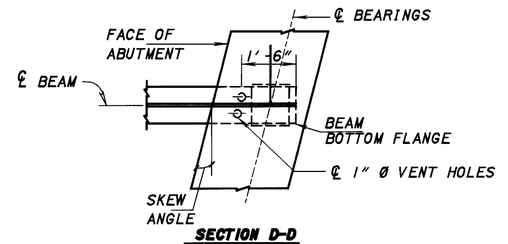

SECTION D-D

LEGEND

EXP - EXPANSION

BEARING TABLE

BEARING LOCATION	TYPE	L	W	t_i In.	t_o In.	n_1	n_2	STEEL LOAD ℄	TOTAL HEIGHT*	DL, Kips	LL, Kips	TOTAL, Kips
ABUTMENT	EXP	9"	12"	0.24	0.17	5	6	12"x13"x1½"	3½"	56	42	98
PIER 1 & PIER 3	EXP	10"	16"	0.28	0.20	3	4	11"x17"x1½"	3"	85	49	134
PIER 2	FIXED	10"	16"	0.28	0.20	3	4	11"x22"x1½"	3"	85	49	134

n_1 - NUMBER OF INTERNAL ELASTOMER LAYERS, t_i ELASTOMER LAYERS ARE 50 DUROMETERS
n_2 - NUMBER OF STEEL LAMINATES, 0.0747" THICKNESS * TOTAL HEIGHT INCLUDES LOAD PLATE

NOTES:

INSTALLATION PROCEDURE: ANCHOR BOLTS SHALL BE EITHER CAST IN PLACE BY USE OF A TEMPLATE OR FIELD DRILLED AND GROUTED AT THE CONTRACTOR'S OPTION. CARE SHALL BE TAKEN TO ASSURE THAT THE ANCHOR BOLTS DO NOT INTERFERE WITH REINFORCING STEEL.

MATERIALS: THE HP SHAPE (SUPPORT MEMBER) AND STEEL PLATES MAY BE GRADE 36 STEEL. THE HP SHAPE AND STEEL PLATES SHALL BE METALIZED.

PAYMENT FOR MATERIALS, LABOR, FABRICATION, PROTECTIVE COATING, VENT HOLES AND INSTALLATION OF THE HP SHAPE AND STEEL PLATE SHALL BE INCLUDED WITH ITEM 516 ABUTMENT ELASTOMERIC BEARINGS, AS PER PLAN, FOR PAYMENT.

WELDING: WELDING OF THE LOAD PLATE TO THE SUPERSTRUCTURE SHALL BE CONTROLLED SO THAT THE PLATE TEMPERATURE AT THE ELASTOMER BONDED SURFACE SHALL NOT EXCEED 300° F AS DETERMINED BY THE USE OF PYROMETRIC STICKS OR OTHER TEMPERATURE MONITORING DEVICES. THE STEEL LOAD PLATE SHALL BE BONDED BY VULCANIZATION TO THE ELASTOMER DURING THE MOLDING PROCESS.

BRIDGE SEAT REINFORCING:
REINFORCING STEEL IN THE VICINITY OF BRIDGE SEAT SHALL BE ACCURATELY PLACED TO AVOID INTERFERENCE WITH THE DRILLING OF BEARING ANCHOR HOLES OR THE PRE-SETTING OF BEARING ANCHORS.

BEARING REPOSITIONING: IF DECK CONCRETE IS PLACED AT AN AMBIENT TEMPERATURE HIGHER THAN 80° F OR LOWER THAN 40° F AND THE BEARING SHEAR DEFLECTION EXCEEDS ONE-SIXTH OF THE BEARING HEIGHT AT 60° F ± 10° F, THE BEAMS SHALL BE RAISED TO ALLOW THE BEARING TO RETURN TO THEIR UNDERFORMED SHAPE AT 60° F ± 10° F.

ELASTOMERIC BEARINGS SHALL COMPLY WITH ITEM 516 AND AASHTO STANDARD SPECIFICATION FOR HIGHWAY BRIDGES, SECTION 18, BEARING DEVICES, DIVISION II, CONSTRUCTION ARTICLES 18.4.5.1 AND 18.5.6.2. BEARINGS SHALL BE GRADE 3, 50 DUROMETER ELASTOMER AND SHALL BE SUBJECTED TO THE LOAD TESTING REQUIREMENTS DEFINED IN ARTICLE 18.7.4.5 OF THE AASHTO DOCUMENT LISTED ABOVE. THE UNIT BID PRICE SHALL INCLUDE ALL MATERIALS, LABOR, TESTING, STEEL LOAD PLATES AND INCIDENTALS NECESSARY TO FURNISH AND INSTALL LAMINATED ELASTOMERIC BEARINGS. PAYMENT WILL BE MADE AT THE CONTRACT PRICE FOR ITEM 516, EACH, ELASTOMERIC BEARINGS WITH INTERNAL LAMINATES AND LOAD PLATE (NEOPRENE).

BASIS OF PAYMENT: THE UNIT BID PRICE SHALL INCLUDE ALL MATERIALS, LABOR, TESTING, ANCHOR RODS, HP10x42, STEEL PLATES AND INCIDENTALS NECESSARY TO FURNISH AND INSTALL LAMINATED ELASTOMERIC BEARINGS, EITHER FIXED OR EXPANSION. PAYMENT WILL BE MADE AT THE CONTRACT PRICE FOR ITEM 516, EACH, ELASTOMERIC BEARINGS WITH INTERNAL LAMINATES AND LOAD PLATE (NEOPRENE):

9" x 12" x 2" WITH 12" x 13" x 1½" LOAD PLATE, AS PER PLAN (ABUTMENT)
10" x 16" x 1½" WITH 11" x 17" x 1½" LOAD PLATE (PIER #1 & #3)
10" x 16" x 1½" WITH 11" x 22" x 1½" LOAD PLATE, AS PER PLAN (PIER # 2)

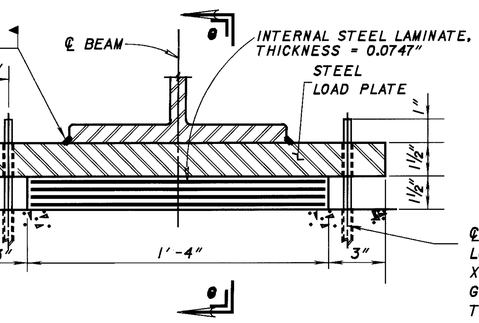

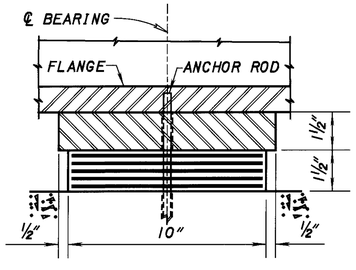

SECTION G-G
LAMINATED ELASTOMERIC FIXED PIER BEARING

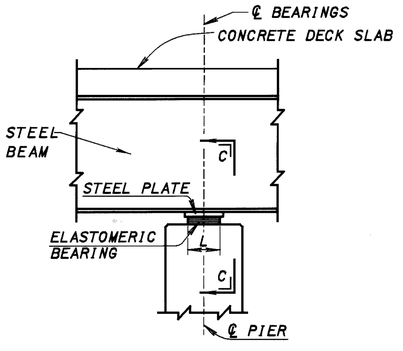

SECTION THRU PIER

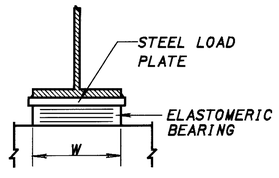

SECTION C-C

ODOT CENTRAL OFFICE
OFFICE OF PRODUCTION
DESIGN AGENCY

DATE 10-8-99
REVIEWED DRL
STRUCTURE FILE NUMBER 5204143

DRAWN TAA
REVISED

DESIGNED TAA
CHECKED DFT

BEARING DETAILS
MED-71-2402 R
I-71 OVER S.R. 303

MED-71-15.78

44/46

929
940

THIS REINFORCING SCHEDULE IS FOR INFORMATION ONLY.

MARK	NUMBER					LENGTH	WEIGHT	TYPE	DIMENSIONS			
	REAR ABUT. STAGE I	REAR ABUT. STAGE II	FWD. ABUT. STAGE I	FWD. ABUT. STAGE II	TOTAL		LB		A	B	C	INC
ABUTMENTS - MED-71-2402 R (NORTHBOUND LANE)												
A500	34	50	34	50	168	8'-5"	1475	2	3'-0"	2'-8"	3'-0"	
A501	54	90	54	90	288	8'-1"	2427	2	2'-10"	2'-8"	2'-10"	
A502	27	45	27	45	144	8'-5"	1265	2	3'-3"	2'-2"	3'-3"	
		1 SR			1 SR	10'-7"						
A503		OF			OF	TO	47	STR				6 3/8"
		4			4	12'-2"						
A504	6				6	31'-4"	196	STR				
A505	6	12	6	12	36	35'-0"	1314	STR				
A506	28	8	28	8	72	16'-9"	1258	3	5'-8"	2'-7"		
A507	17		17		34	16'-5"	582	2	7'-0"	2'-8"	7'-0"	
A508		12		12	24	3'-0"	75	STR				
		1 SR			1 SR	8'-10						
A509		OF			OF	TO	19	STR				9"
		2			2	9'-7"						
A510		2		2	4	12'-1"	50	STR				
A511		1			1	9'-3"	10	STR				
A512		1			1	8'-6"	9	STR				
A513		1			1	10'-3"	11	19	8'-3"	1'-9"	2'-0"	
A514		1			1	9'-6"	10	19	8'-3"	1'-1"	1'-3"	
A515		1			1	6'-10"	7	STR				
A516		1			1	6'-1"	6	STR				
A517		1			1	4'-5"	5	STR				
A518		1			1	3'-8"	4	STR				
	1 SR	1 SR	1 SR	1 SR	4 SR	21'-3"			9'-5"		9'-5"	
A519	OF	OF	OF		OF	TO	601	2	TO	2'-8"	TO	6 1/2"
	6	6	6		6	26'-9"			12'-2"		12'-2"	
A520	8	8	8	8	32	6'-5"	214	2	2'-0"	2'-8"	2'-0"	
A521	1	1	1	1	4	19'-9"	82	2	8'-8"	2'-8"	8'-8"	
A522	1	1	1	1	4	19'-3"	80	2	8'-5"	2'-8"	8'-5"	
A523	1				1	6'-0"	6	STR				
A524	2				2	7'-11"	17	STR				
A525	2				2	8'-6"	18	STR				
A526	1				1	5'-4"	6	STR				
A527	8		8		16	14'-0"	234	STR				
A528	1				1	8'-6"	9	19	7'-10	0'-7"	0'-8"	
A529	1				1	9'-2"	10	19	7'-10	1'-2"	1'-4"	
A530	1				1	2'-11"	3	STR				
A531	1				1	3'-5"	4	STR				
	1 SR				1 SR	10'-7"						
A532	OF				OF	TO	24	STR				1'-7"
	2				2	12'-2"						
			1 SR		1 SR	30'-5"						
A533			OF		OF	TO	65	STR				1'-6"
			2		2	31'-11"						
			1 SR		1 SR	30'-5"						
A534			OF		OF	TO	130	STR				6"
			4		4	31'-11"						
				1 SR	1 SR	9'-6"						
A535				OF	OF	TO	21	STR				1'-6"
				2	2	11'-0"						
				1 SR	1 SR	9'-6"						
A536				OF	OF	TO	43	STR				6"
				4	4	11'-0"						
A537				1	1	9'-1"	9	19	8'-5"	0'-11"	0'-8"	
A538				1	1	9'-11"	10	19	8'-5"	1'-7"	1'-6"	

MARK	NUMBER					LENGTH	WEIGHT	TYPE	DIMENSIONS			
	REAR ABUT. STAGE I	REAR ABUT. STAGE II	FWD. ABUT. STAGE I	FWD. ABUT. STAGE II	TOTAL		LB		A	B	C	INC
ABUTMENTS - MED-71-2402 R (NORTHBOUND LANE)												
A539				1	1	5'-6"	6	STR				
A540				1	1	6'-4"	7	STR				
A541				1	1	7'-10"	8	STR				
A542				1	1	8'-9"	9	STR				
A543				1	1	3'-2"	4	STR				
A544				1	1	4'-0"	4	STR				
				1 SR	1 SR	8'-4"						
A545				OF	OF	TO	18	STR				10"
				2	2	9'-2"						
A546			2		2	8'-9"	18	STR				
A547			2		2	7'-11"	17	STR				
A548			1		1	6'-8"	7	STR				
A549			1		1	5'-10"	6	STR				
A550			1		1	4'-8"	5	STR				
A551			1		1	3'-10"	4	STR				
A552			1		1	9'-8"	10	19	7'7"	1'-10"	2'-1"	
A553			1		1	8'-10"	9	19	7'7"	1'-2"	1'-3"	
A601	30	98	30	98	256	5'-11"	2277	STR				
A802		28		28	56	30'-6"	4560	STR				
		1 SR			1 SR	10'-7"						
A803		OF			OF	TO	121	STR				6 3/8"
		4			4	12'-2"						
	1 SR		1 SR		2 SR	36'-11"						
A804	OF		OF		OF	TO	796	STR				2 5/8"
	4		4		4	37'-7"						
	1 SR		1 SR		2 SR	36'-11"						
A805	OF		OF		OF	TO	398	STR				8"
	2		2		2	37'-7"						
A806	4				4	31'-4"	335	STR				
A807	4		4		8	38'-3"	817	STR				
A808		8		8	16	30'-8"	1310	STR				
			1 SR		1 SR	30'-5"						
A809			OF		OF	TO	333	STR				6"
			4		4	31'-11"						
				1 SR	1 SR	9'-6"						
A810				OF	OF	TO	109	STR				6"
				4	4	11'-0"						
D801	28	44	28	44	144	4'-4"	1665	18	2'-7"	1'-0"	1'-0"	

DESIGN AGENCY: ODOT CENTRAL OFFICE, OFFICE OF PRODUCTION

DESIGNED TAA | DRAWN TAA | CHECKED DFT | REVISED | REVIEWED DRL | DATE 10-8-99 | STRUCTURE FILE NUMBER 5204143

REINFORCING STEEL
MED-71-2402 R
I-71 OVER S.R. 303

MED-71-15.78

45/46

930
940

THIS REINFORCING SCHEDULE IS FOR INFORMATION ONLY.

MARK	NUMBER				LENGTH	WEIGHT LB	TYPE	DIMENSIONS					
	PIER 1	PIER 2	PIER 3	TOTAL				A	B	C	D	R	INC
	PIERS - MED-71-2402 R (NORTHBOUND LANE)												
SP401	2			2	16'-6"	488	27	4½"	2'-6"				
SP402		2		2	12'-4"	370	27	4½"	2'-6"				
SP403			2	2	15'-7"	458	27	4½"	2'-6"				
P500	8	8	8	24	8'-0"	200	24	2'-8"	2'-0"			1'-3⅜"	
P501	8		8	16	15'-5"	257	3	2'-8"	4'-10"				
P502	148	140	140	428	12'-0"	5357	2	4'-9"	2'-8"	4'-9"			
P503	10	10	10	30	35'-8"	1116	STR						
P504	20	10	10	40	28'-7"	1192	STR						
P505		10		10	27'-11"	291	STR						
P506			10	10	26'-10"	280	STR						
P507	17	17	17	51	9'-8"	514	STR						
P508		8		8	15'-9"	131	3	2'-8"	5'-0"				
P701	8	8	8	24	35'-8"	1750	STR						
P702	8			8	38'-3"	625	STR						
P703	8			8	21'-6"	352	STR						
P704		8	8	16	37'-5"	1223	STR						
P705		8	8	16	21'-2"	692	STR						
P801	8	8	8	24	35'-8"	2286	STR						
P802	16	8	8	32	31'-0"	2649	STR						
P803		8		8	29'9"	635	STR						
P804			8	8	28'-8"	612	STR						
P805	22	22	22	66	18'-4"	3230	17	16'-6"					
P806	18	18	18	54	11'-4"	1634	17	9'-6"					
P1001	16			16	21'-0"	1444	STR						
P1002		16		16	17'-0"	1170	STR						
P1003			16	16	20'-0"	1374	STR						
P1004	16	16	16	48	10'-8"	2203	1	1'-6"	9'-6"				

MARK	NUMBER			LENGTH	WEIGHT LB	TYPE	DIMENSIONS		
	SUPER STAGE I	SUPER STAGE II	TOTAL				A	B	INC
	SUPERSTRUCTURE - MED-71-2402 R (NORTHBOUND LANE)								
S401	266	398	664	29'-0"	12863	STR			
S501	746		746	40'-0"	31123	STR			
S502		912	912	30'-2"	28695	STR			
S503	287	406	693	29'-6"	21323	STR			
S504		208	208	29'-9"	6454	STR			
S505		208	208	28'-7"	6200	STR			
S506		164	164	27'-5"	4690	STR			
S601	111	164	275	24'-0"	9913	STR			

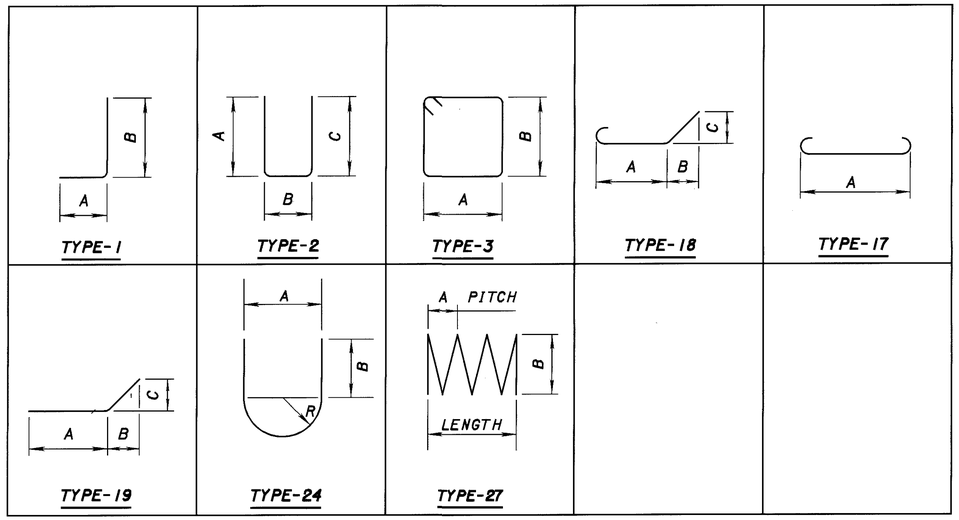

BENDING DIAGRAMS

NOTES

ALL REINFORCING STEEL SHALL BE EPOXY COATED.

THE BAR SIZE IS INDICATED IN THE BAR MARK. THE FIRST DIGIT INDICATES THE BAR SIZE. FOR EXAMPLE, AN A501 IS A #5 BAR. THE DIMENSIONS SHOWN ARE OUT TO OUT UNLESS OTHERWISE INDICATED. "R" INDICATES THE INSIDE RADIUS.

REIFORCING STEEL MAY REQUIRE FIELD CUTTING OR BENDING TO BE PROPERLY FITTED. PAYMENT SHALL BE INCLUDED WITH THE ASSOCIATED CONCRETE ITEM.

DESIGN AGENCY
ODOT CENTRAL OFFICE
OFFICE OF PRODUCTION

REVISED DRL DATE 10-8-99
STRUCTURE FILE NUMBER 5204143

DRAWN TAA REVISED
DESIGNED TAA CHECKED DFT

REINFORCING STEEL
MED-71-2402 R
I-71 OVER S.R. 303

MED-71-15.78

46/46

931
940

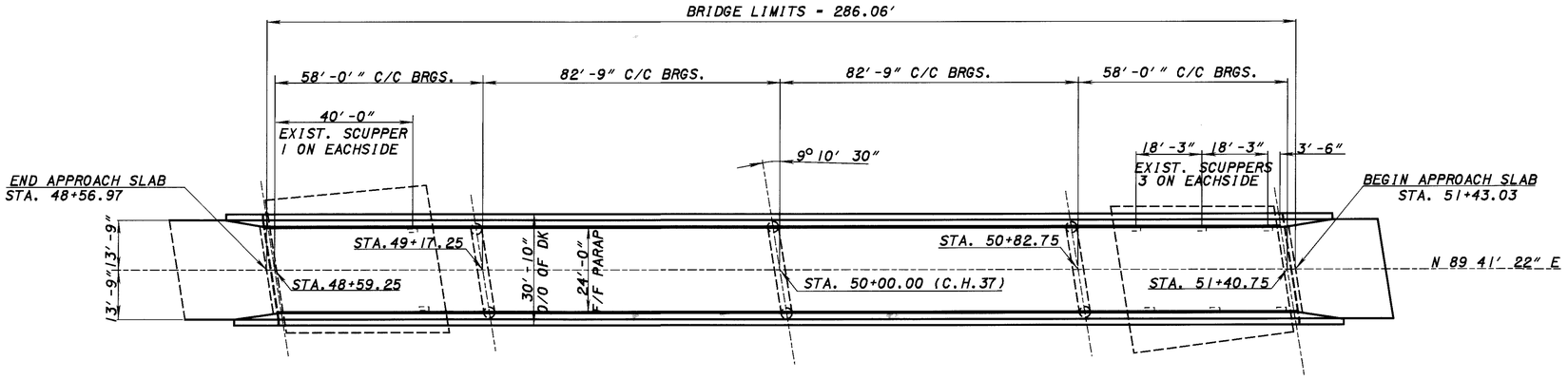

PLAN VIEW

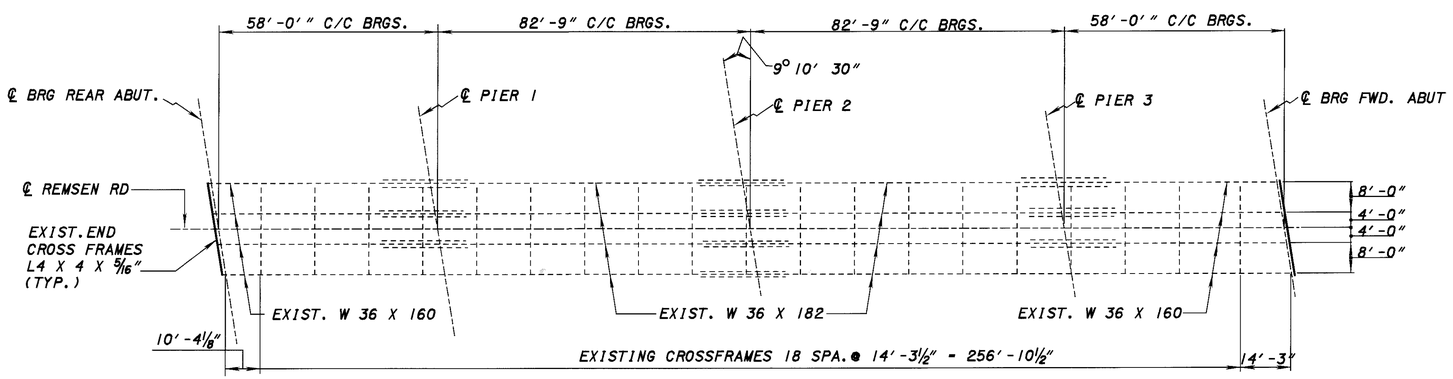

EXISITING STEEL FRAMING PLAN

PROPOSED WORK

1. ENCASE THE EXISTING PIERS WITH 6 INCHES OF CONCRETE. SOUND AND PATCH PRIOR TO ADDING ENCASEMENT.
2. PAINT THE EXISTING STEEL BEAMS
3. REPLACE THE ABUTMENT BEARINGS, MASONRY PLATES AND LOAD PLATES
4. MODIFY EXISTING SCUPPERS
5. REPLACE END CROSSFRAMES
6. SEAL EXPOSED SUBSTRUCTURE SURFACES.

NOTES

FOR PIER COLUMN ENCASEMENT DETAILS SEE SHEET 7 / 9

FOR BEARING DETAILS, SEE SHEET 8 / 9

FOR SCUPPER MODIFICATION SEE SHEET 6 / 9

STATIONING AND DIMENSIONS SHOWN ARE FROM EXISTING PLANS.

FOR END CROSSFRAMES REMOVAL DETAILS SEE SHEET 9 / 9

DESIGN AGENCY
OHIO DEPARTMENT
OF TRANSPORTATION
OFFICE OF PRODUCTION

DESIGNED JFF
DRAWN JFF
CHECKED HLG
REVISED DFT
DATE 9-15-99
REVISED
STRUCTURE FILE NUMBER 5203872

PLAN VIEW
BRIDGE NO. MED-71-2034
IR 71 UNDER REMSEN RD (CH37)

MED-71-15.78

1 / 9

932
940

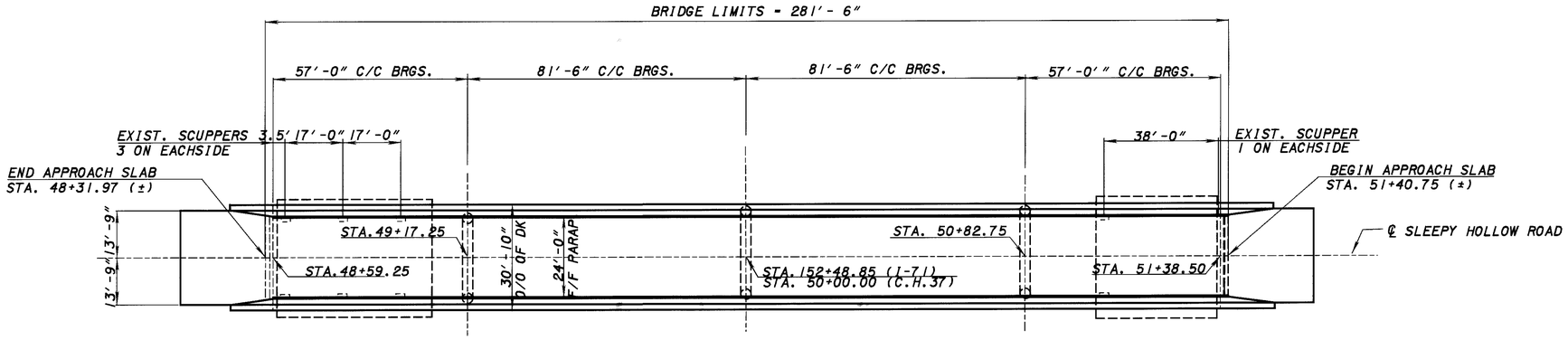

TYPICAL PLAN VIEW

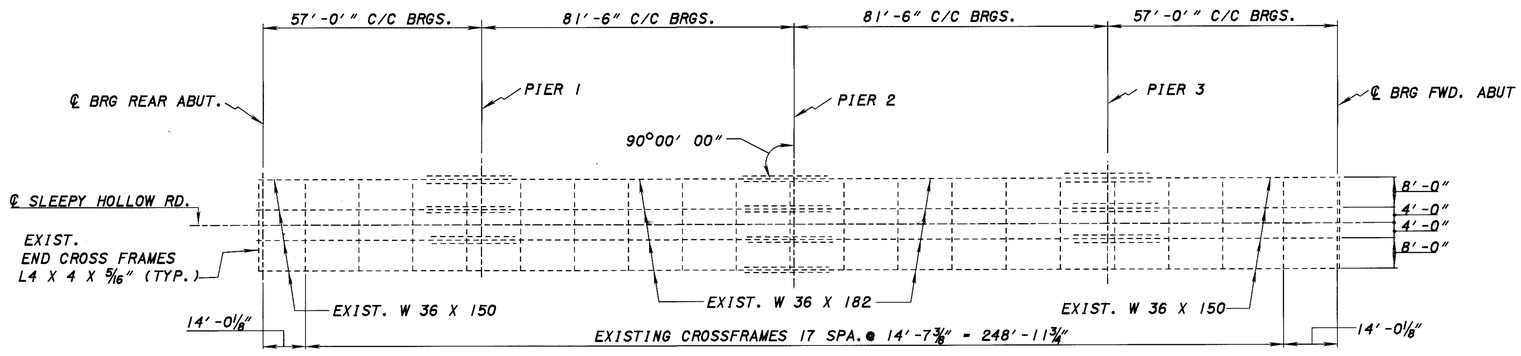

EXISITING STEEL FRAMING PLAN

PROPOSED WORK

1. ENCASE THE EXISTING PIERS WITH 6 INCHES OF CONCRETE. SOUND AND PATCH PRIOR TO ADDING ENCASEMENT.
2. PAINT THE EXISTING STEEL BEAMS
3. REPLACE THE ABUTMENT BEARINGS, MASONRY PLATES AND LOAD PLATES
4. MODIFY EXISTING SCUPPERS
5. REPLACE END CROSSFRAMES
6. SEAL EXPOSED SUBSTRUCTURE SURFACES.

NOTES

FOR PIER COLUMN ENCASEMENT DETAILS
SEE SHEET 7 / 9

FOR BEARING DETAILS, SEE SHEET 8 / 9

FOR SCUPPER MODIFICATION SEE SHEET 6 / 9

STATIONING AND DIMENSIONS SHOWN ARE FROM EXISTING PLANS.

FOR END CROSSFRAMES REMOVAL DETAILS
SEE SHEET 9 / 9

DESIGN AGENCY
OHIO DEPARTMENT OF TRANSPORTATION
OFFICE OF PRODUCTION

DESIGNED	DRAWN	REVISED	DATE
JFF	JFF	DFT	9-15-99
CHECKED	REVISED	STRUCTURE FILE NUMBER	
HLG		5204054	

PLAN VIEW
BRIDGE NO. MED-71-2242
I-R UNDER SLEEPY HOLLOW ROAD (CH.136)

MED-71-15.78

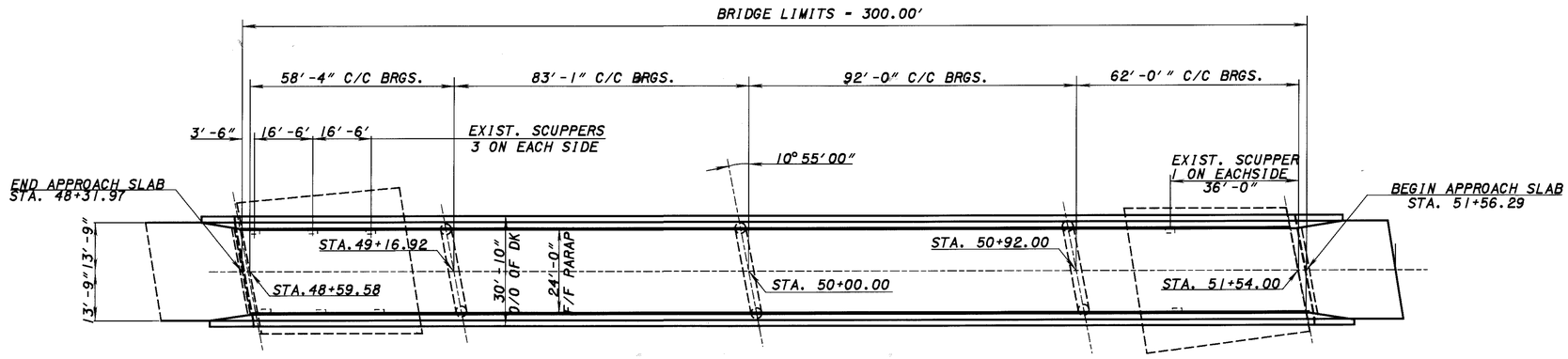

TYPICAL PLAN VIEW

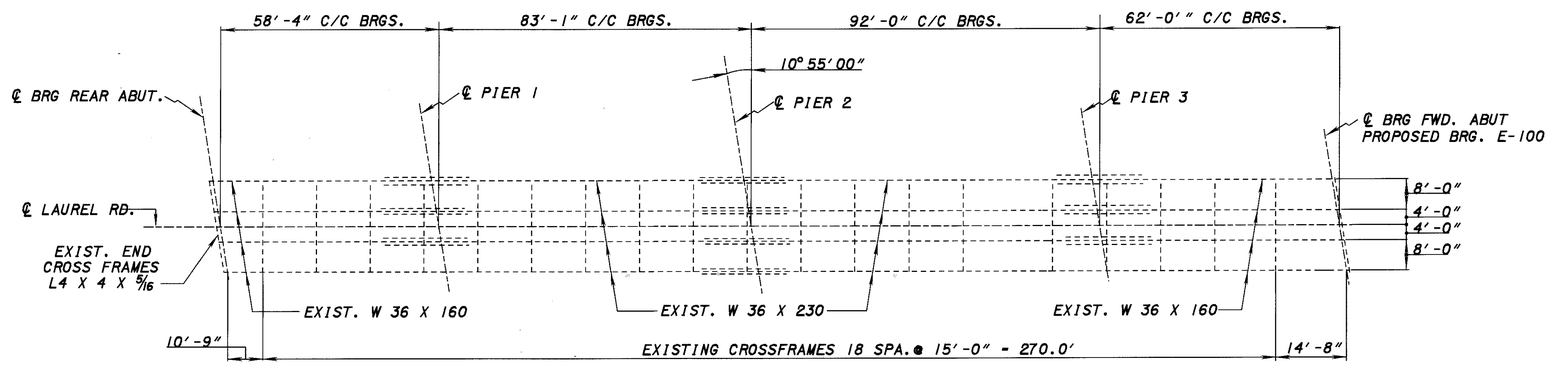

EXISITING STEEL FRAMING PLAN

PROPOSED WORK

1. ENCASE THE EXISTING PIERS WITH 6 INCHES OF CONCRETE. SOUND AND PATCH PRIOR TO ADDING ENCASEMENT.
2. PAINT THE EXISTING STEEL BEAMS
3. REPLACE THE ABUTMENT BEARINGS, MASONRY PLATES AND LOAD PLATES
4. MODIFY EXISTING SCUPPERS
5. REPLACE END CROSSFRAMES
6. SEAL EXPOSED SUBSTRUCTURE SURFACES.

NOTES

FOR PIER COLUMN ENCASEMENT DETAILS SEE SHEET 7 / 9

FOR BEARING DETAILS, SEE SHEET 8 / 9

FOR SCUPPER MODIFICATION SEE SHEET 6 / 9

STATIONING AND DIMENSIONS SHOWN ARE FROM EXISTING PLANS.

FOR END CROSSFRAMES REMOVAL DETAILS SEE SHEET 9 / 9

DESIGN AGENCY
OHIO DEPARTMENT
OF TRANSPORTATION
OFFICE OF PRODUCTION

DESIGNED	DRAWN	REVIEWED	DATE
JFF	JFF	DFT	9-15-99
CHECKED	REVISED	STRUCTURE FILE NUMBER	
HLG		5204119	

PLAN VIEW
BRIDGE NO. MED-71-2321
IR 71 UNDER LAUREL ROAD (CH38)

MED-71-15.78

MED-71-2034	MED-71-2242	MED-71-2321	MED-71-2565					ESTIMATED QUANTITIES
QUANTITY				ITEM	EXT	TOTAL	UNIT	DESCRIPTION
LUMP	LUMP	LUMP	LUMP	202	11203			PORTIONS OF STRUCTURE REMOVED, OVER 20 FOOT SPAN, AS PER PLAN
310	325	320	350	SPECIAL	51267510	1305	SQ YD	SEALING OF CONCRETE SURFACES (EPOXY-URETHANE)
8	8	8		516	44101	24	EACH	ELASTOMERIC BEARINGS WITH INTERNAL LAMINATES AND LOAD PLATE (NEOPRENE), AS PER PLAN (8½"x12"x2½" PAD)
LUMP	LUMP	LUMP		516	47000			JACKING AND TEMPORARY SUPPORT OF SUPERSTRUCTURE
8	8	8		518	12901	24	EACH	SCUPPER, LENGTHENING, AS PER PLAN
12,390	12,200	13,035		815	00050	37,625	SQ FT	SURFACE PREPARATION OF EXISTING STEEL, SYSTEM OZEU*
12,390	12,200	13,035		815	00056	37,625	SQ FT	FIELD PAINTING OF EXISTING STEEL, PRIME COAT, SYSTEM OZEU*
12,390	12,200	13,035		815	00060	37,625	SQ FT	FIELD PAINTING OF EXISTING STEEL, INTERMEDIATE COAT, SYSTEM OZEU*
12,390	12,200	13,035		815	00066	37,625	SQ FT	FIELD PAINTING OF EXISTING STEEL, FINISH COAT, SYSTEM OZEU*
40	40	40		815	00504	120	MAN HR	GRINDING FINS, TEARS, SLIVERS
580	580	580		815	00508	1740	LIN FT	GRINDING FLANGE EDGES
20	20	20	20	842	34450	80	CU YD	CLASS S CONCRETE, MISC.: PIER ENCASEMENT
LUMP	LUMP	LUMP		863	10001	LUMP		STRUCTURAL STEEL MEMBERS, MISCELLANEOUS LEVEL FABRICATION, AS PER PLAN

* THESE QUANTITIES CONTAIN AN ADDITIONAL 25% FOR INCIDENTALS

NOTES

NOTE: ALL REINFORCING STEEL SHALL BE EPOXY COATED.

THE BAR SIZE IS INDICATED IN THE BAR MARK. THE FIRST DIGIT INIDICATES THE BAR SIZE. FOR EXAMPLE, AN A501 IS A #5 BAR. BAR DIMENSIONS SHOWN ARE OUT TO OUT UNLESS OTHERWISE NOTED. "R" INDICATES INSIDE RADIUS.

MIN. LAP SPLICES: #4 BAR - 2'-0"

THIS REINFORCING STEEL LIST IS FOR INFORMATION PURPOSES ONLY

SEE SHEET 7/9 FOR PIER COLUMN ENCASEMENT DETAILS.

MARK	NUMBER TOTAL	LENGTH	WEIGHT	TYPE	DIMENSIONS A	B	C	D	E	R	INC.
PIERS											
MED-71-2034											
P401	33	15'-3"	336	STR							
P402	33	13'-10"	305	STR							
SP401	234	7'-6"	1172	33						1'-9"	
MED-71-2242											
P403	33	13'-10"	305	STR							
P404	33	17'-8"	389	STR							
SP401	252	7'-6"	1263	33						1'-9"	
MED-71-2321											
P405	33	14'-5"	318	STR							
P406	33	16'-10"	371	STR							
SP401	252	7'-6"	1263	33						1'-9"	
MED-71-2526											
P407	66	13'-9"	606	STR							
SP401	222	7'-6"	1112	33							

NOTE: THE GRAND TOTAL IS SHOWN FOR INFORMATION ONLY.

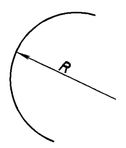

TYPE 33

DESIGN AGENCY
OHIO DEPARTMENT OF TRANSPORTATION
OFFICE OF PRODUCTION

DESIGNED JFF | DRAWN JFF | REVISED DFT | DATE 9-18-99

CHECKED HLG | REVISED | STRUCTURE FILE NUMBER

ESTIMATED QUANTITIES AND REINFORCING STEEL LIST

BRIDGE NOS. MED-71-2034, MED-71-2242, MED-71-2321, MED-71-2565
IR-71 UNDER REWSEN RD, SLEEPY HOLLOW RD, LAUREL RD, GRAFTON RD

MED-71-15.78

4/9

935
940

STANDARD DRAWINGS AND SUPPLEMENTAL SPECIFICATIONS

REFERENCE SHALL BE MADE TO STANDARD DRAWINGS:

AND TO SUPPLEMENTAL SPECIFICATIONS:
815 DATED 5-30-96
863 DATED 10-12-99
910 DATED 7-28-98

DESIGN SPECIFICATION:

THIS STRUCTURE CONFORMS TO "STANDARD SPECIFICATIONS FOR HIGHWAY BRIDGES" ADOPTED BY THE AMERICAN ASSOCIATION FOR STATE HIGHWAY AND TRANSPORTATION OFFICIALS, 1997, INCLUDING THE 1998 INTERIM SPECIFICATIONS AND THE ODOT BRIDGE DESIGN MANUAL.

DESIGN LOADING:

HS20-44, CASE II AND THE ALTERNATE MILITARY LOADING.

DESIGN DATA:

CONCRETE CLASS S - COMPRESSIVE STRENGTH 4500 P.S.I.
REINFORCING STEEL - ASTM A615, A616 OR A617
GRADE 60, MINIMUM YIELD STRENGTH 60,000 P.S.I.

EXISTING STRUCTURE VERIFICATION:

DETAILS AND DIMENSIONS SHOWN ON THESE PLANS PERTAINING TO THE EXISTING STRUCTURE HAVE BEEN OBTAINED FROM PLANS OF THE EXISTING STRUCTURE AND/OR FROM FIELD OBSERVATIONS AND MEASUREMENTS. CONSEQUENTLY, THEY ARE INDICATIVE OF THE EXISTING STRUCTURE AND THE PROPOSED WORK BUT THEY SHALL BE CONSIDERED TENTATIVE AND APPROXIMATE. THE CONTRACTOR IS REFERRED TO THE CONSTRUCTION MATERIAL SPECIFICATION (CMS SECTIONS 102.05, 105.02 AND 513.02).

CONTRACT BID PRICES SHALL BE BASED UPON A RECOGNITION OF THE UNCERTAINTIES DESCRIBED ABOVE AND UPON A PREBID EXAMINATION OF THE EXISTING STRUCTURE BY THE CONTRACTOR. HOWEVER , ALL PROJECT WORK SHALL BE BASED UPON ACTUAL DETAILS AND DIMENSIONS WHICH HAVE BEEN VERIFIED BY THE CONTRACTOR IN THE FIELD.

EXISTING BRIDGE PLANS MAY BE INSPECTED IN THE OFFICE OF STRUCTURAL ENGINEERING IN COLUMBUS, OHIO OR AT THE ODOT DISTRICT OFFICE IN ASHLAND, OHIO.

REPLACEMENT OF EXISTING REINFORCING STEEL:

ANY EXISTING REINFORCING BARS WHICH ARE TO BE INCORPORATED INTO THE NEW WORK AND WHICH ARE MADE UNUSABLE BY THE CONTRACTOR'S CONCRETE REMOVAL OPERATIONS SHALL BE REPLACED WITH NEW STEEL AT THE CONTRACTOR'S COST.

ITEM 202 PORTIONS OF STRUCTURE REMOVED, OVER 20 FOOT SPAN, AS PER PLAN

DESCRIPTION:
THIS WORK SHALL CONSIST OF THE REMOVAL OF PORTIONS OF EXISTING SCUPPERS, END CROSSFRAMES, GUSSET PLATES AND EXISTING ABUTMENT BEARINGS AND THIER LOAD PLATES. THE EXISTING ABUTMENT BRIDGE SEATS SHALL BE THOROUGHLY CLEANED PRIOR TO PLACEMENT OF NEW BEARINGS. THE CONCRETE SURFACE SHALL BE CLEANED OF ALL DIRT OR OTHER FOREIGN MATERIALS BY USE OF WATER, AIR UNDER PRESSURE OR ANY OTHER METHOD THAT PRODUCES SATISFACTORY RESULTS, APPROVED BY THE ENGINEER.

PAYMENT:
THIS WORK WILL BE PAID FOR AT THE CONTRACT LUMP SUM PRICE BID, WHICH PRICE AND PAYMENT SHALL BE FULL COMPENSATION FOR ALL LABOR, EQUIPMENT, MATERIALS AND INCIDENTALS NECESSARY TO COMPLETE THE WORK.

TRAFFIC MAINTENANCE:

SEE ROADWAY PLANS FOR ADDITIONAL TRAFFIC NOTES AND DETAILS.

ITEM 516-JACKING AND TEMPORARY SUPPORT OF SUPERSTRUCTURE

THIS ITEM SHALL CONSIST OF FURNISHING ALL NECESSARY LABOR, MATERIALS, AND EQUIPMENT TO RAISE THE EXISTING STRUCTURES AS NECESSARY TO REPLACE EXISTING ABUTMENT BEARINGS.

THE CONTRACTOR SHALL BE RESPONSIBLE FOR THE DESIGN, INSTALLATION AND OPERATION OF AN ADEQUATE JACKING SYSTEM, INCLUDING ANY TEMPORARY OR PERMANENT SUPPORTS NECESSARY TO PERFORM THE WORK DESCRIBED IN THESE PLANS. THREE (3) SETS OF JACKING PLANS, WHICH INCLUDE THE INFORMATION DESCRIBED IN THIS NOTE, SHALL BE SUBMITTED TO THE ENGINEER FOR APPROVAL AT LEAST THIRTY (30) DAYS BEFORE ACTUAL WORK IS TO BEGIN. THE PLANS SHALL BE PREPARED AND STAMPED BY A REGISTERED PROFESSIONAL ENGINEER.

JACKING SUBMITTALS SHALL INCLUDE AT LEAST THE FOLLOWING:

1. THE SIGNATURE AND NUMBER, OR PROFESSIONAL SEAL, OF THE REGISTERED PROFESSIONAL ENGINEER WHO PREPARED THE SUBMITTAL.

2. A DRAWING SHOWING THE PHYSICAL AND DIMENSIONAL POSITION OF THE JACKS WITH RESPECT TO THE STRUCTURE INCLUDING CLEARANCES AND CENTER OF LIFT.

3. A SCHEMATIC LAYOUT OF JACKS, CHECK VALVES, PUMPS WITH 3 WAY RETRACTOR VALVE, PRESSURE GAGES, FLOW CONTROL VALVES, ETC. IN ACCORDANCE WITH MANUFACTURER'S RECOMMENDATIONS. ALL JACKS FOR EACH ABUTMENT SHALL BE CONNECTED. ALL JACKS AT EACH ABUTMENT SHALL BE THE SAME SIZE.

4. ANALYSIS AND CALCULATIONS OF THE STRESSES INDUCED OR CREATED IN THE STRUCTURE DUE TO JACKING OPERATIONS IF A DIFFERENTIAL JACKING HEIGHT OF 1" IS EXCEEDED BETWEEN SUBSTRUCTURE UNITS.

5. PHYSICAL DIMENSIONS, MATERIALS, AND FABRICATION DETAILS OF ANY TEMPORARY SUPPORTS.

6. A STEP BY STEP PROCEDURE DETAILING ALL STEPS IN THE JACKING OPERATION.

THE ENTIRE SYSTEM, INCLUDING JACKS, SHALL HAVE 20% MORE CAPACITY THAN REQUIRED BASED ON CALCULATED LOADS.

FOR LIFTS GREATER THAN 1", JACKS SHALL HAVE LOCKING NUTS TO POSITIVELY LOCK AND SUPPORT THE STRUCTURE. JACKS SHALL HAVE A SWIVEL LOAD CAP, A DOMED PISTON HEAD OR SOME OTHER DEVICE TO PROTECT AGAINST THE EFFECTS OF SIDE LOAD ON THE JACK.

JACKS ALONE SHALL NOT BE USED TO SUPPORT LOADS EXCEPT DURING THE ACTUAL JACKING OPERATION. TEMPORARY SUPPORTS, BLOCKING OR OTHER METHODS APPROVED BY THE DIRECTOR SHALL BE USED. HORIZONTAL AND VERTICAL MOVEMENT RESTRAINT SHALL BE PROVIDED.

SINGLE ACTING RAMS WITH NO OVER-TRAVEL PROTECTION SYSTEM SHALL NOT BE USED.

SPARE EQUIPMENT SHALL BE AVAILABLE ON SITE FOR THE REQUIRED STRUCTURE RAISING TO PROCEED IN THE EVENT OF BREAKDOWN. A LIST OF SPARE EQUIPMENT SHALL BE PROVIDED TO THE ENGINEER.

THE JACKING OPERATION SHALL LIFT ALL BEAMS AT ANY ONE ABUTMENT SIMULTANEOUSLY IF THE HEIGHT OF THE LIFT EXCEEDS ¼". MAXIMUM DIFFERENTIAL JACKING HEIGHT BETWEEN ANY ADJACENT ABUTMENTS OR PIERS SHALL BE 1" OR LESS.

IF DURING THE JACKING OPERATIONS, CRACKING OF THE CONCRETE SUPERSTRUCTURE, SEPARATION OF THE CONCRETE DECK FROM THE STEEL STRINGERS, OR OTHER DAMAGE TO THE STRUCTURE IS VISUALLY OBSERVED, THE JACKING OPERATION SHALL IMMEDIATELY CEASE AND APPROVED SUPPORTS SHALL BE INSTALLED. THE CONTRACTOR SHALL THEN ANALYZE THE DAMAGE AND SUBMIT A METHOD OF CORRECTION TO THE ENGINEER FOR APPROVAL. ANY BEAMS THAT SEPARATE FROM THE DECK SHALL BE EPOXY INJECTED FOR THE DISTANCE OF THE SEPARATION IN ACCORDANCE WITH THE PROPOSAL NOTE "CONCRETE REPAIR BY EPOXY INJECTION." COST OF THIS EPOXY INJECTION OR OTHER REQUIRED REPAIRS SHALL BE BORNE BY THE CONTRACTOR.

THE CONTRACTOR SHALL DEMONSTRATE TO THE ENGINEER THAT THE BRIDGE BEARINGS ARE FULLY SEATED BETWEEN ALL CONTACT AREAS. IF FULL SEATING IS NOT ATTAINED, SUITABLE MEANS OF REPAIR, SUBJECT TO THE APPROVAL OF THE ENGINEER, WILL BE REQUIRED AT THE CONTRACTOR'S EXPENSE.

THE JACKING OPERATION SHALL BE DIRECTED BY A PROFESSIONAL ENGINEER EMPLOYED BY THE CONTRACTOR. FAILURE TO HAVE A PROFESSIONAL ENGINEER PRESENT SHALL BE CAUSE FOR CEASING JACKING OPERATIONS.

PAYMENT SHALL BE MADE AT THE LUMP SUM PRICE BID FOR ITEM 516, JACKING AND TEMPORARY SUPPORT OF SUPERSTRUCTURE AND SHALL INCLUDE ALL NECESSARY TOOLS, LABOR, EQUIPMENT AND MATERIALS NECESSARY TO COMPLETE THIS ITEM OF WORK.

ITEM 842, CLASS S CONCRETE, MISCELLANEOUS: PIER ENCASEMENT.

THIS ITEM SHALL BE USED AS PER DETAILS IN THESE PLANS.

SURFACE PREPARATION: THE PIER CONCRETE COLUMNS SHALL BE SOUNDED AND PATCHED. ALL LOOSE AND DELAMINATED CONCRETE SHALL BE REMOVED. RUSTED EXPOSED REINFORCING STEEL AND EXPOSED CONCRETE SURFACES SHALL BE CLEANED AND THE SURFACE PREPARED PER 519.04. UP TO 10% OF THE SURFACE AREA SHALL BE ASSUMED TO BE PATCHED, AS DIRECTED BY THE ENGINEER. THE 10% QUANTITY SHALL BE ASSUMED AS THE TOTAL BASED UPON ALL THE PIERS, NOT USED FOR AN INDIVIDUAL PIER COLUMN. PATCHING OF CENTER PIERS SHALL ALSO BE INCLUDED UNER THIS PAY ITEM, EVEN THOUGH NO ENCASEMENT WILL BE PROVIDED. PATCHING CONCRETE SHALL BE AS PER 519.

ANY EXCAVATION IS INCLUDED IN THIS ITEM.

CONRETE FOR ENCASEMENT SHALL BE AS FOLLOWS:

IN LIEU OF THE PROPORTIONING SPECIFIED IN 499.03 AND 511.02, THE FOLLOWING TABLE SHALL BE USED TO ESTABLISH THE QUANTITIES PER CUBIC YARD FOR CONCRETE. THE COARSE AGGREGATE SHALL BE NO. 8 LIMESTONE. CEMENT USED SHALL BE EXPANSIVE HYDRAULIC CEMENT CONFORMING TO ASTM C845, TYPE K AS PER 701.08.

QUANTITIES PER CUBIC YARD

FINES (LB)	AGGREGATE COURSE (LB)	TOTAL (LB)	CEMENT CONTENT (LB)	WATER/ CEMENT RATIO
1300	1275	2575	715	0.50

AIR CONTENT - 8% PLUS OR MINUS 2%

TYPE D CHEMICAL ADMIXTURE SHALL BE USED.

THE SLUMP AT THE TIME OF CONCRETE PLACEMENT SHALL BE BETWEEN 5 AND 7 INCHES.

CURING SHALL BE IN ACCORDANCE WITH 511.14 TYPE A WATER CURING.

A CEMENT COMPANY REPRESENTATIVE SHALL BE ON HAND DURING THE MIXING AND PLACING OPERATION DURING THE FIRST POUR, IF THE REDI-MIX PRODUCER HAS NOT HAD PREVIOUS EXPERIENCE WITH TYPE K CEMENT.

REDI-MIX PRODUCERS WHO HAVE HAD PREVIOUS EXPERIENCE SHALL HAVE ON HAND A PERSON WHO HAS BEEN FACTORY TRAINED IN THE USE OF TYPE K CEMENT.

ALL OTHER PROVISIONS OF ITEM 842 SHALL REMAIN IN EFFECT.

PAYMENT FOR ALL OF THE ABOVE SHALL BE AT THE UNIT PRICE BID PER CUBIC YARD FOR ITEM 842, CLASS S CONCRETE, MISCELLANEOUS: PIER ENCASEMENT, WHICH SHALL INCLUDE ALL EXCAVATION, LABOR, EQUIPMENT, MATERIALS, AND INCIDENTALS NECESSARY TO COMPLETE THE ABOVE WORK.

DESIGN AGENCY
OHIO DEPARTMENT
OF TRANSPORTATION
OFFICE OF PRODUCTION

DESIGNED	DRAWN	REVISED	DATE
JFF	JFF	DFT	9-15-99
CHECKED	REVISED	STRUCTURE FILE NUMBER	
HLG			

GENERAL NOTES

BRIDGE NOS. MED-71-2034, MED-71-2242, MED-71-2321, MED-71-2565
IR-71 UNDER REMSEN RD, SLEEPY HOLLOW RD, LAUREL RD, GRAFTON RD

MED-71-15.78

5 / 9

936
940

ITEM 518, SCUPPER LENGTHENING, AS PER PLAN

THE CONTRACTOR SHALL REMOVE THE BOTTOM OF EACH SCUPPER DOWNSPOUT, AS INDICATED IN THE PLANS. THE CONTRACTOR SHALL THEN WELD AN EXTENSION TO THE EXISTING SCUPPER DOWNSPOUT. THE DOWNSPOUT EXTENSION SHALL BE IN ACCORDANCE WITH 518 AND SHALL EXTEND A MINIMUM OF 6" BELOW THE BOTTOM FLANGE OF THE ADJACENT BEAM. THE MATERIAL AND THE SIZE OF THE EXTENSION SHALL BE THE SAME AS THAT OF THE EXISTING SCUPPER DOWNSPOUT. THE CONTRACTOR SHALL ALSO CLEAN AND PAINT THE ENTIRE SCUPPER DOWNSPOUT INCLUDING THE EXTENSION, COST TO BE INCLUDED WITH THE APPROPRIATE OZEU PAY ITEMS. COST FOR ALL MATERIAL, LABOR AND INCIDENTALS FOR THE ABOVE WORK SHALL BE INCLUDED UNDER ITEM 518 SCUPPER LENGTHENING, AS PER PLAN.

ITEM 815 GRINDING FLANGE EDGES

GRIND BOTTOM FLANGES OF EXISTING BEAMS OF THE TWO MIDDLE SPANS OVER THE TRAVEL ROADWAY LANES (36' LENGTH).

ITEM 815 FIELD PAINTING OF EXISTING STEEL, SYSTEM OZEU

THE COLOR OF THE FINISH COAT SHALL BE A LIGHT GRAY COLOR MEETING FEDERAL STANDARD NUMBER 16440. IN ADDITION TO THE SURFACE AREA OF THE STEEL STRINGERS TO BE PAINTED, AN ADDITIONAL 25% OF THIS AMOUNT HAS BEEN ADDED TO THE SURFACE SQUARE FOOT TOTALS TO ACCOUNT FOR INCIDENTALS SUCH AS CROSS FRAMES AND BEARINGS.

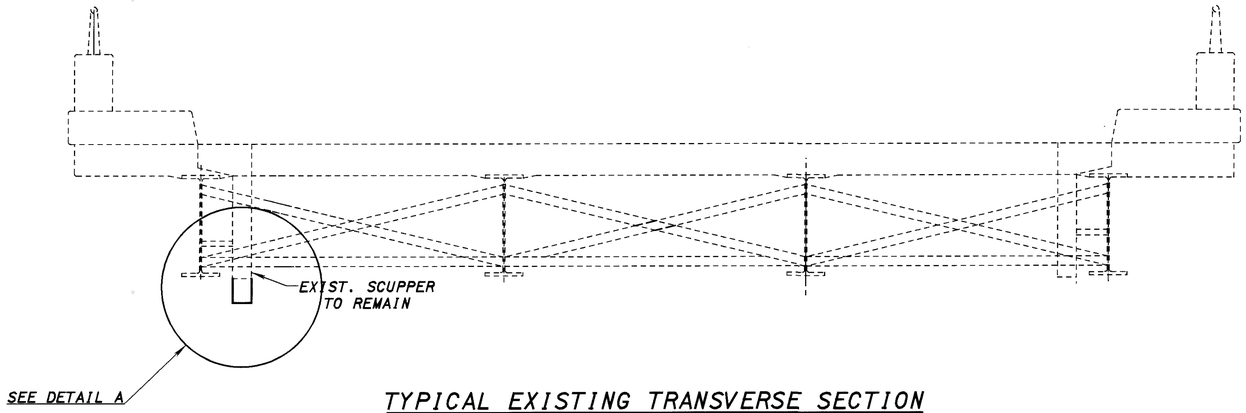

TYPICAL EXISTING TRANSVERSE SECTION

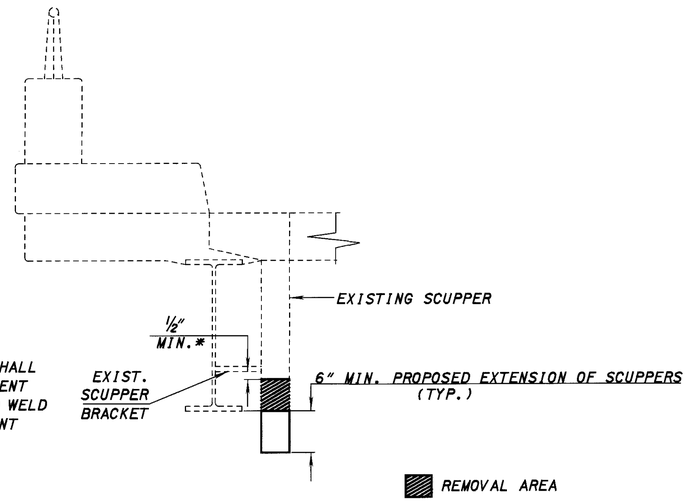

DETAIL A

*FOR THE REMSEN ROAD OVERPASS STRUCTURE THE EXISTING SCUPPER SHALL BE REMOVED A MINIMUM OF 10 INCHES, WHICH WILL INCLUDE REPLACEMENT OF SCUPPER BRACKET. THE EXISTING BRACKET SHALL BE REMOVED AND WELD GROUND FLUSH. A NEW BRACKET SHALL BE FURNISHED IN KIND, PAYMENT INCLUDED WITH ITEM 518, SCUPPER LENGTHENING.

SEE SHEETS 1-3/ 9 FOR EXISTING SCUPPER LOCATIONS

DESIGN AGENCY
OHIO DEPARTMENT OF TRANSPORTATION
OFFICE OF PRODUCTION

DATE 9-18-99
REVIEWED DFT
STRUCTURE FILE NUMBER

DRAWN JFF
REVISED

DESIGNED JFF
CHECKED HLG

GENERAL NOTES AND SCUPPER DETAILS
BRIDGE NOS. MED-71-2034, MED-71-2242, AND MED-71-2321
IR-71 UNDER REMSEN RD, SLEEPY HOLLOW RD, LAUREL RD

MED-71-15.78

○ - DENOTES PROPOSED PIER ENCASEMENT

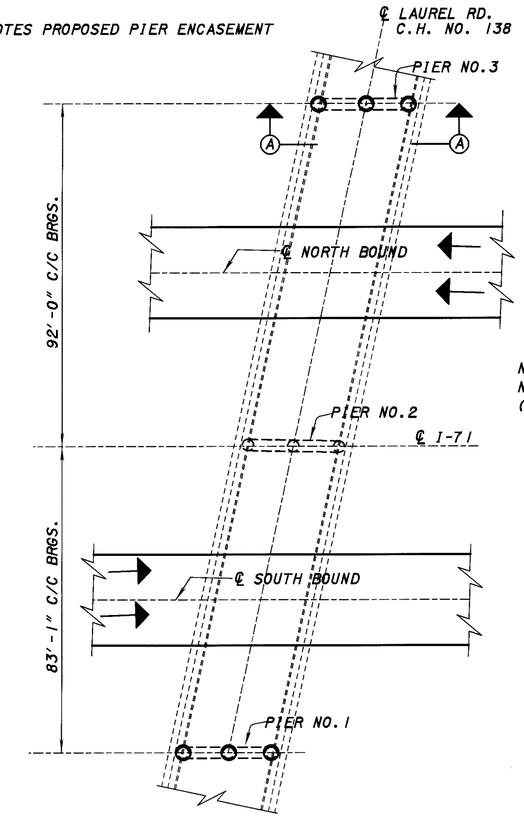

MED-71-2321

NOTE:
NO ENCASEMENT OF CENTER PIER.
(TYP.)

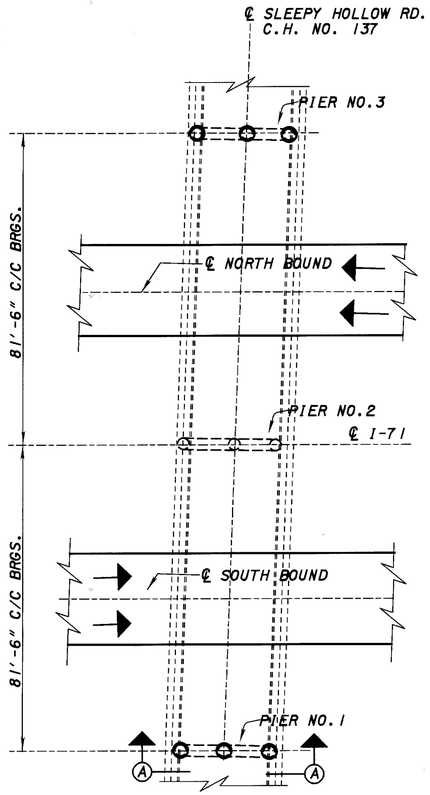

MED-71-2242

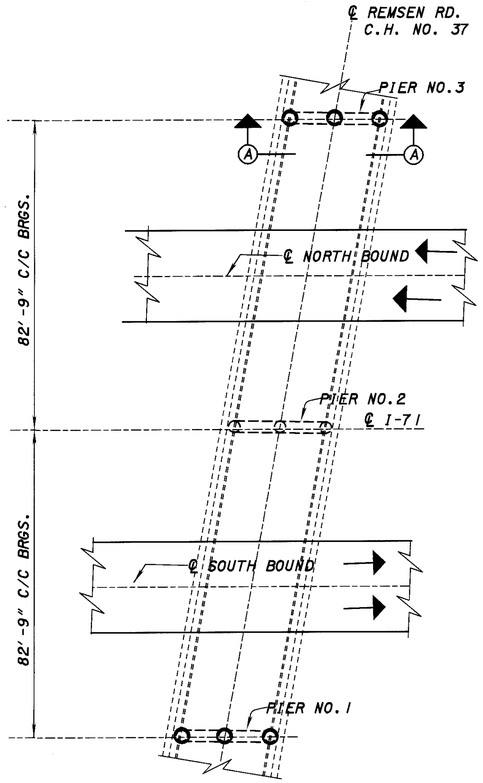

MED-71-2034

LOCATIONS OF PIER ENCASEMENTS

PROPOSED WORK

1. PIERS 1&3 TO BE SOUNDED, PATCHED AND CONCRETE ENCASED THEN A CONCRETE SEALER TO BE APPLIED.
2. MIDDLE PIERS TO BE SOUNDED, PATCHED THEN SEALED.

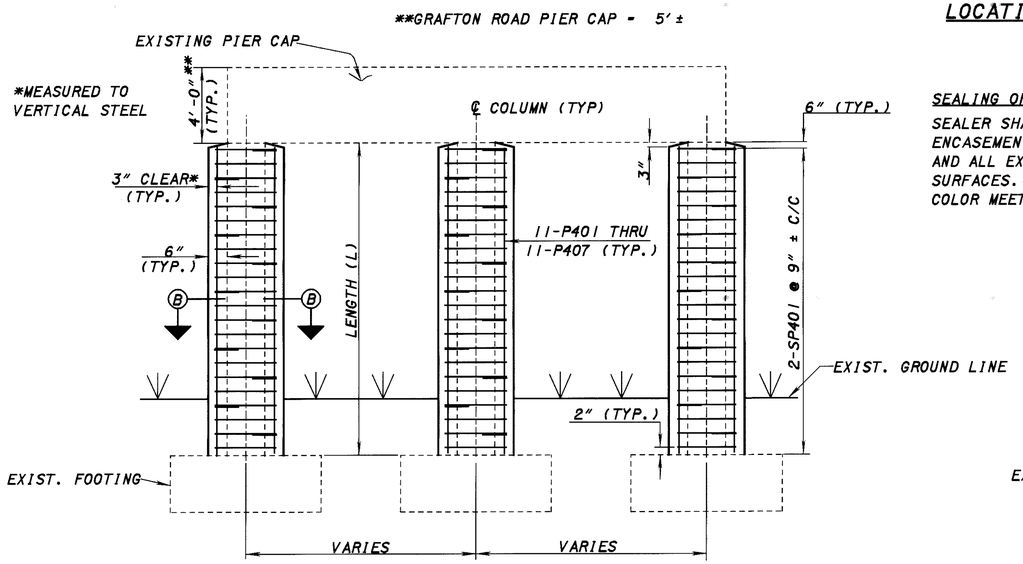

VIEW Ⓐ - Ⓐ
PROPOSED PIER COLUMN ENCASEMENT

SEALING OF CONCRETE SURFACES (EPOXY URETHANE):
SEALER SHALL BE APPLIED TO ALL COLUMNS (AFTER ENCASEMENT), PIER CAP SIDES, ENDS AND BOTTOM AND ALL EXPOSED ABUTMENT WINGWALL AND BREASTWALL SURFACES. EPOXY URETHANE SHALL BE THE "BUFF" COLOR MEETING FEDERAL COLOR STANDARD NO. 37722.

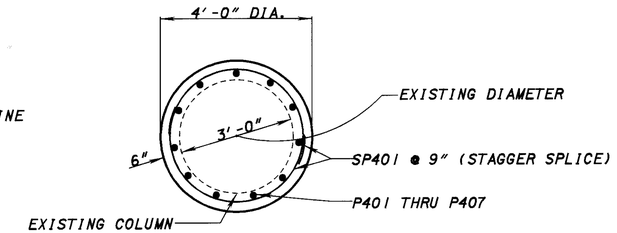

SECTION Ⓑ - Ⓑ

SEE SHEET 4/9 FOR REINFORCING STEEL SCHEDULE

BRIDGE	PIER COLUMNS ENCASEMENT LENGTH* (L)		
	PIER 1	PIER 2	PIER 3
MED-71-2034	15'-8½"	0	14'-3⅛"
MED-71-2242	14'-3½"	0	18'-1 7/16"
MED-71-2321	14'-10¼"	0	17'-2⅛"
MED-71-2565	14'-2¾"	0	14'-2¾"

*DIMENSIONS GIVEN ARE FROM THE EXISTING PLANS
SEE NOTE 1

NOTE 1. A PLAN VIEW OF GRAFTON ROAD OVERHEAD STRUCTURE HAS NOT BEEN SHOWN, BUT DETAILS ARE SIMILAR. "L" INCLUDED IN ABOVE TABLE.

DESIGN AGENCY
OHIO DEPARTMENT OF TRANSPORTATION
OFFICE OF PRODUCTION

DESIGNED	DRAWN	REVIEWED	DATE
JFF	JFF	DFT	9-15-99
CHECKED	REVISED	STRUCTURE FILE NUMBER	
HLG			

PIER COLUMN ENCASEMENT DETAIL

BRIDGE NOS. MED-71-2034, MED-71-2242, MED-71-2321, MED-71-2565
IR-71 UNDER REMSEN RD, SLEEPY HOLLOW RD, LAUREL RD, GRAFTON RD

MED-71-15.78

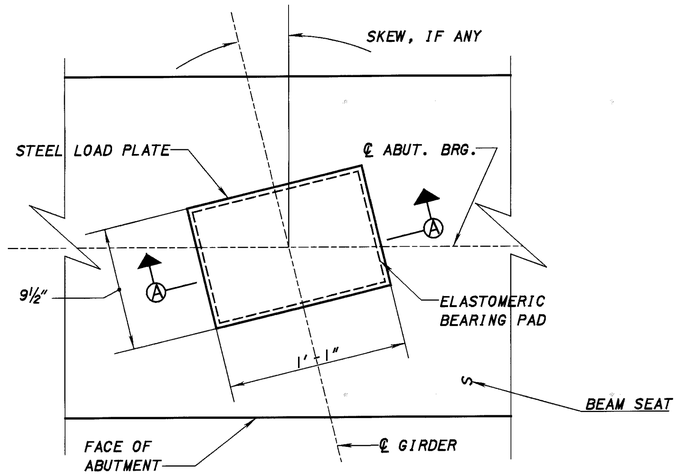

PART PLAN AT ABUTMENTS

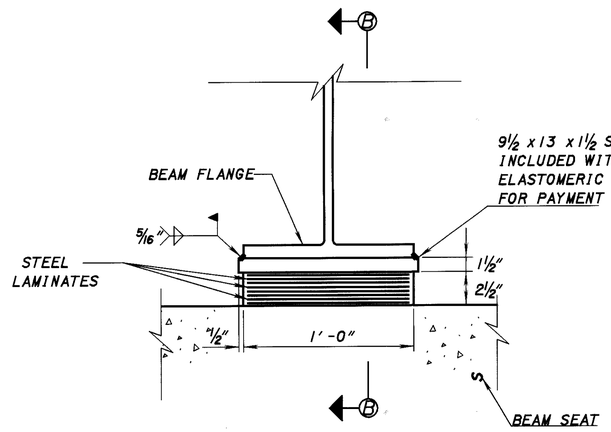

SECTION Ⓐ-Ⓐ

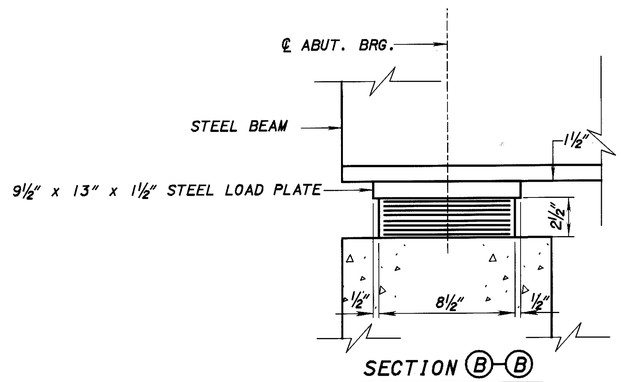

SECTION Ⓑ-Ⓑ

NOTES:

MATERIALS: THE STEEL PLATES MAY BE GRADE 36 STEEL. THE STEEL PLATES SHALL HAVE THE SAME PROTECTIVE COATING AS THE MAIN STRUCTURAL STEEL.

PAYMENT FOR MATERIALS (INCLUDING STEEL LOAD PLATE AND SHIM PLATES OR OTHER MEANS OF FIT UP) LABOR, FABRICATION, PROTECTIVE COATING AND INSTALLATION SHALL BE INCLUDED WITH ITEM 516 ELASTOMERIC BEARINGS, AS PER PLAN, FOR PAYMENT.

WELDING: WELDING OF THE LOAD PLATE TO THE SUPERSTRUCTURE SHALL BE CONTROLLED SO THAT THE PLATE TEMPERATURE AT THE ELASTOMER BONDED SURFACE SHALL NOT EXCEED 300 F AS DETERMINED BY THE USE OF PYROMETRIC STICKS OR OTHER TEMPERATURE MONITORING DEVICES. THE STEEL LOAD PLATE SHALL BE BONDED BY VULCANIZATION TO THE ELASTOMER DURING THE MOLDING PROCESS. STEEL LOAD PLATE MAY BE A36 OR A572 WITH PAYMENT INCLUDED IN ITEM 516.

ELASTOMERIC BEARINGS SHALL COMPLY WITH ITEM 516 AND AASHTO STANDARD SPECIFICATIONS FOR HIGHWAY BRIDGES, SECTION 18, BEARINGS, DIVISION II, CONSTRUCTION ARTICLES 18.4.5.1 AND 18.5.6.2. BEARINGS SHALL BE GRADE 3, 50 DUROMETER ELASTOMER AND SHALL BE SUBJECTED TO THE LOAD TESTING REQUIREMENTS DEFINED IN ARTICLE 18.7.4.5 (DIVISION II) OF THE AASHTO DOCUMENT LISTED ABOVE. THE UNIT BID PRICE SHALL INCLUDE ALL MATERIALS, LABOR, TESTING, STEEL LOAD PLATES AND INCIDENTALS NECESSARY TO FURNISH AND INSTALL LAMINATED ELASTOMERIC BEARINGS. PAYMENT WILL BE MADE AT THE CONTRACT PRICE FOR ITEM 516, EACH, ELASTOMERIC BEARINGS WITH INTERNAL LAMINATES AND LOAD PLATE (NEOPRENE), AS PER PLAN.

THE EXISTING PLAN DIMENSION BETWEEN THE BRIDGE SECTION AND BOTTOM OF STEEL BEAM IS 4½". THIS DIMENSION SHALL BE FIELD VERIFIED. AFTER VERIFICATION THE CONTRACTOR SHALL SELECT A METHOD TO SET THE BEAMS TO THEIR ORIGINAL POSITION. THE CONSTRACTOR MAY USE STEEL SHIMS, ADJUST LOAD PLATE THICKNESS OR ADJUST THE CONCRETE BRIDGE SECTION TO PROVIDE THE APPROPRIATE CLEARANCE. THE PLAN SHALL BE SUBMITTED TO THE PROJECT ENGINEER FOR APPROVAL. ALL COSTS SHALL BE INCLUDED WITH ITEM 516 ELASTOMERIC BEARING PAD.

BASIS OF PAYMENT: THE UNIT BID PRICE SHALL INCLUDE ALL MATERIALS, LABOR, TESTING, ELEVATION ADJUSTMENT, STEEL PLATES AND INCIDENTALS NECESSARY TO FURNISH AND INSTALL LAMINATED ELASTOMERIC BEARINGS, EXPANSION. PAYMENT WILL BE MADE AT THE CONTRACT PRICE FOR ITEM 516, EACH, ELASTOMERIC BEARINGS WITH INTERNAL LAMINATES AND LOAD PLATE (NEOPRENE):

8½"x12"x 2½" WITH 9½"x13"x1½" LOAD PLATE, AS PER PLAN (ABUTMENTS)

PROPOSED BEARING TABLE

BRIDGE NOS.	BEARING LOCATION	TYPE	L	W	t_i	t_e	n_1	n_2	STEEL LOAD PL	TOTAL HEIGHT*	DL, KIPS	LL, KIPS	TOTAL, KIPS
MED-71-2034 MED-71-2242 MED-71-2321	REAR & FORWARD ABUTMENTS	EXP.	8½	12	.260	.190	6	7	9½x 13 x 1½	4	38	47	85

n_1 - NUMBER OF INTERNAL ELASTOMER LAYERS, t_i
n_2 - NUMBER OF STEEL LAMINATES, 0.0747 THICKNESS
t_e - THICKNESS OF EXTERNAL ELASTOMER LAYER

ELASTOMER LAYERS ARE 50 DUROMETERS
* TOTAL HEIGHT INCLUDES LOAD PLATE

DESIGN AGENCY
ODOT CENTRAL OFFICE
OFFICE OF PRODUCTION

DESIGNED	DRAWN	REVIEWED	DATE
HLG	HLG	DFT	9-16-99
CHECKED	REVISED	STRUCTURE FILE NUMBER	
DFT			

BEARING DETAILS

BRIDGE NOS. MED-71-2034, MED-71-2242, MED-71-2321
IR-71 UNDER REMSEN RD, SLEEPY HOLLOW RD, LAUREL RD

MED-71-15.78

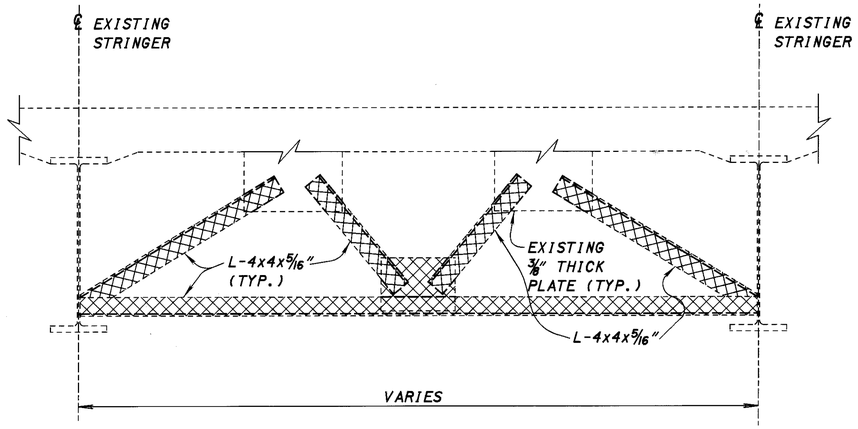

END CROSSFRAME REMOVAL

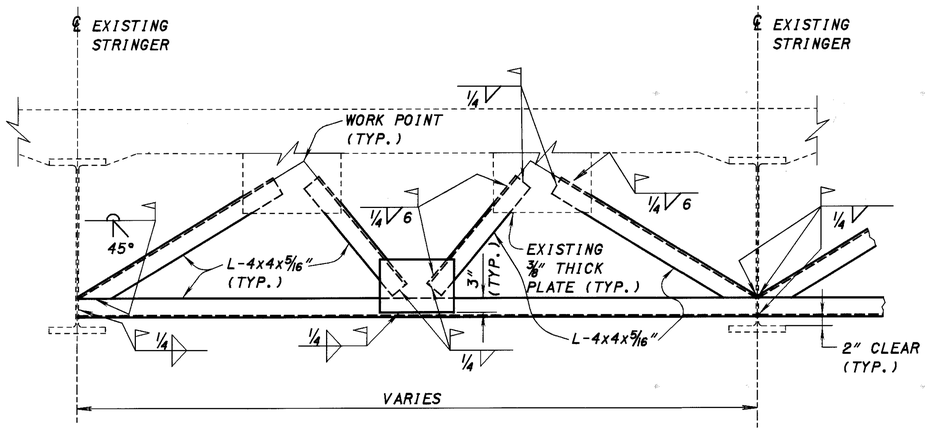

PROPOSED END CROSSFRAME DETAILS

NOTES

1. ▨ DENOTES CROSSFRAME MEMBERS TO BE REMOVED AND REPLACED. THE CONNECTIONS TO THE BEAM AND PLATE SHALL BE GROUND SMOOTH. COST FOR THE REMOVAL OF CROSSFRAME MEMBERS SHALL BE INCLUDED IN ITEM 202 - PORTION OF STRUCTURE REMOVED AND SHALL INCLUDE ALL LABOR, EQUIPMENT, MATERIAL AND INCIDENTALS NECESSARY TO COMPLETE THE ABOVE WORK. CROSSFRAME MEMBERS SHALL BE REPLACED IN KIND IN THE SAME MANNER AS THE EXISTING BRIDGE. PAYMENT FOR MEMBERS REPLACED SHALL BE INCLUDED IN ITEM 863 - STRUCTURAL STEEL, AS PER PLAN AND SHALL INCLUDE ALL LABOR, EQUIPMENT, MATERIAL AND INCIDENTALS NECESSARY TO COMPLETE THE WORK. CROSSFRAME MEMBERS REPLACED SHALL BE REATTACHED CONSISTENT WITH PROPOSED END CROSSFRAME DETAIL.

2. ITEM 863 - STRUCTURAL STEEL MEMBERS, MISCELLANEOUS LEVEL FABRICATION, AS PER PLAN (STRUCTURAL STEEL, REPLACEMENT OF DETERIORATED END CROSS-FRAMES). STEEL MEMBERS TO BE FABRICATED UNDER THIS ITEM WILL NOT REQUIRE SHOP DRAWINGS PRIOR TO FABRICATION. THE CONTRACTOR SHALL MAKE NECESSARY MEASUREMENTS AND PREPARE SKETCHES, DRAWINGS, TABLES, ETC. THE ENGINEER SHALL HAVE AUTHORITY AND RESPONSIBILITY FOR ENSURING THAT THE FABRICATED STEEL IS ACCEPTABLE. MILL TEST REPORTS AND SHIPPING DOCUMENTS SHALL BE SUBMITTED TO THE ENGINEER FOR REVIEW AND APPROVAL PRIOR TO INCORPORATING STEEL ITEMS INTO THE WORK. AFTER FABRICATION, THE CONTRACTOR SHALL SUBMIT SHOP DRAWINGS TO THE ENGINEER FOR REVIEW AND APPROVAL TO ENSURE THAT THE DRAWINGS DEPICT THE STEEL AS ACTUALLY INCORPORATED INTO THE WORK, PER 863.08. THE ENGINEER WILL THEN SEND ONE APPROVED SET TO THE OFFICE OF STRUCTURAL ENGINEERING. STEEL MEMBERS INCLUDED IN THIS ITEM INCLUDE THE END CROSSFRAMES AND GUSSET PLATES AS DETAILED IN THE PLANS. PAYMENT SHALL BE LUMP SUM.

3. PAINTING OF 863 STEEL: NEW STEEL SHALL BE SHOP PRIMED, WHICH SHALL BE INCLUDED IN THE COST OF ITEM 863. THE NEW STEEL SHALL ALSO BE PREPARED AND PAINTED PER SUPPLEMENTAL SPECIFICATION 815 IN THE FIELD AS IF IT WERE EXISTING STEEL. QUANTITIES AND PAYMENTS FOR THIS WORK SHALL BE INCLUDED IN THE SQUARE FOOT UNIT PRICE BID FOR EACH OF THE 815 ITEMS.

4. ALL END CROSSFRAMES AT EACH ABUTMENT SHALL BE REPLACED AT MED-71-2034, MED-71-2242 AND MED-71-2321.

DESIGN AGENCY: ODOT CENTRAL OFFICE OFFICE OF PRODUCTION

DESIGNED	DRAWN	REVIEWED	DATE
DFT	BKL	DFT	9-16-99
CHECKED	REVISED	STRUCTURE FILE NUMBER	
HLG			

END CROSSFRAME DETAILS

BRIDGE NOS. MED-71-2034, MED-71-2242, MED-71-2321
IR-71 UNDER REMSEN RD, SLEEPY HOLLOW RD, LAUREL RD

MED-71-15.78

9 / 9

940
940

GEOLOGY OF THE SITE

THE PROJECT SITE LIES ON THE GLACIATED, MODERATELY ROLLING PLAIN ALONG THE ALLEGHENY ESCARPMENT SEPARATING THE ALLEGHENY PLATEAU FROM THE MISSISSIPPI VALLEY PLAIN THE PROJECT SITE LIES AT A HIGH ELEVATION OF 1,114 AT TOP OF THE IR-71 BRIDGE ABUTMENTS AND A LOW ELEVATION OF 1,092 ON SR-18 BENEATH THE IR-71 BRIDGES IN MEDINA COUNTY, OHIO.

THE WISCONSIN ICE SHEET PASSED OVER THE AREA LEAVING VARIABLE DEPOSITS AND THICKNESSES OF GLACIAL DRIFT MATERIAL. INFORMATION OBTAINED FROM MEDINA COUNTY SOIL SURVEY, NOVEMBER, 1977, INDICATES THAT THE SITE CONSISTS MAINLY OF SILTY CLAY AND CLAY. INFORMATION ALSO INDICATES THAT THE SOILS ALONG IR-71 EMBANKMENT UPPER PORTION ARE MAINLY COMPRISED OF CUT-AND-FILL MATERIALS.

THE OHIO GEOLOGICAL SURVEY INDICATES THAT BEDROCK STANDS AT APPROXIMATE ELEVATION OF 1,050 IN THE VICINITY OF THE SITE. AT THIS ELEVATION IT IS EXPECTED THAT BEDROCK IS COMPRISED OF SHALES AND SHALY SANDSTONE OF LOGAN FORMATION

EXPLORATION

THE SUBSURFACE EXPLORATION PROGRAM FOR THIS PROJECT INCLUDED ADVANCING A TOTAL OF FOUR (4) DRIVE SAMPLE CORE BORINGS WITH A CME-75 TRUCK MOUNTED DRILLING RIG AND A CME-750 ATV MOUNTED DRILLING RIG USING CONVENTIONAL 3 25 OR 4.25 INCH I D HOLLOW STEM AUGERS, PERFORMED DURING JUNE AND JULY, 1992 ALL TEST BORINGS WERE ADVANCED FOR BRIDGE FOUNDATION DESIGN PURPOSE

INVESTIGATIONAL FINDINGS

TEST BORINGS B1-1 AND B1-4 WERE ADVANCED THROUGH THE EXISTING EMBANKMENT MATERIAL. TEST BORING B1-2 AND B1-3 WERE ADVANCED THROUGH ASPHALT PAVEMENT, WHICH WAS FOUND TO BE 10 INCHES THICK AT BOTH LOCATIONS. THE TEST BORINGS DISCLOSED ALTERNATING LAYERS OF GRAVEL AND SAND CLASSIFIED AS A-1-b, SAND CLASSIFIED AS A-3a, ROCK FRAGMENTS WITH SAND AND SILT CLASSIFIED AS A-2-4, ROCK FRAGMENT WITH SILT AND CLAY CLASSIFIED AS A-2-6, SANDY SILT CLASSIFIED AS A-4a, SILT CLASSIFIED AS A-4b, AND SILT AND CLAY CLASSIFIED AS A-6a. THE RELATIVE DENSITY OF THE NON-COHESIVE SOILS ENCOUNTERED WAS FOUND TO RANGE FROM "LOOSE" TO "VERY DENSE," BUT PREDOMINANTLY "VERY DENSE " THE CONSISTENCY OF THE COHESIVE SOILS ENCOUNTERED WAS FOUND TO RANGE FROM "SOFT" TO "HARD," BUT PREDOMINANTLY "VERY STIFF." SILTSTONE, SHALE AND/OR SANDSTONE WERE ENCOUNTERED AT ALL FOUR TEST BORING LOCATIONS TOP OF THE BEDROCK WAS FOUND TO BE DIPPING SOUTH THE OVERALL ROCK QUALITY DESIGNATION (RQD) FOR THE ROCK CORES WAS FOUND TO RANGE FROM 10 TO 26 PERCENT, WHICH CAN BE TERMED AS "VERY POOR "

FOR SPECIFIC CONDITIONS AT VARIOUS DEPTHS, REFER TO THE INDIVIDUAL TEST BORING LOGS WHICH FORM A PART OF THESE PLANS.

LEGEND

- AUGER BORING LOCATION- PLAN VIEW
- PRESS AND/OR DRIVE SAMPLE AND/OR CORE BORING LOCATION- PLAN VIEW
- TR — TOP OF ROCK
- CAPPED PILE
- FOOTING
- FOOTING ON PILE
- HORIZONTAL BAR ON BORING LOG INDICATES THE DEPTH THE SAMPLE WAS TAKEN
- X/Y/Z — FIGURES BESIDE THE BORING LOG IN PROFILE INDICATE THE NUMBER OF BLOWS FOR STANDARD PENETRATION TEST
  - X = NO. OF BLOWS FOR FIRST 6"
  - Y = NO. OF BLOWS FOR SECOND 6"
  - Z = NO. OF BLOWS FOR THIRD 6"
- W —— INDICATES FREE WATER ELEVATION
- INDICATES STATIC WATER ELEVATION

SYMBOLS OF ROCK TYPES

- COAL
- WEATHERED MUDSTONE
- MUDSTONE
- WEATHERED SHALE
- SHALE
- CLAYSTONE
- SILTSTONE
- WEATHERED SANDSTONE
- SANDSTONE
- LEACHED DOLOMITE
- DOLOMITE
- LEACHED LIMESTONE
- LIMESTONE
- BOULDERS or COBBLES

GENERAL INFORMATION

Drive sample / Press sample / Core borings

Drive sample borings are made by means of a mechanically-powered rotary-type drilling machine, employing a 2" O D , 1-3/8" I D split spoon sampler, at 2 5 and/or 5-foot depth intervals, driven by means of a 140 lb drop hammer with a free fall of 30" The number of blows required to drive the sampler 18" is considered the standard penetration test

Drive/press borings are made by means of a mechanically-powered rotary-type drilling machine, employing a 2" O D , 1-3/8" I D split spoon sampler, and 3" O D thin wall press sampler The press sampler is advanced by continuous uniform pressure, applied by the drilling machine

Core borings are made by means of a mechanically-powered rotary-type drilling machine, employing a NXM core barrel with industrial diamond cutting head

The boring log sheets display a graphic plot of the information obtained including depth and elevation of the sample, type of sample, the standard penetration test readings in three 6-inch increments, depth and elevation of press samples, field number assigned to sample, sample description - based on laboratory tests utilizing the Casagrande AC classification system - and gradation, plasticity and moisture determinations Results of strength and consolidation testing, if performed on undisturbed samples, will appear graphically on separate enclosures Rock samples are displayed on the log sheets including depth and elevation of the sample, amount of recovery and a visual classification based on type, color, degree of hardness, grain size, deterioration, bedding, acid reaction and other qualifying factors

At depths where materials are bouldery or gravelly to the extent that the sampler can not be utilized, a wash sample is procured and visually classified, in order to determine the general characteristics of the material These samples are not considered sufficiently representative to warrant laboratory testing

PARTICLE SIZE DEFINITIONS

12"	3"	2.0mm		0.42mm	0.074mm	0.005mm
Boulders	Cobbles	Gravel	Coarse Sand	Fine Sand	Silt	Clay
		No. 10 sieve		No. 40 sieve	No. 200 sieve	

CALCULATED | CHECKED

STRUCTURE FOUNDATION INVESTIGATION
MED - 71 - 1685 (L&R)

1/4

MED - 71 - 15.78

1
36

STRUCTURE FOUNDATION INVESTIGATION
BRIDGE No MED-71-1685 (L&R)
WIDENING
MEDINA COUNTY, OHIO

R&R INTERNATIONAL INC
Geotechnical Engineers • Geologists
1234 S CLEVELAND MASSILLON ROAD
PO BOX 4383
AKRON OH 44321

CHECKED BY	REVIEWED	DATE
J X	G M	10 29 92



DESIGN FILE : i:\pd_med_ir71\dgn\soils\soils01.dgn
USERNAME : jrogers
DATE : 18-NOV-1999
TIME : 13:48

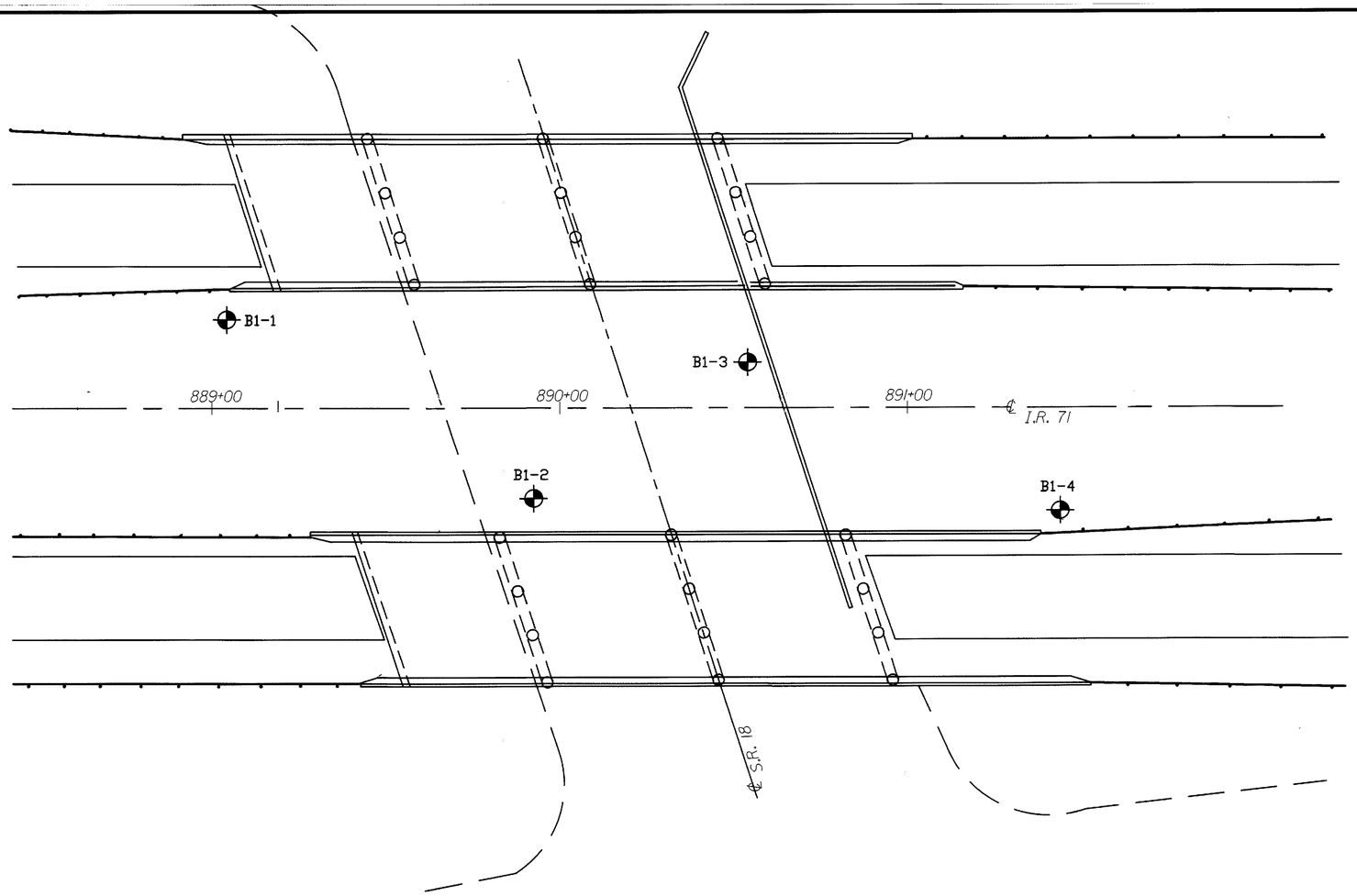

SCALE: HORIZ. 1"=20'
VERT. 1"=10'

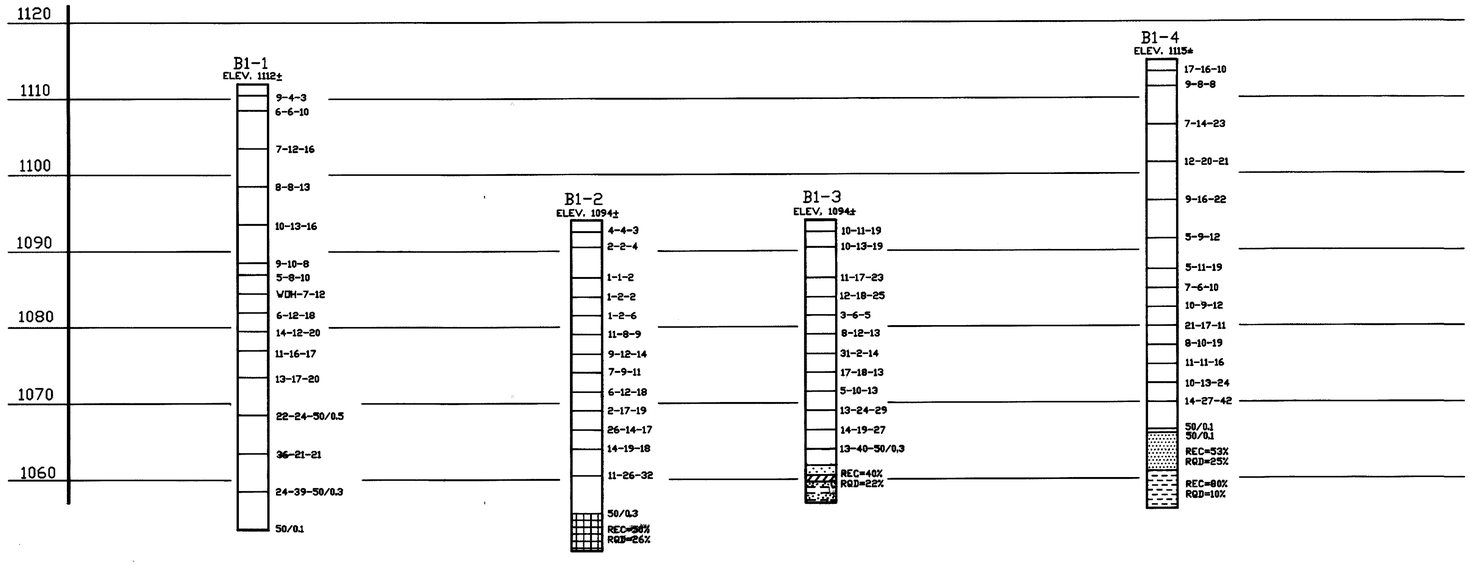

STRUCTURE FOUNDATION INVESTIGATION
BRIDGE No. MED-71-1685 (L&R)
WIDENING
MEDINA COUNTY, OHIO

R&R INTERNATIONAL, INC.

Geotechnical Engineers • Geologists
1234 S. CLEVELAND-MASSILLON ROAD
P.O. BOX 4383
AKRON, OH 44321

DRAWN BY	CHECKED BY	REVIEWED	DATE
V. K.	J.X.	G.M.R.	10.29.92

CALCULATED | CHECKED

STRUCTURE FOUNDATION INVESTIGATION
MED - 71 - 1685 (L&R)

2/4

MED - 71 - 15.78

2
36

DESIGN FILE : i:\pd_med_ir71\dgn\soils\soils02.dgn
USERNAME : jrogers
DATE : 18-NOV-1999
TIME : 13:48

LOG OF BORING

Date Started 6-19-92 | Sampler Type SS | Dia. 2.00 inch. | Water Elev. 1059 ±
Date Completed 6-19-92 | Casing: length -- | Dia. 3.25 inch.
Boring No. B1-1 | Station & Offset STA 889+05.07 | Surface Elev. 1112 ±

ELEV.	DEPTH	STD.PEN. (N)	REC. Ft.	LOSS Ft.	DESCRIPTION	SAMPLE NO.	SAMPLE TYPE	PHYSICAL CHARACTERITICS % AGG.	% COAR. SAND	% FINE SAND	% SILT	% CLAY	L.L.	P.L.	P.I.	W.C. %	SHTL CLASS.
1112.0	0																
	1.5	9-4-3	0.7		Medium stiff, brown SANDY SILT, trace to little gravel, moist.	1	SS										
1108.5	3.5	6-6-10	0.7			2	SS										
	8.5	7-12-16	0.8			3	SS	4.2	6.8	11.3	*	77.7	30.4	19.2	11.2	15.6	A-6a
	13.5	8-8-13	1.0			4	SS										
					Medium stiff to hard, brown and gray molted SILT AND CLAY, little to some gravel, dry to moist.												
	18.5	10-13-16	1.2			5	SS										
	23.5	9-10-8	0.8			6	SS										
	25.0	5-8-10	1.2			7	SS										
1085.0	27.0 27.5	WOH-7-12	1.5			8	SS	21.9	16.1	20.4	*	41.6	—	—	—	19.1	A-4a
	30.0	6-12-18	1.5			9	SS										
	32.5	14-12-20	1.2			10	SS	33.5	9.2	16.5	*	40.8	—	—	—	9.7	A-4a
	35.0	11-16-17	1.5		Very stiff to hard, brown SANDY SILT, some gravel, moist.	11	SS										
	38.5	13-17-20	0.8			12	SS										
1069.0	43.0 43.5	22-24-50/0.5	1.2			13	SS	31.0	10.3	25.5	*	33.2	—	—	—	9.2	A-2-4
					Very dense to dense, gray ROCK FRAGMENTS W/ SAND AND SILT, wet to saturated.												
	48.5	36-21-21	1.0			14	SS										
1062.0	50.0																
	53.5	24-39-50/0.3	0.6		Gray SHALE, highly weathered. Note: -auger refusal encountered at 58.6 ft.	15	SS										
1053.4	58.6	50/0.1	0.1			16	SS	58.0	10.7	5.6	*	25.7	—	—	—	10.8	A-2-4
					TERMINATION DEPTH 58.6 FEET												

* SILT AND CLAY COMBINED

LOG OF BORING

Date Started 7-2-92 | Sampler Type SS | Dia. 2.00 inch. | Water Elev. 1087 ±
Date Completed 7-2-92 | Casing: length -- | Dia. 4.25 inch.
Boring No. B1-2 | Station & Offset STA 889+92.07 | Surface Elev. 1094 ±

ELEV.	DEPTH	STD.PEN. (N)	REC. Ft.	LOSS Ft.	DESCRIPTION	SAMPLE NO.	SAMPLE TYPE	PHYSICAL CHARACTERITICS % AGG.	% COAR. SAND	% FINE SAND	% SILT	% CLAY	L.L.	P.L.	P.I.	W.C. %	SHTL CLASS.
1094.0	0																
1093.2	0.8				ASPHALT												
	1.5	4-4-3	1.2		Medium, brown SANDY SILT, trace clay, moist.	1	SS										
1091.0	3.0 3.5	2-2-4	0.4		Loose, brown SAND, trace to little silt, moist.	2	SS	26.0	32.1	27.5	*	14.4	--	--	--	5.9	A-3a
1089.0	5.0																
	7.5	1-1-2	1.3		Soft brown SILT, trace to little sand, trace to little gravel, moist to wet.	3	SS	4.7	5.5	13.6	*	76.2	--	--	--	19.3	A-4b
	10.0	1-2-2	0.7			4	SS										
1082.0	12.0 12.5	1-2-6	1.5			5	SS	17.1	10.1	15.0	*	57.8	23.9	15.7	8.2	17.7	A-4a
	15.0	11-8-9	1.5			6	SS	17.3	11.4	20.2	*	51.1	--	--	--	10.7	A-4a
	17.5	9-12-14	1.3		Medium stiff to very stiff, brown to grayish brown SANDY SILT, little gravel, saturated.	7	SS										
	20.0	7-9-11	1.4			8	SS										
	22.5	6-12-18	1.2			9	SS										
1070.0	24.0																
	25.0	2-17-19	1.5			10	SS										
	27.5	26-14-17	1.5			11	SS										
	30.0	14-19-18	1.4		Dense to very dense, gray SHALE FRAGMENTS W/ SILT AND CLAY, saturated.	12	SS										
	33.5	11-26-32	0.9			13	SS										
1055.5	38.5	50/0.3	0.3			14	SS										
		REC = 50% RQD = 26%			Gray SHALE, highly weathered and fractured. Note: gray clay seam from approx. depth of 40.0 to 40.5 ft.	RUN 1 38.5 to 43.5	NXW										
1050.5	43.5				TERMINATION DEPTH 43.5 FEET												

* SILT AND CLAY COMBINED

STRUCTURE FOUNDATION INVESTIGATION
MED - 71 - 1685 (L&R)

CALCULATED | CHECKED

3/4

MED - 71 - 15.78

3 / 36

STRUCTURE FOUNDATION INVESTIGATION
BRIDGE No. MED-71-1685 (L&R)
WIDENING
MEDINA COUNTY, OHIO

R&R INTERNATIONAL, INC.
Geotechnical Engineers • Geologists
1234 S. CLEVELAND-MASSILLON ROAD
P.O. BOX 4383
AKRON, OH 44321

TYPED BY	CHECKED BY	REVIEWED	DATE
T.E.	J.X.	G.M.R.	10.29.92

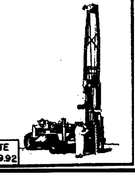

DESIGN FILE : I:\pd_med_ir71\dgn\soils\soils03.dgn
USERNAME : jrogers
DATE : 18-NOV-1999
TIME : 13:48

LOG OF BORING

Date Started 6-18-92 | Sampler Type SS | Dia. 2.00 inch. | Water Elev. 1084 ±
Date Completed 6-18-92 | Casing: length -- | Dia. 3.25 inch.
Boring No. B1-4 | Station & Offset STA. 891+42.0T, 29'R | Surface Elev. 1115 ±

ELEV.	DEPTH	STD.PEN. (N)	REC. Ft.	LOSS Ft.	DESCRIPTION	SAMPLE NO.	SAMPLE TYPE	PHYSICAL CHARACTERITICS % AGG.	% COAR. SAND	% FINE SAND	% SILT	% CLAY	L.L.	P.L.	P.I.	W.C. %	SHTL CLASS.
1115.0	0																
	1.5	17-16-10	0.8		Very stiff, brown and gray SANDY SILT, little to some gravel, dry to moist.	1	SS										
1112.5	2.5																
	3.5	9-8-8	1.2			2	SS										
	8.5	7-14-23	1.5			3	SS										
	13.5	12-20-21	1.5		Very stiff to hard, brown and gray mottled SILT AND CLAY, little gravel, trace sand, moist. Note: -color changes brown at an approx. depth of 13.0 ft. -color changes gray at an approx. depth of 22.0 ft.	4	SS	7.1	7.4	11.8	*	73.7	--	--	--	14.8	A-6a
	18.5	9-16-22	1.5			5	SS										
	23.5	5-9-12	1.5			6	SS										
	27.5	5-11-19	1.5			7	SS										
	30.0	7-6-10	1.5			8	SS										
1084.0	31.0																
	32.5	10-9-12	1.5			9	SS	19.5	14.9	17.9	*	47.7	--	--	--	12.6	A-4a
	35.0	21-17-11	1.5		Medium dense, gray SAND AND GRAVEL, little to some silt, wet to saturated	10	SS										
	37.5	8-10-19	1.5			11	SS										
1077.0	38.0																
	40.0	11-11-16	1.5		Very stiff to hard, gray SILT AND CLAY, little sand, trace to little gravel, saturated.	12	SS										
	42.5	10-13-24	1.5			13	SS	6.1	8.2	9.5	*	76.2	23.6	16.5	7.1	15.4	A-4a
1070.0	45.0	14-27-42	1.2			14	SS										
	48.5	50/0.1	1.0		Hard, gray SANDY SILT, some gravel, saturated. Note: auger refusal encountered at 49 ft.	15	SS										
1066.0	49.0	50/0.1	1.0			16	SS										
		REC = 53% RQD = 25%			Gray SANDSTONE, very dense, slightly weathered and fractured Note: - thin gray clay seam encountered at approx. depths of 49.0 ft., 50.0 ft. and 54.0 to 58.0 ft. - gray clay seam from approx. depth of 50.0 to 50.3 ft.	RUN 1 49.0 to 54.0	NXW										
1061.0	54.0																
		REC = 80% RQD = 10%			Gray CLAYEY SHALE, extremely weathered, fractured. Note: - clay seam from approx. depth of 54.0 ft. - clay seam from approx. depth of 56.0 ft.	RUN 2 54.0 to 59.0	NXW										
1056.0	59.0				TERMINATION DEPTH 59.0 FEET												

* SILT AND CLAY COMBINED

LOG OF BORING

Date Started 7-2-92 | Sampler Type SS | Dia. 2.00 inch. | Water Elev. 1081.5
Date Completed 7-2-92 | Casing: length -- | Dia. 3.25 inch.
Boring No. B1-3 | Station & Offset STA. 890+54.0T, 13'L | Surface Elev. 1094 ±

ELEV.	DEPTH	STD.PEN. (N)	REC. Ft.	LOSS Ft.	DESCRIPTION	SAMPLE NO.	SAMPLE TYPE	PHYSICAL CHARACTERITICS % AGG.	% COAR. SAND	% FINE SAND	% SILT	% CLAY	L.L.	P.L.	P.I.	W.C. %	SHTL CLASS.
1094.0	0.0																
1093.2	0.8				ASPHALT												
	1.5	10-11-19	0.9			1	SS	10.7	9.5	13.3	*	66.5	--	--	--	16.0	A-6a
	3.5	10-13-19	0.8			2	SS	14.8	14.9	13.2	*	57.1	33.3	21.4	11.9	12.8	A-6a
	7.5	11-17-23	0.8		Stiff to hard, brown SILT AND CLAY, trace to little sand, moist.	3	SS										
	10.0	12-18-25	0.8			4	SS										
	12.5	3-6-5	1.2			5	SS										
	15.0	8-12-13	1.1			6	SS	14.5	9.9	15.0	*	60.6	--	--	--	15.0	A-6a
1077.0	17.0																
	17.5	31-50/0.4	1.4			7	SS										
	20.0	17-18-13	0.5		Very stiff to hard, grayish brown SANDY SILT, trace to some gravel, moist to wet.	8	SS										
	22.5	5-10-13	1.0			9	SS										
	25.0	13-24-29	1.2			10	SS	21.4	8.8	21.8	*	48.0	--	--	--	9.3	A-4a
1067.5	26.5																
	27.5	14-19-27	1.5		Dense, gray SHALE FRAGMENTS W/ SAND AND SILT, moist.	11	SS										
	30.0	13-40-50/0.3	0.7		Note: auger refusal encountered at 32.0 ft.	12	SS	55.5	12.5	4.9	*	27.0	--	--	--	6.4	A-2-4
1062.0	32.0				Yellow to white SANDSTONE, medium grained.												
1060.9	33.1		REC=40%		Grayish brown CLAY SEAM, wet.	RUN1 32.0 to 37.0	NXW										
1060.0	34.0		RQD=22%														
					Gray SILTSTONE, slightly fractured.												
1057.0	37.0				TERMINATION DEPTH 37.0 FEET												

* SILT AND CLAY COMBINED

CALCULATED | CHECKED

STRUCTURE FOUNDATION INVESTIGATION
MED - 71 - 1685 (L&R)

4/4

MED - 71 - 15.78

4
36

STRUCTURE FOUNDATION INVESTIGATION
BRIDGE No. MED-71-1685 L&R
MEDINA COUNTY, OHIO

R&R INTERNATIONAL INC.
Geotechnical Engineers • Geologists
1234 S. CLEVELAND-MASSILLON ROAD
P.O. BOX 4383
AKRON, OH 44321

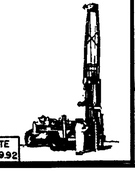

TYPED BY	CHECKED BY	REVIEWED	DATE
T.E.	J.X.	G.M.R.	10.29.92

DESIGN FILE : I:\pd_med_ir71\dgn\soils\soils04.dgn
USERNAME : jrogers
DATE : 18-NOV-1999
TIME : 13:48

GEOLOGY OF THE SITE

THE PROJECT SITE LIES ON THE GLACIATED, MODERATELY ROLLING PLAIN ALONG THE ALLEGHENY ESCARPMENT SEPARATING THE ALLEGHENY PLATEAU FROM THE MISSISSIPPI VALLEY PLAIN. THE PROJECT SITE LIES AT A HIGH ELEVATION OF 1,173 AT TOP OF THE IR-71 BRIDGE ABUTMENTS AND A LOW ELEVATION OF 1,050 ON IR-271 BENEATH THE IR-71 BRIDGES IN MEDINA COUNTY, OHIO.

THE WISCONSIN ICE SHEET PASSED OVER THE AREA LEAVING VARIABLE DEPOSITS AND THICKNESSES OF GLACIAL DRIFT MATERIAL. INFORMATION OBTAINED FROM MEDINA COUNTY SOIL SURVEY, NOVEMBER, 1977, INDICATES THAT THE SITE CONSISTS MAINLY OF SILTY CLAY AND CLAY. INFORMATION ALSO INDICATES THAT THE SOILS ALONG IR-71 EMBANKMENT UPPER PORTION ARE MAINLY COMPRISED OF CUT-AND-FILL MATERIALS.

THE OHIO GEOLOGICAL SURVEY INDICATES THAT BEDROCK STANDS AT APPROXIMATE ELEVATION OF 1,100 IN THE VICINITY OF THE SITE. AT THIS ELEVATION IT IS EXPECTED THAT BEDROCK IS COMPRISED OF SHALES AND SHALY SANDSTONE OF LOGAN FORMATION.

EXPLORATION

THE SUBSURFACE EXPLORATION PROGRAM FOR THIS PROJECT INCLUDED ADVANCING A TOTAL OF FOUR (4) DRIVE SAMPLE CORE BORINGS WITH A CME-75 TRUCK MOUNTED DRILLING RIG USING CONVENTIONAL 3.25 OR 4.25 INCH I.D. HOLLOW STEM AUGERS, PERFORMED DURING JUNE AND JULY, 1992. ALL TEST BORINGS WERE ADVANCED FOR BRIDGE FOUNDATION DESIGN PURPOSE.

INVESTIGATIONAL FINDINGS

TEST BORINGS B2-1 AND B2-4 WERE ADVANCED THROUGH THE EXISTING EMBANKMENT MATERIAL. TEST BORING B2-2 AND B2-3 WERE ADVANCED THROUGH ASPHALT PAVEMENT, WHICH WAS FOUND TO BE 7 INCHES THICK AT BOTH LOCATIONS THE TEST BORINGS DISCLOSED ALTERNATING LAYERS OF SAND CLASSIFIED AS A-3a, ROCK FRAGMENT WITH SILT AND CLAY CLASSIFIED AS A-2-6, SANDY SILT CLASSIFIED AS A-4a, SILT CLASSIFIED AS A-4b, AND SILT AND CLAY CLASSIFIED AS A-6a. THE RELATIVE DENSITY OF THE NON-COHESIVE SOILS ENCOUNTERED WAS FOUND TO RANGE FROM "MEDIUM DENSE" TO "VERY DENSE." THE CONSISTENCY OF THE COHESIVE SOILS ENCOUNTERED WAS FOUND TO RANGE FROM "SOFT" TO "HARD," BUT PREDOMINANTLY "VERY STIFF." SANDSTONE AND/OR SHALE WERE ENCOUNTERED WITHIN THE EXPLORED DEPTHS AT THE TEST BORING LOCATIONS B2-1 THROUGH B2-4. TOP OF THE BEDROCK WAS FOUND TO BE SLIGHTLY DIPPING NORTH. THE OVERALL ROCK QUALITY DESIGNATION (RQD) FOR THE ROCK CORES WAS FOUND TO RANGE FROM 0 TO 86 PERCENT, WHICH CAN BE TERMED AS "VERY POOR" TO "GOOD."

FOR SPECIFIC CONDITIONS AT VARIOUS DEPTHS, REFER TO THE INDIVIDUAL TEST BORING LOGS WHICH FORM A PART OF THESE PLANS.

LEGEND

- AUGER BORING LOCATION - PLAN VIEW
- PRESS AND/OR DRIVE SAMPLE AND/OR CORE BORING LOCATION - PLAN VIEW
- TR — TOP OF ROCK
- CAPPED PILE
- FOOTING
- FOOTING ON PILE
- HORIZONTAL BAR ON BORING LOG INDICATES THE DEPTH THE SAMPLE WAS TAKEN
- X/Y/Z — FIGURES BESIDE THE BORING LOG IN PROFILE INDICATE THE NUMBER OF BLOWS FOR STANDARD PENETRATION TEST
  - X = NO OF BLOWS FOR FIRST 6"
  - Y = NO OF BLOWS FOR SECOND 6"
  - Z = NO OF BLOWS FOR THIRD 6"
- W — INDICATES FREE WATER ELEVATION
- INDICATES STATIC WATER ELEVATION

SYMBOLS OF ROCK TYPES

- COAL
- WEATHERED MUDSTONE
- MUDSTONE
- WEATHERED SHALE
- SHALE
- CLAYSTONE
- SILTSTONE
- WEATHERED SANDSTONE
- SANDSTONE
- LEACHED DOLOMITE
- DOLOMITE
- LEACHED LIMESTONE
- LIMESTONE
- BOULDERS or COBBLES

GENERAL INFORMATION

Drive sample / Press sample / Core borings

Drive sample borings are made by means of a mechanically-powered rotary-type drilling machine, employing a 2" O D , 1-3/8" I D split spoon sampler, at 2 5 and/or 5-foot depth intervals, driven by means of a 140 lb drop hammer with a free fall of 30" The number of blows required to drive the sampler 18" is considered the standard penetration test

Drive/press borings are made by means of a mechanically-powered rotary-type drilling machine, employing a 2" O D , 1-3/8" I D split spoon sampler, and 3" O D thin wall press sampler The press sampler is advanced by continuous uniform pressure, applied by the drilling machine

Core borings are made by means of a mechanically-powered rotary-type drilling machine, employing a NXM core barrel with industrial diamond cutting head

The boring log sheets display a graphic plot of the information obtained including depth and elevation of the sample, type of sample, the standard penetration test readings in three 6-inch increments, depth and elevation of press samples, field number assigned to sample, sample description - based on laboratory tests utilizing the Casagrande AC classification system - and gradation, plasticity and moisture determinations Results of strength and consolidation testing, if performed on undisturbed samples, will appear graphically on separate enclosures Rock samples are displayed on the log sheets including depth and elevation of the sample, amount of recovery and a visual classification based on type, color, degree of hardness, grain size, deterioration, bedding, acid reaction and other qualifying factors

At depths where materials are bouldery or gravelly to the extent that the sampler can not be utilized, a wash sample is procured and visually classified, in order to determine the general characteristics of the material These samples are not considered sufficiently representative to warrant laboratory testing

PARTICLE SIZE DEFINITIONS

12"	3"	2 0mm	0 42mm	0 074mm	0 005mm
Boulders	Cobbles	Gravel	Coarse Sand	Fine Sand	Silt	Clay
		No 10 sieve	No 40 sieve	No 200 sieve	

STRUCTURE FOUNDATION INVESTIGATION
MED - 71 - 1870 (L&R)

CALCULATED | CHECKED

1/4

MED - 71 - 15.78

5
36

STRUCTURE FOUNDATION INVESTIGATION
BRIDGE No. MED-71-1870 L&R
WIDENING
MEDINA COUNTY, OHIO

R&R INTERNATIONAL INC

Geotechnical Engineers • Geologists
1234 S CLEVELAND-MASSILLON ROAD
PO BOX 4383
AKRON, OH 44321



CHECKED BY	REVIEWED	DATE
J X	G M R	10 29 92

DESIGN FILE : I:\pd_med_ir71\dgn\soils\soils05.dgn
USERNAME : jrogers
DATE : 18-NOV-1999
TIME : 13:48

DATE : 18-NOV-1999
TIME : 13:48

DESIGN FILE : i:\pd_med_ir71\dgn\soils\soils06.dgn
USERNAME : jrogers

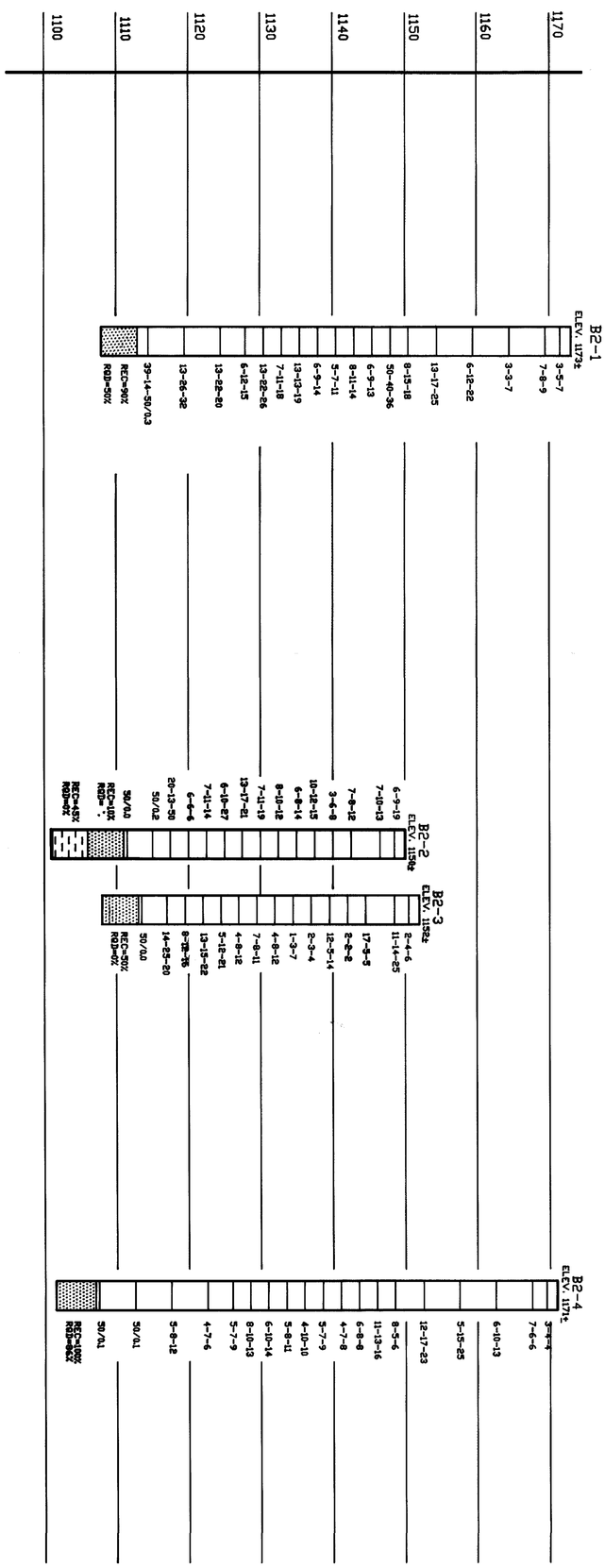

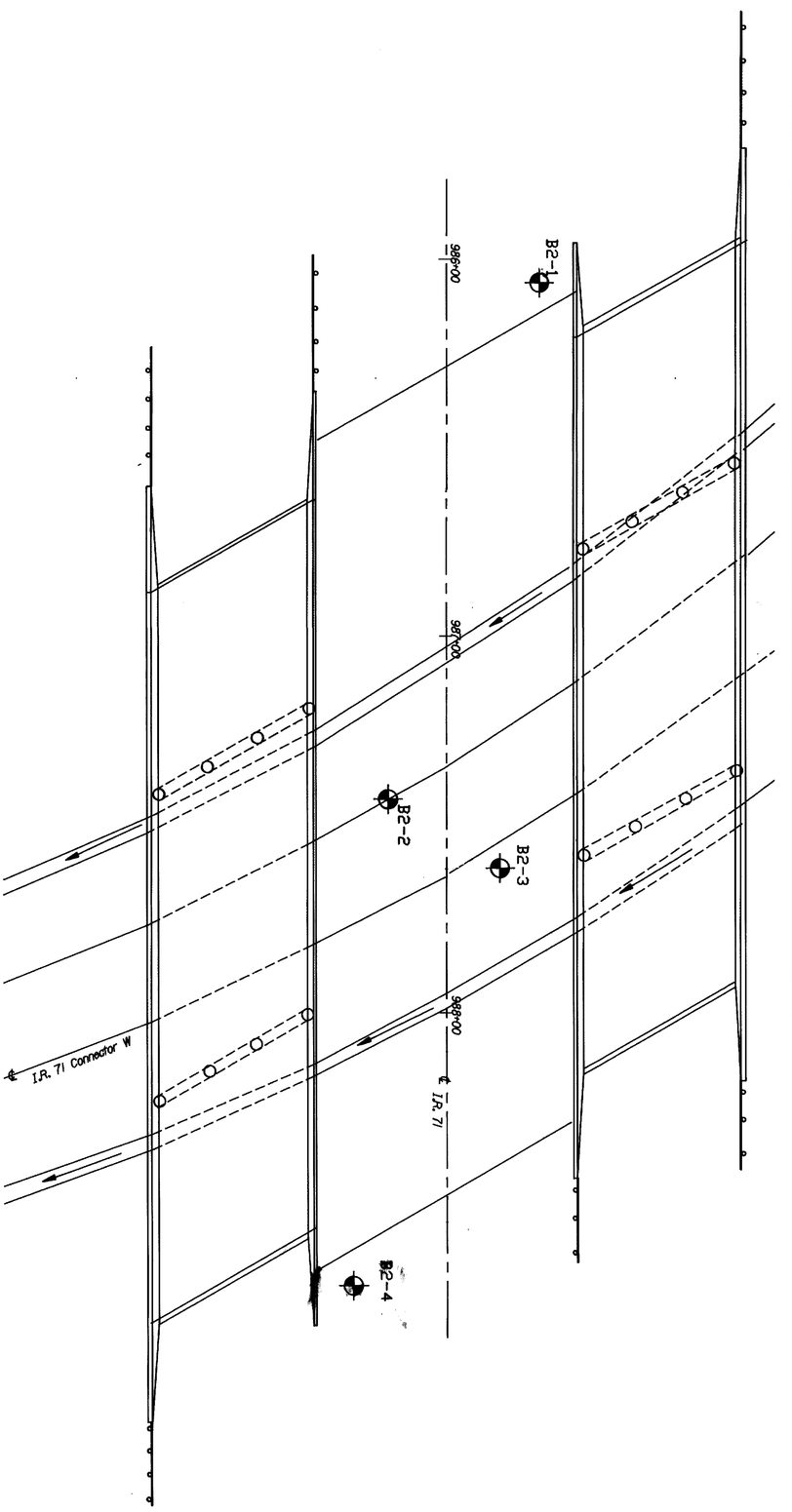

SCALE: HORIZ. 1"=80'
VERT. 1"=10'

STRUCTURE FOUNDATION INVESTIGATION
BRIDGE No. MED-71-1870 L&R
WIDENING
MEDINA COUNTY, OHIO

R&R INTERNATIONAL INC.

Geotechnical Engineers + Geologists
1234 S. CLEVELAND-MASSILLON ROAD
P.O. BOX 4386
AKRON, OH 44321

DRAWN BY	CHECKED BY	REVIEWED	DATE
V.K.	J.K.	G.M.R.	10/28/99

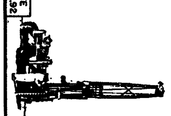

LOG OF BORING

Date Started 6-23-92 | Sampler Type SS | Dia. 2.00 inch. | Water Elev. 1120 ±
Date Completed 6-23-92 | Casing: length -- | Dia. 4.25 inch.
Boring No. B2-1 | Station & Offset STA. 986+14.07 26' L | Surface Elev. 1173 ±

ELEV.	DEPTH	STD.PEN. (N)	REC. Ft.	LOSS Ft.	DESCRIPTION	SAMPLE NO.	SAMPLE TYPE	PHYSICAL CHARACTERITICS % AGG.	COAR. SAND	FINE SAND	SILT	CLAY	L.L.	P.L.	P.I.	W.C. %	SHTL CLASS.
1173.0	0																
	1.5	3-5-7	0.2			1	SS										
	3.5	7-8-9	0.6			2	SS										
	8.5	3-3-7	1.2		Stiff to hard, brown SILT AND CLAY, trace sand, trace gravel, damp to moist. Note: - color darker from 0.0 to 9.0 ft. - shale fragments from 18.5 to 24.0 ft.	3	SS	3.3	7.9	9.8	*	79.0	—	—	—	16.4	A-6a
	13.5	6-12-22	1.2			4	SS										
	18.5	13-17-25	1.4			5	SS										
	22.5	8-15-18	1.5			6	SS										
1149.0	24.0																
	25.0	50-40-36	1.5		Very stiff to hard, brown GRAVEL W/ SAND, SILT AND CLAY, moist to wet.	7	SS										
	27.5	6-9-13	1.5			8	SS										
1143.0	30.0	8-11-14	1.5			9	SS										
	32.5	5-7-11	1.2		Very stiff, grayish brown SILT, trace gravel, trace sand, wet.	10	SS										
	35.0	6-9-14	1.5			11	SS										
1137.0	36.0																
	37.5	13-13-19	1.5		Very stiff to hard, gray SILT AND CLAY, little sand, trace to little gravel, wet.	12	SS	6.0	5.8	11.4	*	76.8	25.8	15.3	10.5	18.3	A-6a
	40.0	7-11-18	1.5			13	SS										
	42.5	13-22-26	1.5			14	SS										
	45.0	6-12-15	1.2			15	SS										
	48.5	13-22-20	1.2			16	SS										
1123.0	50.0																
	53.5	13-26-32	0.5		Hard, grayish brown SANDY SILT, saturated.	17	SS	29.0	9.8	15.2	*	46.0	—	—	—	16.4	A-4a
1118.0	55.0																
	58.5	39-14-50/0.3	1.5		Very dense, yellow to brown to gray SAND, trace silt, saturated.	18	SS										
1113.0	60.0				Gray SANDSTONE, very dense. Note: -gray clay seam at approx. depth of 62.0 ft. -gray clay seam at approx. depth of 62.5 ft. -gray clay seam at approx. depth of 63.5 ft. -gray clay seam at approx. depth of 64.5 ft.													
		REC = 90% RQD = 50%															
1108.0	65.0				TERMINATION DEPTH 65.0 FEET												

* SILT AND CLAY COMBINED

LOG OF BORING

Date Started 7-8-92 | Sampler Type SS | Dia. 2.00 inch. | Water Elev. 1119 ±
Date Completed 7-8-92 | Casing: length -- | Dia. 4.25 inch.
Boring No. B2-2 | Station & Offset STA. 987+50.07 15' R | Surface Elev. 1150 ±

ELEV.	DEPTH	STD.PEN. (N)	REC. Ft.	LOSS Ft.	DESCRIPTION	SAMPLE NO.	SAMPLE TYPE	PHYSICAL CHARACTERITICS % AGG.	COAR. SAND	FINE SAND	SILT	CLAY	L.L.	P.L.	P.I.	W.C. %	SHTL CLASS.
1150.0	0																
1149.4	0.6				ASPHALT												
1148.9	1.1				ROADBASE												
	1.5	6-9-19	0.8			1	SS	7.1	29.6	38.2	*	25.1	—	—	—	16.5	A-3a
	3.5	7-10-13	0.1		Medium dense, brown to yellow SAND, little to some silt, trace gravel, moist.	2	SS										
1145.0	5.0																
	7.5	7-9-12	1.2			3	SS										
	10.0	3-6-8	1.2			4	SS										
	12.5	10-12-15	1.5			5	SS	11.3	5.2	10.5	*	73.0	25.0	16.3	8.7	15.3	A-4a
	15.0	6-8-14	1.5			6	SS										
	17.5	8-10-12	1.5		Stiff to hard, grayish brown SANDY SILT, trace to little gravel, damp to moist.	7	SS	6.8	7.1	12.1	*	74.0	—	—	—	14.9	A-4a
	20.0	7-11-19	1.5			8	SS										
	22.5	13-17-21	1.5			9	SS										
	25.0	6-10-27	1.5			10	SS										
	27.5	7-11-14	1.5			11	SS	26.8	7.3	12.8	*	53.1	—	—	—	11.5	A-4a
1120.0	30.0	6-6-6	1.5			12	SS										
	32.5	20-13-50	1.5		Stiff to hard, grayish brown to white SAND, little sandstone fragments, staurated.	13	SS										
1116.5	33.5																
	35.0	50/.02	0.2			14	SS										
	38.5	50/0.0	0.0		Yellow SANDSTONE, highly weathered, fractured horizontally every 2 to 3 inches.	15	SS										
		REC = 10% RQD = 0%				RUN 1 39.0 to 44.0	NXW										
1104.0	46.0																
		REC = 45% RQD = 0%			Gray SHALE, highly weathered, fractured horizontally every 2 to 3 inches.	RUN 2 44.0 to 49.0	NXW										
1101.0	49.0				TERMINATION DEPTH 49.0 FEET												

* SILT AND CLAY COMBINED

STRUCTURE FOUNDATION INVESTIGATION
BRIDGE No. MED-71-1870 L&R
WIDENING
MEDINA COUNTY, OHIO

R&R INTERNATIONAL, INC.
Geotechnical Engineers • Geologists
1234 S. CLEVELAND-MASSILLON ROAD
P.O. BOX 4383
AKRON, OH 44321

TYPED BY	CHECKED BY	REVIEWED	DATE
T.E.	J.X.	G.M.R.	10.29.92

CALCULATED | CHECKED

STRUCTURE FOUNDATION INVESTIGATION
MED - 71 - 1870 (L&R)

3/4

MED - 71 - 15.78

7
36

DATE : 18-NOV-1999
TIME : 13:48
DESIGN FILE : i:\pd_med_lr-7\dgn\soils\soils07.dgn
USERNAME : jrogers

LOG OF BORING

Date Started 6-23-92 | Sampler Type SS | Dia. 2.00 inch. | Water Elev. 1148 ±
Date Completed 6-23-92 | Casing: length -- | Dia. 3.25 inch.
Boring No. B2-4 | Station & Offset STA. 988+79.07, 24'R | Surface Elev. 1171 ±

ELEV.	DEPTH	STD.PEN. (N)	REC. Ft.	LOSS Ft.	DESCRIPTION	SAMPLE NO.	SAMPLE TYPE	PHYSICAL CHARACTERITICS % AGG.	COAR. SAND	FINE SAND	SILT	CLAY	L.L.	P.L.	P.I.	W.C. %	SHTL CLASS.
1171.0	0																
	1.5	3-4-4	0.7			1	SS										
	3.5	7-6-6	0.3			2	SS										
	8.5	6-10-13	1.0		Stiff to hard, brown SILT AND CLAY, trace gravel, damp to moist.	3	SS										
	13.5	5-15-25	1.5			4	SS	5.3	6.0	7.7	*	81.0	—	—	—	17.0	A-6a
	18.5	12-17-23	1.5			5	SS										
1148.0	22.5 23.0	8-5-6	1.5			6	SS										
	25.0	11-13-16	1.5			7	SS	19.9	6.8	23.9	*	49.4	—	—	—	18.3	A-4a
	27.5	6-8-8	1.5			8	SS										
	30.0	4-7-8	1.5			9	SS										
	32.5	5-7-9	1.5			10	SS										
	35.0	4-10-10	1.5			11	SS										
	37.5	5-8-11	1.5			12	SS										
	40.0	6-10-14	1.5			13	SS										
	42.5	8-10-13	1.5		Stiff to hard, brown to grayish brown SANDY SILT, little to trace gravel, moist to wet.	14	SS	9.1	8.4	13.7	*	68.8	21.0	15.5	5.5	14.8	A-4a
	45.0	5-7-9	1.5		Note: – color changes gray at 58.0 ft.	15	SS										
	48.5	4-7-6	1.5			16	SS										
	53.5	5-8-12	1.5			17	SS										
	58.5	50/0.1	0.1			18	SS	13.6	4.9	44.9	*	36.6	—	—	—	14.7	A-4a
1108.0	63.0 63.5	50/0.1	0.1		Gray SANDSTONE, fine to medium grained, fractured. Note: – thin clay seams encountered at approx. depths of 64.9 ft., 67.8 ft. and 68.8 ft. – rock core sample fractured between approx. depths of 67.5 to 70.0 ft.	19	SS										
		REC = 100% RQD = 86%				RUN 1 64.0 to 69.5	NXW										
1101.5	69.5				TERMINATION DEPTH 69.5 FEET												

* SILT AND CLAY COMBINED

LOG OF BORING

Date Started 7-7-92 | Sampler Type SS | Dia. 2.00 inch. | Water Elev. 1122 ±
Date Completed 7-7-92 | Casing: length -- | Dia. 4.25 inch.
Boring No. B2-3 | Station & Offset STA. 987+69.07, 15'L | Surface Elev. 1152 ±

ELEV.	DEPTH	STD. PEN. (N)	REC. Ft.	LOSS Ft.	DESCRIPTION	SAMPLE NO.	SAMPLE TYPE	PHYSICAL CHARACTERITICS % AGG.	COAR. SAND	FINE SAND	SILT	CLAY	L.L.	P.L.	P.I.	W.C. %	SHTL CLASS.
1152.0	0																
1151.4	0.6				ASPHALT												
	1.5	2-4-6	0.8			1	SS										
	3.5	11-14-25	0.8			2	SS	29.3	15.5	16.7	*	38.5	—	—	—	10.1	A-4a
	7.5	17-5-5	0.0			3	SS										
	10.0	2-2-2	0.0			4	SS										
	12.5	12-5-14	1.5			5	SS	5.0	5.7	9.7	*	79.6	—	—	—	17.6	A-4a
	15.0	2-3-4	1.3		Stiff to hard, grayish brown SANDY SILT, some to little gravel, little some clay, damp to wet.	6	SS										
	17.5	1-3-7	1.5			7	SS	6.8	7.1	12.1	*	74.0	—	—	—	14.9	A-4a
	20.0	4-8-12	1.5			8	SS										
	22.5	7-8-11	1.5			9	SS	6.7	5.7	10.8	*	76.8	26.2	16.8	9.4	16.0	A-4a
	25.0	4-8-12	1.5			10	SS										
	27.5	5-12-21	1.5			11	SS	16.6	10.0	17.8	*	55.6	—	—	—	14.4	A-4a
	30.0	13-15-22	1.3			12	SS										
1119.5	32.5	8-12-16	1.5			13	SS										
	35.0	14-25-20	1.5		Medium dense to dense, gray SAND, little to trace sandstone fragments, saturated.	14	SS										
1113.5	38.5	50/0.0	0.0			15	SS										
		REC = 50% RQD = 0%			Yellow to white SANDSTONE, highly weathered, fractured. Note: – gray clay seam at approx. depth of 43.5 ft.	RUN 1 39.0 to 44.0											
1108.0	44.0				TERMINATION DEPTH 44.0 FEET												

* SILT AND CLAY COMBINED

STRUCTURE FOUNDATION INVESTIGATION
BRIDGE No. MED-71-1870 L&R
WIDENING
MEDINA COUNTY, OHIO

R&R INTERNATIONAL INC.
Geotechnical Engineers • Geologists
1234 S. CLEVELAND-MASSILLON ROAD
P.O. BOX 4383
AKRON, OH 44321

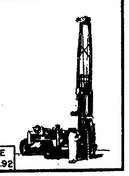

TYPED BY	CHECKED BY	REVIEWED	DATE
T.E.	J.X.	G.M.R.	10.29.92

CALCULATED | CHECKED

STRUCTURE FOUNDATION INVESTIGATION
MED - 71 - 1870 (L&R)

4/4

MED - 71 - 15.78

8
36

DESIGN FILE : i:\pd_med_ir71\dgn\soils\soils08.dgn
USERNAME : jrogers
DATE : 18-NOV-1999
TIME : 13:48

GEOLOGY OF THE SITE

THE PROJECT SITE LIES ON THE GLACIATED, MODERATELY ROLLING PLAIN ALONG THE ALLEGHENY ESCARPMENT SEPARATING THE ALLEGHENY PLATEAU FROM THE MISSISSIPPI VALLEY PLAIN. THE PROJECT SITE LIES AT A HIGH ELEVATION OF 1,152 AT THE TOP OF IR-71 BRIDGE ABUTMENTS AND A LOW ELEVATION OF 1,131 ON CH-66 (WILBUR ROAD) BENEATH THE IR-71 BRIDGES IN MEDINA COUNTY, OHIO.

THE WISCONSIN ICE SHEET PASSED OVER THE AREA LEAVING VARIABLE DEPOSITS AND THICKNESSES OF GLACIAL DRIFT MATERIAL. INFORMATION OBTAINED FROM MEDINA COUNTY SOIL SURVEY, NOVEMBER, 1977, INDICATES THAT THE SITE CONSISTS MAINLY OF SILT AND SAND. INFORMATION ALSO INDICATES THAT THE SOILS ALONG IR-71 EMBANKMENT UPPER PORTION ARE MAINLY COMPRISED OF CUT-AND-FILL MATERIALS.

THE OHIO GEOLOGICAL SURVEY INDICATES THAT BEDROCK STANDS AT APPROXIMATE ELEVATION OF 1,100 IN THE VICINITY OF THE SITE. AT THIS ELEVATION IT IS EXPECTED THAT BEDROCK IS COMPRISED OF SHALES AND SHALY SANDSTONE OF LOGAN FORMATION.

EXPLORATION

THE SUBSURFACE EXPLORATION PROGRAM FOR THIS PROJECT INCLUDED ADVANCING A TOTAL OF FOUR (4) DRIVE SAMPLE CORE BORINGS WITH A CME-75 TRUCK MOUNTED DRILLING RIG AND A CME-750 ATV MOUNTED DRILLING RIG USING CONVENTIONAL 3.25 OR 4.25 INCH I.D. HOLLOW STEM AUGERS; PERFORMED DURING JUNE, 1992. ALL TEST BORINGS WERE ADVANCED FOR BRIDGE FOUNDATION DESIGN PURPOSE.

INVESTIGATIONAL FINDINGS

TEST BORINGS B3-1 AND B3-4 WERE ADVANCED THROUGH THE EXISTING EMBANKMENT MATERIAL. TEST BORING B3-2 AND B3-3 WERE ADVANCED THROUGH ASPHALT PAVEMENT ON CH-66, WHICH WAS FOUND TO BE 3 INCHES THICK AT BOTH LOCATIONS. THE TEST BORINGS DISCLOSED ALTERNATING LAYERS OF GRAVEL AND SAND CLASSIFIED AS A-1-b, SILT CLASSIFIED AS A-4b, AND SILT AND CLAY CLASSIFIED AS A-6a. THE RELATIVE DENSITY OF THE NON-COHESIVE SOILS ENCOUNTERED WAS FOUND TO RANGE FROM "MEDIUM DENSE" TO "VERY DENSE." THE CONSISTENCY OF THE COHESIVE SOILS ENCOUNTERED WAS FOUND TO RANGE FROM "STIFF" TO "HARD," BUT PREDOMINANTLY "HARD." SANDSTONE WAS ENCOUNTERED AT ALL FOUR TEST BORING LOCATIONS. TOP OF THE BEDROCK WAS FOUND TO BE DIPPING SOUTH. THE OVERALL ROCK QUALITY DESIGNATION (RQD) FOR THE ROCK CORES WAS FOUND TO RANGE FROM 10 TO 96 PERCENT, WHICH CAN BE TERMED AS "VERY POOR" TO "EXCELLENT," BUT PREDOMINANTLY "GOOD."

FOR SPECIFIC CONDITIONS AT VARIOUS DEPTHS, REFER TO THE INDIVIDUAL TEST BORING LOGS WHICH FORM A PART OF THESE PLANS.

LEGEND

- AUGER BORING LOCATION - PLAN VIEW
- PRESS AND/OR DRIVE SAMPLE AND/OR CORE BORING LOCATION - PLAN VIEW
- TR — TOP OF ROCK
- CAPPED PILE
- FOOTING
- FOOTING ON PILE
- HORIZONTAL BAR ON BORING LOG INDICATES THE DEPTH THE SAMPLE WAS TAKEN
- X/Y/Z — FIGURES BESIDE THE BORING LOG IN PROFILE INDICATE THE NUMBER OF BLOWS FOR STANDARD PENETRATION TEST
  - X = NO. OF BLOWS FOR FIRST 6"
  - Y = NO. OF BLOWS FOR SECOND 6"
  - Z = NO. OF BLOWS FOR THIRD 6"
- W — INDICATES FREE WATER ELEVATION
- INDICATES STATIC WATER ELEVATION

SYMBOLS OF ROCK TYPES

- COAL
- WEATHERED MUDSTONE
- MUDSTONE
- WEATHERED SHALE
- SHALE
- CLAYSTONE
- SILTSTONE
- WEATHERED SANDSTONE
- SANDSTONE
- LEACHED DOLOMITE
- DOLOMITE
- LEACHED LIMESTONE
- LIMESTONE
- BOULDERS or COBBLES

GENERAL INFORMATION

Drive sample / Press sample / Core borings

Drive sample borings are made by means of a mechanically-powered rotary-type drilling machine, employing a 2" O.D., 1-3/8" I.D. split spoon sampler, at 2.5 and/or 5-foot depth intervals, driven by means of a 140 lb. drop hammer with a free fall of 30". The number of blows required to drive the sampler 18" is considered the standard penetration test.

Drive/press borings are made by means of a mechanically-powered rotary-type drilling machine, employing a 2" O.D., 1-3/8" I.D. split spoon sampler, and 3" O.D. thin wall press sampler. The press sampler is advanced by continuous uniform pressure, applied by the drilling machine.

Core borings are made by means of a mechanically-powered rotary-type drilling machine, employing a NXM core barrel with industrial diamond cutting head.

The boring log sheets display a graphic plot of the information obtained including depth and elevation of the sample, type of sample, the standard penetration test readings in three 6-inch increments, depth and elevation of press samples, field number assigned to sample, sample description - based on laboratory tests utilizing the Casagrande AC classification system - and gradation, plasticity and moisture determinations. Results of strength and consolidation testing, if performed on undisturbed samples, will appear graphically on separate enclosures. Rock samples are displayed on the log sheets including depth and elevation of the sample, amount of recovery and a visual classification based on type, color, degree of hardness, grain size, deterioration, bedding, acid reaction and other qualifying factors.

At depths where materials are bouldery or gravelly to the extent that the sampler can not be utilized, a wash sample is procured and visually classified, in order to determine the general characteristics of the material. These samples are not considered sufficiently representative to warrant laboratory testing.

PARTICLE SIZE DEFINITIONS

12"	3"	2.0mm		0.42mm	0.074mm	0.005mm
Boulders	Cobbles	Gravel	Coarse Sand		Fine Sand	Silt	Clay
			No. 10 sieve	No. 40 sieve	No. 200 sieve		

STRUCTURE FOUNDATION INVESTIGATION
BRIDGE No. MED-71-1918 L&R
WIDENING
MEDINA COUNTY, OHIO

R&R INTERNATIONAL, INC.
Geotechnical Engineers • Geologists
1234 S. CLEVELAND-MASSILLON ROAD
P.O. BOX 4383
AKRON, OH 44321

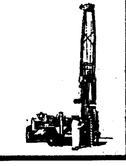

CHECKED BY	REVIEWED	DATE
J.K.	G.M.R.	10.29.92

CALCULATED | CHECKED

STRUCTURE FOUNDATION INVESTIGATION
MED - 71 - 1918 (L&R)

1/3

MED - 71 - 15.78

9
36

DESIGN FILE : i:\pd_med_ir71\dgn\soils\soils09.dgn
USERNAME : jrogers
DATE : 18-NOV-1999
TIME : 13:48

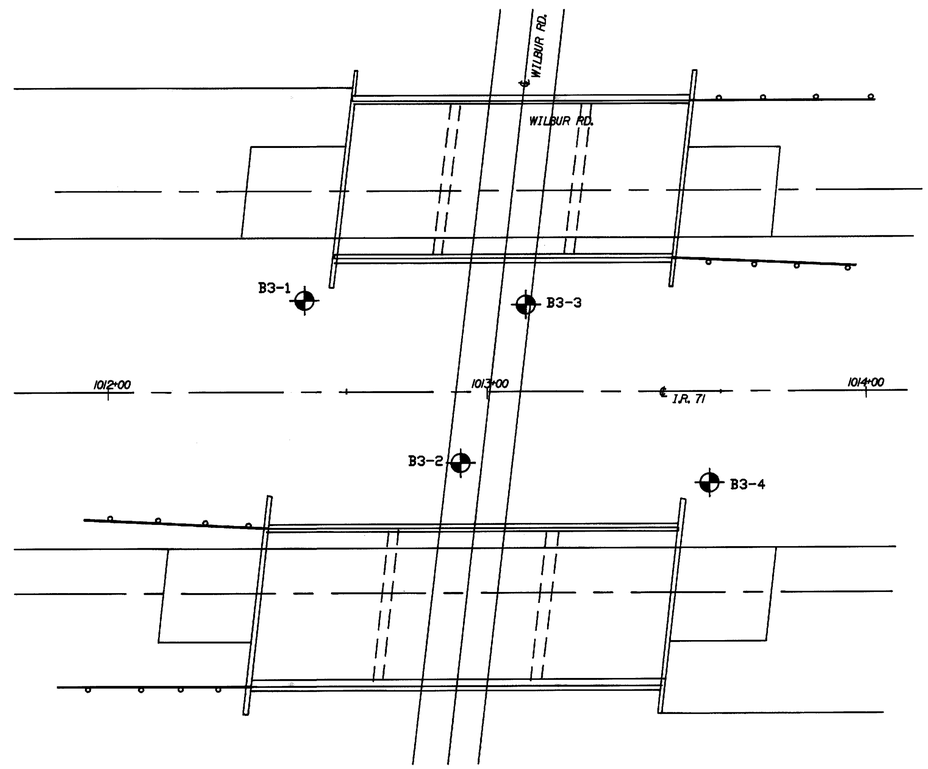

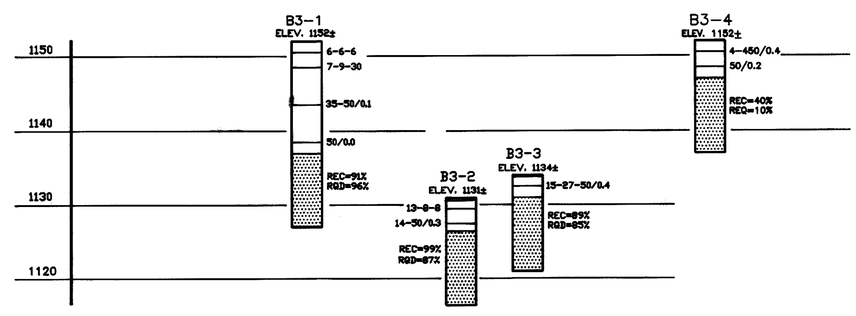

SCALE: HORIZ. 1"=20'
VERT. 1"=10'

STRUCTURE FOUNDATION INVESTIGATION
BRIDGE No. MED-71-1918 L&R
WIDENING
MEDINA COUNTY, OHIO

R&R INTERNATIONAL, INC.

Geotechnical Engineers • Geologists
1234 S. CLEVELAND-MASSILLON ROAD
P.O. BOX 4383
AKRON, OH 44321

DRAWN BY	CHECKED BY	REVIEWED	DATE
V.K.	J.X.	G.M.R.	10.29.92

CALCULATED
CHECKED

STRUCTURE FOUNDATION INVESTIGATION
MED - 71 - 1918 (L&R)

2/3

MED - 71 - 15.78

10
36

DATE : 18-NOV-1999
TIME : 13:48
DESIGN FILE : i:\pd_med_ir71\dgn\soils\soils10.dgn
USERNAME : jrogers

LOG OF BORING

Date Started 6-23-92 | Sampler Type SS | Dia. 2.00 inch. | Water Elev. (DRY)
Date Completed 6-23-92 | Casing: length -- | Dia. 3.25 inch.
Boring No. B3-1 | Station & Offset STA. 1012+52.07, 25'L | Surface Elev. 1152 ±

ELEV.	DEPTH	STD.PEN. (N)	REC. Ft.	LOSS Ft.	DESCRIPTION	SAMPLE NO.	SAMPLE TYPE	PHYSICAL CHARACTERITICS % AGG.	COAR. SAND	FINE SAND	SILT	CLAY	L.L.	P.L.	P.I.	W.C. %	SHTL CLASS.
1152.0	0.0																
	1.5	6-6-6	1.0		Stiff, brown SILT AND CLAY, trace gravel, trace sand, moist.	1	SS										
1148.0	3.5 4.0	7-9-30	1.2			2	SS										
	8.5	35-50/0.1	0.6		Yellow to brown SANDSTONE extremely weathered and fractured.	3	SS										
1138.5	13.5	50/0.0	0.0			4	SS										
		REC = 91% RQD = 96%			Yellow to brown SANDSTONE, slightly fractured, fine to medium grained.	RUN 1 15.0 to 25.0	NXW										
1127.0	25.0				TERMINATION DEPTH 25.0 FEET												

*: SILT AND CLAY COMBINED

LOG OF BORING

Date Started 6-25-92 | Sampler Type SS | Dia. 2.00 inch. | Water Elev. (DRY)
Date Completed 6-25-92 | Casing: length -- | Dia. 4.25 inch.
Boring No. B3-2 | Station & Offset STA. 1012+93.07, 19'R | Surface Elev. 1131 ±

ELEV.	DEPTH	STD.PEN. (N)	REC. Ft.	LOSS Ft.	DESCRIPTION	SAMPLE NO.	SAMPLE TYPE	PHYSICAL CHARACTERITICS % AGG.	COAR. SAND	FINE SAND	SILT	CLAY	L.L.	P.L.	P.I.	W.C. %	SHTL CLASS.
1131.0	0																
	1.5	13-8-8	0.4		Medium dense to very dense, brown SANDSTONE FRAGMENTS, trace silt, dry.	1	SS	68.1	17.9	8.7	*	5.3	—	—	—	16.7	A-1-b
	3.5	14-50/0.3	0.7			2	SS										
1126.5	4.5																
		REC = 99% RQD = 87%			Yellow to white SANDSTONE, slightly fractured, fine to medium grained. Note: - thin silt seams encountered at approx. depths of 3.0, 3.5, and 6.5 ft.	RUN 1 4.5 to 14.5	NXW										
1116.5	14.5				TERMINATION DEPTH 14.5 FEET												

*: SILT AND CLAY COMBINED

LOG OF BORING

Date Started 6-25-92 | Sampler Type SS | Dia. 2.00 inch. | Water Elev. (DRY)
Date Completed 6-25-92 | Casing: length -- | Dia. 4.25 inch.
Boring No. B3-3 | Station & Offset STA. 1013+11.07, 24'L | Surface Elev. 1134 ±

ELEV.	DEPTH	STD.PEN. (N)	REC. Ft.	LOSS Ft.	DESCRIPTION	SAMPLE NO.	SAMPLE TYPE	PHYSICAL CHARACTERITICS % AGG.	COAR. SAND	FINE SAND	SILT	CLAY	L.L.	P.L.	P.I.	W.C. %	SHTL CLASS.
1134.0	0																
	1.5	15-27-50/0.4	0.8		Very dense, brown SAND AND GRAVEL, trace silt and clay, dry.	1	SS										
1131.0	3.0																
		REC = 89% RQD = 85%			Yellow to white SANDSTONE, fine to medium grained, slightly fractured Note: - thin silt seam was encountered at approx. depths of 5.5 ft.	RUN 1 3.0 to 13.0	NXW										
1121.0	13.0				TERMINATION DEPTH 13.0 FEET												

*: SILT AND CLAY COMBINED

LOG OF BORING

Date Started 6-24-92 | Sampler Type SS | Dia. 2.00 inch. | Water Elev. (DRY)
Date Completed 6-24-92 | Casing: length -- | Dia. 3.25 inch.
Boring No. B3-4 | Station & Offset STA. 1013+60.07, 25'R | Surface Elev. 1152 ±

ELEV.	DEPTH	STD.PEN. (N)	REC. Ft.	LOSS Ft.	DESCRIPTION	SAMPLE NO.	SAMPLE TYPE	PHYSICAL CHARACTERITICS % AGG.	COAR. SAND	FINE SAND	SILT	CLAY	L.L.	P.L.	P.I.	W.C. %	SHTL CLASS.
1152.0	0																
	1.5	4-4-50/0.4	0.5		Medium stiff, brown SILT, trace to little clay, moist.	1	SS	6.6	5.3	13.2	*	74.9	—	—	—	18.3	A-4b
1149.5	2.5																
	3.5	50/0.2	0.0			2	SS										
		REC = 40% RQD = 10%			Yellow to white SANDSTONE, fine to medium grained, slightly fractured. Note: - thin silt seam was encountered at approx. depths of 5.5 ft. - lost circulation at approx. depth of 12.0 ft.	RUN 1 5.0 to 15.0	NXW										
1137.0	15.0				TERMINATION DEPTH 15.0 FEET												

*: SILT AND CLAY COMBINED

STRUCTURE FOUNDATION INVESTIGATION
MED - 71 - 1918 (L&R)

CALCULATED | CHECKED

3/3

MED - 71 - 15.78

11
36

STRUCTURE FOUNDATION INVESTIGATION
BRIDGE No. MED-71-1918 (L&R)
WIDENING
MEDINA COUNTY, OHIO

R&R INTERNATIONAL INC.
Geotechnical Engineers • Geologists
1234 S. CLEVELAND-MASSILLON ROAD
P.O. BOX 4383
AKRON, OH 44321

TYPED BY	CHECKED BY	REVIEWED	DATE
T.E.	J.K.	G.M.R.	10.29.92

DESIGN FILE : i:\pd_med_ir71\dgn\soils\soillil.dgn
USERNAME : jrogers
DATE : 18-NOV-1999
TIME : 13:48

GEOLOGY OF THE SITE

THE PROJECT SITE LIES ON THE GLACIATED, MODERATELY ROLLING PLAIN ALONG THE ALLEGHENY ESCARPMENT SEPARATING THE ALLEGHENY PLATEAU FROM THE MISSISSIPPI VALLEY PLAIN. THE PROJECT SITE LIES AT A HIGH ELEVATION OF 1,060 AT TOP OF THE IR-71 BRIDGE ABUTMENTS AND A LOW ELEVATION OF 1,007 AT THE BOTTOM OF ROCKY RIVER BENEATH THE IR-71 BRIDGES IN MEDINA COUNTY, OHIO.

THE WISCONSIN ICE SHEET PASSED OVER THE AREA LEAVING VARIABLE DEPOSITS AND THICKNESSES OF GLACIAL DRIFT MATERIAL. INFORMATION OBTAINED FROM MEDINA COUNTY SOIL SURVEY, NOVEMBER, 1977, INDICATES THAT THE SITE CONSISTS MAINLY OF SANDY SILT, SAND AND SILTY CLAY. INFORMATION ALSO INDICATES THAT THE SOILS ALONG IR-71 EMBANKMENT UPPER PORTION ARE MAINLY COMPRISED OF CUT-AND-FILL MATERIALS.

THE OHIO GEOLOGICAL SURVEY INDICATES THAT BEDROCK STANDS AT APPROXIMATE ELEVATIONS 900 TO 1,000 IN THE VICINITY OF THE SITE. AT THIS ELEVATION IT IS EXPECTED THAT BEDROCK IS COMPRISED OF SHALES AND SHALY SANDSTONE OF LOGAN FORMATION.

EXPLORATION

THE SUBSURFACE EXPLORATION PROGRAM FOR THIS PROJECT INCLUDED ADVANCING A TOTAL OF FOUR (4) DRIVE SAMPLE CORE BORINGS WITH A CME-75 TRUCK MOUNTED DRILLING RIG AND A SIMCO 4000TR-2 TRACK MOUNTED DRILLING RIG USING CONVENTIONAL 3.25 OR 4.24 INCH I.D. HOLLOW STEM AUGERS, PERFORMED DURING JUNE AND AUGUST, 1992. ALL TEST BORINGS WERE ADVANCED FOR BRIDGE FOUNDATION DESIGN PURPOSE. TEST BORING B4-3 WAS ALSO ADVANCED FOR RIVER SCOUR STUDY.

INVESTIGATIONAL FINDINGS

TEST BORINGS B4-1 THROUGH B4-4 WERE ADVANCED THROUGH THE EXISTING EMBANKMENT MATERIAL. TEST BORINGS DISCLOSED ALTERNATING LAYERS OF GRAVEL AND SAND CLASSIFIED AS A-1-b, SAND CLASSIFIED AS A-3a, SANDY SILT CLASSIFIED AS A-4a, SILT CLASSIFIED AS A-4b, AND SILT AND CLAY CLASSIFIED AS A-6a. THE RELATIVE DENSITY OF THE NON-COHESIVE SOILS ENCOUNTERED WAS FOUND TO BE "VERY DENSE." THE CONSISTENCY OF THE COHESIVE SOILS ENCOUNTERED WAS FOUND TO RANGE FROM "SOFT" TO "HARD," BUT PREDOMINANTLY "HARD." SANDSTONE WAS ENCOUNTERED AT TEST BORING LOCATION B4-4. THE ROCK QUALITY DESIGNATION (RQD) FOR THE ROCK CORES WAS FOUND TO BE 10 PERCENT, WHICH CAN BE TERMED AS "VERY POOR."

FOR SPECIFIC CONDITIONS AT VARIOUS DEPTHS, REFER TO THE INDIVIDUAL TEST BORING LOGS WHICH FORM A PART OF THESE PLANS.

LEGEND

- AUGER BORING LOCATION - PLAN VIEW
- PRESS AND/OR DRIVE SAMPLE AND/OR CORE BORING LOCATION - PLAN VIEW
- TR — TOP OF ROCK
- CAPPED PILE
- FOOTING
- FOOTING ON PILE
- HORIZONTAL BAR ON BORING LOG INDICATES THE DEPTH THE SAMPLE WAS TAKEN
- X/Y/Z — FIGURES BESIDE THE BORING LOG IN PROFILE INDICATE THE NUMBER OF BLOWS FOR STANDARD PENETRATION TEST
  - X = NO. OF BLOWS FOR FIRST 6"
  - Y = NO. OF BLOWS FOR SECOND 6"
  - Z = NO. OF BLOWS FOR THIRD 6"
- W — INDICATES FREE WATER ELEVATION
- INDICATES STATIC WATER ELEVATION

SYMBOLS OF ROCK TYPES

- COAL
- WEATHERED MUDSTONE
- MUDSTONE
- WEATHERED SHALE
- SHALE
- CLAYSTONE
- SILTSTONE
- WEATHERED SANDSTONE
- SANDSTONE
- LEACHED DOLOMITE
- DOLOMITE
- LEACHED LIMESTONE
- LIMESTONE
- BOULDERS or COBBLES

GENERAL INFORMATION

Drive sample / Press sample / Core borings

Drive sample borings are made by means of a mechanically-powered rotary-type drilling machine, employing a 2" O.D., 1-3/8" I.D. split spoon sampler, at 2.5 and/or 5-foot depth intervals, driven by means of a 140 lb. drop hammer with a free fall of 30". The number of blows required to drive the sampler 18" is considered the standard penetration test.

Drive/press borings are made by means of a mechanically-powered rotary-type drilling machine, employing a 2" O.D., 1-3/8" I.D. split spoon sampler, and 3" O.D. thin wall press sampler. The press sampler is advanced by continuous uniform pressure, applied by the drilling machine.

Core borings are made by means of a mechanically-powered rotary-type drilling machine, employing a NXM core barrel with industrial diamond cutting head.

The boring log sheets display a graphic plot of the information obtained including depth and elevation of the sample, type of sample, the standard penetration test readings in three 6-inch increments, depth and elevation of press samples, field number assigned to sample, sample description - based on laboratory tests utilizing the Casagrande AC classification system - and gradation, plasticity and moisture determinations. Results of strength and consolidation testing, if performed on undisturbed samples, will appear graphically on separate enclosures. Rock samples are displayed on the log sheets including depth and elevation of the sample, amount of recovery and a visual classification based on type, color, degree of hardness, grain size, deterioration, bedding, acid reaction and other qualifying factors.

At depths where materials are bouldery or gravelly to the extent that the sampler can not be utilized, a wash sample is procured and visually classified, in order to determine the general characteristics of the material. These samples are not considered sufficiently representative to warrant laboratory testing.

PARTICLE SIZE DEFINITIONS

12"	3"	2.0mm		0.42mm	0.074mm	0.005mm	
Boulders	Cobbles	Gravel	Coarse Sand	Fine Sand	Silt		Clay
		No. 10 sieve		No. 40 sieve	No. 200 sieve		

STRUCTURE FOUNDATION INVESTIGATION
BRIDGE No. MED-71-1992 L&R
WIDENING
MEDINA COUNTY, OHIO

R&R INTERNATIONAL, INC.
Geotechnical Engineers • Geologists
1234 S. CLEVELAND-MASSILLON ROAD
P.O. BOX 4383
AKRON, OH 44321

CHECKED BY	REVIEWED	DATE
J.X.	G.M.R.	10-29-92

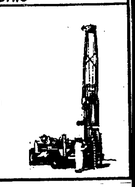

CALCULATED | CHECKED

STRUCTURE FOUNDATION INVESTIGATION
MED - 71 - 1992 (L&R)

1/4

MED - 71 - 15.78

12/36

DESIGN FILE : i:\pd_med_ir71\dgn\soils\soilsl2.dgn
USERNAME : jrogers
DATE : 18-NOV-1999
TIME : 13:48

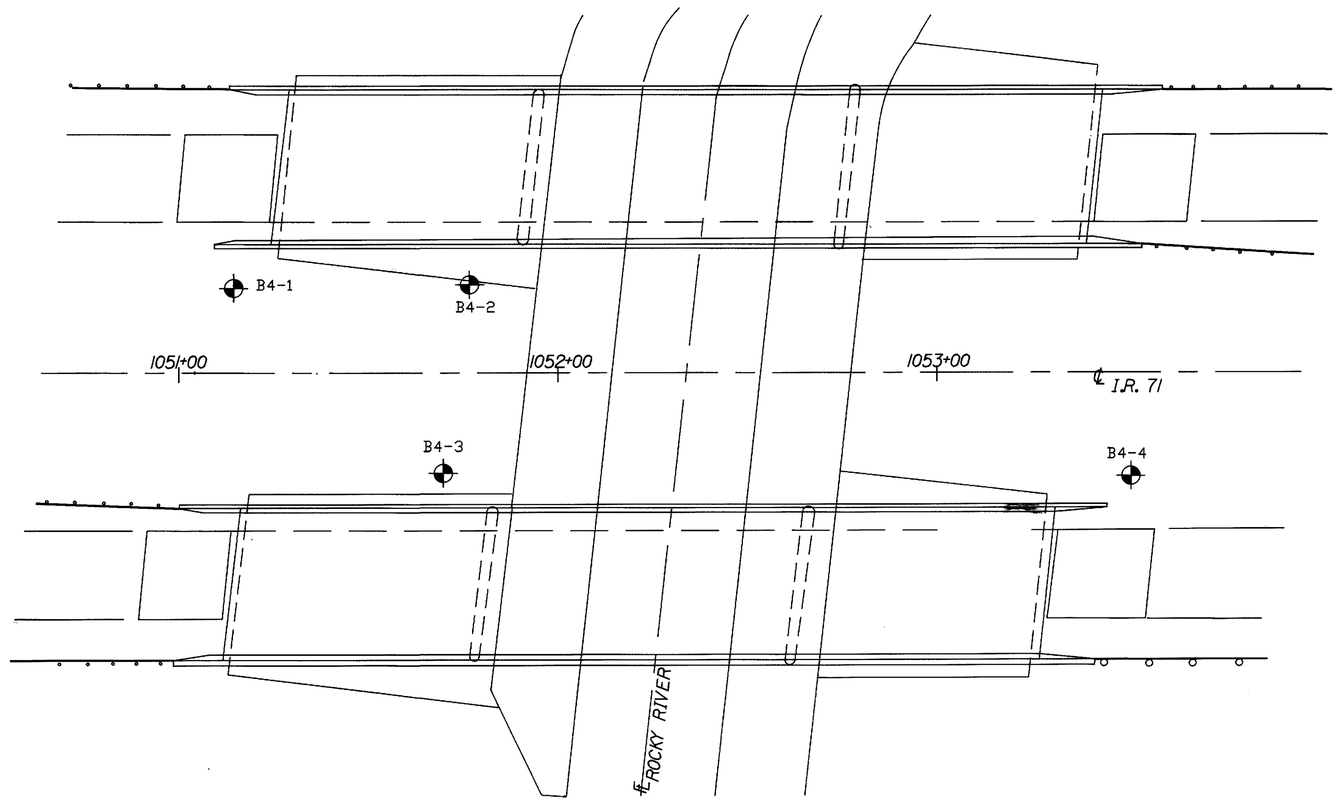

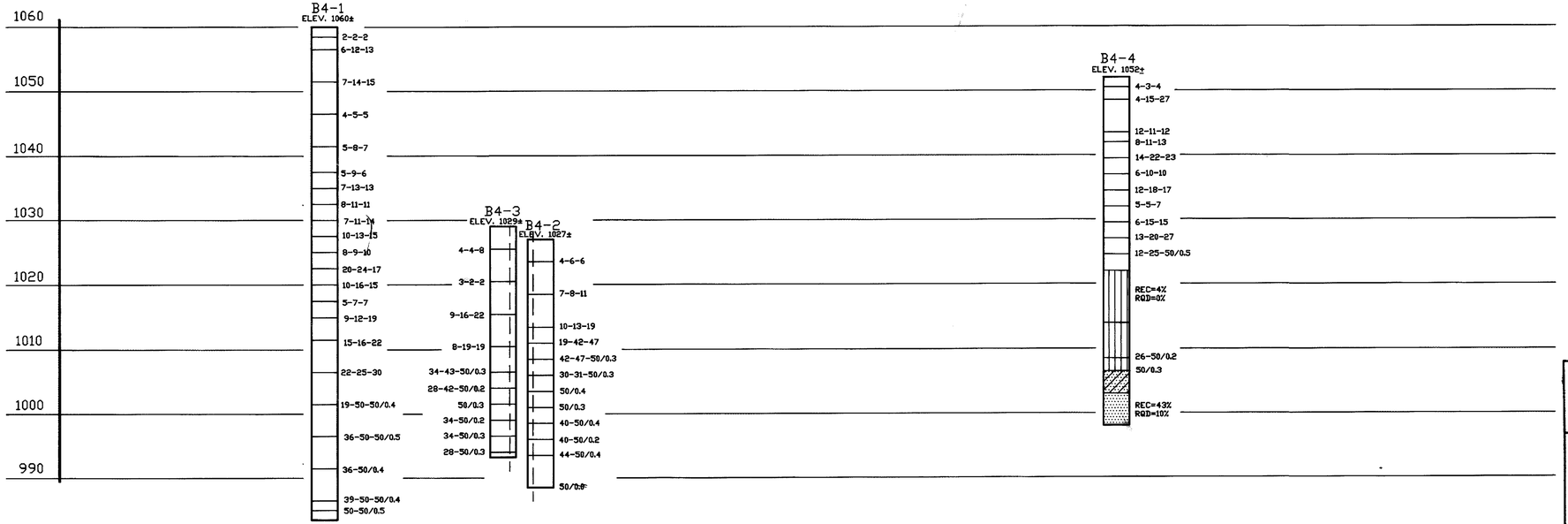

SCALE: HORIZ. 1"=20'
VERT. 1"=10'

STRUCTURE FOUNDATION INVESTIGATION
BRIDGE No. MED-71-1992 L&R
WIDENING
MEDINA COUNTY, OHIO

R&R INTERNATIONAL INC.
Geotechnical Engineers • Geologists
1234 S. CLEVELAND-MASSILLON ROAD
P.O. BOX 4383
AKRON, OH 44321

DRAWN BY	CHECKED BY	REVIEWED	DATE
V. K.	J. X.	G. M. R.	10.29.92

CALCULATED | CHECKED

STRUCTURE FOUNDATION INVESTIGATION
MED - 71 - 1992 (L&R)

2/4

MED - 71 - 15.78

13
36

DESIGN FILE : i:\pd_med_lr71\dgn\soils\soils13.dgn
USERNAME : jrogers
DATE : 18-NOV-1999
TIME : 13:48

LOG OF BORING

Date Started 8-7-92 | Sampler Type SS | Dia. 2.00 inch. | Water Elev. 1007 ±
Date Completed 8-7-92 | Casing: length -- | Dia. 3.25 inch.
Boring No. B4-3 | Station & Offset STA. 105+87.99, 27'R | Surface Elev. 1029 ±

ELEV.	DEPTH	STD.PEN. (N)	REC. Ft.	LOSS Ft.	DESCRIPTION	SAMPLE NO.	SAMPLE TYPE	PHYSICAL CHARACTERITICS % AGG.	% COAR. SAND	% FINE SAND	% SILT	% CLAY	L.L.	P.L.	P.I.	W.C. %	SHTL CLASS.
1029.0	0.0																
	3.5	4-4-8	0.7		Medium stiff to hard, brown SANDY SILT, trace gravel, little to some clay, damp.	1	SS	11.0	11.7	20.4	*	56.9	28.6	21.0	7.6	21.3	A-4a
	8.5	3-2-2	1.2			2	SS										
	13.5	9-16-22	1.5			3	SS	24.9	24.7	10.6	*	39.8	—	—	—	10.5	A-4a
1014.0	15.0																
	18.5	8-19-19	1.4		Hard, brown SILT, trace gravel, some sand, moist.	4	SS	7.5	1.3	26.0	51.2	14.0	—	—	—	20.1	A-4b
1007.0	22.0																
	22.5	34-43-50/0.3	1.5		Hard, brown SILTY SAND, trace gravel, saturated.	5	SS	0.1	0.1	59.7	*	40.1	—	—	—	22.0	A-4a
1004.0	25.0	28-42-50/0.2	1.5		Very dense, brown SAND, trace gravel, some silt, saturated.	6	SS	0.1	0.6	67.4	*	31.9	—	—	—	18.5	A-3a
1002.0	27.0																
	27.5	50/0.3	0.3		Hard, brown SILT AND CLAY, trace gravel, little sand, moist.	7	SS	0.3	0.5	15.4	47.5	36.3	—	—	—	18.8	A-6a
999.0	30.0	34-50/0.2	0.7		Hard, brown SILT, trace gravel, little sand, moist.	8	SS	8.5	5.7	24.0	51.1	10.7	—	—	—	12.2	A-4b
	32.5	34-50/0.3	0.0		Note: - sandstone fragments encountered at 32.5 ft. - auger refusal encountered at 35.8 ft.	9	SS										
	35.0	28-50/0.3	0.0			10	SS										
993.2	35.8				TERMINATION DEPTH 35.8 FEET												

* SILT AND CLAY COMBINED

LOG OF BORING

Date Started 6-24-92 | Sampler Type SS | Dia. 2.00 inch. | Water Elev. (DRY)
Date Completed 6-24-92 | Casing: length -- | Dia. 4.25 inch.
Boring No. B4-4 | Station & Offset STA. 105+73.99, 27'R | Surface Elev. 1052 ±

ELEV.	DEPTH	STD.PEN. (N)	REC. Ft.	LOSS Ft.	DESCRIPTION	SAMPLE NO.	SAMPLE TYPE	PHYSICAL CHARACTERITICS % AGG.	% COAR. SAND	% FINE SAND	% SILT	% CLAY	L.L.	P.L.	P.I.	W.C. %	SHTL CLASS.
1052.0	0																
	1.5	4-3-4	0.3			1	SS										
	3.5	4-15-27	0.6			2	SS										
	6.5	12-11-12	0.6		Medium stiff to hard, brown SANDY SILT, trace gravel, little to some clay, damp.	3	SS										
	10.0	8-11-13	0.7		Note: - trace organics in sample at approx. depth of 9.0 ft.	4	SS	11.5	8.0	13.5	*	67.0	—	—	—	15.0	A-4a
	12.5	14-22-23	1.0			5	SS										
	15.0	6-10-10	1.5			6	SS										
	17.5	12-18-17	0.7			7	SS										
1032.0	20.0	5-5-7	1.0			8	SS	6.6	7.8	14.3	*	71.3	27.7	17.5	10.2	16.4	A-6a
	22.5	6-15-15	1.5		Stiff to hard, brown to gray SILT AND CLAY, trace sand, damp.	9	SS										
1027.0	25.0	13-20-27	1.2			10	SS	10.5	9.1	15.7	*	64.7	—	—	—	12.2	A-4a
	27.5	12-25-50/0.5	1.4		Hard, gray SANDY SILT, little gravel, moist. Note: - auger refusal encountered at 30.0 ft.	11	SS										
1022.0	30.0																
1021.6	30.4				Gray LIMESTONE BOULDER, very dense.												
		REC = 4% RQD = 0%			Hard, gray SANDY SILT, little gravel, moist.	RUN 1 30.0 to 38.0	NXW										
	43.5	26-50/0.2	0.3			12	SS	17.1	7.6	39.3	*	36.0	—	—	—	10.6	A-4a
1007.0	45.0																
	45.5	50/0.3	0.3		Brown SANDSTONE FRAGMENTS, extremely weathered and decomposed.	13	SS										
1003.0	49.0																
		REC = 43% RQD = 10%			Brown to yellow SANDSTONE, medium to coarse grained, highly weathered.	RUN 2 49.0 to 54.0	NXW										
998.0	54.0				TERMINATION DEPTH 54.0 FEET												

* SILT AND CLAY COMBINED

STRUCTURE FOUNDATION INVESTIGATION
BRIDGE No. MED-71-1992 (L&R)
WIDENING
MEDINA COUNTY, OHIO

R&R INTERNATIONAL, INC.
Geotechnical Engineers • Geologists
1234 S. CLEVELAND-MASSILLON ROAD
P.O. BOX 4383
AKRON, OH 44321

TYPED BY	CHECKED BY	REVIEWED	DATE
T.S.	J.K.	G.M.R.	10.29.92

CALCULATED | CHECKED

STRUCTURE FOUNDATION INVESTIGATION
MED - 71 - 1992 (L&R)

1/4

MED - 71 - 15.78

14
36

DESIGN FILE : I:\pd_med_ir71\dgn\soils\soilsl4.dgn
USERNAME : jrogers
DATE : 18-NOV-1999
TIME : 13:48

LOG OF BORING

Date Started 6-24-92
Date Completed 6-24-92
Boring No. B4-1

Sampler Type SS Dia. 2.00 inch.
Casing: length -- Dia. 3.25 inch.
Station & Offset STA. 1051+20.99 24' L

Water Elev. 1125.5
Surface Elev. 1160 ±

ELEV.	DEPTH	SAMPLE NO.	SAMPLE TYPE	PHYSICAL CHARACTERISTICS % AGG.	COAR. SAND	FINE SAND	SILT	CLAY	L.L.	P.L.	P.I.	W.C. %	SHTL CLASS.	REC. LOSS Ft.	STD.PEN. (N)	DESCRIPTION
1160.0	0															
	1.5	1	SS	12.8	10.4	12.8	*	64.0	—	—	—	12.1	A-4a	1.2	2-2-2	Medium stiff to very stiff, brown to gray SILT AND CLAY, trace gravel, trace to little sand, damp. Note: -dead tree roots in sample at approx. depth of 2.0 ft.
	3.5	2	SS											0.4	6-12-13	
	8.5	3	SS											1.3	7-14-15	
	13.5	4	SS											0.7	4-5-5	
	18.5	5	SS											1.5	5-6-7	
	22.5	6	SS											1.5	5-6-6	
1136.0	26.0	7	SS											1.3	7-13-13	
1135.5	28.5	8	SS											1.4	8-11-11	Very stiff, gray SANDY SILT, little gravel, damp.
1132.0	28.0															Very stiff, gray to black, ORGANIC SANDY SILT, trace gravel, moist.
	30.0	9	SS	10.3	7.2	9.5	*	73.0	—	—	—	15.4	A-8a	1.2	7-11-14	Very stiff, grey to brown, SILT AND CLAY, trace gravel, trace sand, moist.
	32.5	10	SS											1.5	10-13-15	
	35.0	11	SS											1.5	8-9-10	
1123.0	37.0	12	SS	9.2	11.1	23.6	*	56.1	20.4	13.8	6.6	11.7	A-4a	1.4	20-24-17	Hard to medium stiff, SANDY SILT, little to some gravel, wet.
	37.5															
	40.0	13	SS											0.9	10-16-16	
	42.5	14	SS											0.3	5-7-7	
	45.0	15	SS											1.5	9-12-19	
	48.5	16	SS											1.5	15-16-22	
	53.5	17	SS	7.5	9.2	29.4	*	53.9	—	—	—	9.7	A-4a	1.3	22-25-30	
	58.5	18	SS											1.3	19-50-500/.4	
	63.5	19	SS											1.4	36-50-500/.5	
	68.5	20	SS											0.8	36-500/.4	
1087.0	73.0	21	SS	49.1	27.8	15.8	*	7.3	—	—	—	12.5	A-1-b	1.3	39-50-500/.4	Very dense, brown, GRAVEL AND SAND, trace silt, saturated. Note: -augered from 76.0 to 76.5 ft.
1083.5	73.5	22	SS											0.7	50-500/.5	
	76.5															TERMINATION DEPTH: 76.5 FEET

* SILT AND SAND COMBINED

LOG OF BORING

Date Started 8-6-92
Date Completed 8-6-92
Boring No. B4-2

Sampler Type SS Dia. 2.00 inch.
Casing: length -- Dia. 3.25 inch.
Station & Offset STA. 1051+96.99 25' L

Water Elev. 1008 ±
Surface Elev. 1027 ±

ELEV.	DEPTH	SAMPLE NO.	SAMPLE TYPE	PHYSICAL CHARACTERISTICS % AGG.	COAR. SAND	FINE SAND	SILT	CLAY	L.L.	P.L.	P.I.	W.C. %	SHTL CLASS.	REC. LOSS Ft.	STD.PEN. (N)	DESCRIPTION
1027.0	0															
	3.5	1	SS	14.6	7.8	11.4	*	66.2	—	—	—	14.5	A-4a	0.6	4-6-6	Stiff to hard, brown, SANDY SILT, little gravel, moist.
	8.5	2	SS											1.1	7-9-11	
	13.5	3	SS	12.4	8.3	22.7	*	56.6	—	—	—	13.4	A-4a	1.2	10-13-19	
	18.5	4	SS											1.3	19-42-47	
1007.0	20.0	5	SS	2.0	9.2	57.5	*	31.3	—	—	—	16.8	A-3a	1.3	42-47-500/.3	
	21.0	6	SS											0.9	30-31-500/.3	Very dense, brown, SAND, trace gravel, some silt, wet.
	23.5	7	SS											1.3	500/.4	
1002.0	25.0	8	SS	10.7	7.5	22.4	*	59.4	—	—	—	12.2	A-4a	0.7	500/.3	Hard, brown, SANDY SILT, trace gravel wet.
	26.0	9	SS											0.8	40-500/.4	
995.0	28.5	10	SS	6.6	3.5	27.1	*	62.8	—	—	—	14.1	A-4a	0.8	40-500/.4	
	31.0	11	SS	3.6	3.0	13.7	*	57.9	21.8	—	--	12.9	A-4b	0.7	44-500/.4	Hard, brown, SILT, trace gravel, little sand, wet. Note: -auger refusal encountered at 38.5 feet.
988.5	32.0	12	SS											0.0	500/.0	
	38.5															TERMINATION DEPTH: 38.5 FEET

* SILT AND CLAY COMBINED

STRUCTURE FOUNDATION INVESTIGATION
BRIDGE No. MED-71-1992 (L&R)
WIDENING
MEDINA COUNTY, OHIO

R&R INTERNATIONAL INC

Geotechnical Engineers • Geologists
1234 S. CLEVELAND-MASSILLON ROAD
P.O. BOX 4383
AKRON, OH 44321

TYPED BY	CHECKED BY	REVIEWED	DATE
T.E.	J.K.	G.M.R.	10.29.92

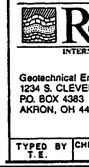

CALCULATED | CHECKED

STRUCTURE FOUNDATION INVESTIGATION
MED - 71 - 1992 (L&R)

4/4

MED - 71 - 15.78

15
36

DESIGN FILE : i:\pd_med_lr71\dgn\soils\soilsl5.dgn
USERNAME : jrogers
DATE : 18-NOV-1999
TIME : 13:48

GEOLOGY OF THE SITE

THE PROJECT SITE LIES ON THE GLACIATED, MODERATELY ROLLING PLAIN ALONG THE ALLEGHENY ESCARPMENT SEPARATING THE ALLEGHENY PLATEAU FROM THE MISSISSIPPI VALLEY PLAIN. THE PROJECT SITE LIES AT A HIGH ELEVATION OF 1,074 AT TOP OF THE WEST ABUTMENT AND A LOW ELEVATION OF 1,071 AT TOP OF THE EAST ABUTMENT OF BRIDGE No. MED-71-2034 OVER IR-71 IN MEDINA COUNTY, OHIO.

THE WISCONSIN ICE SHEET PASSED OVER THE AREA LEAVING VARIABLE DEPOSITS AND THICKNESSES OF GLACIAL DRIFT MATERIAL. INFORMATION OBTAINED FROM MEDINA COUNTY SOIL SURVEY, NOVEMBER, 1977, INDICATES THAT THE SITE CONSISTS MAINLY OF SILTY CLAY AND CLAY. INFORMATION ALSO INDICATES THAT THE SOILS ALONG IR-71 EMBANKMENT UPPER PORTION ARE MAINLY COMPRISED OF CUT-AND-FILL MATERIALS.

THE OHIO GEOLOGICAL SURVEY INDICATES THAT BEDROCK STANDS AT APPROXIMATE ELEVATION OF 900 IN THE VICINITY OF THE SITE. AT THIS ELEVATION IT IS EXPECTED THAT BEDROCK IS COMPRISED OF SHALES AND SHALY SANDSTONE OF LOGAN FORMATION.

EXPLORATION

THE SUBSURFACE EXPLORATION PROGRAM FOR THIS PROJECT INCLUDED ADVANCING A TOTAL OF TWO (2) DRIVE SAMPLE CORE BORINGS WITH A CME-75 TRUCK MOUNTED DRILLING RIG USING CONVENTIONAL 4.25 INCH I.D. HOLLOW STEM AUGERS, PERFORMED DURING JUNE AND AUGUST, 1992. ALL TEST BORINGS WERE ADVANCED FOR BRIDGE FOUNDATION DESIGN PURPOSE.

INVESTIGATIONAL FINDINGS

TEST BORINGS B5-1 WAS ADVANCED THROUGH THE EXISTING EMBANKMENT MATERIAL. TEST BORING B5-2 WAS ADVANCED THROUGH ASPHALT PAVEMENT, WHICH WAS FOUND TO BE 8 INCHES THICK. THE TEST BORINGS DISCLOSED ALTERNATING LAYERS OF GRAVEL AND SAND CLASSIFIED AS A-1-b, SANDY SILT CLASSIFIED AS A-4a, AND SILT AND CLAY CLASSIFIED AS A-6a. THE RELATIVE DENSITY OF THE NON-COHESIVE SOILS ENCOUNTERED WAS FOUND TO RANGE FROM "MEDIUM DENSE" TO "DENSE." THE CONSISTENCY OF THE COHESIVE SOILS ENCOUNTERED WAS FOUND TO RANGE FROM "STIFF" TO "HARD," BUT PREDOMINANTLY "HARD." BEDROCK WAS NOT ENCOUNTERED WITHIN THE EXPLORED DEPTHS AT EITHER TEST BORING LOCATIONS.

FOR SPECIFIC CONDITIONS AT VARIOUS DEPTHS, REFER TO THE INDIVIDUAL TEST BORING LOGS WHICH FORM A PART OF THESE PLANS.

LEGEND

- AUGER BORING LOCATION - PLAN VIEW
- PRESS AND/OR DRIVE SAMPLE AND/OR CORE BORING LOCATION - PLAN VIEW
- TR — TOP OF ROCK
- CAPPED PILE
- FOOTING
- FOOTING ON PILE
- HORIZONTAL BAR ON BORING LOG INDICATES THE DEPTH THE SAMPLE WAS TAKEN
- X/Y/Z — FIGURES BESIDE THE BORING LOG IN PROFILE INDICATE THE NUMBER OF BLOWS FOR STANDARD PENETRATION TEST
  - X = NO. OF BLOWS FOR FIRST 6"
  - Y = NO. OF BLOWS FOR SECOND 6"
  - Z = NO. OF BLOWS FOR THIRD 6"
- W — INDICATES FREE WATER ELEVATION
- INDICATES STATIC WATER ELEVATION

SYMBOLS OF ROCK TYPES

- COAL
- WEATHERED MUDSTONE
- MUDSTONE
- WEATHERED SHALE
- SHALE
- CLAYSTONE
- SILTSTONE
- WEATHERED SANDSTONE
- SANDSTONE
- LEACHED DOLOMITE
- DOLOMITE
- LEACHED LIMESTONE
- LIMESTONE
- BOULDERS or COBBLES

GENERAL INFORMATION

Drive sample / Press sample / Core borings

Drive sample borings are made by means of a mechanically-powered rotary-type drilling machine, employing a 2" O.D., 1-3/8" I.D. split spoon sampler, at 2.5 and/or 5-foot depth intervals, driven by means of a 140 lb. drop hammer with a free fall of 30". The number of blows required to drive the sampler 18" is considered the standard penetration test.

Drive/press borings are made by means of a mechanically-powered rotary-type drilling machine, employing a 2" O.D., 1-3/8" I.D. split spoon sampler, and 3" O.D. thin wall press sampler. The press sampler is advanced by continuous uniform pressure, applied by the drilling machine.

Core borings are made by means of a mechanically-powered rotary-type drilling machine, employing a NXM core barrel with industrial diamond cutting head.

The boring log sheets display a graphic plot of the information obtained including depth and elevation of the sample, type of sample, the standard penetration test readings in three 6-inch increments, depth and elevation of press samples, field number assigned to sample, sample description - based on laboratory tests utilizing the Casagrande AC classification system - and gradation, plasticity and moisture determinations. Results of strength and consolidation testing, if performed on undisturbed samples, will appear graphically on separate enclosures. Rock samples are displayed on the log sheets including depth and elevation of the sample, amount of recovery and a visual classification based on type, color, degree of hardness, grain size, deterioration, bedding, acid reaction and other qualifying factors.

At depths where materials are bouldery or gravelly to the extent that the sampler can not be utilized, a wash sample is procured and visually classified, in order to determine the general characteristics of the material. These samples are not considered sufficiently representative to warrant laboratory testing.

PARTICLE SIZE DEFINITIONS

Boulders	Cobbles	Gravel	Coarse Sand	Fine Sand	Silt	Clay
12"	3"	2.0mm (No. 10 sieve)	0.42mm (No. 40 sieve)	0.074mm (No. 200 sieve)	0.005mm	

CALCULATED | CHECKED

STRUCTURE FOUNDATION INVESTIGATION
MED - 71 - 2034 (L&R)

1/3

MED - 71 - 15.78

16
36

STRUCTURE FOUNDATION INVESTIGATION
BRIDGE No. MED-71-2034 WIDENING
MEDINA COUNTY, OHIO

R&R INTERNATIONAL INC.
Geotechnical Engineers • Geologists
1234 S. CLEVELAND-MASSILLON ROAD
P.O. BOX 4383
AKRON, OH 44321

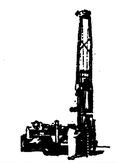

CHECKED BY	REVIEWED	DATE
J.X.	G.M.R.	10.29.92

DESIGN FILE : i:\pd_med_ir71\dgn\soils\soilsl6.dgn
USERNAME : jrogers
DATE : 18-NOV-1999
TIME : 13:48

DATE : 18-NOV-1999
TIME : 13:48
DESIGN FILE : i:\pd_med_ir71\dgn\soils\soilsl7.dgn
USERNAME : jrogers

STRUCTURE FOUNDATION INVESTIGATION
BRIDGE No. MED-71-2034
WIDENING
MEDINA COUNTY, OHIO

R&R INTERNATIONAL,INC.
Geotechnical Engineers • Geologists
1234 S. CLEVELAND-MASSILLON ROAD
P.O. BOX 4383
AKRON, OH 44321

TYPED BY	CHECKED BY	REVIEWED	DATE
T. E.	J. X.	G. M. R.	10.29.92

CALCULATED | CHECKED

STRUCTURE FOUNDATION INVESTIGATION
MED - 71 - 2034 (L&R)

2/3

MED - 71 - 15.78

LOG OF BORING

Date Started 6-25-92 | Sampler Type SS | Dia. 2.00 inch. | Water Elev. 1057 ±
Date Completed 6-25-92 | Casing: length -- | Dia. 4.25 inch.
Boring No. B5-1 | Station & Offset STA 48+31 5' R | Surface Elev. 1074 ±

ELEV.	DEPTH	STD.PEN. (N)	REC. Ft.	LOSS Ft.	DESCRIPTION	SAMPLE NO.	SAMPLE TYPE	PHYSICAL CHARACTERITICS % AGG.	COAR. SAND	FINE SAND	SILT	CLAY	L.L.	P.L.	P.I.	W.C. %	SHTL CLASS.
1074.0	0																
	1.5	11-7-7	0.4			1	SS	34.9	15.2	9.6	*	40.3	—	—	—	12.2	A-4a
	3.5	3-8-17	1.1			2	SS										
	8.5	7-16-22	1.0			3	SS										
	13.5	7-26-36	1.2			4	SS	10.8	9.2	13.8	*	66.2	—	—	—	14.6	A-4a
	18.5	15-20-25	1.4			5	SS										
	22.5	8-12-19	1.3		Hard, brown to gray SANDY SILT, some to trace gravel, damp to wet.	6	SS										
	25.0	13-17-24	1.2			7	SS	11.3	8.2	11.4	*	69.1	—	—	—	13.6	A-4a
	27.5	8-12-19	1.3			8	SS										
	30.0	9-14-16	1.3			9	SS	7.2	8.7	12.3	*	71.8	23.3	15.2	8.1	14.1	A-4a
	32.5	10-17-22	1.3			10	SS										
	35.0	24-50/0.3	0.5			11	SS										
	37.5	11-19-26	1.3			12	SS										
	40.0	13-15-20	1.5			13	SS	7.9	6.8	11.2	*	74.1	—	—	—	16.1	A-4a
	42.5	14-16-25	1.5			14	SS										
	45.0	13-16-24	1.5			15	SS										
	48.5	10-17-24	1.5			16	SS										
	53.5	14-17-25	1.5			17	SS	6.8	7.2	11.2	*	74.8	25.4	15.8	9.6	16.2	A-4a
1019.0	55.0				TERMINATION DEPTH 55.0 FEET												

* SILT AND CLAY COMBINED

LOG OF BORING

Date Started 6-26-92 | Sampler Type SS | Dia. 2.00 inch. | Water Elev. 1038.5
Date Completed 6-26-92 | Casing: length -- | Dia. 4.25 inch.
Boring No. B5-2 | Station & Offset STA 51+70 7' L | Surface Elev. 1071 ±

ELEV.	DEPTH	STD.PEN. (N)	REC. Ft.	LOSS Ft.	DESCRIPTION	SAMPLE NO.	SAMPLE TYPE	PHYSICAL CHARACTERITICS % AGG.	COAR. SAND	FINE SAND	SILT	CLAY	L.L.	P.L.	P.I.	W.C. %	SHTL CLASS.
1071.0	0																
1070.3	0.7				ASPHALT												
	1.5	22-15-23	0.7			1	SS	14.4	9.7	11.4	29.8	34.7	—	—	—	12.0	A-4a
	3.5	12-16-17	0.5			2	SS										
	8.5	6-7-50/0.5	0.4		Hard to very stiff, brown SANDY SILT, trace to little gravel, damp.	3	SS	39.1	9.3	9.9	*	41.7	—	—	—	10.2	A-4a
	13.5	8-14-16	0.5			4	SS										
1056.0	15.0																
	18.5	30-30-33	1.2		Hard, brown to dark brown SILT AND CLAY, trace to little sand, trace gravel, damp.	5	SS	11.6	6.3	9.8	*	72.3	31.7	20.8	10.9	15.0	A-6a
1051.0	20.0																
	22.5	14-27-30	1.2			6	SS										
	25.0	18-30-34	1.0		Hard, brown to dark brown SANDY SILT, little gravel, damp.	7	SS	19.6	9.6	13.1	*	57.7	—	—	—	11.1	A-4a
	27.5	20-22-41	0.8			8	SS	10.4	13.0	27.5	*	49.1	—	—	—	14.9	A-4a
	30.0	38-50/0.3	0.4			9	SS	0.7	5.2	36.2	*	57.9	—	—	—	14.8	A-4a
1039.0	32.0																
	32.5	14-15-18	1.5		Dense, brown SAND AND GRAVEL, little to some gravel, little clay, saturated.	10	SS	23.0	30.8	23.3	*	22.9	—	—	—	10.6	A-1-b
	35.0	7-11-19	1.5			11	SS										
1034.5	36.5																
	37.5	7-13-18	1.5		Very stiff to hard, brownish gray SANDY SILT, trace gravel, moist.	12	SS	4.3	7.2	12.0	*	76.5	25.6	18.0	7.8	16.1	A-4a
	40.0	4-8-15	1.5			13	SS										
	42.5	7-10-20	1.5			14	SS	5.4	7.1	11.6	*	75.9	—	—	—	16.5	A-4a
	45.0	7-11-19	1.5			15	SS										
	48.5	20-50/0.5	0.8			16	SS										
	53.5	11-15-19	1.5			17	SS	7.2	7.8	11.0	*	74	—	—	—	15.4	A-4a
1016.0	55.0				TERMINATION DEPTH 55.0 FEET												

* SILT AND CLAY COMBINED

STRUCTURE FOUNDATION INVESTIGATION
BRIDGE No. MED-71-2034
WIDENING
MEDINA COUNTY, OHIO

R&R INTERNATIONAL,INC.
Geotechnical Engineers • Geologists
1234 S. CLEVELAND-MASSILLON ROAD
P.O. BOX 4383
AKRON, OH 44321



TYPED BY	CHECKED BY	REVIEWED	DATE
T.E.	J.K.	G.M.R.	10.29.92

CALCULATED | CHECKED

STRUCTURE FOUNDATION INVESTIGATION
MED - 71 - 2034 (L&R)

3/3

MED - 71 - 15.78

18
36

DESIGN FILE : i:\pd_med_ir71\dgn\soils\soils18.dgn
USERNAME : jrogers
DATE : 18-NOV-1999
TIME : 13:48

GEOLOGY OF THE SITE

THE PROJECT SITE LIES ON THE GLACIATED, MODERATELY ROLLING PLAIN ALONG THE ALLEGHENY ESCARPMENT SEPARATING THE ALLEGHENY PLATEAU FROM THE MISSISSIPPI VALLEY PLAIN. THE PROJECT SITE LIES AT A HIGH ELEVATION OF 1,068 AT TOP OF THE IR-71 BRIDGE ABUTMENTS AND A LOW ELEVATION OF 1,047 ON SR-3 BENEATH THE IR-71 BRIDGES IN MEDINA COUNTY, OHIO.

THE WISCONSIN ICE SHEET PASSED OVER THE AREA LEAVING VARIABLE DEPOSITS AND THICKNESSES OF GLACIAL DRIFT MATERIAL. INFORMATION OBTAINED FROM MEDINA COUNTY SOIL SURVEY, NOVEMBER, 1977, INDICATES THAT THE SITE CONSISTS MAINLY OF SILTY CLAY, CLAY, SILTY SAND, SAND AND GRAVEL. INFORMATION ALSO INDICATES THAT THE SOILS ALONG IR-71 EMBANKMENT UPPER PORTION ARE MAINLY COMPRISED OF CUT-AND-FILL MATERIALS.

THE OHIO GEOLOGICAL SURVEY INDICATES THAT BEDROCK STANDS AT APPROXIMATE ELEVATION OF 950 IN THE VICINITY OF THE SITE. AT THIS ELEVATION IT IS EXPECTED THAT BEDROCK IS COMPRISED OF SHALES AND SHALY SANDSTONE OF LOGAN FORMATION.

EXPLORATION

THE SUBSURFACE EXPLORATION PROGRAM FOR THIS PROJECT INCLUDED ADVANCING A TOTAL OF SEVEN (7) DRIVE SAMPLE CORE BORINGS WITH A CME-75 TRUCK MOUNTED DRILLING RIG AND A CME-750 ATV MOUNTED DRILLING RIG USING CONVENTIONAL 3.25 INCH I.D. HOLLOW STEM AUGERS, PERFORMED DURING JUNE AND JULY, 1992. TEST BORINGS B6-1, B6-2, B6-3 AND B6-4 WERE ADVANCED FOR BRIDGE (MED-71-2090L&R) FOUNDATION DESIGN PURPOSE. TEST BORINGS B6-5 AND B6-6 WERE ADVANCED FOR BRIDGE (MED-71-2092W) FOUNDATION DESIGN PURPOSE. AT TEST BORING LOCATIONS B6-5 AND B6-7, SOIL SAMPLES WERE OBTAINED FOR THE BRIDGE SCOUR STUDY PURPOSE.

INVESTIGATIONAL FINDINGS

TEST BORINGS B6-1 AND B6-4 WERE ADVANCED THROUGH THE EXISTING EMBANKMENT MATERIAL. TEST BORING B6-3 AND B6-5 WERE ADVANCED THROUGH ASPHALT PAVEMENT, WHICH WAS FOUND TO BE 10 AND 8 INCHES THICK, RESPECTIVELY. TEST BORING B6-2 AND B6-6 WERE ADVANCED THROUGH THE EXISTING ROADWAY SHOULDER AREAS. TEST BORING B6-7 WAS ADVANCED THROUGH THE SOUTH BANK OF THE PLUM CREEK NEAR BRIDGE No. MED-71-2088E. THE TEST BORINGS DISCLOSED ALTERNATING LAYERS OF GRAVEL AND SAND CLASSIFIED AS A-1-b, SAND CLASSIFIED AS A-3/A-3a, ROCK FRAGMENTS WITH SAND AND SILT CLASSIFIED AS A-2-4, SANDY SILT CLASSIFIED AS A-4a, SILT CLASSIFIED AS A-4b, AND SILT AND CLAY CLASSIFIED AS A-6a.

AT TEST BORING LOCATIONS B6-1 THROUGH B6-4, THE RELATIVE DENSITY OF THE NON-COHESIVE SOILS ENCOUNTERED WAS FOUND TO RANGE FROM "LOOSE" TO "VERY DENSE," BUT PREDOMINANTLY "MEDIUM DENSE." THE CONSISTENCY OF THE COHESIVE SOILS ENCOUNTERED WAS FOUND TO RANGE FROM "MEDIUM STIFF" TO "HARD," BUT PREDOMINANTLY "VERY STIFF."

AT TEST BORING LOCATIONS B6-5 AND B6-6, THE RELATIVE DENSITY OF THE NON-COHESIVE SOILS ENCOUNTERED WAS FOUND TO RANGE FROM "LOOSE" TO "VERY DENSE," BUT PREDOMINANTLY "MEDIUM DENSE." THE CONSISTENCY OF THE COHESIVE SOILS ENCOUNTERED WAS FOUND TO RANGE FROM "MEDIUM STIFF" TO "HARD," BUT PREDOMINANTLY "VERY STIFF."

AT TEST BORING LOCATION B6-7, THE RELATIVE DENSITY OF THE NON-COHESIVE SOILS ENCOUNTERED WAS FOUND TO BE "MEDIUM DENSE." THE CONSISTENCY OF THE COHESIVE SOILS ENCOUNTERED WAS FOUND TO RANGE FROM "MEDIUM STIFF" TO "HARD," BUT PREDOMINANTLY "VERY STIFF."

BEDROCK WAS NOT ENCOUNTERED WITHIN THE EXPLORED DEPTHS AT ANY OF THE TEST BORING LOCATIONS. FOR SPECIFIC CONDITIONS AT VARIOUS DEPTHS, REFER TO THE INDIVIDUAL TEST BORING LOGS WHICH FORM A PART OF THESE PLANS.

LEGEND

- AUGER BORING LOCATION - PLAN VIEW
- PRESS AND/OR DRIVE SAMPLE AND/OR CORE BORING LOCATION - PLAN VIEW
- TR — TOP OF ROCK
- CAPPED PILE
- FOOTING
- FOOTING ON PILE
- HORIZONTAL BAR ON BORING LOG INDICATES THE DEPTH THE SAMPLE WAS TAKEN
- X/Y/Z — FIGURES BESIDE THE BORING LOG IN PROFILE INDICATE THE NUMBER OF BLOWS FOR STANDARD PENETRATION TEST
  - X = NO. OF BLOWS FOR FIRST 6"
  - Y = NO. OF BLOWS FOR SECOND 6"
  - Z = NO. OF BLOWS FOR THIRD 6"
- W — INDICATES FREE WATER ELEVATION
- INDICATES STATIC WATER ELEVATION

SYMBOLS OF ROCK TYPES

- COAL
- WEATHERED MUDSTONE
- MUDSTONE
- WEATHERED SHALE
- SHALE
- CLAYSTONE
- SILTSTONE
- WEATHERED SANDSTONE
- SANDSTONE
- LEACHED DOLOMITE
- DOLOMITE
- LEACHED LIMESTONE
- LIMESTONE
- BOULDERS or COBBLES

GENERAL INFORMATION

Drive sample / Press sample / Core borings

Drive sample borings are made by means of a mechanically-powered rotary-type drilling machine, employing a 2" O.D., 1-3/8" I.D. split spoon sampler, at 2.5 and/or 5-foot depth intervals, driven by means of a 140 lb. drop hammer with a free fall of 30". The number of blows required to drive the sampler 18" is considered the standard penetration test.

Drive/press borings are made by means of a mechanically-powered rotary-type drilling machine, employing a 2" O.D., 1-3/8" I.D. split spoon sampler, and 3" O.D. thin wall press sampler. The press sampler is advanced by continuous uniform pressure, applied by the drilling machine.

Core borings are made by means of a mechanically-powered rotary-type drilling machine, employing a NXM core barrel with industrial diamond cutting head.

The boring log sheets display a graphic plot of the information obtained including depth and elevation of the sample, type of sample, the standard penetration test readings in three 6-inch increments, depth and elevation of press samples, field number assigned to sample, sample description - based on laboratory tests utilizing the Casagrande AC classification system - and gradation, plasticity and moisture determinations. Results of strength and consolidation testing, if performed on undisturbed samples, will appear graphically on separate enclosures. Rock samples are displayed on the log sheets including depth and elevation of the sample, amount of recovery and a visual classification based on type, color, degree of hardness, grain size, deterioration, bedding, acid reaction and other qualifying factors.

At depths where materials are bouldery or gravelly to the extent that the sampler can not be utilized, a wash sample is procured and visually classified, in order to determine the general characteristics of the material. These samples are not considered sufficiently representative to warrant laboratory testing.

PARTICLE SIZE DEFINITIONS

12"	3"	2.0mm		0.42mm		0.074mm	0.005mm
Boulders	Cobbles	Gravel	Coarse Sand		Fine Sand	Silt	Clay
		No. 10 sieve		No. 40 sieve		No. 200 sieve	

STRUCTURE FOUNDATION INVESTIGATION
BRIDGE No. MED-71-2090 (L&R)
BRIDGE No. MED-71-2092W
BRIDGE No. MED-71-2088E
MEDINA COUNTY, OHIO

R&R INTERNATIONAL, INC.
Geotechnical Engineers • Geologists
1234 S. CLEVELAND-MASSILLON ROAD
P.O. BOX 4383
AKRON, OH 44321

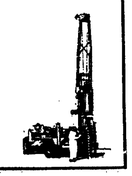

CHECKED BY	REVIEWED	DATE
J.K.	G.M.R.	10-29-92

CALCULATED | CHECKED

STRUCTURE FOUNDATION INVESTIGATION
MED - 71 - 2090 (L&R) MED - 71 - 2092W MED - 71 - 2088E

1/11

MED - 71 - 15.78

19
36

DESIGN FILE : i:\pd_med_ir71\dgn\soils\soils19.dgn
USERNAME : jrogers
DATE : 18-NOV-1999
TIME : 13:49

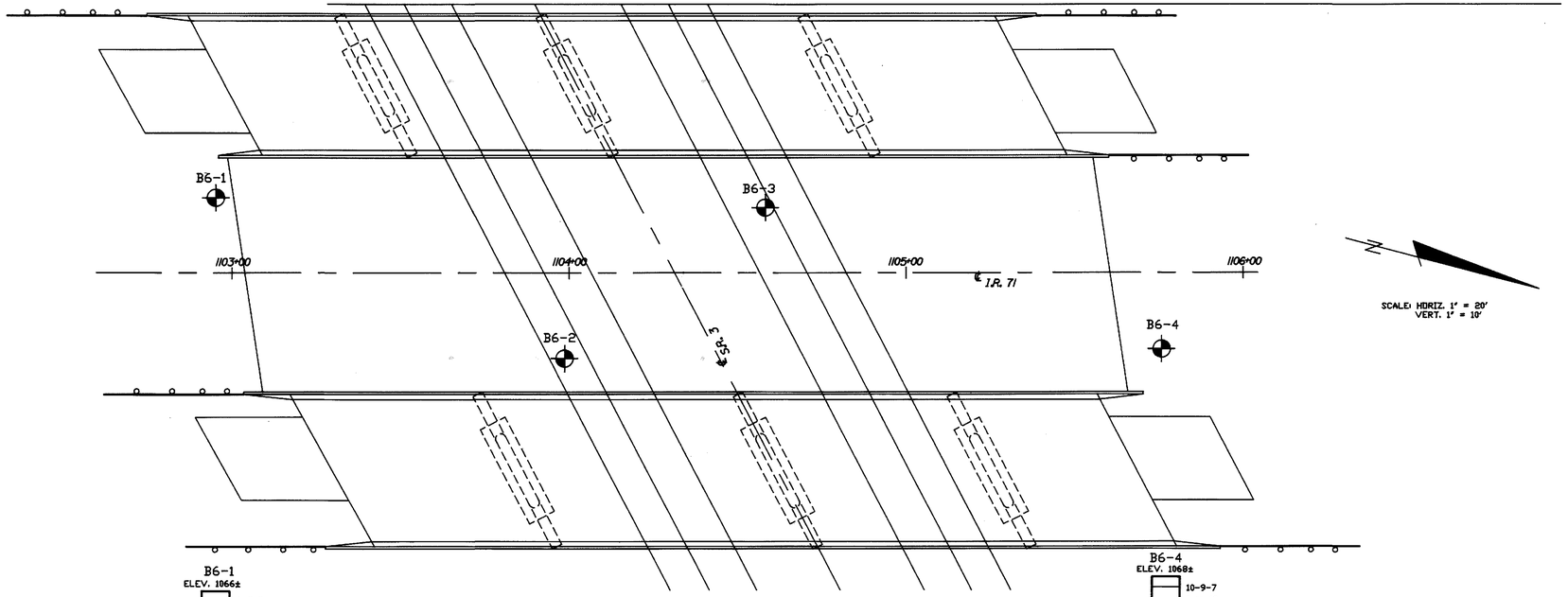

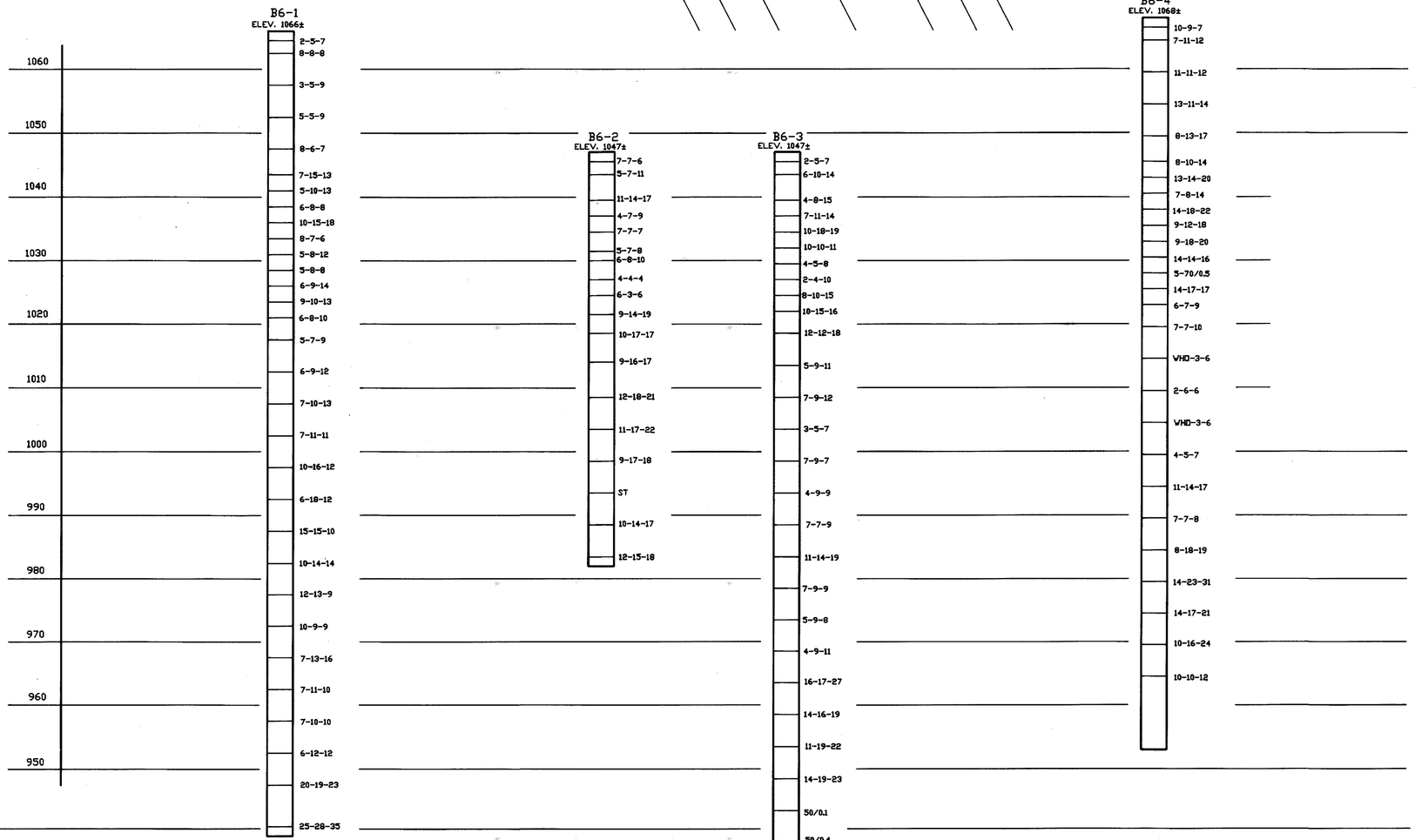

STRUCTURE FOUNDATION INVESTIGATION
~~BRIDGE~~ No. MED-71-2090 (L&R)
MEDINA COUNTY, OHIO

R&R INTERNATIONAL, INC.
Geotechnical Engineers • Geologists
1234 S. CLEVELAND-MASSILLON ROAD
P.O. BOX 4383
AKRON, OH 44321

DRAWN BY	CHECKED BY	REVIEWED	DATE
V. K.	J.K.	G. M. R.	10-29-92

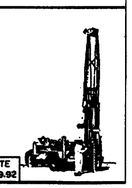

DESIGN FILE : i:\pd_med_ir71\dgn\soils\soils20.dgn
USERNAME : jrogers
DATE : 18-NOV-1999
TIME : 13:49

CALCULATED | CHECKED

STRUCTURE
MED - 71 - 2090 (L&R)

2/11

MED - 71 - 15.78

20/36

STRUCTURE FOUNDATION INVESTIGATION
MED - 71 - 2092W MED - 71 - 2088E

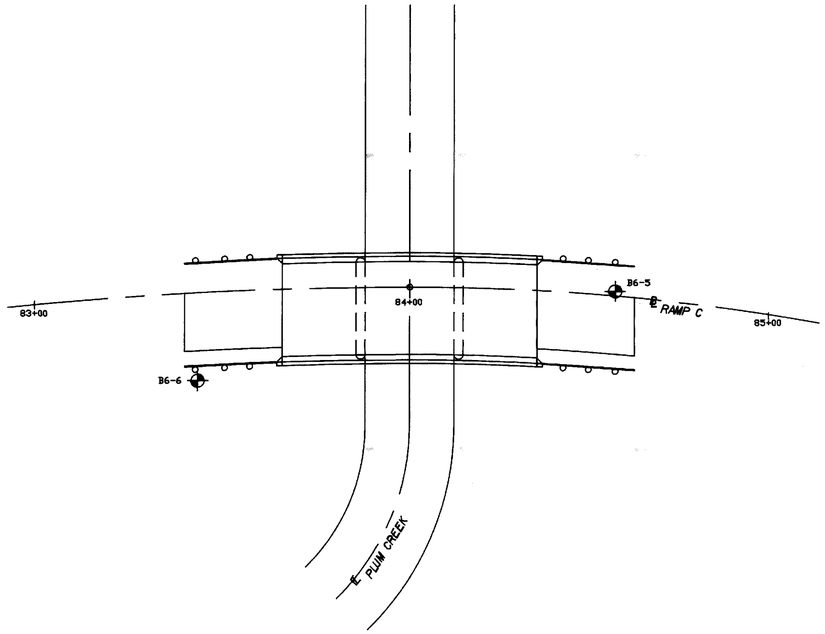



SCALE: HORIZ. 1"=20'
VERT. 1"=10'

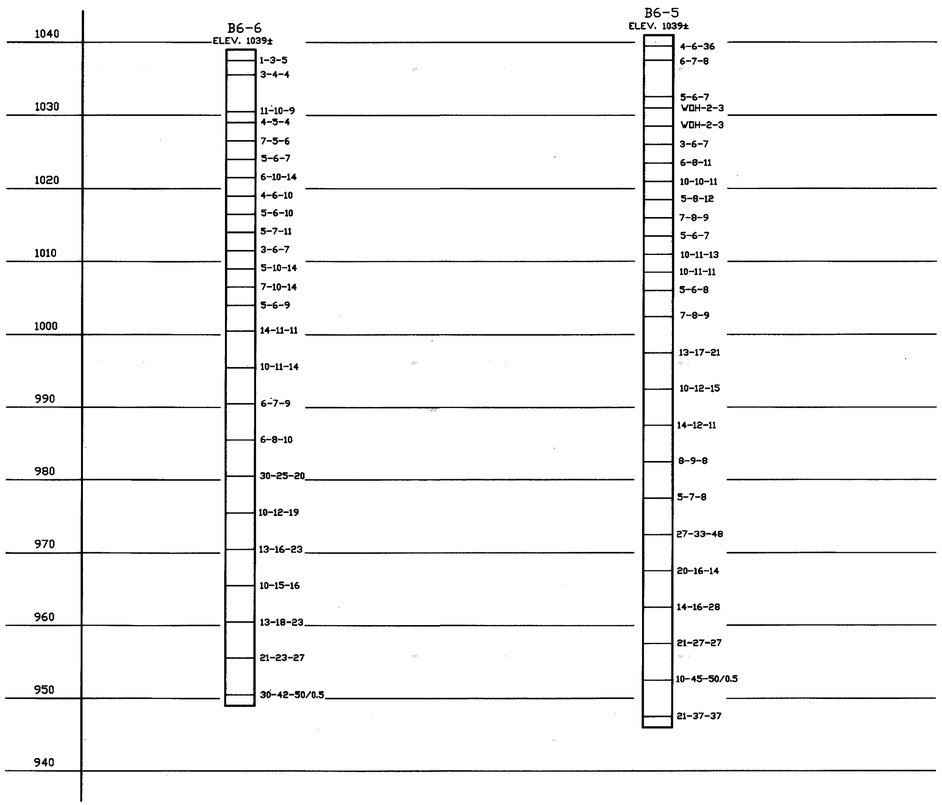

STRUCTURE FOUNDATION INVESTIGATION
BRIDGE No. MED-71-2092W
MEDINA COUNTY, OHIO

R&R INTERNATIONAL, INC.
Geotechnical Engineers • Geologists
1234 S. CLEVELAND-MASSILLON ROAD
P.O. BOX 4389
AKRON, OH 44321



DRAWN BY	CHECKED BY	REVIEWED	DATE
V. K.	J.X.	G. M. R.	10-29-92

CALCULATED | CHECKED

STRUCTURE FOUNDATION INVESTIGATION
MED - 71 - 2090 (L&R) MED - 71 - 2088E
MED - 71 - 2092W

3/11

MED - 71 - 15.78

21
36

DESIGN FILE : i:\pd_med_ir71\dgn\soils\soils21.dgn
USERNAME : jrogers
DATE : 18-NOV-1999
TIME : 13:49

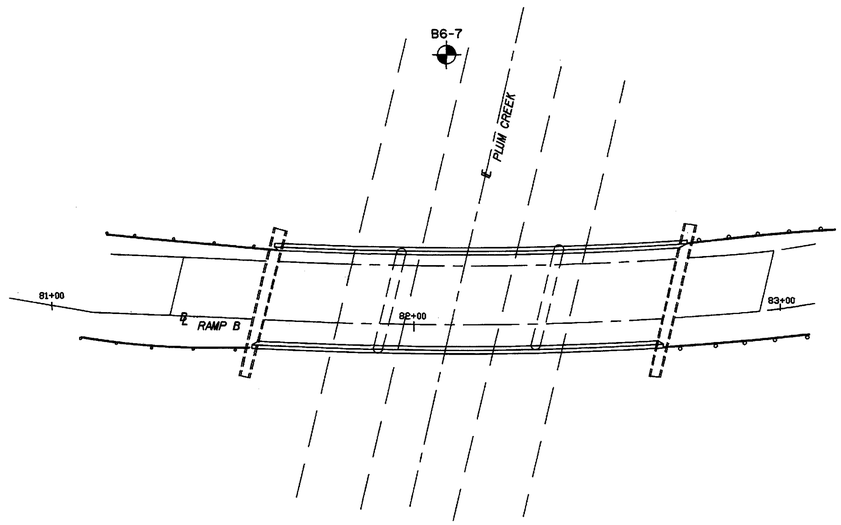



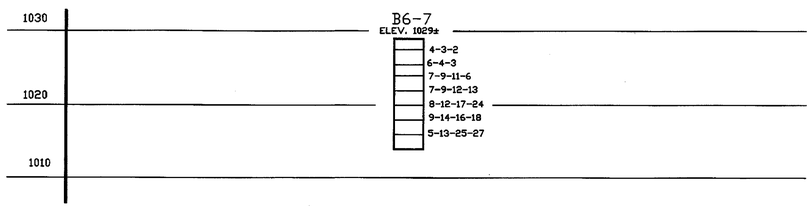

STRUCTURE FOUNDATION INVESTIGATION

BRIDGE No. MED-71-2088E
MEDINA COUNTY, OHIO

R&R INTERNATIONAL INC.

Geotechnical Engineers • Geologists
1234 S. CLEVELAND-MASSILLON ROAD
P.O. BOX 4383
AKRON, OH 44321



DRAWN BY	CHECKED BY	REVIEWED	DATE
V. K.	J. X.	G. M. R.	10.29.92

CALCULATED | CHECKED

STRUCTURE FOUNDATION INVESTIGATION
MED - 71 - 2090 (L&R) MED - 71 - 2092W MED - 71 - 2088E

4/11

MED - 71 - 15.78

22
36

DESIGN FILE : I:\pd_med_ir71\dgn\soils\soils22.dgn
USERNAME : jrogers
DATE : 18-NOV-1999
TIME : 13:49

LOG OF BORING

Date Started 6-25-92 | Sampler Type SS | Dia. 2.00 inch. | Water Elev. 1033.5

Date Completed 6-25-92 | Casing: length -- | Dia. 3.25 inch.

Boring No. B6-1 | Station & Offset STA. 1102+96.99 26' L. | Surface Elev. 1066 ±

ELEV.	DEPTH	STD.PEN. (N)	REC. Ft.	LOSS Ft.	DESCRIPTION	SAMPLE NO.	SAMPLE TYPE	PHYSICAL CHARACTERITICS % AGG.	% COAR. SAND	% FINE SAND	% SILT	% CLAY	L.L.	P.L.	P.I.	W.C. %	SHTL CLASS.
1066.0	0																
	1.5	2-5-7	0.7			1	SS										
	3.5	8-8-8	0.8			2	SS										
	8.5	3-5-9	1.0			3	SS										
	13.5	5-5-9	1.0		Stiff to hard, brown to brown and gray mottled SILT AND CLAY, trace to little gravel, trace to little sand, damp to moist.	4	SS	6.9	7.2	10.9	*	75.0	—	—	—	15.0	A-6a
	18.5	8-6-7	1.5			5	SS										
	22.5	7-15-13	1.2			6	SS										
	25.0	5-10-13	1.5			7	SS	13.3	6.8	9.5	*	70.4	29.6	15.8	13.8	14.0	A-6a
	27.5	6-8-8	1.3			8	SS	3.5	6.1	8.9	*	81.5	—	—	—	19.8	A-6a
	30.0	10-15-18	1.5			9	SS										
1034.0	32.0																
	32.5	8-7-6	1.5		Medium dense, brown SAND, little to some silt and clay, moist to saturated	10	SS										
1032.0	34.0																
	35.0	5-8-12	1.3			11	SS	7.0	8.0	12.9	*	72.1	23.6	16.0	7.6	15.1	A-4a
	37.5	5-8-8	1.5			12	SS										
	40.0	6-9-14	1.5			13	SS										
	42.5	9-10-13	1.5			14	SS										
	45.0	6-8-10	1.5			15	SS										
	48.5	5-7-9	1.2			16	SS										
	53.5	6-9-12	1.5		Very stiff to hard, gray SANDY SILT, trace to little gravel, wet. Note: - gravel decreases at 45.0 ft. - sand increases from 68.5 to 70.0 ft.	17	SS										
	58.5	7-10-13	1.5			18	SS										
	63.5	7-11-11	1.5			19	SS										
	68.5	10-16-12	1.5			20	SS										
	73.5	6-18-12	1.5		(cont.)	21	SS										
988.0	78.0																
	78.5	15-15-10	1.5		Medium dense, gray and brown GRAVEL W/ SAND AND SILT, little to some clay, saturated.	22	SS	38.4	22.3	10.8	*	28.5	—	—	—	14.0	A-2-4
986.0	80.0																
	83.5	10-14-14	1.5			23	SS										
	88.5	12-13-9	1.5			24	SS										
					Very stiff, gray and brown SANDY SILT, some gravel, saturated.												
	93.5	10-9-9	1.5			25	SS										
	98.5	7-13-16	1.5			26	SS										
	103.5	7-11-10	0.5			27	SS										
	108.5	7-10-10	1.0			28	SS	22.9	9.4	11.9	*	55.8	—	—	—	19.4	A-4a
956.0	110.0																
	113.5	6-12-12	1.0			29	SS										
	118.5	20-19-23	1.0		Medium dense to very dense, gray SANDSTONE FRAGMENTS W/ SILT AND CLAY, saturated.	30	SS	38.6	18.8	11.2	*	31.4	—	—	—	11.0	A-2-4
	125.0	25-28-35	1.0			31	SS										
939.5	126.5				TERMINATION DEPTH 126.5 FEET												

* SILT AND CLAY COMBINED

STRUCTURE FOUNDATION INVESTIGATION

BRIDGE No. MED-71-2090 (L&R)
MEDINA COUNTY, OHIO

R&R INTERNATIONAL, INC.

Geotechnical Engineers • Geologists
1234 S. CLEVELAND-MASSILLON ROAD
P.O. BOX 4383
AKRON, OH 44321

TYPED BY	CHECKED BY	REVIEWED	DATE
T.E.	J.X.	G.M.R.	10.29.92

CALCULATED | CHECKED

STRUCTURE FOUNDATION INVESTIGATION
MED - 71 - 2090 (L&R) MED - 71 - 2088E
MED - 71 - 15.78

5/11

23
36

DESIGN FILE : I:\pd_med_ir71\dgn\soils\soils23.dgn
USERNAME : jrogers

DATE : 18-NOV-1999
TIME : 13:49

LOG OF BORING

Date Started 7-6-92 | Sampler Type SS | Dia. 2.00 inch. | Water Elev. 1027 ±

Date Completed 7-6-92 | Casing: length -- | Dia. 3.25 inch.

Boring No. B6-2 | Station & Offset STA. 1103+97.99 25' R. | Surface Elev. 1047 ±

ELEV.	DEPTH	STD.PEN. (N)	REC. Ft.	LOSS Ft.	DESCRIPTION	SAMPLE NO.	SAMPLE TYPE	PHYSICAL CHARACTERITICS % AGG.	% COAR. SAND	% FINE SAND	% SILT	% CLAY	L.L.	P.L.	P.I.	W.C. %	SHTL CLASS.
1047.0	0																
	1.5	7-7-6	0.6			1	SS	5.3	8.4	12.3	*	74.0	---	---	---	15.6	A-6a
	3.5	5-7-11	0.9			2	SS										
	7.5	11-14-17	1.5		Stiff to hard, brown SILT AND CLAY, trace gravel, trace sand, damp.	3	SS										
	10.0	4-7-9	1.2			4	SS	7.0	9.2	11.4	*	72.4	---	---	---	15.5	A-6a
	12.5	7-7-7	0.9			5	SS										
	15.5	5-7-8	1.5			6	SS										
	17.5	6-8-10	0.8			7	SS										
1027.0	20.0	4-4-4	0.8			8	SS										
	22.5	6-3-6	1.5			9	SS	27.1	11.1	13.0	*	48.8	---	---	---	14.6	A-4a
	25.5	9-14-19	1.5			10	SS										
	28.5	10-17-17	1.5			11	SS										
	33.0	9-16-17	1.5		Stiff to hard, brown SANDY SILT, some gravel, saturated.	12	SS										
	38.5	12-18-21	1.5			13	SS										
	43.5	11-17-22	1.5			14	SS										
999.0	48.0																
	48.5	9-17-18	1.5		Hard, brownish gray SILT, trace sand, wet. Note: - shale fragments in sample.	15	SS										
993.5	53.5	Shelby Tube			Medium dense, brown SAND, trace gravel, some silt, wet to saturated.	16	SS	16.6	37.9	21.8	*	23.7	---	---	---	11.6	A-3a
991.0	56.0																
	58.5	10-14-17	1.5		Hard, brownish gray SILT, wet.	17	SS										
	63.5	12-15-18	1.5			18	SS	0.9	1.0	1.6	*	96.5	---	---	---	22.1	A-4b
982.0	65.0				TERMINATION DEPTH 65.0 FEET												

* SILT AND CLAY COMBINED

STRUCTURE FOUNDATION INVESTIGATION
BRIDGE No. MED-71-2090 (L&R)
MEDINA COUNTY, OHIO

R&R INTERNATIONAL, INC.
Geotechnical Engineers • Geologists
1234 S. CLEVELAND-MASSILLON ROAD
P.O. BOX 4383
AKRON, OH 44321

TYPED BY	CHECKED BY	REVIEWED	DATE
T.E.	J.X.	G.M.R.	10.29.92

DESIGN FILE : I:\pd_med_ir71\dgn\soils\soils24.dgn
USERNAME : jrogers
DATE : 18-NOV-1999
TIME : 13:49

CALCULATED | CHECKED

STRUCTURE FOUNDATION INVESTIGATION
MED - 71 - 2090 (L&R)
MED - 71 - 2092W
MED - 71 - 2088E

6/11

MED - 71 - 15.78

24/36

LOG OF BORING

Date Started 7-1-92 | Sampler Type SS | Dia. 2.00 inch. | Water Elev. 1024 ±
Date Completed 7-1-92 | Casing: length -- | Dia. 3.25 inch.
Boring No. B6-3 | Station & Offset STA. 1104+58.89 19' L. | Surface Elev. 1047 ±

ELEV.	DEPTH	STD.PEN. (N)	REC. Ft.	LOSS Ft.	DESCRIPTION	SAMPLE NO.	SAMPLE TYPE	PHYSICAL CHARACTERITICS % AGG.	COAR. SAND	FINE SAND	SILT	CLAY	L.L.	P.L.	P.I.	W.C. %	SHTL CLASS.
1047.0	0																
1046.2	0.8				ASPHALT												
1045.7	1.3				ROADBASE MATERIAL												
	1.5	2-5-7	1.2			1	SS										
	3.5	6-10-14	1.3			2	SS										
	7.5	4-8-15	1.2		Hard to very stiff to hard, brown to brownish gray SANDY SILT, little t trace gravel, moist to wet.	3	SS	15.9	14.4	14.9	*	54.8	—	—	—	14.3	A-4a
	10.0	7-11-14	1.3		Note: – trace organics in sample at 11.0 ft. – trace organics in sample at 17.0 ft.	4	SS										
	12.5	10-18-19	1.5			5	SS										
	15.0	10-10-11	1.5			6	SS										
	17.5	4-5-8	1.5			7	SS	10.0	10.9	33.3	*	45.8	—	—	—	17.2	A-4a
	20.0	2-4-10	1.5			8	SS										
	22.5	8-10-15	1.4			9	SS										
	25.0	10-15-16	1.5			10	SS	10.3	11.1	22.9	*	55.7	—	—	—	13.2	A-4a
1020.0	27.0																
	28.5	12-12-18	1.5		Hard, brownish gray SILT AND CLAY, trace gravel trace sand, wet.	11	SS										
1017.0	30.0																
	33.5	5-9-11	1.5		Medium dense, brownish gray SAND, trace gravel, saturated.	12	SS										
1012.0	35.0																
	38.5	7-9-12	1.5		Very stiff to stiff, gray SILT AND CLAY, trace silt, wet to moist.	13	SS										
	43.5	3-5-7	1.5			14	SS										
1001.0	46.0																
	48.5	7-9-7	1.5			15	SS										
	53.5	4-9-9	1.5			16	SS	3.8	11.7	18.8	*	65.7	27.2	18.5	8.7	16.4	A-4b
	58.5	7-7-9	1.5			17	SS										
	63.5	11-14-19	1.5			18	SS										
	68.5	7-9-9	1.5		Very stiff to hard, gray SILT, trace sand, moist.	19	SS										
	73.5	5-9-8	1.5			20	SS										
	78.5	4-9-11	1.5			21	SS										
	83.5	16-17-27	1.5			22	SS	22.5	7.4	8.8	*	61.3	—	—	—	12.8	A-4b
	88.5	14-16-19	1.5			23	SS										
	93.5	11-19-22	1.5			24	SS										
949.0	98.0																
	98.5	14-19-23	1.5		Dense to very dense, gray GRAVEL W/ SAND AND SILT, saturated.	25	SS										
	103.5	50/0.1	0.2			26	SS	40.8	16.9	13.5	*	28.8	—	—	—	10.5	A-2-4
938.1	108.9	50/0.4	0.4			27	SS										
					TERMINATION DEPTH 108.9 FEET												

* SILT AND CLAY COMBINED

R&R INTERNATIONAL, INC.
Geotechnical Engineers • Geologists
1234 S. CLEVELAND-MASSILLON ROAD
P.O. BOX 4363
AKRON, OH 44321

TYPED BY	CHECKED BY	REVIEWED BY	DATE
T.E.	J.K.	G.M.R.	10/29/99

STRUCTURE FOUNDATION INVESTIGATION
BRIDGE No. MED-71-2090 (L&R)
MEDINA COUNTY, OHIO

LOG OF BORING

Date Started 7-1-91 | Sampler Type SS | Dia. 2.00 inch. | Water Elev. 1025.5

Date Completed 7-1-91 | Casing: length -- | Dia. 3.25 inch.

Boring No. B6-4 | Station & Offset STA. 1105+69.99 22' R. | Surface Elev. 1068 ±

* SILT AND CLAY COMBINED

SAMPLE NO.	SAMPLE TYPE	PHYSICAL CHARACTERTICS % AGG.	COAR. SAND	FINE SAND	SILT	CLAY*	L.L.	P.L.	P.I.	W.C. %	SHTL CLASS.	REC. Ft.	LOSS Ft.	STD.PEN. (N)	DEPTH	ELEV.	DESCRIPTION
1	SS	8.8	8.4	13.0	*	69.8	—	—	—	14.2	A-6a	0.3		10-9-7	1.5	1068.0	Very stiff, brown SILT AND CLAY trace gravel, trace sand, damp to moist.
2	SS											1.5		7-11-12	3.5		
3	SS	7.5	6.1	9.5	*	76.9	—	—	—	14.3	A-6a	1.2		11-11-12	8.5		
4	SS											1.2		13-11-14	13.5		
5	SS											1.5		8-13-17	18.5		
6	SS											1.5		8-10-14	22.5		
7	SS											1.3		13-14-20	25.0		
8	SS											1.2		7-8-14	27.5		
9	SS											1.5		14-18-22	30.0		
10	SS											1.2		9-12-18	32.5		
11	SS											1.5		9-18-20	35.0		
12	SS											1.3		14-14-16	37.5		
13	SS	2.7	2.5	3.9	*	90.9	38.9	21.4	15.5	25.5	A-6a	0.5		5-70/0.5	40.0 40.5	1027.5	Very dense, grayish brown SAND AND GRAVEL, little silt, moist to wet. Note: – brownish yellow sandstone fragments in sample at 41.0 ft. – trace organics in sample at 40.5 ft.
14	SS											1.5		14-17-17	42.5		
15	SS											1.5		6-7-9	44.0 45.0	1024.0	
16	SS											1.5		7-7-10	47.0 48.5	1021.0	Hard to very stiff, brownish gray SILT AND CLAY, little gravel, little sand, wet.
17	SS	1.0	1.2	4.0	*	93.8	—	—	—	19.8	A-4b	1.5		woh-3-6	53.5 54.0	1014.0	Medium dense to loose, brownish gray SAND, little to some clay, wet.
18	SS											1.5		2-6-8	58.5		Stiff to hard, brownish gray SILT, trace sand, wet.
19	SS											1.0		woh-3-6	63.5		
20	SS											1.5		4-5-7	68.5		
21	SS											1.5		11-14-17	73.5		
22	SS	12.8	7.8	10.1	*	69.3	—	—	—	15.5	A-4b	1.2		7-7-8	78.5 79.0	989.0	Very stiff to hard, brownish gray SILT AND CLAY, trace sand, wet.
23	SS											1.5		8-18-19	83.5		
24	SS											1.5		14-23-31	88.5 89.0	979.0	
25	SS											1.5		14-17-21	93.5		Hard, brownish gray SILT, trace to little gravel, trace sand, wet.
26	SS											1.5		10-16-24	98.5		
27	SS											1.5		10-10-12	103.5		Dense to medium dense, brownish gray SAND, little to some gravel, saturated. Note: quick sand condition encountered at 105.0 ft. – sampling could not be performed below 105.0 ft. – augered from 105.0 to 115.0 ft., bedrock was not encountered
															115.0	953.0	TERMINATION DEPTH: 115.0 FEET

STRUCTURE FOUNDATION INVESTIGATION
BRIDGE No. MED-71-2090 (L&R)
MEDINA COUNTY, OHIO

R&R INTERNATIONAL INC.
Geotechnical Engineers • Geologists
1234 S. CLEVELAND-MASSILLON ROAD
P.O. BOX 4383
AKRON, OH 44321

TYPED BY	CHECKED BY	REVIEWED	DATE
T.E.	J.X.	G.M.R.	10.29.92

CALCULATED | CHECKED

STRUCTURE FOUNDATION INVESTIGATION
MED - 71 - 2090 (L&R) MED - 71 - 2088E
MED - 71 - 2092W

8/11

MED - 71 - 15.78

26
36

DESIGN FILE : i:\pd_med_lr71\dgn\soils\soils26.dgn
USERNAME : jrogers

DATE : 18-NOV-1999
TIME : 13:49

LOG OF BORING

Date Started 7-6-92 Sampler Type SS Dia. 2.00 inch. Water E av. 1014 ±
Date Completed 7-6-92 Casing: length -- Dia. 3.25 inch.
Boring No. B6-5 Station & Offset STA 84+58 2' L. Surface Elev. 1041 ±

ELEV.	DEPTH	STD.PEN. (N)	REC. Ft.	LOSS Ft.	DESCRIPTION	SAMPLE NO.	SAMPLE TYPE	PHYSICAL CHARACTERITICS % AGG.	COAR. SAND	FINE SAND	SILT	CLAY	L.L.	P.L.	P.I.	W.C. %	SHTL CLASS.
1041.0	0																
1040.3	0.7																
	1.5	4-6-36	0.7		ASPHALT	1	SS	35.2	11.1	12.2	*	41.5	--	--	--	10.2	A-4a
	3.5	6-7-8	1.3		Hard, brown SANDY SILT, some gravel, damp. (Roadbase)	2	SS										
1036.0	5.0																
	8.5	5-6-7	1.5			3	SS										
	10.0	woh-2-3	1.5		Medium dense to loose, brownish gray SILTY SAND, moist.	4	SS	0.0	0.5	51.3	*	48.2	--	--	--	19.0	A-4a
	12.5	woh-2-3	1.5			5	SS										
1026.0	15.0	3-6-7	1.5			6	SS										
	17.5	6-8-11	1.5			7	SS	4.2	3.0	4.6	*	88.2	--	--	--	18.8	A-4b
	20.0	10-10-11	1.5		Stiff to very stiff, brownish gray SILT, trace sand, trace gravel, moist.	8	SS										
	22.5	5-8-12	1.5			9	SS										
	25.0	7-8-9	0.0			10	SS										
	27.5	5-6-7	1.5			11	SS	0.1	0.1	0.1	50.4	49.3	--	--	--	26.3	A-4b
1012.0	29.0																
	30.0	10-11-13	1.5		Medium dense to dense, brownish gray SAND, some silt, saturated.	12	SS	0.2	2.0	65.8	*	32.0	--	--	--	21.3	A-3a
1008.5	32.5	10-11-11	1.5		Very stiff, brownish gray SANDY SILT, trace gravel saturated.	13	SS	0.3	1.0	61.2	*	37.5	--	--	--	20.6	A-4a
1006.0	35.0	5-6-8	1.5		Stiff, brownish gray SILT, some sand, trace gravel, satyurated.	14	SS	0.1	0.8	21.8	57.6	19.7	--	--	--	20.0	A-4b
1003.0	38.0					12	SS										
	38.5	7-8-9	1.5			13	SS										
						14	SS										
	43.5	13-17-21	1.5		Medium dense to dense, brownish gray SAND, little silt, saturated.												
	48.5	10-12-15	1.5			17	SS										
	53.5	14-12-11	1.5			18	SS										
986.0	55.0																
	58.5	8-9-8	1.5		Very stiff, grayish brown SILT AND CLAY, little gravel, little sand, wet.	19	SS	19.6	10.0	3.4	*	67.0	--	--	--	21.1	A-6a
978.0	63.0																
	63.5	5-7-8	1.5		Medium dense, brownish gray SAND, little silt, saturated.	20	SS										
973.0	68.0																
	68.5	27-33-48	1.5		Hard, brownish gray SANDY SILT, little gravel, wet.	21	SS										
	73.5	20-16-14	1.0		Note: - rock fragments in sample from 73.5 to 84.0 ft.	22	SS	18.0	9.1	13.0	*	59.9	--	--	--	14.0	A-4a
963.0	78.0																
	78.5	14-16-28	1.0			23	SS										
	83.5	21-27-27	1.5		Dense to very dense, brownish gray SAND, little clay, saturated.	24	SS										
	88.5	10-45-50/0.5	1.5			25	SS										
	93.5	21-37-37	1.0			26	SS										
946.0	95.0				TERMINATION DEPTH 95.0 FEET												

* SILT AND SAND COMBINED

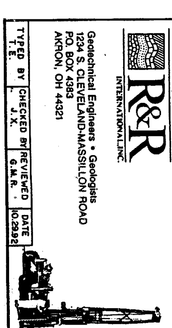

R&R INTERNATIONAL, INC.
Geotechnical Engineers • Geologists
2241 SCHOOLCRAFT ROAD
P.O. BOX 4393
AKRON, OH 44321

TYPED BY T.E. | CHECKED BY J.K. | REVIEWED BY G.M.R. | DATE 10.2892

STRUCTURE FOUNDATION INVESTIGATION
BRIDGE No. MED-71-2092W
MEDINA COUNTY, OHIO

DATE : 18-NOV-1999 DESIGN FILE : i:\pd_med_ir71\dgn\soils\soils28.dgn
TIME : 13:49 USERNAME : jrogers

LOG OF BORING

Date Started 7-7-92 Sampler Type SS Dia. 2.00 inch. Water Elev. 1013 ±
Date Completed 7-7-92 Casing: length -- Dia. 3.25 inch.
Boring No. B6-6 Station & Offset STA 83+43 24' R. Surface Elev. 1039 ±

ELEV.	DEPTH	STD.PEN. (N)	REC. Ft.	LOSS Ft.	DESCRIPTION	SAMPLE NO.	SAMPLE TYPE	PHYSICAL CHARACTERITICS % AGG.	COAR. SAND	FINE SAND	SILT	CLAY	L.L.	P.L.	P.I.	W.C. %	SHTL CLASS.
1039.0	0																
	1.5	1-3-5	0.3		Medium stiff, brown and gray SANDY SILT, some gravel, damp.	1	SS										
	3.5	3-4-4	0.8			2	SS	23.3	20.8	19.9	*	36.0	--	--	--	21.1	A-4a
1034.0	5.0																
	8.5	11-10-9	1.5		Medium dense to loose, brownish gray SAND SILT, trace gravel, moist.	3	SS										
	10.0	4-5-4	1.0			4	SS										
1026.5	12.5	7-5-6-	1.0			5	SS	8.8	8.7	13.3	*	69.2	--	--	--	15.0	A-4a
	15.0	5-6-7	1.3		Stiff to very stiff, brownish gray SANDY SILT, trace gravel, moist.	6	SS										
	17.5	6-10-14	1.3			7	SS										
1019.0	20.0	4-6-10	1.5			8	SS										
	22.5	5-6-10	1.5		Very stiff, brownish gray SILT, trace gravel, little sand, moist.	9	SS	0.0	0.1	0.2	*	99.7	--	--	--	23.0	A-4b
1014.0	25.0	5-7-11	1.5			10	SS										
	27.5	3-6-7	1.5		Medium dense, brownish gray SAND, trace gravel, little to some silt, wet to saturated.	11	SS										
	30.0	5-10-14	1.5			12	SS										
1008.0	31.0																
	32.5	7-10-14	1.5			13	SS										
	35.0	5-6-9	1.5			14	SS	0.1	0.3	3.1	*	96.5	24.5	17.4	7.1	22.1	A-4b
	38.5	14-11-11	1.5			15	SS										
	43.5	10-11-14	1.5			16	SS										
	48.5	6-7-9	1.5			17	SS										
	53.5	6-8-10	1.5		Very stiff to hard, brownish gray SILT, trace gravel, trace sand, moist to wet.	18	SS										
	58.5	30-25-20	1.5			19	SS										
979.0	60.0																
	63.5	10-12-19	1.5			20	SS										
	68.5	13-16-23	1.5			21	SS										
	73.5	10-15-16	1.5		Hard, brownish gray SANDY SILT, some gravel, saturated.	22	SS										
	78.5	13-18-23	1.5			23	SS	23.6	11.9	15.5	*	49.0	--	--	--	11.5	A-4a
	83.5	21-23-27	1.5			24	SS										
	88.5	30-42-50/0.5	1.5			25	SS										
949.0	90.0				TERMINATION DEPTH 90.0 FEET												

* SILT AND CLAY COMBINED

STRUCTURE FOUNDATION INVESTIGATION
BRIDGE No. MED-71-2092W
MEDINA COUNTY, OHIO

R&R INTERNATIONAL INC.
Geotechnical Engineers • Geologists
1234 S. CLEVELAND-MASSILLON ROAD
P.O. BOX 4383
AKRON, OH 44321

TYPED BY T.E. | CHECKED BY J.X. | REVIEWED G.W.R. | DATE 10/29/92

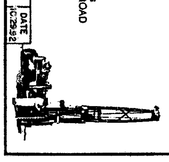

LOG OF BORING

Date Started 8-17-92 | Sampler Type SS | Dia. 2.00 inch. | Water Elev. 1024 ±

Date Completed 8-17-92 | Casing: length -- | Dia. 3.25 inch. |

Boring No. B6-7 | Station & Offset STA 82+08 74 L. | Surface Elev. 1029 ±

ELEV.	DEPTH	STD.PEN. (N)	REC. Ft.	LOSS Ft.	DESCRIPTION	SAMPLE NO.	SAMPLE TYPE	PHYSICAL CHARACTERITICS % AGG.	% COAR. SAND	% FINE SAND	% SILT	% CLAY	L.L.	P.L.	P.I.	W.C. %	SHTL CLASS.
1029.0	0.0																
	1.5	4-3-2	1.5		Medium stiff, brown SANDY SILT, trace gravel, moist to wet.	1	SS										
	3.5	6-4-3	1.5			2	SS	22.9	5.1	38.2	*	33.8	---	---	---	19.4	A-4a
1024.0	5.0	7-9-11-6	1.5			3	SS	58.8	16.2	10.4	*	14.6	---	---	---	16.4	A-1-b
					Medium dense, brown SAND AND GRAVEL,												
1022.0	7.0	7-9-12-13	1.5		saturated.	4	SS	8.2	6.1	14.6	29.9	41.2	---	---	---	15.0	A-4a
	9.0	8-12-17-24	0.5			5	SS	11.3	6.7	14.3	33.2	34.5	---	---	---	16.1	A-4a
	11.0	9-14-16-18	1.5		Very stiff to hard, brown SANDY SILT, trace gravel, wet.	6	SS	4.5	6.8	13.4	39.0	36.3	---	---	---	14.5	A-4a
	13.0	5-13-25-27	1.5			7	SS	0.0	0.3	14.2	43.2	42.3	---	---	---	20.9	A-4a
1014.0	15.0				TERMINATION DEPTH 15.0 FEET												

* SILT AND CLAY COMBINED

STRUCTURE FOUNDATION INVESTIGATION
BRIDGE No. MED-71-2088E
MEDINA COUNTY, OHIO

R&R INTERNATIONAL INC.
Geotechnical Engineers • Geologists
1234 S. CLEVELAND-MASSILLON ROAD
P.O. BOX 4383
AKRON, OH 44321

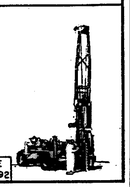

TYPED BY	CHECKED BY	REVIEWED	DATE
T.E.	J.X.	G.M.R.	10.29.92

CALCULATED | CHECKED

STRUCTURE
MED - 71 - 2090 (L&R)
MED - 71 - 2092W MED - 71 - 2088E

11/11

MED - 71 - 15.78

29
36

DESIGN FILE : I:\pd_med_lr71\dgn\solls\solls29.dgn
USERNAME : jrogers
DATE : 18-NOV-1999
TIME : 13:49

GEOLOGY OF THE SITE

THE PROJECT SITE LIES ON THE GLACIATED, MODERATELY ROLLING PLAIN ALONG THE ALLEGHENY ESCARPMENT SEPARATING THE ALLEGHENY PLATEAU FROM THE MISSISSIPPI VALLEY PLAIN. THE PROJECT SITE LIES AT A HIGH ELEVATION OF 1,153 AT TOP OF THE EAST ABUTMENT AND A LOW ELEVATION OF 1,145 AT TOP OF THE WEST ABUTMENT OF BRIDGE No. MED-71-2242 OVER IR-71 IN MEDINA COUNTY, OHIO.

THE WISCONSIN ICE SHEET PASSED OVER THE AREA LEAVING VARIABLE DEPOSITS AND THICKNESSES OF GLACIAL DRIFT MATERIAL. INFORMATION OBTAINED FROM MEDINA COUNTY SOIL SURVEY, NOVEMBER, 1977, INDICATES THAT THE SITE CONSISTS MAINLY OF SILTY CLAY AND CLAY. INFORMATION ALSO INDICATES THAT THE SOILS ALONG IR-71 EMBANKMENT UPPER PORTION ARE MAINLY COMPRISED OF CUT-AND-FILL MATERIALS.

THE OHIO GEOLOGICAL SURVEY INDICATES THAT BEDROCK STANDS AT APPROXIMATE ELEVATION OF 1,080 IN THE VICINITY OF THE SITE. AT THIS ELEVATION IT IS EXPECTED THAT BEDROCK IS COMPRISED OF SHALES AND SHALY SANDSTONE OF LOGAN FORMATION.

EXPLORATION

THE SUBSURFACE EXPLORATION PROGRAM FOR THIS PROJECT INCLUDED ADVANCING A TOTAL OF TWO (2) DRIVE SAMPLE CORE BORINGS WITH A CME-75 TRUCK MOUNTED DRILLING RIG USING CONVENTIONAL 3.25 INCH I.D. HOLLOW STEM AUGERS, PERFORMED DURING JULY, 1992. ALL TEST BORINGS WERE ADVANCED FOR BRIDGE FOUNDATION DESIGN PURPOSE.

INVESTIGATIONAL FINDINGS

TEST BORINGS B7-1 AND B7-2 WERE ADVANCED THROUGH THE EXISTING ASPHALT PAVEMENT, WHICH WAS FOUND TO BE 4 AND 5 INCHES THICK, RESPECTIVELY. THE TEST BORINGS DISCLOSED ALTERNATING LAYERS OF SAND CLASSIFIED AS A-3a, SANDY SILT CLASSIFIED AS A-4a, AND SILT AND CLAY CLASSIFIED AS A-6a. THE RELATIVE DENSITY OF THE NON-COHESIVE SOILS ENCOUNTERED WAS FOUND TO BE "MEDIUM DENSE." THE CONSISTENCY OF THE COHESIVE SOILS ENCOUNTERED WAS FOUND TO RANGE FROM "STIFF" TO "HARD," BUT PREDOMINANTLY "HARD." BEDROCK WAS NOT ENCOUNTERED WITHIN THE EXPLORED DEPTHS AT EITHER TEST BORING LOCATIONS.

FOR SPECIFIC CONDITIONS AT VARIOUS DEPTHS, REFER TO THE INDIVIDUAL TEST BORING LOGS WHICH FORM A PART OF THESE PLANS.

LEGEND

- AUGER BORING LOCATION - PLAN VIEW
- PRESS AND/OR DRIVE SAMPLE AND/OR CORE BORING LOCATION - PLAN VIEW
- TR — TOP OF ROCK
- CAPPED PILE
- FOOTING
- FOOTING ON PILE
- HORIZONTAL BAR ON BORING LOG INDICATES THE DEPTH THE SAMPLE WAS TAKEN
- X/Y/Z — FIGURES BESIDE THE BORING LOG IN PROFILE INDICATE THE NUMBER OF BLOWS FOR STANDARD PENETRATION TEST
  - X = NO. OF BLOWS FOR FIRST 6"
  - Y = NO. OF BLOWS FOR SECOND 6"
  - Z = NO. OF BLOWS FOR THIRD 6"
- W —— INDICATES FREE WATER ELEVATION
- INDICATES STATIC WATER ELEVATION

SYMBOLS OF ROCK TYPES

- COAL
- WEATHERED MUDSTONE
- MUDSTONE
- WEATHERED SHALE
- SHALE
- CLAYSTONE
- SILTSTONE
- WEATHERED SANDSTONE
- SANDSTONE
- LEACHED DOLOMITE
- DOLOMITE
- LEACHED LIMESTONE
- LIMESTONE
- BOULDERS or COBBLES

GENERAL INFORMATION

Drive sample / Press sample / Core borings

Drive sample borings are made by means of a mechanically-powered rotary-type drilling machine, employing a 2" O.D., 1-3/8" I.D. split spoon sampler, at 2.5 and/or 5-foot depth intervals, driven by means of a 140 lb. drop hammer with a free fall of 30". The number of blows required to drive the sampler 18" is considered the standard penetration test.

Drive/press borings are made by means of a mechanically-powered rotary-type drilling machine, employing a 2" O.D., 1-3/8" I.D. split spoon sampler, and 3" O.D. thin wall press sampler. The press sampler is advanced by continuous uniform pressure, applied by the drilling machine.

Core borings are made by means of a mechanically-powered rotary-type drilling machine, employing a NXM core barrel with industrial diamond cutting head.

The boring log sheets display a graphic plot of the information obtained including depth and elevation of the sample, type of sample, the standard penetration test readings in three 6-inch increments, depth and elevation of press samples, field number assigned to sample, sample description - based on laboratory tests utilizing the Casagrande AC classification system - and gradation, plasticity and moisture determinations. Results of strength and consolidation testing, if performed on undisturbed samples, will appear graphically on separate enclosures. Rock samples are displayed on the log sheets including depth and elevation of the sample, amount of recovery and a visual classification based on type, color, degree of hardness, grain size, deterioration, bedding, acid reaction and other qualifying factors.

At depths where materials are bouldery or gravelly to the extent that the sampler can not be utilized, a wash sample is procured and visually classified, in order to determine the general characteristics of the material. These samples are not considered sufficiently representative to warrant laboratory testing.

PARTICLE SIZE DEFINITIONS

12"	3"	2.0mm		0.42mm	0.074mm	0.005mm
Boulders	Cobbles	Gravel	Coarse Sand	Fine Sand	Silt	Clay
		No. 10 sieve		No. 40 sieve	No. 200 sieve	

STRUCTURE FOUNDATION INVESTIGATION
BRIDGE No. MED-71-2242
WIDENING
MEDINA COUNTY, OHIO

R&R INTERNATIONAL, INC.
Geotechnical Engineers • Geologists
1234 S. CLEVELAND-MASSILLON ROAD
P.O. BOX 4383
AKRON, OH 44321

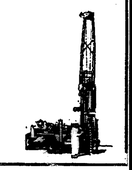

CHECKED BY	REVIEWED	DATE
J.X.	G.M.R.	10-29-92

CALCULATED | CHECKED

STRUCTURE FOUNDATION INVESTIGATION
MED - 71 - 2242

1/3

MED - 71 - 15.78

30
36

DESIGN FILE : i:\pd_med_ir71\dgn\soils\soils30.dgn
USERNAME : jrogers
DATE : 18-NOV-1999
TIME : 13:49

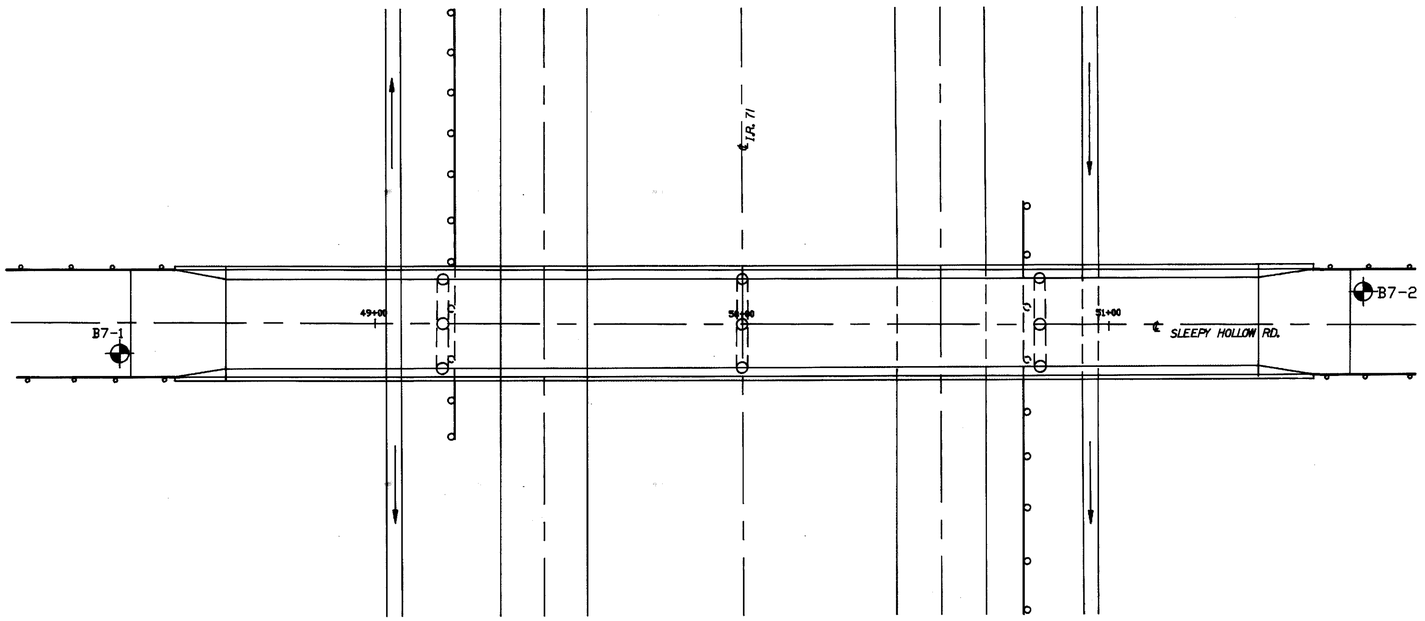

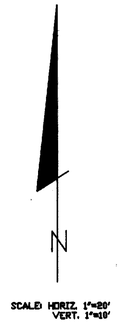

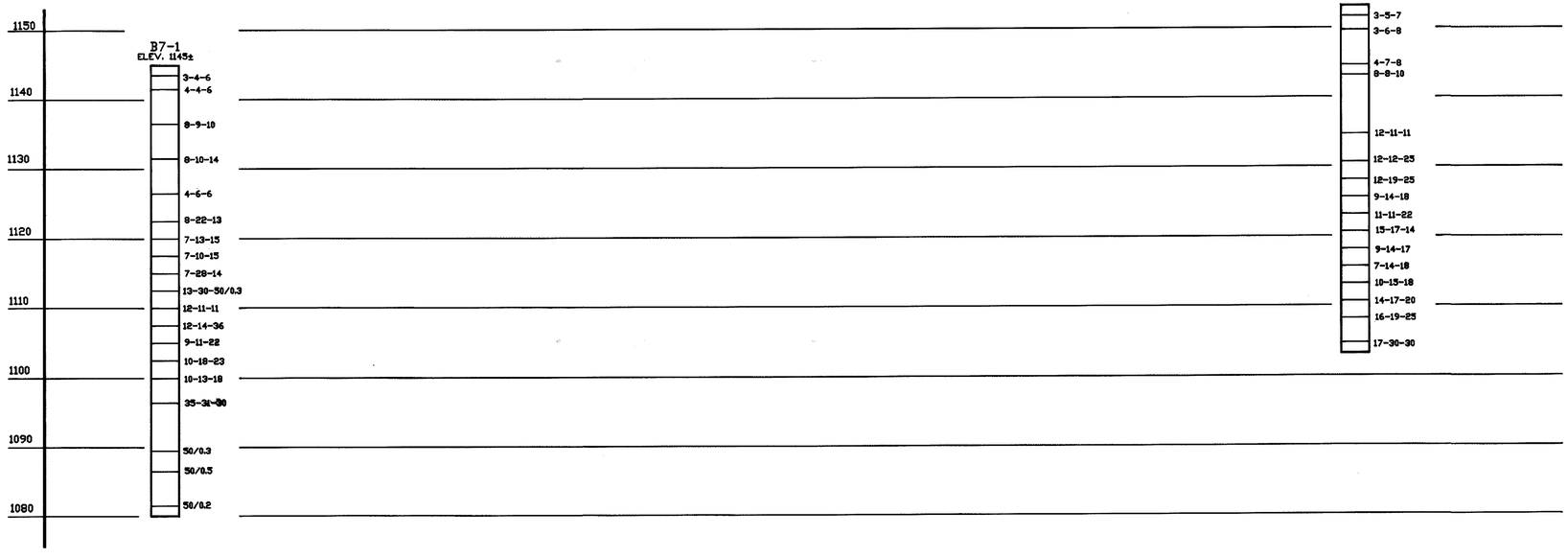

STRUCTURE FOUNDATION INVESTIGATION
BRIDGE No. MED-71-2242
WIDENING
MEDINA COUNTY, OHIO

R&R INTERNATIONAL, INC.

Geotechnical Engineers • Geologists
1234 S. CLEVELAND-MASSILLON ROAD
P.O. BOX 4383
AKRON, OH 44321

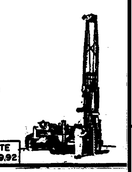

DRAWN BY	CHECKED BY	REVIEWED	DATE
V.K.	J.K.	G.M.R.	10.29.92

CALCULATED | CHECKED

STRUCTURE FOUNDATION INVESTIGATION
MED - 71 - 2242

2/3

MED - 71 - 15.78

31
36

DESIGN FILE : I:\pd_med_lr71\dgn\soils\soils31.dgn
USERNAME : jrogers
DATE : 18-NOV-1999
TIME : 13:49

LOG OF BORING

Date Started 7-8-92 | Sampler Type SS | Dia. 2.00 inch. | Water Elev. 1118 ±
Date Completed 7-8-92 | Casing: length -- | Dia. 3.25 inch.
Boring No. B7-1 | Station & Offset STA 48+31 8'L | Surface Elev. 1145 ±

ELEV.	DEPTH	STD.PEN. (N)	REC. Ft.	LOSS Ft.	DESCRIPTION	SAMPLE NO.	SAMPLE TYPE	PHYSICAL CHARACTERITICS % AGG.	COAR. SAND	FINE SAND	SILT	CLAY	L.L.	P.L.	P.I.	W.C. %	SHTL CLASS.
1145.0	0																
1144.7	0.3				ASPHALT												
	1.5	3-4-6	0.8			1	SS	8.0	7.6	11.2	*	73.2	—	—	—	18.7	A-4a
	3.5	4-4-6	0.5			2	SS										
					Stiff to very stiff, brown SANDY SILT, trace gravel, damp.												
	8.5	8-9-10	1.1			3	SS										
1135.0	10.0																
					Medium dense, brown SAND, trace gravel, little silt, moist.												
	13.5	8-10-14	1.3			4	SS										
1130.0	15.0																
	18.5	4-6-6	1.1			5	SS										
	22.5	8-22-13	1.5			6	SS	25.1	13.1	14.8	*	47.2	—	—	—	12.9	A-4a
	25.0	7-13-15	1.0			7	SS										
	27.5	7-10-15	1.1			8	SS										
	30.0	7-28-14	1.3			9	SS	14.8	6.7	8.2	*	70.3	27.3	17.6	9.7	13.8	A-4a
	32.5	13-30-50/0.3	1.5			10	SS										
	35.0	12-11-11	0.8			11	SS										
	37.5	12-14-36	1.0			12	SS										
	40.0	9-11-22	0.8			13	SS										
	42.5	10-18-23	1.2			14	SS	29.5	8.5	8.4	*	53.6	—	—	—	13.0	A-4a
	45.0	10-13-18	0.3		Stiff to hard, brownish gray SANDY SILT, trace gravel, saturated.	15	SS										
	48.5	35-31-30	0.8			16	SS										
	55.6	50/0.3	0.2			17	SS	28.1	11.0	4.3	*	56.6	—	—	—	15.6	A-4a
	58.5	50/0.5	0.3			18	SS										
	63.5	50/0.2	0.2			19	SS										
1080.0	65.0				TERMINATION DEPTH 65.0 FEET												

* SILT AND CLAY COMBINED

LOG OF BORING

Date Started 7-10-92 | Sampler Type SS | Dia. 2.00 inch. | Water Elev. 1118 ±
Date Completed 7-10-92 | Casing: length -- | Dia. 3.25 inch.
Boring No. B7-2 | Station & Offset STA 51 + 70 8' L | Surface Elev. 1153 ±

ELEV.	DEPTH	STD.PEN. (N)	REC. Ft.	LOSS Ft.	DESCRIPTION	SAMPLE NO.	SAMPLE TYPE	PHYSICAL CHARACTERITICS % AGG.	COAR. SAND	FINE SAND	SILT	CLAY	L.L.	P.L.	P.I.	W.C. %	SHTL CLASS.
1153.0	0																
1152.6	0.4				ASPHALT												
	1.5	3-5-7	0.9			1	SS	9.6	11.1	15.5	*	63.8	—	—	—	1.5	A-4a
	3.5	3-6-8	0.8			2	SS										
	8.5	4-7-8	0.9			3	SS										
					Stiff to hard, brown SANDY SILT, trace to little gravel, damp. Note: – trace organics encountered at 8.5 ft.												
	13.5	8-8-10	1.1			4	SS	26.7	14.9	12.7	*	45.7	—	—	—	14.6	A-4a
	18.5	12-11-11	0.1			5	SS										
	22.5	12-12-25	0.8			6	SS										
	25.0	12-19-25	1.5			7	SS										
	27.5	9-14-18	1.5			8	SS										
1123.0	30.0	11-11-22	0.7			9	SS										
	32.5	15-17-14	1.0		Hard, brownish gray SILT AND CLAY, trace gravel, trace to little sand, moist.	10	SS	4.3	5.2	7.7	*	82.8	28.8	17.6	11.2	18.2	A-6a
	35.0	9-14-17	1.2			11	SS										
1117.0	36.0																
	37.5	7-14-18	1.5			12	SS										
	40.0	10-15-18	1.5			13	SS	37.4	9.2	6.6	*	46.8	—	—	—	16.0	A-4a
	42.5	14-17-20	1.5		Hard, brownish gray SANDY SILT, some gravel, saturated.	14	SS										
	45.0	16-19-25	0.3			15	SS										
	48.5	17-30-30	0.6			16	SS	41.3	8.5	4.8	*	45.4	—	—	—	15.1	A-4a
1103.0	50.0				TERMINATION DEPTH 50.0 FEET												

* SILT AND CLAY COMBINED

STRUCTURE FOUNDATION INVESTIGATION
BRIDGE No. MED-71-2242
WIDENING
MEDINA COUNTY, OHIO

R&R INTERNATIONAL, INC.
Geotechnical Engineers • Geologists
1234 S. CLEVELAND-MASSILLON ROAD
P.O. BOX 4383
AKRON, OH 44321

TYPED BY	CHECKED BY	REVIEWED	DATE
T.E.	J.X.	G.M.R.	10.29.92

CALCULATED | CHECKED

STRUCTURE FOUNDATION INVESTIGATION
MED - 71 - 2242

3/3

MED - 71 - 15.78

32/36

DATE : 18-NOV-1999 TIME : 13:49
DESIGN FILE : i:\pd_med_ir7\dgn\soils\soils32.dgn
USERNAME : jrogers

GEOLOGY OF THE SITE

THE PROJECT SITE LIES ON THE GLACIATED, MODERATELY ROLLING PLAIN ALONG THE ALLEGHENY ESCARPMENT SEPARATING THE ALLEGHENY PLATEAU FROM THE MISSISSIPPI VALLEY PLAIN. THE PROJECT SITE LIES AT A HIGH ELEVATION OF 1,170 AT TOP OF THE IR-71 BRIDGE ABUTMENTS AND A LOW ELEVATION OF 1,145 ON SR-303 BENEATH THE IR-71 BRIDGES IN MEDINA COUNTY, OHIO.

THE WISCONSIN ICE SHEET PASSED OVER THE AREA LEAVING VARIABLE DEPOSITS AND THICKNESSES OF GLACIAL DRIFT MATERIAL. INFORMATION OBTAINED FROM MEDINA COUNTY SOIL SURVEY, NOVEMBER, 1977, INDICATES THAT THE SITE CONSISTS MAINLY OF SILTY CLAY AND CLAY. INFORMATION ALSO INDICATES THAT THE SOILS ALONG IR-71 EMBANKMENT UPPER PORTION ARE MAINLY COMPRISED OF CUT-AND-FILL MATERIALS.

THE OHIO GEOLOGICAL SURVEY INDICATES THAT BEDROCK STANDS AT APPROXIMATE ELEVATION OF 1,100 IN THE VICINITY OF THE SITE. AT THIS ELEVATION IT IS EXPECTED THAT BEDROCK IS COMPRISED OF SHALES AND SHALY SANDSTONE OF LOGAN FORMATION.

EXPLORATION

THE SUBSURFACE EXPLORATION PROGRAM FOR THIS PROJECT INCLUDED ADVANCING A TOTAL OF FOUR (4) DRIVE SAMPLE CORE BORINGS WITH A CME-75 TRUCK MOUNTED DRILLING RIG USING CONVENTIONAL 3.25 INCH I.D. HOLLOW STEM AUGERS, PERFORMED DURING JUNE, 1992. ALL TEST BORINGS WERE ADVANCED FOR BRIDGE FOUNDATION DESIGN PURPOSE.

INVESTIGATIONAL FINDINGS

TEST BORINGS B8-1 AND B8-4 WERE ADVANCED THROUGH THE EXISTING EMBANKMENT MATERIAL. TEST BORING B8-2 AND B8-3 WERE ADVANCED THROUGH THE EXISTING MEDIAN LOCATED BETWEEN EASTBOUND AND WESTBOUND LANES OF SR-303. THE TEST BORINGS DISCLOSED ALTERNATING LAYERS OF GRAVEL AND SAND CLASSIFIED AS A-1-b, ROCK FRAGMENTS WITH SAND AND SILT CLASSIFIED AS A-2-4, SANDY SILT CLASSIFIED AS A-4a, SILT CLASSIFIED AS A-4b, AND SILT AND CLAY CLASSIFIED AS A-6a. THE RELATIVE DENSITY OF THE NON-COHESIVE SOILS ENCOUNTERED WAS FOUND TO RANGE FROM "MEDIUM DENSE" TO "VERY DENSE," BUT PREDOMINANTLY "DENSE." THE CONSISTENCY OF THE COHESIVE SOILS ENCOUNTERED WAS FOUND TO RANGE FROM "STIFF" TO "HARD," BUT PREDOMINANTLY "HARD." SILTSTONE, SHALE AND/OR SANDSTONE WERE ENCOUNTERED AT TEST BORING LOCATIONS B8-1, B8-2 AND B8-3. THE OVERALL ROCK QUALITY DESIGNATION (RQD) FOR THE ROCK CORES WAS FOUND TO RANGE FROM 0 TO 60 PERCENT, WHICH CAN BE TERMED AS "VERY POOR" TO "FAIR."

FOR SPECIFIC CONDITIONS AT VARIOUS DEPTHS, REFER TO THE INDIVIDUAL TEST BORING LOGS WHICH FORM A PART OF THESE PLANS.

LEGEND

- AUGER BORING LOCATION - PLAN VIEW
- PRESS AND/OR DRIVE SAMPLE AND/OR CORE BORING LOCATION - PLAN VIEW
- TR — TOP OF ROCK
- CAPPED PILE
- FOOTING
- FOOTING ON PILE
- HORIZONTAL BAR ON BORING LOG INDICATES THE DEPTH THE SAMPLE WAS TAKEN
- X/Y/Z — FIGURES BESIDE THE BORING LOG IN PROFILE INDICATE THE NUMBER OF BLOWS FOR STANDARD PENETRATION TEST
  - X = NO. OF BLOWS FOR FIRST 6"
  - Y = NO. OF BLOWS FOR SECOND 6"
  - Z = NO. OF BLOWS FOR THIRD 6"
- W — INDICATES FREE WATER ELEVATION
- INDICATES STATIC WATER ELEVATION

SYMBOLS OF ROCK TYPES

- COAL
- WEATHERED MUDSTONE
- MUDSTONE
- WEATHERED SHALE
- SHALE
- CLAYSTONE
- SILTSTONE
- WEATHERED SANDSTONE
- SANDSTONE
- LEACHED DOLOMITE
- DOLOMITE
- LEACHED LIMESTONE
- LIMESTONE
- BOULDERS or COBBLES

GENERAL INFORMATION

Drive sample / Press sample / Core borings

Drive sample borings are made by means of a mechanically-powered rotary-type drilling machine, employing a 2" O.D., 1-3/8" I.D. split spoon sampler, at 2.5 and/or 5-foot depth intervals, driven by means of a 140 lb. drop hammer with a free fall of 30". The number of blows required to drive the sampler 18" is considered the standard penetration test.

Drive/press borings are made by means of a mechanically-powered rotary-type drilling machine, employing a 2" O.D., 1-3/8" I.D. split spoon sampler, and 3" O.D. thin wall press sampler. The press sampler is advanced by continuous uniform pressure, applied by the drilling machine.

Core borings are made by means of a mechanically-powered rotary-type drilling machine, employing a NXM core barrel with industrial diamond cutting head.

The boring log sheets display a graphic plot of the information obtained including depth and elevation of the sample, type of sample, the standard penetration test readings in three 6-inch increments, depth and elevation of press samples, field number assigned to sample, sample description - based on laboratory tests utilizing the Casagrande AC classification system - and gradation, plasticity and moisture determinations. Results of strength and consolidation testing, if performed on undisturbed samples, will appear graphically on separate enclosures. Rock samples are displayed on the log sheets including depth and elevation of the sample, amount of recovery and a visual classification based on type, color, degree of hardness, grain size, deterioration, bedding, acid reaction and other qualifying factors.

At depths where materials are bouldery or gravelly to the extent that the sampler can not be utilized, a wash sample is procured and visually classified, in order to determine the general characteristics of the material. These samples are not considered sufficiently representative to warrant laboratory testing.

PARTICLE SIZE DEFINITIONS

12"	3"	2.0mm		0.42mm	0.074mm	0.005mm
Boulders	Cobbles	Gravel	Coarse Sand	Fine Sand	Silt	Clay
		No. 10 sieve		No. 40 sieve	No. 200 sieve	

STRUCTURE FOUNDATION INVESTIGATION
BRIDGE No. MED-71-2402 (L&R)
WIDENING
MEDINA COUNTY, OHIO

R&R INTERNATIONAL, INC.
Geotechnical Engineers • Geologists
1234 S. CLEVELAND-MASSILLON ROAD
P.O. BOX 4383
AKRON, OH 44321

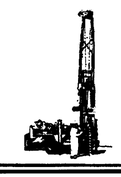

CHECKED BY	REVIEWED	DATE
J.X.	G.M.R.	10.29.92

CALCULATED | CHECKED

STRUCTURE FOUNDATION INVESTIGATION
MED - 71 - 2402

1/4

MED - 71 - 15.78

33
36

DESIGN FILE : I:\pd_med_ir71\dgn\soils\soils33.dgn
USERNAME : jrogers
DATE : 18-NOV-1999
TIME : 13:49

N

SCALE: HORIZ 1"=20
VERT 1"=10

STRUCTURE FOUNDATION INVESTIGATION
BRIDGE No. MED-71-2402 (L&R)
WIDENING
MEDINA COUNTY, OHIO

R&R INTERNATIONAL, INC.
Geotechnical Engineers • Geologists
1234 S. CLEVELAND-MASSILLON ROAD
P.O. BOX 4383
AKRON, OH 44321

DRAWN BY	CHECKED BY	REVIEWED	DATE
V.K.	J.K.	G.M.R.	10.29.92

CALCULATED | CHECKED

STRUCTURE FOUNDATION INVESTIGATION
MED - 71 - 2402

2/4

MED - 71 - 15.78

34
36

DESIGN FILE : I:\pd_med_ir71\dgn\soils\soils34.dgn
USERNAME : jrogers
DATE : 18-NOV-1999
TIME : 13:49

LOG OF BORING

Date Started 6-28-92 | Sampler Type SS | Dia. 2.00 inch. | Water Elev. 1128 ±
Date Completed 6-28-92 | Casing: length -- | Dia. 3.25 inch.
Boring No. B8-1 | Station & Offset STA. 1267+70.99 19' L | Surface Elev. 1167 ±

ELEV.	DEPTH	STD.PEN. (N)	REC. Ft.	LOSS Ft.	DESCRIPTION	SAMPLE NO.	SAMPLE TYPE	PHYSICAL CHARACTERITICS % AGG.	COAR. SAND	FINE SAND	SILT	CLAY	L.L.	P.L.	P.I.	W.C. %	SHTL CLASS.
1167.0	0																
1166.8	0.2				TOPSOIL												
	1.5	4–5–6	0.8			1	SS										
	3.5	5–6–5	0.7			2	SS										
	8.5	5–6–6	1.5			3	SS										
	13.5	4–6–10	1.5			4	SS										
					Stiff to hard, brown to brownish gray SILT AND CLAY trace gravel, little sand, moist. Note: – trace organics in sample from 13.5 to 15.0 ft.												
	18.5	5–14–15	1.1			5	SS										
	22.5	14–30–50/0.2	1.0			6	SS										
	25.0	10–12–22	1.5			7	SS	7.0	6.5	8.4	*	78.1	—	—	—	15.1	A–6a
	27.5	6–8–13	1.5			8	SS										
	30.0	5–6–8	1.5			9	SS										
	32.5	5–8–10	1.5			10	SS										
	35.0	4–6–9	1.5			11	SS	9.9	7.6	9.3	*	73.2	—	—	—	17.0	A–6a
1130.0	37.0																
	37.5	9–13–17	1.0			12	SS										
					Dense, gray SAND AND GRAVEL, little silt, moist to saturated.												
	40.0	10–14–20	1.1			13	SS	46.7	27.0	10.2	*	16.1	—	—	—	16.3	A–1–b
	42.5	13–19–23	1			14	SS										
1122.0	45.0	9–15–25	1.5			15	SS										
					Hard, gray SANDY SILT, little gravel, wet.												
	48.5	16–20–25	0.9			16	SS	25.2	6.8	7.3	*	60.7	—	—	—	14.6	A–4a
1113.5	53.5	35–50/0.2	0.6			17	SS										
	55.0	50/0.3	0.3			18	SS										
		REC = 90% RQD = 40%			Gray SILTSTONE, clayey shale interbedded. Note: – fractured, gray clayey shale interbedded from 55.8 to 56.8 ft.	RUN 1 55.0 TO 60.0	NXW										
1107.0	60.0				TERMINATION DEPTH 60.0 FEET												

* Silt and Clay Combined

LOG OF BORING

Date Started 6-29-92 | Sampler Type SS | Dia. 2.00 inch. | Water Elev. 1136 ±
Date Completed 6-29-92 | Casing: length -- | Dia. 3.25 inch.
Boring No. B8-2 | Station & Offset STA. 1268+88.99 25'L | Surface Elev. 1146 ±

ELEV.	DEPTH	STD.PEN. (N)	REC. Ft.	LOSS Ft.	DESCRIPTION	SAMPLE NO.	SAMPLE TYPE	PHYSICAL CHARACTERITICS % AGG.	COAR. SAND	FINE SAND	SILT	CLAY	L.L.	P.L.	P.I.	W.C. %	SHTL CLASS.
1146.0	0.0																
1145.7	0.3				TOPSOIL												
	1.5	5–6–7	1.1			1	SS	10.8	6.8	9.0	*	73.4	—	—	—	15.2	A–6a
	3.5	9–13–21	1.3		Stiff to hard, brown SILT AND CLAY, little gravel, little sand, damp.	2	SS										
1140.0	6.0																
	7.5	10–18–24	1.2		Dense, brown GRAVEL W/ SAND AND SILT, moist.	3	SS	50.9	13.4	10.3	*	25.4	—	—	—	8.0	A–2–4
1137.0	9.0																
	10.0	8–8–10	1.0		Very stiff, brownish gray SILT, little sand, moist.	4	SS										
1134.5	11.5																
	12.5	5–7–12	1.5			5	SS										
	15.0	3–6–9	1.5			6	SS	7.0	6.2	8.3	*	78.5	28.8	19.3	9.5	17.7	A–4a
	17.5	3–6–8	1.5		Stiff to hard, brownish gray SANDY SILT, trace gravel, wet. Note: – sample very silty at 23.0 ft.	7	SS										
	20.0	6–11–35	1.5			8	SS										
	22.5	11–11–15	1.1			9	SS										
1121.0	25.0	6–12–15	1.2			10	SS	32.0	15.1	17.5	*	35.4	—	—	—	12.3	A–2–4
					Medium dense, brownish gray to gray GRAVEL W/ SAND AND SILT, wet.												
	27.5	5–6–24	1.2														
1117.5	28.5																
	30.0	50/0.3	0.3			12	SS										
		REC = 40% RQD = 0%			Gray SANDSTONE, fine grained. Note: – rock core extremely weathered from 30.3 to 35.0 ft	RUN 1 30.3 to 35.3	NXW										
		REC = 82% RQD = 60%				RUN 2 35.3 to 40.3	NXW										
1105.7	40.3				TERMINATION DEPTH 40.3 FEET												

* SILT AND CLAY COMBINED

STRUCTURE FOUNDATION INVESTIGATION
BRIDGE No. MED–71–2402 (L&R)
WIDENING
MEDINA COUNTY, OHIO

R&R INTERNATIONAL, INC.
Geotechnical Engineers • Geologists
1234 S. CLEVELAND-MASSILLON ROAD
P.O. BOX 4383
AKRON, OH 44321

TYPED BY	CHECKED BY	REVIEWED	DATE
T. E.	J. K.	G.M.R.	10.29.92

CALCULATED | CHECKED

STRUCTURE FOUNDATION INVESTIGATION
MED – 71 – 2402

3/4

MED – 71 – 15.78

35
36

DESIGN FILE : i:\pd_med_lr_71\dgn\soils\soils35.dgn
USERNAME : jrogers
DATE : 18-NOV-1999
TIME : 13:49

LOG OF BORING

Date Started 6-29-92 | Sampler Type SS | Dia 2 00 inch | Water Elev 1136 ±
Date Completed 6-29-92 | Casing length -- | Dia 3 25 inch
Boring No B8-3 | Station & Offset STA. 1268+75.99 24 R | Surface Elev 1148 ±

ELEV	DEPTH	STD PEN (N)	REC Ft	LOSS Ft	DESCRIPTION	SAMPLE NO	SAMPLE TYPE	PHYSICAL CHARACTERITICS % AGG	% COAR SAND	% FINE SAND	% SILT	% CLAY	LL	PL	PI	WC %	SHTL CLASS
1148 0	0 0																
1147 6	0 4				TOPSOIL												
	1 5	6-8-10	1 2			1	SS										
	3 5	15-13-16	1 0			2	SS	7 4	5 8	7 1		79 7	--	--	--	17 0	A-6a
	7 5	10-10-12	1 5		Stiff to very stiff brown to brownish gray	3	SS										
	10 0	5-6-8	0 9		SILT AND CLAY trace gravel little sand damp to moist	4	SS	9 0	6 0	7 3		77 7	28 9	17 3	11 6	16 3	A-6a
	12 5	5-6-9	1 3			5	SS										
	15 0	3-4-6	1 5			6	SS										
	17 5	3-5-10	1 5			7	SS	5 2	6 4	8 4		80 0	--	--	--	17 9	A-6a
1128 0	20 0	9-23-20	0 5			8	SS										
	22 5	13-14-14	0 6		Dense to medium dense brownish gray ROCK FRAGMENTS AND SAND trace silt and clay saturated	9	SS	60 6	19 0	9 1		11 3	--	--	--	13 8	A-1-b
1124 0	24 0																
	25 0	8-9-12	1 0			10	SS										
	27 5	2-6-85	1 5		Very stiff to hard grayish brown SANDY SILT some gravel saturated	11	SS										
	30 0	38-18-25	0 8			12	SS	33 1	9 5	18 9		38 5	--	--	--	12 4	A-4a
1118 0	32 0																
	32 5	50/0 2	0 2		Gray SANDSTONE fine grained	13	SS										
1114 0	34 0				Note - a clay seam encountered at 39 0 ft												
		REC = 86% RQD = 55%			Gray CLAYEY SHALE extremely weathered and fractured	RUN 1 34 0 to 44 0	NXW										
1104 0	44 0				TERMINATION DEPTH 44 0 FEET												

SILT AND CLAY COMBINED

LOG OF BORING

Date Started 6-27-92 | Sampler Type SS | Dia 2 00 inch | Water Elev 1130 ±
Date Completed 6-27-92 | Casing length -- | Dia 3 25 inch
Boring No B8-4 | Station & Offset STA. 1269+94.99 23 R | Surface Elev 1165 ±

ELEV	DEPTH	STD PEN (N)	REC Ft	LOSS Ft	DESCRIPTION	SAMPLE NO	SAMPLE TYPE	PHYSICAL CHARACTERITICS % AGG	% COAR SAND	% FINE SAND	% SILT	% CLAY	LL	PL	PI	WC %	SHTL CLASS
1165 0	0																
1164 8	0 2				TOPSOIL												
	1 5	8-9-10	1 1			1	SS										
	3 5	11-8-15	0 0			2	SS										
	8 5	16-14-20	1 5			3	SS										
	13 5	8-11-16	1 2		Very stiff to hard brown to brownish gray SILT AND CLAY little gravel little sand damp	4	SS	10 8	6 4	9 1		73 7	--	--	--	15 1	A-6a
	18 5	17-16-18	1 2			5	SS										
	22 5	14-17-50/0 2	1 3			6	SS										
	25 0	5-12-25	1 1			7	SS										
	27 5	18-20-40	1 5			8	SS	13 8	10 6	9 3		66 3	--	--	--	13 6	A-6a
	30 0	7-11-19	1 5			9	SS										
	32 5	8-18-18	1 5			10	SS	7 7	6 4	7 9		78 0	30 0	18 9	11 1	16 5	A-6a
1130 0	35 0	8-8-50/0 3	1 0			11	SS										
	37 5	28-50/0 3	0 9			12	SS										
	40 0	8-14-20	1 1		Hard brownish gray SANDY SILT some gravel moist	13	SS	28 0	14 4	9 6		48 0	--	--	--	14 2	A-4a
	42 5	17-25-27	1 2			14	SS										
1120 0	45 0	8-15-17	1 5			15	SS										
	48 5	50/0 3	0 3		Very dense brownish gray ROCK FRAGMENTS W/ SAND AND SILT moist to saturated	16	SS	54 2	8 9	9 6		27 3	--	--	--	12 2	A-2-4
1111 0	53 5 54 0	50/0 5	0 5			17	SS										
					TERMINATION DEPTH 54 0 FEET												

SILT AND CLAY COMBINED

STRUCTURE FOUNDATION INVESTIGATION
BRIDGE No MED-71-2402 (L&R)
WIDENING
MEDINA COUNTY, OHIO

R&R INTERNATIONAL INC

Geotechnical Engineers • Geologists
1234 S. CLEVELAND-MASSILLON ROAD
P.O. BOX 4383
AKRON, OH 44321

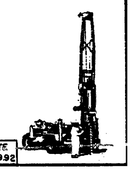

TYPED BY	CHECKED BY	REVIEWED	DATE
T.E.	J.K.	G.M.R.	10.29.92

CALCULATED | CHECKED

STRUCTURE FOUNDATION INVESTIGATION
MED - 71 - 2402

4/4

MED - 71 - 15.78

36
36

DESIGN FILE : i:\pd_med_lr71\dgn\solls\solls36.dgn
USERNAME : jrogers
DATE : 18-NOV-1999
TIME : 13:49

MOISTURE (ASTM D-2216-80), GRADATION (ASTM D-422-63) AND ATTERBERG LIMITS (ASTM D-4318-64)

BORING NUMBER	SAMPLE NUMBER	DEPTH (ft)	DEPTH (m)	MOISTURE CONTENT(%)	PARTICLE SIZE ANALYSIS (by weight) (% Passing US. Standard sieve) #4	#10	#40	#100	#200	C. AGG.	C. SAND	F. SAND	SILT	CLAY		ATTERBURG LIMITS L.L.	P.L.	P.I.	ODOT CLASSIFICATION
B-1	1	1.0	0.30	15	Gray SANDY SILT, some clay, trace gravel, trace rock fragments														(Visual)
	2	3.5	1.07	16	98	95	89	83	77	5	6	12	28	49		25	17	8	A-4a
	3	6.0	1.83	15	Gray SANDY SILT, some clay, trace gravel, trace rock fragments														(Visual)
	4	8.5	2.59	16	Gray SANDY SILT, some clay, trace gravel, trace rock fragments														(Visual)
B-2	1	1.0	0.30	13	98	95	89	82	76	5	6	12	37	39		26	17	9	A-4a
	2	3.5	1.07	15	Gray SANDY SILT, some clay, trace gravel, trace rock fragments														(Visual)
	3	6.0	1.83	16	Gray SANDY SILT, some clay, trace gravel, trace rock fragments														(Visual)
	4	8.5	2.59	15	Gray SANDY SILT, some clay, trace gravel, trace rock fragments														(Visual)
B-3	1	1.0	0.30	12	Gray SANDY SILT, some clay, trace gravel, trace rock fragments														(Visual)
	2	3.5	1.07	17	Brown SANDY SILT, some clay, trace gravel, trace rock fragments														(Visual)
	3	6.0	1.83	19	78	77	75	74	72	23	2	3		72	*	38	23	15	A-6a
	4	8.5	2.59	21	Gray SILT AND CLAY, some gravel and rock fragments, trace sand with occasional silt seams														(Visual)
B-4	1	1.0	0.30	13	Brown and gray SILT AND CLAY, some sand, trace gravel, trace rock fragments														(Visual)
	2	3.5	1.07	14	95	92	85	77	71	8	7	14		71	*	29	17	12	A-6a
	3	6.0	1.83	14	Brown SILT AND CLAY, some sand, trace gravel, trace rock fragments														(Visual)
	4	8.5	2.59	15	Brown SILT AND CLAY, some sand, trace gravel, trace rock fragments														(Visual)
B-5	1	1.0	0.30	11	65	60	53	47	43	40	7	10		43	*	29	19	10	A-4a
	2	3.5	1.07	7	Gray highly weathered CLAY SHALE														(Visual)
	3	6.0	1.83	5	Gray highly weathered CLAY SHALE														(Visual)
	4	8.5	2.59	3	Gray highly weathered CLAY SHALE														(Visual)
B-6	1A	1.0	0.30	13	91	77	54	41	36	23	23	18		36	*	25	17	8	A-4a
	1B	2.3	0.70	13	Gray decomposed CLAY SHALE														(Visual)
	2	3.5	1.07	6	Gray highly weathered CLAY SHALE														(Visual)
	3	6.0	1.83	6	Gray highly weathered CLAY SHALE														(Visual)
	4	8.5	2.59	6	Gray highly weathered CLAY SHALE														(Visual)
B-7	1	1.0	0.30	14	Brown SANDY SILT, little clay, trace rock fragments														(Visual)
	2	3.5	1.07	7	Gray highly weathered CLAY SHALE														(Visual)
	3	6.0	1.83	6	Gray highly weathered CLAY SHALE														(Visual)
	4	8.5	2.59	5	Gray highly weathered CLAY SHALE														(Visual)
B-8	1	1.0	0.30	11	Brown SANDY SILT, some clay, trace gravel, trace rock fragments														(Visual)
	2	3.5	1.07	18	Brown SANDY SILT, some clay, trace gravel, trace rock fragments														(Visual)
	3	6.0	1.83	17	Brown SANDY SILT, some clay, trace gravel, trace rock fragments														(Visual)
	4	8.5	2.59	15	Brown SANDY SILT, some clay, trace gravel, trace rock fragments														(Visual)

* Silt and Clay Combined

DESIGN AGENCY
PRIME ENGINEERING & ARCHITECT, INC.
1038 GHENT RD, AKRON, OHIO 44333

REVIEWED | DATE | STRUCTURE FILE NUMBER
DRAWN | REVISED
DESIGNED | CHECKED

SOIL PROFILE

MED-71-15.78

1
78

TBI-TB6.DGN PDH 11/2/99

MOISTURE (ASTM D-2216-80), GRADATION (ASTM D-422-63) AND ATTERBERG LIMITS (ASTM D-4318-64)

BORING NUMBER	SAMPLE NUMBER	DEPTH (ft)	DEPTH (m)	MOISTURE CONTENT(%)	PARTICLE SIZE ANALYSIS (by weight) (% Passing US. Standard sieve) #4	#10	#40	#100	#200	AGG.	C. SAND	F. SAND	SILT	CLAY		ATTERBURG LIMITS L.L.	P.L.	P.I.	ODOT CLASSIFICATION
B-9	1	1.0	0.30	13	Brown SANDY SILT, little clay, trace rock fragments, trace roots														(Visual)
	2	3.5	1.07	16	97	94	86	77	70	6	8	16		70	*	30	19	11	A-6a
	3	6.0	1.83	19	Brown SILT AND CLAY, some sand, trace gravel, trace rock fragments														(Visual)
	4A	8.5	2.59	23	Brown SILT AND CLAY, some sand, trace gravel with occasional silt seams														(Visual)
	4B	9.5	2.90	15	Gray SILT AND CLAY, some sand, trace gravel, trace rock fragments														(Visual)
B-10	1	1.0	0.30	15	99	97	91	84	78	3	6	13		78	*	33	20	13	A-6a
	2	3.5	1.07	16	Brown SILT AND CLAY, little sand, trace gravel, trace rock fragments														(Visual)
	3	6.0	1.83	14	Brown SILT AND CLAY, little sand, trace gravel, trace rock fragments														(Visual)
	4	8.5	2.59	12	Brown SANDY SILT, some clay, trace gravel, trace rock fragments														(Visual)
B-11	1	1.0	0.30	19	99	98	94	87	81	2	4	13		81	*	31	20	11	A-6a
	2	3.5	1.07	28	Brown SILT AND CLAY, little sand, trace gravel, trace rock fragments with layer of topsoil														(Visual)
	3	6.0	1.83	22	Brown SILT AND CLAY, little sand, trace gravel, trace rock fragments														(Visual)
	4	8.5	2.59	18	Brown SILT AND CLAY, little sand, trace gravel, trace rock fragments														(Visual)
B-12	1	1.0	0.30	15	Brown SILT AND CLAY, little sand, trace gravel, trace rock fragments														(Visual)
	2	3.5	1.07	17	Brown SILT AND CLAY, little sand, trace gravel, trace rock fragments														(Visual)
	3	6.0	1.83	15	Brown SILT AND CLAY, little sand, trace gravel, trace rock fragments														(Visual)
	4	8.0	2.44	18	Brown SILT AND CLAY, little sand, trace gravel, trace rock fragments														(Visual)
B-13	1	1.0	0.30	15	93	90	83	75	70	10	7	13		70	*	31	19	12	A-6a
	2	3.5	1.07	12	Brown SILT AND CLAY, little sand, trace gravel, trace rock fragments														(Visual)
	3	6.0	1.83	17	Brown SILT AND CLAY, little sand, trace gravel, trace rock fragments														(Visual)
	4	8.5	2.59	15	Brown SILT AND CLAY, little sand, trace gravel, trace rock fragments														(Visual)
B-14	1	1.0	0.30	15	96	92	85	78	73	8	7	12		73	*	30	19	11	A-6a
	2	3.5	1.07	16	Brown SILT AND CLAY, little sand, trace gravel, trace rock fragments														(Visual)
	3	6.0	1.83	17	Brown SILT AND CLAY, little sand, trace gravel, trace rock fragments														(Visual)
	4	8.5	2.59	25	Brown SILT AND CLAY, little sand, trace gravel, trace organic														(Visual)
B-15	1	1.0	0.30	17	94	91	84	75	69	9	7	15	35	34		29	20	9	A-4a
	2	3.5	1.07	14	Brown SANDY SILT, some clay, trace gravel, trace rock fragments														(Visual)
	3	6.0	1.83	14	Brown SANDY SILT, some clay, trace gravel, trace rock fragments														(Visual)
	4	8.5	2.59	17	Brown SANDY SILT, some clay, trace gravel, trace rock fragments														(Visual)
B-16	1A	1.0	0.30	16	Brown SILT AND CLAY, little sand, trace gravel, trace rock fragments														(Visual)
	1B	2.0	0.61	13	Brown and gray SILT AND CLAY, some sand, trace gravel, trace rock fragments														(Visual)
	2	3.5	1.07	11	Gray SILT AND CLAY, some sand, trace gravel, trace rock fragments														(Visual)
	3	6.0	1.83	16	Brown and gray SILT AND CLAY, some sand, trace gravel, trace rock fragments														(Visual)
	4	8.5	2.59	15	Brown SILT AND CLAY, some sand, trace gravel, trace rock fragments														(Visual)

* Silt and Clay Combined

DESIGN AGENCY
PRIME ENGINEERING & ARCHITECT, INC.
1038 GHENT RD, AKRON, OHIO 44333

REVIEWED DATE
STRUCTURE FILE NUMBER
DRAWN REVISED
DESIGNED CHECKED

SOIL PROFILE

MED-71-15.78

2
78

TBI-TB6.DGN PDH 11/2/99

MOISTURE (ASTM D-2216-80), GRADATION (ASTM D-422-63) AND ATTERBERG LIMITS (ASTM D-4318-64)

BORING NUMBER	SAMPLE NUMBER	DEPTH (ft)	DEPTH (m)	MOISTURE CONTENT(%)	PARTICLE SIZE ANALYSIS (by weight) (% Passing US. Standard sieve) #4	#10	#40	#100	#200	C. AGG.	C. SAND	F. SAND	SILT	CLAY		ATTERBURG LIMITS L.L.	P.L.	P.I.	ODOT CLASSIFICATION
B-17	1	1.0	0.30	16	Brown SILT AND CLAY, some sand, trace gravel, trace rock fragments														(Visual)
	2	3.5	1.07	16	99	96	88	80	74	4	8	14		74	*	32	19	13	A-6a
	3	6.0	1.83	15	Brown SILT AND CLAY, some sand, trace gravel, trace rock fragments														(Visual)
	4	8.5	2.59	13	Brown SILT AND CLAY, some sand, trace gravel, trace rock fragments														(Visual)
B-18	1	1.0	0.30	14	Brown SANDY SILT, some clay, trace gravel, trace rock fragments														(Visual)
	2	3.5	1.07	13	Brown SANDY SILT, some clay, trace gravel, trace rock fragments														(Visual)
	3A	6.0	1.83	17	97	94	88	81	75	6	6	12		75	*	30	19	11	A-6a
	3B	7.0	2.13	18	Brown SILT AND CLAY, little sand, trace gravel, trace rock fragments with topsoil seam														(Visual)
	4	8.5	2.59	22	Brown, mottled gray SILT AND CLAY, little sand, trace gravel, trace rock fragments														(Visual)
B-19	1	1.0	0.30	13	Brown and gray SANDY SILT, some clay, trace gravel, trace rock fragments														(Visual)
	2	3.5	1.07	15	Brown SANDY SILT, some clay, trace gravel, trace rock fragments														(Visual)
	3	6.0	1.83	21	Brown SANDY SILT, some clay, trace gravel, trace rock fragments with topsoil seam														(Visual)
	4	8.5	2.59	16	Brown SANDY SILT, little clay, trace gravel, trace rock fragments														(Visual)
B-20	1	1.0	0.30	14	Brown SILT AND CLAY, little sand, trace gravel, trace rock fragments														(Visual)
	2	3.5	1.07	20	99	98	95	90	85	2	3	9		85	*	34	21	13	A-6a
	3	6.0	1.83	18	Brown SILT AND CLAY, little sand, trace gravel, trace rock fragments														(Visual)
	4	8.5	2.59	17	Brown SILT AND CLAY, little sand, trace gravel, trace rock fragments														(Visual)
B-21	1	1.0	0.30	16	87	85	81	76	72	15	4	9		72	*	34	21	13	A-6a
	2	3.5	1.07	16	Brown SILT AND CLAY, little gravel and rock fragments, little sand														(Visual)
	3	6.0	1.83	15	Brown SILT AND CLAY, little gravel and rock fragments, little sand														(Visual)
	4	8.5	2.59	10	Gray SANDY SILT, little clay, trace gravel, trace rock fragments														(Visual)
B-22	1	1.0	0.30	15	Brown SILT AND CLAY, little sand, trace gravel, trace rock fragments														(Visual)
	2	3.5	1.07	18	98	96	91	85	81	4	5	9		81	*	32	20	12	A-6a
	3	6.0	1.83	18	Gray SILT AND CLAY, little sand, trace gravel, trace rock fragments with occasional silt seams														(Visual)
	4	8.5	2.59	18	Gray SILT AND CLAY, little sand, trace gravel, trace rock fragments with occasional silt seams														(Visual)
B-23	1	1.0	0.30	12	Brown SANDY SILT, some clay, trace gravel, trace rock fragments														(Visual)
	2	3.5	1.07	15	Gray SILT AND CLAY, little sand, trace gravel, trace rock fragments														(Visual)
	3	6.0	1.83	15	Gray SILT AND CLAY, little sand, trace gravel, trace rock fragments														(Visual)
	4	8.5	2.59	14	Gray SILT AND CLAY, little sand, trace gravel, trace rock fragments														(Visual)
B-24	1	1.0	0.30	12	98	96	90	84	80	4	6	10		80	*	32	20	12	A-6a
	2	3.5	1.07	15	Brown SILT AND CLAY, little sand, trace gravel, trace rock fragments														(Visual)
	3	6.0	1.83	19	Brown SILT AND CLAY, little sand, trace gravel, trace rock fragments														(Visual)
	4	8.5	2.59	18	Brown SILT AND CLAY, little sand, trace gravel, trace rock fragments														(Visual)

* Silt and Clay Combined

DESIGN AGENCY
PRIME ENGINEERING & ARCHITECT, INC.
1038 GHENT RD, AKRON, OHIO 44333

DESIGNED | DRAWN | REVIEWED | DATE
CHECKED | REVISED | STRUCTURE FILE NUMBER

SOIL PROFILE

MED-71-15.78

3
78

TBI-TB6.DGN PDH 11/2/99

MOISTURE (ASTM D-2216-80), GRADATION (ASTM D-422-63) AND ATTERBERG LIMITS (ASTM D-4318-64)

BORING NUMBER	SAMPLE NUMBER	DEPTH (ft)	DEPTH (m)	MOISTURE CONTENT(%)	PARTICLE SIZE ANALYSIS (by weight) (% Passing US. Standard sieve) #4	#10	#40	#100	#200	AGG.	C. SAND	F. SAND	SILT	CLAY		ATTERBURG LIMITS L.L.	P.L.	P.I.	ODOT CLASSIFICATION
B-25	1	1.0	0.30	15	99	96	88	82	77	4	8	11		77	*	32	20	12	A-6a
	2	3.5	1.07	17	Brown SILT AND CLAY, some sand, trace gravel. trace rock fragments														(Visual)
	3	6.0	1.83	13	Gray SILT AND CLAY, little sand, little gravel and rock fragments														(Visual)
	4	8.5	2.59	12	Gray SILT AND CLAY, little sand, little gravel and rock fragments														(Visual)
B-26	1	1.0	0.30	18	94	91	84	77	72	9	7	12	38	34		30	20	10	A-4a
	2	3.5	1.07	15	Gray SANDY SILT, some clay, trace gravel, trace rock fragments														(Visual)
	3	7.0	2.13	16	Gray SANDY SILT, some clay, trace gravel, trace rock fragments														(Visual)
	4	8.5	2.59	16	Gray SANDY SILT, some clay, trace gravel, trace rock fragments														(Visual)
B-27	1	1.0	0.30	13	Brown SANDY SILT, some clay, trace gravel, trace rock fragments														(Visual)
	2	3.5	1.07	17	96	91	83	78	73	9	8	10	36	37		31	21	10	A-4a
	3	6.0	1.83	18	Brown SANDY SILT, some clay, trace gravel, trace rock fragments														(Visual)
	4	8.5	2.59	19	Brown SANDY SILT, some clay, trace gravel, trace rock fragments														(Visual)
B-28	1	1.0	0.30	12	Brown SILT AND CLAY, little sand, little gravel and rock fragments														(Visual)
	2	3.5	1.07	18	90	88	83	77	72	12	5	11		72	*	31	19	12	A-6a
	3	6.0	1.83	24	Brown SILT AND CLAY, little sand, little gravel and rock fragments														(Visual)
	4	8.5	2.59	18	Brown SILT AND CLAY, little sand, little gravel and rock fragments														(Visual)
B-29	1	1.0	0.30	13	Brown SANDY SILT, some clay, trace gravel, trace rock fragments														(Visual)
	2	3.5	1.07	14	98	94	86	78	72	6	8	13	38	34		26	18	8	A-4a
	3	6.0	1.83	17	Brown SANDY SILT, some clay, trace gravel, trace rock fragments														(Visual)
	4	8.5	2.59	18	Brown SANDY SILT, some clay, trace gravel, trace rock fragments														(Visual)
B-30	1	1.0	0.30	15	Brown SILT AND CLAY, little sand, trace gravel, trace rock fragments														(Visual)
	2	3.5	1.07	16	98	95	89	84	80	5	6	10		80	*	32	20	12	A-6a
	3	6.0	1.83	17	Brown SILT AND CLAY, little sand, trace gravel, trace rock fragments														(Visual)
	4	8.5	2.59	15	Brown and gray SILT AND CLAY, little sand, trace gravel, trace rock fragments														(Visual)
B-31	1	1.0	0.30	11	84	76	59	46	38	24	17	21		38	*	24	14	10	A-4a
	2A	3.5	1.07	17	Brown SANDY SILT, little clay, trace gravel, trace rock fragments														(Visual)
	2B	4.0	1.22	17	Brown SILT AND CLAY, little sand, trace gravel, trace rock fragments														(Visual)
	3	6.0	1.83	16	Gray SILT AND CLAY, little sand, trace gravel, trace rock fragments														(Visual)
	4	8.5	2.59	16	Gray SILT AND CLAY, little sand, trace gravel, trace rock fragments														(Visual)
B-32	1	1.0	0.30	14	Brown SANDY SILT, some clay, trace gravel, trace rock fragments														(Visual)
	2	3.5	1.07	15	92	89	82	76	72	11	7	11	38	34		26	16	10	A-4a
	3	6.0	1.83	16	Gray SANDY SILT, some clay, trace gravel, trace rock fragments														(Visual)
	4	8.5	2.59	15	Gray SANDY SILT, some clay, trace gravel, trace rock fragments														(Visual)

* Silt and Clay Combined

DESIGN AGENCY
PRIME ENGINEERING & ARCHITECT, INC.
1038 GHENT RD, AKRON, OHIO 44333

REVIEWED DATE STRUCTURE FILE NUMBER
DRAWN REVISED
DESIGNED CHECKED

SOIL PROFILE

MED-71-15.78

4
78

TBI-TB6.DGN PDH 11/2/99

MOISTURE (ASTM D-2216-80), GRADATION (ASTM D-422-63) AND ATTERBERG LIMITS (ASTM D-4318-64)

BORING NUMBER	SAMPLE NUMBER	DEPTH (ft)	DEPTH (m)	MOISTURE CONTENT(%)	PARTICLE SIZE ANALYSIS (by weight) (% Passing US. Standard sieve) #4	#10	#40	#100	#200	C. AGG.	C. SAND	F. SAND	SILT	CLAY		ATTERBURG LIMITS L.L	P.L.	P.I.	ODOT CLASSIFICATION
B-33	1	1.0	0.30	15	Brown SILT AND CLAY, little sand, trace gravel, trace rock fragments, trace roots														(Visual)
	2	3.5	1.07	17	99	95	87	79	73	5	8	13	39	34		25	17	8	A-4a
	3	6.0	1.83	12	Gray SANDY SILT, some clay, trace gravel, trace rock fragments														(Visual)
	4	8.5	2.59	20	Gray SANDY SILT, some clay, trace gravel, trace rock fragments														(Visual)
B-34	1	0.0	0.00	14	Brown SILT AND CLAY, little sand, trace gravel, trace rock fragments														(Visual)
	2	3.0	0.91	14	96	93	86	81	76	7	7	10		76	*	30	19	11	A-6a
	3	6.0	1.83	16	Brown SILT AND CLAY, little sand, trace gravel, trace rock fragments														(Visual)
	4	8.5	2.59	20	Brown SILT AND CLAY, little sand, trace gravel, trace rock fragments														(Visual)
B-35	1	0.0	0.00	16	97	94	87	81	76	6	7	12		76	*	30	19	11	A-6a
	2	3.0	0.91	14	Brown SILT AND CLAY, little sand, trace gravel, trace rock fragments														(Visual)
	3	6.0	1.83	15	Brown SILT AND CLAY, little sand, trace gravel, trace rock fragments														(Visual)
	4	8.5	2.59	17	Brown SILT AND CLAY, little sand, trace gravel, trace rock fragments														(Visual)
B-36	1	1.0	0.30	15	Brown SILT AND CLAY, little sand, trace gravel, trace rock fragments														(Visual)
	2	3.5	1.07	16	Brown SILT AND CLAY, little sand, trace gravel, trace rock fragments														(Visual)
	3	6.0	1.83	23	Brown SILT AND CLAY, little sand, trace gravel, trace rock fragments														(Visual)
	4	8.5	2.59	16	Brown SILT AND CLAY, little sand, trace gravel, trace rock fragments														(Visual)
B-37	1	0.0	0.00	14	Brown SILT AND CLAY, little sand, trace gravel, trace rock fragments, trace roots														(Visual)
	2	3.0	0.91	12	98	95	88	81	76	5	7	12		76	*	28	17	11	A-6a
	3	6.0	1.83	13	Brown SILT AND CLAY, little sand, trace gravel, trace rock fragments														(Visual)
	4	8.5	2.59	16	Brown SILT AND CLAY, little sand, trace gravel, trace rock fragments														(Visual)
B-38	1	0.0	0.00	15	98	95	89	83	79	5	6	10		79	*	31	19	12	A-6a
	2	3.0	0.91	14	Brown SILT AND CLAY, little sand, trace gravel, trace rock fragments														(Visual)
	3	6.0	1.83	15	Brown SILT AND CLAY, little sand, trace gravel, trace rock fragments														(Visual)
	4	8.5	2.59	14	Brown SILT AND CLAY, little sand, trace gravel, trace rock fragments														(Visual)
B-39	1	1.0	0.30	17	Brown SILT AND CLAY, little sand, trace gravel, trace rock fragments														(Visual)
	2	3.5	1.07	16	Brown SILT AND CLAY, little sand, trace gravel, trace rock fragments														(Visual)
	3	6.0	1.83	16	Brown SILT AND CLAY, little sand, trace gravel, trace rock fragments														(Visual)
	4	8.5	2.59	14	Brown SILT AND CLAY, little sand, trace gravel, trace rock fragments														(Visual)
B-40	1	0.0	0.00	16	Brown SILT AND CLAY, little sand, trace gravel, trace rock fragments														(Visual)
	2	3.0	0.91	13	98	94	86	79	74	6	8	12		74	*	31	19	12	A-6a
	3	6.0	1.83	14	Brown SILT AND CLAY, little sand, trace gravel, trace rock fragments														(Visual)
	4	8.5	2.59	15	Brown SILT AND CLAY, little sand, trace gravel, trace rock fragments														(Visual)
B-41	1	1.0	0.30	15	Brown SILT AND CLAY, little sand, trace rock fragments, trace roots														(Visual)
	2	3.5	1.07	13	Brown SILT AND CLAY, little sand, trace gravel, trace rock fragments														(Visual)

* Silt and Clay Combined

DESIGN AGENCY
PRIME ENGINEERING & ARCHITECT, INC.
1038 GHENT RD, AKRON, OHIO 44333

REVIEWED DATE STRUCTURE FILE NUMBER
DRAWN REVISED
DESIGNED CHECKED

SOIL PROFILE

MED-71-15.78

5
78

TBI-TB6.DGN PDH 11/2/99

MOISTURE (ASTM D-2216-80), GRADATION (ASTM D-422-63) AND ATTERBERG LIMITS (ASTM D-4318-64)

BORING NUMBER	SAMPLE NUMBER	DEPTH (ft)	DEPTH (m)	MOISTURE CONTENT(%)	PARTICLE SIZE ANALYSIS (by weight) (% Passing US. Standard sieve) #4	#10	#40	#100	#200	C. AGG.	C. SAND	F. SAND	SILT	CLAY		ATTERBURG LIMITS L.L.	P.L.	P.I.	ODOT CLASSIFICATION
	3	6.0	1.83	14	Brown SILT AND CLAY, little sand, trace gravel, trace rock fragments														(Visual)
	4	8.5	2.59	14	Brown SILT AND CLAY, little sand, trace gravel, trace rock fragments														(Visual)
B-42	1	0.0	0.00	17	98	94	87	80	75	6	7	12		75	*	30	19	11	A-6a
	2	3.0	0.91	13	Brown SILT AND CLAY, little sand, trace gravel, trace rock fragments														(Visual)
	3	6.0	1.83	18	Brown SILT AND CLAY, little sand, trace gravel, trace rock fragments														(Visual)
	4	8.5	2.59	15	Brown SILT AND CLAY, little sand, trace gravel, trace rock fragments														(Visual)
B-43	1	1.0	0.30	17	Brown SILT AND CLAY, little sand, trace gravel, trace rock fragments, trace roots														(Visual)
	2	3.5	1.07	9	Brown FINE SANDSTONE FRAGMENTS														
	3	6.0	1.83	9	Brown FINE SANDSTONE FRAGMENTS														(Visual)
B-44	1	0.0	0.00	22	Brown SILT AND CLAY, little sand, trace gravel, trace roots.														(Visual)
	2	3.0	0.91	15	99	97	91	86	81	3	6	10	39	42		30	20	10	A-4a
	3	6.0	1.83	16	Brown SANDY SILT, some clay, trace gravel, trace rock fragments														(Visual)
	4	8.5	2.59	8	Brown SANDSTONE FRAGMENTS														(Visual)
B-45	1	1.0	0.30	12	Brown and gray SANDY SILT, some clay, trace gravel, trace rock fragments														(Visual)
	2	3.5	1.07	11	97	94	87	80	71	6	7	16	34	37		24	17	7	A-4a
	3	6.0	1.83	14	Brown and gray SANDY SILT, some clay, trace gravel, trace rock fragments														(Visual)
	4	8.5	2.59	15	Gray SANDY SILT, some clay, trace gravel, trace rock fragments														(Visual)
B-46	1	0.0	0.00	13	Brown and gray SANDY SILT, little clay, trace gravel, trace rock fragments														(Visual)
	2	3.0	0.91	10	99	95	86	78	71	5	9	16	42	29		21	15	6	A-4a
	3	6.0	1.83	19	Gray SILT AND CLAY, little sand, trace gravel, trace rock fragments with occasional silt seams														(Visual)
	4	8.5	2.59	18	Gray SILT AND CLAY, little sand, trace gravel, trace rock fragments with occasional silt seams														(Visual)
B-47	1	1.0	0.30	14	Brown SILT AND CLAY, some sand, trace gravel, trace rock fragments, trace roots														(Visual)
	2	3.5	1.07	20	96	93	87	77	72	7	6	15		72	*	32	21	11	A-6a
	3	6.0	1.83	13	Gray SILT AND CLAY, some sand, trace gravel, trace rock fragments														(Visual)
	4	8.5	2.59	13	Gray SILT AND CLAY, some sand, trace gravel, trace rock fragments														(Visual)
B-48	1	0.0	0.00	14	98	95	87	80	74	5	8	13	36	38		28	19	9	A-4a
	2	3.0	0.91	11	Gray SANDY SILT, some clay, trace gravel, trace rock fragments														(Visual)
	3	6.0	1.83	12	Gray SANDY SILT, some clay, trace gravel, trace rock fragments														(Visual)
	4	8.5	2.59	14	Gray SANDY SILT, some clay, trace gravel, trace rock fragments														(Visual)
B-49	1	1.0	0.30	12	Brown SANDY SILT, some clay, trace gravel, trace rock fragments														(Visual)
	2	3.5	1.07	10	Gray SANDY SILT, some clay, trace gravel, trace rock fragments														(Visual)
	3	6.0	1.83	13	Gray SANDY SILT, some clay, trace gravel, trace rock fragments														(Visual)
	4	8.5	2.59	14	Gray SANDY SILT, some clay, trace gravel, trace rock fragments with silt and clay layer														(Visual)

* Silt and Clay Combined

DESIGN AGENCY
PRIME ENGINEERING & ARCHITECT, INC.
1038 GHENT RD, AKRON, OHIO 44333

REVIEWED DATE STRUCTURE FILE NUMBER
DRAWN REVISED
DESIGNED CHECKED

SOIL PROFILE

MED-71-15.78

6
78

TBI-TB6.DGN PDH 11/2/99

MOISTURE (ASTM D-2216-80), GRADATION (ASTM D-422-63) AND ATTERBERG LIMITS (ASTM D-4318-64)

BORING NUMBER	SAMPLE NUMBER	DEPTH (ft)	DEPTH (m)	MOISTURE CONTENT(%)	PARTICLE SIZE ANALYSIS (by weight) (% Passing US. Standard sieve) #4	#10	#40	#100	#200	C. AGG.	C. SAND	F. SAND	SILT	CLAY	ATTERBURG LIMITS L.L.	P.L.	P.I.	ODOT CLASSIFICATION
B-50	1	0.0	0.00	13	95	91	83	74	68	9	8	15	26	42	28	18	10	A-4a
	2	3.0	0.91	19	Brown SANDY SILT, some clay, trace gravel, trace rock fragments													(Visual)
	3	6.0	1.83	19	Brown SANDY SILT, some clay, trace gravel, trace rock fagments													(Visual)
	4	8.5	2.59	16	Brown to gray SANDY SILT, some clay, trace gravel, trace rock fragments													(Visual)
B-51	1	0.0	0.00	13	Gray SANDY SILT, some clay, trace gravel, trace rock fragments													(Visual)
	2	3.0	0.91	15	92	89	83	77	72	11	6	11	29	43	26	17	9	A-4a
	3	6.0	1.83	15	Gray SANDY SILT, some clay, trace gravel, trace rock fragments													(Visual)
	4	8.5	2.59	17	Gray SANDY SILT, some clay, trace gravel, trace rock fragments													(Visual)
B-52	1	0.0	0.00	13	Brown SANDY SILT, some clay, trace gravel, trace rock fragments													(Visual)
	2	3.0	0.91	15	97	94	87	81	76	6	7	11	32	44	26	16	10	A-4a
	3	6.0	1.83	17	Gray SILT AND CLAY, little sand, trace gravel, trace rock fragments													(Visual)
	4	8.5	2.59	16	Gray SILT AND CLAY, little sand, trace gravel, trace rock fragments													(Visual)
B-53	1	0.0	0.00	18	Gray SILT AND CLAY, little sand, trace gravel, trace rock fragments													(Visual)
	2	3.0	0.91	21	96	95	93	90	88	5	2	4	88 *		37	22	15	A-6a
	3	6.0	1.83	15	Gray SILT AND CLAY, trace sand, trace gravel, trace rock fragments													(Visual)
	4	8.5	2.59	15	Gray SILT AND CLAY, trace sand, trace gravel, trace rock fragments													(Visual)
B-54	1	0.0	0.00	14	Brown SILT AND CLAY, some sand, trace gravel, trace rock fragments, trace roots													(Visual)
	2	3.0	0.91	16	93	88	78	70	64	12	10	14	64 *		33	20	13	A-6a
	3	6.0	1.83	17	Gray SILT AND CLAY, little sand, trace gravel, trace rock fragments													(Visual)
	4	8.5	2.59	15	Gray SILT AND CLAY, little sand, trace gravel, trace rock fragments													(Visual)
B-55	1	0.0	0.00	13	Brown SILT AND CLAY, little sand, trace gravel, trace rock fragments													(Visual)
	2	3.0	0.91	14	96	93	87	81	76	7	6	11	76 *		33	19	14	A-6a
	3	6.0	1.83	16	Brown SILT AND CLAY, little sand, trace gravel, trace rock fragments													(Visual)
	4	8.5	2.59	14	Brown SILT AND CLAY, some sand, trace gravel, trace rock fragments, trace roots													(Visual)
B-56	1	0.0	0.00	21	98	95	88	81	75	5	7	13	75 *		35	21	14	A-6a
	2	3.0	0.91	14	Brown SANDY SILT, some clay, trace gravel, trace rock fragments													(Visual)
	3	6.0	1.83	14	Brown SANDY SILT, some clay, trace gravel, trace rock fragments													(Visual)
	4	8.5	2.59	25	Gray SILT AND CLAY, little sand, trace gravel, trace rock fragments													(Visual)
B-57	1	0.0	0.00	15	Brown SANDY SILT, some clay, trace gravel, trace rock fragments													(Visual)
	2	3.0	0.91	17	99	96	90	85	80	4	6	10	39	41	30	20	10	A-4a
	3	6.0	1.83	14	Brown SANDY SILT, some clay, trace gravel, trace rock fragments													(Visual)
	4	8.5	2.59	18	Brown SANDY SILT, some clay, trace gravel, trace rock fragments													(Visual)
B-58	1	0.0	0.00	15	Brown SILT AND CLAY, little sand, trace gravel, trace roots													(Visual)
	2	3.0	0.91	23	100	100	99	97	93	0	1	6	93 *		35	20	15	A-6a

* Silt and Clay Combined

DESIGN AGENCY
PRIME ENGINEERING & ARCHITECT, INC.
1038 GHENT RD, AKRON, OHIO 44333

REVIEWED | DATE | STRUCTURE FILE NUMBER
DRAWN | REVISED
DESIGNED | CHECKED

SOIL PROFILE

MED-71-15.78

7
78

TB7-TBI2.DGN PDH 11/2/99

MOISTURE (ASTM D-2216-80), GRADATION (ASTM D-422-63) AND ATTERBERG LIMITS (ASTM D-4318-64)

BORING NUMBER	SAMPLE NUMBER	DEPTH (ft)	DEPTH (m)	MOISTURE CONTENT(%)	PARTICLE SIZE ANALYSIS (by weight) (% Passing US. Standard sieve) #4	#10	#40	#100	#200	AGG.	C. SAND	F. SAND	SILT	CLAY		ATTERBURG LIMITS L.L.	P.L.	P.I.	ODOT CLASSIFICATION
	3	6.0	1.83	22	Brown SILT AND CLAY, trace sand														(Visual)
	4	8.5	2.59	15	Brown SILT AND CLAY, little sand, trace rock fragments														(Visual)
B-59	1	0.0	0.00	15	Brown SILT AND CLAY, little sand, trace gravel, trace rock fragments														(Visual)
	2	3.0	0.91	17	98	95	88	83	78		5	7	11	78	*	32	20	12	A-6a
	3	6.0	1.83	14	Brown SILT AND CLAY, little sand, trace gravel, trace rock fragments														(Visual)
	4	8.5	2.59	12	Gray SILT AND CLAY, little sand, trace gravel, trace rock fragments														(Visual)
B-60	1	0.0	0.00	16	96	92	83	76	71		8	9	12	71	*	31	19	12	A-6a
	2	3.0	0.91	16	Brown SILT AND CLAY, some sand, trace gravel, trace rock fragments														(Visual)
	3	6.0	1.83	15	Brown SILT AND CLAY, some sand, trace gravel, trace rock fragments														(Visual)
	4	8.5	2.59	15	Brown SILT AND CLAY, some sand, trace gravel, trace rock fragments														(Visual)
B-61	1	0.0	0.00	15	96	92	84	75	69		8	8	15	35	34		30	20	10	A-4a
	2	3.0	0.91	10	Brown and gray SANDY SILT, some clay, trace gravel, trace rock fragments														(Visual)
	3	6.0	1.83	13	Brown and gray SANDY SILT, some clay, trace gravel, trace rock fragments														(Visual)
	4	8.5	2.59	18	Brown SANDY SILT, some clay, trace gravel, trace rock fragments														(Visual)
B-62	1	0.0	0.00	14	Brown SILT AND CLAY, some sand, little gravel and rock fragments														(Visual)
	2	3.0	0.91	15	93	88	80	72	67		12	8	13	67	*	32	19	13	A-6a
	3	6.0	1.83	16	Brown SILT AND CLAY, some sand, little gravel and rock fragments														(Visual)
	4	8.5	2.59	16	Brown SILT AND CLAY, some sand, little gravel and rock fragments														(Visual)
B-63	1	0.0	0.00	15	Brown SILT AND CLAY, little sand, trace gravel, trace rock fragments, trace roots														(Visual)
	2	3.0	0.91	18	Brown SILT AND CLAY, little sand, trace gravel, trace rock fragments														(Visual)
	3	6.0	1.83	14	Brown SANDY SILT, trace clay, trace gravel, trace rock fragments														(Visual)
	4	8.5	2.59	24	Brown SILT AND CLAY, little sand, trace gravel, trace rock fragments														(Visual)
B-64	1	0.0	0.00	17	97	94	88	81	77		6	6	11	77	*	33	20	13	A-6a
	2	3.0	0.91	15	Brown SILT AND CLAY, little sand, trace gravel, trace rock fragments														(Visual)
	3	6.0	1.83	16	Brown SILT AND CLAY, little sand, trace gravel, trace rock fragments														(Visual)
	4	8.5	2.59	13	Brown SILT AND CLAY, little sand, trace gravel, trace rock fragments														(Visual)
B-65	1	0.0	0.00	17	Brown SILT AND CLAY, little sand, trace gravel, trace rock fragments, trace topsoil														(Visual)
	2	3.0	0.91	20	100	100	100	100	99		0	0	0	40	59		31	22	9	A-4a
	3	6.0	1.83	20	Gray SANDY SILT, some clay														(Visual)
	4	8.5	2.59	19	Gray SANDY SILT, some clay														(Visual)
B-66	1	0.0	0.00	22	Brown SILT AND CLAY, little sand, trace gravel, trace rock fragments, trace roots														(Visual)
	2	3.0	0.91	23	100	100	100	99	98		0	0	2	98	*	32	21	11	A-6a
	3	6.0	1.83	23	Gray SANDY SILT, some clay with occasional sand and silt seams														(Visual)
	4	8.5	2.59	21	Gray SANDY SILT, some clay with occasional sand and silt seams														(Visual)

* Silt and Clay Combined

DESIGN AGENCY
PRIME ENGINEERING & ARCHITECT, INC.
1038 GHENT RD, AKRON, OHIO 44333

REVIEWED | DATE | STRUCTURE FILE NUMBER
DRAWN | REVISED
DESIGNED | CHECKED

SOIL PROFILE

MED-71-15.78

8
78

TB7-TB12.DGN PDH 11/2/99

MOISTURE (ASTM D-2216-80), GRADATION (ASTM D-422-63) AND ATTERBERG LIMITS (ASTM D-4318-64)

BORING NUMBER	SAMPLE NUMBER	DEPTH (ft)	DEPTH (m)	MOISTURE CONTENT(%)	PARTICLE SIZE ANALYSIS (by weight) (% Passing US. Standard sieve) #4	#10	#40	#100	#200	C. AGG.	C. SAND	F. SAND	SILT	CLAY		ATTERBURG LIMITS L.L	P.L.	P.I.	ODOT CLASSIFICATION
B-67	1	0.0	0.00	17	94	91	83	73	66	9	8	16		66	*	32	21	11	A-6a
	2	3.0	0.91	11	95	90	79	70	64	10	11	15	33	31		24	16	8	A-4a
	3	6.0	1.83	14	Gray SANDY SILT, some clay, trace gravel, trace rock fragments														(Visual)
	4	8.5	2.59	14	Gray SANDY SILT, some clay, trace gravel, trace rock fragments														(Visual)
B-68	1	0.0	0.00	19	Brown SILT AND CLAY, little sand, trace gravel, trace rock fragments, trace roots														(Visual)
	2	3.0	0.91	11	99	94	80	69	62	6	14	18	33	29		22	16	6	A-4a
	3	6.0	1.83	14	Gray SANDY SILT, some clay, trace gravel, trace rock fragments														(Visual)
	4	8.5	2.59	15	Gray SANDY SILT, some clay, trace gravel, trace rock fragments														(Visual)
B-69	1	0.0	0.00	17	Brown SANDY SILT, little clay, trace gravel, trace roots														(Visual)
	2	3.0	0.91	19	98	96	92	89	86	4	4	6	47	39		27	18	9	A-4a
	3	6.0	1.83	19	Gray SANDY SILT, some clay, trace gravel, trace rock fragments														(Visual)
	4	8.5	2.59	18	Gray SANDY SILT, some clay, trace gravel, trace rock fragments														(Visual)
B-70	1	0.0	0.00	18	Brown SILT, some clay, trace sand, trace gravel, trace rock fragments														(Visual)
	2	3.0	0.91	14	99	98	96	94	92	2	2	4	50	42		26	17	9	A-4b
	3	6.0	1.83	22	Gray SILT, some clay, trace sand, trace gravel, trace rock fragments														(Visual)
	4	8.5	2.59	17	Gray SILT, some clay, trace sand, trace gravel, trace rock fragments														(Visual)
B-71	1	0.0	0.00	17	Brown SANDY SILT, trace clay, trace gravel, trace rockfragments														(Visual)
	2	3.0	0.91	13	91	84	71	64	59	16	13	12	28	31		24	16	8	A-4a
	3	6.0	1.83	14	Gray SANDY SILT, some clay, trace gravel, trace rock fragments														(Visual)
	4	8.5	2.59	22	Gray SANDY SILT, some clay, trace gravel, trace rock fragments														(Visual)
B-72	1	0.0	0.00	16	96	93	86	79	74	7	7	12		74	*	32	20	12	A-6a
	2	3.0	0.91	18	Brown SILT AND CLAY, little sand, trace gravel, trace rock fragments, trace roots														(Visual)
	3	6.0	1.83	20	Brown SILT AND CLAY, little sand, trace gravel, trace rock fragments														(Visual)
	4	8.5	2.59	14	Brown SILT AND CLAY, little sand, trace gravel, trace rock fragments														(Visual)
B-73	1	0.0	0.00	25	100	100	96	89	83	0	4	13		83	*	37	26	11	A-6a
	2	3.0	0.91	16	Brown SILT AND CLAY, little sand, trace gravel														(Visual)
	3	6.0	1.83	15	91	73	47	31	21	27	26	26		21	*				A-1-b
	4	8.5	2.59	22	Gray SILT, little clay, trace sand														(Visual)
B-74	1	0.0	0.00	15	Brown SILT AND CLAY, little sand, trace gravel, trace rock fragments, trace roots														(Visual)
	2	3.0	0.91	17	99	96	87	76	71	4	9	16		71	*	31	19	12	A-6a
	3	6.0	1.83	12	Brown SILT AND CLAY, little sand, trace gravel, trace rock fragments														(Visual)
	4	8.5	2.59	13	Brown SILT AND CLAY, little sand, trace gravel, trace rock fragments														(Visual)

* Silt and Clay Combined

DESIGN AGENCY
PRIME ENGINEERING & ARCHITECT, INC.
1038 GHENT RD, AKRON, OHIO 44333

DESIGNED | DRAWN | REVIEWED | DATE
CHECKED | REVISED | STRUCTURE FILE NUMBER

SOIL PROFILE

MED-71-15.78

9
78

TB7-TB12.DGN PDH 11/2/99

MOISTURE (ASTM D-2216-80), GRADATION (ASTM D-422-63) AND ATTERBERG LIMITS (ASTM D-4318-64)

BORING NUMBER	SAMPLE NUMBER	DEPTH (ft)	DEPTH (m)	MOISTURE CONTENT(%)	PARTICLE SIZE ANALYSIS (by weight) (% Passing US. Standard sieve) #4	#10	#40	#100	#200	C. AGG.	C. SAND	F. SAND	SILT	CLAY		ATTERBURG LIMITS L.L	P.L.	P.I.	ODOT CLASSIFICATION
B-75	1	0.0	0.00	15	96	92	85	77	71	8	7	13		71	*	32	20	12	A-6a
	2	3.0	0.91	17	Brown and gray SILT AND CLAY, little sand, trace gravel, trace rock fragments with occasional silt seams														(Visual)
	3	6.0	1.83	22	Brown SILT AND CLAY, little sand, trace gravel, trace rock fragments														(Visual)
	4	8.5	2.59	20	Gray SILT AND CLAY, little sand, trace gravel, trace rock fragments with occasional silt seams														(Visual)
B-76	1	0.0	0.00	14	Brown, mottled gray SILT AND CLAY, little sand, trace gravel, trace rock frag														(Visual)
	2	3.0	0.91	14	94	91	84	79	74	9	7	9		74	*	34	21	13	A-6a
	3	6.0	0.00	15	Brown SILT AND CLAY, little sand, trace gravel, trace rock fragments														(Visual)
	4	8.5	2.59	13	Brown SILT AND CLAY, little sand, trace gravel, trace rock fragments														(Visual)
B-77	1	0.0	0.00	17	Brown SANDY SILT, little clay, trace gravel, trace rock fragments, trace roots														(Visual)
	2	3.0	0.91	25	100	100	100	100	99	0	0	1	39	60		30	20	10	A-4a
	3	6.0	1.83	24	Gray SILTAND CLAY, trace sand with occasional silt layer														(Visual)
	4	8.5	2.59	21	Gray SILT AND CLAY, trace sand														(Visual)
B-78	1	0.0	0.00	14	Brown SANDY SILT, some clay, trace gravel, trace rock fragments														(Visual)
	2	3.0	0.91	15	97	93	85	80	75	7	8	10	34	41		29	19	10	A-4a
	3	6.0	1.83	15	Gray SANDY SILT, some clay, trace gravel, trace rock fragments														(Visual)
	4	8.5	2.59	16	Gray SANDY SILT, some clay, trace gravel, trace rock fragments														(Visual)
B-79	1	0.0	0.00	18	97	94	86	77	72	6	8	14		72	*	32	20	12	A-6a
	2	3.0	0.91	17	Brown SILT AND CLAY, some sand, trace gravel, trace rock fragments														(Visual)
	3	6.0	1.83	16	Gray SILT AND CLAY, some sand, trace gravel, trace rock fragments														(Visual)
	4	8.5	2.59	14	Gray SILT AND CLAY, some sand, trace gravel, trace rock fragments														(Visual)
B-80	1	0.0	0.00	15	94	91	85	80	76	9	6	9		76	*	34	20	14	A-6a
	2	3.0	0.91	16	Brown SILT AND CLAY, little sand, trace gravel, trace rock fragments														(Visual)
	3	6.0	1.83	13	Brown SILT AND CLAY, little sand, little gravel and rock fragments														(Visual)
	4	8.5	2.59	12	Brown SILT AND CLAY, little sand, little gravel and rock fragments														(Visual)
B-81	1	0.0	0.00	17	96	93	87	80	76	7	6	11	39	37		31	21	10	A-4a
	2	3.0	0.91	16	Brown SANDY SILT, some clay, trace gravel, trace rock fragments														(Visual)
	3	6.0	1.83	15	Brown SANDY SILT, some clay, trace gravel, trace rock fragments														(Visual)
B-82	1	0.0	0.00	17	98	95	87	81	76	5	8	11		76	*	33	20	13	A-6a
	2	3.0	0.91	16	Brown SILT AND CLAY, little sand, trace gravel, trace rock fragments														(Visual)
	3	6.0	1.83	18	Brown SILT AND CLAY, little sand, trace gravel, trace rock fragments														(Visual)
	4	8.5	2.59	15	Brown SILT AND CLAY, little sand, trace gravel, trace rock fragments														(Visual)
B-83	1	0.0	0.00	15	Brown SANDY SILT, some clay, trace gravel, trace rock fragments														(Visual)
	2	3.0	0.91	15	Brown SANDY SILT, some clay, trace gravel, trace rock fragments														(Visual)
	3	6.0	1.83	17	Brown SANDY SILT, some clay, trace gravel, trace rock fragments														(Visual)

* Silt and Clay Combined

DESIGN AGENCY
PRIME ENGINEERING & ARCHITECT, INC.
1038 GHENT RD, AKRON, OHIO 44333

REVIEWED | DATE | STRUCTURE FILE NUMBER
DRAWN | REVISED
DESIGNED | CHECKED

SOIL PROFILE

MED-71-15.78

10/78

TB7-TBI2.DGN PDH 11/2/99

MOISTURE (ASTM D-2216-80), GRADATION (ASTM D-422-63) AND ATTERBERG LIMITS (ASTM D-4318-64)

BORING NUMBER	SAMPLE NUMBER	DEPTH (ft)	DEPTH (m)	MOISTURE CONTENT(%)	PARTICLE SIZE ANALYSIS (by weight) (% Passing US. Standard sieve) #4	#10	#40	#100	#200	C. AGG.	C. SAND	F. SAND	SILT	CLAY		ATTERBURG LIMITS L.L.	P.L.	P.I.	ODOT CLASSIFICATION
	4	8.5	2.59	16	Brown SANDY SILT, some clay, trace gravel, trace rock fragments														(Visual)
B-84	1	0.0	0.00	14	Brown SANDY SILT, little clay, little gravel and rock fragments														(Visual)
	2	3.0	0.91	10	92	86	75	66	60		14	11	15	31	29	24	16	8	A-4a
	3	6.0	1.83	18	Gray SILT AND CLAY, some sand, trace gravel trace rock fragments														(Visual)
	4	8.5	2.59	14	Gray SILT AND CLAY, some sand, trace gravel trace rock fragments														(Visual)
B-85	1	0.0	0.00	14	96	91	82	74	69		9	9	13	34	35	29	19	10	A-4a
	2	3.0	0.91	13	Gray SANDY SILT, some clay, trace gravel, trace rock fagments														(Visual)
	3	6.0	1.83	14	Gray SILT AND CLAY, little sand, trace gravel, trace rock fragments														(Visual)
	4	8.5	2.59	17	Gray SILT AND CLAY, little sand, trace gravel, trace rock fragments														(Visual)
B-86	1	0.0	0.00	12	Brown SANDY SILT, some clay, little gravel and rock fragments, trace roots														(Visual)
	2	3.0	0.91	13	93	89	80	74	70		11	9	10	37	33	28	18	10	A-4a
	3	6.0	1.83	14	Gray SANDY SILT, some clay, little gravel and rock fragments														(Visual)
	4	8.5	2.59	13	Gray SANDY SILT, some clay, little gravel and rock fragments														(Visual)
B-87	1	0.0	0.00	15	Brown SANDY SILT, some clay, trace gravel, trace roots														(Visual)
	2	3.0	0.91	12	78	66	49	30	23		34	17	26		23	*			A-1-b
	3	6.0	1.83	14	Gray SANDY SILT, some clay, trace gravel, trace rock fagments														(Visual)
	4	8.5	2.59	14	Gray SANDY SILT, some clay, trace gravel, trace rock fragments														(Visual)
B-88	1	0.0	0.00	12	96	91	84	78	74		9	7	10	39	35	26	19	7	A-4a
	2	3.0	0.91	14	Gray SILT AND CLAY, little sand, trace gravel, trace rock fragments														(Visual)
	3	6.0	1.83	15	Gray SILT AND CLAY, little sand, trace gravel, trace rock fragments														(Visual)
	4	8.5	2.59	14	Gray SILT AND CLAY, little sand, trace gravel, trace rock fragments														(Visual)
B-89	1	0.0	0.00	16	Gray SANDY SILT, some clay, trace gravel, trace rock fagments														(Visual)
	2	3.0	0.91	15	98	94	85	80	76		6	9	9	36	40	25	18	7	A-4a
	3	6.0	1.83	14	Gray SANDY SILT, some clay, trace gravel, trace rock fagments														(Visual)
	4	8.5	2.59	16	Gray SANDY SILT, some clay, trace gravel, trace rock fagments														(Visual)
B-90	1	0.0	0.00	15	Brown SILTY CLAY, little sand, trace gravel, trace rock fragments														(Visual)
	2	3.0	0.91	17	94	93	89	85	81		7	4	8		81	*	37	20	17	A-6b
	3	6.0	1.83	16	Brown SILT AND CLAY, little sand, trace gravel, trace rock fragments														(Visual)
B-91	1	0.0	0.00	15	Brown SILT AND CLAY, little sand, trace gravel, trace rock fragments, trace roots														(Visual)
	2	3.0	0.91	18	98	95	88	84	80		5	7	8		80	*	38	23	15	A-6a
	3	6.0	1.83	18	Brown SILT AND CLAY, little sand, trace gravel, trace rock fragments														(Visual)
	4	8.5	2.59	15	Brown SILT AND CLAY, little sand, trace gravel, trace rock fragments														(Visual)

* Silt and Clay Combined

DESIGN AGENCY
PRIME ENGINEERING & ARCHITECT, INC.
1038 GHENT RD, AKRON, OHIO 44333

REVIEWED | DATE | STRUCTURE FILE NUMBER
DRAWN | REVISED
DESIGNED | CHECKED

SOIL PROFILE

MED-71-15.78

II
78

TB7-TBI2.DGN PDH 11/2/99

MOISTURE (ASTM D-2216-80), GRADATION (ASTM D-422-63) AND ATTERBERG LIMITS (ASTM D-4318-64)

BORING NUMBER	SAMPLE NUMBER	DEPTH (ft)	DEPTH (m)	MOISTURE CONTENT(%)	PARTICLE SIZE ANALYSIS (by weight) (% Passing US. Standard sieve) #4	#10	#40	#100	#200	C. AGG.	C. SAND	F. SAND	SILT	CLAY		ATTERBURG LIMITS L.L.	P.L.	P.I.	ODOT CLASSIFICATION
B-92	1	0.0	0.00	14	Brown and gray SILT AND CLAY, little sand, trace gravel, trace rock fragments														(Visual)
	2	3.0	0.91	15	97	94	86	81	76	6	8	10		76	*	31	20	11	A-6a
	3	6.0	1.83	13	Brown and gray SILT AND CLAY, little sand, trace gravel, trace rock fragments														(Visual)
	4	8.5	2.59	12	Brown SILT AND CLAY, little sand, trace gravel, trace rock fragments														(Visual)
B-93	1	0.0	0.00	21	91	90	87	83	80	10	3	7		80	*	44	22	22	A-7-6
	2	3.0	0.91	15	Brown SANDY SILT, some clay, trace gravel, trace rock fagments														(Visual)
	3	6.0	1.83	15	Brown SANDY SILT, some clay, trace gravel, trace rock fagments														(Visual)
	4	8.5	2.59	16	Brown SANDY SILT, some clay, trace gravel, trace rock fagments														(Visual)
B-94	1	0.0	0.00	20	Brown SILT AND CLAY, little sand, trace rock fragments, trace roots														(Visual)
	2	3.0	0.91	18	99	96	90	86	82	4	6	8		82	*	35	20	15	A-6a
	3	6.0	1.83	18	Brown SILT AND CLAY, little sand, trace gravel, trace rock fragments														(Visual)
	4	8.5	2.59	15	Brown SILT AND CLAY, little sand, trace gravel, trace rock fragments														(Visual)
B-95	1	0.0	0.00	12	Brown SILT AND CLAY, little sand, trace rock fragments, trace gravel, trace roots														(Visual)
	2	3.0	0.91	14	97	94	86	79	74	6	8	12		74	*	29	18	11	A-6a
	3	6.0	1.83	13	Brown SILT AND CLAY, some sand, trace gravel, trace rock fragments														(Visual)
	4	8.5	2.59	13	Brown and gray SILT AND CLAY, some sand, trace gravel, trace rock fragments														(Visual)
B-96	1	0.0	0.00	13	Brown SANDY SILT, little clay, little gravel and rock fragments														(Visual)
	2	3.0	0.91	11	91	85	73	65	59	15	12	14	31	28		26	17	9	A-4a
	3	6.0	1.83	17	Brown and gray SILT AND CLAY, little sand, trace gravel, trace rock fragments														(Visual)
	4	8.5	2.59	22	Brown SILT AND CLAY, little sand, trace gravel, trace rock fragments, trace organic														(Visual)
B-97	1	0.0	0.00	15	Brown and gray SILT AND CLAY, some sand, trace gravel, trace roots														(Visual)
	2	3.0	0.91	17	95	91	82	76	71	9	9	12		71	*	33	21	12	A-6a
	3	6.0	1.83	15	Brown and gray SILT AND CLAY, some sand, trace gravel, trace rock fragments														(Visual)
	4	8.5	2.59	13	Brown and gray SILT AND CLAY, some sand, trace gravel, trace rock fragments														(Visual)
B-98	1	0.0	0.00	17	98	95	89	82	77	5	6	12		77	*	34	20	14	A-6a
	2	3.0	0.91	16	Brown SILT AND CLAY, little sand, trace gravel, trace rock fragments														(Visual)
	3	6.0	1.83	16	Brown SILT AND CLAY, little sand, trace gravel, trace rock fragments														(Visual)
	4	8.5	2.59	15	Brown SILT AND CLAY, little sand, trace gravel, trace rock fragments														(Visual)
B-99	1	0.0	0.00	17	99	96	90	83	78	4	6	12		78	*	33	21	12	A-6a
	2	3.0	0.91	14	Gray SILT AND CLAY, little sand, trace gravel, trace rock fragments														(Visual)
	3	6.0	1.83	13	Gray SILT AND CLAY, little sand, trace gravel, trace rock fragments														(Visual)
	4	8.5	2.59	13	Gray SILT AND CLAY, little sand, trace gravel, trace rock fragments														(Visual)
B-100	1	0.0	0.00	22	99	97	94	88	84	3	3	10		84	*	42	23	19	A-7-6
	2	3.0	0.91	18	Brown CLAY, little sand, trace gravel, trace rock fragments														(Visual)

* Silt and Clay Combined

DESIGN AGENCY
PRIME ENGINEERING & ARCHITECT, INC.
1038 GHENT RD, AKRON, OHIO 44333

DESIGNED | DRAWN | REVIEWED | DATE | STRUCTURE FILE NUMBER
CHECKED | REVISED

SOIL PROFILE

MED-71-15.78

12
78

TB7-TB12.DGN PDH 11/2/99

MOISTURE (ASTM D-2216-80), GRADATION (ASTM D-422-63) AND ATTERBERG LIMITS (ASTM D-4318-64)

BORING NUMBER	SAMPLE NUMBER	DEPTH (ft)	DEPTH (m)	MOISTURE CONTENT(%)	PARTICLE SIZE ANALYSIS (by weight) (% Passing US. Standard sieve) #4	#10	#40	#100	#200	C. AGG.	C. SAND	F. SAND	SILT	CLAY		ATTERBURG LIMITS L.L.	P.L.	P.I.	ODOT CLASSIFICATION
	3	6.0	1.83	17	Brown SILT AND CLAY, some sand, trace gravel, trace rock fragments														(Visual)
	4	8.5	2.59	15	Brown and gray SILT AND CLAY, some sand, trace gravel, trace rock fragments														(Visual)
B-101	1	0.0	0.00	15	Brown SILT AND CLAY, little sand, trace gravel, trace rock fragments														(Visual)
	2	3.0	0.91	15	97	93	86	80	75		7	7	10	75	*	32	20	12	A-6a
	3	6.0	1.83	14	Brown SILT AND CLAY, little sand, trace gravel, trace rock fragments														(Visual)
	4	8.5	2.59	14	Gray SILT AND CLAY, little sand, trace gravel, trace rock fragments														(Visual)
B-102	1	0.0	0.00	16	Brown CLAY, little sand, trace gravel, trace rock fragments														(Visual)
	2	3.0	0.91	22	100	100	96	91	88		0	4	8	88	*	44	22	22	A-7-6
	3	6.0	1.83	21	Brown CLAY, little sand, trace gravel, trace rock fragments														(Visual)
	4	8.5	2.59	15	Brown SILT AND CLAY, some sand, trace gravel, trace rock fragments														(Visual)
B-103	1	0.0	0.00	15	Brown SANDY SILT, some clay, trace gravel, trace rock fragments														(Visual)
	2	3.0	0.91	18	99	97	92	81	73		3	5	19	39	34	31	21	10	A-4a
	3	6.0	1.83	28	Brown SILT AND CLAY, little sand, trace gravel, trace rock fragments, trace organic														(Visual)
	4	8.5	2.59	19	Brown, SILT AND CLAY, little sand, trace gravel, trace rock fragments														(Visual)
B-104	1	0.0	0.00	21	72	46	18	4	1		54	28	17		1	*			A-1-a
	2	3.0	0.91	18	97	94	87	80	75		6	7	12		75	*	31	18	13	A-6a
	3	6.0	1.83	19	Brown, mottled gray SILT AND CLAY, little sand, trace gravel, trace rock fragments														(Visual)
	4	8.5	2.59	16	Brown, mottled gray SILT AND CLAY, little sand, trace gravel, trace rock fragments														(Visual)
B-105	1	0.0	0.00	17	Brown SANDY SILT, some clay, trace gravel, trace rock fragments, trace roots														(Visual)
	2	3.0	0.91	14	98	94	86	80	75		6	8	11	33	42	30	20	10	A-4a
	3	6.0	1.83	18	Brown SANDY SILT, some clay, trace gravel, trace rock fragments														(Visual)
	4	8.5	2.59	17	Brown SANDY SILT, some clay, trace gravel, trace rock fragments														(Visual)
B-106	1	0.0	0.00	13	94	91	84	76	71		9	7	13	32	39	29	19	10	A-4a
	2	3.0	0.91	19	Brown SANDY SILT, some clay, trace gravel, trace rock fragments														(Visual)
	3	6.0	1.83	15	Brown and gray SILT AND CLAY, little sand, trace gravel, trace rock fragments														(Visual)
	4	8.5	2.59	17	Brown and gray SILT AND CLAY, little sand, trace gravel, trace rock fragments														(Visual)
B-107	1	0.0	0.00	15	Brown SILT AND CLAY, some sand, trace gravel, trace rock frragments, trace roots														(Visual)
	2	3.0	0.91	14	98	93	85	78	74		7	8	11		74	*	31	19	12	A-6a
	3	6.0	1.83	15	Brown SILT AND CLAY, some sand, trace gravel, trace rock frragments														(Visual)
	4	8.5	2.59	21	Brown SILT AND CLAY, some sand, trace gravel, trace rock frragments														(Visual)
B-108	1	0.0	0.00	16	Brown SILT AND CLAY, some sand, trace gravel, trace rock frragments														(Visual)
	2	3.0	0.91	16	Brown SILT AND CLAY, some sand, trace gravel, trace rock frragments														(Visual)
	3	6.0	1.83	15	Gray SILT AND CLAY, little sand, trace gravel, trace rock fragments														(Visual)
	4	8.5	2.59	15	Gray SILT AND CLAY, little sand, trace gravel, trace rock fragments														(Visual)

* Silt and Clay Combined

DESIGN AGENCY
PRIME ENGINEERING & ARCHITECT, INC.
1038 GHENT RD, AKRON, OHIO 44333

DESIGNED | DRAWN | CHECKED | REVIEWED | REVISED | DATE | STRUCTURE FILE NUMBER

SOIL PROFILE

MED-71-15.78

13
78

TBI3-TBI7.DGN PDH 11/2/99

MOISTURE (ASTM D-2216-80), GRADATION (ASTM D-422-63) AND ATTERBERG LIMITS (ASTM D-4318-64)

BORING NUMBER	SAMPLE NUMBER	DEPTH (ft)	DEPTH (m)	MOISTURE CONTENT(%)	PARTICLE SIZE ANALYSIS (by weight) (% Passing US. Standard sieve) #4	#10	#40	#100	#200	C. AGG.	C. SAND	F. SAND	SILT	CLAY		ATTERBURG LIMITS L.L.	P.L.	P.I.	ODOT CLASSIFICATION
B-109	1	0.0	0.00	13	Brown and gray SANDY SILT, some clay, trace gravel, trace rock fragments														(Visual)
	2	3.0	0.91	15	98	95	87	81	75	5	8	12	35	40		25	16	9	A-4a
	3	6.0	1.83	19	Gray SANDY SILT, some clay, trace gravel, trace rock fragments														(Visual)
	4	8.5	2.59	16	Gray SANDY SILT, some clay, trace gravel, trace rock fragments														(Visual)
B-110	1	0.0	0.00	16	99	96	89	80	74	4	7	15		74		30	18	12	A-6a
	2	3.0	0.91	14	Gray SILT AND CLAY, some sand, trace gravel, trace rock fragments														(Visual)
	3	6.0	1.83	18	Gray SILT AND CLAY, some sand, trace gravel, trace rock fragments														(Visual)
	4	8.5	2.59	15	Gray SILT AND CLAY, some sand, trace gravel, trace rock fragments														(Visual)
B-111	1	0.0	0.00	13	96	92	83	77	71	8	9	12		71	*	28	17	11	A-6a
	2	3.0	0.91	14	Brown SILT AND CLAY, some sand, trace gravel, trace rock fragments														(Visual)
	3	6.0	1.83	16	Gray SILT AND CLAY, little sand, trace gravel, trace rock fragments														(Visual)
	4	8.5	2.59	15	Gray SILT AND CLAY, little sand, trace gravel, trace rock fragments														(Visual)
B-112	1	0.0	0.00	17	Brown SILT AND CLAY, little sand, trace gravel, trace rock fragments														(Visual)
	2	3.0	0.91	17	98	95	87	81	76	5	8	11		76	*	33	19	14	A-6a
	3	6.0	1.83	15	Gray SILT AND CLAY, little sand, trace gravel, trace rock fragments														(Visual)
	4	8.5	2.59	15	Gray SILT AND CLAY, little sand, trace gravel, trace rock fragments														(Visual)
B-113	1	0.0	0.00	18	Brown SILT AND CLAY, little sand, trace gravel, trace rock fragments														(Visual)
	2	3.0	0.91	17	97	94	87	81	76	6	7	10		76	*	36	21	15	A-6a
	3	6.0	1.83	16	Brown and gray SILT AND CLAY, little sand, trace gravel, trace rock fragments														(Visual)
	4	8.5	2.59	16	Gray SILT AND CLAY, little sand, trace gravel, trace rock fragments														(Visual)
B-114	1	0.0	0.00	15	Brown SILT AND CLAY, little sand, trace gravel, trace rock fragments														(Visual)
	2	3.0	0.91	17	97	94	86	80	76	6	8	10		76	*	34	22	12	A-6a
	3	6.0	1.83	17	Brown SILT AND CLAY, little sand, trace gravel, trace rock fragments														(Visual)
	4	8.5	2.59	20	Brown SILT AND CLAY, little sand, trace gravel, trace rock fragments														(Visual)
B-115	1	0.0	0.00	16	98	95	89	82	77	5	6	12		77	*	35	20	15	A-6a
	2	3.0	0.91	27	Brown SILT AND CLAY, little sand, trace gravel, trace rock fragments with peat layer														(Visual)
	3	6.0	1.83	15	Brown SILT AND CLAY, little sand, trace gravel, trace rock fragments														(Visual)
	4	8.5	2.59	16	Brown SILT AND CLAY, little sand, trace gravel, trace rock fragments														(Visual)
B-116	1	0.0	0.00	16	Brown SILT AND CLAY, little sand, trace gravel, trace rock fragments														(Visual)
	2	3.0	0.91	16	Brown SILT AND CLAY, little sand, trace gravel, trace rock fragments														(Visual)
	3	6.0	1.83	16	Brown SILT AND CLAY, little sand, trace gravel, trace rock fragments														(Visual)
	4	8.5	2.59	17	Brown SILT AND CLAY, little sand, trace gravel, trace rock fragments														(Visual)

* Silt and Clay Combined

DESIGN AGENCY
PRIME ENGINEERING & ARCHITECT, INC.
1038 GHENT RD, AKRON, OHIO 44333

REVIEWED DATE STRUCTURE FILE NUMBER
DRAWN REVISED
DESIGNED CHECKED

SOIL PROFILE

MED-71-15.78

14
78

TBI3-TBI7.DGN PDH 11/2/99

MOISTURE (ASTM D-2216-80), GRADATION (ASTM D-422-63) AND ATTERBERG LIMITS (ASTM D-4318-64)

BORING NUMBER	SAMPLE NUMBER	DEPTH (ft)	DEPTH (m)	MOISTURE CONTENT(%)	PARTICLE SIZE ANALYSIS (by weight) (% Passing US. Standard sieve) #4	#10	#40	#100	#200	C. AGG.	C. SAND	F. SAND	SILT	CLAY		ATTERBURG LIMITS L.L.	P.L.	P.I.	ODOT CLASSIFICATION
B-117	1	0.0	0.00	16	Brown CLAY, trace sand, trace gravel, trace rock fragments														(Visual)
	2	3.0	0.91	23	100	99	96	92	89		1	3	7	89	*	42	24	18	A-7-6
	3	6.0	1.83	18	Brown CLAY, trace sand, trace gravel, trace rock fragments														(Visual)
	4	8.5	2.59	15	Brown CLAY, trace sand, trace gravel, trace rock fragments														(Visual)
B-118	1	0.0	0.00	18	Brown SILTY CLAY, some sand, trace gravel, trace rock fragments														(Visual)
	2	3.0	0.91	23	98	97	91	83	76		3	6	15	76	*	38	22	16	A-6b
	3	6.0	1.83	21	Brown SILTY CLAY, some sand, trace gravel, trace rock fragments														(Visual)
	4	8.5	2.59	23	Brown SILTY CLAY, some sand, trace gravel, trace rock fragments														(Visual)
B-119	1	0.0	0.00	16	Brown SILTY CLAY, little sand, trace gravel, trace rock fragments														(Visual)
	2	3.0	0.91	16	99	97	92	86	81		3	5	11	81	*	34	18	16	A-6b
	3	6.0	1.83	18	Brown SILTY CLAY, little sand, trace gravel, trace rock fragments														(Visual)
	4	8.5	2.59	20	Brown SILTY CLAY, little sand, trace gravel, trace rock fragments														(Visual)
B-120	1	0.0	0.00	23	Brown SILT AND CLAY, little sand, trace gravel, trace rock fragments														(Visual)
	2	3.0	0.91	15	98	94	87	81	76		6	7	11	76	*	31	18	13	A-6a
	3	6.0	1.83	16	Brown SILT AND CLAY, little sand, trace gravel, trace rock fragments														(Visual)
	4	8.5	2.59	19	Brown SILT AND CLAY, little sand, trace gravel, trace rock fragments														(Visual)
B-121	1	0.0	0.00	16	96	94	88	81	77		6	6	11	77	*	30	18	12	A-6a
	2	3.0	0.91	17	Brown SILT AND CLAY, little sand, trace gravel, trace rock fragments														(Visual)
	3	6.0	1.83	21	Brown SILT AND CLAY, little sand, trace gravel, trace rock fragments														(Visual)
	4	8.5	2.59	19	Brown SILT AND CLAY, little sand, trace gravel, trace rock fragments, trace organic														(Visual)
B-122	1	0.0	0.00	17	99	96	89	82	76		4	7	13	76	*	35	19	16	A-6b
	2	3.0	0.91	14	Brown SILTY CLAY, some sand, trace gravel, trace rock fragments														(Visual)
	3	6.0	1.83	23	Brown SILTY CLAY, some sand, trace gravel, trace rock fragments														(Visual)
	4	8.5	2.59	16	Brown SILT AND CLAY, some sand, trace gravel, trace rock fragments														(Visual)
B-123	1	0.0	0.00	16	Brown SILT AND CLAY, little sand, trace gravel, trace rock fragments, trace roots														(Visual)
	2	3.0	0.91	12	97	92	83	77	72		8	9	11	36	36	29	19	10	A-4a
	3	6.0	1.83	14	Gray SANDY SILT, some clay, trace gravel, trace rock fragments														(Visual)
	4	8.5	2.59	19	Brown SILT AND CLAY, little sand, trace gravel, trace rock fragments														(Visual)
B-124	1	0.0	0.00	16	Brown SILT AND CLAY, some sand, trace gravel, trace rock fragments, trace root														(Visual)
	2	3.0	0.91	14	98	94	88	81	76		6	6	12	32	44	28	18	10	A-4a
	3	6.0	1.83	17	Brown SANDY SILT, some clay, trace gravel, trace rock fragments														(Visual)
	4	8.5	2.59	21	Gray SILT AND CLAY, some sand, trace gravel, trace rock fragments														(Visual)
B-125	1	0.0	0.00	14	Brown SILT AND CLAY, little sand, trace gravel, trace rock fragments, trace roots														(Visual)
	2	3.0	0.91	20	100	99	97	92	89		1	2	8	89	*	46	22	24	A-7-6

* Silt and Clay Combined

DESIGN AGENCY
PRIME ENGINEERING & ARCHITECT, INC.
1038 GHENT RD, AKRON, OHIO 44333

DATE
REVIEWED
STRUCTURE FILE NUMBER
DRAWN
REVISED
DESIGNED
CHECKED

SOIL PROFILE

MED-71-15.78

15
78

TBI3-TBI7.DGN PDH 11/2/99

MOISTURE (ASTM D-2216-80), GRADATION (ASTM D-422-63) AND ATTERBERG LIMITS (ASTM D-4318-64)

BORING NUMBER	SAMPLE NUMBER	DEPTH (ft)	DEPTH (m)	MOISTURE CONTENT(%)	PARTICLE SIZE ANALYSIS (by weight) (% Passing US. Standard sieve) #4	#10	#40	#100	#200	C. AGG.	C. SAND	F. SAND	SILT	CLAY		ATTERBURG LIMITS L.L.	P.L.	P.I.	ODOT CLASSIFICATION
	3	6.0	1.83	16	Brown CLAY, trace sand, trace gravel, trace rock fragments														(Visual)
	4	8.5	2.59	20	Gray COARSE AND FINE SAND, little silt														(Visual)
B-126	1	0.0	0.00	16	Brown SILT AND CLAY, some sand, trace gravel, trace rock fragments														(Visual)
	2	3.0	0.91	15	99	95	85	78	73	5	10	12		73	*	29	18	11	A-6a
	3	6.0	1.83	14	Gray SILT AND CLAY, some sand, trace gravel, trace rock fragments														(Visual)
	4	8.5	2.59	13	Gray SILT AND CLAY, some sand, trace gravel, trace rock fragments														(Visual)
B-127	1	0.0	0.00	15	99	97	91	86	83	3	6	8		83	*	32	20	12	A-6a
	2	3.0	0.91	15	Brown SILT AND CLAY, little sand, trace gravel, trace rock fragments														(Visual)
	3	6.0	1.83	15	Brown SILT AND CLAY, little sand, trace gravel, trace rock fragments														(Visual)
	4	8.5	2.59	14	Brown and gray SILT AND CLAY, little sand, trace gravel, trace rock fragments														(Visual)
B-128	1	0.0	0.00	12	93	89	81	75	71	11	8	10		71	*	30	19	11	A-6a
	2	3.0	0.91	13	Gray SILT AND CLAY, little sand, trace gravel, little rock fragments														(Visual)
	3	6.0	1.83	14	Gray SILT AND CLAY, little sand, trace gravel, little rock fragments														(Visual)
	4	8.5	2.59	14	Gray SILT AND CLAY, little sand, trace gravel, little rock fragments														(Visual)
B-129	1	0.0	0.00	15	Brown SILT AND CLAY, little sand, trace gravel, trace rock fragments														(Visual)
	2	3.0	0.91	16	97	93	85	79	76	7	8	9		76	*	34	21	13	A-6a
	3	6.0	1.83	16	Brown SILT AND CLAY, little sand, trace gravel, trace rock fragments														(Visual)
	4	8.5	2.59	15	Brown to gray SILT AND CLAY, little sand, trace gravel, trace rock fragments														(Visual)
B-130	1	0.0	0.00	23	Brown SILT AND CLAY, little sand, trace gravel, trace rock fragments, trace roots														(Visual)
	2	3.0	0.91	25	99	98	95	89	84	2	3	12		84	*	36	23	13	A-6a
	3	6.0	1.83	29	Brown SILT AND CLAY, little sand, trace gravel, trace rock fragments, trace roots														(Visual)
	4	8.5	2.59	17	Brown SILT AND CLAY, little sand, trace gravel, trace rock fragments														(Visual)
B-131	1	0.0	0.00	21	Brown SILT AND CLAY, little sand, trace gravel, trace rock fragments, trace roots														(Visual)
	2	3.0	0.91	17	97	93	83	77	73	7	10	10		73	*	34	21	13	A-6a
	3	6.0	1.83	17	Brown SILT AND CLAY, little sand, trace gravel, trace rock fragments														(Visual)
	4	8.5	2.59	15	Gray SILT AND CLAY, little sand, trace gravel, little rock fragments														(Visual)
B-132	1	1	0.30	18	Brown SILT AND CLAY, little sand, trace gravel, trace rock fragments														(Visual)
	2	3.5	1.07	21	95	86	77	72	68	14	9	9		68	*	38	22	16	A-6b
	3	6	1.83	16	Gray SILTY CLAY, little sand, little gravel and rock fragments														(Visual)
	4	8.5	2.59	17	Brown SILT AND CLAY, little sand, trace gravel, trace rock fragments														(Visual)
B-115S	1	0.0	0.00	18	Brown SILT AND CLAY, little sand, trace gravel, trace rock fragments														(Visual)
	2	2.0	0.61	18	Brown SILT AND CLAY, little sand, trace gravel, trace rock fragments														(Visual)
	3	4.0	1.22	14	Brown SILT AND CLAY, little sand, trace gravel, trace rock fragments														(Visual)
	4	6.0	1.83	17	Brown SILT AND CLAY, little sand, trace gravel, trace rock fragments														(Visual)

* Silt and Clay Combined

DESIGN AGENCY
PRIME ENGINEERING & ARCHITECT, INC.
1038 GHENT RD, AKRON, OHIO 44333

REVIEWED DATE STRUCTURE FILE NUMBER
DRAWN REVISED
DESIGNED CHECKED

SOIL PROFILE

MED-71-15.78

16
78

TBI3-TBI7.DGN PDH 11/2/99

MOISTURE (ASTM D-2216-80), GRADATION (ASTM D-422-63) AND ATTERBERG LIMITS (ASTM D-4318-64)

BORING NUMBER	SAMPLE NUMBER	DEPTH (ft)	DEPTH (m)	MOISTURE CONTENT(%)	PARTICLE SIZE ANALYSIS (by weight) (% Passing US. Standard sieve) #4	#10	#40	#100	#200	C. AGG.	C. SAND	F. SAND	SILT	CLAY	ATTERBURG LIMITS L.L.	P.L.	P.I.	ODOT CLASSIFICATION
	5	8.0	2.44	13	Brown SILT AND CLAY, little sand, trace gravel, trace rock fragments													(Visual)
B-115E	1	0.0	0.00	18	Brown SILT AND CLAY, little sand, trace gravel, trace rock fragments													(Visual)
	2	2.0	0.61	19	Brown SILT AND CLAY, little sand, trace gravel, trace rock fragments													(Visual)
	3	4.0	1.22	22	Brown SILT AND CLAY, little sand, trace gravel, trace rock fragments													(Visual)
	4	6.0	1.83	10	Brown COARSE AND FINE SAND, little silt													(Visual)
	5	8.0	2.44	17	Brown SILT AND CLAY, little sand, trace gravel, trace rock fragments													(Visual)
B-115N	1	0.0	0.00	21	Brown SILT AND CLAY, little sand, trace gravel, trace rock fragments, trace roots													(Visual)
	2	2.0	0.61	18	Brown SILT AND CLAY, little sand, trace gravel, trace rock fragments													(Visual)
	3	4.0	1.22	17	Brown SILT AND CLAY, little sand, trace gravel, trace rock fragments													(Visual)
	4	6.0	1.83	19	Brown SILT AND CLAY, little sand, trace gravel, trace rock fragments													(Visual)
	5	8.0	2.44	17	Brown SILT AND CLAY, little sand, trace gravel, trace rock fragments													(Visual)

* Silt and Clay Combined

DESIGN AGENCY
PRIME ENGINEERING & ARCHITECT, INC.
1038 GHENT RD, AKRON, OHIO 44333

REVIEWED DATE | STRUCTURE FILE NUMBER
DRAWN | REVISED
DESIGNED | CHECKED

SOIL PROFILE

MED-71-15.78

17
78

TBI3-TBI7.DGN PDH 11/2/99

PRIME ENGINEERING & ARCHITECTURE INC.

TEST BORING No.: B-1

STATION & OFFSET: 840+00, 30.0 ft. Lt. (South Bound)

ELEVATION: 1026.2ft

CLIENT: Richland Engineering Limited

PROJECT: Subsurface Exploration for MED-IR71-15.94 PROJECT No.: 98113

LOCATION: Medina County, Ohio

DATE STARTED: 2/2/99 DATE COMPLETED: 2/2/99

SAMPLER DIAM: 2.0" TYPE: SS HAMMER WT.: 140lb FALL: 30.0"

CASING DIAM: 3.25" TYPE: HSA OTHER:

DRILLING INFORMATION:
OTB / Mobile B-57 Truck Mounted Drilling Rig

GROUNDWATER INFORMATION:
No groundwater encountered during and upon completion of the drilling operations.

ELEV (ft.)	DEPTH (ft.)	Soil/ Rock Symbol	MATERIAL DESCRIPTION	SAMPLE NUMBER	SAMPLE DEPTH	N-VALUE (BLOWS/FT) OR REC%/(RQD%)	PENETROMETER (tons/ft²)	MOISTURE CONTENT (%)	ATTERBERG LIMITS (%) LL	PL	PI	DRY DENSITY (pcf)	UNCONFINED COMPRESSIVE STRENGTH (psf)	MINUS No. 200 SIEVE (%)	CLASSIFICATION SYMBOL
			TOPSOIL												
1025.2	1.0		Very stiff to stiff, gray SANDY SILT, some clay, trace gravel, trace rock fragments, moist (possible fill).	1	1.0	16		15							Visual
				2	3.5	11		16	25	17	8			77	A-4a
				3	6.0	12		15							Visual
				4	8.5	11		16							Visual
1016.2	10.0		TERMINATION DEPTH = 10.0 FEET												

NOTES/REMARKS:

B-1: PAGE 1 OF 1

TEST_BORING_LOG 98113.GPJ PRIMENG.GDT 3/16/99

PRIME ENGINEERING & ARCHITECTURE INC.

TEST BORING No.: B-2

STATION & OFFSET: 844+00, 30.0 ft. Rt. (North Bound)

ELEVATION: 1035.6ft

CLIENT: Richland Engineering Limited

PROJECT: Subsurface Exploration for MED-IR71-15.94 PROJECT No.: 98113

LOCATION: Medina County, Ohio

DATE STARTED: 2/3/99 DATE COMPLETED: 2/3/99

SAMPLER DIAM: 2.0" TYPE: SS HAMMER WT.: 140lb FALL: 30.0"

CASING DIAM: 3.25" TYPE: HSA OTHER:

DRILLING INFORMATION:
OTB / Mobile B-57 Truck Mounted Drilling Rig

GROUNDWATER INFORMATION:
No groundwater encountered during and upon completion of the drilling operations.

ELEV (ft.)	DEPTH (ft.)	Soil/ Rock Symbol	MATERIAL DESCRIPTION	SAMPLE NUMBER	SAMPLE DEPTH	N-VALUE (BLOWS/FT) OR REC%/(RQD%)	PENETROMETER (tons/ft²)	MOISTURE CONTENT (%)	ATTERBERG LIMITS (%) LL	PL	PI	DRY DENSITY (pcf)	UNCONFINED COMPRESSIVE STRENGTH (psf)	MINUS No. 200 SIEVE (%)	CLASSIFICATION SYMBOL
			TOPSOIL												
1034.2	1.4		Very stiff to stiff, brown to gray SANDY SILT, some clay, trace gravel, trace rock fragments, moist (possible fill). Note: Trace of roots found to 2 feet.	1	1.0	22		13	26	17	9			76	A-4a
				2	3.5	11		15							Visual
				3	6.0	11		16							Visual
				4	8.5	10		15							Visual
1025.6	10.0		TERMINATION DEPTH = 10.0 FEET												

NOTES/REMARKS:

B-2: PAGE 1 OF 1

TEST_BORING_LOG 98113.GPJ PRIMENG.GDT 3/16/99

PRIME ENGINEERING & ARCHITECTURE INC.

TEST BORING No.: B-3

STATION & OFFSET: 848+00, 30.0 ft. Lt. (South Bound)

ELEVATION: 1031.9ft

CLIENT: Richland Engineering Limited

PROJECT: Subsurface Exploration for MED-IR71-15.94 PROJECT No.: 98113

LOCATION: Medina County, Ohio

DATE STARTED: 2/2/99 DATE COMPLETED: 2/2/99

SAMPLER DIAM: 2.0" TYPE: SS HAMMER WT.: 140lb FALL: 30.0"

CASING DIAM: 3.25" TYPE: HSA OTHER:

DRILLING INFORMATION:
OTB / Mobile B-57 Truck Mounted Drilling Rig

GROUNDWATER INFORMATION:
No groundwater encountered during and upon completion of the drilling operations.

ELEV (ft.)	DEPTH (ft.)	Soil/ Rock Symbol	MATERIAL DESCRIPTION	SAMPLE NUMBER	SAMPLE DEPTH	N-VALUE (BLOWS/FT) OR REC%/(RQD%)	PENETROMETER (tons/ft²)	MOISTURE CONTENT (%)	ATTERBERG LIMITS (%) LL	PL	PI	DRY DENSITY (pcf)	UNCONFINED COMPRESSIVE STRENGTH (psf)	MINUS No. 200 SIEVE (%)	CLASSIFICATION SYMBOL
			TOPSOIL												
1030.9	1.0		Very stiff to stiff, gray to brown SANDY SILT, some clay, trace gravel, trace rock fragments, moist (fill).	1	1.0	24		12							Visual
			Note: Trace of organics found at 3.5 feet.	2	3.5	10		17							Visual
1027.9	4.0		Stiff, brown SILT AND CLAY, some gravel and rock fragments, trace sand, moist.	3	6.0	10		19	38	23	15			72	A-6a
			Note: Color change to gray at 8.5 feet. Note: Silt seam found at 9.3 feet.	4	8.5	12		21							Visual
1021.9	10.0		TERMINATION DEPTH = 10.0 FEET												

NOTES/REMARKS:

B-3: PAGE 1 OF 1

TEST_BORING_LOG 98113.GPJ PRIMENG.GDT 3/16/99

DESIGN AGENCY
PRIME ENGINEERING & ARCHITECT, INC.
1038 CHENT RD, AKRON, OHIO 44333

DATE | REVIEWED | STRUCTURE FILE NUMBER

DRAWN | REVISED

DESIGNED | CHECKED

SOIL PROFILE

MED-71-15.78

18
78

SBI-SBI2.DGN PDH 11/2/99

PRIME ENGINEERING & ARCHITECTURE INC.

TEST BORING No.: B-4

STATION & OFFSET: 852+00, 30.0 ft. Rt. (North Bound)

ELEVATION: 1041.0ft

CLIENT: Richland Engineering Limited

PROJECT: Subsurface Exploration for MED-IR71-15.94 PROJECT No.: 98113

LOCATION: Medina County, Ohio

DATE STARTED: 2/3/99 DATE COMPLETED: 2/3/99

SAMPLER DIAM: 2.0" TYPE: SS HAMMER WT.: 140lb FALL: 30.0"

CASING DIAM: 3.25" TYPE: HSA OTHER:

DRILLING INFORMATION:
OTB / Mobile B-57 Truck Mounted Drilling Rig

GROUNDWATER INFORMATION:
No groundwater encountered during and upon completion of the drilling operations.

ELEV (ft.)	DEPTH (ft.)	Soil/Rock Symbol	MATERIAL DESCRIPTION	SAMPLE NUMBER	SAMPLE DEPTH	N-VALUE (BLOWS/FT) OR REC%/(RQD%)	PENETROMETER (tons/ft²)	MOISTURE CONTENT (%)	ATTERBERG LIMITS (%) LL	ATTERBERG LIMITS (%) PL	ATTERBERG LIMITS (%) PI	DRY DENSITY (pcf)	UNCONFINED COMPRESSIVE STRENGTH (psf)	MINUS No. 200 SIEVE (%)	CLASSIFICATION SYMBOL
			TOPSOIL												
1039.7	1.3		Very stiff to stiff, brown and gray SILT AND CLAY, some sand, trace gravel, trace rock fragments, moist (fill).	1	1.0	25		13							Visual
				2	3.5	18		14	29	17	12			71	A-6a
				3	6.0	16		14							Visual
				4	8.5	12		15							Visual
1031.0	10.0		TERMINATION DEPTH = 10.0 FEET												

NOTES/REMARKS:

TEST_BORING_LOG 98113.GPJ PRIMENG.GDT 3/16/99

B-4: PAGE 1 OF 1

PRIME ENGINEERING & ARCHITECTURE INC.

TEST BORING No.: B-5

STATION & OFFSET: 856+00, 30.0 ft. Lt. (South Bound)

ELEVATION: 1039.3ft

CLIENT: Richland Engineering Limited

PROJECT: Subsurface Exploration for MED-IR71-15.94 PROJECT No.: 98113

LOCATION: Medina County, Ohio

DATE STARTED: 2/2/99 DATE COMPLETED: 2/2/99

SAMPLER DIAM: 2.0" TYPE: SS HAMMER WT.: 140lb FALL: 30.0"

CASING DIAM: 3.25" TYPE: HSA OTHER:

DRILLING INFORMATION:
OTB - Mobile B-57 Truck Mounted Drilling Rig

GROUNDWATER INFORMATION:
No groundwater encountered during and upon completion of the drilling operations.

ELEV (ft.)	DEPTH (ft.)	Soil/Rock Symbol	MATERIAL DESCRIPTION	SAMPLE NUMBER	SAMPLE DEPTH	N-VALUE (BLOWS/FT) OR REC%/(RQD%)	PENETROMETER (tons/ft²)	MOISTURE CONTENT (%)	ATTERBERG LIMITS (%) LL	ATTERBERG LIMITS (%) PL	ATTERBERG LIMITS (%) PI	DRY DENSITY (pcf)	UNCONFINED COMPRESSIVE STRENGTH (psf)	MINUS No. 200 SIEVE (%)	CLASSIFICATION SYMBOL
			TOPSOIL												
1037.8	1.5		Hard, brown, mottled gray SANDY SILT, some gravel and rock fragments, little clay, trace roots, moist.	1	1.0	36		11	29	19	10			43	A-4a
1035.8	3.5		Gray, highly weathered CLAY SHALE, moist.	2	3.5	58		7							Visual
				3	6.0	50+		5							Visual
				4	8.5	50+		3							Visual
1029.3	10.0		TERMINATION DEPTH = 10.0 FEET												

NOTES/REMARKS:

TEST_BORING_LOG 98113.GPJ PRIMENG.GDT 3/16/99

B-5: PAGE 1 OF 1

PRIME ENGINEERING & ARCHITECTURE INC.

TEST BORING No.: B-6

STATION & OFFSET: 860+00, 30.0 ft. Rt (North Bound)

ELEVATION: 1048.7ft

CLIENT: Richland Engineering Limited

PROJECT: Subsurface Exploration for MED-IR71-15.94 PROJECT No.: 98113

LOCATION: Medina County, Ohio

DATE STARTED: 2/3/99 DATE COMPLETED: 2/3/99

SAMPLER DIAM: 2.0" TYPE: SS HAMMER WT.: 140lb FALL: 30.0"

CASING DIAM: 3.25" TYPE: HSA OTHER:

DRILLING INFORMATION:
OTB / Mobile B-57 Truck Mounted Drilling Rig

GROUNDWATER INFORMATION:
No groundwater encountered during and upon completion of the drilling operations.

ELEV (ft.)	DEPTH (ft.)	Soil/Rock Symbol	MATERIAL DESCRIPTION	SAMPLE NUMBER	SAMPLE DEPTH	N-VALUE (BLOWS/FT) OR REC%/(RQD%)	PENETROMETER (tons/ft²)	MOISTURE CONTENT (%)	ATTERBERG LIMITS (%) LL	ATTERBERG LIMITS (%) PL	ATTERBERG LIMITS (%) PI	DRY DENSITY (pcf)	UNCONFINED COMPRESSIVE STRENGTH (psf)	MINUS No. 200 SIEVE (%)	CLASSIFICATION SYMBOL
			TOPSOIL												
1047.6	1.1		Very stiff, brown SANDY SILT, some gravel and rock fragments, little clay, moist.	1	1.0	22		13	25	17	8			36	A-4a
1046.4	2.3		Gray, decomposed to highly weathered CLAY SHALE, moist.	2	3.5	50+		6							Visual
				3	6.0	50+		6							Visual
				4	8.5	50+		6							Visual
1038.7	10.0		TERMINATION DEPTH = 10.0 FEET												

NOTES/REMARKS:

TEST_BORING_LOG 98113.GPJ PRIMENG.GDT 3/16/99

B-6: PAGE 1 OF 1

DESIGN AGENCY
PRIME ENGINEERING & ARCHITECT, INC.
1038 GHENT RD, AKRON, OHIO 44333

REVIEWED | DATE | STRUCTURE FILE NUMBER

DRAWN | REVISED

DESIGNED | CHECKED

SOIL PROFILE

MED-71-15.78

19
78

SBI-SBI2.DGN PDH 11/2/99

PRIME ENGINEERING & ARCHITECTURE INC.

TEST BORING No.: B-7

STATION & OFFSET: 864+00, 30.0 ft. Lt. (South Bound)

ELEVATION: 1055.9ft

CLIENT: Richland Engineering Limited

PROJECT: Subsurface Exploration for MED-IR71-15.94 PROJECT No.: 98113

LOCATION: Medina County, Ohio

DATE STARTED: 2/2/99 DATE COMPLETED: 2/2/99

SAMPLER DIAM: 2.0" TYPE: SS HAMMER WT.: 140lb FALL: 30.0"

CASING DIAM: 3.25" TYPE: HSA OTHER:

DRILLING INFORMATION:
OTB / Mobile B-57 Truck Mounted Drilling Rig

GROUNDWATER INFORMATION:
No groundwater encountered during and upon completion of the drilling operations.

ELEV (ft.)	DEPTH (ft.)	Soil/Rock Symbol	MATERIAL DESCRIPTION	SAMPLE NUMBER	SAMPLE DEPTH	N-VALUE (BLOWS/FT) OR REC%/(RQD%)	PENETROMETER (tons/ft²)	MOISTURE CONTENT (%)	ATTERBERG LIMITS (%) LL	PL	PI	DRY DENSITY (pcf)	UNCONFINED COMPRESSIVE STRENGTH (psf)	MINUS No. 200 SIEVE (%)	CLASSIFICATION SYMBOL
			TOPSOIL												
1054.9	1.0		Medium stiff, brown SANDY SILT, little clay, trace rock fragments, trace roots, moist (fill).	1	1.0	8		14							Visual
1052.4	3.5		Gray, highly weathered CLAY SHALE, moist.	2	3.5	50+		7							Visual
				3	6.0	50+		6							Visual
				4	8.5	50+		5							Visual
1045.9	10.0		TERMINATION DEPTH = 10.0 FEET												

NOTES/REMARKS:

TEST_BORING_LOG 98113.GPJ PRIMENG.GDT 3/16/99

B-7: PAGE 1 OF 1

PRIME ENGINEERING & ARCHITECTURE INC.

TEST BORING No.: B-8

STATION & OFFSET: 868+00, 30.0 ft. Rt. (North Bound)

ELEVATION: 1064.8ft

CLIENT: Richland Engineering Limited

PROJECT: Subsurface Exploration for MED-IR71-15.94 PROJECT No.: 98113

LOCATION: Medina County, Ohio

DATE STARTED: 2/3/99 DATE COMPLETED: 2/3/09

SAMPLER DIAM: 2.0" TYPE: SS HAMMER WT.: 140lb FALL: 30.0"

CASING DIAM: 3.25" TYPE: HSA OTHER:

DRILLING INFORMATION:
OTB / Mobile B-57 Truck Mounted Drilling Rig

GROUNDWATER INFORMATION:
No groundwater encountered during and upon completion of the drilling operations.

ELEV (ft.)	DEPTH (ft.)	Soil/Rock Symbol	MATERIAL DESCRIPTION	SAMPLE NUMBER	SAMPLE DEPTH	N-VALUE (BLOWS/FT) OR REC%/(RQD%)	PENETROMETER (tons/ft²)	MOISTURE CONTENT (%)	ATTERBERG LIMITS (%) LL	PL	PI	DRY DENSITY (pcf)	UNCONFINED COMPRESSIVE STRENGTH (psf)	MINUS No. 200 SIEVE (%)	CLASSIFICATION SYMBOL
1064.6	0.3		TOPSOIL												
			Very stiff to stiff, brown SANDY SILT, some clay, trace gravel, trace rock fragments, moist (fill).	1	1.0	19		11							Visual
				2	3.5	15		18							Visual
				3	6.0	9		17							Visual
				4	8.5	16		15							Visual
1054.8	10.0		TERMINATION DEPTH = 10.0 FEET												

NOTES/REMARKS:

TEST_BORING_LOG 98113.GPJ PRIMENG.GDT 3/16/99

B-8: PAGE 1 OF 1

PRIME ENGINEERING & ARCHITECTURE INC.

TEST BORING No.: B-9

STATION & OFFSET: 872+00, 30.0 ft. Lt. (South Bound)

ELEVATION: 1073.9ft

CLIENT: Richland Engineering Limited

PROJECT: Subsurface Exploration for MED-IR71-15.94 PROJECT No.: 98113

LOCATION: Medina County, Ohio

DATE STARTED: 2/2/99 DATE COMPLETED: 2/2/99

SAMPLER DIAM: 2.0" TYPE: SS HAMMER WT.: 140lb FALL: 30.0"

CASING DIAM: 3.25" TYPE: HSA OTHER:

DRILLING INFORMATION:
OTB / Mobile B-57 Truck Mounted Drilling Rig

GROUNDWATER INFORMATION:
No groundwater encountered during and upon completion of the drilling operations.

ELEV (ft.)	DEPTH (ft.)	Soil/Rock Symbol	MATERIAL DESCRIPTION	SAMPLE NUMBER	SAMPLE DEPTH	N-VALUE (BLOWS/FT) OR REC%/(RQD%)	PENETROMETER (tons/ft²)	MOISTURE CONTENT (%)	ATTERBERG LIMITS (%) LL	PL	PI	DRY DENSITY (pcf)	UNCONFINED COMPRESSIVE STRENGTH (psf)	MINUS No. 200 SIEVE (%)	CLASSIFICATION SYMBOL
			TOPSOIL												
1072.9	1.0		Very stiff, brown SANDY SILT, little clay, trace rock fragments, trace roots, moist (possible fill).	1	1.0	19		13							Visual
1070.4	3.5		Very stiff to stiff, brown to gray SILT AND CLAY, some sand, trace gravel, trace rock fragments, moist.	2	3.5	26		16	30	19	11			70	A-6a
				3	6.0	23		19							Visual
			Note: Silt seams found at 9.0 feet.	4A	8.5	9		23							Visual
				4B	9.5			15							Visual
1063.9	10.0		TERMINATION DEPTH = 10.0 FEET												

NOTES/REMARKS:

TEST_BORING_LOG 98113.GPJ PRIMENG.GDT 3/16/99

B-9: PAGE 1 OF 1

DESIGN AGENCY
PRIME ENGINEERING & ARCHITECT, INC.
1038 GHENT RD, AKRON, OHIO 44333

DESIGNED | DRAWN | REVIEWED | DATE | STRUCTURE FILE NUMBER
CHECKED | REVISED

SOIL PROFILE

MED-71-15.78

20
78

SBI-SBI2.DGN PDH 11/2/99

PRIME ENGINEERING & ARCHITECTURE INC.

TEST BORING No.: B-10

STATION & OFFSET: 876+00, 30.0 ft. Rt. (North Bound)

ELEVATION: 1082.6ft

CLIENT: Richland Engineering Limited

PROJECT: Subsurface Exploration for MED-IR71-15.94 PROJECT No.: 98113

LOCATION: Medina County, Ohio

DATE STARTED: 2/3/99 DATE COMPLETED: 2/3/99

SAMPLER DIAM: 2.0" TYPE: SS HAMMER WT.: 140lb FALL: 30.0"

CASING DIAM: 3.25" TYPE: HSA OTHER:

DRILLING INFORMATION:
OTB / Mobile B-57 Truck Mounted Drilling Rig

GROUNDWATER INFORMATION:
No groundwater encountered during and upon completion of the drilling operations.

ELEV (ft.)	DEPTH (ft.)	Soil/Rock Symbol	MATERIAL DESCRIPTION	SAMPLE NUMBER	SAMPLE DEPTH	N-VALUE (BLOWS/FT) OR REC%/(RQD%)	PENETROMETER (tons/ft²)	MOISTURE CONTENT (%)	ATTERBERG LIMITS (%) LL	PL	PI	DRY DENSITY (pcf)	UNCONFINED COMPRESSIVE STRENGTH (psf)	MINUS No. 200 SIEVE (%)	CLASSIFICATION SYMBOL
1082.4	0.3		TOPSOIL												
			Very stiff, brown SILT AND CLAY, little sand, trace gravel, trace rock fragments, moist (fill).	1	1.0	19		15	33	20	13			78	A-6a
				2	3.5	25		16							Visual
				3	6.0	22		14							Visual
1075.6	7.0		Very stiff to hard, brown SANDY SILT, some clay, trace gravel, trace rock fragments, moist.	4	8.5	41		12							Visual
1072.6	10.0		TERMINATION DEPTH = 10.0 FEET												

NOTES/REMARKS:

B-10: PAGE 1 OF 1

TEST BORING LOG 98113.GPJ PRIMENG.GDT 3/10/99

PRIME ENGINEERING & ARCHITECTURE INC.

TEST BORING No.: B-11

STATION & OFFSET: 878+00, 30.0 ft. Lt. (South Bound)

ELEVATION: 1091.6ft

CLIENT: Richland Engineering Limited

PROJECT: Subsurface Exploration for MED-IR71-15.94 PROJECT No.: 98113

LOCATION: Medina County, Ohio

DATE STARTED: 2/2/99 DATE COMPLETED: 2/2/99

SAMPLER DIAM: 2.0" TYPE: SS HAMMER WT.: 140lb FALL: 30.0"

CASING DIAM: 3.25" TYPE: HSA OTHER:

DRILLING INFORMATION:
OTB / Mobile B-57 Truck Mounted Drilling Rig

GROUNDWATER INFORMATION:
Water encountered at 6.0 feet during the drilling and dry at completion.

ELEV (ft.)	DEPTH (ft.)	Soil/Rock Symbol	MATERIAL DESCRIPTION	SAMPLE NUMBER	SAMPLE DEPTH	N-VALUE (BLOWS/FT) OR REC%/(RQD%)	PENETROMETER (tons/ft²)	MOISTURE CONTENT (%)	ATTERBERG LIMITS (%) LL	PL	PI	DRY DENSITY (pcf)	UNCONFINED COMPRESSIVE STRENGTH (psf)	MINUS No. 200 SIEVE (%)	CLASSIFICATION SYMBOL
			▼ GROUNDWATER DURING DRILLING												
1090.5	1.1		TOPSOIL												
			Stiff, brown SILT AND CLAY, little sand, trace gravel, trace rock fragments, moist (fill).	1	1.0	12		19	31	20	11			81	A-6a
			Note: Layer of topsoil found at 3.5 feet.	2	3.5	13		28							Visual
1087.6	4.0		Stiff, brown SILT AND CLAY, little sand, trace gravel, trace rock fragments, moist	3	6.0	10		22							Visual
				4	8.5	14		18							Visual
1081.6	10.0		TERMINATION DEPTH = 10.0 FEET												

NOTES/REMARKS:

B-11: PAGE 1 OF 1

TEST BORING LOG 98113.GPJ PRIMENG.GDT 3/10/99

PRIME ENGINEERING & ARCHITECTURE INC.

TEST BORING No.: B-12

STATION & OFFSET: 884+00, 30.0 ft. Rt. (North Bound)

ELEVATION: 1100.6ft

CLIENT: Richland Engineering Limited

PROJECT: Subsurface Exploration for MED-IR71-15.94 PROJECT No.: 98113

LOCATION: Medina County, Ohio

DATE STARTED: 3/8/99 DATE COMPLETED: 3/8/99

SAMPLER DIAM: 2.0" TYPE: SS HAMMER WT.: 140lb FALL: 30.0"

CASING DIAM: 3.25" TYPE: HSA OTHER:

DRILLING INFORMATION:
NAR / Mobile B-57 Truck Mounted Drilling Rig

GROUNDWATER INFORMATION:
No groundwater encountered during and upon completion of the drilling operations.

ELEV (ft.)	DEPTH (ft.)	Soil/Rock Symbol	MATERIAL DESCRIPTION	SAMPLE NUMBER	SAMPLE DEPTH	N-VALUE (BLOWS/FT) OR REC%/(RQD%)	PENETROMETER (tons/ft²)	MOISTURE CONTENT (%)	ATTERBERG LIMITS (%) LL	PL	PI	DRY DENSITY (pcf)	UNCONFINED COMPRESSIVE STRENGTH (psf)	MINUS No. 200 SIEVE (%)	CLASSIFICATION SYMBOL
1100.3	0.3		TOPSOIL												
			Very stiff, brown SILT AND CLAY, little sand, trace gravel, trace rock fragments, moist.	1	1.0	18		15							Visual
				2	3.5	21		17							Visual
				3	6.0	26		15							Visual
				4	8.5	27		18							Visual
1090.6	10.0		TERMINATION DEPTH = 10.0 FEET												

NOTES/REMARKS:

B-12: PAGE 1 OF 1

TEST BORING LOG 98113.GPJ PRIMENG.GDT 3/10/99

DESIGN AGENCY
PRIME ENGINEERING & ARCHITECT, INC.
1038 GHENT RD, AKRON, OHIO 44333

DRAWN | DATE | REVIEWED | STRUCTURE FILE NUMBER

DESIGNED | CHECKED | REVISED

SOIL PROFILE

MED-71-15.78

21
78

SBI-SBI2.DGN PDH 11/2/99

PRIME ENGINEERING & ARCHITECTURE INC.

TEST BORING No.: B-13

STATION & OFFSET: 888+00, 30.0 ft. Lt. (South Bound)

ELEVATION: 1108.4ft

CLIENT: Richland Engineering Limited

PROJECT: Subsurface Exploration for MED-IR71-15.94 PROJECT No.: 98113

LOCATION: Medina County, Ohio

DATE STARTED: 2/2/99 DATE COMPLETED: 2/2/99

SAMPLER DIAM: 2.0" TYPE: SS HAMMER WT.: 140lb FALL: 30.0"

CASING DIAM: 3.25" TYPE: HSA OTHER:

DRILLING INFORMATION:
OTB / Mobile B-57 Truck Mounted Drilling Rig

GROUNDWATER INFORMATION:
No groundwater encountered during and upon completion of the drilling operations.

ELEV (ft.)	DEPTH (ft.)	Soil/Rock Symbol	MATERIAL DESCRIPTION	SAMPLE NUMBER	SAMPLE DEPTH	N-VALUE (BLOWS/FT) OR REC%/(RQD%)	PENETROMETER (tons/ft²)	MOISTURE CONTENT (%)	ATTERBERG LIMITS (%) LL	PL	PI	DRY DENSITY (pcf)	UNCONFINED COMPRESSIVE STRENGTH (psf)	MINUS No. 200 SIEVE (%)	CLASSIFICATION SYMBOL
1108.2	0.3		TOPSOIL Very stiff, brown SILT AND CLAY, little sand, trace gravel, trace rock fragments, moist (fill).	1	1.0	16		15	31	19	12			70	A-6a
				2	3.5	21		12							Visual
				3	6.0	50+		17							Visual
			Note: Boulder encountered at 6.8 feet.	4	8.5	15		15							Visual
1098.4	10.0		TERMINATION DEPTH = 10.0 FEET												

NOTES/REMARKS:

TEST_BORING_LOG 98113.GPJ PRIMENG.GDT 3/16/99

B-13: PAGE 1 OF 1

PRIME ENGINEERING & ARCHITECTURE INC.

TEST BORING No.: B-14

STATION & OFFSET: 892+00, 30.0 ft. Rt. (North Bound)

ELEVATION: 1114.9ft

CLIENT: Richland Engineering Limited

PROJECT: Subsurface Exploration for MED-IR71-15.94 PROJECT No.: 98113

LOCATION: Medina County, Ohio

DATE STARTED: 2/8/99 DATE COMPLETED: 2/8/99

SAMPLER DIAM: 2.0" TYPE: SS HAMMER WT.: 140lb FALL: 30.0"

CASING DIAM: 3.25" TYPE: HSA OTHER:

DRILLING INFORMATION:
OTB / Mobile B-57 Truck Mounted Drilling Rig

GROUNDWATER INFORMATION:
No groundwater encountered during and upon completion of the drilling operations.

ELEV (ft.)	DEPTH (ft.)	Soil/Rock Symbol	MATERIAL DESCRIPTION	SAMPLE NUMBER	SAMPLE DEPTH	N-VALUE (BLOWS/FT) OR REC%/(RQD%)	PENETROMETER (tons/ft²)	MOISTURE CONTENT (%)	ATTERBERG LIMITS (%) LL	PL	PI	DRY DENSITY (pcf)	UNCONFINED COMPRESSIVE STRENGTH (psf)	MINUS No. 200 SIEVE (%)	CLASSIFICATION SYMBOL
1114.7	0.3		TOPSOIL Stiff, brown SILT AND CLAY, little sand, trace gravel, trace rock fragments, moist (fill).	1	1.0	11		15	30	19	11			73	A-6a
				2	3.5	11		16							Visual
				3	6.0	13		17							Visual
			Note: Trace of organics found at 9.0 feet.	4	8.5	11		25							Visual
1104.9	10.0		TERMINATION DEPTH = 10.0 FEET												

NOTES/REMARKS:

TEST_BORING_LOG 98113.GPJ PRIMENG.GDT 3/16/99

B-14: PAGE 1 OF 1

PRIME ENGINEERING & ARCHITECTURE INC.

TEST BORING No.: B-15

STATION & OFFSET: 896+00, 30.0 ft. Lt. (South Bound)

ELEVATION: 1119.3ft

CLIENT: Richland Engineering Limited

PROJECT: Subsurface Exploration for MED-IR71-15.94 PROJECT No.: 98113

LOCATION: Medina County, Ohio

DATE STARTED: 2/9/99 DATE COMPLETED: 2/9/99

SAMPLER DIAM: 2.0" TYPE: SS HAMMER WT.: 140lb FALL: 30.0"

CASING DIAM: 3.25" TYPE: HSA OTHER:

DRILLING INFORMATION:
OTB / Mobile B-57 Truck Mounted Drilling Rig

GROUNDWATER INFORMATION:
No groundwater encountered during and upon completion of the drilling operations.

ELEV (ft.)	DEPTH (ft.)	Soil/Rock Symbol	MATERIAL DESCRIPTION	SAMPLE NUMBER	SAMPLE DEPTH	N-VALUE (BLOWS/FT) OR REC%/(RQD%)	PENETROMETER (tons/ft²)	MOISTURE CONTENT (%)	ATTERBERG LIMITS (%) LL	PL	PI	DRY DENSITY (pcf)	UNCONFINED COMPRESSIVE STRENGTH (psf)	MINUS No. 200 SIEVE (%)	CLASSIFICATION SYMBOL
1118.9	0.4		TOPSOIL Medium stiff to very stiff, brown SANDY SILT, some clay, trace gravel, trace rock fragments, moist (fill).	1	1.0	7		17	29	20	9			69	A-4a
				2	3.5	17		14							Visual
				3	6.0	20		14							Visual
				4	8.5	16		17							Visual
1109.3	10.0		TERMINATION DEPTH = 10.0 FEET												

NOTES/REMARKS:

TEST_BORING_LOG 98113.GPJ PRIMENG.GDT 3/17/99

B-15: PAGE 1 OF 1

DESIGN AGENCY
PRIME ENGINEERING & ARCHITECT, INC.
1038 GHENT RD, AKRON, OHIO 44333

DESIGNED	DRAWN	REVIEWED	DATE	STRUCTURE FILE NUMBER
CHECKED	REVISED			

SOIL PROFILE

MED-71-15.78

22
78

SB13-SB24.DGN PDH 11/2/99

PRIME ENGINEERING & ARCHITECTURE INC.

TEST BORING No.: B-16

STATION & OFFSET: 900+00, 30.0 ft. Rt. (North Bound)

ELEVATION: 1121.9ft

CLIENT: Richland Engineering Limited

PROJECT: Subsurface Exploration for MED-IR71-15.94 PROJECT No.: 98113

LOCATION: Medina County, Ohio

DATE STARTED: 2/8/99 DATE COMPLETED: 2/8/99

SAMPLER DIAM: 2.0" TYPE: SS HAMMER WT.: 140lb FALL: 30.0"

CASING DIAM: 3.25" TYPE: HSA OTHER:

DRILLING INFORMATION:
OTB / Mobile B-57 Truck Mounted Drilling Rig

GROUNDWATER INFORMATION:
No groundwater encountered during and upon completion of the drilling operations.

ELEV (ft.)	DEPTH (ft.)	Soil/Rock Symbol	MATERIAL DESCRIPTION	SAMPLE NUMBER	SAMPLE DEPTH	N-VALUE (BLOWS/FT) OR REC%(RQD%)	PENETROMETER (tons/ft²)	MOISTURE CONTENT (%)	ATTERBERG LIMITS (%) LL	PL	PI	DRY DENSITY (pcf)	UNCONFINED COMPRESSIVE STRENGTH (psf)	MINUS No. 200 SIEVE (%)	CLASSIFICATION SYMBOL
1121.6	0.3		TOPSOIL												
			Stiff to very stiff, brown and gray SILT AND CLAY, little to some sand, trace gravel, trace rock fragments, moist (fill).	1A	1.0	14		16							Visual
				1B	2.0			13							Visual
				2	3.5	20		11							Visual
				3	6.0	27		16							Visual
				4	8.5	16		15							Visual
1111.9	10.0		TERMINATION DEPTH = 10.0 FEET												

NOTES/REMARKS:

TEST_BORING_LOG_98113.GPJ PRIMENG.GDT 3/17/99

B-16: PAGE 1 OF 1

PRIME ENGINEERING & ARCHITECTURE INC.

TEST BORING No.: B-17

STATION & OFFSET: 904+00, 30.0 ft. Lt. (South Bound)

ELEVATION: 1125.3ft

CLIENT: Richland Engineering Limited

PROJECT: Subsurface Exploration for MED-IR71-15.94 PROJECT No.: 98113

LOCATION: Medina County, Ohio

DATE STARTED: 2/9/99 DATE COMPLETED: 2/9/99

SAMPLER DIAM: 2.0" TYPE: SS HAMMER WT.: 140lb FALL: 30.0"

CASING DIAM: 3.25" TYPE: HSA OTHER:

DRILLING INFORMATION:
OTB / Mobile B-57 Truck Mounted Drilling Rig

GROUNDWATER INFORMATION:
No groundwater encountered during and upon completion of the drilling operations.

ELEV (ft.)	DEPTH (ft.)	Soil/Rock Symbol	MATERIAL DESCRIPTION	SAMPLE NUMBER	SAMPLE DEPTH	N-VALUE (BLOWS/FT) OR REC%(RQD%)	PENETROMETER (tons/ft²)	MOISTURE CONTENT (%)	ATTERBERG LIMITS (%) LL	PL	PI	DRY DENSITY (pcf)	UNCONFINED COMPRESSIVE STRENGTH (psf)	MINUS No. 200 SIEVE (%)	CLASSIFICATION SYMBOL
1124.6	0.7		TOPSOIL												
			Stiff to very stiff, brown SILT AND CLAY, some sand, trace gravel, trace rock fragments, moist (fill).	1	1.0	13		16							Visual
				2	3.5	12		16	32	19	13			74	A-6a
				3	6.0	26		15							Visual
			Note: Gray color present below 8.0 feet.	4	8.5	12		13							Visual
1115.3	10.0		TERMINATION DEPTH = 10.0 FEET												

NOTES/REMARKS:

TEST_BORING_LOG_98113.GPJ PRIMENG.GDT 3/16/99

B-17: PAGE 1 OF 1

PRIME ENGINEERING & ARCHITECTURE INC.

TEST BORING No.: B-18

STATION & OFFSET: 908+00, 30.0 ft. Rt. (North Bound)

ELEVATION: 1128.0ft

CLIENT: Richland Engineering Limited

PROJECT: Subsurface Exploration for MED-IR71-15.94 PROJECT No.: 98113

LOCATION: Medina County, Ohio

DATE STARTED: 2/8/99 DATE COMPLETED: 2/8/99

SAMPLER DIAM: 2.0" TYPE: SS HAMMER WT.: 140lb FALL: 30.0"

CASING DIAM: 3.25" TYPE: HSA OTHER:

DRILLING INFORMATION:
OTB / Mobile B-57 Truck Mounted Drilling Rig

GROUNDWATER INFORMATION:
No groundwater encountered during and upon completion of the drilling operations.

ELEV (ft.)	DEPTH (ft.)	Soil/Rock Symbol	MATERIAL DESCRIPTION	SAMPLE NUMBER	SAMPLE DEPTH	N-VALUE (BLOWS/FT) OR REC%(RQD%)	PENETROMETER (tons/ft²)	MOISTURE CONTENT (%)	ATTERBERG LIMITS (%) LL	PL	PI	DRY DENSITY (pcf)	UNCONFINED COMPRESSIVE STRENGTH (psf)	MINUS No. 200 SIEVE (%)	CLASSIFICATION SYMBOL
1127.5	0.5		TOPSOIL												
			Stiff, brown SANDY SILT, some clay, trace gravel, trace rock fragments, moist (fill).	1	1.0	14		14							Visual
				2	3.5	15		13							Visual
1123.0	5.0		Very stiff, brown SILT AND CLAY, little sand, trace gravel, trace rock fragments, moist (fill).	3A	6.0	17		17	30	19	11			75	A-6a
				3B	7.0			18							Visual
1120.5	7.5		Note: Topsoil seam found at 7.5 feet. Stiff, brown, mottled gray SILT AND CLAY, little sand, trace gravel, trace rock fragments, moist.	4	8.5	12		22							Visual
1118.0	10.0		TERMINATION DEPTH = 10.0 FEET												

NOTES/REMARKS:

TEST_BORING_LOG_98113.GPJ PRIMENG.GDT 3/17/99

B-18: PAGE 1 OF 1

DESIGN AGENCY
PRIME ENGINEERING & ARCHITECT, INC.
1038 GHENT RD, AKRON, OHIO 44333

REVIEWED DATE STRUCTURE FILE NUMBER

DRAWN REVISED

DESIGNED CHECKED

SOIL PROFILE

MED-71-15.78

23
78

SB13-SB24.DGN PDH 11/2/99

PRIME ENGINEERING & ARCHITECTURE INC.

TEST BORING No.: B-19

STATION & OFFSET: 912+00, 30.0 ft. Lt. (South Bound)

ELEVATION: 1131.3ft

CLIENT: Richland Engineering Limited

PROJECT: Subsurface Exploration for MED-IR71-15.94 PROJECT No.: 98113

LOCATION: Medina County, Ohio

DATE STARTED: 2/9/99 DATE COMPLETED: 2/9/99

SAMPLER DIAM: 2.0" TYPE: SS HAMMER WT.: 140lb FALL: 30.0"

CASING DIAM: 3.25" TYPE: HSA OTHER:

DRILLING INFORMATION:
OTB / Mobile B-57 Truck Mounted Drilling Rig

GROUNDWATER INFORMATION:
No groundwater encountered during and upon completion of the drilling operations.

ELEV (ft.)	DEPTH (ft.)	Soil/Rock Symbol	MATERIAL DESCRIPTION	SAMPLE NUMBER	SAMPLE DEPTH	N-VALUE (BLOWS/FT) OR REC%/(RQD%)	PENETROMETER (tons/ft²)	MOISTURE CONTENT (%)	ATTERBERG LIMITS (%) LL	PL	PI	DRY DENSITY (pcf)	UNCONFINED COMPRESSIVE STRENGTH (psf)	MINUS No. 200 SIEVE (%)	CLASSIFICATION SYMBOL
1130.7	0.6		TOPSOIL Very stiff to stiff, brown and gray SANDY SILT, some clay, trace gravel, trace rock fragments, moist (fill).	1	1.0	19		13							Visual
				2	3.5	19		15							Visual
1124.7	6.6		Note: Topsoil seams encountered from 6.2 to 6.6 feet. Very stiff, brown SANDY SILT little clay, trace gravel, trace rock fragments, moist.	3	6.0	11		21							Visual
				4	8.5	19		16							Visual
1121.3	10.0		TERMINATION DEPTH = 10.0 FEET												

NOTES/REMARKS:

B-19: PAGE 1 OF 1

TEST_BORING_LOG_98113.GPJ PRIMENG.GDT 3/16/99

PRIME ENGINEERING & ARCHITECTURE INC.

TEST BORING No.: B-20

STATION & OFFSET: 916+00, 30.0 ft. Rt. (North Bound)

ELEVATION: 1134.2ft

CLIENT: Richland Engineering Limited

PROJECT: Subsurface Exploration for MED-IR71-15.94 PROJECT No.: 98113

LOCATION: Medina County, Ohio

DATE STARTED: 2/8/99 DATE COMPLETED: 2/8/99

SAMPLER DIAM: 2.0" TYPE: SS HAMMER WT.: 140lb FALL: 30.0"

CASING DIAM: 3.25" TYPE: HSA OTHER:

DRILLING INFORMATION:
OTB / Mobile B-57 Truck Mounted Drilling Rig

GROUNDWATER INFORMATION:
No groundwater encountered during and upon completion of the drilling operations.

ELEV (ft.)	DEPTH (ft.)	Soil/Rock Symbol	MATERIAL DESCRIPTION	SAMPLE NUMBER	SAMPLE DEPTH	N-VALUE (BLOWS/FT) OR REC%/(RQD%)	PENETROMETER (tons/ft²)	MOISTURE CONTENT (%)	ATTERBERG LIMITS (%) LL	PL	PI	DRY DENSITY (pcf)	UNCONFINED COMPRESSIVE STRENGTH (psf)	MINUS No. 200 SIEVE (%)	CLASSIFICATION SYMBOL
1133.8	0.4		TOPSOIL Very stiff, brown SILT AND CLAY, little sand, trace gravel, trace rock fragments, moist (possible fill).	1	1.0	21		14							Visual
				2	3.5	23		20	34	21	13			85	A-6a
				3	6.0	22		18							Visual
				4	8.5	25		17							Visual
1124.2	10.0		TERMINATION DEPTH = 10.0 FEET												

NOTES/REMARKS:

B-20: PAGE 1 OF 1

TEST_BORING_LOG_98113.GPJ PRIMENG.GDT 3/16/99

PRIME ENGINEERING & ARCHITECTURE INC.

TEST BORING No.: B-21

STATION & OFFSET: 920+00, 30.0 ft. Lt. (South Bound)

ELEVATION: 1137.5ft

CLIENT: Richland Engineering Limited

PROJECT: Subsurface Exploration for MED-IR71-15.94 PROJECT No.: 98113

LOCATION: Medina County, Ohio

DATE STARTED: 2/9/99 DATE COMPLETED: 2/9/99

SAMPLER DIAM: 2.0" TYPE: SS HAMMER WT.: 140lb FALL: 30.0"

CASING DIAM: 3.25" TYPE: HSA OTHER:

DRILLING INFORMATION:
OTB / Mobile B-57 Truck Mounted Drilling Rig

GROUNDWATER INFORMATION:
No groundwater encountered during and upon completion of the drilling operations.

ELEV (ft.)	DEPTH (ft.)	Soil/Rock Symbol	MATERIAL DESCRIPTION	SAMPLE NUMBER	SAMPLE DEPTH	N-VALUE (BLOWS/FT) OR REC%/(RQD%)	PENETROMETER (tons/ft²)	MOISTURE CONTENT (%)	ATTERBERG LIMITS (%) LL	PL	PI	DRY DENSITY (pcf)	UNCONFINED COMPRESSIVE STRENGTH (psf)	MINUS No. 200 SIEVE (%)	CLASSIFICATION SYMBOL
1137.0	0.5		TOPSOIL Stiff to very stiff, brown, SILT AND CLAY, little gravel and rock fragments, little sand, moist (possible fill)	1	1.0	10		16	34	21	13			72	A-6a
				2	3.5	25		16							Visual
				3	6.0	24		15							Visual
1130.2	7.3		Stiff, gray SANDY SILT, little clay, trace gravel, trace rock fragments, moist.	4	8.5	13		10							Visual
1127.5	10.0		TERMINATION DEPTH = 10.0 FEET												

NOTES/REMARKS:

B-21: PAGE 1 OF 1

TEST_BORING_LOG_98113.GPJ PRIMENG.GDT 3/16/99

DESIGN AGENCY
PRIME ENGINEERING & ARCHITECT, INC.
1038 GHENT RD, AKRON, OHIO 44333

DESIGNED | DRAWN | CHECKED | DATE | REVIEWED | REVISED | STRUCTURE FILE NUMBER

SOIL PROFILE

MED-71-15.78

24
78

SBI3-SB24.DGN PDH 11/2/99

PRIME ENGINEERING & ARCHITECTURE INC.

TEST BORING No.: B-22

STATION & OFFSET: 924+00, 30.0 ft. Rt. (North Bound)

ELEVATION: 1140.3ft

CLIENT: Richland Engineering Limited

PROJECT: Subsurface Exploration for MED-IR71-15.94 PROJECT No.: 98113

LOCATION: Medina County, Ohio

DATE STARTED: 2/8/99 DATE COMPLETED: 2/8/99

SAMPLER DIAM: 2.0" TYPE: SS HAMMER WT.: 140lb FALL: 30.0"

CASING DIAM: 3.25" TYPE: HSA OTHER:

DRILLING INFORMATION:
OTB / Mobile B-57 Truck Mounted Drilling Rig

GROUNDWATER INFORMATION:
No groundwater encountered during and upon completion of the drilling operations.

ELEV (ft.)	DEPTH (ft.)	Soil/Rock Symbol	MATERIAL DESCRIPTION	SAMPLE NUMBER	SAMPLE DEPTH	N-VALUE (BLOWS/FT) OR REC%/(RQD%)	PENETROMETER (tons/ft²)	MOISTURE CONTENT (%)	ATTERBERG LIMITS (%) LL	PL	PI	DRY DENSITY (pcf)	UNCONFINED COMPRESSIVE STRENGTH (psf)	MINUS No. 200 SIEVE (%)	CLASSIFICATION SYMBOL
1140.1	0.3		TOPSOIL Very stiff, brown SILT AND CLAY, little sand, trace gravel, trace rock fragments, moist (possible fill).	1	1.0	18		15							Visual
				2	3.5	26		18	32	20	12			81	A-6a
				3	6.0	22		18							Visual
1133.1	7.2		Very stiff to stiff, gray SILT AND CLAY, little sand, trace rock fragments, trace gravel, moist with occasional silt seams.	4	8.5	12		18							Visual
1130.3	10.0		TERMINATION DEPTH = 10.0 FEET												

NOTES/REMARKS:

B-22: PAGE 1 OF 1

TEST_BORING_LOG 98113.GPJ PRIMENG.GDT 3/10/99

PRIME ENGINEERING & ARCHITECTURE INC.

TEST BORING No.: B-23

STATION & OFFSET: 928+00, 30.0 ft. Lt. (South Bound)

ELEVATION: 1143.2ft

CLIENT: Richland Engineering Limited

PROJECT: Subsurface Exploration for MED-IR71-15.94 PROJECT No.: 98113

LOCATION: Medina County, Ohio

DATE STARTED: 2/9/99 DATE COMPLETED: 2/9/99

SAMPLER DIAM: 2.0" TYPE: SS HAMMER WT.: 140lb FALL: 30.0"

CASING DIAM: 3.25" TYPE: HSA OTHER:

DRILLING INFORMATION:
OTB / Mobile B-57 Truck Mounted Drilling Rig

GROUNDWATER INFORMATION:
No groundwater encountered during and upon completion of the drilling operations.

ELEV (ft.)	DEPTH (ft.)	Soil/Rock Symbol	MATERIAL DESCRIPTION	SAMPLE NUMBER	SAMPLE DEPTH	N-VALUE (BLOWS/FT) OR REC%/(RQD%)	PENETROMETER (tons/ft²)	MOISTURE CONTENT (%)	ATTERBERG LIMITS (%) LL	PL	PI	DRY DENSITY (pcf)	UNCONFINED COMPRESSIVE STRENGTH (psf)	MINUS No. 200 SIEVE (%)	CLASSIFICATION SYMBOL
1142.9	0.3		TOPSOIL Very stiff, brown SANDY SILT, some clay, trace gravel, trace rock fragments, moist (possible fill).	1	1.0	17		12							Visual
1141.1	2.1		Medium stiff to stiff, gray SILT AND CLAY, little sand, trace gravel, trace rock fragments, moist.	2	3.5	6		15							Visual
				3	6.0	9		15							Visual
				4	8.5	9		14							Visual
1133.2	10.0		TERMINATION DEPTH = 10.0 FEET												

NOTES/REMARKS:

B-23: PAGE 1 OF 1

TEST_BORING_LOG 98113.GPJ PRIMENG.GDT 3/10/99

PRIME ENGINEERING & ARCHITECTURE INC.

TEST BORING No.: B-24

STATION & OFFSET: 932+00, 30.0 ft. Rt. (North Bound)

ELEVATION: 1146.0ft

CLIENT: Richland Engineering Limited

PROJECT: Subsurface Exploration for MED-IR71-15.94 PROJECT No.: 98113

LOCATION: Medina County, Ohio

DATE STARTED: 2/8/99 DATE COMPLETED: 2/8/99

SAMPLER DIAM: 2.0" TYPE: SS HAMMER WT.: 140lb FALL: 30.0"

CASING DIAM: 3.25" TYPE: HSA OTHER:

DRILLING INFORMATION:
OTB / Mobile B-57 Truck Mounted Drilling Rig

GROUNDWATER INFORMATION:
No groundwater encountered during and upon completion of the drilling operations.

ELEV (ft.)	DEPTH (ft.)	Soil/Rock Symbol	MATERIAL DESCRIPTION	SAMPLE NUMBER	SAMPLE DEPTH	N-VALUE (BLOWS/FT) OR REC%/(RQD%)	PENETROMETER (tons/ft²)	MOISTURE CONTENT (%)	ATTERBERG LIMITS (%) LL	PL	PI	DRY DENSITY (pcf)	UNCONFINED COMPRESSIVE STRENGTH (psf)	MINUS No. 200 SIEVE (%)	CLASSIFICATION SYMBOL
1145.8	0.3		TOPSOIL Very stiff to stiff, brown SILT AND CLAY, little sand, trace gravel, trace rock fragments, moist (possible fill).	1	1.0	20		12	32	20	12			80	A-6a
				2	3.5	21		15							Visual
				3	6.0	14		19							Visual
				4	8.5	13		18							Visual
1136.0	10.0		TERMINATION DEPTH = 10.0 FEET												

NOTES/REMARKS:

B-24: PAGE 1 OF 1

TEST_BORING_LOG 98113.GPJ PRIMENG.GDT 3/10/99

DESIGN AGENCY
PRIME ENGINEERING & ARCHITECT, INC.
1038 GHENT RD, AKRON, OHIO 44333

REVIEWED DATE | STRUCTURE FILE NUMBER
DRAWN | REVISED
DESIGNED | CHECKED

SOIL PROFILE

MED-71-15.78

25
78

SB13-SB24.DGN PDH 11/2/99

PRIME ENGINEERING & ARCHITECTURE INC.

TEST BORING No.: B-25

STATION & OFFSET: 936+00, 30.0 ft. Lt. (South Bound)

ELEVATION: 1149.3ft

CLIENT: Richland Engineering Limited

PROJECT: Subsurface Exploration for MED-IR71-15.94 PROJECT No.: 98113

LOCATION: Medina County, Ohio

DATE STARTED: 2/9/99 DATE COMPLETED: 2/9/99

SAMPLER DIAM: 2.0" TYPE: SS HAMMER WT.: 140lb FALL: 30.0"

CASING DIAM: 3.25" TYPE: HSA OTHER:

DRILLING INFORMATION:
OTB / Mobile B-57 Truck Mounted Drilling Rig

GROUNDWATER INFORMATION:
No groundwater encountered during and upon completion of the drilling operations.

ELEV (ft.)	DEPTH (ft.)	Soil/ Rock Symbol	MATERIAL DESCRIPTION	SAMPLE NUMBER	SAMPLE DEPTH	N-VALUE (BLOWS/FT) OR REC%/(RQD%)	PENETROMETER (tons/ft²)	MOISTURE CONTENT (%)	ATTERBERG LIMITS (%) LL	PL	PI	DRY DENSITY (pcf)	UNCONFINED COMPRESSIVE STRENGTH (psf)	MINUS No. 200 SIEVE (%)	CLASSIFICATION SYMBOL
1149.0	0.3		TOPSOIL												
			Very stiff, brown SILT AND CLAY, little sand, trace gravel, trace rock fragments, moist (possible fill).	1	1.0	22		15	32	20	12			77	A-6a
				2	3.5	22		17							Visual
1143.8	5.5		Very stiff to stiff, gray SILT AND CLAY, little sand, little gravel and rock fragments, moist.	3	6.0	22		13							Visual
				4	8.5	13		12							Visual
1139.3	10.0		TERMINATION DEPTH = 10.0 FEET												

NOTES/REMARKS:

B-25: PAGE 1 OF 1

TEST_BORING_LOG_98113.GPJ_PRIMENG.GDT 3/16/99

PRIME ENGINEERING & ARCHITECTURE INC.

TEST BORING No.: B-26

STATION & OFFSET: 940+00, 30.0 ft. Rt. (North Bound)

ELEVATION: 1152.1ft

CLIENT: Richland Engineering Limited

PROJECT: Subsurface Exploration for MED-IR71-15.94 PROJECT No.: 98113

LOCATION: Medina County, Ohio

DATE STARTED: 2/8/99 DATE COMPLETED: 2/8/99

SAMPLER DIAM: 2.0" TYPE: SS HAMMER WT.: 140lb FALL: 30.0"

CASING DIAM: 3.25" TYPE: HSA OTHER:

DRILLING INFORMATION:
OTB / Mobile B-57 Truck Mounted Drilling Rig

GROUNDWATER INFORMATION:
Water encountered at 9.0 feet upon completion.

▽ GROUNDWATER UPON COMPLETION

ELEV (ft.)	DEPTH (ft.)	Soil/ Rock Symbol	MATERIAL DESCRIPTION	SAMPLE NUMBER	SAMPLE DEPTH	N-VALUE (BLOWS/FT) OR REC%/(RQD%)	PENETROMETER (tons/ft²)	MOISTURE CONTENT (%)	ATTERBERG LIMITS (%) LL	PL	PI	DRY DENSITY (pcf)	UNCONFINED COMPRESSIVE STRENGTH (psf)	MINUS No. 200 SIEVE (%)	CLASSIFICATION SYMBOL
1151.9	0.2		TOPSOIL												
			Very stiff to medium stiff, brown SANDY SILT, some clay, trace gravel, trace rock fragments, moist.	1	1.0	66		18	30	20	10			72	A-4a
			Note: Boulder encountered at 2.0 feet.												
			Note: Color change to gray at 3.5 feet.	2	3.5	9		15							Visual
				3	7.0	7		16							Visual
				4	8.5	6		16							Visual
1142.1	10.0		TERMINATION DEPTH = 10.0 FEET												

NOTES/REMARKS:

B-26: PAGE 1 OF 1

TEST_BORING_LOG_98113.GPJ_PRIMENG.GDT 3/16/99

PRIME ENGINEERING & ARCHITECTURE INC.

TEST BORING No.: B-27

STATION & OFFSET: 944+00, 30.0 ft. Lt. (South Bound)

ELEVATION: 1155.4ft

CLIENT: Richland Engineering Limited

PROJECT: Subsurface Exploration for MED-IR71-15.94 PROJECT No.: 98113

LOCATION: Medina County, Ohio

DATE STARTED: 2/9/99 DATE COMPLETED: 2/9/99

SAMPLER DIAM: 2.0" TYPE: SS HAMMER WT.: 140lb FALL: 30.0"

CASING DIAM: 3.25" TYPE: HSA OTHER:

DRILLING INFORMATION:
OTB / Mobile B-57 Truck Mounted Drilling Rig

GROUNDWATER INFORMATION:
No groundwater encountered during and upon completion of the drilling operations.

ELEV (ft.)	DEPTH (ft.)	Soil/ Rock Symbol	MATERIAL DESCRIPTION	SAMPLE NUMBER	SAMPLE DEPTH	N-VALUE (BLOWS/FT) OR REC%/(RQD%)	PENETROMETER (tons/ft²)	MOISTURE CONTENT (%)	ATTERBERG LIMITS (%) LL	PL	PI	DRY DENSITY (pcf)	UNCONFINED COMPRESSIVE STRENGTH (psf)	MINUS No. 200 SIEVE (%)	CLASSIFICATION SYMBOL
1155.2	0.2		TOPSOIL												
			Very stiff to stiff, brown SANDY SILT, some clay, trace gravel, trace rock fragments, moist.	1	1.0	18		13							Visual
				2	3.5	13		17	31	21	10			73	A-4a
				3	6.0	9		18							Visual
				4	8.5	9		19							Visual
1145.4	10.0		TERMINATION DEPTH = 10.0 FEET												

NOTES/REMARKS:

B-27: PAGE 1 OF 1

TEST_BORING_LOG_98113.GPJ_PRIMENG.GDT 3/16/99

DESIGN AGENCY
PRIME ENGINEERING & ARCHITECT, INC.
1038 GHENT RD, AKRON, OHIO 44333

DESIGNED | DRAWN | CHECKED | REVIEWED | REVISED | DATE | STRUCTURE FILE NUMBER

SOIL PROFILE

MED-71-15.78

26
78

SB25-SB36.DGN PDH 11/2/99

PRIME ENGINEERING & ARCHITECTURE INC.

TEST BORING No.: B-28

STATION & OFFSET: 948+00, 30.0 ft. Rt. (North Bound)

ELEVATION: 1158.0ft

CLIENT: Richland Engineering Limited

PROJECT: Subsurface Exploration for MED-IR71-15.94 PROJECT No.: 98113

LOCATION: Medina County, Ohio

DATE STARTED: 2/8/99 DATE COMPLETED: 2/8/99

SAMPLER DIAM: 2.0" TYPE: SS HAMMER WT.: 140lb FALL: 30.0"

CASING DIAM: 3.25" TYPE: HSA OTHER:

DRILLING INFORMATION:
OTB / Mobile B-57 Truck Mounted Drilling Rig

GROUNDWATER INFORMATION:
No groundwater encountered during and upon completion of the drilling operations.

ELEV (ft.)	DEPTH (ft.)	Soil/Rock Symbol	MATERIAL DESCRIPTION	SAMPLE NUMBER	SAMPLE DEPTH	N-VALUE (BLOWS/FT) OR REC%/(RQD%)	PENETROMETER (tons/ft²)	MOISTURE CONTENT (%)	ATTERBERG LIMITS (%) LL	PL	PI	DRY DENSITY (pcf)	UNCONFINED COMPRESSIVE STRENGTH (psf)	MINUS No. 200 SIEVE (%)	CLASSIFICATION SYMBOL
			TOPSOIL												
1157.0	1.0		Very stiff to soft, brown SILT AND CLAY, little sand, little gravel and rock fragments, moist.	1	1.0	22		12							Visual
				2	3.5	8		18	31	19	12			72	A-6a
				3	6.0	4		24							Visual
				4	8.5	10		18							Visual
1148.0	10.0		TERMINATION DEPTH = 10.0 FEET												

NOTES/REMARKS:

TEST BORING LOG 98113.GPJ PRIMENG.GDT 3/16/99

B-28: PAGE 1 OF 1

PRIME ENGINEERING & ARCHITECTURE INC.

TEST BORING No.: B-29

STATION & OFFSET: 952+00, 30.0 ft. Lt. (South Bound)

ELEVATION: 1160.5ft

CLIENT: Richland Engineering Limited

PROJECT: Subsurface Exploration for MED-IR71-15.94 PROJECT No.: 98113

LOCATION: Medina County, Ohio

DATE STARTED: 2/9/99 DATE COMPLETED: 2/9/99

SAMPLER DIAM: 2.0" TYPE: SS HAMMER WT.: 140lb FALL: 30.0"

CASING DIAM: 3.25" TYPE: HSA OTHER:

DRILLING INFORMATION:
OTB / Mobile B-57 Truck Mounted Drilling Rig

GROUNDWATER INFORMATION:
No groundwater encountered during and upon completion of the drilling operations.

ELEV (ft.)	DEPTH (ft.)	Soil/Rock Symbol	MATERIAL DESCRIPTION	SAMPLE NUMBER	SAMPLE DEPTH	N-VALUE (BLOWS/FT) OR REC%/(RQD%)	PENETROMETER (tons/ft²)	MOISTURE CONTENT (%)	ATTERBERG LIMITS (%) LL	PL	PI	DRY DENSITY (pcf)	UNCONFINED COMPRESSIVE STRENGTH (psf)	MINUS No. 200 SIEVE (%)	CLASSIFICATION SYMBOL
1160.3	0.3		TOPSOIL												
			Stiff to very stiff, brown SANDY SILT, some clay, trace rock fragments, moist (possible fill).	1	1.0	14		13							Visual
				2	3.5	28		14	26	18	8			72	A-4a
				3	6.0	12		17							Visual
				4	8.5	11		18							Visual
1150.5	10.0		TERMINATION DEPTH = 10.0 FEET												

NOTES/REMARKS:

TEST BORING LOG 98113.GPJ PRIMENG.GDT 3/16/99

B-29: PAGE 1 OF 1

PRIME ENGINEERING & ARCHITECTURE INC.

TEST BORING No.: B-30

STATION & OFFSET: 956+00, 30.0 ft. Rt. (North Bound)

ELEVATION: 1162.3ft

CLIENT: Richland Engineering Limited

PROJECT: Subsurface Exploration for MED-IR71-15.94 PROJECT No.: 98113

LOCATION: Medina County, Ohio

DATE STARTED: 2/9/99 DATE COMPLETED: 2/9/99

SAMPLER DIAM: 2.0" TYPE: SS HAMMER WT.: 140lb FALL: 30.0"

CASING DIAM: 3.25" TYPE: HSA OTHER:

DRILLING INFORMATION:
OTB / Mobile B-57 Truck Mounted Drilling Rig

GROUNDWATER INFORMATION:
No groundwater encountered during and upon completion of the operations.

ELEV (ft.)	DEPTH (ft.)	Soil/Rock Symbol	MATERIAL DESCRIPTION	SAMPLE NUMBER	SAMPLE DEPTH	N-VALUE (BLOWS/FT) OR REC%/(RQD%)	PENETROMETER (tons/ft²)	MOISTURE CONTENT (%)	ATTERBERG LIMITS (%) LL	PL	PI	DRY DENSITY (pcf)	UNCONFINED COMPRESSIVE STRENGTH (psf)	MINUS No. 200 SIEVE (%)	CLASSIFICATION SYMBOL
1161.9	0.4		TOPSOIL												
			Stiff to very stiff, brown SILT AND CLAY, little sand, trace gravel, trace rock fragments, moist.	1	1.0	13		15							Visual
				2	3.5	23		16	32	20	12			80	A-6a
				3	6.0	24		17							Visual
				4	8.5	15		15							Visual
1152.3	10.0		TERMINATION DEPTH = 10.0 FEET												

NOTES/REMARKS:

TEST BORING LOG 98113.GPJ PRIMENG.GDT 3/16/99

B-30: PAGE 1 OF 1

DESIGN AGENCY
PRIME ENGINEERING & ARCHITECT, INC.
1038 GHENT RD, AKRON, OHIO 44333

REVIEWED | DATE | STRUCTURE FILE NUMBER

DRAWN | REVISED

DESIGNED | CHECKED

SOIL PROFILE

MED-71-15.78

SB25-SB36.DGN PDH 11/2/99

PRIME ENGINEERING & ARCHITECTURE INC.

TEST BORING No.: B-31

STATION & OFFSET: 960+00, 30.0 ft. Lt. (South Bound)

ELEVATION: 1165.1ft

CLIENT: Richland Engineering Limited

PROJECT: Subsurface Exploration for MED-IR71-15.94 PROJECT No.: 98113

LOCATION: Medina County, Ohio

DATE STARTED: 2/9/99 DATE COMPLETED: 2/9/99

SAMPLER DIAM: 2.0" TYPE: SS HAMMER WT.: 140lb FALL: 30.0"

CASING DIAM: 3.25" TYPE: HSA OTHER:

DRILLING INFORMATION:
OTB / Mobile B-57 Truck Mounted Drilling Rig

GROUNDWATER INFORMATION:
No groundwater encountered during and upon completion of the drilling operations.

ELEV (ft.)	DEPTH (ft.)	Soil/ Rock Symbol	MATERIAL DESCRIPTION	SAMPLE NUMBER	SAMPLE DEPTH	N-VALUE (BLOWS/FT) OR REC%/(RQD%)	PENETROMETER (tons/ft²)	MOISTURE CONTENT (%)	ATTERBERG LIMITS (%) LL	PL	PI	DRY DENSITY (pcf)	UNCONFINED COMPRESSIVE STRENGTH (psf)	MINUS No. 200 SIEVE (%)	CLASSIFICATION SYMBOL
1165.0	0.1		TOPSOIL												
			Very stiff, brown SANDY SILT, little clay, trace gravel, trace rock fragments, moist (fill).	1	1.0	18		11	24	14	10			38	A-4a
				2A	3.5	19		17							Visual
1161.1	4.0		Very stiff, brown SILT AND CLAY, little sand, trace gravel, trace rock fragments, moist (possible fill).	2B	4.0			17							Visual
1159.6	5.5		Stiff to medium stiff, gray SILT AND CLAY, little sand, trace gravel, trace rock fragments, moist.	3	6.0	9		16							Visual
				4	8.5	7		16							Visual
1155.1	10.0		TERMINATION DEPTH = 10.0 FEET												

NOTES/REMARKS:

TEST_BORING_LOG_98113.GPJ_PRIMENG.GDT 3/17/99

B-31: PAGE 1 OF 1

PRIME ENGINEERING & ARCHITECTURE INC.

TEST BORING No.: B-32

STATION & OFFSET: 964+00, 30.0 ft. Rt. (North Bound)

ELEVATION: 1166.7ft

CLIENT: Richland Engineering Limited

PROJECT: Subsurface Exploration for MED-IR71-15.94 PROJECT No.: 98113

LOCATION: Medina County, Ohio

DATE STARTED: 2/9/99 DATE COMPLETED: 2/9/99

SAMPLER DIAM: 2.0" TYPE: SS HAMMER WT.: 140lb FALL: 30.0"

CASING DIAM: 3.25" TYPE: HSA OTHER:

DRILLING INFORMATION:
OTB / Mobile B-57 Truck Mounted Drilling Rig

GROUNDWATER INFORMATION:
No groundwater encountered during and upon completion of the drilling operations.

ELEV (ft.)	DEPTH (ft.)	Soil/ Rock Symbol	MATERIAL DESCRIPTION	SAMPLE NUMBER	SAMPLE DEPTH	N-VALUE (BLOWS/FT) OR REC%/(RQD%)	PENETROMETER (tons/ft²)	MOISTURE CONTENT (%)	ATTERBERG LIMITS (%) LL	PL	PI	DRY DENSITY (pcf)	UNCONFINED COMPRESSIVE STRENGTH (psf)	MINUS No. 200 SIEVE (%)	CLASSIFICATION SYMBOL
1166.4	0.3		TOPSOIL												
			Medium stiff to stiff, brown to gray SANDY SILT, some clay, trace gravel, trace rockfragments, moist.	1	1.0	12		14							Visual
			Note: Color change to gray at 3.5 feet.	2	3.5	7		15	26	16	10			72	A-4a
				3	6.0	10		16							Visual
				4	8.5	8		15							Visual
1156.7	10.0		TERMINATION DEPTH = 10.0 FEET												

NOTES/REMARKS:

TEST_BORING_LOG_98113.GPJ_PRIMENG.GDT 3/16/99

B-32: PAGE 1 OF 1

PRIME ENGINEERING & ARCHITECTURE INC.

TEST BORING No.: B-33

STATION & OFFSET: 968+00, 30.0 ft. Lt. (South Bound)

ELEVATION: 1168.9ft

CLIENT: Richland Engineering Limited

PROJECT: Subsurface Exploration for MED-IR71-15.94 PROJECT No.: 98113

LOCATION: Medina County, Ohio

DATE STARTED: 2/17/99 DATE COMPLETED: 2/17/99

SAMPLER DIAM: 2.0" TYPE: SS HAMMER WT.: 140lb FALL: 30.0"

CASING DIAM: 2.25" TYPE: HSA OTHER:

DRILLING INFORMATION:
STL / Diedrich D-50 Truck Mounted Drilling Rig

GROUNDWATER INFORMATION:
No groundwater encountered during and upon completion of the drilling operations.

ELEV (ft.)	DEPTH (ft.)	Soil/ Rock Symbol	MATERIAL DESCRIPTION	SAMPLE NUMBER	SAMPLE DEPTH	N-VALUE (BLOWS/FT) OR REC%/(RQD%)	PENETROMETER (tons/ft²)	MOISTURE CONTENT (%)	ATTERBERG LIMITS (%) LL	PL	PI	DRY DENSITY (pcf)	UNCONFINED COMPRESSIVE STRENGTH (psf)	MINUS No. 200 SIEVE (%)	CLASSIFICATION SYMBOL
1168.7	0.3		TOPSOIL												
			Stiff, brown SILT AND CLAY, little sand, trace gravel, trace rock fragments, trace roots, moist.	1	1.0	15		15							Visual
1165.9	3.0		Very stiff to stiff, gray SANDY SILT, some clay, trace gravel, trace rock fragments, moist.	2	3.5	17		17	25	17	8			73	A-4a
				3	6.0	12		12							Visual
				4	8.5	20		20							Visual
1158.9	10.0		TERMINATION DEPTH = 10.0 FEET												

NOTES/REMARKS:

TEST_BORING_LOG_98113.GPJ_PRIMENG.GDT 3/16/99

B-33: PAGE 1 OF 1

DESIGN AGENCY
PRIME ENGINEERING & ARCHITECT, INC.
1038 GHENT RD, AKRON, OHIO 44333

DESIGNED | DATE | REVIEWED | STRUCTURE FILE NUMBER
DRAWN | REVISED
CHECKED

SOIL PROFILE

MED-71-15.78

28
78

SB25-SB36.DGN PDH 11/2/99

PRIME ENGINEERING & ARCHITECTURE INC.

TEST BORING No.: B-34

STATION & OFFSET: 972+00, 30.0 ft. Rt. (North Bound)

ELEVATION: 1170.9ft

CLIENT: Richland Engineering Limited

PROJECT: Subsurface Exploration for MED-IR71-15.94 PROJECT No.: 98113

LOCATION: Medina County, Ohio

DATE STARTED: 2/9/99 DATE COMPLETED: 2/9/99

SAMPLER DIAM: 2.0" TYPE: SS HAMMER WT.: 140lb FALL: 30.0"

CASING DIAM: 2.25" TYPE: HSA OTHER:

DRILLING INFORMATION:
STL / Diedrich D-50 Truck Mounted Drilling Rig

GROUNDWATER INFORMATION:
No groundwater encountered during and upon completion of the drilling operations.

ELEV (ft.)	DEPTH (ft.)	Soil/Rock Symbol	MATERIAL DESCRIPTION	SAMPLE NUMBER	SAMPLE DEPTH	N-VALUE (BLOWS/FT) OR REC%/(RQD%)	PENETROMETER (tons/ft²)	MOISTURE CONTENT (%)	ATTERBERG LIMITS (%) LL	PL	PI	DRY DENSITY (pcf)	UNCONFINED COMPRESSIVE STRENGTH (psf)	MINUS No. 200 SIEVE (%)	CLASSIFICATION SYMBOL
1170.7	0.3		TOPSOIL												
			Stiff to hard, brown SILT AND CLAY, little sand, trace gravel, trace rock fragments, moist.	1	0.0	9		14							Visual
				2	3.0	40		14	30	19	11			76	A-6a
				3	6.0	26		16							Visual
				4	8.5	23		20							Visual
1160.9	10.0		TERMINATION DEPTH = 10.0 FEET												

NOTES/REMARKS:

B-34: PAGE 1 OF 1

TEST BORING LOG 98113.GPJ PRIMENG.GDT 3/15/99

PRIME ENGINEERING & ARCHITECTURE INC.

TEST BORING No.: B-35

STATION & OFFSET: 976+00, 30.0 ft. Lt. (South Bound)

ELEVATION: 1173.0ft

CLIENT: Richland Engineering Limited

PROJECT: Subsurface Exploration for MED-IR71-15.94 PROJECT No.: 98113

LOCATION: Medina County, Ohio

DATE STARTED: 2/17/99 DATE COMPLETED: 2/17/99

SAMPLER DIAM: 2.0" TYPE: SS HAMMER WT.: 140lb FALL: 30.0"

CASING DIAM: 2.25" TYPE: HSA OTHER:

DRILLING INFORMATION:
STL / Diedrich D-50 Truck Mounted Drilling Rig

GROUNDWATER INFORMATION:
No groundwater encountered during and upon completion of the drilling operations.

ELEV (ft.)	DEPTH (ft.)	Soil/Rock Symbol	MATERIAL DESCRIPTION	SAMPLE NUMBER	SAMPLE DEPTH	N-VALUE (BLOWS/FT) OR REC%/(RQD%)	PENETROMETER (tons/ft²)	MOISTURE CONTENT (%)	ATTERBERG LIMITS (%) LL	PL	PI	DRY DENSITY (pcf)	UNCONFINED COMPRESSIVE STRENGTH (psf)	MINUS No. 200 SIEVE (%)	CLASSIFICATION SYMBOL
1172.8	0.3		TOPSOIL												
			Very stiff to hard, brown SILT AND CLAY, little sand, trace gravel, trace rock fragments, moist.	1	0.0	15		16	30	19	11			78	A-6a
				2	3.0	37		14							Visual
				3	6.0	29		15							Visual
				4	8.5	38		17							Visual
1163.0	10.0		TERMINATION DEPTH = 10.0 FEET												

NOTES/REMARKS:

B-35: PAGE 1 OF 1

TEST BORING LOG 98113.GPJ PRIMENG.GDT 3/15/99

PRIME ENGINEERING & ARCHITECTURE INC.

TEST BORING No.: B-36

STATION & OFFSET: 980+00, 30.0 ft. Rt. (North Bound)

ELEVATION: 1173.8ft

CLIENT: Richland Engineering Limited

PROJECT: Subsurface Exploration for MED-IR71-15.94 PROJECT No.: 98113

LOCATION: Medina County, Ohio

DATE STARTED: 3/8/99 DATE COMPLETED: 3/8/99

SAMPLER DIAM: 2.0" TYPE: SS HAMMER WT.: 140lb FALL: 30.0"

CASING DIAM: 2.25" TYPE: HSA OTHER:

DRILLING INFORMATION:
NAR / CME-55 Truck Mounted drilling Rig

GROUNDWATER INFORMATION:
No groundwater encountered during and upon completion of the drilling operations.

ELEV (ft.)	DEPTH (ft.)	Soil/Rock Symbol	MATERIAL DESCRIPTION	SAMPLE NUMBER	SAMPLE DEPTH	N-VALUE (BLOWS/FT) OR REC%/(RQD%)	PENETROMETER (tons/ft²)	MOISTURE CONTENT (%)	ATTERBERG LIMITS (%) LL	PL	PI	DRY DENSITY (pcf)	UNCONFINED COMPRESSIVE STRENGTH (psf)	MINUS No. 200 SIEVE (%)	CLASSIFICATION SYMBOL
1173.4	0.4		TOPSOIL												
			Stiff to very stiff, brown, SILT AND CLAY, little sand, trace gravel, trace rock fragments, moist.	1	1.0	17		15							Visual
				2	3.5	13		16							Visual
				3	6.0	30		23							Visual
				4	8.5	24		16							Visual
1163.8	10.0		TERMINATION DEPTH = 10.0 FEET												

NOTES/REMARKS:

B-36: PAGE 1 OF 1

TEST BORING LOG 98113.GPJ PRIMENG.GDT 3/15/99

DESIGN AGENCY
PRIME ENGINEERING & ARCHITECT, INC.
1038 GHENT RD, AKRON, OHIO 44333

DESIGNED	DRAWN	REVIEWED	DATE
CHECKED	REVISED	STRUCTURE FILE NUMBER	

SOIL PROFILE

MED-71-15.78

29
78

SB25-SB36.DGN PDH 11/2/99

PRIME ENGINEERING & ARCHITECTURE INC.

TEST BORING No.: B-37

STATION & OFFSET: 984+00, 30.0 ft. Lt. (South Bound)

ELEVATION: 1173.3ft

CLIENT: Richland Engineering Limited

PROJECT: Subsurface Exploration for MED-IR71-15.94 PROJECT No.: 98113

LOCATION: Medina County, Ohio

DATE STARTED: 2/17/99 DATE COMPLETED: 2/17/99

SAMPLER DIAM: 2.0" TYPE: SS HAMMER WT.: 140lb FALL: 30.0"

CASING DIAM: 2.25" TYPE: HSA OTHER:

DRILLING INFORMATION:
STL / Diedrich D-50 Truck Mounted Drilling Rig

GROUNDWATER INFORMATION:
No groundwater encountered during and upon completion of the drilling operations.

ELEV (ft.)	DEPTH (ft.)	Soil/Rock Symbol	MATERIAL DESCRIPTION	SAMPLE NUMBER	SAMPLE DEPTH	N-VALUE (BLOWS/FT) OR RECN/(RQD%)	PENETROMETER (tons/ft²)	MOISTURE CONTENT (%)	ATTERBERG LIMITS (%) LL	PL	PI	DRY DENSITY (pcf)	UNCONFINED COMPRESSIVE STRENGTH (psf)	MINUS No. 200 SIEVE (%)	CLASSIFICATION SYMBOL
1173.1	0.3		TOPSOIL.												
			Stiff to hard, brown SILT AND CLAY, little sand, trace gravel, trace rock fragments, moist.	1	0.0	9		14							Visual
				2	3.0	39		12	28	17	11			76	A-6a
				3	6.0	32		13							Visual
				4	8.5	41		16							Visual
1163.3	10.0		TERMINATION DEPTH = 10.0 FEET												

NOTES/REMARKS:

B-37: PAGE 1 OF 1

TEST BORING LOG 98113.GPJ PRIMENG.GDT 3/16/99

PRIME ENGINEERING & ARCHITECTURE INC.

TEST BORING No.: B-38

STATION & OFFSET: 992+00, 30.0 ft. Lt. (South Bound)

ELEVATION: 1167.5ft

CLIENT: Richland Engineering Limited

PROJECT: Subsurface Exploration for MED-IR71-15.94 PROJECT No.: 98113

LOCATION: Medina County, Ohio

DATE STARTED: 2/17/99 DATE COMPLETED: 2/17/99

SAMPLER DIAM: 2.0" TYPE: SS HAMMER WT.: 140lb FALL: 30.0"

CASING DIAM: 2.25" TYPE: HSA OTHER:

DRILLING INFORMATION:
STL / Diedrich D-50 Truck Mounted Drilling Rig

GROUNDWATER INFORMATION:
No groundwater encountered during and upon completion of the drilling operations.

ELEV (ft.)	DEPTH (ft.)	Soil/Rock Symbol	MATERIAL DESCRIPTION	SAMPLE NUMBER	SAMPLE DEPTH	N-VALUE (BLOWS/FT) OR RECN/(RQD%)	PENETROMETER (tons/ft²)	MOISTURE CONTENT (%)	ATTERBERG LIMITS (%) LL	PL	PI	DRY DENSITY (pcf)	UNCONFINED COMPRESSIVE STRENGTH (psf)	MINUS No. 200 SIEVE (%)	CLASSIFICATION SYMBOL
1167.3	0.3		TOPSOIL.												
			Stiff to hard, brown SILT AND CLAY, little sand, trace gravel, trace rock fragments, moist.	1	0.0	9		15	31	19	12			79	A-6a
				2	3.0	39		14							Visual
				3	6.0	32		15							Visual
				4	8.5	37		14							Visual
1157.5	10.0		TERMINATION DEPTH = 10.0 FEET												

NOTES/REMARKS:

B-38: PAGE 1 OF 1

TEST BORING LOG 98113.GPJ PRIMENG.GDT 3/16/99

PRIME ENGINEERING & ARCHITECTURE INC.

TEST BORING No.: B-39

STATION & OFFSET: 996+00, 30.0 ft. Rt. (North Bound)

ELEVATION: 1164.4ft

CLIENT: Richland Engineering Limited

PROJECT: Subsurface Exploration for MED-IR71-15.94 PROJECT No.: 98113

LOCATION: Medina County, Ohio

DATE STARTED: 2/8/99 DATE COMPLETED: 2/8/99

SAMPLER DIAM: 2.0" TYPE: SS HAMMER WT.: 140lb FALL: 30.0"

CASING DIAM: 3.25" TYPE: HSA OTHER:

DRILLING INFORMATION:
NAR / CME-55 Truck Mounted drilling Rig

GROUNDWATER INFORMATION:
No groundwater encountered during and upon completion of the drilling operations.

ELEV (ft.)	DEPTH (ft.)	Soil/Rock Symbol	MATERIAL DESCRIPTION	SAMPLE NUMBER	SAMPLE DEPTH	N-VALUE (BLOWS/FT) OR RECN/(RQD%)	PENETROMETER (tons/ft²)	MOISTURE CONTENT (%)	ATTERBERG LIMITS (%) LL	PL	PI	DRY DENSITY (pcf)	UNCONFINED COMPRESSIVE STRENGTH (psf)	MINUS No. 200 SIEVE (%)	CLASSIFICATION SYMBOL
1164.1	0.3		TOPSOIL.												
			Very stiff, brown SILT AND CLAY, little sand, trace gravel, trace rock fragments, moist.	1	1.0	24		17							Visual
				2	3.5	22		16							Visual
				3	6.0	25		16							Visual
				4	8.5	50+		14							Visual
1155.3	9.1		Note: Cobble encountered at 9.0 feet. TERMINATION DEPTH = 10.0 FEET												

NOTES/REMARKS:

B-39: PAGE 1 OF 1

TEST BORING LOG 98113.GPJ PRIMENG.GDT JK 6/6/99

DESIGN AGENCY
PRIME ENGINEERING & ARCHITECT, INC.
1038 GHENT RD, AKRON, OHIO 44333

DESIGNED | DRAWN | CHECKED | REVIEWED | REVISED | DATE | STRUCTURE FILE NUMBER

SOIL PROFILE

MED-71-15.78

30
78

SB37-SB48.DGN PDH 11/2/99

PRIME ENGINEERING & ARCHITECTURE INC.

TEST BORING No.: B-40

STATION & OFFSET: 1000+00, 30.0 ft. Lt. (South Bound)

ELEVATION: 1161.3ft

CLIENT: Richland Engineering Limited

PROJECT: Subsurface Exploration for MED-IR71-15.94 PROJECT No.: 98113

LOCATION: Medina County, Ohio

DATE STARTED: 2/17/99 DATE COMPLETED: 2/17/99

SAMPLER DIAM: 2.0" TYPE: SS HAMMER WT.: 140lb FALL: 30.0"

CASING DIAM: 2.25" TYPE: HSA OTHER:

DRILLING INFORMATION:
STL / Diedrich D-50 Truck Mounted Drilling Rig

GROUNDWATER INFORMATION:
No groundwater encountered during and upon completion of the drilling operations.

ELEV (ft.)	DEPTH (ft.)	Soil/Rock Symbol	MATERIAL DESCRIPTION	SAMPLE NUMBER	SAMPLE DEPTH	N-VALUE (BLOWS/FT) OR RECS%(RQD%)	PENETROMETER (tons/ft²)	MOISTURE CONTENT (%)	ATTERBERG LIMITS (%) F LIQUID LIMIT	ATTERBERG LIMITS (%) P PLASTIC LIMIT	ATTERBERG LIMITS (%) PI PLASTICITY INDEX	DRY DENSITY (pcf)	UNCONFINED COMPRESSIVE STRENGTH (psf)	MINUS No. 200 SIEVE (%)	CLASSIFICATION SYMBOL
1161.1	0.3		TOPSOIL												
			Stiff to hard, brown SILT AND CLAY, little sand, trace gravel, trace rock fragments, moist.	1	0.0	11		16							Visual
				2	3.0	30		13	31	19	12			74	A-6a
				3	6.0	22		14							Visual
				4	8.5	35		15							Visual
1151.3	10.0		TERMINATION DEPTH = 10.0 FEET												

NOTES/REMARKS:

B-40: PAGE 1 OF 1

TEST_BORING_LOG 98113.GPJ PRIMENG.GDT 3/16/99

PRIME ENGINEERING & ARCHITECTURE INC.

TEST BORING No.: B-41

STATION & OFFSET: 1004+00, 30.0 ft. Rt. (North Bound)

ELEVATION: 1158.5ft

CLIENT: Richland Engineering Limited

PROJECT: Subsurface Exploration for MED-IR71-15.94 PROJECT No.: 98113

LOCATION: Medina County, Ohio

DATE STARTED: 2/8/99 DATE COMPLETED: 2/8/99

SAMPLER DIAM: 2.0" TYPE: SS HAMMER WT.: 140lb FALL: 30.0"

CASING DIAM: 3.25" TYPE: HSA OTHER:

DRILLING INFORMATION:
NAR / CME-55 Truck Mounted drilling Rig

GROUNDWATER INFORMATION:
No groundwater encountered during and upon completion of the drilling operations.

ELEV (ft.)	DEPTH (ft.)	Soil/Rock Symbol	MATERIAL DESCRIPTION	SAMPLE NUMBER	SAMPLE DEPTH	N-VALUE (BLOWS/FT) OR RECS%(RQD%)	PENETROMETER (tons/ft²)	MOISTURE CONTENT (%)	ATTERBERG LIMITS (%) F LIQUID LIMIT	ATTERBERG LIMITS (%) P PLASTIC LIMIT	ATTERBERG LIMITS (%) PI PLASTICITY INDEX	DRY DENSITY (pcf)	UNCONFINED COMPRESSIVE STRENGTH (psf)	MINUS No. 200 SIEVE (%)	CLASSIFICATION SYMBOL
1158.3	0.3		TOPSOIL												
			Very stiff to hard, brown SILT AND CLAY, little sand, trace gravel, trace rock fragments, moist.	1	1.0	19		15							Visual
				2	3.5	30		13							Visual
				3	6.0	27		14							Visual
				4	8.5	31		14							Visual
1148.5	10.0		TERMINATION DEPTH = 10.0 FEET												

NOTES/REMARKS:

B-41: PAGE 1 OF 1

TEST_BORING_LOG 98113.GPJ PRIMENG.GDT 3/16/99

PRIME ENGINEERING & ARCHITECTURE INC.

TEST BORING No.: B-42

STATION & OFFSET: 1008+00, 30.0 ft. Lt. (South Bound)

ELEVATION: 1154.9ft

CLIENT: Richland Engineering Limited

PROJECT: Subsurface Exploration for MED-IR71-15.94 PROJECT No.: 98113

LOCATION: Medina County, Ohio

DATE STARTED: 2/17/99 DATE COMPLETED: 2/17/99

SAMPLER DIAM: 2.0" TYPE: SS HAMMER WT.: 140lb FALL: 30.0"

CASING DIAM: 2.25" TYPE: HSA OTHER:

DRILLING INFORMATION:
STL / Diedrich D-50 Truck Mounted Drilling Rig

GROUNDWATER INFORMATION:
No groundwater encountered during and upon completion of the drilling operations.

ELEV (ft.)	DEPTH (ft.)	Soil/Rock Symbol	MATERIAL DESCRIPTION	SAMPLE NUMBER	SAMPLE DEPTH	N-VALUE (BLOWS/FT) OR RECS%(RQD%)	PENETROMETER (tons/ft²)	MOISTURE CONTENT (%)	ATTERBERG LIMITS (%) F LIQUID LIMIT	ATTERBERG LIMITS (%) P PLASTIC LIMIT	ATTERBERG LIMITS (%) PI PLASTICITY INDEX	DRY DENSITY (pcf)	UNCONFINED COMPRESSIVE STRENGTH (psf)	MINUS No. 200 SIEVE (%)	CLASSIFICATION SYMBOL
1154.6	0.3		TOPSOIL												
			Stiff to hard, brown SILT AND CLAY, little sand, trace gravel, trace rock fragments, moist.	1	0.0	11		17	30	19	11			75	A-6a
				2	3.0	33		13							Visual
				3	6.0	20		18							Visual
				4	8.5	39		15							Visual
1144.9	10.0		TERMINATION DEPTH = 10.0 FEET												

NOTES/REMARKS:

B-42: PAGE 1 OF 1

TEST_BORING_LOG 98113.GPJ PRIMENG.GDT 3/16/99

DESIGN AGENCY
PRIME ENGINEERING & ARCHITECT, INC.
1038 GHENT RD, AKRON, OHIO 44333

DESIGNED	DRAWN	REVIEWED	DATE
CHECKED	REVISED	STRUCTURE FILE NUMBER	

SOIL PROFILE

MED-71-15.78

31
78

SB37-SB48.DGN PDH 11/2/99

PRIME ENGINEERING & ARCHITECTURE INC.

TEST BORING No.: B-43

STATION & OFFSET: 1020+00, 30.0 ft. Rt. (North Bound)

ELEVATION: 1145.0ft

CLIENT: Richland Engineering Limited

PROJECT: Subsurface Exploration for MED-IR71-15.94 PROJECT No.: 98113

LOCATION: Medina County, Ohio

DATE STARTED: 2/8/99 DATE COMPLETED: 2/8/99

SAMPLER DIAM: 2.0" TYPE: SS HAMMER WT.: 140lb FALL: 30.0"

CASING DIAM: 3.25" TYPE: HSA OTHER:

DRILLING INFORMATION:
NAR / CME-55 Truck Mounted drilling Rig

GROUNDWATER INFORMATION:
Water encountered at 5.0 feet upon completions of drilling operations.

GROUNDWATER UPON COMPLETION

ELEV (ft.)	DEPTH (ft.)	Soil/Rock Symbol	MATERIAL DESCRIPTION	SAMPLE NUMBER	SAMPLE DEPTH	N-VALUE (BLOWS/FT) OR REC%/(RQD%)	PENETROMETER (tons/ft²)	MOISTURE CONTENT (%)	ATTERBERG LIMITS (%) LL	PL	PI	DRY DENSITY (pcf)	UNCONFINED COMPRESSIVE STRENGTH (psf)	MINUS No. 200 SIEVE (%)	CLASSIFICATION SYMBOL
1144.6	0.4		TOPSOIL Stiff, brown SILT AND CLAY, little sand, trace gravel, trace rock fragments, trace roots, moist	1	1.0	13		17							Visual
1141.5	3.5		Brown FINE SANDSTONE FRAGMENTS	2	3.5	50+		9							Visual
1138.8	6.2		Note: Auger refusal at 6.17 feet (possible bedrock). TERMINATION DEPTH = 6.17 FEET	3	6.0	50+		9							Visual

NOTES/REMARKS:

TEST BORING LOG 98113.GPJ PRIMENG.GDT 3/17/99

B-43: PAGE 1 OF 1

PRIME ENGINEERING & ARCHITECTURE INC.

TEST BORING No.: B-44

STATION & OFFSET: 1024+00, 30.0 ft. Lt. (South Bound)

ELEVATION: 1138.9ft

CLIENT: Richland Engineering Limited

PROJECT: Subsurface Exploration for MED-IR71-15.94 PROJECT No.: 98113

LOCATION: Medina County, Ohio

DATE STARTED: 2/17/99 DATE COMPLETED: 2/17/99

SAMPLER DIAM: 2.0" TYPE: SS HAMMER WT.: 140lb FALL: 30.0"

CASING DIAM: 2.25" TYPE: HSA OTHER:

DRILLING INFORMATION:
STL / Diedrich D-50 Truck Mounted Drilling Rig

GROUNDWATER INFORMATION:
No groundwater encountered during and upon completion of the drilling operations.

ELEV (ft.)	DEPTH (ft.)	Soil/Rock Symbol	MATERIAL DESCRIPTION	SAMPLE NUMBER	SAMPLE DEPTH	N-VALUE (BLOWS/FT) OR REC%/(RQD%)	PENETROMETER (tons/ft²)	MOISTURE CONTENT (%)	ATTERBERG LIMITS (%) LL	PL	PI	DRY DENSITY (pcf)	UNCONFINED COMPRESSIVE STRENGTH (psf)	MINUS No. 200 SIEVE (%)	CLASSIFICATION SYMBOL
1138.6	0.3		TOPSOIL Very stiff, brown, SILT AND CLAY, little sand, trace gravel, trace roots, moist (fill).	1	0.0	16		22							Visual
1135.9	3.0		Hard, brown SANDY SILT, some clay, trace gravel, trace rock fragments, moist (fill).	2	3.0	30		15	30	20	10			81	A-4a
				3	6.0	35		16							Visual
1130.2	8.7		Note: Sandstone boulder encountered at 8.5 feet. TERMINATION DEPTH = 8.7 FEET	4	8.5	50/0.17		8							Visual

NOTES/REMARKS:

TEST BORING LOG 98113.GPJ PRIMENG.GDT 3/16/99

B-44: PAGE 1 OF 1

PRIME ENGINEERING & ARCHITECTURE INC.

TEST BORING No.: B-45

STATION & OFFSET: 1028+00, 30.0 ft. RT. (North Bound)

ELEVATION: 1128.9ft

CLIENT: Richland Engineering Limited

PROJECT: Subsurface Exploration for MED-IR71-15.94 PROJECT No.: 98113

LOCATION: Medina County, Ohio

DATE STARTED: 3/8/99 DATE COMPLETED: 3/8/99

SAMPLER DIAM: 2.0" TYPE: SS HAMMER WT.: 140lb FALL: 30.0"

CASING DIAM: 3.25" TYPE: HSA OTHER:

DRILLING INFORMATION:
NAR / CME-55 Truck Mounted drilling Rig

GROUNDWATER INFORMATION:
No groundwater encountered during and upon completion of the drilling operations.

ELEV (ft.)	DEPTH (ft.)	Soil/Rock Symbol	MATERIAL DESCRIPTION	SAMPLE NUMBER	SAMPLE DEPTH	N-VALUE (BLOWS/FT) OR REC%/(RQD%)	PENETROMETER (tons/ft²)	MOISTURE CONTENT (%)	ATTERBERG LIMITS (%) LL	PL	PI	DRY DENSITY (pcf)	UNCONFINED COMPRESSIVE STRENGTH (psf)	MINUS No. 200 SIEVE (%)	CLASSIFICATION SYMBOL
1128.6	0.3		TOPSOIL Very stiff to stiff, brown and gray SANDY SILT, some clay, trace gravel, trace rock fragments, moist	1	1.0	22		12							Visual
				2	3.5	22		11	24	17	7			71	A-4a
				3	6.0	11		14							Visual
			Note: Color change to gray at 8.5 feet.	4	8.5	15		15							Visual
1118.9	10.0		TERMINATION DEPTH = 10.0 FEET												

NOTES/REMARKS:

TEST BORING LOG 98113.GPJ PRIMENG.GDT 3/16/99

B-45: PAGE 1 OF 1

DESIGN AGENCY
PRIME ENGINEERING & ARCHITECT, INC.
1038 GHENT RD, AKRON, OHIO 44333

DESIGNED	DRAWN	REVIEWED	DATE
CHECKED	REVISED	STRUCTURE FILE NUMBER	

SOIL PROFILE

MED-71-15.78

SB37-SB48.DGN PDH 11/2/99

PRIME ENGINEERING & ARCHITECTURE INC.

TEST BORING No.: B-46

STATION & OFFSET: 1032+00, 30.0 ft. Lt. (South Bound)

ELEVATION: 1116.8ft

CLIENT: Richland Engineering Limited

PROJECT: Subsurface Exploration for MED-IR71-15.94 PROJECT No.: 98113

LOCATION: Medina County, Ohio

DATE STARTED: 2/17/99 DATE COMPLETED: 2/17/99

SAMPLER DIAM: 2.0" TYPE: SS HAMMER WT.: 140lb FALL: 30.0"

CASING DIAM: 2.25" TYPE: HSA OTHER:

DRILLING INFORMATION:
STL / Diedrich D-50 Truck Mounted Drilling Rig

GROUNDWATER INFORMATION:
No groundwater encountered during and upon completion of the drilling operations.

ELEV (ft.)	DEPTH (ft.)	Soil/Rock Symbol	MATERIAL DESCRIPTION	SAMPLE NUMBER	SAMPLE DEPTH	N-VALUE (BLOWS/FT) OR REC%/(RQD%)	PENETROMETER (ton/ft²)	MOISTURE CONTENT (%)	ATTERBERG LIMITS (%) LL	PL	PI	DRY DENSITY (pcf)	UNCONFINED COMPRESSIVE STRENGTH (psf)	MINUS No. 200 SIEVE (%)	CLASSIFICATION SYMBOL
1116.5	0.3		TOPSOIL Medium stiff, brown and gray SANDY SILT, little clay, trace gravel, trace rock fragments, moist (fill).	1	0.0	5		13							Visual
				2	3.0	29		10	21	15	6			71	A-4a
1113.4	3.4		Note: Trace of organics encountered from 3.1 to 3.4 feet Very stiff, gray SANDY SILT, little clay, trace gravel, trace rock fragments, moist.												
				3	6.0	18		19							Visual
1110.8	6.0		Very stiff to stiff, gray SILT AND CLAY, little sand, trace gravel, trace rock fragments, moist with occasional silt seams.												
				4	8.5	13		18							Visual
1106.8	10.0		TERMINATION DEPTH = 10.0 FEET												

NOTES/REMARKS:

B-46: PAGE 1 OF 1

TEST BORING LOG 98113.GPJ PRIMENG.GDT 3/18/99

PRIME ENGINEERING & ARCHITECTURE INC.

TEST BORING No.: B-47

STATION & OFFSET: 1036+00, 30.0 ft. Rt. (North Bound)

ELEVATION: 1104.7ft

CLIENT: Richland Engineering Limited

PROJECT: Subsurface Exploration for MED-IR71-15.94 PROJECT No.: 98113

LOCATION: Medina County, Ohio

DATE STARTED: 3/8/99 DATE COMPLETED: 3/8/99

SAMPLER DIAM: 2.0" TYPE: SS HAMMER WT.: 140lb FALL: 30.0"

CASING DIAM: 3.25" TYPE: HSA OTHER:

DRILLING INFORMATION:
NAR / CME-55 Truck Mounted drilling Rig

GROUNDWATER INFORMATION:
Water encountered at 9.0 feet upon completion of the drilling operations.

▽ GROUNDWATER UPON COMPLETION

ELEV (ft.)	DEPTH (ft.)	Soil/Rock Symbol	MATERIAL DESCRIPTION	SAMPLE NUMBER	SAMPLE DEPTH	N-VALUE (BLOWS/FT) OR REC%/(RQD%)	PENETROMETER (ton/ft²)	MOISTURE CONTENT (%)	ATTERBERG LIMITS (%) LL	PL	PI	DRY DENSITY (pcf)	UNCONFINED COMPRESSIVE STRENGTH (psf)	MINUS No. 200 SIEVE (%)	CLASSIFICATION SYMBOL
1104.4	0.3		TOPSOIL Very stiff to stiff, brown SILT AND CLAY, some sand, trace gravel, trace rock fragments, moist.	1	1.0	18		14							Visual
				2	3.5	15		20	32	21	11			72	A-6a
			Note: Color change to gray at 6.0 feet												
				3	6.0	9		13							Visual
				4	8.5	11		13							Visual
1094.7	10.0		TERMINATION DEPTH = 10.0 FEET												

NOTES/REMARKS:

B-47: PAGE 1 OF 1

TEST BORING LOG 98113.GPJ PRIMENG.GDT 3/18/99

PRIME ENGINEERING & ARCHITECTURE INC.

TEST BORING No.: B-48

STATION & OFFSET: 1040+00, 30.0 ft. Lt. (South Bound)

ELEVATION: 1092.9ft

CLIENT: Richland Engineering Limited

PROJECT: Subsurface Exploration for MED-IR71-15.94 PROJECT No.: 98113

LOCATION: Medina County, Ohio

DATE STARTED: 2/17/99 DATE COMPLETED: 2/17/99

SAMPLER DIAM: 2.0" TYPE: SS HAMMER WT.: 140lb FALL: 30.0"

CASING DIAM: 2.25" TYPE: HSA OTHER:

DRILLING INFORMATION:
STL / Diedrich D-50 Truck Mounted Drilling Rig

GROUNDWATER INFORMATION:
No groundwater encountered during and upon completion of the drilling operations.

ELEV (ft.)	DEPTH (ft.)	Soil/Rock Symbol	MATERIAL DESCRIPTION	SAMPLE NUMBER	SAMPLE DEPTH	N-VALUE (BLOWS/FT) OR REC%/(RQD%)	PENETROMETER (ton/ft²)	MOISTURE CONTENT (%)	ATTERBERG LIMITS (%) LL	PL	PI	DRY DENSITY (pcf)	UNCONFINED COMPRESSIVE STRENGTH (psf)	MINUS No. 200 SIEVE (%)	CLASSIFICATION SYMBOL
1092.7	0.3		TOPSOIL Stiff to very stiff, brown and gray SANDY SILT, some clay, trace gravel, trace rock fragments, moist.	1	0.0	10		14	28	19	9			74	A-4a
				2	3.0	29		11							Visual
			Note: Color change to gray at 3.5 feet												
				3	6.0	12		12							Visual
				4	8.5	13		14							Visual
1082.9	10.0		TERMINATION DEPTH = 10.0 FEET												

NOTES/REMARKS:

B-48: PAGE 1 OF 1

TEST BORING LOG 98113.GPJ PRIMENG.GDT 3/18/99

DESIGN AGENCY
PRIME ENGINEERING & ARCHITECT, INC.
1038 GHENT RD, AKRON, OHIO 44333

DESIGNED	DATE	REVIEWED	STRUCTURE FILE NUMBER
DRAWN		REVISED	
CHECKED			

SOIL PROFILE

MED-71-15.78

33
78

SB37-SB48.DGN PDH 11/2/99

PRIME ENGINEERING & ARCHITECTURE INC.

TEST BORING No.: B-49

STATION & OFFSET: 1044+00, 30.0 ft. Rt. (North Bound)

ELEVATION: 1080.6ft

CLIENT: Richland Engineering Limited

PROJECT: Subsurface Exploration for MED-IR71-15.94 PROJECT No.: 98113

LOCATION: Medina County, Ohio

DATE STARTED: 3/5/99 DATE COMPLETED: 3/5/09

SAMPLER DIAM: 2.0" TYPE: SS HAMMER WT.: 140lb FALL: 30.0"

CASING DIAM: 2.25" TYPE: HSA OTHER:

DRILLING INFORMATION:
STL / Diedrich D-50 Truck Mounted Drilling Rig

GROUNDWATER INFORMATION:
No groundwater encountered during and upon completion of the drilling operations.

ELEV (ft.)	DEPTH (ft.)	Soil/Rock Symbol	MATERIAL DESCRIPTION	SAMPLE NUMBER	SAMPLE DEPTH	N-VALUE (BLOWS/FT) OR REC%/(ROD%)	PENETROMETER (tons/ft²)	MOISTURE CONTENT (%)	ATTERBERG LIMITS (%) LL	PL	PI	DRY DENSITY (pcf)	UNCONFINED COMPRESSIVE STRENGTH (psf)	MINUS No. 200 SIEVE (%)	CLASSIFICATION SYMBOL
1080.3	0.3		TOPSOIL Very stiff, brown SANDY SILT, some clay, trace gravel, trace rock fragments, moist.	1	1.0	25		12							Visual
			Note: Color change to gray at 3.5 feet.	2	3.5	27		10							Visual
				3	6.0	20		13							Visual
				4	8.5	15		14							Visual
1070.6	10.0		TERMINATION DEPTH = 10.0 FEET												

NOTES/REMARKS:

B-49: PAGE 1 OF 1

TEST BORING_LOG 98113.GPJ PRIMENG.GDT 3/15/99

PRIME ENGINEERING & ARCHITECTURE INC.

TEST BORING No.: B-50

STATION & OFFSET: 1060+00, 30.0 ft. Rt. (North Bound)

ELEVATION: 1042.9ft

CLIENT: Richland Engineering Limited

PROJECT: Subsurface Exploration for MED-IR71-15.94 PROJECT No.: 98113

LOCATION: Medina County, Ohio

DATE STARTED: 2/8/99 DATE COMPLETED: 2/8/99

SAMPLER DIAM: 2.0" TYPE: SS HAMMER WT.: 140lb FALL: 30.0"

CASING DIAM: 2.25" TYPE: HSA OTHER:

DRILLING INFORMATION:
STL / Diedrich D-50 Truck Mounted Drilling Rig

GROUNDWATER INFORMATION:
No groundwater encountered during and upon completion of the drilling operations.

ELEV (ft.)	DEPTH (ft.)	Soil/Rock Symbol	MATERIAL DESCRIPTION	SAMPLE NUMBER	SAMPLE DEPTH	N-VALUE (BLOWS/FT) OR REC%/(ROD%)	PENETROMETER (tons/ft²)	MOISTURE CONTENT (%)	ATTERBERG LIMITS (%) LL	PL	PI	DRY DENSITY (pcf)	UNCONFINED COMPRESSIVE STRENGTH (psf)	MINUS No. 200 SIEVE (%)	CLASSIFICATION SYMBOL
1042.4	0.6		TOPSOIL Stiff to very stiff, brown SANDY SILT, some clay, trace gravel, trace rock fragments, moist.	1	0.0	9		13	28	18	10			68	A-4a
				2	3.0	12		19							Visual
			Note: Color change to gray at 9.0 feet.	3	6.0	15		19							Visual
				4	8.5	17		16							Visual
1032.9	10.0		TERMINATION DEPTH = 10.0 FEET												

NOTES/REMARKS:

B-50: PAGE 1 OF 1

TEST BORING_LOG 98113.GPJ PRIMENG.GDT 3/15/99

PRIME ENGINEERING & ARCHITECTURE INC.

TEST BORING No.: B-51

STATION & OFFSET: 1064+00, 30.0 ft. Lt. (South Bound)

ELEVATION: 1044.4ft

CLIENT: Richland Engineering Limited

PROJECT: Subsurface Exploration for MED-IR71-15.94 PROJECT No.: 98113

LOCATION: Medina County, Ohio

DATE STARTED: 2/17/99 DATE COMPLETED: 2/17/99

SAMPLER DIAM: 2.0" TYPE: SS HAMMER WT.: 140lb FALL: 30.0"

CASING DIAM: 2.25" TYPE: HSA OTHER:

DRILLING INFORMATION:
STL / Diedrich D-50 Truck Mounted Drilling Rig

GROUNDWATER INFORMATION:
No groundwater encountered during and upon completion of the drilling operations.

ELEV (ft.)	DEPTH (ft.)	Soil/Rock Symbol	MATERIAL DESCRIPTION	SAMPLE NUMBER	SAMPLE DEPTH	N-VALUE (BLOWS/FT) OR REC%/(ROD%)	PENETROMETER (tons/ft²)	MOISTURE CONTENT (%)	ATTERBERG LIMITS (%) LL	PL	PI	DRY DENSITY (pcf)	UNCONFINED COMPRESSIVE STRENGTH (psf)	MINUS No. 200 SIEVE (%)	CLASSIFICATION SYMBOL
1044.2	0.3		TOPSOIL Medium stiff to stiff, gray SANDY SILT, some clay, trace gravel, trace rock fragments, moist.	1	0.0	7		13							Visual
				2	3.0	15		15	26	17	9			72	A-4a
				3	6.0	11		15							Visual
				4	8.5	12		17							Visual
1034.4	10.0		TERMINATION DEPTH = 10.0 FEET												

NOTES/REMARKS:

B-51: PAGE 1 OF 1

TEST BORING_LOG 98113.GPJ PRIMENG.GDT 3/15/99

DESIGN AGENCY
PRIME ENGINEERING & ARCHITECT, INC.
1038 GHENT RD, AKRON, OHIO 44333

REVIEWED | DATE | STRUCTURE FILE NUMBER
DRAWN | REVISED
DESIGNED | CHECKED

SOIL PROFILE

MED-71-15.78

34
78

SB49-SB60.DGN PDH 11/2/99

PRIME ENGINEERING & ARCHITECTURE INC.

TEST BORING No.: B-52

STATION & OFFSET: 1068+00, 30.0 ft. Rt. (North Bound)

ELEVATION: 1046.4ft

CLIENT: Richland Engineering Limited

PROJECT: Subsurface Exploration for MED-IR71-15.94 PROJECT No.: 98113

LOCATION: Medina County, Ohio

DATE STARTED: 2/8/99 DATE COMPLETED: 2/8/99

SAMPLER DIAM: 2.0" TYPE: SS HAMMER WT.: 140lb FALL: 30.0"

CASING DIAM: 2.25" TYPE: HSA OTHER:

DRILLING INFORMATION:
STL / Diedrich D-50 Truck Mounted Drilling Rig

GROUNDWATER INFORMATION:
No groundwater encountered during and upon completion of the drilling operations.

ELEV (ft.)	DEPTH (ft.)	Soil/Rock Symbol	MATERIAL DESCRIPTION	SAMPLE NUMBER	SAMPLE DEPTH	N-VALUE (BLOWS/FT) OR REC%/(ROD%)	PENETROMETER (tons/ft²)	MOISTURE CONTENT (%)	ATTERBERG LIMITS (%) LL	PL	PI	DRY DENSITY (pcf)	UNCONFINED COMPRESSIVE STRENGTH (psf)	MINUS No. 200 SIEVE (%)	CLASSIFICATION SYMBOL
1046.2	0.3		TOPSOIL.	1	0.0	8		13							
			Stiff, brown to gray SANDY SILT, some clay, trace gravel, trace rock fragments, moist.												Visual
				2	3.0	15		15	26	16	10			76	A-4a
1040.4	6.0		Very stiff to stiff, gray SILT AND CLAY, little sand, trace rock fragments, moist.	3	6.0	17		17							Visual
				4	8.5	9		16							Visual
1036.4	10.0		TERMINATION DEPTH = 10.0 FEET												

NOTES/REMARKS:

B-52: PAGE 1 OF 1

TEST_BORING_LOG 98113.GPJ PRIMENG.GDT 3/16/99

PRIME ENGINEERING & ARCHITECTURE INC.

TEST BORING No.: B-53

STATION & OFFSET: 1072+00, 30.0 ft. Lt. (South Bound)

ELEVATION: 1048.9ft

CLIENT: Richland Engineering Limited

PROJECT: Subsurface Exploration for MED-IR71-15.94 PROJECT No.: 98113

LOCATION: Medina County, Ohio

DATE STARTED: 2/17/99 DATE COMPLETED: 2/17/99

SAMPLER DIAM: 2.0" TYPE: SS HAMMER WT.: 140lb FALL: 30.0"

CASING DIAM: 2.25" TYPE: HSA OTHER:

DRILLING INFORMATION:
STL / Diedrich D-50 Truck Mounted Drilling Rig

GROUNDWATER INFORMATION:
No groundwater encountered during and upon completion of the drilling operations.

ELEV (ft.)	DEPTH (ft.)	Soil/Rock Symbol	MATERIAL DESCRIPTION	SAMPLE NUMBER	SAMPLE DEPTH	N-VALUE (BLOWS/FT) OR REC%/(ROD%)	PENETROMETER (tons/ft²)	MOISTURE CONTENT (%)	ATTERBERG LIMITS (%) LL	PL	PI	DRY DENSITY (pcf)	UNCONFINED COMPRESSIVE STRENGTH (psf)	MINUS No. 200 SIEVE (%)	CLASSIFICATION SYMBOL
1048.6	0.3		TOPSOIL.	1	0.0	4		18							
			Soft to very stiff, gray SILT AND CLAY, little to trace sand, trace gravel, trace rock fragments, moist.												Visual
				2	3.0	11		21	37	22	15			88	A-6a
				3	6.0	16		15							Visual
				4	8.5	17		15							Visual
1038.9	10.0		TERMINATION DEPTH = 10.0 FEET												

NOTES/REMARKS:

B-53: PAGE 1 OF 1

TEST_BORING_LOG 98113.GPJ PRIMENG.GDT 3/16/99

PRIME ENGINEERING & ARCHITECTURE INC.

TEST BORING No.: B-54

STATION & OFFSET: 1076+00, 30.0 ft. Rt. (North Bound)

ELEVATION: 1051.2ft

CLIENT: Richland Engineering Limited

PROJECT: Subsurface Exploration for MED-IR71-15.94 PROJECT No.: 98113

LOCATION: Medina County, Ohio

DATE STARTED: 2/8/99 DATE COMPLETED: 2/8/99

SAMPLER DIAM: 2.0" TYPE: SS HAMMER WT.: 140lb FALL: 30.0"

CASING DIAM: 2.25" TYPE: HSA OTHER:

DRILLING INFORMATION:
STL / Diedrich D-50 Truck Mounted Drilling Rig

GROUNDWATER INFORMATION:
No groundwater encountered during and upon completion of the operations.

ELEV (ft.)	DEPTH (ft.)	Soil/Rock Symbol	MATERIAL DESCRIPTION	SAMPLE NUMBER	SAMPLE DEPTH	N-VALUE (BLOWS/FT) OR REC%/(ROD%)	PENETROMETER (tons/ft²)	MOISTURE CONTENT (%)	ATTERBERG LIMITS (%) LL	PL	PI	DRY DENSITY (pcf)	UNCONFINED COMPRESSIVE STRENGTH (psf)	MINUS No. 200 SIEVE (%)	CLASSIFICATION SYMBOL
1050.9	0.3		TOPSOIL.	1	0.0	7		14							
			Medium stiff to very stiff, brown to gray SILT AND CLAY, some to little sand, trace gravel, trace rock fragments, moist.												Visual
				2	3.0	19		16	33	20	13			64	A-6a
				3	6.0	11		17							Visual
				4	8.5	9		15							Visual
1041.2	10.0		TERMINATION DEPTH = 10.0 FEET												

NOTES/REMARKS:

B-54: PAGE 1 OF 1

TEST_BORING_LOG 98113.GPJ PRIMENG.GDT 3/16/99

DESIGN AGENCY
PRIME ENGINEERING & ARCHITECT, INC.
1038 GHENT RD, AKRON, OHIO 44333

DESIGNED	DRAWN	REVIEWED	DATE	STRUCTURE FILE NUMBER
CHECKED	REVISED			

SOIL PROFILE

MED-71-15.78

35
78

SB49-SB60.DGN PDH 11/2/99

PRIME ENGINEERING & ARCHITECTURE INC.

TEST BORING No.: B-55

STATION & OFFSET: 1080+00, 30.0 ft. Lt. (South Bound)

ELEVATION: 1053.3ft

CLIENT: Richland Engineering Limited

PROJECT: Subsurface Exploration for MED-IR71-15.94 PROJECT No.: 98113

LOCATION: Medina County, Ohio

DATE STARTED: 2/17/99 DATE COMPLETED: 2/17/99

SAMPLER DIAM: 2.0" TYPE: SS HAMMER WT.: 140lb FALL: 30.0"

CASING DIAM: 2.25" TYPE: HSA OTHER:

DRILLING INFORMATION:
STL / Diedrich D-50 Truck Mounted Drilling Rig

GROUNDWATER INFORMATION:
No groundwater encountered during and upon completion of the drilling operations.

ELEV (ft.)	DEPTH (ft.)	Soil/Rock Symbol	MATERIAL DESCRIPTION	SAMPLE NUMBER	SAMPLE DEPTH	N-VALUE (BLOWS/FT) OR REC%/(RQD%)	PENETROMETER (tons/ft²)	MOISTURE CONTENT (%)	ATTERBERG LIMITS (%) LL	PL	PI	DRY DENSITY (pcf)	UNCONFINED COMPRESSIVE STRENGTH (psf)	MINUS No. 200 SIEVE (%)	CLASSIFICATION SYMBOL
1053.1	0.3		TOPSOIL.												
			Medium stiff to hard, brown SILT AND CLAY, little to some sand, trace gravel, trace rock fragments, moist.	1	0.0	7		13							Visual
				2	3.0	34		14	33	19	14			76	A-6a
				3	6.0	20		16							Visual
			Note: Roots found at 8.5 feet	4	8.5	10		14							Visual
1043.3	10.0		TERMINATION DEPTH = 10.0 FEET												

NOTES/REMARKS:

TEST_BORING_LOG_98113.GPJ_PRIMENG.GDT 3/16/99

B-55: PAGE 1 OF 1

PRIME ENGINEERING & ARCHITECTURE INC.

TEST BORING No.: B-56

STATION & OFFSET: 1084+00, 30.0 ft. Rt. (North Bound)

ELEVATION: 1055.0ft

CLIENT: Richland Engineering Limited

PROJECT: Subsurface Exploration for MED-IR71-15.94 PROJECT No.: 98113

LOCATION: Medina County, Ohio

DATE STARTED: 2/8/99 DATE COMPLETED: 2/8/99

SAMPLER DIAM: 2.0" TYPE: SS HAMMER WT.: 140lb FALL: 30.0"

CASING DIAM: 2.25" TYPE: HSA OTHER:

DRILLING INFORMATION:
STL / Diedrich D-50 Truck Mounted Drilling Rig

GROUNDWATER INFORMATION:
No groundwater encountered during and upon completion of the drilling operations.

ELEV (ft.)	DEPTH (ft.)	Soil/Rock Symbol	MATERIAL DESCRIPTION	SAMPLE NUMBER	SAMPLE DEPTH	N-VALUE (BLOWS/FT) OR REC%/(RQD%)	PENETROMETER (tons/ft²)	MOISTURE CONTENT (%)	ATTERBERG LIMITS (%) LL	PL	PI	DRY DENSITY (pcf)	UNCONFINED COMPRESSIVE STRENGTH (psf)	MINUS No. 200 SIEVE (%)	CLASSIFICATION SYMBOL
1054.8	0.3		TOPSOIL.												
			Soft, brown SILT AND CLAY, little sand, trace gravel, trace rock fragments, trace roots, moist (fill).	1	0.0	4		21	35	21	14			75	A-6a
1053.0	2.0		Very stiff, brown SANDY SILT, some clay, trace gravel, trace rock fragments, moist.	2	3.0	27		14							Visual
				3	6.0	21		14							Visual
				4	8.5	11		25							Visual
1046.0	9.0		Stiff, gray SILT AND CLAY, little sand, trace gravel, trace rock fragments, moist.												
1045.0	10.0		TERMINATION DEPTH = 10.0 FEET												

NOTES/REMARKS:

TEST_BORING_LOG_98113.GPJ_PRIMENG.GDT 3/16/99

B-56: PAGE 1 OF 1

PRIME ENGINEERING & ARCHITECTURE INC.

TEST BORING No.: B-57

STATION & OFFSET: 1088+00, 30.0 ft. Lt. (South Bound)

ELEVATION: 1057.2ft

CLIENT: Richland Engineering Limited

PROJECT: Subsurface Exploration for MED-IR71-15.94 PROJECT No.: 98113

LOCATION: Medina County, Ohio

DATE STARTED: 2/16/99 DATE COMPLETED: 2/16/99

SAMPLER DIAM: 2.0" TYPE: SS HAMMER WT.: 140lb FALL: 30.0"

CASING DIAM: 2.25" TYPE: HSA OTHER:

DRILLING INFORMATION:
STL / Diedrich D-50 Truck Mounted Drilling Rig

GROUNDWATER INFORMATION:
No groundwater encountered during and upon completion of the drilling operations.

ELEV (ft.)	DEPTH (ft.)	Soil/Rock Symbol	MATERIAL DESCRIPTION	SAMPLE NUMBER	SAMPLE DEPTH	N-VALUE (BLOWS/FT) OR REC%/(RQD%)	PENETROMETER (tons/ft²)	MOISTURE CONTENT (%)	ATTERBERG LIMITS (%) LL	PL	PI	DRY DENSITY (pcf)	UNCONFINED COMPRESSIVE STRENGTH (psf)	MINUS No. 200 SIEVE (%)	CLASSIFICATION SYMBOL
1057.0	0.3		TOPSOIL.												
			Stiff, brown SANDY SILT, some clay, trace gravel, trace rock fragments, moist.	1	0.0	10		15							Visual
				2	3.0	15		17	30	20	10			80	A-4a
				3	6.0	12		14							Visual
				4	8.5	11		18							Visual
1047.2	10.0		TERMINATION DEPTH = 10.0 FEET												

NOTES/REMARKS:

TEST_BORING_LOG_98113.GPJ_PRIMENG.GDT 3/16/99

B-57: PAGE 1 OF 1

DESIGN AGENCY
PRIME ENGINEERING & ARCHITECT, INC.
1038 GHENT RD, AKRON, OHIO 44333

DESIGNED	DRAWN	REVIEWED	DATE
CHECKED	REVISED	STRUCTURE FILE NUMBER	

SOIL PROFILE

MED-71-15.78

SB49-SB60.DGN PDH 11/2/99

PRIME ENGINEERING & ARCHITECTURE INC.

TEST BORING No.: B-58

STATION & OFFSET: 1092+00, 30.0 ft. Rt. (North Bound)

ELEVATION: 1059.3ft

CLIENT: Richland Engineering Limited

PROJECT: Subsurface Exploration for MED-IR71-15.94 PROJECT No.: 98113

LOCATION: Medina County, Ohio

DATE STARTED: 2/8/99 DATE COMPLETED: 2/8/99

SAMPLER DIAM: 2.0" TYPE: SS HAMMER WT.: 140lb FALL: 30.0"

CASING DIAM: 2.25" TYPE: HSA OTHER:

DRILLING INFORMATION:
STL / Diedrich D-50 Truck Mounted Drilling Rig

GROUNDWATER INFORMATION:
No groundwater encountered during and upon completion of the drilling operations.

ELEV (ft.)	DEPTH (ft.)	Soil/Rock Symbol	MATERIAL DESCRIPTION	SAMPLE NUMBER	SAMPLE DEPTH	N-VALUE (BLOWS/FT) OR RECS/RQD(%)	PENETROMETER (tons/ft²)	MOISTURE CONTENT (%)	ATTERBERG LIMITS (%) LL	PL	PI	DRY DENSITY (pcf)	UNCONFINED COMPRESSIVE STRENGTH (psf)	MINUS No. 200 SIEVE (%)	CLASSIFICATION SYMBOL
1059.1	0.3		TOPSOIL Medium stiff, brown SILT AND CLAY, little sand, trace gravel, trace roots (fill).	1	0.0	6		15							Visual
1056.3	3.0		Stiff, brown and gray SILT AND CLAY, trace sand, moist.	2	3.0	12		23	35	20	15			93	A-6a
				3	6.0	14		22							Visual
1050.8	8.5		Very stiff, brown SILT AND CLAY, little sand, trace rock fragments, moist.	4	8.5	19		15							Visual
1049.3	10.0		TERMINATION DEPTH = 10.0 FEET												

NOTES/REMARKS:

TEST_BORING_LOG_98113.GPJ PRIMENG.GDT 3/16/99

B-58: PAGE 1 OF 1

PRIME ENGINEERING & ARCHITECTURE INC.

TEST BORING No.: B-59

STATION & OFFSET: 1096+00, 30.0 ft. Lt. (South Bound)

ELEVATION: 1061.5ft

CLIENT: Richland Engineering Limited

PROJECT: Subsurface Exploration for MED-IR71-15.94 PROJECT No.: 98113

LOCATION: Medina County, Ohio

DATE STARTED: 2/16/99 DATE COMPLETED: 2/16/99

SAMPLER DIAM: 2.0" TYPE: SS HAMMER WT.: 140lb FALL: 30.0"

CASING DIAM: 2.25" TYPE: HSA OTHER:

DRILLING INFORMATION:
STL / Diedrich D-50 Truck Mounted Drilling Rig

GROUNDWATER INFORMATION:
No groundwater encountered during and upon completion of the drilling operations.

ELEV (ft.)	DEPTH (ft.)	Soil/Rock Symbol	MATERIAL DESCRIPTION	SAMPLE NUMBER	SAMPLE DEPTH	N-VALUE (BLOWS/FT) OR RECS/RQD(%)	PENETROMETER (tons/ft²)	MOISTURE CONTENT (%)	ATTERBERG LIMITS (%) LL	PL	PI	DRY DENSITY (pcf)	UNCONFINED COMPRESSIVE STRENGTH (psf)	MINUS No. 200 SIEVE (%)	CLASSIFICATION SYMBOL
1061.3	0.3		TOPSOIL Stiff, brown SILT AND CLAY, little sand, trace gravel, trace rock fragments, moist (fill).	1	0.0	11		15							Visual
1058.2	3.3		Note: Trace organic from 3.0 to 3.3 feet. Very stiff to hard, brown SILT AND CLAY, little sand, trace gravel, trace rock fragments, moist.	2	3.0	27		17	32	20	12			78	A-6a
				3	6.0	28		14							Visual
			Note: Color change to gray at 9.0 feet.	4	8.5	34		12							Visual
1051.5	10.0		TERMINATION DEPTH = 10.0 FEET												

NOTES/REMARKS:

TEST_BORING_LOG_98113.GPJ PRIMENG.GDT 3/16/99

B-59: PAGE 1 OF 1

PRIME ENGINEERING & ARCHITECTURE INC.

TEST BORING No.: B-60

STATION & OFFSET: 1112+00, 30.0 ft. Lt. (South Bound)

ELEVATION: 1070.0ft

CLIENT: Richland Engineering Limited

PROJECT: Subsurface Exploration for MED-IR71-15.94 PROJECT No.: 98113

LOCATION: Medina County, Ohio

DATE STARTED: 2/16/99 DATE COMPLETED: 2/16/99

SAMPLER DIAM: 2.0" TYPE: SS HAMMER WT.: 140lb FALL: 30.0"

CASING DIAM: 2.25" TYPE: HSA OTHER:

DRILLING INFORMATION:
STL / Diedrich D-50 Truck Mounted Drilling Rig

GROUNDWATER INFORMATION:
No groundwater encountered during and upon completion of the drilling operations.

ELEV (ft.)	DEPTH (ft.)	Soil/Rock Symbol	MATERIAL DESCRIPTION	SAMPLE NUMBER	SAMPLE DEPTH	N-VALUE (BLOWS/FT) OR RECS/RQD(%)	PENETROMETER (tons/ft²)	MOISTURE CONTENT (%)	ATTERBERG LIMITS (%) LL	PL	PI	DRY DENSITY (pcf)	UNCONFINED COMPRESSIVE STRENGTH (psf)	MINUS No. 200 SIEVE (%)	CLASSIFICATION SYMBOL
1069.8	0.2		TOPSOIL Stiff to very stiff, brown SILT AND CLAY, some sand, trace gravel, trace rock fragments, moist.	1	0.0	12		16	31	19	12			71	A-6a
				2	3.0	13		16							Visual
				3	6.0	13		15							Visual
				4	8.5	27		15							Visual
1060.0	10.0		TERMINATION DEPTH = 10.0 FEET												

NOTES/REMARKS:

TEST_BORING_LOG_98113.GPJ PRIMENG.GDT 3/16/99

B-60: PAGE 1 OF 1

DESIGN AGENCY
PRIME ENGINEERING & ARCHITECT, INC.
1038 GHENT RD, AKRON, OHIO 44333

REVIEWED | DATE | STRUCTURE FILE NUMBER
DRAWN | REVISED
DESIGNED | CHECKED

SOIL PROFILE

MED-71-15.78

37
78

SB49-SB60.DGN PDH 11/2/99

PRIME ENGINEERING & ARCHITECTURE INC.

TEST BORING No.: B-61

STATION & OFFSET: 1116+00, 30.0 ft. Rt. (North Bound)

ELEVATION: 1072.4ft

CLIENT: Richland Engineering Limited

PROJECT: Subsurface Exploration for MED-IR71-15.94 — PROJECT No.: 98113

LOCATION: Medina County, Ohio

DATE STARTED: 2/8/99 — DATE COMPLETED: 2/8/99

SAMPLER DIAM: 2.0" — TYPE: SS — HAMMER WT.: 140lb — FALL: 30.0"

CASING DIAM: 2.25" — TYPE: HSA — OTHER:

DRILLING INFORMATION:
STL / Diedrich D-50 Truck Mounted Drilling Rig

GROUNDWATER INFORMATION:
No groundwater encountered during and upon completion of the drilling operations.

ELEV (ft.)	DEPTH (ft.)	Solid Rock Symbol	MATERIAL DESCRIPTION	FIELD DATA: SAMPLE NUMBER	SAMPLE DEPTH	N-VALUE (BLOWS/FT) OR REC%(RQD%)	PENETROMETER (tons/ft²)	LABORATORY DATA: MOISTURE CONTENT (%)	ATTERBERG LIMITS (%): LIQUID LIMIT (LL)	PLASTIC LIMIT (PL)	PLASTICITY INDEX (PI)	DRY DENSITY (pcf)	UNCONFINED COMPRESSIVE STRENGTH (psf)	MINUS No. 200 SIEVE (%)	CLASSIFICATION SYMBOL
1072.2	0.3		TOPSOIL	1	0.0	9		15	30	20	10			69	A-4a
			Stiff to very stiff, brown and gray SANDY SILT, some clay, trace gravel, trace rock fragments, moist (fill).	2	3.0	27		10							Visual
				3	6.0	20		13							Visual
1063.9	8.5		Stiff, brown SANDY SILT, some clay, trace gravel, trace rock fragments, moist.	4	8.5	23		18							Visual
1062.4	10.0		TERMINATION DEPTH = 10.0 FEET												

NOTES/REMARKS:

TEST_BORING_LOG 98113.GPJ PRIMENG.GDT 3/16/99

B-61: PAGE 1 OF 1

PRIME ENGINEERING & ARCHITECTURE INC.

TEST BORING No.: B-62

STATION & OFFSET: 1120+00, 30.0 ft. Lt. (South Bound)

ELEVATION: 1074.7ft

CLIENT: Richland Engineering Limited

PROJECT: Subsurface Exploration for MED-IR71-15.94 — PROJECT No.: 98113

LOCATION: Medina County, Ohio

DATE STARTED: 2/16/99 — DATE COMPLETED: 2/16/99

SAMPLER DIAM: 2.0" — TYPE: SS — HAMMER WT.: 140lb — FALL: 30.0"

CASING DIAM: 2.25" — TYPE: HSA — OTHER:

DRILLING INFORMATION:
STL / Diedrich D-50 Truck Mounted Drilling Rig

GROUNDWATER INFORMATION:
No groundwater encountered during and upon completion of the drilling operations.

ELEV (ft.)	DEPTH (ft.)	Solid Rock Symbol	MATERIAL DESCRIPTION	FIELD DATA: SAMPLE NUMBER	SAMPLE DEPTH	N-VALUE (BLOWS/FT) OR REC%(RQD%)	PENETROMETER (tons/ft²)	LABORATORY DATA: MOISTURE CONTENT (%)	ATTERBERG LIMITS (%): LIQUID LIMIT (LL)	PLASTIC LIMIT (PL)	PLASTICITY INDEX (PI)	DRY DENSITY (pcf)	UNCONFINED COMPRESSIVE STRENGTH (psf)	MINUS No. 200 SIEVE (%)	CLASSIFICATION SYMBOL
1074.5	0.5		TOPSOIL	1	0.0	9		14							Visual
			Stiff to hard, brown SILT AND CLAY, some sand, little gravel and rock fragments, moist.	2	3.0	27		15	32	19	13			67	A-6a
				3	6.0	27		16							Visual
				4	8.5	40		16							Visual
1064.7	10.0		TERMINATION DEPTH = 10.0 FEET												

NOTES/REMARKS:

TEST_BORING_LOG 98113.GPJ PRIMENG.GDT 3/16/99

B-62: PAGE 1 OF 1

PRIME ENGINEERING & ARCHITECTURE INC.

TEST BORING No.: B-63

STATION & OFFSET: 1124+00, 30.0 ft. Rt. (North Bound)

ELEVATION: 1076.9ft

CLIENT: Richland Engineering Limited

PROJECT: Subsurface Exploration for MED-IR71-15.94 — PROJECT No.: 98113

LOCATION: Medina County, Ohio

DATE STARTED: 2/8/99 — DATE COMPLETED: 2/8/99

SAMPLER DIAM: 2.0" — TYPE: SS — HAMMER WT.: 140lb — FALL: 30.0"

CASING DIAM: 2.25" — TYPE: HSA — OTHER:

DRILLING INFORMATION:
STL / Diedrich D-50 Truck Mounted Drilling Rig

GROUNDWATER INFORMATION:
No groundwater encountered during and upon completion of the drilling operations.

ELEV (ft.)	DEPTH (ft.)	Solid Rock Symbol	MATERIAL DESCRIPTION	FIELD DATA: SAMPLE NUMBER	SAMPLE DEPTH	N-VALUE (BLOWS/FT) OR REC%(RQD%)	PENETROMETER (tons/ft²)	LABORATORY DATA: MOISTURE CONTENT (%)	ATTERBERG LIMITS (%): LIQUID LIMIT (LL)	PLASTIC LIMIT (PL)	PLASTICITY INDEX (PI)	DRY DENSITY (pcf)	UNCONFINED COMPRESSIVE STRENGTH (psf)	MINUS No. 200 SIEVE (%)	CLASSIFICATION SYMBOL
1076.7	0.3		TOPSOIL	1	0.0	10		15							Visual
			Stiff to hard, brown SILT AND CLAY, little sand, trace gravel, trace rock fragments, trace roots, moist (fill).	2	3.0	35		18							Visual
1070.4	6.5		Stiff, brown SANDY SILT, trace clay, trace gravel, trace rock fragments, moist.	3	6.0	13		14							Visual
1068.4	8.5		Stiff, brown SILT AND CLAY, little sand, trace gravel, trace rock fragments, moist.	4	8.5	14		24							Visual
1066.9	10.0		TERMINATION DEPTH = 10.0 FEET												

NOTES/REMARKS:

TEST_BORING_LOG 98113.GPJ PRIMENG.GDT 3/16/99

B-63: PAGE 1 OF 1

DESIGN AGENCY
PRIME ENGINEERING & ARCHITECT, INC.
1038 GHENT RD, AKRON, OHIO 44333

REVIEWED | DATE | STRUCTURE FILE NUMBER

DRAWN | REVISED

DESIGNED | CHECKED

SOIL PROFILE

MED-71-15.78

38
78

SB6I-SB72.DGN PDH 11/2/99

PRIME ENGINEERING & ARCHITECTURE INC.

TEST BORING No.: B-64

STATION & OFFSET: 1128+00, 30.0 ft. Lt. (South Bound)

ELEVATION: 1079.7ft

CLIENT: Richland Engineering Limited

PROJECT: Subsurface Exploration for MED-IR71-15.94 PROJECT No.: 98113

LOCATION: Medina County, Ohio

DATE STARTED: 2/16/99 DATE COMPLETED: 2/16/99

SAMPLER DIAM: 2.0" TYPE: SS HAMMER WT.: 140lb FALL: 30.0"

CASING DIAM: 2.25" TYPE: HSA OTHER:

DRILLING INFORMATION:
STL / Diedrich D-50 Truck Mounted Drilling Rig

GROUNDWATER INFORMATION:
No groundwater encountered during and upon completion of the drilling operations.

ELEV (ft.)	DEPTH (ft.)	Soil/Rock Symbol	MATERIAL DESCRIPTION	SAMPLE NUMBER	SAMPLE DEPTH	N-VALUE (BLOWS/FT) OR REC%/(RQD%)	PENETROMETER (ton/ft²)	MOISTURE CONTENT (%)	ATTERBERG LIMITS (%) LL	PL	PI	DRY DENSITY (pcf)	UNCONFINED COMPRESSIVE STRENGTH (psf)	MINUS No. 200 SIEVE (%)	CLASSIFICATION SYMBOL
1079.5	0.3		TOPSOIL	1	0.0	8		17	33	20	13			77	A-6a
			Medium stiff to hard, brown SILT AND CLAY, little sand, trace gravel, trace rock fragments, moist.	2	3.0	41		15							Visual
				3	6.0	36		16							Visual
				4	8.5	50+		13							Visual
1069.7	10.0		TERMINATION DEPTH = 10.0 FEET												

NOTES/REMARKS:

B-64: PAGE 1 OF 1

TEST_BORING LOG 98113.GPJ PRIMENG.GDT 3/16/99

PRIME ENGINEERING & ARCHITECTURE INC.

TEST BORING No.: B-65

STATION & OFFSET: 1132+00, 30.0 ft. Rt. (North Bound)

ELEVATION: 1083.2ft

CLIENT: Richland Engineering Limited

PROJECT: Subsurface Exploration for MED-IR71-15.94 PROJECT No.: 98113

LOCATION: Medina County, Ohio

DATE STARTED: 2/8/99 DATE COMPLETED: 2/8/99

SAMPLER DIAM: 2.0" TYPE: SS HAMMER WT.: 140lb FALL: 30.0"

CASING DIAM: 2.25" TYPE: HSA OTHER:

DRILLING INFORMATION:
STL / Diedrich D-50 Truck Mounted Drilling Rig

GROUNDWATER INFORMATION:
No groundwater encountered during and upon completion of the drilling operations.

ELEV (ft.)	DEPTH (ft.)	Soil/Rock Symbol	MATERIAL DESCRIPTION	SAMPLE NUMBER	SAMPLE DEPTH	N-VALUE (BLOWS/FT) OR REC%/(RQD%)	PENETROMETER (ton/ft²)	MOISTURE CONTENT (%)	ATTERBERG LIMITS (%) LL	PL	PI	DRY DENSITY (pcf)	UNCONFINED COMPRESSIVE STRENGTH (psf)	MINUS No. 200 SIEVE (%)	CLASSIFICATION SYMBOL
1082.8	0.4		TOPSOIL	1	0.0	9		17							Visual
			Medium stiff, brown SILT AND CLAY, little sand, trace topsoil, moist (fill).												
1080.2	3.0		Stiff to very stiff, gray SANDY SILT, some clay, moist.	2	3.0	16		20	31	22	9			99	A-4a
				3	6.0	13		20							Visual
				4	8.5	15		19							Visual
1073.2	10.0		TERMINATION DEPTH = 10.0 FEET												

NOTES/REMARKS:

B-65: PAGE 1 OF 1

TEST_BORING LOG 98113.GPJ PRIMENG.GDT 3/16/99

PRIME ENGINEERING & ARCHITECTURE INC.

TEST BORING No.: B-66

STATION & OFFSET: 1136+00, 30.0 ft. Lt. (South Bound)

ELEVATION: 1086.8ft

CLIENT: Richland Engineering Limited

PROJECT: Subsurface Exploration for MED-IR71-15.94 PROJECT No.: 98113

LOCATION: Medina County, Ohio

DATE STARTED: 2/16/99 DATE COMPLETED: 2/16/99

SAMPLER DIAM: 2.0" TYPE: SS HAMMER WT.: 140lb FALL: 30.0"

CASING DIAM: 2.25" TYPE: HSA OTHER:

DRILLING INFORMATION:
STL / Diedrich D-50 Truck Mounted Drilling Rig

GROUNDWATER INFORMATION:
Water encountered at 8.8 feet during the drilling and dry at completion

ELEV (ft.)	DEPTH (ft.)	Soil/Rock Symbol	MATERIAL DESCRIPTION	SAMPLE NUMBER	SAMPLE DEPTH	N-VALUE (BLOWS/FT) OR REC%/(RQD%)	PENETROMETER (ton/ft²)	MOISTURE CONTENT (%)	ATTERBERG LIMITS (%) LL	PL	PI	DRY DENSITY (pcf)	UNCONFINED COMPRESSIVE STRENGTH (psf)	MINUS No. 200 SIEVE (%)	CLASSIFICATION SYMBOL
1086.6	0.3		TOPSOIL	1	0.0	6		22							Visual
			Medium stiff, brown to gray SILT AND CLAY, little sand, trace gravel, trace rock fragments, trace roots, moist.	2	3.0	11		23	32	21	11			98	A-6a
1080.8	6.0		Stiff, gray SANDY SILT, some clay, moist with occasional sand and silt seams.	3	6.0	9		23							Visual
				4	8.5	9		21							Visual
1076.8	10.0		TERMINATION DEPTH 10.0 FEET												

NOTES/REMARKS:

B-66: PAGE 1 OF 1

TEST_BORING LOG 98113.GPJ PRIMENG.GDT 3/17/99

DESIGN AGENCY
PRIME ENGINEERING & ARCHITECT, INC.
1038 GHENT RD, AKRON, OHIO 44333

REVIEWED | DATE | STRUCTURE FILE NUMBER
DRAWN | REVISED
DESIGNED | CHECKED

SOIL PROFILE

MED-71-15.78

39
78

SB61-SB72.DGN PDH 11/2/99

PRIME ENGINEERING & ARCHITECTURE INC.

TEST BORING No.: B-67

STATION & OFFSET: 1140+00, 30.0 ft. Rt. (North Bound)

ELEVATION: 1090.3ft

CLIENT: Richland Engineering Limited

PROJECT: Subsurface Exploration for MED-IR71-15.94 PROJECT No.: 98113

LOCATION: Medina County, Ohio

DATE STARTED: 2/8/99 DATE COMPLETED: 2/8/99

SAMPLER DIAM: 2.0" TYPE: SS HAMMER WT.: 140lb FALL: 30.0"

CASING DIAM: 2.25" TYPE: HSA OTHER:

DRILLING INFORMATION:
STL / Diedrich D-50 Truck Mounted Drilling Rig

GROUNDWATER INFORMATION:
No groundwater encountered during and upon completion of the drilling operations.

ELEV (ft.)	DEPTH (ft.)	Soil/Rock Symbol	MATERIAL DESCRIPTION	SAMPLE NUMBER	SAMPLE DEPTH	N-VALUE (BLOWS/FT) OR REC%/(RQD%)	PENETROMETER (tons/ft²)	MOISTURE CONTENT (%)	ATTERBERG LIMITS (%) LL	PL	PI	DRY DENSITY (pcf)	UNCONFINED COMPRESSIVE STRENGTH (psf)	MINUS No. 200 SIEVE (%)	CLASSIFICATION SYMBOL
1090.0	0.3		TOPSOIL Stiff, brown SILT AND CLAY, little sand, trace gravel, trace roots, moist (fill).	1	0.0	10		17	32	21	11			66	A-6a
1087.3	3.0		Very stiff to stiff, gray SANDY SILT, some clay, trace gravel, trace rock fragments, moist.	2	3.0	22		11	24	16	8			64	A-4a
				3	6.0	11		14							Visual
				4	8.5	10		14							Visual
1080.3	10.0		TERMINATION DEPTH = 10.0 FEET												

NOTES/REMARKS:

TEST_BORING_LOG_98113.GPJ PRIMENG.GDT 3/16/99

PRIME ENGINEERING & ARCHITECTURE INC.

TEST BORING No.: B-68

STATION & OFFSET: 1144+00, 30.0 ft. Lt. (South Bound)

ELEVATION: 1093.7ft

CLIENT: Richland Engineering Limited

PROJECT: Subsurface Exploration for MED-IR71-15.94 PROJECT No.: 98113

LOCATION: Medina County, Ohio

DATE STARTED: 2/16/99 DATE COMPLETED: 2/16/99

SAMPLER DIAM: 2.0" TYPE: SS HAMMER WT.: 140lb FALL: 30.0"

CASING DIAM: 2.25" TYPE: HSA OTHER:

DRILLING INFORMATION:
STL / Diedrich D-50 Truck Mounted Drilling Rig

GROUNDWATER INFORMATION:
No groundwater encountered during and upon completion of the drilling operations.

ELEV (ft.)	DEPTH (ft.)	Soil/Rock Symbol	MATERIAL DESCRIPTION	SAMPLE NUMBER	SAMPLE DEPTH	N-VALUE (BLOWS/FT) OR REC%/(RQD%)	PENETROMETER (tons/ft²)	MOISTURE CONTENT (%)	ATTERBERG LIMITS (%) LL	PL	PI	DRY DENSITY (pcf)	UNCONFINED COMPRESSIVE STRENGTH (psf)	MINUS No. 200 SIEVE (%)	CLASSIFICATION SYMBOL
1093.5	0.3		TOPSOIL Medium stiff, brown SILT AND CLAY, little sand, trace gravel, trace rock fragments, trace roots, moist (fill).	1	0.0	8		19							Visual
1090.7	3.0		Stiff, gray SANDY SILT, some clay, trace gravel, trace rock fragments, moist.	2	3.0	14		11	22	16	6			62	A-4a
				3	6.0	12		14							Visual
				4	8.5	10		15							Visual
1083.7	10.0		TERMINATION DEPTH = 10.0 FEET												

NOTES/REMARKS:

TEST_BORING_LOG_98113.GPJ PRIMENG.GDT 3/16/99

PRIME ENGINEERING & ARCHITECTURE INC.

TEST BORING No.: B-69

STATION & OFFSET: 1148+00, 30.0 ft. Rt. (North Bound)

ELEVATION: 1096.7ft

CLIENT: Richland Engineering Limited

PROJECT: Subsurface Exploration for MED-IR71-15.94 PROJECT No.: 98113

LOCATION: Medina County, Ohio

DATE STARTED: 2/8/99 DATE COMPLETED: 2/8/99

SAMPLER DIAM: 2.0" TYPE: SS HAMMER WT.: 140lb FALL: 30.0"

CASING DIAM: 2.25" TYPE: HSA OTHER:

DRILLING INFORMATION:
STL / Diedrich D-50 Truck Mounted Drilling Rig

GROUNDWATER INFORMATION:
No groundwater encountered during and upon completion of the drilling operations.

ELEV (ft.)	DEPTH (ft.)	Soil/Rock Symbol	MATERIAL DESCRIPTION	SAMPLE NUMBER	SAMPLE DEPTH	N-VALUE (BLOWS/FT) OR REC%/(RQD%)	PENETROMETER (tons/ft²)	MOISTURE CONTENT (%)	ATTERBERG LIMITS (%) LL	PL	PI	DRY DENSITY (pcf)	UNCONFINED COMPRESSIVE STRENGTH (psf)	MINUS No. 200 SIEVE (%)	CLASSIFICATION SYMBOL
1096.5	0.3		TOPSOIL Medium stiff, brown SANDY SILT, little clay, trace gravel, trace roots, moist (fill).	1	0.0	5		17							Visual
1093.7	3.0		Stiff, gray SANDY SILT, some clay, trace gravel, trace rock fragments, moist.	2	3.0	9		19	27	18	9			86	A-4a
				3	6.0	9		19							Visual
				4	8.5	11		18							Visual
1086.7	10.0		TERMINATION DEPTH = 10.0 FEET												

NOTES/REMARKS:

TEST_BORING_LOG_98113.GPJ PRIMENG.GDT 3/16/99

DESIGN AGENCY
PRIME ENGINEERING & ARCHITECT, INC.
1038 GHENT RD, AKRON, OHIO 44333

DRAWN | DESIGNED | REVIEWED | CHECKED | DATE | REVISED | STRUCTURE FILE NUMBER

SOIL PROFILE

MED-71-15.78

SB6I-SB72.DGN PDH 11/2/99

PRIME ENGINEERING & ARCHITECTURE INC.

TEST BORING No.: B-70

STATION & OFFSET: 1152+00, 30.0 ft. Lt. (South Bound)

ELEVATION: 1100.4ft

CLIENT: Richland Engineering Limited

PROJECT: Subsurface Exploration for MED-IR71-15.94 PROJECT No.: 98113

LOCATION: Medina County, Ohio

DATE STARTED: 2/16/99 DATE COMPLETED: 2/16/99

SAMPLER DIAM: 2.0" TYPE: SS HAMMER WT.: 140lb FALL: 30.0"

CASING DIAM: 2.25" TYPE: HSA OTHER:

DRILLING INFORMATION:
STL / Diedrich D-50 Truck Mounted Drilling Rig

GROUNDWATER INFORMATION:
No groundwater encountered during and upon completion of the drilling operations.

ELEV (ft.)	DEPTH (ft.)	Soil/ Rock Symbol	MATERIAL DESCRIPTION	SAMPLE NUMBER	SAMPLE DEPTH	N-VALUE (BLOWS/FT) OR REC%/(RQD%)	PENETROMETER (tons/ft²)	MOISTURE CONTENT (%)	ATTERBERG LIMITS (%) LL	PL	PI	DRY DENSITY (pcf)	UNCONFINED COMPRESSIVE STRENGTH (psf)	MINUS No. 200 SIEVE (%)	CLASSIFICATION SYMBOL
1100.1	0.3		TOPSOIL	1	0.0	8		18							Visual
			Medium stiff to very stiff, brown SILT, some clay, trace sand, trace gravel, trace rock fragments, moist.	2	3.0	17		14	26	17	9			92	A-4b
			Note: Color change to gray at 3.5 feet.	3	6.0	11		22							Visual
				4	8.5	13		17							Visual
1090.4	10.0		TERMINATION DEPTH = 10.0 FEET												

NOTES/REMARKS:

B-70: PAGE 1 OF 1

TEST BORING LOG 98113.GPJ PRIMENG.GDT 3/17/99

PRIME ENGINEERING & ARCHITECTURE INC.

TEST BORING No.: B-71

STATION & OFFSET: 1156+00, 30.0 ft. Rt. (North Bound)

ELEVATION: 1104.2ft

CLIENT: Richland Engineering Limited

PROJECT: Subsurface Exploration for MED-IR71-15.94 PROJECT No.: 98113

LOCATION: Medina County, Ohio

DATE STARTED: 2/8/99 DATE COMPLETED: 2/8/99

SAMPLER DIAM: 2.0" TYPE: SS HAMMER WT.: 140lb FALL: 30.0"

CASING DIAM: 2.25" TYPE: HSA OTHER:

DRILLING INFORMATION:
STL / Diedrich D-50 Truck Mounted Drilling Rig

GROUNDWATER INFORMATION:
No groundwater encountered during and upon completion of the drilling operations.

ELEV (ft.)	DEPTH (ft.)	Soil/ Rock Symbol	MATERIAL DESCRIPTION	SAMPLE NUMBER	SAMPLE DEPTH	N-VALUE (BLOWS/FT) OR REC%/(RQD%)	PENETROMETER (tons/ft²)	MOISTURE CONTENT (%)	ATTERBERG LIMITS (%) LL	PL	PI	DRY DENSITY (pcf)	UNCONFINED COMPRESSIVE STRENGTH (psf)	MINUS No. 200 SIEVE (%)	CLASSIFICATION SYMBOL
1103.8	0.4		TOPSOIL	1	0.0	9		17							Visual
			Stiff to very stiff, brown SANDY SILT, some clay, trace gravel, trace rock fragments, moist.	2	3.0	10		13	24	16	8			59	A-4a
			Note: Color change to gray at 4.0 feet.	3	6.0	10		14							Visual
				4	8.5	14		22							Visual
1094.2	10.0		TERMINATION DEPTH = 10.0 FEET												

NOTES/REMARKS:

B-71: PAGE 1 OF 1

TEST BORING LOG 98113.GPJ PRIMENG.GDT 3/16/99

PRIME ENGINEERING & ARCHITECTURE INC.

TEST BORING No.: B-72

STATION & OFFSET: 1160+00, 30.0 ft. Lt. (South Bound)

ELEVATION: 1107.6ft

CLIENT: Richland Engineering Limited

PROJECT: Subsurface Exploration for MED-IR71-15.94 PROJECT No.: 98113

LOCATION: Medina County, Ohio

DATE STARTED: 2/16/99 DATE COMPLETED: 2/16/99

SAMPLER DIAM: 2.0" TYPE: SS HAMMER WT.: 140lb FALL: 30.0"

CASING DIAM: 2.25" TYPE: HSA OTHER:

DRILLING INFORMATION:
STL / Diedrich D-50 Truck Mounted Drilling Rig

GROUNDWATER INFORMATION:
No groundwater encountered during and upon completion of the drilling operations.

ELEV (ft.)	DEPTH (ft.)	Soil/ Rock Symbol	MATERIAL DESCRIPTION	SAMPLE NUMBER	SAMPLE DEPTH	N-VALUE (BLOWS/FT) OR REC%/(RQD%)	PENETROMETER (tons/ft²)	MOISTURE CONTENT (%)	ATTERBERG LIMITS (%) LL	PL	PI	DRY DENSITY (pcf)	UNCONFINED COMPRESSIVE STRENGTH (psf)	MINUS No. 200 SIEVE (%)	CLASSIFICATION SYMBOL
1107.4	0.5		TOPSOIL	1	0.0	5		16	32	20	12			74	A-6a
			Medium stiff to hard, brown SILT AND CLAY, little sand, trace gravel, trace rock fragments, moist (fill).	2	3.0	15		18							Visual
				3	6.0	13		20							Visual
				4	8.5	50		14							Visual
1097.6	10.0		TERMINATION DEPTH = 10.0 FEET												

NOTES/REMARKS:

B-72: PAGE 1 OF 1

TEST BORING LOG 98113.GPJ PRIMENG.GDT 3/16/99

DESIGN AGENCY
PRIME ENGINEERING & ARCHITECT, INC.
1038 GHENT RD, AKRON, OHIO 44333

DRAWN | DATE | REVIEWED | STRUCTURE FILE NUMBER
DESIGNED | | CHECKED | REVISED

SOIL PROFILE

MED-71-15.78

41
78

SB61-SB72.DGN PDH 11/2/99

PRIME ENGINEERING & ARCHITECTURE INC.

TEST BORING No.: B-73

STATION & OFFSET: 1164+00, 30.0 ft. Rt. (North Bound)

ELEVATION: 1110.8ft

CLIENT: Richland Engineering Limited

PROJECT: Subsurface Exploration for MED-IR71-15.94 PROJECT No.: 98113

LOCATION: Medina County, Ohio

DATE STARTED: 2/8/99 DATE COMPLETED: 2/8/99

SAMPLER DIAM: 2.0" TYPE: SS HAMMER WT.: 140lb FALL: 30.0"

CASING DIAM: 2.25" TYPE: HSA OTHER:

DRILLING INFORMATION:
STL / Diedrich D-50 Truck Mounted Drilling Rig

GROUNDWATER INFORMATION:
No groundwater encountered during and upon completion of the drilling operations.

ELEV (ft.)	DEPTH (ft.)	Soil/Rock Symbol	MATERIAL DESCRIPTION	SAMPLE NUMBER	SAMPLE DEPTH	N-VALUE (BLOWS/FT) OR REC%/RQD%	PENETROMETER (tons/ft²)	MOISTURE CONTENT (%)	ATTERBERG LIMITS (%) LL	PL	PI	DRY DENSITY (pcf)	UNCONFINED COMPRESSIVE STRENGTH (psf)	MINUS No. 200 SIEVE (%)	CLASSIFICATION SYMBOL
1110.5	0.3		TOPSOIL Stiff to very stiff, brown SILT AND CLAY, little sand, no to trace gravel, moist.	1	0.0	8		25	37	26	11			83	A-6a
				2	3.0	16		16							Visual
1104.8	6.0		Medium dense, brown GRAVEL WITH SAND, little silt, trace clay, moist.	3	6.0	15		15						21	A-1-b
1102.3	8.5		Medium dense, gray SILT, little clay, trace sand, moist.	4	8.5	12		22							Visual
1100.8	10.0		TERMINATION DEPTH = 10.0 FEET												

NOTES/REMARKS:

B-73: PAGE 1 OF 1

TEST_BORING_LOG 98113.GPJ PRIMENG.GDT 3/16/99

PRIME ENGINEERING & ARCHITECTURE INC.

TEST BORING No.: B-74

STATION & OFFSET: 1168+00, 30.0 ft. Lt. (South Bound)

ELEVATION: 1114.5ft

CLIENT: Richland Engineering Limited

PROJECT: Subsurface Exploration for MED-IR71-15.94 PROJECT No.: 98113

LOCATION: Medina County, Ohio

DATE STARTED: 2/16/99 DATE COMPLETED: 2/16/99

SAMPLER DIAM: 2.0" TYPE: SS HAMMER WT.: 140lb FALL: 30.0"

CASING DIAM: 2.25" TYPE: HSA OTHER:

DRILLING INFORMATION:
STL / Diedrich D-50 Truck Mounted Drilling Rig

GROUNDWATER INFORMATION:
No groundwater encountered during and upon completion of the drilling operations.

ELEV (ft.)	DEPTH (ft.)	Soil/Rock Symbol	MATERIAL DESCRIPTION	SAMPLE NUMBER	SAMPLE DEPTH	N-VALUE (BLOWS/FT) OR REC%/RQD%	PENETROMETER (tons/ft²)	MOISTURE CONTENT (%)	ATTERBERG LIMITS (%) LL	PL	PI	DRY DENSITY (pcf)	UNCONFINED COMPRESSIVE STRENGTH (psf)	MINUS No. 200 SIEVE (%)	CLASSIFICATION SYMBOL
1114.3	0.3		TOPSOIL Stiff to hard, brown SILT AND CLAY, little sand, trace gravel, trace rock fragments, moist.	1	0.0	10		15							Visual
				2	3.0	39		17	31	19	12			71	A-6a
				3	6.0	34		12							Visual
				4	8.5	30		13							Visual
1104.5	10.0		TERMINATION DEPTH = 10.0 FEET												

NOTES/REMARKS:

B-74: PAGE 1 OF 1

TEST_BORING_LOG 98113.GPJ PRIMENG.GDT 3/17/99

PRIME ENGINEERING & ARCHITECTURE INC.

TEST BORING No.: B-75

STATION & OFFSET: 1172+00, 30.0 ft. Rt. (North Bound)

ELEVATION: 1117.7ft

CLIENT: Richland Engineering Limited

PROJECT: Subsurface Exploration for MED-IR71-15.94 PROJECT No.: 98113

LOCATION: Medina County, Ohio

DATE STARTED: 2/8/99 DATE COMPLETED: 2/8/99

SAMPLER DIAM: 2.0" TYPE: SS HAMMER WT.: 140lb FALL: 30.0"

CASING DIAM: 2.25" TYPE: HSA OTHER:

DRILLING INFORMATION:
STL / Diedrich D-50 Truck Mounted Drilling Rig

GROUNDWATER INFORMATION:
No groundwater encountered during and upon completion of the drilling operations.

ELEV (ft.)	DEPTH (ft.)	Soil/Rock Symbol	MATERIAL DESCRIPTION	SAMPLE NUMBER	SAMPLE DEPTH	N-VALUE (BLOWS/FT) OR REC%/RQD%	PENETROMETER (tons/ft²)	MOISTURE CONTENT (%)	ATTERBERG LIMITS (%) LL	PL	PI	DRY DENSITY (pcf)	UNCONFINED COMPRESSIVE STRENGTH (psf)	MINUS No. 200 SIEVE (%)	CLASSIFICATION SYMBOL
1117.4	0.3		TOPSOIL Stiff to very stiff, brown and gray SILT AND CLAY, little sand, trace gravel, trace rock fragments, moist with occasional silt seams.	1	0.0	15		15	32	20	12			71	A-6a
				2	3.0	12		17							Visual
				3	6.0	22		22							Visual
			Note: Color change to gray at 9.0 feet.	4	8.5	15		20							Visual
1107.7	10.0		TERMINATION DEPTH = 10.0 FEET												

NOTES/REMARKS:

B-75: PAGE 1 OF 1

TEST_BORING_LOG 98113.GPJ PRIMENG.GDT 3/16/99

DESIGN AGENCY
PRIME ENGINEERING & ARCHITECT, INC.
1038 GHENT RD, AKRON, OHIO 44333

DESIGNED	DRAWN	REVIEWED	DATE
CHECKED	REVISED	STRUCTURE FILE NUMBER	

SOIL PROFILE

MED-71-15.78

42
78

SB73-SB84.DGN PDH 11/2/99

PRIME ENGINEERING & ARCHITECTURE INC.

TEST BORING No.: B-76

STATION & OFFSET: 1176+00, 30.0 ft. Lt. (South Bound)

ELEVATION: 1121.3ft

CLIENT: Richland Engineering Limited

PROJECT: Subsurface Exploration for MED-IR71-15.94 PROJECT No.: 98113

LOCATION: Medina County, Ohio

DATE STARTED: 2/16/99 DATE COMPLETED: 2/16/99

SAMPLER DIAM: 2.0" TYPE: SS HAMMER WT.: 140lb FALL: 30.0"

CASING DIAM: 2.25" TYPE: HSA OTHER:

DRILLING INFORMATION:
STL / Diedrich D-50 Truck Mounted Drilling Rig

GROUNDWATER INFORMATION:
No groundwater encountered during and upon completion of the drilling operations.

ELEV (ft.)	DEPTH (ft.)	Soil/Rock Symbol	MATERIAL DESCRIPTION	SAMPLE NUMBER	SAMPLE DEPTH	N-VALUE (BLOWS/FT) OR REC%/(RQD%)	PENETROMETER (tons/ft²)	MOISTURE CONTENT (%)	ATTERBERG LIMITS (%) LL	PL	PI	DRY DENSITY (pcf)	UNCONFINED COMPRESSIVE STRENGTH (psf)	MINUS No. 200 SIEVE (%)	CLASSIFICATION SYMBOL
1121.1	0.3		TOPSOIL												Visual
			Stiff to very stiff, brown mottled gray SILT AND CLAY, little sand, trace gravel, trace rock fragments, moist.	1	0.0	10		14							
				2	3.0	23		14	34	21	13			74	A-6a
			Note: Color change to brown at 3.5 feet.												
				3	6.0	28		15							Visual
				4	8.5	25		13							Visual
1111.3	10.0		TERMINATION DEPTH = 10.0 FEET												

NOTES/REMARKS:

TEST BORING LOG 98113.GPJ PRIMENG.GDT 3/16/99

B-76: PAGE 1 OF 1

PRIME ENGINEERING & ARCHITECTURE INC.

TEST BORING No.: B-77

STATION & OFFSET: 1180+00, 30.0 ft. Rt. (North Bound)

ELEVATION: 1124.4ft

CLIENT: Richland Engineering Limited

PROJECT: Subsurface Exploration for MED-IR71-15.94 PROJECT No.: 98113

LOCATION: Medina County, Ohio

DATE STARTED: 2/9/99 DATE COMPLETED: 2/9/99

SAMPLER DIAM: 2.0" TYPE: SS HAMMER WT.: 140lb FALL: 30.0"

CASING DIAM: 2.25" TYPE: HSA OTHER:

DRILLING INFORMATION:
STL / Diedrich D-50 Truck Mounted Drilling Rig

GROUNDWATER INFORMATION:
No groundwater encountered during and upon completion of the drilling operations.

ELEV (ft.)	DEPTH (ft.)	Soil/Rock Symbol	MATERIAL DESCRIPTION	SAMPLE NUMBER	SAMPLE DEPTH	N-VALUE (BLOWS/FT) OR REC%/(RQD%)	PENETROMETER (tons/ft²)	MOISTURE CONTENT (%)	ATTERBERG LIMITS (%) LL	PL	PI	DRY DENSITY (pcf)	UNCONFINED COMPRESSIVE STRENGTH (psf)	MINUS No. 200 SIEVE (%)	CLASSIFICATION SYMBOL
1123.9	0.5		TOPSOIL												Visual
			Stiff, brown SANDY SILT, little clay, trace gravel, trace rock fragments, trace roots, moist (fill).	1	0.0	9		17							
1121.4	3.0		Stiff, gray SANDY SILT, some clay, moist.	2	3.0	11		25	30	20	10			99	A-4a
1118.4	6.0		Stiff to very stiff, gray SILT AND CLAY, trace sand, moist with occasional silt layers.	3	6.0	13		24							Visual
				4	8.5	19		21							Visual
1114.4	10.0		TERMINATION DEPTH = 10.0 FEET												

NOTES/REMARKS:

TEST BORING LOG 98113.GPJ PRIMENG.GDT 3/17/99

B-77: PAGE 1 OF 1

PRIME ENGINEERING & ARCHITECTURE INC.

TEST BORING No.: B-78

STATION & OFFSET: 1184+00, 30.0 ft. Lt. (South Bound)

ELEVATION: 1127.4ft

CLIENT: Richland Engineering Limited

PROJECT: Subsurface Exploration for MED-IR71-15.94 PROJECT No.: 98113

LOCATION: Medina County, Ohio

DATE STARTED: 2/16/99 DATE COMPLETED: 2/16/99

SAMPLER DIAM: 2.0" TYPE: SS HAMMER WT.: 140lb FALL: 30.0"

CASING DIAM: 2.25" TYPE: HSA OTHER:

DRILLING INFORMATION:
STL / Diedrich D-50 Truck Mounted Drilling Rig

GROUNDWATER INFORMATION:
No groundwater encountered during and upon completion of the drilling operations.

ELEV (ft.)	DEPTH (ft.)	Soil/Rock Symbol	MATERIAL DESCRIPTION	SAMPLE NUMBER	SAMPLE DEPTH	N-VALUE (BLOWS/FT) OR REC%/(RQD%)	PENETROMETER (tons/ft²)	MOISTURE CONTENT (%)	ATTERBERG LIMITS (%) LL	PL	PI	DRY DENSITY (pcf)	UNCONFINED COMPRESSIVE STRENGTH (psf)	MINUS No. 200 SIEVE (%)	CLASSIFICATION SYMBOL
1127.0	0.4		TOPSOIL												Visual
			Stiff to very stiff, brown SANDY SILT, some clay, trace gravel, trace rock fragments, moist.	1	0.0	10		14							
				2	3.0	17		15	29	19	10			75	A-4a
			Note: Color change to gray at 3.5 feet.												
				3	6.0	12		15							Visual
				4	8.5	14		16							Visual
1117.4	10.0		TERMINATION DEPTH = 10.0 FEET												

NOTES/REMARKS:

TEST BORING LOG 98113.GPJ PRIMENG.GDT 3/16/99

B-78: PAGE 1 OF 1

DESIGN AGENCY
PRIME ENGINEERING & ARCHITECT, INC.
1038 GHENT RD, AKRON, OHIO 44333

REVIEWED | DATE | STRUCTURE FILE NUMBER

DRAWN | REVISED

DESIGNED | CHECKED

SOIL PROFILE

MED-71-15.78

SB73-SB84.DGN PDH 11/2/99

PRIME ENGINEERING & ARCHITECTURE INC.

TEST BORING No.: B-79

STATION & OFFSET: 1188+00, 30.0 ft. Rt. (North Bound)

ELEVATION: 1130.1ft

CLIENT: Richland Engineering Limited

PROJECT: Subsurface Exploration for MED-IR71-15.94 PROJECT No.: 98113

LOCATION: Medina County, Ohio

DATE STARTED: 2/9/99 DATE COMPLETED: 2/9/99

SAMPLER DIAM: 2.0" TYPE: SS HAMMER WT.: 140lb FALL: 30.0"

CASING DIAM: 2.25" TYPE: HSA OTHER:

DRILLING INFORMATION:
STL / Diedrich D-50 Truck Mounted Drilling Rig

GROUNDWATER INFORMATION:
No groundwater encountered during and upon completion of the drilling operations.

ELEV (ft.)	DEPTH (ft.)	Soil/Rock Symbol	MATERIAL DESCRIPTION	SAMPLE NUMBER	SAMPLE DEPTH	FIELD DATA: N-VALUE (BLOWS/FT) OR REC%/(RQD%)	FIELD DATA: PENETROMETER (tons/ft²)	LAB: MOISTURE CONTENT (%)	LAB: ATTERBERG LIMITS (%) LL	LAB: ATTERBERG LIMITS (%) PL	LAB: PLASTICITY INDEX	LAB: DRY DENSITY (pcf)	LAB: UNCONFINED COMPRESSIVE STRENGTH (psf)	LAB: MINUS No. 200 SIEVE (%)	LAB: CLASSIFICATION SYMBOL
1129.8	0.3		TOPSOIL Stiff to very stiff, brown SILT AND CLAY, some sand, trace gravel, trace rock fragments, moist (possible fill).	1	0.0	13		18	32	20	12			72	A-6a
				2	3.0	16		17							Visual
			Note: Color change to gray at 5.0 feet.	3	6.0	9		16							Visual
				4	8.5	8		14							Visual
1120.1	10.0		TERMINATION DEPTH 10.0 FEET												

NOTES/REMARKS:

B-79: PAGE 1 OF 1

TEST_BORING_LOG 98113.GPJ PRIMENG.GDT 3/16/99

PRIME ENGINEERING & ARCHITECTURE INC.

TEST BORING No.: B-80

STATION & OFFSET: 1192+00, 30.0 ft. Lt. (South Bound)

ELEVATION: 1132.9ft

CLIENT: Richland Engineering Limited

PROJECT: Subsurface Exploration for MED-IR71-15.94 PROJECT No.: 98113

LOCATION: Medina County, Ohio

DATE STARTED: 2/16/99 DATE COMPLETED: 2/16/99

SAMPLER DIAM: 2.0" TYPE: SS HAMMER WT.: 140lb FALL: 30.0"

CASING DIAM: 2.25" TYPE: HSA OTHER:

DRILLING INFORMATION:
STL / Diedrich D-50 Truck Mounted Drilling Rig

GROUNDWATER INFORMATION:
No groundwater encountered during and upon completion of the drilling operations.

ELEV (ft.)	DEPTH (ft.)	Soil/Rock Symbol	MATERIAL DESCRIPTION	SAMPLE NUMBER	SAMPLE DEPTH	FIELD DATA: N-VALUE (BLOWS/FT) OR REC%/(RQD%)	FIELD DATA: PENETROMETER (tons/ft²)	LAB: MOISTURE CONTENT (%)	LAB: ATTERBERG LIMITS (%) LL	LAB: ATTERBERG LIMITS (%) PL	LAB: PLASTICITY INDEX	LAB: DRY DENSITY (pcf)	LAB: UNCONFINED COMPRESSIVE STRENGTH (psf)	LAB: MINUS No. 200 SIEVE (%)	LAB: CLASSIFICATION SYMBOL
1132.7	0.3		TOPSOIL Stiff to hard, brown SILT AND CLAY, little sand, trace to little gravel and rock fragments, moist.	1	0.0	10		15	34	20	14			76	A-6a
				2	3.0	27		16							Visual
				3	6.0	38		13							Visual
				4	8.5	50+		12							Visual
1122.9	10.0		TERMINATION DEPTH = 10.0 FEET												

NOTES/REMARKS:

B-80: PAGE 1 OF 1

TEST_BORING_LOG 98113.GPJ PRIMENG.GDT 3/16/99

PRIME ENGINEERING & ARCHITECTURE INC.

TEST BORING No.: B-81

STATION & OFFSET: 1196+00, 30.0 ft. Rt. (North Bound)

ELEVATION: 1135.5ft

CLIENT: Richland Engineering Limited

PROJECT: Subsurface Exploration for MED-IR71-15.94 PROJECT No.: 98113

LOCATION: Medina County, Ohio

DATE STARTED: 2/9/99 DATE COMPLETED: 2/9/99

SAMPLER DIAM: 2.0" TYPE: SS HAMMER WT.: 140lb FALL: 30.0"

CASING DIAM: 2.25" TYPE: HSA OTHER:

DRILLING INFORMATION:
STL / Diedrich D-50 Truck Mounted Drilling Rig

GROUNDWATER INFORMATION:
No groundwater encountered during and upon completion of the drilling operations.

ELEV (ft.)	DEPTH (ft.)	Soil/Rock Symbol	MATERIAL DESCRIPTION	SAMPLE NUMBER	SAMPLE DEPTH	FIELD DATA: N-VALUE (BLOWS/FT) OR REC%/(RQD%)	FIELD DATA: PENETROMETER (tons/ft²)	LAB: MOISTURE CONTENT (%)	LAB: ATTERBERG LIMITS (%) LL	LAB: ATTERBERG LIMITS (%) PL	LAB: PLASTICITY INDEX	LAB: DRY DENSITY (pcf)	LAB: UNCONFINED COMPRESSIVE STRENGTH (psf)	LAB: MINUS No. 200 SIEVE (%)	LAB: CLASSIFICATION SYMBOL
1135.2	0.3		TOPSOIL Stiff to very stiff, brown SANDY SILT, some clay, trace gravel, trace rock fragments, moist.	1	0.0	9		17	31	21	10			76	A-4a
				2	3.0	22		16							Visual
			Note: Auger refusal at 7.3 feet.	3	6.0	50+		15							Visual
1128.2	7.3		TERMINATION DEPTH = 7.3 FEET												

NOTES/REMARKS:

B-81: PAGE 1 OF 1

TEST_BORING_LOG 98113.GPJ PRIMENG.GDT 3/16/99

DESIGN AGENCY
PRIME ENGINEERING & ARCHITECT, INC.
1038 GHENT RD, AKRON, OHIO 44333

DESIGNED | DRAWN | CHECKED | REVIEWED | REVISED | DATE | STRUCTURE FILE NUMBER

SOIL PROFILE

MED-71-15.78

44
78

SB73-SB84.DGN PDH 11/2/99

PRIME ENGINEERING & ARCHITECTURE INC.

TEST BORING No.: B-82

STATION & OFFSET: 1200+00, 30.0 ft. Lt. (South Bound)

ELEVATION: 1138.1ft

CLIENT: Richland Engineering Limited

PROJECT: Subsurface Exploration for MED-IR71-15.94 — PROJECT No.: 98113

LOCATION: Medina County, Ohio

DATE STARTED: 2/15/99 — DATE COMPLETED: 2/15/99

SAMPLER DIAM: 2.0" — TYPE: SS — HAMMER WT.: 140lb — FALL: 30.0"

CASING DIAM: 2.25" — TYPE: HSA — OTHER:

DRILLING INFORMATION:
STL / Diedrich D-50 Truck Mounted Drilling Rig

GROUNDWATER INFORMATION:
No groundwater encountered during and upon completion of the drilling operations.

ELEV (ft.)	DEPTH (ft.)	Soil/Rock Symbol	MATERIAL DESCRIPTION	SAMPLE NUMBER	SAMPLE DEPTH	N-VALUE (BLOWS/FT) OR REC%/RQD%	PENETROMETER (tons/ft²)	MOISTURE CONTENT (%)	ATTERBERG LIMITS (%) LL	PL	PI	DRY DENSITY (pcf)	UNCONFINED COMPRESSIVE STRENGTH (psf)	MINUS No. 200 SIEVE (%)	CLASSIFICATION SYMBOL
1137.9	0.3		TOPSOIL.	1	0.0	10		17	33	20	13			76	A-6a
			Stiff to very stiff, brown SILT AND CLAY, little sand, trace gravel, trace rock fragments, moist.	2	3.0	23		16							Visual
				3	6.0	15		18							Visual
				4	8.5	24		15							Visual
1128.1	10.0		TERMINATION DEPTH = 10.0 FEET												

NOTES/REMARKS:

TEST BORING_LOG 98113.GPJ PRIMENG.GDT 3/16/99

B-82: PAGE 1 OF 1

PRIME ENGINEERING & ARCHITECTURE INC.

TEST BORING No.: B-83

STATION & OFFSET: 1204+00, 30.0 ft. Rt. (North Bound)

ELEVATION: 1140.8ft

CLIENT: Richland Engineering Limited

PROJECT: Subsurface Exploration for MED-IR71-15.94 — PROJECT No.: 98113

LOCATION: Medina County, Ohio

DATE STARTED: 2/9/99 — DATE COMPLETED: 2/9/99

SAMPLER DIAM: 2.0" — TYPE: SS — HAMMER WT.: 140lb — FALL: 30.0"

CASING DIAM: 2.25" — TYPE: HSA — OTHER:

DRILLING INFORMATION:
STL / Diedrich D-50 Truck Mounted Drilling Rig

GROUNDWATER INFORMATION:
No groundwater encountered during and upon completion of the drilling operations.

ELEV (ft.)	DEPTH (ft.)	Soil/Rock Symbol	MATERIAL DESCRIPTION	SAMPLE NUMBER	SAMPLE DEPTH	N-VALUE (BLOWS/FT) OR REC%/RQD%	PENETROMETER (tons/ft²)	MOISTURE CONTENT (%)	ATTERBERG LIMITS (%) LL	PL	PI	DRY DENSITY (pcf)	UNCONFINED COMPRESSIVE STRENGTH (psf)	MINUS No. 200 SIEVE (%)	CLASSIFICATION SYMBOL
1140.5	0.3		TOPSOIL.	1	0.0	11		15							Visual
			Stiff to very stiff, brown SANDY SILT, some clay, trace gravel, trace rock fragments, moist.	2	3.0	27		15							Visual
				3	6.0	27		17							Visual
				4	8.5	17		16							Visual
1130.8	10.0		TERMINATION DEPTH = 10.0 FEET												

NOTES/REMARKS:

TEST BORING_LOG 98113.GPJ PRIMENG.GDT 3/16/99

B-83: PAGE 1 OF 1

PRIME ENGINEERING & ARCHITECTURE INC.

TEST BORING No.: B-84

STATION & OFFSET: 1208+00, 30.0 ft. Lt. (South Bound)

ELEVATION: 1143.5ft

CLIENT: Richland Engineering Limited

PROJECT: Subsurface Exploration for MED-IR71-15.94 — PROJECT No.: 98113

LOCATION: Medina County, Ohio

DATE STARTED: 2/15/99 — DATE COMPLETED: 2/15/99

SAMPLER DIAM: 2.0" — TYPE: SS — HAMMER WT.: 140lb — FALL: 30.0"

CASING DIAM: 2.25" — TYPE: HSA — OTHER:

DRILLING INFORMATION:
STL / Diedrich D-50 Truck Mounted Drilling Rig

GROUNDWATER INFORMATION:
No groundwater encountered during and upon completion of the drilling operations.

ELEV (ft.)	DEPTH (ft.)	Soil/Rock Symbol	MATERIAL DESCRIPTION	SAMPLE NUMBER	SAMPLE DEPTH	N-VALUE (BLOWS/FT) OR REC%/RQD%	PENETROMETER (tons/ft²)	MOISTURE CONTENT (%)	ATTERBERG LIMITS (%) LL	PL	PI	DRY DENSITY (pcf)	UNCONFINED COMPRESSIVE STRENGTH (psf)	MINUS No. 200 SIEVE (%)	CLASSIFICATION SYMBOL
1143.3	0.5		TOPSOIL.	1	0.0	9		14							Visual
			Stiff to hard, brown, SANDY SILT, little clay, little gravel and rock fragments, moist (fill)..	2	3.0	40		10	24	16	8			60	A-4a
1139.5	4.0		Very stiff, gray SILT AND CLAY, some sand, trace gravel, trace rock fragments, moist.	3	6.0	27		18							Visual
				4	8.5	23		14							Visual
1133.5	10.0		TERMINATION DEPTH = 10.0 FEET												

NOTES/REMARKS:

TEST BORING_LOG 98113.GPJ PRIMENG.GDT 3/16/99

B-84: PAGE 1 OF 1

DESIGN AGENCY
PRIME ENGINEERING & ARCHITECT, INC.
1038 GHENT RD, AKRON, OHIO 44333

DESIGNED | DRAWN | CHECKED | REVIEWED | REVISED | DATE

STRUCTURE FILE NUMBER

SOIL PROFILE

MED-71-15.78

45
78

SB73-SB84.DGN PDH 11/2/99

PRIME ENGINEERING & ARCHITECTURE INC.

TEST BORING No.: B-85

STATION & OFFSET: 1212+00, 30.0 ft. Rt. (North Bound)

ELEVATION: 1146.2ft

CLIENT: Richland Engineering Limited

PROJECT: Subsurface Exploration for MED-IR71-15.94 PROJECT No.: 98113

LOCATION: Medina County, Ohio

DATE STARTED: 2/9/99 DATE COMPLETED: 2/9/99

SAMPLER DIAM: 2.0" TYPE: SS HAMMER WT.: 140lb FALL: 30.0"

CASING DIAM: 2.25" TYPE: HSA OTHER:

DRILLING INFORMATION:
STL / Diedrich D-50 Truck Mounted Drilling Rig

GROUNDWATER INFORMATION:
No groundwater encountered during and upon completion of the drilling operations.

ELEV (ft.)	DEPTH (ft.)	Soil/Rock Symbol	MATERIAL DESCRIPTION	SAMPLE NUMBER	SAMPLE DEPTH	N-VALUE (BLOWS/FT) OR REC%/(RQD%)	PENETROMETER (tons/ft²)	MOISTURE CONTENT (%)	ATTERBERG LIMITS (%) LL	PL	PI	DRY DENSITY (pcf)	UNCONFINED COMPRESSIVE STRENGTH (psf)	MINUS No. 200 SIEVE (%)	CLASSIFICATION SYMBOL
1145.9	0.3		TOPSOIL Stiff, brown to gray SANDY SILT, some clay, trace gravel, trace rock fragments, moist (fill).	1	0.0	8		14	29	19	10			69	A-4a
				2	3.0	14		13							Visual
1140.2	6.0		Stiff, gray SILT AND CLAY, little sand, trace gravel, trace rock fragments, moist.	3	6.0	8		14							Visual
				4	8.5	9		17							Visual
1136.2	10.0		TERMINATION DEPTH = 10.0 FEET												

NOTES/REMARKS:

B-85: PAGE 1 OF 1

TEST_BORING_LOG 98113.GPJ PRMENG.GDT 3/16/99

PRIME ENGINEERING & ARCHITECTURE INC.

TEST BORING No.: B-86

STATION & OFFSET: 1216+00, 30.0 ft. Lt. (South Bound)

ELEVATION: 1148.9ft

CLIENT: Richland Engineering Limited

PROJECT: Subsurface Exploration for MED-IR71-15.94 PROJECT No.: 98113

LOCATION: Medina County, Ohio

DATE STARTED: 2/15/99 DATE COMPLETED: 2/15/99

SAMPLER DIAM: 2.0" TYPE: SS HAMMER WT.: 140lb FALL: 30.0"

CASING DIAM: 2.25" TYPE: HSA OTHER:

DRILLING INFORMATION:
STL / Diedrich D-50 Truck Mounted Drilling Rig

GROUNDWATER INFORMATION:
No groundwater encountered during and upon completion of the drilling operations.

ELEV (ft.)	DEPTH (ft.)	Soil/Rock Symbol	MATERIAL DESCRIPTION	SAMPLE NUMBER	SAMPLE DEPTH	N-VALUE (BLOWS/FT) OR REC%/(RQD%)	PENETROMETER (tons/ft²)	MOISTURE CONTENT (%)	ATTERBERG LIMITS (%) LL	PL	PI	DRY DENSITY (pcf)	UNCONFINED COMPRESSIVE STRENGTH (psf)	MINUS No. 200 SIEVE (%)	CLASSIFICATION SYMBOL
1148.6	0.3		TOPSOIL Medium stiff, brown, SANDY SILT, some clay, little gravel and rock fragments, trace roots, moist (fill).	1	0.0	9		12							Visual
1145.9	3.0		Hard to very stiff, gray SANDY SILT, some clay, little gravel and rock fragments, moist.	2	3.0	47		13	28	18	10			70	A-4a
				3	6.0	24		14							Visual
				4	8.5	15		13							Visual
1138.9	10.0		TERMINATION DEPTH = 10.0 FEET												

NOTES/REMARKS:

B-86: PAGE 1 OF 1

TEST_BORING_LOG 98113.GPJ PRMENG.GDT 3/16/99

PRIME ENGINEERING & ARCHITECTURE INC.

TEST BORING No.: B-87

STATION & OFFSET: 1220+00, 30.0 ft. Rt. (North Bound)

ELEVATION: 1151.5ft

CLIENT: Richland Engineering Limited

PROJECT: Subsurface Exploration for MED-IR71-15.94 PROJECT No.: 98113

LOCATION: Medina County, Ohio

DATE STARTED: 2/9/99 DATE COMPLETED: 2/9/99

SAMPLER DIAM: 2.0" TYPE: SS HAMMER WT.: 140lb FALL: 30.0"

CASING DIAM: 2.25" TYPE: HSA OTHER:

DRILLING INFORMATION:
STL / Diedrich D-50 Truck Mounted Drilling Rig

GROUNDWATER INFORMATION:
No groundwater encountered during and upon completion of the drilling operations.

ELEV (ft.)	DEPTH (ft.)	Soil/Rock Symbol	MATERIAL DESCRIPTION	SAMPLE NUMBER	SAMPLE DEPTH	N-VALUE (BLOWS/FT) OR REC%/(RQD%)	PENETROMETER (tons/ft²)	MOISTURE CONTENT (%)	ATTERBERG LIMITS (%) LL	PL	PI	DRY DENSITY (pcf)	UNCONFINED COMPRESSIVE STRENGTH (psf)	MINUS No. 200 SIEVE (%)	CLASSIFICATION SYMBOL
1151.3	0.3		TOPSOIL Stiff, brown SANDY SILT, some clay, trace gravel, trace roots, moist (fill).	1	0.0	9		15							Visual
1148.5	3.0		Medium dense, gray GRAVEL WITH SAND, little silt, trace clay, moist (fill).	2	3.0	25		12						23	A-1-b
1145.5	6.0		Stiff, gray SANDY SILT, some clay, trace gravel, trace rock fragments, moist.	3	6.0	15		14							Visual
				4	8.5	9		14							Visual
1141.5	10.0		TERMINATION DEPTH = 10.0 FEET												

NOTES/REMARKS:

B-87: PAGE 1 OF 1

TEST_BORING_LOG 98113.GPJ PRMENG.GDT 3/16/99

DESIGN AGENCY
PRIME ENGINEERING & ARCHITECT, INC.
1038 GHENT RD, AKRON, OHIO 44333

DESIGNED | DRAWN | CHECKED | REVIEWED | REVISED | DATE | STRUCTURE FILE NUMBER

SOIL PROFILE

MED-71-15.78

46
78

SB85-SB96.DGN PDH 11/2/99

PRIME ENGINEERING & ARCHITECTURE INC.

TEST BORING No.: B-88

STATION & OFFSET: 1224+00, 30.0 ft. Lt. (South Bound)

ELEVATION: 1154.2ft

CLIENT: Richland Engineering Limited

PROJECT: Subsurface Exploration for MED-IR71-15.94 PROJECT No.: 98113

LOCATION: Medina County, Ohio

DATE STARTED: 2/15/99 DATE COMPLETED: 2/15/99

SAMPLER DIAM: 2.0" TYPE: SS HAMMER WT.: 140lb FALL: 30.0"

CASING DIAM: 2.25" TYPE: HSA OTHER:

DRILLING INFORMATION:
STL / Diedrich D-50 Truck Mounted Drilling Rig

GROUNDWATER INFORMATION:
No groundwater encountered during and upon completion of the drilling operations.

ELEV (ft.)	DEPTH (ft.)	Soil/ Rock Symbol	MATERIAL DESCRIPTION	SAMPLE NUMBER	SAMPLE DEPTH	N-VALUE (BLOWS/FT) OR REC%/(RQD%)	PENETROMETER (tons/ft²)	MOISTURE CONTENT (%)	ATTERBERG LIMITS (%) LL	PL	PI	DRY DENSITY (pcf)	UNCONFINED COMPRESSIVE STRENGTH (psf)	MINUS No. 200 SIEVE (%)	CLASSIFICATION SYMBOL
1154.0	0.3		TOPSOIL Stiff, gray SANDY SILT, some clay, trace gravel, trace rock fragments, moist (fill).	1	0.0	13		12	26	19	7			74	A-4a
1151.2	3.0		Stiff to very stiff, gray SILT AND CLAY, little sand, trace gravel, trace rock fragments, moist.	2	3.0	14		14							Visual
				3	6.0	13		15							Visual
				4	8.5	25		14							Visual
1144.2	10.0		TERMINATION DEPTH = 10.0 FEET												

NOTES/REMARKS:

TEST_BORING_LOG 98113.GPJ PRIMENG.GDT 3/16/99

B-88: PAGE 1 OF 1

PRIME ENGINEERING & ARCHITECTURE INC.

TEST BORING No.: B-89

STATION & OFFSET: 1228+00, 30.0 ft. Rt. (North Bound)

ELEVATION: 1156.9ft

CLIENT: Richland Engineering Limited

PROJECT: Subsurface Exploration for MED-IR71-15.94 PROJECT No.: 98113

LOCATION: Medina County, Ohio

DATE STARTED: 2/9/99 DATE COMPLETED: 2/9/99

SAMPLER DIAM: 2.0" TYPE: SS HAMMER WT.: 140lb FALL: 30.0"

CASING DIAM: 2.25" TYPE: HSA OTHER:

DRILLING INFORMATION:
STL / Diedrich D-50 Truck Mounted Drilling Rig

GROUNDWATER INFORMATION:
No groundwater encountered during and upon completion of the drilling operations.

ELEV (ft.)	DEPTH (ft.)	Soil/ Rock Symbol	MATERIAL DESCRIPTION	SAMPLE NUMBER	SAMPLE DEPTH	N-VALUE (BLOWS/FT) OR REC%/(RQD%)	PENETROMETER (tons/ft²)	MOISTURE CONTENT (%)	ATTERBERG LIMITS (%) LL	PL	PI	DRY DENSITY (pcf)	UNCONFINED COMPRESSIVE STRENGTH (psf)	MINUS No. 200 SIEVE (%)	CLASSIFICATION SYMBOL
1156.6	0.3		TOPSOIL Stiff to very stiff, gray SANDY SILT, some clay, trace gravel, trace rock fragments, moist.	1	0.0	9		16							Visual
				2	3.0	16		15	25	18	7			76	A-4a
				3	6.0	10		14							Visual
				4	8.5	11		16							Visual
1146.9	10.0		TERMINATION DEPTH = 10.0 FEET												

NOTES/REMARKS:

TEST_BORING_LOG 98113.GPJ PRIMENG.GDT 3/16/99

B-89: PAGE 1 OF 1

PRIME ENGINEERING & ARCHITECTURE INC.

TEST BORING No.: B-90

STATION & OFFSET: 1232+00, 30.0 ft. Lt. (South Bound)

ELEVATION: 1159.5ft

CLIENT: Richland Engineering Limited

PROJECT: Subsurface Exploration for MED-IR71-15.94 PROJECT No.: 98113

LOCATION: Medina County, Ohio

DATE STARTED: 2/15/99 DATE COMPLETED: 2/15/99

SAMPLER DIAM: 2.0" TYPE: SS HAMMER WT.: 140lb FALL: 30.0"

CASING DIAM: 2.25" TYPE: HSA OTHER:

DRILLING INFORMATION:
STL / Diedrich D-50 Truck Mounted Drilling Rig

GROUNDWATER INFORMATION:
No groundwater encountered during and upon completion of the drilling operations.

ELEV (ft.)	DEPTH (ft.)	Soil/ Rock Symbol	MATERIAL DESCRIPTION	SAMPLE NUMBER	SAMPLE DEPTH	N-VALUE (BLOWS/FT) OR REC%/(RQD%)	PENETROMETER (tons/ft²)	MOISTURE CONTENT (%)	ATTERBERG LIMITS (%) LL	PL	PI	DRY DENSITY (pcf)	UNCONFINED COMPRESSIVE STRENGTH (psf)	MINUS No. 200 SIEVE (%)	CLASSIFICATION SYMBOL
1159.3	0.2		TOPSOIL Stiff to very stiff, brown SILTY CLAY, little sand, trace gravel, trace rock fragments, moist.	1	0.0	11		15							Visual
				2	3.0	27		17	37	20	17			81	A-6b
				3	6.0	30		16							Visual
1153.5	6.0		Hard, brown SILT AND CLAY, little sand, trace gravel, trace rock fragments, moist. Note: Auger refusal at 7.5 feet due to boulder.												
1151.5	8.0		TERMINATION DEPTH = 8.0 FEET												

NOTES/REMARKS:

TEST_BORING_LOG 98113.GPJ PRIMENG.GDT 3/16/99

B-90: PAGE 1 OF 1

DESIGN AGENCY
PRIME ENGINEERING & ARCHITECT, INC.
1038 GHENT RD, AKRON, OHIO 44333

REVIEWED | DATE | STRUCTURE FILE NUMBER

DRAWN | REVISED

DESIGNED | CHECKED

SOIL PROFILE

MED-71-15.78

47
78

SB85-SB96.DGN PDH 11/2/99

PRIME ENGINEERING & ARCHITECT INC.

TEST BORING No.: B-91

STATION & OFFSET: 1236+00, 30.0 ft. Rt. (North Bound)

ELEVATION: 1161.8ft

CLIENT: Richland Engineering Limited

PROJECT: Subsurface Exploration for MED-IR71-15.94 PROJECT No.: 98113

LOCATION: Medina County, Ohio

DATE STARTED: 2/9/99 DATE COMPLETED: 2/9/99

SAMPLER DIAM: 2.0" TYPE: SS HAMMER WT.: 140lb FALL: 30.0"

CASING DIAM: 2.25" TYPE: HSA OTHER:

DRILLING INFORMATION:
STL / Diedrich D-50 Truck Mounted Drilling Rig

GROUNDWATER INFORMATION:
No groundwater encountered during and upon completion of the drilling operations.

ELEV (ft.)	DEPTH (ft.)	Soil/Rock Symbol	MATERIAL DESCRIPTION	SAMPLE NUMBER	SAMPLE DEPTH	N-VALUE (BLOWS/FT) OR REC%/(ROD%)	PENETROMETER (tons/ft²)	MOISTURE CONTENT (%)	ATTERBERG LIMITS (%) LIQUID LIMIT	ATTERBERG LIMITS (%) PL	ATTERBERG LIMITS (%) PLASTICITY INDEX	DRY DENSITY (pcf)	UNCONFINED COMPRESSIVE STRENGTH (psf)	MINUS No. 200 SIEVE (%)	CLASSIFICATION SYMBOL
1161.5	0.3		TOPSOIL	1	0.0	10		15							Visual
			Stiff to hard, brown SILT AND CLAY, little sand, trace gravel, trace rock fragments, moist.	2	3.0	25		18	38	23	15			80	A-6a
				3	6.0	25		18							Visual
				4	8.5	36		15							Visual
1151.8	10.0		TERMINATION DEPTH = 10.0 FEET												

NOTES/REMARKS:

B-91: PAGE 1 OF 1

TEST BORING LOG 98113.GPJ PRIMENG.GDT 3/16/99

PRIME ENGINEERING & ARCHITECT INC.

TEST BORING No.: B-92

STATION & OFFSET: 1240+00, 30.0 ft. Lt. (South Bound)

ELEVATION: 1164.7ft

CLIENT: Richland Engineering Limited

PROJECT: Subsurface Exploration for MED-IR71-15.94 PROJECT No.: 98113

LOCATION: Medina County, Ohio

DATE STARTED: 2/15/99 DATE COMPLETED: 2/15/99

SAMPLER DIAM: 2.0" TYPE: SS HAMMER WT.: 140lb FALL: 30.0"

CASING DIAM: 2.25" TYPE: HSA OTHER:

DRILLING INFORMATION:
STL / Diedrich D-50 Truck Mounted Drilling Rig

GROUNDWATER INFORMATION:
No groundwater encountered during and upon completion of the drilling operations.

ELEV (ft.)	DEPTH (ft.)	Soil/Rock Symbol	MATERIAL DESCRIPTION	SAMPLE NUMBER	SAMPLE DEPTH	N-VALUE (BLOWS/FT) OR REC%/(ROD%)	PENETROMETER (tons/ft²)	MOISTURE CONTENT (%)	ATTERBERG LIMITS (%) LIQUID LIMIT	ATTERBERG LIMITS (%) PL	ATTERBERG LIMITS (%) PLASTICITY INDEX	DRY DENSITY (pcf)	UNCONFINED COMPRESSIVE STRENGTH (psf)	MINUS No. 200 SIEVE (%)	CLASSIFICATION SYMBOL
1164.2	0.5		TOPSOIL	1	0.0	13		14							Visual
			Stiff to hard, brown and gray SILT AND CLAY, little sand, trace gravel, trace rock fragments, moist.	2	3.0	20		15	31	20	11			76	A-6a
				3	6.0	29		13							Visual
				4	8.5	75		12							Visual
1154.8	9.9		TERMINATION DEPTH = 9.9 FEET												

NOTES/REMARKS:

B-92: PAGE 1 OF 1

TEST BORING LOG 98113.GPJ PRIMENG.GDT 3/16/99

PRIME ENGINEERING & ARCHITECT INC.

TEST BORING No.: B-93

STATION & OFFSET: 1244+00, 30.0 ft. Rt. (North Bound)

ELEVATION: 1167.5ft

CLIENT: Richland Engineering Limited

PROJECT: Subsurface Exploration for MED-IR71-15.94 PROJECT No.: 98113

LOCATION: Medina County, Ohio

DATE STARTED: 2/9/99 DATE COMPLETED: 2/9/99

SAMPLER DIAM: 2.0" TYPE: SS HAMMER WT.: 140lb FALL: 30.0"

CASING DIAM: 2.25" TYPE: HSA OTHER:

DRILLING INFORMATION:
STL / Diedrich D-50 Truck Mounted Drilling Rig

GROUNDWATER INFORMATION:
No groundwater encountered during and upon completion of the drilling operations.

ELEV (ft.)	DEPTH (ft.)	Soil/Rock Symbol	MATERIAL DESCRIPTION	SAMPLE NUMBER	SAMPLE DEPTH	N-VALUE (BLOWS/FT) OR REC%/(ROD%)	PENETROMETER (tons/ft²)	MOISTURE CONTENT (%)	ATTERBERG LIMITS (%) LIQUID LIMIT	ATTERBERG LIMITS (%) PL	ATTERBERG LIMITS (%) PLASTICITY INDEX	DRY DENSITY (pcf)	UNCONFINED COMPRESSIVE STRENGTH (psf)	MINUS No. 200 SIEVE (%)	CLASSIFICATION SYMBOL
1167.0	0.5		TOPSOIL	1	0.0	9		21	44	22	22			80	A-7-6
			Stiff, brown CLAY, trace sand, trace gravel, trace rock fragments, moist.	2	3.0	28		15							Visual
1164.5	3.0		Hard, brown SANDY SILT, some clay, trace gravel, trace rock fragments, moist.	3	6.0	34		15							Visual
				4	8.5	33		16							Visual
1157.5	10.0		TERMINATION DEPTH = 10.0 FEET												

NOTES/REMARKS:

B-93: PAGE 1 OF 1

TEST BORING LOG 98113.GPJ PRIMENG.GDT 3/16/99

DESIGN AGENCY
PRIME ENGINEERING & ARCHITECT, INC.
1038 GHENT RD, AKRON, OHIO 44333

DESIGNED | DRAWN | CHECKED | REVIEWED | REVISED | DATE | STRUCTURE FILE NUMBER

SOIL PROFILE

MED-71-15.78

48
78

SB85-SB96.DGN PDH 11/2/99

PRIME ENGINEERING & ARCHITECTURE INC.

TEST BORING No.: B-94

STATION & OFFSET: 1248+00, 30.0 ft. Lt. (South Bound)

ELEVATION: 1169.7ft

CLIENT: Richland Engineering Limited

PROJECT: Subsurface Exploration for MED-IR71-15.94 PROJECT No.: 98113

LOCATION: Medina County, Ohio

DATE STARTED: 2/15/99 DATE COMPLETED: 2/15/99

SAMPLER DIAM: 2.0" TYPE: SS HAMMER WT.: 140lb FALL: 30.0"

CASING DIAM: 2.25" TYPE: HSA OTHER:

DRILLING INFORMATION:
STL / Diedrich D-50 Truck Mounted Drilling Rig

GROUNDWATER INFORMATION:
No groundwater encountered during and upon completion of the drilling operations.

ELEV (ft.)	DEPTH (ft.)	Soil/Rock Symbol	MATERIAL DESCRIPTION	FIELD DATA: SAMPLE NUMBER	SAMPLE DEPTH	N-VALUE (BLOWS/FT) OR REC%/(RQD%)	PENETROMETER (tons/ft²)	LABORATORY DATA: MOISTURE CONTENT (%)	ATTERBERG LIMITS (%): LIQUID LIMIT LL	PLASTIC LIMIT PL	PLASTICITY INDEX PI	DRY DENSITY (pcf)	UNCONFINED COMPRESSIVE STRENGTH (psf)	MINUS No. 200 SIEVE (%)	CLASSIFICATION SYMBOL
1169.3	0.4		TOPSOIL Stiff to hard, brown SILT AND CLAY, little sand, trace gravel, trace rock fragments, moist.	1	0.0	14		20							Visual
				2	3.0	30		18	35	20	15			82	A-6a
				3	6.0	23		18							Visual
				4	8.5	26		15							Visual
1159.7	10.0		TERMINATION DEPTH = 10.0 FEET												

NOTES/REMARKS:

TEST_BORING_LOG 98113.GPJ PRIMENG.GDT 3/18/99

B-94: PAGE 1 OF 1

PRIME ENGINEERING & ARCHITECTURE INC.

TEST BORING No.: B-95

STATION & OFFSET: 1252+00, 30.0 ft. Rt. (North Bound)

ELEVATION: 1170.9ft

CLIENT: Richland Engineering Limited

PROJECT: Subsurface Exploration for MED-IR71-15.94 PROJECT No.: 98113

LOCATION: Medina County, Ohio

DATE STARTED: 2/9/99 DATE COMPLETED: 2/9/99

SAMPLER DIAM: 2.0" TYPE: SS HAMMER WT.: 140lb FALL: 30.0"

CASING DIAM: 2.25" TYPE: HSA OTHER:

DRILLING INFORMATION:
STL / Diedrich D-50 Truck Mounted Drilling Rig

GROUNDWATER INFORMATION:
No groundwater encountered during and upon completion of the drilling operations.

ELEV (ft.)	DEPTH (ft.)	Soil/Rock Symbol	MATERIAL DESCRIPTION	FIELD DATA: SAMPLE NUMBER	SAMPLE DEPTH	N-VALUE (BLOWS/FT) OR REC%/(RQD%)	PENETROMETER (tons/ft²)	LABORATORY DATA: MOISTURE CONTENT (%)	ATTERBERG LIMITS (%): LIQUID LIMIT LL	PLASTIC LIMIT PL	PLASTICITY INDEX PI	DRY DENSITY (pcf)	UNCONFINED COMPRESSIVE STRENGTH (psf)	MINUS No. 200 SIEVE (%)	CLASSIFICATION SYMBOL
1170.8	0.3		TOPSOIL Stiff, brown SILT AND CLAY, little sand, trace gravel, trace rock fragments, trace roots, moist (fill).	1	0.0	12		12							Visual
1167.9	3.0		Note: Two inch thick topsoil layer encountered at 3.3 feet. Stiff, brown SILT AND CLAY, some sand, trace gravel, trace rock fragments, moist.	2	3.0	24		14	29	18	11			74	A-6a
				3	6.0	28		13							Visual
				4	8.5	24		13							Visual
1160.9	10.0		Note: Gray color present at 9.0 feet. TERMINATION DEPTH = 10.0 FEET												

NOTES/REMARKS:

TEST_BORING_LOG 98113.GPJ PRIMENG.GDT 3/18/99

B-95: PAGE 1 OF 1

PRIME ENGINEERING & ARCHITECTURE INC.

TEST BORING No.: B-96

STATION & OFFSET: 1256+00, 30.0 ft. Lt. (South Bound)

ELEVATION: 1171.5ft

CLIENT: Richland Engineering Limited

PROJECT: Subsurface Exploration for MED-IR71-15.94 PROJECT No.: 98113

LOCATION: Medina County, Ohio

DATE STARTED: 2/15/99 DATE COMPLETED: 2/15/99

SAMPLER DIAM: 2.0" TYPE: SS HAMMER WT.: 140lb FALL: 30.0"

CASING DIAM: 2.25" TYPE: HSA OTHER:

DRILLING INFORMATION:
STL / Diedrich D-50 Truck Mounted Drilling Rig

GROUNDWATER INFORMATION:
No groundwater encountered during and upon completion of the drilling operations.

ELEV (ft.)	DEPTH (ft.)	Soil/Rock Symbol	MATERIAL DESCRIPTION	FIELD DATA: SAMPLE NUMBER	SAMPLE DEPTH	N-VALUE (BLOWS/FT) OR REC%/(RQD%)	PENETROMETER (tons/ft²)	LABORATORY DATA: MOISTURE CONTENT (%)	ATTERBERG LIMITS (%): LIQUID LIMIT LL	PLASTIC LIMIT PL	PLASTICITY INDEX PI	DRY DENSITY (pcf)	UNCONFINED COMPRESSIVE STRENGTH (psf)	MINUS No. 200 SIEVE (%)	CLASSIFICATION SYMBOL
1171.3	0.3		TOPSOIL Stiff to hard, brown, SANDY SILT, little clay, little gravel and rock fragments, moist (fill).	1	0.0	11		13							Visual
1167.5	4.0		Very stiff, brown and gray SILT AND CLAY, little sand, trace gravel, trace rock fragments, moist (fill).	2	3.0	39		11	26	17	9			63	A-4a
				3	6.0	22		17							Visual
				4	8.5	26		22							Visual
1161.5	10.0		Note: Trace organics at 9.0 feet TERMINATION DEPTH = 10.0 FEET												

NOTES/REMARKS:

TEST_BORING_LOG 98113.GPJ PRIMENG.GDT 3/18/99

B-96: PAGE 1 OF 1

DESIGN AGENCY
PRIME ENGINEERING & ARCHITECT, INC.
1038 GHENT RD, AKRON, OHIO 44333

DESIGNED	DRAWN	REVIEWED	DATE
CHECKED	REVISED	STRUCTURE FILE NUMBER	

SOIL PROFILE

MED-71-15.78

49
78

SB85-SB96.DGN PDH 11/2/99

PRIME ENGINEERING & ARCHITECTURE INC.

TEST BORING No.: B-97

STATION & OFFSET: 1260+00, 30.0 ft. Rt. (North Bound)

ELEVATION: 1171.0ft

CLIENT: Richland Engineering Limited

PROJECT: Subsurface Exploration for MED-IR71-15.94 PROJECT No.: 98113

LOCATION: Medina County, Ohio

DATE STARTED: 2/9/99 DATE COMPLETED: 2/9/99

SAMPLER DIAM: 2.0" TYPE: SS HAMMER WT.: 140lb FALL: 30.0"

CASING DIAM: 2.25" TYPE: HSA OTHER:

DRILLING INFORMATION:
STL / Diedrich D-50 Truck Mounted Drilling Rig

GROUNDWATER INFORMATION:
No groundwater encountered during and upon completion of the drilling operations.

ELEV (ft.)	DEPTH (ft.)	Soil/Rock Symbol	MATERIAL DESCRIPTION	SAMPLE NUMBER	SAMPLE DEPTH	N-VALUE (BLOWS/FT) OR REC%/(RQD%)	PENETROMETER (tons/ft²)	MOISTURE CONTENT (%)	ATTERBERG LIMITS (%) LIQUID LIMIT (LL)	ATTERBERG LIMITS (%) PLASTIC LIMIT (PL)	ATTERBERG LIMITS (%) PLASTICITY INDEX (PI)	DRY DENSITY (pcf)	UNCONFINED COMPRESSIVE STRENGTH (psf)	MINUS No. 200 SIEVE (%)	CLASSIFICATION SYMBOL
1170.7	0.3		TOPSOIL	1	0.0	6		15							Visual
			Stiff to hard, brown and gray SILT AND CLAY, some sand, trace gravel, trace rock fragments, moist (possible fill).	2	3.0	12		17	33	21	12			71	A-6a
				3	6.0	27		15							Visual
				4	8.5	24		13							Visual
1161.0	10.0		TERMINATION DEPTH = 10.0 FEET												

NOTES/REMARKS:

TEST_BORING_LOG 98113.GPJ PRIMENG.GDT 3/15/99

PRIME ENGINEERING & ARCHITECTURE INC.

TEST BORING No.: B-98

STATION & OFFSET: 1276+00, 30.0 ft. Rt. (North Bound)

ELEVATION: 1157.8ft

CLIENT: Richland Engineering Limited

PROJECT: Subsurface Exploration for MED-IR71-15.94 PROJECT No.: 98113

LOCATION: Medina County, Ohio

DATE STARTED: 2/10/99 DATE COMPLETED: 2/10/99

SAMPLER DIAM: 2.0" TYPE: SS HAMMER WT.: 140lb FALL: 30.0"

CASING DIAM: 2.25" TYPE: HSA OTHER:

DRILLING INFORMATION:
STL / Diedrich D-50 Truck Mounted Drilling Rig

GROUNDWATER INFORMATION:
No groundwater encountered during and upon completion of the drilling operations.

ELEV (ft.)	DEPTH (ft.)	Soil/Rock Symbol	MATERIAL DESCRIPTION	SAMPLE NUMBER	SAMPLE DEPTH	N-VALUE (BLOWS/FT) OR REC%/(RQD%)	PENETROMETER (tons/ft²)	MOISTURE CONTENT (%)	ATTERBERG LIMITS (%) LIQUID LIMIT (LL)	ATTERBERG LIMITS (%) PLASTIC LIMIT (PL)	ATTERBERG LIMITS (%) PLASTICITY INDEX (PI)	DRY DENSITY (pcf)	UNCONFINED COMPRESSIVE STRENGTH (psf)	MINUS No. 200 SIEVE (%)	CLASSIFICATION SYMBOL
1157.5	0.3		TOPSOIL	1	0.0	9		17	34	20	14			77	A-6a
			Stiff to very stiff, brown SILT AND CLAY, little sand, trace gravel, trace rock fragments, moist.	2	3.0	19		16							Visual
				3	6.0	15		16							Visual
				4	8.5	18		15							Visual
1147.8	10.0		TERMINATION DEPTH = 10.0 FEET												

NOTES/REMARKS:

TEST_BORING_LOG 98113.GPJ PRIMENG.GDT 3/15/99

PRIME ENGINEERING & ARCHITECTURE INC.

TEST BORING No.: B-99

STATION & OFFSET: 1280+00, 30.0 ft. Lt. (South Bound)

ELEVATION: 1154.2ft

CLIENT: Richland Engineering Limited

PROJECT: Subsurface Exploration for MED-IR71-15.94 PROJECT No.: 98113

LOCATION: Medina County, Ohio

DATE STARTED: 2/15/99 DATE COMPLETED: 2/15/99

SAMPLER DIAM: 2.0" TYPE: SS HAMMER WT.: 140lb FALL: 30.0"

CASING DIAM: 2.25" TYPE: HSA OTHER:

DRILLING INFORMATION:
STL / Diedrich D-50 Truck Mounted Drilling Rig

GROUNDWATER INFORMATION:
No groundwater encountered during and upon completion of the drilling operations.

ELEV (ft.)	DEPTH (ft.)	Soil/Rock Symbol	MATERIAL DESCRIPTION	SAMPLE NUMBER	SAMPLE DEPTH	N-VALUE (BLOWS/FT) OR REC%/(RQD%)	PENETROMETER (tons/ft²)	MOISTURE CONTENT (%)	ATTERBERG LIMITS (%) LIQUID LIMIT (LL)	ATTERBERG LIMITS (%) PLASTIC LIMIT (PL)	ATTERBERG LIMITS (%) PLASTICITY INDEX (PI)	DRY DENSITY (pcf)	UNCONFINED COMPRESSIVE STRENGTH (psf)	MINUS No. 200 SIEVE (%)	CLASSIFICATION SYMBOL
1153.9	0.3		TOPSOIL	1	0.0	7		17	33	21	12			78	A-6a
			Medium stiff, brown SILT AND CLAY, little sand, trace gravel, trace rock fragments, moist (fill).	2	3.0	33		14							Visual
1151.2	3.0		Hard to very stiff, gray SILT AND CLAY, little sand, trace gravel, trace rock fragments, moist.	3	6.0	25		13							Visual
				4	8.5	21		13							Visual
1144.2	10.0		TERMINATION DEPTH = 10.0 FEET												

NOTES/REMARKS:

TEST_BORING_LOG 98113.GPJ PRIMENG.GDT 3/15/99

DESIGN AGENCY: PRIME ENGINEERING & ARCHITECT, INC.
1038 GHENT RD, AKRON, OHIO 44333

DESIGNED | DRAWN | REVIEWED | DATE | CHECKED | REVISED | STRUCTURE FILE NUMBER

SOIL PROFILE

MED-71-15.78

SB97-SB108.DGN PDH 11/2/99

PRIME ENGINEERING & ARCHITECTURE INC.

TEST BORING No.: B-100

STATION & OFFSET: 1284+00, 30.0 ft. Rt. (North Bound)

ELEVATION: 1150.3ft

CLIENT: Richland Engineering Limited

PROJECT: Subsurface Exploration for MED-IR71-15.94 — PROJECT No.: 98113

LOCATION: Medina County, Ohio

DATE STARTED: 2/10/99 — DATE COMPLETED: 2/10/99

SAMPLER DIAM: 2.0" — TYPE: SS — HAMMER WT.: 140lb — FALL: 30.0"

CASING DIAM: 2.25" — TYPE: HSA — OTHER:

DRILLING INFORMATION:
STL / Diedrich D-50 Truck Mounted Drilling Rig

GROUNDWATER INFORMATION:
No groundwater encountered during and upon completion of the drilling operations.

ELEV (ft.)	DEPTH (ft.)	Soil/ Rock Symbol	MATERIAL DESCRIPTION	FIELD DATA: SAMPLE NUMBER	SAMPLE DEPTH	N-VALUE (BLOWS/FT) OR REC%/(RQD%)	PENETROMETER (tons/ft²)	LABORATORY DATA: MOISTURE CONTENT (%)	ATTERBERG LIMITS (%): LL	PL	PI	DRY DENSITY (pcf)	UNCONFINED COMPRESSIVE STRENGTH (psf)	MINUS No. 200 SIEVE (%)	CLASSIFICATION SYMBOL
1150.0	0.3		TOPSOIL Medium stiff to stiff, brown CLAY, little sand, trace gravel, trace rock fragments, moist (fill).	1	0.0	6		22	42	23	19			84	A-7-6
				2	3.0	15		18							Visual
1144.3	6.0		Very stiff to hard, brown to gray SILT AND CLAY, some sand, trace gravel, trace rock fragments, moist.	3	6.0	16		17							Visual
				4	8.5	48		15							Visual
1140.3	10.0		TERMINATION DEPTH = 10.0 FEET												

NOTES/REMARKS:

B-100: PAGE 1 OF 1

TEST BORING LOG 98113.GPJ PRIMENG.GDT 3/16/99

PRIME ENGINEERING & ARCHITECTURE INC.

TEST BORING No.: B-101

STATION & OFFSET: 1288+00, 30.0 ft. Lt. (South Bound)

ELEVATION: 1146.7ft

CLIENT: Richland Engineering Limited

PROJECT: Subsurface Exploration for MED-IR71-15.94 — PROJECT No.: 98113

LOCATION: Medina County, Ohio

DATE STARTED: 2/15/99 — DATE COMPLETED: 2/15/99

SAMPLER DIAM: 2.0" — TYPE: SS — HAMMER WT.: 140lb — FALL: 30.0"

CASING DIAM: 2.25" — TYPE: HSA — OTHER:

DRILLING INFORMATION:
STL / Diedrich D-50 Truck Mounted Drilling Rig

GROUNDWATER INFORMATION:
No groundwater encountered during and upon completion of the drilling operations.

ELEV (ft.)	DEPTH (ft.)	Soil/ Rock Symbol	MATERIAL DESCRIPTION	FIELD DATA: SAMPLE NUMBER	SAMPLE DEPTH	N-VALUE (BLOWS/FT) OR REC%/(RQD%)	PENETROMETER (tons/ft²)	LABORATORY DATA: MOISTURE CONTENT (%)	ATTERBERG LIMITS (%): LL	PL	PI	DRY DENSITY (pcf)	UNCONFINED COMPRESSIVE STRENGTH (psf)	MINUS No. 200 SIEVE (%)	CLASSIFICATION SYMBOL
1146.4	0.3		TOPSOIL Stiff to hard, brown SILT AND CLAY, little sand, trace gravel, trace rock fragments, moist.	1	0.0	11		15							Visual
				2	3.0	27		15	32	20	12			75	A-6a
				3	6.0	37		14							Visual
			Note: Color change to gray at 8.5 feet	4	8.5	21		14							Visual
1136.7	10.0		TERMINATION DEPTH = 10.0 FEET												

NOTES/REMARKS:

B-101: PAGE 1 OF 1

TEST BORING LOG 98113.GPJ PRIMENG.GDT 3/16/99

PRIME ENGINEERING & ARCHITECTURE INC.

TEST BORING No.: B-102

STATION & OFFSET: 1292+00, 30.0 ft. Rt. (North Bound)

ELEVATION: 1142.9ft

CLIENT: Richland Engineering Limited

PROJECT: Subsurface Exploration for MED-IR71-15.94 — PROJECT No.: 98113

LOCATION: Medina County, Ohio

DATE STARTED: 2/10/99 — DATE COMPLETED: 2/10/99

SAMPLER DIAM: 2.0" — TYPE: SS — HAMMER WT.: 140lb — FALL: 30.0"

CASING DIAM: 2.25" — TYPE: HSA — OTHER:

DRILLING INFORMATION:
STL / Diedrich D-50 Truck Mounted Drilling Rig

GROUNDWATER INFORMATION:
No groundwater encountered during and upon completion of the drilling operations.

ELEV (ft.)	DEPTH (ft.)	Soil/ Rock Symbol	MATERIAL DESCRIPTION	FIELD DATA: SAMPLE NUMBER	SAMPLE DEPTH	N-VALUE (BLOWS/FT) OR REC%/(RQD%)	PENETROMETER (tons/ft²)	LABORATORY DATA: MOISTURE CONTENT (%)	ATTERBERG LIMITS (%): LL	PL	PI	DRY DENSITY (pcf)	UNCONFINED COMPRESSIVE STRENGTH (psf)	MINUS No. 200 SIEVE (%)	CLASSIFICATION SYMBOL
1142.5	0.4		TOPSOIL Medium stiff to stiff, brown CLAY, little sand, trace to no rock fragments, moist.	1	0.0	5		16							Visual
				2	3.0	10		22	44	22	22			88	A-7-6
				3	6.0	13		21							Visual
1134.4	8.5		Very stiff, brown and gray SILT AND CLAY, some sand, trace gravel, trace rock fragments, moist.	4	8.5	17		15							Visual
1132.9	10.0		TERMINATION DEPTH = 10.0 FEET												

NOTES/REMARKS:

B-102: PAGE 1 OF 1

TEST BORING LOG 98113.GPJ PRIMENG.GDT 3/16/99

DESIGN AGENCY: PRIME ENGINEERING & ARCHITECT, INC. 1038 GHENT RD, AKRON, OHIO 44333

DESIGNED | DRAWN | CHECKED | REVIEWED | REVISED | DATE | STRUCTURE FILE NUMBER

SOIL PROFILE

MED-71-15.78

51 / 78

SB97-SB108.DGN PDH 11/2/99

PRIME ENGINEERING & ARCHITECTURE INC.

TEST BORING No.: B-103

STATION & OFFSET: 1296+00, 30.0 ft. Lt. (South Bound)

ELEVATION: 1142.7ft

CLIENT: Richland Engineering Limited

PROJECT: Subsurface Exploration for MED-IR71-15.94 PROJECT No.: 98113

LOCATION: Medina County, Ohio

DATE STARTED: 2/15/99 DATE COMPLETED: 2/15/99

SAMPLER DIAM: 2.0" TYPE: SS HAMMER WT.: 140lb FALL: 30.0"

CASING DIAM: 2.25" TYPE: HSA OTHER:

DRILLING INFORMATION:
STL / Diedrich D-50 Truck Mounted Drilling Rig

GROUNDWATER INFORMATION:
No groundwater encountered during and upon completion of the drilling operations.

ELEV (ft.)	DEPTH (ft.)	Soil/Rock Symbol	MATERIAL DESCRIPTION	SAMPLE NUMBER	SAMPLE DEPTH	N-VALUE (BLOWS/FT) OR REC%/RQD%	PENETROMETER (tons/ft²)	MOISTURE CONTENT (%)	ATTERBERG LIMITS (%) LL	PL	PI	DRY DENSITY (pcf)	UNCONFINED COMPRESSIVE STRENGTH (psf)	MINUS No. 200 SIEVE (%)	CLASSIFICATION SYMBOL
1142.4	0.3		TOPSOIL Medium stiff to very stiff, brown SANDY SILT, some clay, trace gravel, trace rock fragments, moist.	1	0.0	6		15							Visual
				2	3.0	20		18	31	21	10			73	A-4a
1138.7	6.0		Note: Trace organics at 6.0 feet Stiff to very stiff, brown SILT AND CLAY, little sand, trace gravel, trace rock fragments, moist.	3	6.0	11		28							Visual
				4	8.5	18		19							Visual
1132.7	10.0		TERMINATION DEPTH = 10.0 FEET												

NOTES/REMARKS:

TEST_BORING_LOG 98113.GPJ PRIMENG.GDT 3/16/99

B-103: PAGE 1 OF 1

PRIME ENGINEERING & ARCHITECTURE INC.

TEST BORING No.: B-104

STATION & OFFSET: 1300+00, 30.0 ft. Rt. (North Bound)

ELEVATION: 1145.5ft

CLIENT: Richland Engineering Limited

PROJECT: Subsurface Exploration for MED-IR71-15.94 PROJECT No.: 98113

LOCATION: Medina County, Ohio

DATE STARTED: 2/10/99 DATE COMPLETED: 2/10/99

SAMPLER DIAM: 2.0" TYPE: SS HAMMER WT.: 140lb FALL: 30.0"

CASING DIAM: 2.25" TYPE: HSA OTHER:

DRILLING INFORMATION:
STL / Diedrich D-50 Truck Mounted Drilling Rig

GROUNDWATER INFORMATION:
No groundwater encountered during and upon completion of the drilling operations.

ELEV (ft.)	DEPTH (ft.)	Soil/Rock Symbol	MATERIAL DESCRIPTION	SAMPLE NUMBER	SAMPLE DEPTH	N-VALUE (BLOWS/FT) OR REC%/RQD%	PENETROMETER (tons/ft²)	MOISTURE CONTENT (%)	ATTERBERG LIMITS (%) LL	PL	PI	DRY DENSITY (pcf)	UNCONFINED COMPRESSIVE STRENGTH (psf)	MINUS No. 200 SIEVE (%)	CLASSIFICATION SYMBOL
1145.3	0.2		TOPSOIL	1	0.0	33		21							A-1-a
1144.8	0.7		ASPHALT SANDSTONE FRAGMENTS (possible base)												
1142.5	3.0		Very stiff, brown, mottled gray SILT AND CLAY, little sand, trace gravel, trace rock fragments, moist.	2	3.0	8		18	31	18	13			75	A-6a
				3	6.0	10		19							Visual
				4	8.5	24		16							Visual
1135.5	10.0		TERMINATION DEPTH = 10.0 FEET												

NOTES/REMARKS:

TEST_BORING_LOG 98113.GPJ PRIMENG.GDT 3/17/99

B-104: PAGE 1 OF 1

PRIME ENGINEERING & ARCHITECTURE INC.

TEST BORING No.: B-105

STATION & OFFSET: 1304+00, 30.0 ft. Lt. (South Bound)

ELEVATION: 1147.1ft

CLIENT: Richland Engineering Limited

PROJECT: Subsurface Exploration for MED-IR71-15.94 PROJECT No.: 98113

LOCATION: Medina County, Ohio

DATE STARTED: 2/15/99 DATE COMPLETED: 2/15/99

SAMPLER DIAM: 2.0" TYPE: SS HAMMER WT.: 140lb FALL: 30.0"

CASING DIAM: 2.25" TYPE: HSA OTHER:

DRILLING INFORMATION:
STL / Diedrich D-50 Truck Mounted Drilling Rig

GROUNDWATER INFORMATION:
No groundwater encountered during and upon completion of the drilling operations.

ELEV (ft.)	DEPTH (ft.)	Soil/Rock Symbol	MATERIAL DESCRIPTION	SAMPLE NUMBER	SAMPLE DEPTH	N-VALUE (BLOWS/FT) OR REC%/RQD%	PENETROMETER (tons/ft²)	MOISTURE CONTENT (%)	ATTERBERG LIMITS (%) LL	PL	PI	DRY DENSITY (pcf)	UNCONFINED COMPRESSIVE STRENGTH (psf)	MINUS No. 200 SIEVE (%)	CLASSIFICATION SYMBOL
1146.7	0.4		TOPSOIL Medium stiff to very stiff, brown SANDY SILT, some clay, trace gravel, trace rock fragments, moist.	1	0.0	9		17							Visual
				2	3.0	23		14	30	20	10			75	A-4a
				3	6.0	13		18							Visual
				4	8.5	24		17							Visual
1137.1	10.0		TERMINATION DEPTH = 10.0 FEET												

NOTES/REMARKS:

TEST_BORING_LOG 98113.GPJ PRIMENG.GDT 3/16/99

B-105: PAGE 1 OF 1

DESIGN AGENCY
PRIME ENGINEERING & ARCHITECT, INC.
1038 GHENT RD, AKRON, OHIO 44333

DESIGNED | DRAWN | CHECKED | REVIEWED | REVISED | DATE | STRUCTURE FILE NUMBER

SOIL PROFILE

MED-71-15.78

52
78

SB97-SB108.DGN PDH 11/2/99

PRIME ENGINEERING & ARCHITECTURE INC.

TEST BORING No.: B-106

STATION & OFFSET: 1308+00, 30.0 ft. Rt. (North Bound)

ELEVATION: 1148.9ft

CLIENT: Richland Engineering Limited

PROJECT: Subsurface Exploration for MED-IR71-15.94 PROJECT No.: 98113

LOCATION: Medina County, Ohio

DATE STARTED: 2/10/99 DATE COMPLETED: 2/10/99

SAMPLER DIAM: 2.0" TYPE: SS HAMMER WT.: 140lb FALL: 30.0"

CASING DIAM: 2.25" TYPE: HSA OTHER:

DRILLING INFORMATION:
STL / Diedrich D-50 Truck Mounted Drilling Rig

GROUNDWATER INFORMATION:
No groundwater encountered during and upon completion of the drilling operations.

ELEV (ft.)	DEPTH (ft.)	Soil/Rock Symbol	MATERIAL DESCRIPTION	SAMPLE NUMBER	SAMPLE DEPTH	N-VALUE (BLOWS/FT) OR REC%/RQD%	PENETROMETER (tons/ft²)	MOISTURE CONTENT (%)	ATTERBERG LIMITS (%) LL	PL	PI	DRY DENSITY (pcf)	UNCONFINED COMPRESSIVE STRENGTH (psf)	MINUS No. 200 SIEVE (%)	CLASSIFICATION SYMBOL
1148.4	0.5		TOPSOIL Medium stiff to stiff, brown SANDY SILT, some clay, trace gravel, trace rock fragments, moist.	1	0.0	10		13	29	19	10			71	A-4a
				2	3.0	6		19							Visual
1142.9	6.0		Very stiff, brown and gray SILT AND CLAY, little sand, trace gravel, trace rock fragments, moist.	3	6.0	16		15							Visual
				4	8.5	23		17							Visual
1138.9	10.0		TERMINATION DEPTH = 10.0 FEET												

NOTES/REMARKS:

B-106: PAGE 1 OF 1

TEST BORING LOG 98113.GPJ PRIMENG.GDT 2/16/99

PRIME ENGINEERING & ARCHITECTURE INC.

TEST BORING No.: B-107

STATION & OFFSET: 1312+00, 30.0 ft. Lt. (South Bound)

ELEVATION: 1151.2ft

CLIENT: Richland Engineering Limited

PROJECT: Subsurface Exploration for MED-IR71-15.94 PROJECT No.: 98113

LOCATION: Medina County, Ohio

DATE STARTED: 2/15/99 DATE COMPLETED: 2/15/99

SAMPLER DIAM: 2.0" TYPE: SS HAMMER WT.: 140lb FALL: 30.0"

CASING DIAM: 2.25" TYPE: HSA OTHER:

DRILLING INFORMATION:
STL / Diedrich D-50 Truck Mounted Drilling Rig

GROUNDWATER INFORMATION:
No groundwater encountered during and upon completion of the drilling operations.

ELEV (ft.)	DEPTH (ft.)	Soil/Rock Symbol	MATERIAL DESCRIPTION	SAMPLE NUMBER	SAMPLE DEPTH	N-VALUE (BLOWS/FT) OR REC%/RQD%	PENETROMETER (tons/ft²)	MOISTURE CONTENT (%)	ATTERBERG LIMITS (%) LL	PL	PI	DRY DENSITY (pcf)	UNCONFINED COMPRESSIVE STRENGTH (psf)	MINUS No. 200 SIEVE (%)	CLASSIFICATION SYMBOL
1150.8	0.4		TOPSOIL Very stiff to hard, brown SILT AND CLAY, some sand, trace gravel, trace rock fragments, moist.	1	0.0	15		15							Visual
				2	3.0	23		14	31	19	12			74	A-6a
				3	6.0	32		15							Visual
				4	8.5	19		21							Visual
1141.2	10.0		TERMINATION DEPTH = 10.0 FEET												

NOTES/REMARKS:

B-107: PAGE 1 OF 1

TEST BORING LOG 98113.GPJ PRIMENG.GDT 3/16/99

PRIME ENGINEERING & ARCHITECTURE INC.

TEST BORING No.: B-108

STATION & OFFSET: 1316+00, 30.0 ft. Rt. (North Bound)

ELEVATION: 1153.4ft

CLIENT: Richland Engineering Limited

PROJECT: Subsurface Exploration for MED-IR71-15.94 PROJECT No.: 98113

LOCATION: Medina County, Ohio

DATE STARTED: 2/10/99 DATE COMPLETED: 2/10/99

SAMPLER DIAM: 2.0" TYPE: SS HAMMER WT.: 140lb FALL: 30.0"

CASING DIAM: 2.25" TYPE: HSA OTHER:

DRILLING INFORMATION:
STL / Diedrich D-50 Truck Mounted Drilling Rig

GROUNDWATER INFORMATION:
No groundwater encountered during and upon completion of the drilling operations.

ELEV (ft.)	DEPTH (ft.)	Soil/Rock Symbol	MATERIAL DESCRIPTION	SAMPLE NUMBER	SAMPLE DEPTH	N-VALUE (BLOWS/FT) OR REC%/RQD%	PENETROMETER (tons/ft²)	MOISTURE CONTENT (%)	ATTERBERG LIMITS (%) LL	PL	PI	DRY DENSITY (pcf)	UNCONFINED COMPRESSIVE STRENGTH (psf)	MINUS No. 200 SIEVE (%)	CLASSIFICATION SYMBOL
1153.2	0.3		TOPSOIL Medium stiff to very stiff, brown SILT AND CLAY, some to little sand, trace gravel, trace rock fragments, moist.	1	0.0	9		16							Visual
				2	3.0	25		16							Visual
			Note: Color change to gray at 6.0 feet.	3	6.0	12		15							Visual
				4	8.5	16		15							Visual
1143.4	10.0		TERMINATION DEPTH = 10 FEET												

NOTES/REMARKS:

B-108: PAGE 1 OF 1

TEST BORING LOG 98113.GPJ PRIMENG.GDT 3/17/99

DESIGN AGENCY
PRIME ENGINEERING & ARCHITECT, INC.
1038 GHENT RD, AKRON, OHIO 44333

DESIGNED | DRAWN | CHECKED | REVIEWED | REVISED | DATE | STRUCTURE FILE NUMBER

SOIL PROFILE

MED-71-15.78

53
78

SB97-SB108.DGN PDH 11/2/99

PRIME ENGINEERING & ARCHITECTURE INC.

TEST BORING No.: B-109

STATION & OFFSET: 1320+00, 30.0 ft. Lt. (South Bound)

ELEVATION: 1155.5ft

CLIENT: Richland Engineering Limited

PROJECT: Subsurface Exploration for MED-IR71-15.94 — PROJECT No.: 98113

LOCATION: Medina County, Ohio

DATE STARTED: 2/15/99 — DATE COMPLETED: 2/15/99

SAMPLER DIAM: 2.0" — TYPE: SS — HAMMER WT.: 140lb — FALL: 30.0"

CASING DIAM: 2.25" — TYPE: HSA — OTHER:

DRILLING INFORMATION:
STL / Diedrich D-50 Truck Mounted Drilling Rig

GROUNDWATER INFORMATION:
No groundwater encountered during and upon completion of the drilling operations.

ELEV (ft.)	DEPTH (ft.)	Soil/Rock Symbol	MATERIAL DESCRIPTION	SAMPLE NUMBER	SAMPLE DEPTH	N-VALUE (BLOWS/FT) OR REC%/(RQD%)	PENETROMETER (tons/ft²)	MOISTURE CONTENT (%)	ATTERBERG LIMITS (%) LL	PL	PI	DRY DENSITY (pcf)	UNCONFINED COMPRESSIVE STRENGTH (psf)	MINUS No. 200 SIEVE (%)	CLASSIFICATION SYMBOL
1155.2	0.3		TOPSOIL	1	0.0	8		13							Visual
			Stiff to very stiff, brown to gray SANDY SILT, some clay, trace gravel, trace rock fragments, moist.												
			Note: Color change to gray at 1.5 feet.	2	3.0	11		15	25	16	9			75	A-4a
				3	6.0	12		19							Visual
				4	8.5	16		16							Visual
1145.5	10.0		TERMINATION DEPTH = 10.0 FEET												

NOTES/REMARKS:

TEST_BORING_LOG 98113.GPJ PRIMENG.GDT 3/16/99

B-109: PAGE 1 OF 1

PRIME ENGINEERING & ARCHITECTURE INC.

TEST BORING No.: B-110

STATION & OFFSET: 1324+00, 30.0 ft. Rt. (North Bound)

ELEVATION: 1156.4ft

CLIENT: Richland Engineering Limited

PROJECT: Subsurface Exploration for MED-IR71-15.94 — PROJECT No.: 98113

LOCATION: Medina County, Ohio

DATE STARTED: 2/10/99 — DATE COMPLETED: 2/10/99

SAMPLER DIAM: 2.0" — TYPE: SS — HAMMER WT.: 140lb — FALL: 30.0"

CASING DIAM: 2.25" — TYPE: HSA — OTHER:

DRILLING INFORMATION:
STL / Diedrich D-50 Truck Mounted Drilling Rig

GROUNDWATER INFORMATION:
No groundwater encountered during and upon completion of the drilling operations.

ELEV (ft.)	DEPTH (ft.)	Soil/Rock Symbol	MATERIAL DESCRIPTION	SAMPLE NUMBER	SAMPLE DEPTH	N-VALUE (BLOWS/FT) OR REC%/(RQD%)	PENETROMETER (tons/ft²)	MOISTURE CONTENT (%)	ATTERBERG LIMITS (%) LL	PL	PI	DRY DENSITY (pcf)	UNCONFINED COMPRESSIVE STRENGTH (psf)	MINUS No. 200 SIEVE (%)	CLASSIFICATION SYMBOL
1156.2	0.3		TOPSOIL	1	0.0	9		16	30	18	12			74	A-6a
			Stiff to very stiff, gray SILT AND CLAY, some sand, trace gravel, trace rock fragments, moist.												
				2	3.0	16		14							Visual
				3	6.0	13		18							Visual
				4	8.5	15		15							Visual
1146.4	10.0		TERMINATION DEPTH = 10.0 FEET												

NOTES/REMARKS:

TEST_BORING_LOG 98113.GPJ PRIMENG.GDT 3/16/99

B-110: PAGE 1 OF 1

PRIME ENGINEERING & ARCHITECTURE INC.

TEST BORING No.: B-111

STATION & OFFSET: 1328+00, 30.0 ft. Lt. (South Bound)

ELEVATION: 1155.3ft

CLIENT: Richland Engineering Limited

PROJECT: Subsurface Exploration for MED-IR71-15.94 — PROJECT No.: 98113

LOCATION: Medina County, Ohio

DATE STARTED: 2/15/99 — DATE COMPLETED: 2/15/99

SAMPLER DIAM: 2.0" — TYPE: SS — HAMMER WT.: 140lb — FALL: 30.0"

CASING DIAM: 2.25" — TYPE: HSA — OTHER:

DRILLING INFORMATION:
STL / Diedrich D-50 Truck Mounted Drilling Rig

GROUNDWATER INFORMATION:
No groundwater encountered during and upon completion of the drilling operations.

ELEV (ft.)	DEPTH (ft.)	Soil/Rock Symbol	MATERIAL DESCRIPTION	SAMPLE NUMBER	SAMPLE DEPTH	N-VALUE (BLOWS/FT) OR REC%/(RQD%)	PENETROMETER (tons/ft²)	MOISTURE CONTENT (%)	ATTERBERG LIMITS (%) LL	PL	PI	DRY DENSITY (pcf)	UNCONFINED COMPRESSIVE STRENGTH (psf)	MINUS No. 200 SIEVE (%)	CLASSIFICATION SYMBOL
1155.0	0.3		TOPSOIL	1	0.0	11		13	28	17	11			71	A-6a
			Stiff to very stiff, brown to gray SILT AND CLAY, some to little sand, trace gravel, trace rock fragments, moist.												
				2	3.0	27		14							Visual
			Note: Color change to gray at 6.0 feet.	3	6.0	15		16							Visual
				4	8.5	21		15							Visual
1145.3	10.0		TERMINATION DEPTH = 10.0 FEET												

NOTES/REMARKS:

TEST_BORING_LOG 98113.GPJ PRIMENG.GDT 3/16/99

B-111: PAGE 1 OF 1

DESIGN AGENCY
PRIME ENGINEERING & ARCHITECT, INC.
1038 GHENT RD, AKRON, OHIO 44333

REVIEWED | DATE | STRUCTURE FILE NUMBER
DRAWN | REVISED
DESIGNED | CHECKED

SOIL PROFILE

MED-71-15.78

54
78

SBI09-SBI20.DGN PDH 11/2/99

PRIME ENGINEERING & ARCHITECTURE INC.

TEST BORING No.: B-112

STATION & OFFSET: 1332+00, 30.0 ft. Rt. (North Bound)

ELEVATION: 1151.8ft

CLIENT: Richland Engineering Limited

PROJECT: Subsurface Exploration for MED-IR71-15.94 — PROJECT No.: 98113

LOCATION: Medina County, Ohio

DATE STARTED: 2/10/99 — DATE COMPLETED: 2/10/99

SAMPLER DIAM: 2.0" — TYPE: SS — HAMMER WT.: 140lb — FALL: 30.0"

CASING DIAM: 2.25" — TYPE: HSA — OTHER:

DRILLING INFORMATION:
STL / Diedrich D-50 Truck Mounted Drilling Rig

GROUNDWATER INFORMATION:
No groundwater encountered during and upon completion of the drilling operations.

ELEV (ft.)	DEPTH (ft.)	Soil/Rock Symbol	MATERIAL DESCRIPTION	SAMPLE NUMBER	SAMPLE DEPTH	N-VALUE (BLOWS/FT) OR REC%/(RQD%)	PENETROMETER (tons/ft²)	MOISTURE CONTENT (%)	ATTERBERG LIMITS (%) LL	PL	PI	DRY DENSITY (pcf)	UNCONFINED COMPRESSIVE STRENGTH (psf)	MINUS No. 200 SIEVE (%)	CLASSIFICATION SYMBOL
1151.8	0.0			1	0.0	6		17							Visual
1151.5	0.3		TOPSOIL Medium stiff to very stiff, brown SILT AND CLAY, little sand, trace gravel, trace rock fragments, moist.	2	3.0	28		17	33	19	14			76	A-6a
			Note: Color change to gray at 6.0 feet.	3	6.0	21		15							Visual
				4	8.5	22		15							Visual
1141.8	10.0		TERMINATION DEPTH = 10.0 FEET												

NOTES/REMARKS:

B-112: PAGE 1 OF 1

TEST_BORING_LOG_98113.GPJ PRMENG.GDT 3/16/99

PRIME ENGINEERING & ARCHITECTURE INC.

TEST BORING No.: B-113

STATION & OFFSET: 1336+00, 30.0 ft. Lt. (South Bound)

ELEVATION: 1147.9ft

CLIENT: Richland Engineering Limited

PROJECT: Subsurface Exploration for MED-IR71-15.94 — PROJECT No.: 98113

LOCATION: Medina County, Ohio

DATE STARTED: 2/11/99 — DATE COMPLETED: 2/11/99

SAMPLER DIAM: 2.0" — TYPE: SS — HAMMER WT.: 140lb — FALL: 30.0"

CASING DIAM: 2.25" — TYPE: HSA — OTHER:

DRILLING INFORMATION:
STL / Diedrich D-50 Truck Mounted Drilling Rig

GROUNDWATER INFORMATION:
Water encountered at 4.0 feet during and dry upon completion of the drilling operations.

ELEV (ft.)	DEPTH (ft.)	Soil/Rock Symbol	MATERIAL DESCRIPTION	SAMPLE NUMBER	SAMPLE DEPTH	N-VALUE (BLOWS/FT) OR REC%/(RQD%)	PENETROMETER (tons/ft²)	MOISTURE CONTENT (%)	ATTERBERG LIMITS (%) LL	PL	PI	DRY DENSITY (pcf)	UNCONFINED COMPRESSIVE STRENGTH (psf)	MINUS No. 200 SIEVE (%)	CLASSIFICATION SYMBOL
GROUNDWATER DURING DRILLING															
1147.8	0.0			1	0.0	10		18							Visual
1147.5	0.3		TOPSOIL Stiff to very stiff, brown to gray SILT AND CLAY, little sand, trace gravel, trace rock fragments, moist.	2	3.0	29		17	36	21	15			76	A-6a
			Note: Color change to gray at 7.0 feet	3	6.0	22		16							Visual
				4	8.5	15		16							Visual
1137.9	10.0		TERMINATION DEPTH = 10.0 FEET												

NOTES/REMARKS:

B-113: PAGE 1 OF 1

TEST_BORING_LOG_98113.GPJ PRMENG.GDT 3/16/99

PRIME ENGINEERING & ARCHITECTURE INC.

TEST BORING No.: B-114

STATION & OFFSET: 1340+00, 30.0 ft. Rt. (North Bound)

ELEVATION: 1142.8ft

CLIENT: Richland Engineering Limited

PROJECT: Subsurface Exploration for MED-IR71-15.94 — PROJECT No.: 98113

LOCATION: Medina County, Ohio

DATE STARTED: 2/10/99 — DATE COMPLETED: 2/10/99

SAMPLER DIAM: 2.0" — TYPE: SS — HAMMER WT.: 140lb — FALL: 30.0"

CASING DIAM: 2.25" — TYPE: HSA — OTHER:

DRILLING INFORMATION:
STL / Diedrich D-50 Truck Mounted Drilling Rig

GROUNDWATER INFORMATION:
No groundwater encountered during and upon completion of the drilling operations.

ELEV (ft.)	DEPTH (ft.)	Soil/Rock Symbol	MATERIAL DESCRIPTION	SAMPLE NUMBER	SAMPLE DEPTH	N-VALUE (BLOWS/FT) OR REC%/(RQD%)	PENETROMETER (tons/ft²)	MOISTURE CONTENT (%)	ATTERBERG LIMITS (%) LL	PL	PI	DRY DENSITY (pcf)	UNCONFINED COMPRESSIVE STRENGTH (psf)	MINUS No. 200 SIEVE (%)	CLASSIFICATION SYMBOL
1142.4	0.0			1	0.0	6		15							Visual
1142.0	0.4		TOPSOIL Medium stiff to very stiff, brown SILT AND CLAY, little sand, trace gravel, trace rock fragments, moist.	2	3.0	25		17	34	22	12			76	A-6a
				3	6.0	26		17							Visual
				4	8.5	21		20							Visual
1132.8	10.0		TERMINATION DEPTH = 10.0 FEET												

NOTES/REMARKS:

B-114: PAGE 1 OF 1

TEST_BORING_LOG_98113.GPJ PRMENG.GDT 3/16/99

DESIGN AGENCY
PRIME ENGINEERING & ARCHITECT, INC.
1038 GHENT RD, AKRON, OHIO 44333

DESIGNED | DRAWN | CHECKED | REVIEWED | DATE | STRUCTURE FILE NUMBER | REVISED

SOIL PROFILE

MED-71-15.78

55
78

SBI09-SBI20.DGN PDH 11/2/99

PRIME ENGINEERING & ARCHITECTURE INC.

TEST BORING No.: B-115

STATION & OFFSET: 1344+00, 30.0 ft. Lt. (South Bound)

ELEVATION: 1139.5ft

CLIENT: Richland Engineering Limited

PROJECT: Subsurface Exploration for MED-IR71-15.94 — PROJECT No.: 98113

LOCATION: Medina County, Ohio

DATE STARTED: 2/11/99 — DATE COMPLETED: 2/11/99

SAMPLER DIAM: 2.0" — TYPE: SS — HAMMER WT.: 140lb — FALL: 30.0"

CASING DIAM: 2.25" — TYPE: HSA — OTHER:

DRILLING INFORMATION:
STL / Diedrich D-50 Truck Mounted Drilling Rig

GROUNDWATER INFORMATION:
No groundwater encountered during and upon completion of the drilling operations.

ELEV (ft.)	DEPTH (ft.)	Soil/Rock Symbol	MATERIAL DESCRIPTION	SAMPLE NUMBER	SAMPLE DEPTH	N-VALUE (BLOWS/FT) OR REC%/(RQD%)	PENETROMETER (tons/ft²)	MOISTURE CONTENT (%)	ATTERBERG LIMITS (%) LL	PL	PI	DRY DENSITY (pcf)	UNCONFINED COMPRESSIVE STRENGTH (psf)	MINUS No. 200 SIEVE (%)	CLASSIFICATION SYMBOL
1139.2	0.3		TOPSOIL	1	0.0	8		16	35	20	15			77	A-6a
			Stiff to hard, brown SILT AND CLAY, little sand, trace gravel, trace rock fragments, moist.												
			Note: Two inch thick peat layer encountered at 4.0 feet	2	3.0	18		27							Visual
				3	6.0	41		15							Visual
				4	8.5	40		16							Visual
1129.5	10.0		TERMINATION DEPTH = 10.0 FEET												

NOTES/REMARKS:

TEST_BORING_LOG 98113.GPJ PRIMENG.GDT 3/16/99

B-115: PAGE 1 OF 1

PRIME ENGINEERING & ARCHITECTURE INC.

TEST BORING No.: B-116

STATION & OFFSET: 1348+00, 30.0 ft. Rt. (North Bound)

ELEVATION: 1135.1ft

CLIENT: Richland Engineering Limited

PROJECT: Subsurface Exploration for MED-IR71-15.94 — PROJECT No.: 98113

LOCATION: Medina County, Ohio

DATE STARTED: 2/10/99 — DATE COMPLETED: 2/10/99

SAMPLER DIAM: 2.0" — TYPE: SS — HAMMER WT.: 140lb — FALL: 30.0"

CASING DIAM: 2.25" — TYPE: HSA — OTHER:

DRILLING INFORMATION:
STL / Diedrich D-50 Truck Mounted Drilling Rig

GROUNDWATER INFORMATION:
No groundwater encountered during and upon completion of the drilling operations.

ELEV (ft.)	DEPTH (ft.)	Soil/Rock Symbol	MATERIAL DESCRIPTION	SAMPLE NUMBER	SAMPLE DEPTH	N-VALUE (BLOWS/FT) OR REC%/(RQD%)	PENETROMETER (tons/ft²)	MOISTURE CONTENT (%)	ATTERBERG LIMITS (%) LL	PL	PI	DRY DENSITY (pcf)	UNCONFINED COMPRESSIVE STRENGTH (psf)	MINUS No. 200 SIEVE (%)	CLASSIFICATION SYMBOL
1134.7	0.4		TOPSOIL	1	0.0	11		16							Visual
			Stiff to hard, brown SILT AND CLAY, little sand, trace gravel, trace rock fragments, moist.												
				2	3.0	34		16							Visual
				3	6.0	32		16							Visual
				4	8.5	30		17							Visual
1125.1	10.0		TERMINATION DEPTH = 10.0 FEET												

NOTES/REMARKS:

TEST_BORING_LOG 98113.GPJ PRIMENG.GDT 3/16/99

B-116: PAGE 1 OF 1

PRIME ENGINEERING & ARCHITECTURE INC.

TEST BORING No.: B-117

STATION & OFFSET: 1352+00, 30.0 ft. Lt. (South Bound)

ELEVATION: 1131.5ft

CLIENT: Richland Engineering Limited

PROJECT: Subsurface Exploration for MED-IR71-15.94 — PROJECT No.: 98113

LOCATION: Medina County, Ohio

DATE STARTED: 2/11/99 — DATE COMPLETED: 2/11/99

SAMPLER DIAM: 2.0" — TYPE: SS — HAMMER WT.: 140lb — FALL: 30.0"

CASING DIAM: 2.25" — TYPE: HSA — OTHER:

DRILLING INFORMATION:
STL / Diedrich D-50 Truck Mounted Drilling Rig

GROUNDWATER INFORMATION:
No groundwater encountered during and upon completion of the drilling operations.

ELEV (ft.)	DEPTH (ft.)	Soil/Rock Symbol	MATERIAL DESCRIPTION	SAMPLE NUMBER	SAMPLE DEPTH	N-VALUE (BLOWS/FT) OR REC%/(RQD%)	PENETROMETER (tons/ft²)	MOISTURE CONTENT (%)	ATTERBERG LIMITS (%) LL	PL	PI	DRY DENSITY (pcf)	UNCONFINED COMPRESSIVE STRENGTH (psf)	MINUS No. 200 SIEVE (%)	CLASSIFICATION SYMBOL
1131.2	0.3		TOPSOIL	1	0.0	9		16							Visual
			Medium stiff to hard, brown CLAY, trace sand, trace gravel, trace rock fragments, moist.												
				2	3.0	13		23	42	24	18			89	A-7-6
				3	6.0	22		18							Visual
				4	8.5	35		15							Visual
1121.5	10.0		TERMINATION DEPTH = 10.0 FEET												

NOTES/REMARKS:

TEST_BORING_LOG 98113.GPJ PRIMENG.GDT 3/16/99

B-117: PAGE 1 OF 1

DESIGN AGENCY
PRIME ENGINEERING & ARCHITECT, INC.
1038 GHENT RD, AKRON, OHIO 44333

DESIGNED | DRAWN | CHECKED | REVIEWED | REVISED | DATE

STRUCTURE FILE NUMBER

SOIL PROFILE

MED-71-15.78

56
78

SBI09-SBI20.DGN PDH 11/2/99

PRIME ENGINEERING & ARCHITECTURE INC.

TEST BORING No.: B-118

STATION & OFFSET: 1356+00, 30.0 ft. Rt. (North Bound)

ELEVATION: 1127.6ft

CLIENT: Richland Engineering Limited

PROJECT: Subsurface Exploration for MED-IR71-15.94 PROJECT No.: 98113

LOCATION: Medina County, Ohio

DATE STARTED: 2/10/99 DATE COMPLETED: 2/10/99

SAMPLER DIAM: 2.0" TYPE: SS HAMMER WT.: 140lb FALL: 30.0"

CASING DIAM: 2.25" TYPE: HSA OTHER:

DRILLING INFORMATION:
STL / Diedrich D-50 Truck Mounted Drilling Rig

GROUNDWATER INFORMATION:
No groundwater encountered during and upon completion of the drilling operations.

ELEV (ft.)	DEPTH (ft.)	Soil/Rock Symbol	MATERIAL DESCRIPTION	SAMPLE NUMBER	SAMPLE DEPTH	FIELD DATA: N-VALUE (BLOWS/FT) OR REC%/(RQD%)	FIELD DATA: PENETROMETER (tons/ft²)	LAB: MOISTURE CONTENT (%)	LAB: ATTERBERG LIMITS (%) LL	PL	PI	LAB: PLASTICITY INDEX	LAB: DRY DENSITY (pcf)	LAB: UNCONFINED COMPRESSIVE STRENGTH (psf)	LAB: MINUS No. 200 SIEVE (%)	CLASSIFICATION SYMBOL
1127.3	0.3		TOPSOIL	1	0.0	6		18								Visual
			Medium stiff to very stiff, brown SILTY CLAY, some sand, trace gravel, trace rock fragments, moist.	2	3.0	17		23	38	22	16				76	A-6b
				3	6.0	13		21								Visual
				4	8.5	30		23								Visual
1117.6	10.0		TERMINATION DEPTH = 10.0 FEET													

NOTES/REMARKS:

B-118: PAGE 1 OF 1

TEST BORING LOG 98113.GPJ PRIMENG.GDT 3/16/99

PRIME ENGINEERING & ARCHITECTURE INC.

TEST BORING No.: B-119

STATION & OFFSET: 1360+00, 30.0 ft. Lt. (South Bound)

ELEVATION: 1123.2ft

CLIENT: Richland Engineering Limited

PROJECT: Subsurface Exploration for MED-IR71-15.94 PROJECT No.: 98113

LOCATION: Medina County, Ohio

DATE STARTED: 2/11/99 DATE COMPLETED: 2/11/99

SAMPLER DIAM: 2.0" TYPE: SS HAMMER WT.: 140lb FALL: 30.0"

CASING DIAM: 2.25" TYPE: HSA OTHER:

DRILLING INFORMATION:
STL / Diedrich D-50 Truck Mounted Drilling Rig

GROUNDWATER INFORMATION:
No groundwater encountered during and upon completion of the drilling operations.

ELEV (ft.)	DEPTH (ft.)	Soil/Rock Symbol	MATERIAL DESCRIPTION	SAMPLE NUMBER	SAMPLE DEPTH	FIELD DATA: N-VALUE (BLOWS/FT) OR REC%/(RQD%)	FIELD DATA: PENETROMETER (tons/ft²)	LAB: MOISTURE CONTENT (%)	LAB: ATTERBERG LIMITS (%) LL	PL	PI	LAB: PLASTICITY INDEX	LAB: DRY DENSITY (pcf)	LAB: UNCONFINED COMPRESSIVE STRENGTH (psf)	LAB: MINUS No. 200 SIEVE (%)	CLASSIFICATION SYMBOL
1123.0	0.3		TOPSOIL	1	0.0	8		16								Visual
			Stiff to very stiff, brown SILTY CLAY, little sand, trace gravel, trace rock fragments, moist.	2	3.0	16		16	34	18	16				81	A-6b
				3	6.0	14		18								Visual
				4	8.5	14		20								Visual
1113.2	10.0		TERMINATION DEPTH = 10.0 FEET													

NOTES/REMARKS:

B-119: PAGE 1 OF 1

TEST BORING LOG 98113.GPJ PRIMENG.GDT 3/16/99

PRIME ENGINEERING & ARCHITECTURE INC.

TEST BORING No.: B-120

STATION & OFFSET: 1364+00, 30.0 ft. Rt. (North Bound)

ELEVATION: 1119.0ft

CLIENT: Richland Engineering Limited

PROJECT: Subsurface Exploration for MED-IR71-15.94 PROJECT No.: 98113

LOCATION: Medina County, Ohio

DATE STARTED: 2/10/99 DATE COMPLETED: 2/10/99

SAMPLER DIAM: 2.0" TYPE: SS HAMMER WT.: 140lb FALL: 30.0"

CASING DIAM: 2.25" TYPE: HSA OTHER:

DRILLING INFORMATION:
STL / Diedrich D-50 Truck Mounted Drilling Rig

GROUNDWATER INFORMATION:
No groundwater encountered during and upon completion of the drilling operations.

ELEV (ft.)	DEPTH (ft.)	Soil/Rock Symbol	MATERIAL DESCRIPTION	SAMPLE NUMBER	SAMPLE DEPTH	FIELD DATA: N-VALUE (BLOWS/FT) OR REC%/(RQD%)	FIELD DATA: PENETROMETER (tons/ft²)	LAB: MOISTURE CONTENT (%)	LAB: ATTERBERG LIMITS (%) LL	PL	PI	LAB: PLASTICITY INDEX	LAB: DRY DENSITY (pcf)	LAB: UNCONFINED COMPRESSIVE STRENGTH (psf)	LAB: MINUS No. 200 SIEVE (%)	CLASSIFICATION SYMBOL
1118.8	0.3		TOPSOIL	1	0.0	9		23								Visual
			Stiff to very stiff, brown SILT AND CLAY, little sand, trace gravel, trace rock fragments, moist.	2	3.0	31		15	31	18	13				76	A-6a
				3	6.0	22		16								Visual
				4	8.5	12		19								Visual
1109.0	10.0		TERMINATION DEPTH = 10.0 FEET													

NOTES/REMARKS:

B-120: PAGE 1 OF 1

TEST BORING LOG 98113.GPJ PRIMENG.GDT 3/16/99

DESIGN AGENCY
PRIME ENGINEERING & ARCHITECT, INC.
1038 GHENT RD, AKRON, OHIO 44333

DRAWN | DESIGNED | CHECKED | REVIEWED | REVISED | DATE | STRUCTURE FILE NUMBER

SOIL PROFILE

MED-71-15.78

57
78

SB109-SB120.DGN PDH 11/2/99

PRIME ENGINEERING & ARCHITECTURE INC.

TEST BORING No.: B-121

STATION & OFFSET: 1368+00, 30.0 ft. Lt. (South Bound)

ELEVATION: 1115.1ft

CLIENT: Richland Engineering Limited

PROJECT: Subsurface Exploration for MED-IR71-15.94 PROJECT No.: 98113

LOCATION: Medina County, Ohio

DATE STARTED: 2/11/99 DATE COMPLETED: 2/11/99

SAMPLER DIAM: 2.0" TYPE: SS HAMMER WT.: 140lb FALL: 30.0"

CASING DIAM: 2.25" TYPE: HSA OTHER:

DRILLING INFORMATION:
STL / Diedrich D-50 Truck Mounted Drilling Rig

GROUNDWATER INFORMATION:
No groundwater encountered during and upon completion of the drilling operations.

ELEV (ft.)	DEPTH (ft.)	Soil/Rock Symbol	MATERIAL DESCRIPTION	FIELD DATA: SAMPLE NUMBER	SAMPLE DEPTH	N-VALUE (BLOWS/FT) OR REC%/(RQD%)	PENETROMETER (tons/ft²)	LABORATORY DATA: MOISTURE CONTENT (%)	ATTERBERG LIMITS (%): LL	PL	PI	DRY DENSITY (pcf)	UNCONFINED COMPRESSIVE STRENGTH (psf)	MINUS No. 200 SIEVE (%)	CLASSIFICATION SYMBOL
1114.7	0.4		TOPSOIL	1	0.0	12		16	30	18	12			77	A-6a
			Stiff to very stiff, brown SILT AND CLAY, little sand, trace gravel, trace rock fragments, moist (fill).	2	3.0	15		17							Visual
				3	6.0	15		21							Visual
				4	8.5	31		19							Visual
1105.1	10.0		Note: Trace of organic at 9.0 feet TERMINATION DEPTH = 10.0 FEET												

NOTES/REMARKS:

B-121: PAGE 1 OF 1

TEST BORING LOG 98113.GPJ PRIMENG.GDT 3/16/99

PRIME ENGINEERING & ARCHITECTURE INC.

TEST BORING No.: B-122

STATION & OFFSET: 1372+00, 30.0 ft. Rt. (North Bound)

ELEVATION: 1111.2ft

CLIENT: Richland Engineering Limited

PROJECT: Subsurface Exploration for MED-IR71-15.94 PROJECT No.: 98113

LOCATION: Medina County, Ohio

DATE STARTED: 2/10/99 DATE COMPLETED: 2/10/99

SAMPLER DIAM: 2.0" TYPE: SS HAMMER WT.: 140lb FALL: 30.0"

CASING DIAM: 2.25" TYPE: HSA OTHER:

DRILLING INFORMATION:
STL / Diedrich D-50 Truck Mounted Drilling Rig

GROUNDWATER INFORMATION:
No groundwater encountered during and upon completion of the drilling operations.

ELEV (ft.)	DEPTH (ft.)	Soil/Rock Symbol	MATERIAL DESCRIPTION	FIELD DATA: SAMPLE NUMBER	SAMPLE DEPTH	N-VALUE (BLOWS/FT) OR REC%/(RQD%)	PENETROMETER (tons/ft²)	LABORATORY DATA: MOISTURE CONTENT (%)	ATTERBERG LIMITS (%): LL	PL	PI	DRY DENSITY (pcf)	UNCONFINED COMPRESSIVE STRENGTH (psf)	MINUS No. 200 SIEVE (%)	CLASSIFICATION SYMBOL
1110.9	0.3		TOPSOIL	1	0.0	6		17	35	19	16			76	A-6b
			Medium stiff to very stiff, brown SILTY CLAY, some sand, trace gravel, trace rock fragments, moist (fill).	2	3.0	27		14							Visual
				3	6.0	13		23							Visual
1103.2	8.0		Very stiff, brown SILT AND CLAY, little sand, trace gravel, trace rock fragments, moist.	4	8.5	31		16							Visual
1101.2	10.0		TERMINATION DEPTH = 10.0 FEET												

NOTES/REMARKS:

B-122: PAGE 1 OF 1

TEST BORING LOG 98113.GPJ PRIMENG.GDT 3/16/99

PRIME ENGINEERING & ARCHITECTURE INC.

TEST BORING No.: B-123

STATION & OFFSET: 1376+00, 30.0 ft. Lt. (South Bound)

ELEVATION: 1106.9ft

CLIENT: Richland Engineering Limited

PROJECT: Subsurface Exploration for MED-IR71-15.94 PROJECT No.: 98113

LOCATION: Medina County, Ohio

DATE STARTED: 2/11/99 DATE COMPLETED: 2/11/99

SAMPLER DIAM: 2.0" TYPE: SS HAMMER WT.: 140lb FALL: 30.0"

CASING DIAM: 2.25" TYPE: HSA OTHER:

DRILLING INFORMATION:
STL / Diedrich D-50 Truck Mounted Drilling Rig

GROUNDWATER INFORMATION:
No groundwater encountered during and upon completion of the drilling operations.

ELEV (ft.)	DEPTH (ft.)	Soil/Rock Symbol	MATERIAL DESCRIPTION	FIELD DATA: SAMPLE NUMBER	SAMPLE DEPTH	N-VALUE (BLOWS/FT) OR REC%/(RQD%)	PENETROMETER (tons/ft²)	LABORATORY DATA: MOISTURE CONTENT (%)	ATTERBERG LIMITS (%): LL	PL	PI	DRY DENSITY (pcf)	UNCONFINED COMPRESSIVE STRENGTH (psf)	MINUS No. 200 SIEVE (%)	CLASSIFICATION SYMBOL
1106.6	0.3		TOPSOIL	1	0.0	10		16							Visual
			Stiff, brown SILT AND CLAY, little sand, trace gravel, trace rock fragments, trace roots, moist (fill).	2	3.0	23		12	29	19	10			72	A-4a
1103.9	3.0		Very stiff, gray SANDY SILT, some clay, trace gravel, trace rock fragments, moist (fill).	3	6.0	20		14							Visual
1098.4	8.5		Very stiff, brown SILT AND CLAY, little sand, trace gravel, trace rock fragments, moist (fill).	4	8.5	18		19							Visual
1096.9	10.0		TERMINATION DEPTH = 10.0 FEET												

NOTES/REMARKS:

B-123: PAGE 1 OF 1

TEST BORING LOG 98113.GPJ PRIMENG.GDT 3/16/99

DESIGN AGENCY
PRIME ENGINEERING & ARCHITECT, INC.
1038 GHENT RD, AKRON, OHIO 44333

DESIGNED | DRAWN | CHECKED | REVIEWED | DATE | STRUCTURE FILE NUMBER | REVISED

SOIL PROFILE

MED-71-15.78

58
78

SB121-SB132.DGN PDH 11/2/99

PRIME ENGINEERING & ARCHITECTURE INC.

TEST BORING No.: B-124

STATION & OFFSET: 1380+00, 30.0 ft. Rt. (North Bound)

ELEVATION: 1102.9ft

CLIENT: Richland Engineering Limited

PROJECT: Subsurface Exploration for MED-IR71-15.94 — PROJECT No.: 98113

LOCATION: Medina County, Ohio

DATE STARTED: 2/10/99 — DATE COMPLETED: 2/10/99

SAMPLER DIAM: 2.0" — TYPE: SS — HAMMER WT.: 140lb — FALL: 30.0"

CASING DIAM: 2.25" — TYPE: HSA — OTHER:

DRILLING INFORMATION:
STL / Diedrich D-50 Truck Mounted Drilling Rig

GROUNDWATER INFORMATION:
No groundwater encountered during and upon completion of the drilling operations.

ELEV (ft.)	DEPTH (ft.)	Soil/Rock Symbol	MATERIAL DESCRIPTION	SAMPLE NUMBER	SAMPLE DEPTH	N-VALUE (BLOWS/FT) OR REC%/(RQD%)	PENETROMETER (tons/ft²)	MOISTURE CONTENT (%)	ATTERBERG LIMITS (%) LL	PL	PI	DRY DENSITY (pcf)	UNCONFINED COMPRESSIVE STRENGTH (psf)	MINUS No. 200 SIEVE (%)	CLASSIFICATION SYMBOL
1102.7	0.3		TOPSOIL	1	0.0	7		16							Visual
			Medium stiff, brown SILT AND CLAY, little sand, trace gravel, trace rock fragments, moist (fill).												
1099.9	3.0		Stiff to very stiff, brown SANDY SILT, some clay, trace gravel, trace rock fragments, moist (fill).	2	3.0	18		14	28	18	10			76	A-4a
				3	6.0	9		17							Visual
1094.4	8.5		Very stiff, gray SILT AND CLAY, some sand, trace gravel, trace rock fragments, moist (fill).	4	8.5	8		21							Visual
1092.9	10.0		TERMINATION DEPTH = 10.0 FEET												

NOTES/REMARKS:

TEST_BORING_LOG 98113.GPJ PRIMENG.GDT 3/16/99

B-124: PAGE 1 OF 1

PRIME ENGINEERING & ARCHITECTURE INC.

TEST BORING No.: B-125

STATION & OFFSET: 1384+00, 30.0 ft. Lt. (South Bound)

ELEVATION: 1098.5ft

CLIENT: Richland Engineering Limited

PROJECT: Subsurface Exploration for MED-IR71-15.94 — PROJECT No.: 98113

LOCATION: Medina County, Ohio

DATE STARTED: 2/11/99 — DATE COMPLETED: 2/11/99

SAMPLER DIAM: 2.0" — TYPE: SS — HAMMER WT.: 140lb — FALL: 30.0"

CASING DIAM: 2.25" — TYPE: HSA — OTHER:

DRILLING INFORMATION:
STL / Diedrich D-50 Truck Mounted Drilling Rig

GROUNDWATER INFORMATION:
Water encountered at 9.0 feet at completion.

ELEV (ft.)	DEPTH (ft.)	Soil/Rock Symbol	MATERIAL DESCRIPTION	SAMPLE NUMBER	SAMPLE DEPTH	N-VALUE (BLOWS/FT) OR REC%/(RQD%)	PENETROMETER (tons/ft²)	MOISTURE CONTENT (%)	ATTERBERG LIMITS (%) LL	PL	PI	DRY DENSITY (pcf)	UNCONFINED COMPRESSIVE STRENGTH (psf)	MINUS No. 200 SIEVE (%)	CLASSIFICATION SYMBOL
			▽ GROUNDWATER UPON COMPLETION												
1098.2	0.3		TOPSOIL	1	0.0	7		14							Visual
			Medium stiff, brown SILT AND CLAY, little sand, trace gravel, trace rock fragments, trace roots, moist (fill).												
1095.5	3.0		Very stiff, brown CLAY, trace sand, trace gravel, trace rock fragments, moist (fill).	2	3.0	22		20	46	22	24			89	A-7-6
				3	6.0	26		16							Visual
1090.0	8.5		Medium dense, gray COARSE AND FINE SAND, little silt, moist (fill). ▽	4	8.5	13		20							Visual
1088.5	10.0		TERMINATION DEPTH = 10.0 FEET												

NOTES/REMARKS:

TEST_BORING_LOG 98113.GPJ PRIMENG.GDT 3/16/99

B-125: PAGE 1 OF 1

PRIME ENGINEERING & ARCHITECTURE INC.

TEST BORING No.: B-126

STATION & OFFSET: 1388+00, 30.0 ft. Rt. (North Bound)

ELEVATION: 1094.1ft

CLIENT: Richland Engineering Limited

PROJECT: Subsurface Exploration for MED-IR71-15.94 — PROJECT No.: 98113

LOCATION: Medina County, Ohio

DATE STARTED: 2/10/99 — DATE COMPLETED: 2/10/99

SAMPLER DIAM: 2.0" — TYPE: SS — HAMMER WT.: 140lb — FALL: 30.0"

CASING DIAM: 2.25" — TYPE: HSA — OTHER:

DRILLING INFORMATION:
STL / Diedrich D-50 Truck Mounted Drilling Rig

GROUNDWATER INFORMATION:
No groundwater encountered during and upon completion of the drilling operations.

ELEV (ft.)	DEPTH (ft.)	Soil/Rock Symbol	MATERIAL DESCRIPTION	SAMPLE NUMBER	SAMPLE DEPTH	N-VALUE (BLOWS/FT) OR REC%/(RQD%)	PENETROMETER (tons/ft²)	MOISTURE CONTENT (%)	ATTERBERG LIMITS (%) LL	PL	PI	DRY DENSITY (pcf)	UNCONFINED COMPRESSIVE STRENGTH (psf)	MINUS No. 200 SIEVE (%)	CLASSIFICATION SYMBOL
1093.7	0.4		TOPSOIL	1	0.0	11		16							Visual
			Stiff to very stiff, brown to gray SILT AND CLAY, some sand, trace gravel, trace rock fragments, moist.												
			Note: Color change to gray at 3.0 feet.	2	3.0	18		15	29	18	11			73	A-6a
				3	6.0	15		14							Visual
				4	8.5	10		13							Visual
1084.1	10.0		TERMINATION DEPTH = 10.0 FEET												

NOTES/REMARKS:

TEST_BORING_LOG 98113.GPJ PRIMENG.GDT 3/16/99

B-126: PAGE 1 OF 1

DESIGN AGENCY
PRIME ENGINEERING & ARCHITECT, INC.
1038 GHENT RD, AKRON, OHIO 44333

DESIGNED | DRAWN | CHECKED | REVIEWED | REVISED | DATE | STRUCTURE FILE NUMBER

SOIL PROFILE

MED-71-15.78

59
78

SB121-SB132.DGN PDH 11/2/99

PRIME ENGINEERING & ARCHITECTURE INC.

TEST BORING No.: B-127

STATION & OFFSET: 1392+00, 30.0 ft. Lt. (South Bound)

ELEVATION: 1090.1ft

CLIENT: Richland Engineering Limited

PROJECT: Subsurface Exploration for MED-IR71-15.94 PROJECT No.: 98113

LOCATION: Medina County, Ohio

DATE STARTED: 2/11/99 DATE COMPLETED: 2/11/99

SAMPLER DIAM: 2.0" TYPE: SS HAMMER WT.: 140lb FALL: 30.0"

CASING DIAM: 2.25" TYPE: HSA OTHER:

DRILLING INFORMATION:
STL / Diedrich D-50 Truck Mounted Drilling Rig

GROUNDWATER INFORMATION:
No groundwater encountered during and upon completion of the drilling operations.

ELEV (ft.)	DEPTH (ft.)	Soil/Rock Symbol	MATERIAL DESCRIPTION	SAMPLE NUMBER	SAMPLE DEPTH	N-VALUE (BLOWS/FT) OR REC%/RQD%	PENETROMETER (tons/ft²)	MOISTURE CONTENT (%)	ATTERBERG LIMITS (%) LL	ATTERBERG LIMITS (%) PL	ATTERBERG LIMITS (%) PI	DRY DENSITY (pcf)	UNCONFINED COMPRESSIVE STRENGTH (psf)	MINUS No. 200 SIEVE (%)	CLASSIFICATION SYMBOL
1089.8	0.3		TOPSOIL	1	0.0	12		15	32	20	12			83	A-6a
			Stiff to very stiff, brown SILT AND CLAY, little sand, trace gravel, trace rock fragments, moist.	2	3.0	20		15							Visual
				3	6.0	24		15							Visual
			Note: Gray color present at 8.5 feet	4	8.5	16		14							Visual
1080.1	10.0		TERMINATION DEPTH = 10.0 FEET												

NOTES/REMARKS:

B-127: PAGE 1 OF 1

TEST_BORING_LOG 98113.GPJ PRIMENG.GDT 3/16/99

PRIME ENGINEERING & ARCHITECTURE INC.

TEST BORING No.: B-128

STATION & OFFSET: 1396+00, 30.0 ft. Rt. (North Bound)

ELEVATION: 1085.3ft

CLIENT: Richland Engineering Limited

PROJECT: Subsurface Exploration for MED-IR71-15.94 PROJECT No.: 98113

LOCATION: Medina County, Ohio

DATE STARTED: 2/11/99 DATE COMPLETED: 2/11/99

SAMPLER DIAM: 2.0" TYPE: SS HAMMER WT.: 140lb FALL: 30.0"

CASING DIAM: 2.25" TYPE: HSA OTHER:

DRILLING INFORMATION:
STL / Diedrich D-50 Truck Mounted Drilling Rig

GROUNDWATER INFORMATION:
No groundwater encountered during and upon completion of the drilling operations.

ELEV (ft.)	DEPTH (ft.)	Soil/Rock Symbol	MATERIAL DESCRIPTION	SAMPLE NUMBER	SAMPLE DEPTH	N-VALUE (BLOWS/FT) OR REC%/RQD%	PENETROMETER (tons/ft²)	MOISTURE CONTENT (%)	ATTERBERG LIMITS (%) LL	ATTERBERG LIMITS (%) PL	ATTERBERG LIMITS (%) PI	DRY DENSITY (pcf)	UNCONFINED COMPRESSIVE STRENGTH (psf)	MINUS No. 200 SIEVE (%)	CLASSIFICATION SYMBOL
1085.1	0.3		TOPSOIL	1	0.0	17		12	30	19	11			71	A-6a
			Stiff to very stiff, gray SILT AND CLAY, little sand, little gravel and rock fragments, moist.	2	3.0	16		13							Visual
				3	6.0	13		14							Visual
				4	8.5	19		14							Visual
1075.3	10.0		TERMINATION DEPTH = 10.0 FEET												

NOTES/REMARKS:

B-128: PAGE 1 OF 1

TEST_BORING_LOG 98113.GPJ PRIMENG.GDT 3/16/99

PRIME ENGINEERING & ARCHITECTURE INC.

TEST BORING No.: B-129

STATION & OFFSET: 1400+00, 30.0 ft. Lt. (South Bound)

ELEVATION: 1081.1ft

CLIENT: Richland Engineering Limited

PROJECT: Subsurface Exploration for MED-IR71-15.94 PROJECT No.: 98113

LOCATION: Medina County, Ohio

DATE STARTED: 2/11/99 DATE COMPLETED: 2/11/99

SAMPLER DIAM: 2.0" TYPE: SS HAMMER WT.: 140lb FALL: 30.0"

CASING DIAM: 2.25" TYPE: HSA OTHER:

DRILLING INFORMATION:
STL / Diedrich D-50 Truck Mounted Drilling Rig

GROUNDWATER INFORMATION:
No groundwater encountered during and upon completion of the drilling operations.

ELEV (ft.)	DEPTH (ft.)	Soil/Rock Symbol	MATERIAL DESCRIPTION	SAMPLE NUMBER	SAMPLE DEPTH	N-VALUE (BLOWS/FT) OR REC%/RQD%	PENETROMETER (tons/ft²)	MOISTURE CONTENT (%)	ATTERBERG LIMITS (%) LL	ATTERBERG LIMITS (%) PL	ATTERBERG LIMITS (%) PI	DRY DENSITY (pcf)	UNCONFINED COMPRESSIVE STRENGTH (psf)	MINUS No. 200 SIEVE (%)	CLASSIFICATION SYMBOL
1080.8	0.3		TOPSOIL	1	0.0	15		15							Visual
			Very stiff to hard, brown SILT AND CLAY, little sand, trace gravel, trace rock fragments, moist.	2	3.0	23		16	34	21	13			76	A-6a
				3	6.0	25		16							Visual
			Note: Color change to gray at 9.0 feet	4	8.5	30		15							Visual
1071.1	10.0		TERMINATION DEPTH = 10.0 FEET												

NOTES/REMARKS:

B-129: PAGE 1 OF 1

TEST_BORING_LOG 98113.GPJ PRIMENG.GDT 3/16/99

DESIGN AGENCY
PRIME ENGINEERING & ARCHITECT, INC.
1038 GHENT RD, AKRON, OHIO 44333

DRAWN | DATE | REVIEWED | STRUCTURE FILE NUMBER
DESIGNED | CHECKED | REVISED

SOIL PROFILE

MED-71-15.78

60
78

SB121-SB132.DGN PDH 11/2/99

PRIME ENGINEERING & ARCHITECTURE INC.

TEST BORING No.: B-130

STATION & OFFSET: 1404+00, 30.0 ft. Rt. (North Bound)

ELEVATION: 1076.4ft

CLIENT: Richland Engineering Limited

PROJECT: Subsurface Exploration for MED-IR71-15.94 — PROJECT No.: 98113

LOCATION: Medina County, Ohio

DATE STARTED: 2/11/99 — DATE COMPLETED: 2/11/99

SAMPLER DIAM: 2.0" — TYPE: SS — HAMMER WT.: 140lb — FALL: 30.0"

CASING DIAM: 2.25" — TYPE: HSA — OTHER:

DRILLING INFORMATION:
STL / Diedrich D-50 Truck Mounted Drilling Rig

GROUNDWATER INFORMATION:
No groundwater encountered during and upon completion of the drilling operations.

ELEV (ft.)	DEPTH (ft.)	Soil/Rock Symbol	MATERIAL DESCRIPTION	SAMPLE NUMBER	SAMPLE DEPTH	N-VALUE (BLOWS/FT) OR REC%/(RQD%)	PENETROMETER (tons/ft²)	MOISTURE CONTENT (%)	ATTERBERG LIMITS (%) LL	PL	PI	DRY DENSITY (pcf)	UNCONFINED COMPRESSIVE STRENGTH (psf)	MINUS No. 200 SIEVE (%)	CLASSIFICATION SYMBOL
1076.1	0.3		TOPSOIL												
			Medium stiff to hard, brown SILT AND CLAY, little sand, trace gravel, trace rock fragments, moist.	1	0.0	7		23							Visual
				2	3.0	13		25	36	23	13			84	A-6a
			Note: Trace of roots found to 2.0 feet												
				3	6.0	7		29							Visual
				4	8.5	37		17							Visual
1066.4	10.0		TERMINATION DEPTH = 10.0 FEET												

NOTES/REMARKS:

B-130: PAGE 1 OF 1

TEST_BORING_LOG 98113.GPJ PRIMENG.GDT 3/16/99

PRIME ENGINEERING & ARCHITECTURE INC.

TEST BORING No.: B-131

STATION & OFFSET: 1408+00, 30.0 ft. Lt. (South Bound)

ELEVATION: 1072.1ft

CLIENT: Richland Engineering Limited

PROJECT: Subsurface Exploration for MED-IR71-15.94 — PROJECT No.: 98113

LOCATION: Medina County, Ohio

DATE STARTED: 2/11/99 — DATE COMPLETED: 2/11/99

SAMPLER DIAM: 2.0" — TYPE: SS — HAMMER WT.: 140lb — FALL: 30.0"

CASING DIAM: 2.25" — TYPE: HSA — OTHER:

DRILLING INFORMATION:
STL / Diedrich D-50 Truck Mounted Drilling Rig

GROUNDWATER INFORMATION:
No groundwater encountered during and upon completion of the drilling operations.

ELEV (ft.)	DEPTH (ft.)	Soil/Rock Symbol	MATERIAL DESCRIPTION	SAMPLE NUMBER	SAMPLE DEPTH	N-VALUE (BLOWS/FT) OR REC%/(RQD%)	PENETROMETER (tons/ft²)	MOISTURE CONTENT (%)	ATTERBERG LIMITS (%) LL	PL	PI	DRY DENSITY (pcf)	UNCONFINED COMPRESSIVE STRENGTH (psf)	MINUS No. 200 SIEVE (%)	CLASSIFICATION SYMBOL
1071.7	0.4		TOPSOIL												
			Stiff to very stiff, brown SILT AND CLAY, little sand, trace gravel, trace rock fragments, moist.	1	0.0	12		21							Visual
				2	3.0	16		17	34	21	13			73	A-6a
				3	6.0	31		17							Visual
			Note: Color change to gray at 8.5 feet.	4	8.5	19		15							Visual
1062.1	10.0		TERMINATION DEPTH = 10.0 FEET												

NOTES/REMARKS:

B-131: PAGE 1 OF 1

TEST_BORING_LOG 98113.GPJ PRIMENG.GDT 3/16/99

PRIME ENGINEERING & ARCHITECTURE INC.

TEST BORING No.: B-132

STATION & OFFSET: 1412+00, 30.0 ft. Rt. (North Bound)

ELEVATION: 1067.7ft

CLIENT: Richland Engineering Limited

PROJECT: Subsurface Exploration for MED-IR71-15.94 — PROJECT No.: 98113

LOCATION: Medina County, Ohio

DATE STARTED: 3/8/99 — DATE COMPLETED: 3/8/99

SAMPLER DIAM: 2.0" — TYPE: SS — HAMMER WT.: 140lb — FALL: 30.0"

CASING DIAM: 2.25" — TYPE: HSA — OTHER:

DRILLING INFORMATION:
STL / Diedrich D-50 Truck Mounted Drilling Rig

GROUNDWATER INFORMATION:
No groundwater encountered during and upon completion of the drilling operations.

ELEV (ft.)	DEPTH (ft.)	Soil/Rock Symbol	MATERIAL DESCRIPTION	SAMPLE NUMBER	SAMPLE DEPTH	N-VALUE (BLOWS/FT) OR REC%/(RQD%)	PENETROMETER (tons/ft²)	MOISTURE CONTENT (%)	ATTERBERG LIMITS (%) LL	PL	PI	DRY DENSITY (pcf)	UNCONFINED COMPRESSIVE STRENGTH (psf)	MINUS No. 200 SIEVE (%)	CLASSIFICATION SYMBOL
1067.4	0.3		TOPSOIL												
			Very stiff, brown SILT AND CLAY, little sand, trace gravel, trace rock fragments, moist.	1	1.0	22		18							Visual
1064.7	3.0		Stiff, gray SILTY CLAY, little sand, little gravel and rock fragments, moist.	2	3.5	13		21	38	22	16			68	A-6b
				3	6.0	13		16							Visual
1059.2	8.5		Very stiff, brown SILT AND CLAY, little sand, trace gravel, trace rock fragments, moist.	4	8.5	26		17							Visual
1057.7	10.0		TERMINATION DEPTH = 10.0 FEET												

NOTES/REMARKS:

B-132: PAGE 1 OF 1

TEST_BORING_LOG 98113.GPJ PRIMENG.GDT 3/16/99

DESIGN AGENCY
PRIME ENGINEERING & ARCHITECT, INC.
1038 GHENT RD, AKRON, OHIO 44333

DESIGNED | DRAWN | REVIEWED | DATE | CHECKED | REVISED | STRUCTURE FILE NUMBER

SOIL PROFILE

MED-71-15.78

61
78

SB121-SB132.DGN PDH 11/2/99

PRIME ENGINEERING & ARCHITECTURE INC.

TEST BORING No.: B-115S

STATION & OFFSET: 1343+00, 30.0 ft. Lt. (South Bound)

ELEVATION:

CLIENT: Richland Engineering Limited

PROJECT: Subsurface Exploration for MED-IR71-15.94 — PROJECT No.: 98113

LOCATION: Medina County, Ohio

DATE STARTED: 3/8/99 — DATE COMPLETED: 3/8/99

SAMPLER DIAM: 2.0" — TYPE: SS — HAMMER WT.: 140lb — FALL: 30.0"

CASING DIAM: 3.25" — TYPE: HSA — OTHER:

DRILLING INFORMATION:
NAR / CME-55 Truck Mounted drilling Rig

GROUNDWATER INFORMATION:
No groundwater encountered during and upon completion of the drilling operations.

ELEV (ft.)	DEPTH (ft.)	Soil/Rock Symbol	MATERIAL DESCRIPTION	SAMPLE NUMBER	SAMPLE DEPTH	N-VALUE (BLOWS/FT) OR REC%/RQD%	PENETROMETER (tons/ft²)	MOISTURE CONTENT (%)	ATTERBERG LIMITS (%) LL	PL	PI	DRY DENSITY (pcf)	UNCONFINED COMPRESSIVE STRENGTH (psf)	MINUS No. 200 SIEVE (%)	CLASSIFICATION SYMBOL
	0.3		TOPSOIL	1	0.0	13		18							Visual
			Stiff to hard, brown SILT AND CLAY, little sand, trace gravel, trace rock fragments, moist.	2	2.0	23		18							Visual
				3	4.0	26		14							Visual
				4	6.0	66		17							Visual
				5	8.0	30		13							Visual
	10.0		TERMINATION DEPTH = 10.0 FEET												

NOTES/REMARKS:

TEST_BORING_LOG 98113.GPJ PRIMENG.GDT 3/16/99

B-115S: PAGE 1 OF 1

PRIME ENGINEERING & ARCHITECTURE INC.

TEST BORING No.: B-115E

STATION & OFFSET: 1344+00, 30.0 ft. Rt. (North Bound)

ELEVATION:

CLIENT: Richland Engineering Limited

PROJECT: Subsurface Exploration for MED-IR71-15.94 — PROJECT No.: 98113

LOCATION: Medina County, Ohio

DATE STARTED: 3/8/99 — DATE COMPLETED: 3/8/99

SAMPLER DIAM: 2.0" — TYPE: SS — HAMMER WT.: 140lb — FALL: 30.0"

CASING DIAM: 3.25" — TYPE: HSA — OTHER:

DRILLING INFORMATION:
NAR / CME-55 Truck Mounted drilling Rig

GROUNDWATER INFORMATION:
Water encountered at 6.0 feet during and at 9.0 feet upon completion of the drilling operations

▼ GROUNDWATER DURING DRILLING ▽ GROUNDWATER UPON COMPLETION

ELEV (ft.)	DEPTH (ft.)	Soil/Rock Symbol	MATERIAL DESCRIPTION	SAMPLE NUMBER	SAMPLE DEPTH	N-VALUE (BLOWS/FT) OR REC%/RQD%	PENETROMETER (tons/ft²)	MOISTURE CONTENT (%)	ATTERBERG LIMITS (%) LL	PL	PI	DRY DENSITY (pcf)	UNCONFINED COMPRESSIVE STRENGTH (psf)	MINUS No. 200 SIEVE (%)	CLASSIFICATION SYMBOL
	0.4		TOPSOIL	1	0.0	12		18							Visual
			Stiff to hard, brown SILT AND CLAY, little sand, trace gravel, trace rock fragments, moist.	2	2.0	33		19							Visual
				3	4.0	22		22							Visual
	6.0		Medium dense, brown COARSE AND FINE SAND, little silt, moist.	4	6.0	30		10							Visual
	8.0		Hard, brown SILT AND CLAY, little sand, trace gravel, trace rock fragments, moist.	5	8.0	36		17							Visual
	10.0		TERMINATION DEPTH = 10.0 FEET												

NOTES/REMARKS:

TEST_BORING_LOG 98113.GPJ PRIMENG.GDT 3/16/99

B-115E: PAGE 1 OF 1

PRIME ENGINEERING & ARCHITECTURE INC.

TEST BORING No.: B-115N

STATION & OFFSET: 1345+00, 30.0 ft. Lt. (South Bound)

ELEVATION:

CLIENT: Richland Engineering Limited

PROJECT: Subsurface Exploration for MED-IR71-15.94 — PROJECT No.: 98113

LOCATION: Medina County, Ohio

DATE STARTED: 3/8/99 — DATE COMPLETED: 3/8/99

SAMPLER DIAM: 2.0" — TYPE: SS — HAMMER WT.: 140lb — FALL: 30.0"

CASING DIAM: 3.25" — TYPE: HSA — OTHER:

DRILLING INFORMATION:
NAR / CME-55 Truck Mounted drilling Rig

GROUNDWATER INFORMATION:
No groundwater encountered during and upon completion of the drilling operations.

ELEV (ft.)	DEPTH (ft.)	Soil/Rock Symbol	MATERIAL DESCRIPTION	SAMPLE NUMBER	SAMPLE DEPTH	N-VALUE (BLOWS/FT) OR REC%/RQD%	PENETROMETER (tons/ft²)	MOISTURE CONTENT (%)	ATTERBERG LIMITS (%) LL	PL	PI	DRY DENSITY (pcf)	UNCONFINED COMPRESSIVE STRENGTH (psf)	MINUS No. 200 SIEVE (%)	CLASSIFICATION SYMBOL
	0.3		TOPSOIL	1	0.0	10		21							Visual
			Stiff to very stiff, brown SILT AND CLAY, little sand, trace gravel, trace rock fragments, moist.	2	2.0	25		18							Visual
				3	4.0	22		17							Visual
				4	6.0	25		19							Visual
				5	8.0	16		17							Visual
	10.0		TERMINATION DEPTH = 10.0 FEET												

NOTES/REMARKS:

TEST_BORING_LOG 98113.GPJ PRIMENG.GDT 3/16/99

B-115N: PAGE 1 OF 1

DESIGN AGENCY
PRIME ENGINEERING & ARCHITECT, INC.
1038 GHENT RD, AKRON, OHIO 44333

DESIGNED | DRAWN | CHECKED | DATE | REVIEWED | REVISED | STRUCTURE FILE NUMBER

SOIL PROFILE

MED-71-15.78

62
78

SBI15S-SBI15N.DGN PDH 11/2/99

I-71 Southbound Lane Pavement Cores

Core Number	Station	Offset	Asphalt Thickness	Length of Recovered Core	Type of RoadBase
PS-1	1399+48	75' Lt.	5.0"	4.0"	Crushed Limestone
PS-2	1374+02	75' Lt.	6.0"	3.5"	Washed Sand & Gravel
PS-3	1347+39	75' Lt.	5.5"	5.5"	Washed Sand & Gravel
PS-4	1324+91	75' Lt.	6.0"	6.0"	Washed Sand & Gravel
PS-5	1299+67	75' Lt.	5.5"	5.5"	Washed Sand & Gravel
PS-6	1273+53	75' Lt.	6.0"	6.0"	Washed Sand & Gravel
PS-7	1247+64	75' Lt.	8.0"	7.0"	Washed Sand & Gravel
PS-8	1221+64	75' Lt.	7.0"	7.0"	Washed Sand & Gravel
PS-9	1197+45	75' Lt.	5.5"	5.0"	Washed Sand & Gravel
PS-10	1170+99	75' Lt.	6.5"	6.5"	Washed Sand & Gravel
PS-11	1146+70	75' Lt.	6.5"	6.25"	Washed Sand & Gravel
PS-11A	1133+88	75' Lt.	7.0"	7.0"	Washed Sand & Gravel
PS-12	1115+84	75' Lt.	2.0"	11.0" *	Washed Sand & Gravel
PS-12A	1108+38	75' Lt.	5.5"	5.5"	Washed Sand & Gravel
PS-13	1087+07	75' Lt.	7.5"	5.5"	Washed Sand & Gravel
PS-14	1061+41	75' Lt.	6.5"	6.5"	Washed Sand & Gravel
PS-15	1035+59	75' Lt.	6.0"	6.0"	Washed Sand & Gravel
PS-16	1008+97	75' Lt.	5.75"	5.75"	Washed Sand & Gravel
PS-17	982+77	75' Lt.	6.0"	6.0"	Washed Sand & Gravel
PS-18	957+04	75' Lt.	6.25"	6.25"	Washed Sand & Gravel
PS-19	930+11	75' Lt.	6.5"	6.25"	Washed Sand & Gravel
PS-20	881+99	75' Lt.	6.0"	5.75"	Washed Sand & Gravel
PS-21	859+58	75' Lt.	8.0"	7.25"	Crushed Limestone
PS-22	836+17	75' Lt.	8.0"	7.0"	Crushed Limestone

PS = Pavement South

* Concrete was encountered in PS-12. Pavement measurements = Asphalt 0-2", Concrete 2-11"

I-71 Northbound Lane Pavement Cores

Core Number	Station	Offset	Asphalt Thickness	Length of Recovered Core	Type of RoadBase
PN-1	840+26	75' Rt.	9.0"	6.5"	Crushed Limestone
PN-2	864+21	75' Rt.	10.0"	6.0"	Crushed Limestone
PN-3	906+77	75' Rt.	9.0"	9.0"	Crushed Limestone
PN-4	911+03	75' Rt.	9.5"	9.5"	Crushed Limestone
PN-4A	923+00	75' Rt.	7.5"	7.5"	Washed Sand & Gravel
PN-5	934+95	75' Rt.	5.0"	3.5"	Washed Sand & Gravel
PN-6	959+97	75' Rt.	6.0"	5.75"	Washed Sand & Gravel
PN-7	995+06	75' Rt.	6.0"	5.0"	Washed Sand & Gravel
PN-8	1010+62	75' Rt.	6.0"	5.0"	Washed Sand & Gravel
PN-9	1037+25	75' Rt.	5.5"	5.5"	Washed Sand & Gravel
PN-10	1062+16	75' Rt.	5.5"	5.5"	Washed Sand & Gravel
PN-11	1087+90	75' Rt.	4.5"	3.0"	Washed Sand & Gravel
PN-12	1112+30	75' Rt.	5.5"	5.5"	Washed Sand & Gravel
PN-13	1136+60	75' Rt.	5.5"	5.5"	Washed Sand & Gravel
PN-14	1161+86	75' Rt.	6.0"	6.0"	Washed Sand & Gravel
PN-15	1187+06	75' Rt.	8.0"	7.0"	Washed Sand & Gravel
PN-16	1211+53	75' Rt.	6.0"	5.0"	Washed Sand & Gravel
PN-17	1235+37	75' Rt.	6.0"	6.0"	Washed Sand & Gravel
PN-18	1264+09	75' Rt.	7.0"	7.0"	Washed Sand & Gravel
PN-19	1288+45	75' Rt.	6.5"	6.5"	Washed Sand & Gravel
PN-20	1313+60	75' Rt.	6.25"	6.25"	Washed Sand & Gravel
PN-21	1341+12	75' Rt.	6.0"	6.0"	Washed Sand & Gravel
PN-22	1367+53	75' Rt.	6.0"	6.0"	Washed Sand & Gravel

PN = Pavement North

DESIGN AGENCY
PRIME ENGINEERING & ARCHITECT, INC.
1038 GHENT RD, AKRON, OHIO 44333

DESIGNED | DRAWN | REVIEWED | DATE
CHECKED | REVISED | STRUCTURE FILE NUMBER

SOIL PROFILE

MED-71-15.78

63
78

PCI-PC2.DGN PDH 11/2/99

PRIME ENGINEERING & ARCHITECTURE INC.

TEST BORING No.: S-1

STATION & OFFSET: 964+27.59, 181.42 LT.

ELEVATION: 1,187.81

CLIENT: Richland Engineering Ltd.

PROJECT: Subsurfce Investigation for Granger Road Bridge over IR-71 PROJECT No.: 99017

LOCATION: Medina County, Ohio

DATE STARTED: 2/21/99 DATE COMPLETED: 2/21/99

SAMPLER DIAM: 2.0" TYPE: SS HAMMER WT.: 140lb FALL: 30.0"

CASING DIAM: 3.25" TYPE: OTHER:

DRILLING INFORMATION: Ohio Test Bor, Inc., Mobile B-57 Truck Mounted Drilling Rig

GROUNDWATER INFORMATION: Spoon was wet at 74.5 feet.

▼ GROUNDWATER DURING DRILLING ▽ GROUNDWATER UPON COMPLETION

ELEV (ft.)	DEPTH (ft.)	Soil/Rock Symbol	MATERIAL DESCRIPTION	SAMPLE NUMBER	SAMPLE DEPTH	FIELD DATA: N-VALUE (BLOWS/FT) OR REC%/(RQD%)	FIELD DATA: PENETROMETER (tons/ft²)	LABORATORY DATA: MOISTURE CONTENT (%)	ATTERBERG LIMITS (%): LIQUID LIMIT LL	ATTERBERG LIMITS (%): PLASTIC LIMIT PL	ATTERBERG LIMITS (%): PLASTICITY INDEX PI	DRY DENSITY (pcf)	UNCONFINED COMPRESSIVE STRENGTH (psf)	MINUS No. 200 SIEVE (%)	CLASSIFICATION SYMBOL
	0.5		ASPHALT												
	1.3		APPROACH SLAB												
			Very stiff to hard, brown SILT AND CLAY, little sand, trace gravel, moist.	1	1.5	23	4.0+								
				2	3.5	52	4.0+								
				3	6.0	46	4.0+								
	8.5		Layer of coarse and fine sand	4	8.5	32									
	8.0														
			Note: Trace of rock fragments encountered below 11.0 feet.	5	11.0	41	4.0+								
				6	13.5	32	4.0+								
				7	16.0	37	4.0+								
				8	18.5	55	4.0+								
	21.0		Dense, brown SILT, some clay, little sand, trace gravel, moist.	9	21.0	33	3.5								
	23.7		Very stiff, gray SILT AND CLAY, little sand, trace gravel, trace rock fragments, moist.	10	23.5	25	3.0								
				11	26.0	22	2.5								
				12	28.5	18	2.5								

NOTES/REMARKS: Boring was located 25.0 feet west of west abutment on west bound lane.

TEST_BORING_LOG 99017.GPJ PRIMENG.GDT 2/26/99

S-1: PAGE 1 OF 3

PRIME ENGINEERING & ARCHITECTURE INC.

TEST BORING No.: S-1

STATION & OFFSET: 964+27.59, 181.42 LT.

ELEVATION: 1,187.81

PROJECT: Subsurfce Investigation for Granger Road Bridge over IR-71 PROJECT No.: 99017

DRILLING INFORMATION: Ohio Test Bor, Inc., Mobile B-57 Truck Mounted Drilling Rig

GROUNDWATER INFORMATION: Spoon was wet at 74.5 feet.

▼ GROUNDWATER DURING DRILLING ▽ GROUNDWATER UPON COMPLETION

ELEV (ft.)	DEPTH (ft.)	Soil/Rock Symbol	MATERIAL DESCRIPTION	SAMPLE NUMBER	SAMPLE DEPTH	FIELD DATA: N-VALUE (BLOWS/FT) OR REC%/(RQD%)	FIELD DATA: PENETROMETER (tons/ft²)	LABORATORY DATA: MOISTURE CONTENT (%)	ATTERBERG LIMITS (%): LIQUID LIMIT LL	ATTERBERG LIMITS (%): PLASTIC LIMIT PL	ATTERBERG LIMITS (%): PLASTICITY INDEX PI	DRY DENSITY (pcf)	UNCONFINED COMPRESSIVE STRENGTH (psf)	MINUS No. 200 SIEVE (%)	CLASSIFICATION SYMBOL
			Very stiff, gray SILT AND CLAY, little sand, trace gravel, trace rock fragments, moist. *(continued)*	13	33.5	15	1.75								
				14	38.5	22	1.75								
			Note: Layer of coarse and fine sand encountered at 44.0 feet	15	43.5	25	3.5								
	44.0		Dense, gray SILT, some clay, little sand, trace gravel, trace rock fragments, moist.	16	48.5	44	3.5								
	53.5		Very stiff to hard, gray SILT AND CLAY, little sand, trace gravel, trace rock fragments, moist.	17	53.5	25	3.0								
				18	58.5	49	3.5								
				19	63.5	42	4.0+								

NOTES/REMARKS: Boring was located 25.0 feet west of west abutment on west bound lane.

TEST_BORING_LOG 99017.GPJ PRIMENG.GDT 2/26/99

S-1: PAGE 2 OF 3

PRIME ENGINEERING & ARCHITECTURE INC.

TEST BORING No.: S-1

STATION & OFFSET: 964+27.59, 181.42 LT.

ELEVATION: 1,187.81

PROJECT: Subsurfce Investigation for Granger Road Bridge over IR-71 PROJECT No.: 99017

DRILLING INFORMATION: Ohio Test Bor, Inc., Mobile B-57 Truck Mounted Drilling Rig

GROUNDWATER INFORMATION: Spoon was wet at 74.5 feet.

▼ GROUNDWATER DURING DRILLING ▽ GROUNDWATER UPON COMPLETION

ELEV (ft.)	DEPTH (ft.)	Soil/Rock Symbol	MATERIAL DESCRIPTION	SAMPLE NUMBER	SAMPLE DEPTH	FIELD DATA: N-VALUE (BLOWS/FT) OR REC%/(RQD%)	FIELD DATA: PENETROMETER (tons/ft²)	LABORATORY DATA: MOISTURE CONTENT (%)	ATTERBERG LIMITS (%): LIQUID LIMIT LL	ATTERBERG LIMITS (%): PLASTIC LIMIT PL	ATTERBERG LIMITS (%): PLASTICITY INDEX PI	DRY DENSITY (pcf)	UNCONFINED COMPRESSIVE STRENGTH (psf)	MINUS No. 200 SIEVE (%)	CLASSIFICATION SYMBOL
			Very stiff to hard, gray SILT AND CLAY, little sand, trace gravel, trace rock fragments, moist. *(continued)*	20	68.5	42	2.75								
	73.5		Hard, gray SILTY CLAY, trace sand, trace gravel, trace rock fragments, moist.	21	73.5	49	1.5								
	76.5		Very dense, gray, decomposed SANDSTONE, wet.	22	78.5	108									
	82.5		Gray SANDSTONE FRAGMENTS (Possible Bedrock)	23	83.5	50/0.13									
	83.6		TERMINATION DEPTH = 83.6 FEET												

NOTES/REMARKS: Boring was located 25.0 feet west of west abutment on west bound lane.

TEST_BORING_LOG 99017.GPJ PRIMENG.GDT 2/26/99

S-1: PAGE 3 OF 3

DESIGN AGENCY: PRIME ENGINEERING & ARCHITECT, INC. 1038 GHENT RD, AKRON, OHIO 44333

DRAWN: PH | DESIGNED | CHECKED | REVIEWED | DATE | REVISED

STRUCTURE FILE NUMBER: 5203643

SUBSURFACE INVESTIGATION
BRIDGE NO. MED-71-1828
IR-71 UNDER GRANGER ROAD CH-21

MED-71-15.78

1 / 3

64 / 78

GRBI-GRB4.DGN PDH 11/3/99

PRIME ENGINEERING & ARCHITECTURE INC.

TEST BORING No.: S-2

STATION & OFFSET: 964+53.63, 10.69 LT.

ELEVATION: 1,167.23

CLIENT: Richland Engineering Ltd.

PROJECT: Subsurfce Investigation for Granger Road Bridge over IR-71 PROJECT No.: 99017

LOCATION: Medina County, Ohio

DATE STARTED: 2/23/99 DATE COMPLETED: 2/23/99

SAMPLER DIAM: 2.0" TYPE: SS HAMMER WT.: 140lb FALL: 30.0"

CASING DIAM: 3.25" TYPE: OTHER:

DRILLING INFORMATION: Ohio Test Bor, Inc., Mobile B-57 Truck Mounted Drilling Rig

GROUNDWATER INFORMATION: Spoon was wet at 7.0 feet.

▽ GROUNDWATER DURING DRILLING ▽ GROUNDWATER UPON COMPLETION

ELEV (ft.)	DEPTH (ft.)	Soil/Rock Symbol	MATERIAL DESCRIPTION	SAMPLE NUMBER	SAMPLE DEPTH	N-VALUE (BLOWS/FT) OR REC/R(RQD%)	PENETROMETER (tons/ft²)	MOISTURE CONTENT (%)	ATTERBERG LIMITS (%) LL	PL	PI	DRY DENSITY (pcf)	UNCONFINED COMPRESSIVE STRENGTH (psf)	MINUS No. 200 SIEVE (%)	CLASSIFICATION SYMBOL
	0.0		TOPSOIL												
			Very stiff, brown and gray SILT AND CLAY, little sand, trace gravel, trace rockfragments, moist.	1	1.0	19	4.0+								
				2	3.5	17	2.25								
	6.2		Layer of coarse and fine sand	3	6.0	5									
	8.6		Very stiff, gray SILT AND CLAY, little sand, trace gravel, trace rockfragments, moist.	4	8.5	16	1.25								
			Note: Boulder encountered at 11.0 feet.	5	11.0	50/0.42									
				6	13.5	19	1.5								
				7	16.0	25	1.75								
				8	18.5	24	1.0								
				9	21.0	18	1.75								
	24.0		Medium dense, gray SILT, little clay, trace sand, moist.	10	23.5	20									
	25.5		Hard, gray SILT AND CLAY, little sand, trace gravel, trace rock fragments, moist.	11	26.0	84									
			Note: Occasional layer of gravel and rock fragments with sand encountered from 25.5 to 29.4 feet.	12	28.5	39	4.0								

NOTES/REMARKS: Boring was located along I- 71 median, south to center pier (Approximate Sta. 964+45, 10.0 ft., Lt.)

S-2: PAGE 1 OF 2

TEST BORING LOG 99017.GPJ PRIMENG.GDT 2/26/99

PRIME ENGINEERING & ARCHITECTURE INC.

TEST BORING No.: S-2

STATION & OFFSET: 964+53.63, 10.69 LT.

ELEVATION: 1,167.23

PROJECT: Subsurfce Investigation for Granger Road Bridge over IR-71 PROJECT No.: 99017

DRILLING INFORMATION: Ohio Test Bor, Inc., Mobile B-57 Truck Mounted Drilling Rig

GROUNDWATER INFORMATION: Spoon was wet at 7.0 feet.

▽ GROUNDWATER DURING DRILLING ▽ GROUNDWATER UPON COMPLETION

ELEV (ft.)	DEPTH (ft.)	Soil/Rock Symbol	MATERIAL DESCRIPTION	SAMPLE NUMBER	SAMPLE DEPTH	N-VALUE (BLOWS/FT) OR REC/R(RQD%)	PENETROMETER (tons/ft²)	MOISTURE CONTENT (%)	ATTERBERG LIMITS (%) LL	PL	PI	DRY DENSITY (pcf)	UNCONFINED COMPRESSIVE STRENGTH (psf)	MINUS No. 200 SIEVE (%)	CLASSIFICATION SYMBOL
			Hard, gray SILT AND CLAY, little sand, trace gravel, trace rock fragments, moist. *(continued)*												
				13	33.5	42	4.0								
				14	38.5	46	1.75								
				15	43.5	50/0.33	3.0								
	44.3		Very hard, gray SANDSTONE	R-1	45.0										
			Note: Auger refusal at 45.0 feet due to very hard sandstone. Core through from 45.0 to 50.0 feet.												
	46.2		Very dense, gray, decomposed SANDSTONE, wet.			30% (15%)									
				16	50.0	62									
				17	53.5	50/0.33									
	56.5		Light gray, medium hard to hard, weathered SANDSTONE, fine grained, very thin to moderately bedded.												
				R-2	58.5	100% (13%)									
	63.5		TERMINATION DEPTH = 63.5 FEET												

NOTES/REMARKS: Boring was located along I- 71 median, south to center pier (Approximate Sta. 964+45, 10.0 ft., Lt.)

S-2: PAGE 2 OF 2

TEST BORING LOG 99017.GPJ PRIMENG.GDT 2/26/99

DESIGN AGENCY: PRIME ENGINEERING & ARCHITECT, INC. 1038 GHENT RD, AKRON, OHIO 44333

REVIEWED | DATE | STRUCTURE FILE NUMBER: 5203643

DRAWN: PH | DESIGNED | CHECKED | REVISED

SUBSURFACE INVESTIGATION
BRIDGE NO. MED-71-1828
IR-71 UNDER GRANGER ROAD CH-21

MED-71-15.78

2 / 3

65 / 78

GRB1-GRB4.DGN PDH 11/3/99

PRIME ENGINEERING & ARCHITECTURE INC.

TEST BORING No.: S-3

STATION & OFFSET: 965+21.76, 153.08 RT.

ELEVATION: 1,189.05

CLIENT: Richland Engineering Ltd.

PROJECT: Subsurfce Investigation for Granger Road Bridge over IR-71 PROJECT No.: 99017

LOCATION: Medina County, Ohio

DATE STARTED: 2/20/99 DATE COMPLETED: 2/20/99

SAMPLER DIAM: 2.0" TYPE: SS HAMMER WT.: 140lb FALL: 30.0"

CASING DIAM: 3.25" TYPE: OTHER:

DRILLING INFORMATION: Ohio Test Bor, Inc., Mobile B-57 Truck Mounted Drilling Rig

GROUNDWATER INFORMATION: Spoon was wet at 66.5. Couldn't take final reading due to hole caved in at 27.0 feet.

GROUNDWATER DURING DRILLING

ELEV (ft.)	DEPTH (ft.)	Soil/Rock Symbol	MATERIAL DESCRIPTION	SAMPLE NUMBER	SAMPLE DEPTH	N-VALUE (BLOWS/FT) OR REC%/(RQD%)	PENETROMETER (tons/ft²)
	0.2		ASPHALT				
	1.1		APPROCH SLAB				
			Stiff to hard, brown SILT AND CLAY, little sand, trace gravel, moist.	1	1.5	13	3.0
				2	3.5	15	2.0
				3	6.0	41	4.0
				4	8.5	34	3.0
				5	11.0	34	4.0
				6	13.5	33	4.0+
			Note: Trace of rock fragments encountered below 13.5 feet	7	16.0	46	4.0+
				8	18.5	36	3.5
	21.3		Very stiff to hard, gray SILT AND CLAY, little sand, trace gravel, trace rock fragments, moist.	9	21.0	29	2.75
				10	23.5	22	2.5
				11	26.0	24	2.25
				12	28.5	16	1.25

MOISTURE CONTENT (%)	ATTERBERG LIMITS (%) LIQUID LIMIT	PLASTIC LIMIT	PLASTICITY INDEX	DRY DENSITY (pcf)	UNCONFINED COMPRESSIVE STRENGTH (psf)	MINUS No. 200 SIEVE (%)	CLASSIFICATION SYMBOL

NOTES/REMARKS: Boring was located 15.0 feet east of east abutment on east bound lane.

S-3: PAGE 1 OF 3

TEST_BORING_LOG 99017.GPJ PRIMENG.GDT 2/25/99

PRIME ENGINEERING & ARCHITECTURE INC.

TEST BORING No.: S-3

STATION & OFFSET: 965+21.76, 153.08 RT.

ELEVATION: 1,189.05

PROJECT: Subsurface Exploration for Granger Road Bridge over IR-71 PROJECT No.: 99017

DRILLING INFORMATION: Ohio Test Bor, Inc., Mobile B-57 Truck Mounted Drilling Rig

GROUNDWATER INFORMATION: Water encountered at 66.5 feet during the drilling operations. Couldn't take final reading because hole caved in at 27.0 feet.

GROUNDWATER DURING DRILLING

ELEV (ft.)	DEPTH (ft.)	Soil/Rock Symbol	MATERIAL DESCRIPTION	SAMPLE NUMBER	SAMPLE DEPTH	N-VALUE (BLOWS/FT) OR REC%/(RQD%)	PENETROMETER (tons/ft²)
			Very stiff to hard, gray SILT AND CLAY, little sand, trace gravel, trace rock fragments, moist. *(continued)*	13	31.0	24	2.0
				14	33.5	21	2.25
				15	36.0	24	2.25
				16	38.5	22	2.25
				17	41.0	21	1.75
				18	43.5	30	2.0
1143.1	46.0		Layer of silt encountered	19	46.0	16	2.0
1142.2	46.9			20	48.5	27	3.0
				21	51.0	38	4.0+
				22	53.5	31	2.5
				23	56.0	31	2.25
				24	58.5	68	1.75
1129.3	59.8		Hard, gray SANDY SILT, little clay, trace rock fragments, moist.	25	63.5	40	4.0+

MOISTURE CONTENT (%)	ATTERBERG LIMITS (%) LIQUID LIMIT	PLASTIC LIMIT	PLASTICITY INDEX	MINUS No. 10 SIEVE (%)	MINUS No. 40 SIEVE (%)	MINUS No. 200 SIEVE (%)	CLASSIFICATION SYMBOL

NOTES/REMARKS:

S-3: PAGE 2 OF 3

TEST_BORING_LOG 99017.GPJ PRIMENG.GDT 3/31/99

PRIME ENGINEERING & ARCHITECTURE INC.

TEST BORING No.: S-3

STATION & OFFSET: 965+21.76, 153.08 RT.

ELEVATION: 1,189.05

PROJECT: Subsurfce Investigation for Granger Road Bridge over IR-71 PROJECT No.: 99017

DRILLING INFORMATION: Ohio Test Bor, Inc., Mobile B-57 Truck Mounted Drilling Rig

GROUNDWATER INFORMATION: Spoon was wet at 66.5. Couldn't take final reading due to hole caved in at 27.0 feet.

GROUNDWATER DURING DRILLING

ELEV (ft.)	DEPTH (ft.)	Soil/Rock Symbol	MATERIAL DESCRIPTION	SAMPLE NUMBER	SAMPLE DEPTH	N-VALUE (BLOWS/FT) OR REC%/(RQD%)	PENETROMETER (tons/ft²)
	66.5		Medium dense, gray, decomposed SANDSTONE, wet.	26	68.5	29	
	71.0		Light gray, medium hard to hard, weathered SANDSTONE, fine grained, very thin to moderately bedded.	R-1	71.5	100% (10%)	
	76.5		TERMINATION DEPTH = 76.5 FEET				

MOISTURE CONTENT (%)	ATTERBERG LIMITS (%) LIQUID LIMIT	PLASTIC LIMIT	PLASTICITY INDEX	DRY DENSITY (pcf)	UNCONFINED COMPRESSIVE STRENGTH (psf)	MINUS No. 200 SIEVE (%)	CLASSIFICATION SYMBOL

NOTES/REMARKS: Boring was located 15.0 feet east of east abutment on east bound lane.

S-3: PAGE 3 OF 3

TEST_BORING_LOG 99017.GPJ PRIMENG.GDT 2/25/99

DESIGN AGENCY: PRIME ENGINEERING & ARCHITECT, INC. 1038 GHENT RD, AKRON, OHIO 44333

DESIGNED | DRAWN: PH | REVIEWED | DATE | STRUCTURE FILE NUMBER: 5203643

CHECKED | REVISED

SUBSURFACE INVESTIGATION
BRIDGE NO. MED-71-1828
IR-71 UNDER GRANGER ROAD CH-21

MED-71-15.78

3 / 3

66 / 78

GRB1-GRB4.DGN PDH 11/3/99

LOG OF BORING

Date Started 8/6/97 Sampler: Type SS Dia. 1 3/8"
Date completed 8/6/97 Water Elev. -
Boring No. B-1 Station & Offset 865+77, 91' LT. Surface Elev. 1058.1'

Elev.	Depth	Std. Pen. (N)	Rec. ft	Loss ft	Description	Sample No.	Physical Characteristics: % Agg	% C.S.	% F.S.	% Silt	% Clay	L.L.	P.I.	W.C.	ODOT Class
1058.1	0	AUGERED			SOD	-	-	-	-	-	-	-	-	-	VISUAL
1057.3	2														
1055.6	4	12/11/10			BROWN SANDY CLAY WITH STONE FRAGS.	149	0	12	27	30	31	28	12	13	A-6a
1053.1	6	8/5/5			GRAY SANDY CLAY WITH STONE FRAGS.	150	0	21	27	28	24	27	11	16	A-6a
1050.6	8	2/2/3			GRAY SANDY SILT	151	0	17	24	32	27	28	10	21	A-4a
1048.1	10	4/6/9			TOP OF ROCK — BROWN AND GRAY SANDY SILT	152	0	11	19	39	31	28	8	17	A-4a
1045.6	12														
	14	14/50			OLIVE JOINTED SHALE	153	-	-	-	-	-	-	-	6	VISUAL
1043.6	16														
	18		5.0	0.0	SHALE, BLACK, FIRM, CARBONACEOUS, ARENACEOUS, WITH THIN CLAY SEAMS, JOINTED IN PART										
1038.1	20														

BOTTOM OF BORING

Particle Sizes: Agg= >2.00mm, Coarse Sand= 2.00-0.42mm Fine Sand= 0.42-0.074mm, Silt= 0.074-0.005mm, Clay= <0.005mm
Form TE-GL Revised 5/95

LOG OF BORING

Date Started 7/30/97 Sampler: Type SS Dia. 1 3/8"
Date completed 7/30/97 Water Elev. -
Boring No. B-2 Station & Offset 868+67, 98' LT. Surface Elev. 1066.2'

Elev.	Depth	Std. Pen. (N)	Rec. ft	Loss ft	Description	Sample No.	Physical Characteristics: % Agg	% C.S.	% F.S.	% Silt	% Clay	L.L.	P.I.	W.C.	ODOT Class
1066.2	0	AUGERED			SOD	-	-	-	-	-	-	-	-	-	VISUAL
1065.4	2														
1063.7	4	5/4/4			BROWN SANDY SILT WITH STONE FRAGS.	99	0	23	26	29	22	22	6	12	A-4a
1061.2	6	5/8/6			BROWN SANDY SILT WITH STONE FRAGS.	100	0	21	32	26	21	22	7	18	A-4a
1058.7	8	5/4/5			BROWN SANDY SILT WITH STONE FRAGS.	101	0	16	34	27	23	22	6	14	A-4a
1056.2	10	1/2/3			BROWN SANDY SILT WITH STONE FRAGS.	102	0	23	28	28	21	22	6	17	A-4a
1053.7	12				TOP OF ROCK —										
1052.2	14	4/5/20			BROWN SANDY SILT	103	0	15	12	45	28	29	8	15	A-4a
	16		5.0	0.0	SHALE, BLACK, FIRM, CARBONACEOUS, ARENACEOUS, WITH CLAY SEAMS, WITH THE BEDDING PLANES BEING TILTED A SLIGHT ANGEL, MOSTLY HIGHLY BROKEN AND JOINTED, JOINTED IN THE REMAINDER; INTERBEDDED WITH THICK SEAMS OF DARK GRAY TO BLACK, FIRM, SILTSTONE.										
1047.2	18														

BOTTOM OF BORING

Particle Sizes: Agg= >2.00mm, Coarse Sand= 2.00-0.42mm Fine Sand= 0.42-0.074mm, Silt= 0.074-0.005mm, Clay= <0.005mm
Form TE-GL Revised 5/95

LOG OF BORING

Date Started 7/29/97 Sampler: Type SS Dia. 1 3/8"
Date completed 7/29/97 Water Elev. -
Boring No. B-3 Station & Offset 870+67, 96' LT. Surface Elev. 1071.0'

Elev.	Depth	Std. Pen. (N)	Rec. ft	Loss ft	Description	Sample No.	Physical Characteristics: % Agg	% C.S.	% F.S.	% Silt	% Clay	L.L.	P.I.	W.C.	ODOT Class
1071.0	0	AUGERED			SOD	-	-	-	-	-	-	-	-	-	VISUAL
1070.2	2														
1068.5	4	10/11/15			BROWN CLAYEY SILT WITH STONE FRAGS.	94	0	4	10	36	50	29	9	15	A-4a
1066.0	6	10/20/25			BROWN CLAYEY SILT WITH STONE FRAGS.	95	0	5	14	37	44	30	9	15	A-4a
1063.5	8	7/9/12			BROWN SANDY SILT WITH STONE FRAGS.	96	0	7	15	42	36	25	7	26	A-4a
1061.0	10				TOP OF ROCK —										
	12	6/12/18			GRAY SILTY GRAVEL	97	47	9	5	20	19	32	10	17	A-4a
1058.5		50(0.2)			BLACK ARENACEOUS, JOINTED SHALE	98								4	VISUAL
1058.3															

BOTTOM OF BORING

Particle Sizes: Agg= >2.00mm, Coarse Sand= 2.00-0.42mm Fine Sand= 0.42-0.074mm, Silt= 0.074-0.005mm, Clay= <0.005mm
Form TE-GL Revised 5/95

LOG OF BORING

Date Started 7/29/97 Sampler: Type SS Dia. 1 3/8"
Date completed 7/29/97 Water Elev. -
Boring No. B-4 Station & Offset 872+67, 100' LT. Surface Elev. 1075.0'

Elev.	Depth	Std. Pen. (N)	Rec. ft	Loss ft	Description	Sample No.	Physical Characteristics: % Agg	% C.S.	% F.S.	% Silt	% Clay	L.L.	P.I.	W.C.	ODOT Class
1075.0	0														
1072.5	2														
	4	7/9/13			BROWN CLAYEY SILT	28	0	5	13	40	42	30	10	16	A-4a
1070.0	6	6/9/12			BROWN SANDY SILT	29	0	6	17	38	39	29	10	16	A-4a
1067.5	8	8/8/13			BROWN SANDY SILT	30	0	6	15	45	34	26	8	14	A-4a
1065.0	10	7/10/15			BROWN SANDY SILT	31	0	7	15	44	34	25	6	15	A-4a
1062.5	12				TOP OF ROCK —										
	14	7/12/15			BROWN CLAYEY SILT	32	0	12	6	45	37	33	10	15	A-4a
1060.0	16														
1059.0		13/22/10			BLACK SHALE WITH CLAY SEAMS	33	-	-	-	-	-	-	-	9	VISUAL
	18		5.0	0.0	SHALE, BLACK, FIRM, CARBONACEOUS, ARENACEOUS, WITH SCATTERED CLAY SEAMS, JOINTED; INTERBEDDED WITH NUMEROUS SEAMS OF LIGHT TO DARK GRAY, FIRM, VERY FINE-GRAINED SANDSTONE.										
	20														
1053.0	22														

BOTTOM OF BORING

Particle Sizes: Agg= >2.00mm, Coarse Sand= 2.00-0.42mm Fine Sand= 0.42-0.074mm, Silt= 0.074-0.005mm, Clay= <0.005mm
Form TE-GL Revised 5/95

LOG OF BORING

Date Started 7/22/97 Sampler: Type SS Dia. 1 3/8"
Date completed 7/22/97 Water Elev. -
Boring No. B-5 Station & Offset 874+57, 104' LT. Surface Elev. 1080.0'

Elev.	Depth	Std. Pen. (N)	Rec. ft	Loss ft	Description	Sample No.	Physical Characteristics: % Agg	% C.S.	% F.S.	% Silt	% Clay	L.L.	P.I.	W.C.	ODOT Class
1080.0	0	AUGERED			SOD	-	-	-	-	-	-	-	-	-	VISUAL
1079.2	2														
1077.5	4	8/12/14			BROWN SANDY SILT WITH STONE FRAGS.	28	0	11	24	36	29	26	9	12	A-4a
1075.0	6	8/9/12			BROWN SANDY SILT WITH STONE FRAGS.	29	0	10	45	26	19	NP	NP	14	A-4a
1072.5	8	5/8/12			BROWN SANDY SILT WITH STONE FRAGS.	30	0	7	18	41	34	28	9	17	A-4a
1070.0	10	5/21/14			BROWN SANDY SILT	31	0	9	23	40	28	26	9	20	A-4a
1067.5	12	4/9/25			BROWN SANDY SILT WITH STONE FRAGS.	32	0	12	33	42	13	NP	NP	13	A-4a
1065.0	14	25/50			BROWN SANDY SILT WITH STONE FRAGS.	33	0	9	31	46	14	NP	NP	14	A-4a
1062.5	16														
	18	6/16/20			GRAY SANDY GRAVELLY SILT	34	38	6	15	27	14	NP	NP	13	A-4a
1060.0	20	50(0.3)			GRAY SILTY GRAVEL	35	59	6	5	22	8	NP	NP	14	A-2-4
	22														
	24														
1055.0		63(0.5)			GRAY GRAVELLY SILT	36	45	8	5	26	16	27	8	15	A-4a
1054.5															

BOTTOM OF BORING

Particle Sizes: Agg= >2.00mm, Coarse Sand= 2.00-0.42mm Fine Sand= 0.42-0.074mm, Silt= 0.074-0.005mm, Clay= <0.005mm
Form TE-GL Revised 5/95

OHIO DEPARTMENT OF TRANSPORTATION
OFFICE OF MATERIALS MANAGEMENT
1600 WEST BROAD ST. COLUMBUS, OH 43223

REVISED DATE	DATE
CHECKED M.R.S.	10/17/97
REVISED J.B.H.	
TYPED J.B.H.	

SUBSURFACE INVESTIGATION
SITE I NOISE WALL

MED-71-15.78

1 / 12

67
78

NWI-NW5.DGN PH 11/4/99

LOG OF BORING

Date Started 7/17/97 Sampler: Type SS Dia. 1 3/8"
Date completed 7/21/97 Water Elev. ---
Boring No. B-6 Station & Offset 876+67, 120' LT. Surface Elev. 1081.5'

Elev.	Depth	Std. Pen. (N)	Rec. ft	Loss ft	Description	Sample No.	% Agg	% C.S.	% F.S.	% Silt	% Clay	L.L.	P.I.	W.C.	ODOT Class
1081.5	0	AUGERED			SOD AND TOPSOIL		-	-	-	-	-	-	-	-	VISUAL
1080.1	2														
1079.0	4	3/6/7			GRAY CLAYEY SILT	19	0	4	15	45	36	30	10	23	A-4a
1076.5	6	7/9/13			BROWN SILT AND CLAY WITH STONE FRAGS.	20	0	5	13	41	41	31	11	15	A-6a
1074.0	8	8/12/14			BROWN SILT AND CLAY WITH STONE FRAGS.	21	0	5	12	40	43	32	12	16	A-6a
1071.5	10	9/14/21			BROWN SANDY SILT WITH STONE FRAGS.	22	0	14	22	38	26	25	8	14	A-4a
1069.0	12	50(0.5)			BROWN SANDY SILT WITH STONE FRAGS.	23	0	14	29	47	10	NP	NP	12	A-4a
1066.5	14														
1064.0	16	28/20/31			BROWN SANDY SILT WITH STONE FRAGS.	24	0	11	25	50	14	NP	NP	11	A-4b
1061.5	18	19/23/35			GRAY SANDY SILT WITH STONE FRAGS.	25	0	15	35	40	10	NP	NP	9	A-4a
	20	22/25/30			GRAY SANDY SILT WITH STONE FRAGS.	26	0	13	25	43	19	NP	NP	11	A-4a
	22				TOP OF ROCK										
1056.5	24	65(0.5)			BLACK ARENACEOUS SHALE	27	-	-	-	-	-	-	-	5	VISUAL
1056.0					BOTTOM OF BORING										

Particle Sizes: Agg= >2.00mm, Coarse Sand= 2.00-0.42mm Fine Sand= 0.42-0.074mm, Silt= 0.074-0.005mm, Clay= <0.005mm

Form TE-65 Revised 9/95

LOG OF BORING

Date Started 7/16/97 Sampler: Type SS Dia. 1 3/8"
Date completed 7/16/97 Water Elev. ---
Boring No. B-8 Station & Offset 881+17, 150' LT. Approx. Surface Elev. 1092.0'

Elev.	Depth	Std. Pen. (N)	Rec. ft	Loss ft	Description	Sample No.	% Agg	% C.S.	% F.S.	% Silt	% Clay	L.L.	P.I.	W.C.	ODOT Class
1092.0	0	AUGERED			SOD AND TOPSOIL		-	-	-	-	-	-	-	-	VISUAL
1091.0	2														
1089.5	4	3/7/11			BROWN CLAYEY SILT	1	0	4	12	37	47	28	10	13	A-4a
1087.0	6	10/12/20			BROWN CLAYEY SILT	2	0	5	11	35	49	26	7	15	A-4a
1084.5	8	14/17/25			BROWN CLAYEY SILT	3	0	5	11	38	46	29	10	14	A-4a
1082.0	10	11/19/21			BROWN AND GRAY CLAYEY SILT	4	0	6	12	35	47	27	9	16	A-4a
1079.5	12	11/14/15			GRAY CLAYEY SILT	5	0	6	14	38	42	25	7	17	A-4a
1077.0	14	13/14/12			GRAY SANDY SILT	6	0	10	22	45	23	NP	NP	11	A-4a
1074.5	16	10/16/16			BROWN SANDY SILT	7	0	10	24	47	19	NP	NP	10	A-4a
1072.0	18	20/21/19			GRAY SILTY SANDY GRAVEL	8	38	9	14	28	11	NP	NP	10	A-4a
	20														
	22														
1067.0	24														
1065.5	26	13/15/22			GRAY SANDY SILT	9	0	16	13	44	27	NP	NP	8	A-3a
					BOTTOM OF BORING										

Particle Sizes: Agg= >2.00mm, Coarse Sand= 2.00-0.42mm Fine Sand= 0.42-0.074mm, Silt= 0.074-0.005mm, Clay= <0.005mm

Form TE-65 Revised 9/95

LOG OF BORING

Date Started 7/17/97 Sampler: Type SS Dia. 1 3/8"
Date completed 7/17/97 Water Elev. ---
Boring No. B-7 Station & Offset 878+59, 124' LT. Approx. Surface Elev. 1089.0'

Elev.	Depth	Std. Pen. (N)	Rec. ft	Loss ft	Description	Sample No.	% Agg	% C.S.	% F.S.	% Silt	% Clay	L.L.	P.I.	W.C.	ODOT Class
1089.0	0	AUGERED			SOD AND TOPSOIL		-	-	-	-	-	-	-	-	VISUAL
1088.0	2														
1086.5	4	9/14/17			BROWN SANDY SILT	10	0	10	30	40	20	NP	NP	13	A-4c
1084.0	6	11/21/25			BROWN SANDY SILT	11	0	7	14	59	20	NP	NP	25	A-4b
1081.5	8	13/17/24			GRAY SANDY SILT	12	0	11	14	52	23	NP	NP	23	A-4b
1079.0	10	7/10/14			GRAY AND BROWN SANDY SILT	13	0	20	37	28	15	NP	NP	19	A-4c
1076.5	12	6/11/12			BROWN AND GRAY SILTY SANDY GRAVEL	14	45	22	11	15	7	NP	NP	20	A-1-b
1074.0	14	12/20/15			GRAY SILTY GRAVELLY SAND	15	36	20	16	22	6	NP	NP	18	A-2-4
1071.5	16	10/11/13			GRAY SILTY SANDY GRAVEL	16	48	17	16	14	5	NP	NP	18	A-1-b
1069.0	18	16/10/11			GRAY SILTY SANDY GRAVEL	17	45	13	16	20	6	NP	NP	18	A-2-4
	20														
	22														
1064.0	24														
1062.5	26	17/30/31			GRAY SILTY SANDY GRAVEL	18	46	18	11	18	7	NP	NP	15	A-1-b
					BOTTOM OF BORING										

Particle Sizes: Agg= >2.00mm, Coarse Sand= 2.00-0.42mm Fine Sand= 0.42-0.074mm, Silt= 0.074-0.005mm, Clay= <0.005mm

Form TE-65 Revised 9/95

OHIO DEPARTMENT OF TRANSPORTATION
OFFICE OF MATERIALS MANAGEMENT
1600 WEST BROAD ST. COLUMBUS, OH 43223

REVISED	DATE
	10/17/97

CHECKED	TYPED
M.R.S.	J.B.H.
REVISED	
J.B.H.	

SUBSURFACE INVESTIGATION
SITE I NOISE WALL

MED-71-15.78

2 / 12

68
78

NWI-NW5.DGN PH 11/4/99

LOG OF BORING

Date Started 7/30/97 Sampler: Type SS Dia. 1 3/8"
Date completed 7/30/97 Water Elev. -
Boring No. B-9 Station & Offset 905+67, 104' RT. Surface Elev. 1127.0'

Elev.	Depth	Std. Pen. (N)	Rec. ft	Loss ft	Description	Sample No.	% Agg	% C.S.	% F.S.	% Silt	% Clay	L.L.	P.I.	W.C.	ODOT Class
1127.0	0	AUGERED			BERM MATERIAL, SAND AND GRAVEL	-	-	-	-	-	-	-	-	-	VISUAL
1126.0	2														
1124.5	4	4/7/9			GRAY SANDY SILT WITH STONE FRAGMENTS	104	0	8	17	34	41	26	9	14	A-4a
1122.0	6	5/7/7			GRAY SANDY SILT WITH STONE FRAGMENTS	105	0	9	17	33	41	25	9	14	A-4a
1119.5	8	5/8/10			BROWN SILT WITH STONE FRAGMENTS	106	0	7	12	34	47	30	4	15	A-4a
1117.0	10	3/5/11			BROWN CLAYEY SILT WITH STONE FRAGMENTS	107	0	3	9	36	52	29	8	15	A-4a
1114.5	12	7/10/15			BROWN CLAYEY SILT WITH STONE FRAGMENTS	108	0	5	11	38	46	30	10	15	A-4a
1112.0	14	7/10/20			BROWN CLAYEY SILT WITH STONE FRAGMENTS	109	0	4	10	35	51	30	10	17	A-4a
1109.5	16	6/7/8			GRAY CLAYEY SILT WITH STONE FRAGMENTS	110	0	7	13	44	36	24	7	13	A-4a
1107.0	18	3/6/8			BROWN SANDY SILT WITH STONE FRAGMENTS	111	-	-	-	-	-	-	-	15	VISUAL
	20														
	22														
1102.0	24														
1100.5	26	3/5/14			BROWN SILTY SANDY GRAVEL	112	44	10	18	18	10	NP	NP	15	A-2-4

BOTTOM OF BORING

Particle Sizes: Agg= >2.00mm, Coarse Sand= 2.00-0.42mm Fine Sand= 0.42-0.074mm, Silt= 0.074-0.005mm, Clay= <0.005mm

Form TE-124 Revised 9/95

LOG OF BORING

Date Started 8/4/97 Sampler: Type SS Dia. 1 3/8"
Date completed 8/4/97 Water Elev. -
Boring No. B-11 Station & Offset 909+67, 96' RT. Surface Elev. 1130.0'

Elev.	Depth	Std. Pen. (N)	Rec. ft	Loss ft	Description	Sample No.	% Agg	% C.S.	% F.S.	% Silt	% Clay	L.L.	P.I.	W.C.	ODOT Class
1130.0	0	AUGERED			BERM MATLERIAL, SAND AND GRAVEL	-	-	-	-	-	-	-	-	-	VISUAL
1129.0	2														
1127.5	4	7/10/11			BROWN SILT AND CLAY WITH STONE FRAGMENTS	122	0	5	12	43	40	33	12	20	A-6a
1125.0	6	7/9/12			BROWN SILT AND CLAY WITH STONE FRAGMENTS	123	0	4	12	41	43	33	12	16	A-6a
1122.5	8	8/10/14			BROWN SILT AND CLAY WITH STONE FRAGMENTS	124	0	7	13	43	37	33	14	11	A-6a
1120.0	10	7/11/16			BROWN SILT AND CLAY WITH STONE FRAGMENTS	125	0	7	10	35	48	32	11	17	A-6a
1117.5	12	5/7/12			GRAY CLAYEY SILT WITH STONE FRAGMENTS	126	0	5	11	41	43	26	8	16	A-4a
1115.0	14	5/7/8			BROWN AND GRAY SANDY SILT WITH STONE FRAGMENTS	127	0	10	19	47	24	21	5	14	A-4a
1112.5	16	4/7/11			GRAY SANDY SILT WITH STONE FRAGMENTS	128	0	8	16	43	33	26	9	13	A-4a
1110.0	18	4/7/12			GRAY SANDY SILT	129	0	4	18	52	26	20	5	14	A-4b
	20														
	22														
1105.0	24														
1103.5	26	7/15/20			GRAY SILTY GRAVELLY SAND WITH STONE FRAGMENTS	130	36	5	31	19	9	NP	NP	18	A-2-4

BOTTOM OF BORING

Particle Sizes: Agg= >2.00mm, Coarse Sand= 2.00-0.42mm Fine Sand= 0.42-0.074mm, Silt= 0.074-0.005mm, Clay= <0.005mm

Form TE-124 Revised 9/95

LOG OF BORING

Date Started 7/30/97 Sampler: Type SS Dia. 1 3/8"
Date completed 7/30/97 Water Elev. -
Boring No. B-10 Station & Offset 907+67, 100' RT. Surface Elev. 1128.0'

Elev.	Depth	Std. Pen. (N)	Rec. ft	Loss ft	Description	Sample No.	% Agg	% C.S.	% F.S.	% Silt	% Clay	L.L.	P.I.	W.C.	ODOT Class
1128.0	0	AUGERED			BERM MATERIAL, SAND AND GRAVEL	-	-	-	-	-	-	-	-	-	VISUAL
1127.0	2														
1125.5	4	6/6/10			BROWN SANDY CLAY WITH STONE FRAGMENTS	113	0	8	13	38	41	30	12	15	A-6a
1123.0	6	6/9/10			BROWN SANDY SILT WITH STONE FRAGMENTS	114	0	7	14	37	42	26	8	13	A-4a
1120.5	8	3/4/9			BROWN SILT AND CLAY WITH STONE FRAGMENTS	115	0	7	12	35	46	30	11	15	A-6a
1118.0	10	3/6/9			BROWN AND GRAY SILT AND CLAY WITH STONE FRAGMENTS	116	0	4	14	37	45	30	11	17	A-6a
1115.5	12	5/9/11			BROWN AND GRAY SANDY CLAY WITH STONE FRAGMENTS	117	0	6	17	41	36	29	11	20	A-6a
1113.0	14	10/18/20			BROWN SILT AND CLAY WITH STONE FRAGMENTS	118	0	4	9	35	52	31	11	13	A-6a
1110.5	16	5/12/18			BROWN SILT AND CLAY WITH STONE FRAGMENTS	119	0	4	11	36	49	30	11	15	A-6a
1108.0	18	10/10/14			BROWN SANDY CLAY WITH STONE FRAGMENTS	120	0	7	14	34	45	30	12	15	A-6a
	20														
	22														
1103.0	24														
1101.5	26	8/5/8			GRAY SANDY SILT WITH STONE FRAGMENTS	121	0	5	24	39	32	21	6	18	A-4a

BOTTOM OF BORING

Particle Sizes: Agg= >2.00mm, Coarse Sand= 2.00-0.42mm Fine Sand= 0.42-0.074mm, Silt= 0.074-0.005mm, Clay= <0.005mm

Form TE-124 Revised 9/95

OHIO DEPARTMENT OF TRANSPORTATION
OFFICE OF MATERIALS MANAGEMENT
1600 WEST BROAD ST. COLUMBUS, OH 43223

REVISED DATE | DATE: 10/17/97
CHECKED M.R.S.
REVISED J.B.H.
TYPED J.B.H.

SUBSURFACE INVESTIGATION
SITE 2 NOISE WALL

MED-71-15.78

3 / 12

69 / 78

NWI-NW5.DGN PH 11/4/99

LOG OF BORING

Date Started 8/6/97 Sampler: Type SS Dia. 1 3/8"
Date completed 8/6/97 Water Elev. -
Boring No. B-15 Station & Offset 914+67, 81' RT. Approx. Surface Elev. 1134.0'

Elev.	Depth	Std. Pen. (N)	Rec. ft	Loss ft	Description	Sample No.	Physical Characteristics % Agg	% C.S.	% F.S.	% Silt	% Clay	L.L.	P.I.	W.C.	ODOT Class
1134.0	0														
	2	AUGERED			0.5' ASPHALT AND 2.0' FILL MATL.	-	-	-	-	-	-	-	-	-	VISUAL
1131.5	4	4/5/6			BROWN SILT AND CLAY WITH STONE FRAGMENTS	18	0	6	13	39	42	30	11	14	A-6a
1129.0	6	4/6/7			BROWN CLAYEY SILT WITH STONE FRAGMENTS	19	0	5	10	40	45	29	10	16	A-4a
1126.5	8	4/6/7			BROWN SILTY CLAY WITH STONE FRAGMENTS	20	0	6	12	41	41	30	11	16	A-6b
1124.0	10	5/6/8			BROWN CLAYEY SILT WITH STONE FRAGMENTS	21	0	6	11	41	42	28	9	19	A-4a
1121.5	12	7/7/8			BROWN SANDY CLAY WITH STONE FRAGMENTS	22	0	11	12	36	41	31	12	15	A-6a
1119.0	14	4/4/7			BROWN SANDY SILT WITH STONE FRAGMENTS	23	0	8	16	41	35	28	10	13	A-4a
1116.5	16	3/5/8			GRAY SANDY CLAY	24	0	4	25	41	30	30	11	22	A-6a
1114.0	18	1/8/12			TOP OF ROCK	25	0	6	16	51	27	26	8	14	A-4b
1111.0	20				BROWN AND GRAY SANDY SILT										
	22														
	24														
	26		4.6	0.4	SANDSTONE, BROWN, FIRM, FELDSPATHIC, MICACEOUS, WITH CARBONACEOUS LAMINAE AT THE BOTTOM MEDIUM TO COARSE-GRAINED, MEDIUM-BEDDED IN THE TOP HALF, THIN-BEDDED IN THE BOTTOM HALF, WITH SCATTERED CLAY SEAMS, JOINTED NEAR THE BOTTOM, WITH A WEATHERED SEAM IN THE MIDDLE. CORE LOSS 8%										
1106.0	28				BOTTOM OF BORING										

Particle Sizes: Agg= >2.00mm, Coarse Sand= 2.00-0.42mm Fine Sand= 0.42-0.074mm, Silt= 0.074-0.005mm, Clay= <0.005mm

Form TE-93,Revised 5/95

LOG OF BORING

Date Started 8/5/97 Sampler: Type SS Dia. 1 3/8"
Date completed 8/5/97 Water Elev. -
Boring No. B-17 Station & Offset 918+17, 80' RT. Surface Elev. 1125.0'

Elev.	Depth	Std. Pen. (N)	Rec. ft	Loss ft	Description	Sample No.	Physical Characteristics % Agg	% C.S.	% F.S.	% Silt	% Clay	L.L.	P.I.	W.C.	ODOT Class
1125.0	0														
	2	AUGERED			1.0' BERM MATL. & 1.5' BR. SANDY CLAY	-	-	-	-	-	-	-	-	-	VISUAL
1122.5	4	5/8/12			BROWN SILT AND CLAY	1	0	6	12	37	45	31	12	15	A-6a
1120.0	6	13/16/18			BROWN SANDY CLAY WITH STONE FRAGMENTS	2	0	8	13	33	46	30	11	15	A-6a
1117.5	8	11/16/21			BROWN AND GRAY SILT AND CLAY	3	0	7	10	36	47	30	11	16	A-6a
1115.0	10	10/15/17			BROWN AND GRAY CLAYEY SILT	4	0	7	12	32	49	26	8	13	A-4a
1112.5	12	12/13/22			GRAY CLAYEY SILT WITH STONE FRAGMENTS	5	0	6	11	33	50	26	9	14	A-4a
1110.0	14	11/12/18			BROWN SILTY SAND WITH STONE FRAGMENTS	6	0	30	34	21	15	NP	NP	7	A-4a
1107.5	16	13/17/23			BROWN SANDY SILT	7	0	3	27	49	21	NP	NP	16	A-4a
1105.0	18	9/10/14			BROWN CLAYEY SILT WITH STONE FRAGMENTS	8	0	8	19	43	30	26	8	12	A-4a
	20				TOP OF ROCK										
	22				*										VISUAL
1101.0	24														
	26		5.0	0.0	SANDSTONE, LIGHT BROWN, FIRM, FELDSPATHIC, MICACEOUS, WITH SCATTERED FERRUGINOUS LAMINAE FINE TO MEDIUM-GRAINED, CONGLOMERATIC IN PLACES, THIN TO MEDIUM-BEDDED, WITH SCATTERED THIN CLAY SEAMS, JOINTED IN PLACES, WITH A WEATHERED SEAM IN THE MIDDLE.										
	28														
1096.0					BOTTOM OF BORING										

Particle Sizes: Agg= >2.00mm, Coarse Sand= 2.00-0.42mm Fine Sand= 0.42-0.074mm, Silt= 0.074-0.005mm, Clay= <0.005mm

Form TE-93,Revised 5/95

* LIGHT BROWN SANDSTONE (DRILLER'S DESCRIPTION)

LOG OF BORING

Date Started 8/5/97 Sampler: Type SS Dia. 1 3/8"
Date completed 8/5/97 Water Elev. -
Boring No. B-16 Station & Offset 916+67, 81' RT. Surface Elev. 1135.0'

Elev.	Depth	Std. Pen. (N)	Rec. ft	Loss ft	Description	Sample No.	Physical Characteristics % Agg	% C.S.	% F.S.	% Silt	% Clay	L.L.	P.I.	W.C.	ODOT Class
1135.0	0														
1134.0		AUGERED			BERM MATERIAL, SAND AND GRAVEL	-	-	-	-	-	-	-	-	-	VISUAL
1132.5	2														
	4	2/14/16			GRAY SILT AND CLAY WITH STONE FRAGMENTS	131	0	3	10	46	41	33	13	16	A-6a
1130.0	6	8/26/26			BROWN SILT AND CLAY WITH STONE FRAGMENTS	132	0	3	9	39	49	33	12	15	A-6a
1127.5	8	8/19/27			BROWN SILT WITH STONE FRAGMENTS	133	0	5	11	37	47	24	4	13	A-4a
1125.0	10	1/19/22			BROWN CLAYEY SILT WITH STONE FRAGMENTS	134	0	5	11	39	45	28	9	15	A-4a
1122.5	12	2/14/20			BROWN SILT AND CLAY WITH STONE FRAGMENTS	135	0	6	12	40	42	31	13	14	A-6a
1120.0	14	5/8/15			BROWN SANDY CLAY WITH STONE FRAGMENTS	136	0	8	14	40	38	30	11	14	A-6a
1117.5	16	4/15/17			BROWN SANDY CLAY WITH STONE FRAGMENTS	137	0	12	17	41	30	32	15	12	A-6a
1115.0	18	6/16/12			BROWN SANDY SILT WITH STONE FRAGMENTS	138	0	10	17	42	31	28	10	14	A-4a
	20														
	22														
	24														
1110.0	26	18/50			BROWN SILTY SAND	139	0	25	41	20	14	NP	NP	7	A-3a
1109.0					BOTTOM OF BORING										

Particle Sizes: Agg= >2.00mm, Coarse Sand= 2.00-0.42mm Fine Sand= 0.42-0.074mm, Silt= 0.074-0.005mm, Clay= <0.005mm

Form TE-93,Revised 5/95

OHIO DEPARTMENT OF TRANSPORTATION
OFFICE OF MATERIALS MANAGEMENT
1600 WEST BROAD ST. COLUMBUS, OH 43223

REVISED DATE | DATE 10/17/97
CHECKED M.R.S.
REVISED J.B.H.
TYPED J.B.H.

SUBSURFACE INVESTIGATION
SITE 2 NOISE WALL

MED-71-15.78

4 / 12

70 / 78

NWI-NW5.DGN PH 11/4/99

LOG OF BORING

Date Started 8/5/97 Sampler: Type SS Dia. 1 3/8"
Date completed 8/5/97
Boring No. B-26 Station & Offset 929+88, 80' RT.

Water Elev. -
Surface Elev. 1136.0'

Elev.	Depth	Std. Pen. (N)	Rec. ft	Loss ft	Description	Sample No.	Physical Characteristics: % Agg	% C.S.	% F.S.	% Silt	% Clay	L.L.	P.I.	W.C.	ODOT Class
1136.0	0	AUGERED			SOD	-	-	-	-	-	-	-	-	-	VISUAL
1135.2	2														
1133.5	4	7/15/18			BROWN CLAYEY SILT WITH STONE FRAGMENTS	140	0	7	11	39	43	29	10	14	A-4a
1131.0	6	12/16/19			BROWN CLAYEY SILT WITH STONE FRAGMENTS	141	0	7	11	40	42	27	8	17	A-4a
1128.5	8	17/17/19			BROWN CLAYEY SILT WITH STONE FRAGMENTS	142	0	6	12	36	46	28	10	13	A-4a
1126.0	10	12/14/15			BROWN AND GRAY SANDY SILT WITH STONE FRAGMENTS	143	0	8	13	38	41	26	8	15	A-4a
1123.5	12	9/9/16			GRAY CLAYEY SILT WITH STONE FRAGMENTS	144	0	6	11	39	44	26	9	14	A-4a
1121.0	14	8/9/12			GRAY CLAYEY SILT WITH STONE FRAGMENTS	145	0	5	11	41	43	26	8	15	A-4a
1118.5	16	5/8/10			GRAY CLAYEY SILT WITH STONE FRAGMENTS	146	0	5	10	38	47	26	8	16	A-4a
1116.0	18	6/8/14			GRAY CLAYEY SILT WITH STONE FRAGMENTS	147	0	6	11	38	45	26	8	16	A-4a
1111.0	20														
1109.5	22	8/11/14			GRAY SANDY SILT WITH STONE FRAGMENTS	146	0	8	13	38	41	26	9	12	A-4a
	24				BOTTOM OF BORING										
	26														

Particle Sizes: Agg= >2.00mm, Coarse Sand= 2.00-0.42mm Fine Sand= 0.42-0.074mm, Silt= 0.074-0.005mm, Clay= <0.005mm

Form TE-GL Revised 3/95

LOG OF BORING

Date Started 8/20/97 Sampler: Type SS Dia. 1 3/8"
Date completed 8/20/97
Boring No. B-28 Station & Offset 931+88, 74' RT.

Water Elev. -
Approx. Surface Elev. 1147.0'

Elev.	Depth	Std. Pen. (N)	Rec. ft	Loss ft	Description	Sample No.	Physical Characteristics: % Agg	% C.S.	% F.S.	% Silt	% Clay	L.L.	P.I.	W.C.	ODOT Class
1147.0	0	AUGERED			0.5' ASPHALT & 0.5' SAND & GRAVEL	-	-	-	-	-	-	-	-	-	VISUAL
1146.0	2														
1144.5	4	5/6/6			BROWN SILTY GRAVELLY SAND	226	23	45	20	7	5	NP	NP	7	A-1-b
1142.0	6	5/4/10			BROWN SILTY SANDY GRAVEL	227	53	22	11	8	6	NP	NP	6	A-1-a
1139.5	8	6/6/8			BROWN CLAYEY SILT WITH STONE FRAGMENTS	228	0	6	11	42	41	30	10	17	A-4a
1137.0	10	3/6/8			BROWN CLAYEY SILT WITH STONE FRAGMENTS	229	0	5	11	41	43	30	10	15	A-4a
1134.5	12	5/6/11			BROWN CLAYEY SILT WITH STONE FRAGMENTS	230	0	6	12	40	42	30	10	15	A-4a
1132.0	14	3/4/5			BROWN AND GRAY SILT AND CLAY WITH STONE FRAGMENTS	231	0	5	8	47	40	33	12	17	A-6a
1129.5	16	3/7/10			BROWN CLAYEY SILT WITH STONE FRAGMENTS	232	0	6	12	38	44	30	10	14	A-4a
1127.0	18	3/7/11			GRAY SILT AND CLAY WITH STONE FRAGMENTS	233	0	5	12	44	39	31	11	18	A-6a
1122.0	20														
1120.5	22	5/8/14			GRAY CLAYEY SILT	234	0	4	11	44	41	29	8	19	A-4a
	24				BOTTOM OF BORING										
	26														

Particle Sizes: Agg= >2.00mm, Coarse Sand= 2.00-0.42mm Fine Sand= 0.42-0.074mm, Silt= 0.074-0.005mm, Clay= <0.005mm

Form TE-GL Revised 3/95

LOG OF BORING

Date Started 8/5/97 Sampler: Type SS Dia. 1 3/8"
Date completed 8/5/97
Boring No. B-27 Station & Offset 930+88, 94' RT.

Water Elev. -
Approx. Surface Elev. 1146.0'

Elev.	Depth	Std. Pen. (N)	Rec. ft	Loss ft	Description	Sample No.	Physical Characteristics: % Agg	% C.S.	% F.S.	% Silt	% Clay	L.L.	P.I.	W.C.	ODOT Class
1146.0	0	AUGERED			BROWN SANDY CLAY	-	-	-	-	-	-	-	-	-	VISUAL
1143.5	2														
1141.0	4	5/4/11			BROWN AND GRAY CLAYEY SILT WITH STONE FRAGMENTS	9	0	5	11	41	43	30	10	14	A-4a
1138.5	6	9/12/15			BROWN AND GRAY SILT WITH STONE FRAGMENTS	10	0	6	12	40	42	26	6	13	A-4a
1136.0	8	6/9/13			BROWN AND GRAY CLAYEY SILT WITH STONE FRAGMENTS	11	0	6	12	39	43	29	9	15	A-4a
1133.5	10	9/11/13			BROWN AND GRAY SILT AND CLAY WITH STONE FRAGMENTS	12	0	6	12	39	43	30	11	17	A-6a
1131.0	12	5/8/11			GRAY CLAYEY SILT	13	0	6	12	36	46	26	8	14	A-4a
1128.5	14	3/7/9			GRAY CLAYEY SILT	14	0	6	11	36	47	26	9	14	A-4a
1126.0	16	5/8/12			GRAY CLAYEY SILT	15	0	6	10	37	47	26	8	14	A-4a
	18	6/9/15			GRAY CLAYEY SILT WITH STONE FRAGMENTS	16	0	7	11	37	45	25	7	14	A-4a
1121.0	20														
1119.6	22	7/8/13			GRAY SANDY GRAVELLY SILT	17	30	5	11	35	49	27	9	15	A-4a
	24				BOTTOM OF BORING										
	26														

Particle Sizes: Agg= >2.00mm, Coarse Sand= 2.00-0.42mm Fine Sand= 0.42-0.074mm, Silt= 0.074-0.005mm, Clay= <0.005mm

Form TE-GL Revised 3/95

OHIO DEPARTMENT OF TRANSPORTATION
OFFICE OF MATERIALS MANAGEMENT
1600 WEST BROAD ST. COLUMBUS, OH 43223

REVISED DATE	DATE: 10/17/97
	CHECKED M.R.S.
	REVISED J.B.H.
	TYPED J.B.H.

SUBSURFACE INVESTIGATION
SITE 2 NOISE WALL

MED-71-15.78

5/12

71/78

NWI-NW5.DGN PH 11/4/99

PRIME ENGINEERING & ARCHITECTURE INC.

TEST BORING No.: NB-1

STATION & OFFSET: 905+17.6, 92.0 ft. Rt.

ELEVATION: 1126.7ft

CLIENT: Richland Engineering Ltd.

PROJECT: Subsurface Exploration for Noise Barrier along Right Side Shoulder of IR-71 NB

LOCATION: Medina County, Ohio

DATE STARTED: 3/12/99 DATE COMPLETED: 3/12/99

SAMPLER DIAM: 2" TYPE: HAMMER WT.: 140lb FALL: 30"

CASING DIAM: 3.25" TYPE: HSA OTHER:

DRILLING INFORMATION: NAD / CME-55 Truck Mounted drilling Rig

GROUNDWATER INFORMATION: Water encountered at 25.0 feet during and at 15.3 feet upon completion of the drilling operations

▼ GROUNDWATER DURING DRILLING ▽ GROUNDWATER UPON COMPLETION

ELEV (ft.)	DEPTH (ft.)	Soil/Rock Symbol	MATERIAL DESCRIPTION	SAMPLE NUMBER	SAMPLE DEPTH	N-VALUE (BLOWS/FT) OR REC%/(RQD%)	PENETROMETER (tons/ft²)	MOISTURE CONTENT (%)	ATTERBERG LIMITS (%) LIQUID LIMIT LL	PLASTIC LIMIT PL	PLASTICITY INDEX PI	DRY DENSITY (pcf)	UNCONFINED COMPRESSIVE STRENGTH (psf)	MINUS No. 200 SIEVE (%)	CLASSIFICATION SYMBOL
1126.4	0.3		TOPSOIL												
			Medium stiff to very stiff, brown to gray SILT AND CLAY, little sand, trace gravel, trace rock fragments, trace roots, moist (fill).	1	1.5	7	1.0								
				2	4.0	21	1.0								
				3	6.5	13	1.5								
1118.7	8.0		Stiff to hard, brown SILT AND CLAY, little sand, trace gravel, trace rock fragments, moist.	4	8.5	17	3.0								
				5	12.5	30	4.0+								
				6	15.0	28	4.0+								
				7	17.5	32	4.0								
1106.7	20.0		Medium dense, brown SILT, little clay, trace sand, moist.	8	20.0	11	1.0								
1104.2	22.5		Stiff, gray SANDY SILT, little clay, little gravel and rock fragments, moist to wet.	9	22.5	15	2.0								
			Note: Occasional sand and silt seams encountered from 25.0 to 28.5 feet.	10	25.0	9									
				11	28.5	9	1.0								
1096.7	30.0		TERMINATION DEPTH = 30.0 FEET												

NOTES/REMARKS:

TEST_BORING_LOG 99017.GPJ PRIMENG.GDT 3/31/99

NB-1: PAGE 1 OF 1

PRIME ENGINEERING & ARCHITECTURE INC.

TEST BORING No.: NB-2

STATION & OFFSET: 908+17.6, 92.0 ft. Rt.

ELEVATION: 1128.8ft

CLIENT: Richland Engineering Ltd.

PROJECT: Subsurface Exploration for Noise Barrier along Right Side Shoulder of IR-71 NB PROJECT No.: 99017

LOCATION: Medina County, Ohio

DATE STARTED: 3/15/99 DATE COMPLETED: 3/15/99

SAMPLER DIAM: 2" TYPE: SS HAMMER WT.: 140lb FALL: 30"

CASING DIAM: 3.25" TYPE: HSA OTHER:

DRILLING INFORMATION: NAD / CME-55 Truck Mounted drilling Rig

GROUNDWATER INFORMATION: Water encountered at 17.5 feet during and at 15.6 feet upon completion of the drilling operations

▼ GROUNDWATER DURING DRILLING ▽ GROUNDWATER UPON COMPLETION

ELEV (ft.)	DEPTH (ft.)	Soil/Rock Symbol	MATERIAL DESCRIPTION	SAMPLE NUMBER	SAMPLE DEPTH	N-VALUE (BLOWS/FT) OR REC%/(RQD%)	PENETROMETER (tons/ft²)	MOISTURE CONTENT (%)	ATTERBERG LIMITS (%) LIQUID LIMIT LL	PLASTIC LIMIT PL	PLASTICITY INDEX PI	DRY DENSITY (pcf)	UNCONFINED COMPRESSIVE STRENGTH (psf)	MINUS No. 200 SIEVE (%)	CLASSIFICATION SYMBOL
1128.3	0.5		GRAVEL WITH SAND (Roadbase).												
			Very stiff to stiff, brown SILT AND CLAY, little sand, trace gravel, trace rock fragments, moist (fill).	1	1.5	16	4.0+								
				2	4.0	16	2.5								
				3	6.5	12	2.5								
			Note: Trace roots encountered at 9.0 feet.	4	8.5	11	4.0+								
			Note: Trace organics at 12.9 feet.	5	12.5	13	1.75								
1114.3	14.5		Very stiff, brown SILT AND CLAY, little sand, trace gravel, trace rock fragments, moist.	6	15.0	25	4.0+								
1111.3	17.5		Stiff, brown SANDY SILT, little clay, little gravel and rock fragments, moist. Note: Silt layer encountered from 18.2 to 18.5 feet.	7	17.5	14									
1106.8	22.0		Very stiff, brown and gray to gray SILT AND CLAY, little sand, trace gravel, trace rock fragments, moist.	8	20.0	15									
				9	22.5	22	3.0								
				10	25.0	16									
1099.3	29.5		Medium dense, light gray, decomposed SANDSTONE	11	28.5	27									
1098.8	30.0		TERMINATION DEPTH = 30.0 FEET												

NOTES/REMARKS:

TEST_BORING_LOG 99017.GPJ PRIMENG.GDT 3/31/99

NB-2: PAGE 1 OF 1

PRIME ENGINEERING & ARCHITECTURE INC.

TEST BORING No.: NB-3

STATION & OFFSET: 911+17.6, 92.0 ft. Rt.

ELEVATION: 1131.1ft

CLIENT: Richland Engineering Ltd.

PROJECT: Subsurface Exploration for Noise Barrier along Right Side Shoulder of IR-71 NB PROJECT No.: 99017

LOCATION: Medina County, Ohio

DATE STARTED: 3/15/99 DATE COMPLETED: 3/15/99

SAMPLER DIAM: 2" TYPE: SS HAMMER WT.: 140lb FALL: 30"

CASING DIAM: 3.25" TYPE: HSA OTHER:

DRILLING INFORMATION: NAD / CME-55 Truck Mounted drilling Rig

GROUNDWATER INFORMATION: Water encountered at 17.5 feet during and at 17.0 feet upon completion of the drilling operations

▼ GROUNDWATER DURING DRILLING ▽ GROUNDWATER UPON COMPLETION

ELEV (ft.)	DEPTH (ft.)	Soil/Rock Symbol	MATERIAL DESCRIPTION	SAMPLE NUMBER	SAMPLE DEPTH	N-VALUE (BLOWS/FT) OR REC%/(RQD%)	PENETROMETER (tons/ft²)	MOISTURE CONTENT (%)	ATTERBERG LIMITS (%) LIQUID LIMIT LL	PLASTIC LIMIT PL	PLASTICITY INDEX PI	DRY DENSITY (pcf)	UNCONFINED COMPRESSIVE STRENGTH (psf)	MINUS No. 200 SIEVE (%)	CLASSIFICATION SYMBOL
1130.8	0.3		TOPSOIL												
			Hard to stiff, brown SILT AND CLAY, little sand, trace gravel, trace rock fragments, moist.	1	1.5	19	4.0+								
				2	4.0	36									
				3	6.5	24	4.0+								
			Note: Color change to gray at 8.5 feet.	4	8.5	21	3.0								
				5	12.5	13	1.5								
				6	15.0	12	1.5								
1115.1	16.0		Stiff, brown SANDY SILT, little clay, moist to wet with occasional layers of silt and sand.	7	17.5	11									
1111.1	20.0		Very stiff, brown SILT AND CLAY, little sand, little gravel and rock fragments, moist.	8	20.0	25	4.0								
1108.6	22.5		Very dense, brown, decomposed SANDSTONE	9	22.5	50+									
			Note: Augered to 25.0 feet.												
1106.1	25.0		TERMINATION DEPTH = 25.0 FEET												

NOTES/REMARKS:

TEST_BORING_LOG 99017.GPJ PRIMENG.GDT 3/31/99

NB-3: PAGE 1 OF 1

DESIGN AGENCY
PRIME ENGINEERING & ARCHITECT, INC.
1038 GHENT RD, AKRON, OHIO 44333

DESIGNED | DRAWN | CHECKED | REVIEWED | REVISED | DATE | STRUCTURE FILE NUMBER

SITE 2 NOISE WALL

MED-71-15.78

6 / 12

72 / 78

NBI-NBI0.DGN RRB 9/24/99

PRIME ENGINEERING & ARCHITECTURE INC.

TEST BORING No.: NB-4

STATION & OFFSET: 914+17.6, 92.0 ft. Rt.

APPROX. ELEVATION: 1133.1ft

CLIENT: Richland Engineering Ltd.

PROJECT: Subsurface Exploration for Noise Barrier along Right Side Shoulder of IR-71 NB PROJECT No.: 99017

LOCATION: Medina County, Ohio

DATE STARTED: 3/17/99 DATE COMPLETED: 3/17/99

SAMPLER DIAM: 2" TYPE: SS HAMMER WT.: 140lb FALL: 30"

CASING DIAM: 3.25" TYPE: HSA OTHER:

DRILLING INFORMATION:
NAD / CME-55 Truck Mounted drilling Rig

GROUNDWATER INFORMATION:
Water encountered at 20.0 feet during and at 21.0 feet upon completion of the drilling operations

▼ GROUNDWATER DURING DRILLING ▽ GROUNDWATER UPON COMPLETION

ELEV (ft.)	DEPTH (ft.)	Soil/Rock Symbol	MATERIAL DESCRIPTION	SAMPLE NUMBER	SAMPLE DEPTH	N-VALUE (BLOWS/FT) OR REC%/(RQD%)	PENETROMETER (tons/ft²)	MOISTURE CONTENT (%)	ATTERBERG LIMITS (%) LIQUID LIMIT	PLASTIC LIMIT	PLASTICITY INDEX	DRY DENSITY (pcf)	UNCONFINED COMPRESSIVE STRENGTH (psf)	MINUS No. 200 SIEVE (%)	CLASSIFICATION SYMBOL
1132.1	1.0		ASPHALT												
1131.6	1.5		GRAVEL WITH SAND (Road base)												
			Stiff, brown and gray SILT AND CLAY, some gravel and rock fragments, little sand, moist (fill).	1	1.5	14									
1129.1	4.0		Medium dense, brown GRAVEL AND ROCK FRAGMENTS WITH SAND, trace silt, moist (fill).	2	4.0	11									
				3	6.0	9									
1126.6	6.5		Stiff to very stiff, brown SILT AND CLAY, little sand, trace gravel, trace rock fragments, moist (fill).	4	8.5	10	3.0								
				5	12.5	16	3.0								
				6	15.0	15	2.5								
				7	17.5	11									
			Note: Trace organics and wood found at 18.0 feet.												
				8	20.0	8									
			Note: Trace roots found at 20.5 feet.												
1111.8	21.3		Medium stiff, brown SANDY SILT, little clay, trace gravel, trace rock fragments, moist to wet.												
1111.1	22.0		Very dense, gray, decomposed SANDSTONE. Note: Augered to 25.0 feet and cored from 25.0 to 28.0 feet.												
1108.1	25.0		Brown, medium hard, weathered SANDSTONE, fine grained, very thin to thinly bedded.	R-1	25.0	92% (11%)									
1105.1	28.0		TERMINATION DEPTH = 28.0 FEET		28.0										

NOTES/REMARKS: Note: Boring location was moved 12.0 feet west due to inaccessibility.

NB-4: PAGE 1 OF 1

TEST_BORING_LOG 99017.GPJ PRIMENG.GDT 3/31/99

PRIME ENGINEERING & ARCHITECTURE INC.

TEST BORING No.: NB-5

STATION & OFFSET: 917+17.7, 92.0 ft. Rt.

ELEVATION: 1133.8ft

CLIENT: Richland Engineering Ltd.

PROJECT: Subsurface Exploration for Noise Barrier along Right Side Shoulder of IR-71 NB PROJECT No.: 99017

LOCATION: Medina County, Ohio

DATE STARTED: 3/17/99 DATE COMPLETED: 3/17/99

SAMPLER DIAM: 2" TYPE: SS HAMMER WT.: 140lb FALL: 30"

CASING DIAM: 3.25" TYPE: HSA OTHER:

DRILLING INFORMATION:
NAD / CME-55 Truck Mounted drilling Rig

GROUNDWATER INFORMATION:
Dry during and wet at 17.0 feet upon completion of the drilling operations

▽ GROUNDWATER UPON COMPLETION

ELEV (ft.)	DEPTH (ft.)	Soil/Rock Symbol	MATERIAL DESCRIPTION	SAMPLE NUMBER	SAMPLE DEPTH	N-VALUE (BLOWS/FT) OR REC%/(RQD%)	PENETROMETER (tons/ft²)	MOISTURE CONTENT (%)	ATTERBERG LIMITS (%) LIQUID LIMIT	PLASTIC LIMIT	PLASTICITY INDEX	DRY DENSITY (pcf)	UNCONFINED COMPRESSIVE STRENGTH (psf)	MINUS No. 200 SIEVE (%)	CLASSIFICATION SYMBOL
1133.5	0.3		TOPSOIL. Very stiff to hard, brown SILT AND CLAY, little sand, trace gravel, trace rock fragments, moist.	1	1.5	19	3.5								
				2	4.0	36	4.0+								
				3	6.0	27	4.0+								
				4	8.5	30	3.5								
				5	12.5	30	3.5								
1118.8	15.0		Very stiff to stiff, brown SANDY SILT, little clay, trace gravel, trace rock fragments, moist.	6	15.0	16	3.0								
			Note: Sand seams encountered at 18.0 feet.	7	17.5	19	2.5								
				8	20.0	9	1.5								
1111.8	22.0		Very dense, brown, decomposed SANDSTONE Note: Augered to 25.0 feet and cored from 25.0 to 28.0 feet.	9	22.5	50+									
1108.8	25.0		Brown, medium hard, weathered SANDSTONE, fine grained, very thin to thinly bedded.	R-1	25.0	79% (0%)									
1105.8	28.0		TERMINATION DEPTH = 28.0 FEET		28.0										

NOTES/REMARKS:

NB-5: PAGE 1 OF 1

TEST_BORING_LOG 99017.GPJ PRIMENG.GDT 3/31/99

PRIME ENGINEERING & ARCHITECTURE INC.

TEST BORING No.: NB-6

STATION & OFFSET: 920+17.6, 92.1 ft. Rt.

ELEVATION: 1136.6ft

CLIENT: Richland Engineering Ltd.

PROJECT: Subsurface Exploration for Noise Barrier along Right Side Shoulder of IR-71 NB PROJECT No.: 99017

LOCATION: Medina County, Ohio

DATE STARTED: 3/16/99 DATE COMPLETED: 3/16/99

SAMPLER DIAM: 2" TYPE: SS HAMMER WT.: 140lb FALL: 30"

CASING DIAM: 3.25" TYPE: HSA OTHER:

DRILLING INFORMATION:
NAD / CME-55 Truck Mounted drilling Rig

GROUNDWATER INFORMATION:
Water encountered at 21.4 feet during and dry upon completion of the drilling operations

▼ GROUNDWATER DURING DRILLING

ELEV (ft.)	DEPTH (ft.)	Soil/Rock Symbol	MATERIAL DESCRIPTION	SAMPLE NUMBER	SAMPLE DEPTH	N-VALUE (BLOWS/FT) OR REC%/(RQD%)	PENETROMETER (tons/ft²)	MOISTURE CONTENT (%)	ATTERBERG LIMITS (%) LIQUID LIMIT	PLASTIC LIMIT	PLASTICITY INDEX	DRY DENSITY (pcf)	UNCONFINED COMPRESSIVE STRENGTH (psf)	MINUS No. 200 SIEVE (%)	CLASSIFICATION SYMBOL
1136.3	0.3		TOPSOIL. Very stiff to hard, brown SILT AND CLAY, little sand, trace gravel, trace rock fragments, moist.	1	1.5	18	3.5								
				2	4.0	28	3.5								
				3	6.0	17	3.0								
			Note: Color change to gray at 7.0 feet.												
				4	8.5	24	4.0								
				5	12.5	30									
1123.6	13.0		Very stiff, brown SILT, little sand, trace clay, moist.												
1121.8	15.0		Dense to medium dense, brown GRAVEL AND ROCK FRAGMENTS WITH SAND, trace silt, moist. Note: Trace cobble from 15.0 to 17.5 feet.	6	15.0	33									
				7	17.5	36									
1116.3	20.3		Very stiff to hard, brown SANDY SILT, little clay, trace gravel, trace rock fragments, moist. Note: Occasional gray silt seams encountered from 20.3 to 22.5 feet.	8	20.0	26	2.0								
				9	22.5	69	4.0+								
1112.8	23.8		TERMINATION DEPTH = 23.8 FEET												

NOTES/REMARKS:

NB-6: PAGE 1 OF 1

TEST_BORING_LOG 99017.GPJ PRIMENG.GDT 3/31/99

DESIGN AGENCY
PRIME ENGINEERING & ARCHITECT, INC.
1038 GHENT RD, AKRON, OHIO 44333

DESIGNED | DRAWN | CHECKED | REVIEWED | DATE | REVISED | STRUCTURE FILE NUMBER

SITE 2 NOISE WALL

MED-71-15.78

7 / 12

73 / 78

NBI-NB10.DGN RRB 9/24/99

PRIME ENGINEERING & ARCHITECTURE INC.

TEST BORING No.: NB-7

STATION & OFFSET: 923+17.9, 92.1 ft. Rt.

ELEVATION: 1138.7ft

CLIENT: Richland Engineering Ltd.

PROJECT: Subsurface Exploration for Noise Barrier along Right Side Shoulder of IR-71 NB PROJECT No.: 99017

LOCATION: Medina County, Ohio

DATE STARTED: 3/16/99 DATE COMPLETED: 3/16/99

SAMPLER DIAM: 2" TYPE: SS HAMMER WT.: 140lb FALL: 30"

CASING DIAM: 3.25" TYPE: HSA OTHER:

DRILLING INFORMATION:
NAD / CME-55 Truck Mounted drilling Rig

GROUNDWATER INFORMATION:
No groundwater encountered during and upon completion of the drilling operations.

ELEV (ft.)	DEPTH (ft.)	Soil/ Rock Symbol	MATERIAL DESCRIPTION	SAMPLE NUMBER	SAMPLE DEPTH	N-VALUE (BLOWS/FT) OR REC%/(RQD%)	PENETROMETER (tons/ft²)	MOISTURE CONTENT (%)	ATTERBERG LIMITS (%) LL	PL	PI	DRY DENSITY (pcf)	UNCONFINED COMPRESSIVE STRENGTH (psf)	MINUS No. 200 SIEVE (%)	CLASSIFICATION SYMBOL
1138.4	0.3		TOPSOIL.												
			Very stiff to hard, brown SILT AND CLAY, little sand, trace gravel, trace rock fragments, moist.	1	1.5	26	4.0+								
				2	4.0	50+	4.0+								
			Note: Boulder encountered at 5.0 feet.	3	6.0	50	3.5								
				4	8.5	31	4.0+								
1126.2	12.5		Very dense to medium dense, brown GRAVEL AND ROCK FRAGMENTS WITH SAND, trace silt, moist.	5	12.5	60									
1123.7	15.0		Medium dense, brown COARSE AND FINE SAND, trace silt, moist.	6	15.0	26									
				7	17.5	15									
1118.4	20.3		Very stiff to hard, brown SANDY SILT, little clay, little gravel and rock fragments, moist. Note: Occasional silt seams encountered from 20.3 to 22.5 feet.	8	20.0	17									
1115.7	23.0		Very dense, brown, decomposed SANDSTONE	9	22.5	50+									
1114.2	24.5		TERMINATION DEPTH = 24.5 FEET	10	23.0	50+									
				11	28.5										

NOTES/REMARKS:

NB-7: PAGE 1 OF 1

PRIME ENGINEERING & ARCHITECTURE INC.

TEST BORING No.: NB-8

STATION & OFFSET: 926+17.8, 92.0 ft. Rt.

ELEVATION: 1141.1ft

CLIENT: Richland Engineering Ltd.

PROJECT: Subsurface Exploration for Noise Barrier along Right Side Shoulder of IR-71 NB PROJECT No.: 99017

LOCATION: Medina County, Ohio

DATE STARTED: 3/16/99 DATE COMPLETED: 3/16/99

SAMPLER DIAM: 2" TYPE: SS HAMMER WT.: 140lb FALL: 30"

CASING DIAM: 3.25" TYPE: HSA OTHER:

DRILLING INFORMATION:
NAD / CME-55 Truck Mounted drilling Rig

GROUNDWATER INFORMATION:
No groundwater encountered during and upon completion of the drilling operations.

ELEV (ft.)	DEPTH (ft.)	Soil/ Rock Symbol	MATERIAL DESCRIPTION	SAMPLE NUMBER	SAMPLE DEPTH	N-VALUE (BLOWS/FT) OR REC%/(RQD%)	PENETROMETER (tons/ft²)	MOISTURE CONTENT (%)	ATTERBERG LIMITS (%) LL	PL	PI	DRY DENSITY (pcf)	UNCONFINED COMPRESSIVE STRENGTH (psf)	MINUS No. 200 SIEVE (%)	CLASSIFICATION SYMBOL
1140.8	0.3		TOPSOIL.												
			Very stiff to stiff, gray SILT AND CLAY, little sand, trace gravel, trace rock fragments, moist.	1	1.5	25	4.0+								
				2	4.0	19	2.5								
				3	6.0	13	2.5								
			Note: Occasional sand and silt seams encountered from 9.0 to 19.0 feet.	4	8.5	15	1.5								
				5	12.5	14	1.5								
				6	15.0	10	1.0								
				7	17.5	24									
1122.1	19.0		Medium dense, light gray FINE SAND, moist.	8	20.0	18									
				9	22.5	12	2.0								
1117.1	24.0		Stiff, gray SILT, little clay, little sand, trace gravel, trace rock fragments, moist.	10	25.0	14	1.0								
1112.6	28.5		Stiff, brown SANDY SILT, little clay, trace gravel, trace rock fragments, moist.	11	28.5	15									
1111.1	30.0		TERMINATION DEPTH = 30.0 FEET												

NOTES/REMARKS:

NB-8: PAGE 1 OF 1

PRIME ENGINEERING & ARCHITECTURE INC.

TEST BORING No.: NB-9

STATION & OFFSET: 929+17.8, 92.0 ft. Rt.

ELEVATION: 1143.0ft

CLIENT: Richland Engineering Ltd.

PROJECT: Subsurface Exploration for Noise Barrier along Right Side Shoulder of IR-71 NB PROJECT No.: 99017

LOCATION: Medina County, Ohio

DATE STARTED: 3/15/99 DATE COMPLETED: 3/15/99

SAMPLER DIAM: 2" TYPE: SS HAMMER WT.: 140lb FALL: 30"

CASING DIAM: 3.25" TYPE: HSA OTHER:

DRILLING INFORMATION:
NAD / CME-55 Truck Mounted drilling Rig

GROUNDWATER INFORMATION:
No groundwater encountered during and upon completion of the drilling operations.

ELEV (ft.)	DEPTH (ft.)	Soil/ Rock Symbol	MATERIAL DESCRIPTION	SAMPLE NUMBER	SAMPLE DEPTH	N-VALUE (BLOWS/FT) OR REC%/(RQD%)	PENETROMETER (tons/ft²)	MOISTURE CONTENT (%)	ATTERBERG LIMITS (%) LL	PL	PI	DRY DENSITY (pcf)	UNCONFINED COMPRESSIVE STRENGTH (psf)	MINUS No. 200 SIEVE (%)	CLASSIFICATION SYMBOL
1142.6	0.4		TOPSOIL.												
			Very stiff to stiff, brown SILT AND CLAY, little sand, trace gravel, trace rock fragments, moist (fill).	1	1.5	16									
1138.0	5.0		Medium stiff to hard, gray SILT AND CLAY, little sand, trace gravel, trace rock fragments, moist.	2	4.0	9	1.5								
				3	6.0	7	1.5								
				4	8.5	18	2.5								
				5	12.5	14	2.5								
				6	15.0	17	2.5								
				7	17.5	18	2.5								
				8	20.0	16	2.0								
			Note: Trace cobble from 22.5 to 25.0 feet.	9	22.5	24	3.5								
				10	25.0	25	3.5								
				11	28.5	46	4.0+								
1113.0	30.0		TERMINATION DEPTH = 30.0 FEET												

NOTES/REMARKS:

NB-9: PAGE 1 OF 1

TEST_BORING_LOG 99017.GPJ PRIMENG.GDT 3/31/99

DESIGN AGENCY
PRIME ENGINEERING & ARCHITECT, INC.
1038 GHENT RD, AKRON, OHIO 44333

DESIGNED | DRAWN | CHECKED | REVIEWED | DATE | STRUCTURE FILE NUMBER | REVISED

SITE 2 NOISE WALL

MED-71-15.78

8 / 12

74 / 78

NBI-NBJO.DGN RRB 9/24/99

PRIME ENGINEERING & ARCHITECTURE INC.

TEST BORING No.: NB-10

STATION & OFFSET: 932+17.7, 92.0 ft. Rt.

APPROX. ELEVATION: 1146.2ft

CLIENT: Richland Engineering Ltd.

PROJECT: Subsurface Exploration for Noise Barrier along Right Side Shoulder of IR-71 NB PROJECT No.: 99017

LOCATION: Medina County, Ohio

DATE STARTED: 3/17/99 DATE COMPLETED: 3/17/99

SAMPLER DIAM: 2" TYPE: SS HAMMER WT.: 140lb FALL: 30"

CASING DIAM: 3.25" TYPE: HSA OTHER:

DRILLING INFORMATION:
NAD / CME-55 Truck Mounted drilling Rig

GROUNDWATER INFORMATION:
No groundwater encountered during and upon completion of the drilling operations.

ELEV (ft.)	DEPTH (ft.)	Soil/Rock Symbol	MATERIAL DESCRIPTION	SAMPLE NUMBER	SAMPLE DEPTH	N-VALUE (BLOWS/FT) OR REC%/RQD%	PENETROMETER (tons/ft²)	MOISTURE CONTENT (%)	ATTERBERG LIMITS (%) LL	PL	PI	DRY DENSITY (pcf)	UNCONFINED COMPRESSIVE STRENGTH (psf)	MINUS No. 200 SIEVE (%)	CLASSIFICATION SYMBOL
1145.9	0.3		ASPHALT												
1145.2	1.0		GRAVEL WITH SAND (Roadbase)												
			Very stiff to stiff, brown SILT AND CLAY, little sand, trace gravel, trace rock fragments, moist (fill).	1	1.5	19	4.0+								
				2	4.0	29	4.0+								
				3	6.5	20	3.5								
				4	8.5	15	3.0								
				5	12.5	18	4.0								
1130.7	15.5		Very stiff to stiff, brown SANDY SILT, some clay, trace gravel, trace rock fragments, moist (fill).	6	15.0	13	2.5								
				7	17.5	16	3.5								
				8	20.0	14	3.0								
				9	22.5	9	3.0								
			Note: Trace organic and roots encountered at 25.8 feet.	10	25.0	11	3.5								
1120.2	26.0		Hard, brown with mottled gray SILT AND CLAY, little sand, trace gravel, trace rock fragments, trace cobbles, moist.												
			Note: Trace cobble from 26.5 to 28.5 feet.	11	28.5	34	4.0								
1116.2	30.0		TERMINATION DEPTH = 30.0 FEET												

NOTES/REMARKS: Note: Boring location was moved 20.0 feet west due to inaccessibility.

NB-10: PAGE 1 OF 1

TEST_BORING_LOG 99017.GPJ PRIMENG.GDT 3/31/99

NBI-NB10.DGN RRB 9/24/99

DESIGN AGENCY
PRIME ENGINEERING & ARCHITECT, INC.
1038 GHENT RD, AKRON, OHIO 44333

DESIGNED | DRAWN | REVIEWED | DATE | STRUCTURE FILE NUMBER
CHECKED | REVISED

SITE 2 NOISE WALL

MED-71-15.78

9 / 12

75 / 78

LOG OF BORING

Date Started 8/27/97 Sampler: Type SS Dia. 1 3/8" Water Elev. ---
Date completed 8/27/97
Boring No. B-29 Station & Offset 1282+38, 92' LT. Surface Elev. 1153.0'

Elev.	Depth	Std. Pen. (N)	Rec. ft	Loss ft	Description	Sample No.	Physical Characteristics % Agg	% C.S.	% F.S.	% Silt	% Clay	L.L.	P.I.	W.C.	ODOT Class
1153.0	0	AUGERED			BERM MATERIAL, SAND AND GRAVEL	-	-	-	-	-	-	-	-	-	VISUAL
1152.0	2														
1150.5	4	7/9/14			BROWN SILT AND CLAY WITH STONE FRAGMENTS	261	0	8	10	42	40	30	11	14	A-6a
1148.0	6	4/9/12			BROWN AND GRAY CLAYEY SILT WITH STONE FRAGMENTS	262	0	6	12	43	39	30	9	21	A-4a
1145.5	8	7/10/15			BROWN SILT AND CLAY WITH STONE FRAGMENTS	263	0	5	10	38	47	35	14	15	A-6a
1143.0	10	9/11/14			BROWN CLAYEY SILT WITH STONE FRAGMENTS	264	0	7	10	36	47	30	9	15	A-4a
1140.5	12	10/12/16			BROWN CLAYEY SILT WITH STONE FRAGMENTS	265	0	5	9	36	50	30	9	16	A-4a
1138.0	14	11/12/16			GRAY SILT AND CLAY WITH STONE FRAGMENTS	266	0	7	10	33	50	30	11	16	A-6a
1135.5	16	6/10/11			GRAY SANDY CLAY	267	0	9	14	31	46	29	11	16	A-6a
1133.0	18	11/11/18			GRAY SANDY CLAY WITH STONE FRAGMENTS	268	0	9	15	37	39	30	13	13	A-6a
	20														
1128.0	22														
1126.5	24	9/12/18			GRAY CLAYEY SILT WITH STONE FRAGMENTS	269	0	8	12	41	39	26	9	12	A-4a
	26				BOTTOM OF BORING										

Particle Sizes: Agg= >2.00mm, Coarse Sand= 2.00-0.42mm Fine Sand= 0.42-0.074mm, Silt= 0.074-0.005mm, Clay= <0.005mm

Form TE-GL Revised 9/95

LOG OF BORING

Date Started 8/13/97 Sampler: Type SS Dia. 1 3/8" Water Elev. ---
Date completed 8/13/97
Boring No. B-31 Station & Offset 1284+38, 89' LT. Surface Elev. 1151.0'

Elev.	Depth	Std. Pen. (N)	Rec. ft	Loss ft	Description	Sample No.	Physical Characteristics % Agg	% C.S.	% F.S.	% Silt	% Clay	L.L.	P.I.	W.C.	ODOT Class
1151.0	0	AUGERED			SOD	-	-	-	-	-	-	-	-	-	VISUAL
1150.2	2														
1148.5	4	14/19/21			BROWN SILT AND CLAY WITH STONE FRAGMENTS	181	0	8	10	42	40	31	11	14	A-6a
1146.0	6	16/24/26			BROWN CLAYEY SILT WITH STONE FRAGMENTS	182	0	7	11	38	43	30	10	15	A-4a
1143.5	8	14/21/26			BROWN SILT AND CLAY WITH STONE FRAGMENTS	183	0	7	11	38	44	32	12	15	A-6a
1141.0	10	15/19/21			BROWN AND GRAY CLAYEY SILT WITH STONE FRAGMENTS	184	0	7	10	37	46	28	9	13	A-4a
1138.5	12	10/11/15			GRAY CLAYEY SILT WITH STONE FRAGMENTS	185	0	10	10	28	52	27	8	16	A-4a
1136.0	14	6/10/12			GRAY CLAYEY SILT WITH STONE FRAGMENTS	186	0	6	11	33	50	26	8	15	A-4a
1133.5	16	10/16/17			GRAY CLAYEY SILT WITH STONE FRAGMENTS	187	0	7	12	29	52	26	9	17	A-4a
1131.0	18	12/21/22			GRAY SANDY SILT WITH STONE FRAGMENTS	188	0	9	12	35	44	28	10	18	A-4a
	20														
1126.0	22														
1124.5	24	12/22/32			GRAY SANDY SILT WITH STONE FRAGMENTS	189	0	9	12	39	40	26	8	11	A-4a
	26				BOTTOM OF BORING										

Particle Sizes: Agg= >2.00mm, Coarse Sand= 2.00-0.42mm Fine Sand= 0.42-0.074mm, Silt= 0.074-0.005mm, Clay= <0.005mm

Form TE-GL Revised 9/95

LOG OF BORING

Date Started 8/14/97 Sampler: Type SS Dia. 1 3/8" Water Elev. ---
Date completed 8/14/97
Boring No. B-30 Station & Offset 1283+38, 90' LT. Surface Elev. 1152.0'

Elev.	Depth	Std. Pen. (N)	Rec. ft	Loss ft	Description	Sample No.	Physical Characteristics % Agg	% C.S.	% F.S.	% Silt	% Clay	L.L.	P.I.	W.C.	ODOT Class
1152.0	0	AUGERED			SOD	-	-	-	-	-	-	-	-	-	VISUAL
1151.2	2														
1149.5	4	15/22/31			BROWN SILT AND CLAY WITH STONE FRAGMENTS	190	0	6	10	39	45	31	11	13	A-6a
1147.0	6	16/24/25			BROWN SILT AND CLAY WITH STONE FRAGMENTS	191	0	8	10	36	46	32	11	12	A-6a
1144.5	8	15/22/25			BROWN SILT AND CLAY WITH STONE FRAGMENTS	192	0	5	8	32	55	33	12	14	A-6a
1142.0	10	14/27/32			BROWN SILT AND CLAY WITH STONE FRAGMENTS	193	0	6	9	31	54	33	13	14	A-6a
1139.5	12	15/21/23			BROWN SILT AND CLAY WITH STONE FRAGMENTS	194	0	7	10	30	53	33	12	16	A-6a
1137.0	14	12/19/19			BROWN AND GRAY CLAYEY SILT WITH STONE FRAGMENTS	195	0	7	12	32	49	29	10	14	A-4a
1134.5	16	9/12/16			GRAY SANDY SILT WITH STONE FRAGMENTS	196	0	11	17	38	34	25	9	12	A-4a
1132.0	18	9/12/17			BROWN SANDY GRAVELLY SILT WITH STONE FRAGMENTS	197	26	6	10	26	32	NP	NP	8	A-4a
	20														
1127.0	22														
1125.5	24	12/19/22			GRAY SILT WITH STONE FRAGMENTS	198	0	8	12	38	42	24	6	12	A-4a
	26				BOTTOM OF BORING										

Particle Sizes: Agg= >2.00mm, Coarse Sand= 2.00-0.42mm Fine Sand= 0.42-0.074mm, Silt= 0.074-0.005mm, Clay= <0.005mm

Form TE-GL Revised 9/95

OHIO DEPARTMENT OF TRANSPORTATION
OFFICE OF MATERIALS MANAGEMENT
1600 WEST BROAD ST. COLUMBUS, OH 43223

REVISED DATE | DATE 10/17/97
CHECKED M.R.S.
REVISED J.B.H.
TYPED J.B.H.

SUBSURFACE INVESTIGATION
SITE 4 NOISE WALL

MED-71-15.78

10/12

76/78

NWIO-NWI2.DGN PH 11/4/99

LOG OF BORING

Date Started 8/19/97 Sampler: Type SS Dia. 1 3/8"
Date completed 8/19/97 Water Elev.
Boring No. B-36 Station & Offset 1292+38, 80' LT. Surface Elev. 1143.0'

Elev.	Depth	Std. Pen. (N)	Rec. ft	Loss ft	Description	Sample No.	Physical Characteristics % Agg	% C.S.	% F.S.	% Silt	% Clay	L.L.	P.I.	W.C.	ODOT Class
1143.0	0														
	2	AUGERED			SANDY CLAY, ROCK FRAGMENTS	-	-	-	-	-	-	-	-	-	VISUAL
1140.5	4	2/5/7			BROWN SILT AND CLAY	59	0	3	9	45	43	37	15	21	A-6a
1138.0	6	3/5/10			BROWN SILTY CLAY	60	0	3	13	41	43	39	17	21	A-6b
1135.5	8	4/6/7			BROWN SANDY GRAVELLY CLAY	61	35	7	10	24	24	30	11	15	A-6a
1133.0	10	10/11/11			BROWN SANDY CLAY	62	0	8	19	36	37	35	17	16	A-6b
1130.5	12	9/10/13			BROWN SANDY CLAY	63	0	10	16	36	38	30	12	13	A-6a
1128.0	14	14/15/17			BROWN SANDY GRAVELLY CLAY	64	44	6	9	21	20	28	11	12	A-6a
1125.5	16	9/13/14			GRAY SANDY SILT WITH STONE FRAGMENTS	65	0	10	12	39	39	26	9	10	A-4a
1123.0	18	7/8/13			GRAY SANDY SILT WITH STONE FRAGMENTS	66	0	9	12	37	42	25	7	12	A-4a
	20														
	22														
1118.0	24														
1116.5	26	8/9/9			GRAY GRAVELLY SILT	67	39	6	7	21	27	27	9	14	A-4a

BOTTOM OF BORING

Particle Sizes: Agg= >2.00mm, Coarse Sand= 2.00-0.42mm Fine Sand= 0.42-0.074mm, Silt= 0.074-0.005mm, Clay= <0.005mm

Form TE-61 Revised 9/95

LOG OF BORING

Date Started 8/19/97 Sampler: Type SS Dia. 1 3/8"
Date completed 8/19/97 Water Elev.
Boring No. B-38 Station & Offset 1296+38, 80' LT. Surface Elev. 1144.0'

Elev.	Depth	Std. Pen. (N)	Rec. ft	Loss ft	Description	Sample No.	Physical Characteristics % Agg	% C.S.	% F.S.	% Silt	% Clay	L.L.	P.I.	W.C.	ODOT Class
1144.0	0														
1143.2		AUGERED			SOD	-	-	-	-	-	-	-	-	-	VISUAL
1141.5	2														
	4	12/15/14			BROWN SANDY CLAY WITH STONE FRAGMENTS	208	0	10	32	29	29	28	11	13	A-6a
1139.0	6	9/9/11			BROWN AND GRAY CLAYEY SILT WITH STONE FRAGMENTS	209	0	3	12	45	40	32	10	18	A-4a
1136.5	8	9/17/18			BROWN SILT AND CLAY WITH STONE FRAGMENTS	210	0	4	8	54	34	34	12	15	A-6a
1134.0	10	12/20/23			BROWN SILT AND CLAY WITH STONE FRAGMENTS	211	0	7	10	36	47	32	12	15	A-6a
1131.5	12	12/19/25			BROWN SILT AND CLAY WITH STONE FRAGMENTS	212	0	7	10	37	46	34	13	17	A-6a
1129.0	14	12/17/18			BROWN SILT AND CLAY WITH STONE FRAGMENTS	213	0	6	9	38	47	32	11	15	A-6a
1126.5	16	12/18/19			BROWN SILT AND CLAY WITH STONE FRAGMENTS	214	0	6	9	37	48	34	13	15	A-6a
1124.0	18	12/19/21			BROWN SILT AND CLAY WITH STONE FRAGMENTS	215	0	6	9	37	48	33	12	19	A-6a
	20														
	22														
1119.0	24														
1117.5	26	6/8/14			GRAY SILT AND CLAY WITH STONE FRAGMENTS	216	0	6	10	34	50	29	11	15	A-6a

BOTTOM OF BORING

Particle Sizes: Agg= >2.00mm, Coarse Sand= 2.00-0.42mm Fine Sand= 0.42-0.074mm, Silt= 0.074-0.005mm, Clay= <0.005mm

Form TE-61 Revised 9/95

LOG OF BORING

Date Started 8/19/97 Sampler: Type SS Dia. 1 3/8"
Date completed 8/19/97 Water Elev.
Boring No. B-37 Station & Offset 1294+38, 80' LT. Surface Elev. 1143.0'

Elev.	Depth	Std. Pen. (N)	Rec. ft	Loss ft	Description	Sample No.	Physical Characteristics % Agg	% C.S.	% F.S.	% Silt	% Clay	L.L.	P.I.	W.C.	ODOT Class
1143.0	0														
1142.2		AUGERED			SOD	-	-	-	-	-	-	-	-	-	VISUAL
1140.5	2														
	4	10/11/12			BROWN AND GRAY SILT AND CLAY WITH STONE FRAGMENTS	217	0	5	14	45	36	32	11	15	A-6a
1138.0	6	8/8/14			BROWN AND GRAY SILT AND CLAY WITH STONE FRAGMENTS	218	0	3	9	37	51	38	15	27	A-6a
1135.5	8	11/14/18			BROWN CLAYEY SILT WITH STONE FRAGMENTS	219	0	6	11	38	45	30	10	12	A-4a
1133.0	10	8/17/18			BROWN CLAYEY SILT WITH STONE FRAGMENTS	220	0	5	11	32	52	31	10	12	A-4a
1130.5	12	9/9/10			BROWN SILT	221	0	2	12	61	25	NP	NP	18	A-4b
1128.0	14	10/16/17			BROWN SANDY SILT	222	0	7	18	42	33	NP	NP	15	A-4a
1125.5	16	15/21/23			GRAY CLAYEY SILT	223	0	7	10	36	47	28	10	14	A-4a
1123.0	18	7/10/17			GRAY SILT AND CLAY WITH STONE FRAGMENTS	224	0	5	7	40	48	30	11	17	A-6a
	20														
	22														
1118.0	24														
1116.5	26	10/14/16			GRAY SILT AND CLAY WITH STONE FRAGMENTS	225	0	6	10	37	47	29	11	15	A-6a

BOTTOM OF BORING

Particle Sizes: Agg= >2.00mm, Coarse Sand= 2.00-0.42mm Fine Sand= 0.42-0.074mm, Silt= 0.074-0.005mm, Clay= <0.005mm

Form TE-61 Revised 9/95

LOG OF BORING

Date Started 8/19/97 Sampler: Type SS Dia. 1 3/8"
Date completed 8/19/97 Water Elev.
Boring No. B-39 Station & Offset 1298+38, 80' LT. Surface Elev. 1145.0'

Elev.	Depth	Std. Pen. (N)	Rec. ft	Loss ft	Description	Sample No.	Physical Characteristics % Agg	% C.S.	% F.S.	% Silt	% Clay	L.L.	P.I.	W.C.	ODOT Class
1145.0	0														
1144.2		AUGERED			SOD	-	-	-	-	-	-	-	-	-	VISUAL
1142.5	2														
	4	9/11/14			BROWN SANDY CLAY	199	0	4	25	34	37	29	12	9	A-6a
1140.0	6	5/10/11			BROWN SANDY SILT	200	0	6	22	35	37	28	10	14	A-4a
1137.5	8	10/12/18			BROWN SILT AND CLAY	201	0	4	9	36	51	33	11	14	A-6a
1135.0	10	12/16/18			BROWN SILT AND CLAY	202	0	6	10	37	47	33	12	14	A-6a
1132.5	12	12/19/23			BROWN SILT AND CLAY	203	0	6	8	32	54	34	13	14	A-6a
1130.0	14	15/20/28			BROWN SILT AND CLAY	204	0	6	8	32	54	35	14	15	A-6a
1127.5	16	14/17/20			BROWN AND GRAY SILT AND CLAY	205	0	6	9	31	54	34	13	14	A-6a
1125.0	18	12/20/20			BROWN AND GRAY SILT AND CLAY	206	0	7	10	31	52	35	13	18	A-6a
	20														
	22														
1120.0	24														
1118.5	26	8/10/16			GRAY SANDY SILT	207	0	10	18	31	41	25	9	14	A-4a

BOTTOM OF BORING

Particle Sizes: Agg= >2.00mm, Coarse Sand= 2.00-0.42mm Fine Sand= 0.42-0.074mm, Silt= 0.074-0.005mm, Clay= <0.005mm

Form TE-61 Revised 9/95

OHIO DEPARTMENT OF TRANSPORTATION
OFFICE OF MATERIALS MANAGEMENT
1600 WEST BROAD ST. COLUMBUS, OH 43223

REVISED DATE | DATE 10/17/97
CHECKED M.R.S.
REVISED J.B.H.
TYPED J.B.H.

SUBSURFACE INVESTIGATION
SITE 4 NOISE WALL

MED-71-15.78

11 / 12

77
78

NMIO-NW12.DGN PH 11/4/99

LOG OF BORING

Date Started 8/27/97 Sampler: Type SS Dia. 1 3/8"
Date completed 8/27/97
Boring No. B-40A Station & Offset 1398+38, 85' LT.

Water Elev. 1067.0'
Surface Elev. 1084.0'

Elev.	Depth	Std. Pen. (N)	Rec. ft	Loss ft	Description	Sample No.	Physical Characteristics: % Agg	% C.S.	% F.S.	% Silt	% Clay	L.L.	P.I.	W.C.	ODOT Class
1084.0	0	AUGERED			SOD	-	-	-	-	-	-	-	-	-	VISUAL
1083.2	2														
1081.5	4	11/14/14			BROWN SANDY CLAY WITH STONE FRAGMENTS	252	0	12	20	35	33	30	13	14	A-6a
1079.0	6	4/6/9			BROWN SANDY CLAY WITH STONE FRAGMENTS	253	0	9	12	34	45	30	11	15	A-6a
1076.5	8	4/6/9			GRAY CLAYEY SILT WITH STONE FRAGMENTS	254	0	7	11	39	43	28	9	15	A-4a
1074.0	10	3/6/10			GRAY CLAYEY SILT WITH STONE FRAGMENTS	255	0	8	11	39	42	27	9	16	A-4a
1071.5	12	5/8/12			GRAY CLAYEY SILT WITH STONE FRAGMENTS	256	0	7	11	36	46	28	10	15	A-4a
1069.0	14	4/5/10			GRAY SILT AND CLAY WITH STONE FRAGMENTS	257	0	7	10	35	48	29	11	15	A-6a
1066.5	16	5/7/8			GRAY CLAYEY SILT WITH STONE FRAGMENTS	258	0	7	10	41	42	26	8	16	A-4a
1064.0	18	4/7/12			GRAY SILTY SANDY GRAVEL WITH STONE FRAGMENTS	259	44	10	8	24	14	NP	NP	15	A-4a
	20				TOP OF ROCK										
1059.0	22	50(0.3)			*	260								16	VISUAL
1058.7	24				BOTTOM OF BORING										

* BLACK ARENACEOUS, JOINTED SHALE W/CLAY SEAMS FROM 25.0' TO 25.3'

Particle Sizes: Agg= >2.00mm, Coarse Sand= 2.00-0.42mm Fine Sand= 0.42-0.074mm, Silt= 0.074-0.005mm, Clay= <0.005mm

Form TE-GLRevised 9/95

LOG OF BORING

Date Started 8/26/97 Sampler: Type SS Dia. 1 3/8"
Date completed 8/26/97
Boring No. B-43 Station & Offset 1406+38, 85' LT.

Water Elev. 1058.0'
Surface Elev. 1076.0'

Elev.	Depth	Std. Pen. (N)	Rec. ft	Loss ft	Description	Sample No.	Physical Characteristics: % Agg	% C.S.	% F.S.	% Silt	% Clay	L.L.	P.I.	W.C.	ODOT Class
1076.0	0	AUGERED			SOD	-	-	-	-	-	-	-	-	-	VISUAL
1075.2	2														
1073.5	4	7/10/12			GRAY SILT AND CLAY WITH STONE FRAGMENTS	235	0	4	10	33	53	35	13	15	A-6a
1071.0	6	5/9/12			GRAY CLAYEY SILT W/ST. FRAGS. AND TRACE OF ORGANIC	236	0	2	8	34	56	33	7	26	A-4a
1068.5	8	8/14/16			BROWN SANDY CLAY WITH STONE FRAGMENTS	237	0	9	21	35	35	33	14	17	A-6a
1066.0	10	5/15/23			BROWN AND GRAY SILTY CLAY WITH STONE FRAGMENTS	238	0	7	11	37	45	35	16	14	A-6b
1063.5	12	8/12/20			GRAY SANDY SILT WITH STONE FRAGMENTS	2339	0	7	22	31	40	22	7	14	A-4a
1061.0	14	8/10/15			GRAY SANDY SILT WITH STONE FRAGMENTS	240	0	9	18	32	41	26	10	18	A-4a
1058.5	16	8/6/8			GRAY SANDY GRAVELLY SILT WITH STONE FRAGMENTS	241	35	9	10	14	32	23	6	25	A-4a
1056.0	18														
1054.5	20	16/30/62			GRAY SILTY SANDY GRAVEL	242	46	10	13	22	9	NP	NP	17	A-2-4
					BOTTOM OF BORING										

Particle Sizes: Agg= >2.00mm, Coarse Sand= 2.00-0.42mm Fine Sand= 0.42-0.074mm, Silt= 0.074-0.005mm, Clay= <0.005mm

Form TE-GLRevised 9/95

LOG OF BORING

Date Started 8/26/97 Sampler: Type SS Dia. 1 3/8"
Date completed 8/26/97
Boring No. B-42 Station & Offset 1404+38, 85' LT.

Water Elev. 1058.0'
Surface Elev. 1078.0'

Elev.	Depth	Std. Pen. (N)	Rec. ft	Loss ft	Description	Sample No.	Physical Characteristics: % Agg	% C.S.	% F.S.	% Silt	% Clay	L.L.	P.I.	W.C.	ODOT Class
1078.0	0	AUGERED			SOD	-	-	-	-	-	-	-	-	-	VISUAL
1077.2	2														
1075.5	4	5/9/14			BROWN SILT AND CLAY WITH STONE FRAGMENTS	243	0	5	10	41	44	32	12	15	A-6a
1073.0	6	9/12/20			BROWN CLAYEY SILT WITH STONE FRAGMENTS	244	0	7	11	34	48	30	9	15	A-4a
1070.5	8	7/12/17			DARK BROWN CLAYEY SILT WITH STONE FRAGMENTS	245	0	7	10	37	46	30	10	16	A-4a
1068.0	10	6/8/12			GRAY CLAYEY SILT WITH STONE FRAGMENTS	246	0	7	10	37	46	29	10	14	A-4a
1065.5	12	5/8/15			GRAY CLAYEY SILT WITH STONE FRAGMENTS	247	0	6	10	50	34	27	8	14	A-4b
1063.0	14	5/7/15			GRAY SILT AND CLAY WITH STONE FRAGMENTS	248	0	6	11	35	48	29	11	15	A-6a
1060.5	16	6/10/17			GRAY SILTY SANDY GRAVEL	249	44	11	10	24	11	NP	NP	14	A-2-4
1058.0	18	12/12/9			GRAY SILTY SANDY GRAVEL WITH STONE FRAGMENTS	250	42	19	11	20	8	NP	NP	20	A-2-4
	20				TOP OF ROCK (DRILLER'S DESCRIPTION)										
1053.0	22	60(0.5)			GRAY AND BROWN CLAYEY SAND AND ST. FRAGS.	251	-	-	-	-	-	-	-	14	VISUAL
1052.5	24				BOTTOM OF BORING										

Particle Sizes: Agg= >2.00mm, Coarse Sand= 2.00-0.42mm Fine Sand= 0.42-0.074mm, Silt= 0.074-0.005mm, Clay= <0.005mm

Form TE-GLRevised 9/95

OHIO DEPARTMENT OF TRANSPORTATION
OFFICE OF MATERIALS MANAGEMENT
1600 WEST BROAD ST. COLUMBUS, OH 43223

REVISED DATE	DATE: 10/17/97
	CHECKED: M.R.S.
	REVISED: J.B.H.
	TYPED: J.B.H.

SUBSURFACE INVESTIGATION
SITE 6 NOISE WALL, NEW LOCATION

MED-71-15.78

12/12

78/78

NW10-NW12.DGN PH 11/4/99